NOTES :

- (I), (II), (III), DENOTES RAMP TYPE.
- CONSTRUCT ALL CARRIAGE WALKS AND DRIVEWAYS PER CITY OF MILWAUKEE SPECIFICATIONS.
- OFFSET MEASUREMENTS TO TREES, WOOD POLES AND LIGHT POLES ARE TAKEN TO EDGE NEAREST THE CENTERLINE.
- OFFSET MEASUREMENTS TO HYDRANTS ARE TAKEN TO THE OPERATING NUT.
- PROJECT IS DESIGNED TO BE CONST IN 2 EQUAL PASSES W/ 0.10 CRN IN EACH PASS REDUCING THROUGH INTERSECTIONS AS SHOWN.
- GRADE & PLACE 1.5 WIDTH OF SOD IN LAWN AREAS DISTURBED BY CONSTRUCTION, UNLESS OTHERWISE DIRECTED.
- INTERNAL MANHOLE SEALS ARE REQUIRED IN ALL MANHOLES MARKED SAN. (SANITARY).
- IN AREAS OF GRINDING, GRIND TO OBTAIN 0.12' MINIMUM COVER AT CURB FLANGE, 0.17' MINIMUM AT BUTT JOINTS AND 0.21' MINIMUM ELSEWHERE.
- ANY SAWING ALONG THE CURB FLANGE SHALL BE INCLUDED IN THE PRICE BID FOR CURB & GUTTER.

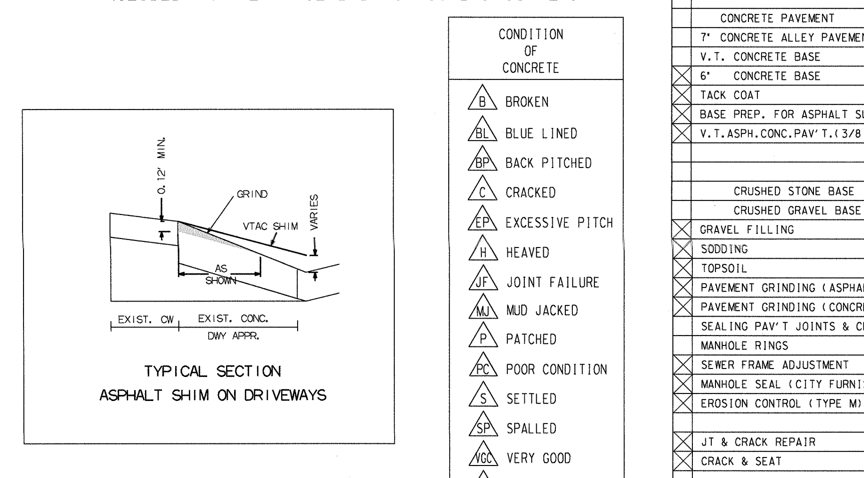

TYPICAL SECTION
ASPHALT SHIM ON DRIVEWAYS

CONDITION OF CONCRETE
B BROKEN
BL BLUE LINED
BP BACK PITCHED
C CRACKED
EP EXCESSIVE PITCH
H HEAVED
JF JOINT FAILURE
MJ MUD JACKED
P PATCHED
PC POOR CONDITION
S SETTLED
SP SPALLED
VGC VERY GOOD
VPC VERY POOR

ESTIMATE / CERTIFICATE QUANTITIES

	DESCRIPTION	UNIT	ASSESS.	X-ING			PLAN TOT.	PROJ.TOT.
X	MOBILIZATION	L.S.						
X	FINISHING ROADWAY	L.S.						
X	BARRICADING AND SIGNING	L.S.						
X	CUTTING	C.Y.						
X	ROADWAY CUTTING	C.Y.						
X	FILLING	C.Y.						
X	ROADWAY FILLING	C.Y.						
X	PAVEMENT REMOVAL	S.Y.						
X	BITUMINOUS SURFACE REMOVAL	S.Y.						
X	CURB &/OR CURB & GUTTER REMOVAL	L.F.						
X	CONC. WALK &/OR DRIVEWAY REMOVAL	S.F.						
X	SAWING (FULL DEPTH)	L.F.						
X	SAWING	L.F.						
	TREES CLEARING	I.D.						
	TREES GRUBBING	I.D.						
X	CONCRETE CURB & GUTTER	L.F.						
	V.T. CONC. WALK &/OR DRIVEWAY	C.Y.						
X	5" CONCRETE WALK	S.F.						
X	7" CONCRETE DRIVEWAY	S.F.						
	CONCRETE PAVEMENT	S.Y.						
	7" CONCRETE ALLEY PAVEMENT	S.Y.						
	V.T. CONCRETE BASE	C.Y.						
X	6" CONCRETE BASE	S.Y.						
X	TACK COAT	GAL.						
X	BASE PREP. FOR ASPHALT SURFACE	L.S.						
X	V.T. ASPH. CONC. PAV'T. (3/8 MAX.)	S.Y.						
	CRUSHED STONE BASE							
	CRUSHED GRAVEL BASE							
X	GRAVEL FILLING	TON						
X	SODDING	S.Y.						
X	TOPSOIL	C.Y.						
X	PAVEMENT GRINDING (ASPHALT)	S.Y.						
X	PAVEMENT GRINDING (CONCRETE)	S.Y.						
	SEALING PAV'T JOINTS & CRACKS	S.Y.						
	MANHOLE RINGS	EACH						
X	SEWER FRAME ADJUSTMENT	V.F.						
X	MANHOLE SEAL (CITY FURNISHED)	EACH						
X	EROSION CONTROL (TYPE M)	EACH						
X	JT & CRACK REPAIR	LF						1450
X	CRACK & SEAT	SY						

STORM DRAINAGE UNITS
C.B.W. - 0 RESET - 12 ABANDON - 0
PROJECT IN (SEPARATED) AREA

FILE NO.
(3500N, 3800N)

DEPARTMENT OF PUBLIC WORKS
INFRASTRUCTURE SERVICES DIVISION
FIELD OPERATIONS
FIELD & DESIGN ENGINEERING
MILWAUKEE, WISCONSIN

PLAN OF: N. 97TH ST.
THIS SECTION: W. KEEFE AVE. - W. NASH ST.
W. KEEFE ST. - W. LISBON AVE.

DRAWN BY G GUERRA DATE: 01/08/13
DESCRIPTIONS BY G GUERRA DATE: 01/08/13
LEVELS BY JL DATE: 6/7/12
LEVELS TRANSF. BY DATE:
DESIGNED BY S SYLVAN DATE: 9/7/12
GRADES TRANSF. BY G GUERRA DATE: 01/08/13
CHECKED BY DATE: 2/5/13
APPROVED BY DATE: 2/5/13
FILE: ST211130101 PLOT DATE: 01-FEB-2013

PROJECT NO. ST211130101
SHEET 1 OF 3
1/4 SEC. 261
ALD. DIST. 5
SCALE 1" = 10'
OBSTRUCTIONS - SEE OBSTRUCTION LIST
REVISED:
REVISED:
REVISED:

DATE	TO
ESTIMATING	
HOLLOW WALKS	
PUBLIC HEARING	1
CONSTRUCTION	1
SEWER	
WATER	1
STREET LIGHTING	1
BLDG. SEWERS	
MEASURING	1
FIELD	1
DISTRICT FILE	
FORESTRY	1
W.E. / G.O.	1
WIS. GAS CO.	1
TRANSIT SYSTEM	1
CABLE TV	1
UND. GRD. COND.	1
WATER DIST.	1
WEPCO N/S	1
WEPCO S/S	1
SEWER SERVICES	1
UTILITY COOR.	1
Traffic Eng	1
PLAN SIZE	

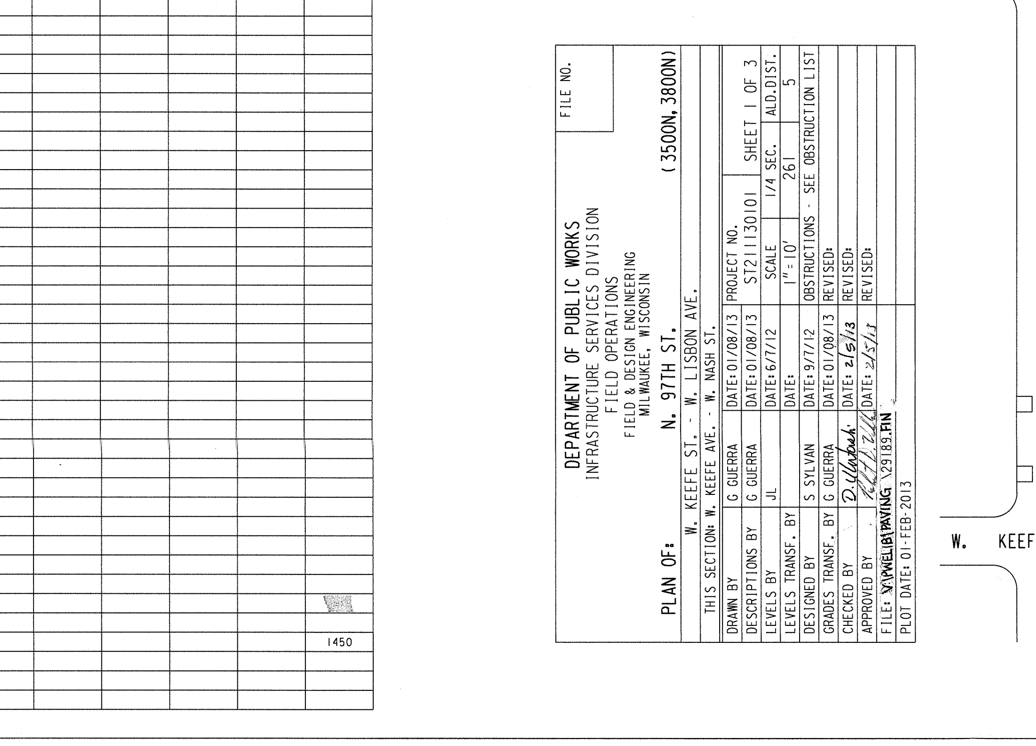

PROJECT SHEET 1

N. 97TH. ST. - W. KEEFE AVE. - W. NASH ST.
ST211130101 W. KEEFE AVE. - W. LISBON AVE.
15. X 110.
S2189
(1 OF 3)

NOTES :

- (I), (II), (III), DENOTES RAMP TYPE.
- CONSTRUCT ALL CARRIAGE WALKS AND DRIVEWAYS PER CITY OF MILWAUKEE SPECIFICATIONS.
- OFFSET MEASUREMENTS TO TREES, WOOD POLES AND LIGHT POLES ARE TAKEN TO EDGE NEAREST THE CENTERLINE.
- OFFSET MEASUREMENTS TO HYDRANTS ARE TAKEN TO THE OPERATING NUT.

CONDITION OF CONCRETE

- B BROKEN
- BL BLUE LINED
- BP BACK PITCHED
- C CRACKED
- EP EXCESSIVE PITCH
- H HEAVED
- JF JOINT FAILURE
- MJ MUD JACKED
- P PATCHED
- PC POOR CONDITION
- S SETTLED
- SP SPALLED
- VG VERY GOOD
- VP VERY POOR

ESTIMATE / CERTIFICATE QUANTITIES

DESCRIPTION	UNIT	ASSESS.	X-ING			PLAN TOT.	PROJ. TOT.
MOBILIZATION	L.S.						
FINISHING ROADWAY	L.S.						
BARRICADING AND SIGNING	L.S.						
CUTTING	C.Y.						
ROADWAY CUTTING	C.Y.						
FILLING	C.Y.						
ROADWAY FILLING	C.Y.						
PAVEMENT REMOVAL	S.Y.						
BITUMINOUS SURFACE REMOVAL	S.Y.						
CURB &/OR CURB & GUTTER REMOVAL	L.F.						
CONC.WALK &/OR DRIVEWAY REMOVAL	S.F.						
SAWING (FULL DEPTH)	L.F.						
SAWING	L.F.						
TREES CLEARING	I.D.						
TREES GRUBBING	I.D.						
CONCRETE CURB & GUTTER	L.F.						
V.T. CONC.WALK &/OR DRIVEWAY	C.Y.						
5' CONCRETE WALK	S.F.						
7' CONCRETE DRIVEWAY	S.F.						
CONCRETE PAVEMENT	S.Y.						
7' CONCRETE ALLEY PAVEMENT	S.Y.						
V.T. CONCRETE BASE	C.Y.						
CONCRETE BASE	S.Y.						
TACK COAT	GAL.						
BASE PREP. FOR ASPHALT SURFACE	L.S.						
V.T.ASPH.CONC.PAV'T.(MAX.)	S.Y.						
CRUSHED STONE BASE							
CRUSHED GRAVEL BASE							
GRAVEL FILLING	TON						
SODDING	S.Y.						
TOPSOIL	C.Y.						
PAVEMENT GRINDING (ASPHALT)	S.Y.						
PAVEMENT GRINDING (CONCRETE)	S.Y.						
SEALING PAV'T JOINTS & CRACKS	S.Y.						
MANHOLE RINGS	EACH						
SEWER FRAME ADJUSTMENT	V.F.						
MANHOLE SEAL (CITY FURNISHED)	EACH						
EROSION CONTROL (TYPE M)	EACH						

DEPARTMENT OF PUBLIC WORKS
INFRASTRUCTURE SERVICES DIVISION
FIELD OPERATIONS
FIELD & DESIGN ENGINEERING
MILWAUKEE, WISCONSIN

PLAN OF: N. 97TH ST. (3500N, 3800N)
W. KEEFE ST. - W. LISBON AVE.
THIS SECTION: W. NASH ST. - W. METCALFE PL.

FILE NO.

DRAWN BY	G GUERRA	DATE: 01/08/13	PROJECT NO.	
DESCRIPTIONS BY	G GUERRA	DATE: 01/08/13	ST211130101	SHEET 2 OF 3
LEVELS BY	JL	DATE: 6/7/12	SCALE 1"=10'	1/4 SEC. 261 / ALD.DIST. 5
LEVELS TRANSF. BY		DATE:	OBSTRUCTIONS - SEE OBSTRUCTION LIST	
DESIGNED BY	S SYLVAN	DATE: 9/7/12		
GRADES TRANSF. BY	G GUERRA	DATE: 01/08/13	REVISED:	
CHECKED BY	[illegible]	DATE: 2/5/13	REVISED:	
APPROVED BY	[illegible]	DATE: 2/5/13	REVISED:	

FILE: V:\PWELIB\PAVING\29189.FIN
PLOT DATE: 01-FEB-2013

STORM DRAINAGE UNITS
C.B.W.- 0 RESET- 6 ABANDON-
PROJECT IN (SEPARATED) AREA

EROSION CONTROL AND C.B. REQUISITION PLAN
TYPE M 8 ☒-CBW 0 □-RESET 6 ✕-ABANDON 0 ☒ NO WORK

N. 97TH. ST.
W. NASH. ST.
W. METCALFE PL.

DATE		
TO	2/5/13	7/10/13
ESTIMATING		
HOLLOW WALKS		
PUBLIC HEARING	6	
CONSTRUCTION		
SEWER		
WATER		
STREET LIGHTING		
BLDG. SEWERS		
MEASURING		
FIELD		
DISTRICT FILE		
FORESTRY		
W.E. / G.O.		
WIS. GAS CO.		
TRANSIT SYSTEM		
CABLE TV		
UND. GRD. COND.		
WATER DIST.		
WEPCO N/S		
WEPCO S/S		
SEWER SERVICES		
UTILITY COOR.		
[illegible]		
PLAN SIZE	15	

N. 97TH ST. - W. KEEFE AVE. - W. LISBON AVE.
W. KEEFE AVE. - W. NASH ST.
ST211130101 15" X 11" 29189 #375
(2 OF 3)

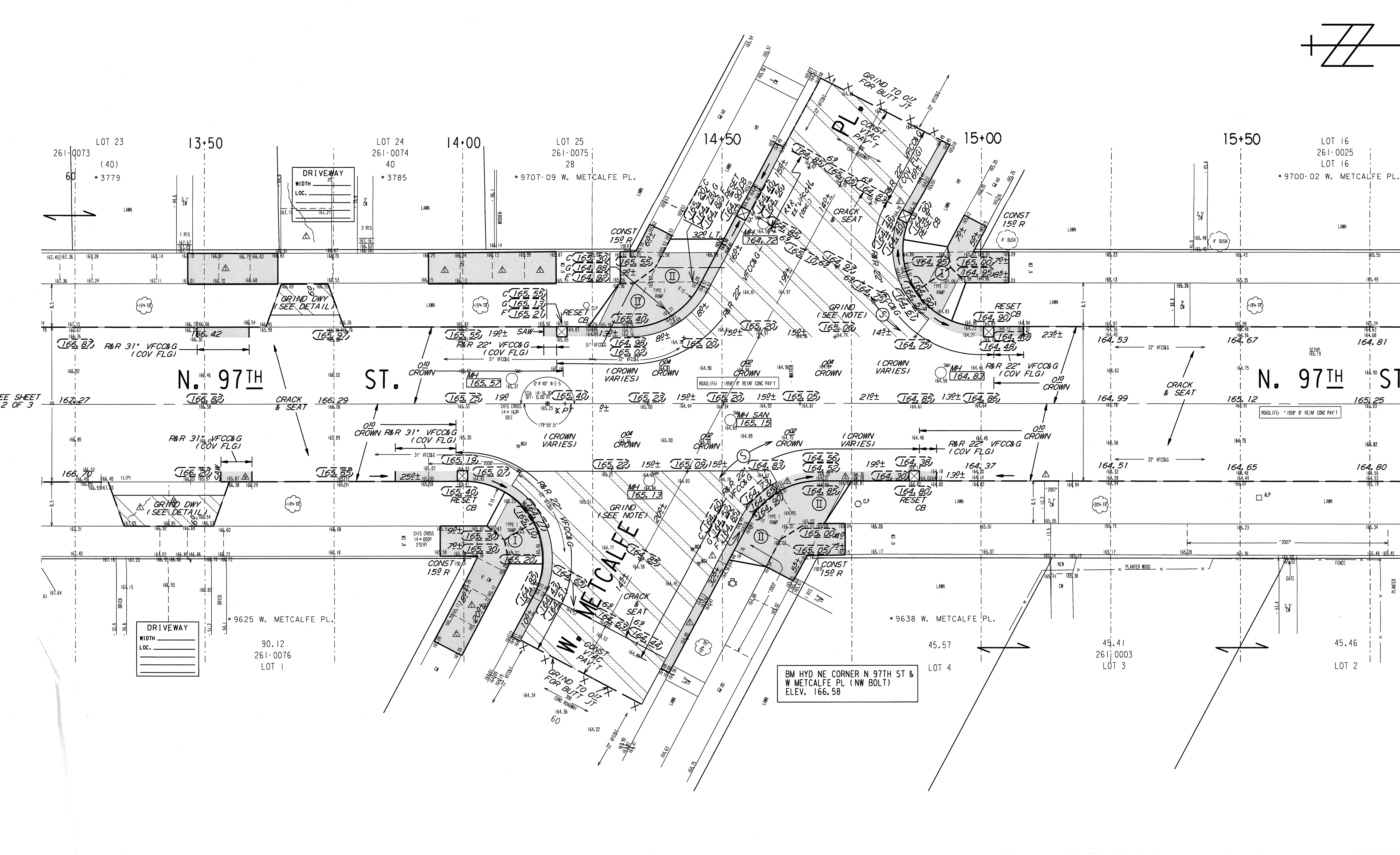

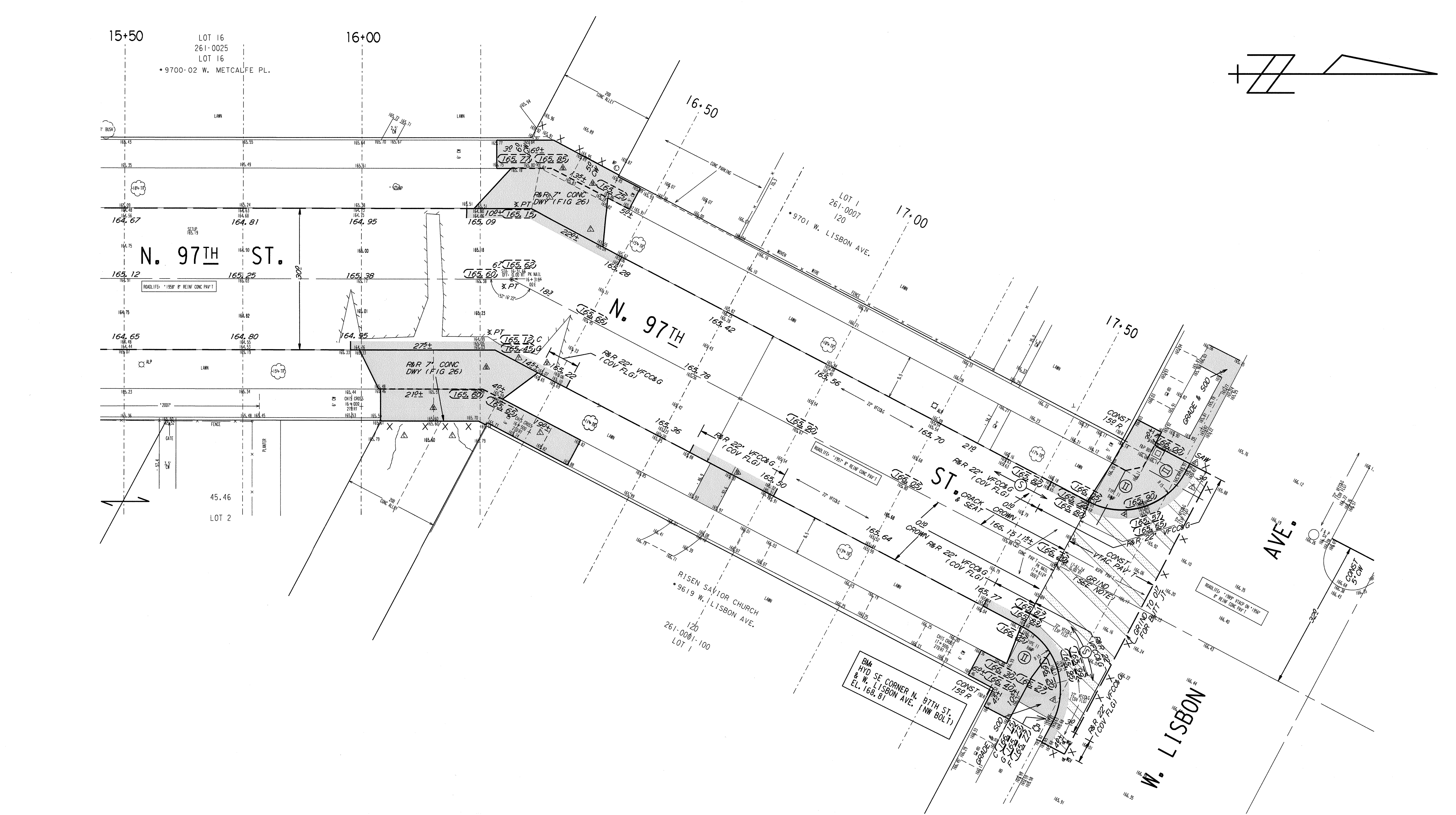

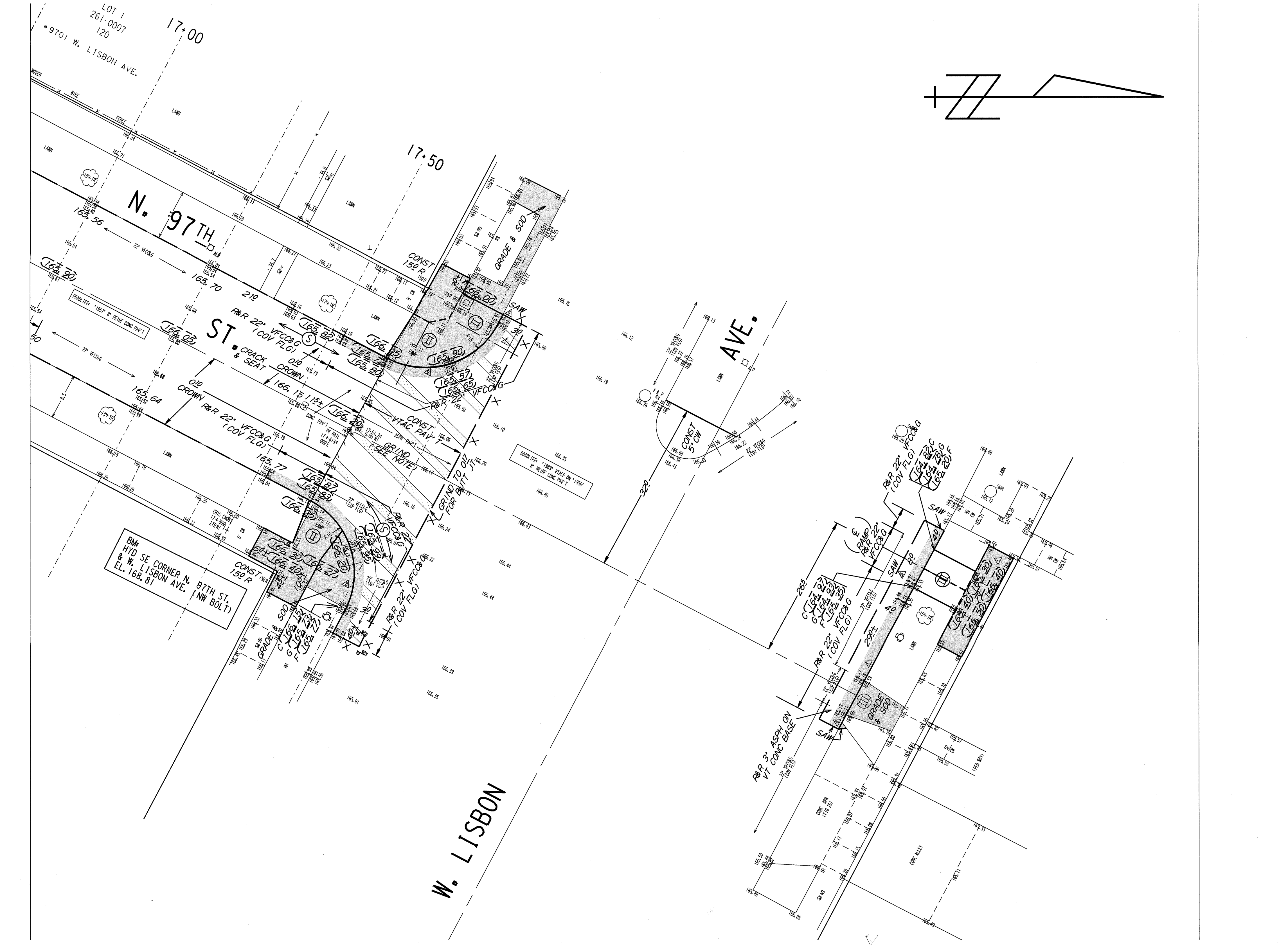

NOTES :

- (I), (II), (III), DENOTES RAMP TYPE.
- CONSTRUCT ALL CARRIAGE WALKS AND DRIVEWAYS PER CITY OF MILWAUKEE SPECIFICATIONS.
- OFFSET MEASUREMENTS TO TREES, WOOD POLES AND LIGHT POLES ARE TAKEN TO EDGE NEAREST THE CENTERLINE.
- OFFSET MEASUREMENTS TO HYDRANTS ARE TAKEN TO THE OPERATING NUT.

CONDITION OF CONCRETE

- B BROKEN
- BL BLUE LINED
- BP BACK PITCHED
- C CRACKED
- EP EXCESSIVE PITCH
- H HEAVED
- JF JOINT FAILURE
- MJ MUD JACKED
- P PATCHED
- PC POOR CONDITION
- S SETTLED
- SP SPALLED
- VG VERY GOOD
- VP VERY POOR

ESTIMATE / CERTIFICATE QUANTITIES

DESCRIPTION	UNIT	ASSESS.	X-ING			PLAN TOT.	PROJ. TOT.
MOBILIZATION	L.S.						
FINISHING ROADWAY	L.S.						
BARRICADING AND SIGNING	L.S.						
CUTTING	C.Y.						
ROADWAY CUTTING	C.Y.						
FILLING	C.Y.						
ROADWAY FILLING	C.Y.						
PAVEMENT REMOVAL	S.Y.						
BITUMINOUS SURFACE REMOVAL	S.Y.						
CURB &/OR CURB & GUTTER REMOVAL	L.F.						
CONC.WALK &/OR DRIVEWAY REMOVAL	S.F.						
SAWING (FULL DEPTH)	L.F.						
SAWING	L.F.						
TREES CLEARING	I.D.						
TREES GRUBBING	I.D.						
CONCRETE CURB & GUTTER	L.F.						
V.T. CONC.WALK &/OR DRIVEWAY	C.Y.						
5" CONCRETE WALK	S.F.						
7" CONCRETE DRIVEWAY	S.F.						
CONCRETE PAVEMENT	S.Y.						
7" CONCRETE ALLEY PAVEMENT	S.Y.						
V.T. CONCRETE BASE	C.Y.						
CONCRETE BASE	S.Y.						
TACK COAT	GAL.						
BASE PREP. FOR ASPHALT SURFACE	L.S.						
V.T.ASPH.CONC.PAV'T.(MAX.)	S.Y.						
CRUSHED STONE BASE							
CRUSHED GRAVEL BASE							
GRAVEL FILLING	TON						
SODDING	S.Y.						
TOPSOIL	C.Y.						
PAVEMENT GRINDING (ASPHALT)	S.Y.						
PAVEMENT GRINDING (CONCRETE)	S.Y.						
SEALING PAV'T JOINTS & CRACKS	S.Y.						
MANHOLE RINGS	EACH						
SEWER FRAME ADJUSTMENT	V.F.						
MANHOLE SEAL (CITY FURNISHED)	EACH						
EROSION CONTROL (TYPE M)	EACH						

DEPARTMENT OF PUBLIC WORKS
INFRASTRUCTURE SERVICES DIVISION
FIELD OPERATIONS
FIELD & DESIGN ENGINEERING
MILWAUKEE, WISCONSIN

FILE NO.

PLAN OF: N. 97TH ST. (3500N, 3800N)
W. KEEFE ST. - W. LISBON AVE.
THIS SECTION: W. METCALFE PL. - W. LISBON AVE.

DRAWN BY	G GUERRA	DATE: 01/08/13	PROJECT NO.		
DESCRIPTIONS BY	G GUERRA	DATE: 01/08/13	ST211130101	SHEET 3 OF 3	
LEVELS BY	JL	DATE: 6/7/12	SCALE	1/4 SEC.	ALD.DIST.
LEVELS TRANSF. BY		DATE:	1"=10'	261	5
DESIGNED BY	S SYLVAN	DATE: 9/7/12	OBSTRUCTIONS - SEE OBSTRUCTION LIST		
GRADES TRANSF. BY	G GUERRA	DATE: 01/08/13	REVISED:		
CHECKED BY	D. [illegible]	DATE: 2/5/13	REVISED:		
APPROVED BY	[illegible]	DATE: 2/5/13	REVISED:		
FILE: V:\PWELIB\PAVING\29189.FIN					
PLOT DATE: 01-FEB-2013					

STORM DRAINAGE UNITS		
C.B.W.-	RESET-	ABANDON-
PROJECT IN (SEPARATED) AREA		

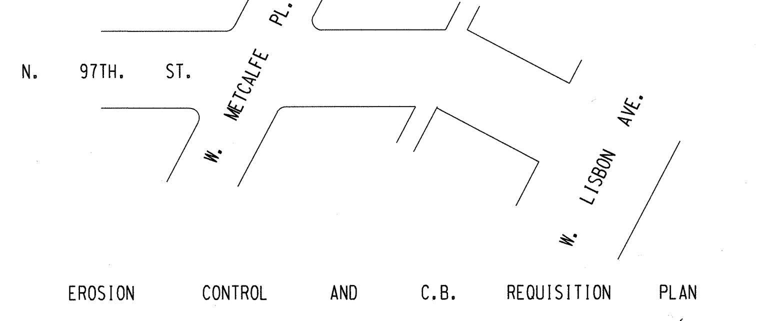

EROSION CONTROL AND C.B. REQUISITION PLAN

TYPE M	☒ - CBW	☐ - RESET	✕ - ABANDON	∅
				NO WORK

DATE / TO	2/13/13	7/10/13		
ESTIMATING	1			
HOLLOW WALKS	1			
PUBLIC HEARING	1			
CONSTRUCTION	1	6		
SEWER	1			
WATER	1			
STREET LIGHTING	1			
BLDG. SEWERS	1			
MEASURING	1			
FIELD		1		
DISTRICT FILE	2			
FORESTRY	1			
W.E. / G.O.				
WIS. GAS CO.	1			
TRANSIT SYSTEM				
CABLE TV				
UND. GRD. COND.	1			
WATER DIST.	1			
WEPCO N/S	1			
WEPCO S/S				
SEWER SERVICES				
UTILITY COOR.	1			
Traffic Eng RM 506	1	1		
PLAN SIZE				

N. 97TH ST. - W. KEEFE AVE. - W. LISBON AVE.
W. METCALFE PL. - W. LISBON AVE.
ST211130101
18. X 112.
S9189
(3 OF 3) #373