PROJECT ID:
WITH:

COUNTY: MILWAUKEE

CITY OF MILWAUKEE
DEPARTMENT OF PUBLIC WORKS

PLAN OF PROPOSED IMPROVEMENT

LAKEFRONT GATEWAY LOCAL ROADS

N. HARBOR DRIVE & E. CLYBOURN STREET STREETSCAPING
MILWAUKEE COUNTY

CONTRACT B

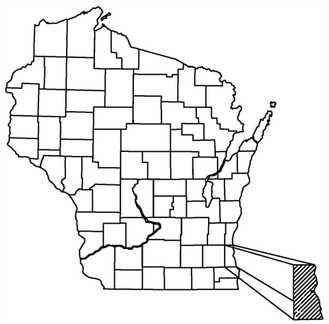

N

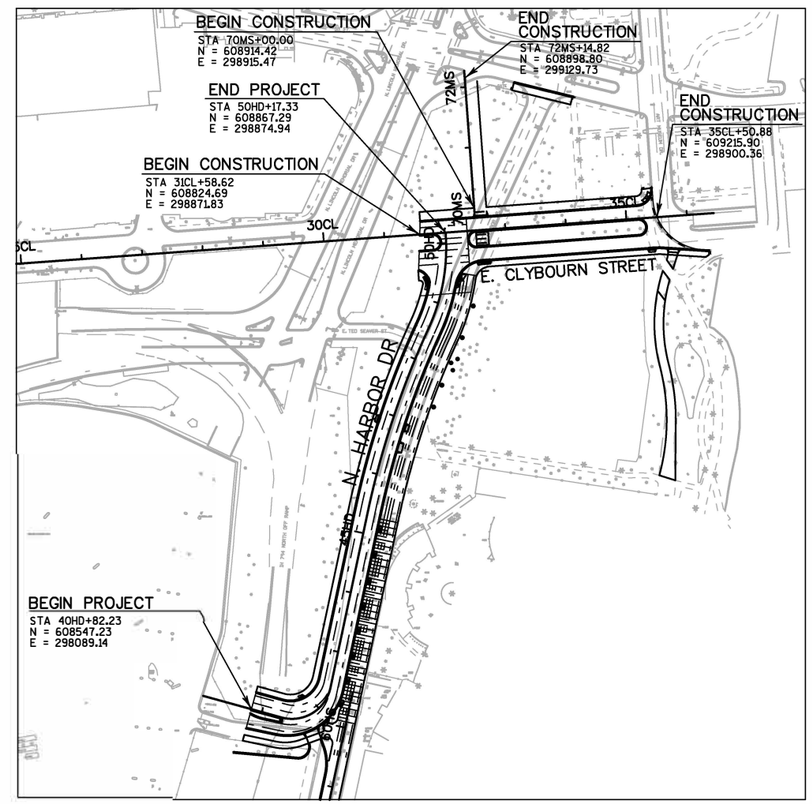

"COORDINATES ON THIS PLAN ARE REFERENCED TO THE WISCONSIN COUNTY COORDINATE SYSTEM (WCCS), 'MILWAUKEE' COUNTY."

CONVENTIONAL SYMBOLS

PLAN

- CORPORATE LIMITS
- PROPERTY LINE
- LOT LINE
- LIMITED HIGHWAY EASEMENT
- EXISTING RIGHT OF WAY
- PROPOSED OR NEW R/W LINE
- SLOPE INTERCEPT
- REFERENCE LINE
- EXISTING CULVERT
- PROPOSED CULVERT (Box or Pipe)
- COMBUSTIBLE FLUIDS — CAUTION
- MARSH AREA
- WOODED OR SHRUB AREA

PROFILE

- GRADE LINE
- ORIGINAL GROUND
- MARSH OR ROCK PROFILE (To be noted as such) — ROCK
- SPECIAL DITCH — LABEL
- GRADE ELEVATION — 95.36
- CULVERT (Profile View)

UTILITIES

- ELECTRIC — E
- FIBER OPTIC — FO
- GAS — G
- SANITARY SEWER — SAN
- STORM SEWER — SS
- TELEPHONE — T
- WATER — W
- UTILITY PEDESTAL
- POWER POLE
- TELEPHONE POLE

ch2m
MILWAUKEE, WISCONSIN

WISCONSIN
ANDREA M. MASTERS
38385
RACINE, WI
PROFESSIONAL ENGINEER

7/22/2016 (Date) (Signature)

CITY OF MILWAUKEE

Department of Public Works
Infrastructure Services Division

APPROVED BY:

CITY ENGINEER

COMMISSIONER OF PUBLIC WORKS

E

2

GENERAL NOTES

DETAILS OF CONSTRUCTION NOT SHOWN SHALL BE IN ACCORDANCE WITH THE PERTINENT REQUIREMENTS OF THE STANDARD SPECIFICATIONS.

STATIONING, DISTANCES, AND OFFSETS FOR SIGNS SHOWN IN PLANS ARE APPROXIMATE AND THE FINAL LOCATION OF SIGNS ARE TO BE DETERMINED BY THE ENGINEER.

NO TREES OR SHRUBS SHALL BE REMOVED WITHOUT APPROVAL OF THE ENGINEER.

THE LOCATIONS OF EXISTING AND PROPOSED UTILITY INSTALLATIONS AS SHOWN ON THE PLANS ARE APPROXIMATE. THERE MAY BE OTHER UTILITY INSTALLATIONS WITHIN THE PROJECT AREA THAT ARE NOT SHOWN.

THE CONTRACTOR SHALL NOTIFY DIGGERS HOTLINE AND AFFECTED UTILITIES PRIOR TO THE START OF WORK. ANY UTILITY WHICH IS NOT A MEMBER OF THE DIGGERS HOTLINE MUST BE CONTACTED SEPARATELY.

PRIOR TO ORDERING DRAINAGE PIPES AND STRUCTURES, THE CONTRACTOR SHALL FIELD VERIFY RELATED DRAINAGE INFORMATION IN THE PLAN WITH THE ENGINEER.

INLET AND DISCHARGE ELEVATIONS FOR DRAINAGE STRUCTURES SHOWN ON THE PLAN MAY BE ADJUSTED BY THE ENGINEER TO FIT FIELD CONDITIONS.

TEMPORARY STORAGE OF ANY EXCAVATED MATERIAL WILL NOT BE PERMITTED IN WETLANDS.

BROKEN CONCRETE CONTAINING RE-BAR SHALL NOT BE USED AS RIPRAP OR RIPRAP HEAVY.

EXISTING PIPE CULVERT SIZES SHOWN ARE APPROXIMATE AND CONTRACTOR WILL BASE BID ON THE ACTUAL FIELD CONDITIONS.

EXCAVATION BELOW SUBGRADE (EBS) IS NOT USED TO BALANCE YARDAGE BUT IS MEASURED AND PAID FOR AS COMMON EXCAVATION. THE LOCATION FOR EBS WILL BE DETERMINED BY THE ENGINEER.

SEED, INSTALL EROSION MAT, AND FERTILIZE ALL SALVAGED TOPSOIL AREAS WITHIN 7 WORKING DAYS AFTER GRADING WORK IS COMPLETED.

DO NOT APPLY FERTILIZER WITHIN 20 FEET OF A WATER OR WETLAND.

TRAFFIC CONTROL DEVICES SHALL BE ADJUSTED TO FIT FIELD CONDITIONS AS DIRECTED BY THE ENGINEER.

CURB HEIGHT AT THE END OF CURB AND GUTTER SHALL TAPER FROM 0 TO 6-INCHES IN 6 FEET.

EXISTING ELEVATIONS SHALL BE VERIFIED IN THE FIELD.

EXISTING DRIVEWAYS AND FIELD ENTRANCES SHALL BE RESTORED IN KIND AS DIRECTED BY THE ENGINEER IN THE FIELD AND AT THE LOCATION DETERMINED BY THE ENGINEER.

A SAWED JOINT IS REQUIRED WHERE NEW HMA OR CONCRETE PAVEMENT SURFACE MEETS EXISTING HMA OR CONCRETE PAVEMENT SURFACE.

CONCRETE MEDIAN SLOPED NOSE SHALL BE CONSTRUCTED FOR ALL MEDIAN OPENINGS AT INTERSECTIONS WITH CURB & GUTTER.

CURB AND GUTTER AND SIDEWALK SHALL BE REMOVED TO THE NEAREST JOINT IF THE NEAREST JOINT IS 4-FEET OR LESS. IF THIS NEAREST JOINT IS GREATER THAN 4-FEET IT SHALL BE RETURNED TO THE LOCATION SHOWN ON THE PLAN (SAWCUT).

LIGHTING DESIGN, DETAILS, AND MISCELLANEOUS QUANTITIES PROVIDED BY THE CITY OF MILWAUKEE.

STORM SEWER DESIGN, DETAILS, AND MISCELLANEOUS QUANTITIES PROVIDED BY THE CITY OF MILWAUKEE.

CITY UNDERGROUND COMMUNICATIONS CONDUIT (CUC) CONSTRUCTION DETAILS AND LOCATIONS PROVIDED BY THE CITY OF MILWAUKEE.

ANY INCIDENTAL EXCAVATION OR EXCAVATION THAT CONTAINS CONTAMINATED SOIL SHALL ALSO BE PAID FOR EITHER BY "MANAGEMENT OF SOLID WASTE" OR "EXCAVATION, HAULING, AND DISPOSAL OF PETROLEUM CONTAMINATED SOIL" AND IS BEING PAID FOR IN ADDITION TO OTHER BID ITEMS WHICH INCLUDE EXCAVATION QUANTITIES SUCH AS, BUT NOT LIMITED TO, COMMON EXCAVATION, STORM SEWER ITEMS, STREETSCAPING ITEMS, AND LIGHTING ITEMS.

STANDARD ABBREVATIONS

AEW	APRON END WALL
AGG	AGGREGATE
AH	AHEAD
ASP	ASPHALTIC
BK	BACK
BAD	BASE AGGREGATE DENSE
BB	BALL & BURLAP
BM	BENCH MARK
BT	BEGIN TRANSITION
CAL	CALIBER
CC	CENTER OF CURVATURE
CE	COMMERCIAL ENTRANCE
C&G	CURB AND GUTTER
C/L OR ℄	C/L OR ℄ CENTER OR CONSTRUCTION LINE
CONC	CONCRETE
CP	CULVERT PIPE
CPCM	CULVERT PIPE REINFORCED METAL
CPRC	CULVERT PIPE REINFORCED CONCRETE
CPRCHE	CULVERT PIPE REINFORCED CONCRETE HORIZONTAL ELLIPTICAL
CSD	CONCRETE SURFACE DRAIN
CY	CUBIC YARD
D	DEGREE OF CURVE
DISH	DISCHARGE
ET	END TRANSITION
FE	FIELD ENTRANCE
FS	FULL SUPERELEVATION
HMA	HOT MIX ASPHALT
HP	HIGH POINT
HT	HEIGHT
INV	INVERT
L	LENGTH OF CURVE
LHF	LEFT HAND FORWARD
LP	LOW POINT
LT	LEFT
MAX	MAXIMUM
MIN	MINIMUM
M/L	MATCHLINE
NB	NORTHBOUND
NC	NORMAL CROWN
NORM	NORMAL
O/S	OFFSET
PAVT	PAVEMENT
PC	POINT OF CURVE
PCC	POINT OF COMPOUND CURVE
PE	PRIVATE ENTRANCE
PGL	PROFILE GRADE LINE
PI	POINT OF INTERSECTION
PLE	PERMANENT LIMITED EASEMENT
POB	POINT OF BEGINNING
PT	POINT OF TANGENT
PUU	PIPE UNDERDRAIN UNPERFORATED
PVC	POLYVINYL CHLORIDE
R/L	REFERENCE LINE
R/W	RIGHT OF WAY
RAB	ROUNDABOUT
RC	REVERSE CROWN
RCAEW	APRON ENDWALL FOR CULVERT PIPE REINFORCED CONCRETE
REQD	REQUIRED
RHF	RIGHT HAND FORWARD
RO	RUN OFF LENGTH
RT	RIGHT
SALV	SALVAGED
SB	SOUTHBOUND
SDD	STANDARD DETAIL DRAWING
SE	SUPER ELEVATION
SF	SQUARE FOOT
STA	STATION
SY	SQUARE YARD
SVD	SLOTTED VANE DRAIN
T	TANGENT LENGTH
TLE	TEMPORARY LIMITED EASEMENT
TYP	TYPICAL
VCL	VERTICAL CURVE LENGTH
VPC	POINT OF VERTICAL CURVE
VPI	POINT OF VERTICAL INTERSECTION
VPRC	POINT OF VERTICAL REVERSE CURVE
VPT	POINT OF VERTICAL TANGENT

UTILITIES

MR. BRYAN STOEHR
WE ENERGIES - ELECTRIC
333 W. EVERETT STREET - A299
MILWAUKEE, WI 53203
PHONE (414) 944-5516
bryan.stoehr@we-energies.com

MR. LATROY BRUMFIELD, PROJECT MANAGER
CO UTILITY ACCOM &
WISC. GAS CO. D/B/A WE ENERGIES
333 W. EVERETT STREET - A299
MILWAUKEE, WI 53203
PHONE(414) 221-5617
latroy.brumfield@we-energies.com

MR. TERRENCE OLSON, JR., SENIOR ENGINEER
WE ENERGIES (STEAM)
333 W. EVERETT STREET - A299
MILWAUKEE, WI 53203
PHONE(414) 221-4509
terrence.olson@we-energies.com

MS. KAREN EWOLDT
AREA MANAGER
AT&T WISCONSIN
316 W WASHINGTON AVE. RM. 206
MADISON, WI 53703
PHONE (608) 252-5423
ke3543@att.com

MR. CARL DONAHUE
AT&T CORP.
866 ROCK CREEK ROAD
PLANO, IL 60545
PHONE (847) 420-9115
cd8729@att.com

MR. MIKE JANSEN
NETWORK OPS. MANAGER
AT&T MOBILITY
15345 W. COFFEE ROAD
NEW BERLIN, WI 53151
PHONE (262) 785-7102
mj2179@att.com

MR. GREG HEISEL
HWY MAINTENANCE MANAGER
MILWAUKEE COUNTY DEPARTMENT
OF TRANSPORTATION (MCDOT)
10190 W WATERTOWN PLANK ROAD
MILWAUKEE, WI 53226
PHONE (414) 257-6568
greg.heisel@milwcnty.com

MS. MELANIE MACARTHUR
COORDINATOR OF STREET SUPERVISION
MILWAUKEE COUNTY TRANSIT SYSTEM
1942 NORTH 17TH STREET
MILWAUKEE, WI 53205
PHONE(414) 343-1764
mmacarthur@mcts.org

MR. JIM KOSTUCH
OSP NETWORK-
PAETEC BUSINESS SERVICES,
PROJECT MANAGER-
WINDSTREAM NTI, INC. &
WINDSTREAM KDL, INC.
13935 BISHOPS DRIVE
BROOKFIELD, WI 53005
PHONE(262) 792-7938
james.kostuch@windstream.com

MR. MIKE OLSEN
ATC MANAGEMENT, INC.
801 O'KEEFE ROAD
PO BOX 6113
DEPERE, WI 54115-6113
PHONE (920) 338-6582
molsen@atcllc.com

MR. MICHAEL NORRIS
SR. SPECIALIST, RIGHT OF WAY
WEST SHORE PIPE LINE COMPANY
C/O BUCKEYE PARTNERS, L.P.
12920 S. BELL ROAD
LEMONT, IL 60439
PHONE (219) 313-5321
mrnorris@buckeye.com

MR. ARIC AUFDERMAUER
UTILITY PIPELINER A
WEST SHORE PIPE LINE COMPANY
11115 W COUNTY LINE ROAD
MILWAUKEE, WI 53224
PHONE (414) 391-8102

MR. RICHARD TRGOVEC
OSP ENGINEER
MIDWEST FIBER NETWORKS
3701 W. BURNHAM STREET, STE C
MILWAUKEE, WI 53215
PHONE (414) 672-5612
rtrgovec@midwestfibernetworks.com

MR. LUKAS LACROSSE
FIELD ENGINEER
TIME WARNER CABLE
1320 N MARTIN LUTHER KING JR. DRIVE
MILWAUKEE, WI 53212
PHONE(414) 908-4766
lukas.lacrosse@twcable.com

MR. ANTHONY KOTECKI
CONSTRUCTION UTILITY COORDINATOR
CITY OF MILWAUKEE DPW
841 N BROADWAY, RM 710
MILWAUKEE, WI 53202
PHONE(414) 286-2433
anthony.kotecki@milwaukee.gov

MS. CARRIE LEWIS
SUPERINTENDENT
MILWAUKEE WATER WORKS
841 N BROADWAY RM 409
MILWAUKEE, WI 53202
PHONE(414) 286-2801
carrie.lewis@milwaukee.gov

MR. JOHN COTTRELL
OSP ENGINEERING DEPT.
TW TELECOM
3235 INTERTECH DRIVE, SUITE 600
BROOKFIELD, WI 53045
PHONE(414) 908-1011
john.cottrell@twtelecom.com

MS. DEBRA JENSEN
PLANNING SERVICES SUPERVISOR
MILWAUKEE METRO SEWERAGE DIST.
260 W SEEBOTH STREET
MILWAUKEE, WI 53204-1446
PHONE(414) 225-2143
djensen@mmsd.com

MR. STEVE BONCZKOWSKI
VERIZON BUSINESS DIVISION
501 63RD STREET
DOWNERS GROVE, IL 60516
PHONE(630) 395-6701
stephen.bonczkowski@verizon.com

MR. ROBERT GOSSE
DIRECTOR OF DESIGN AND CONSTRUCTION
MILWAUKEE WORLD FESTIVAL, INC.
200 NORTH HARBOR DRIVE
MILWAUKEE, WI 53202
PHONE(414) 287-4466
rgosse@summerfest.com

OTHER CONTACTS

MR. MIKAEL A. EDWARDS
MILWAUKEE POLICE DEPARTMENT
POLICE SERGEANT
4715 W. VLIET STREET
MILWAUKEE, WI 53208
PHONE (414) 935-7617

MR. MICHAEL BABICH
MILWAUKEE COUNTY
SHERIFF DEPARTMENT
821 W STATE STREET - SAFETY BLDG.
MILWAUKEE, WI 53233
PHONE (414) 278-4788

ORDER OF SECTION 2 SHEETS

PROJECT OVERVIEW
TYPICAL SECTIONS
CONSTRUCTION DETAILS
TRAFFIC AND LIGHTING
PLANTING DETAILS
PLAN DETAILS
PAVING GRADES
STORM SEWER
LIGHTING PLAN
PAVEMENT MARKING
TRAFFIC CONTROL
ALIGNMENT

PROJECT CONTACTS

CITY OF MILWAUKEE

MR. JEFFREY POLENSKE
CITY ENGINEER
CITY OF MILWAUKEE
841 N BROADWAY, RM 701
MILWAUKEE, WI 53202
PHONE(414) 286-3701
jeffrey.polenske@milwaukee.gov

DIGGERS HOTLINE
Dial 811 or (800) 242-8511
www.DiggersHotline.com

2

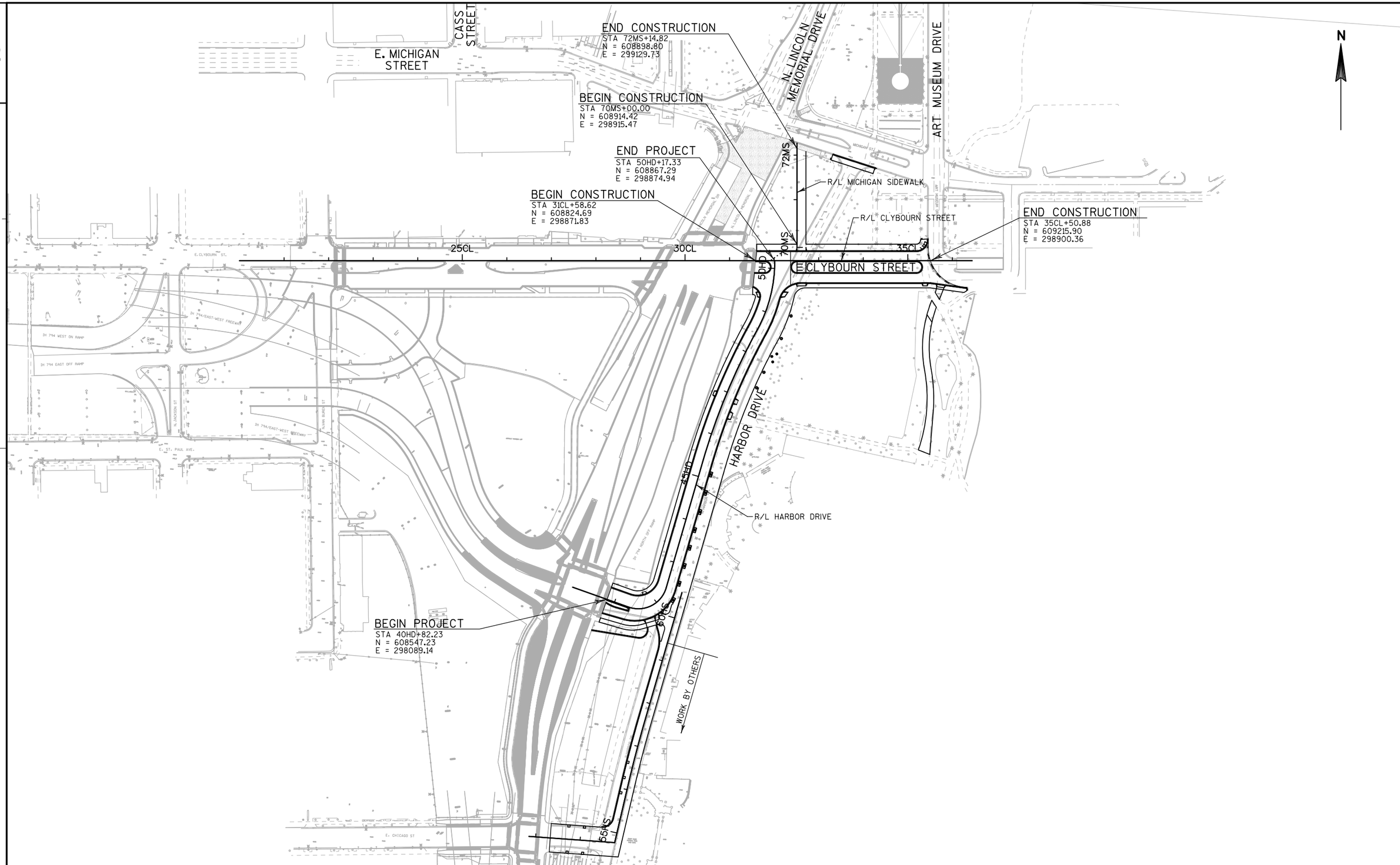
N
END CONSTRUCTION
STA 72MS+14.82
N = 608898.80
E = 299129.73
CASS STREET
E. MICHIGAN STREET
N. LINCOLN MEMORIAL DRIVE
ART MUSEUM DRIVE
BEGIN CONSTRUCTION
STA 70MS+00.00
N = 608914.42
E = 298915.47
END PROJECT
STA 50HD+17.33
N = 608867.29
E = 298874.94
72MS
R/L MICHIGAN SIDEWALK
BEGIN CONSTRUCTION
STA 31CL+58.62
N = 608824.69
E = 298871.83
R/L CLYBOURN STREET
END CONSTRUCTION
STA 35CL+50.88
N = 609215.90
E = 298900.36
25CL
30CL
70MS
35CL
50HD
E. CLYBOURN STREET
HARBOR DRIVE
45HD
R/L HARBOR DRIVE
BEGIN PROJECT
STA 40HD+82.23
N = 608547.23
E = 298089.14
60HS
WORK BY OTHERS
55HS

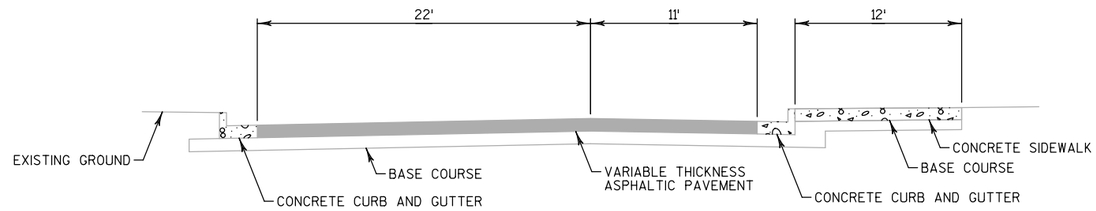

TYPICAL EXISTING SECTION

N. HARBOR DR
STA 42HD+50 TO STA 49HD+00

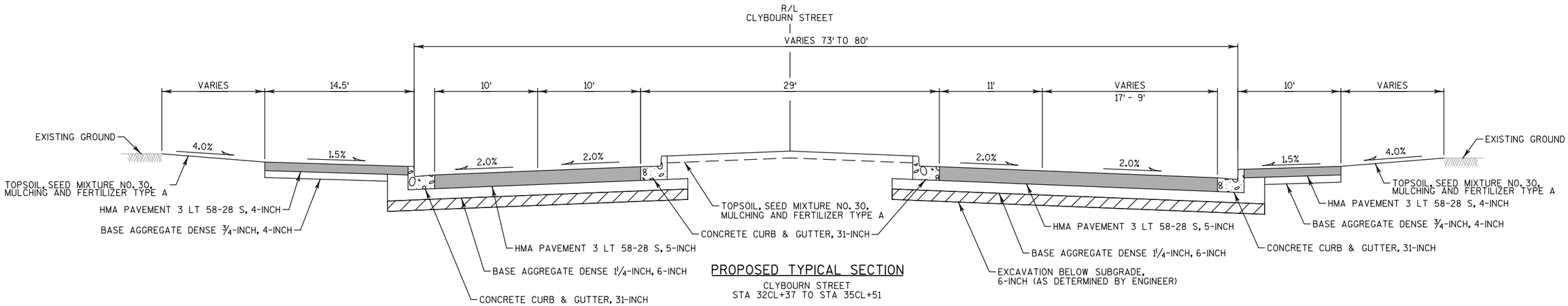

PROPOSED TYPICAL SECTION

CLYBOURN STREET
STA 32CL+37 TO STA 35CL+51

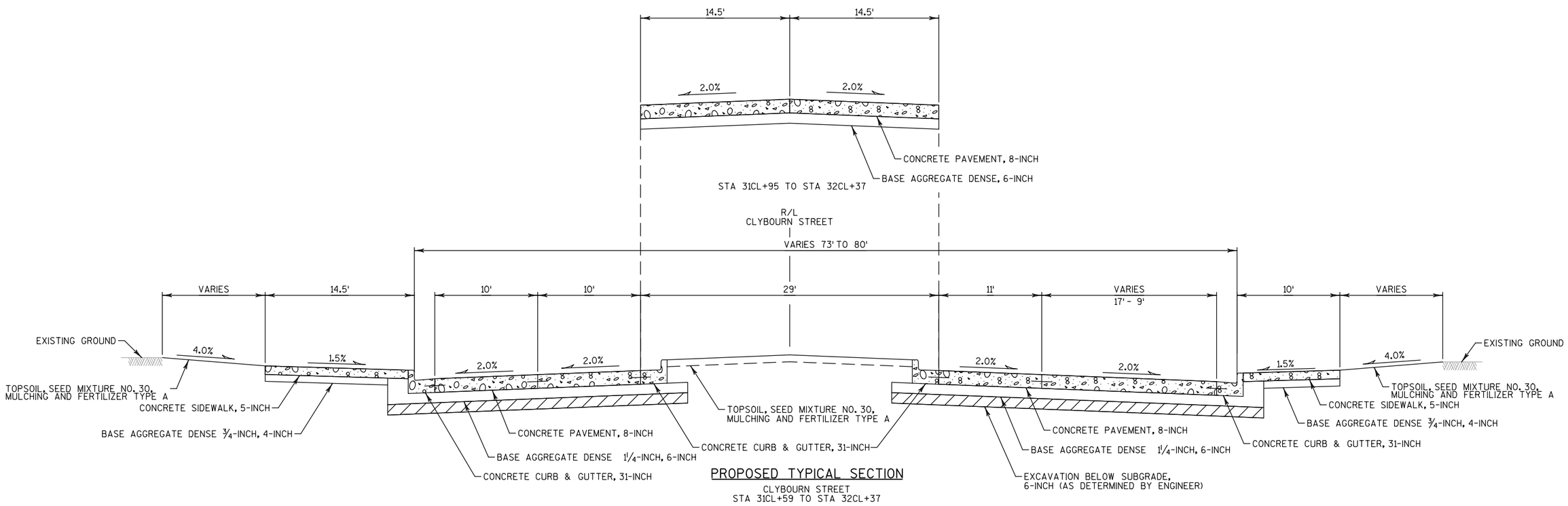

PROPOSED TYPICAL SECTION

CLYBOURN STREET
STA 31CL+59 TO STA 32CL+37

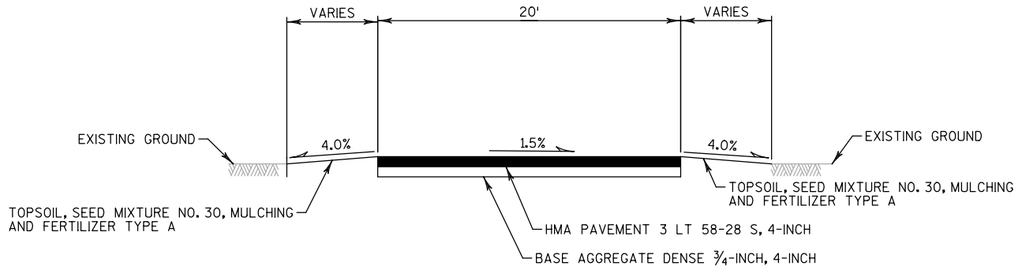

MICHIGAN SIDEWALK
STA 70MS+00 TO STA 72MS+15

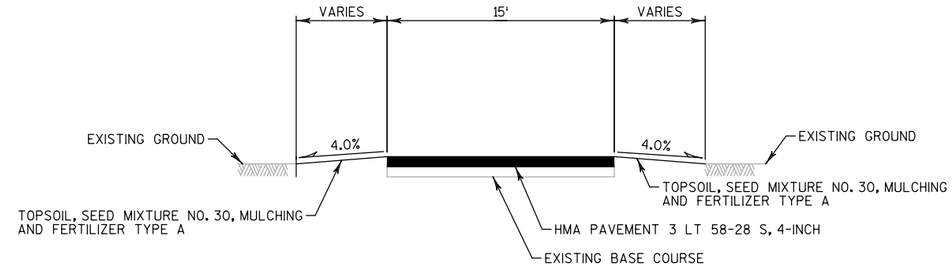

PATH TO SUMMERFEST GROUNDS
EAST OF HARBOR DRIVE

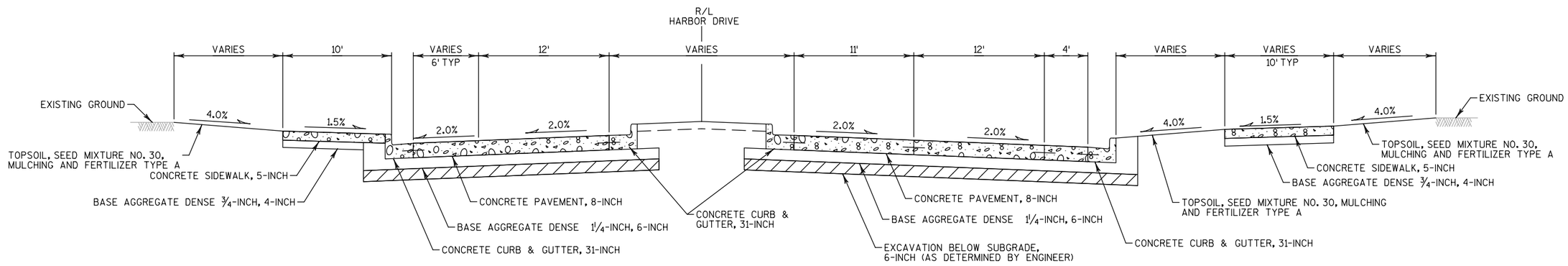

PROPOSED TYPICAL SECTION
HARBOR DRIVE
STA 40HD+82 TO STA 42HD+52

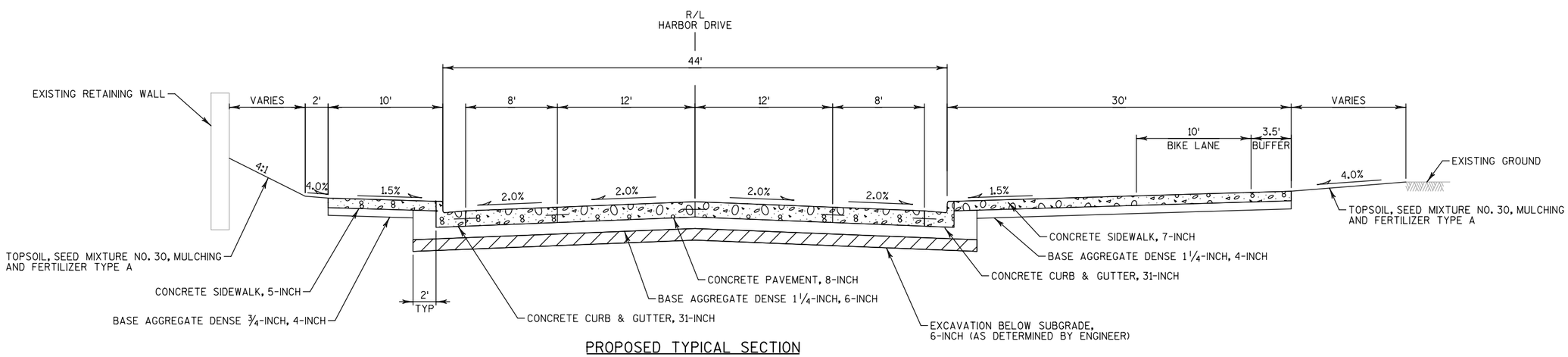

PROPOSED TYPICAL SECTION
HARBOR DRIVE
STA 42HD+52 TO STA 49HD+50

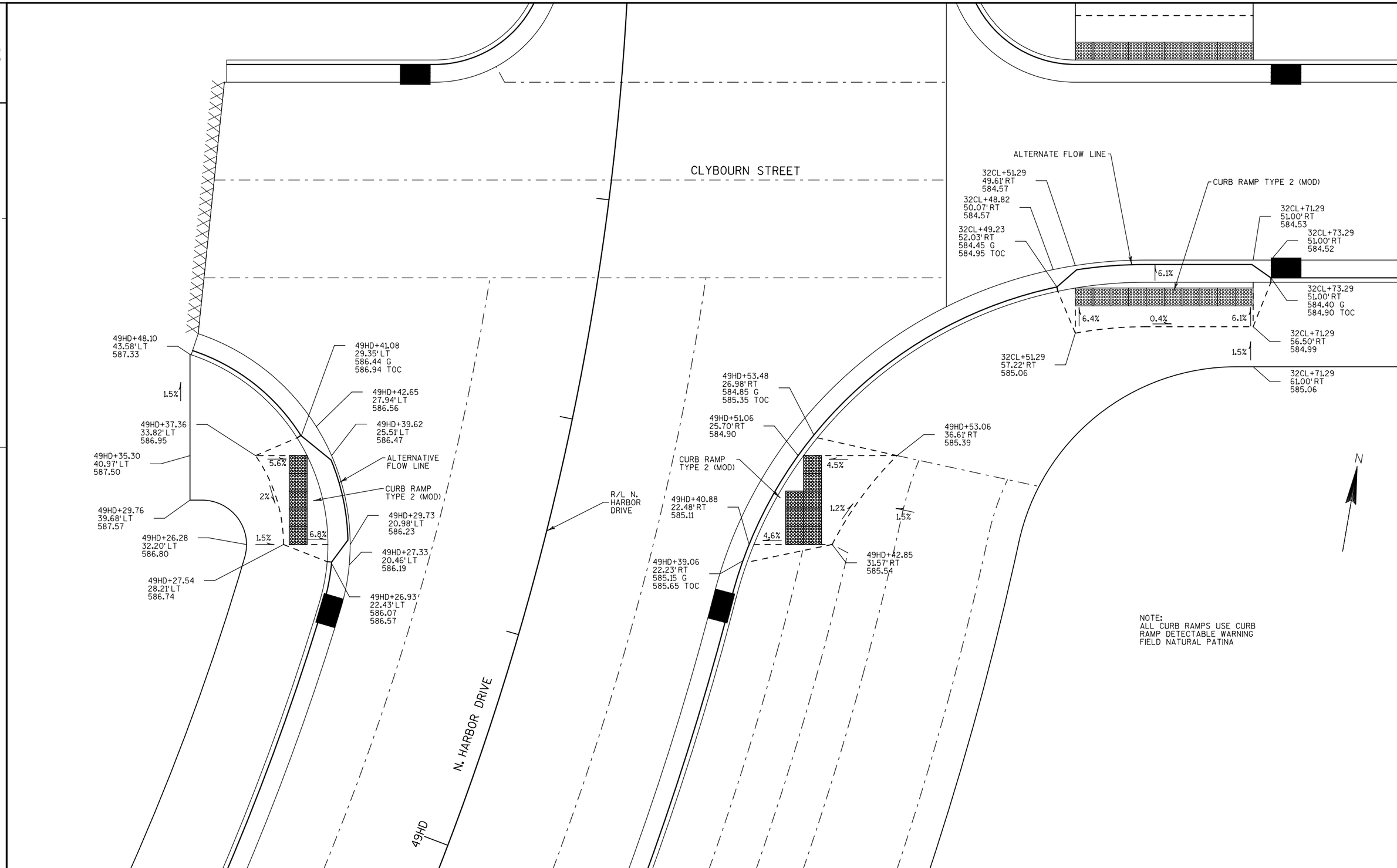

NOTE:
ALL CURB RAMPS USE CURB RAMP DETECTABLE WARNING FIELD NATURAL PATINA

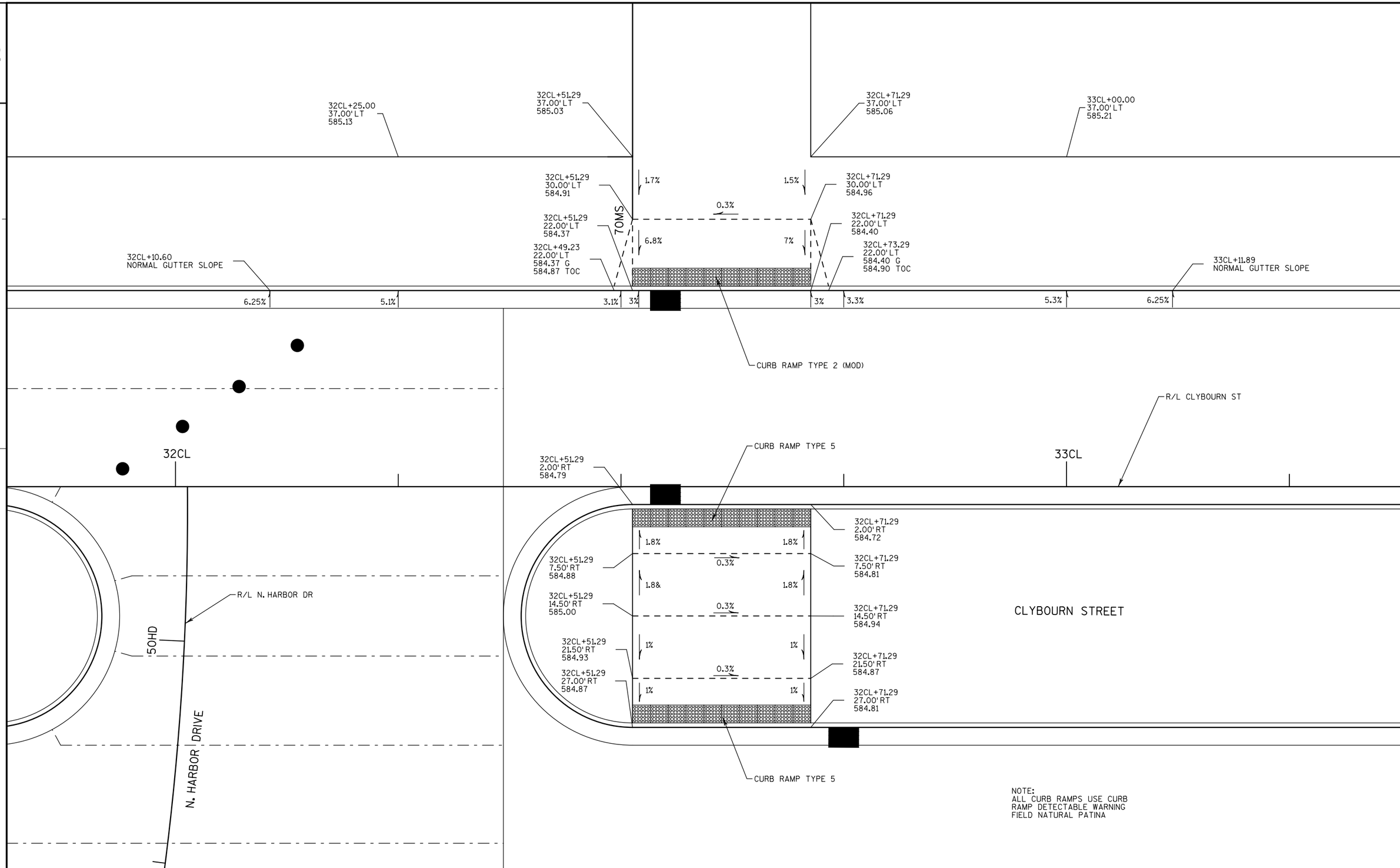

PROJECT NO: 1301-13-71	HWY: LOCAL ROADS	COUNTY: MILWAUKEE	CONSTRUCTION DETAILS - CURB RAMPS	SHEET 8	E

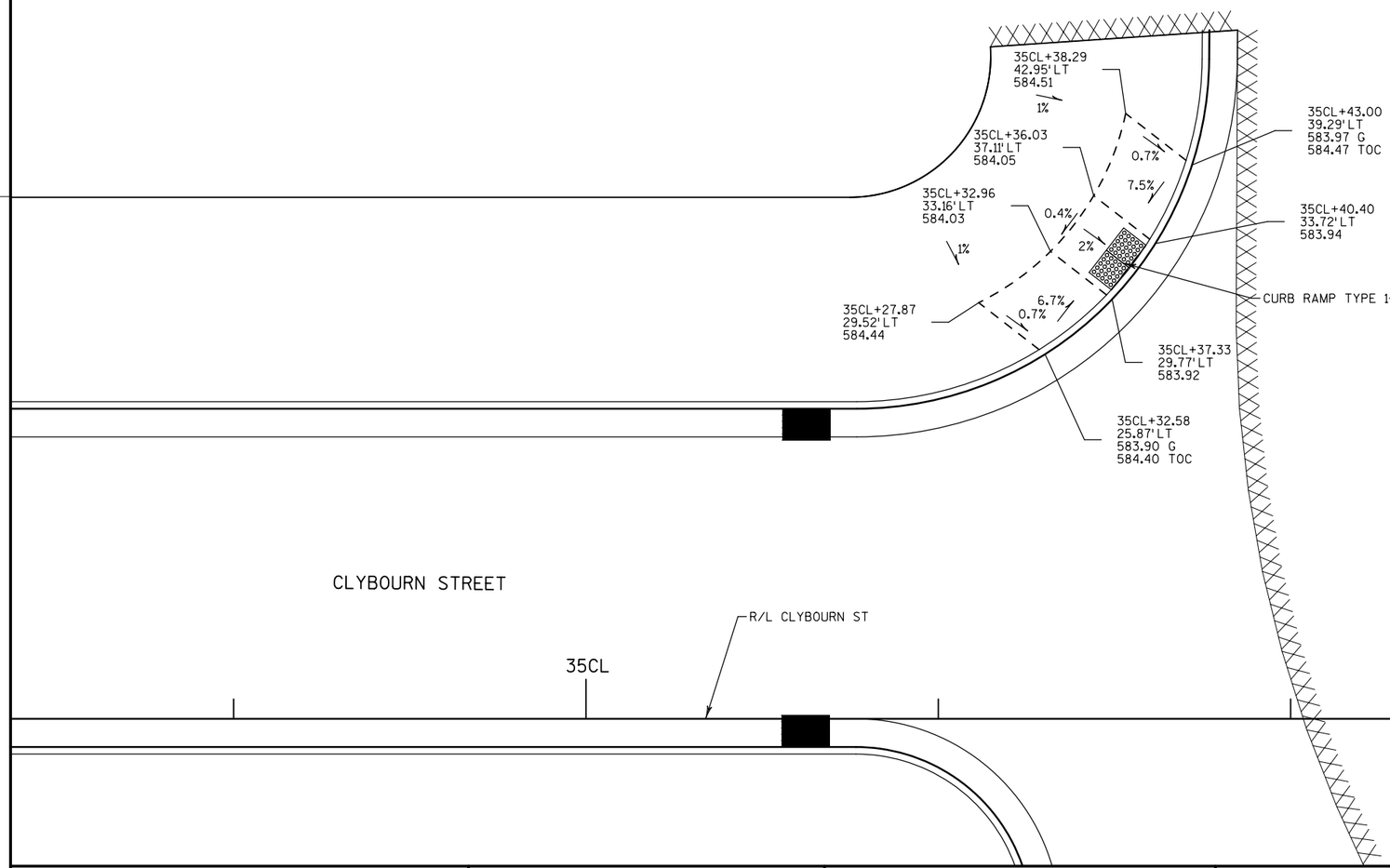

NOTE:
ALL CURB RAMPS USE CURB RAMP DETECTABLE WARNING FIELD NATURAL PATINA

PROJECT NO: 1301-13-71	HWY: LOCAL ROADS	COUNTY: MILWAUKEE	CONSTRUCTION DETAILS - CURB RAMPS	SHEET 9	E

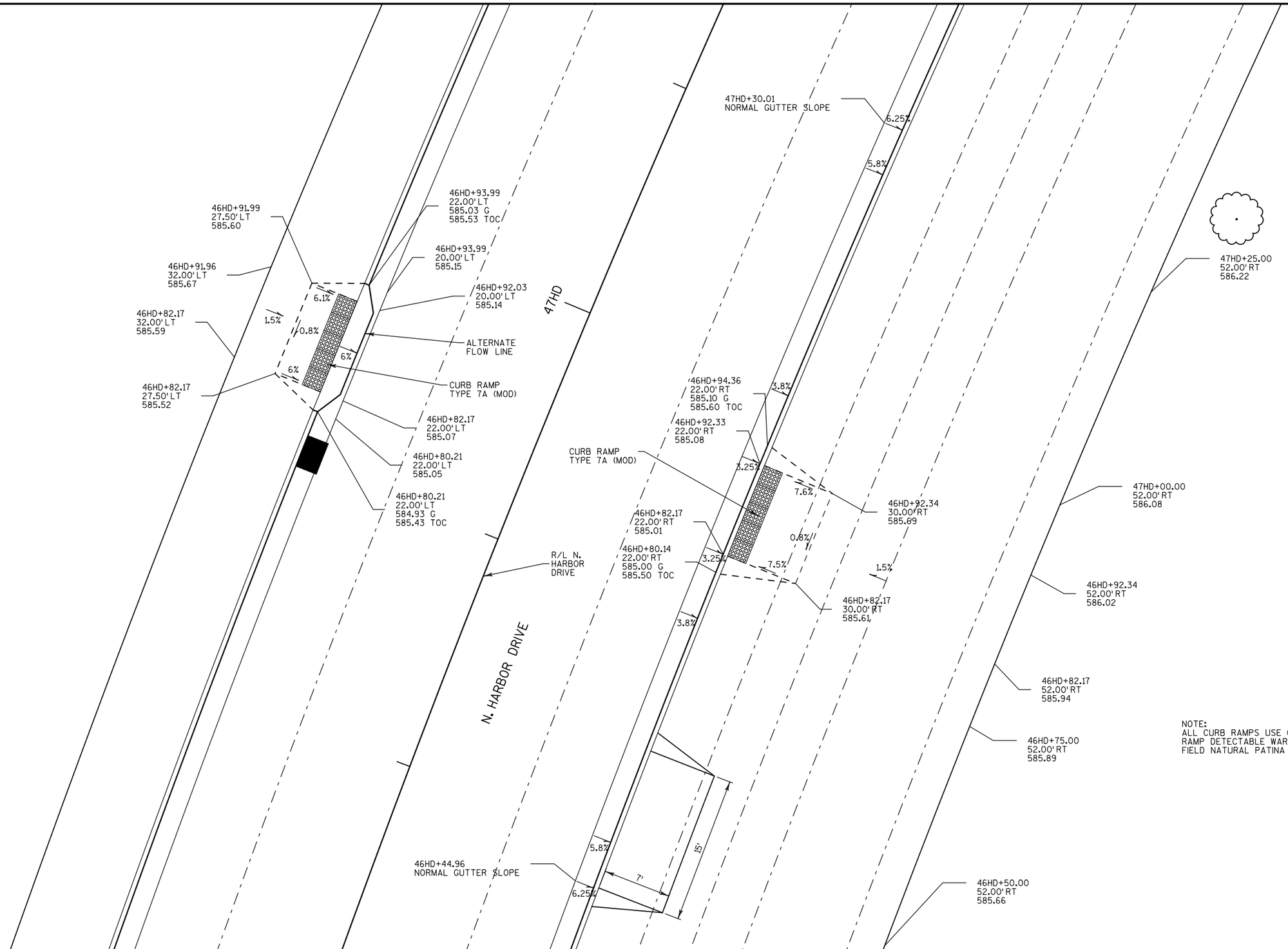

NOTE:
ALL CURB RAMPS USE CURB RAMP DETECTABLE WARNING FIELD NATURAL PATINA

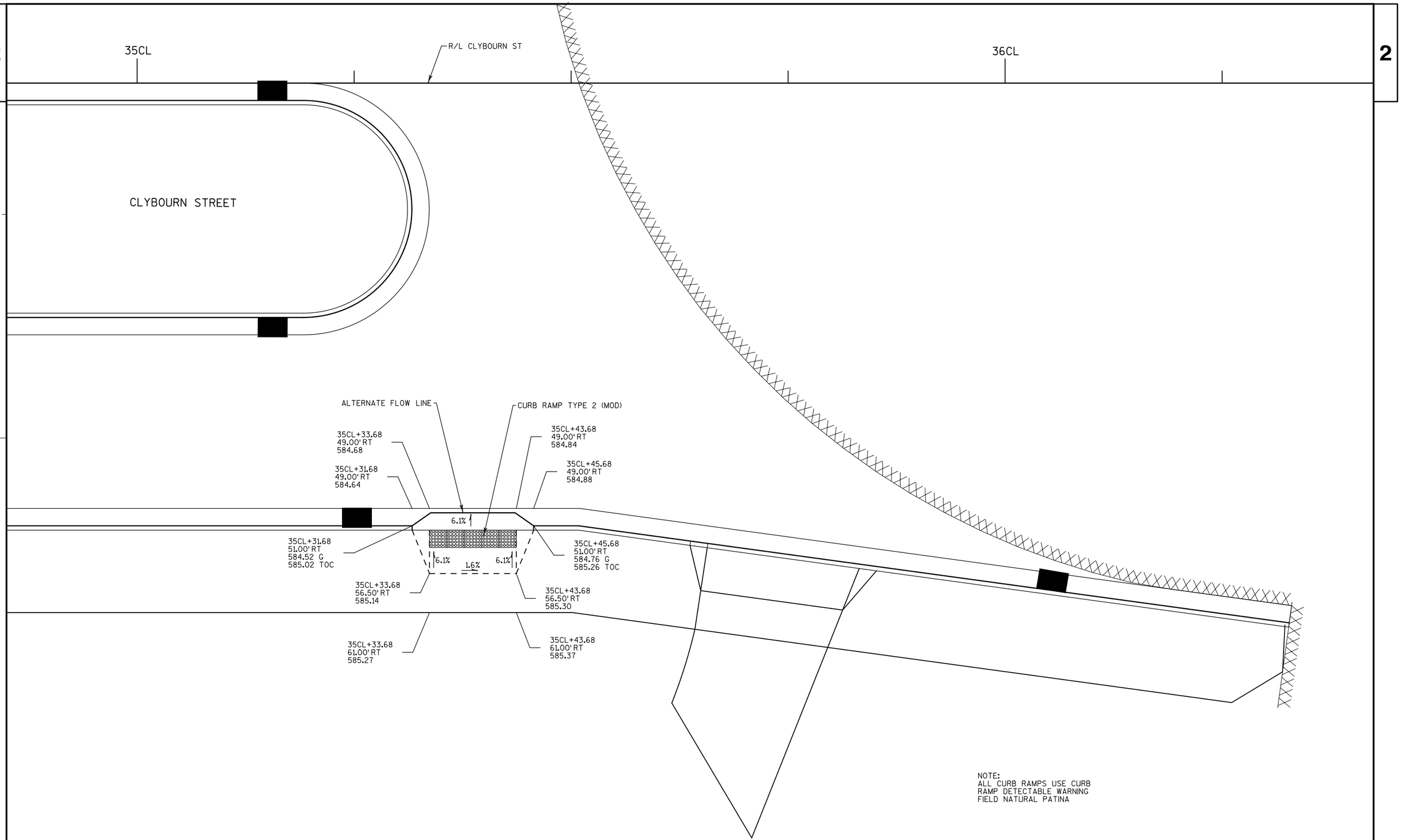

NOTE:
ALL CURB RAMPS USE CURB
RAMP DETECTABLE WARNING
FIELD NATURAL PATINA

PROJECT NO: 1301-13-71	HWY: LOCAL ROADS	COUNTY: MILWAUKEE	CONSTRUCTION DETAILS - CURB RAMPS	SHEET 11	E

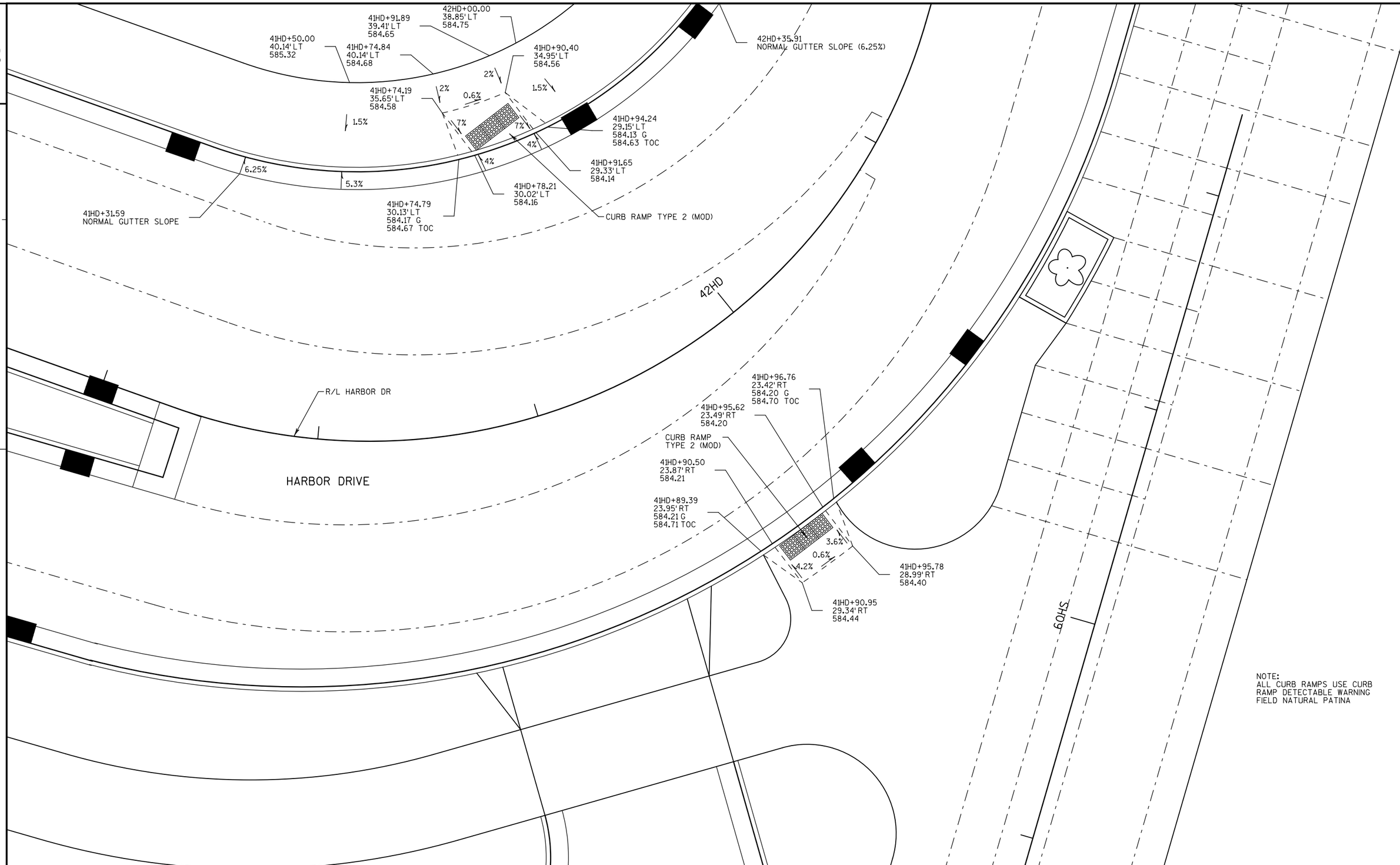

PROJECT NO: 1301-13-71	HWY: LOCAL ROADS	COUNTY: MILWAUKEE	CONSTRUCTION DETAILS - CURB RAMPS	SHEET 12	E

2

* REMOVE 3'-0" CURB & GUTTER MIN. OR TO THE NEAREST JOINT, 6'-0 MAX. UNLESS OTHERWISE DIRECTED ON THE PLAN.

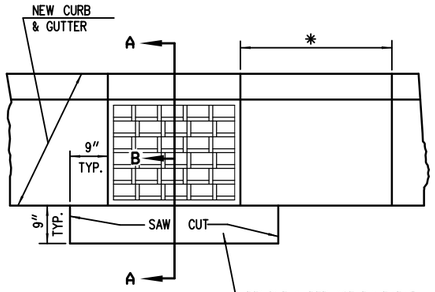

PLAN VIEW

REPAIR BY REMOVING & REPLACING DAMAGED OR LOOSE BRICK OR BLOCK TO DEPTH AS DIRECTED BY ENGINEER. WORK UNDER ADJUSTING CATCH BASIN COVERS SHALL BE CONFINED TO THE BRICK SHIMMING ABOVE THE STRUCTURE CORBEL. THIS SHIMMING SHALL NOT EXCEED 1 FOOT BETWEEN THE TOP OF THE CORBEL AND THE FRAME BOTTOM. ANY WORK MORE EXTENSIVE THAN DESCRIBED IMMEDIATELY ABOVE SHALL BE CONSTRUED AS WORK UNDER RECONSTRUCTING CATCH BASINS. DEPTHS OF BRICKWORK TO BE REPAIRED, AS INDICATED ON THE PLAN, ARE ESTIMATES ONLY AND MAY VARY AT TIME OF CONSTRUCTION.

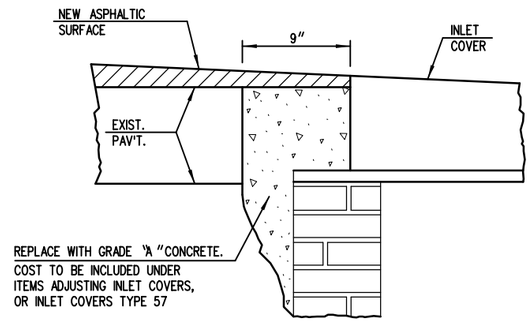

SECTION A-B

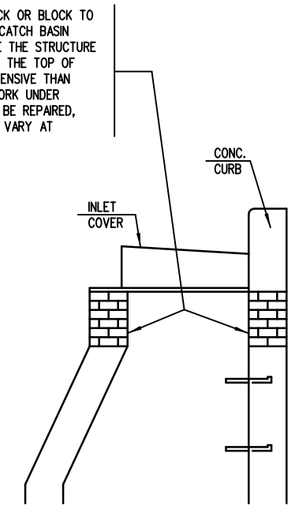

SECTION A-A

ADJUSTING INLET COVERS

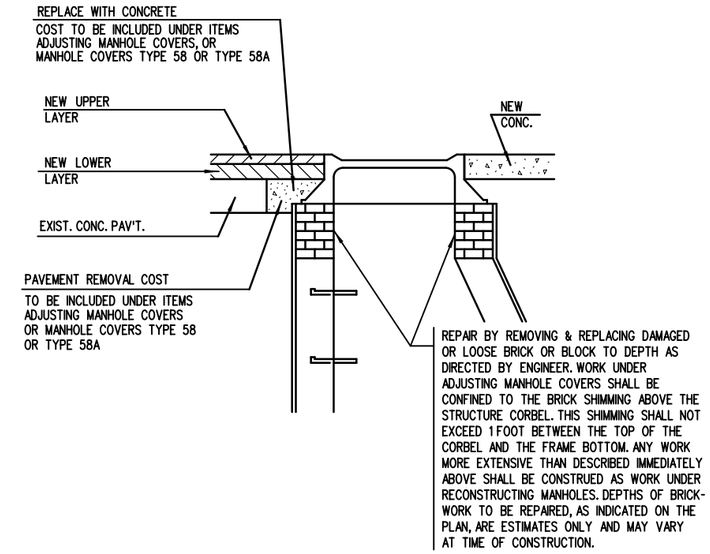

ADJUSTING MANHOLE COVERS OR MANHOLE COVERS TYPE 58 OR TYPE 58A

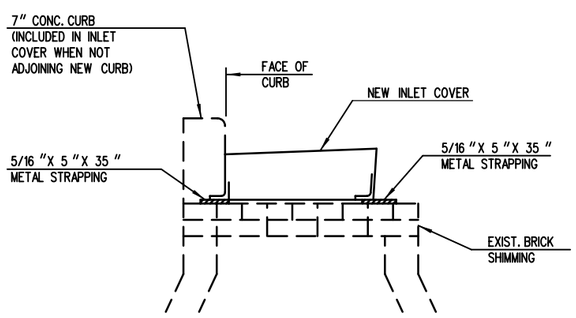

EXIST. DRAINAGE STRUCTURE

NOTES:

1. METAL STRAPPING TO BE 5/16 X"5 X"35 FLAT STEEL, HOT ROLLED (ASTM A36).
2. METAL STRAPPING TO BE PLACED ACROSS EXISTING DRAINAGE STRUCTURE TO SUPPORT NEW COVER. THE METAL STRAPPING SHALL BE SET ON A BED OF MORTAR.
3. PRECAST CONCRETE FLAT SLAB TOPS MAY BE USED ON THE STRUCTURE. THE TOPS SHALL BE INSTALLED ON A BED OF MORTAR.
4. COST OF MATERIALS AND LABOR TO BE INCLUDED IN PRICE BID FOR INLET COVER, TYPE 57.

DETAIL FOR PLACING NEW INLET COVER ON EXISTING INLET USING METAL STRAPPING MATERIALS

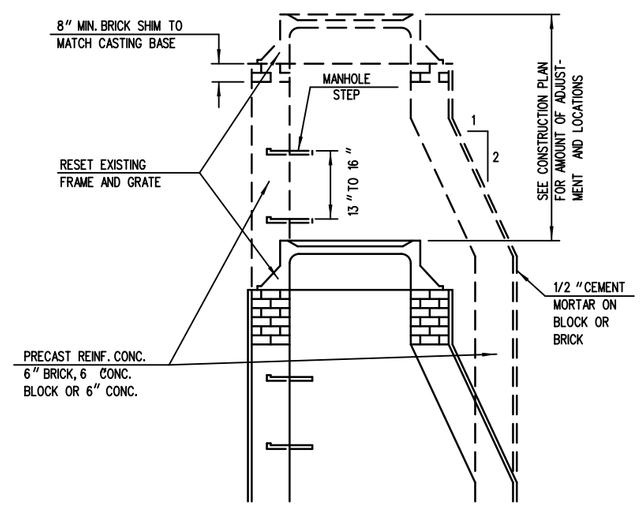

CORBEL MAY BE REVERSED
STRAIGHT SIDE LEANED
SLIGHTLY TO CLEAR CURB HEAD.

REPAIR BY REMOVING AND REPLACING DAMAGED OR LOOSE BRICK OR BLOCK TO THE DEPTH AS SHOWN ON THE PLAN OR AS DIRECTED BY THE ENGINEER. DEPTHS AS INDICATED ON PLAN ARE ESTIMATES ONLY AND MAY VARY AT TIME OF CONSTRUCTION.

RECONSTRUCTING MANHOLES AND INLETS

CONSTRUCTION NOTES

1. LOCATIONS OF STRUCTURES IN CURB & GUTTER SECTIONS REFER TO FACE OF CURB.
2. LOCATIONS OF STRUCTURES NOT IN CURB AND GUTTER SECTIONS REFER TO CENTERLINE OF STRUCTURE.
3. PIPE LENGTHS GIVEN ARE APPROXIMATE OUT TO OUT OF STRUCTURE.
4. GRATE & RIM ELEVATIONS ARE GIVEN AT FLOW LINE OF INLET COVER OR AT CENTER-LINE OF MANHOLE COVER.
5. WHEN NEW COVERS ARE PLACED, THE FIRST 12 OF ADJUSTMENT OR REPAIRING SHALL BE INCLUDED IN THE COST OF THE NEW COVER. ANY ADJUSTMENT OR REPAIR OF BRICKWORK 12 " OR LESS WILL BE PAID AS ADJUSTING COVERS WHEN RESETTING EXISTING COVERS, ANY ADJUSTMENT OR REPAIR OF BRICKWORK MORE THAN 12 " WILL BE PAID AS A RECONSTRUCT.
6. MANHOLE ADJUSTMENTS IN ASPHALTIC PAVEMENT WILL BE MADE AFTER THE LOWER LAYER IS PLACED.
7. WHEN CONSTRUCTING CONCRETE CURB ADJACENT TO INLET COVER TYPE 57, TWO (2) DEFORMED TIE BARS SHALL BE PLACED LONGITUDINALLY THROUGH THE CURB SECTION AND EXTENDED ONE (1) FOOT BEYOND EACH SIDE OF THE FRAME. A DUMMY JOINT SHALL BE CUT IN THE CURB AT EACH SIDE OF THE FRAME.

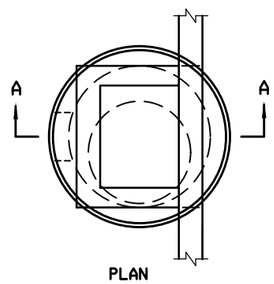

PLAN

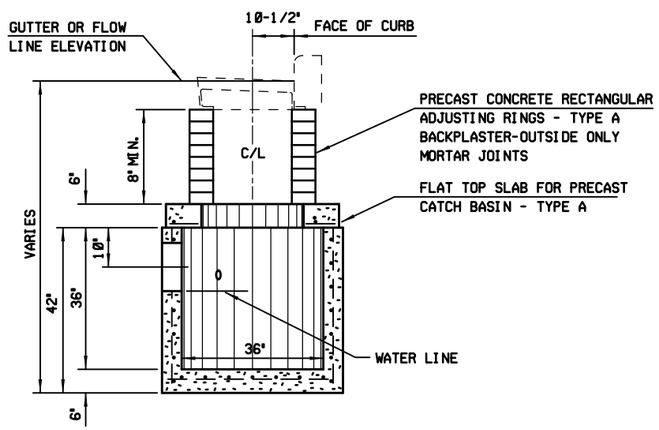

SECTION A-A

OUTLET - TYPE 45A

GENERAL NOTES

1. PRECAST INLET UNITS AND BASES SHALL CONFORM TO THE PERTINENT REQUIREMENTS OF AASHTO DESIGNATION M199 AND ASTM DESIGNATION C-478 AND THESE DETAILED REQUIREMENTS WHICH SHALL GOVERN WHERE THEY ALTER THE AASHTO AND ASTM STANDARDS.
2. ALL REINFORCEMENT STEEL SHALL BE GRADE 60 OR GREATER AND EMBEDDED AT LEAST 1" CLEAR.
3. PRECAST REINFORCED BASES SHALL BE PLACED ON A BED OF MATERIAL AT LEAST 4 IN DEPTH WHICH MEETS REQUIREMENTS FOR GRANULAR BACKFILL. THIS BEDDING SHALL BE COMPACTED AND PROVIDE UNIFORM SUPPORT FOR THE ENTIRE AREA OF THE BASE.
4. SET FRAME ELEVATION 0.03 FT. LOWER THAN ELEVATION INDICATED ON PLAN.

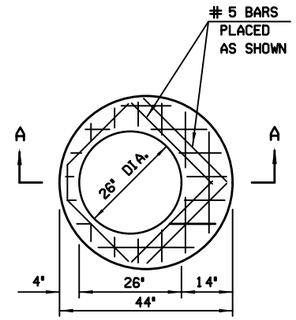

PLAN

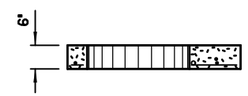

SECTION A-A

TOP SLAB - TYPE A

FLAT TOP SLAB SHALL BE 6" THICK REINFORCED WITH ONE LAYER OF STEEL WITH A MINIMUM AREA OF 0.32 SQ. IN. PER LINEAL FOOT IN BOTH DIRECTIONS, PLACED NEAR THE BOTTOM OF THE SLAB WITH 1" CLEAR COVER.

ADDITIONALLY, NO. 5 BARS SHALL BE PLACED AROUND TOP SLAB OPENING AS SHOWN.

REINFORCEMENT SHALL BE TIED OR WELDED TOGETHER.

THE MINIMUM COMPRESSIVE STRENGTH OF THE CONCRETE SHALL BE 4000 P.S.I.

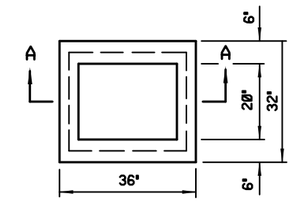

PLAN

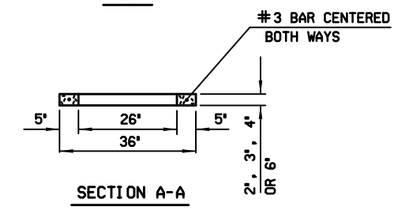

SECTION A-A

RECTANGULAR ADJUSTING RING - TYPE A

THE ADJUSTING RINGS SHALL BE 2", 3", 4" OR 6" IN HEIGHT.

THE MINIMUM COMPRESSIVE STRENGTH OF THE CONCRETE SHALL BE 3300 P.S.I.

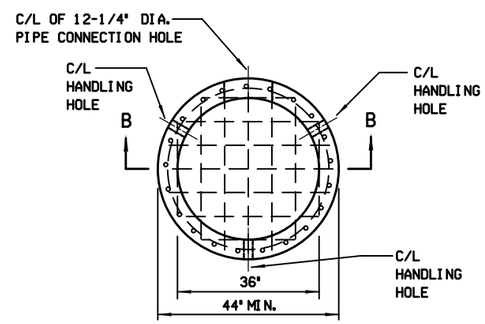

RISER SECTION WITH INTEGRAL BASE PLAN

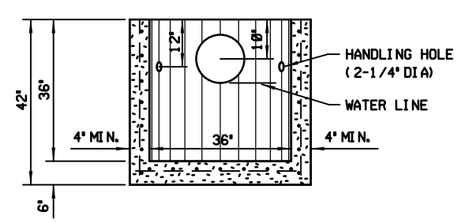

SECTION B-B

CIRCUMFERENTIAL AND LONGITUDINAL REINFORCEMENT IN THE RISER SECTON SHALL EACH CONSIST OF ONE LAYER OF STEEL NOT LESS THAN 0.12 SQ. IN. PER FOOT AND SHALL BE PLACED IN THE CENTER THIRD OF THE WALL.

THE BASE SLAB SHALL BE REINFORCED WITH ONE LAYER OF STEEL WITH A MINIMUM AREA OF 0.32 SQ. IN. PER FOOT IN BOTH DIRECTIONS, PLACED ABOVE THE MIDPOINT OF THE SLAB.

RISER SECTION AND BASE SLAB REINFORCEMENT SHALL BE TIED OR WELDED TOGETHER.

TWO TO THREE HANDLING HOLES 2-1/4" IN DIAMETER AND A PIPE CONNECTION HOLE 12-1/4" IN DIAMETER SHALL BE CAST OR CORED IN THE RISER SECTION AT THE LOCATIONS SHOWN. LIFTING DEVICES MAY BE SUBSTITUTED FOR HANDLING HOLES.

NO JOINTS OR HOLES SHALL BE BELOW THE WATERLINE.

THE MINIMUM COMPRESSIVE STRENGTH OF THE CONCRETE SHALL BE 4000 P.S.I.

RISER SECTION MAY TAPER TO A 33" INTERNAL DIAMETER AT IT'S BOTTOM PROVIDED A 44" MINIMUM OUTSIDE DIAMETER IS MAINTAINED.

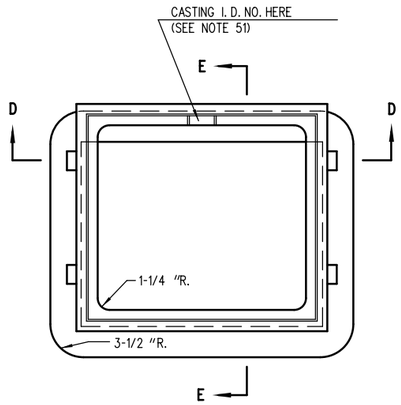

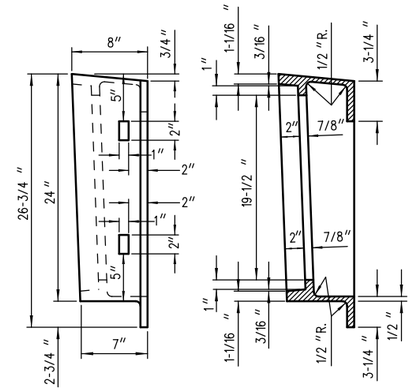

SECTION E-E

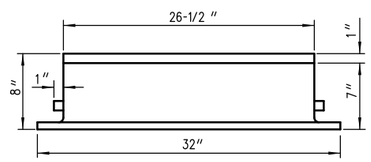

FRAME

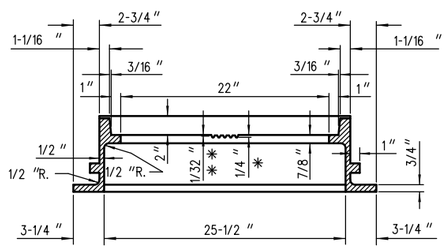

SECTION D-D

✳ DEPRESSION FOR LETTERS

✳ ✳ CLEARANCE FROM TOP OF LETTERS TO FACE OF SEAT

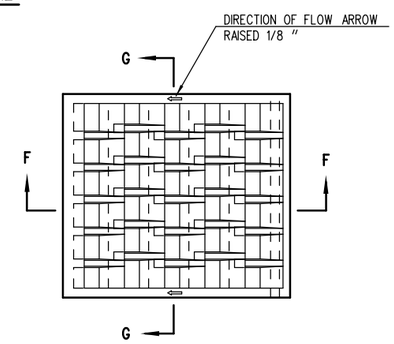

GRATE

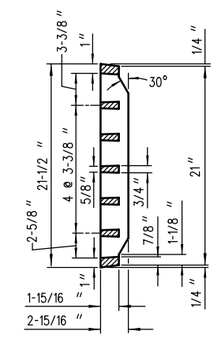

SECTION G-G

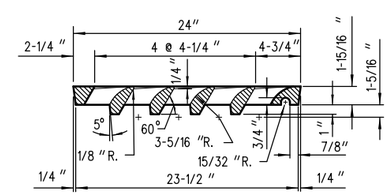

SECTION F-F

GENERAL NOTES

ALL EDGES ARE TO BE GROUND

ALL CASTINGS SHALL BEAR THE FOLLOWING IDENTIFICATION MARKS IN THE FORM OF LEGIBLE LETTERS OR NUMERALS RAISED 1/8 "

ON THE FRAME

1. ON THE UPPER FACE OF THE FLANGE IN 1 INCH HIGH LETTERS THE INITIALS OR MONOGRAM OF THE FOUNDRY, THE YEAR MADE AND THE SERIAL NUMBER OF THE INDIVIDUAL CASTING.
2. ON THE SEAT OF THE FRAME IN 1 INCH HIGH LETTERS, THE CASTING IDENTIFICATION NUMBER (51).

ON THE GRATE

1. ON THE UPPER SIDE OF THE GRATE IN 1 INCH HIGH LETTERS, THE INITIALS OR MONOGRAM OF THE FOUNDRY, THE YEAR MADE, THE CASTING IDENTIFICATION NUMBER (57) AND THE SERIAL NUMBER OF THE INDIVIDUAL CASTING.

INLET COVER - TYPE 57

LID-145 LBS., FRAME-204 LBS.

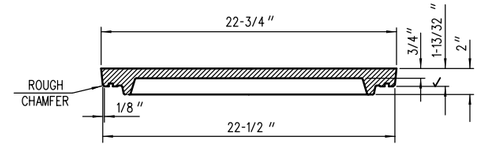

SECTION A-A

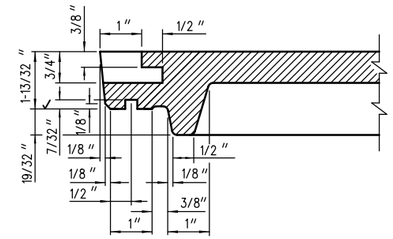

SECTION B-B

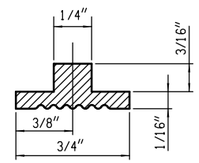

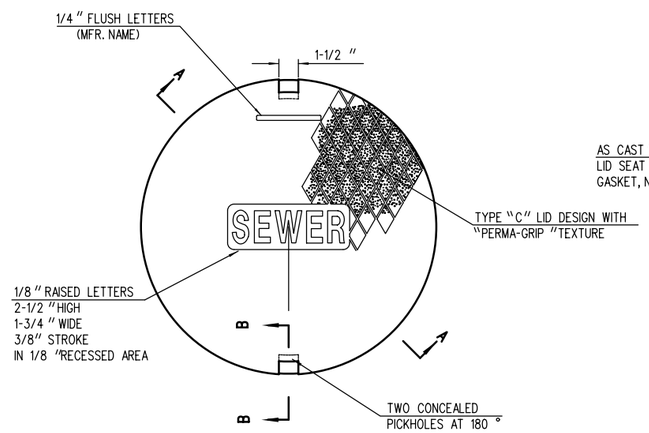

TOP VIEW

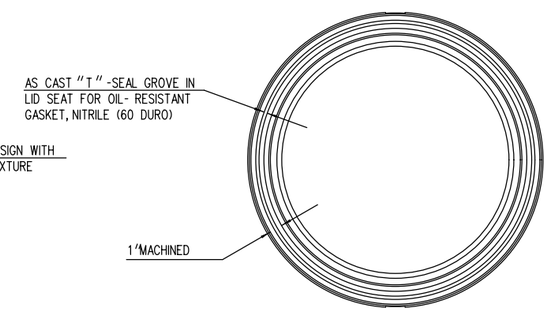

BOTTOM VIEW

MANHOLE COVER - TYPE 58-A

LID - 107 LBS.

NOTE:

ALL CASTINGS SHALL BEAR THE FOLLOWING IDENTIFICATION MARKS IN THE FORM OF LEGIBLE LETTERS OR NUMERALS RAISED 1/8" HAVING A DIGIT OR LETTER HEIGHT OF ONE INCH ON LOWER FACE OF LID:

1. THE INITIALS OR MONOGRAM OF THE FOUNDRY.
2. THE CONTRACT NUMBER AND YEAR MADE.
3. THE CASTING IDENTIFICATION NUMBER.
4. THE SERIAL NUMBER OF THE INDIVIDUAL CASTING.

NOTE: ALL EXTERIOR EDGES SHALL BE GROUND.

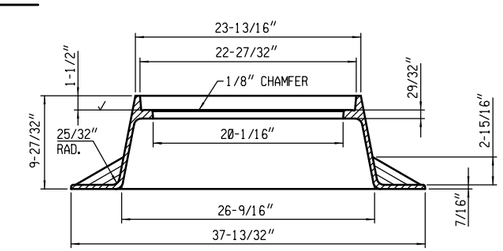

MANHOLE FRAME - TYPE MS21

FRAME - 182 LBS.

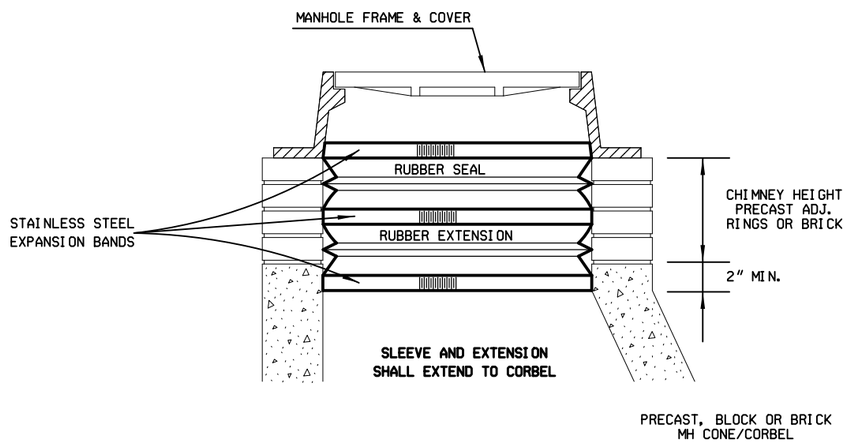

INTERNAL SANITARY MANHOLE SEAL

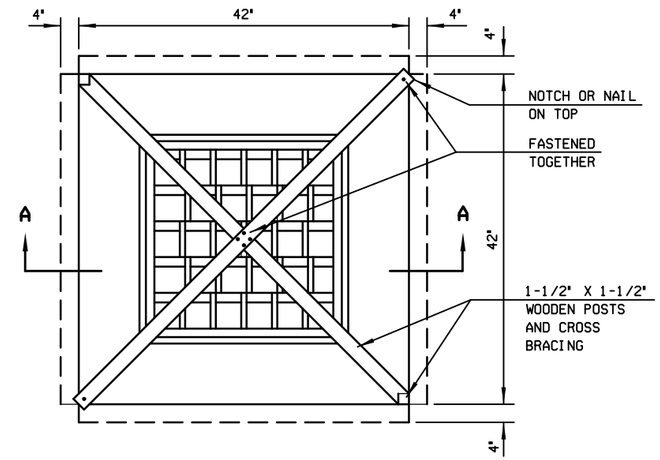

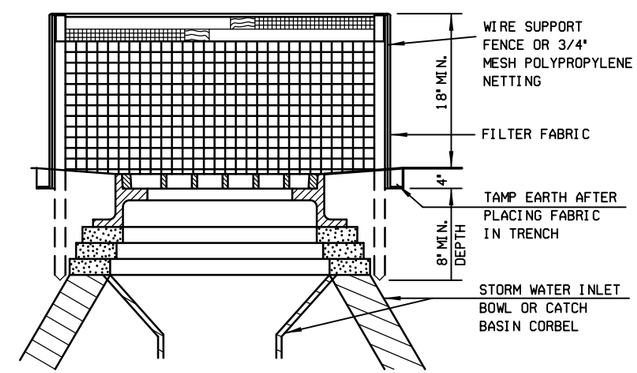

SECTION A-A

INLET SCREEN

(NOT PAVED) (TYPE R)

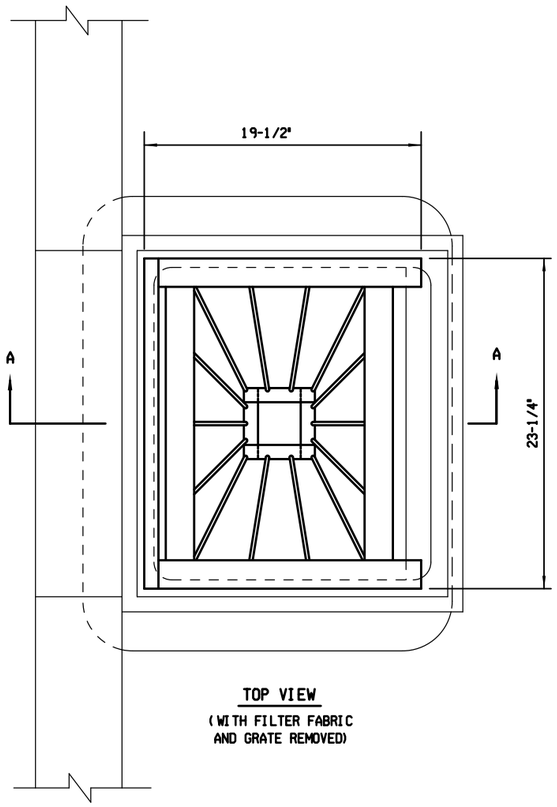

TOP VIEW

(WITH FILTER FABRIC AND GRATE REMOVED)

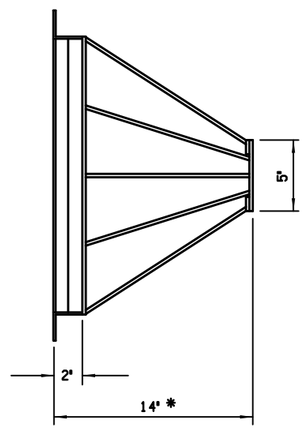

FRONT VIEW

(BASKET ONLY)

* MAY BE DECREASED IF INLET IS OF INSUFFICIENT DEPTH

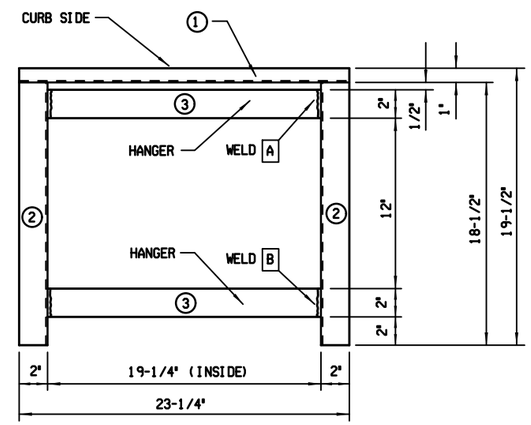

TOP VIEW

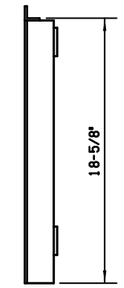

SIDE VIEW

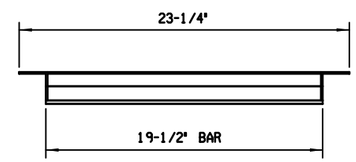

FRONT VIEW

BAR SCHEDULE

NO.	SHAPE	SIZE	THICKNESS	LENGTH	QUANTITY
1	ANGLE	1" X 1"	1/8"	23-1/4"	1
2	ANGLE	2" X 2"	1/8"	18-1/2"	2
3	BAR	2"	1/4"	19-1/2"	2

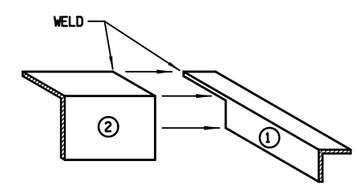

WELD CONNECTION - A

TOP FRAME

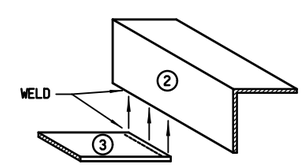

WELD CONNECTION - B

BASKET HANGER TO TOP FRAME

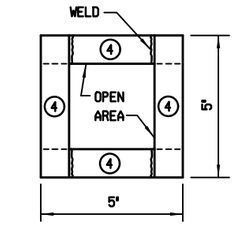

TOP VIEW

SIDE VIEW

BAR SCHEDULE

NO.	SHAPE	SIZE	THICKNESS	LENGTH	QUANTITY
4	BAR	1"	1/4"	5"	4

BASKET BOTTOM

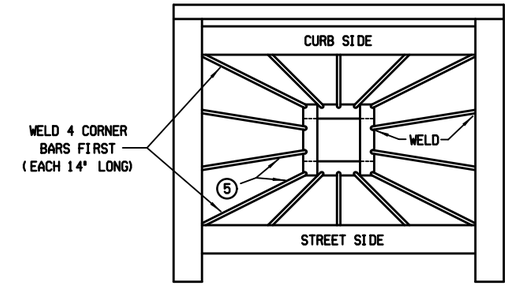

ROD PLACEMENT

ROD SCHEDULE

NO.	SHAPE	SIZE	THICKNESS	LENGTH	QUANTITY
5	ROD	1/4" MIN.	1/8"	12" TO 14" (CUT TO FIT)	14

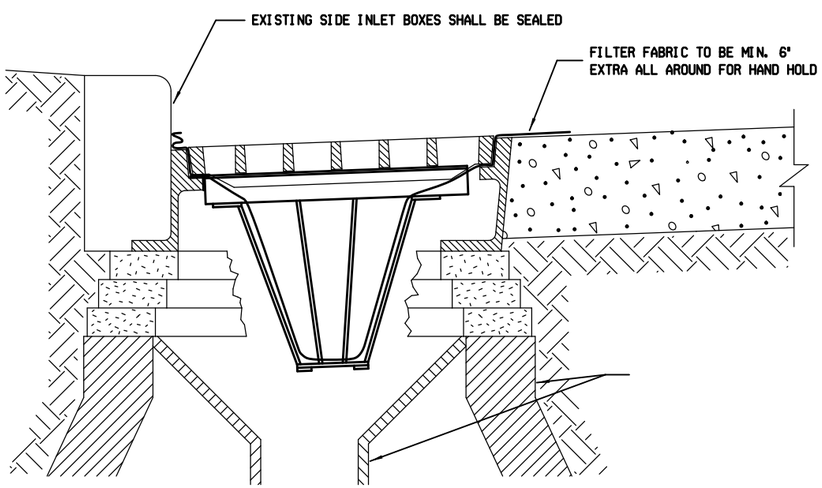

SECTION A-A

TYPE M
INLET BASKET

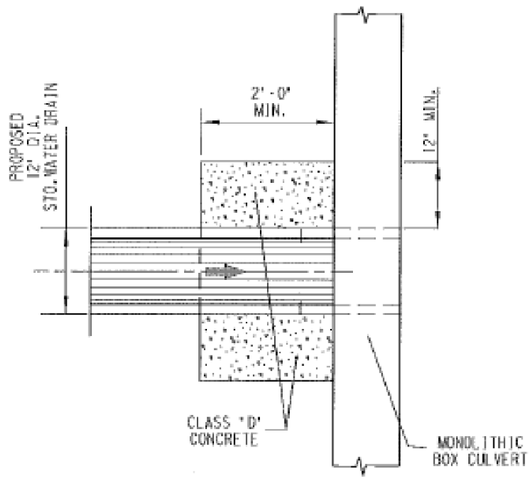

DETAIL OF CONNECTION TO
VARIOUS SIZED BOX CULVERTS

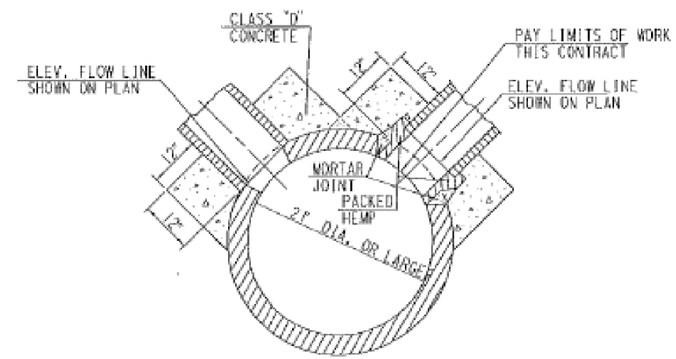

DETAIL OF DIRECT CONNECTION TO
VARIOUS SIZED ROUND STORM SEWER PIPE

CONCRETE COLLAR MODIFIED

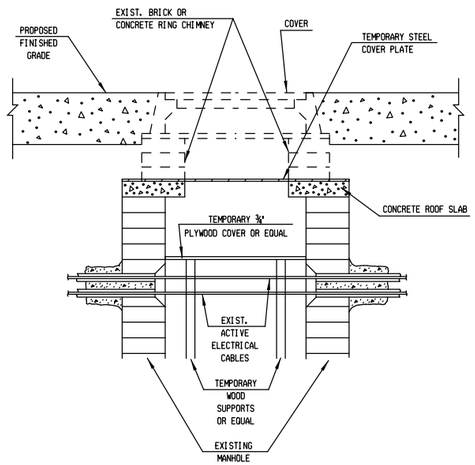

BLOCK OR PRECAST MANHOLE

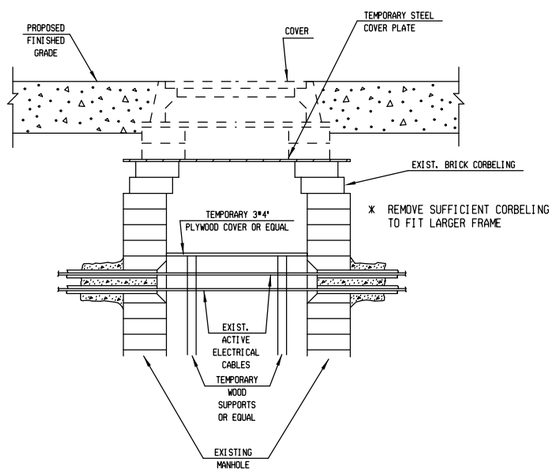

BRICK ROUND MANHOLE

ADJUSTING CUC MANHOLE COVERS

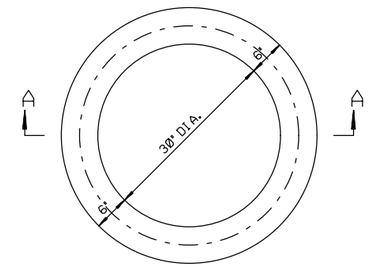

PLAN

CONCRETE ADJUSTING RING

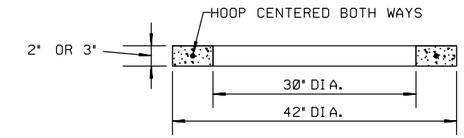

SECTION A-A

THE ADJUSTING RING SHALL BE 2" OR 3" IN HEIGHT.

THE CIRCUMFERENTIAL STEEL SHALL BE CENTERED WITHIN THE RING.

AREA OF CIRCUMFERENTIAL STEEL = 0.07 SQ. INCH PER VERTICAL FOOT WITH A MINIMUM OF .024 SQ. INCH IN ANY ONE RING.

THE MINIMUM COMPRESSIVE STRENGTH OF THE CONCRETE CORE SHALL BE 4000 P.S.I.

ADJUSTING CUC MANHOLES

N. HARBOR DR. - E. CHICAGO ST. TO E. CLYBOURN ST.				
NO.	LOCATION	MANHOLE ADJUSTMENT EACH	COVER	REMARKS
1846	STA 59+70HS ,25' LT	1	NEW COVER	REMOVE CHIMNEY TO ROOF DECK
1845	STA 60+00HS, 5' LT	1	NEW COVER	REMOVE CHIMNEY TO ROOF DECK
1843	STA 45+90HD, 30' RT	1	NEW COVER	REMOVE CHIMNEY TO ROOF DECK
1842	STA 46+40HD, 25' RT	1	NEW COVER	REMOVE CHIMNEY TO ROOF DECK
1841	STA 49+80HD, 40' RT	1	NEW COVER	REMOVE CHIMNEY TO ROOF DECK
TOTAL		5	5	

CUC MANHOLES CONTAIN LIVE ELECTRICAL AND COMMUNICATIONS CABLES INCLUDING FIBER OPTICS. THE CONTRACTOR WILL FOLLOW ALL OSHA AND NFPA SAFETY REGULATIONS REGARDING WORKING IN CLOSE SPACES AND WORKING AROUND LIVE CABLES.

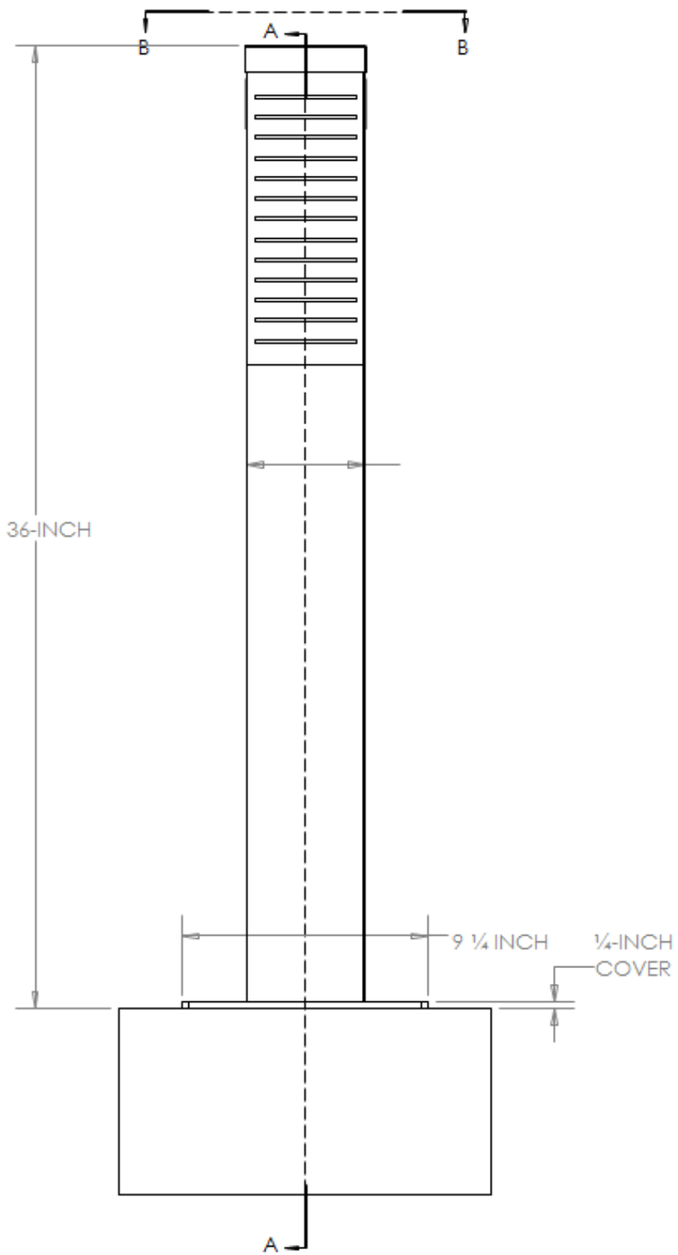

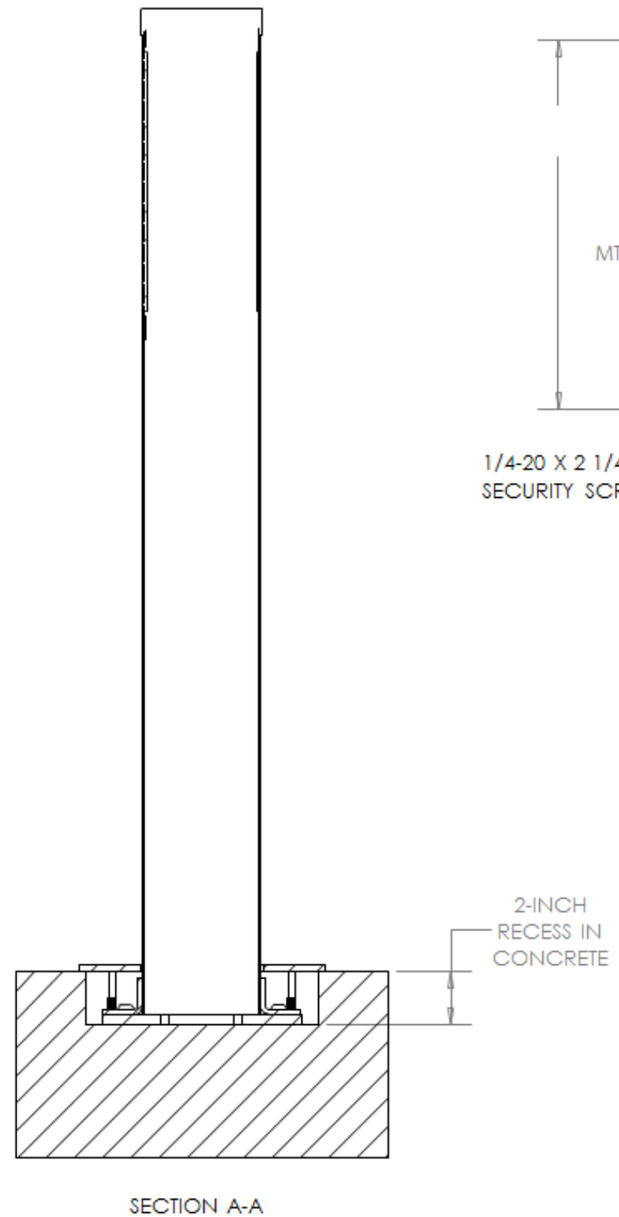

SECTION A-A

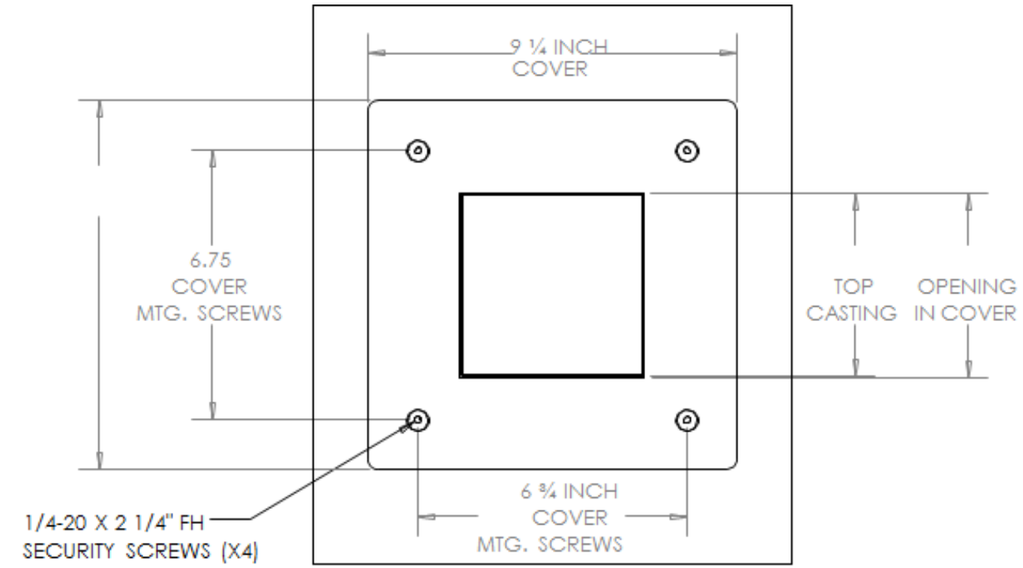

SECTION B-B

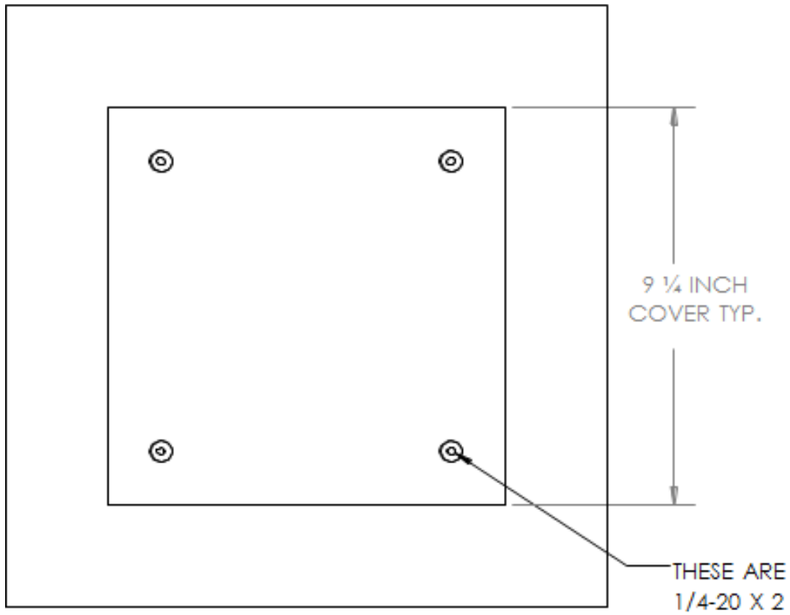
9 ¼ INCH
COVER TYP.
THESE ARE THE SAME
1/4-20 X 2 1/4" SCREWS
USED WHEN THE BOLLARD
IS INSTALLED.

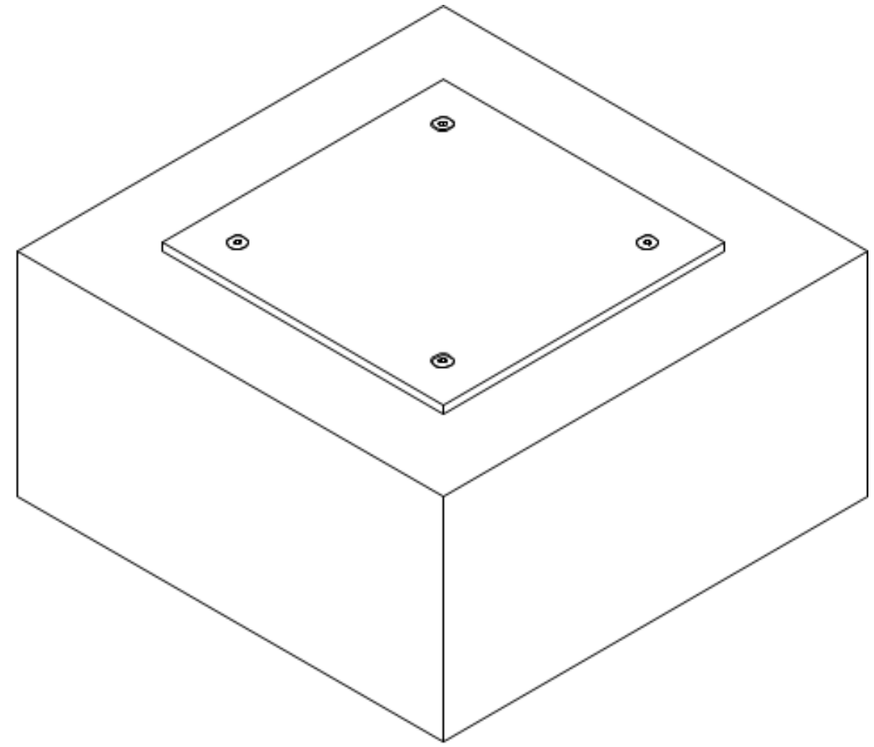

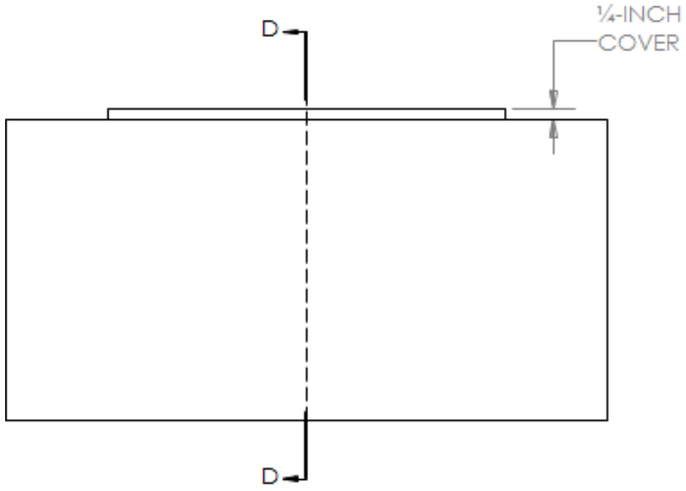
D
¼-INCH
COVER
D

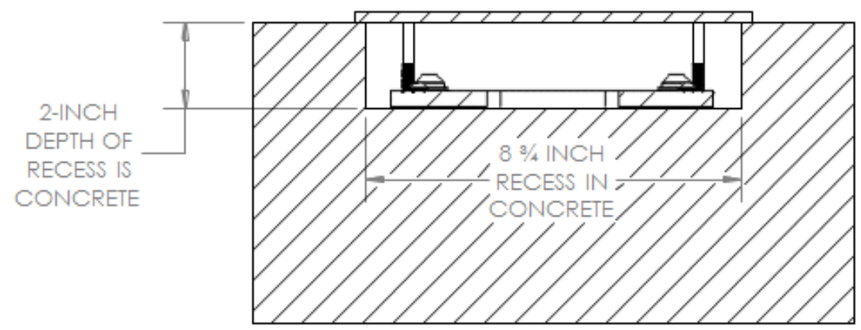
2-INCH
DEPTH OF
RECESS IS
CONCRETE
8 ¾ INCH
RECESS IN
CONCRETE

SECTION D-D

2

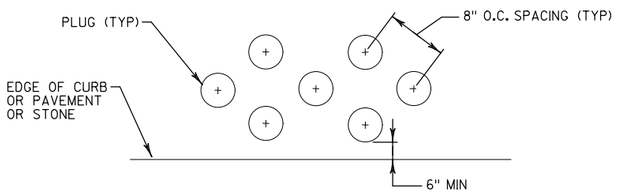

PLANT SPACING LAYOUT

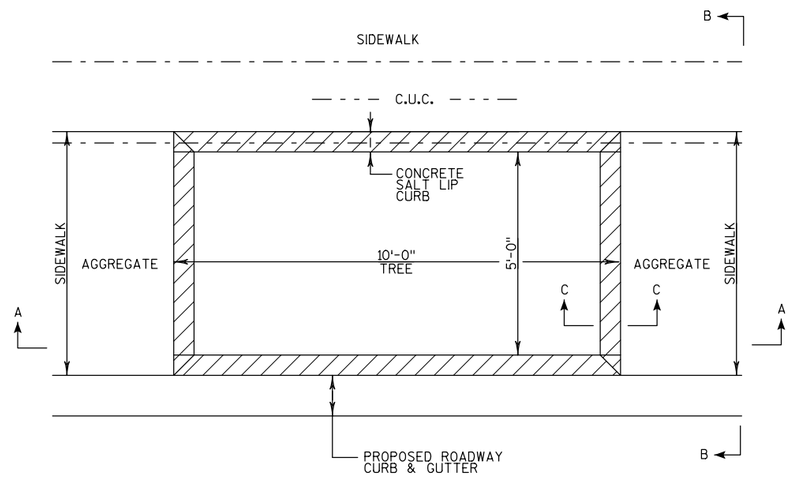

CAST IN PLACE CONCRETE
SALT LIP CURB DETAIL

*NOTE:
PLACE CURB TO DRAIN
AWAY FROM TREE

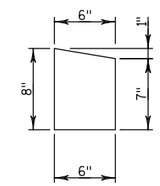

(SECTION C-C)*

NOTES:

1. ALL TREES INSTALLED IN PLANTERS SHALL BE CENTERED IN PLANTER. ALL OTHER TREES SHALL BE PLANTED A MINIMUM OF 5' FROM EDGE OF PAVEMENT
2. CUT BINDINGS AROUND TRUNK AND REMOVE BURLAP FROM TRUNK AND UPPER 1/3 OF ROOTBALL. CUT AND ADJUST BURLAP TO PREVENT FORMATION OF AIR POCKETS.
3. CONTRACTOR SHALL REMOVE ALL TAGS, RIBBONS, OR LABELS FROM ALL PLANTS AFTER ONE FULL GROWING SEASON.
4. CONTRACTOR SHALL MAINTAIN NEW PLANTINGS AS SPECIFIED TWO GROWING SEASONS AFTER SUBSTANTIAL COMPLETION.
5. MULCH GROUPING OF TREES AND PLUGS AS ONE CONTINUOUS BED.
6. SEPERATE AND SPREAD POT BOUND ROTS PRIOR TO PLANTING.
7. PLUGS: REMOVE FROM CONTAINER. REMOVE DEAD OR DAMAGED GROWTH.

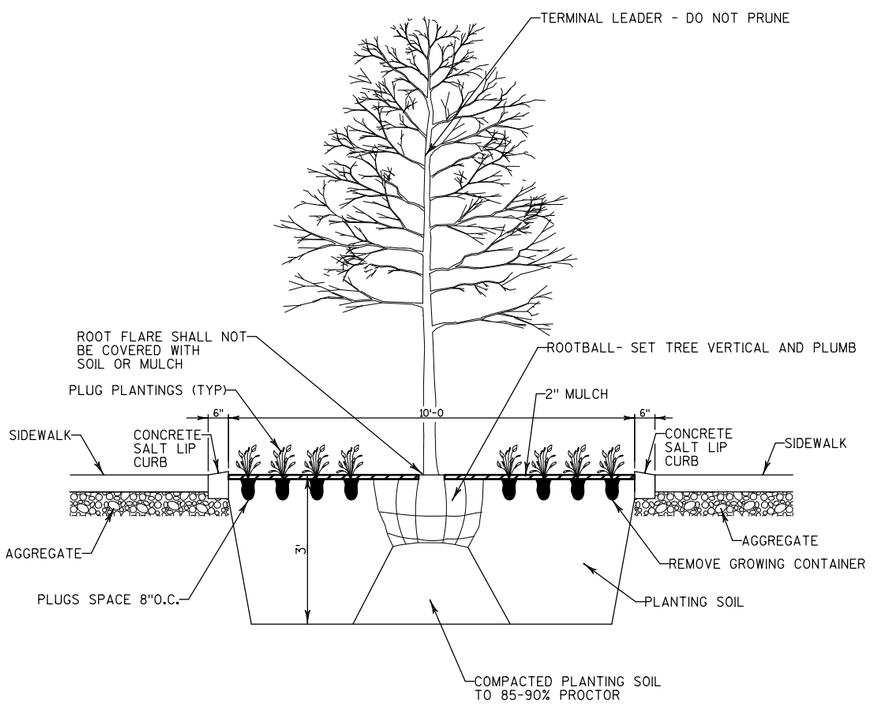

DECIDUOUS TREE PLANTING DETAIL IN PLANTER

(SECTION A-A)

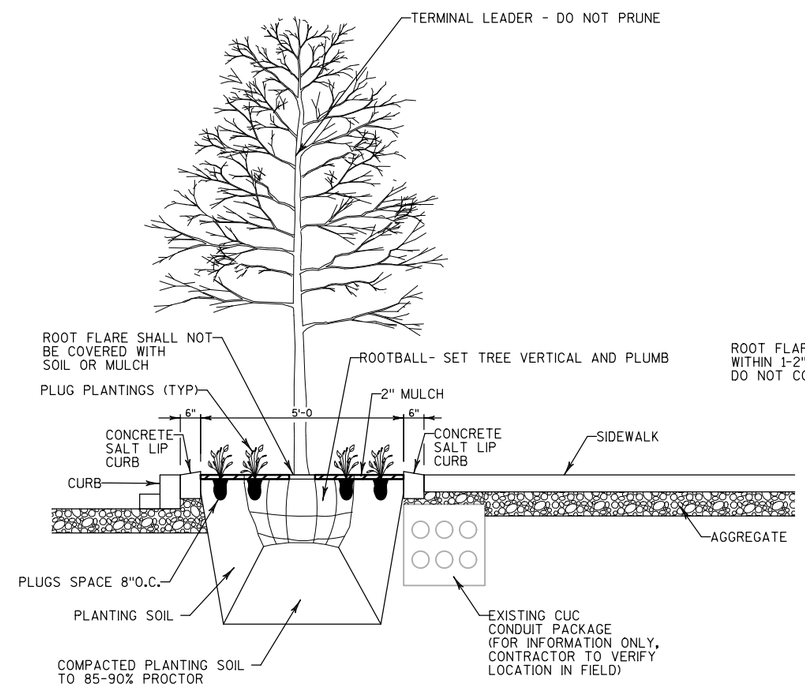

DECIDUOUS TREE PLANTING DETAIL IN PLANTER

(SECTION B-B)

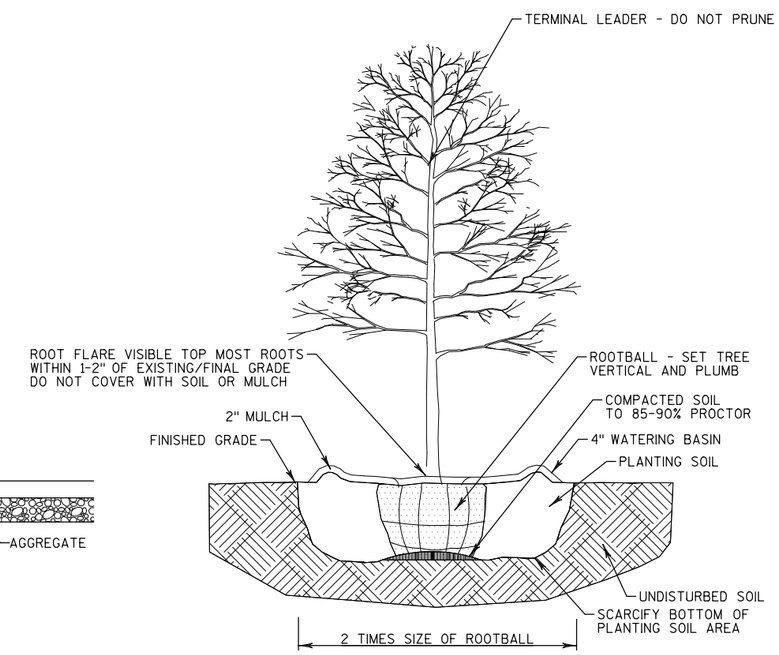

DECIDUOUS TREE PLANTING DETAIL

2

PROJECT NO: 1301-13-71	HWY: LOCAL ROADS	COUNTY: MILWAUKEE	PLANTING DETAILS	SHEET 23	E

2

TRAFFIC & STREET LIGHTING GENERAL NOTES:

PRIOR TO CONSTRUCTION, THE LOCATION OF UNDERGROUND UTILITIES SHALL BE DETERMINED IN THE FIELD BY CONTACTING "DIGGERS HOTLINE."

STREET LIGHTING & TRAFFIC SIGNALS SHALL BE INSTALLED IN COMPLIANCE WITH WISCONSIN DEPARTMENT OF TRANSPORTATION STANDARD SPECIFICATIONS SECTION 652 EXCEPT:

THE CONTRACTOR IS RESPONSIBLE FOR ALL COSTS INCLUDING REPAIRS, REPLACEMENT OR RELOCATION ETC. OF STREET LIGHTING OR TRAFFIC SIGNAL FACILITIES IF THE CONTRACTOR DOES ANY DEVIATION FROM THE STREET LIGHTING OR TRAFFIC SIGNAL DESIGN WITHOUT THE STREET LIGHTING ENGINEERS SIGNED PERMISSION.

1 DETAILS OF CONSTRUCTION MATERIALS AND WORKMANSHIP NOT SHOWN ON THIS DRAWING SHALL CONFORM TO THE PERTINENT REQUIREMENTS OF THE CONTRACT.

2 LOCATIONS OF THE PVC CONDUITS WHERE THEY ARE REQUIRED ARE IDENTIFIED IN THE PRINTS. HOWEVER, INSTALLATION MAY REQUIRE INTEGRATION WITH EXISTING FIELD CONDITIONS. APPROPRIATE ADJUSTMENT ON CONDUIT LOCATIONS MAY BE MADE IF THE FIELD CONDITIONS ARE SUCH THAT THE CONDUIT CANNOT BE INSTALLED AT THE SPECIFIED LOCATIONS. ANY RELOCATIONS MUST BE APPROVED BY THE ENGINEER. FIELD MARK EACH CONDUIT LOCATION BY STAMPING AND PAINTING WITH RED PAINT ON TOP AND BACKSIDE OF CURB.

3 TYPICAL CONDUIT INSTALLED UP TO DIRECT BURIED STREET LIGHT POLES IS AS FOLLOWS 3-INCH OR 2.5-INCH (AS NOTED) SCHEDULE 40 RIGID PVC TO STREET LIGHTING METAL HOUSING (PEDESTAL), THE 2-INCH SCHEDULE 40 RIGID PVC TO STREET LIGHT POLE CABLE SLOT, AND THE 2-INCH SCHEDULE 40 RIGID PVC TO SIGNAL STANDARD BASE AND RISER FOR TRAFFIC SIGNAL ON STREET LIGHT POLE.

4 DEPTH OF CONDUIT INSTALLED BELOW THE STREETS, HIGHWAYS, ROADS, AND ALLEYS SHALL BE 30-INCHES MINIMUM AND 36-INCHES MAXIMUM. (MEASURED FROM FINISHED FLANGE LINE)

5 CONDUIT INSTALLED BEHIND CURB, AND UNDER DRIVEWAYS SHALL BE INSTALLED AT THE BASE OF THE BACKSIDE OF THE CURB/GUTTER SECTION.

6 WHEN THERE IS MORE THAN ONE CONDUIT TO BE LAID BEHIND THE CURB, PLACE ALL CONDUITS IN THE SAME TRENCH.

7 ANY EXCEPTION TO THE MINIMUM OR MAXIMUM DEPTH SHALL BE ONLY WITH THE WRITTEN APPROVAL OF THE ENGINEER.

8 THE CONTRACTOR OR HIS SUBCONTRACTOR MUST MAKE SURE THE AREA BEHIND CURB AND/OR TRENCH SHALL BE FREE OF DEBRIS AND OVERPOUR AND SHALL NOT BE BACKFILLED PRIOR TO INSPECTION OF THE CONDUIT.

9 BENDING OF PVC ELECTRICAL CONDUIT SHALL BE ACCOMPLISHED BY USING A BLANKET OR EMERSION TYPE TANK DESIGNED FOR THE PURPOSE OF BENDING PVC ELECTRICAL CONDUIT.

10 ALL CUT ENDS SHALL BE TRIMMED INSIDE AND OUTSIDE TO REMOVE ALL ROUGH EDGES ON ALL CONDUITS. (SEE NEC 352.28 2008 CODE)

11 PRIOR TO CONDUIT ACCEPTANCE, ALL CONDUIT ENDS SHALL BE THOROUGHLY CLEANED AND BE CAPPED IMMEDIATELY AFTER INSTALLATION WITH THE APPROPRIATE CAST PLASTIC CAP WHICH FITS SNUGGLY ON THE CONDUIT, BUT EASILY REMOVED IN THE FUTURE. DUCT TAPE OR ANY OTHER CAPPING METHOD IS NOT ACCEPTABLE.

12 ALL CONDUIT BEING FURNISHED AND INSTALLED SHALL HAVE THE U.L. LABEL FIRMLY ATTACHED.

13 CONDUIT RUNS SHALL BE THE SAME SIZE PIPE FROM ONE END TO THE OTHER (FROM PULL BOX TO PULL BOX OR JUNCTION BOX OR BASE TO BASE, ETC.).

14 PULL ROPE (3/8-INCH NYLON) SHALL BE INSTALLED IN ALL NEW CONDUIT.

15 ALL CONDUIT RUNS SHALL BE STRAIGHT (WITHOUT BENDS) FROM PULL BOX TO PULL BOX, PULL BOX TO BASE AND BASE TO BASE AS SHOWN ON THE PLANS UNLESS OTHERWISE APPROVED BY THE STREET LIGHTING ENGINEER.

16 WHEN ENDS OF CONDUIT DO NOT CONNECT TO A VAULT AND WILL END UP UNDER CONCRETE WALK. THE CONTRACTOR IS REQUIRED TO LEAVE A 24" X 24" BOX FORM CENTERED OVER THE END OF CONDUIT AND FILL THE BOXFORM WITH CRUSHED GRAVEL. (PER WISDOT SPEC 209.2.1(1) GRANULAR BACKFILL)

17 ALL PIPE CROSSINGS AND VAULTS SHALL BE AT LEAST SIX (6) FEET AWAY FROM FIRE HYDRANTS, UNLESS NOTED OTHERWISE, OR APPROVED BY THE STREET LIGHTING ENGINEER.

18 ALL POLES AND TRAFFIC STANDARDS IN CONCRETE ARE REQUIRED TO HAVE A 30"X30" BOX SHAPED JOINT PLACED AROUND THEM USING AN EXPANSION JOINT FILLER. UNLESS NOTED OTHERWISE (SEE DETAIL 122)

19 TYPICAL RECTANGULAR VAULTS SHOULD BE INSTALLED AS SHOWN ON PLANS, BUT WHEN IT IS NOT POSSIBLE, A 5 FT. TO 6 FT. OFFSET FROM STREET LIGHT POLES, SIGNAL STANDARDS AND FIRE HYDRANTS SHOULD BE USED, OTHERWISE APPROVED BY THE STREET LIGHTING ENGINEER.

20 COORDINATE NEW CONDUIT CONNECTIONS WITH EXISTING CONDUIT, DUCT PACKAGES, AND VAULTS/ MANHOLES WITH CITY OF MILWAUKEE STREET LIGHTING. THE CITY REQUIRES THREE WORKING DAYS ADVANCED NOTICE. CONTACT ELECTRICAL SUPERVISOR
STREET LIGHTING - DENNIS MILLER (OFFICE) 414-286-5942 (CELL) 414-708-4251 OR DISPATCHER @ 414-286-5944
TRAFFIC SIGNALS - AL NICHOLS (OFFICE) 414-286-3687 (CELL) 414-708-5148 OR DISPATCHER @ 414-286-3687

21 IMMEDIATELY AFTER THE CONTRACTOR HAS COMPLETED ALL THE ELECTRICAL VAULT, CONDUIT AND CONDUIT CONNECTIONS, AND JUST BEFORE ELECTRICAL WORK IS COVERED UP WITH CONRETE, SOIL, OR ETC. THE CONTRACTOR IS REQUIRED TO CONTACT THE CITY OF MILWAUKEE ELECTRICAL SHOP SUPERVISORS FOR FINAL INSPECTION AND APPROVAL OF ALL WORK.
STREET LIGHTING - DENNIS MILLER (OFFICE) 414-286-5942 (CELL) 414-708-4251
STREET LIGHTING - GEORGE BERDINE (OFFICE) 414-286-5943 (CELL) 414-708-4245
STREET LIGHTING - THOMAS HUGHES (OFFICE) 414-286-3457 (CELL) 414-708-3175
STREET LIGHTING - DISPATCHER @ 414-286-5944
TRAFFIC SIGNALS - AL NICHOLS (OFFICE) 414-286-5941 (CELL) 414-708-5148
TRAFFIC SIGNALS - DISPATCHER @ 414-286-3687

22 CONDUIT WILL ONLY BE INSTALLED AFTER THE CURB IS POURED, UNLESS APPROVED BY BOTH THE ENGINEER & STREET LIGHTING SHOP SUPERVISOR.

23 ALL PURPOSE ANTI SEIZE (OR EQUIVALENT) TO BE APPLIED ON ALL BOLTS AND SCREWS, ESPECIALLY THE STREET LIGHTING PEDESTAL AND HAND HOLE PANEL ON STREET LIGHT POLE. OXIDE INHIBITOR OX-4 (OR EQUIVALENT) TO BE APPLIED ON ALL WIRE CONNECTIONS (ALUMINUM OR COPPER) AND WIRE NUTS.

ELECTRICAL AS-BUILT REQUIREMENTS:

* LOCATE AND CLEARLY DIMENSION ALL CONDUIT RUNS, FITTINGS, SPLICE VAULTS, PULL BOXES, METER PEDESTALS, LIGHT BASES, TRANSFORMER, POLES AND OTHER APPURTENANCES IN TWO (2) DIRECTIONS. SWING TIES SHOULD BE MADE FROM OBJECTS THAT ARE PERMANENT IN NATURE AND VISIBLE ON THE FINISHED SURFACE.
* STREET NAMES SHALL BE ON ALL SHEETS.
* SHOW ALL SIZES AND MATERIAL TYPES OF PIPES AND CONDUITS.
* ALL HORIZONTAL DISTANCES SHALL BE SHOWN TO THE NEAREST TENTH OF A FOOT (I.E., 205.3'). ALL VERTICAL DISTANCES SHALL BE SHOWN TO THE NEAREST INCH (I.E. 24").
* SHOW LOCATION AND ELEVATIONS OF PIPES AND FITTINGS WHERE CHANGES OR DEFLECTIONS IN DIRECTION OCCUR.
* SPECIAL DETAIL DRAWINGS WILL BE SUPPLIED WHERE REQUIRED FOR CLARITY.
* DEVIATIONS FROM ORIGINAL PLANS OR STANDARD DETAILS SHALL BE NOTED ON AS-BUILT DRAWINGS.

2

NOTE: 1.) KEEP AREA BEHIND CURB FREE OF DEBRIS AND CONCRETE OVERPOUR.
2.) CONDUIT TO BE PLACED 6 INCHES ON CENTER DIRECTLY BEHIND CURB, UNLESS NOTED OR APPROVED BY ENGINEER.

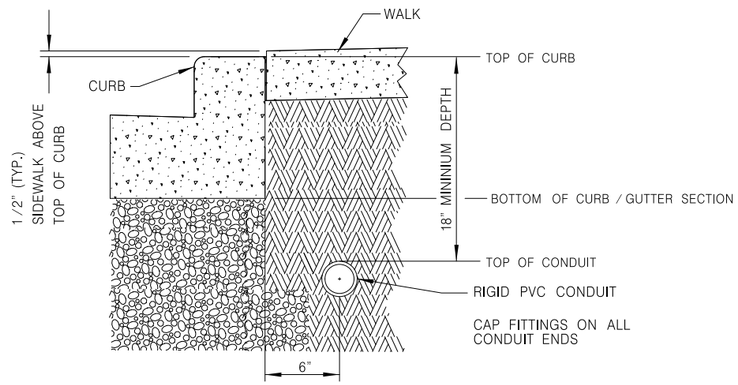

100 DETAIL "A"

NOT TO SCALE

TYPICAL CONDUIT INSTALLATION
BEHIND CURB

ANY DEVIATIONS FROM DETAIL WILL REQUIRE PERMISSION FROM STREET LIGHTING FORCES.
CONTACT DISPATCHER AT (414) 286-5944 FOR THE APPROPRIATE SHOP SUPERVISOR.

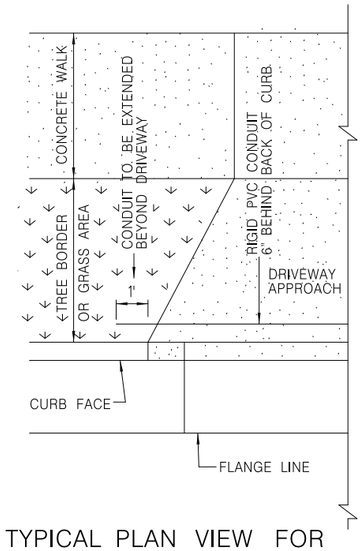

TYPICAL PLAN VIEW FOR
FLARED DRIVEWAY

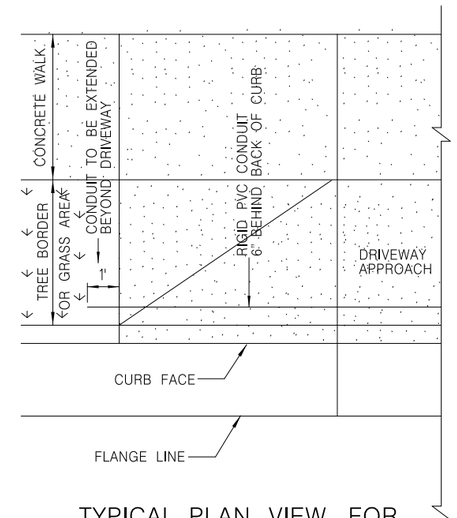

TYPICAL PLAN VIEW FOR
DEPRESSED DRIVEWAY

2

NOTE: 1.) KEEP AREA BEHIND CURB FREE OF DEBRIS AND CONCRETE OVERPOUR.

DETAIL "B"

CONDUIT TO BE PLACED 6" ON CENTER DIRECTLY BEHIND CURB,
UNLESS NOTED OR APPROVED BY ENGINEER.

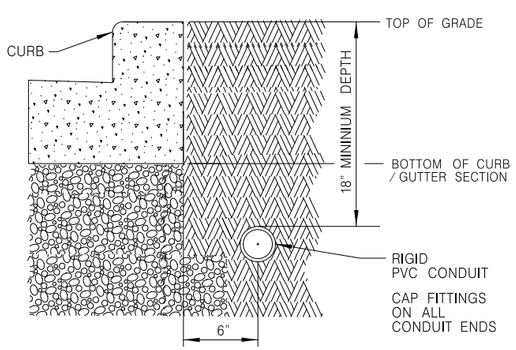

DETAIL "C"

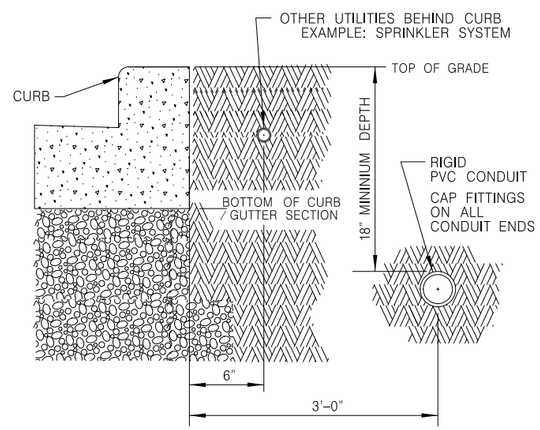

100 DETAIL "B" & "C"

NOT TO SCALE

TYPICAL CONDUIT INSTALLATION
BEHIND CURB

ANY DEVIATIONS FROM DETAIL WILL REQUIRE PERMISSION FROM STREET LIGHTING FORCES.
CONTACT DISPATCHER AT (414) 286-5944 FOR THE APPROPRIATE SHOP SUPERVISOR.

NOTE: 1.) KEEP AREA BEHIND CURB FREE OF DEBRIS AND CONCRETE OVERPOUR.
2.) CONDUIT TO BE PLACED 6 INCHES ON CENTER DIRECTLY BEHIND CURB, UNLESS NOTED OR APPROVED BY ENGINEER.

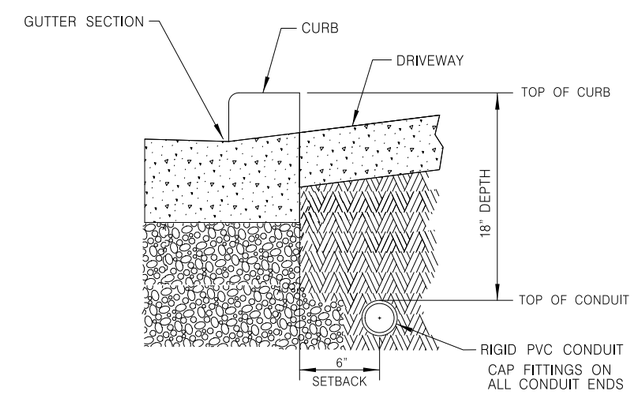

101 DETAIL

NOT TO SCALE

TYPICAL CONDUIT INSTALLATION
UNDER DRIVEWAYS OR PEDESTRIAN RAMPS

ANY DEVIATIONS FROM DETAIL WILL REQUIRE PERMISSION FROM STREET LIGHTING FORCES.
CONTACT DISPATCHER AT (414) 286-5944 FOR THE APPROPRIATE SHOP SUPERVISOR.

2

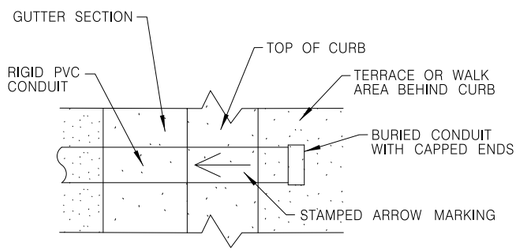

TOP VIEW OF CURB STAMPING

NOT TO SCALE

NOTE:

ARROW MARK SHALL BE INSCRIBED IN PAVEMENT SURFACE 1/4-INCH TO 3/8-INCH DEEP AT EACH LOCATION WHERE CONDUITS ARE PLACED UNDER THE PAVEMENT.

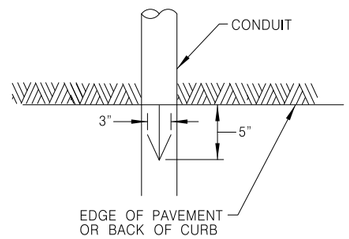

ARROW MARK

NOT TO SCALE

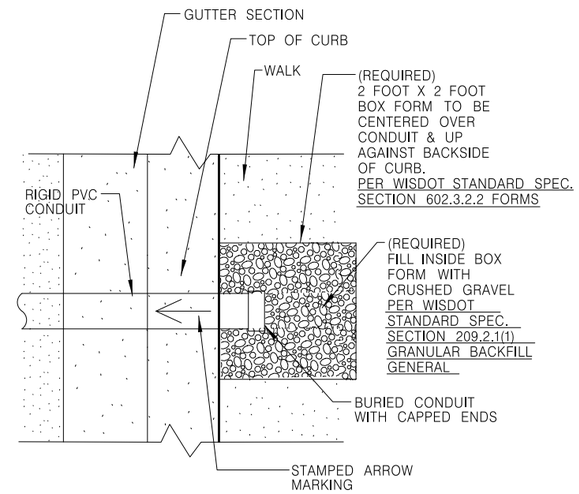

TOP VIEW OF CURB STAMPING

NOT TO SCALE

NOTE:

ARROW MARK SHALL BE INSCRIBED IN PAVEMENT SURFACE 1/4-INCH TO 3/8-INCH DEEP AT EACH LOCATION WHERE CONDUITS ARE PLACED UNDER THE PAVEMENT.

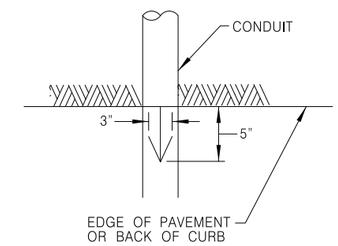

ARROW MARK

NOT TO SCALE

2

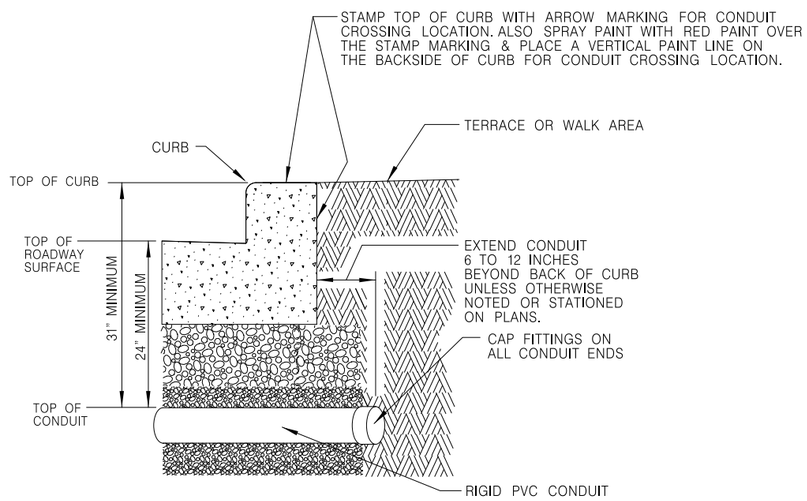

102 DETAIL VERSION #1

TYPICAL CONDUIT INSTALLATION FOR CROSSING ROADWAYS

NOT TO SCALE

ANY DEVIATIONS FROM DETAIL WILL REQUIRE PERMISSION FROM STREET LIGHTING FORCES. CONTACT DISPATCHER AT (414) 286-5944 FOR THE APPROPRIATE SHOP SUPERVISOR.

THE CONTRACTOR IS REQUIRED TO FORM OUT A OPENING IN THE CONCRETE WALK BEFORE POURING THE CONCRETE WALK AROUND TRAFFIC AND STREET LIGHTING FACILITIES. (AS SHOWN IN DETAIL)

THE CONTRACTOR IS REQUIRED TO FILL IN THE FORMED OUT AREA OPENING IN THE CONCRETE WALK WITH CRUSHED GRAVEL, AFTER POURING THE CONCRETE WALK AROUND TRAFFIC AND STREET LIGHTING FACILITIES. (AS SHOWN IN DETAIL)

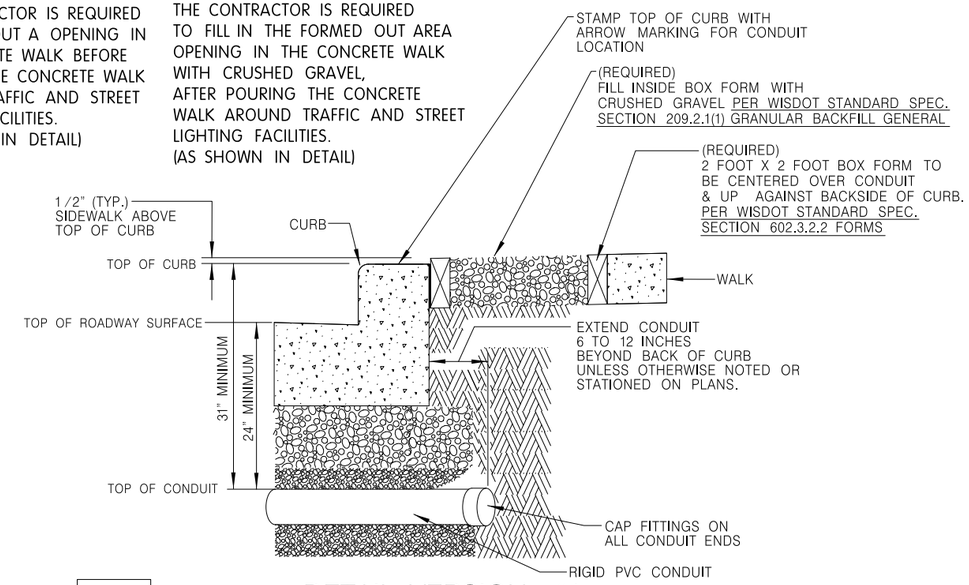

103 DETAIL VERSION #1

TYPICAL CONDUIT INSTALLATION FOR CROSSING ROADWAYS FROM FULL WALK AREAS

NOT TO SCALE

ANY DEVIATIONS FROM DETAIL WILL REQUIRE PERMISSION FROM STREET LIGHTING FORCES. CONTACT DISPATCHER AT (414) 286-5944 FOR THE APPROPRIATE SHOP SUPERVISOR.

2

NOTE: CAP FITTINGS ON CONDUIT ENDS

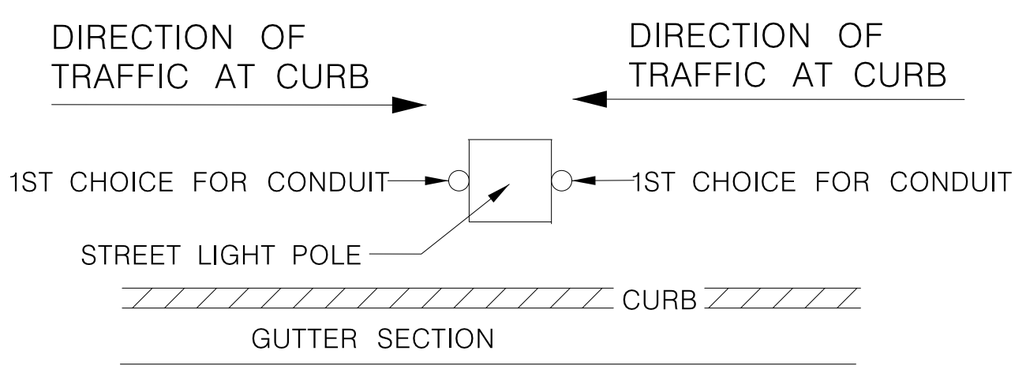

104 DETAIL

TYPICAL TRAFFIC SIGNAL RISER CONDUIT LOCATIONS ON STREET LIGHT POLE DEPENDING ON DIRECTION OF TRAFFIC AT CURB

NOT TO SCALE

ANY DEVIATIONS FROM DETAIL WILL REQUIRE PERMISSION FROM TRAFFIC / STREET LIGHTING FORCES.
CONTACT DISPATCHER AT (414) 286-5944 FOR THE APPROPRIATE SHOP SUPERVISOR.

THE CONTRACTOR IS REQUIRED TO FORM OUT A OPENING IN THE CONCRETE WALK BEFORE POURING THE CONCRETE WALK AROUND TRAFFIC AND STREET LIGHTING FACILITIES.
(AS SHOWN IN ADJACENT DETAIL)

THE CONTRACTOR IS REQUIRED TO FILL IN THE FORMED OUT AREA OPENING IN THE CONCRETE WALK WITH CRUSHED GRAVEL, AFTER POURING THE CONCRETE WALK AROUND TRAFFIC AND STREET LIGHTING FACILITIES.
(AS SHOWN IN ADJACENT DETAIL)

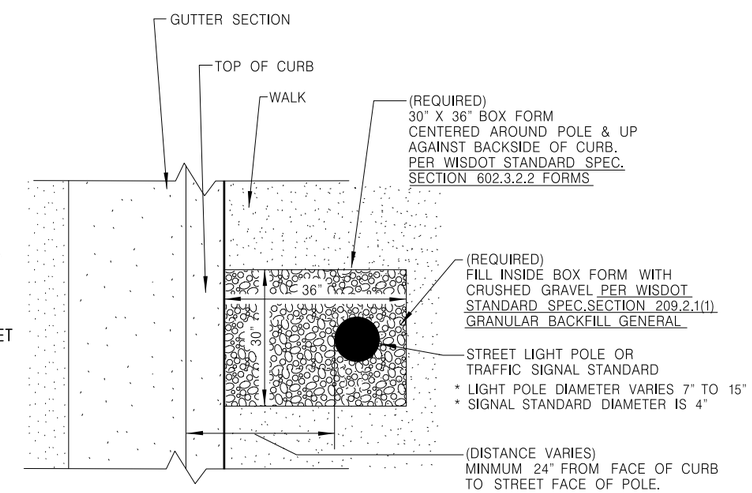

105 DETAIL

TYPICAL 30" X 36" BOX FORM AROUND STREET LIGHTING POLE OR TRAFFIC SIGNAL STANDARD

ANY DEVIATIONS FROM DETAIL WILL REQUIRE PERMISSION FROM STREET LIGHTING FORCES.
CONTACT DISPATCHER AT (414) 286-5944 FOR THE APPROPRIATE SHOP SUPERVISOR.

NOT TO SCALE

2

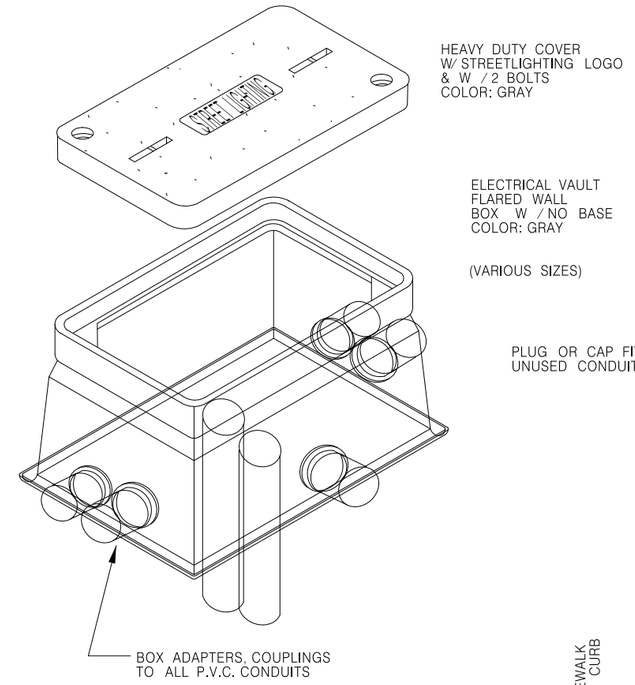

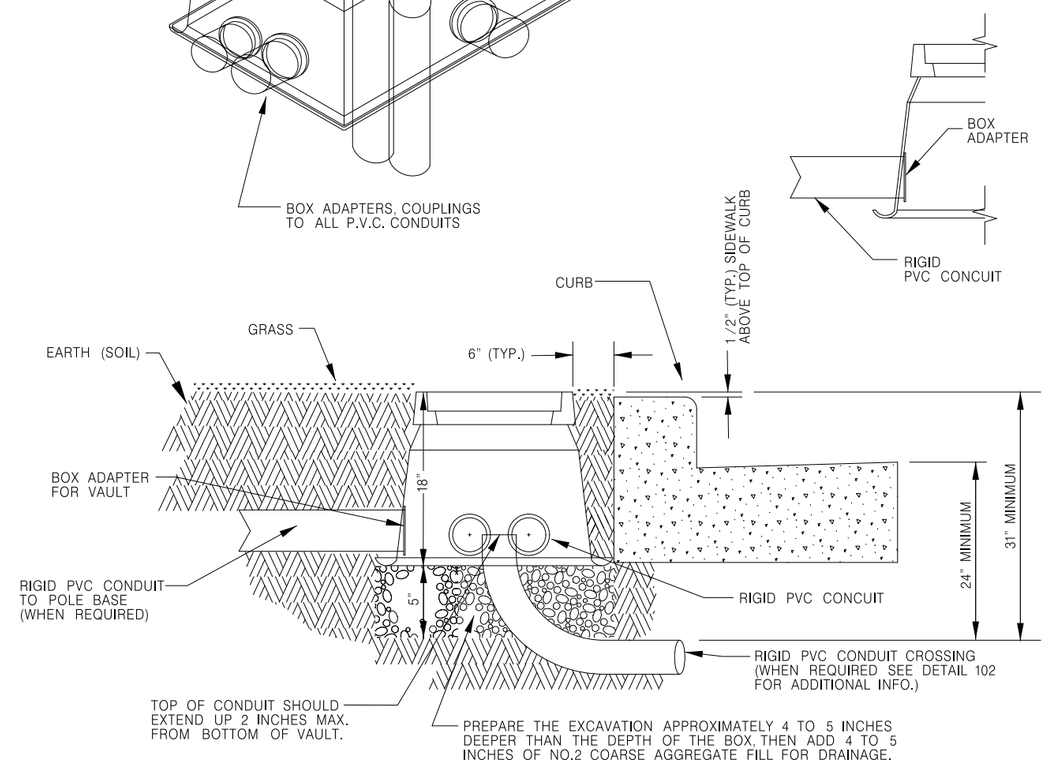

121 DETAIL

TYPICAL VAULT INSTALLATION IN GRASS AREA

NOT TO SCALE

ANY DEVIATIONS FROM DETAIL WILL REQUIRE PERMISSION FROM STREET LIGHTING FORCES.
CONTACT DISPATCHER AT (414) 286-5944 FOR THE APPROPRIATE SHOP SUPERVISOR.

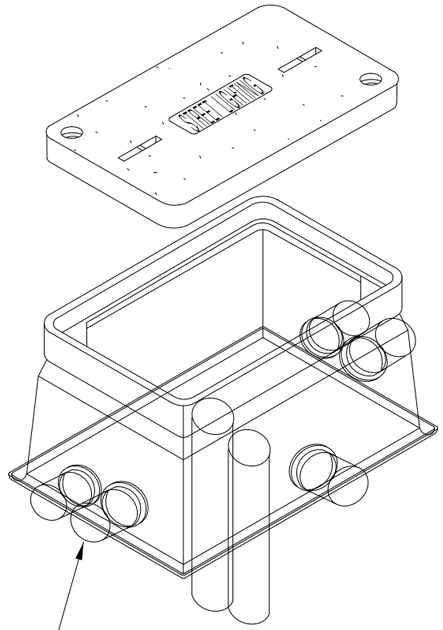

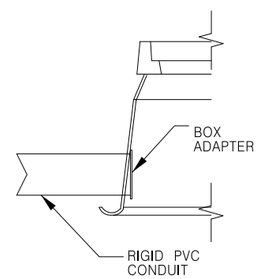

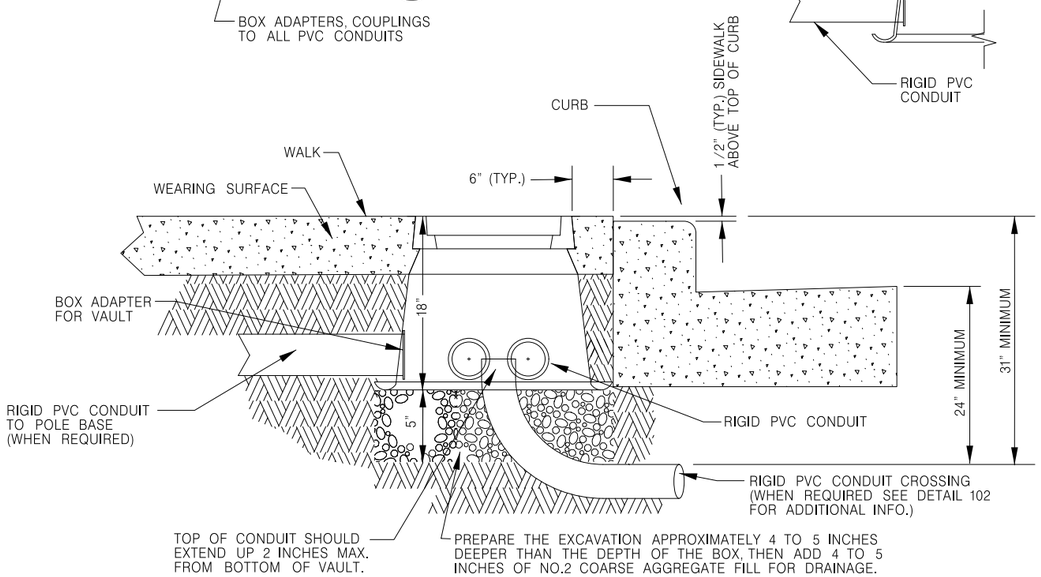

112 DETAIL

TYPICAL VAULT INSTALLATION IN WALK

NOT TO SCALE

ANY DEVIATIONS FROM DETAIL WILL REQUIRE PERMISSION FROM STREET LIGHTING FORCES.
CONTACT DISPATCHER AT (414) 286–5944 FOR THE APPROPRIATE SHOP SUPERVISOR.

2

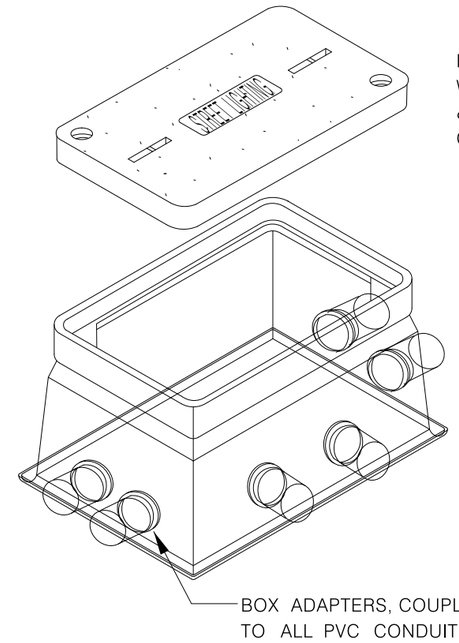

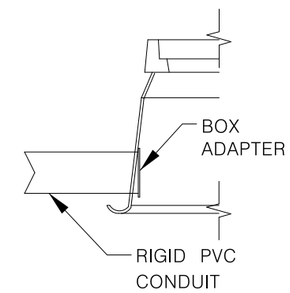

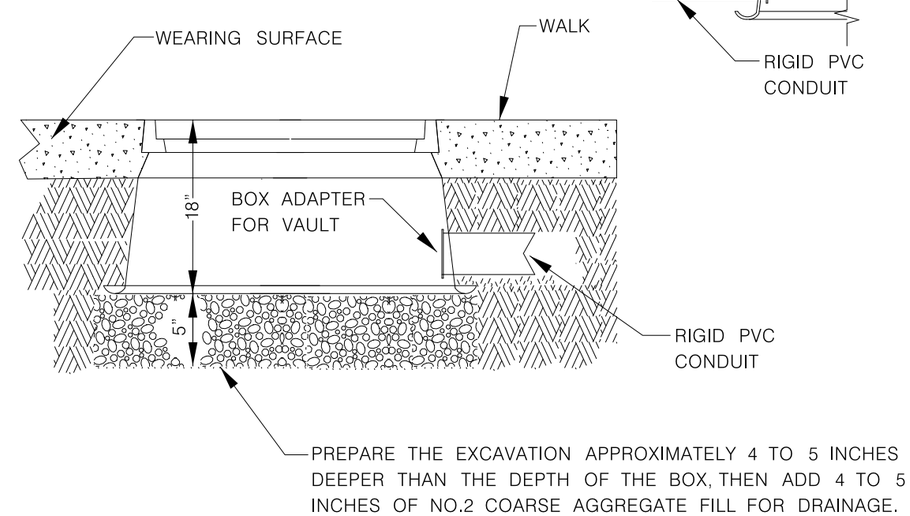

113 DETAIL

TYPICAL VAULT INSTALLATION
IN SIDEWALK

ANY DEVIATIONS FROM DETAIL WILL REQUIRE PERMISSION FROM STREET LIGHTING FORCES.
CONTACT DISPATCHER AT (414) 286–5944 FOR THE APPROPRIATE SHOP SUPERVISOR.

NOT TO SCALE

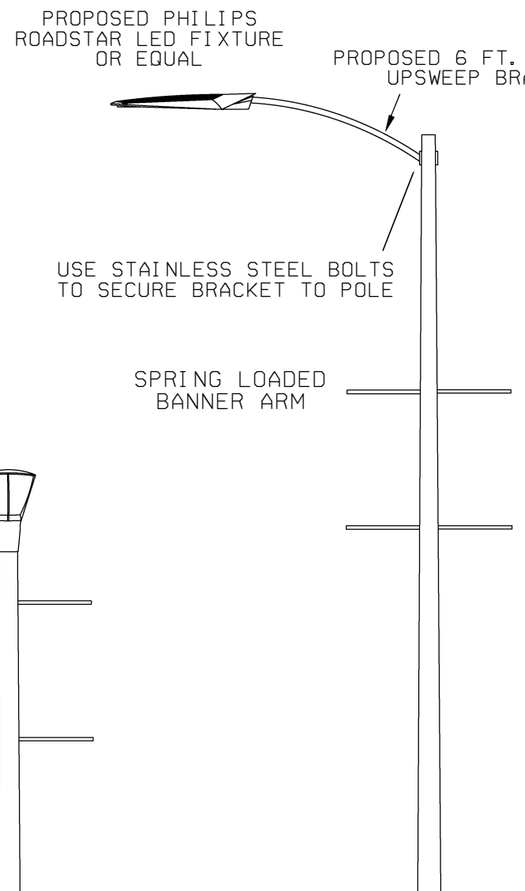

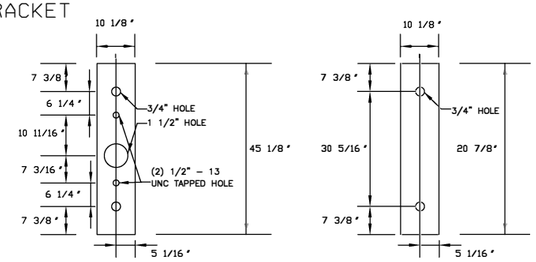

STRESSCRETE SQUARE POLE MOUNTING PLATE SET

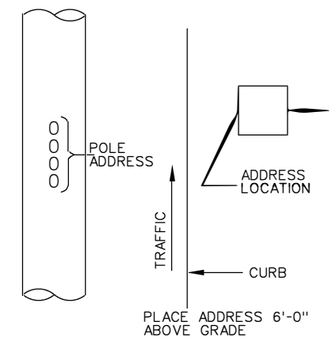

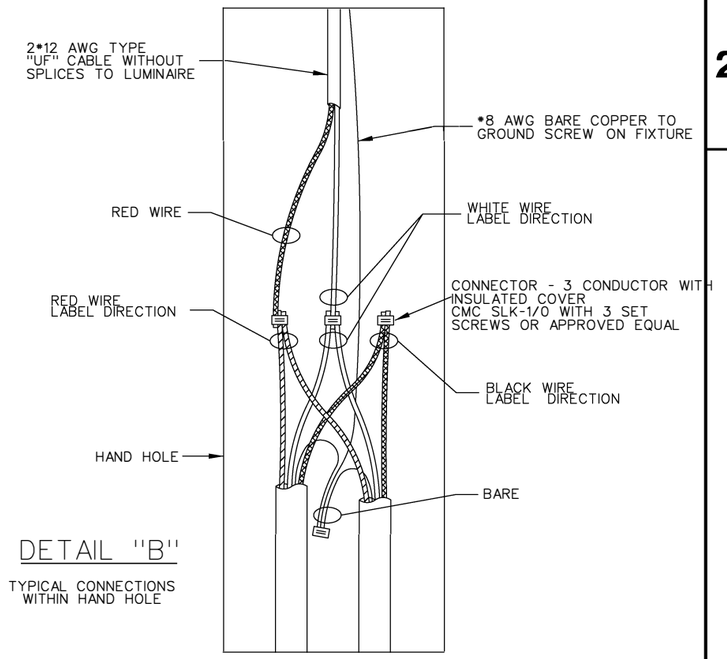

DETAIL "B"

TYPICAL CONNECTIONS
WITHIN HAND HOLE

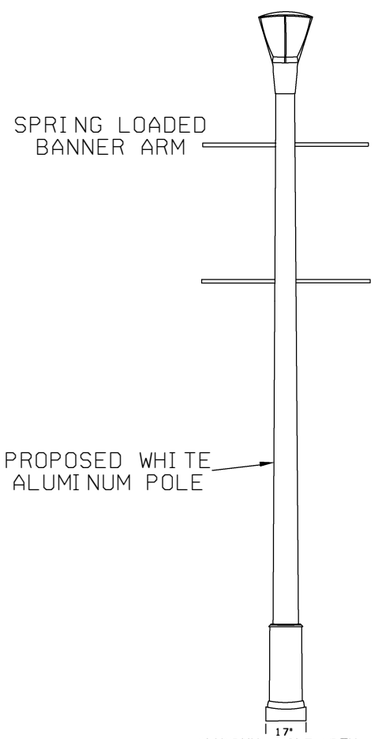

ALUMINUM POLE WITH
PHILIPS URBANSCAPE FIXTURE OR EQUAL

SQUARE CONCRETE POLE WITH
SINGLE PHILIPS ROADSTAR FIXTURE
OR EQUAL

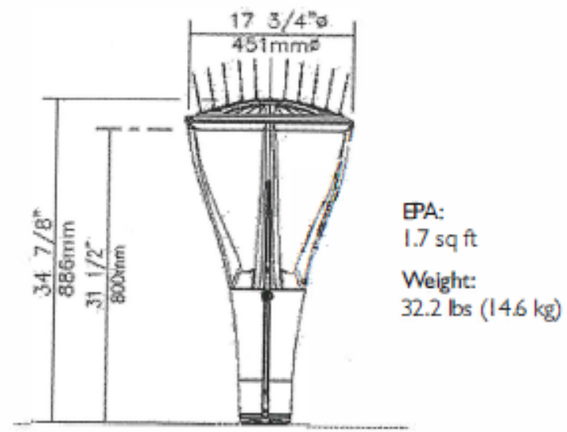

PHILIPS URBANSCAPE

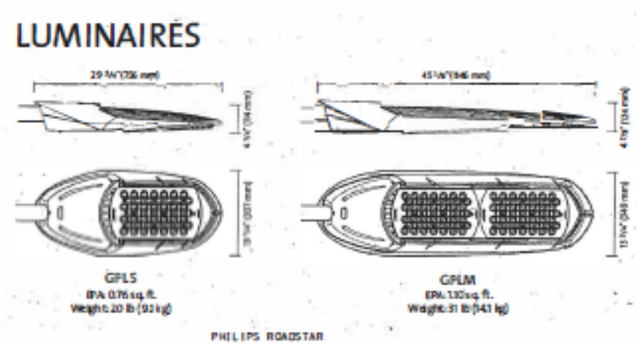

PHILIPS ROADSTAR

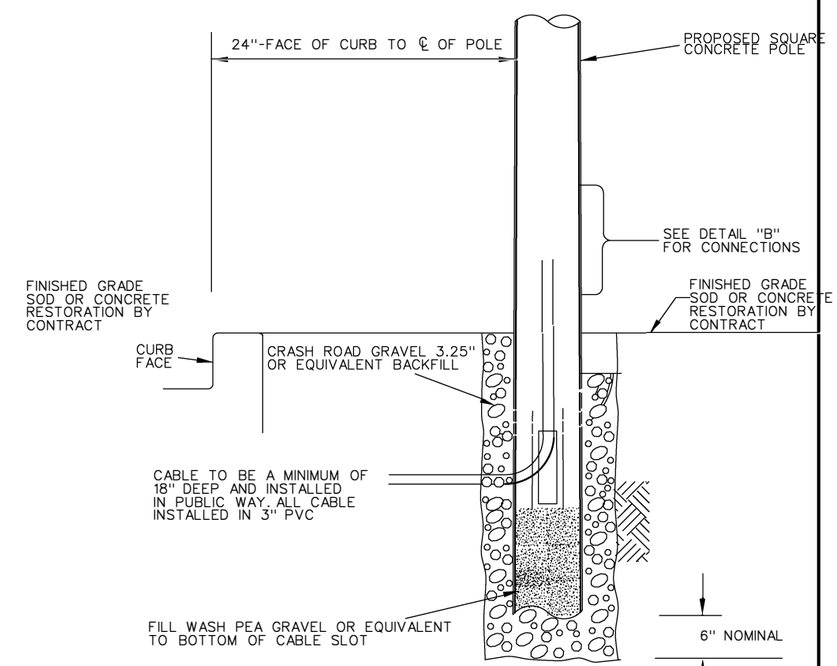

*ALSO REFER TO CONDUIT PLAN FOR
DETAILED CONDUIT INSTALLATION*

TYPICAL INSTALLATION

PROPOSED SQUARE CONCRETE POLE

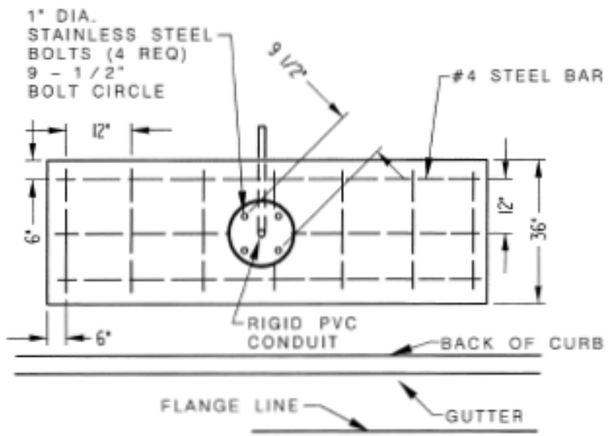

TOP VIEW

CONTACT: DENNIS MILLER
(DPW) @(414)708-4251

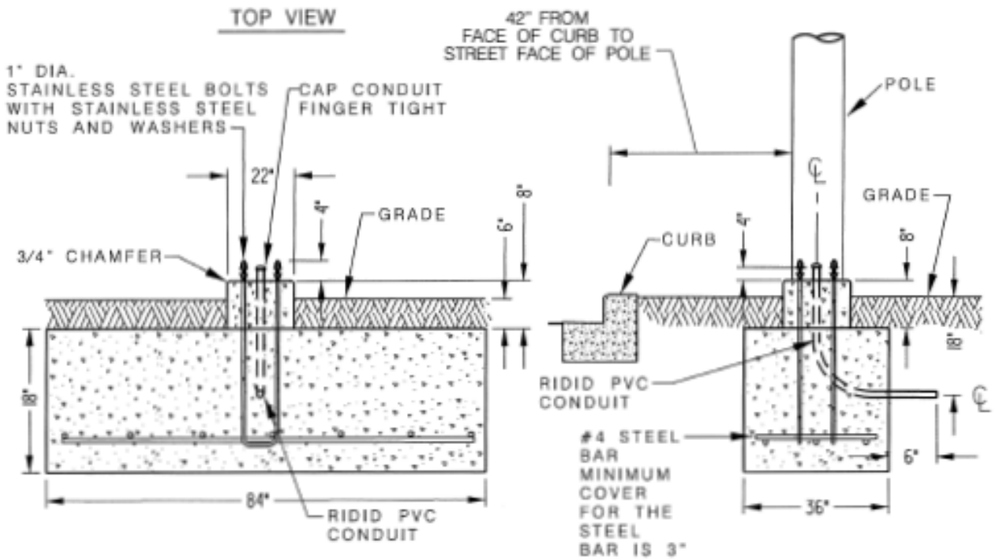

FRONT VIEW

SIDE VIEW

116 DETAIL

TYPICAL SPREAD FOOTING WITH
SIDEWALK SIDE CONDUIT FEED

ANY DEVIATIONS FROM DETAIL WILL REQUIRE PERMISSION FROM STREET LIGHTING FORCES.
CONTACT DISPATCHER AT (414) 286-5944 FOR THE APPROPRIATE SHOP SUPERVISOR.

NOT TO SCALE

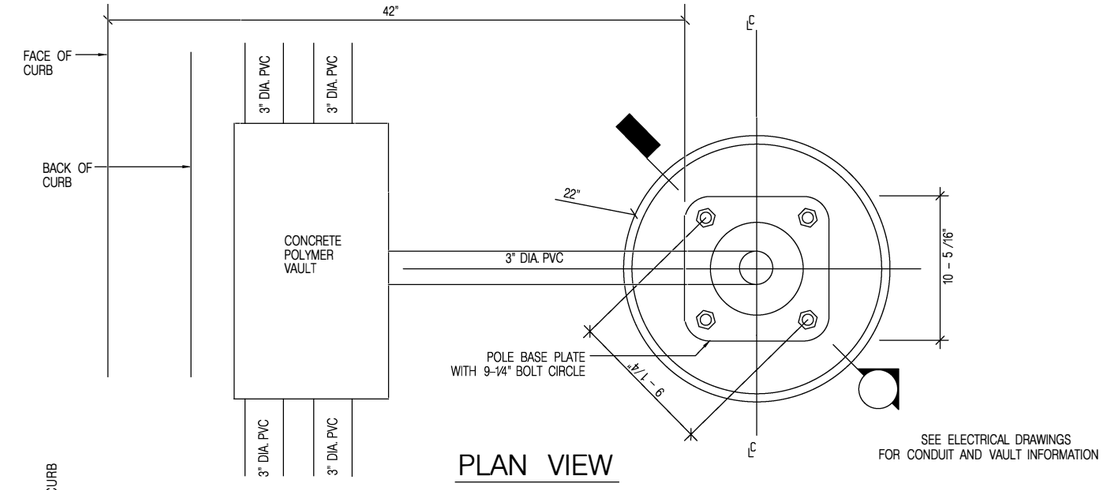

PLAN VIEW

SEE ELECTRICAL DRAWINGS
FOR CONDUIT AND VAULT INFORMATION

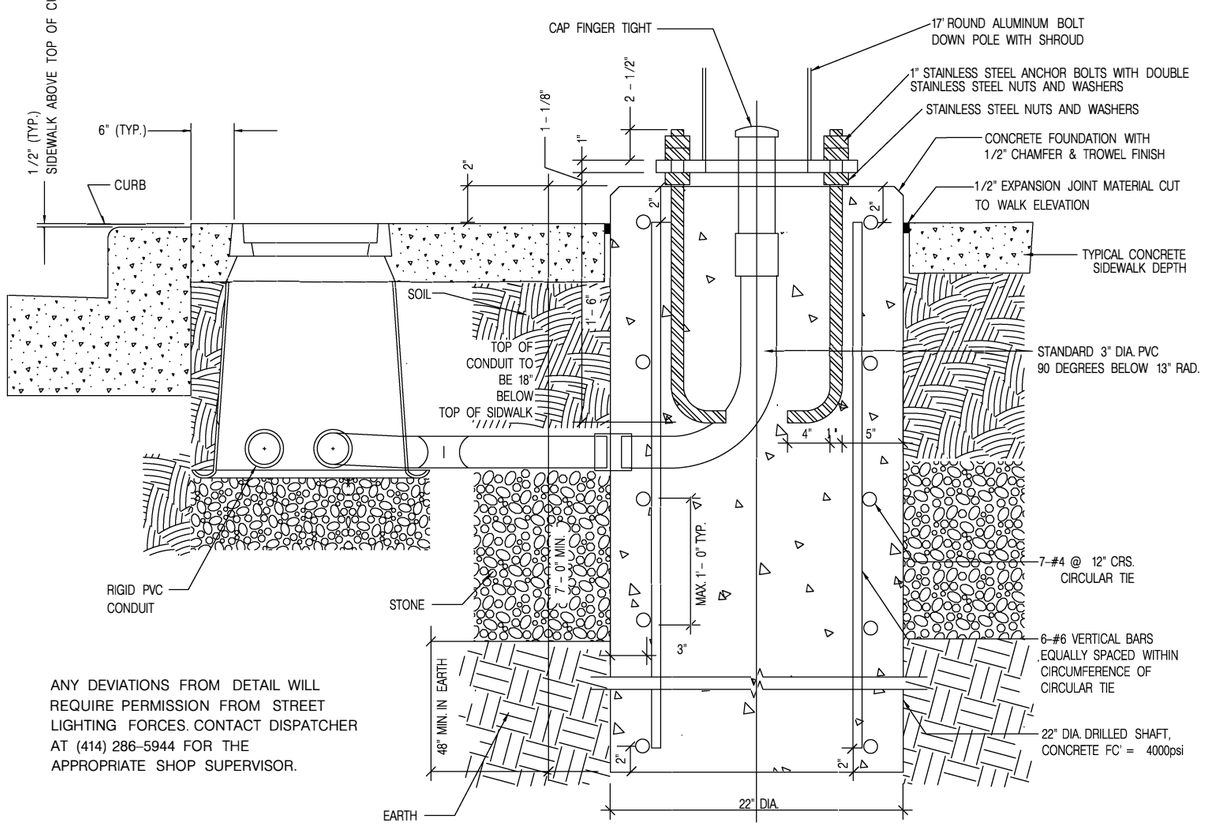

ANY DEVIATIONS FROM DETAIL WILL REQUIRE PERMISSION FROM STREET LIGHTING FORCES. CONTACT DISPATCHER AT (414) 286-5944 FOR THE APPROPRIATE SHOP SUPERVISOR.

SEE ELECTRICAL DRAWINGS
FOR ADDITIONAL INFORMATION

124 17 FT. ALUMINUM BOLT DOWN POLE FOUNDATION

TYPICAL SECTION VIEW

NOT TO SCALE

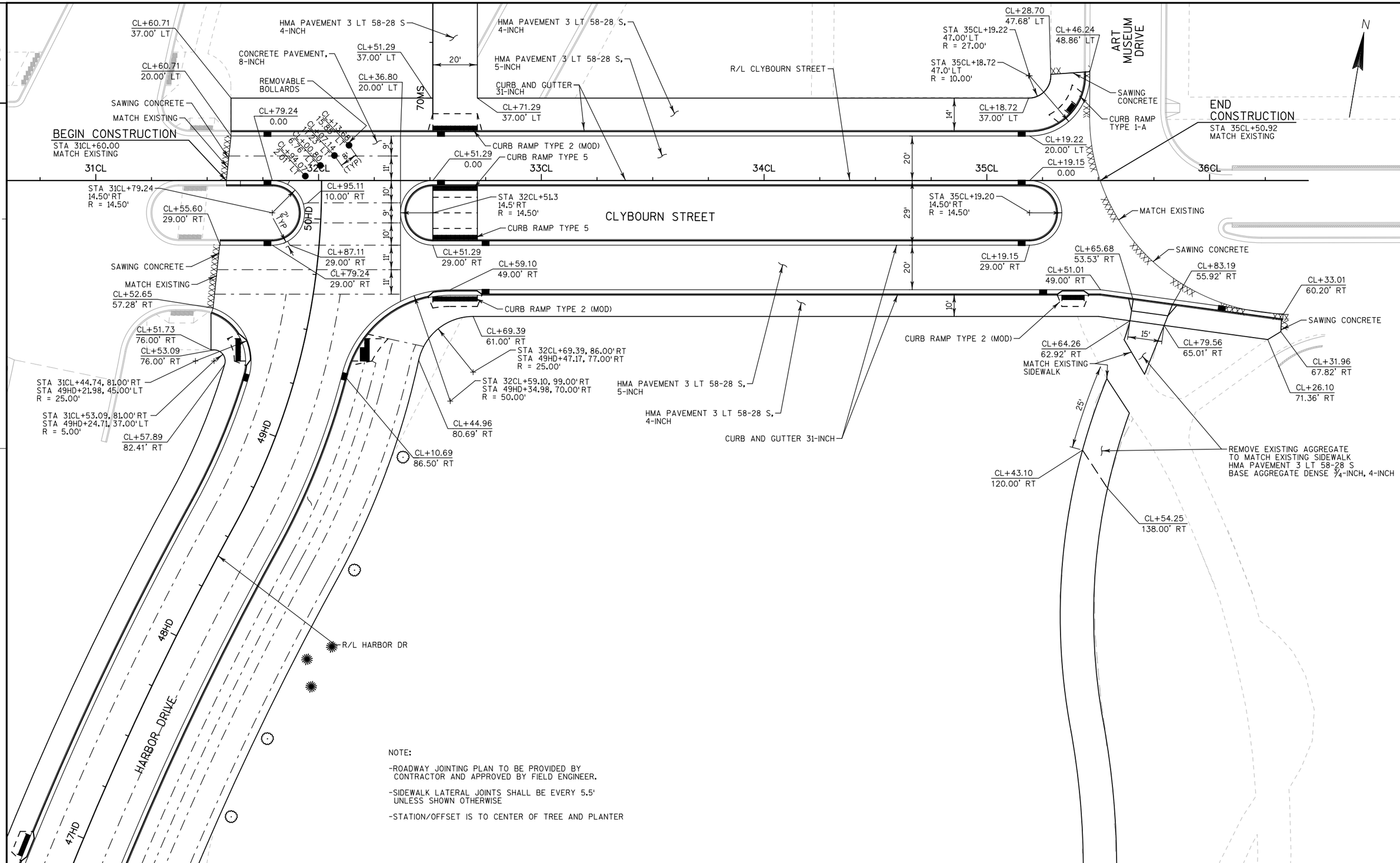

NOTE:

-ROADWAY JOINTING PLAN TO BE PROVIDED BY CONTRACTOR AND APPROVED BY FIELD ENGINEER.

-SIDEWALK LATERAL JOINTS SHALL BE EVERY 5.5' UNLESS SHOWN OTHERWISE

-STATION/OFFSET IS TO CENTER OF TREE AND PLANTER

PROJECT NO: 1301-13-71	HWY: LOCAL ROADS	COUNTY: MILWAUKEE	PLAN DETAILS - CLYBOURN STREET	SHEET 31	E

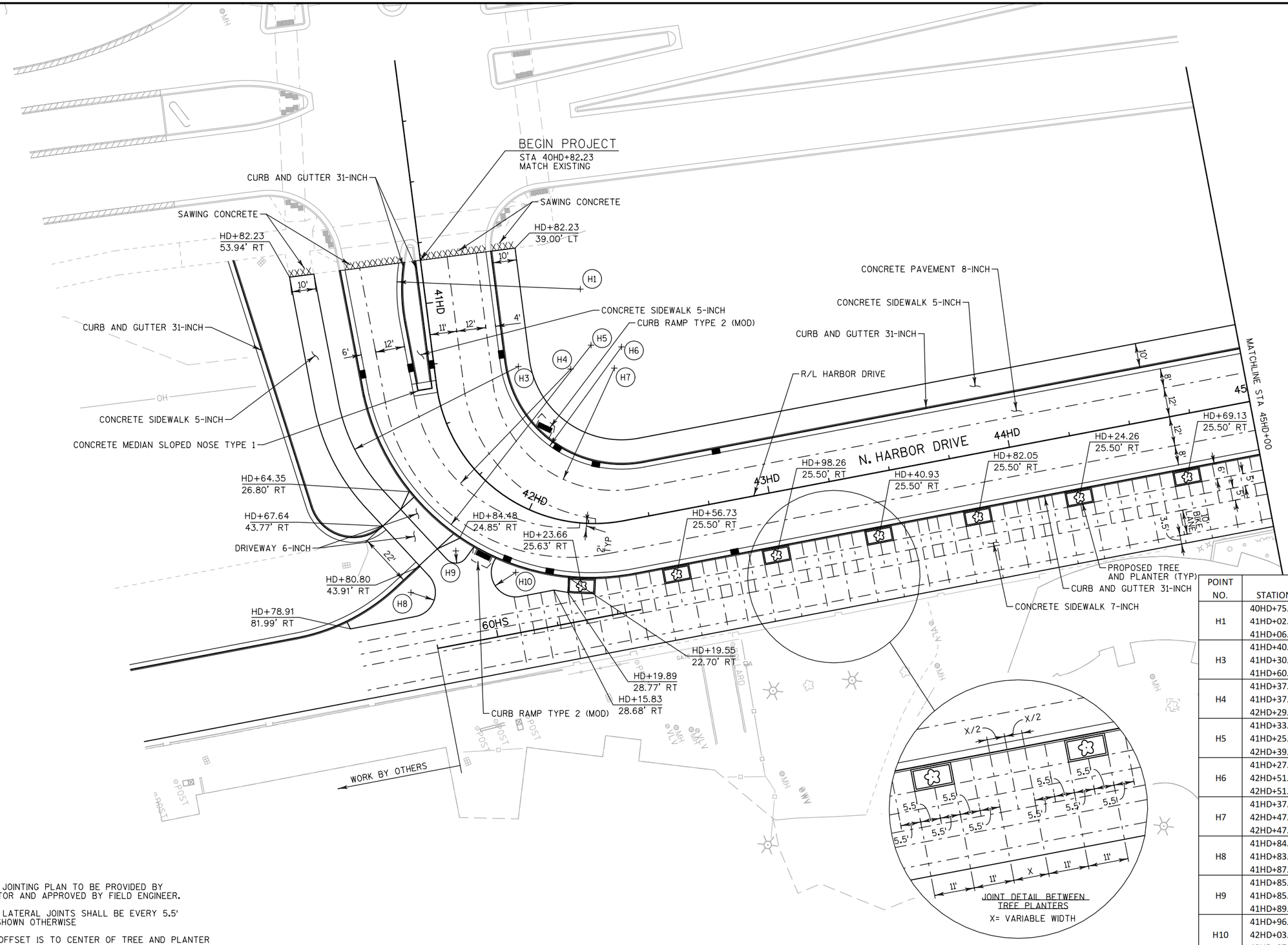

NOTE:

-ROADWAY JOINTING PLAN TO BE PROVIDED BY CONTRACTOR AND APPROVED BY FIELD ENGINEER.

-SIDEWALK LATERAL JOINTS SHALL BE EVERY 5.5' UNLESS SHOWN OTHERWISE

-STATION/OFFSET IS TO CENTER OF TREE AND PLANTER

POINT NO.	STATION	OFFSET	RADIUS	POINT TYPE
H1	40HD+75.60	6.77' RT	75.00'	PC
	41HD+02.28	63.32' LT		
	41HD+06.85	11.54' RT		PT
H3	41HD+40.88	39.99' RT	75.00'	PC
	41HD+30.41	34.17' LT		
	41HD+60.46	35.39' RT		PT
H4	41HD+37.52	9.76' RT	65.00'	PC
	41HD+37.46	55.24' LT		
	42HD+29.87	0.73' RT		PT
H5	41HD+33.81	27.88' RT	93.00'	PC
	41HD+25.56	64.75' LT		
	42HD+39.86	20.00' RT		PT
H6	41HD+27.83	27.00' LT	50.00'	PC
	42HD+51.89	70.00' LT		
	42HD+51.89	20.00' LT		PT
H7	41HD+37.46	22.92' LT	50.00'	PC
	42HD+47.40	62.00' LT		
	42HD+47.40	12.00' LT		PT
H8	41HD+84.18	44.67' RT	10.00'	PC
	41HD+83.31	54.55' RT		
	41HD+87.24	61.27' RT		PT
H9	41HD+85.22	34.81' RT	5.00'	PC
	41HD+85.82	29.89' RT		
	41HD+89.24	29.97' RT		PT
H10	41HD+96.78	23.92' RT	10.00'	PC
	42HD+03.88	25.85' RT		
	42HD+07.29	34.52' RT		PT

PROJECT NO: 1301-13-71	HWY: LOCAL ROADS	COUNTY: MILWAUKEE	PLAN DETAILS - N. HARBOR DRIVE	SHEET 32	E

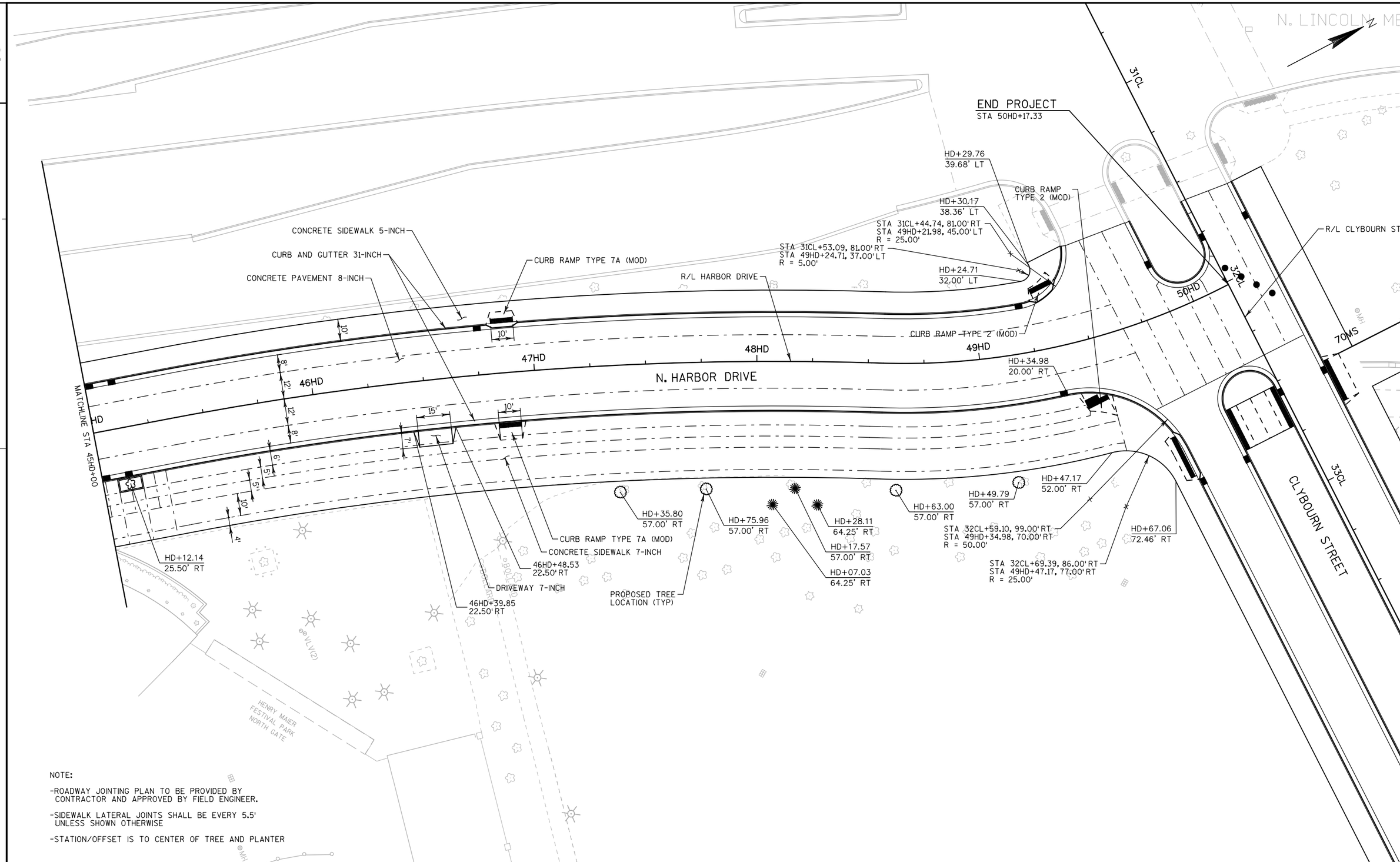

NOTE:

-ROADWAY JOINTING PLAN TO BE PROVIDED BY CONTRACTOR AND APPROVED BY FIELD ENGINEER.

-SIDEWALK LATERAL JOINTS SHALL BE EVERY 5.5' UNLESS SHOWN OTHERWISE

-STATION/OFFSET IS TO CENTER OF TREE AND PLANTER

PROJECT NO: 1301-13-71	HWY: LOCAL ROADS	COUNTY: MILWAUKEE	PLAN DETAILS - N. HARBOR DRIVE	SHEET 33	E

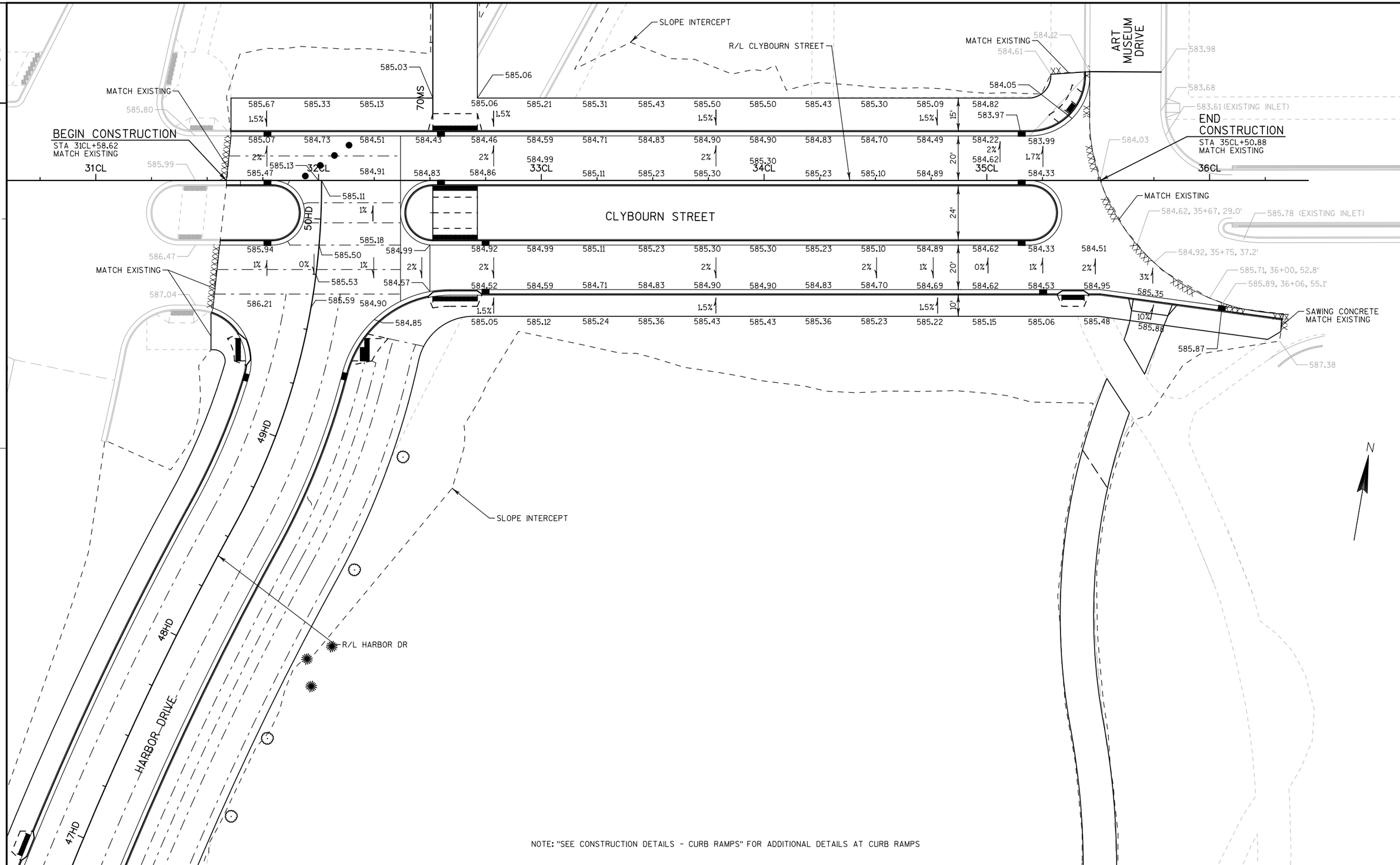

NOTE: "SEE CONSTRUCTION DETAILS - CURB RAMPS" FOR ADDITIONAL DETAILS AT CURB RAMPS

PROJECT NO: 1301-13-71	HWY: LOCAL ROADS	COUNTY: MILWAUKEE	PAVING GRADES - CLYBOURN STREET	SHEET 34	E

FILE NAME : ch_B_021301_pg.DGN PLOT DATE : 22-JUL-2016 PLOT BY : mmorgan PLOT NAME : PLOT SCALE : 40:1

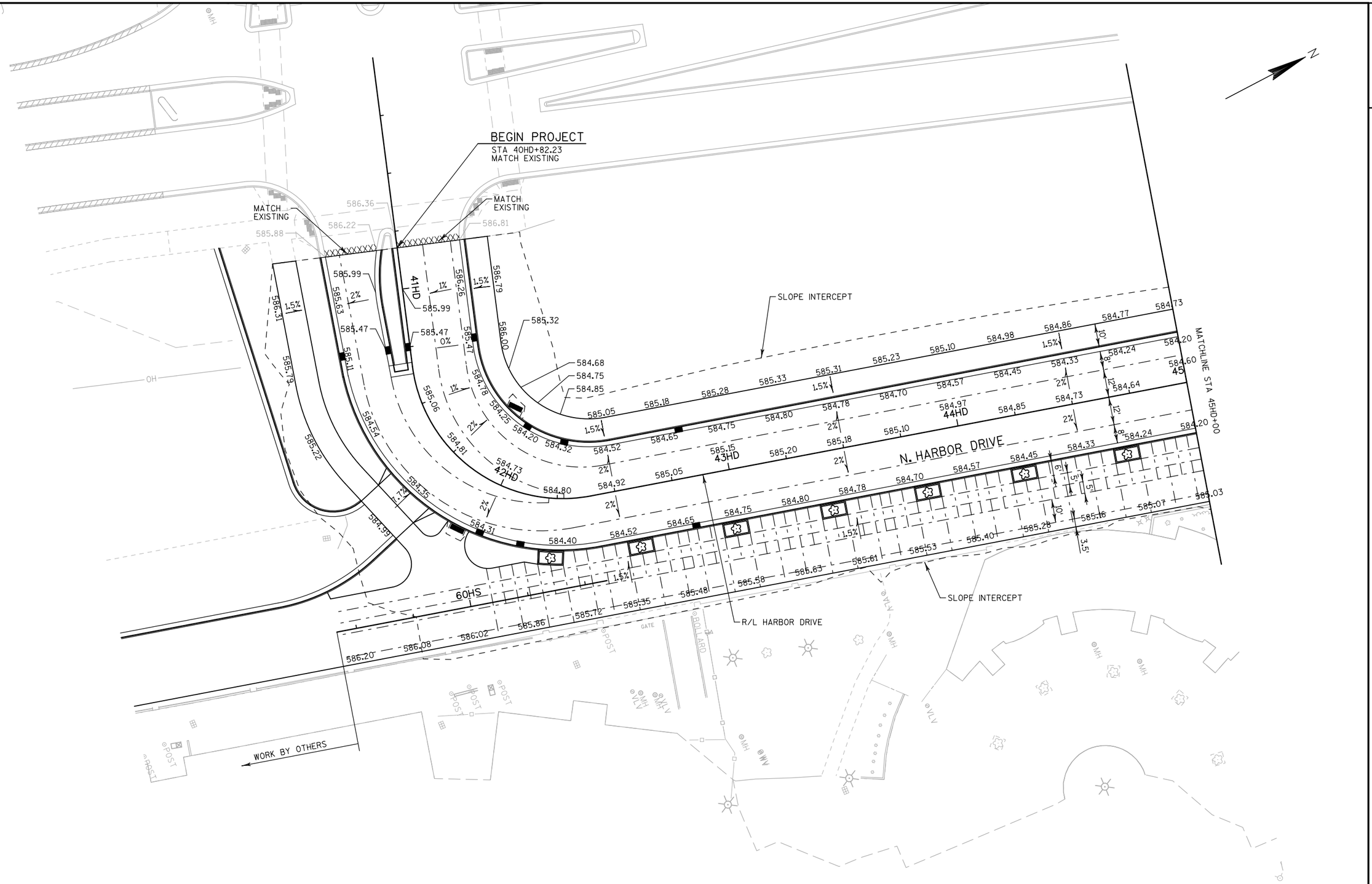

NOTE: "SEE CONSTRUCTION DETAILS - CURB RAMPS" FOR ADDITIONAL DETAILS AT CURB RAMPS

PROJECT NO: 1301-13-71	HWY: LOCAL ROADS	COUNTY: MILWAUKEE	PAVING GRADES - N. HARBOR DRIVE	SHEET 35	E

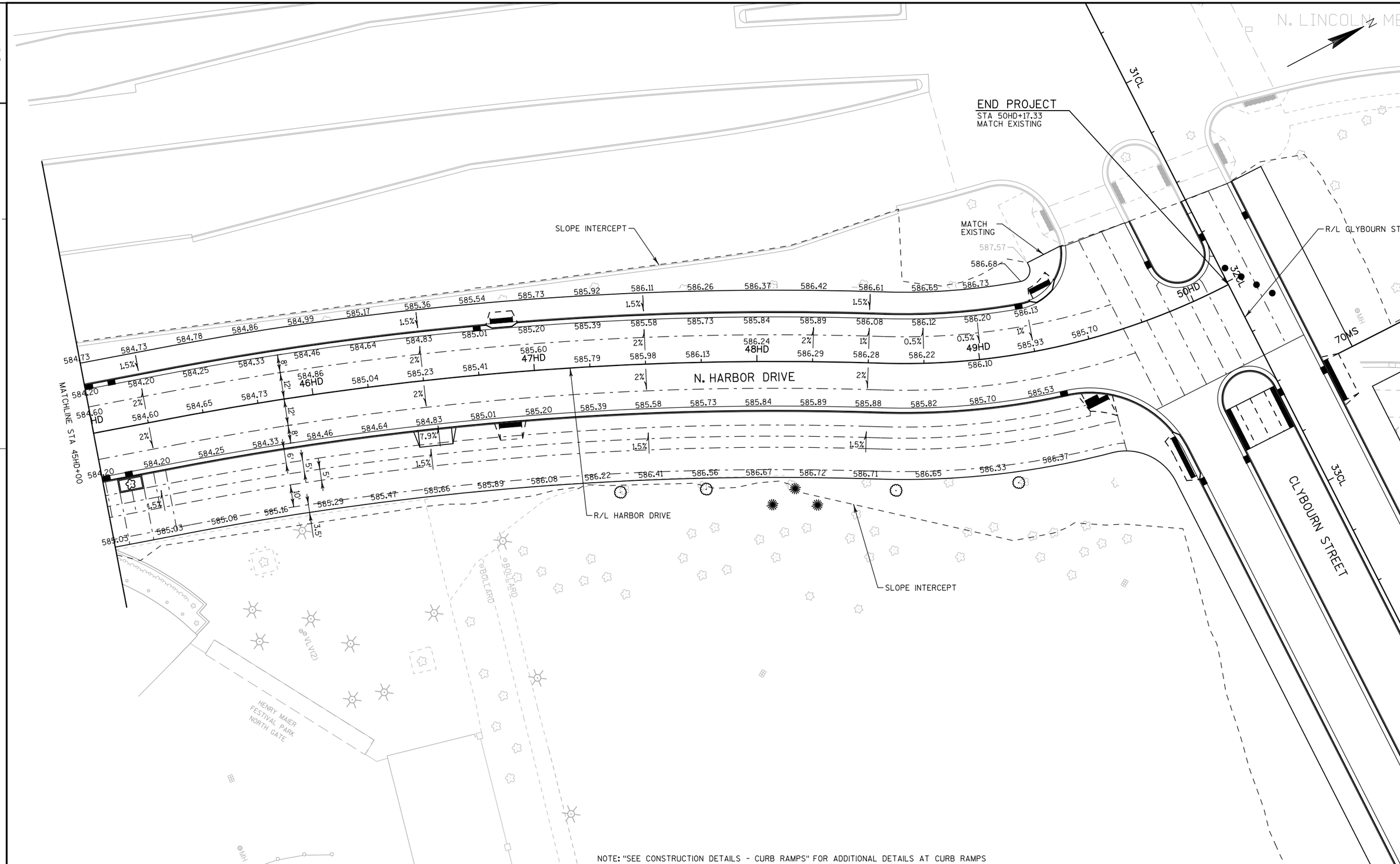

NOTE: "SEE CONSTRUCTION DETAILS - CURB RAMPS" FOR ADDITIONAL DETAILS AT CURB RAMPS

PROJECT NO: 1301-13-71	HWY: LOCAL ROADS	COUNTY: MILWAUKEE	PAVING GRADES - N. HARBOR DRIVE	SHEET 36	E

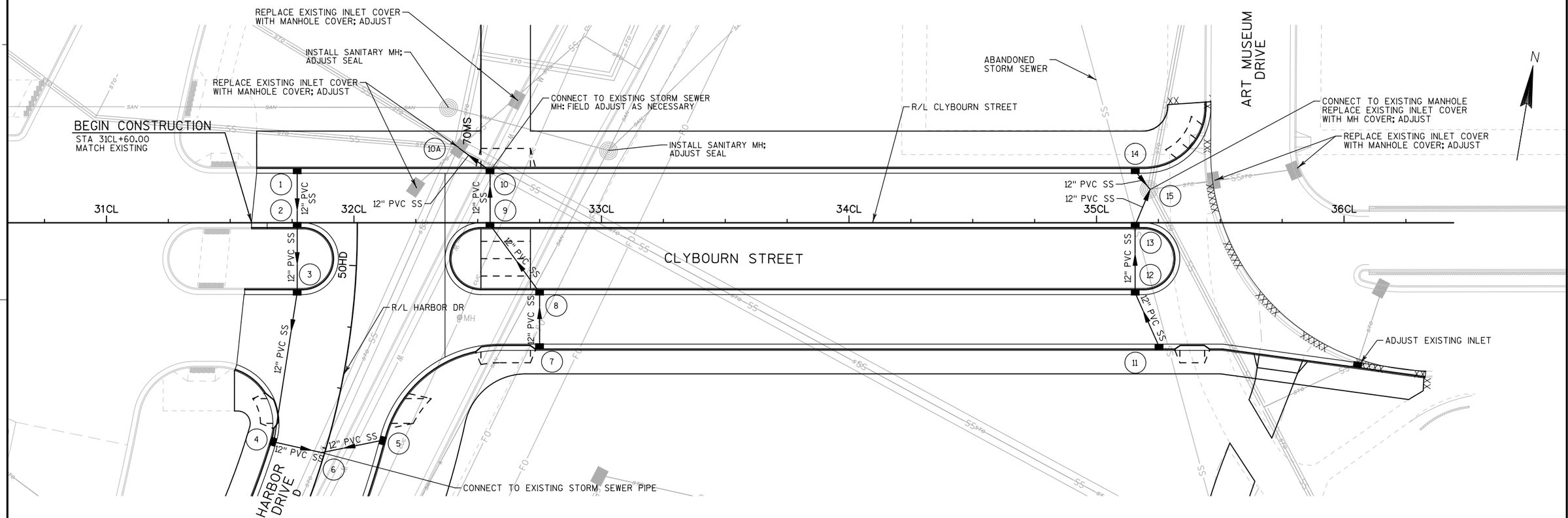

PROJECT NO: 1301-13-71	HWY: LOCAL ROADS	COUNTY: MILWAUKEE	STORM SEWER - CLYBOURN STREET	SHEET 37	E

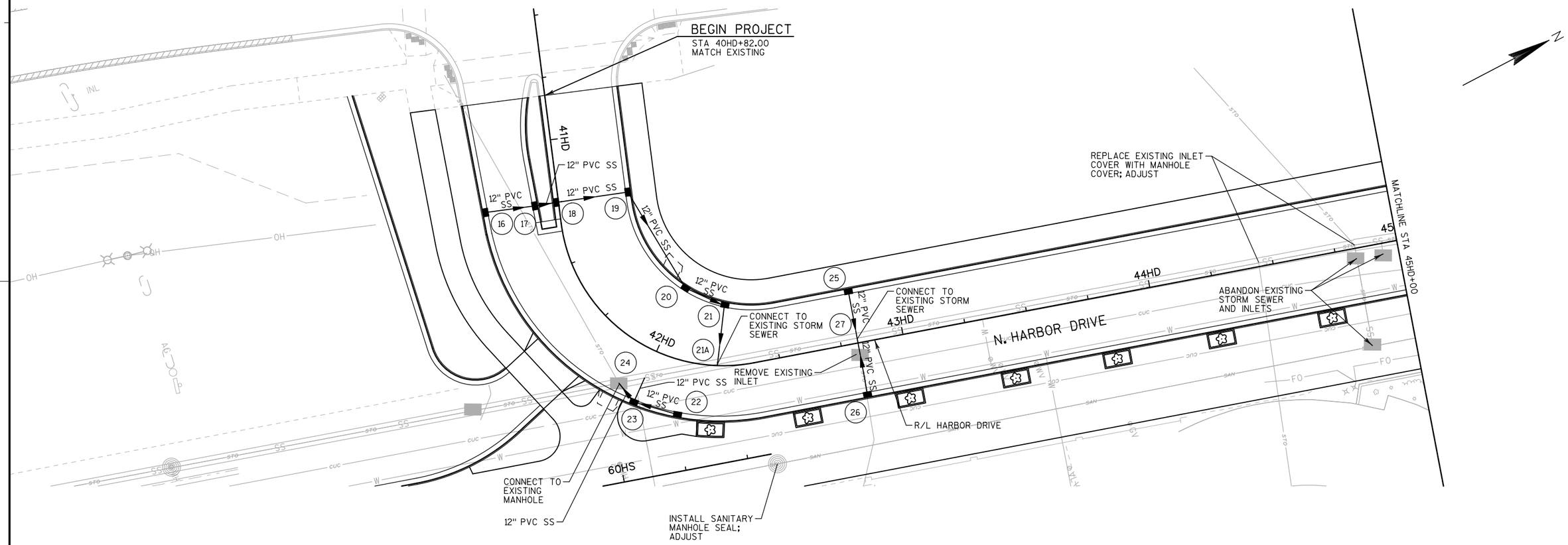

PROJECT NO: 1301-13-71	HWY: LOCAL ROADS	COUNTY: MILWAUKEE	STORM SEWER - N. HARBOR DRIVE	SHEET 38	E

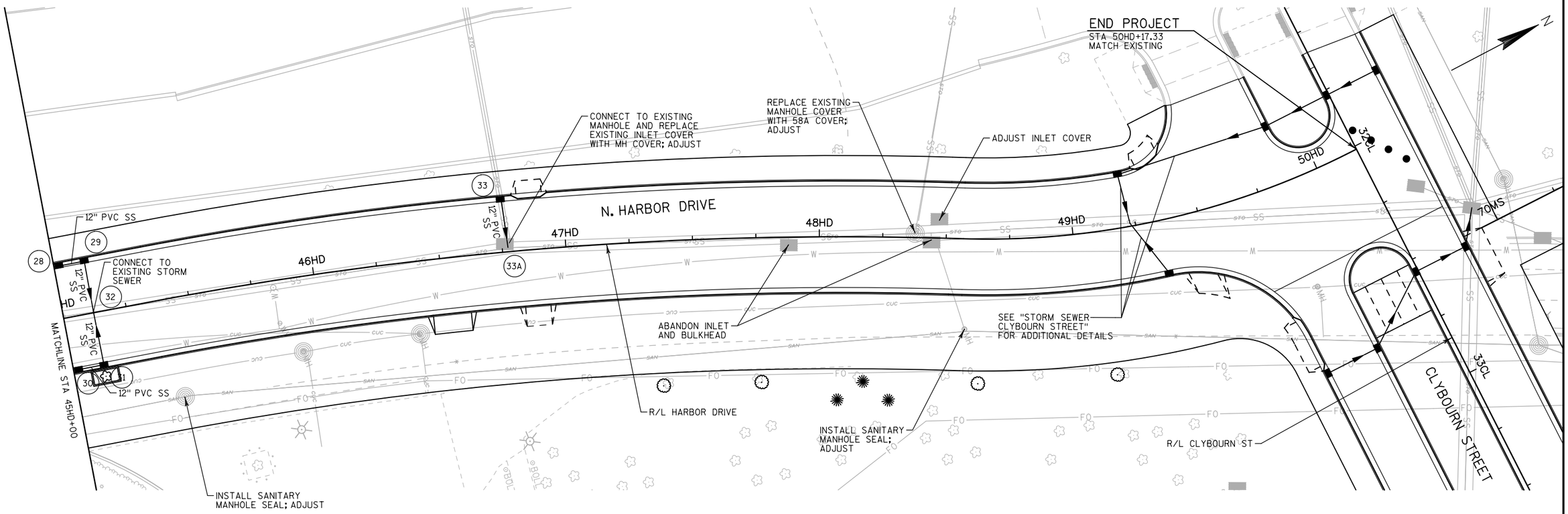

PROJECT NO: 1301-13-71	HWY: LOCAL ROADS	COUNTY: MILWAUKEE	STORM SEWER - N. HARBOR DRIVE	SHEET 39	E

2

GENERAL NOTES

1. DETAILS OF CONSTRUCTION MATERIALS AND WORKMANSHIP NOT SHOWN ON THESE DRAWINGS SHALL CONFORM TO THE PERTINENT REQUIREMENTS OF THE CONTRACT.

2. LOCATIONS OF THE PVC CONDUITS ARE IDENTIFIED IN THE PLANS WHERE THEY ARE REQUIRED, HOWEVER, INSTALLATION WILL REQUIRE INTEGRATION WITH EXISTING FIELD CONDITIONS. UNDER THE APPROVAL OF THE ENGINEER, APPROPRIATE ADJUSTMENT OF CONDUIT LOCATIONS MAY BE MADE IF THE FIELD CONDITIONS ARE SUCH THAT THE CONDUIT CANNOT BE INSTALLED AT THE SPECIFIED LOCATIONS. FIELD MARK EACH CONDUIT LOCATION IN RED TO ILLUSTRATE AS BUILT CONDITIONS.

3. THE TRENCH SHALL NOT BE BACKFILLED PRIOR TO INSPECTIONS ON THE CONDUIT.

4. ALL OPEN AND UN-TERMINATED CONDUITS SHALL BE CAPPED OR PLUGGED WITH ENGINEER APPROVED FITTINGS IMMEDIATELY AFTER INSTALLATION.

5. BENDING OF PVC ELECTRICAL CONDUIT SHALL BE ACCOMPLISHED BY USING A BLANKET OR IMMERSION TYPE TANK DESIGNED FOR THE PURPOSE OF BENDING PVC ELECTRICAL CONDUIT.

6. ALL CUT ENDS SHALL BE TRIMMED INSIDE AND OUTSIDE TO REMOVE ALL ROUGH EDGES ON ALL CONDUITS.

7. PRIOR TO CONDUIT ACCEPTANCE, ALL CONDUIT ENDS SHALL BE THOROUGHLY CLEANED AND BE CAPPED WITH THE APPROPRIATE CAST PLASTIC CAP WHICH FITS SNUGGLY ON THE CONDUIT THAT CAN BE EASILY REMOVED. DUCT TAPE OR ANY OTHER CAPPING METHOD IS NOT ACCEPTABLE.

8. CONDUIT RUNS SHALL BE THE SAME SIZE PIPE FROM ONE END TO THE OTHER (FROM PULL BOX-TO-PULL BOX, JUNCTION BOX OR BASE-TO-BASE, ETC.) UNLESS OTHERWISE NOTED ON PLANS.

9. PULL ROPE (3/8-INCH NYLON) SHALL BE INSTALLED IN ALL NEW CONDUITS.

10. CONTRACTOR SHALL SUPPLY AS-BUILT DRAWINGS (.PDF FORMAT) FOR ALL THE WORK BEING DONE.

11. CONDUIT LATERAL SHALL BE TRENCHED UNDER PAVEMENT BEFORE PAVEMENT CONSTRUCTION.

12. UNDERGROUND WIRE & CONDUIT SHOWN ON REMOVAL PLANS FOR REMOVAL SHALL BE ABANDONED IN PLACE UNLESS DIRECTED BY THE ENGINEER. CONTRACTOR MAY CHOOSE TO REMOVE CONDUCTOR AT THEIR OWN EXPENSE.

13. PROVIDE MINIMUM CABLE SLACK AS MENTIONED BELOW.

PULL BOXES:	5-FT ONE WAY IN OR OUT
EMBEDDED JUNCTION BOXES:	3-FT
DISTRIBUTION CENTER/LOAD CENTER:	10-FT

14. AT EVERY BRIDGE JOIN, EXPANSION/DEFLECTION FITTINGS MUST BE USED TO PREVENT DAMAGE TO CONDUIT AND LIGHTING CIRCUITS. THIS ITEM IS INCIDENTAL TO THE CONDUIT BID ITEM.

15. THE SUPPORT CHANNELS FOR INSTALLATION OF CONDUITS, LUMINAIRES, JUNCTION BOXES AND ENCLOSURES SHALL BE STAINLESS STEEL UNISTRUT P1000 SERIES OR APPROVED EQUAL, CHANNELS SHALL BE SLOTTED OR PERFORATED.

16. PROVIDE REMOVABLE SEALANT SUCH AS DUCT SEAL IN THE CONDUITS AT THE CABINETS, PULL BOXES AND JUNCTIONS BOXES TO AVOID CONDENSATION CAUSED BY AIRFLOW THROUGH THE CONDUITS DUE TO TEMPERATURE DIFFERENCE. THIS WORK SHALL BE INCIDENTAL TO ASSOCIATED CONDUIT PAY ITEM.

LIGHTING PLAN FINAL - GENERAL NOTES

1. INSTALLATION OF UNDERGROUND CONDUIT LATERAL UNDER PAVEMENT SHALL BE INSTALLED MINIMUM 30 INCH BELOW PROPOSED GRADE. CONDUIT LATERAL SHALL BE TRENCHED UNDER PAVEMENT BEFORE PAVEMENT CONSTRUCTION. CONTRACTOR IS RESPONSIBLE TO COORDINATE WITH ROADWAY CONSTRUCTION FOR CONDUIT LATERAL INSTALLATION.

2. PROVIDE 3 INCH PVC CONDUIT ELBOW IN ALL GROUND MOUNTED CONCRETE BASES FOR CABLE IN DUCT TYPE INSTALLATION. THIS WORK IS INCIDENTAL TO CONCRETE BASES PAY ITEMS.

3. AT EACH SIGN STRUCTURE BASE PROVIDE 2" PVC CONDUIT FROM JUNCTION BOX TO SIGN STRUCTURE. INSTALLATION OF JUNCTION BOX AND CONDUIT ARE INCIDENTAL TO SIGN STRUCTURE INSTALLATION WORK.

4. INSTALL COMMON GROUND CONDUCTOR IN CONDUIT WHERE MULTIPLE BRANCH CIRCUITS CONDUCTORS ARE INSTALLED IN SAME CONDUIT AND SPLICE THE GROUND CONDUCTOR WITH TAP CONNECTOR IN PULLBOX.

5. ALL CONDUITS AND JUNCTION BOXES EMBEDDED IN STRUCTURE SHALL BE PAID UNDER STRUCTURE PAY ITEMS. CONTRACTOR SHALL COORDINATE THE EXACT LOCATION OF EMBEDDED CONDUITS.

ABBREVIATIONS

ABBREVIATION	DESCRIPTION
1P	1 PHASE
2W	2 WIRE
A	AMPERES
A.I.C.	AMPS INTERRUPTING CURRENT
AN	ABOVE NORMAL
AWG	AMERICAN WIRE GAUGE
B.N.	BELOW NORMAL
C	CONDUIT
CKT. OR CIRC.	CIRCUIT
DIA.	DIAMETER
EB	EAS BOUND
EXLPB	EXISTING LIGHTING PULL BOX
FT.	FEET
GND	GROUND
HID	HIGH INTENSITY DISCHARGE
HPS	HIGH PRESSURE SODIUM
JB	JUNCTION BOX
L.E.D.	LIGHT EMITTING DIODE
LPB	LIGHTING PULL BOX
LT	LEFT
M.B.	MAIN BREAKER
M.L.O.	MAIN LUGS ONLY
NB	NORTH BOUND
NEMA	NATIONAL ELECTRICAL MANUFACTURES ASSOCIATION
No. / #	NUMBER
N.T.S.	NOT TO SCALE
P	POLE WHEN USED WITH CIRCUIT BREAKER
RT	RIGHT
RTRC	CONDUIT REINFORCED THERMOSETTING RESIN 1-INCH
SB	SOUTH BOUND
SPD	SUREG - PROTECTON DEVICES
SS	STAINLESS STEEL
STA.	STATION
UDL	UNDERDECK LIGHTING
VAC	VOLTS ALTERNATING CURRENT
WB	WEST BOUND
W.S.C.S.	WISCONISIN STATE ELECTRICAL CODE
X'MER	TRANSFORMER

2

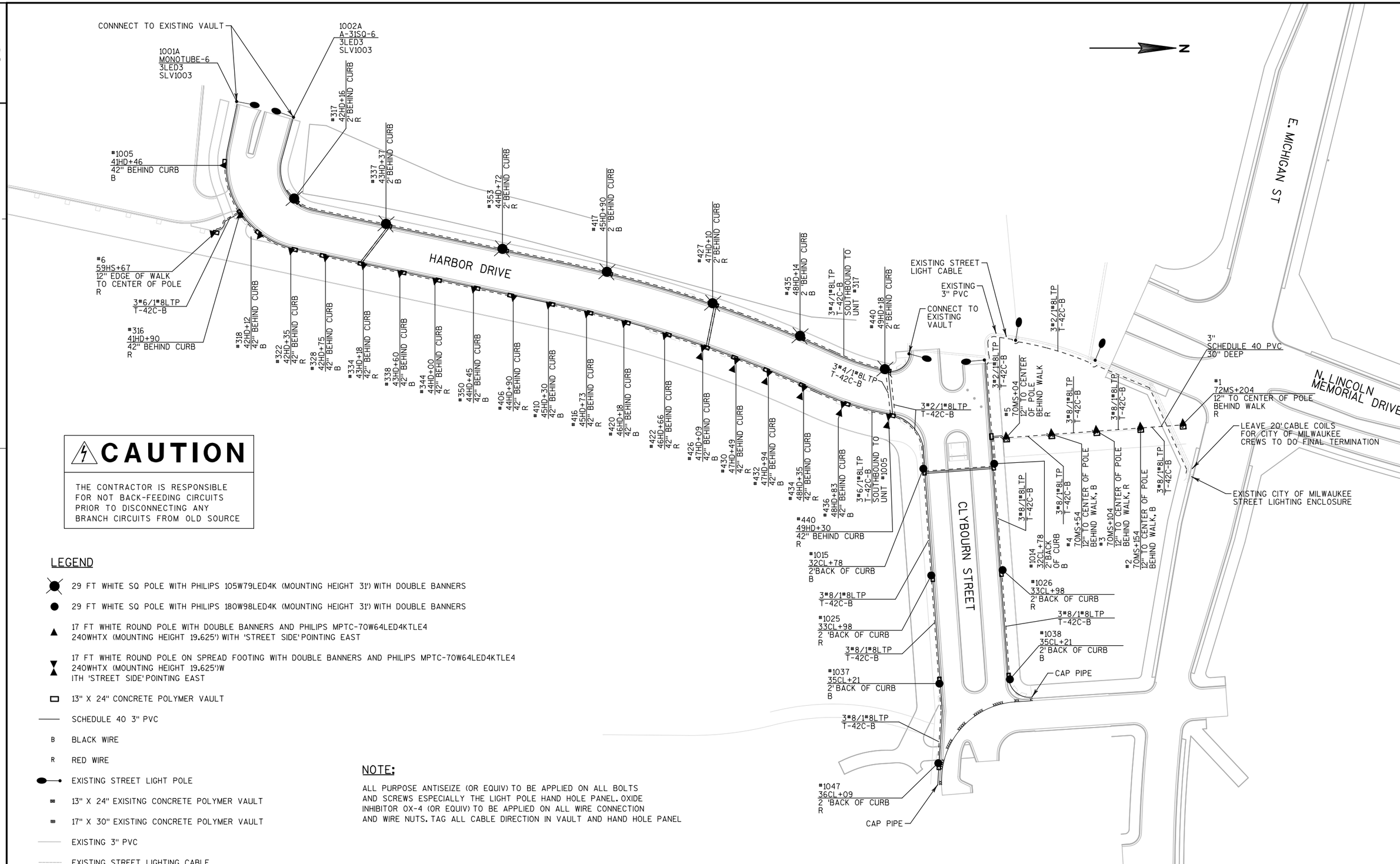

⚠ CAUTION

THE CONTRACTOR IS RESPONSIBLE FOR NOT BACK-FEEDING CIRCUITS PRIOR TO DISCONNECTING ANY BRANCH CIRCUITS FROM OLD SOURCE

LEGEND

- 29 FT WHITE SQ POLE WITH PHILIPS 105W79LED4K (MOUNTING HEIGHT 31') WITH DOUBLE BANNERS
- 29 FT WHITE SQ POLE WITH PHILIPS 180W98LED4K (MOUNTING HEIGHT 31') WITH DOUBLE BANNERS
- 17 FT WHITE ROUND POLE WITH DOUBLE BANNERS AND PHILIPS MPTC-70W64LED4KTLE4 240WHTX (MOUNTING HEIGHT 19.625') WITH 'STREET SIDE' POINTING EAST
- 17 FT WHITE ROUND POLE ON SPREAD FOOTING WITH DOUBLE BANNERS AND PHILIPS MPTC-70W64LED4KTLE4 240WHTX (MOUNTING HEIGHT 19.625')W ITH 'STREET SIDE' POINTING EAST
- 13" X 24" CONCRETE POLYMER VAULT
- SCHEDULE 40 3" PVC
- B BLACK WIRE
- R RED WIRE
- EXISTING STREET LIGHT POLE
- 13" X 24" EXISITNG CONCRETE POLYMER VAULT
- 17" X 30" EXISTING CONCRETE POLYMER VAULT
- EXISTING 3" PVC
- EXISTING STREET LIGHTING CABLE

NOTE:

ALL PURPOSE ANTISEIZE (OR EQUIV) TO BE APPLIED ON ALL BOLTS AND SCREWS ESPECIALLY THE LIGHT POLE HAND HOLE PANEL. OXIDE INHIBITOR OX-4 (OR EQUIV) TO BE APPLIED ON ALL WIRE CONNECTION AND WIRE NUTS. TAG ALL CABLE DIRECTION IN VAULT AND HAND HOLE PANEL

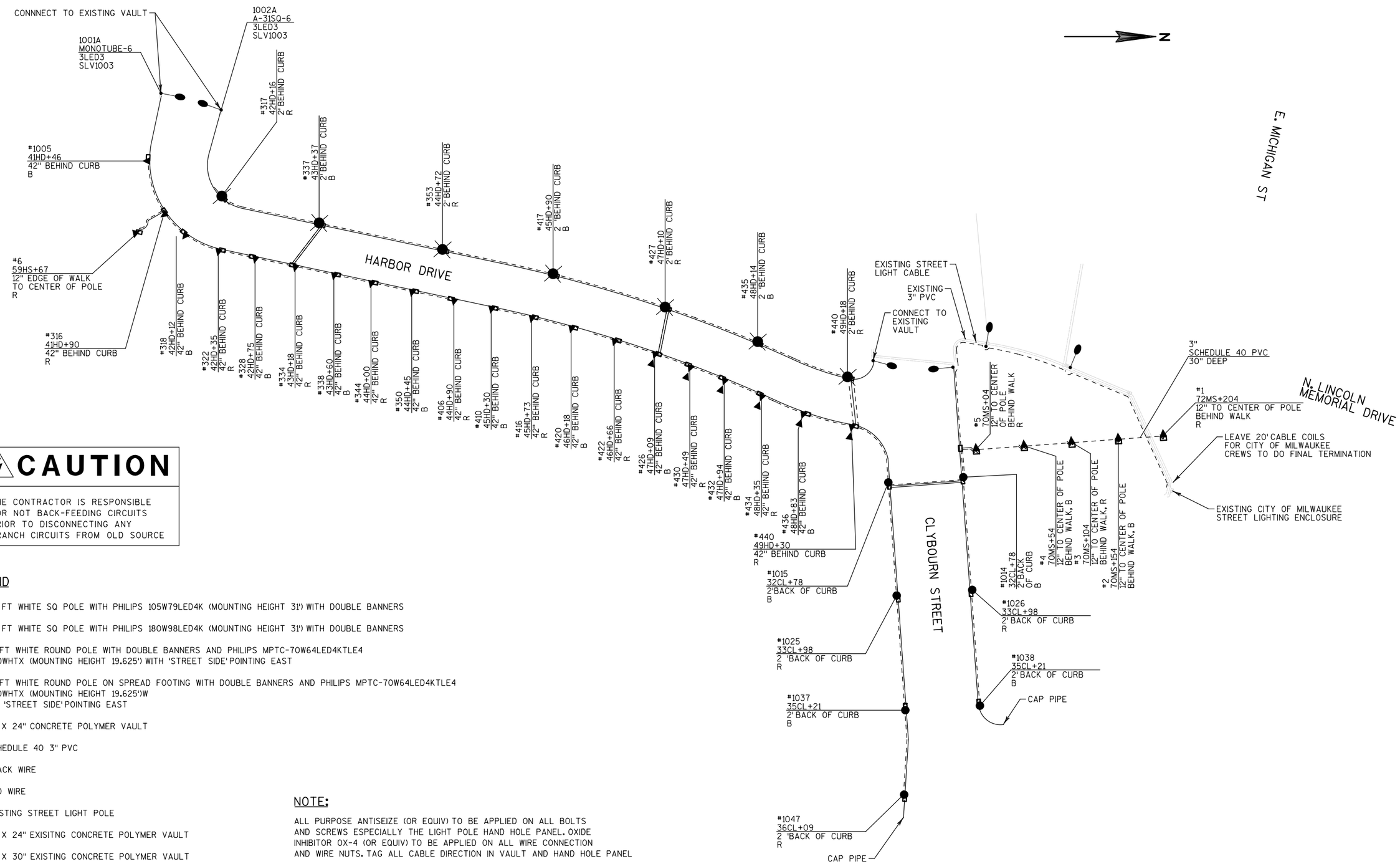

⚠ CAUTION

THE CONTRACTOR IS RESPONSIBLE FOR NOT BACK-FEEDING CIRCUITS PRIOR TO DISCONNECTING ANY BRANCH CIRCUITS FROM OLD SOURCE

LEGEND

- 29 FT WHITE SQ POLE WITH PHILIPS 105W79LED4K (MOUNTING HEIGHT 31') WITH DOUBLE BANNERS
- 29 FT WHITE SQ POLE WITH PHILIPS 180W98LED4K (MOUNTING HEIGHT 31') WITH DOUBLE BANNERS
- 17 FT WHITE ROUND POLE WITH DOUBLE BANNERS AND PHILIPS MPTC-70W64LED4KTLE4 240WHTX (MOUNTING HEIGHT 19.625') WITH 'STREET SIDE' POINTING EAST
- 17 FT WHITE ROUND POLE ON SPREAD FOOTING WITH DOUBLE BANNERS AND PHILIPS MPTC-70W64LED4KTLE4 240WHTX (MOUNTING HEIGHT 19.625')W ITH 'STREET SIDE' POINTING EAST
- 13" X 24" CONCRETE POLYMER VAULT
- SCHEDULE 40 3" PVC
- B BLACK WIRE
- R RED WIRE
- EXISTING STREET LIGHT POLE
- 13" X 24" EXISITNG CONCRETE POLYMER VAULT
- 17" X 30" EXISTING CONCRETE POLYMER VAULT
- EXISTING 3" PVC
- EXISTING STREET LIGHTING CABLE

NOTE:

ALL PURPOSE ANTISEIZE (OR EQUIV) TO BE APPLIED ON ALL BOLTS AND SCREWS ESPECIALLY THE LIGHT POLE HAND HOLE PANEL. OXIDE INHIBITOR OX-4 (OR EQUIV) TO BE APPLIED ON ALL WIRE CONNECTION AND WIRE NUTS. TAG ALL CABLE DIRECTION IN VAULT AND HAND HOLE PANEL

PROJECT NO: 1301-13-71	HWY: LOCAL ROADS	COUNTY: MILWAUKEE	LIGHTING PLAN SCHEMATIC	SHEET 42	E

BEGIN CONSTRUCTION
STA 31CL+58.62
MATCH EXISTING

CWW12

70MS

14'

20'

STA 32CL+51, 0'RT

20'

31CL

32CL

33CL

34CL

35CL

36CL

ART MUSEUM DRIVE

CWW12

10'

STA 35CL+78, 28'LT

STA 35CL+45, 28'LT

STA 35CL+44, 26.4'LT

R/L CLYBOURN STREET

CLYBOURN STREET

24'

END CONSTRUCTION
STA 35CL+50.88
MATCH EXISTING

50HD

10'

20'

STA 32CL+51, 29'RT

20'

STA 35CL+44, 49'RT

9'

CWW12

CWW12

N

49HD

48HD

R/L HARBOR DR

HARBOR DRIVE

47HD

LEGEND

CWW12 PAVEMENT MARKING CROSSWALK EPOXY 12-INCH (WHITE)

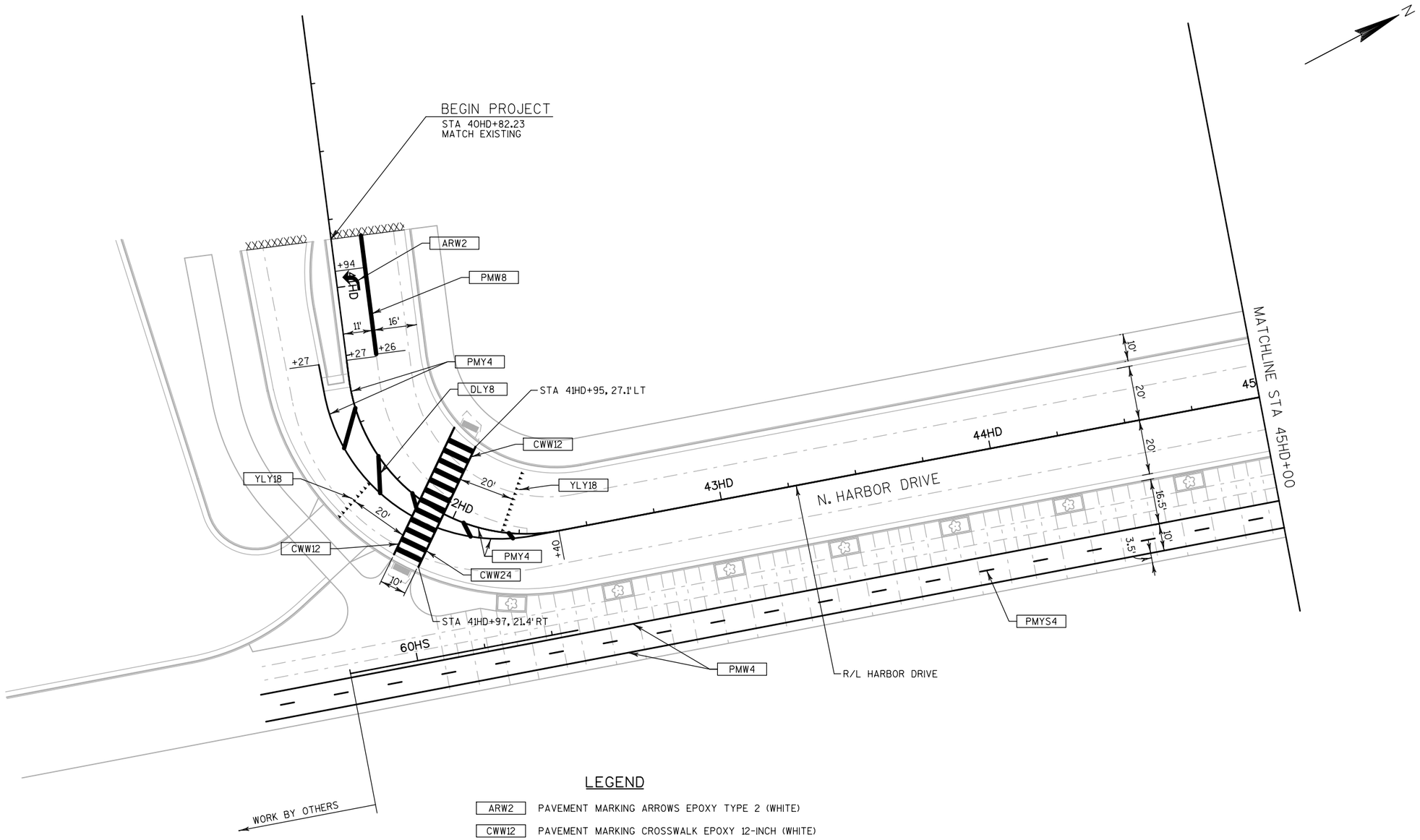

LEGEND

ARW2	PAVEMENT MARKING ARROWS EPOXY TYPE 2 (WHITE)
CWW12	PAVEMENT MARKING CROSSWALK EPOXY 12-INCH (WHITE)
CWW24	PAVEMENT MARKING CROSSWALK EPOXY 24-INCH (WHITE), 24-INCH SPACING
DLY8	PAVEMENT MARKING DIAGONAL EPOXY 8-INCH (YELLOW)
PMW4	PAVEMENT MARKING EPOXY 4-INCH (WHITE)
PMY4	PAVEMENT MARKING EPOXY 4-INCH (YELLOW)
PMW8	PAVEMENT MARKING EPOXY 8-INCH (WHITE)
PMYS4	PAVEMENT MARKING PAINT 4-INCH (YELLOW SKIP) (5' SEGMENT, 15' GAP)
YLY18	PAVEMENT MARKING YIELD LINE SYMBOLS EPOXY 18-INCH (WHITE)

END PROJECT
STA 50HD+17.33
MATCH EXISTING

31CL

STA 46HD+92, 20' LT

YLY18

PMY4

10'

20'

47HD

46HD

48HD

49HD

R/L HARBOR DRIVE

STA 49HD+40, 25.5' LT

CWW12

50HD

32CL

R/L CLYBOURN ST

70MS

STA 49HD+51, 23.3' RT

+30

+31

CWW24

N. HARBOR DRIVE

MATCHLINE STA 45HD+00

16.5'

3.5'

YLY18

CWW12

PMYS4

PMW4

ARW1

SMWBL

33CL

CLYBOURN STREET

LEGEND

ARW1	PAVEMENT MARKING ARROWS EPOXY TYPE 1 (WHITE)
CWW12	PAVEMENT MARKING CROSSWALK EPOXY 12-INCH (WHITE)
CWW24	PAVEMENT MARKING CROSSWALK EPOXY 24-INCH (WHITE), 24-INCH SPACING
PMW4	PAVEMENT MARKING EPOXY 4-INCH (WHITE)
PMY4	PAVEMENT MARKING EPOXY 4-INCH (YELLOW)
PMYS4	PAVEMENT MARKING PAINT 4-INCH (YELLOW SKIP) (5' SEGMENT, 15' GAP)
SMWBL	PAVEMENT MARKING SYMBOLS BIKE LANE EPOXY (WHITE)
SLW12	PAVEMENT MARKING STOP LINE EPOXY 12-INCH (WHITE)
YLY18	PAVEMENT MARKING YIELD LINE SYMBOLS EPOXY 18-INCH (WHITE)

PROJECT NO: 1301-13-71	HWY: LOCAL ROADS	COUNTY: MILWAUKEE	PAVEMENT MARKING - N. HARBOR DRIVE	SHEET 45	E

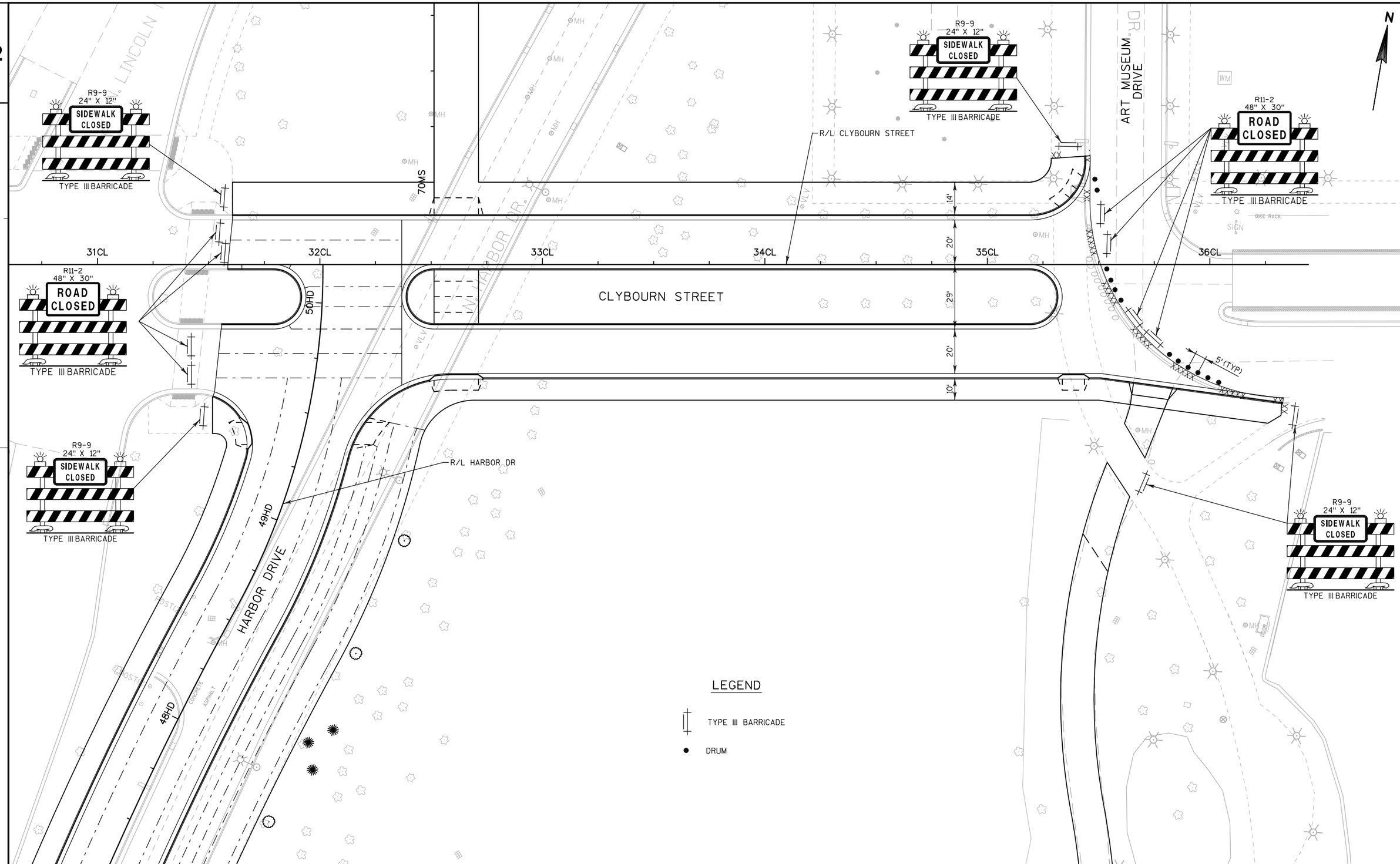

PROJECT NO: 1301-13-71	HWY: LOCAL ROADS	COUNTY: MILWAUKEE	TRAFFIC CONTROL - CLYBOURN STREET	SHEET 46	E

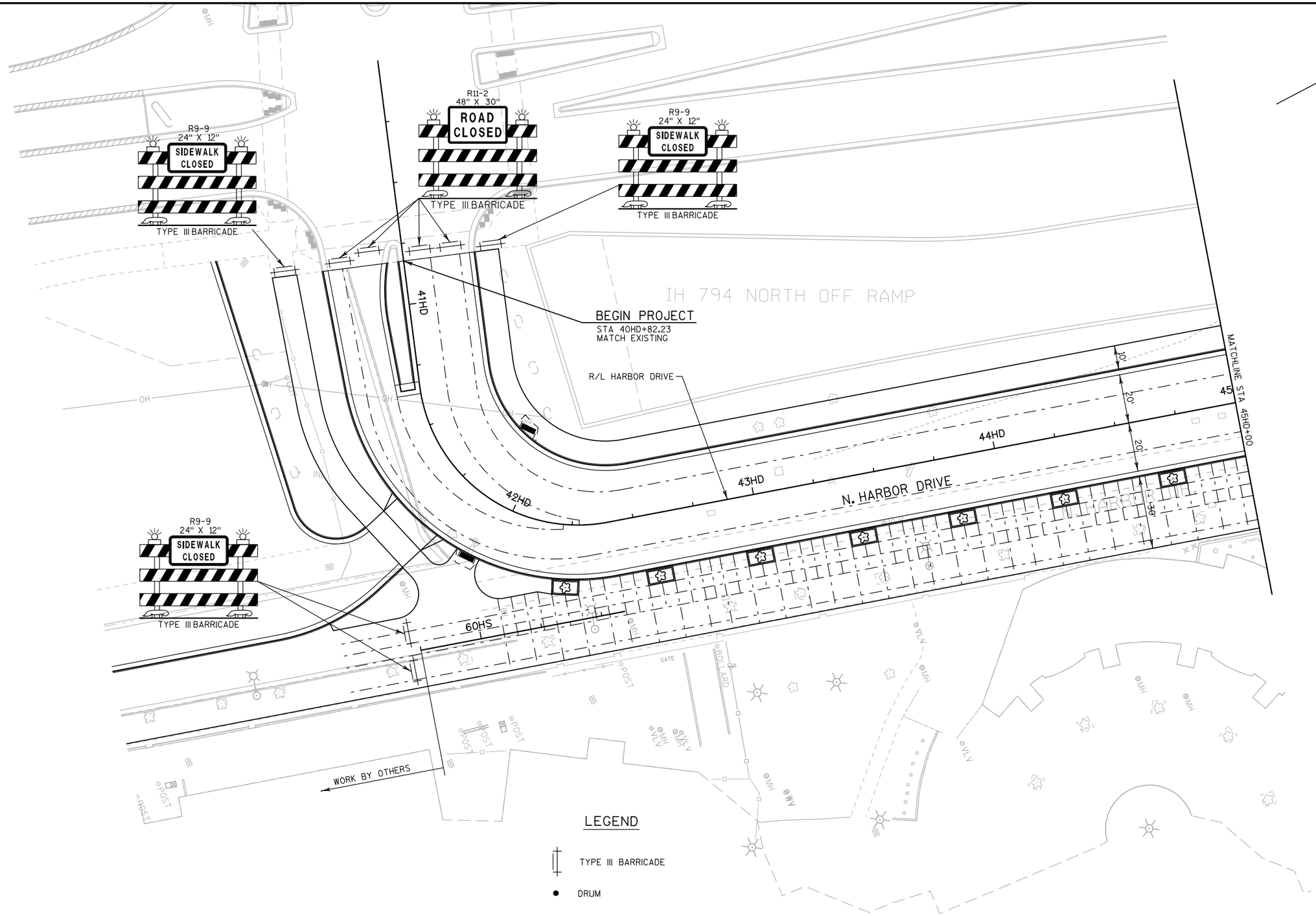

PROJECT NO: 1301-13-71	HWY: LOCAL ROADS	COUNTY: MILWAUKEE	TRAFFIC CONTROL - N. HARBOR DRIVE	SHEET 47	E

END PROJECT
STA 50HD+17.33
MATCH EXISTING

R11-2
48" X 30"
ROAD CLOSED
TYPE III BARRICADE

R9-9
24" X 12"
SIDEWALK CLOSED
TYPE III BARRICADE

R11-2
48" X 30"
ROAD CLOSED
TYPE III BARRICADE

R9-9
24" X 12"
SIDEWALK CLOSED
TYPE III BARRICADE

N. LINCOLN MEM

31CL

32CL

50HD

70MS

N. HARBOR DR.

33CL

CLYBOURN STREET

R/L CLYBOURN ST

N

N. HARBOR DRIVE

46HD

47HD

48HD

49HD

10'

20'

20'

30'

MATCHLINE STA 45HD+00

R/L HARBOR DRIVE

CONCRETE

ASPHALT

BOLLARD

BOLLARD

VLV(2)

HENRY MAIER FESTIVAL PARK NORTH GATE

MH

VLV

LEGEND

TYPE III BARRICADE

DRUM

PROJECT NO: 1301-13-71	HWY: LOCAL ROADS	COUNTY: MILWAUKEE	TRAFFIC CONTROL - N. HARBOR DRIVE	SHEET 48	E

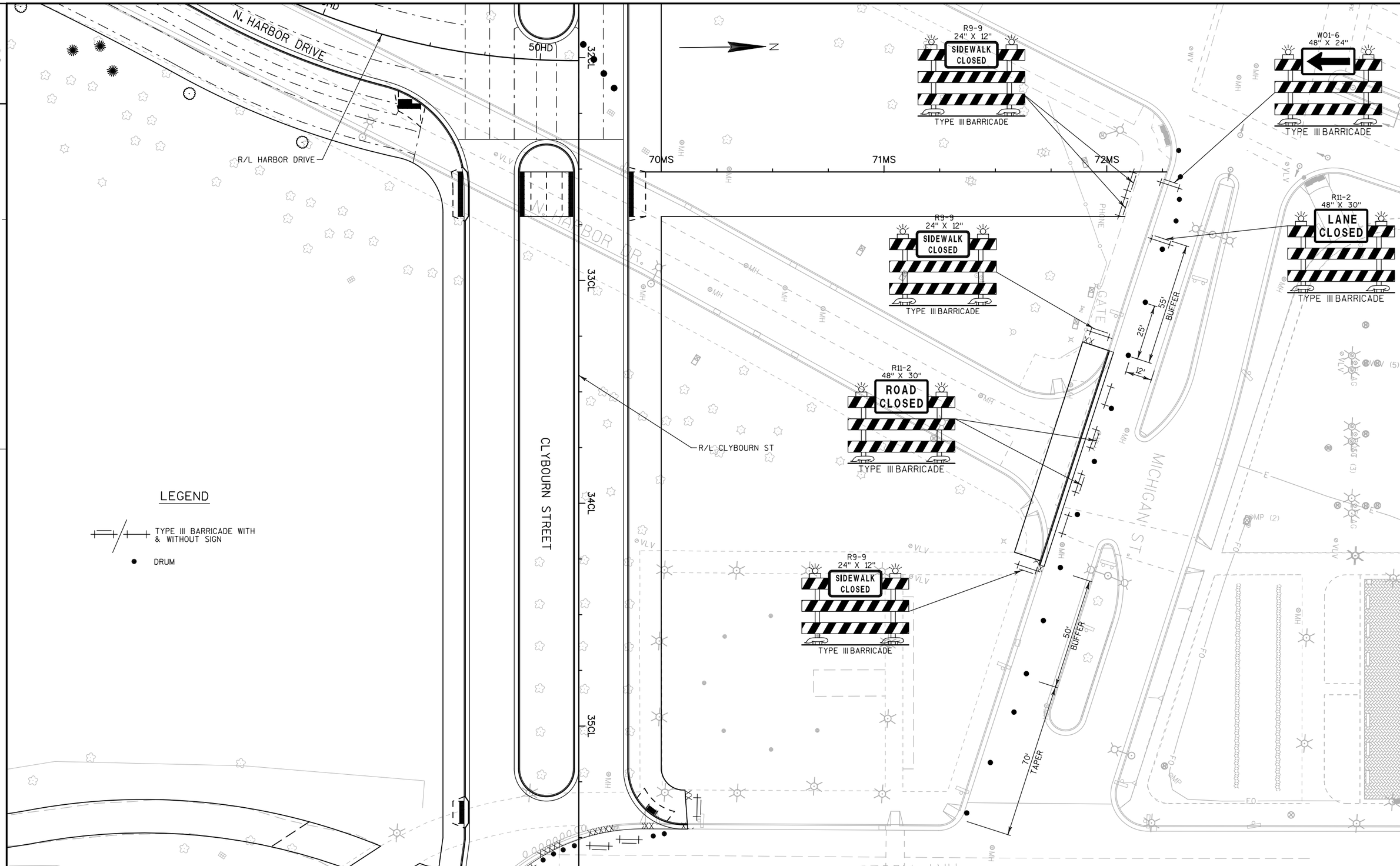

PROJECT NO: 1301-13-71	HWY: LOCAL ROADS	COUNTY: MILWAUKEE	TRAFFIC CONTROL - MICHIGAN SIDEWALK	SHEET 49	E

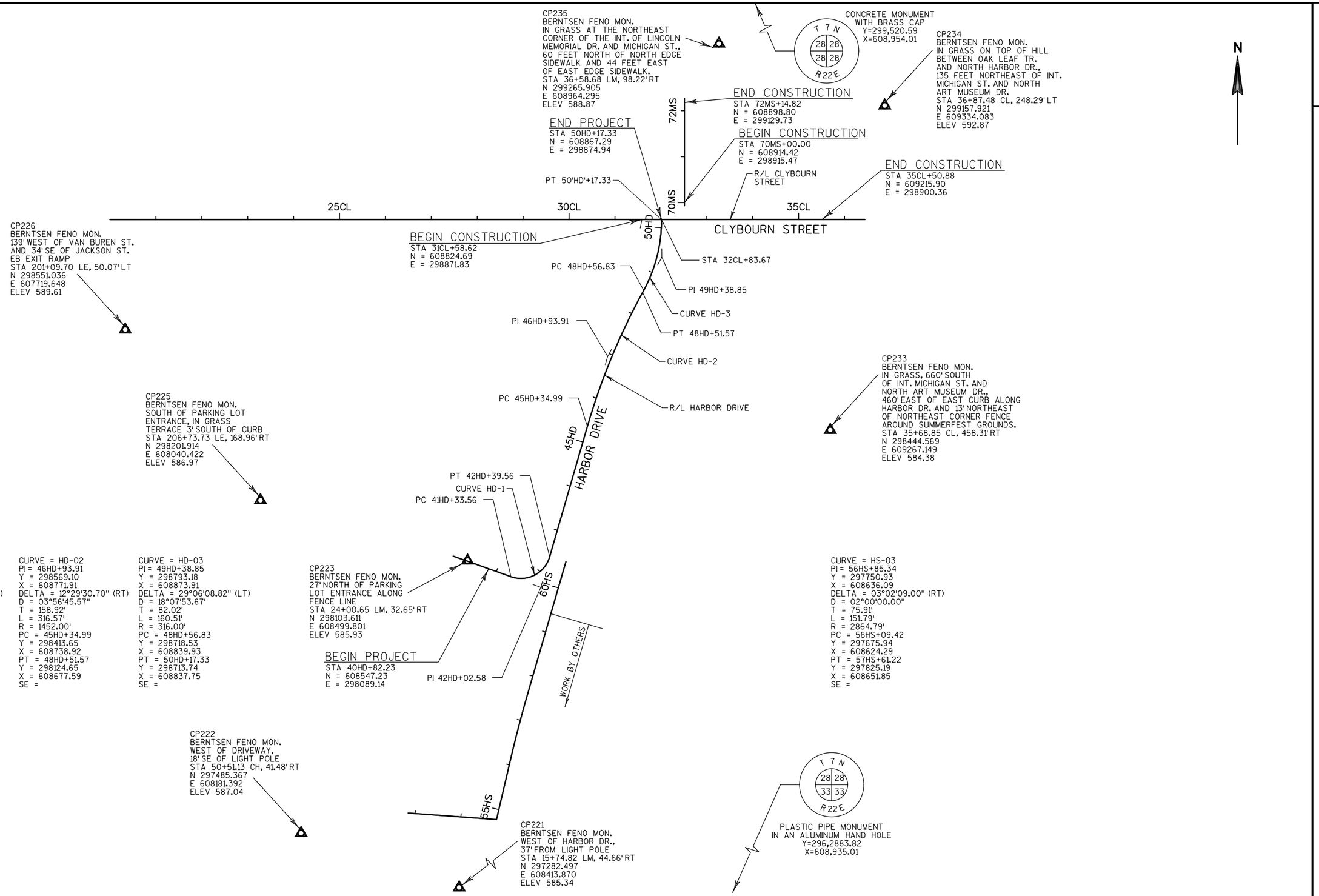
CP235
BERNTSEN FENO MON.
IN GRASS AT THE NORTHEAST
CORNER OF THE INT. OF LINCOLN
MEMORIAL DR. AND MICHIGAN ST.,
60 FEET NORTH OF NORTH EDGE
SIDEWALK AND 44 FEET EAST
OF EAST EDGE SIDEWALK.
STA 36+58.68 LM, 98.22' RT
N 299265.905
E 608964.295
ELEV 588.87
T 7 N
28 28
28 28
R 22 E
CONCRETE MONUMENT
WITH BRASS CAP
Y=299,520.59
X=608,954.01
CP234
BERNTSEN FENO MON.
IN GRASS ON TOP OF HILL
BETWEEN OAK LEAF TR.
AND NORTH HARBOR DR.,
135 FEET NORTHEAST OF INT.
MICHIGAN ST. AND NORTH
ART MUSEUM DR.
STA 36+87.48 CL, 248.29' LT
N 299157.921
E 609334.083
ELEV 592.87
N
END CONSTRUCTION
STA 72MS+14.82
N = 608898.80
E = 299129.73
72MS
END PROJECT
STA 50HD+17.33
N = 608867.29
E = 298874.94
BEGIN CONSTRUCTION
STA 70MS+00.00
N = 608914.42
E = 298915.47
R/L CLYBOURN
STREET
END CONSTRUCTION
STA 35CL+50.88
N = 609215.90
E = 298900.36
PT 50'HD'+17.33
70MS
25CL
30CL
35CL
50HD
CLYBOURN STREET
CP226
BERNTSEN FENO MON.
139' WEST OF VAN BUREN ST.
AND 34' SE OF JACKSON ST.
EB EXIT RAMP
STA 201+09.70 LE, 50.07' LT
N 298551.036
E 607719.648
ELEV 589.61
BEGIN CONSTRUCTION
STA 31CL+58.62
N = 608824.69
E = 298871.83
STA 32CL+83.67
PC 48HD+56.83
PI 49HD+38.85
CURVE HD-3
PT 48HD+51.57
PI 46HD+93.91
CURVE HD-2
CP233
BERNTSEN FENO MON.
IN GRASS, 660' SOUTH
OF INT. MICHIGAN ST. AND
NORTH ART MUSEUM DR.,
460' EAST OF EAST CURB ALONG
HARBOR DR. AND 13' NORTHEAST
OF NORTHEAST CORNER FENCE
AROUND SUMMERFEST GROUNDS.
STA 35+68.85 CL, 458.31' RT
N 298444.569
E 609267.149
ELEV 584.38
CP225
BERNTSEN FENO MON.
SOUTH OF PARKING LOT
ENTRANCE, IN GRASS
TERRACE 3' SOUTH OF CURB
STA 206+73.73 LE, 168.96' RT
N 298201.914
E 608040.422
ELEV 586.97
PC 45HD+34.99
R/L HARBOR DRIVE
45HD
HARBOR DRIVE
PT 42HD+39.56
CURVE HD-1
PC 41HD+33.56
CURVE = HD-01
PI = 42HD+02.58
Y = 298057.13
X = 608663.26
DELTA = 93°26'22.65" (LT)
D = 88°08'50.47"
T = 69.02'
L = 106.00'
R = 65.00'
PC = 41HD+33.56
Y = 298075.49
X = 608596.72
PT = 42HD+39.56
Y = 298124.65
X = 608677.59
SE =
CURVE = HD-02
PI = 46HD+93.91
Y = 298569.10
X = 608771.91
DELTA = 12°29'30.70" (RT)
D = 03°56'45.57"
T = 158.92'
L = 316.57'
R = 1452.00'
PC = 45HD+34.99
Y = 298413.65
X = 608738.92
PT = 48HD+51.57
Y = 298124.65
X = 608677.59
SE =
CURVE = HD-03
PI = 49HD+38.85
Y = 298793.18
X = 608873.91
DELTA = 29°06'08.82" (LT)
D = 18°07'53.67'
T = 82.02'
L = 160.51'
R = 316.00'
PC = 48HD+56.83
Y = 298718.53
X = 608839.93
PT = 50HD+17.33
Y = 298713.74
X = 608837.75
SE =
CP223
BERNTSEN FENO MON.
27' NORTH OF PARKING
LOT ENTRANCE ALONG
FENCE LINE
STA 24+00.65 LM, 32.65' RT
N 298103.611
E 608499.801
ELEV 585.93
60HS
BEGIN PROJECT
STA 40HD+82.23
N = 608547.23
E = 298089.14
PI 42HD+02.58
WORK BY OTHERS
CURVE = HS-03
PI = 56HS+85.34
Y = 297750.93
X = 608636.09
DELTA = 03°02'09.00" (RT)
D = 02°00'00.00"
T = 75.91'
L = 151.79'
R = 2864.79'
PC = 56HS+09.42
Y = 297675.94
X = 608624.29
PT = 57HS+61.22
Y = 297825.19
X = 608651.85
SE =
CP222
BERNTSEN FENO MON.
WEST OF DRIVEWAY,
18' SE OF LIGHT POLE
STA 50+51.13 CH, 41.48' RT
N 297485.367
E 608181.392
ELEV 587.04
55HS
T 7 N
28 28
33 33
R 22 E
PLASTIC PIPE MONUMENT
IN AN ALUMINUM HAND HOLE
Y=296,2883.82
X=608,935.01
CP221
BERNTSEN FENO MON.
WEST OF HARBOR DR.,
37' FROM LIGHT POLE
STA 15+74.82 LM, 44.66' RT
N 297282.497
E 608413.870
ELEV 585.34

3

Base Bid - Miscellaneous Quantities

Item No.	Description	Quantity	Unit
201.0105	CLEARING	**18**	STA
201.0120	CLEARING	**26**	ID
201.0205	GRUBBING	**18**	STA
201.0220	GRUBBING	**26**	ID
204.0100	REMOVING PAVEMENT	**7,000**	SY
204.0150	REMOVING CURB & GUTTER	**2,540**	LF
204.0155	REMOVING CONCRETE SIDEWALK	**1,880**	SY
204.0170	REMOVING FENCE	**140**	LF
204.0210	REMOVING MANHOLES	**7**	EACH
204.0220	REMOVING INLETS	**6**	EACH
204.0245	REMOVING STORM SEWER 12-INCH	**280**	LF
204.0260	ABANDONING INLET	**2**	EACH
205.0100	EXCAVATION COMMON	**5,790**	CY
205.0501.S	EXCAVATION, HAULING, AND DISPOSAL OF PETROLEUM CONTAMINATED SOIL	**1,110**	TON
213.0100	FINISHING ROADWAY (CONTRACT B)	**1**	EACH
214.0100	OBLITERATING OLD ROAD	**2**	STA
305.0110	BASE AGGREGATE DENSE 3/4-INCH	**720**	TON
305.0120	BASE AGGREGATE DENSE 1 1/4-INCH	**6,450**	TON
415.0080	CONCRETE PAVEMENT 8-INCH	**4,630**	SY
416.0160	CONCRETE DRIVEWAY 6-INCH	**64**	SY
416.0170	CONCRETE DRIVEWAY 7-INCH	**10**	SY
455.0105	ASPHALTIC MATERIAL PG 58-28	**47**	TON
455.0605	TACK COAT	**190**	GAL
460.5224	HMA PAVEMENT TYPE 2LT58-28S	**860**	TON
601.0331	CONCRETE CURB & GUTTER 31-INCH	**3,460**	LF
602.0410	CONCRETE SIDEWALK 5-INCH	**9,100**	SF
602.0420	CONCRETE SIDEWALK 7-INCH	**25,900**	SF
602.0515	CURB RAMP DETECTABLE WARNING FIELD NATURAL PATINA	**304**	SF
611.8110	ADJUSTING MANHOLE COVERS	**1**	EACH
619.1000	MOBILIZATION	**1**	LS
625.0100	TOPSOIL	**8,300**	SY
627.0200	MULCHING	**8,300**	SY
628.1504	SILT FENCE	**750**	LF
628.1520	SILT FENCE MAINTENANCE	**750**	LF
628.1905	MOBILIZATIONS EROSION CONTROL	**2**	EACH
628.1910	MOBILIZATIONS EMERGENCY EROSION CONTROL	**2**	EACH
628.7005	INLET PROTECTION TYPE A	**10**	EACH
628.7015	INLET PROTECTION TYPE C	**10**	EACH
629.0205	FERTILIZER TYPE A	**5.7**	CWT

Base Bid - Miscellaneous Quantities (cont.)

Item No.	Description	Quantity	Unit
630.0130	SEEDING MIXTURE NO. 30	**230**	LB
643.0100	TRAFFIC CONTROL (CONTRACT B)	**1**	EACH
643.0300	TRAFFIC CONTROL DRUMS	**2,200**	DAYS
643.0420	TRAFFIC CONTROL BARRICADES TYPE III	**2,700**	DAYS
643.0705	TRAFFIC CONTROL WARNING LIGHTS TYPE A	**5,400**	DAYS
643.0715	TRAFFIC CONTROL WARNING LIGHTS TYPE C	**310**	DAYS
643.0900	TRAFFIC CONTROL SIGNS	**2,700**	DAYS
646.0106	PAVEMENT MARKING EPOXY 4-INCH	**2,730**	LF
646.0126	PAVEMENT MARKING EPOXY 8-INCH	**50**	LF
647.0156	PAVEMENT MARKING ARROWS EPOXY TYPE 1	**2**	EACH
647.0166	PAVEMENT MARKING ARROWS EPOXY TYPE 2	**1**	EACH
647.0306	PAVEMENT MARKING SYMBOLS BIKE LANES EPOXY	**2**	EACH
647.0526	PAVEMENT MARKING YIELD LINE SYMBOLS EPOXY 18-INCH	**39**	EACH
647.0716	PAVEMENT MARKING DIAGONAL EPOXY 8-INCH	**36**	LF
647.0776	PAVEMENT MARKING CROSSWALK EPOXY 12-INCH	**570**	LF
647.0796	PAVEMENT MARKING CROSSWALK EPOXY 24-INCH	**220**	LF
690.0250	SAWING CONCRETE	**350**	LF
SPV.0035.01	PLANTING SOIL MIX	**80**	CY
SPV.0060.01	ADJUSTING WATER BOXES	**2**	EACH
SPV.0060.02	ADJUSTING CUC MANHOLE COVERS	**5**	EACH
SPV.0060.03	TREE - TAXODIUM DISTICHUM ‘MICKELSON’	**4**	EACH
SPV.0060.04	TREE - GINGKO BILIBA 'PRINCETON SENTRY’	**8**	EACH
SPV.0060.05	TREE - SYRINGA RETICULATA ‘IVORY SILK'	**3**	EACH
SPV.0060.06	PLUG, CAREX PENSYLVANCIA	**788**	EACH
SPV.0060.07	SIDEWALK BOLLARD TYPE B 36-INCH	**4**	EACH
SPV.0090.01	CAST-IN-PLACE CONCRETE SALT LIP CURB	**290**	LF
SPV.0105.01	CONCRETE PAVEMENT AND SIDEWALK JOINT LAYOUT	**1**	LS
SPV.0180.01	SHREDDED HARDWOOD BARK MULCH	**80**	SY
SPV.0195.01	MANAGEMENT OF SOLID WASTE	**9,960**	TON

3

3

Item No.	Description	Quantity	Unit

CITY OF MILWAUKEE SEWER ITEMS

608.0312	STORM SEWER PIPE REINFORVED CONCRETE CLASS III 12-INCH	**611**	LF
611.2004	MANHOLES 4-FT DIAMETER	**16**	EACH
611.8110	ADJUSTING MAHOLE COVERS	**13**	EACH
611.8115	ADJUSTING INLET COVERS	**4**	EACH
SPV.0060.08	CATCH BASINS TYPE 45A	**12**	EACH
SPV.0060.09	INLET COVERS TYPE 57	**29**	EACH
SPV.0060.10	MANHOLE COVERS TYPE 58A	**12**	EACH
SPV.0060.27	INTERNAL SANITARY MAHOLE SEAL	**4**	EACH

CITY OF MILWAUKEE LIGHTING ITEMS

652.0235	CONDUIT RIGID NONMETALLIC SCHEDULE 40 3-INCH	**3,200**	LF
SPV.0060.11	STREET LIGHTING POLYMER CONCRETE VAULT 13-INCH x 24-INCH x 18-INCH	**40**	EACH
SPV.0060.12	PHILIPS ROADSTAR 180W98LED4K-LE3-240 (INSTALLED)	**7**	EACH
SPV.0060.13	PHILIPS ROADSTAR 105W79LED4K-LE3-240-BL (INSTALLED)	**7**	EACH
SPV.0060.14	PHILIPS ROADSTAR 180W98LED4K-LE3-240-BL (STOCK)	**3**	EACH
SPV.0060.15	PHILIPS ROADSTAR 105W79LED4K-LE3-240-BL (STOCK)	**3**	EACH
SPV.0060.16	PHILIPS URBANSCAPE MPTC-70W64LED4K-T-LE4-240-2BXCST-WHTX (INSTALLED)	**26**	EACH
SPV.0060.17	PHILIPS URBANSCAPE MPTC-70W64LED4K-T-LE4-240-2BXCST-WHTX (STOCK)	**10**	EACH
SPV.0060.18	STRESSCRETE E360-BPT-G-S35-COM-(2)BS-SM WITH BANNER ARMS (INSTALLED)	**14**	EACH
SPV.0060.19	STRESSCRETE E360-BPT-G-S35-COM-(2)BS-SM WITH BANNER ARMS (STOCK)	**5**	EACH
SPV.0060.20	INSTALL 6'0-2" ALUMINUM MITCHELL UPSWEEP BRACKET ARM	**14**	EACH
SPV.0060.21	INSTALL SQUARE POLE MOUNTING PLATE SET, STRESSCRETE PO1543A-PLATE	**14**	EACH
SPV.0060.22	SPLICE (HAND HOLE)	**40**	EACH
SPV.0060.23	INSTALL CONCRETE POLE BASE	**20**	EACH
SPV.0060.24	INSTALL CONCRETE SPREAD FOOTING	**6**	EACH
SPV.0060.25	INSTALL VALMONT QTA354 (INSTALLED)	**26**	EACH
SPV.0060.26	INSTALL VALMONT QTA354 (STOCK)	**5**	EACH
SPV.0090.02	3#2/1#8 LTP, UNDERGROUND CABLE	**750**	LF
SPV.0090.03	3#4/1#8 LTP, UNDERGROUND CABLE	**800**	LF
SPV.0090.04	3#6/1#8 LTP, UNDERGROUND CABLE	**1,000**	LF
SPV.0090.05	3#8/1#8 LTP, UNDERGROUND CABLE	**850**	LF
SPV.0090.06	2#12UF UNDERGROUND CABLE	**1,100**	LF

3

3

Lakefront Gateway Project

DRAINAGE STRUCTURES						PVC PIPE, STORM SEWER						REMARKS	DRAIN CONNECTION INFO		EXISTING SS INFO AT CONNECTION		
TYPE OF STRUCTURE	STATION	CENTERLINE OFFSET	COVER ELEV.	NEW STRUCTURE	FRAME & LID	CONNECTION STRUCTURE	SIZE (IN)	LENGTH (FT)	INVERT ELEV. INLET	INVERT ELEV. OUTLET	PIPE SLOPE		DRAIN FL ELEV. AT CONNECTION	INSIDE TOP OF DRAIN AT CONNECTION	EX. SEWER INVERT	EX. SEWER INSIDE TOP OF PIPE ELEV.	SIZE OF STORM SEWER CONNECTING INTO
INLET 1	31CL+77	21L	585.07	45A	57	INLET 2	12	22	581.85	580.50	0.060				NOTE: EXISTING STORM SEWER ELEVS		
INLET 2	31CL+77	1R	585.47	4'-0" MH	57	INLET 3	12	26	580.50	578.90	0.060				ARE INTERPOLATED OR EXTRAPOLATED		
INLET 3	31CL+77	23R	585.94	4'-0" MH	57	INLET 4	12	60	578.90	575.30	0.060				FROM LAKEFRONT GATEWAY SURVEY		
INLET 4	49HD+23	21L	586.13	4'-0" MH	57	DC 6	12	20	575.30	574.30	0.050				INFORMATION		
INLET 5	49HD+33	21R	585.53	45A	57	DC 6	12	25	577.25	574.75	0.100						
DC 6	49HD+23	0	-	-	-	-	-	-	-	-	-	DIRECT CONNECTION TO EXISTING SS PIPE	574.30	575.30	571.00	575.50	54
													574.75	575.42	EX. SS INFO INTERPOLATED FROM MEASUREDOWNS		
INLET 7	32CL+75	50R	584.52	45A	57	INLET 8	12	22	581.30	580.85	0.020						
INLET 8	32CL+75	28R	584.92	4'-0" MH	57	INLET 9	12	33	580.85	580.15	0.020						
INLET 9	32CL+55	1R	584.83	4'-0" MH	57	INLET 10	12	22	580.15	579.70	0.020						
INLET 10	32CL+55	21L	584.43	4'-0" MH	57	MH 10A	12	15	579.70	579.40	0.020	FIELD ADJUST AS NECESSARY					
MH 10A	69MS+95	10L	-	-	58A	-	-	-	-	-	-	FIELD ADJUST AS NECESSARY:CONNECT TO EXISTING MH; REPLACE EXISTING INLET COVER WITH MH COVER; ADJUST	579.40	580.40	569.75	575.75	72
													SHOULD BE SUFFICIENT CLEARANCE		EX. SS INFO INTERPOLATED FROM MEASUREDOWNS		
INLET 11	35CL+25	50R	584.53	45A	57	INLET 12	12	24	581.30	580.80	0.020						
INLET 12	35CL+15	28R	584.33	4'-0" MH	57	INLET 13	12	22	580.80	580.35	0.020						
INLET 13	35CL+15	1R	584.33	4'-0" MH	57	MH 15	12	16	580.35	580.00	0.021						
INLET 14	35CL+15	21L	583.97	45A	57	MH 15	12	9	580.75	580.55	0.021						
MH 15	35CL+21	14L	584.10	-	58A	-	-	-	-	-	-	CONNECT TO EXISTING MH; REPLACE EXISTING INLET COVER WITH MH COVER; ADJUST	580.00	581.00	579.13	581.38	27
													580.55	581.55	EX. SS INFO FROM P.F. 207-019		
INLET 16	41HD+25	30R	585.11	45A	57	INLET 17	12	20	581.90	581.70	0.010						
INLET 17	41HD+25	10R	585.47	4'-0" MH	57	INLET 18	12	9	581.70	581.60	0.010						
INLET 18	41HD+25	1R	585.47	4'-0" MH	57	INLET 19	12	29	581.60	581.30	0.010						
INLET 19	41HD+25	28L	585.47	4'-0" MH	57	INLET 20	12	44	581.30	580.85	0.010						
INLET 20	42HD+00	28L	584.20	4'-0" MH	57	INLET 21	12	17	580.85	580.65	0.010						
INLET 21	42HD+25	24L	584.32	4'-0" MH	57	DC 21A	12	24	580.65	580.40	0.010						
													DC 21A, MH 24, & DC 27 INVERTS ARE BASED ON DS MH'S 577.35 INVERT				
DC 21A	42HD+25	0	-	-	-	-	-	-	-	-	-	DIRECT CONNECTION TO EXISTING SS PIPE	580.40	581.40	577.50	581.50	48
															(TOO FAR S) EX. SS INFO EXTRAP. FROM MEASUREDOWNS		
INLET 22	42HD+15	21R	584.35	45A	57	INLET 23	12	18	581.15	580.70	0.025						
INLET 23	42HD+00	21R	584.31	4'-0" MH	57	MH 24	12	11	580.70	580.40	0.025						
MH 24	41HD+93	19R		-	58A	-	-	-	-	-	-	CONNECT TO EXISTING MH, REPLACE EXISTING INLET COVER WITH MH COVER, ADJUST	580.40	581.40	577.50	581.50	48
															(TOO FAR S) EX. SS INFO EXTRAP. FROM MEASUREDOWNS		
INLET 25	42HD+82	21L	584.65	45A	57	DC 27	12	19	581.45	580.65	0.040						
INLET 26	42HD+82	21R	584.65	45A	57	DC 27	12	23	581.45	580.50	0.040						
DC 27	42HD+82	2L	-	-	-	-	-	-	-	-	-	DIRECT CONNECTION TO EXISTING SS PIPE	580.65	581.65	577.50	581.50	48
													580.50	581.50	(TOO FAR S) EX. SS INFO EXTRAP. FROM MEASUREDOWNS		
INLET 28	45HD+02	21L	584.20	45A	57	INLET 29	12	10	581.00	580.75	0.021						
INLET 29	45HD+12	21L	584.20	4'-0" MH	57	DC 32	12	21	580.75	580.30	0.021						
INLET 30	45HD+02	21R	584.20	45A	57	INLET 31	12	10	581.00	580.75	0.021						
INLET 31	45HD+12	21R	584.20	4'-0" MH	57	DC 32	12	21	580.75	580.30	0.021						
DC 32	45HD+12	0	-	-	-	-	-	-	-	-	-	DIRECT CONNECTION TO EXISTING SS PIPE	580.30	581.30	577.25	581.75	54
													580.30	581.30	EX. SS INFO INTERPOLATED FROM MEASUREDOWNS		
INLET 33	46HD+75	21L	585.01	45A	57	MH 33A	12	19	581.80	579.90	0.100						
MH 33A	46HD+75	2L	585.41	-	58A	-	-	-	-	-	-	CONNECT TO EXISTING MH, REPLACE EXISTING INLET COVER WITH MH COVER, ADJUST	579.90	580.90	576.00	580.50	54
															EX. SS INFO INTERPOLATED FROM MEASUREDOWNS		

3

NOTE: STORM SEWER DESIGN AND CALCULATIONS COMPLETED BY CITY OF MILWAUKEE

3

Lakefront Gateway Project

DRAINAGE STRUCTURES						PVC PIPE, STORM SEWER						REMARKS	DRAIN CONNECTION INFO		EXISTING SS INFO AT CONNECTION		
TYPE OF STRUCTURE	STATION	CENTERLINE OFFSET	COVER ELEV.	NEW STRUCTURE	FRAME & LID	CONNECTION STRUCTURE	SIZE (IN)	LENGTH (FT)	INVERT ELEV. INLET	INVERT ELEV. OUTLET	PIPE SLOPE		DRAIN FL ELEV. AT CONNECTION	INSIDE TOP OF DRAIN AT CONNECTION	EX. SEWER INVERT	EX. SEWER INSIDE TOP OF PIPE ELEV.	SIZE OF STORM SEWER CONNECTING INTO
INLET	32CL+23	14L	-	-	58A	-	-	-	-	-	-	REPLACE EXISTING INLET COVER WITH MH COVER, ADJUST					
SAN MH	33CL+04	29L	-	-	-	-	-	-	-	-	-	INSTALL SAN MH SEAL, ADJUST EXISTING MH					
INLET	35CL+80	22L	-	-	58A	-	-	-	-	-	-	REPLACE EXISTING INLET COVER WITH MANHOLE COVER, ADJUST					
INLET	36CL+06	58R	-	-	-	-	-	-	-	-	-	ADJUST EXISTING INLET					
REMOVE INLET	42HD+81	4R	-	-	-	-	-	-	-	-	-	REMOVE EXISTING INLET					
MH WITH INLET COVER	44HD+44	1L	-	-	58A	-	-	-	-	-	-	REPLACE EXISTING INLET COVER WITH MH COVER, ADJUST					
MH WITH INLET COVER	44HD+82	1L	-	-	58A	-	-	-	-	-	-	REPLACE EXISTING INLET COVER WITH MH COVER, ADJUST					
ABANDON SS	44HD+83 TO 45HD+94	1L TO 40R	-	-	-	-	-	45	-	-	-	SEE PLAN. ABANDON EXISTING SS B/W INLETS 44HD+83 39R, 44HD+83 4R, 44HD+94 4R					
ABANDON INLET	44HD+83	4R	-	-	-	-	-	-	-	-	-	ABANDON INLET					
ABANDON INLET	44HD+83	39R	-	-	-	-	-	-	-	-	-	ABANDON INLET					
ABANDON INLET	44HD+94	4R	-	-	-	-	-	-	-	-	-	ABANDON INLET					
SAN MH	45HD+40	39R	-	-	-	-	-	-	-	-	-	INSTALL SAN MH SEAL, ADJUST EXISTING MH					
ABANDON INLET	47HD+88	2R	-	-	-	-	-	-	-	-	-	ABANDON INLET AND BULKHEAD					
ABANDON INLET	48HD+44	0	-	-	-	-	-	-	-	-	-	ABANDON INLET AND BULKHEAD					
INLET	48HD+48	5L	-	-	57	-	-	-	-	-	-	FIELD ADJUST AS NECESSARY; ADJUST INLET					
SAN MH	48HD+55	36R	-	-	-	-	-	-	-	-	-	INSTALL SAN MH SEAL, ADJUST EXISTING MH					
SAN MH	60HS+60	4R	-	-	58A	-	-	-	-	-	-	INSTALL SAN MH SEAL, ADJUST EXISTING MH					
MH WITH INLET COVER	70MS+12	15R	-	-	58A	-	-	-	-	-	-	REPLACE EXISTING INLET COVER WITH MH COVER, ADJUST					
MH	70MS+30	1L			58A							ADJUST MH COVER*					
MH	70MS+22	52R	-	-	58A	-	-	-	-	-	-	ADJUST MH COVER*					
REMOVE INLET	70MS+25	63R	-	-	-	-	-	-	-	-	-	REMOVE INLET*					
REMOVE MH	70MS+39	42R	-	-	-	-	-	-	-	-	-	REMOVE MH AND BULKHEAD*					
REMOVE INLET	70MS+44	72R	-	-	-	-	-	-	-	-	-	REMOVE INLET*					
REMOVE MH	70MS+58	56R	-	-	-	-	-	-	-	-	-	REMOVE MH*					
REMOVE INLET	70MS+59	41R	-	-	-	-	-	-	-	-	-	REMOVE INLET*					
REMOVE INLET	70MS+60	82R	-	-	-	-	-	-	-	-	-	REMOVE INLET*					
REMOVE MH	70MS+73	60R	-	-	-	-	-	-	-	-	-	REMOVE MH*					
REMOVE INLET	70MS+78	52R	-	-	-	-	-	-	-	-	-	REMOVE INLET*					
REMOVE MH	71MS+43	100R	-	-	-	-	-	-	-	-	-	REMOVE MH AND BULKHEAD*					
ABANDON SS	70MS+22 TO 71MS+43	41R TO 100R	-	-	-	-	-	205	-	-	-	ABANDON EXISTING SS. SEE PLAN FOR DETAILS*					
												***ADDITIONAL ITEMS LISTED ON PLAN AND PROFILE SHEETS**					

Structure	Catch Basin 44A	Inlet 45A	4-'0" SMH	Frame & Lid 58A	Frame & Lid 57	Abandon Inlet	Remove Inlet	Adandon MH	Remove MH	Abandon SS (ft.)	8" Pipe (ft.)	12" Pipe (ft.)	Sanitary MH Seal	Adjust MH	Adjust Inlet
Total	0	12	16	12	29	5	6	0	4	250	0	611	4	13	4

NOTE: STORM SEWER DESIGN AND CALCULATIONS COMPLETED BY CITY OF MILWAUKEE

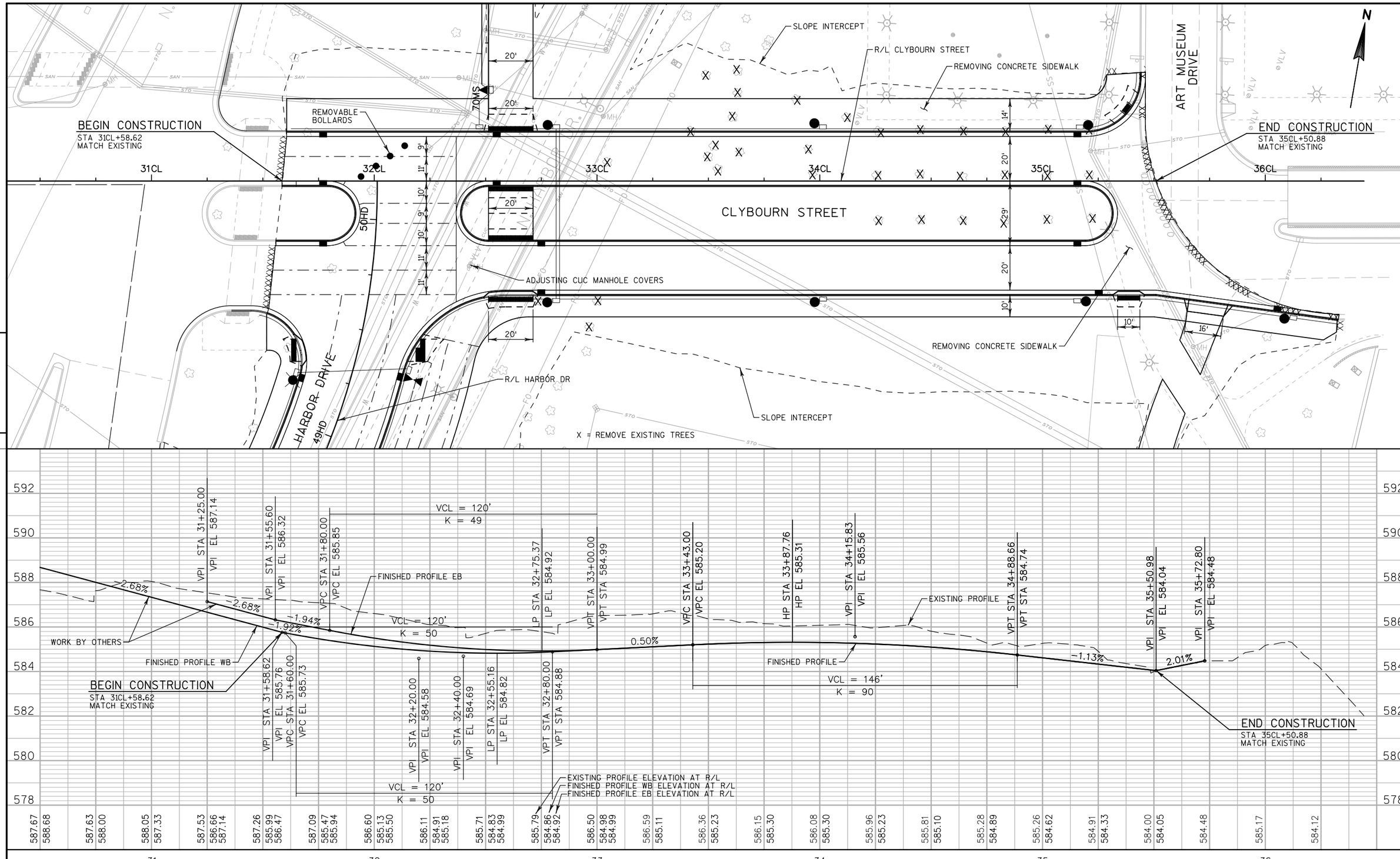

PROJECT NO:1301-13-01	HWY:LOCAL ROADS	COUNTY:MILWAUKEE	PLAN & PROFILE - CLYBOURN STREET	SHEET 55	E

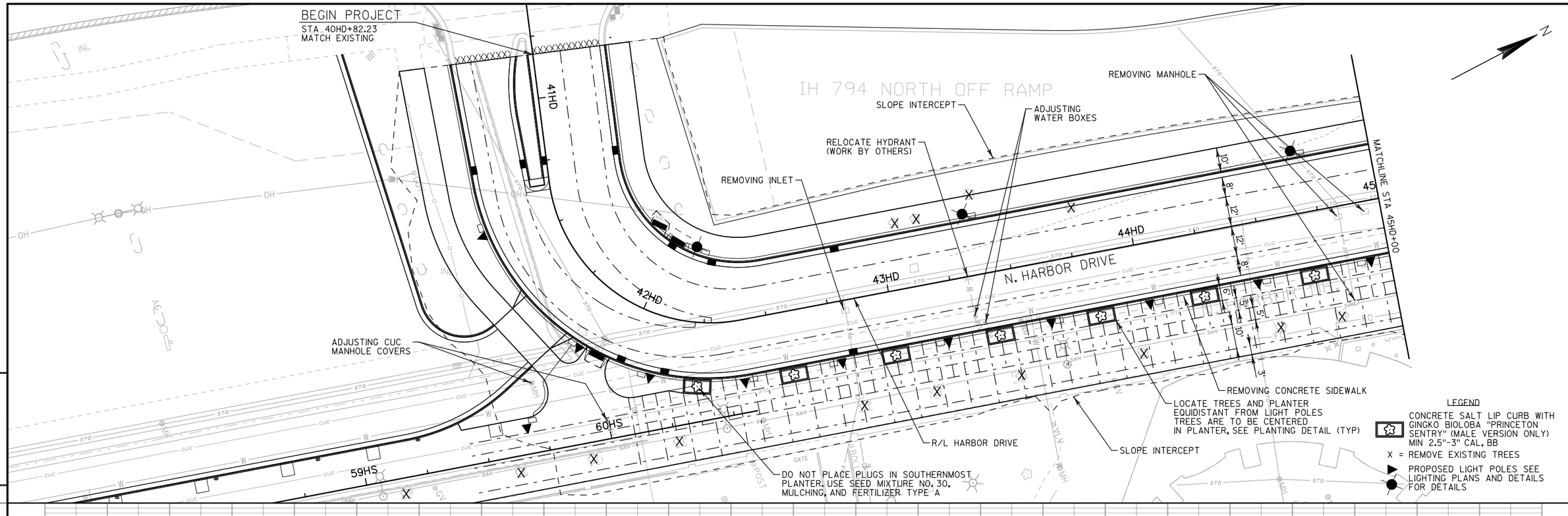

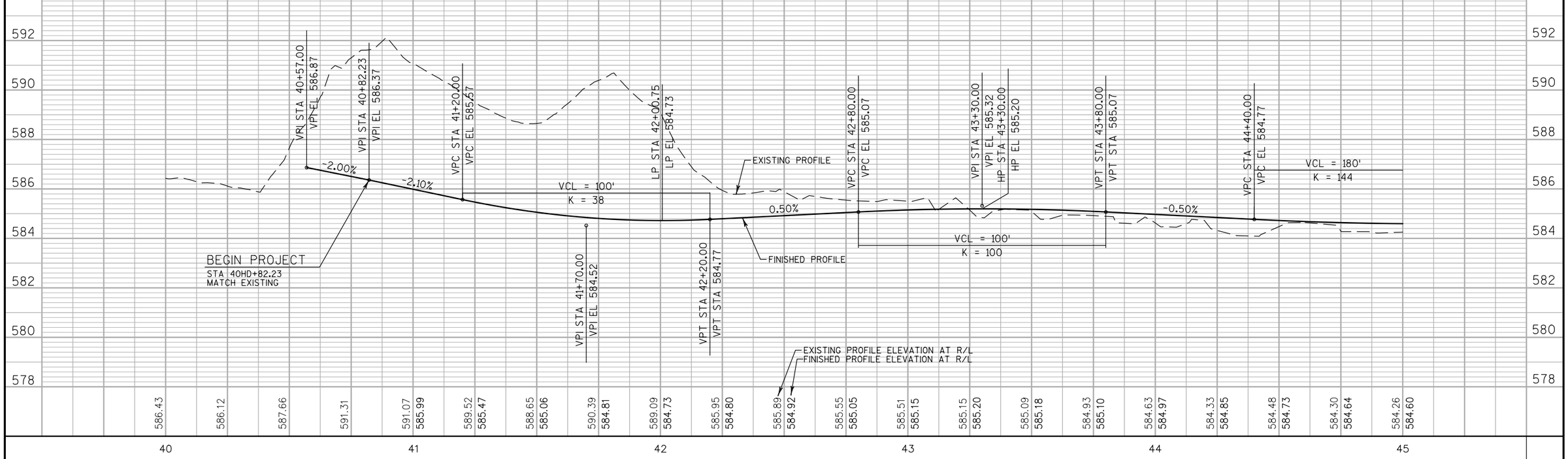

PROJECT NO:1301-13-01	HWY:LOCAL ROADS	COUNTY:MILWAUKEE	PLAN & PROFILE - N. HARBOR DRIVE	SHEET 56	E

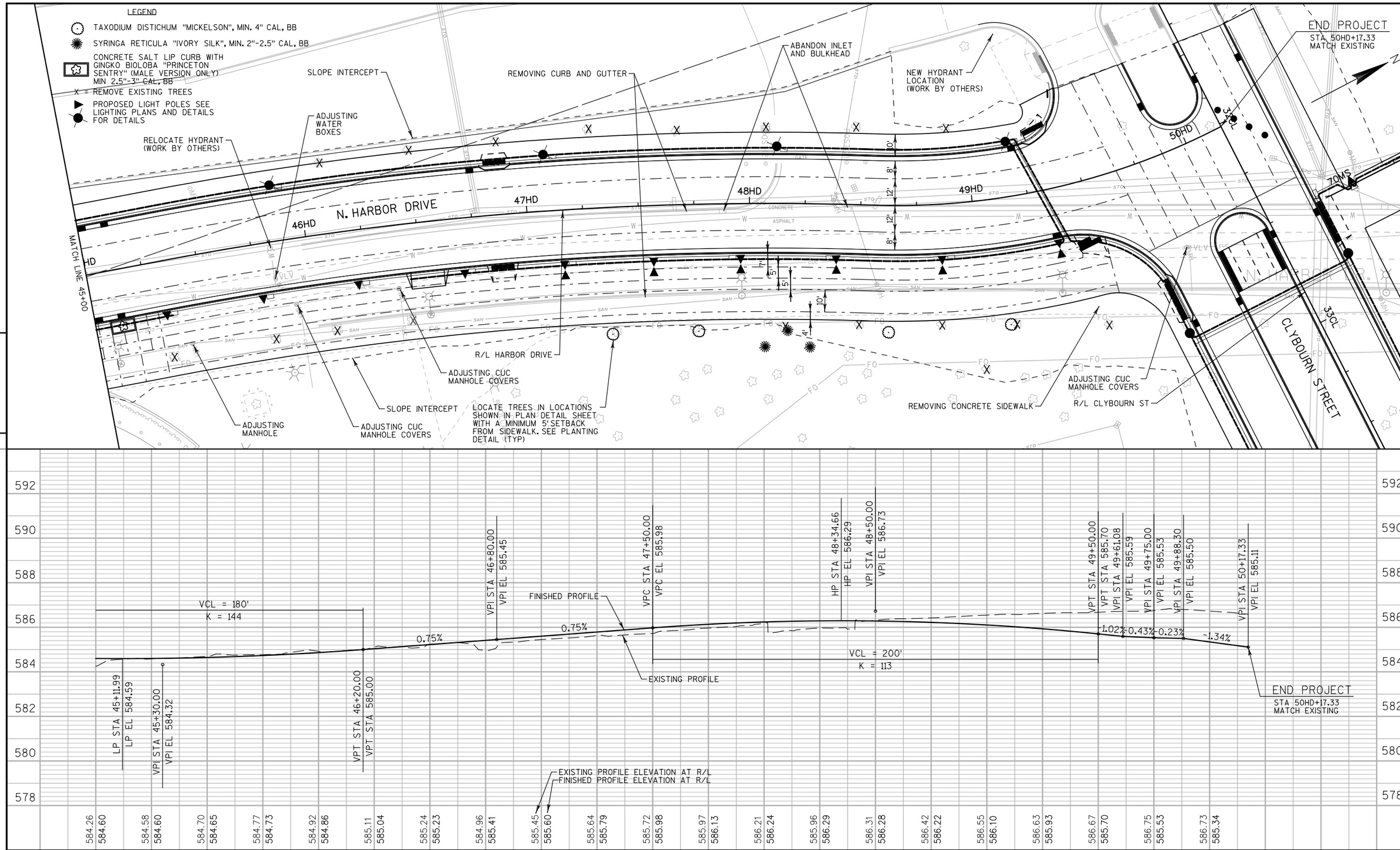

PROJECT NO:1301-13-01	HWY:LOCAL ROADS	COUNTY:MILWAUKEE	PLAN & PROFILE: N. HARBOR DRIVE	SHEET 57	E

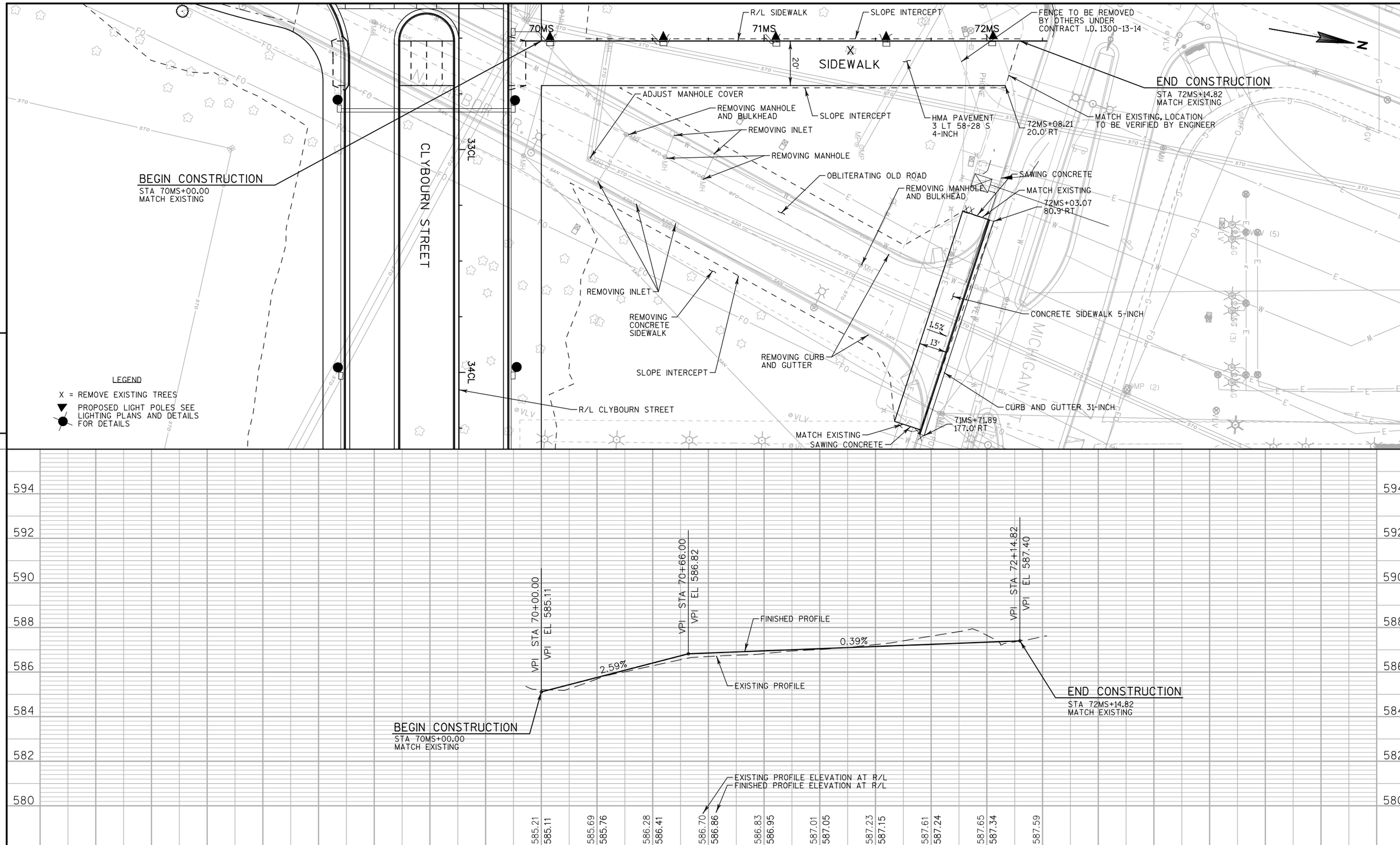

PROJECT NO:1301-13-01	HWY:LOCAL ROADS	COUNTY:MILWAUKEE	PLAN & PROFILE - MICHIGAN SIDEWALK	SHEET 58	E