City Of Milwaukee
Department of Public Works
Room 501 – Frank P. Zeidler Municipal Building
841 North Broadway
Milwaukee, Wisconsin 53202-3684

INVITATION TO BID

Commissioner of Public Works
Phone: 414-286-3314

OFFICIAL NOTICE NO. 87-2013
Project No. 1

Sealed bids for the work, material, labor, and services hereinafter described will be received at the Department of Public Works **Contract Office**, Room 506, Frank P. Zeidler Municipal Building, 841 North Broadway, Milwaukee, Wisconsin 53202-3684, no later than Thursday, May 23, 2013 at 10:30 A.M.

IMPORTANT

This bid is your offer to perform or supply the subject matter under "DESCRIPTION" below according to the terms and conditions set forth in this Invitation to Bid, Specific Official Notice No. 87-2013, General Specifications, Detailed Specifications, Special Provisions, Plans of this particular project, the proposed contract and Special Conditions when applicable.

Your bid must meet the Detailed Specifications and the Plans for this particular project.

You must agree to comply with all applicable requirements of the Americans with Disabilities Act of 1990, 42 U.S.C. Section 12101, et seq.

The bid must be signed as set forth in the General Specifications and must comply with all the requirements therein set forth, or it will not be considered. If submitted by a corporation, the bid proposal must bear the corporate seal.

Bid security hereinafter specified must be submitted with your bid. If a bid bond is used, it must be sealed by the bonding company and be accompanied by an affidavit of no interest and a copy of a power of attorney. Bonding agents must be licensed to do business in the State of Wisconsin.

Bids received after the date and the time above specified will not be opened and read and will be deemed rejected.

NOTE: Also read the General Official Notice to Contractors, General and Detailed Specifications, Special Provisions, and Special Conditions when applicable pertaining to this bid.

_____

FOR WATER MAIN RELAYS IN:

PROJECT NO. 1:

S. 66th St. (32 Work Days) From: 130' S/O W. Arthur Ave. To: W. Cleveland Ave.	C.C Resolution No.: 121553 Adopted: 3/19/13
S. 62nd St. (20 Work Days) From: W. Harrison Ave. To: S. 63rd St.	C.C Resolution No.: 121553 Adopted: 3/19/13
W. Wick Pl. (18 Work Days) From: S. 67th St. To: S. 68th St.	C.C Resolution No.: 121553 Adopted: 3/19/13
S. 61st St. (10 Work Days) From: 195' N/O W. Harrison Ave. To: W. Harrison Ave.	C.C Resolution No.: 121553 Adopted: 3/19/13
W. Harrison Ave. (18 Work Days) From: W. Kinnickinnic River Pkwy. To: S. 62nd St.	C.C Resolution No.: 121553 Adopted: 3/19/13
S. 63rd St. (17 Work Days) From: W. Harrison Ave. To: W. Cleveland Ave.	C.C Resolution No.: 121553 Adopted: 3/19/13
S. 63rd St. (11 Work Days) From: 440' N/O W. Harrison Ave. To: W. Harrison Ave.	C.C Resolution No.: 121553 Adopted: 3/19/13
S. 63rd St. (28 Work Days) From: W. Cleveland Ave. To: W. Stack Dr.	C.C Resolution No.: 111025 Adopted: 12/20/11

The SBE Requirement for this Project is: 25%
The Residency Requirement for this Project is: 40%
The Apprenticeship Requirements for this Project are: 1 Construction Craft Laborer
Liquidated damages per diem: $370.00

Time for Completion: 120 Working Days. Schedule notes: All work in S. 63rd St., plan file no.'s 2013046, 2013047, 2013048, and 2013049, shall be completed by August 30, 2013. All other work in this contract shall be completed by December 13, 2013.

Each project in this contract is assigned an allowable number of project working days. A project working day is defined as any day the contractor is able to work a minimum of four (4) hours towards completion of the project.

DETAILED SPECIFICATIONS: Installation Specifications for Water Mains dated January 2, 1987, special provisions and addenda, if any apply to all of the above water main projects.

THE SUCCESSFUL CONTRACTOR SHALL FURNISH A PERFORMANCE BOND AND A PAYMENT BOND IN THE AMOUNT OF 100% OF THE BID WITH EACH EXECUTED CONTRACT.

NOTE: BIDS WILL BE OPENED AND PUBLICLY READ AT THE OFFICE OF THE COMMISSIONER OF PUBLIC WORKS ON Thursday, May 23, 2013 @ 10:30 A.M.

Specifications and Drawings for this project will be available to prospective bidders via http://www.mpw.net/bids/docs/87-2013/. Bidders are encouraged to utilize this electronic method of obtaining bid documents as the Department of Public Works intends to solely use this method for future projects. If you only print the documents from the website and would like your company's name placed on the plan holders list, please call 414-286-3314.

Plans and specifications will be furnished to the prospective bidders upon payment of a non-refundable fee of $10.00, for each project in Room 506, Frank P. Zeidler Municipal Building, 841 N. Broadway, Milwaukee, Wisconsin 53202. A $10.00 per set additional non-refundable fee is required to obtain bid documents by mail.

THE CONTRACTOR SHALL SPECIFICALLY NOTE THE SBE, RESIDENCY, AND APPRENTICESHIP FORMS FOR THIS PROJECT. IF THE FORMS ARE NOT FILLED OUT PROPERLY, IT WILL BE CAUSE FOR REJECTION OF THE BID.

THE TRAINING CREDIT INCENTIVE WILL NOT APPLY TO THIS PROJECT.

Contractor must comply with all provisions of the CITY OF MILWAUKEE GENERAL OFFICIAL NOTICE TO CONTRACTORS, published above and may be found at http://www.mpw.net/services/bids_home.

FORM DPW-125 (REV. 01/26/05)

B I D

City of Milwaukee
Department of Public Works
Room 501 - Frank P. Zeidler Municipal Building
841 North Broadway
Milwaukee, Wisconsin 53202

(Bids Close: Thursday, May 23, 2013 @ 10:30 A.M. Time and Date)

Submit bids to: City of Milwaukee
Department of Public Works **Contract Office**
Room 506, 841 North Broadway
Milwaukee, Wisconsin 53202.

The undersigned _____
(A Corporation) (A Partnership) (An Individual)
(use one)

of _____
Street City Zip Code Telephone Number

hereby proposes to furnish work, material, labor and services as set forth in the description in the Invitation to Bid at and for the prices hereinafter named according to the provisions in the Official Notice and the Invitation to Bid, Detail Specifications, Special Provisions, Addenda's, if any, and Plans for this particular project on file in the office of the Commissioner of Public Works, and if successful, hereby agrees to enter into a contract with the City of Milwaukee with such sureties as required and set forth in the aforesaid documents for the performance of said contract (said contract form being on file in the office of the Commissioner of Public Works), and in accordance with the terms and conditions set forth in the contract documents, to-wit: written agreement, official notice, invitation to bid, bid, instructions to bidders, detail specifications, special provisions, special conditions when applicable, plans, schedule of fixed prices, supplemental agreements and all addenda.

In case of obtaining the award, the undersigned bidder anticipates using, subject to the approval of the Commissioner, the following subcontractors, with the class of work to be performed by each, which list shall not be added to nor altered without the written consent of the Commissioner:

Name of Proposed Subcontractors	Class of Work	Amount	Check Box If M/W/SBE

FOR WATER MAIN RELAYS IN:

PROJECT NO. 1:

S. 66th St. (32 Work Days) W.O. Number: WT410101025
From: 130' S/O W. Arthur Ave.
To: W. Cleveland Ave.

S. 62nd St. (20 Work Days) W.O. Number: WT410101026
From: W. Harrison Ave.
To: S. 63rd St.

W. Wick Pl. (18 Work Days) W.O. Number: WT410101027
From: S. 67th St.
To: S. 68th St.

S. 61st St. (10 Work Days) W.O. Number: WT410101036
From: 195' N/O W. Harrison Ave.
To: W. Harrison Ave.

W. Harrison Ave. (18 Work Days) W.O. Number: WT410101037
From: W. Kinnickinnic River Pkwy.
To: S. 62nd St.

S. 63rd St. (17 Work Days) W.O. Number: WT410101038
From: W. Harrison Ave.
To: W. Cleveland Ave.

S. 63rd St. (11 Work Days) W.O. Number: WT410101047
From: 440' N/O W. Harrison Ave.
To: W. Harrison Ave.

S. 63rd St. (28 Work Days) W.O. Number: WT410110012
From: W. Cleveland Ave.
To: W. Stack Dr.

In the City of Milwaukee, according to the plans and specifications and for the unit price bids listed on the following pages:

ALL PRICES MUST BE PRINTED OR TYPED

OFFICIAL NOTICE NO. 13-87-1

WATER MAIN

Wednesday, May 01, 2013

5,403 LIN. FT. FURN AND INST DI WM, HYD BRANCH, BRANCH PIPE (3"-16" AS EST ON CONST PLANS)

(Bid in figures) $ _____ PER LIN. FT.

(Bid in words) $ _____ PER LIN. FT.

13 HYDRANT INSTALL HYDRANT

(Bid in figures) $ _____ PER HYDRANT

(Bid in words) $ _____ PER HYDRANT

14 HYDRANT REMOVE HYDRANT/MINOR

(Bid in figures) $ _____ PER HYDRANT

(Bid in words) $ _____ PER HYDRANT

144 SERVICE CONNECT ORIGINAL SERVICE (C.O.S.-SHORT)

(Bid in figures) $ _____ PER SERVICE

(Bid in words) $ _____ PER SERVICE

6 SERVICE CONNECT ORIGINAL SERVICE (C.O.S.-LONG)

(Bid in figures) $ _____ PER SERVICE

(Bid in words) $ _____ PER SERVICE

5,368 BAR FURNISH & INSTALL DOWEL BARS - PAVEMENT

(Bid in figures) $ _____ PER BAR

(Bid in words) $ _____ PER BAR

3,110 SQ. YD. PERMANENT PAVEMENT - 8" CONCRETE

(Bid in figures) $ _____ PER SQ. YD.

(Bid in words) $ _____ PER SQ. YD.

399 SQ. YD. PERMANENT PAVEMENT - 3" ASPHALTIC CONCRETE

(Bid in figures) $ _____ PER SQ. YD.

(Bid in words) $ _____ PER SQ. YD.

399 SQ. YD. PERMANENT PAVEMENT - 8" CONCRETE BASE

(Bid in figures) $ _____ PER SQ. YD.

(Bid in words) $ _____ PER SQ. YD.

923 LIN. FT. CONCRETE CURB & GUTTER

(Bid in figures) $ _____ PER LIN. FT.

(Bid in words) $ _____ PER LIN. FT.

100 SQ. FT. CONCRETE WALK

(Bid in figures) $ _____ PER SQ. FT.

(Bid in words) $ _____ PER SQ. FT.

1 LUMP SUM BARRICADES AND TRAFFIC CONTROL

(Bid in figures) $ _____ LUMP SUM

(Bid in words) $ _____ LUMP SUM

1 LUMP SUM FINISHING OF ROADWAY

(Bid in figures) $ _____ LUMP SUM

(Bid in words) $ _____ LUMP SUM

5,925 LIN. FT. SAWCUTTING - CONCRETE (FULL DEPTH)

(Bid in figures) $ _____ PER LIN. FT.

(Bid in words) $ _____ PER LIN. FT.

1,092	LIN. FT.	SAWCUTTING - ASPHALT ON CONCRETE BASE (FULL DEPTH)

(Bid in figures) $ _____ PER LIN. FT.

(Bid in words) $ _____ PER LIN. FT.

1	LUMP SUM	FURNISH, INSTALL, AND MAINTAIN EROSION CONTROL

(Bid in figures) $ _____ LUMP SUM

(Bid in words) $ _____ LUMP SUM

TOTAL WATER MAIN

(Bid in figures) $ _____

(Bid in words) $ _____

*** IMPORTANT NOTICE ***

ALL BID PRICES MUST BE ENTERED IN WORDS AND IN NUMERALS. IN CASE OF VARIATION BETWEEN THE TWO, THE WORDS WILL PREVAIL.

IN ADDITION, IF THERE IS A DISCREPANCY BETWEEN THE TOTAL INDICATED IN THE PROPOSAL AND THE AMOUNT OBTAINED BY ADDING THE PRODUCTS OF THE QUANTITIES TIMES THE UNIT PRICES, THE LATTER SHALL GOVERN. ANY ERRORS FOUND IN THE TOTAL INDICATED SHALL BE CORRECTED AND THE CONTRACT AWARD SHALL BE MADE TO THE LOWEST RESPONSIBLE BIDDER BASED ON THE CORRECTED TOTAL.

If DOUBT EXISTS AS TO WHAT IS BID, THE BID WILL BE REJECTED.

ACKNOWLEDGEMENTS PAGE

SMALL BUSINESS ENTERPRISE, RESIDENT PREFERENCE AND APPRENTECESHIP PROGRAM REQUIREMENTS

In submitting this bid, the bidder acknowledges, understands and agrees that submission of a bid shall commit the bidder to comply with the City's requirements as outlined in the SMALL BUSINESS ENTERPRISE PROGRAM, (SBE), the Resident Preference Program and the Apprenticeship Program provisions. The bidder also agrees to comply with the specific requirements as follows:

The bidder's commitment for SBE participation on this project is _25_ %

The bidder's commitment for Resident Preference Program Participation on the project is _40_ %

The bidder's commitment for Apprenticeship Program participation on this project is:

Apprentice(s) from _one_ the following trade are to be employed:

Construction Craft Laborer

In submitting this bid, the bidder understands that the Commissioner of Public Works reserves the right to reject any and all bids. If written notice of the acceptance of the bid is mailed, telegraphed, or delivered to the undersigned within forty-five (45) days after the opening thereof, the undersigned agrees to execute and deliver the contract in the prescribed form (contract form on file in the office of the Commissioner of Public Works) and furnish the required performance and payment bonds, and to meet such insurance requirements as may be required, within ten days after the receipt of the official notice of award.

This bidder understands that if they are the successful bidder and the contract is awarded, that pursuant to Sec. 7.14, Milwaukee City Charter, 1971 Compilation, as amended, failure to execute and to deliver the contract or to furnish the required insurance and the required security within ten (10) days after receipt of the official notice of award or such extension thereto as the Commissioner only may deem reasonable, the City, in addition to any other legal or equitable remedy which it may have, may annul the award and notice of award, and the bid security of this bidder will be forfeited.

Attached hereto is an affidavit in proof that the undersigned has not colluded with any person in respect to this bid or any other bid for the contract for which this bid is submitted.

We acknowledge the receipt of Addenda _____ to _____ inclusive.

Bidder assures the City and acknowledges that the Official Notice, Special Provisions, if any, Special Conditions where applicable, Invitation to Bid and Bid, Detail Specifications, Addenda, if any, and Plans of this particular project have been read and has a full understanding of the provisions therein.

SIGNATURE PAGE

IMPORTANT – THREE (3) SIGNATURES ARE REQUIRED OR BID WILL BE CONSIDERED NONRESPONSIVE

In signing and submitting this bid, the bidder assures the City of Milwaukee that the Official Notice, Notice to Bidders, Special Conditions where applicable, Invitation to Bid and Bid, Detail Specifications, Special Provisions, Schedule of Fixed Prices, Addenda, and Plans of this particular project have been read and understood and that the furnishing of the subject work, material, labor and services is under bidder's control. If the bidder's performance is contingent upon the acts of another party, the bidder assures that they have the necessary commitments to complete the contract which may be awarded.

Submitted by _____
Name of Bidder (person, firm or corporation)

Telephone No. _____

Fax No. _____

Address _____

_____
(City, State, Zip Code)

MUST BE SIGNED

Signed per _____
(Manual **signature required**)

Official Capacity _____

BID DATED _____ M/W/SBE Contractor: Yes/Designation _____
No _____

If a Corporation, answer the following:

Incorporated under laws of what state? _____

If a foreign corporation, are you licensed to do business in Wisconsin? _____

SWORN STATEMENT OF BIDDER
AS REQUIRED BY
SECTION 66.0901 (7) WISCONSIN STATUTES

I, being first duly sworn at _____
(City, State)
on oath state on behalf of said bidder, that I have examined and carefully prepared this proposal from the plans, specifications, and the other contract documents and have checked the same in detail before submitting this proposal; and this sworn statement is hereby made a part of the foregoing proposal.

MUST BE SIGNED

Signature _____

_____
(Title, if any)

Subscribed and sworn to before me this

_____ day of _____, 20_____ Notary Public, _____ County

State of _____

_____
(**Notary Signature**) My commission expires _____

NON-COLLUSION AFFIDAVIT

State of _____)
) ss.
County of _____)

_____, being first duly sworn, deposes and says that:

(1) He is _____
(owner, partner, officer, representative, or agent)

of _____, the Bidder that has submitted the attached Bid;

(2) He is fully informed respecting the preparation and contents of the attached Bid and of all pertinent circumstances respecting such Bid;

(3) Such Bid is genuine and is not a collusive or sham Bid;

(4) Neither the said Bidder nor any of its officers, partners, owners, agents, representatives, employees, or parties in interest, including this affiant, has in any way colluded, conspired, connived, or agreed, directly or indirectly with any other Bidder, firm, or person to submit a collusive or sham Bid in connection with the Contract for which the attached Bid has been submitted or to refrain from bidding in connection with such Contract, or has in any manner, directly or indirectly, sought by agreement or collusion or communication or conference with any other Bidder, firm, or person to fix the price or prices in the attached Bid or of any other Bidder, or to fix any overhead, profit, or cost element of the Bid price or the Bid price of any other Bidder, or to secure through any collusion, conspiracy, connivance, or unlawful agreement any advantage against the Commissioner of Public Works or any person interested in the proposed Contract; and

(5) The price or prices quoted in the attached Bid are fair and proper and are not tainted by any collusion, conspiracy, connivance, or unlawful agreement on the part of the Bidder or any of its agents, representatives, owners, employees, or parties in interest, including this affiant.

(Check One) _____
Signature of

_____ Bidder if the bidder is an individual;

_____ Partner if the bidder is a partnership;

_____ Officer if the bidder is a corporation.

Subscribed and sworn to before me this

_____ day of _____, 20_____.

_____
Notary Signature

My commission expires _____, 20_____.

State of Wisconsin
Department of Workforce Development
Equal Rights Division

Disclosure of Ownership

The statutory authority for the use of this form is prescribed in Sections 66.0903(12)(d), 66.0904(10)(d) and 103.49(7)(d), Wisconsin Statutes.
The use of this form is mandatory. The penalty for failing to complete this form is prescribed in Section 103.005(12), Wisconsin Statutes.
Personal information you provide may be used for secondary purposes [Privacy Law, s. 15.04(1) (m), Wisconsin Statutes].

(1) On the date a contractor submits a bid to or completes negotiations with a state agency, local governmental unit, or developer, investor or owner on a project subject to Section 66.0903, 66.0904 or 103.49, Wisconsin Statutes, the contractor shall disclose to such state agency, local governmental unit, or developer, investor or owner, the name of any "other construction business," which the contractor, or a shareholder, officer or partner of the contractor, owns or has owned within the preceding three (3) years.

(2) The term "other construction business" means any business engaged in the erection, construction, remodeling, repairing, demolition, altering or painting and decorating of buildings, structures or facilities. It also means any business engaged in supplying mineral aggregate, or hauling excavated material or spoil as provided by Sections 66.0903(3), 66.0904(2), 103.49(2) and 103.50(2), Wisconsin Statutes.

(3) This form must ONLY be filed, with the state agency project owner, local governmental unit project owner, or developer, investor or owner of a publicly funded private construction project that will be awarding the contract, if **both (A) and (B) are met**.

(A) The contractor, or a shareholder, officer or partner of the contractor:
(1) Owns at least a 25% interest in the "other construction business," indicated below, on the date the contractor submits a bid or completes negotiations; or
(2) Has owned at least a 25% interest in the "other construction business" at any time within the preceding three (3) years.

(B) The Wisconsin Department of Workforce Development (DWD) has determined that the "other construction business" has failed to pay the prevailing wage rate or time and one-half the required hourly basic rate of pay, for hours worked in excess of the prevailing hours of labor, to any employee at any time within the preceding three (3) years.

Other Construction Business

Business Name			
Street Address or P O Box	City	State	Zip Code
Business Name			
Street Address or P O Box	City	State	Zip Code
Business Name			
Street Address or P O Box	City	State	Zip Code
Business Name			
Street Address or P O Box	City	State	Zip Code

I hereby state under penalty of perjury that the information, contained in this document, is true and accurate according to my knowledge and belief.

Print the Name of Authorized Officer			
Authorized Officer Signature	Date Signed		
Corporation, Partnership or Sole Proprietorship Name			
Street Address or P O Box	City	State	Zip Code

If you have any questions call (608) 266-6861

PREVAILING WAGE NOTICE

ALL PREVAILING WAGE CONTRACTS AWARDED BY THE DEPARTMENT OF PUBLIC WORKS AFTER THE FIRST OF ANY CALENDAR YEAR ARE SUBJECT TO THE NEW PREVAILING WAGE SCHEDULE THAT GOES INTO EFFECT ON JANUARY 2ND. THE PREVAILING WAGE SCHEDULE INCLUDED IN BID PACKAGES ISSUED LATE IN THE PRECEDING YEAR MAY NOT BE TOTALLY ACCURATE FOR CONTRACTS OFFICIALLY AWARDED AFTER THE TURN OF THE YEAR. THE NEW PREVAILING WAGE WILL BE INCORPORATED INTO THE CONTRACT WHEN AWARDED.

BIDDERS ARE REQUIRED TO UTILIZE THE WISCONSIN DEPARTMENT OF WORKFORCE DEVELOPMENT'S "DICTIONARY OF OCCUPATIONAL CLASSIFICATIONS AND WORK DESCRIPTIONS" TO DETERMINE THE APPROPRIATE JOB CLASSIFICATIONS AND WAGE RATES FOR THEIR EMPLOYEES PRIOR TO BIDDING. THIS DOCUMENT CAN BE FOUND ON THEIR WEBSITE AT DWD.WISCONSIN.GOV; TYPE "DICTIONARY" IN THE SEARCH BOX.

Rev. 06/07

Revised: 7/15/2009
Updated: 1/2012

City of Milwaukee

Department of Public Works

Residents Preference Program Provisions

I. General

A. In accordance with Chapter 309 of the Milwaukee Code of Ordinances, residents preference hiring is required for all construction contracting activities of the Department of Public Works. The ordinance requires that 40% of WORKER HOURS worked on a DPW contract be performed by UNEMPLOYED or UNDEREMPLOYED RESIDENTS of the City, except in special cases where the Commissioner of Public Works determines there is sufficient reason to impose lesser levels of participation. Further, the Commissioner of Public Works may increase the percentage of RESIDENT worker participation to more than 40% on specific contracts. For this contract, bidders are required to show that a minimum **40** % of WORKER HOURS will be performed by UNEMPLOYED or UNDEREMPLOYED RESIDENTS of the City. Up to one-third of required worker hours may be achieved by documenting the use of UNEMPLOYED or UNDEREMPLOYED RESIDENTS on projects undertaken by the contractor where such compliance is not required, or by hiring UNEMPLOYED or UNDEREMPLOYED RESIDENTS on a full-time permanent basis for non-construction job categories connected to the project. Such adjustments must be proposed in an affidavit on a form provided by the department setting forth the facts upon which the request for adjustment is based.

B. The contractor, prior to commencing work, shall submit an affidavit (Form I) for proof of residency for all employees utilized by the contractor and subcontractors to meet the Residents Preference Program requirements, stating that each employee is either UNEMPLOYED or UNDEREMPLOYED and is a RESIDENT of the City. The contractor shall prepare and submit accurate and timely resident utilization forms and reports to the Department of Public Works. Time Reports shall be submitted within ten (10) days following completion of work, or every three months, whichever comes first. The reports shall identify the name, address, race, gender, work classification, wage rates and hours worked of all employees utilized on the contract by the contractor and all subcontractors. Failure to submit the required forms and reports to the Department of Public Works may result in disqualification of future bids, delay of payments, or other appropriate sanctions. Final contract payments will not be made until the summary of hours worked on the back of the Prime Contractor's Affidavit of Compliance is completed and on file with the Department of Public Works.

C. During the performance of this contract the Department of Public Works reserves the right to conduct compliance reviews. If the contractor is not in compliance with the specifications, the Commissioner of Public Works will notify the contractor in writing of the corrective action that will bring the contractor into compliance. If the contractor fails or refuses to take corrective action as directed, or if the contractor, prime or sub, submits any documents which contain any false, misleading, or fraudulent information, or if the contractor or subcontractor fail to comply with this ordinance, the Department of Public Works may take one or more of the actions listed below.

1. Withhold payments on the contract.

2. Terminate or cancel the contract, in whole or in part.

3. Consider possible debarment of the contractor from bidding for a period of up to two years.

4. Any other remedy available to the City at law or in equity.

D. The penalty for any person, firm, or corporation knowingly engaging in fraud, misrepresentation, or in any attempt directly or indirectly, to evade the provisions of this ordinance by providing false, misleading, or fraudulent information shall, upon conviction, forfeit not less than $1,000 or more than $5,000 together with the costs of prosecution and, upon default of payment, shall be imprisoned in the county jail or house of correction not to exceed 90 days, or until the forfeiture costs are paid.

II. Definitions

A. RESIDENT – A person who maintains his or her place of permanent abode in the City of Milwaukee. Domiciliary intent is required to establish that a person is maintaining his or her place of permanent abode in the City. Mere ownership of real property is not sufficient to establish domiciliary intent. Evidence of domiciliary intent includes, without limitations, the location where a person votes, pays personal income taxes, or obtains a driver's license.

B. UNEMPLOYED or UNDEREMPLOYED – a RESIDENT that has worked less than 1,200 hours in the preceding 12 months or has not worked in the preceding 30 days or, regardless of employment status, has household income at or below the federal poverty guidelines as adjusted by the Wisconsin Department of Public Instruction to define eligibility for reduced lunch in public schools. A RESIDENT will continue to qualify as unemployed or underemployed for five (5) years from the date he or she first participates in a contract under Chapter 309. If a RESIDENT becomes an apprentice for a contractor or becomes a participant in an on-the-job training program as determined by the City immediately after or in the course of performing on a particular construction contract, he or she shall continue to qualify as unemployed or underemployed for a period not exceeding 5 years from the date the person became an apprentice or participant in such on-the-job training program.

C. WORKER HOURS – means the total hours worked on a construction contract by skilled and unskilled construction trade workers, whether those workers are employed by the contractor or any subcontractor. In determining the total worker hours to be furnished at a construction site, the number of hours devoted to all tasks customarily performed on a construction site shall be included, whether or not such tasks are performed on the construction site. "Worker hours" includes work performed by persons filling apprenticeships and participating in on-the-job training programs and excludes the number of hours of work performed by all non-Wisconsin residents.

III. Residency Utilization Requirements

A. The contractor shall utilize UNEMPLOYED or UNDEREMPLOYED RESIDENTS of the City in a minimum amount equal to the percentage of the WORKER HOURS stated in paragraph IA above.

B. The contractor, by signing and submitting a bid, certifies that it understands the provisions of Chapter 309 and knows of and intends to comply with them, and shall ensure that all subcontractors are also informed.

C. The contractor shall maintain, and shall ensure that all subcontractors maintain, personnel records listing the name, address, race and gender of all employees utilized for this contract and any records demonstrating that the employees utilized by the contractor in meeting the residency requirements are actual residents of the City. These records

shall be maintained for seven (7) years after the contractor has received final payment under the contract and shall be made available to the Commissioner of Public Works upon reasonable notice.

D. Compliance with these residency requirements is an element of bid responsiveness. Failure to meet the specified residency requirements will render the bid unresponsive, and the Commissioner of Public Works may then recommend the award to the next apparent low bidder.

E. The City recognizes the following three organizations which can be contacted for access to trained or qualified workers from the City. Other organizations or sources of qualified RESIDENTS can be used at the bidder's discretion.

1. Milwaukee Urban League, located at 435 West North Avenue, Milwaukee, WI 53212. Telephone number 414-374-5850 Ext. 103, fax number 414-374-1995.

2. Big Step, located at 3841 West Wisconsin Avenue, Milwaukee, WI 53208. Telephone 414-342-9787, fax number 414-342-3546.

F. If the prime contractor has problems in meeting the residency requirements or if any other problems relative to residency participation arise during the completion of this project, the prime contractor shall immediately contact the Commissioner of Public Works.

G. Right to Appeal – All contracts awarded under ss. 7-14-2 and 7-22 of the City Charter shall be awarded by the Commissioner of Public Works to the lowest responsible bidder determined in accordance with any applicable City ordinances relating to the participation of Emerging Business Enterprise Programs or requiring participation of City RESIDENTS. Following the opening of any bid where the Commissioner has considered compliance with such City ordinances, the Commissioner shall publish in an official City newspaper his or her determination as to the lowest responsible bidder. Any bidder who objects to the determination based on the consideration of such City Ordinances, may appeal the recommendation by filing a written appeal with the Commissioner within five (5) working days of the date of publication. The appeal shall state the specific objection to the determination, including supporting documentation, and specify an alternative determination. Any appeals that do not conform to this section shall not be considered. The Commissioner shall schedule a hearing before the Public Works Contract Appeals Committee which shall be comprised of the chair of the Economic Development Committee or his or her designee and a member of the Economic Development Committee selected by the chair and the Director of Administration or his or her designee to be held within five days of receipt of the appeal. The Public Works Contract Appeals Committee shall have the authority by majority vote to affirm or set aside the determination of the Commissioner and their decision in this regard shall be final. In the event that a timely appeal meeting the requirements of this paragraph is not filed, or the Committee affirms the Commissioner's determination following a timely appeal, the Commissioner shall make an award in accordance with his or her determination.

FORM I **(Rev.2009)**

_____
Contractor Name

_____
DPW Contract No.

Employee Affidavit

Residents Preference Program

I certify that I maintain my permanent residence in the City of Milwaukee and that I vote, pay personal income tax, obtain my driver's license, etc. at _____, Milwaukee, WI _____
(Address) (Zip Code)

Residency status:

To verify my resident status, attached please find the following (check one)

_____ Copy of my voter's certification form.
_____ Copy of my last year's Form 1040.
_____ Copy of my current Wisconsin Driver's License or State ID.
_____ Copy of Other (i.e., Utility bill, Lease, etc.)

AND

Unemployment status:

I certify that I have been unemployed as follows: (Check those that apply)

_____ I have worked less than 1,200 hours in the preceding 12 months.
_____ I have not worked in the preceding 30 days.

OR

Underemployed status:

_____I certify that based on the attached chart (Income Eligibility Guidelines), I am underemployed.
.

_____
Print Name

_____
Sign Name

_____
Social Security Number

_____
Home Telephone Number

Subscribed and sworn to me this _____day

Of _____, _____ A.D.

My Commission Expires _____.

_____
Notary Public Milwaukee County

RPP Chart

Income Eligibility Guidelines
July 1, 2012 to June 30, 2013

Eligibility determination is based on household size and income.
Total income must be *at* or *below* the amounts in this table.

House-hold Size	**Yearly**	**Monthly**	**Twice per month**	**Every 2 weeks**	**Weekly**
1	**20,665**	**1,723**	**862**	**795**	**398**
2	**27,991**	**2,333**	**1,167**	**1,077**	**539**
3	**35,317**	**2,944**	**1,472**	**1,359**	**680**
4	**42,643**	**3,554**	**1,777**	**1,641**	**821**
5	**49,969**	**4,165**	**2,083**	**1,922**	**961**
6	**57,295**	**4,775**	**2,388**	**2,204**	**1,102**
7	**64,621**	**5,386**	**2,693**	**2,486**	**1,243**
8	**71,947**	**5,996**	**2,998**	**2,768**	**1,384**
9	**79,273**	**6,607**	**3,304**	**3,050**	**1,525**
10	**86,599**	**7,218**	**3,610**	**3,332**	**1,666**
11	**93,925**	**7,829**	**3,916**	**3,614**	**1,807**
12	**101,251**	**8,440**	**4,222**	**3,896**	**1,948**
For Each Additional Household Member Add	**+7,326**	**+611**	**+306**	**+282**	**+141**

Source: Wisconsin Department of Public Instruction

City Of Milwaukee

Department Of Public Works

Minority/Women/Small Business Enterprise (MWSBE) Provisions

I. General

A. In accordance with Chapter 370 of the Milwaukee Code of Ordinances, Minority/Women/Small Business Enterprise (M/W/SBE) participation is required in all contracting activities of the Department of Public Works. The ordinance requires that certified MWSBEs be utilized for 25% of the total dollars annually expended through prime contracts or subcontracts for Construction and the purchase of Goods and Services. For the purchase of Professional Services the requirement is 18%. To that end, the Commissioner of Public Works, as a contracting officer for the City, requires all bidders to utilize MWSBEs as subcontractors and material suppliers on all contracts. For this contract, bidders are required to achieve a minimum **25** % MWSBE participation.

B. The prime contractor shall prepare and submit accurate and timely MWSBE utilization forms and reports to the Department of Public Works. The reports shall include, but not be limited to, Compliance Plan (Form A), monthly utilization (Form D), and MWSBE subcontractor payment certification (Form E) forms as directed. Failure to submit the required forms and reports to the Department of Public Works may result in disqualification of future bids, delay of payments, or other appropriate sanctions. Final contract payments will not be made until final MWSBE utilization reports and MWSBE subcontractor payment certification forms are on file with the Department of Public Works.

C. During the performance of this contract, the Department of Public Works reserves the right to conduct compliance reviews. If the contractor is not in compliance with the specifications, the Commissioner of Public Works will notify the contractor in writing of the corrective action that will bring the contractor into compliance. If the contractor fails or refuses to take corrective action as directed, the Department of Public Works may take one or more of the actions listed below:

1. Terminate or cancel the contract, in whole or in part.

2. Consider possible debarment of the prime contractor from bidding.

3. Withhold payments on the contract.

4. Any other remedy available to the City at law or in equity.

II. Definitions

A. "MINORITY/WOMAN/SMALL BUSINESS ENTERPRISE" (MBE), (WBE) or (SBE) means a small business concern that is 51% owned, operated and controlled by one or more individuals who are a minority, woman and/or a small business owner (who is at an “economic disadvantage”). The individuals must have day-to-day operational and managerial control and interest in capital, financial risks and earnings commensurate with the percentage of their ownership.

B. "OWNED, OPERATED AND CONTROLLED" means a business which is one of the following:

1. A sole proprietorship legitimately owned and operated and controlled by a minority, women or an individual at a disadvantage as defined in Chapter 370.

2. A partnership or joint venture legitimately owned, operated and controlled by individuals who are minorities, women or individuals who are at a disadvantage and who own at least 51% of the beneficial ownership interests in the enterprise and who hold at least 51% of the voting interests of the enterprise eligible as defined in Chapter 370.

3. A corporation legitimately owned, operated and controlled by one or more individuals who are a minority, woman or individual at a disadvantage and who own at least 51% of the outstanding shares and who hold at least 51% of the voting interests of the corporation eligible as defined in Chapter 370.

III. MWSBE Utilization Requirements

A. Each prime contractor shall utilize MWSBE to a minimum of **25** % on this contract. Note that the prime contractors shall be required to attain MWSBE participation on their base bid excluding specified allowances, alternatives, and change orders. MWSBE commitments relative to contract award shall be based upon the approved MWSBE Compliance Plan (Form A).

B. The determination of MWSBE utilization shall be based on the following criteria:

1. The firms identified as MWSBE by the prime contractor on the MWSBE Compliance Plan (Form A) must be certified by the Office of Small Business Development prior to bid opening.

2. The prime contractor shall be credited for the entire expenditure to MWSBE firms only if all of the identified scope of work is performed directly by the certified MWSBE firm.

3. The prime contractor shall be credited for the entire expenditure to MWSBE manufacturer only if the manufacturer produces goods from raw materials or substantially alters them for resale. Only 20% of the MWSBE goals may be expended for MWSBE suppliers that do not manufacture products they supply.

4. The prime contractor shall count toward the MWSBE requirement only those payments to MWSBEs who perform a commercially-useful function in the actual performance of the contract. While that generally means an MWSBE should be engaged in direct contract work, a "commercially-useful function" may also include management of a third tier subcontractor. For example, while an MWSBE trucking subcontractor is always expected to perform some direct work on the project, in some cases it may become necessary to subcontract work out to one or more third tier subcontractors. If a third tier subcontractor is also an MWSBE, the full amount of the work performed by that third tier MWSBE can be counted toward MWSBE participation. However, if the third party subcontractor is not an MWSBE, the prime contractor may only count 20% of the amount being subcontracted to the third tier non-MWSBE subcontractor. MWSBEs are required to notify the Department of Public Works if they subcontract out work so that the Department can determine how much, if any, of the subcontracted work can be counted toward the MWSBE requirement. The Commissioner of Public Works will make the final determination and evaluation of whether the MWSBE is performing a commercially-useful function.

C. The contractor, by signing and submitting a bid, certifies that the contractor understands the provisions of Chapter 370 and knows of and intends to comply with them. The completed MWSBE Compliance Plan (Form A) must be submitted by the apparent low bid contractor within three (3) working days after the identification of the "low bidder."

1. Information on Form A shall include, but not be limited to:

a. The names, addresses, telephone numbers, MWSBE Certification designation and contact person names for the certified MWSBE contractors that will participate on the project as subcontractors or suppliers;

b. A description of the scope of work to be performed by the MWSBE on this project; and

c. The MWSBE contractor dollar value(s) and corresponding percentages that the dollar values represent of the total contract amount.

2. Listing an MWSBE on the Compliance Plan (Form A) shall constitute a representation that the contractor has communicated directly with the MWSBEs listed. If awarded the contract, the bidder will enter into a subcontract with the firm for the portion of the work listed.

3. MWSBE participation is an element of bid responsiveness. Failure to meet the specified MWSBE requirements will render the bid unresponsive. The contract may then be awarded to the next apparent low bidder. Under certain circumstances, failure to meet specified MWSBE requirements after submission of an apparent low bid may result in surrender of the bidder's bid bond.

4. Only MWSBEs that have been certified by the Office of Small Business Development may be listed on the MWSBE Compliance Plan (Form A) and counted towards the percentage requirements on this project. A listing of the currently City certified MWSBE firms is maintained at:

Office of Small Business Development
200 East Wells Street
City Hall, Room 606
Milwaukee, Wisconsin 53202
Phone: (414) 286-5553
FAX: (414) 286-8752

D. After execution of the contract, if for any reason an MWSBE cannot perform, the prime contractor shall contact the Commissioner of Public Works for approval to substitute another certified MWSBE firm. The prime contractor must submit a written request for substitution which specifies the reasons for the request. Approval must be obtained prior to making substitutions. Any difference in the cost occasioned by such substitution shall be borne by the prime contractor. If the prime contractor cannot find another certified firm to do the work at a comparable price, a non-MWSBE firm may be substituted with the approval of the Commissioner of Public Works.

E. If the prime contractor has a problem in meeting the MWSBE requirements or if any other problems relative to MWSBE(s) arise during the completion of this project, the prime contractor shall immediately contact the Commissioner of Public Works.

F. Certification from programs other than the Office of Small Business Development is neither accepted by the City of Milwaukee nor do they have any bearing whatsoever on the eligibility criteria established by the City of Milwaukee.

G. Right to Appeal.

All contracts awarded under ss.7-14-2 and 7-22 of the City Charter shall be awarded by the Commissioner of Public Works to the lowest responsible bidder determined in accordance with applicable City ordinances for participation of the Office of Small Business Development. Following the opening of any bid involving a determination under applicable City ordinances for participation of M/W/SBE, the Commissioner of Public Works shall make a written recommendation as to the lowest responsible bidder and

notify all bidders by publication in an official City newspaper as to the content of the written recommendation. Any bidder who objects to the recommendation on grounds of determinations made under applicable City ordinances for participation of M/W/SBE may appeal the recommendation on such grounds by filing a written appeal with the Commissioner of Public Works within five (5) working days of the date of publication. The appeal shall state the specific objection to the recommendation, include supporting documentation and specify an alternative recommendation. The Commissioner of Public Works shall schedule a hearing before an appeals committee consisting of the Chair of the Economic Development Committee or the Chair's designee, a member of the Economic Development Committee selected by the Chair and the Director of the Office of Small Business Development to be held within five (5) days of receipt of the appeal. The Committee shall have authority by majority vote to affirm or set aside the recommendation of the Commissioner of Public Works and its decision in this regard shall be final. In the event a timely appeal, meeting the requirements above is not filed, or the Committee affirms the Commissioner's recommendation following a timely appeal, meeting the requirements above, the Commissioner shall make an award in accordance with the recommendation.

H. Percentage of Required MWSBE Participation

Construction 25%
The Purchase of Goods and Services 25%
The Purchase of Professional Services 18%

The following tables outline the specific types of Business Enterprises and the percentage requirement for particular contract types. Once the specific enterprise percentage listed below is met for a particular contract type the overall MWSBE percentage requirement may be met by using any other certified MWSBE

For example, a Construction contract requiring 25% MWSBE can be achieved by using an African American MWSBE for 5.57, an Asian American MWSBE for .07 and a WBE for 7.31. The remaining 12.05% can be met by using any certified MWSBE.

	Construction	**Goods & Services**	**Professional Services**
MBE			
African American Firms	5.57%		
Asian American Firms	0.07%		
Hispanic Firms		3.23%	
Native American Firms		0.17%	
WBE	7.31%	17.09%	
SBE	12.05%	4.51%	18%
TOTAL	***25%***	***25%***	***18%***

FORM A – COMPLIANCE PLAN – CITY OF MILWAUKEE – DEPARTMENT OF PUBLIC WORKS
M/W/SBE PARTICIPATION FOR SUBCONTRACTORS AND/OR MATERIAL SUPPLIERS

PRIME CONTRACTORS NAME: _____ OFFICIAL NOTICE NUMBER: 87-2013

DATE: _____ TOTAL BID AMOUNT: _____ TOTAL M/W/SBE AMOUNT: _____

This Form A must be completed in its entirety and is a **required** submission with a Bid or Request for Proposal. List all proposed M/W/SBE subcontractor(s) and/or material supplier(s) for this project. **NOTE:** To receive full credit, M/W/SBE's must perform commercially useful work at the job site. ONLY up to twenty percent (20%) credit may be given under certain circumstances to M/W/SBE suppliers or other M/W/SBE contractors who assist in management of the project. I/We propose to utilize the following M/W/SBE subcontractor(s) and/or material supplier(s):

MBE:

Fill in BID REQUIREMENTS: _____% African-Amer _____%Asian-Amer _____%Hispanic _____%Native-Amer; *AND* _____%**WBE**; _____%**SBE**

M/W/SBE FIRM(S) NAME ADDRESS/CONTACT PERSON AND PHONE NUMBER	LIST DESIGNATION: MINORITY / WOMAN / SMALL BUSINESS	% OF BID	AMOUNT	EXPLAIN WORK TO BE PERFORMED / MATERIAL SUPPLIED	AUTHORIZED M/W/SBE(S) OWNER/ REPRESENTATIVE SIGNATURE OF ACKNOWLEDGEMENT
1.					
2.					
3.					
4.					
5.					

I certify that the information included on this Form A is true and complete to the best of my knowledge. I further understand and agree that this Form A is a condition of my Bid/RFP responsiveness. Failure to submit this form and/or meet the specified M/W/SBE requirements may render the Bid/RFP nonresponsive.

CONTRACTOR: _____ DATE: _____/_____/_____
(SIGNATURE & TITLE REQUIRED)

REVIEWED BY OSBD ANALYST: _____ DATE: _____/_____/_____

DEPARTMENT OF PUBLIC WORKS: _____ DATE: _____/_____/_____

DEPARTMENT OF PUBLIC WORKS
MINORITY/WOMAN/SMALL BUSINESS ENTERPRISE PROGRAM

Form D – M/W/SBE MONTHLY REPORT

(1) Report for the Month of _____ 20_____ (Final: yes ___ no ___)

(2) Prime Contractor/Firm _____

(3) Full Address & Phone Number: _____

(4) Description of work/service performed and/or material supplied _____

(5) DPW Contract No. **C**_____ (6) Official Notice No./Project Number _____

(7) Start Date: _____ (8) Prime Contractor's Total $: _____

(9) Completion Date: _____ (10) Prime Contractor to date $: _____

(11) Minority Business % _____ and Minority Business $ amount _____
Woman Business % _____ and Woman Business $ amount _____
Small Business % _____ and Small Business $ amount _____

List all M/W/SBE subcontractor firm(s) utilized in connection with the above contract, either as service performed and/or supplier for the month. This form shall be signed and returned**. If this represents the final report, be sure to attach M/W/SBE Payment Certification Form (Form E) for each sub listed.**

NAME OF M/W/SBE FIRM(s) ***AND*** **LIST THEIR M/W/SBE DESIGNATION**	WORK/SERVICE PERFORMED or MATERIAL SUPPLIED	AMOUNT PAID FOR THE MONTH	TOTAL $ PAID TO DATE
TOTAL PAID TO M/W/SBE(s)			

I/we hereby certify that I/we have read the above and approved this information to be precise and confirmed.

(12) Report Prepared By: _____
(Name) (Title) (Phone Number)

(13) Authorized Signature : _____
(Name) (Title)

(14) Date _____

Note: This form should be submitted no later than the **20th of every month** to the **DEPARTMENT of PUBLIC WORKS CONTRACT ADMINISTRATION, Room 506, Frank P. Zeidler Municipal Building, 841 North Broadway, Milwaukee, WI.**

Rev. 1/2012

DIRECTIONS FOR M/W/SBE MONTHLY REPORT (FORM D)

1. List the month that the report is being submitted. **Note: If this is the final report, check yes and submit Form E Subcontractor Payment Certification Form.**
2. Prime contractor's or firm's registered company name.
3. List full registered business address to include city/state, zip code and telephone number.
4. Brief description service performed and/or material supplied on this contract.
5. List the DPW Contract Number, as represented on the contract document.
6. List the project number as represented on the front page of the contract.
7. List the start date of the project.
8. List the total dollars awarded to the prime contractor.
9. List the completion date of the project.
10. Total dollars paid to Prime contractor to date.
11. List **EACH** M/W/SBE percentage **REQUIRED** on this project and each M/W/SBE dollar amount.
12. List the name, title and phone number of the individual who prepared the report.
13. Provide the authorized signature and title of the individual who approves the report.
14. List the date that the report is completed.

THIS REPORT IS DUE THE 20TH OF EVERY MONTH FOR THE PREVIOUS MONTH'S ACTIVITY. FAILURE TO RETURN THIS FORM BY THE SPECIFIED TIME MAY CAUSE A DELAY IN PAYMENTS.

City Of Milwaukee

Department Of Public Works

Minority/Woman/Small Business Enterprise Program (M/W/SBE)
Subcontractor Payment Certification

(This form must be completed by the M/W/SBE subcontractor and attached to the Prime Contractor's Final M/W/SBE Form D Report)

-PRIME CONTRACTOR & SUBCONTRACTOR EXECUTES-

Section A – M/W/SBE Company Officer Completes **For Payment That Has Been Received.**

M/W/SBE Subcontractor Name: _____

Official Notice No. _____ Project No. _____ DPW Contract No. **C**_____

I hereby certify that I have received $ _____ for subcontract work on the above project.

Dated: _____ Signature of **M/W/SBE** Subcontractor: _____

Printed Name & Title of **M/W/SBE** Subcontractor: _____

Acknowledged by **Prime** Contractor Signature: _____

Printed name & Title of **Prime** Contractor: _____

****

-PRIME CONTRACTOR & SUBCONTRACTOR EXECUTE-

Section B - Prime Contractor and M/W/SBE Company Officers Complete If **Full Payment Has Not Been Made to the M/W/SBE Subcontractor and a balance remains to be paid.**

Prime Contractor: _____

M/W/SBE Subcontractor: _____

Official Notice No. _____ Project No. _____ DPW Contract No. **C**_____

I hereby certify that I will pay $_____ to _____
(Name of M/W/SBE Firm)

for subcontract work on the above project.

Dated: _____ Signature of **Prime** Contractor: _____

Printed Name & Title of **Prime** Contractor: _____

Acknowledged by **M/W/SBE** Subcontractor Signature: _____

Printed Name & Title of **M/W/SBE** Subcontractor: _____

CITY OF MILWAUKEE

PRIME CONTRACTOR AFFIDAVIT OF COMPLIANCE

WITH MINIMUM WAGE SCALE AND SPECIAL AREA WORKER HOURS PROVISIONS

STATE OF _____)
) SS.
_____County)

Project Name _____

DPW Contract No. _____

I, _____, being duly sworn, state that:

1. I am the _____ of_____, a _____ (State) corporation, partnership, or individual of _____ (City, Village, Township), _____ (State), and make this affidavit pursuant to the provisions of § 66.0903 (9), Wisconsin Statutes, and Wisconsin Administrative Code section §DWD 290.14 regarding wage and fringe benefit rates for municipal contracts for construction of public works and pursuant to Section 309-41 of the Milwaukee Code of Ordinances.

2. I have recently completed the work required under the terms of the contract dated _____, 20_____, with the City of Milwaukee, Department of Public Works for the construction of all or part of the above-named public works project and make this affidavit in order to obtain my final payment.

3. I have fully complied with the wage and hour requirements as set forth in the above-referenced contract and paid overtime rates (1½ times) for any work over ten (10) hours per day or forty (40) hours per week.

4. I have received similar evidence of compliance with the contract wage rates and special impact area worker hour requirements in the form of completed affidavits from each of my agents and subcontractors who worked on this project and have listed their names on the reverse side of this affidavit along with numbers and percentages of worker hours.

5. I have full and accurate records which clearly show the name, trade or occupation, and home address of every laborer, worker, or mechanic that I employed in connection with the work on this project, as well as the hours worked and actual wage and fringe benefits paid to such employees. These records will be kept at _____ _____ in the custody of _____, who address and telephone number are _____ _____. These payroll records and the evidence of compliance set in Paragraph 4 will be retained and made available for inspection for a period of at least **seven (7)** years following the completion of the project and will not be removed without prior notification to the commissioner of Public Works.

Title	Officer Name	Address
President	_____	_____
Vice-President	_____	_____
Secretary-Treasure	_____	_____

Subscribed and sworn to before me this _____

day of _____, 20_____

_____

Notary Public, State of _____

My Commission Expires: _____

_____
(Signature)

- OVER -

SUMMARY OF HOURS WORKED

(TARGET RESIDENCY VS TOTAL HOURS)

Name	No. of Hours of Special Impact Area Workers	% of Total Hours	No. of Hours of All Other Workers	% of Total Hours	Total of All Worker Hours
Prime Contractor:					
Subcontractors:					
GRAND TOTAL					

(REV. 01/01/01)

CITY OF MILWAUKEE

SUBCONTRACTOR AFFIDAVIT OF COMPLIANCE

WITH MINIMUM WAGE SCALE AND SPECIAL AREA WORKER HOURS PROVISIONS

STATE OF _____)
) SS.
_____County)

Project Name _____

DPW Contract No. _____

I, _____, being duly sworn, state that:

1. I am the _____ of_____, a _____ (State) corporation, partnership, or individual of _____ (City, Village, Township), _____ (State) and make this affidavit pursuant to the provisions of § 66.0903 (9), Wisconsin Statutes, and Wisconsin Administrative Code section § DWD 290.13 regarding wage and fringe benefit rates for municipal contracts for construction of public works and pursuant to Section 309-41 of the Milwaukee Code of Ordinances.

2. I have recently completed the work required under the terms of the contract dated _____, 20_____ , with the City of Milwaukee, Department of Public Works and _____ (Name of Prime Contractor) for the construction of all or part of the above-named public works project and make this affidavit in order to obtain my final payment.

3. I have fully complied with the wage and hour requirements as set forth in the above-referenced contract and paid overtime rates (1½ times) for any work over ten (10) hours per day or forty (40) hours per week.

4. I have full and accurate records which clearly show the name, trade or occupation, and home address of every laborer, worker, or mechanic that I employed in connection with the work on this project, as well as the hours worked and actual wage and fringe benefits paid to such employees. These records will be kept at _____ _____ in the custody of _____, who address and telephone number are _____ . These payroll records and the evidence of compliance set in Paragraph 4 will be retained and made available for inspection for a period of at least **seven (7)** years following the completion of the project and will not be removed without prior notification to the commissioner of Public Works.

5. I certify that _____ were the total number of hours worked on this project with _____ hours being worked by residents of the special impact area and _____ hours being worked by all other workers.

Title	Officer Name	Address
President	_____	_____
Vice-President	_____	_____
Secretary-Treasure	_____	_____

Subscribed and sworn to before me this _____

day of _____, 20_____

_____

Notary Public, State of _____

My Commission Expires: _____

_____
(Contractor Signature)

To ensure DPW is in compliance with any federal procurement requirements regarding suspension and debarment, CONTRACTOR must sign this "Suspension/Debarment Certification Form".

Please complete and sign below and return this form to:

Department of Public Works Contract Office
Room **506**, Municipal Building
841 North Broadway
Milwaukee, WI 53202

Submittal required prior to start of work on this project.

CERTIFICATION REGARDING SUSPENSION AND DEBARMENT

The CONTRACTOR certifies that all potential sub-recipients, contractors, and any and all of their principals are not debarred, suspended or proposed for debarment for federal assistance (e.g., General Services Administration's List of Parties Excluded from Federal Procurement and Non-Procurement Programs), and that throughout the term of its federally-funded contracts with the City of Milwaukee, the CONTRACTOR will not enter into any transactions with any sub-recipients, contractors, or any of their principals who are debarred, suspended or proposed for debarment.

_____ _____
Signature/Authorized Official Date

_____ C_____
Printed Name Contract Number

_____
Title

_____
Name of Company

AFFIDAVIT OF COMPLIANCE
WITH WISCONSIN STATUTE 103.503
SUBSTANCE ABUSE PREVENTION REQUIREMENTS

STATE OF _____) PROJECT NAME _____
) ss.
_____ COUNTY) DPW Contract No._____

I, _____ , being first duly sworn state that:
(Print name)

1. I am the _____ of _____, a _____.
   (Title) (Company Name) (State)

   Corporation, partnership, or individual of _____, _____ ,
   (City, Village, Township) (State)
   and make this affidavit pursuant to the provisions of Wis. Stat. § 103.503.
2. I have entered into City of Milwaukee, Department of Public Works' Contract No. _____ , to which the provisions of Wis. Stat. 66.0903 apply.
3. I have in place a substance abuse prevention program that meets the requirements of Wis. Stat. 103.503, and I will fully comply in all respects with the requirements of Wis. Stat. 103.503 during the performance of this Contract.
4. I will include in each subcontract covering work performed under this Contract to which the provisions of Wis. Stat. 66.0903 apply, a provision similar to that in Paragraph 3 above, together with a clause requiring such insertion in further subcontracts that may in turn be made.

Title	Officer Name	Address
President	_____	_____
Vice President	_____	_____
Secretary/Treasurer	_____	_____

Subscribed and sworn before me this _____

day of _____ , 20_____ .

_____ _____
Notary Signature Contractor Signature

Notary Public, State of _____

My Commission Expires: _____

1121-2004-1516/96897

(REV. 04/03/07)

FORM F
(REV. 01/01/01)

PROPOSED RESIDENT / APPRENTICE UTILIZATION FORM

This is a preliminary statement of proposed workforce needs where known.

Official Notice # _____ Project # _____ Contract # _____

Contractor _____

JOB CATEGORY	PROPOSED # OF HOURS ON THIS PROJECT	PROPOSED # OF HOURS FOR SPECIAL IMPACT AREA RESIDENTS	PROPOSED # OF HOURS FOR ALL OTHER WORKERS
TRUCK DRIVERS:		(%)	(%)
OPERATING ENGINEERS:			
JOURNEYMEN		(%)	(%)
APPRENTICES		(%)	(%)
SKILLED TRADES: (Specify)			
JOURNEYMEN		(%)	(%)
APPRENTICES		(%)	(%)
TRAINEES		(%)	(%)
LABORERS: (Specify type)			
		(%)	(%)
		(%)	(%)
		(%)	(%)
		(%)	(%)
		(%)	(%)

NAME and ADDRESS of Target Area Residents: _____ _____

_____ _____ _____

_____ _____ _____

NAME and ADDRESS of Apprentices: _____ _____

_____ _____ _____

City of Milwaukee

Department of Public Works

Apprenticeship Provisions

I. General:

A. In accordance with Section 309-38 of the Milwaukee Code of Ordinances, apprenticeship requirements will be specified on all Department of Public Works construction contracts, where appropriate, which are in excess of $100,000. The ordinance requires that a contractor employ apprentices in the performance of the contract and of all subcontracts entered into by the contractor in accordance with the maximum ratio of apprentices to journeymen as established by the Wisconsin Department of Industry, Labor, and Human Relations. Fair consideration must be given to minorities and women. For this contract, bidders are required to utilize apprentice(s) from **one** of the following trade(s):

Construction Craft Laborer

B. The contractor shall prepare and submit an accurate and timely Apprenticeship Utilization Form (Form F) and other reports to the Department of Public Works. The Apprenticeship Utilization Form shall be returned with the executed contract and shall specifically identify the apprentice(s) that will work on the project. The Contractor Time Report shall be submitted within ten (10) days following completion of work or every three (3) months, whichever comes first. Failure to submit the required forms and reports to the Department of Public Works may result in disqualification of future bids, delay of payments, or other appropriate sanctions. Final contract payments will not be made until all apprenticeship related reports are on file with the Department of Public Works.

C. During the performance of this contract the Department of Public Works reserves the right to conduct compliance reviews. If the contractor is not in compliance with the specifications, the Commissioner of Public Works will notify the contractor in writing of the corrective action that will bring the contractor into compliance. If the contractor fails or refuses to take corrective action as directed, or if the contractor, prime or sub, submits any documents which contain any false, misleading, or fraudulent information, or if the contractor or subcontractor fail to comply with this ordinance, the Department of Public Works may take one or more of the actions listed below:

1. Withhold payments on the contract.

2. Terminate, suspend, or cancel the contract, in whole or in part.

3. After due process, consider debarment of the contractor from bidding for a two-year period.

4. Any other remedy available to the City at law or in equity.

II. Definitions:

A. Apprentice - a person, 16 years of age or over, who shall enter into a written contract of service where he or she is to receive from or through his or her employer in consideration for his or her services, in whole or in part, instruction in any trade, craft, or business. Apprenticeship agreements shall be governed by Ch. 106, Wis. Stats.

B. Construction - Means either new construction work or repair work on any roads, bridges, sewers, streets, alleys, buildings, or any other public works.

III. Apprenticeship Utilization Requirements:

A. The contractor shall utilize apprentices in a minimum amount equal to that stated in paragraph I-A above.

B. The contractor, by signing and submitting a bid, certifies that the contractor understands the provisions of Chapter 309 and knows of and intends to comply with them.

C. The contractor shall maintain personnel records listing the names and addresses of its employees utilized for this contract in meeting apprenticeship requirements. These records shall be maintained for three (3) years after the contractor has received final payment under the contract and shall be made available to the Commissioner of Public Works upon reasonable notice.

D. Compliance with these apprenticeship requirements is an element of bid responsiveness. Failure to meet the specified apprenticeship requirements will render the bid unresponsive, and the Commissioner of Public Works may then recommend award to the next apparent low bidder.

E. If the prime contractor has problems in meeting the apprenticeship requirements or if any other problems relative to apprenticeship participation arise during the completion of this project, the prime contractor shall immediately contact the Commissioner of Public Works.

NOTICE TO CONTRACTORS

PLEASE NOTE: Effective December 28, 2005, the City of Milwaukee adopted an ordinance relative to the disclosure of participation in or profits derived from slavery by contractors. All contractors awarded a contract on behalf of the City of Milwaukee, whether or not subject to a competitive bid, shall complete an affidavit prior to entering into the contract verifying that the contractor has searched any and all records of the company or any predecessor company regarding records of investments or profits from slavery or slaveholder insurance policies during the slavery era. The names of any enslaved persons or slaveholders described in those records must be disclosed in the affidavit.

The City shall make the information contained in the affidavit available to the public. Any contract between the City and a contractor which fails to provide the requisite affidavit or which includes material false information on such affidavit shall be rendered null and void. To reference Milwaukee Code of Ordinances 310-14, please see:

http://cctv25.milwaukee.gov/code/volume3/ch310.pdf

CITY OF MILWAUKEE - DEPARTMENT OF PUBLIC WORKS

AFFIDAVIT OF COMPLIANCE

DISCLOSURE OF PARTICIPATION IN OR PROFITS DERIVED FROM SLAVERY BY CONTRACTORS

COMPANY NAME: _____

ADDRESS: _____

CITY/STATE/ZIP: _____

This affidavit of compliance will be the contractor's sworn statement that publicly discloses any slavery policies sold by any companies, or profits from slavery by industries or their predecessors who are doing business with the City of Milwaukee as defined in the Milwaukee Code of Ordinances 310-14.

Please check one:

_____ This business **was not** in existence prior to 1865.

_____ This business **was** in existence prior to 1865. I have searched any and all records for records of investments or profits from slavery and have found no such records.

_____ This business **was** in existence prior to 1865. I have searched any and all records for records of investments or profits from slavery and am disclosing the findings on the attached pages.

I hereby declare that all statements are true, accurate and complete as of the date furnished to the City of Milwaukee.

AUTHORIZED SIGNATURE: _____

PRINTED NAME: _____

Subscribed to before me this _____ day of _____, 20___

NOTARY PUBLIC _____County, _____State _____

SIGNATURE: _____

PRINT NAME: _____ (Seal)

My commission expires: _____

Ref: slaverydisclosureaffidavit

NOTICE TO CONTRACTORS

Effective immediately, the City of Milwaukee has adopted an ordinance relative to Prompt Payment as follows:

2.9.16.b) It is the City's policy to pay all invoices within 30 days. If the City does not make payment within 45 days after receipt of properly completed supporting payment and other required contract documentation, the City shall pay simple interest beginning with the 31st calendar day at the rate of one percent per month (unless the amount due is subject to a good-faith dispute and, before the 45th day of receipt, notice of the dispute is sent to the contractor by first-class mail, personally delivered, or sent in accordance with the notice provisions in the contract). If there are subcontractors, consistent with s.66.0135(3), Wis. Stats., the prime contractor must pay the subcontractors for satisfactory work within seven days of the contractor's receipt of payment from the City of Milwaukee, or seven days from receipt of a properly submitted and approved invoice from the subcontractor, whichever is later. If the contractor fails to make timely payment to a subcontractor, the contractor shall pay interest at the rate of 12 percent per year, compounded monthly, beginning with the 8th calendar day. Reference Common Council File No. 101137 adopted January 2011.

5/11/2011

PREVAILING WAGE RATE DETERMINATION
Issued by the State of Wisconsin
Department of Workforce Development
Pursuant to s. 66.0903, Wis. Stats.
Issued On: 01/10/2013
Amended On: 02/18/2013

DETERMINATION NUMBER:	201300081
EXPIRATION DATE:	Prime Contracts MUST Be Awarded or Negotiated On Or Before 12/31/2013. If NOT, You MUST Reapply.
PROJECT NAME:	ALL PUBLIC WORKS PROJECTS UNDER SEC 66.0903, STATS - CITY OF MILWAUKEE
PROJECT LOCATION:	MILWAUKEE CITY, MILWAUKEE COUNTY, WI
CONTRACTING AGENCY:	CITY OF MILWAUKEE-DEPT OF PUBLIC WORKS

CLASSIFICATION:	Contractors are responsible for correctly classifying their workers. Either call the Department of Workforce Development (DWD) with trade or classification questions or consult DWD's Dictionary of Occupational Classifications & Work Descriptions on the DWD website at: dwd.wisconsin.gov/er/prevailing_wage_rate/Dictionary/dictionary_main.htm.
OVERTIME:	Time and one-half must be paid for all hours worked: - over 10 hours per day on prevailing wage projects - over 40 hours per calendar week - Saturday and Sunday - on all of the following holidays: January 1; the last Monday in May; July 4; the 1st Monday in September; the 4th Thursday in November; December 25; - The day before if January 1, July 4 or December 25 falls on a Saturday; - The day following if January 1, July 4 or December 25 falls on a Sunday. Apply the time and one-half overtime calculation to whichever is higher between the Hourly Basic Rate listed on this project determination or the employee's regular hourly rate of pay. Add any applicable Premium or DOT Premium to the Hourly Basic Rate before calculating overtime. A DOT Premium (discussed below) may supersede this time and one-half requirement.
FUTURE INCREASE:	When a specific trade or occupation requires a future increase, you MUST add the full hourly increase to the "TOTAL" on the effective date(s) indicated for the specific trade or occupation.
PREMIUM PAY:	If indicated for a specific trade or occupation, the full amount of such pay MUST be added to the "HOURLY BASIC RATE OF PAY" indicated for such trade or occupation, whevenever such pay is applicable.
DOT PREMIUM:	This premium only applies to highway and bridge projects owned by the Wisconsin Department of Transportation and to the project type heading "Airport Pavement or State Highway Construction." DO NOT apply the premium calculation under any other project type on this determination.
APPRENTICES:	Pay apprentices a percentage of the applicable journeyperson's hourly basic rate of pay and hourly fringe benefit contributions specified in this determination. Obtain the appropriate percentage from each apprentice's contract or indenture.
SUBJOURNEY:	Subjourney wage rates may be available for some of the trades or occupations indicated below with the exception of laborers, truck drivers and heavy equipment operators. Any employer interested in using a subjourney classification on this project MUST complete Form ERD-10880 and request the applicable wage rate from the Department of Workforce Development PRIOR to using the subjourney worker on this project.

This document **MUST BE POSTED** by the **CONTRACTING AGENCY** in at least one conspicuous and easily accessible place **on the site of the project** . A local governmental unit may post this document at the place normally used to post public notices if there is no common site on the project. This document **MUST** remain posted during the entire time any worker is employed on the project and **MUST** be physically incorporated into the specifications and all contracts and subcontracts. If you have any questions, please write to the Equal Rights Division, Labor Standards Bureau, P.O. Box 8928, Madison, Wisconsin 53708 or call (608) 266-6861.

The following statutory provisions apply to local governmental unit projects of public works and are set forth below pursuant to the requirements of s. 66.0903(8), Stats.

s. 66.0903 (1) (f) & s. 103.49 (1) (c) "PREVAILING HOURS OF LABOR" for any trade or occupation in any area means 10 hours per day and 40 hours per week and may not include any hours worked on a Saturday or Sunday or on any of the following holidays:

1. January 1.
2. The last Monday in May.
3. July 4.
4. The first Monday in September.
5. The 4th Thursday in November.
6. December 25.
7. The day before if January 1, July 4 or December 25 falls on a Saturday.
8. The day following if January 1, July 4 or December 25 falls on a Sunday.

s. 66.0903 (10) RECORDS; INSPECTION; ENFORCEMENT.
(a) Each contractor, subcontractor, or contractor's or subcontractor's agent performing work on a project of public works that is subject to this section shall keep full and accurate records clearly indicating the name and trade or occupation of every person performing the work described in sub. (4) and an accurate record of the number of hours worked by each of those persons and the actual wages paid for the hours worked.

s. 66.0903 (11) LIABILITY AND PENALTIES.
(a) 1. Any contractor, subcontractor, or contractor's or subcontractor's agent who fails to pay the prevailing wage rate determined by the department under sub. (3) or who pays less than 1.5 times the hourly basic rate of pay for all hours worked in excess of the prevailing hours of labor is liable to any affected employee in the amount of his or her unpaid wages or his or her unpaid overtime compensation and in an additional amount as liquidated damages as provided under subd. 2., 3., whichever is applicable.
2. If the department determines upon inspection under sub. (10) (b) or (c) that a contractor, subcontractor, or contractor's or subcontractor's agent has failed to pay the prevailing wage rate determined by the department under sub. (3) or has paid less than 1.5 times the hourly basic rate of pay for all hours worked in excess of the prevailing hours of labor, the department shall order the contractor to pay to any affected employee the amount of his or her unpaid wages or his or her unpaid overtime compensation and an additional amount equal to 100 percent of the amount of those unpaid wages or that unpaid overtime compensation as liquidated damages within a period specified by the department in the order.
3. In addition to or in lieu of recovering the liability specified in subd. 1. as provided in subd. 2., any employee for and in behalf of that employee and other employees similarly situated may commence an action to recover that liability in any court of competent jurisdiction. If the court finds that a contractor, subcontractor, or contractor's or subcontractor's agent has failed to pay the prevailing wage rate determined by the department under sub. (3) or has paid less than 1.5 times the hourly basic rate of pay for all hours worked in excess of the prevailing hours of labor, the court shall order the contractor, subcontractor, or agent to pay to any affected employee the amount of his or her unpaid wages or his or her unpaid overtime compensation and an additional amount equal to 100 percent of the amount of those unpaid wages or that unpaid overtime compensation as liquidated damages.
5. No employee may be a party plaintiff to an action under subd. 3. unless the employee consents in writing to become a party and the consent is filed in the court in which the action is brought. Notwithstanding s. 814.04 (1), the court shall, in addition to any judgment awarded to the plaintiff, allow reasonable attorney fees and costs to be paid by the defendant.

BUILDING OR HEAVY CONSTRUCTION

Includes sheltered enclosures with walk-in access for the purpose of housing persons, employees, machinery, equipment or supplies and non-sheltered work such as canals, dams, dikes, reservoirs, storage tanks, etc. A sheltered enclosure need not be "habitable" in order to be considered a building. The installation of machinery and/or equipment, both above and below grade level, does not change a project's character as a building. On-site grading, utility work and landscaping are included within this definition. Residential buildings of four (4) stories or less, agricultural buildings, parking lots and driveways are NOT included within this definition.

SKILLED TRADES

Fringe Benefits Must Be Paid On All Hours Worked

CODE	TRADE OR OCCUPATION	HOURLY BASIC RATE OF PAY $	HOURLY FRINGE BENEFITS $	TOTAL $
101	Acoustic Ceiling Tile Installer Future Increase(s): Add $.75/hr on 6/3/2013. Add $1.25/hr on 6/2/2014.	32.93	19.81	52.74
102	Boilermaker	31.09	27.23	58.32
103	Bricklayer, Blocklayer or Stonemason Future Increase(s): Add $1.45/hr on 6/01/2013 Premium Increase(s): DOT PREMIUM: Pay two times the hourly basic rate on Sunday, New Year’s Day, Memorial Day, Independence Day, Labor Day, Thanksgiving Day & Christmas Day.	35.80	16.87	52.67
104	Cabinet Installer Future Increase(s): Add $.75/hr on 6/3/2013. Add $1.25/hr on 6/2/2014.	32.93	19.81	52.74
105	Carpenter Future Increase(s): Add $.75/hr on 6/3/2013. Add $1.25/hr on 6/2/2014. Premium Increase(s): DOT PREMIUM: Pay two times the hourly basic rate on Sunday, New Year's Day, Memorial Day, Independence Day, Labor Day, Thanksgiving Day & Christmas Day.	32.93	19.81	52.74
106	Carpet Layer or Soft Floor Coverer	33.43	19.21	52.64
107	Cement Finisher	32.57	17.03	49.60
108	Drywall Taper or Finisher	29.87	18.79	48.66
109	Electrician Future Increase(s): Add $1.60/hr on 6/1/2013. Premium Increase(s): DOT PREMIUM: Pay two times the hourly basic rate on Sunday, New Year’s Day, Memorial Day, Independence Day, Labor Day, Thanksgiving Day & Christmas Day.	32.20	21.71	53.91
110	Elevator Constructor	41.71	23.88	65.59
111	Fence Erector	28.00	4.50	32.50
112	Fire Sprinkler Fitter	37.45	19.30	56.75

CODE	Fringe Benefits Must Be Paid On All Hours Worked TRADE OR OCCUPATION	HOURLY BASIC RATE OF PAY $	HOURLY FRINGE BENEFITS $	TOTAL $
113	Glazier	34.19	18.25	52.44
114	Heat or Frost Insulator	33.93	23.26	57.19
115	Insulator (Batt or Blown)	27.47	19.16	46.63
116	Ironworker	31.31	21.99	53.30
117	Lather	33.43	19.31	52.74
118	Line Constructor (Electrical)	37.05	16.94	53.99
119	Marble Finisher	20.00	0.00	20.00
120	Marble Mason	35.58	16.37	51.95
121	Metal Building Erector	18.50	3.20	21.70
122	Millwright	28.28	24.19	52.47
123	Overhead Door Installer	27.30	3.28	30.58
124	Painter	29.27	18.18	47.45
125	Pavement Marking Operator	30.00	0.00	30.00
126	Piledriver Future Increase(s): Add $.75/hr on 6/3/2013. Premium Increase(s): Add $.65/hr for Piledriver Loftsman; Add $.75/hr for Sheet Piling Loftsman. DOT PREMIUM: Pay two times the hourly basic rate on Sunday, New Year's Day, Memorial Day, Independence Day, Labor Day, Thanksgiving Day & Christmas Day.	29.06	25.46	54.52
127	Pipeline Fuser or Welder (Gas or Utility)	31.18	19.29	50.47
129	Plasterer	32.06	17.68	49.74
130	Plumber Future Increase(s): Add $1.00/hr 6/1/2013; Add $1.00/hr 6/1/2014.	36.47	19.47	55.94
132	Refrigeration Mechanic	37.76	19.99	57.75
133	Roofer or Waterproofer	29.40	15.55	44.95
134	Sheet Metal Worker Future Increase(s): Add $1.41/hour 6/1/2013; Add $1.56/hour 6/1/2014.	36.17	18.00	54.17
135	Steamfitter	37.76	19.99	57.75
137	Teledata Technician or Installer Premium Increase(s): DOT PREMIUM: Pay two times the hourly basic rate on Sunday, New Year’s Day, Memorial Day, Independence Day, Labor Day, Thanksgiving Day & Christmas Day.	24.75	16.08	40.83

CODE	Fringe Benefits Must Be Paid On All Hours Worked TRADE OR OCCUPATION	HOURLY BASIC RATE OF PAY $	HOURLY FRINGE BENEFITS $	TOTAL $
138	Temperature Control Installer	37.31	19.49	56.80
139	Terrazzo Finisher Future Increase(s): Add $ .80 on 6/1/2013	26.57	16.50	43.07
140	Terrazzo Mechanic	29.51	17.63	47.14
141	Tile Finisher	22.27	6.52	28.79
142	Tile Setter	29.70	16.05	45.75
143	Tuckpointer, Caulker or Cleaner	34.35	11.13	45.48
144	Underwater Diver (Except on Great Lakes)	34.16	15.31	49.47
146	Well Driller or Pump Installer Future Increase(s): Add $.20/hr on 06/01/2013.	25.32	15.45	40.77
147	Siding Installer	37.20	17.01	54.21
150	Heavy Equipment Operator - ELECTRICAL LINE CONSTRUCTION ONLY	28.24	15.10	43.34
151	Light Equipment Operator -ELECTRICAL LINE CONSTRUCTION ONLY	29.64	14.64	44.28
152	Heavy Truck Driver - ELECTRICAL LINE CONSTRUCTION ONLY	25.94	13.57	39.51
153	Light Truck Driver - ELECTRICAL LINE CONSTRUCTION ONLY	24.08	12.96	37.04
154	Groundman - ELECTRICAL LINE CONSTRUCTION ONLY	24.00	11.57	35.57

TRUCK DRIVERS

CODE	Fringe Benefits Must Be Paid On All Hours Worked TRADE OR OCCUPATION	HOURLY BASIC RATE OF PAY $	HOURLY FRINGE BENEFITS $	TOTAL $
201	Single Axle or Two Axle	33.32	17.60	50.92
203	Three or More Axle	18.00	9.50	27.50
204	Articulated, Euclid, Dumptor, Off Road Material Hauler Future Increase(s): Add $0.75/hour 6/3/2013; Add $1.00/hour 6/2/2014; Add $1.50/hour 6/1/2015; Add $1.60/hour 5/30/2016.	33.52	17.60	51.12
205	Pavement Marking Vehicle	20.85	11.02	31.87
207	Truck Mechanic	18.00	9.50	27.50

LABORERS

CODE	Fringe Benefits Must Be Paid On All Hours Worked TRADE OR OCCUPATION	HOURLY BASIC RATE OF PAY $	HOURLY FRINGE BENEFITS $	TOTAL $
301	General Laborer Premium Increase(s): Add $.11 for mortar mixer, fork lift operator, air and electric equipment and power buggy operators; Add $.22 for jackhammer operator, certified welder, gunite machineman.	28.82	16.11	44.93
302	Asbestos Abatement Worker	18.00	0.00	18.00
303	Landscaper	11.00	3.97	14.97
310	Gas or Utility Pipeline Laborer (Other Than Sewer and Water)	19.69	16.03	35.72
311	Fiber Optic Laborer (Outside, Other Than Concrete Encased)	17.24	15.03	32.27
314	Railroad Track Laborer	14.50	3.53	18.03
315	Final Construction Clean-Up Worker	28.82	15.61	44.43

HEAVY EQUIPMENT OPERATORS
SITE PREPARATION, UTILITY OR LANDSCAPING WORK ONLY

CODE	Fringe Benefits Must Be Paid On All Hours Worked TRADE OR OCCUPATION	HOURLY BASIC RATE OF PAY $	HOURLY FRINGE BENEFITS $	TOTAL $
501	Air Track, Rotary or Percussion Drilling Machine &/or Hammers, Blaster; Asphalt Milling Machine; Boring Machine (Directional, Horizontal or Vertical); Backhoe (Track Type) Having a Mfgr's Rated Capacity of 130,000 Lbs. or Over; Backhoe (Track Type) Having a Mfgr's Rated Capacity of Under 130,000 Lbs., Backhoe (Mini, 15,000 Lbs. & Under); Bulldozer or Endloader (Over 40 hp); Compactor (Self-Propelled 85 Ft Total Drum Width & Over, or Tractor Mounted, Towed & Light Equipment); Concrete Batch Plant, Batch Hopper; Concrete Breaker (Large, Auto, Vibratory/Sonic, Manual or Remote); Crane, Shovel, Dragline, Clamshells; Forklift (Machinery Moving or Steel Erection, 25 Ft & Over); Gradall (Cruz-Aire Type); Grader or Motor Patrol; Master Mechanic; Mechanic or Welder; Robotic Tool Carrier (With or Without Attachments); Scraper (Self Propelled or Tractor Drawn) 5 cu yds or More Capacity; Tractor or Truck Mounted Hydraulic Backhoe; Tractor or Truck Mounted Hydraulic Crane (10 Tons or Under); Tractor (Scraper, Dozer, Pusher, Loader); Trencher (Wheel Type or Chain Type Having Over 8 Inch Bucket). Future Increase(s): Add $0.75/hour 6/3/2013; Add $1.00/hour 6/2/2014; Add $1.50/hour 6/1/2015; Add $1.60/hour 5/30/2016.	33.82	17.60	51.42

CODE	Fringe Benefits Must Be Paid On All Hours Worked TRADE OR OCCUPATION	HOURLY BASIC RATE OF PAY $	HOURLY FRINGE BENEFITS $	TOTAL $
502	Backfiller; Broom or Sweeper; Bulldozer or Endloader (Under 40 hp); Environmental Burner; Forestry Equipment, Timbco, Tree Shear, Tub Grinder, Processor; Jeep Digger; Screed (Milling Machine); Skid Rig; Straddle Carrier or Travel Lift; Stump Chipper; Trencher (Wheel Type or Chain Type Having 8 Inch Bucket & Under). Future Increase(s): Add $0.75/hour 6/3/2013; Add $1.00/hour 6/2/2014; Add $1.50/hour 6/1/2015; Add $1.60/hour 5/30/2016.	33.52	17.60	51.12
503	Air Compressor (&/or 400 CFM or Over); Augers (Vertical & Horizontal); Compactor (Self-Propelled 84 Ft Total Drum Width & Under, or Tractor Mounted, Towed & Light Equipment); Crusher, Screening or Wash Plant; Farm or Industrial Type Tractor; Forklift; Generator (&/or 150 KW or Over); Greaser; High Pressure Utility Locating Machine (Daylighting Machine); Mulcher; Oiler; Post Hole Digger or Driver; Pump (3 Inch or Over) or Well Points; Refrigeration Plant or Freeze Machine; Rock, Stone Breaker; Skid Steer Loader (With or Without Attachments); Vibratory Hammer or Extractor, Power Pack. Future Increase(s): Add $0.75/hour 6/3/2013; Add $1.00/hour 6/2/2014; Add $1.50/hour 6/1/2015; Add $1.60/hour 5/30/2016.	33.52	17.60	51.12
504	Work Performed on the Great Lakes Including Diver; Wet Tender or Hydraulic Dredge Engineer.	37.45	19.45	56.90
505	Work Performed on the Great Lakes Including Crane or Backhoe Operator; Assistant Hydraulic Dredge Engineer; Hydraulic Dredge Leverman or Diver's Tender; Mechanic or Welder; 70 Ton & Over Tug Operator. Future Increase(s): Add $2.19/hr on 01/01/2013; Add $2.00/hr on 01/01/2014. Premium Increase(s): Add $.50/hr for Friction Crane, Lattice Boom or Crane Certification (CCO).	38.80	20.17	58.97
506	Work Performed on the Great Lakes Including Deck Equipment Operator or Machineryman (Maintains Cranes Over 50 Tons or Backhoes 115,000 Lbs. or More); Tug, Launch or Loader, Dozer or Like Equipment When Operated on a Barge, Breakwater Wall, Slip, Dock or Scow, Deck Machinery. Future Increase(s): Add $2.08/hr on 01/01/2013; Add $2.00/hr on 01/01/2014.	34.50	20.04	54.54
507	Work Performed on the Great Lakes Including Deck Equipment Operator, Machineryman or Fireman (Operates 4 Units or More or Maintains Cranes 50 Tons or Under or Backhoes 115,000 Lbs. or Under); Deck Hand, Deck Engineer or Assistant Tug Operator; Off Road Trucks - Great Lakes ONLY. Future Increase(s): Add $1.88/hr on 01/01/2013; Add $2.00/hr on 01/01/2014.	28.70	19.86	48.56

HEAVY EQUIPMENT OPERATORS
EXCLUDING SITE PREPARATION, UTILITY, PAVING LANDSCAPING WORK

CODE	Fringe Benefits Must Be Paid On All Hours Worked TRADE OR OCCUPATION	HOURLY BASIC RATE OF PAY $	HOURLY FRINGE BENEFITS $	TOTAL $
508	Boring Machine (Directional); Crane, Tower Crane, Pedestal Tower or Derrick, With or Without Attachments, With a Lifting Capacity of Over 100 Tons, Self-Erecting Tower Crane With a Lifting Capacity of Over 4,000 Lbs., Crane With Boom Dollies; Crane, Tower Crane, Pedestal Tower or Derrick, With Boom, Leads &/or Jib Lengths Measuring 176 Ft or Over; Master Mechanic. Premium Increase(s): Crane Operators with CCO certification add $.50/hr. Cranes with boom length over 200 ft. not exceeding 300 ft. OR lifting capacity over 200 ton not exceeding 300 ton add $.50/hr. Over 300 ton OR 300 ft. add $.01/hr. per foot OR ton whichever is greater.	39.16	19.10	58.26
509	Backhoe (Track Type) Having a Mfgr's Rated Capacity of 130,000 Lbs. or Over; Boring Machine (Horizontal or Vertical); Caisson Rig; Crane, Tower Crane, Portable Tower, Pedestal Tower or Derrick, With or Without Attachments, With a Lifting Capacity of 100 Tons or Under, Self-Erecting Tower Crane With A Lifting Capacity Of 4,000 Lbs. & Under; Crane, Tower Crane, Portable Tower, Pedestal Tower or Derrick, With Boom, Leads &/or Jib Lengths Measuring 175 Ft or Under; Pile Driver; Versi Lifts, Tri-Lifts & Gantrys (20,000 Lbs. & Over). Premium Increase(s): Crane Operators with CCO certification add $.50/hr.	38.66	19.10	57.76
510	Backhoe (Track Type) Having a Mfgr.'s Rated Capacity of Under 130,000 Lbs., Backhoe (Mini, 15,000 Lbs. & Under); Concrete Bump Cutter, Grinder, Planing or Grooving Machine; Concrete Laser/Screed; Concrete Paver (Slipform); Concrete Pump (Over 46 Meter), Concrete Conveyor (Rotec or Bidwell Type); Concrete Slipform Placer Curb & Gutter Machine; Concrete Spreader & Distributor; Dredge (NOT Performing Work on the Great Lakes); Forklift (Machinery Moving or Steel Erection, 25 Ft & Over); Gradall (Cruz-Aire Type); Hydro-Blaster (10,000 PSI or Over); Milling Machine; Skid Rig; Traveling Crane (Bridge Type). Premium Increase(s): Crane Operators with CCO certification add $.50/hr.	38.16	19.10	57.26

CODE	Fringe Benefits Must Be Paid On All Hours Worked TRADE OR OCCUPATION	HOURLY BASIC RATE OF PAY $	HOURLY FRINGE BENEFITS $	TOTAL $
511	Air, Track, Rotary or Percussion Drilling Machine &/or Hammers, Blaster; Bulldozer or Endloader (Over 40 hp); Compactor (Self-Propelled 85 Ft Total Drum Width & Over, or Tractor Mounted, Towed & Light Equipment); Concrete Pump (46 Meter & Under), Concrete Conveyor (Rotec or Bidwell Type); Crane (Carry Deck, Mini) or Truck Mounted Hydraulic Crane (10 Tons or Under); Environmental Burner; Gantrys (Under 20,000 Lbs.); Grader or Motor Patrol; High Pressure Utility Locating Machine (Daylighting Machine); Manhoist; Material or Stack Hoist; Mechanic or Welder; Railroad Track Rail Leveling Machine, Tie Placer, Extractor, Tamper, Stone Leveler or Rehabilitation Equipment; Roller (Over 5 Ton); Scraper (Self Propelled or Tractor Drawn) 5 cu yd or More Capacity; Screed (Milling Machine); Sideboom; Straddle Carrier or Travel Lift; Tining or Curing Machine; Tractor (Scraper, Dozer, Pusher, Loader); Tractor or Truck Mounted Hydraulic Backhoe; Tractor or Truck Mounted Hydraulic Crane (10 Tons or Under); Trencher (Wheel Type or Chain Type Having Over 8-Inch Bucket).	37.47	19.10	56.57
512	Backfiller; Broom or Sweeper; Bulldozer or Endloader (Under 40 hp); Compactor (Self-Propelled 84 Ft Total Drum Width & Under, or Tractor Mounted, Towed & Light Equipment); Concrete Batch Plant, Batch Hopper; Concrete Breaker (Large, Auto, Vibratory/Sonic, Manual or Remote); Concrete Conveyor System; Concrete Finishing Machine (Road Type); Fireman (Pile Driver & Derrick NOT Performing Work on the Great Lakes); Grout Pump; Hoist (Tugger, Automatic); Industrial Locomotives; Jeep Digger; Lift Slab Machine; Mulcher; Roller (Rubber Tire, 5 Ton or Under); Screw or Gypsum Pumps; Stabilizing or Concrete Mixer (Self-Propelled or 14S or Over); Stump Chipper; Trencher (Wheel Type or Chain Type Having 8-Inch Bucket & Under); Winches & A-Frames. Future Increase(s): Add $0.75/hour 6/3/2013; Add $1.00/hour 6/2/2014; Add $1.50/hour 6/1/2015; Add $1.60/hour 5/30/2016.	33.82	17.60	51.42
513	Air Compressor (&/or 400 CFM or Over); Air, Electric or Hydraulic Jacking System; Augers (Vertical & Horizontal); Boatmen (NOT Performing Work on the Great Lakes); Boiler (Temporary Heat); Crusher, Screening or Wash Plant; Elevator; Farm or Industrial Type Tractor; Fireman (Asphalt Plant NOT Performing Work on the Great Lakes); Forklift; Generator (&/or 150 KW or Over); Greaser; Heaters (Mechanical); Loading Machine (Conveyor); Oiler; Post Hole Digger or Driver; Prestress Machine; Pump (3 Inch or Over) or Well Points; Refrigeration Plant or Freeze Machine; Robotic Tool Carrier (With or Without Attachments); Rock, Stone Breaker; Skid Steer Loader (With or Without Attachments); Vibratory Hammer or Extractor, Power Pack.	30.44	19.10	49.54
514	Gas or Utility Pipeline, Except Sewer & Water (Primary Equipment). Future Increase(s): Add $2/hr on 1/1/2013.	34.89	20.59	55.48
515	Gas or Utility Pipeline, Except Sewer & Water (Secondary Equipment). Future Increase(s): Add $1.60/hr on 06/01/2013; Add $1.60/hr on 06/01/2014; Add $1.65/hr on 06/01/2015	32.26	17.95	50.21
516	Fiber Optic Cable Equipment	20.00	7.88	27.88

SEWER, WATER OR TUNNEL CONSTRUCTION

Includes those projects that primarily involve public sewer or water distribution, transmission or collection systems and related tunnel work (excluding buildings).

SKILLED TRADES

Fringe Benefits Must Be Paid On All Hours Worked

CODE	TRADE OR OCCUPATION	HOURLY BASIC RATE OF PAY $	HOURLY FRINGE BENEFITS $	TOTAL $
103	Bricklayer, Blocklayer or Stonemason Future Increase(s): Add $1.45/hr on 6/01/2013 Premium Increase(s): DOT PREMIUM: Pay two times the hourly basic rate on Sunday, New Year's Day, Memorial Day, Independence Day, Labor Day, Thanksgiving Day & Christmas Day.	35.80	16.87	52.67
105	Carpenter Future Increase(s): Add $.75/hr on 6/3/2013. Add $1.25/hr on 6/2/2014. Premium Increase(s): DOT PREMIUM: Pay two times the hourly basic rate on Sunday, New Year's Day, Memorial Day, Independence Day, Labor Day, Thanksgiving Day & Christmas Day.	32.93	19.81	52.74
107	Cement Finisher	30.68	16.75	47.43
109	Electrician Future Increase(s): Add $1.60/hr on 6/1/2013. Premium Increase(s): DOT PREMIUM: Pay two times the hourly basic rate on Sunday, New Year's Day, Memorial Day, Independence Day, Labor Day, Thanksgiving Day & Christmas Day.	32.20	21.71	53.91
111	Fence Erector	28.00	4.50	32.50
116	Ironworker	30.90	19.11	50.01
118	Line Constructor (Electrical)	37.05	16.94	53.99
125	Pavement Marking Operator	28.10	15.00	43.10
126	Piledriver	29.56	24.96	54.52
130	Plumber	36.97	17.66	54.63
135	Steamfitter	38.26	19.49	57.75
137	Teledata Technician or Installer	24.65	15.67	40.32
143	Tuckpointer, Caulker or Cleaner	34.35	11.13	45.48
144	Underwater Diver (Except on Great Lakes)	37.45	19.45	56.90
146	Well Driller or Pump Installer	21.00	2.23	23.23

CODE	Fringe Benefits Must Be Paid On All Hours Worked TRADE OR OCCUPATION	HOURLY BASIC RATE OF PAY $	HOURLY FRINGE BENEFITS $	TOTAL $
150	Heavy Equipment Operator - ELECTRICAL LINE CONSTRUCTION ONLY	28.24	15.10	43.34
151	Light Equipment Operator -ELECTRICAL LINE CONSTRUCTION ONLY	29.64	14.64	44.28
152	Heavy Truck Driver - ELECTRICAL LINE CONSTRUCTION ONLY	25.94	13.57	39.51
153	Light Truck Driver - ELECTRICAL LINE CONSTRUCTION ONLY	24.08	12.96	37.04
154	Groundman - ELECTRICAL LINE CONSTRUCTION ONLY	21.75	11.90	33.65

TRUCK DRIVERS

CODE	Fringe Benefits Must Be Paid On All Hours Worked TRADE OR OCCUPATION	HOURLY BASIC RATE OF PAY $	HOURLY FRINGE BENEFITS $	TOTAL $
201	Single Axle or Two Axle	25.87	13.00	38.87
203	Three or More Axle	18.00	0.00	18.00
204	Articulated, Euclid, Dumptor, Off Road Material Hauler	31.89	17.98	49.87
205	Pavement Marking Vehicle	20.85	11.02	31.87
207	Truck Mechanic	17.00	0.00	17.00

LABORERS

CODE	Fringe Benefits Must Be Paid On All Hours Worked TRADE OR OCCUPATION	HOURLY BASIC RATE OF PAY $	HOURLY FRINGE BENEFITS $	TOTAL $
301	General Laborer Premium Increase(s): Add $1.92 for bottomman; Add $2.03 for concrete manhole builder, bracer, jointman, or pipelayer; Add $4.83 for blaster. Add $2.00 for all tunnel work under 15 lbs. compressed air; Add $2.00 for 0-30 lbs. compressed air; Add $3.00 for over 30 lbs. compressed air.	28.95	16.11	45.06
303	Landscaper	26.92	12.51	39.43
304	Flagperson or Traffic Control Person	23.55	13.45	37.00
311	Fiber Optic Laborer (Outside, Other Than Concrete Encased)	17.24	15.03	32.27
314	Railroad Track Laborer	14.50	3.53	18.03

HEAVY EQUIPMENT OPERATORS
SEWER, WATER OR TUNNEL WORK

CODE	Fringe Benefits Must Be Paid On All Hours Worked TRADE OR OCCUPATION	HOURLY BASIC RATE OF PAY $	HOURLY FRINGE BENEFITS $	TOTAL $
521	Backhoe (Track Type) Having a Mfgr.'s Rated Capacity of 130,000 Lbs. or Over; Caisson Rig; Crane, Tower Crane, Pedestal Tower or Derrick, With Boom, Leads &/or Jib Lengths Measuring 176 Ft or Over; Crane, Tower Crane, Pedestal Tower or Derrick, With or Without Attachments, With a Lifting Capacity of Over 100 Tons, Self-Erecting Tower Crane With a Lifting Capacity Of Over 4,000 Lbs., Crane With Boom Dollies; Master Mechanic; Pile Driver. Future Increase(s): Add $1/hr on 6/2/2013. Premium Increase(s): Add $.50/hr for >200 Ton / Add $1/hr at 300 Ton / Add $1.50 at 400 Ton / Add $2/hr at 500 Ton & Over.	35.12	18.46	53.58
522	Backhoe (Track Type) Having a Mfgr.'s Rated Capacity of Under 130,000 Lbs., Backhoe (Mini, 15,000 Lbs. & Under); Boring Machine (Directional); Concrete Bump Cutter, Grinder, Planing or Grooving Machine; Concrete Laser/Screed; Concrete Paver (Slipform); Concrete Pump (Over 46 Meter), Concrete Conveyor (Rotec or Bidwell Type); Concrete Spreader & Distributor; Crane, Tower Crane, Portable Tower, Pedestal Tower or Derrick, With Boom, Leads &/or Jib Lengths Measuring 175 Ft or Under; Crane, Tower Crane, Portable Tower, Pedestal Tower or Derrick, With or Without Attachments, With a Lifting Capacity of 100 Tons or Under, Self-Erecting Tower Crane With a Lifting Capacity of 4,000 Lbs. & Under; Dredge (NOT Performing Work on the Great Lakes); Milling Machine; Skid Rig; Telehandler; Traveling Crane (Bridge Type). Premium Increase(s): Add $.25/hr for operating tower crane.	35.36	19.15	54.51
523	Air Track, Rotary or Percussion Drilling Machine &/or Hammers, Blaster; Boring Machine (Horizontal or Vertical); Bulldozer or Endloader (Over 40 hp); Crane (Carry Deck, Mini) or Truck Mounted Hydraulic Crane (10 Tons or Under); Concrete Pump (46 Meter & Under), Concrete Conveyor (Rotec or Bidwell Type); Concrete Slipform Placer Curb & Gutter Machine; Gradall (Cruz-Aire Type); Grader or Motor Patrol; Hydro-Blaster (10,000 PSI or Over); Manhoist; Material or Stack Hoist; Mechanic or Welder; Roller (Over 5 Ton); Scraper (Self Propelled or Tractor Drawn) 5 cu yd or More Capacity; Screed (Milling Machine); Sideboom; Straddle Carrier or Travel Lift; Tractor (Scraper, Dozer, Pusher, Loader); Tractor or Truck Mounted Hydraulic Backhoe; Tractor or Truck Mounted Hydraulic Crane (10 Tons or Under); Trencher (Wheel Type or Chain Type Having Over 8-Inch Bucket). Premium Increase(s): Add $.25/hr for operating tower crane.	34.41	19.15	53.56

CODE	Fringe Benefits Must Be Paid On All Hours Worked TRADE OR OCCUPATION	HOURLY BASIC RATE OF PAY $	HOURLY FRINGE BENEFITS $	TOTAL $
524	Backfiller; Broom or Sweeper; Bulldozer or Endloader (Under 40 hp); Compactor (Self-Propelled 85 Ft Total Drum Width & Over, or Tractor Mounted, Towed & Light Equipment); Concrete Batch Plant, Batch Hopper; Concrete Breaker (Large, Auto, Vibratory/Sonic, Manual or Remote); Concrete Conveyor System; Concrete Finishing Machine (Road Type); Environmental Burner; Fireman (Pile Driver & Derrick NOT Performing Work on the Great Lakes); Forestry Equipment, Timbco, Tree Shear, Tub Grinder, Processor; Hoist (Tugger, Automatic); Grout Pump; Jeep Digger; Lift Slab Machine; Mulcher; Power Subgrader; Pump (3 Inch or Over) or Well Points; Robotic Tool Carrier (With or Without Attachments); Roller (Rubber Tire, 5 Ton or Under); Screw or Gypsum Pumps; Stabilizing or Concrete Mixer (Self-Propelled or 14S or Over); Stump Chipper; Tining or Curing Machine; Trencher (Wheel Type or Chain Type Having 8-Inch Bucket & Under); Winches & A-Frames.	31.89	18.11	50.00
525	Air Compressor (&/or 400 CFM or Over); Air, Electric or Hydraulic Jacking System; Augers (Vertical & Horizontal); Compactor (Self-Propelled 84 Ft Total Drum Width & Under, or Tractor Mounted, Towed & Light Equipment); Crusher, Screening or Wash Plant; Farm or Industrial Type Tractor; Fireman (Asphalt Plant NOT Performing Work on the Great Lakes); Generator (&/or 150 KW or Over); Heaters (Mechanical); High Pressure Utility Locating Machine (Daylighting Machine); Loading Machine (Conveyor); Post Hole Digger or Driver; Refrigeration Plant or Freeze Machine; Rock, Stone Breaker; Skid Steer Loader (With or Without Attachments); Vibratory Hammer or Extractor, Power Pack. Premium Increase(s): Add $.25/hr for operating tower crane.	31.96	19.15	51.11
526	Boiler (Temporary Heat); Forklift; Greaser; Oiler.	30.44	19.10	49.54
527	Work Performed on the Great Lakes Including Diver; Wet Tender or Hydraulic Dredge Engineer.	37.45	19.45	56.90
528	Work Performed on the Great Lakes Including 70 Ton & Over Tug Operator; Assistant Hydraulic Dredge Engineer; Crane or Backhoe Operator; Hydraulic Dredge Leverman or Diver's Tender; Mechanic or Welder.	37.45	19.45	56.90
529	Work Performed on the Great Lakes Including Deck Equipment Operator or Machineryman (Maintains Cranes Over 50 Tons or Backhoes 115,000 Lbs. or More); Tug, Launch or Loader, Dozer or Like Equipment When Operated on a Barge, Breakwater Wall, Slip, Dock or Scow, Deck Machinery.	27.75	19.15	46.90
530	Work Performed on the Great Lakes Including Deck Equipment Operator; Machineryman or Fireman (Operates 4 Units or More or Maintains Cranes 50 Tons or Under or Backhoes 115,000 Lbs. or Under), Deck Hand, Deck Engineer or Assistant Tug Operator; Off Road Trucks - Great Lakes ONLY.	27.75	19.15	46.90

AIRPORT PAVEMENT OR STATE HIGHWAY CONSTRUCTION

Includes all airport projects (excluding buildings) and all projects awarded by the Wisconsin Department of Transportation (excluding buildings).

SKILLED TRADES

CODE	Fringe Benefits Must Be Paid On All Hours Worked TRADE OR OCCUPATION	HOURLY BASIC RATE OF PAY $	HOURLY FRINGE BENEFITS $	TOTAL $
103	Bricklayer, Blocklayer or Stonemason	35.58	19.20	54.78
105	Carpenter Future Increase(s): Add $.75/hr on 6/3/2013. Add $1.25/hr on 6/2/2014. Premium Increase(s): DOT PREMIUM: Pay two times the hourly basic rate on Sunday, New Year's Day, Memorial Day, Independence Day, Labor Day, Thanksgiving Day & Christmas Day.	32.93	19.81	52.74
107	Cement Finisher Future Increase(s): Add $1.87 on 6/1/13; Add $1.87 on 6/1/14; Add $1.87 on 6/1/15; Add $1.75 on 6/1/16. Premium Increase(s): DOT PREMIUMS: 1) Pay two times the hourly basic rate on Sunday, New Year's Day, Memorial Day, Independence Day, Labor Day, Thanksgiving Day & Christmas Day. 2) Add $1.40/hr when the Wisconsin Department of Transportation or responsible governing agency requires that work be performed at night under artificial illumination with traffic control and the work is completed after sunset and before sunrise.	30.69	17.53	48.22
109	Electrician	31.54	21.14	52.68
111	Fence Erector	28.00	4.50	32.50
116	Ironworker	31.31	21.99	53.30
118	Line Constructor (Electrical)	31.29	15.34	46.63
124	Painter	29.22	16.69	45.91
125	Pavement Marking Operator	29.22	16.69	45.91
126	Piledriver	29.56	23.86	53.42
133	Roofer or Waterproofer	29.40	15.05	44.45
137	Teledata Technician or Installer	24.65	15.67	40.32
143	Tuckpointer, Caulker or Cleaner	34.35	11.13	45.48
144	Underwater Diver (Except on Great Lakes)	37.45	19.45	56.90
150	Heavy Equipment Operator - ELECTRICAL LINE CONSTRUCTION ONLY	29.64	17.06	46.70

CODE	Fringe Benefits Must Be Paid On All Hours Worked TRADE OR OCCUPATION	HOURLY BASIC RATE OF PAY $	HOURLY FRINGE BENEFITS $	TOTAL $
151	Light Equipment Operator -ELECTRICAL LINE CONSTRUCTION ONLY Premium Increase(s): DOT PREMIUM: Pay two times the hourly basic rate on Sunday, New Year's Day, Memorial Day, Independence Day, Labor Day, Thanksgiving Day & Christmas Day.	30.60	14.64	45.24
152	Heavy Truck Driver - ELECTRICAL LINE CONSTRUCTION ONLY	25.94	13.57	39.51
153	Light Truck Driver - ELECTRICAL LINE CONSTRUCTION ONLY	24.08	12.96	37.04
154	Groundman - ELECTRICAL LINE CONSTRUCTION ONLY	21.75	11.90	33.65

TRUCK DRIVERS

CODE	Fringe Benefits Must Be Paid On All Hours Worked TRADE OR OCCUPATION	HOURLY BASIC RATE OF PAY $	HOURLY FRINGE BENEFITS $	TOTAL $
201	Single Axle or Two Axle	33.22	18.90	52.12
203	Three or More Axle Future Increase(s): Add $1.85/hr on 6/1/2013. Premium Increase(s): DOT PREMIUM: Pay two times the hourly basic rate on Sunday, New Year's Day, Memorial Day, Independence Day, Labor Day, Thanksgiving Day & Christmas Day.	23.31	17.13	40.44
204	Articulated, Euclid, Dumptor, Off Road Material Hauler Future Increase(s): Add $2/hr on 6/1/13; Add $1.75/hr on 6/1/14. Premium Increase(s): DOT PREMIUMS: 1) Pay two times the hourly basic rate on Sunday, New Year's Day, Memorial Day, Independence Day, Labor Day, Thanksgiving Day & Christmas Day. 2) Add $1.25/hr night work premium. See DOT's website for details about the applicability of this night work premium at: http://roadwaystandards.dot.wi.gov/hcci/labor-wages-eeo/index.shtm.	27.77	19.90	47.67
205	Pavement Marking Vehicle	23.84	14.90	38.74
206	Shadow or Pilot Vehicle	33.22	18.90	52.12
207	Truck Mechanic	22.50	16.19	38.69

LABORERS

CODE	Fringe Benefits Must Be Paid On All Hours Worked TRADE OR OCCUPATION	HOURLY BASIC RATE OF PAY $	HOURLY FRINGE BENEFITS $	TOTAL $
301	General Laborer Future Increase(s): Add $1.70/hr on 6/1/2013; Add $1.60/hr on 6/1/2014. Premium Increase(s): Add $.15/hr for air tool operator, joint sawer and filler (pavement), vibrator or tamper operator (mechanical hand operated), chain saw operator and demolition burning torch laborer; Add $.35/hr for bituminous worker (raker and luteman), formsetter (curb, sidewalk and pavement) and strike off man; Add $.50/hr for line and grade specialist; Add $.65/hr for blaster and powderman; Add $2.01/hr for topman; Add $2.46/hr for bottomman; Add $3.23/hr for pipelayer. / DOT PREMIUMS: 1) Pay two times the hourly basic rate on Sunday, New Year's Day, Memorial Day, Independence Day, Labor Day, Thanksgiving Day & Christmas Day. 2) Add $1.25/hr for work on projects involving temporary traffic control setup, for lane and shoulder closures, when work under artificial illumination conditions is necessary as required by the project provisions (including prep time prior to and/or cleanup after such time period).	25.39	18.40	43.79
302	Asbestos Abatement Worker	18.00	0.00	18.00
303	Landscaper Future Increase(s): Add $1.70/hr on 6/1/13; Add $1.60/hr on 6/1/14. Premium Increase(s): DOT PREMIUMS: 1) Pay two times the hourly basic rate on Sunday, New Year's Day, Memorial Day, Independence Day, Labor Day, Thanksgiving Day & Christmas Day. 2) Add $1.25/hr for work on projects involving temporary traffic control setup, for lane and shoulder closures, when work under artificial illumination conditions is necessary as required by the project provisions (including prep time prior to and/or cleanup after such time period).	25.39	18.40	43.79
304	Flagperson or Traffic Control Person Future Increase(s): Add $1.70/hr on 6/1/2013; Add $1.60/hr on 6/1/2014. Premium Increase(s): DOT PREMIUMS: 1) Pay two times the hourly basic rate on Sunday, New Year’s Day, Memorial Day, Independence Day, Labor Day, Thanksgiving Day & Christmas Day. 2) Add $1.25/hr when the Wisconsin Department of Transportation or responsible governing agency requires that work be performed at night under artificial illumination with traffic control and the work is completed after sunset and before sunrise.	21.88	18.40	40.28

CODE	Fringe Benefits Must Be Paid On All Hours Worked TRADE OR OCCUPATION	HOURLY BASIC RATE OF PAY $	HOURLY FRINGE BENEFITS $	TOTAL $
311	Fiber Optic Laborer (Outside, Other Than Concrete Encased)	17.24	15.03	32.27
314	Railroad Track Laborer	14.50	3.53	18.03

HEAVY EQUIPMENT OPERATORS
AIRPORT PAVEMENT OR STATE HIGHWAY CONSTRUCTION

CODE	Fringe Benefits Must Be Paid On All Hours Worked TRADE OR OCCUPATION	HOURLY BASIC RATE OF PAY $	HOURLY FRINGE BENEFITS $	TOTAL $
531	Crane, Tower Crane, Pedestal Tower or Derrick, With Boom, Leads &/or Jib Lengths Measuring 176 Ft or Over; Crane, Tower Crane, Pedestal Tower or Derrick, With or Without Attachments, With a Lifting Capacity of Over 100 Tons, Self-Erecting Tower Crane With a Lifting Capacity Of Over 4,000 Lbs., Crane With Boom Dollies; Traveling Crane (Bridge Type). Future Increase(s): Add $2/hr on 6/1/13; Add $1.75/hr on 6/1/14. Premium Increase(s): DOT PREMIUMS: 1) Pay two times the hourly basic rate on Sunday, New Year's Day, Memorial Day, Independence Day, Labor Day, Thanksgiving Day & Christmas Day. 2) Add $1.25/hr night work premium. See DOT's website for details about the applicability of this night work premium at: http://roadwaystandards.dot.wi.gov/hcci/labor-wages-eeo/index.shtm.	35.22	19.90	55.12
532	Backhoe (Track Type) Having a Mfgr.'s Rated Capacity of 130,000 Lbs. or Over; Caisson Rig; Crane, Tower Crane, Portable Tower, Pedestal Tower or Derrick, With Boom, Leads &/or Jib Lengths Measuring 175 Ft or Under; Crane, Tower Crane, Portable Tower, Pedestal Tower or Derrick, With or Without Attachments, With a Lifting Capacity of 100 Tons or Under, Self-Erecting Tower Crane With A Lifting Capacity Of 4,000 Lbs., & Under; Dredge (NOT Performing Work on the Great Lakes); Licensed Boat Pilot (NOT Performing Work on the Great Lakes); Pile Driver. Future Increase(s): Add $2/hr on 6/1/13; Add $1.75/hr on 6/1/14. Premium Increase(s): DOT PREMIUMS: 1) Pay two times the hourly basic rate on Sunday, New Year's Day, Memorial Day, Independence Day, Labor Day, Thanksgiving Day & Christmas Day. 2) Add $1.25/hr night work premium. See DOT's website for details about the applicability of this night work premium at: http://roadwaystandards.dot.wi.gov/hcci/labor-wages-eeo/index.shtm.	34.72	19.90	54.62

CODE	Fringe Benefits Must Be Paid On All Hours Worked TRADE OR OCCUPATION	HOURLY BASIC RATE OF PAY $	HOURLY FRINGE BENEFITS $	TOTAL $
533	Air Track, Rotary or Percussion Drilling Machine &/or Hammers, Blaster; Asphalt Heater, Planer & Scarifier; Asphalt Milling Machine; Asphalt Screed; Automatic Subgrader (Concrete); Backhoe (Track Type) Having a Mfgr.'s Rated Capacity of Under 130,000 Lbs., Backhoe (Mini, 15,000 Lbs. & Under); Bituminous (Asphalt) Plant & Paver, Screed; Boatmen (NOT Performing Work on the Great Lakes); Boring Machine (Directional, Horizontal or Vertical); Bridge (Bidwell) Paver; Bulldozer or Endloader; Concrete Batch Plant, Batch Hopper; Concrete Breaker (Large, Auto, VIbratory/Sonic, Manual or Remote); Concrete Bump Cutter, Grinder, Planing or Grooving Machine; Concrete Conveyor System; Concrete Laser/Screed; Concrete Paver (Slipform); Concrete Pump, Concrete Conveyor (Rotec or Bidwell Type); Concrete Slipform Placer Curb & Gutter Machine; Concrete Spreader & Distributor; Crane (Carry Deck, Mini) or Truck Mounted Hydraulic Crane (10 Tons or Under); Crane WIth a Lifting Capacity of 25 Tons or Under; Forestry Equipment, Timbco, Tree Shear, Tub Grinder, Processor; Gradall (Cruz-Aire Type); Grader or Motor Patrol; Grout Pump; Hydro-Blaster (10,000 PSI or Over); Loading Machine (Conveyor); Material or Stack Hoist; Mechanic or Welder; Milling Machine; Post Hole Digger or Driver; Roller (Over 5 Ton); Scraper (Self Propelled or Tractor Drawn) 5 cu yds or More Capacity; Shoulder Widener; Sideboom; Skid Rig; Stabilizing or Concrete Mixer (Self-Propelled or 14S or Over); Straddle Carrier or Travel Lift; Tractor (Scraper, Dozer, Pusher, Loader); Tractor or Truck Mounted Hydraulic Backhoe; Trencher (Wheel Type or Chain Type); Tube Finisher; Tugger (NOT Performing Work on the Great Lakes); Winches & A-Frames. Future Increase(s): Add $2/hr on 6/1/13; Add $1.75/hr on 6/1/14. Premium Increase(s): DOT PREMIUMS: 1) Pay two times the hourly basic rate on Sunday, New Year's Day, Memorial Day, Independence Day, Labor Day, Thanksgiving Day & Christmas Day. 2) Add $1.25/hr night work premium. See DOT's website for details about the applicability of this night work premium at: http://roadwaystandards.dot.wi.gov/hcci/labor-wages-eeo/index.shtm.	34.22	19.90	54.12
534	Belting, Burlap, Texturing Machine; Broom or Sweeper; Compactor (Self-Propelled or Tractor Mounted, Towed & Light Equipment); Concrete Finishing Machine (Road Type); Environmental Burner; Farm or Industrial Type Tractor; Fireman (Asphalt Plant, Pile Driver & Derrick NOT Performing Work on the Great Lakes); Forklift; Greaser; Hoist (Tugger, Automatic); Jeep Digger; Joint Sawer (Multiple Blade); Launch (NOT Performing Work on the Great Lakes); Lift Slab Machine; Mechanical Float; Mulcher; Power Subgrader; Robotic Tool Carrier (With or Without Attachments); Roller (Rubber Tire, 5 Ton or Under); Self Propelled Chip Spreader; Shouldering Machine; Skid Steer Loader (With or WIthout Attachments); Telehandler; Tining or Curing Machine. Future Increase(s): Add $2/hr on 6/1/13; Add $1.75/hr on 6/1/14. Premium Increase(s):	33.96	19.90	53.86

CODE	Fringe Benefits Must Be Paid On All Hours Worked TRADE OR OCCUPATION	HOURLY BASIC RATE OF PAY $	HOURLY FRINGE BENEFITS $	TOTAL $
	DOT PREMIUMS: 1) Pay two times the hourly basic rate on Sunday, New Year's Day, Memorial Day, Independence Day, Labor Day, Thanksgiving Day & Christmas Day. 2) Add $1.25/hr night work premium. See DOT's website for details about the applicability of this night work premium at: http://roadwaystandards.dot.wi.gov/hcci/labor-wages-eeo/index.shtm.			
535	Air Compressor (&/or 400 CFM or Over); Air, Electric or Hydraulic Jacking System; Augers (Vertical & Horizontal); Automatic Belt Conveyor & Surge Bin; Boiler (Temporary Heat); Concrete Proportioning Plant; Crusher, Screening or Wash Plant; Generator (&/or 150 KW or Over); Heaters (Mechanical); High Pressure Utility Locating Machine (Daylighting Machine); Mudjack; Oiler; Prestress Machine; Pug Mill; Pump (3 Inch or Over) or Well Points; Rock, Stone Breaker; Screed (Milling Machine); Stump Chipper; Tank Car Heaters; Vibratory Hammer or Extractor, Power Pack. Future Increase(s): Add $2/hr on 6/1/13; Add $1.75/hr on 6/1/14. Premium Increase(s): DOT PREMIUMS: 1) Pay two times the hourly basic rate on Sunday, New Year's Day, Memorial Day, Independence Day, Labor Day, Thanksgiving Day & Christmas Day. 2) Add $1.25/hr night work premium. See DOT's website for details about the applicability of this night work premium at: http://roadwaystandards.dot.wi.gov/hcci/labor-wages-eeo/index.shtm.	33.67	19.90	53.57
536	Fiber Optic Cable Equipment.	20.00	7.88	27.88
537	Work Performed on the Great Lakes Including Diver; Wet Tender or Hydraulic Dredge Engineer.	37.45	19.45	56.90
538	Work Performed on the Great Lakes Including 70 Ton & Over Tug Operator; Assistant Hydraulic Dredge Engineer; Crane or Backhoe Operator; Hydraulic Dredge Leverman or Diver's Tender; Mechanic or Welder.	37.45	19.45	56.90
539	Work Performed on the Great Lakes Including Deck Equipment Operator or Machineryman (Maintains Cranes Over 50 Tons or Backhoes 115,000 Lbs. or More); Tug, Launch or Loader, Dozer or Like Equipment When Operated on a Barge, Breakwater Wall, Slip, Dock or Scow, Deck Machinery.	27.75	19.15	46.90
540	Work Performed on the Great Lakes Including Deck Equipment Operator, Machineryman or Fireman (Operates 4 Units or More or Maintains Cranes 50 Tons or Under or Backhoes 115,000 Lbs. or Under); Deck Hand, Deck Engineer or Assistant Tug Operator; Off Road Trucks-Great Lakes ONLY.	27.75	19.15	46.90

LOCAL STREET OR MISCELLANEOUS PAVING CONSTRUCTION

Includes roads, streets, alleys, trails, bridges, paths, racetracks, parking lots and driveways (except residential or agricultural), public sidewalks or other similar projects (excluding projects awarded by the Wisconsin Department of Transportation).

SKILLED TRADES

Fringe Benefits Must Be Paid On All Hours Worked

CODE	TRADE OR OCCUPATION	HOURLY BASIC RATE OF PAY $	HOURLY FRINGE BENEFITS $	TOTAL $
103	Bricklayer, Blocklayer or Stonemason	33.00	15.00	48.00
105	Carpenter	30.16	15.31	45.47
107	Cement Finisher	28.73	17.03	45.76
109	Electrician Future Increase(s): Add $1.60/hr on 6/1/2013. Premium Increase(s): DOT PREMIUM: Pay two times the hourly basic rate on Sunday, New Year's Day, Memorial Day, Independence Day, Labor Day, Thanksgiving Day & Christmas Day.	32.20	21.71	53.91
111	Fence Erector	28.00	4.50	32.50
116	Ironworker	31.31	21.99	53.30
118	Line Constructor (Electrical)	37.05	16.94	53.99
124	Painter	29.27	18.18	47.45
125	Pavement Marking Operator	28.10	15.00	43.10
126	Piledriver	29.56	24.96	54.52
133	Roofer or Waterproofer	29.40	15.05	44.45
137	Teledata Technician or Installer	24.65	15.67	40.32
143	Tuckpointer, Caulker or Cleaner	34.35	11.13	45.48
144	Underwater Diver (Except on Great Lakes)	37.45	19.45	56.90
150	Heavy Equipment Operator - ELECTRICAL LINE CONSTRUCTION ONLY	29.64	14.55	44.19
151	Light Equipment Operator -ELECTRICAL LINE CONSTRUCTION ONLY Premium Increase(s): DOT PREMIUM: Pay two times the hourly basic rate on Sunday, New Year's Day, Memorial Day, Independence Day, Labor Day, Thanksgiving Day & Christmas Day.	30.60	14.64	45.24
152	Heavy Truck Driver - ELECTRICAL LINE CONSTRUCTION ONLY	25.94	13.57	39.51
153	Light Truck Driver - ELECTRICAL LINE CONSTRUCTION ONLY	24.08	12.96	37.04
154	Groundman - ELECTRICAL LINE CONSTRUCTION ONLY	21.75	11.90	33.65

TRUCK DRIVERS

CODE	Fringe Benefits Must Be Paid On All Hours Worked TRADE OR OCCUPATION	HOURLY BASIC RATE OF PAY $	HOURLY FRINGE BENEFITS $	TOTAL $
201	Single Axle or Two Axle	25.87	13.00	38.87
203	Three or More Axle	17.00	0.00	17.00
204	Articulated, Euclid, Dumptor, Off Road Material Hauler Future Increase(s): Add $1/hr on 6/2/2013.	32.39	18.46	50.85
205	Pavement Marking Vehicle	20.85	11.02	31.87
206	Shadow or Pilot Vehicle	25.87	13.00	38.87
207	Truck Mechanic	17.00	0.00	17.00

LABORERS

CODE	Fringe Benefits Must Be Paid On All Hours Worked TRADE OR OCCUPATION	HOURLY BASIC RATE OF PAY $	HOURLY FRINGE BENEFITS $	TOTAL $
301	General Laborer	22.31	18.64	40.95
303	Landscaper Future Increase(s): Add $1.70/hr on 6/1/13; Add $1.60/hr on 6/1/14. Premium Increase(s): DOT PREMIUMS: 1) Pay two times the hourly basic rate on Sunday, New Year's Day, Memorial Day, Independence Day, Labor Day, Thanksgiving Day & Christmas Day. 2) Add $1.25/hr for work on projects involving temporary traffic control setup, for lane and shoulder closures, when work under artificial illumination conditions is necessary as required by the project provisions (including prep time prior to and/or cleanup after such time period).	28.07	13.90	41.97
304	Flagperson or Traffic Control Person Future Increase(s): Add $1.70/hr on 6/1/2013; Add $1.60/hr on 6/1/2014. Premium Increase(s): DOT PREMIUMS: 1) Pay two times the hourly basic rate on Sunday, New Year’s Day, Memorial Day, Independence Day, Labor Day, Thanksgiving Day & Christmas Day. 2) Add $1.25/hr when the Wisconsin Department of Transportation or responsible governing agency requires that work be performed at night under artificial illumination with traffic control and the work is completed after sunset and before sunrise.	24.70	13.90	38.60
311	Fiber Optic Laborer (Outside, Other Than Concrete Encased)	17.24	15.03	32.27
314	Railroad Track Laborer	14.50	3.53	18.03

HEAVY EQUIPMENT OPERATORS
CONCRETE PAVEMENT OR BRIDGE WORK

Fringe Benefits Must Be Paid On All Hours Worked

CODE	TRADE OR OCCUPATION	HOURLY BASIC RATE OF PAY $	HOURLY FRINGE BENEFITS $	TOTAL $
541	Crane, Tower Crane, Pedestal Tower or Derrick, With or Without Attachments, With a Lifting Capacity of Over 100 Tons, Self-Erecting Tower Crane With a Lifting Capacity Of Over 4,000 Lbs., Crane With Boom Dollies; Crane, Tower Crane, Pedestal Tower or Derrick, With Boom, Leads &/or Jib Lengths Measuring 176 Ft or Over; Master Mechanic. Future Increase(s): Add $2/hr on 6/1/13; Add $1.75/hr on 6/1/14. Premium Increase(s): DOT PREMIUMS: 1) Pay two times the hourly basic rate on Sunday, New Year's Day, Memorial Day, Independence Day, Labor Day, Thanksgiving Day & Christmas Day. 2) Add $1.25/hr night work premium. See DOT's website for details about the applicability of this night work premium at: http://roadwaystandards.dot.wi.gov/hcci/labor-wages-eeo/index.shtm.	35.22	19.90	55.12
542	Backhoe (Track Type) Having a Mfgr.'s Rated Capacity of 130,000 Lbs. or Over; Caisson Rig; Crane, Tower Crane, Portable Tower, Pedestal Tower or Derrick, With or Without Attachments, With a Lifting Capacity of 100 Tons or Under, Self-Erecting Tower Crane With a Lifting Capacity of 4,000 Lbs. & Under; Crane, Tower Crane Portable Tower, Pedestal Tower or Derrick, With Boom, Leads &/or Jib Lengths Measuring 175 Ft or Under; Dredge (NOT Performing Work on the Great Lakes); Licensed Boat Pilot (NOT Performing Work on the Great Lakes); Pile Driver. Future Increase(s): Add $2/hr on 6/1/13; Add $1.75/hr on 6/1/14. Premium Increase(s): DOT PREMIUMS: 1) Pay two times the hourly basic rate on Sunday, New Year's Day, Memorial Day, Independence Day, Labor Day, Thanksgiving Day & Christmas Day. 2) Add $1.25/hr night work premium. See DOT's website for details about the applicability of this night work premium at: http://roadwaystandards.dot.wi.gov/hcci/labor-wages-eeo/index.shtm.	34.72	19.90	54.62

CODE	Fringe Benefits Must Be Paid On All Hours Worked TRADE OR OCCUPATION	HOURLY BASIC RATE OF PAY $	HOURLY FRINGE BENEFITS $	TOTAL $
543	Air Track, Rotary or Percussion Drilling Machine &/or Hammers, Blaster; Automatic Subgrader (Concrete); Backhoe (Track Type) Having a Mfgr.'s Rated Capacity of Under 130,000 Lbs., Backhoe (Mini, 15,000 Lbs. & Under); Boring Machine (Directional, Horizontal or Vertical); Bridge (Bidwell) Paver; Bulldozer or Endloader; Concrete Batch Plant, Batch Hopper; Concrete Breaker (Large, Auto, Vibratory/Sonic, Manual or Remote); Concrete Bump Cutter, Grinder, Planing or Grooving Machine; Concrete Conveyor System; Concrete Laser/Screed; Concrete Paver (Slipform); Concrete Pump, Concrete Conveyor (Rotec or Bidwell Type); Concrete Slipform Placer Curb & Gutter Machine; Concrete Spreader & Distributor; Crane (Carry Deck, Mini) or Truck Mounted Hydraulic Crane (10 Tons or Under); Crane With a Lifting Capacity of 25 Tons or Under; Forestry Equipment, Timbco, Tree Shear, Tub Grinder, Processor; Gradall (Cruz-Aire Type); Grader or Motor Patrol; Grout Pump; Hydro-Blaster (10,000 PSI or Over); Loading Machine (Conveyor); Manhoist; Material or Stack Hoist; Mechanic or Welder; Milling Machine; Post Hole Digger or Driver; Scraper (Self Propelled or Tractor Drawn) 5 cu yds or More Capacity; Shoulder Widener; Sideboom; Skid Rig; Stabilizing or Concrete Mixer (Self-Propelled or 14S or Over); Straddle Carrier or Travel Lift; Tractor (Scraper, Dozer, Pusher, Loader); Tractor or Truck Mounted Hydraulic Backhoe; Trencher (Wheel Type or Chain Type); Tube Finisher; Tugger (NOT Performing Work on the Great Lakes); Winches & A-Frames. Future Increase(s): Add $2/hr on 6/1/13; Add $1.75/hr on 6/1/14. Premium Increase(s): DOT PREMIUMS: 1) Pay two times the hourly basic rate on Sunday, New Year's Day, Memorial Day, Independence Day, Labor Day, Thanksgiving Day & Christmas Day. 2) Add $1.25/hr night work premium. See DOT's website for details about the applicability of this night work premium at: http://roadwaystandards.dot.wi.gov/hcci/labor-wages-eeo/index.shtm.	34.22	19.90	54.12
544	Backfiller; Belting, Burlap, Texturing Machine; Broom or Sweeper; Compactor (Self-Propelled or Tractor Mounted, Towed & Light Equipment); Concrete Finishing Machine (Road Type); Environmental Burner; Farm or Industrial Type Tractor; Fireman (Pile Driver & Derrick NOT Performing Work on the Great Lakes); Forklift; Greaser; Jeep Digger; Joint Sawer (Multiple Blade); Launch (NOT Performing Work on the Great Lakes); Lift Slab Machine; Mechanical Float; Mulcher; Power Subgrader; Robotic Tool Carrier (WIth or Without Attachments); Self Propelled Chip Spreader; Shouldering Machine; Skid Steer Loader (With or Without Attachments); Telehandler; Tining or Curing Machine. Future Increase(s): Add $2/hr on 6/1/13; Add $1.75/hr on 6/1/14. Premium Increase(s): DOT PREMIUMS: 1) Pay two times the hourly basic rate on Sunday, New Year's Day, Memorial Day, Independence Day, Labor Day, Thanksgiving Day & Christmas Day. 2) Add $1.25/hr night work premium. See DOT's website for details about the applicability of this night work premium at: http://roadwaystandards.dot.wi.gov/hcci/labor-wages-eeo/index.shtm.	33.96	19.90	53.86

CODE	Fringe Benefits Must Be Paid On All Hours Worked TRADE OR OCCUPATION	HOURLY BASIC RATE OF PAY $	HOURLY FRINGE BENEFITS $	TOTAL $
545	Air Compressor (&/or 400 CFM or Over); Air, Electric or Hydraulic Jacking System; Automatic Belt Conveyor & Surge Bin; Boiler (Temporary Heat); Concrete Proportioning Plant; Crusher, Screening or Wash Plant; Generator (&/or 150 KW or Over); Heaters (Mechanical); High Pressure Utility Locating Machine (Daylighting Machine); Mudjack; Oiler; Prestress Machine; Pug Mill; Pump (3 Inch or Over) or Well Points; Rock, Stone Breaker; Screed (Milling Machine); Stump Chipper; Tank Car Heaters; Vibratory Hammer or Extractor, Power Pack.	33.02	17.60	50.62
546	Fiber Optic Cable Equipment.	20.00	7.88	27.88
547	Work Performed on the Great Lakes Including Diver; Wet Tender or Hydraulic Dredge Engineer.	37.45	19.45	56.90
548	Work Performed on the Great Lakes Including 70 Ton & Over Tug Operator; Assistant Hydraulic Dredge Engineer; Crane or Backhoe Operator; Hydraulic Dredge Leverman or Diver's Tender; Mechanic or Welder.	37.45	19.45	56.90
549	Work Performed on the Great Lakes Including Deck Equipment Operator or Machineryman (Maintains Cranes Over 50 Tons or Backhoes 115,000 Lbs. or more); Tug, Launch or Loader, Dozer or Like Equipment When Operated on a Barge, Breakwater Wall, Slip, Dock or Scow, Deck Machinery.	27.75	19.15	46.90
550	Work Performed on the Great Lakes Including Deck Equipment Operator; Machineryman or Fireman (Operates 4 Units or More or Maintains Cranes 50 Tons or Under or Backhoes 115,000 Lbs. or Under); Deck Hand, Deck Engineer or Assistant Tug Operator; Off Road Trucks - Great Lakes ONLY.	27.75	19.15	46.90

HEAVY EQUIPMENT OPERATORS
ASPHALT PAVEMENT OR OTHER WORK

CODE	Fringe Benefits Must Be Paid On All Hours Worked TRADE OR OCCUPATION	HOURLY BASIC RATE OF PAY $	HOURLY FRINGE BENEFITS $	TOTAL $
551	Crane, Tower Crane, Pedestal Tower or Derrick, With or Without Attachments, With a Lifting Capacity of Over 100 Tons, Self Erecting Tower Crane With a Lifting Capacity of Over 4,000 Lbs., Crane With Boom Dollies; Crane, Tower Crane, Pedestal Tower or Derrick, With Boom, Leads and/or Jib Lengths Measuring 176 Ft or Over; Master Mechanic.	39.16	19.10	58.26
552	Backhoe (Track Type) Having a Mfgr.'s Rated Capacity of 130,000 Lbs. or Over; Caisson Rig; Crane, Tower Crane, Portable Tower, Pedestal Tower or Derrick, With or Without Attachments, With a Lifting Capacity of 100 Tons or Under, Self-Erecting Tower Crane With a Lifting Capacity Of 4,000 Lbs. & Under; Crane, Tower Crane, Portable Tower, Pedestal Tower or Derrick, With Boom, Leads &/or Jib Lengths Measuring 175 Ft or Under; Dredge (NOT Performing Work on the Great Lakes); Licensed Boat Pilot (NOT Performing Work on the Great Lakes); Pile Driver. Future Increase(s): Add $1/hr on 6/2/2013.	32.92	18.46	51.38

CODE	Fringe Benefits Must Be Paid On All Hours Worked TRADE OR OCCUPATION	HOURLY BASIC RATE OF PAY $	HOURLY FRINGE BENEFITS $	TOTAL $
553	Air, Track, Rotary or Percussion Drilling Machine &/or Hammers, Blaster; Asphalt Heater, Planer & Scarifier; Asphalt Milling Machine; Asphalt Screed; Backhoe (Track Type) Having a Mfgr.'s Rated Capacity of Under 130,000 Lbs., Backhoe (Mini, 15,000 Lbs. & Under); Bituminous (Asphalt) Plant & Paver, Screed; Boring Machine (Directional, Horizontal or Vertical); Bulldozer or Endloader; Concrete Breaker (Large, Auto, Vibratory/Sonic, Manual or Remote); Concrete Conveyor System; Concrete Laser/Screed; Concrete Slipform Placer Curb & Gutter Machine; Crane (Carry Deck, Mini) or Truck Mounted Hydraulic Crane (10 Tons or Under); Crane With a Lifting Capacity of 25 Tons or Under; Forestry Equipment, Timbco, Tree Shear, Tub Grinder, Processor; Gradall (Cruz-Aire Type); Grader or Motor Patrol; Hydro-Blaster (10,000 PSI or Over); Loading Machine (Conveyor); Manhoist; Material or Stack Hoist; Mechanic or Welder; Milling Machine; Post Hole Digger or Driver; Railroad Track Rail Leveling Machine, Tie Placer, Extractor, Tamper, Stone Leveler or Rehabilitation Equipment; Roller (Over 5 Ton); Scraper (Self Propelled or Tractor Drawn) 5 cu yds or More Capacity; Shoulder Widener; Sideboom; Skid Rig; Stabilizing or Concrete Mixer (Self-Propelled or 14S or Over); Tractor (Scraper, Dozer, Pusher, Loader); Tractor or Truck Mounted Hydraulic Backhoe; Trencher (Wheel Type or Chain Type); Tube Finisher; Tugger (NOT Performing Work on the Great Lakes); Winches & A-Frames.	32.67	18.44	51.11
554	Backfiller; Broom or Sweeper; Compactor (Self-Propelled or Tractor Mounted, Towed & Light Equipment); Concrete Finishing Machine (Road Type); Environmental Burner; Farm or Industrial Type Tractor; Fireman (Asphalt Plant, Pile Driver & Derrick NOT Performing Work on the Great Lakes); Forklift; Greaser; Hoist (Tugger, Automatic); Jeep Digger; Joint Sawer (Multiple Blade); Launch (NOT Performing Work on the Great Lakes); Lift Slab Machine; Mechanical Float; Mulcher; Power Subgrader; Robotic Tool Carrier (With or Without Attachments); Roller (Rubber Tire, 5 Ton or Under); Self-Propelled Chip Spreader; Shouldering Machine; Skid Steer Loader (With or Without Attachments); Telehandler. Future Increase(s): Add $2/hr on 6/1/13; Add $1.75/hr on 6/1/14.	33.67	19.55	53.22
555	Air Compressor (&/or 400 CFM or Over); Air, Electric or Hydraulic Jacking System; Augers (Vertical & Horizontal); Automatic Belt Conveyor & Surge Bin; Boiler (Temporary Heat); Crusher, Screening or Wash Plant; Generator (&/or 150 KW or Over); Heaters (Mechanical); High Pressure Utility Locating Machine (Daylighting Machine); Mudjack; Oiler; Prestress Machine; Pug Mill; Pump (3 Inch or Over) or Well Points; Rock, Stone Breaker; Screed (Milling Machine); Stump Chipper; Tank Car Heaters; Vibratory Hammer or Extractor, Power Pack. Future Increase(s): Add $2/hr on 6/1/13; Add $1.75/hr on 6/1/14.	33.67	19.55	53.22
556	Fiber Optic Cable Equipment.	20.00	7.88	27.88

RESIDENTIAL OR AGRICULTURAL CONSTRUCTION

Includes single family houses or apartment buildings of no more than four (4) stories in height and all buildings, structures or facilities that are primarily used for agricultural or farming purposes, excluding commercial buildings. For classification purposes, the exterior height of a residential building, in terms of stories, is the primary consideration. All incidental items such as site work, driveways, parking lots, private sidewalks, private septic systems or sewer and water laterals connected to a public system and swimming pools are included within this definition. Residential buildings of five (5) stories and above are NOT included within this definition.

SKILLED TRADES

Fringe Benefits Must Be Paid On All Hours Worked

CODE	TRADE OR OCCUPATION	HOURLY BASIC RATE OF PAY $	HOURLY FRINGE BENEFITS $	TOTAL $
101	Acoustic Ceiling Tile Installer	19.50	10.98	30.48
102	Boilermaker	31.09	27.23	58.32
103	Bricklayer, Blocklayer or Stonemason	25.00	12.36	37.36
104	Cabinet Installer	26.00	2.61	28.61
105	Carpenter	33.43	7.16	40.59
106	Carpet Layer or Soft Floor Coverer	32.93	21.85	54.78
107	Cement Finisher	23.32	6.27	29.59
108	Drywall Taper or Finisher	29.87	18.79	48.66
109	Electrician	24.50	8.96	33.46
110	Elevator Constructor	41.71	23.88	65.59
111	Fence Erector	13.00	1.07	14.07
112	Fire Sprinkler Fitter	37.45	19.30	56.75
113	Glazier	22.00	2.09	24.09
114	Heat or Frost Insulator	35.00	0.00	35.00
115	Insulator (Batt or Blown)	12.82	0.00	12.82
116	Ironworker	30.90	19.11	50.01
117	Lather	33.43	7.16	40.59
119	Marble Finisher	16.50	2.38	18.88
120	Marble Mason	25.00	12.36	37.36
121	Metal Building Erector	17.00	2.62	19.62
123	Overhead Door Installer	25.00	19.00	44.00
124	Painter	23.50	3.73	27.23
125	Pavement Marking Operator	28.10	15.00	43.10

CODE	Fringe Benefits Must Be Paid On All Hours Worked TRADE OR OCCUPATION	HOURLY BASIC RATE OF PAY $	HOURLY FRINGE BENEFITS $	TOTAL $
129	Plasterer	20.00	0.00	20.00
130	Plumber	36.97	18.42	55.39
132	Refrigeration Mechanic	24.75	10.42	35.17
133	Roofer or Waterproofer	29.40	15.55	44.95
134	Sheet Metal Worker	28.15	15.14	43.29
135	Steamfitter	38.26	19.49	57.75
137	Teledata Technician or Installer	18.85	5.00	23.85
138	Temperature Control Installer	22.00	1.10	23.10
139	Terrazzo Finisher	26.57	16.00	42.57
140	Terrazzo Mechanic	30.01	17.13	47.14
141	Tile Finisher	20.60	3.53	24.13
142	Tile Setter	20.43	8.03	28.46
143	Tuckpointer, Caulker or Cleaner	32.50	2.84	35.34
146	Well Driller or Pump Installer	27.60	0.00	27.60
147	Siding Installer	16.00	0.62	16.62

TRUCK DRIVERS

CODE	Fringe Benefits Must Be Paid On All Hours Worked TRADE OR OCCUPATION	HOURLY BASIC RATE OF PAY $	HOURLY FRINGE BENEFITS $	TOTAL $
201	Single Axle or Two Axle	16.25	4.60	20.85
203	Three or More Axle	17.10	1.78	18.88
205	Pavement Marking Vehicle	20.85	11.02	31.87
207	Truck Mechanic	19.00	1.85	20.85

LABORERS

CODE	Fringe Benefits Must Be Paid On All Hours Worked TRADE OR OCCUPATION	HOURLY BASIC RATE OF PAY $	HOURLY FRINGE BENEFITS $	TOTAL $
301	General Laborer	18.00	6.16	24.16
302	Asbestos Abatement Worker	18.00	0.00	18.00
303	Landscaper	11.00	0.00	11.00

CODE	Fringe Benefits Must Be Paid On All Hours Worked TRADE OR OCCUPATION	HOURLY BASIC RATE OF PAY $	HOURLY FRINGE BENEFITS $	TOTAL $
311	Fiber Optic Laborer (Outside, Other Than Concrete Encased)	17.24	15.03	32.27
315	Final Construction Clean-Up Worker	15.00	0.00	15.00

HEAVY EQUIPMENT OPERATORS
RESIDENTIAL OR AGRICULTURAL CONSTRUCTION

CODE	Fringe Benefits Must Be Paid On All Hours Worked TRADE OR OCCUPATION	HOURLY BASIC RATE OF PAY $	HOURLY FRINGE BENEFITS $	TOTAL $
557	Asphalt Heater, Planer & Scarifier; Asphalt Milling Machine; Asphalt Screed; Backhoe (Track Type); Backhoe (Mini, 15,000 Lbs. & Under); Bituminous (Asphalt) Plant & Paver, Screed; Boring Machine (Directional, Horizontal or Vertical); Bulldozer or Endloader; Concrete Breaker (Large, Auto, VIbratory/Sonic, Manual or Remote); Concrete Bump Cutter, Grinder, Planing or Grooving Machine; Concrete Conveyor System; Concrete Laser/Screed; Concrete Paver (Slipform); Concrete Pump, Concrete Conveyor (Rotec or Bidwell Type); Concrete Slipform Placer Curb & Gutter Machine; Concrete Spreader & DIstributor; Crane (Carry Deck, Mini) or Truck Mounted Hydraulic Crane (10 Tons or Under); Crane With a Lifting Capacity of 25 Tons or Under; Crane, Shovel, Dragline, Clamshells; Forestry Equipment, TImbco, Tree Shear, Tub Grinder, Processor; Grader or Motor Patrol; Grout Pump; Hydro-Blaster (10,000 PSI or Over); Loading Machine (Conveyor); Manhoist; Material or Stack Hoist; Mechanic or Welder; Milling Machine; Roller (Over 5 Ton); Scraper (Self Propelled or Tractor Drawn) 5 cu yds or More Capacity; Shoulder Widener; Skid Rig; Stabilizing or Concrete Mixer (Self-Propelled or 14S or Over); Tractor (Scraper, Dozer, Pusher, Loader); Tractor or Truck Mounted Hydraulic Backhoe; Tractor or Truck Mounted Hydraulic Crane (10 Tons or Under); Trencher (Wheel Type or Chain Type); WInches & A-Frames.	23.35	5.58	28.93
558	Air Compressor (&/or 400 CFM or Over); Air, Electric or Hydraulic Jacking System; Backfiller; Belting, Burlap, Texturing Machine; Boiler (Temporary Heat); Broom or Sweeper; Compactor (Self-Propelled or Tractor Mounted, Towed & LIght Equipment); Concrete Finishing Machine (Road Type); Farm or Industrial Type Tractor; Forklift; Generator (&/or 150 KW or Over); Heaters (Mechanical); High Pressure Utility Locating Machine (Daylighting Machine); Jeep Digger; Lift Slab Machine; Mulcher; Oiler; Post Hole Digger or Driver; Power Subgrader; Pump (3 Inch or Over) or Well Points; Robotic Tool Carrier (With or Without Attachments); Rock, Stone Breaker; Roller (Rubber Tire, 5 Tons or Under); Screed (Milling Machine); Self Propelled Chip Spreader; Shouldering Machine; Skid Steer Loader (With or Without Attachments); Stump Chipper; Telehandler; Vibratory Hammer or Extractor, Power Pack.	21.10	0.87	21.97

********** END OF RATES **********

Milwaukee Water Works

Safe, Abundant Drinking Water.

City of Milwaukee Standard Plan Notes For Water Main Construction

DESCRIPTION	PAGE NUMBER
1. Inspection	2
2. Material Testing	2
3. Winter Water Main Construction	2
4. Additional Bids	2
5. Delivery of Material Furnished by the City	3
6. Erosion Control Specifications	3
7. Backflow Preventer	3
8. Hydrants and Valves	4
9. Hydrant Permits	4
10. Water Services	5
11. Pipe Restraint	5
12. Water Quality Tests	5
13. Pressure Testing	5
14. Backfill and Bedding Material	6 & 7
15. Consolidation of Backfill and Aggregate Slurry Backfill	7
16. 4” Asphaltic Concrete Pavement Replacement	7
17. Concrete Pavement Replacement Detail	8
18. Supplemental Schedule of Fixed Prices	9 & 10
19. Valve Box Base Adapter	11
20. Water Main Disinfection Process	12 & 13
21. Erosion Control Special Provision	13 – 16
22. Bicycle Racks	16
23. Mechanical Joint Restraint (MJ Field Lok®)	16 - 24

Revised: June 14, 2011

1. Inspection

Paragraph 3 of section 3.5.11 of the City of Milwaukee Water Main Installation Specifications, dated 1987, shall be revised to read:

The amount of per diem charge for inspection as referred to in section 2.5.11 shall be $325.00.

The contractor shall allow four working days notice for material inspection and for scheduling installation inspection prior to the start of construction. Contact Steve Brengosz at 414-708-2808 or Mark Scheller at 414-286-2427 for materials inspection and the City of Milwaukee's Construction Section at 414-286-2497 for installation inspection.

2. Material Testing

All material tests required on this contract shall be performed at a testing laboratory designated by the City.

3. Winter Water Main Construction

No water main construction work shall be done between the days of December 15 and March 15 of the following year without permission from the City of Milwaukee Commissioner of Public Works or his representative.

4. Additional Bids

The water main construction work for this project is separated into additional bid items for the purpose of identifying possible subcontractor work for the disadvantaged business enterprises.

The portions of the water main specifications listed below shall govern the extent of these bids:

Bid	Specification	Page (S)
Permanent Pavement	Chapter 5.19.0	170,171
Curb & Gutter	Chapter 5.19.0	170,171
Walk	Chapter 5.19.0	170,171
Driveway	Chapter 5.19.0	170,171
Barricades and Traffic Control	Sections 2.7.2 and 2.7.3	38,39
Sawcutting	Sections 3.5.6 and 3.5.7	66,67
Finishing of Roadway	Section 2.5.4	32

All other work on this project, which is not specifically bid, shall be included in the unit price bid for water main.

5. Delivery of Material Furnished by the City

Specification chapter 4.3.0 shall be revised to read:

The City of Milwaukee will not deliver material that is furnished by the City. It shall be the contractor's responsibility to pick up and transport all material furnished by the City. The contractor's responsibility for this material shall begin on the day the contractor picks up the material, whether this is done before or during construction.

The contractor, upon receipt of the city-furnished material, shall sign the City of Milwaukee, Department of Public Works "Material Requisition and Disbursement Report". The contractor shall also return any city-furnished material that is designated to be returned. All costs for the transportation of city furnished material shall be included in the unit price bid for water main. Contact Mr. Kevin Gray, City of Milwaukee Inventory Assistant at 414-286-0669 for additional information.

6. Erosion Control Specifications

Non Rural

Soil Erosion Control Plans for Water Main Installation In Paved, Non-Rural Areas; Revised August 1, 2001, shall apply to this project. Copies of this document are available upon request from Milwaukee Water Works – Water Engineering; Zeidler Municipal Building; 841 N. Broadway, Room 403; Milwaukee, WI 53202.

The contractor shall clean the storm water inlets prior to placing the inlet baskets. If the inlet drain is clogged, the contractor shall contact Underground Operations (414-286-3731) so that the drain can be cleaned.

Rural

Soil Erosion Control Plans for Water Main Installation In Paved, Rural Cross-Section, Pedestrian Ways, and Unpaved Areas Other Than Channels; Revised August 1, 2001, shall apply to this project. Copies of this document are available upon request from Milwaukee Water Works – Water Engineering; Zeidler Municipal Building; 841 N. Broadway, Room 403; Milwaukee, WI 53202.

The contractor shall clean the storm water inlets prior to placing the inlet baskets. If the inlet drain is clogged, the contractor shall contact Underground Operations (414-286-3731) so that the drain can be cleaned.

7. Backflow Preventer

In any instance where water is used from a hydrant or other public water supply source, the contractor shall protect the public water supply by means of an appropriate backflow preventer.

Where the hose or outlet will be above the elevation of the water source, the contractor shall use a reduced pressure zone (rpz) backflow preventer. If a ¾" or smaller hose supply is required a vacuum breaker-backflow preventer may be used. Where the hose and outlet will always be below the elevation of the water source, an atmospheric vacuum breaker may be used. The backflow preventer shall be connected to the hydrant in compliance with section 2.8.12 and shall be self-supporting imposing no load on the hydrant.

8. Hydrants and Valves

The contractor shall install hydrants with the nozzle section facing the street where practical. The cost of modifying the hydrants shall be included in the unit price bid for installing hydrants. The contractor shall be responsible for installing the hydrant frangible coupling (flange) within 0.2' of the plan grade. The contractor shall notify the Milwaukee Water Works Distribution Division of any existing hydrant vandal proof devices before removing hydrants. The contractor shall be responsible for tightening nuts and bolts on all valves and hydrants in this contract.

9. Hydrant Permits

A $65.00 hydrant permit/use fee will be part of the hydrant use permit. This fee is per hydrant per week.

It is the intention of the City of Milwaukee to meter and record all water use on this contract. The contractor must obtain a hydrant permit for this contract, which includes the requirement of a meter to measure water usage. This permit can be obtained from the City's Development Center located at 809 N. Broadway.

If it is found that the contractor is not following the standard hydrant permit use rules, the City of Milwaukee will take normal enforcement action.

Milwaukee Water Works only projects issued through DPW

The permit requires the contractor to place a refundable $675.00 deposit for each meter to be used. The contractor will not be required to pay $325.00 for the setup of the meter. The $65.00 hydrant permit/use fee will be waived by the utility. The contractor will not be charged for the volume of water used.

Combined Water/Sewer projects issued through DPW

The permit requires the contractor to place a refundable $675.00 deposit for each meter to be used. The contractor will be required to pay $325.00 for the setup of the meter. The contractor will be charged for the volume of water used to complete the work on the contract. Construction activities directly related to the installation of water main shall be exempt from the usage charge. The contractor shall contact Meter Services before and after the water main installation. Failure to contact Meter Services will subject the contractor to the full water use charges.

All other contracts or water main installations

The permit requires the contractor to place a refundable $675.00 deposit for each meter to be used. The contractor will be required to pay $325.00 for the setup of the meter. The contractor will be charged for the volume of water used and read on the meter(s).

Questions, arranging installations, and readings

MWW Meter Services dispatcher, 414-286-2865
Mr. Tim Garczynski, Water Meter Project Manager, 414-286-8119

10. Water Services

On each connect original service (C.O.S.), replace original service (R.O.S.) or installation of new service, the contractor shall furnish and install a service insulator (Ford Meter Box Co. Inc. SI-2, SI-4, SI-6, SI-7 or equal). Cost of furnishing and installing the service insulator shall be included in the unit bid price for the C.O.S., R.O.S. or service, respectively. On C.O.S.'s the service insulator shall be installed on the outlet side of the corporation stop. On R.O.S.'s and new services, the service insulator shall be installed on the outlet (private property) side of the curb stop.

11. Pipe Restraint

Pipe shall be restrained by means of concrete buttresses and anchors as shown on specification drawing no.'s 3 through 12 and no. 17. When adequate concrete buttressing is not possible, strapping and rodding as shown on drawing no.'s 13, 14, and 16 shall be installed for pipe restraint at 4" through 16" bends and offsets. Bell spigot restraints, as shown in drawing no. 15, shall be used only at the direction of the commissioner,

1) In conjunction with concrete restraints when the water main must be immediately restored to service, or

2) Where other restraints cannot be used.

12. Water Quality Tests

Section 5.18.1 of the specifications shall be revised to read:

Water from all new mains must successfully pass turbidity and bacterial tests performed by the City before the main is accepted for use.

13. Pressure Testing

The allowable leakage referred to in section 5.17.3 shall not exceed the number of gallons per hour as determined by the following formula:

$$GPH = \frac{S \times D \times \sqrt{P}}{148{,}000}$$

In which GPH = gallons per hour
D = nominal diameter of main in inches
S = length of pipe tested in feet
P = average pressure in pounds per square inch gauge during leakage test

14. Backfill and Bedding Material

The contractor shall have the option of using one of the following requirements for backfill and bedding on installations of 16" and smaller water mains.

Backfill

Material used to backfill water main trenches, as required in chapter 5.16.0 of the "Water Main Installations" of the City of Milwaukee, shall be one of the following gradation requirements:

Option No. 1

Sieve Size	Crushed Gravel	Crushed Stone
1 inch	100 %	100 %
3/8 inch	50 – 85 %	40 – 75 %
No. 4	35 – 65 %	25 – 60 %
No. 10	25 – 50 %	15 – 45 %
No. 40	10 – 30 %	–
No. 200	3 – 10 %	3 – 12 %

Option No. 2

Sieve Size	1/4" Screenings
1/2 inch	100 %
3/8 inch	–
No. 4	75 – 100 %
No. 8	–
No. 16	–
No. 30	–
No. 100	10 – 25 %

Option No. 3 Sieve Analysis, ASTM C 136

Sieve Size	Percent Passing	
2.5 inch	100.0 %	
2 inch	88.2 %	
1.5 inch	68.9 %	
1 inch	50.7 %	
3/4 inch	41.0 %	
1/2 inch	33.3 %	
3/8 inch	28.3 %	
No. 4	20.6 %	
No. 10	15.8 %	
No. 20	12.0 %	
No. 40	10.0 %	
No. 100	8.3 %	
No. 200	7.5 %	Percent Finer than No. 200 Sieve, ASTM C 117

Bedding

Option No. 1

Material used for bedding shall be per specification 4.6.0 of the "Water Main Installation Specifications" of the City of Milwaukee.

Option No. 2

Sieve Size	1/4" Chips
1/2 inch	100 %
3/8 inch	90 – 100 %
No. 4	–
No. 8	0 – 50 %
No. 16	–
No. 30	0 – 5 %

15. Consolidation of Backfill and Aggregate Slurry Backfill

The contractor shall consolidate all backfill by mechanical compaction per specification 2.6.14 (B) of the Standard Specifications for Sewer & Water Construction in Wisconsin. Per the specification, the initial compacted lift shall be two (2) feet. The specification language for subsequent lifts shall be revised to read, "Each subsequent compacted lift of material shall be one (1) foot". Costs are to be included in the unit bid price for water main. Settling the trench by flooding the backfill will not be allowed.

Where specified on the plans, the contractor shall backfill with aggregate slurry per specification 8.43.8 of the Standard Specifications for Sewer & Water Construction in Wisconsin. A bid item for "Slurry Backfill", measured by cubic yards, will be included on the water main construction plans. In addition, if the City of Milwaukee Construction supervisor determines that slurry backfill is required at a location not specified on the plans, and a bid item has not been included in the contract, the contractor shall be paid the "Fixed Price" extra for aggregate slurry backfill.

16. 4" Asphaltic Concrete Pavement Replacement

The bid item for 4" Asphaltic Concrete shall consist of 4" of asphaltic concrete on 2" of ¾" crushed stone (meeting Street Construction Specification 904.2.2) on 7" of no. 2 crushed stone. The cost of the crushed stone base shall be included in the unit price bid for 4" Asphaltic Concrete.

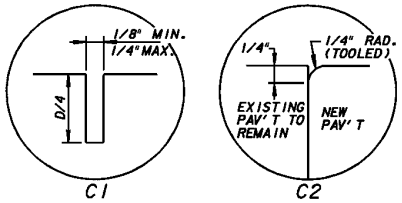

TRANSVERSE JOINTS

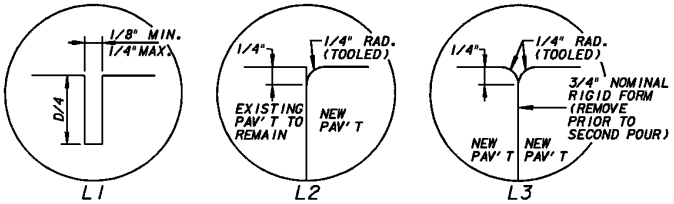

LONGITUDINAL JOINTS

CONCRETE PAVEMENT REPAIR

1. TIE BARS SHALL BE EPOXY COATED IN CONFORMANCE WITH SUBSECTION 505.2.4 OF THE STANDARD SPECIFICATIONS. DOWEL BARS SHALL BE COATED IN CONFORMANCE WITH SUBSECTION 505.2.6 OF THE STANDARD SPECIFICATIONS.
2. DOWELL BARS SHALL BE INSTALLED PARALLEL TO THE PAVEMENT SURFACE.
3. THE C2 JOINTS MAY BE SKEWED (30 DEGREES MAX.) AS DIRECTED BY THE CONSTRUCTION ENGINEER TO FIT THE SKEW OF THE CRACK OR JOINT TO BE REPAIRED.
4. STANDARD SPECIFICATIONS ON THIS DETAIL REFER TO STATE OF WISONCSIN DEPARTMENT OF TRANSPORTATION STANDARD SPECIFICATIONS FOR ROAD AND BRIDGE CONSTRUCTION - LATEST EDITION.
5. THE PREPARATION OF FOUNDATION FOR FULL DEPTH CONCRETE PAVEMENT REPAIR SHALL BE IN ACCORDANCE WITH SUBSECTION 211.4.4 OF THE STANDARD SPECIFICATIONS.
6. PRIOR TO THE PLACEMENT OF CONCRETE PAVEMENT AND/OR CONCRETE BASE IN THE TRENCH AREA, THE EXISTING PAVEMENT SHALL BE DRILLED TO A DEPTH OF 6 INCHES AT TWO FOOT INTERVALS, ON ALL SIDES. EACH HOLE SHALL BE DRILLED AT A MID-POINT OF THE DEPTH OF THE EXISTING CONCRETE PAVEMENT. NO. 6 (3/4 INCH DIAMETER) EPOXY COATED TIE BARS, 12 INCHES LONG, SHALL THEN BE FIRMLY EMBEDDED IN THE PREDRILLED HOLES. THE SUBGRADE SHALL BE RECOMPACTED IMMEDIATELY AFTER THE HOLES ARE DRILLED AND PRIOR TO THE TIE BARS BEING PLACED. ANY BARS THAT ARE DEEMED LOOSE BY THE CONSTRUCTION ENGINEER SHALL BE WEDGED IN TIGHTLY USING CONCRETE NAILS.
7. A QUICK SETTING NON-SHRINKING HIGH STRENGTH MORTAR OR EPOXY SHALL BE USED TO GROUT DOWEL BARS INTO THE DRILL HOLES. THE DRILL HOLES SHALL BE THOUROUGHLY CLEANED OF DRILLING DUST, DEBRIS AND EXCESS MOISTURE PRIOR TO GROUTING. AMPLE MORTAR OR EPOXY SHALL BE PLACED IN THE BACK OF THE HOLE AND THE BAR INSERTED IN SUCH A MANNER THAT IT IS UNIFORMLY COATED WITH MORTAR OR EPOXY AND ALL VOIDS WITHIN THE DRILL HOLE ARE COMPLETELY FILLED. THE MORTAR OR EPOXY CONSISTENCY SHALL BE THICK ENOUGH TO PREVENT EXCESSIVE FLOW FROM THE INSTALLATION.

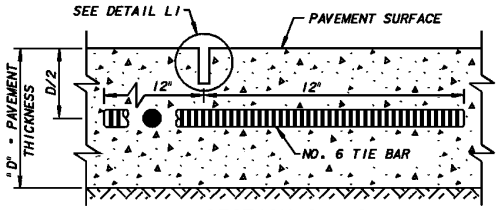

SECTION C - C
SAWED JOINT

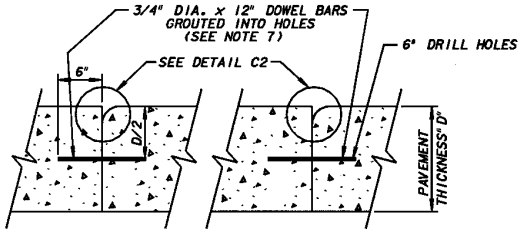

SECTION D - D

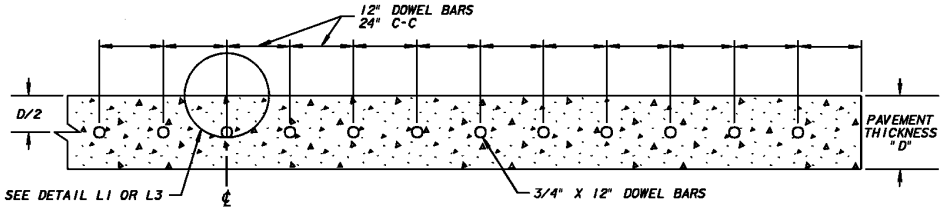

SECTION E - E
DOWEL BAR SPACING ABUTTING EXISTING PAVEMENT

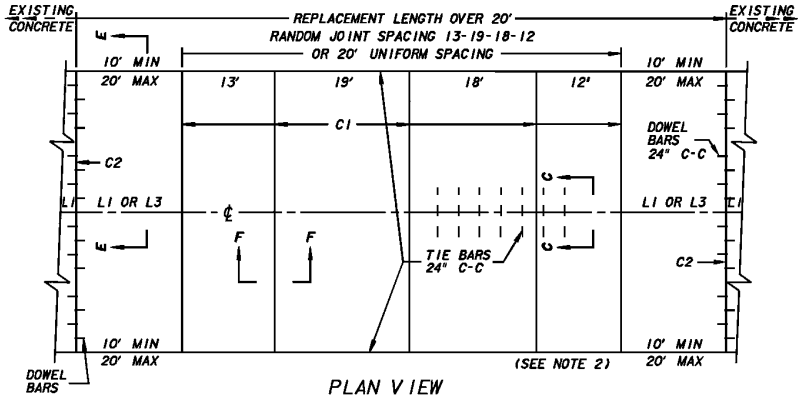

PLAN VIEW
CONCRETE PAVEMENT REPLACEMENT

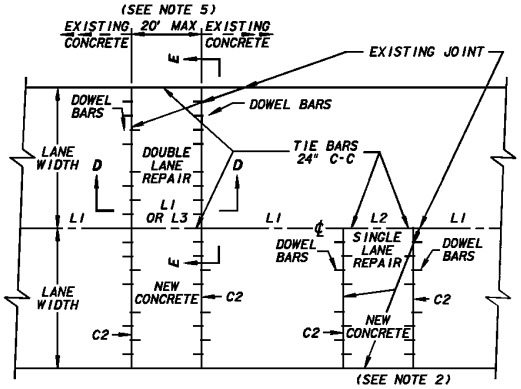

PLAN VIEW
CONCRETE PAVEMENT REPAIR

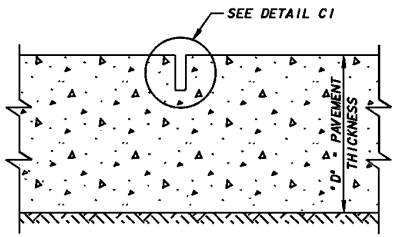

SECTION F - F
CONTRACTION JOINT

This is the "Supplemental Schedule" of FIXED PRICES Referenced to in Chapter 2.6.0 of the Specifications

SPECIFICATION REFERENCE

1987 Water Specifications	ITEM	UNIT	PRICE
5.1.11	Water Service Alteration:		
	Up to 1" Diameter	Each	$ 450.00
	Over 1" Diameter	Each	Agreed Upon
3.5.6	Sawing Concrete Pavements Full Depth With Water Cooled Saw Total footage of 0 to 200 feet	Lump Sum	400.00
	Each additional foot Over 200 feet	Lineal Ft.	2.00
5.1.11	Reconnecting Existing House Sewers and Drains	Lineal Ft.	55.00
5.2.4	Sheathing and Bracing Left in Place (Includes Labor & Material)		Agreed Upon
	Concrete Cap – All Sizes of Pipe	Cubic Yd.	200.00
	Concrete Cradle – All Sizes of Pipe	Cubic Yd.	200.00
5.16.17	3" Thick Bituminous Premix/		Base Price
5.16.18	Asphaltic Concrete		100.00
		Square Yd.	25.00 + Base
5.19.2	8" Thick Class A Concrete Base (Includes Removals):		
	Up to 20 sq.yds.	Square Yd.	45.00
	Over 20 sq.yds.	Square Yd.	35.00
5.19.2	8" Thick Class A Concrete Surface (Includes Removals):		
	Up to 20 sq.yds.	Square Yd.	50.00
	Over 20 sq.yds.	Square Yd.	40.00
5.19.2	5" Thick Class C Concrete Sidewalk (Including removals)	Square Ft.	7.00
5.19.2	7" Thick Class A Concrete Driveway (Includes Removals)	Square Ft.	9.00

SPECIFICATION REFERENCE

1987 Water Specifications	ITEM		UNIT	PRICE
5.19.2	3" Thick Class A Concrete Shim		Square Yd.	20.00
	Rock Excavation		Cubic Yd.	Time & Material
5.16.5	Slurry:			
	Up to 5 Cu. Yds.		Cubic Yd.	100.00
	Over 5 Cu. Yds.		Cubic Yd.	60.00
	Place All Types of Concrete Curb & Gutter (Includes Removals):			
	Up to 50 Lineal Ft.		Lineal Ft.	40.00
	Over 50 Lineal Ft.			Agreed Upon
	Dowel Bars		Each	7.00
	Lawn Replacement:	Type A	Square Yd.	7.00
		Type B	Square Yd.	4.00
		Type C	Square Yd.	3.00

Repair of Water Main Break During Construction
Contractor shall repair all water main breaks on existing mains, which occur during normal working hours. The Water Dept. will operated the valves for shut-off.

Where repairs are made on mains that will be abandoned, the Contractor shall furnish all repair material. The Contractor shall have a minimum of 2 repair clamps, 2 dual purpose sleeves, and 1 length of ductile iron, cast iron or PVC pipe of the existing pipe size on the job before the job starts and at all times thereafter. This repair material need not conform to Water Main Installation Specifications.

When repairs are required on mains that will remain in service, all repair materials shall be picked up by the Contractor at the pipeyard and their cost to be billed to the Contractor only if the break was caused by his negligence.

All breaks occurring as a result of the negligence of the Contractor shall be repaired at his own expense. Where the break occurs while exercising normal care, the Contractor will be compensated for the repair of each break as follows:

a.	Where the break can be repaired without replacing pipe, the Contractor will be paid.	$ 1,000.00
b.	Where the break can be repaired without replacing pipe And the Contractor must excavate, the Contractor will be paid.	$ 1,800.00
c.	Where a piece of pipe must be removed and replaced the Contractor will be paid	Time and Material

Water Services or branches damaged as a result of the construction work shall be repaired by the Contractor at his own cost.

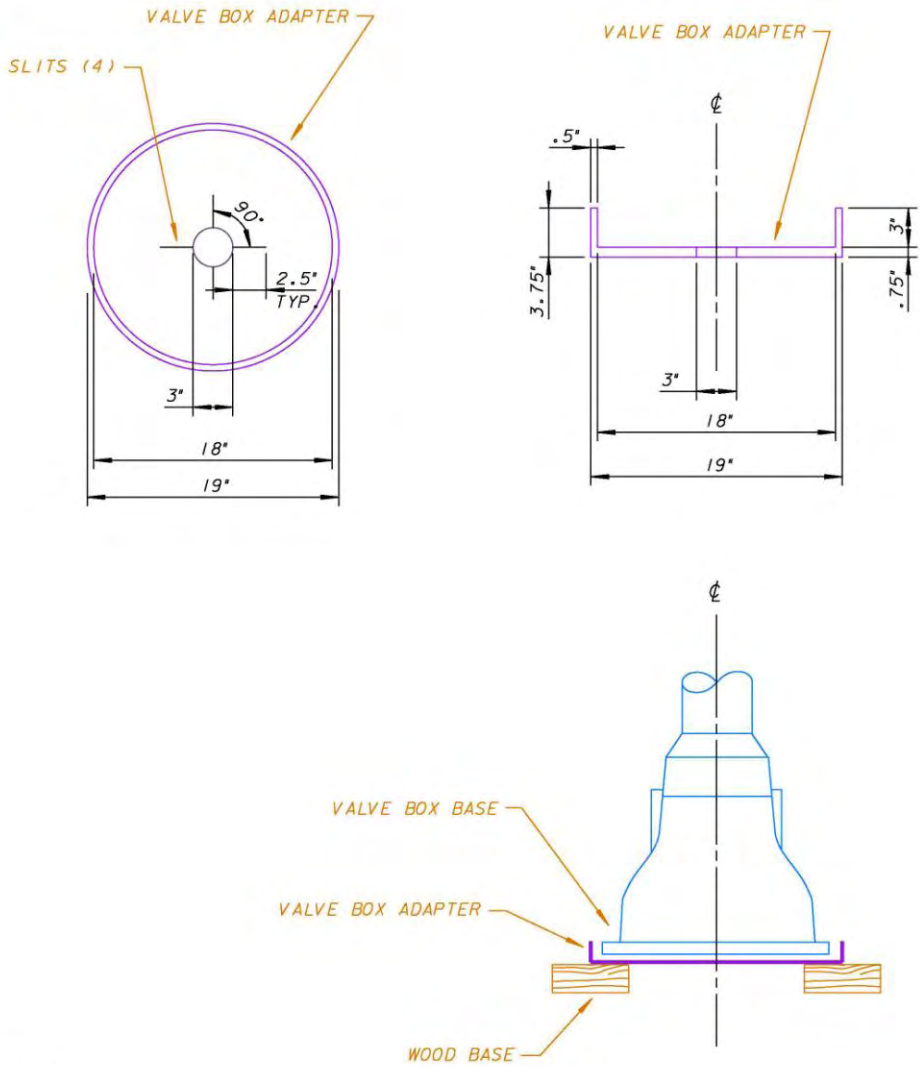

NOTES

- VALVE BOX BASE ADAPTER TO BE FURNISHED AND INSTALLED BY CONTRACTOR UNDER THE VALVE BOX BASE
- VALVE BOX BASE ADAPTER ADAPTOR II AS MANUFACTED BY ADAPTORS INC. OR AN APPOVED EQUIVALENT
- THIS ADAPTER/VALVE BOX ASSEMBLY TO BE USED ONLY WITH GATE VALVES
- ADAPTER/VALVE BOX ASSEMBLY SHALL BE ADJUSTED OVER THE GATE VALVE JUST TO CLEAR THE OPERATING NUT.
- ADAPTER/VALVE BOX ASSEMBLY SHALL HAVE A SNUG FIT WITH THE BONNET ASSEMBLY.

APPROVED	DATE
	6-13-2012
MAINS DESIGN ENGINEER	6-13-2012
CHIEF DESIGN ENGINEER	6-13-2012
SPECIAL DEPUTY COMMISSIONER OF PUBLIC WORKS	

Milwaukee Water Works — Water Engineering, Department of Public Works

VALVE BOX BASE ADAPTER

CHECKED BY	DRAWN BY	DATE	DRAWING NO.
E.J.F.	K.S.R.	06-13-12	VBBA1

20. Water Main Disinfection Process

This process shall supersede chapter 5.18.0 of the water main installation specifications dated January 2, 1987, entitled "Safe Drinking Water Procedures and Tests". The contractor shall be required to disinfect all proposed water mains in this contract using either the continuous feed method per AWWA C651-99, Sec. 4.4.3 or the tablet method detailed below.

If the contractor chooses the continuous feed method, the water main shall be chlorinated following a successful pressure test. After chlorination (>10ppm chlorine residual), the contractor shall flush the super-chlorinated water out of the main and de-chlorinate the discharged water. The contractor shall then flush the water main for a period of 24 hours and begin the sampling process. The sampling process shall be done as detailed in step 6 of the tablet method. After successful water samples are obtained, the contractor shall begin the wet connection process. Following the first wet connection, the contractor shall flush the water main overnight prior to reconnecting services or making the next wet connection.

Tablet Method

1) The contractor shall supply and place calcium hypochlorite tablets in the water main as it is being installed. The placement of the tablets shall be per AWWA C651-99, Sec. 4.4.2. The tablets shall be attached to the top of the pipe with a food-grade adhesive (Loctite Gasket Sealant No. 2 or DAP 100% silicone rubber sealant or approved equal). The calcium hypochlorite tablets shall conform to AWWA C651-99, Sec. 4.1.3.

2) When installation is complete, the contractor shall fill the main with water at a rate to insure that the water within the main will flow at a velocity no greater than 1 ft/s (160gpm fill rate for an 8" water main). Precautions shall be taken to ensure that air pockets are eliminated. This water shall remain in the pipe for 24 hours.

3) Following the 24-hour waiting period, the construction section shall test for a chlorine residual of at least 5ppm at each end of the water main.

4) The contractor shall flush the super-chlorinated water out of the main. The contractor shall de-chlorinate the discharged water. The de-chlorinator shall be the "H2O Neutralizer" by Measurement Technologies, 704 – 228th Avenue NE, #601, Sammamish, WA 98074, (425) 868-8511, or equal.

5) Whether the chlorine residual was less than or greater than 5ppm, the construction section shall then pressure test the water main.

6) A) If the water main passed the pressure test and the chlorine residual was greater than 5ppm, then the contractor shall flush the water main for a period of 24 hours. Following the 24-hour flushing period, two samples shall be collected from the new main. One sample will be for a bacteriological test. The other sample will be tested for chlorine residual and turbidity. If the first samples are unsuccessful, another set of samples will be collected following an additional 24 hours of flushing. If the second set of samples is unsuccessful, re-chlorination will be required (See step 7). The contractor shall begin the wet connection process after obtaining successful samples. Following the first wet connection, the contractor shall flush the water main overnight prior to reconnecting services or making the next wet connection.

   B) If the water main did not pass the pressure test, then the contractor shall make the necessary repairs and the water main shall be re-pressure tested. Following the successful pressure test, the contractor shall fill the water main. The construction section shall then chlorinate the water main by the continuous feed method per AWWA C651-99, Sec. 4.4.3. After successful chlorination (>10ppm chlorine residual), the contractor shall flush the super-chlorinated water out of the main and de-chlorinate the discharged water. The contractor shall then flush the main for a period of 24 hours. Following the 24-hour flushing period, two samples shall be collected from the new main. One sample will be for a bacteriological test. The other sample will be tested for chlorine residual and turbidity. If the first samples are unsuccessful, another set of samples will be collected following an additional 24 hours of flushing. If the second set of samples is unsuccessful, re-chlorination will be required (See Step 7). The contractor shall begin the wet connection process after obtaining successful samples. Following the first wet connection, the contractor shall flush the water main overnight prior to reconnecting services or making the next wet connection.

C) If the water main passed the pressure test but the chlorine residual was less than 5ppm, then the contractor shall fill the water main and the construction section shall chlorinate the water main by the continuous feed method per AWWA C651-99, Sec. 4.4.3. After successful chlorination, the contractor shall flush the super-chlorinated water out of the main and de-chlorinate the discharged water. The contractor shall then flush the main for a period of 24 hours. Following the 24-hour flushing period, two samples shall be collected from the new main. One sample will be for a bacteriological test. The other sample will be tested for chlorine residual and turbidity. If the first samples are unsuccessful, another set of samples will be collected following an additional 24 hours of flushing. If the second set of samples is unsuccessful, re-chlorination will be required (See Step 7). The contractor shall begin the wet connection process after obtaining a successful sample. Following the first wet connection, the contractor shall flush the water main overnight prior to reconnecting services or making the next wet connection.

7) If acceptable bacteriological, chlorine residual, and turbidity samples cannot be obtained in two attempts, the construction section shall re-chlorinate the water main by the continuous feed method per AWWA C651-99, Sec. 4.4.3. After successful chlorination, the contractor shall flush the super-chlorinated water out of the main and de-chlorinate the discharged water. The contractor shall then flush the main for a period of 24 hours. Following the 24-hour flushing period, two samples shall be collected from the new main. One sample will be for a bacteriological test. The other sample will be tested for chlorine residual and turbidity. If the first samples are unsuccessful, another set of samples will be collected following an additional 24 hours of flushing. If the second set of samples is unsuccessful, the contractor will be required to excavate the water main to remedy the problem. If excavation is required, another successful pressure test will be needed prior to re-chlorination. The new water main connections to the distribution system cannot be made until successful samples are obtained.

8) Note: the construction section shall take the samples to the Linnwood Plant testing lab. A Bac-T test shall be run on one of the samples. The other sample shall be tested for a chlorine residual of less than 2ppm and turbidity NTU of less than 5.

21. Erosion Control Special Provision

The erosion control item on this contract shall include an Erosion Control Implementation Plan (ECIP). The ECIP shall be submitted to Mr. Thomas Moore of the Milwaukee Water Works, Water Engineering Section; Zeidler Municipal Building; 841 North Broadway, Rm. 403; Milwaukee, WI 53202, at least ten (10) working days prior to the scheduled start of work on the contract. The Milwaukee Water Works shall review the ECIP for meeting technical standards and notify the contractor if the plan meets the standard within seven (7) working days. Work shall not start until the ECIP meets technical standards. The contractor shall be required to have a copy of the ECIP on the job site for the entire duration of the contract. The ECIP shall include, but not be limited to:

1) A completed “Erosion Control Implementation Plan” application (Attached)
2) A plan showing all locations of erosion control devices and other Best Management Practices (BMP’s).
3) A written description of all erosion control devices and BMP’s to be used.
4) A written schedule of installing erosion control devices.
5) A written schedule of construction operations related to implementing erosion control devices and BMP’s.
6) A written maintenance schedule for all erosion control devices and BMP’s.

All costs associated with implementing the erosion control plan, such as furnishing, installing, maintaining, and removal of erosion control devices shall be included in the unit price bid for erosion control. There shall be no additional compensation for revising the ECIP or utilizing additional BMP’s in order to comply with Chapter 290 of the City of Milwaukee Code of Ordinances. If the contractor is found not in compliance with the ECIP, the contractor will be subject to the penalties included in Chapter 290.

CITY OF MILWAUKEE

DEPARTMENT OF PUBLIC WORKS

Erosion Control Implementation Plan

The Erosion Control Implementation Plan (ECIP) is an effort to conform to Chapter 290 of the Code of Ordinances. The ECIP shall be submitted to the City Engineer at least ten (10) working days prior to the start of any construction activity. **NO** construction activity may begin without an ECIP approved by the Department of Public Works.

FOR OFFICE USE ONLY		**Application No.** _____
Meets Technical Standards ☐	**Does Not Meet Technical Standards** ☐	
Date Application Received: _____	**Date all Information Received:** _____	**Reviewed By:** _____
Fee Paid ☐	**Check No. :**	

	APPLICANT (Contractor)			**Erosion Control Consultant/Engineer**
Name				
Address				
City/State/Zip				
Phone	( )			( )
Relationship to Project				

Principal Contact Responsible for Installation, Maintenance and removal of erosion control measures :

Name			
Phone	( )	**Fax**	( )
Type of Construction			
Proposed Construction Start Date			
Any public waterway within 1,000 feet of any location.	**YES** ☐ **NO** ☐		

ECIP REQUIREMENTS:

- Attach a description of erosion control devices and other best management practices to be utilized on the project(s). The description should include, but not be limited to: type of products; i.e., *Geotex Fabric*, Manufacturer's Names and Types of Equipment (i.e.; self-contained power broom)
- Attach the intended timetable and sequence of construction activities.
- Attach the intended timetable and sequence of best management practices and devices to be implemented for erosion control.
- Attach a site plan showing approximate locations(s) of erosion control devices. The site plan shall be at a scale of no less than 1" = 100'. The plan shall also indicate the direction of runoff flow, the construction limits, temporary stockpiles and any other significant information.

Upon receipt of all required information, the ECIP will be reviewed within ten (10) working days and all involved parties will be notified whether or not the plan meets technical standards.

Applicant's Signature: _____ **Date:** _____

City of Milwaukee

Department of Public Works

Erosion Control – Simplified Checklist

Site Characteristics

The Contractor may utilize the City of Milwaukee plan set for this contract or provide a site diagram. The following information shall be included:

- The scale of the drawing (not less than 1"=100')
- A north arrow (towards the top or to the right of the plan)
- The name of all project streets and streets abutting the project
- Approximate location of all existing and proposed drainage structures
- The direction of water runoff (flow arrows)
- The limits of construction
- The approximate location of all erosion control devices
- Areas where vegetation will be disturbed and re-established
- For non right-of-way projects, locate watershed areas of overland and concentrated flow. Include area sizes in acres and representative soil type of disturbed areas.

Erosion Control Practices

- Storm water inlet protection:
  1. Any structure that is connected to the drainage system shall be protected from sediment entering the system.
  2. All storm water inlets adjacent to and on the project site shall have type M inlet protection.
  3. If the frame of any storm water inlet is removed or openings are in the masonry and storm water may enter, the protection device should be changed to a type R.
  4. Any manholes that the frame is removed or openings are in the masonry and storm water may enter shall have a type R erosion control.

- Temporary storage piles:
  1. Storage of erodable materials (i.e. gravel) should not be closer than 25 feet from a roadway or drainage way. If placed in the right-of-way, the stockpiles shall not be placed closer than 100 feet of an unprotected storm drain. Covering or surrounding with straw bales, silt fence or other measures, shall control erosion from stockpiles existing less than ten (10) days. Stockpiles existing longer than ten (10) days shall be seeded and mulched.

- Tracking:
  1. The project and surrounding roadways shall be kept free from materials that may enter the drainage system. Tracked roadways shall be cleaned immediately by means other than flushing with water.
  2. Tracking pads at ingress and egress points may be used to help control tracking of sediment onto roadway surfaces. The pads shall be constructed with a minimum of 2-inch size stone, 8-feet wide and a minimum of 50-feet long.
  3. The project roadways should be cleaned on a daily basis. Cleaning shall be done by means other than flushing with water.

- Location of sediment controls (i.e. silt fence, straw bales, waddles and other planned practices) that minimize the amount of sediment from leaving the site:
  1. The *"Wisconsin Construction Site Best Management Practices Handbook"* should be consulted.

- Dewatering:
  1. Water containing particles of 100 microns or greater shall be treated by use of temporary sediment basins or other devices designed to remove particles of 100 microns or greater.

- Vegetation:
  1. The construction activity should be staged as to limit the amount of time vegetation is stripped and reestablished.

- Maintenance:
  1. A schedule for maintaining all erosion control devices is necessary to maximize the effort of limiting sediment from entering the drainage system.
  2. All devices should be checked and maintained after a rainfall event that totals 0.50 inches.
  3. All devices should be checked and maintained at least once a week.

22. Bicycle Racks

The City of Milwaukee Street Maintenance Section will be responsible for the removal and replacement of bicycle racks impacted by water main installation. The Contractor, in coordination with City Inspection Staff, must notify Mr. Jeffery Dellemann, Street & Bridge Services Manager, at 414-286-2078, a minimum of five (5) days prior to construction activities impacting the bicycle rack.

The Contractor is responsible for any damage to bicycle racks due to neglecting to have them relocated.

23. Mechanical Joint Restraint (MJ Field Lok®) Revised 4/1/10

The intent of this supplemental installation specification is to identify the joint restraint options allowed by the City of Milwaukee, Milwaukee Water Works, for use on water main and fittings 4" – 16" in diameter. (For additional requirements, see section 11 of the Standard Plan Notes Regarding Water Main Construction and Section 5.3.19 of City of Milwaukee Water Main Installation Specifications.)

Mechanical Joint – Mechanical joints shall be restrained where required by City specifications or construction plans, either by the use of concrete buttresses, anchors, strapping, Tyton joint restraint gaskets (Field Lok 350®), or MJ Field Lok ® glands and gaskets. *(Note: A combination of restraint alternatives may be required to achieve the proper joint restraint at the mechanical joint fittings as well as the specified restrained length.)*

MJ Field Lok® application Notes

1) MJ Field Lok® may be utilized in conjunction with standard joint restraint methods currently approved (anchors, buttresses, strapping, Field Lok 350®) for use in the MWW system to achieve the proper joint restraint.

2) The contractor shall complete the "Optional Joint Restraint Application" included in the contract documents, and submit this form at the same time as the Erosion Control Implementation Plan. The intent of requirement is to insure the proper installation of the MJ Field Lok® and Field Lok® products.

3) Pre-Approval (completed form) must be given to the contractor prior to installation.

4) The approval from the City of Milwaukee to use the Field Lok products may require a preconstruction meeting to discuss the intended use and locations.

5) The City of Milwaukee may also require the contractor to submit a restraint plan.

6) The joint restraint gland and gasket shall be suitable for use with AWWA C110 Fittings.

7) The joint restraint system shall be provided as a kit containing all necessary accessories for proper assembly and installed per manufacturer's specifications.

8) The restraint system shall be completely integral to the gasket, requiring only standard mechanical joint assembly techniques.

9) The restraining system for Ductile Iron shall be pressure rated to 350 psi.

10) The restraining system shall be rated in accordance with the performance requirements of ANSI/AWWA C111/A21.11 Rubber Gasket Joints for Ductile-Iron Pressure Pipe and Fittings.

11) MJ Field Lok® is approved for use on Ductile Iron water main only, and shall not be utilized on Cast Iron. MJ Field Lok® is not approved for use on hydrant branches, due to the MWW oversized hydrant shoe.

12) Marking Tape

A. Description: Marking tape shall be Non-detectable, polyethylene (suitable for direct bury) to be installed when MJ Field Lok® or Field Lok 350 ®restraint is utilized as restraint alternatives.

B. Material: Marking tape shall be made of virgin polyethylene, non-detectable type. The physical properties of the tape shall be in accordance with ASTM D882, ASTM D671, ASTM D2103, ASTM D2578.

C. Design: Marking tape shall have the following properties

a. Color – Blue per APWA color code
b. Width – 3 inches minimum
c. Text – "CAUTION RESTRAINED JOINT BURIED BELOW"
d. Text shall continually repeat every 2 feet
e. Text color – Black
f. Text Size – 1 inch minimum
g. Thickness – 4mil minimum

D. Installation: Marking tape shall be placed along (longitudinally) the top of the water main following the installation of the required poly wrap for pipe and fittings, and taped to the poly wrap (around the water main) at 4 ft intervals for the limits of the installed joint restraint. The tape shall identify the <u>complete</u> restrained length.

E. Acceptable Brands

a. T. Christy's Enterprises Inc. – Non-Detectable Marking Tape

Contractor to submit documentation on products from manufacturers other than listed above.

CITY OF MILWAUKEE

DEPARTMENT OF PUBLIC WORKS

Optional Joint Restraint Request

Use of Mechanical Joint Field Lok® and Field Lok 350® joint restraints will not be allowed without an approved application. (The intent of this submittal is to insure proper installation of the MJ Field Lok® and Field Lok® products.)

FOR OFFICE USE ONLY

Date Application Received: _____

Reviewed By: _____

- ☐ **Joint Restraint Not Acceptable**
- ☐ **Meeting Required prior to Acceptance**
- ☐ **Restraint Plan Required**
- ☐ **Joint Restraint Acceptable**

	APPLICANT (Contractor)		
Company Name			
Contact Name			
Address			
City/State/Zip			
Phone	( )		
Fax	( )		
	PROJECT DESCRIPTION		
DPW Contract			

PROJECT LOCATION(S)	**PLAN FILE NUMBER(S)**

- Identify all projects that approval is being requested in the space provided.
- All joint restraint shall meet the minimum requirements found in the City of Milwaukee Specifications for Water Main Installation.
- The approval from the City of Milwaukee to use the Field Lok products may require a preconstruction meeting to discuss the intended use and locations.
- The City of Milwaukee may also require the contractor to submit a restraint plan.
- By signing this application I acknowledge the following:
  - I have read and understand the City of Milwaukee specification regarding the use and installation of the MJ Field Lok® and Field Lok® products.
  - I have read and understand the manufacturer's recommended installation instructions.
  - Additional standard restraints may be required in conjunction with the installation of the MJ Field Lok® and Field Lok® products.
  - The approval for the use of MJ Field Lok® and Field Lok® products, does not supersede the contractor's responsibility for installing the proper restraint as identified in the plans and specifications.

Applicant's Signature: _____ **Date:** _____

Milwaukee **Water Works**

Water Engineering

Department of Public Works

R-1
REVISED: 02-14-10

MECHANICAL JOINT RESTRAINT (4"–16")

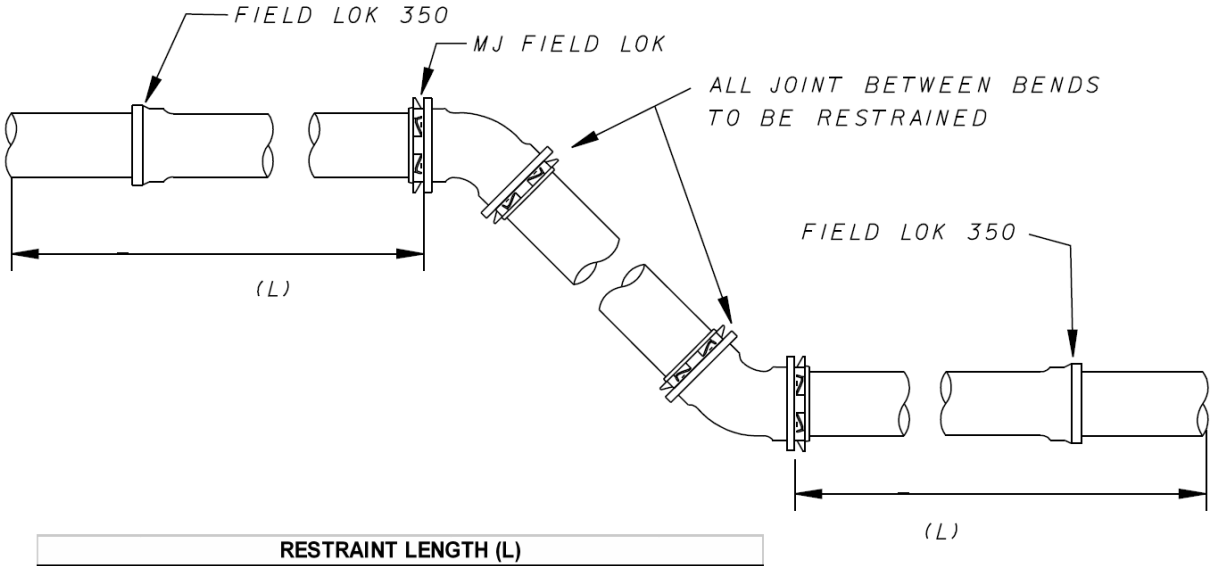

RESTRAINT LENGTH (L)						
	BENDS		OFFSETS			
PIPE	DEGREE OF BEND		OFFSET DIMENSION			
DIA.	22-1/2	45	6"	12"	18"	24"
4"	6'	12'	10'	14'	16'	N/A
6"	8'	16'	12'	16'	20'	35'
8"	12'	20'	16'	22'	24'	35'
12"	15'	26'	18'	24'	27'	35'
16"	18'	36'	19'	26'	30'	N/A

NOTES:

1) MATERIAL: JOINT RESTRAINT FOR MECHANICAL JOINT FITTINGS SHALL BE THE MJ FIELD LOK ® GLAND AND GASKET.

2) THE JOINT RESTRAINT GLAND AND GASKET SHALL BE SUITABLE FOR USE WITH AWWA C110 FITTINGS.

3) NOT TO BE USED ON HYDRANT BRANCHES..

4) THE RESTRAINT SYSTEM SHALL BE COMPLETELY INTEGRAL TO THE GASKET, REQUIRING ONLY STANDARD MECHANICAL JOINT ASSEMBLY TECHNIQUES.

5) THE RESTRAINING SYSTEM FOR DUCTILE IRON SHALL BE PRESSURE RATED TO 350 PSI.

6) THE RESTRAINING SYSTEM SHALL BE RATED IN ACCORDANCE WITH THE PERFORMANCE REQUIREMENTS OF ANSI/AWWA C111/A21.11 RUBBER GASKET JOINTS FOR DUCTILE-IRON PRESSURE PIPE AND FITTINGS.

7) MARKING TAPE REQUIRED "CAUTION RESTRAINED JOINT BURIED BELOW".

8) WHEN CONNECTING TO EXISTING WATER MAIN OR RESTRAINED LENGTH (L) IS NOT ABLE TO BE ACHIEVED, ADDITIONAL RESTRAINT WILL BE NECESSARY. (ANCHOR BLOCKS, BUTTRESSES, STRAPPING)

9) DRAWING NOT TO SCALE

10) FOR ADDITIONAL SPECIFICAITON NOTES SEE THE STANDARD PLAN NOTES REGARDING WATER MAIN CONSTRUCTION.

file - MJ Field Lok.dgn

Milwaukee Water Works

Water Engineering

Department of Public Works

R-2

REVISED: 02-14-10

RESTRAINT STANDARDS (4–16")
WATER MAIN END CONNECTIONS

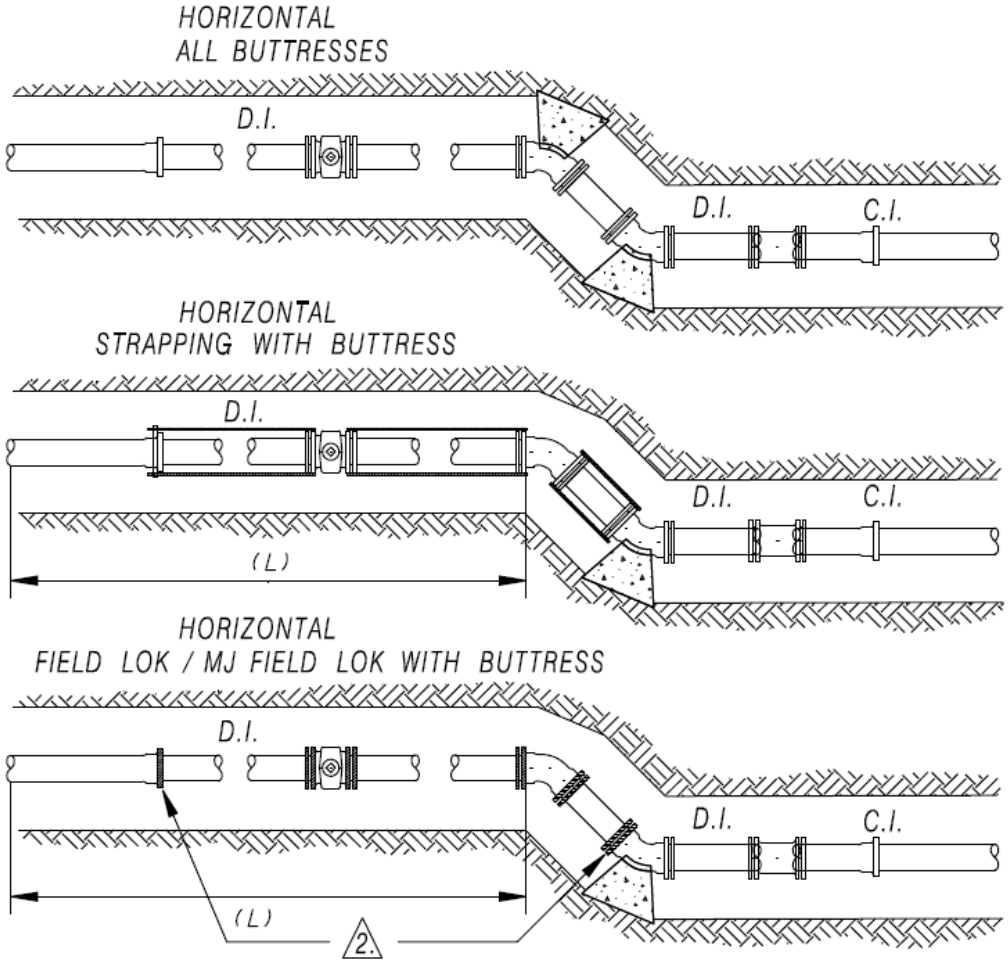

1. ALL BUTTRESSING PER DWG. NO. 7
2. ALL ANCHOR BLOCKS PER DWG. NO. 10
3. RESTRAINED LENGTH "L" PER DWG. NO. 16

2. ALL JOINTS WITHIN LIMITS TO BE RESTRAINED WITH FIELD LOK 350® OR MJ FIELD LOK®

file = MJ Field Lok.dgn

Milwaukee Water Works

Water Engineering

Department of Public Works

R-3

REVISED: 02-24-10

RESTRAINT STANDARDS (4–16")
WATER MAIN END CONNECTIONS

VERTICAL #1 (4–8")

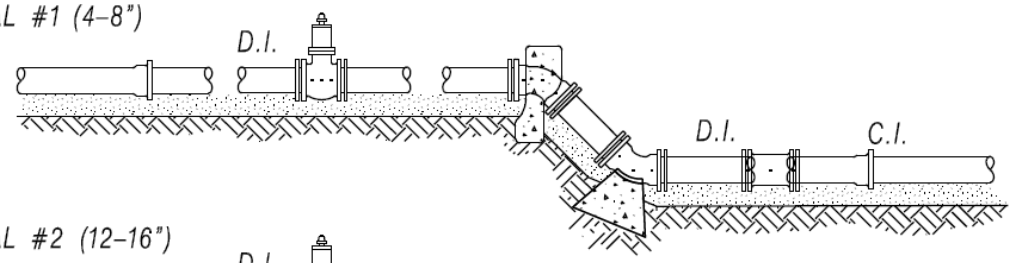

VERTICAL #2 (12–16")

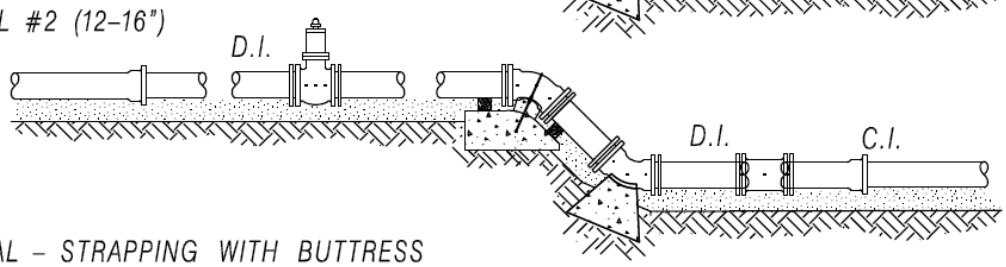

VERTICAL – STRAPPING WITH BUTTRESS

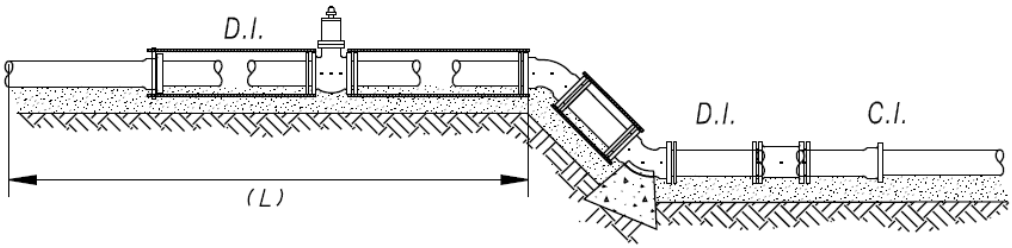

VERTICAL – FIELD LOK / MJ FIELD LOK WITH BUTTRESS

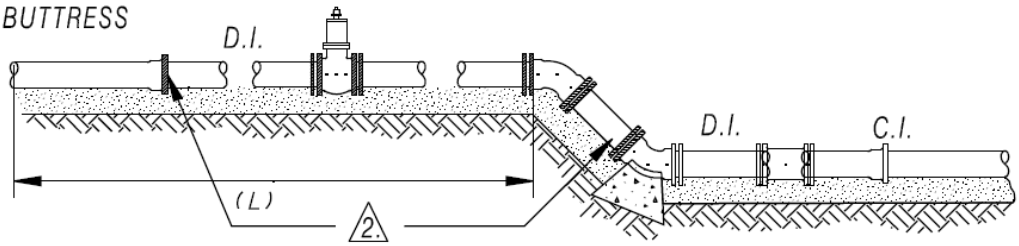

1. ALL BUTTRESSING PER DWG. NO. 7
2. ALL ANCHOR BLOCKS PER DWG. NO. 10
3. RESTRAINED LENGTH "L" PER DWG. NO. 16

2. ALL JOINTS WITHIN LIMITS TO BE RESTRAINED WITH FIELD LOK 350® OR MJ FIELD LOK®

file = MJ Field Lok.dgn

Milwaukee Water Works

Water Engineering

Department of Public Works

R-4

REVISED: 02-24-10

RESTRAINT STANDARDS (4–16")
DUCTILE IRON WATER MAIN

HORIZONTAL ALL FIELD LOK /MJ FIELD LOK

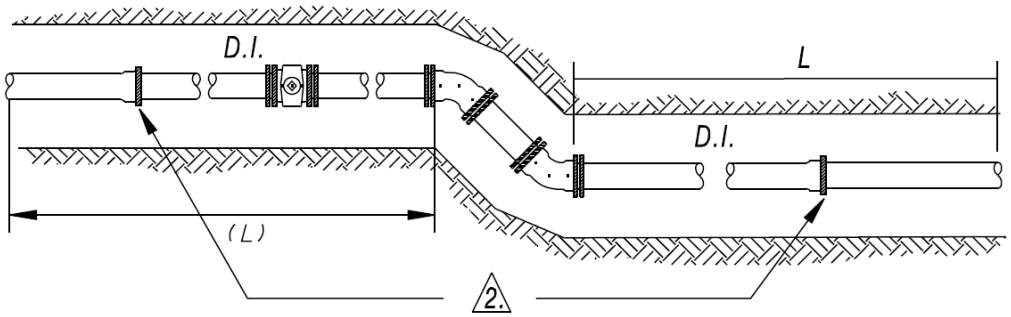

VERTICAL – ALL FIELD LOK /MJ FIELD LOK

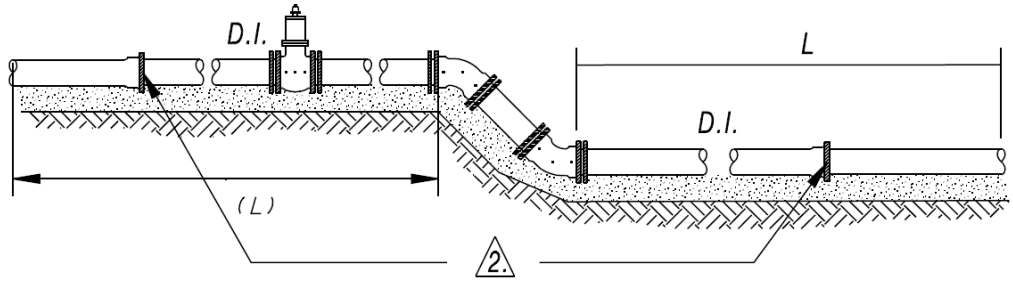

1. ALL BUTTRESSING PER DWG. NO. 7
2. ALL ANCHOR BLOCKS PER DWG. NO. 10
3. RESTRAINED LENGTH "L" PER DWG. NO. 16

2. ALL JOINTS WITHIN LIMITS TO BE RESTRAINED WITH FIELD LOK 350® OR MJ FIELD LOK®

file = MJ Field Lok.dgn

Milwaukee Water Works

Water Engineering

Department of Public Works

R-5

REVISED: 02-24-10

RESTRAINT STANDARDS (4–16")
VERTICAL OFFSET

VERTICAL #1 (4–8")

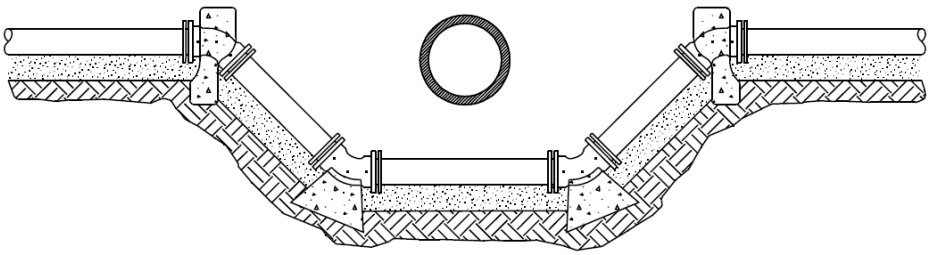

VERTICAL #2 (12–16")

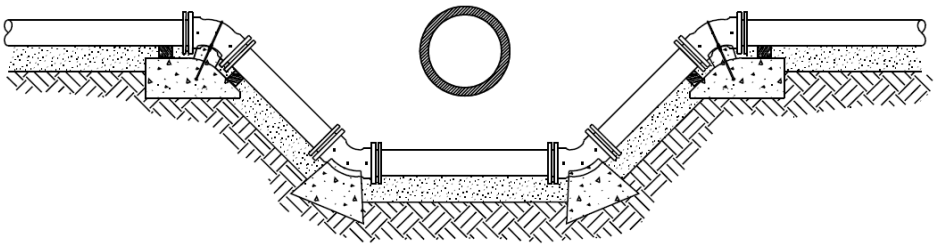

VERTICAL – STRAPPING WITH BUTTRESS

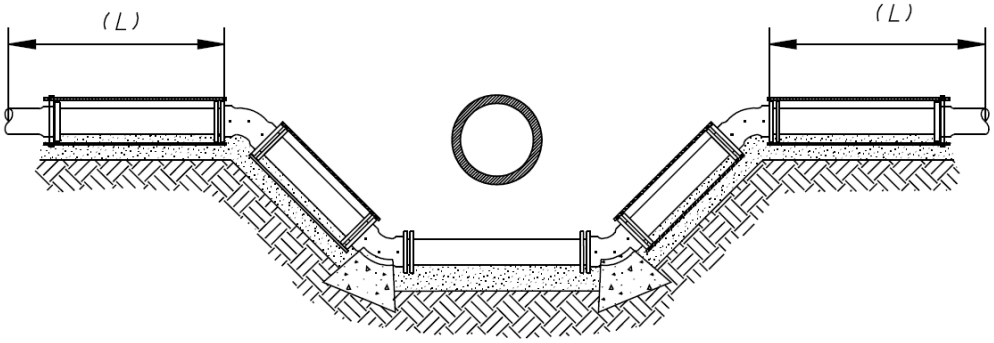

1. ALL BUTTRESSING PER DWG. NO. 7
2. ALL ANCHOR BLOCKS PER DWG. NO. 10
3. RESTRAINED LENGTH "L" PER DWG. NO. 16

2. ALL JOINTS WITHIN LIMITS TO BE RESTRAINED WITH FIELD LOK 350® OR MJ FIELD LOK®

file = MJ Field Lok.dgn

Milwaukee Water Works

Water Engineering

Department of Public Works

R-6

REVISED: 02-24-10

RESTRAINT STANDARDS (4–16")
VERTICAL OFFSET

VERTICAL – FIELD LOK / MJ FIELD LOK WITH BUTTRESS

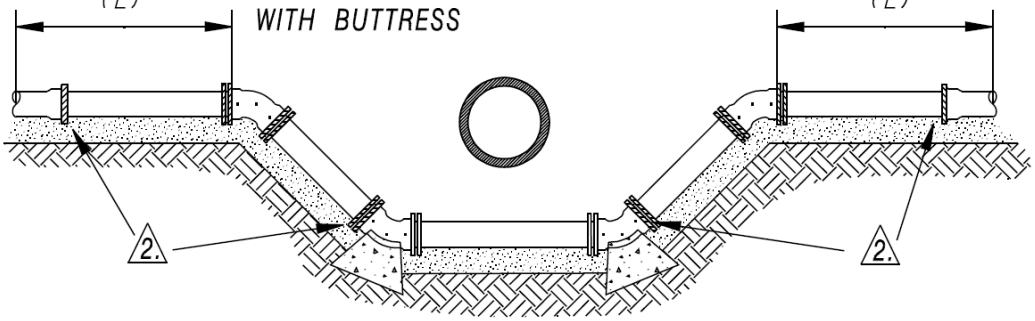

VERTICAL – ALL FIELD LOK /MJ FIELD LOK

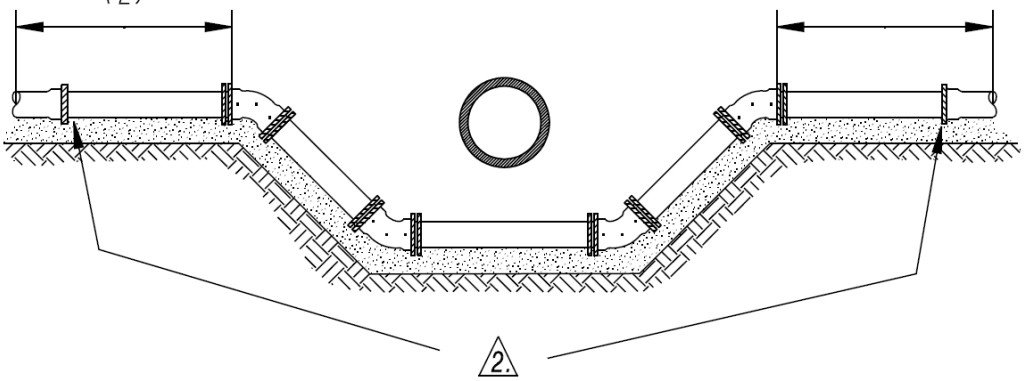

1. ALL BUTTRESSING PER DWG. NO. 7
2. ALL ANCHOR BLOCKS PER DWG. NO. 10
3. RESTRAINED LENGTH "L" PER DWG. NO. 16

2. ALL JOINTS WITHIN LIMITS TO BE RESTRAINED WITH FIELD LOK 350® OR MJ FIELD LOK®

file = MJ Field Lok.dgn

Example Post Contract Award Letter

Contractor X
XXXXXXXXX, INC
(XXX)XXX-XXXX
XXXX Street
Somewhere, WI 5XXXX

City of Milwaukee - Milwaukee Water Works
Water Main Replacements

Project Locations

The City of Milwaukee has recently awarded our firm a water main replacement contract which includes the above projects. The City will provide you with another notice prior to work starting on your block.

This work will include removing pavement, excavating a trench, and installing a new water main. After pressure testing for leaks and disinfecting the pipe, the new water main will be connected to the system and your water service will be transferred.

Your water supply should be unaffected for the majority of the construction activities, but will be out of service when the new main is connected to the system and when your service pipe is connected to the new main. The Milwaukee Water Works will deliver notices prior to these planned “out of water” occurences.

You will experience some disruption of your daily traffic patterns due to the project, but we will do our best to minimize them. We expect there to be no closures of either the street or access to driveways, however there will be special parking restrictions.

All of the work we will be performing is to be funded by the Milwaukee Water Works Capital Improvement budget, which is financed by water revenues. There will be no special assessments made to the abutting properties. The Milwaukee Water Works’ primary mission is to protect customer health by delivering safe, potable water to your tap at an affordable price. Managing the assests of the utility is one of the methods of meeting our mission and water main replacement is necessary when a water main has reached the end of its useful life.

If you or someone in your household is in need of special accommodations or have any questions please call us at the number listed above.

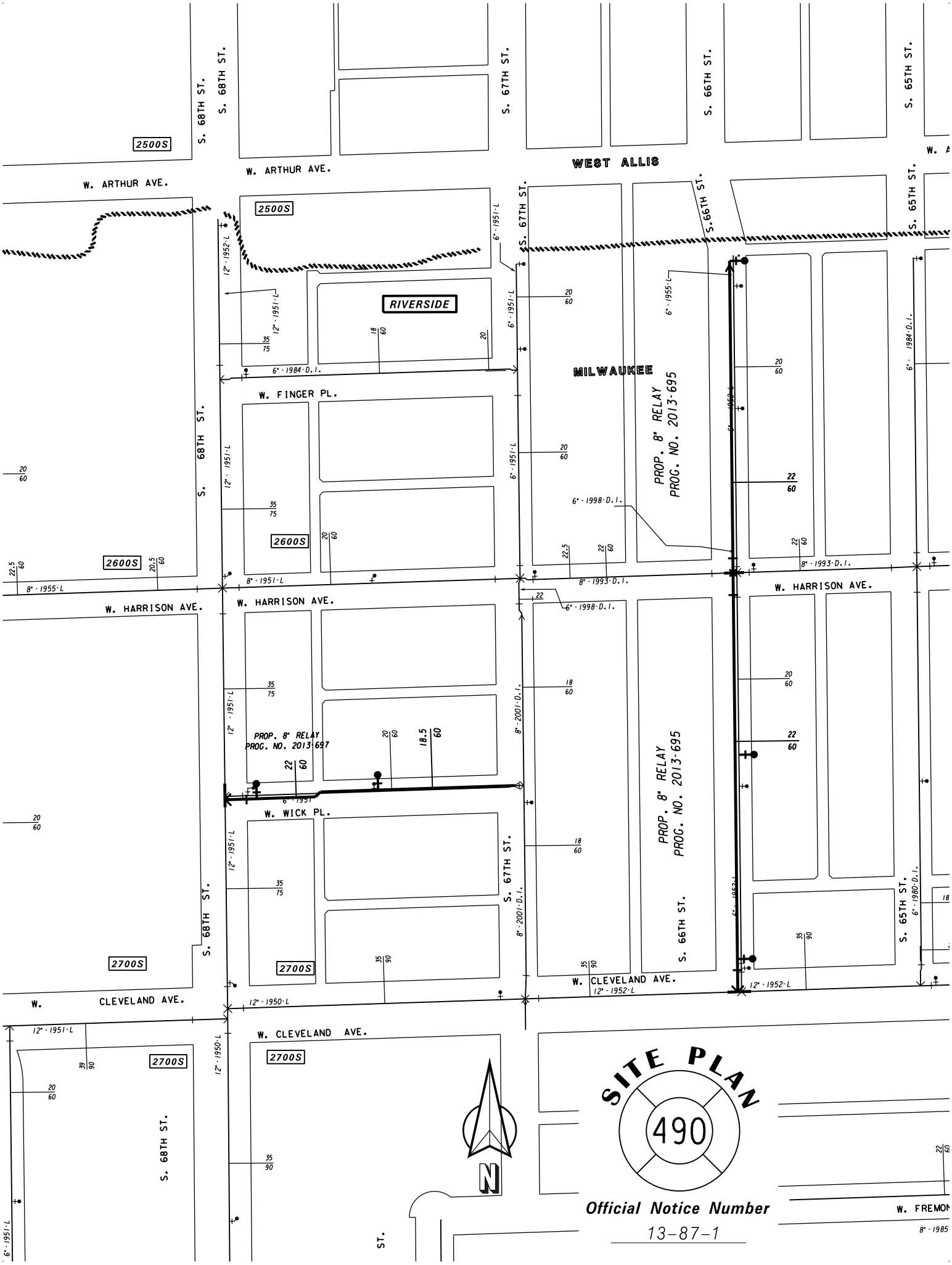
W. ARTHUR AVE.
W. ARTHUR AVE.
WEST ALLIS
S. 68TH ST.
S. 68TH ST.
S. 67TH ST.
S. 66TH ST.
S. 65TH ST.
2500S
2500S
RIVERSIDE
MILWAUKEE
W. FINGER PL.
2600S
2600S
PROP. 8" RELAY
PROG. NO. 2013-695
PROP. 8" RELAY
PROG. NO. 2013-697
W. HARRISON AVE.
W. HARRISON AVE.
W. HARRISON AVE.
W. WICK PL.
2700S
2700S
2700S
W. CLEVELAND AVE.
W. CLEVELAND AVE.
W. CLEVELAND AVE.
W. FREMONT
SITE PLAN
490
Official Notice Number
13-87-1

W. ARTHUR AVE.
W. ARTHUR AVE.
W. ARTHUR AVE.
S. 65TH ST.
S. 64TH ST.
S. 63RD ST.
S. 62ND ST.
S. 61ST ST.
S. 60TH ST.
WEST ALLIS
MILWAUKEE
RIVERSIDE
WEST ALLIS
2500S
2600S
2700S
PROP. 6" RELAY
PROG. NO. 2013-689
PROP. 6" RELAY
PROG. NO. 2013-686
PROP. 8" RELAY
PROG. NO. 2013-687
PROP. 8" RELAY
PROG. NO. 2013-688
PROP. 8" RELAY
PROG. NO. 2013-696
W. HARRISON AVE.
W. HARRISON AVE.
W. HARRISON AVE.
PKWY.
W. KINNICKINNIC RIVER
W. CLEVELAND AVE.
W. CLEVELAND AVE.
SITE PLAN
490
Official Notice Number
13-87-1
N

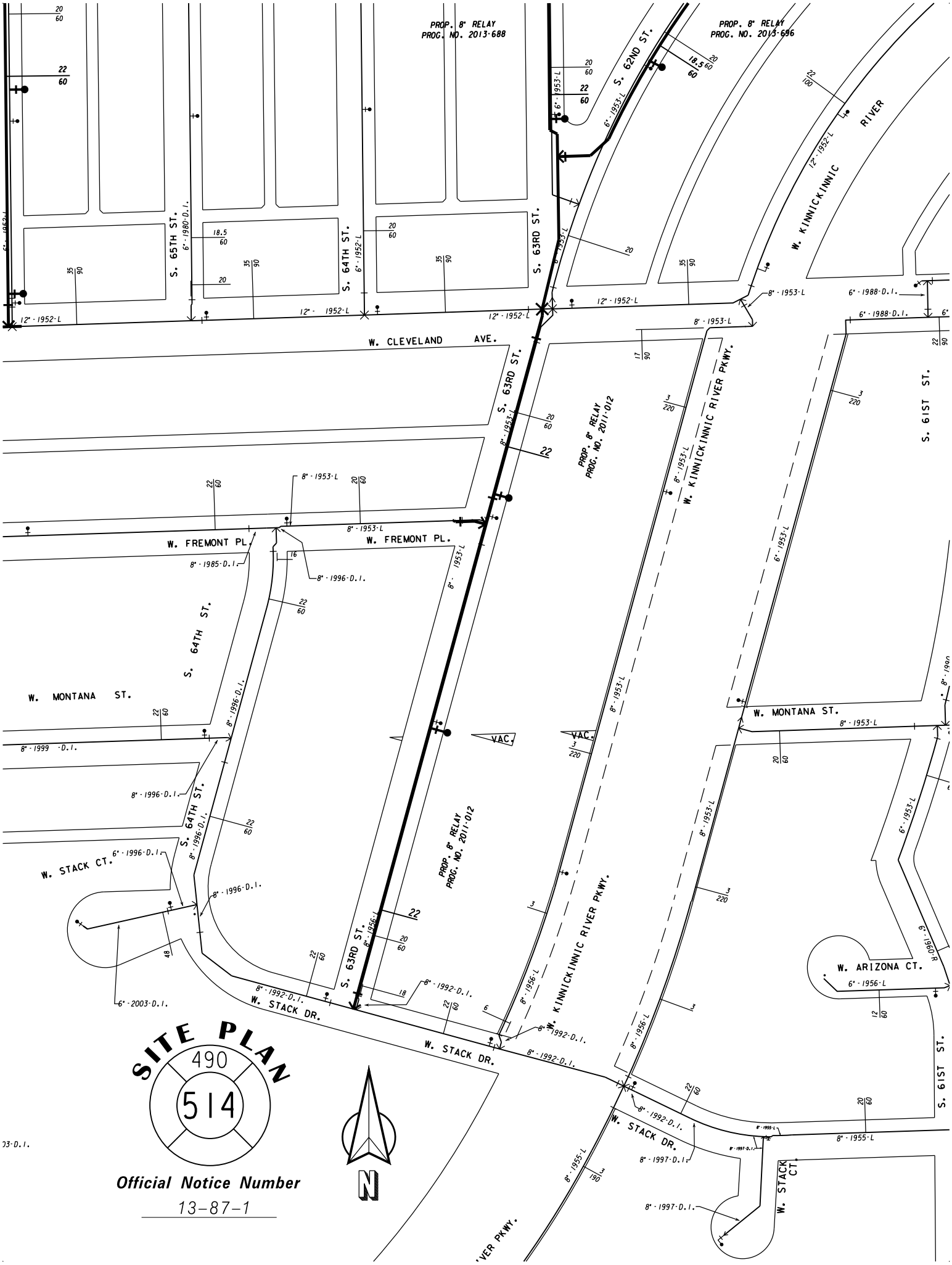
PROP. 8" RELAY
PROG. NO. 2013-688
PROP. 8" RELAY
PROG. NO. 2013-696
S. 62ND ST.
S. 65TH ST.
S. 64TH ST.
S. 63RD ST.
W. KINNICKINNIC RIVER
W. CLEVELAND AVE.
W. FREMONT PL.
W. MONTANA ST.
W. STACK CT.
W. STACK DR.
W. KINNICKINNIC RIVER PKWY.
PROP. 8" RELAY
PROG. NO. 2011-012
VAC.
S. 61ST ST.
W. ARIZONA CT.
SITE PLAN
490
514
Official Notice Number
13-87-1
N