PROJECT ID 2265-00-73
WITH: N/A

COUNTY MILWAUKEE

ORDER OF SHEETS

SECTION NO. 1 TITLE
SECTION NO. 2 TYPICAL SECTIONS AND DETAILS
~~SECTION NO. 3 ESTIMATE OF QUANTITIES~~
~~SECTION NO. 3 MISCELLANEOUS QUANTITIES~~
~~SECTION NO. 4 RIGHT OF WAY PLAT~~
SECTION NO. 5 PLAN AND PROFILE
SECTION NO. 6 STANDARD DETAIL DRAWINGS
~~SECTION NO. 7 SIGN PLATES~~
~~SECTION NO. 8 STRUCTURE PLANS~~
~~SECTION NO. 9 COMPUTER EARTHWORK DATA~~
~~SECTION NO. 9 CROSS SECTIONS~~

STATE PROJECT	FEDERAL PROJECT	
	PROJECT	CONTRACT
2265-00-73		1

STATE OF WISCONSIN
DEPARTMENT OF TRANSPORTATION

PLAN OF PROPOSED IMPROVEMENT

LAYTON BOULEVARD STREETSCAPING ENHANCEMENT

WEST OKLAHOMA AVENUE TO WEST NATIONAL AVENUE

NON-HIGHWAY
MILWAUKEE COUNTY

STATE PROJECT NUMBER
2265-00-73

N

END PROJECT
STA. 124+50.00, T/L

EXCEPTION TO
NET CENTERLINE LENGTH
STA. 105 + 58.2 TO
STA. 123 + 10.0 T/L

EXCEPTION TO
NET CENTERLINE LENGTH
STA. 81 + 48.8 TO
STA. 104 + 32.9 T/L

EXCEPTION TO
NET CENTERLINE LENGTH
STA. 55 + 08.6 TO
STA. 80 + 43.0 T/L

EXCEPTION TO
NET CENTERLINE LENGTH
STA. 28 + 80.8 TO
STA. 53 + 85.0 T/L

EXCEPTION TO
NET CENTERLINE LENGTH
STA. 02 + 05.0 TO
STA. 27 + 03.3 T/L

BEGIN PROJECT
STA. 01+00.00, T/L
Y. = 367,016.56
X. = 2,548,955.83

T 7N. R 21 E.
T 7N. R 22 E.
T 6N. R 21 E.
T 6N. R 22 E.

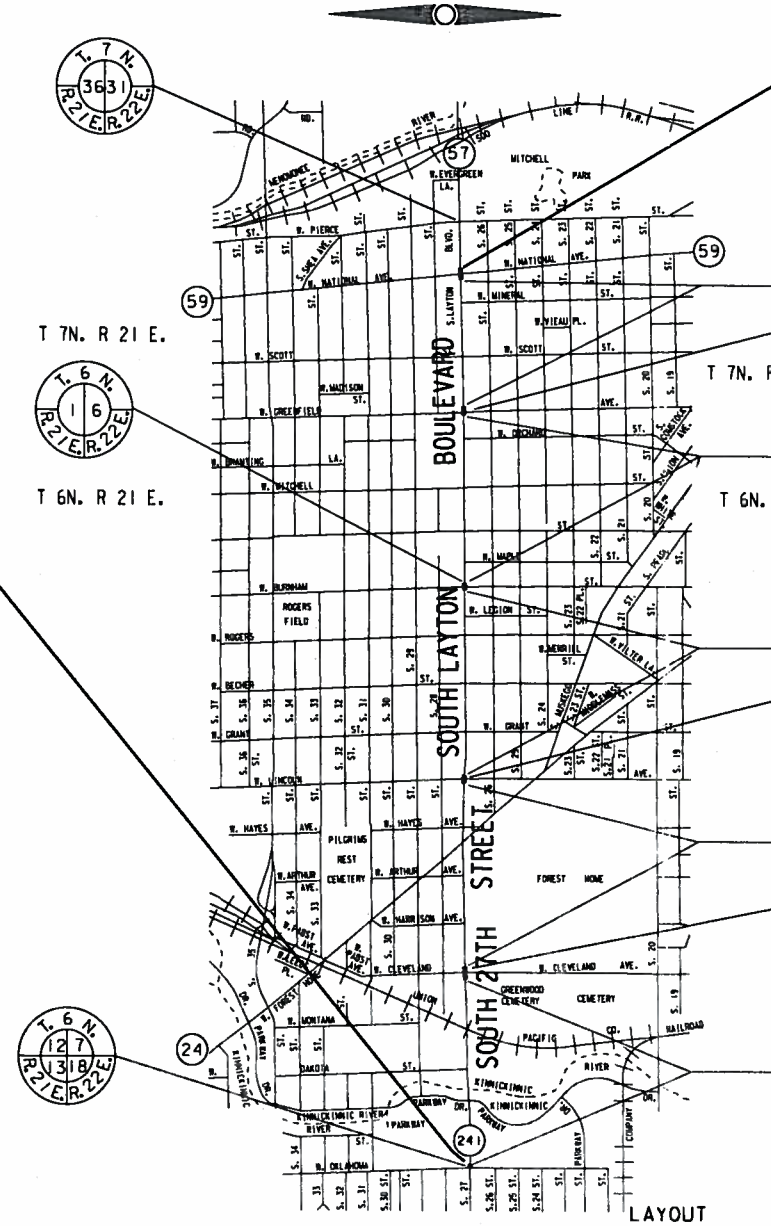

LAYOUT
SCALE 1/2 MI.

TOTAL NET LENGTH OF CENTERLINE = 2.367 MI.

FEDERALLY FUNDED
DBE 10% GOAL

THE COORDINATES ON THIS PLAN ARE BASED ON THE WISCONSIN STATE PLANE COORDINATE SYSTEM, MILWAUKEE COUNTY, NAD 27 SOUTH ZONE.

ELEVATIONS SHOWN ON THIS PLAN ARE REFERENCED TO THE CITY OF MILWAUKEE DATUM.

TO CONVERT ELEVATIONS SHOWN ON THIS PLAN TO NATIONAL GEODEDIC VERTICAL DATUM OF 1929, ADD 580.603 TO ELEVATIONS SHOWN ON THIS PLAN.

CONVENTIONAL SIGNS

COUNTY LINE
TOWNSHIP OR RANGE LINE
SECTION LINE
CORPORATE OR CITY LIMITS
PROPERTY LINE — P.L.
STANDARD BENCH MARK
EXISTING RIGHT OF WAY LINE — R/W
PROPOSED SEWER LATERAL
BASE OF SURVEY LINE
CONCRETE WALK/DWY. REMOVAL
LIMITS OF CONCRETE PAVEMENT REMOVAL — X X X X X X
CATCH BASIN OR INLET — EXISTING / PROPOSED
COMBUSTIBLE FLUIDS UNDER PRESSURE — CAUTION
RAILROADS
FENCE — (TYPE)
FIRE & POLICE CALL BOX
LIGHT POLE
POWER POLE
TELEPHONE OR TELEGRAPH POLE
TRAFFIC SIGNAL
TRAFFIC SIGNAL CONTROL BOX
HYDRANT
GAS OR WATER GATE VALVE
MANHOLES - SEWER / UTILITY (TYPE)
TREES - EXISTING / TO BE REMOVED

Accepted For
City of Milwaukee

6/25/14 Gheasan Kuhn
(Date) Commissioner of Public Works

Original Plans Prepared By

WISCONSIN PROFESSIONAL ENGINEER
JEFFREY S. POLENSKE
E-33528
MILWAUKEE
WIS.

9/23/14
(Date) City Engineer

STATE OF WISCONSIN
DEPARTMENT OF TRANSPORTATION

PREPARED BY

Surveyor City of Milwaukee
Designer City of Milwaukee
Management Consultant
C.O. Examiner

APPROVED FOR THE DEPARTMENT

DATE: (Management Consultant Signature)

E

FILE NAME: W:SPR\ 27TH_OKLA_NATL_STSCP\TITLE.DGN

PLOT DATE:

GENERAL NOTES

ALL OPENINGS BELOW SUBGRADE, RESULTING FROM REMOVALS OR ABANDONMENTS, SHALL BE BACKFILLED WITH GRANULAR MATERIAL.

ALL DISTURBED AREAS, NOT SURFACED, ARE TO BE COVERED WITH 4" OF TOPSOIL, SODDED AND FERTILIZED UNLESS OTHERWISE DIRECTED BY THE ENGINEER.

TOPSOILED AREAS SHALL BE SODDED & FERTILIZED WITHIN 5 CALENDER DAYS.

WHEN THE QUANTITY OF ITEMS OF BASE AGGREGATE & / OR HMA PAVEMENT IS MEASURED FOR PAYMENT BY THE TON, THE DEPTH OR THICKNESS OF THE LAYER SHOWN ON THE PLAN IS APPROXIMATE, AND THE ACTUAL THICKNESS WILL DEPEND ON THE DISTRIBUTION OF MATERIALS AS DIRECTED BY THE ENGINEER.

NO TREES OR SHRUBS SHALL BE REMOVED UNLESS DESIGNATED FOR REMOVAL BY THE ENGINEER.

MEDIAN CURB AND GUTTER IS HIGH SIDE AND ALL REMAINING CURB AND GUTTER IS LOW SIDE UNLESS OTHERWISE INDICATED ON THE PLAN.

TRANSVERSE JOINTS IN THE CONCRETE WALK SHALL BE CONSTRUCTED AT INTERVALS EQUAL TO THE WIDTH OF THE CONCRETE UNLESS OTHERWISE DIRECTED BY THE ENGINEER.

ALL LONGITUDINAL AND TRANSVERSE JOINTS REQUIRING SEALING SHALL BE SEALED IN ACCORDANCE WITH THE DETAIL.

"PAVEMENT TIES" AS SHOWN ON STANDARD DETAIL DRAWING "CONCRETE GUTTER, CURB AND GUTTER AND PAVEMENT TIES" ARE REQUIRED TO TIE EXISTING CONCRETE TO NEW CONCRETE CURB AND GUTTER.

THE LOCATION OF LONGITUDINAL JOINTS IN ASPHALTIC CONCRETE SHALL BE APPROVED BY THE ENGINEER.

THE LOCATION OF EXISTING AND PROPOSED UTILITY INSTALLATIONS AS SHOWN ON THE PLAN IS APPROXIMATE. THERE MAY BE OTHER UTILITY INSTALLATIONS WITHIN THE PROJECT AREA WHICH ARE NOT SHOWN.

REPLACE ALL CONCRETE CURB AND GUTTER INDICATED FOR REMOVAL AND REPLACEMENT IN EXISTING LOCATION UNLESS OTHERWISE NOTED ON PLAN.

CONSTRUCTION PERMITS FOR CONCRETE WALK &/ OR CONCRETE DRIVEWAY WORK HAVE BEEN OBTAINED, WHICH RIGHTS SHALL BE EXTENDED TO THE CONTRACTORS.

INLET SCREENS ARE TO BE PLACED BETWEEN THE FRAME AND GRATE OF CATCH BASINS / INLETS TO PREVENT SOIL FROM ENTERING THE SEWERS.

ALL CURB AND GUTTER SHOULD HAVE A FLANGE THICKNESS OF 9".

ALL RADII IN THE PLANS ARE REFERENCED TO THE FACE OF CURB.

STANDARD ABBREVIATIONS

ASPH.	- ASPHALT
B.M.	- BENCH MARK
CTR.	- CENTER
C/L	- CENTER LINE
COMB.	- COMBINED
CONC.	- CONCRETE
C.W.	- CONCRETE WALK
COR.	- CORNER
C	- CURB
EB	- EAST BOUND
ELEV.	- ELEVATION
ENT.	- ENTRANCE
EXIST.	- EXISTING
F	- FLANGE
G	- GUTTER, OR GAS
HYD.	- HYDRANT
LT.	- LEFT
MMSD	- MILWAUKEE METROPOLITAN SEWERAGE DISTRICT
PGL	- PROFILE GRADE LINE
P/L.	- PROPERTY LINE
R OR RAD.	- RADIUS
RET.	- RETAINING
RT.	- RIGHT
R/W	- RIGHT OF WAY
TEL	- AMERITECH
TES	- TRAFFIC ENGINEERING, AND ELECTRICAL SERVICES
T/L	- TRANSIT LINE
WB	- WEST BOUND
WEP	- WISCONSIN ELECTRIC POWER

LEGEND

(D) CONST. COLORED CONCRETE PAVEMENT (9-INCH)

PLANTER- TYPE 3

TRASH RECEPTACLE -45 GALLON

CONCRETE SIDEWALK REMOVAL

ORDER OF SECTION 2 SHEETS

GENERAL NOTES
~~PROJECT OVERVIEW~~
TYPICAL SECTION
CONSTRUCTION DETAILS
DRAINAGE DETAILS
~~EROSION CONTROL~~
~~STORM SEWER PLAN~~
PLAN DETAILS
SIDEWALK REMOVAL PLAN
UTILITIES
~~TRAFFIC SIGNAL CONDUIT~~
PAVEMENT MARKING
~~TRAFFIC CONTROL DETAIL~~

UTILITY CONTACTS

CITY OF MILWAUKEE, SEWER, WATER AND TRAFFIC ENGINEERING AND ELECTRIC SERVICES

ANTHONY KOTECKI
841 N. BROADWAY,
MILWAUKEE, WI 53202
PHONE: 414-708-3886

WE ENERGIES - ELECTRIC

LATROY BRUMFIELD
500 S. 116TH ST.
WEST ALLIS, WI 53214
PHONE: 414-944-5516

WE ENERGIES - GAS

LATROY BRUMFIELD
500 S. 116TH ST.
WEST ALLIS, WI 53214
PHONE: 414-944-5516

MIDWEST FIBER NETWORKS (CABLE COM, LLC)

RICHARD TRGOVEC
3701 W. BURNHAM ST., SUITE C
MILWAUKEE, WI 53215
PHONE: 414-672-5612

SBC/AT&T

MARK EDER
2005 PEWAUKEE RD.
WAUKESHA, WI 53188
PHONE: 262-896-7434

MILWAUKEE METROPOLITAN SEWERAGE DISTRICT

DEBRA JENSEN
200 W. SEEBOTH ST.
MILWAUKEE, WI 53204
PHONE: 414-225-2143

MILWAUKEE COUNTY TRANSIT SYSTEM - ROUTES

DAVID ZIAREK
1942 N. 17TH ST.
MILWAUKEE, WI 53205
PHONE: 414-343-1764

MILWAUKEE COUNTY TRANSIT SYSTEM - BUS STOPS

WILLIAM LOCHER
1942 N. 17TH ST.
MILWAUKEE, WI 53205
PHONE: 414-937-3217

SEWRPC - LAND MONUMENTS

JOHN WASHBURN
W239 N1812 ROCKWOOD DR.
WAUKESHA, WI 53187
PHONE: 262-547-6722 EXT 295

DON SIMON
W239 N1812 ROCKWOOD DR.
WAUKESHA, WI 53187
PHONE: 262-547-6722 EXT 249

WISCONSIN DEPT. OF NATURAL RESOURCES

KRISTINA BETZOLD
2300 N. DR. MARTIN LUTHER KING, JR. DR.
MILWAUKEE, WI 53212
PHONE: 414-263-8517

DIGGERS HOTLINE

Dial 811 or (800) 242-8511

www.DiggersHotline.com

2

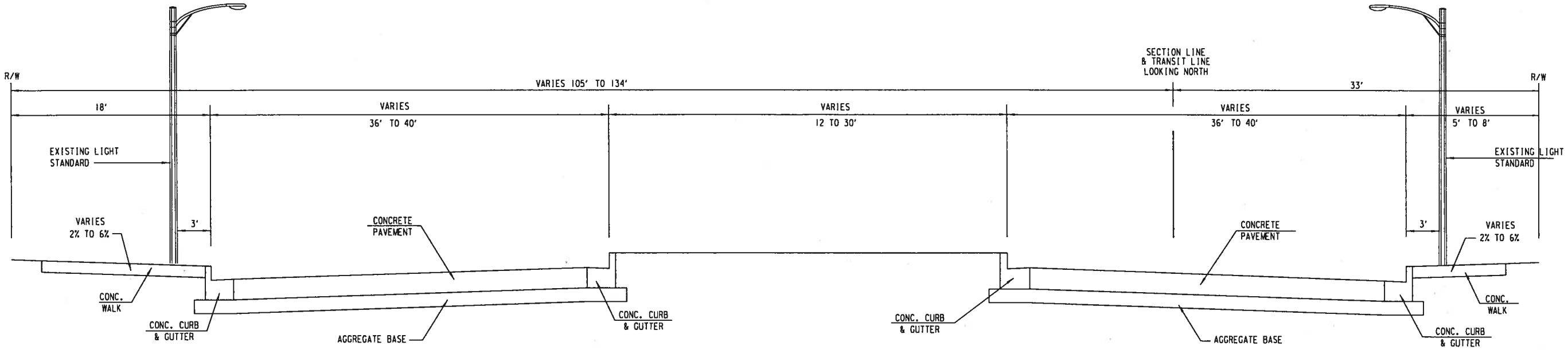

TYPICAL EXISTING SECTION
SOUTH 27TH STREET
STA. 01+00.00 TO STA. 55+50.00

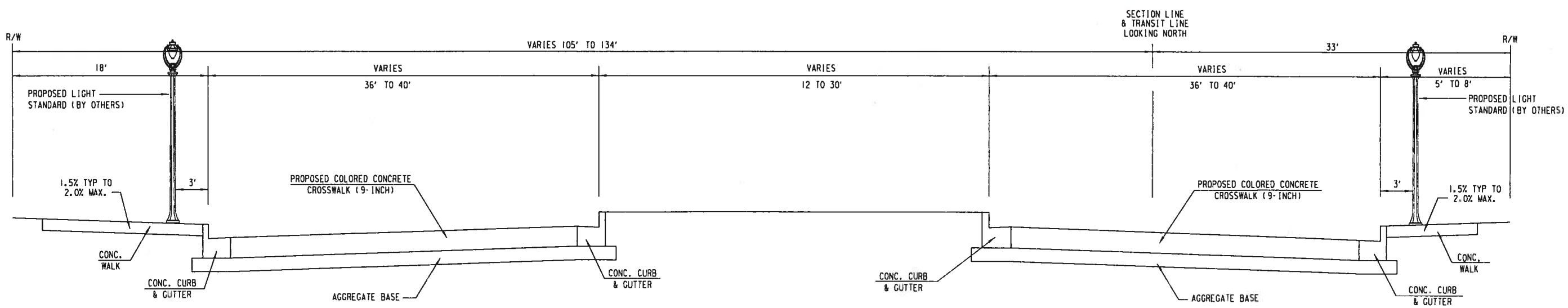

TYPICAL FINISHED SECTION
SOUTH 27TH STREET
STA. 27+00.00 TO STA. 29+00.00
STA. 53+50.00 TO STA. 55+50.00

STATE PROJECT NUMBER 2265-00-73 - -	HWY: NON-HIGHWAY	COUNTY: MILWAUKEE	TYPICAL SECTION	SCALE FEET	SHEET NO:	E

FILE NAME: W:\SPR\27TH OKLA NATL STSCP\TYPSEC.DGN

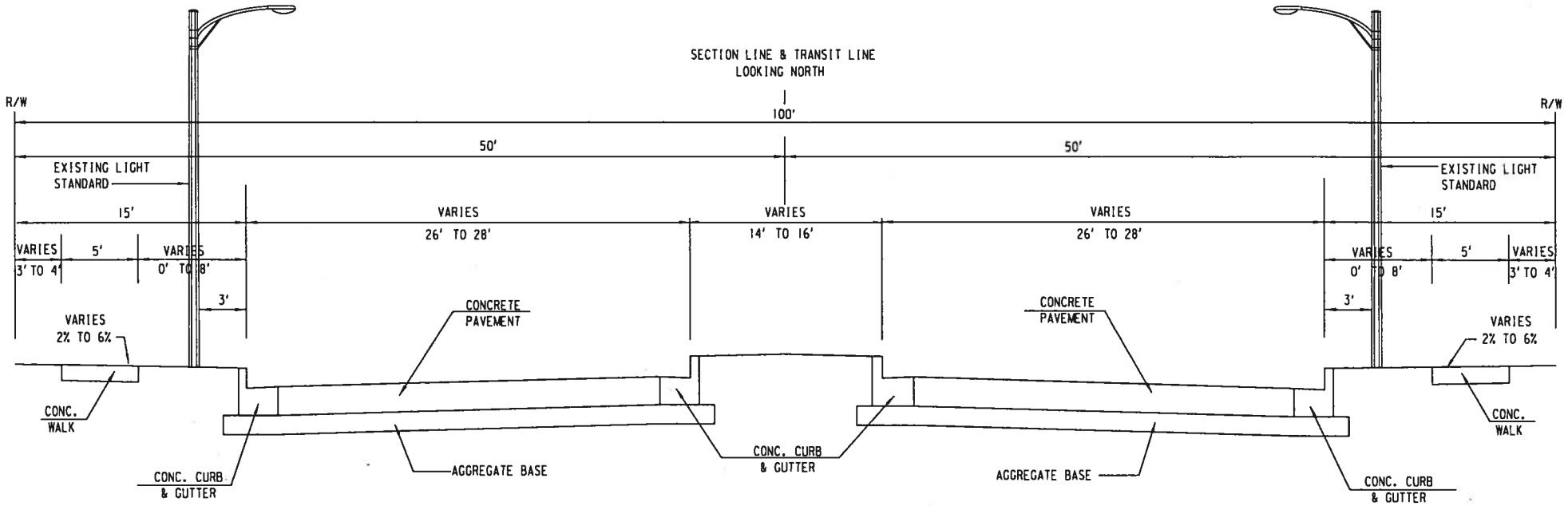

TYPICAL EXISTING SECTION
SOUTH LAYTON BOULEVARD
STA. 55+50.00 TO STA. 125+00.00

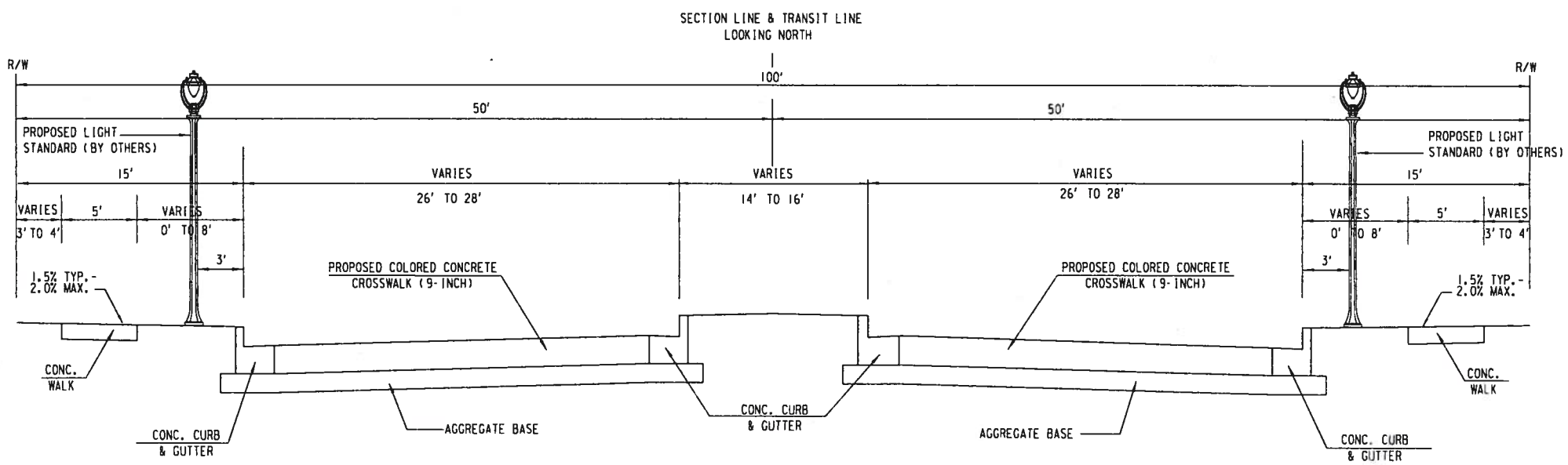

TYPICAL FINISHED SECTION
SOUTH LAYTON BOULEVARD
STA. 80+50.00 TO STA. 81+50.00
STA. 104+00.00 TO STA. 105+50.00
STA. 123+00.00 TO STA. 124+50.00

STATE PROJECT NUMBER 2265-00-73 - -	HWY: NON-HIGHWAY	COUNTY: MILWAUKEE	TYPICAL SECTION	SCALE FEET	SHEET NO:	E

FILE NAME: W:\SPR\27TH OKLA NATL STSCP\TYPSEC.DGN

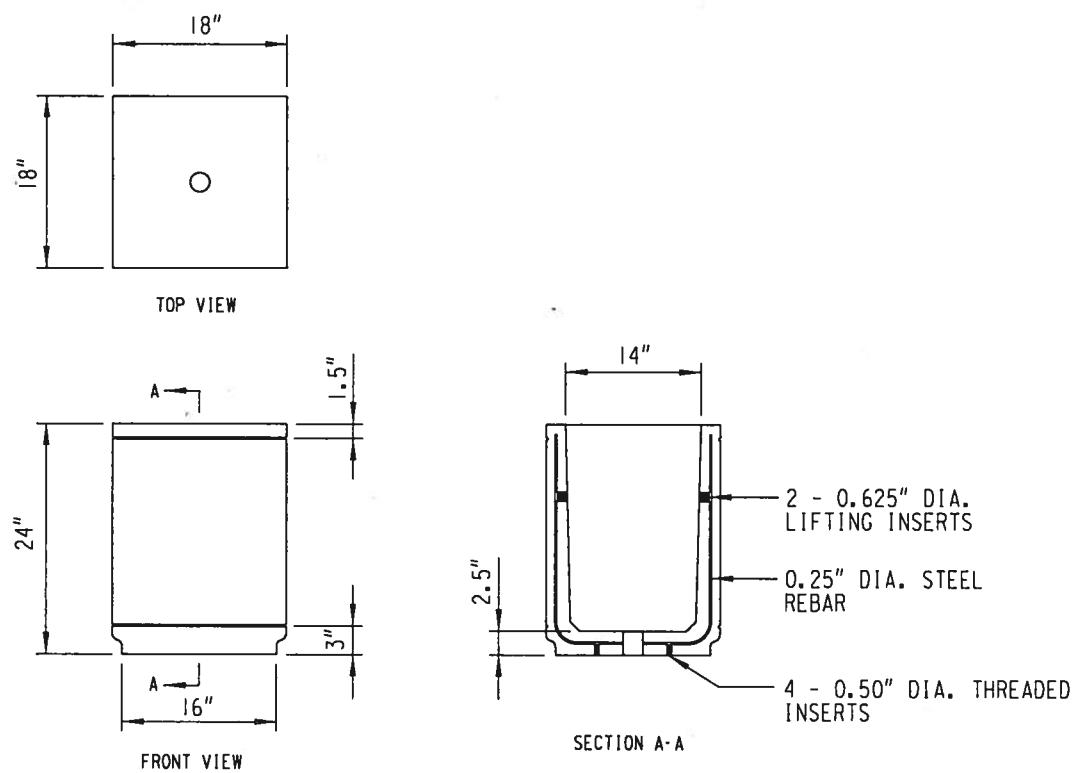

PLANTER DETAIL TYPE 3

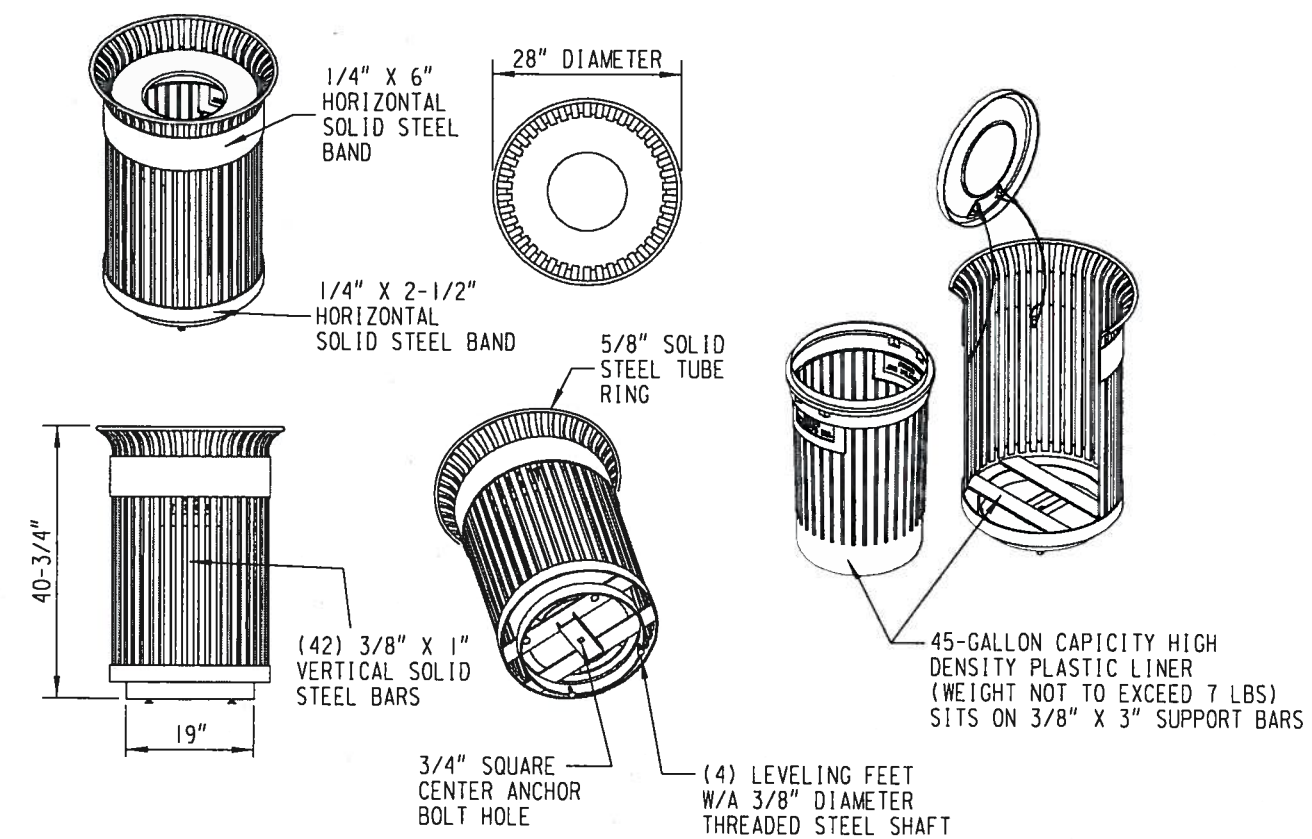

45-GALLON LITTER RECEPTICLE

STATE PROJECT NUMBER 2265-00-73 - -	HWY: NON-HIGHWAY	COUNTY: MILWAUKEE	CONSTRUCTION DETAILS	SCALE FEET	SHEET NO:	E

FILE NAME: W:\SPR\27TH OKLA NATL STSCP\NEW SCHEME\CONDET.DGN

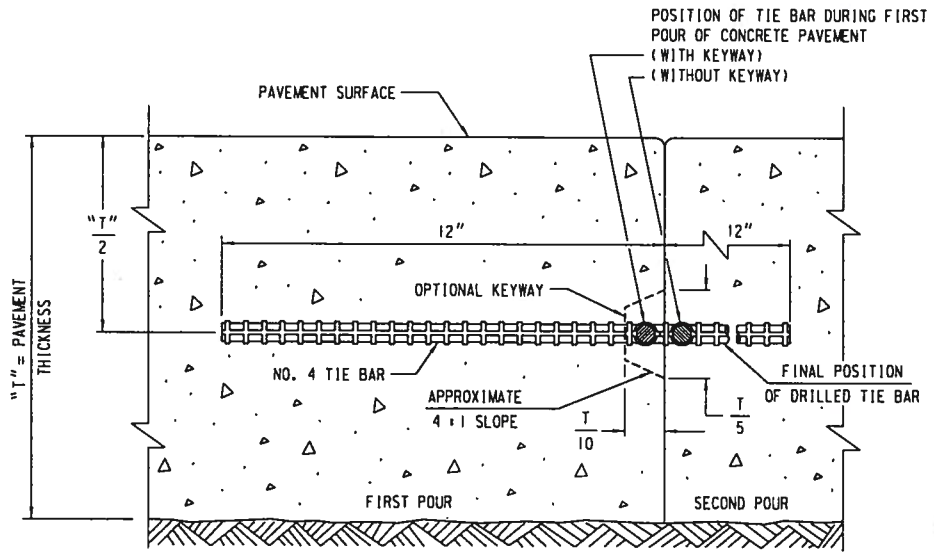

CONSTRUCTION JOINT

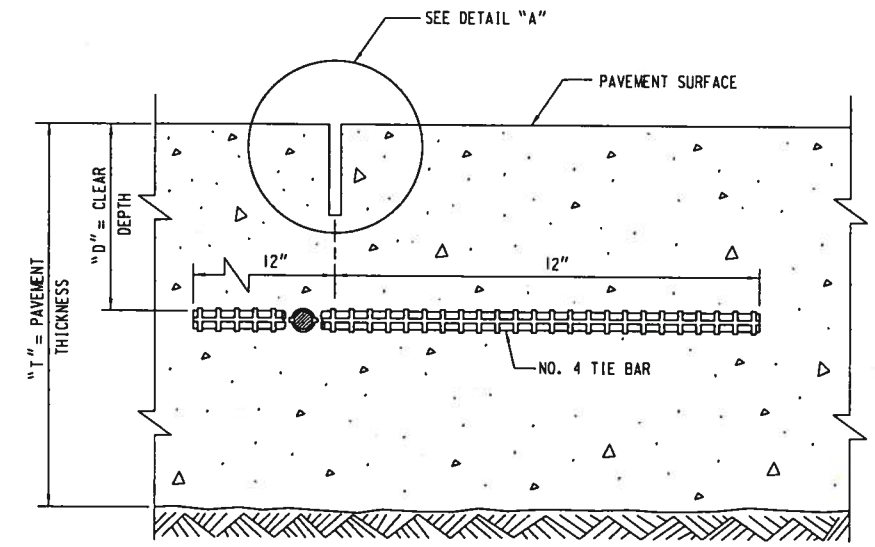

SAWED JOINT

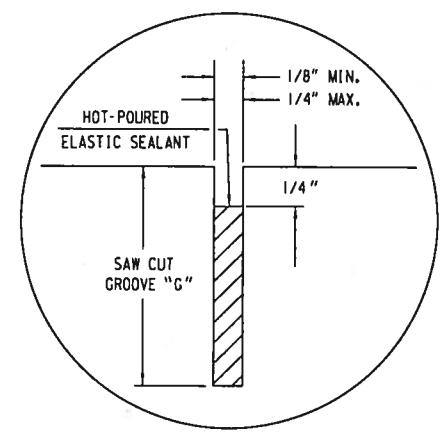

DETAIL "A"

GENERAL NOTES

DETAILS OF CONSTRUCTION NOT SHOWN ON THIS DRAWING SHALL CONFORM TO THE PERTINENT REQUIREMENTS OF THE STANDARD SPECIFICATIONS AND THE APPLICABLE SPECIAL PROVISIONS.

TIE BARS AND PAVEMENT TIES SHALL BE EPOXY COATED IN CONFORMANCE WITH SUBSECTION 505.2.4 OF THE STANDARD SPECIFICATIONS.

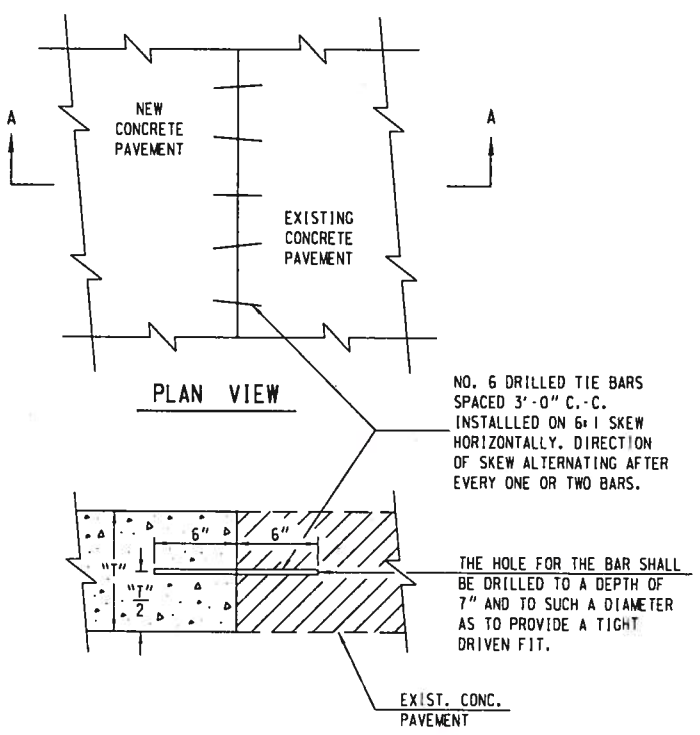

PLAN VIEW

SECTION A-A
PAVEMENT TIES

PAVEMENT THICKNESS "T"	CLEAR DEPTH "D"	SAW CUT GROOVE "G"	MAXIMUM TIE BAR SPACING "S" PAVEMENT WIDTH	
			LESS THAN 30'	30' OR MORE
6"	3" ± 1/2"	1-1/2"	48"	42"
7"	3-1/4" ± 1"	1-3/4"	45"	36"
8"	3-3/4" ± 1"	2"	39"	30"
9"	4-1/4" ± 1"	2-1/4"	33"	27"
10"	4-3/4" ± 1"	2-1/2"	30"	24"
11"	5-1/4" ± 1"	2-3/4"	27"	21"
12"	5-3/4" ± 1"	3"	24"	21"

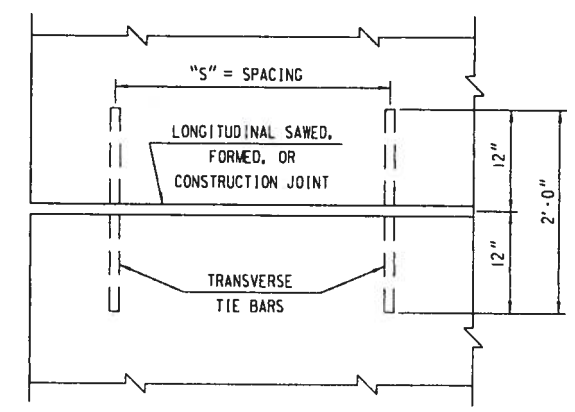

PLAN VIEW
SHOWING LOCATION OF DRILLED TIE BARS

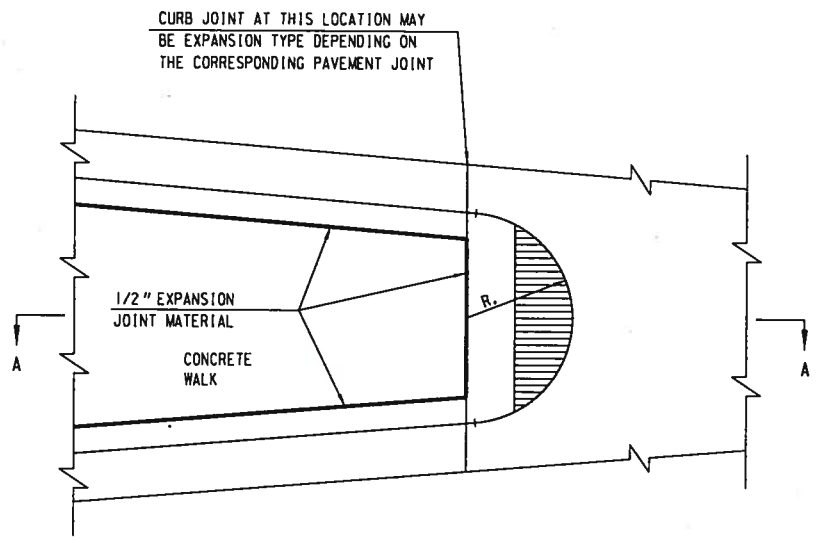

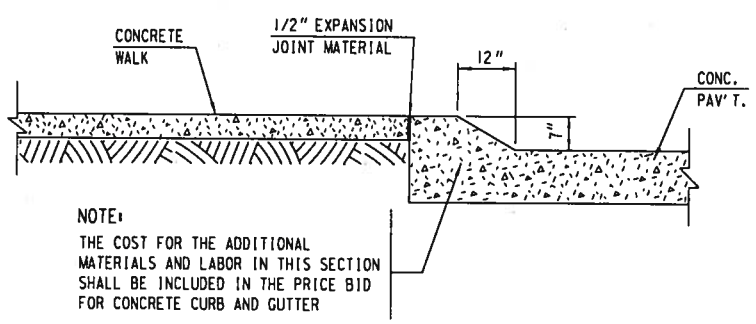

SECTION A-A

SNOWPLOWABLE MEDIAN ISLAND NOSE

(TYPICAL SECTION OF CONCRETE CURB & GUTTER
TO BE CONSTRUCTED AT END OF MEDIAN ISLAND)

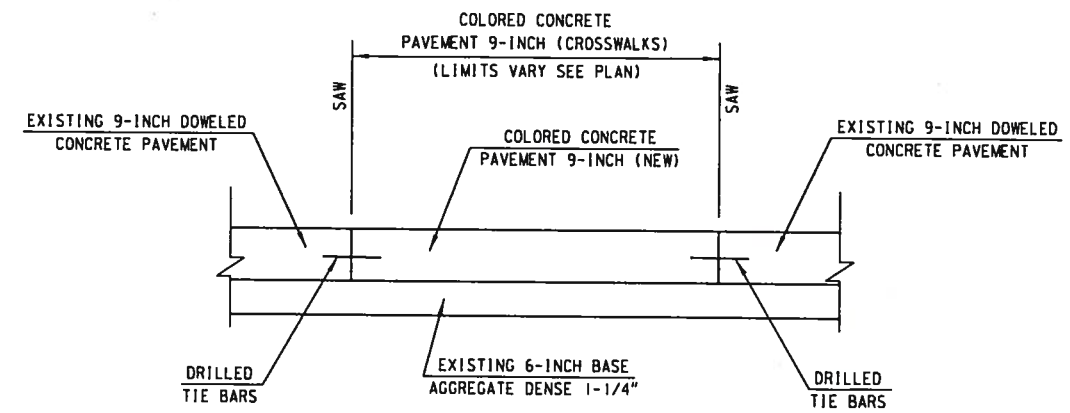

COLORED CONCRETE PAVEMENT 9-INCH (CROSSWALKS)

(D)

INTERSECTIONS WITH COLORED CONCRETE CROSSWALKS
WEST CLEVELAND AVENUE
WEST LINCOLN AVENUE
WEST BURNHAM STREET
WEST GREENFIELD AVENUE
WEST NATIONAL AVENUE

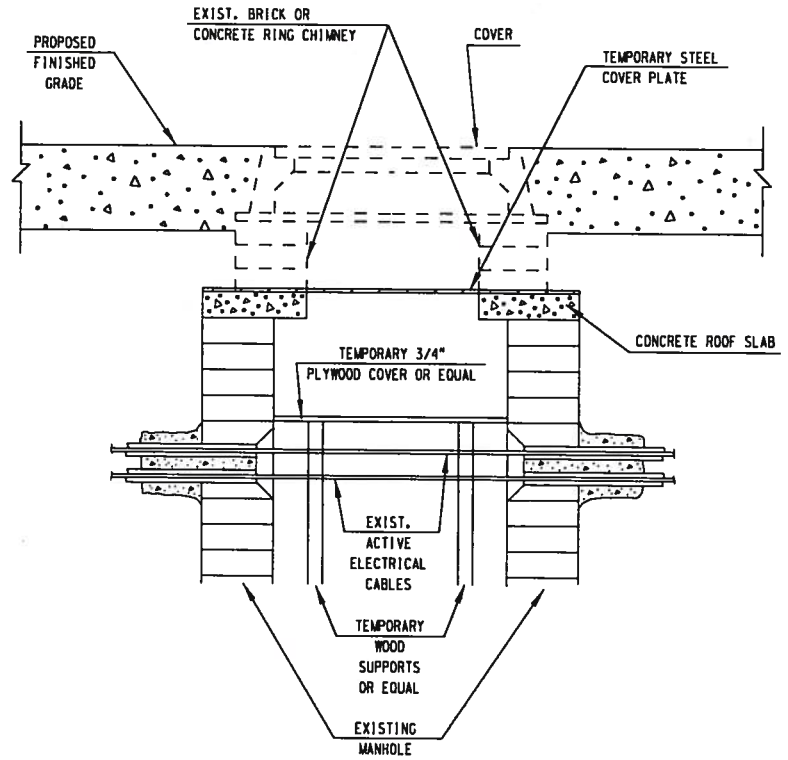

BLOCK OR PRECAST MANHOLE

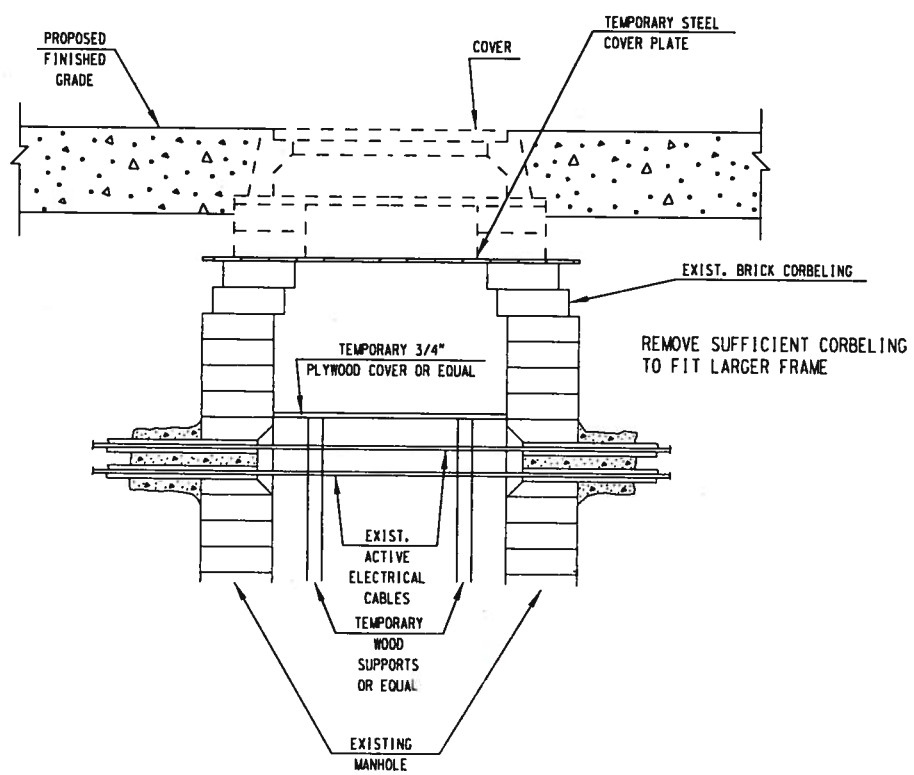

BRICK ROUND MANHOLE

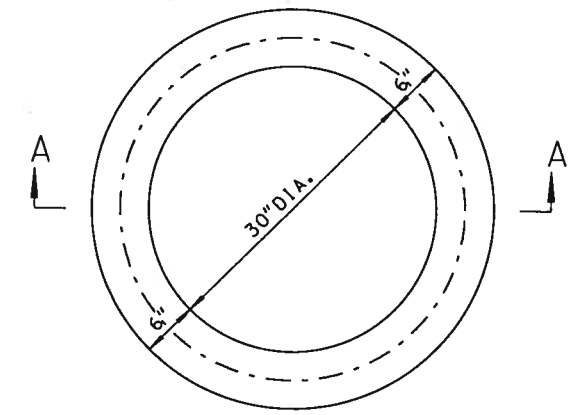

PLAN

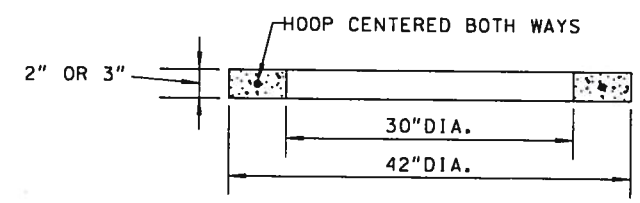

SECTION A-A

THE ADJUSTING RING SHALL BE 2" OR 3" IN HEIGHT.

THE CIRCUMFERENTIAL STEEL SHALL BE CENTERED WITHIN THE RING.

AREA OF CIRCUMFERENTIAL STEEL = 0.07 SQ. INCH PER VERTICAL FOOT WITH A MINIMUM OF .024 SQ. INCH IN ANY ONE RING.

THE MINIMUM COMPRESSIVE STRENGTH OF THE CONCRETE CORE SHALL BE 4000 P.S.I.

CONCRETE ADJUSTING RING

ADJUSTING CUC (TES) MANHOLES

2

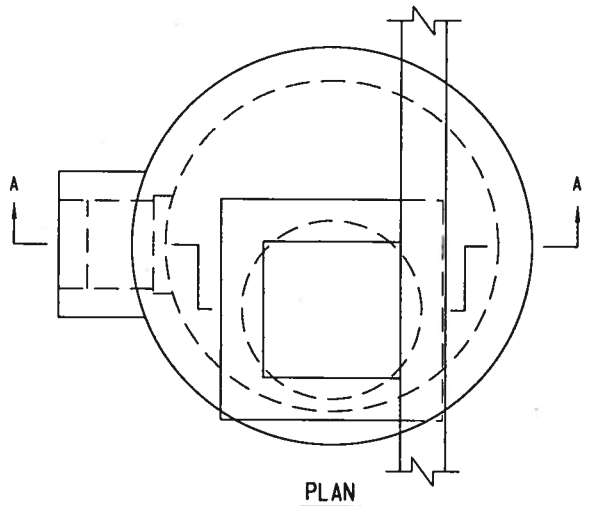

PLAN

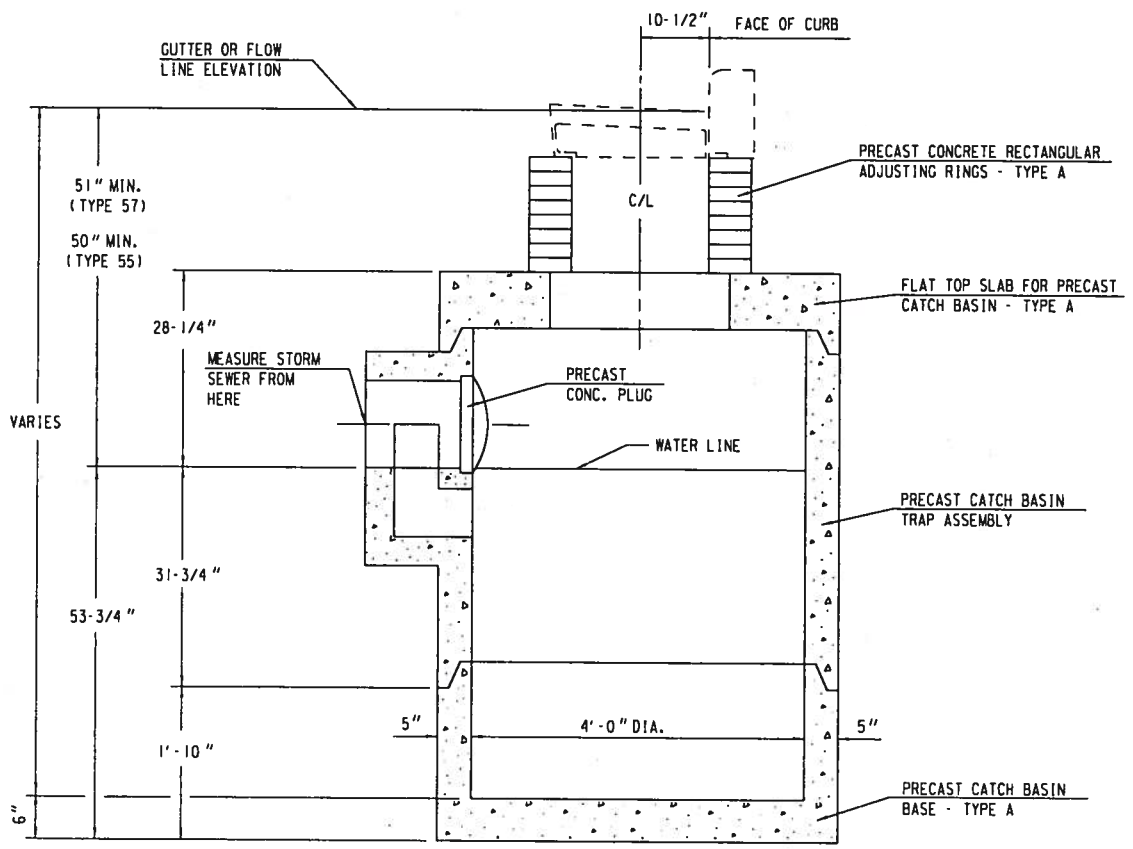

SECTION A-A

CATCH BASIN - TYPE 44A

GENERAL NOTES

1. REINFORCEMENT FOR 5" PRECAST REINFORCED CONCRETE SHALL BE 6" X 6" W16 X W16 WELDED STEEL WIRE FABRIC AND SHALL BE EMBEDDED 2" CLEAR.
2. PRECAST INLET UNITS AND BASES SHALL CONFORM TO THE PERTINENT REQUIREMENTS OF AASHTO DESIGNATION M199.
3. PRECAST REINFORCED BASES SHALL BE PLACED ON A BED OF MATERIAL AT LEAST 4" IN DEPTH WHICH MEETS REQUIREMENTS FOR GRANULAR BACKFILL. THIS BEDDING SHALL BE COMPACTED AND PROVIDE UNIFORM SUPPORT FOR THE ENTIRE AREA OF THE BASE.
4. SET FRAME ELEVATION 0.03 FT. LOWER THAN ELEVATION INDICATED ON PLAN.
5. A PRECAST CONCRETE PLUG SHALL BE CEMENTED INTO THE OPENING AT THE INNER FACE OF THE CATCH

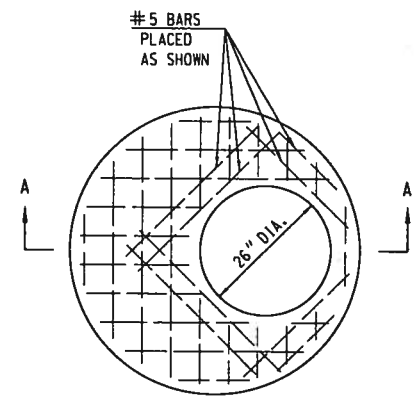

PLAN

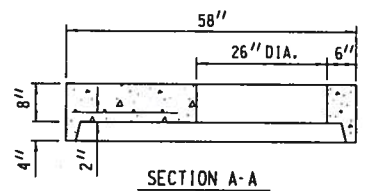

SECTION A-A

TOP SLAB - TYPE A

FLAT TOP SLAB SHALL BE 8" THICK REINFORCED WITH ONE LAYER OF STEEL WITH A MINIMUM AREA OF 0.12 SQ. IN. PER LINEAL FOOT IN BOTH DIRECTIONS, PLACED IN THE CENTER THIRD OF THE SECTION AS SHOWN.

REINFORCEMENT SHALL BE TIED OR WELDED TOGETHER.

THE MINIMUM COMPRESSIVE STRENGTH OF THE CONCRETE SHALL BE 3300 P.S.I.

2

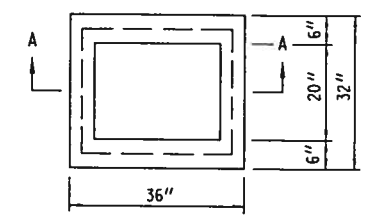

PLAN

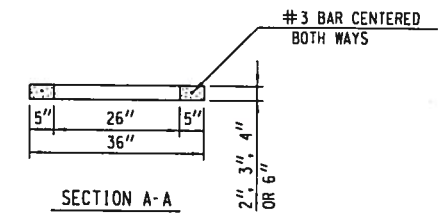

SECTION A-A

RECTANGULAR ADJUSTING RING - TYPE A

THE ADJUSTING RINGS SHALL BE 2", 3", 4" OR 6" IN HEIGHT.

THE MINIMUM COMPRESSIVE STRENGTH OF THE CONCRETE SHALL BE 3300 P.S.I.

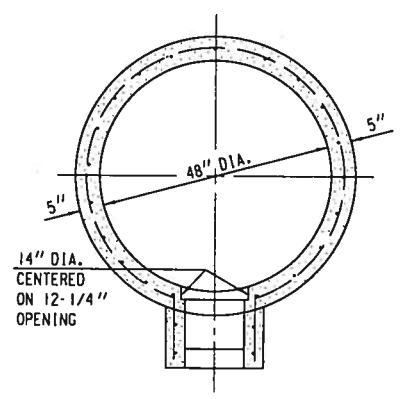

SECTION A-A

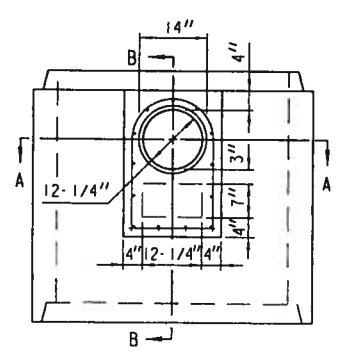

PLAN

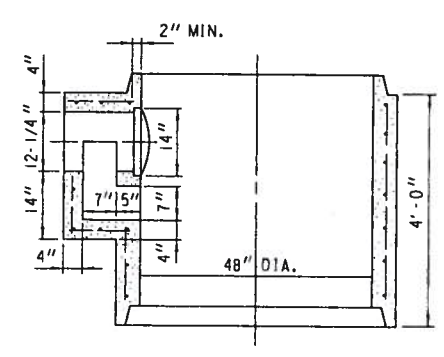

SECTION B-B

TRAP ASSEMBLY

CIRCUMFERENTIAL REINFORCEMENT SHALL CONSIST OF ONE LINE OF STEEL NOT LESS THAN 0.12 SQ. IN. PER LINEAL FOOT, AND SHALL BE PLACED IN THE CENTER THIRD OF THE WALL.

TRAP ASSEMBLY SHALL BE REINFORCED WITH ONE LAYER OF STEEL WITH A MINIMUM AREA OF 0.12 SQ. IN. PER LINEAL FOOT IN BOTH DIRECTIONS, PLACED IN THE CENTER THIRD OF THE SECTION AS SHOWN.

CIRCUMFERENTIAL AND TRAP ASSEMBLY REINFORCEMENT SHALL BE TIED OR WELDED TOGETHER.

THE MINIMUM COMPRESSIVE STRENGTH OF THE CONCRETE SHALL BE 3300 P.S.I.

TWO HANDLING HOLES 2 1/4 INCHES IN DIAMETER SHALL BE CAST OR DRILLED IN THE WALL.

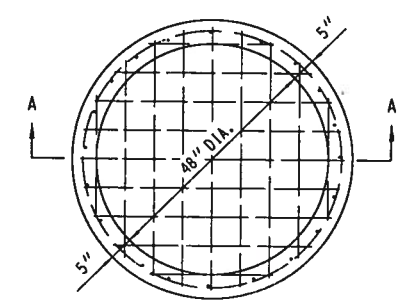

PLAN

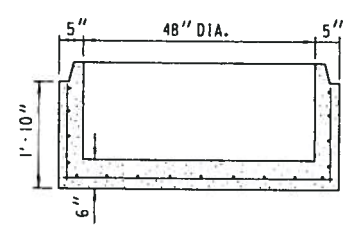

SECTION A-A

BASE - TYPE A

CIRCUMFERENTIAL REINFORCEMENT SHALL CONSIST OF ONE LINE OF STEEL NOT LESS THAN 0.12 SQ. IN. PER LINEAL FOOT, AND SHALL BE PLACED IN THE CENTER THIRD OF THE WALL.

BOTTOM SLAB SHALL BE REINFORCED WITH ONE LAYER OF STEEL WITH A MINIMUM AREA OF 0.12 SQ. IN. PER LINEAL FOOT IN BOTH DIRECTIONS, PLACED IN THE CENTER THIRD OF THE SLAB.

CIRCUMFERENTIAL AND BOTTOM SLAB REINFORCEMENT SHALL BE TIED OR WELDED TOGETHER.

THE MINIMUM COMPRESSIVE STRENGTH OF THE CONCRETE SHALL BE 3300 P.S.I.

TWO HANDLING HOLES 2 1/4 INCHES IN DIAMETER SHALL BE CAST OR DRILLED IN THE WALL.

STATE PROJECT NUMBER 2265-00-73 - -	HWY: NON-HIGHWAY	COUNTY: MILWAUKEE	DRAINAGE DETAILS	SCALE FEET	SHEET NO:	E

FILE NAME: W:\SPR\27TH OKLA NATL STSCP \NEW SCHEME\DRAINDET.DGN

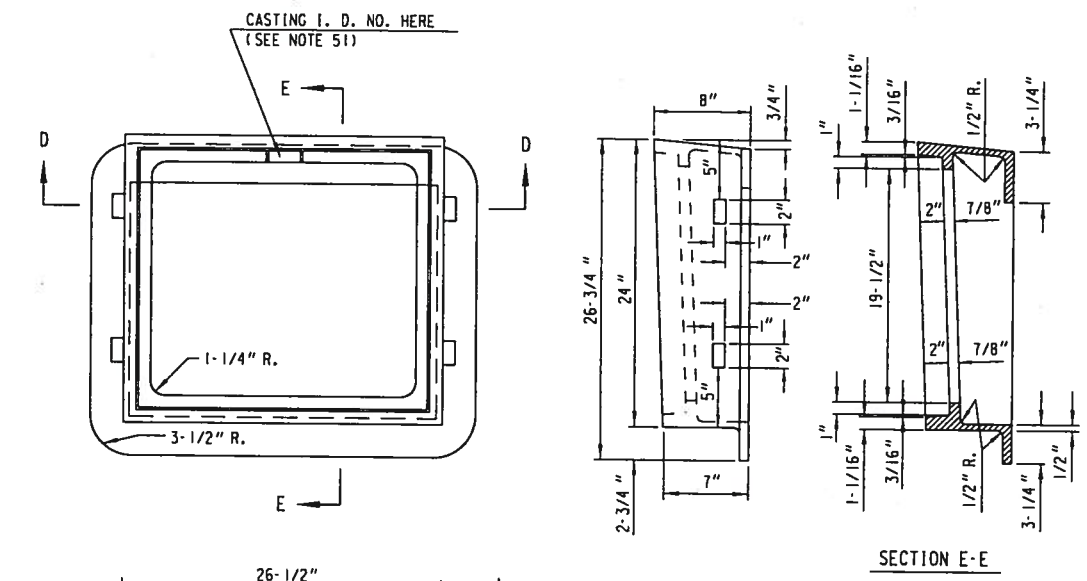

SECTION E-E

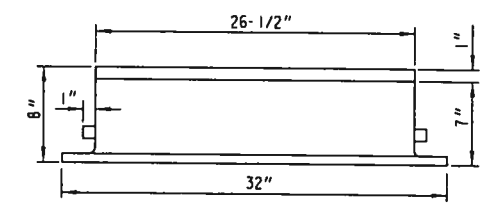

FRAME

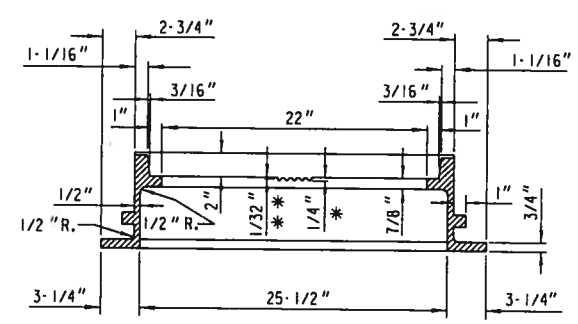

SECTION D-D

* DEPRESSION FOR LETTERS

* * CLEARANCE FROM TOP OF LETTERS TO FACE OF SEAT

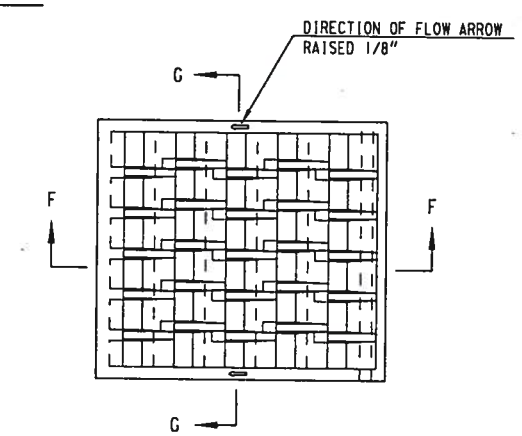

GRATE

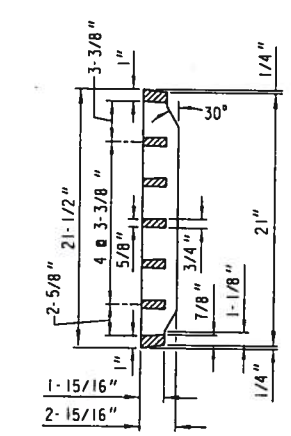

SECTION G-G

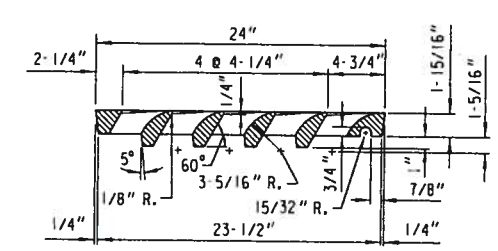

SECTION F-F

GENERAL NOTES

ALL EDGES ARE TO BE GROUND

ALL CASTINGS SHALL BEAR THE FOLLOWING IDENTIFICATION MARKS IN THE FORM OF LEGIBLE LETTERS OR NUMERALS RAISED 1/8"

ON THE FRAME

1. ON THE UPPER FACE OF THE FLANGE IN 1 INCH HIGH LETTERS THE INITIALS OR MONOGRAM OF THE FOUNDRY, THE YEAR MADE AND THE SERIAL NUMBER OF THE INDIVIDUAL CASTING.
2. ON THE SEAT OF THE FRAME IN 1 INCH HIGH LETTERS, THE CASTING IDENTIFICATION NUMBER (51).

ON THE GRATE

1. ON THE UPPER SIDE OF THE GRATE IN 1 INCH HIGH LETTERS, THE INITIALS OR MONOGRAM OF THE FOUNDRY, THE YEAR MADE, THE CASTING IDENTIFICATION NUMBER (57) AND THE SERIAL NUMBER OF THE INDIVIDUAL CASTING.

INLET COVER - TYPE 57

LID-145 LBS., FRAME-204 LBS.

2

* REMOVE 3'-0" CURB & GUTTER MIN. OR TO THE NEAREST JOINT, 6'-0" MAX. UNLESS OTHERWISE DIRECTED ON THE PLAN.

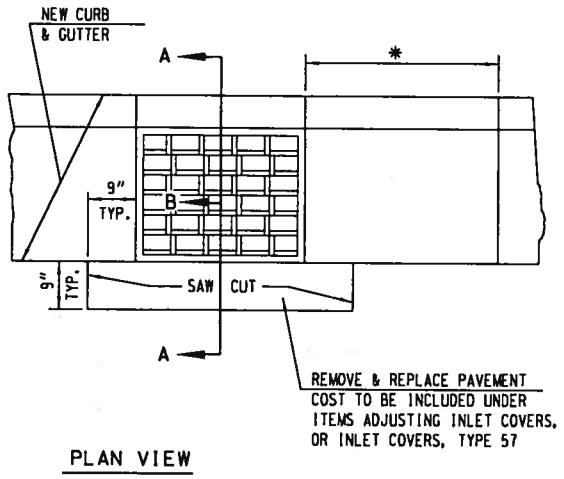

PLAN VIEW

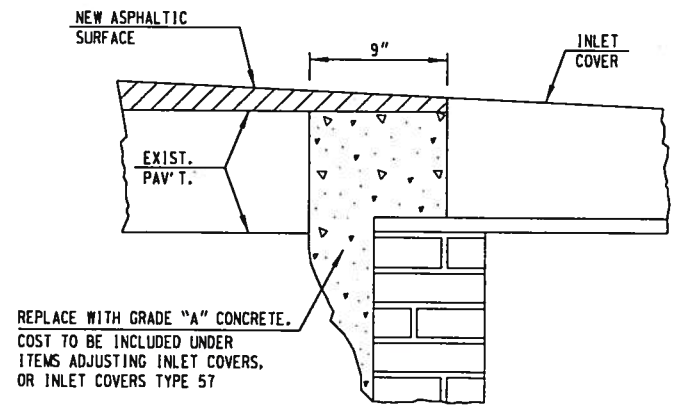

SECTION A-B

REPAIR BY REMOVING & REPLACING DAMAGED OR LOOSE BRICK OR BLOCK TO DEPTH AS DIRECTED BY ENGINEER. WORK UNDER ADJUSTING CATCH BASIN COVERS SHALL BE CONFINED TO THE BRICK SHIMMING ABOVE THE STRUCTURE CORBEL. THIS SHIMMING SHALL NOT EXCEED 1 FOOT BETWEEN THE TOP OF THE CORBEL AND THE FRAME BOTTOM. ANY WORK MORE EXTENSIVE THAN DESCRIBED IMMEDIATELY ABOVE SHALL BE CONSTRUED AS WORK UNDER RECONSTRUCTING CATCH BASINS. DEPTHS OF BRICKWORK TO BE REPAIRED, AS INDICATED ON THE PLAN, ARE ESTIMATES ONLY AND MAY VARY AT TIME OF CONSTRUCTION.

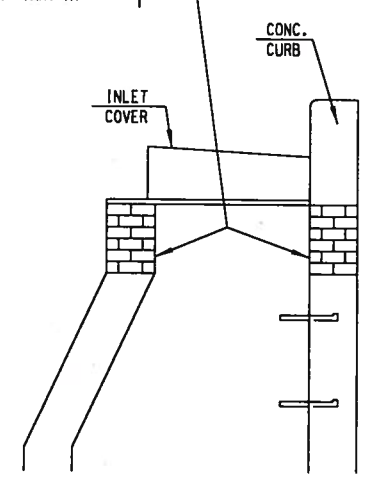

SECTION A-A

ADJUSTING INLET COVERS

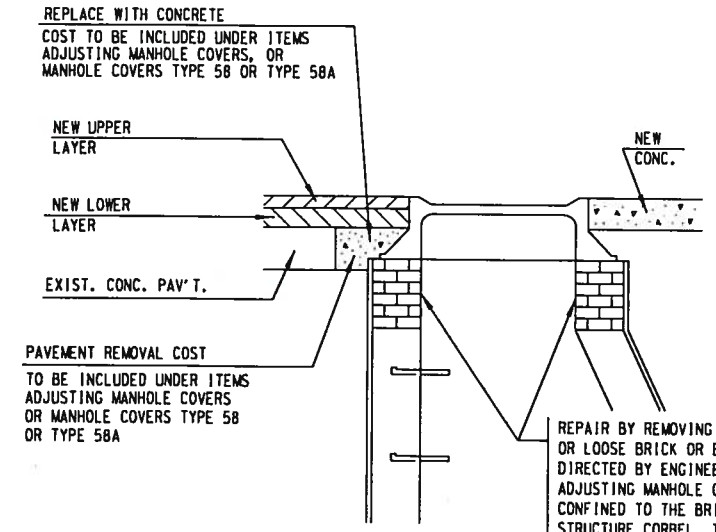

REPAIR BY REMOVING & REPLACING DAMAGED OR LOOSE BRICK OR BLOCK TO DEPTH AS DIRECTED BY ENGINEER. WORK UNDER ADJUSTING MANHOLE COVERS SHALL BE CONFINED TO THE BRICK SHIMMING ABOVE THE STRUCTURE CORBEL. THIS SHIMMING SHALL NOT EXCEED 1 FOOT BETWEEN THE TOP OF THE CORBEL AND THE FRAME BOTTOM. ANY WORK MORE EXTENSIVE THAN DESCRIBED IMMEDIATELY ABOVE SHALL BE CONSTRUED AS WORK UNDER RECONSTRUCTING MANHOLES. DEPTHS OF BRICKWORK TO BE REPAIRED, AS INDICATED ON THE PLAN, ARE ESTIMATES ONLY AND MAY VARY AT TIME OF CONSTRUCTION.

ADJUSTING MANHOLE COVERS OR MANHOLE COVERS TYPE 58 OR TYPE 58A

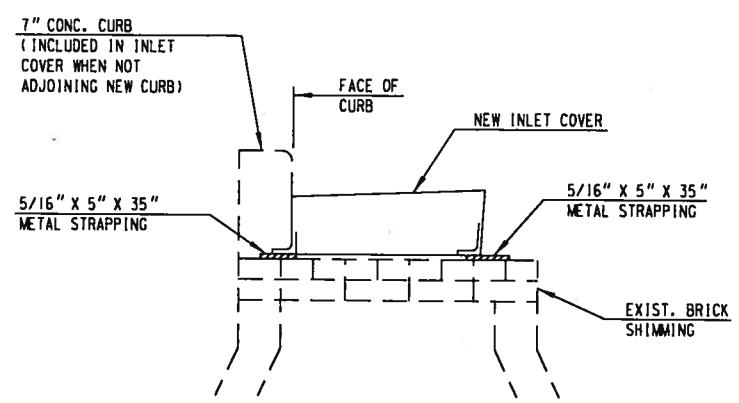

EXIST. DRAINAGE STRUCTURE

NOTES:

1. METAL STRAPPING TO BE 5/16" X 5" X 35" FLAT STEEL, HOT ROLLED (ASTM A36).
2. METAL STRAPPING TO BE PLACED ACROSS EXISTING DRAINAGE STRUCTURE TO SUPPORT NEW COVER. THE METAL STRAPPING SHALL BE SET ON A BED OF MORTAR.
3. PRECAST CONCRETE FLAT SLAB TOPS MAY BE USED ON THE STRUCTURE. THE TOPS SHALL BE INSTALLED ON A BED OF MORTAR.
4. COST OF MATERIALS AND LABOR TO BE INCLUDED IN PRICE BID FOR INLET COVER, TYPE 57.

DETAIL FOR PLACING NEW INLET COVER ON EXISTING INLET USING METAL STRAPPING MATERIALS

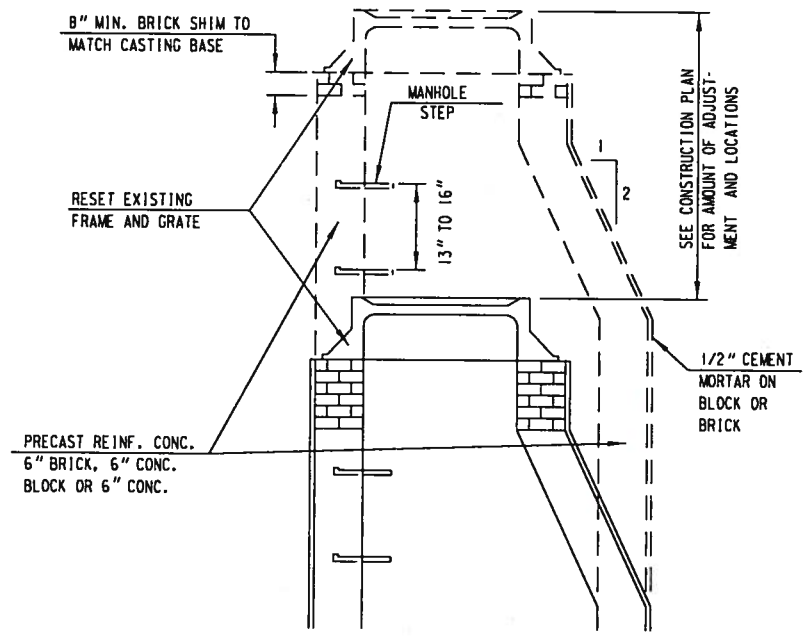

CORBEL MAY BE REVERSED STRAIGHT SIDE LEANED SLIGHTLY TO CLEAR CURB HEAD.

REPAIR BY REMOVING AND REPLACING DAMAGED OR LOOSE BRICK OR BLOCK TO THE DEPTH AS SHOWN ON THE PLAN OR AS DIRECTED BY THE ENGINEER. DEPTHS AS INDICATED ON PLAN ARE ESTIMATES ONLY AND MAY VARY AT TIME OF CONSTRUCTION.

RECONSTRUCTING MANHOLES AND INLETS

CONSTRUCTION NOTES

1. LOCATIONS OF STRUCTURES IN CURB & GUTTER SECTIONS REFER TO FACE OF CURB.
2. LOCATIONS OF STRUCTURES NOT IN CURB AND GUTTER SECTIONS REFER TO CENTERLINE OF STRUCTURE.
3. PIPE LENGTHS GIVEN ARE APPROXIMATE OUT TO OUT OF STRUCTURE.
4. GRATE & RIM ELEVATIONS ARE GIVEN AT FLOW LINE OF INLET COVER OR AT CENTERLINE OF MANHOLE COVER.
5. WHEN NEW COVERS ARE PLACED, THE FIRST 12" OF ADJUSTMENT OR REPAIRING SHALL BE INCLUDED IN THE COST OF THE NEW COVER. ANY ADJUSTMENT OR REPAIR OF BRICKWORK 12" OR LESS WILL BE PAID AS ADJUSTING COVERS WHEN RESETTING EXISTING COVERS, ANY ADJUSTMENT OR REPAIR OF BRICKWORK MORE THAN 12" WILL BE PAID AS A RECONSTRUCT.
6. MANHOLE ADJUSTMENTS IN ASPHALTIC PAVEMENT WILL BE MADE AFTER THE LOWER LAYER IS PLACED.
7. WHEN CONSTRUCTING CONCRETE CURB ADJACENT TO INLET COVER TYPE 57, TWO (2) DEFORMED TIE BARS SHALL BE PLACED LONGITUDINALLY THROUGH THE CURB SECTION AND EXTENDED ONE (1) FOOT BEYOND EACH SIDE OF THE FRAME. A DUMMY JOINT SHALL BE CUT IN THE CURB AT EACH SIDE OF THE FRAME.

2

STATE PROJECT NUMBER 2265-00-73 - -	HWY: NON-HIGHWAY	COUNTY: MILWAUKEE	DRAINAGE DETAILS	SCALE FEET	SHEET NO:	E

FILE NAME: W:\SPR\27TH OKLA NATL STSCP \NEW SCHEME\DRAINDET.DGN

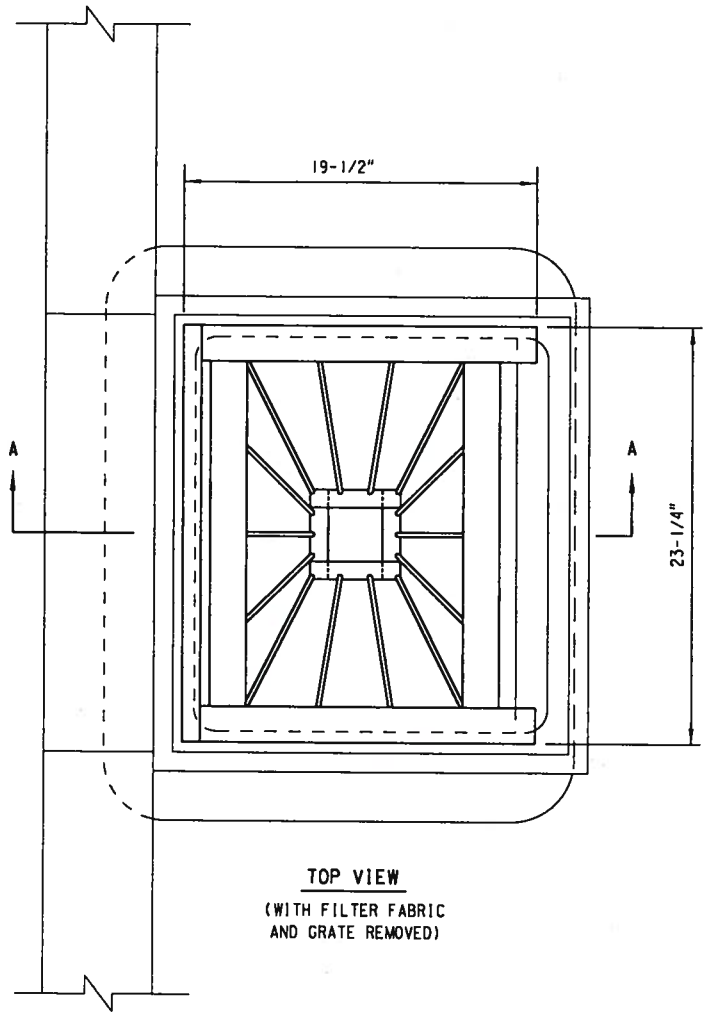

TOP VIEW
(WITH FILTER FABRIC AND GRATE REMOVED)

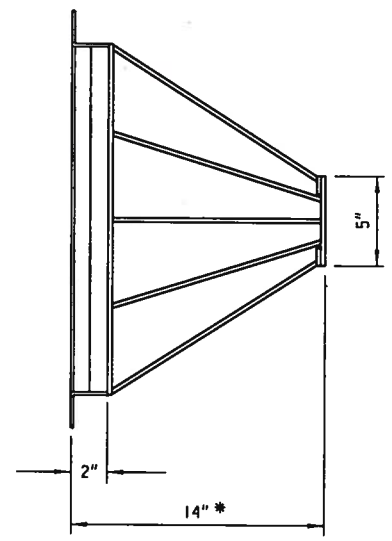

FRONT VIEW
(BASKET ONLY)

* MAY BE DECREASED IF INLET IS OF INSUFFICIENT DEPTH

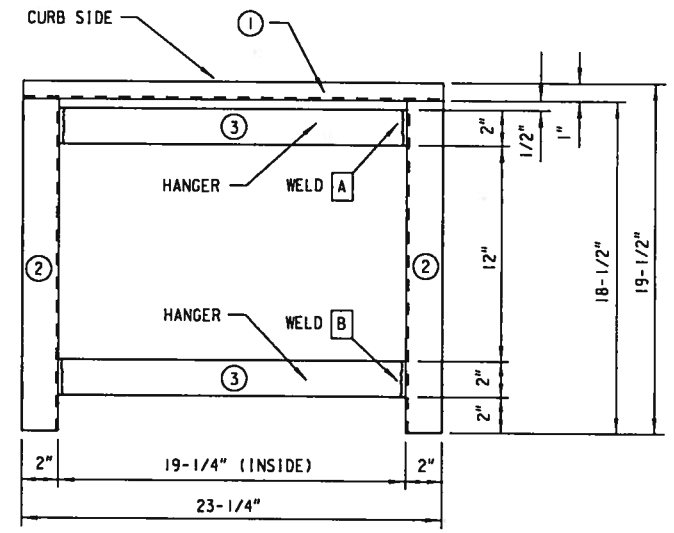

TOP VIEW

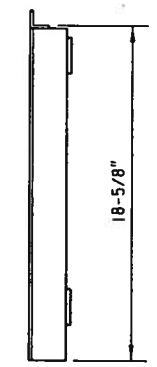

SIDE VIEW

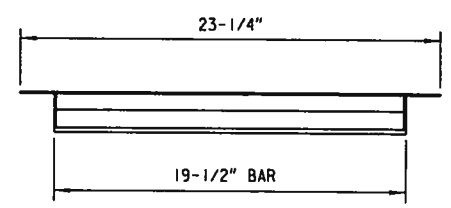

FRONT VIEW

BAR SCHEDULE

NO.	SHAPE	SIZE	THICKNESS	LENGTH	QUANTITY
1	ANGLE	1" X 1"	1/8"	23-1/4"	1
2	ANGLE	2" X 2"	1/8"	18-1/2"	2
3	BAR	2"	1/4"	19-1/2"	2

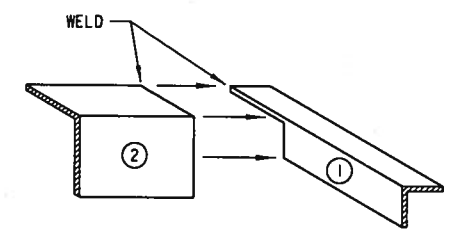

WELD CONNECTION - A
TOP FRAME

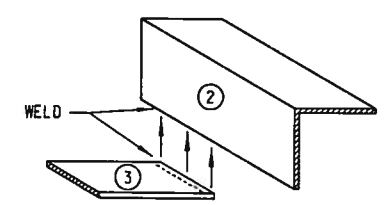

WELD CONNECTION - B
BASKET HANGER TO TOP FRAME

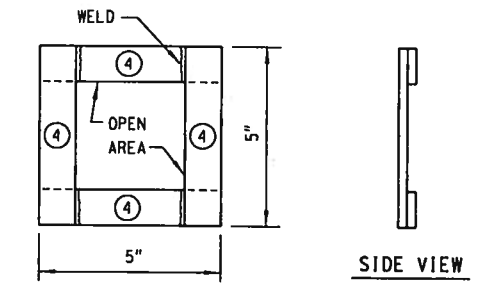

TOP VIEW

SIDE VIEW

BAR SCHEDULE

NO.	SHAPE	SIZE	THICKNESS	LENGTH	QUANTITY
4	BAR	1"	1/4"	5"	4

BASKET BOTTOM

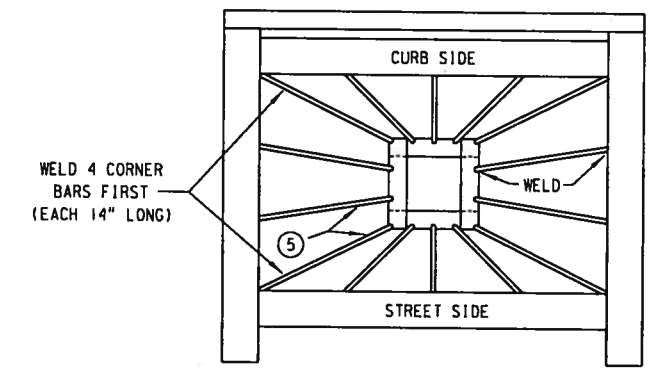

ROD PLACEMENT

ROD SCHEDULE

NO.	SHAPE	SIZE	THICKNESS	LENGTH	QUANTITY
5	ROD	1/4" MIN.	1/8"	12" TO 14" (CUT TO FIT)	14

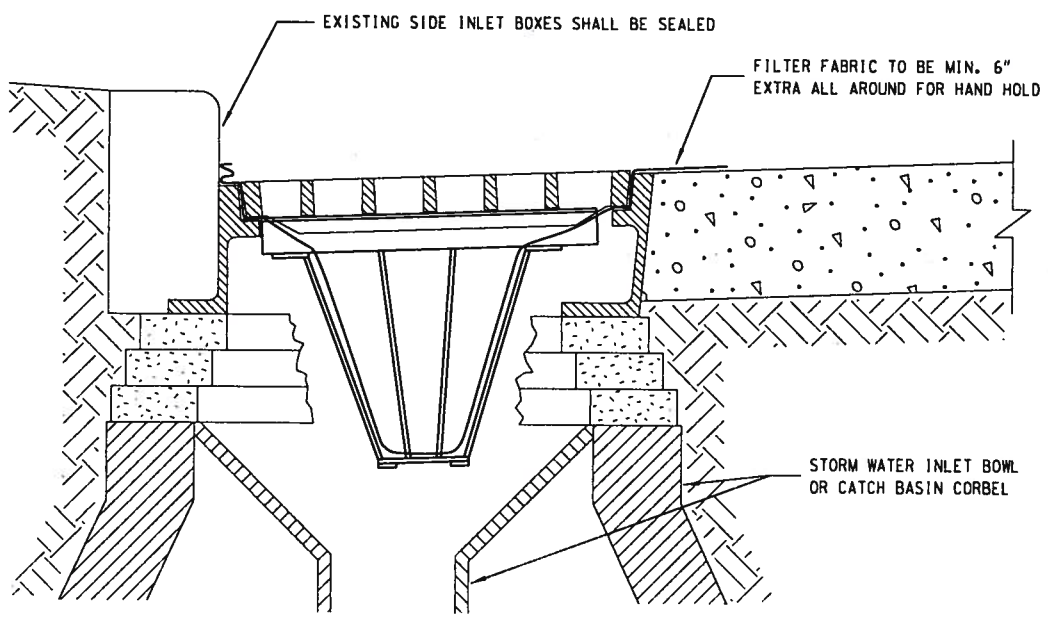

SECTION A-A

TYPE M
INLET / CATCH BASIN BASKET

STATE PROJECT NUMBER 2265-00-73 - -	HWY: NON-HIGHWAY	COUNTY: MILWAUKEE	DRAINAGE DETAILS	SCALE FEET	SHEET NO:	E

FILE NAME: W:\SPR\27TH OKLA NATL STSCP \NEW SCHEME\DRAINDET.DGN

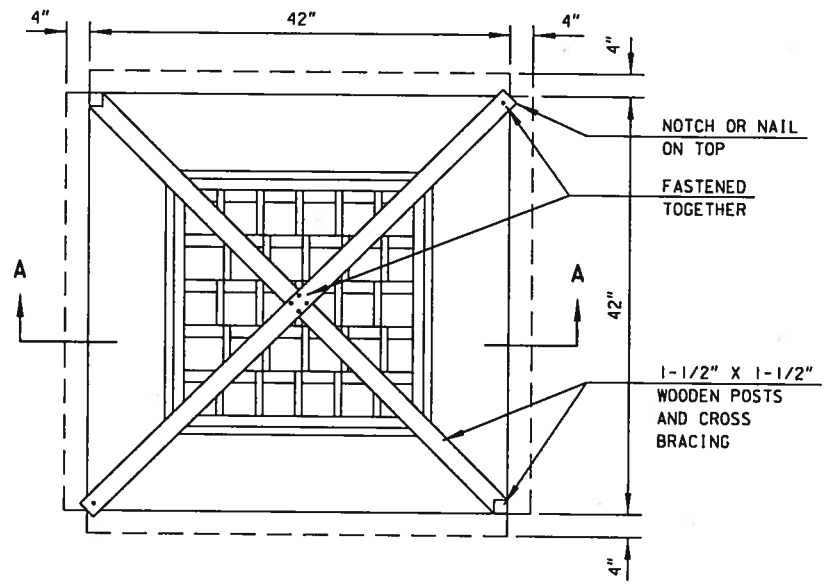

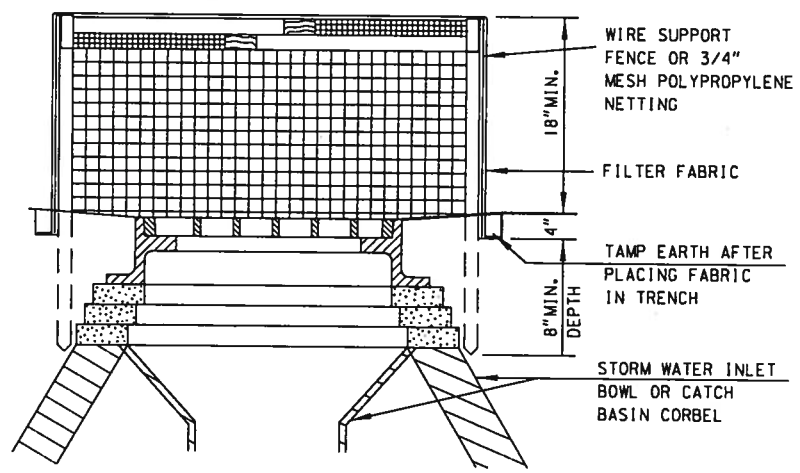

SECTION A-A

INLET SCREEN

(NOT PAVED) (TYPE R)

STATE PROJECT NUMBER 2265-00-73 - -	HWY: NON-HIGHWAY	COUNTY: MILWAUKEE	DRAINAGE DETAILS	SCALE FEET	SHEET NO:	E

FILE NAME: W:\SPR\27TH OKLA NATL STSCP \NEW SCHEME\DRAINDET.DGN

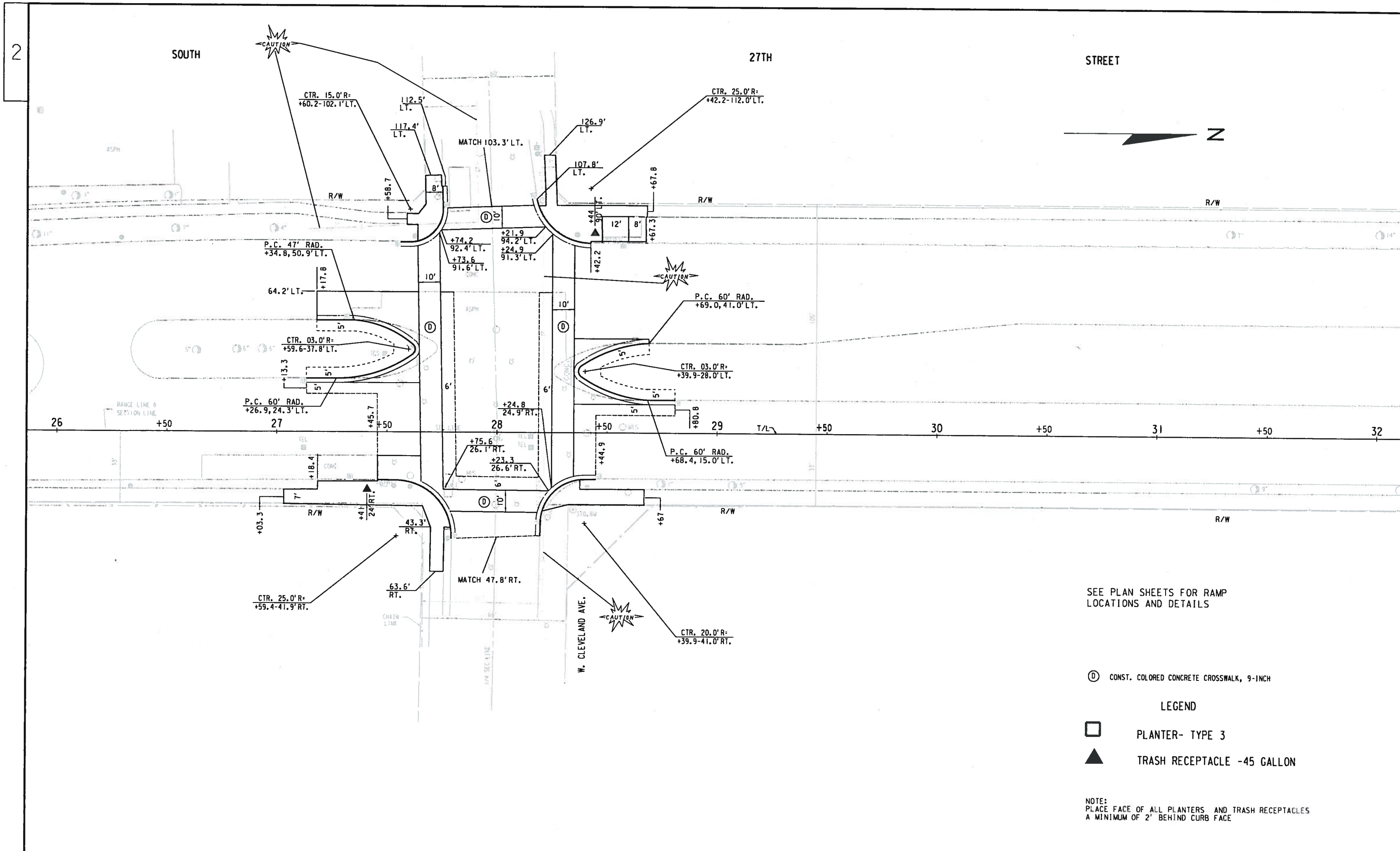

STATE PROJECT NUMBER 2265-00-73 - -	HWY: NON-HIGHWAY	COUNTY: MILWAUKEE	PLAN DETAIL	SCALE FEET 0' 40'	SHEET NO:	E

FILE NAME: W:\SPR\ 27TH OKLA NATL STSCP\ NEW SCHEME\PDET 01 CLEVELAND.DGN

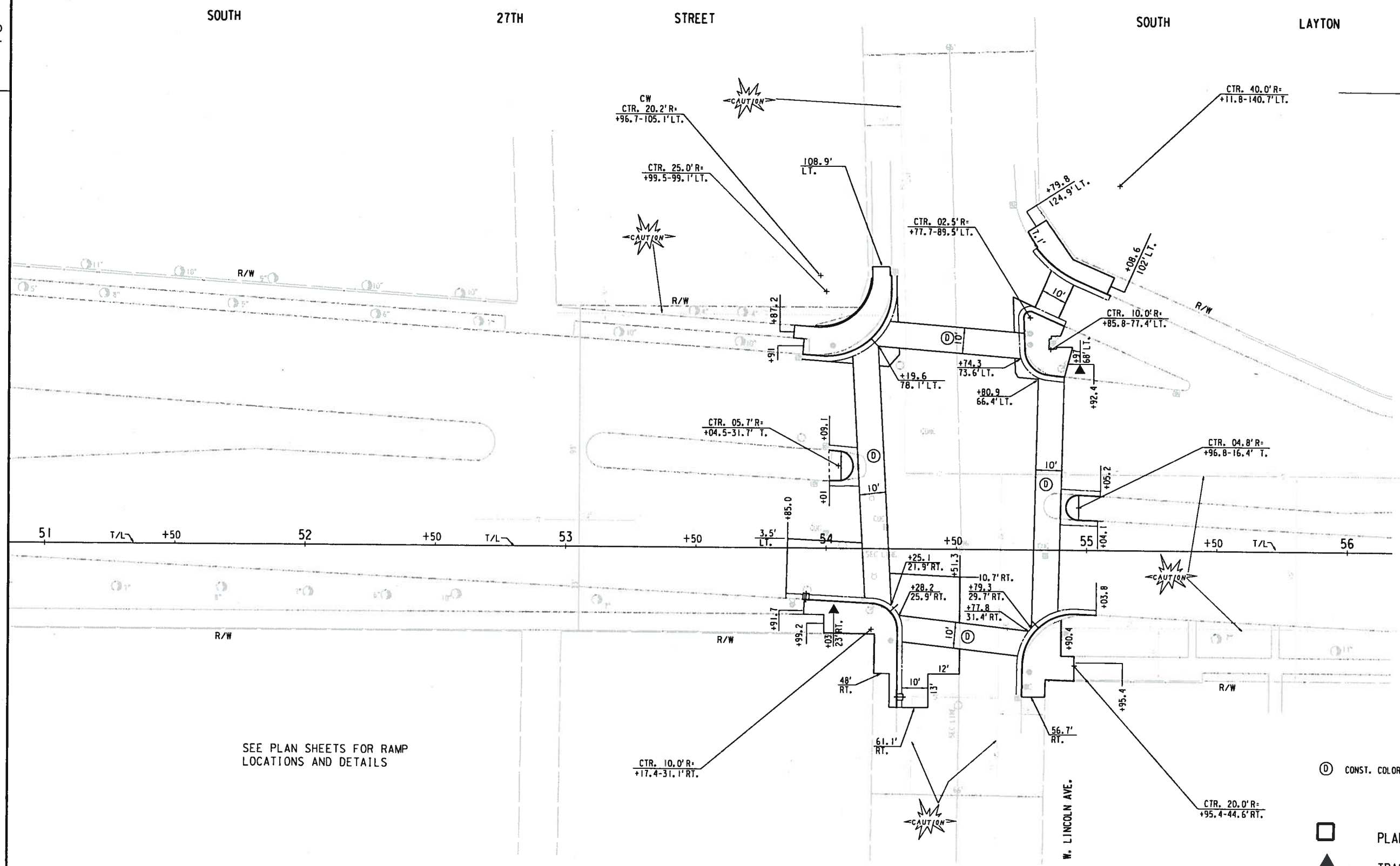

NOTE:
PLACE FACE OF ALL PLANTERS AND TRASH RECEPTACLES
A MINIMUM OF 2' BEHIND CURB FACE

STATE PROJECT NUMBER 2265-00-73 - -	HWY: NON-HIGHWAY	COUNTY: MILWAUKEE	PLAN DETAIL	SCALE FEET 0' 40'	SHEET NO:	E

FILE NAME: W:\SPR\27TH OKLA NATL STSCP\NEW SCHEME\PDET 02 LINCOLN.DGN

SOUTH LAYTON BOULEVARD

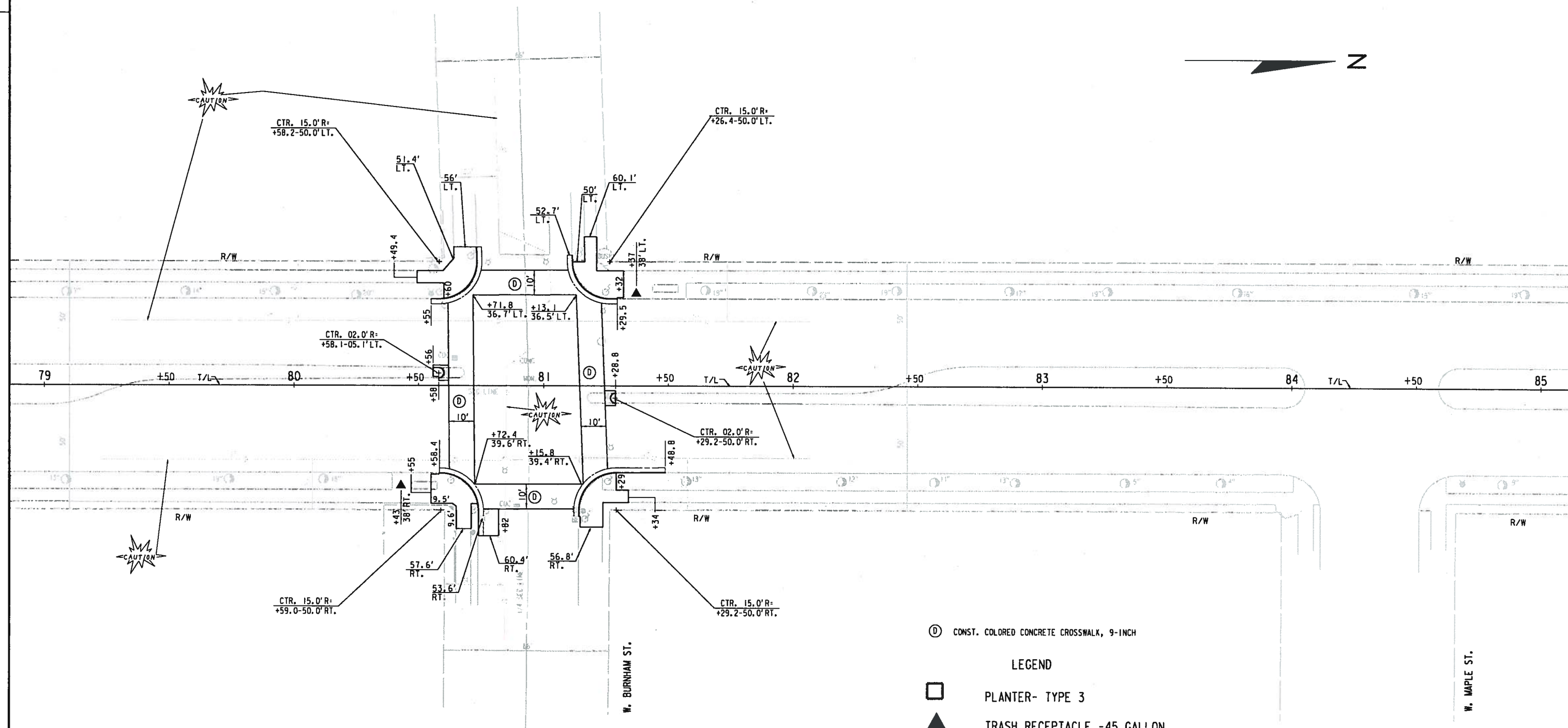

SEE PLAN SHEETS FOR RAMP
LOCATIONS AND DETAILS

(D) CONST. COLORED CONCRETE CROSSWALK, 9-INCH

LEGEND

PLANTER- TYPE 3

TRASH RECEPTACLE -45 GALLON

NOTE:
PLACE FACE OF ALL PLANTERS AND TRASH RECEPTACLES
A MINIMUM OF 2' BEHIND CURB FACE

STATE PROJECT NUMBER 2265-00-73 - -	HWY: NON-HIGHWAY	COUNTY: MILWAUKEE	PLAN DETAIL	SCALE FEET 0' 40'	SHEET NO:	E

FILE NAME: W:\SPR\ 27TH OKLA NATL STSCP\ NEW SCHEME\ PDET 03 BURNHAM.DGN

SOUTH LAYTON BOULEVARD

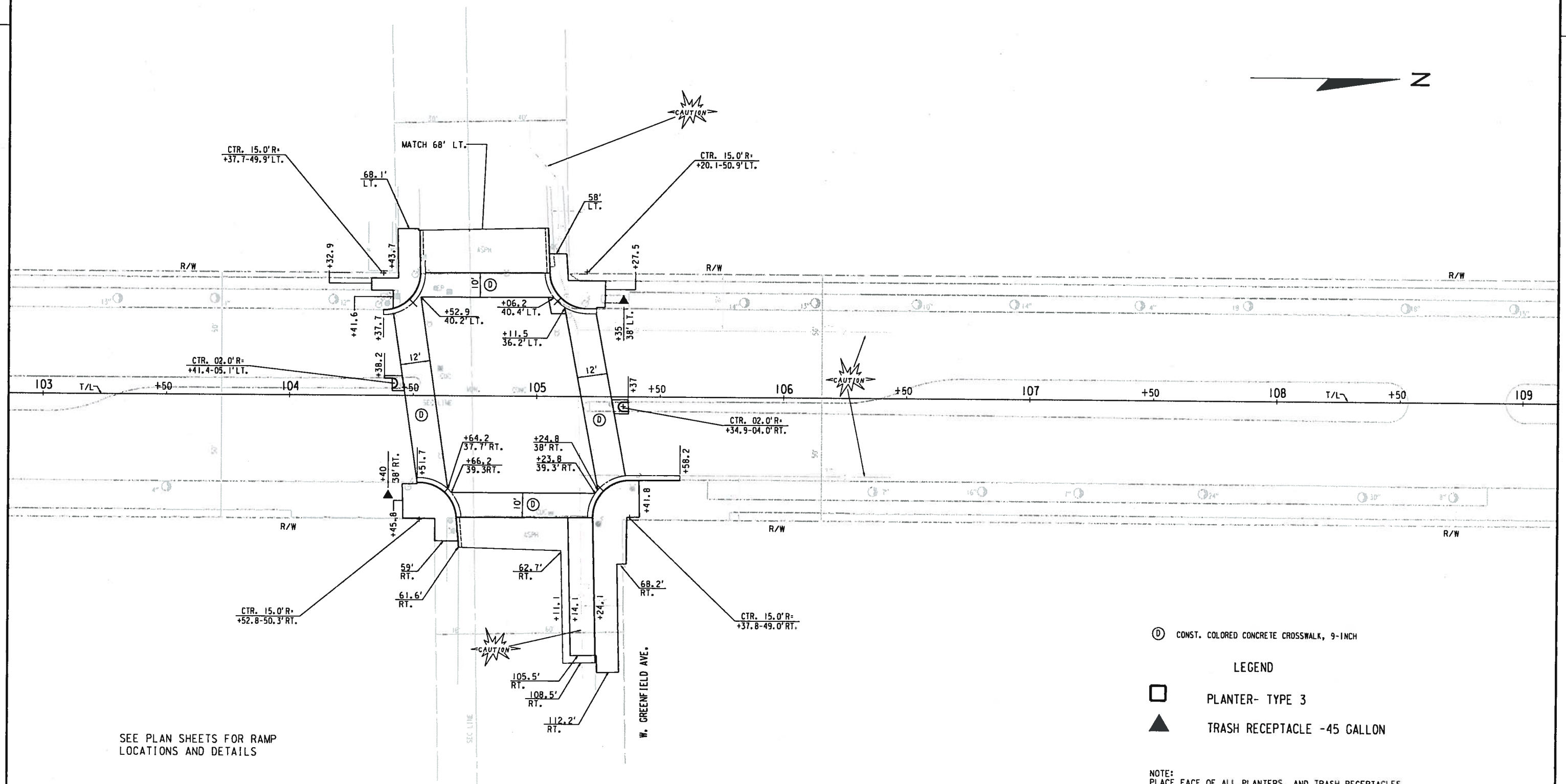

SEE PLAN SHEETS FOR RAMP
LOCATIONS AND DETAILS

(D) CONST. COLORED CONCRETE CROSSWALK, 9-INCH

LEGEND

PLANTER- TYPE 3

TRASH RECEPTACLE -45 GALLON

NOTE:
PLACE FACE OF ALL PLANTERS AND TRASH RECEPTACLES
A MINIMUM OF 2' BEHIND CURB FACE

STATE PROJECT NUMBER 2265-00-73 - -	HWY: NON-HIGHWAY	COUNTY: MILWAUKEE	PLAN DETAIL	SCALE FEET 0' 40'	SHEET NO:	E

FILE NAME: W:\SPR\ 27TH OKLA NATL STSCP\ NEW SCHEME\ PDET 04 GREENFIELD.DGN

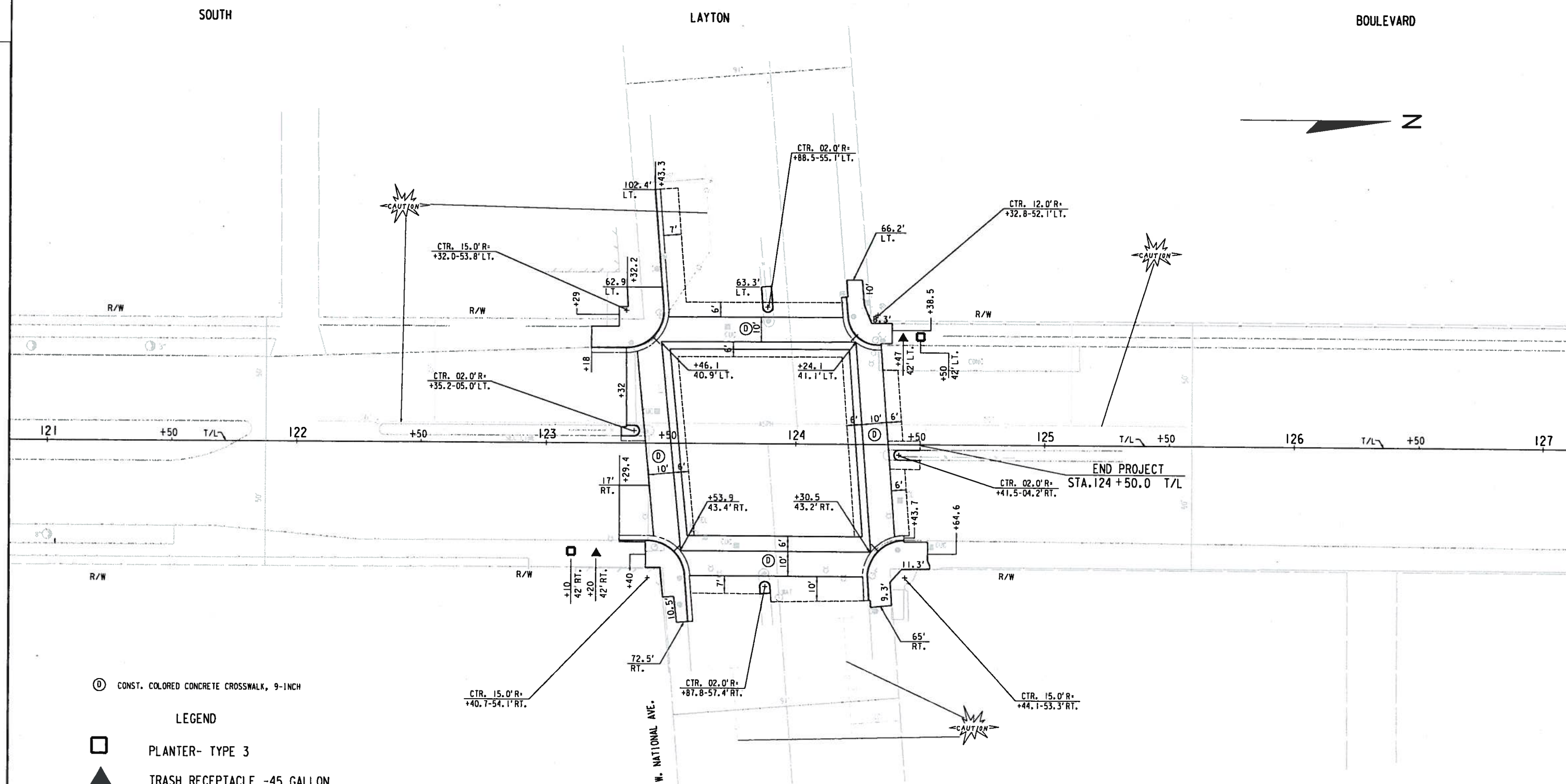

D CONST. COLORED CONCRETE CROSSWALK, 9-INCH

LEGEND

PLANTER- TYPE 3

TRASH RECEPTACLE -45 GALLON

NOTE:
PLACE FACE OF ALL PLANTERS AND TRASH RECEPTACLES
A MINIMUM OF 2' BEHIND CURB FACE

SEE PLAN SHEETS FOR RAMP
LOCATIONS AND DETAILS

STATE PROJECT NUMBER 2265-00-73 - -	HWY: NON-HIGHWAY	COUNTY: MILWAUKEE	PLAN DETAIL	SCALE FEET 0' 40'	SHEET NO:	E

FILE NAME: W:\SPR\ 27TH OKLA NATL STSCP\ NEW SCHEME\ PDET 05 NATIONAL.DGN

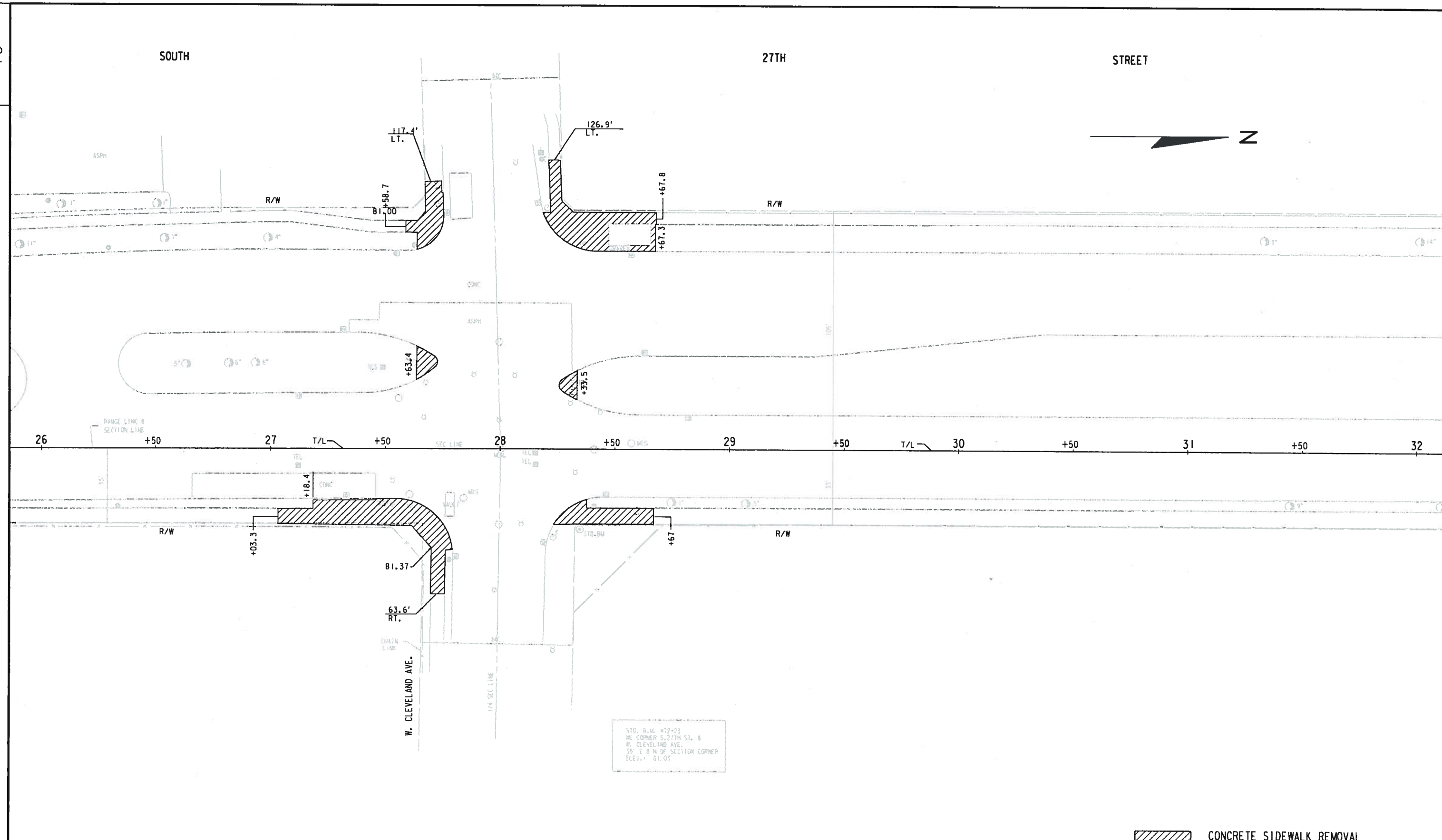

STATE PROJECT NUMBER 2265-00-73 - -	HWY: NON-HIGHWAY	COUNTY: MILWAUKEE	SIDEWALK REMOVAL PLAN	SCALE FEET 0' 40'	SHEET NO:	E

FILE NAME: W:\SPR\ 27TH OKLA NATL STSCP\ NEW SCHEME\ CWREM 01 CLEVELAND.DGN

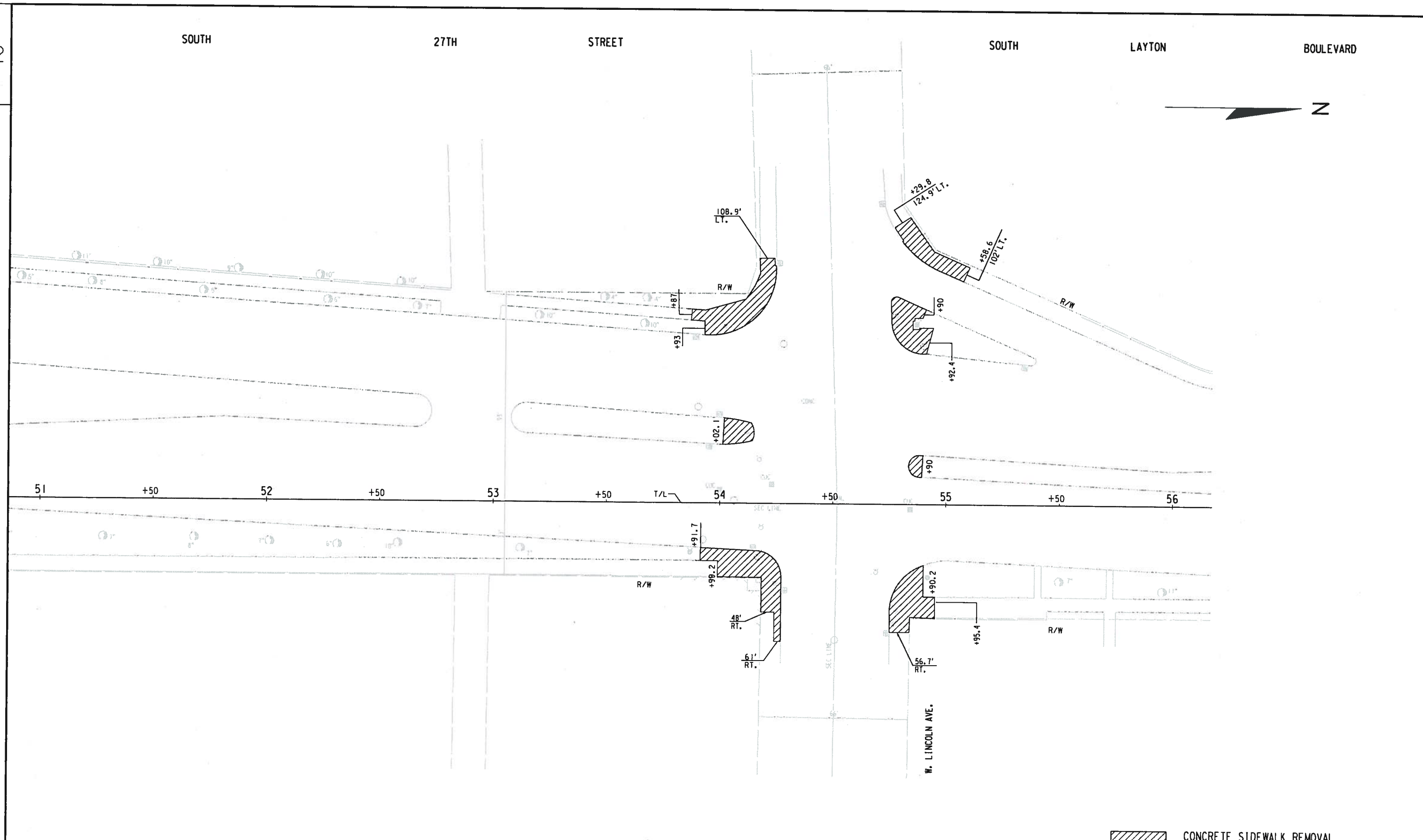

STATE PROJECT NUMBER 2265-00-73 - -	HWY: NON-HIGHWAY	COUNTY: MILWAUKEE	SIDEWALK REMOVAL PLAN	SCALE FEET 0' 40'	SHEET NO:	E

FILE NAME: W:\SPR\27TH OKLA NATL STSCP\ NEW SCHEME\ CW REM 02 LINCOLN.DGN

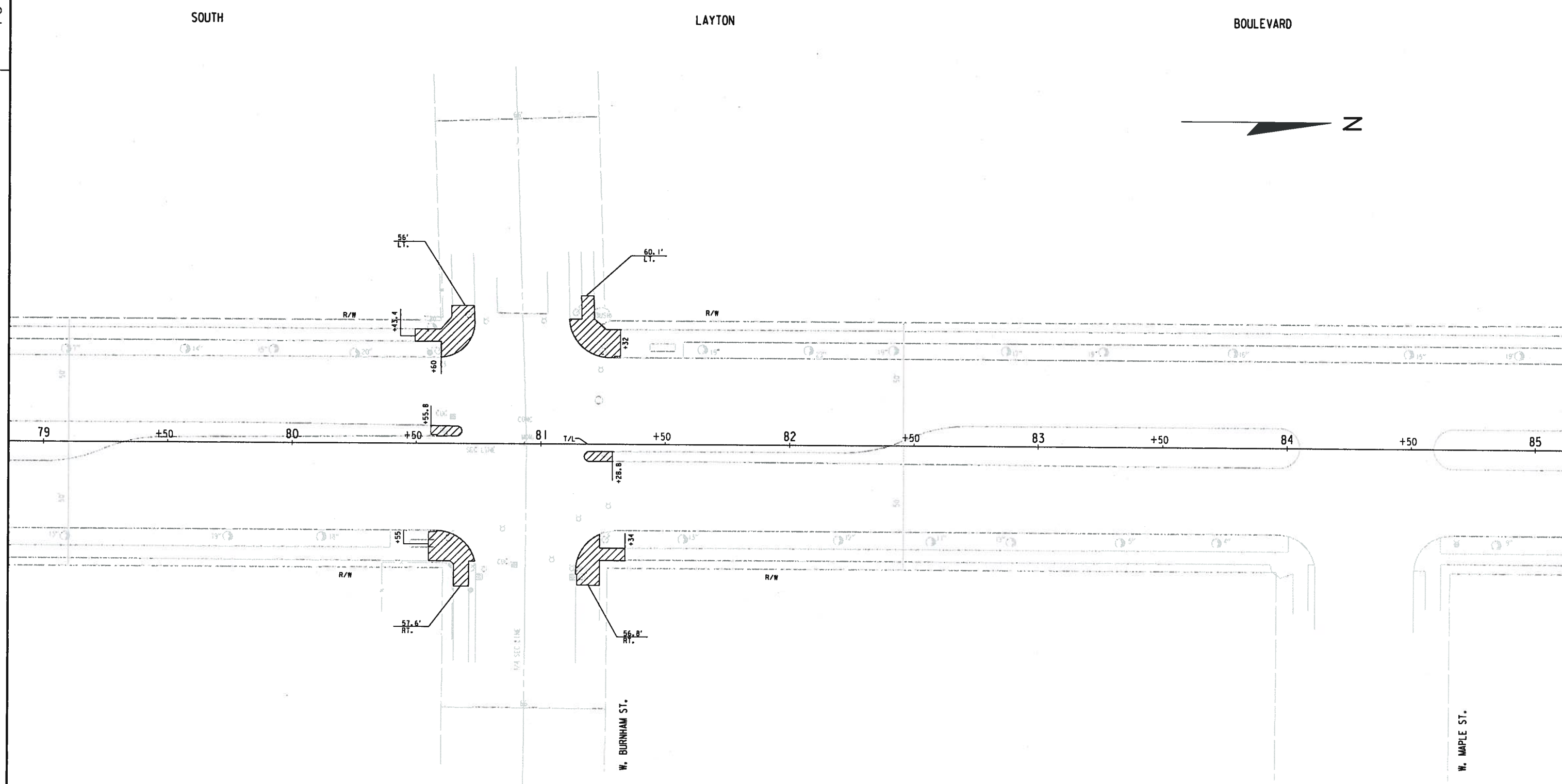

CONCRETE SIDEWALK REMOVAL

STATE PROJECT NUMBER 2265-00-73 - -	HWY: NON-HIGHWAY	COUNTY: MILWAUKEE	SIDEWALK REMOVAL PLAN	SCALE FEET 0' 40'	SHEET NO:	E

FILE NAME: W:\SPR\ 27TH OKLA NATL STSCP\ NEW SCHEME\ CWREM 03 BURNHAM.DGN

SOUTH LAYTON BOULEVARD

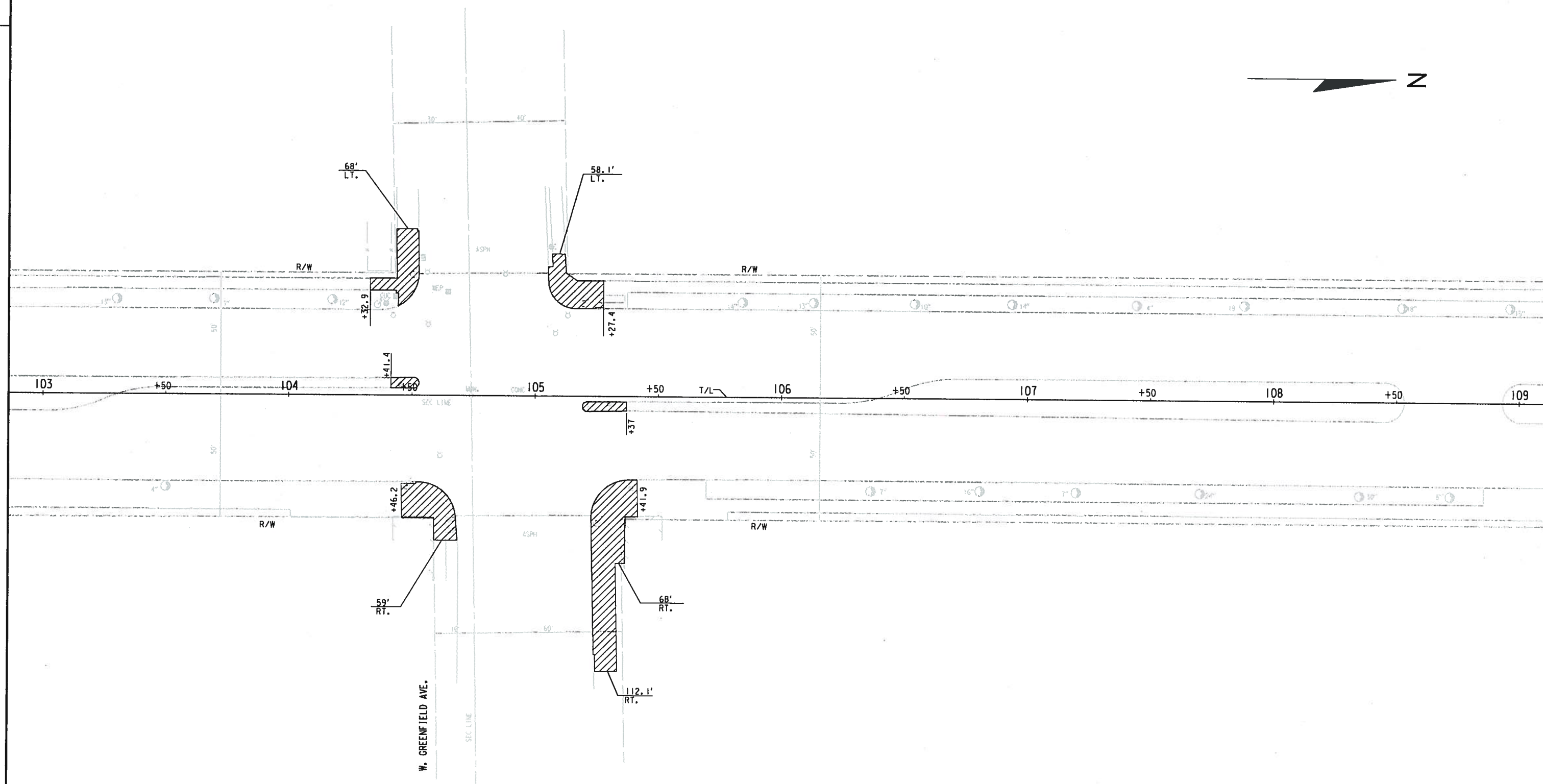

STATE PROJECT NUMBER 2265-00-73 - -	HWY: NON-HIGHWAY	COUNTY: MILWAUKEE	SIDEWALK REMOVAL PLAN	SCALE FEET 0' 40'	SHEET NO:	E

FILE NAME: W:\SPR\ 27TH OKLA NATL STSCP\ NEW SCHEME\CWREM 04 GREENFIELD.DGN

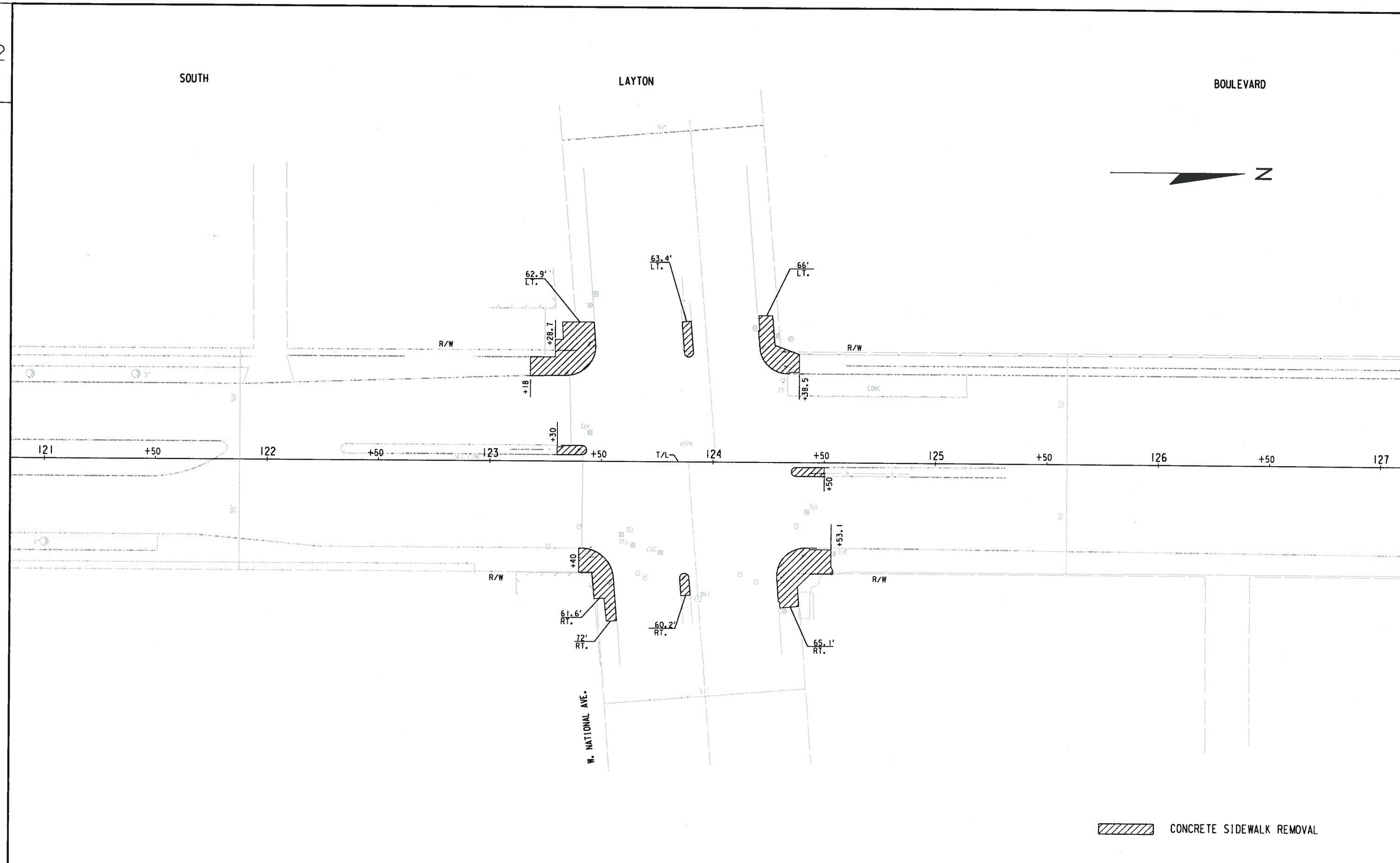

STATE PROJECT NUMBER 2265-00-73 - -	HWY: NON-HIGHWAY	COUNTY: MILWAUKEE	SIDEWALK REMOVAL PLAN	SCALE FEET 0' 40'	SHEET NO:	E

FILE NAME: W:\SPR\ 27TH OKLA NATL STSCP\ NEW SCHEME\CWREM 05 NATIONAL.DGN

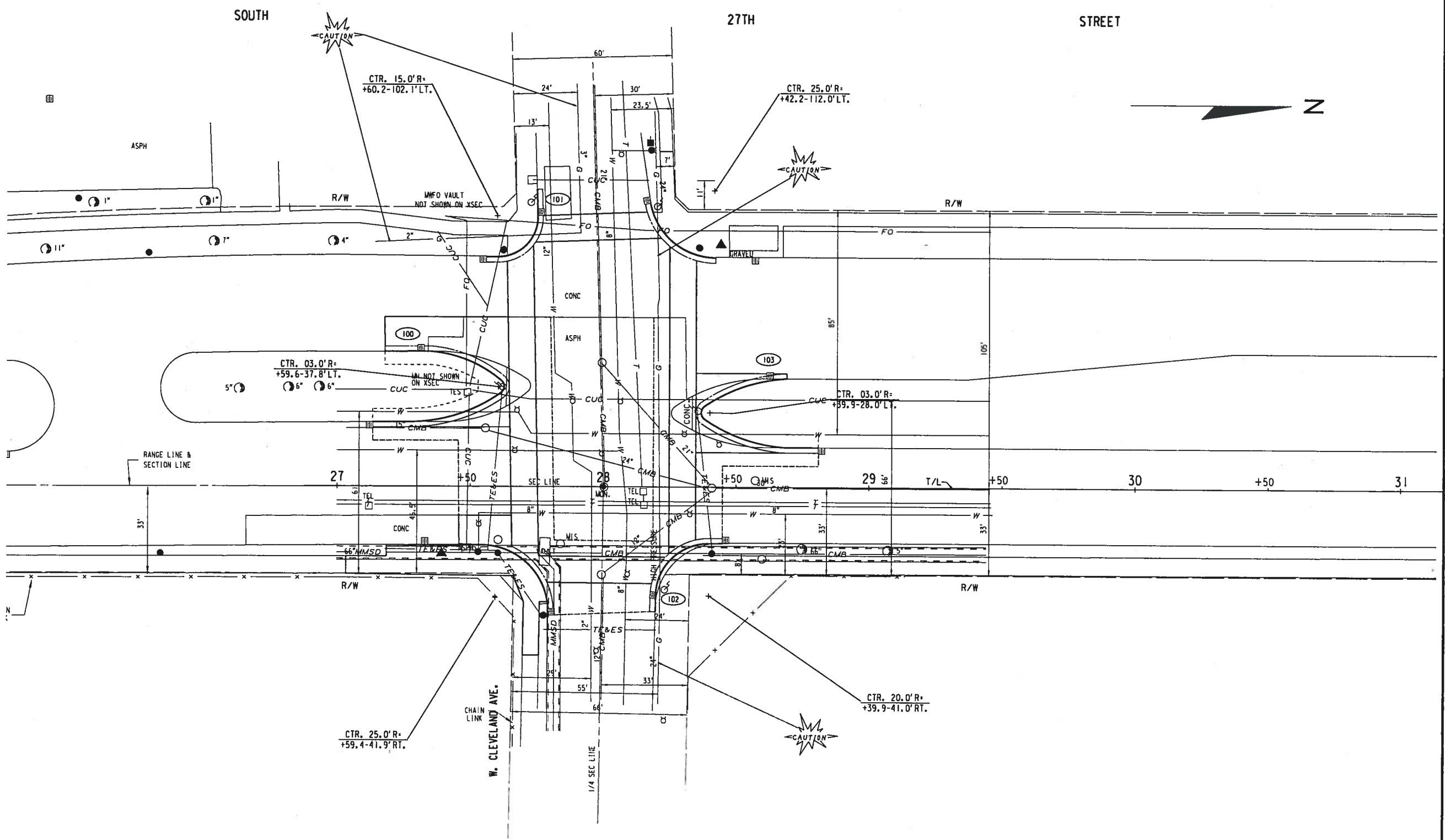

STATE PROJECT NUMBER 2265-00-73 - -	HWY: NON-HIGHWAY	COUNTY: MILWAUKEE	UTILITIES	SCALE FEET 0 40	SHEET NO:	E

FILE NAME: W:\SPR\27TH OKLA NATL STSCP\NEWSCHEME\UTILO|CLEVE.DGN

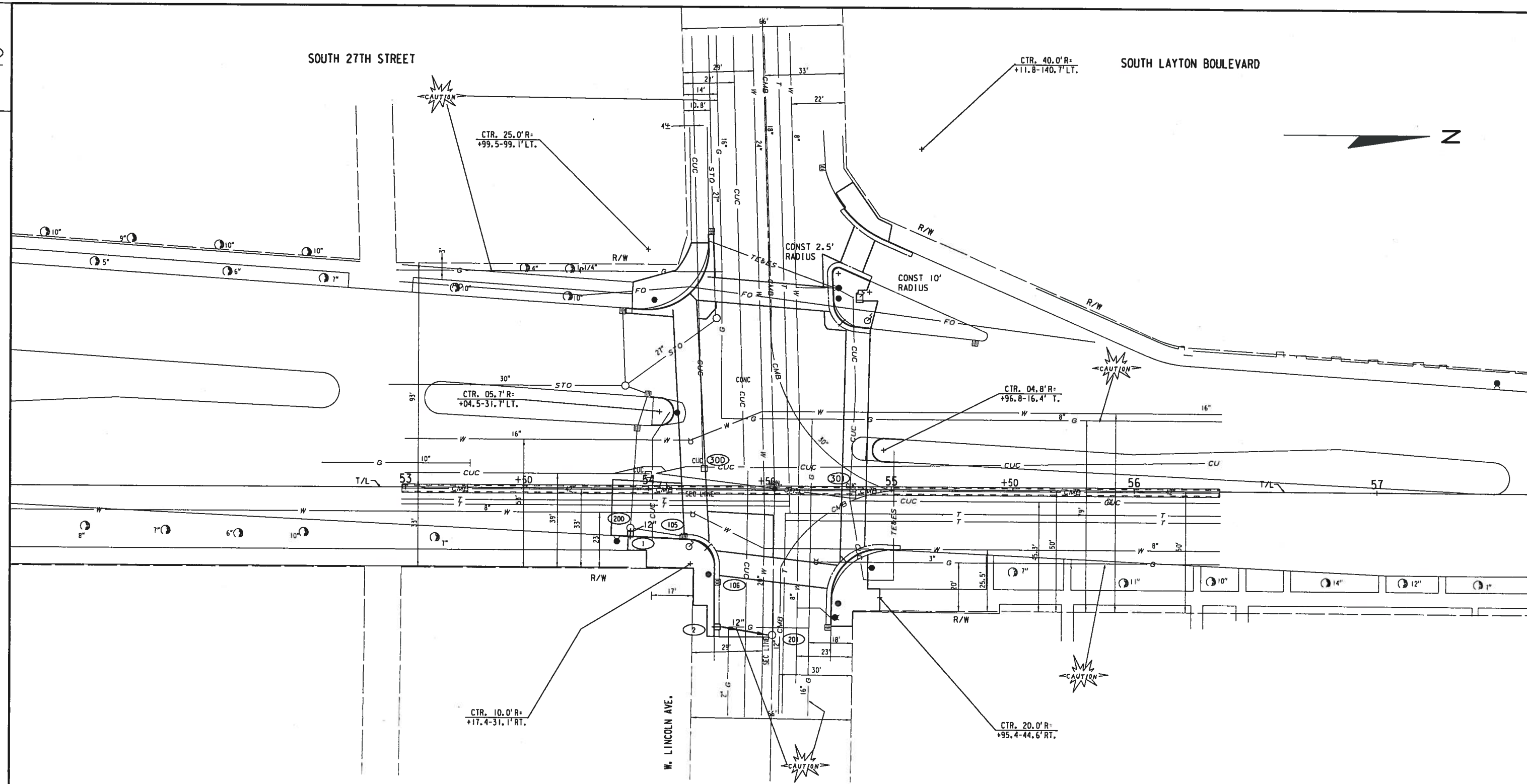

STATE PROJECT NUMBER 2265-00-73	- -	HWY: NON-HIGHWAY	COUNTY: MILWAUKEE	UTILITIES & DRAINAGE	SCALE FEET 0 40	SHEET NO:	E

FILE NAME: W:\SPR\27TH OKLA NATL STSCP NEWSCHEME UTIL03LINC.DGN

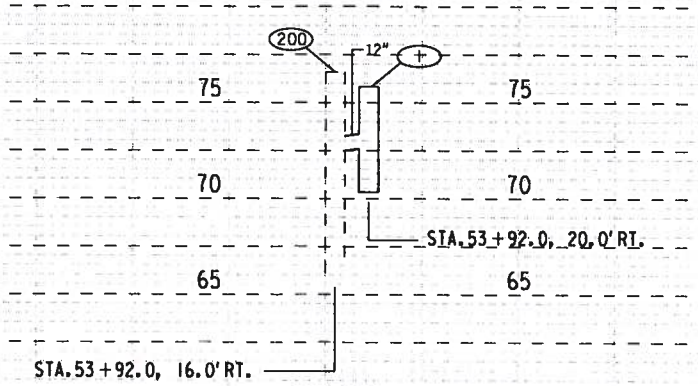

(LOOKING NORTHERLY)

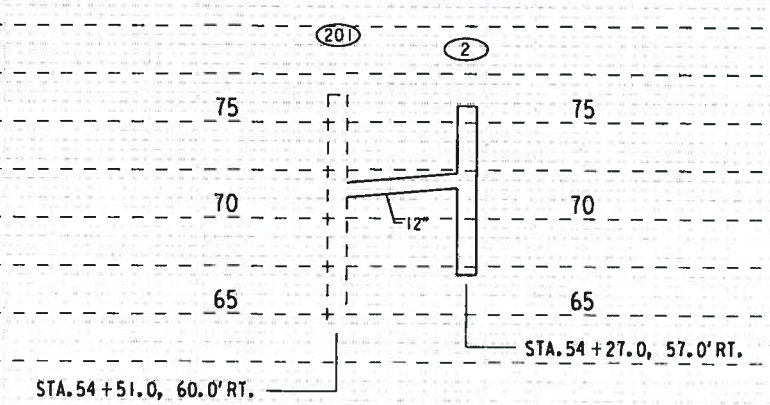

(LOOKING EASTERLY)

SOUTH LAYTON BOULEVARD

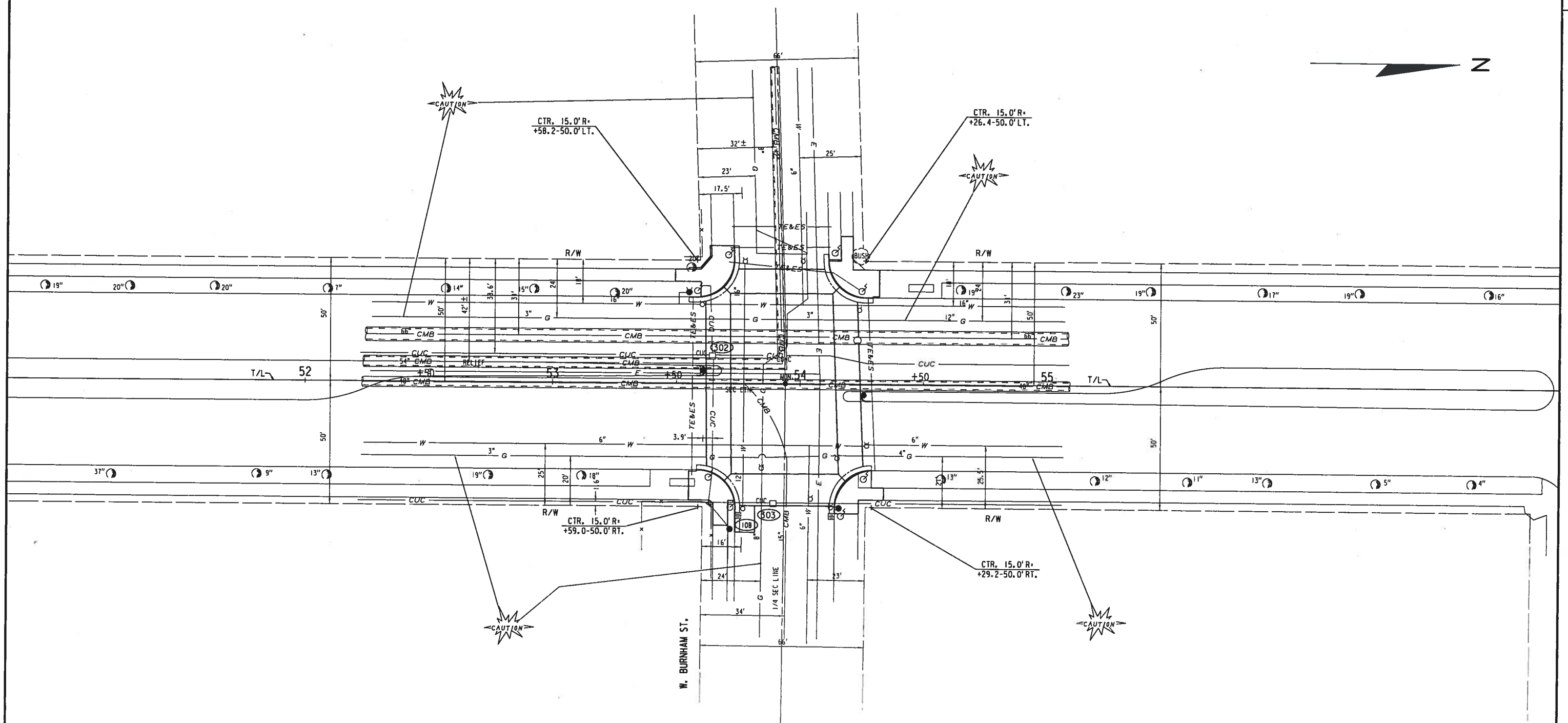

STATE PROJECT NUMBER 2265-00-73 - -	HWY: NON-HIGHWAY	COUNTY: MILWAUKEE	UTILITIES	SCALE FEET 0 40	SHEET NO:	E

FILE NAME: W:\SPR\27TH OKLA NATL STSCP NEWSCHEME UTIL05BURN.DGN

SOUTH LAYTON BOULEVARD

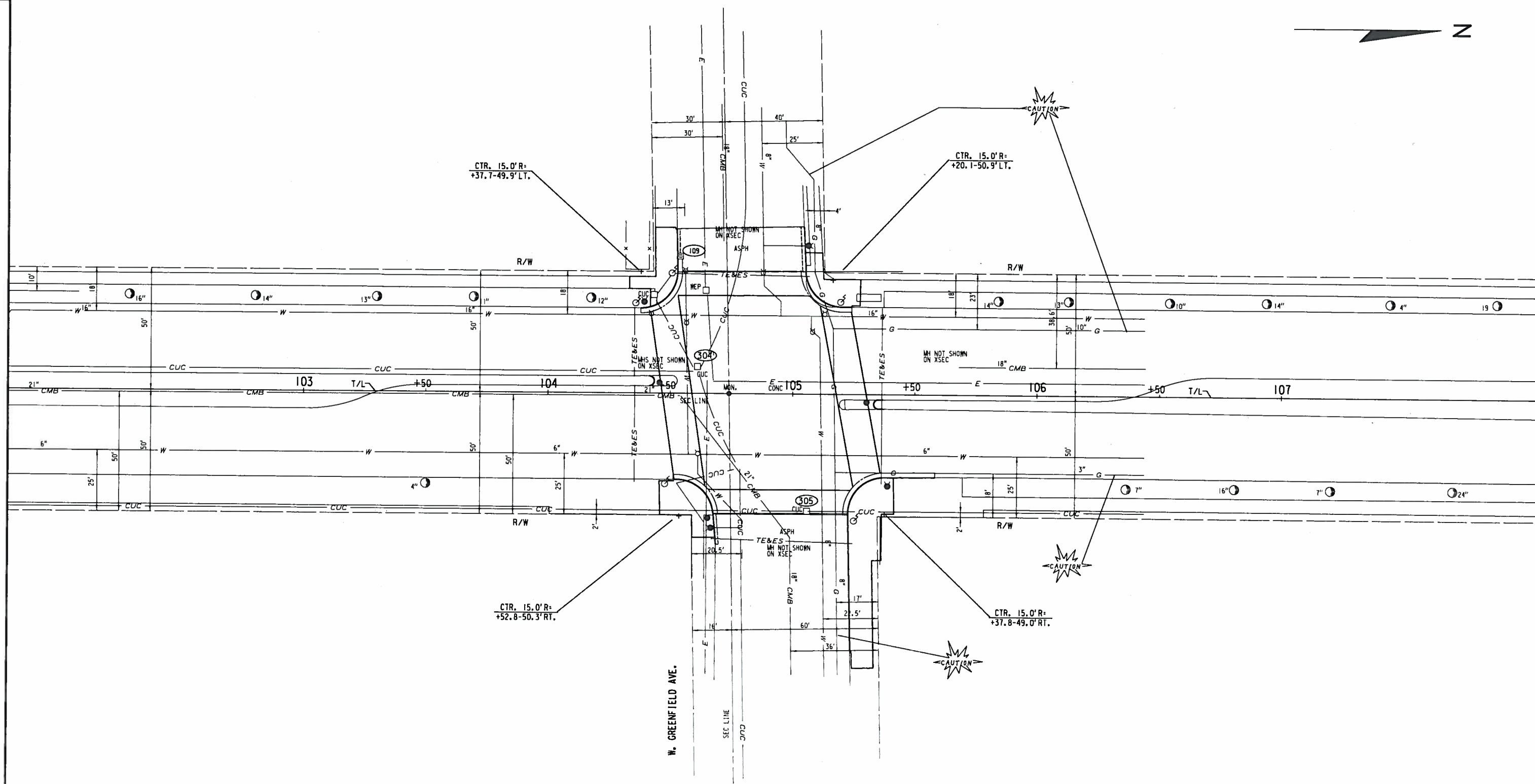

STATE PROJECT NUMBER 2265-00-73 - -	HWY: NON-HIGHWAY	COUNTY: MILWAUKEE	UTILITIES	SCALE FEET 0 40	SHEET NO:	E

FILE NAME: W:\SPR\27TH OKLA NATL STSCP NEWSCHEME UTIL09GREENF.DG

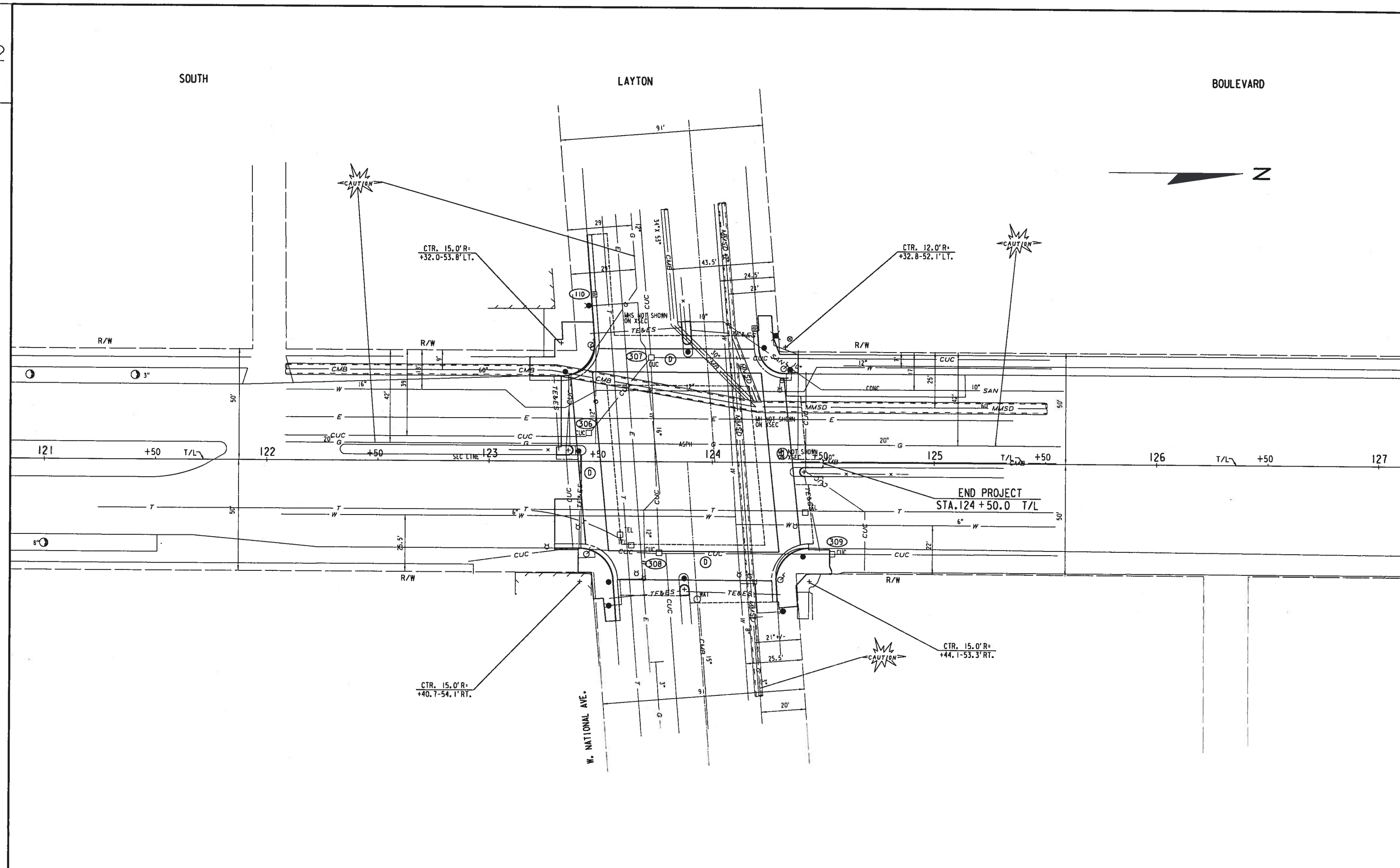

STATE PROJECT NUMBER 2265-00-73 - -	HWY: NON-HIGHWAY	COUNTY: MILWAUKEE	UTILITIES	SCALE FEET 0' 40'	SHEET NO:	E

FILE NAME: W:\SPR\ 27TH OKLA NATL STSCP\ NEW SCHEME\ UTILIT NATIONAL.DGN

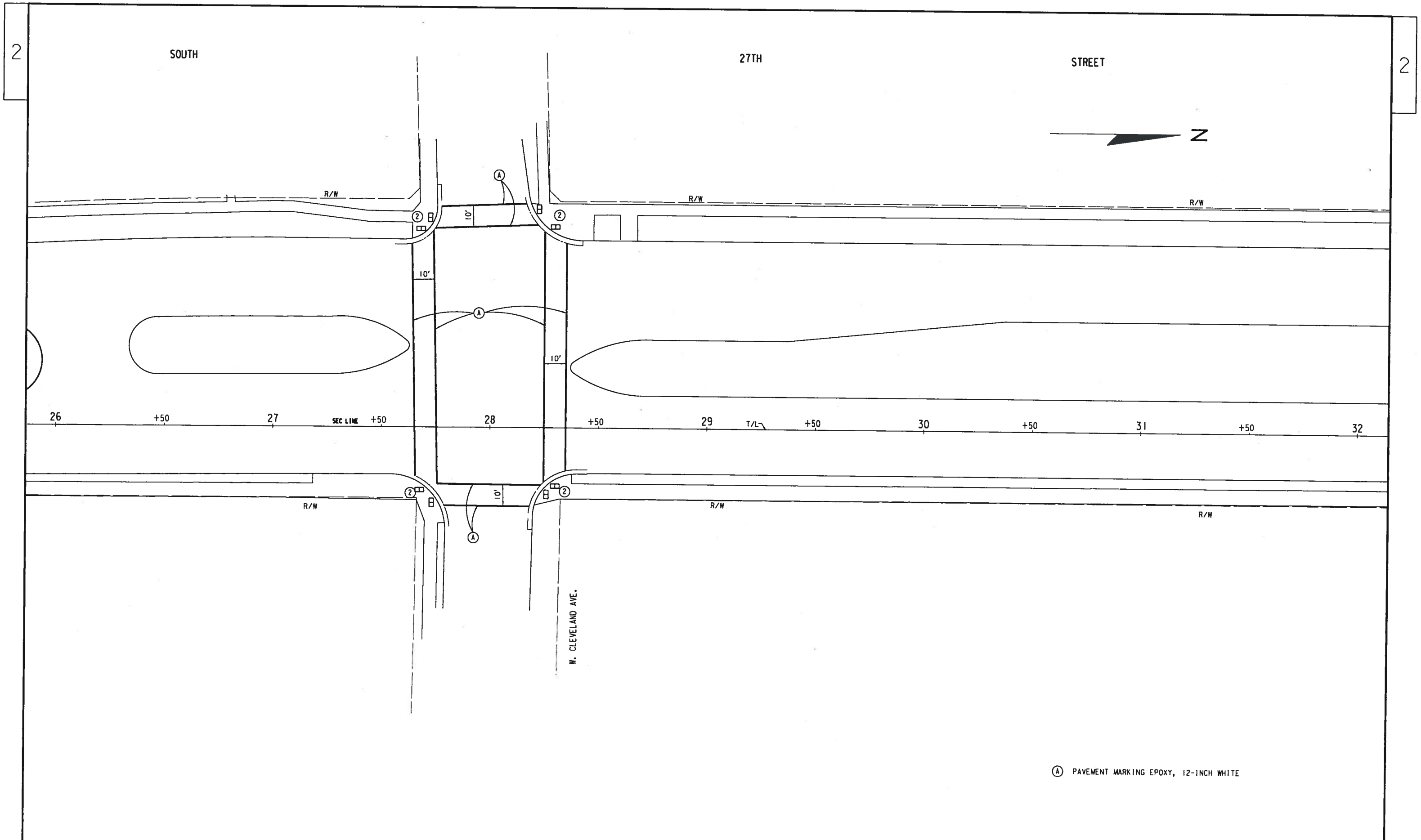

STATE PROJECT NUMBER 2265-00-73 - -	HWY: NON-HIGHWAY	COUNTY: MILWAUKEE	PAVEMENT MARKING	SCALE FEET 0' 40'	SHEET NO:	E

FILE NAME: W:\SPR\ 27TH OKLA NATL STSCP\ NEW SCHEME\PAVEMARK 01 CLEVELAND.DGN

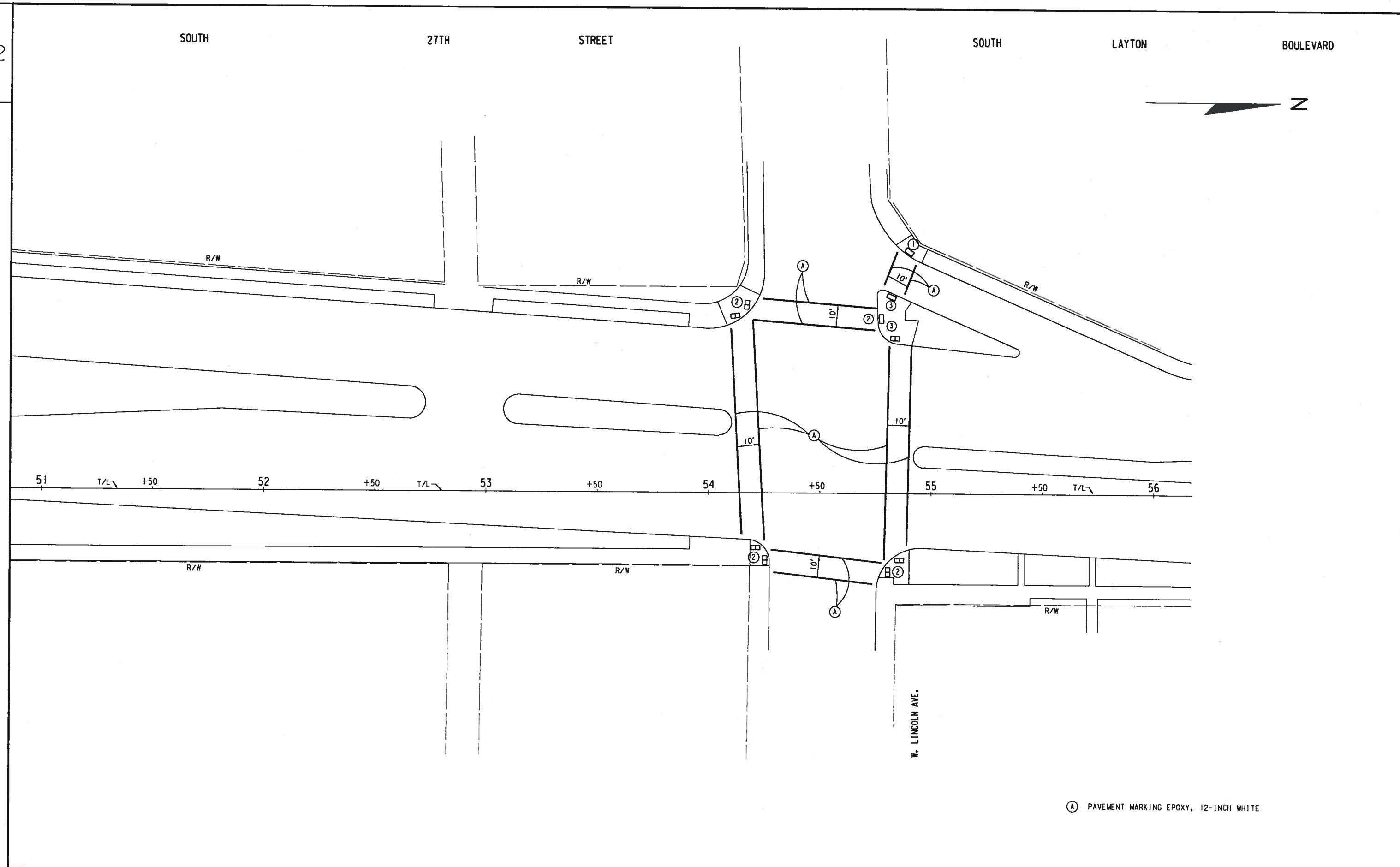

(A) PAVEMENT MARKING EPOXY, 12-INCH WHITE

STATE PROJECT NUMBER 2265-00-73 - -	HWY: NON-HIGHWAY	COUNTY: MILWAUKEE	PAVEMENT MARKING	SCALE FEET 0' 40'	SHEET NO:	E

FILE NAME: W:\SPR\27TH OKLA NATL STSCP\NEW SCHEME\PAVEMARK 02 LINCOLN.DGN

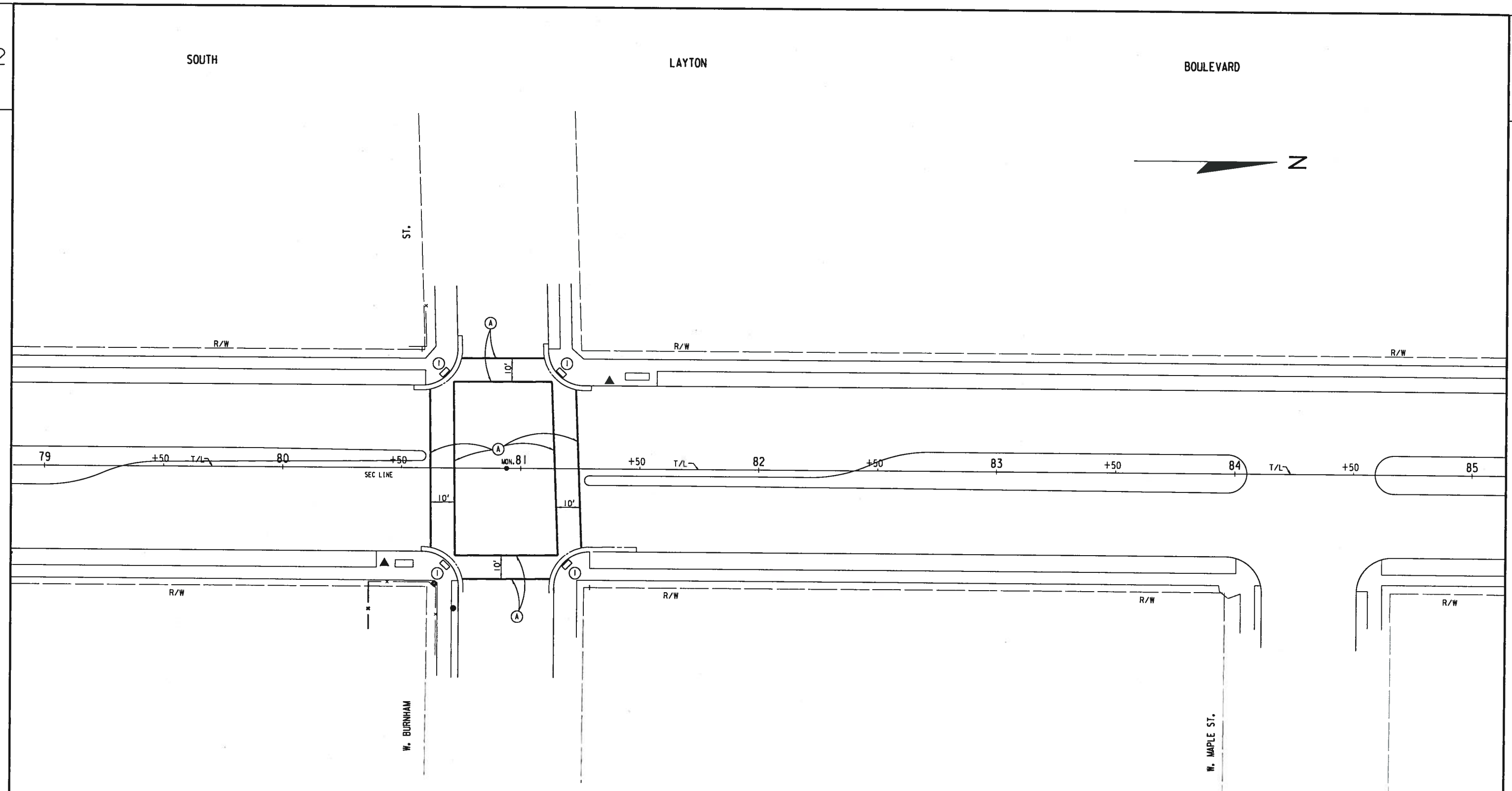

(A) PAVEMENT MARKING EPOXY, 12-INCH WHITE

STATE PROJECT NUMBER 2265-00-73 - -	HWY: NON-HIGHWAY	COUNTY: MILWAUKEE	PAVEMENT MARKING	SCALE FEET 0' 40'	SHEET NO:	E

FILE NAME: W:\SPR\ 27TH OKLA NATL STSCP\ NEW SCHEME\ PAVEMARK 03 BURNHAM.DGN

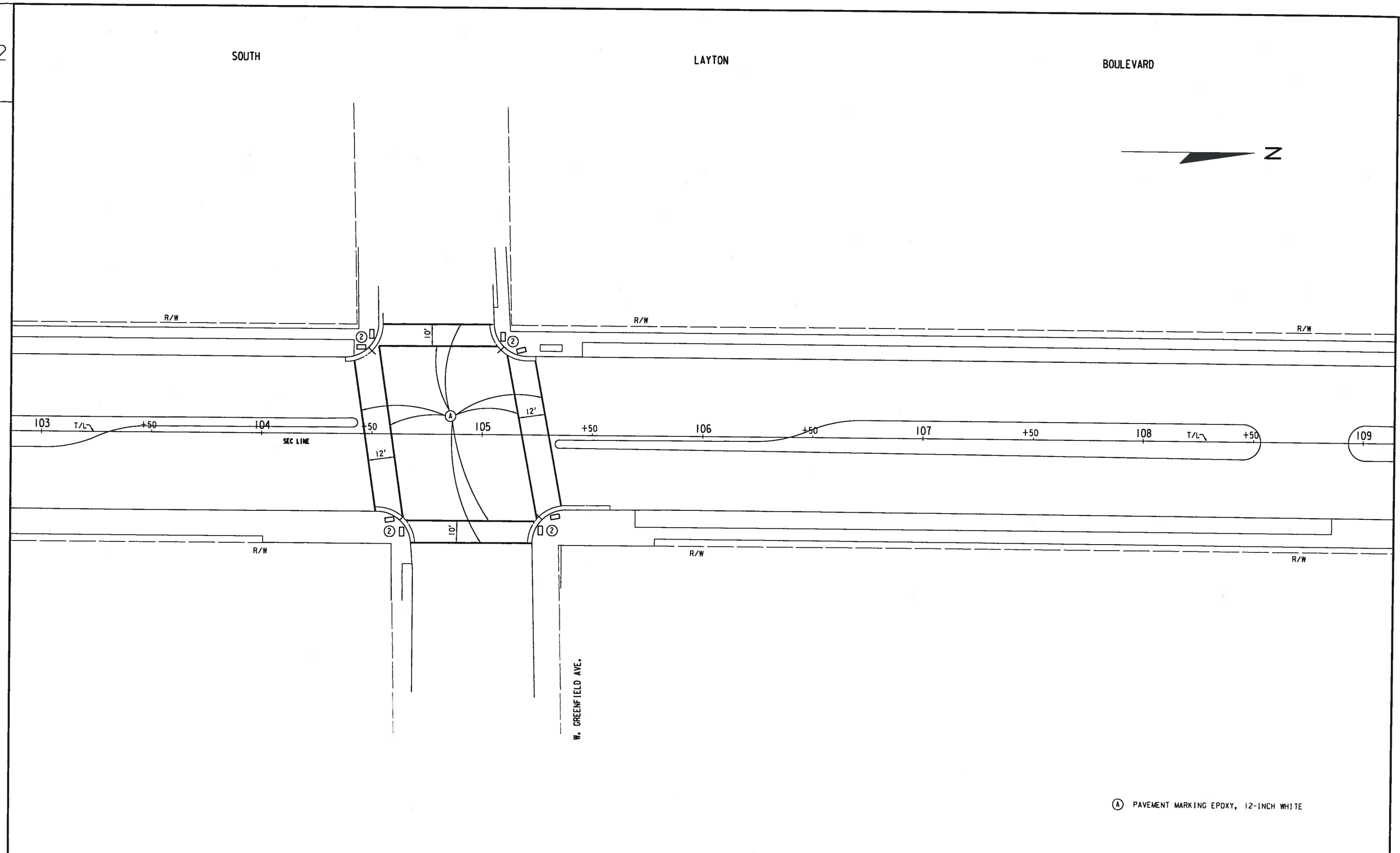

2

STATE PROJECT NUMBER 2265-00-73 - -	HWY: NON-HIGHWAY	COUNTY: MILWAUKEE	PAVEMENT MARKING	SCALE FEET 0' 40'	SHEET NO:	E

FILE NAME: W:\SPR\ 27TH OKLA NATL STSCP\ NEW SCHEME\ PAVEMARK 04 GREENFIELD.DGN

SOUTH LAYTON BOULEVARD

N

CAUTION

R/W

R/W

R/W

10'

+45.9
40.4' LT.

+21.9
40.3' LT.

10'

10'

121 +50 T/L 122 +50 SEC LINE 123 +50 124 +50 125 T/L +50 126 T/L +50 127

END PROJECT
STA. 124 + 50.0 T/L

+53.6
40.1' RT.

+30.3
40.3' RT.

13'

R/W

R/W

R/W

W. NATIONAL AVE.

(A) PAVEMENT MARKING EPOXY, 12-INCH WHITE

STATE PROJECT NUMBER 2265-00-73 - -	HWY: NON-HIGHWAY	COUNTY: MILWAUKEE	PAVEMENT MARKING	SCALE FEET 0' 40'	SHEET NO:	E

FILE NAME: W:\SPR\ 27TH OKLA NATL STSCP\ NEW SCHEME\ PAVEMARK 05 NATIONAL.DGN

3

DRAINAGE STRUCTURES							CORRUGATED P.V.C. PIPE, STORM SEWER (12-INCH)						
GROUP CODE	NO.	LOCATION	COVER ELEV.	COVER STR	COVER TYPE	DEPTH	LOCATION FROM	LOCATION TO	SIZE (INCHES)	LENGTH (FEET)	INVERT ELEV. INLET	INVERT ELEV. DISCH.	REMARKS
0010	1	53 + 92.0 - 20.0' RT.	75.83	44A	57	5.5	1	200	12	3	71.60	71.50	CAUTION TELEPHONE & 8" WATER
0010	2	54 + 27.0 - 57.0' RT.	75.87	44A	57	8.8	2	201	12	23	71.60	71.15	CAUTION GAS, CUC & 20" WATER

2 INLET COVERS TYPE 57 (SPV.0060.04) (0010-PARTICIPATING)
2 INLET TYPE 44A (SPV.0060.05) (0010-PARTICIPATING)
26 L.F. OF STORM SEWER PIPE 12-INCH (SPV.0090.01) (0010-PARTICIPATING)

SALVAGE INLET COVERS		
GROUP CODE	NO.	LOCATION
0010	105	54 + 15.0 - 20.0' RT.
0010	106	54 + 27.0 - 38.5' RT.

2 EACH SALVAGED INLET COVERS
(SPV.611.9710) (0010-PARTICIPATING)

ABANDONING INLETS		
GROUP CODE	NO.	LOCATION
0010	105	54 + 15.0 - 20.0' RT.
0010	106	54 + 27.0 - 38.5' RT.

2 EACH ABANDONING INLETS (204.0260)
(0010-PARTICIPATING)

ADJUSTING INLET COVERS					
GROUP CODE	NO.	LOCATION	PROP. ELEV.	COVER TYPE	REMARKS
0010	100	27 + 31.5 - 55.0' LT.	80.95	57	
0010	101	27 + 76.0 - 104 ' LT.	80.63	57	
0010	102	28 + 20.0 - 41.0' RT.	81.00	57	
0010	103	28 + 63.0 - 40.0' LT.	80.15	57	
0010	108	80 + 75.0 - 53.0' RT.	71.49	57	
0010	109	104 + 55.0 - 56.0' LT.	74.56	57	
0010	110	123 + 50.0 - 72.2' LT.	78.72	57	

7 ADJUSTING INLET COVERS, (SPV.611.8115)
(0010-PARTICIPATING)

ADJUSTING TES MANHOLE COVERS					
GROUP CODE	NO.	LOCATION	PROP. ELEV.	COVER TYPE	REMARKS
0010	300	54 + 22.9 - 8.3 ' LT.	76.46	*	REPAIR CORBEL AS NECESSARY
0010	301	54 + 84.1 - 2.2 ' RT.	76.33	*	REMOVE CHIMNEY TO ROOF DECK
0010	302	80 + 64.5 - 11.0' LT.	71.22	*	REPAIR CORBEL AS NECESSARY
0010	303	80 + 89.3 - 48.7' RT.	72.04	*	REMOVE CHIMNEY TO ROOF DECK
0010	304	104 + 61.0 - 11.0' LT.	75.26	*	REPAIR CORBEL AS NECESSARY
0010	305	105 + 06.0 - 48.0' RT.	74.80	*	REPAIR CORBEL AS NECESSARY
0010	306	123 + 44.5 - 12.8' LT.	79.09	*	REMOVE CHIMNEY TO ROOF DECK
0010	307	123 + 72.5 - 47.0' LT.	79.80	*	REMOVE CHIMNEY TO ROOF DECK
0010	308	123 + 76.4 - 41.0' RT.	79.16	*	REMOVE CHIMNEY TO ROOF DECK
0010	309	124 + 54.3 - 41.0' RT.	78.76	*	REMOVE CHIMNEY TO ROOF DECK

10 ADJUSTING TES MH COVERS, (SPV.0060.8)
(0010-PARTICIPATING)

* COVERS TO BE PROVIDED BY THE CITY OF MILWAUKEE

3

SOUTH 27TH STREET

W. OKLAHOMA AVE.

N

BEGIN PROJECT
STA. 01+00.0 T/L
Y. = 367,016.56
X. = 2,548,955.83

+05
45' LT.

01 +50 02 T/L +50 03 +50 04

R/W

W. OKLAHOMA AVE.

LEGEND

PLANTER- TYPE 3

TRASH RECEPTACLE -45 GALLON

NOTE:
PLACE FACE OF ALL PLANTERS AND TRASH RECEPTACLES
A MINIMUM OF 2' BEHIND CURB FACE

STATE PROJECT NUMBER 2265-00-73 - -	HWY: NON-HIGHWAY	COUNTY: MILWAUKEE	PLAN	SCALE FEET 0' 40'	SHEET NO:	E

FILE NAME: W:\SPR\ 27TH_OKLA_NATL_STSCP\NEW SCHEME \ 01 A OKLAHOMA.DGN

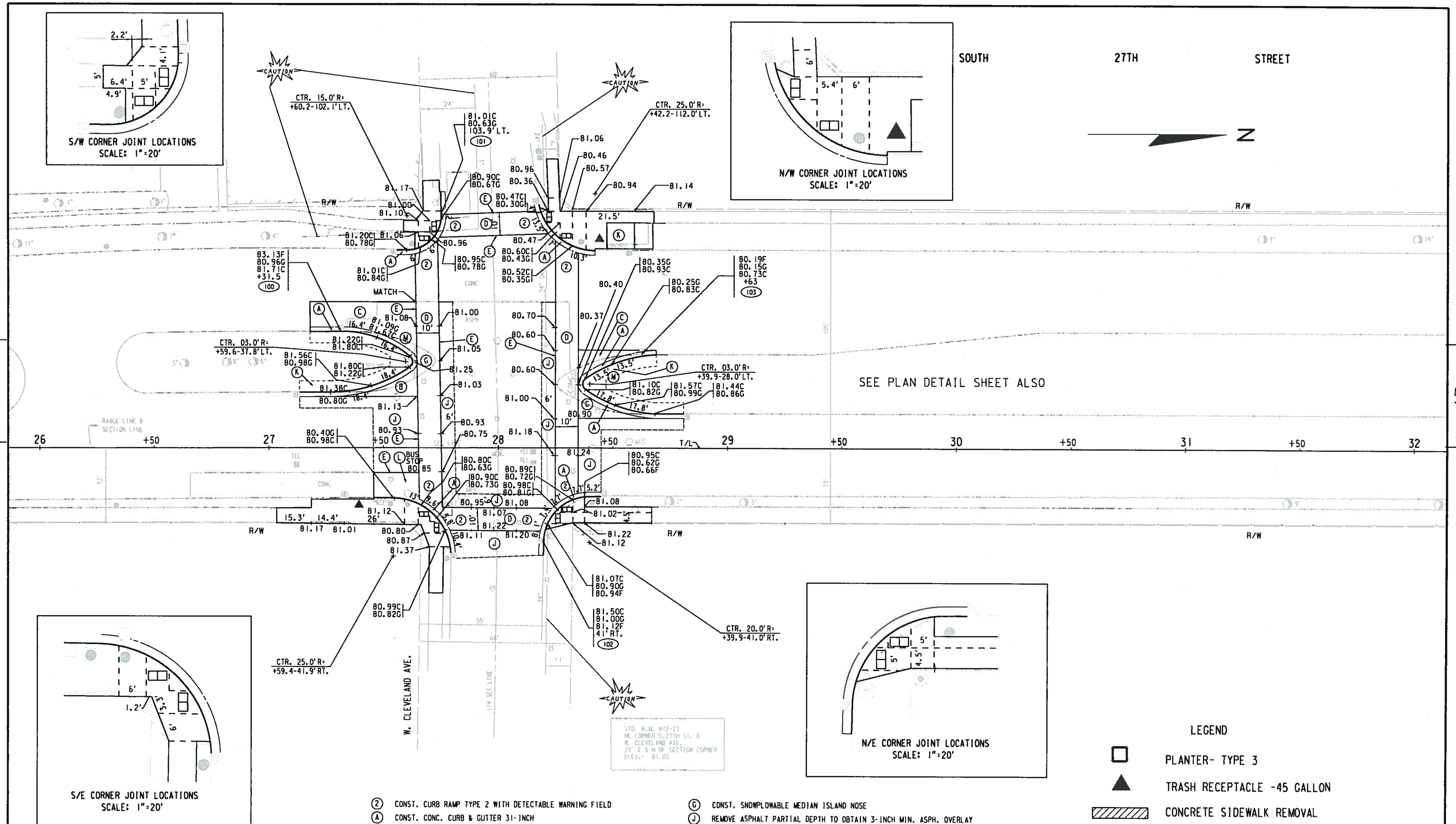

STATE PROJECT NUMBER 2265-00-73 - -	HWY: NON-HIGHWAY	COUNTY: MILWAUKEE	PLAN	SCALE FEET 0 40	SHEET NO:	E

FILE NAME: W:\SPR\27TH OKLA NATL STSCP\NEW SCHEME\01 CLEVELAND.DGN

SOUTH 27TH STREET SOUTH LAYTON BOULEVARD

N

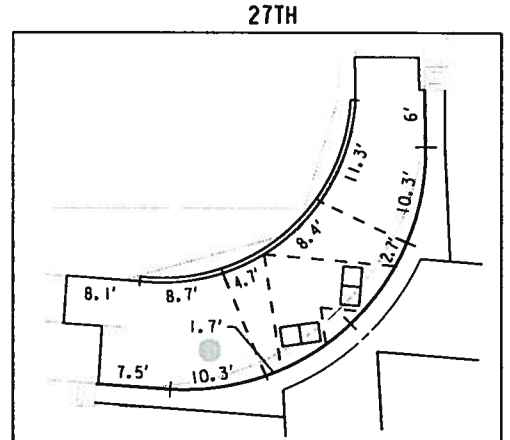

S/W CORNER JOINT LOCATIONS
SCALE: 1"=20'

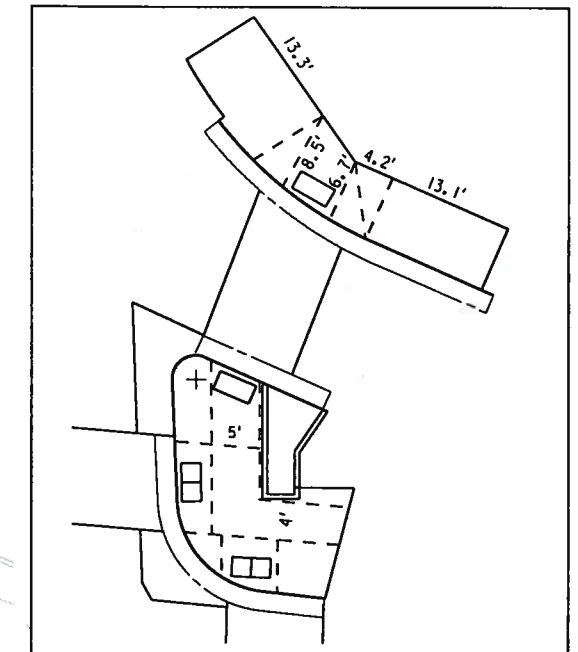

N/W CORNER JOINT LOCATIONS
SCALE: 1"=20'

WALK-CTR. 20.2'R=
+96.7-105.1'LT.

CURB-CTR. 25.0'R=
+99.5-99.1'LT.

CAUTION

CTR. 40.0'R=
+11.8-140.7'LT.

77.41TOC
77.14

77.30TOC
76.84

77.35TOC
76.99

77.42

77.42

77.32C
76.82G

76.96C
76.74G

76.52

76.46

76.72

76.62C
76.36G

76.63C
76.30G

76.61G

76.98C
76.65G

76.93

76.93

76.18

76.77

76.70

76.78C
76.53G

76.72C
76.39G

76.83C
76.66G

77.01C
76.51G

76.88C
76.59G

76.66C
76.24G

76.53G
70.11C

76.68G
77.10C

CTR. 05.7'R=
+04.5-31.7'LT.

77.01C
76.57G

77.19C
76.61G

CTR. 04.8'R=
+96.8-16.4' T.

76.87C
76.45G

76.42C
76.00G
76.04F

76.44C
76.06G

77.08C
76.50G

76.46C
76.13G

76.20C
75.78G

76.15C
75.65G

76.48C
76.19G
76.23F

76.54

76.57

75.92G
76.25C

76.57

76.77

76.30

76.44

76.50

76.40

75.83G
76.57C
+92
20.4'RT

76.65

76.77

76.30C
75.98G

76.47C
76.05G

CTR. 10.0'R=
+17.4-31.1'RT.

CTR. 20.0'R=
+95.4-44.6'RT.

76.37C
75.87G
75.95F
+27
57'RT

W. LINCOLN AVE.

B.M. SE CORNER
S. 27TH ST. & W. LINCOLN AVE.
(NW BOLT) ELEV. 76.95

R/W

T/L

51 +50 52 +50 53 +50 54 +50 55 +50 56

SEE PLAN DETAIL SHEET ALSO

5

5

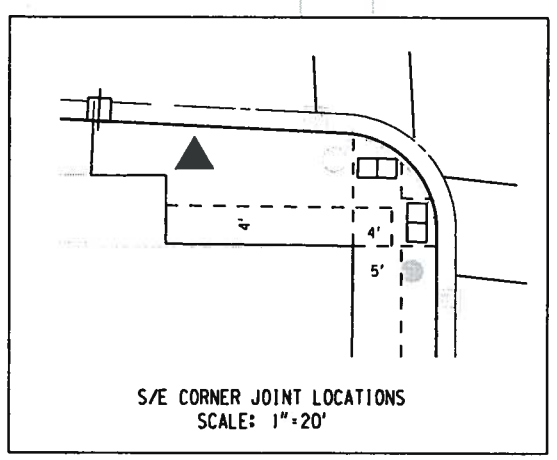

S/E CORNER JOINT LOCATIONS
SCALE: 1"=20'

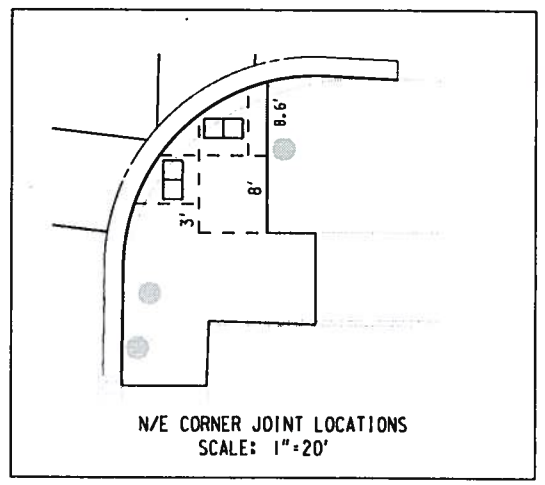

N/E CORNER JOINT LOCATIONS
SCALE: 1"=20'

LEGEND

- PLANTER- TYPE 3
- TRASH RECEPTACLE -45 GALLON
- CONCRETE SIDEWALK REMOVAL

NOTE:
PLACE FACE OF ALL PLANTERS AND TRASH RECEPTACLES A MINIMUM OF 2' BEHIND CURB FACE

(1) CONST. CURB RAMP TYPE 1 WITH DETECTABLE WARNING FIELD
(2) CONST. CURB RAMP TYPE 2 WITH DETECTABLE WARNING FIELD
(3) CONST. CURB RAMP TYPE 3 WITH DETECTABLE WARNING FIELD
(A) CONST. CONC. CURB & GUTTER 31-INCH
(C) CONST. 9-INCH CONC. PAVEMENT
(D) CONST. COLORED CONCRETE CROSSWALK, 9-INCH
(E) SAWING CONCRETE
(F) SAWING ASPHALT
(G) CONST. SNOWPLOWABLE MEDIAN ISLAND NOSE
(L) CONST. 9-INCH CONC. PAVEMENT W/ INTEGRAL CURB & GUTTER, TYPE D
(N) CONST. CONC. CURB PEDESTRIAN

51 +50 52 +50 53 +50 54 +50 55 +50 56

STATE PROJECT NUMBER 2265-00-73	- -	HWY: NON-HIGHWAY	COUNTY: MILWAUKEE	PLAN	SCALE FEET 0 40	SHEET NO:	E

FILE NAME: W:\SPR\27TH OKLA NATL STSCP\ NEW SCHEME\ 02 LINCOLN.DGN

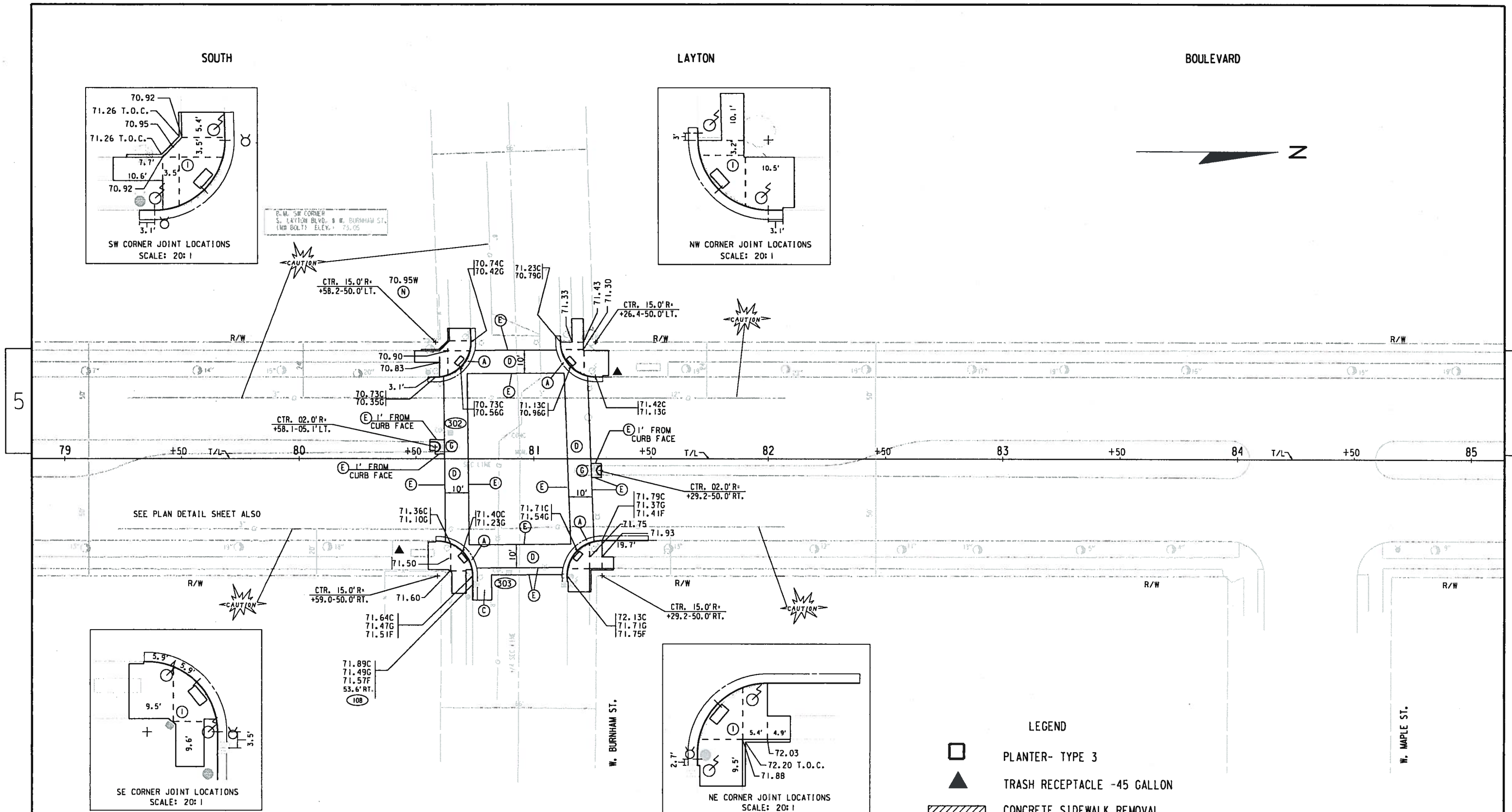

(I) CONST. CURB RAMP TYPE 1 WITH DETECTABLE WARNING FIELD
(A) CONST. CONC. CURB & GUTTER 31-INCH
(C) CONST. 9-INCH CONC. PAVEMENT
(D) CONST. COLORED CONCRETE CROSSWALK, 9-INCH
(E) SAWING CONCRETE
(G) CONST. SNOWPLOWABLE MEDIAN ISLAND NOSE

SEE PLAN DETAIL SHEET ALSO

STATE PROJECT NUMBER 2265-00-73 - -	HWY: NON-HIGHWAY	COUNTY: MILWAUKEE	PLAN	SCALE FEET 0' 40'	SHEET NO:	E

FILE NAME: W:\SPR\ 27TH OKLA NATL STSCP\ NEW SCHEME\ 03 BURNHAM.DGN

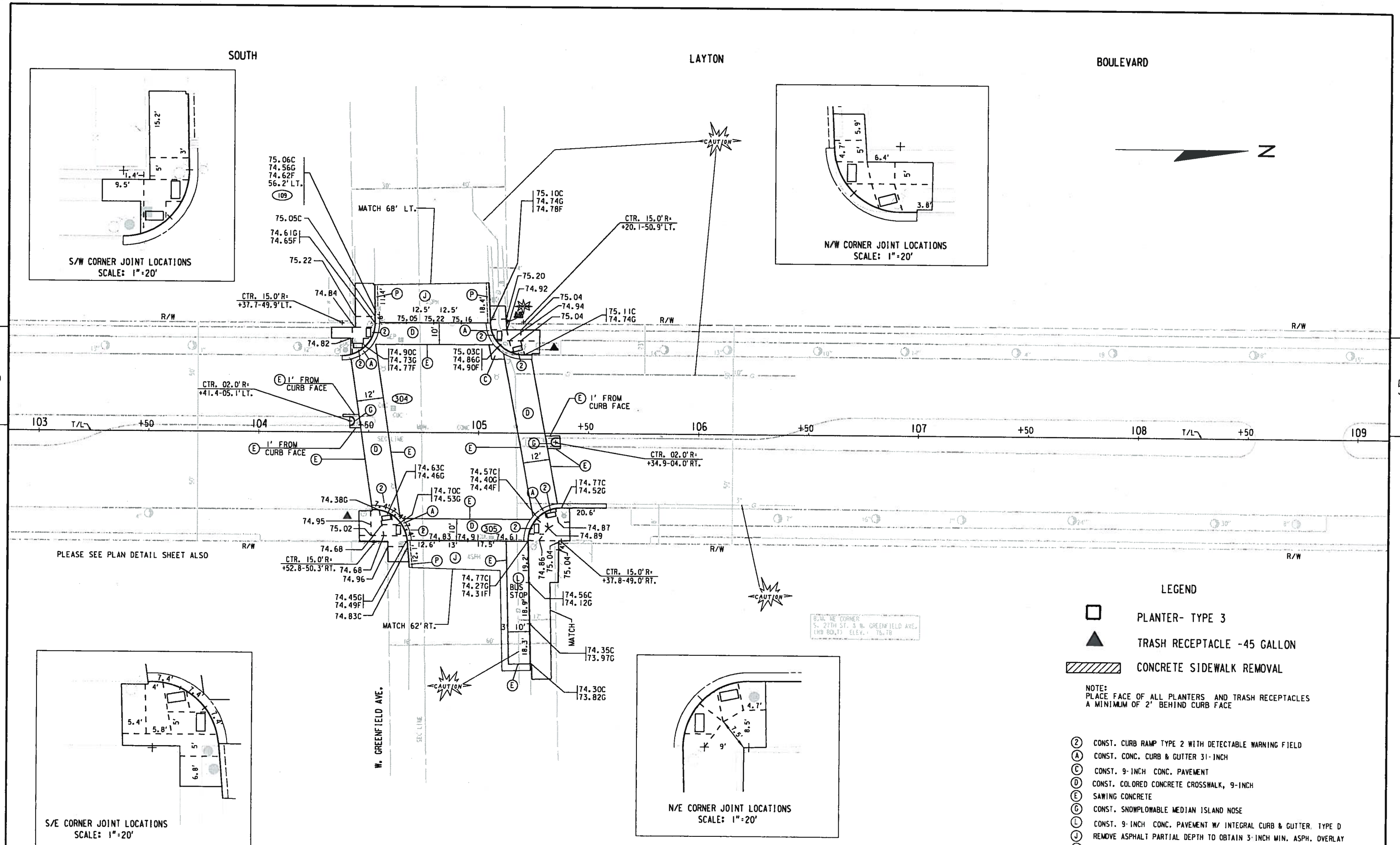

STATE PROJECT NUMBER 2265-00-73 - -	HWY: NON-HIGHWAY	COUNTY: MILWAUKEE	PLAN	SCALE FEET 0' 40'	SHEET NO:	E

FILE NAME: W:\SPR\ 27TH OKLA NATL STSCP\ NEW SCHEME\ 04 GREENFIELD.DGN

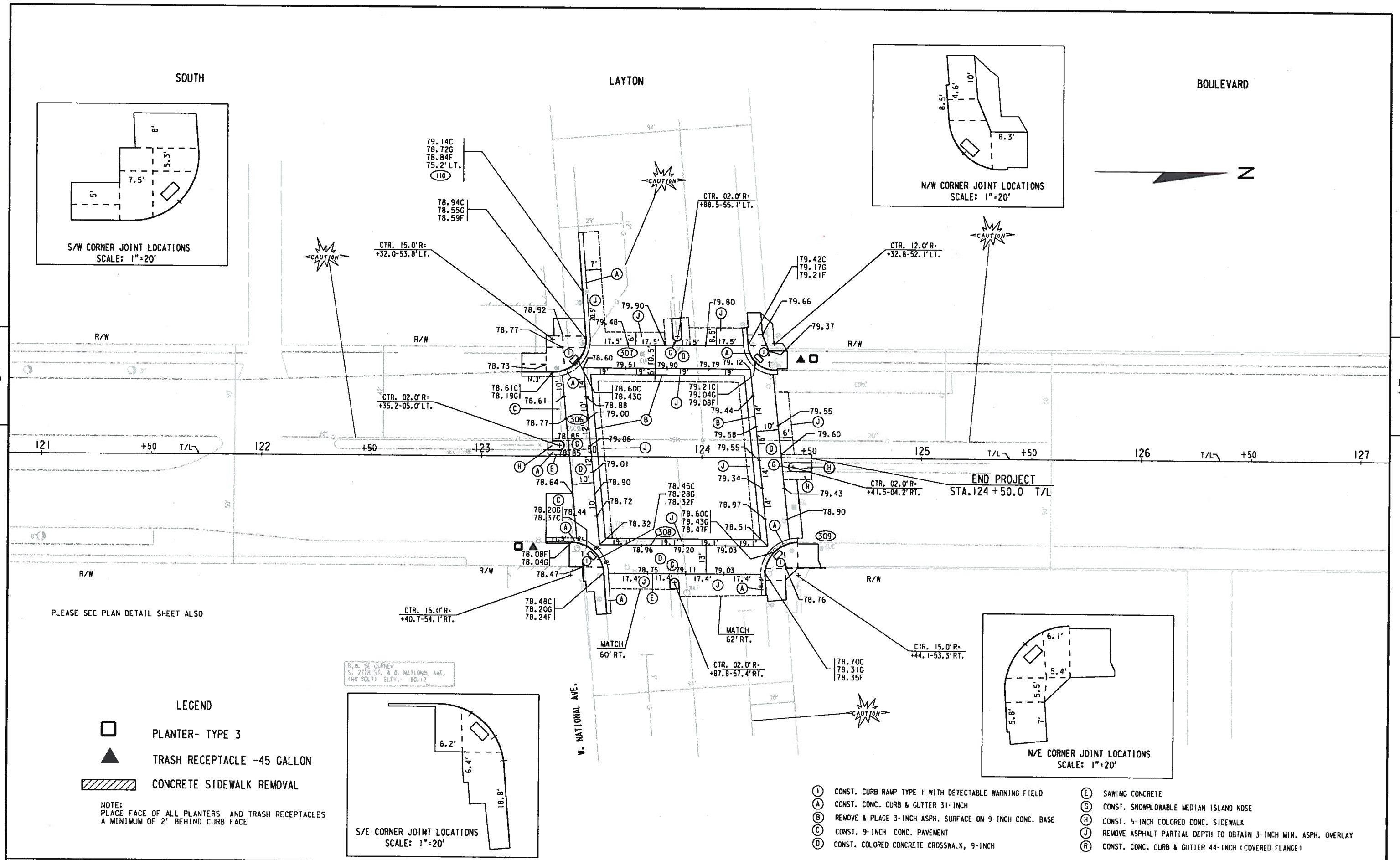

STATE PROJECT NUMBER 2265-00-73 - -	HWY: NON-HIGHWAY	COUNTY: MILWAUKEE	PLAN	SCALE FEET 0' 40'	SHEET NO:	E

FILE NAME: W:\SPR\ 27TH OKLA NATL STSCP\ NEW SCHEME\ 05 NATIONAL.DGN

8D5 sheet a: Curb Ramps Types 1 and 1-A

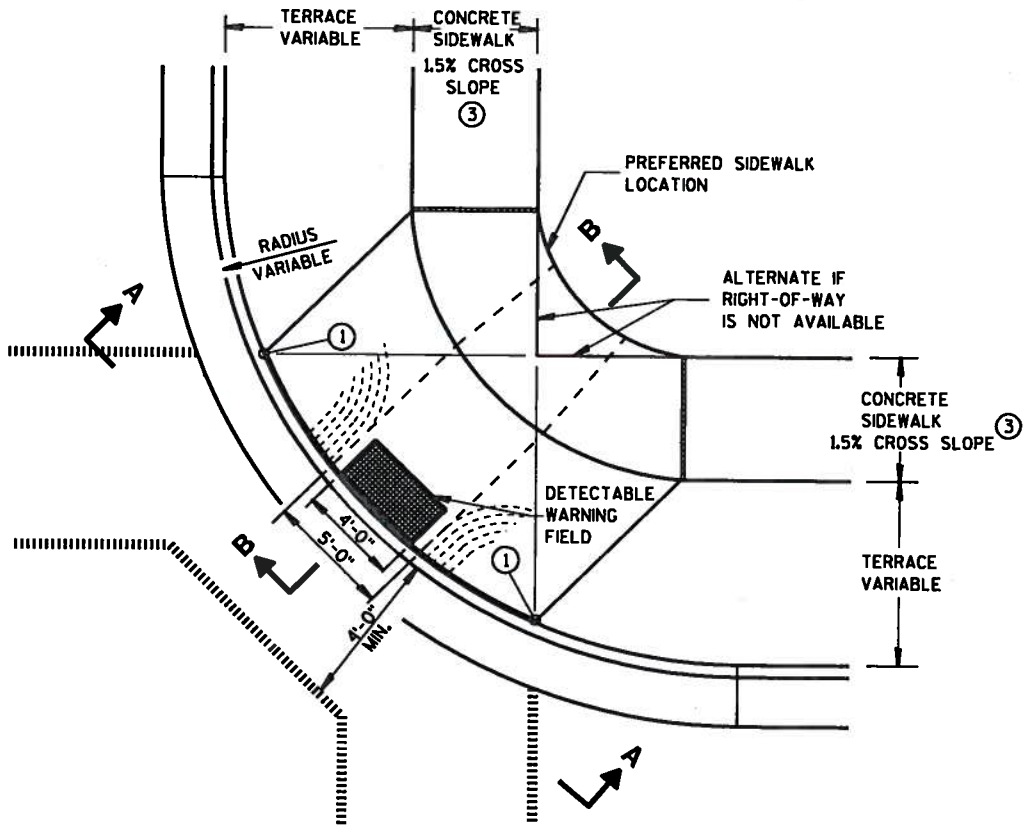

PLAN VIEW
TYPE 1 RAMP
(CENTER OF CORNER RADIUS)

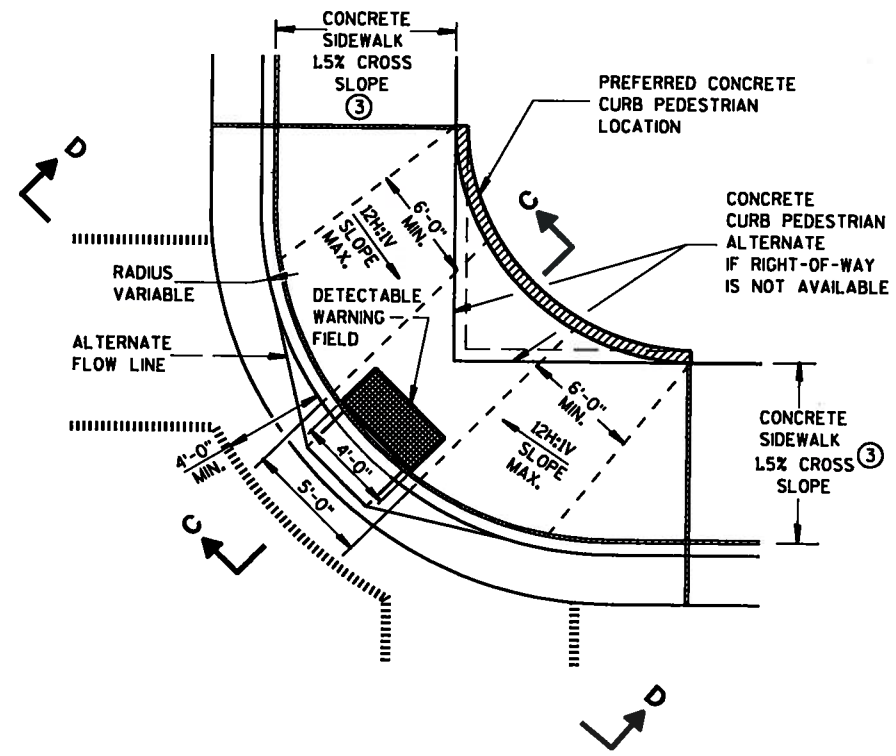

PLAN VIEW
TYPE 1-A RAMP
(NO TERRACE)

GENERAL NOTES

DETAILS OF CONSTRUCTION, MATERIALS AND WORKMANSHIP NOT SHOWN ON THIS DRAWING SHALL CONFORM TO THE PERTINENT REQUIREMENTS OF THE STANDARD SPECIFICATIONS AND THE APPLICABLE SPECIAL PROVISIONS.

RAMPS SHALL BE BUILT AT 12H:1V OR FLATTER. WHEN NECESSARY, THE SIDEWALK ELEVATION MAY BE LOWERED TO MEET THE HIGH POINT ON THE RAMP.

TYPE 1 RAMPS SHALL HAVE A NORMAL SIDEWALK APRON AND CURB ON BOTH SIDES OF RAMP.

DETECTABLE WARNING FIELD SHALL BE MEASURED AND PAID BY THE SQUARE FOOT AS "CURB RAMP DETECTABLE WARNING FIELD". THE CONCRETE PEDESTRIAN CURB, IF NEEDED, SHALL BE MEASURED AND PAID BY THE LINEAL FOOT AS "CONCRETE CURB PEDESTRIAN". CONCRETE SIDEWALK IN THE CURB RAMP AREA SHALL BE MEASURED AND PAID BY THE SQUARE FOOT AS CONCRETE SIDEWALK, INCLUDING THE AREA UNDER THE DETECTABLE WARNING FIELD.

SELECT CURB RAMP DETECTABLE WARNING FIELD MATERIALS AND DEVICES FROM THE DEPARTMENT'S APPROVED MATERIALS LIST. THE COLOR OF THE DETECTABLE WARNING FIELD IS SPECIFIED ELSEWHERE AND IS INCIDENTAL TO THE BID ITEM OF "CURB RAMP DETECTABLE WARNING FIELD".

DETECTABLE WARNING FIELDS THAT ARE INSTALLED AS A GROUP OR SIDE BY SIDE, SHALL BE FROM THE SAME MANUFACTURER.

SURFACE TEXTURE OF THE RAMP SHALL BE OBTAINED BY COARSE BROOMING TRANSVERSE TO THE SLOPE OF THE RAMP.

① THIS POINT IS AN EXTENSION OF OUTSIDE EDGE OF APPROACHING SIDEWALK WHERE IT MEETS THE BACK OF CONCRETE CURB.

② GRADE CHANGE BETWEEN GUTTER FLAG SLOPE AND THE CURB RAMP SLOPE SHALL NOT EXCEED 11%. PROVIDE DRAINAGE AWAY FROM CURB RAMP AT GUTTER FLAG INTERFACE.

③ ±0.5% CONSTRUCTION TOLERANCE IN SIDEWALK CROSS SLOPE. THE SIDEWALK CROSS SLOPE SHALL NOT EXCEED 2% WITHOUT PRIOR APPROVAL FROM THE ENGINEER.

LEGEND

- ½" EXPANSION JOINT-SIDEWALK
- CONTRACTION JOINT FIELD LOCATED
- PAVEMENT MARKING CROSSWALK (WHITE)
- ALTERNATIVE LAYOUT

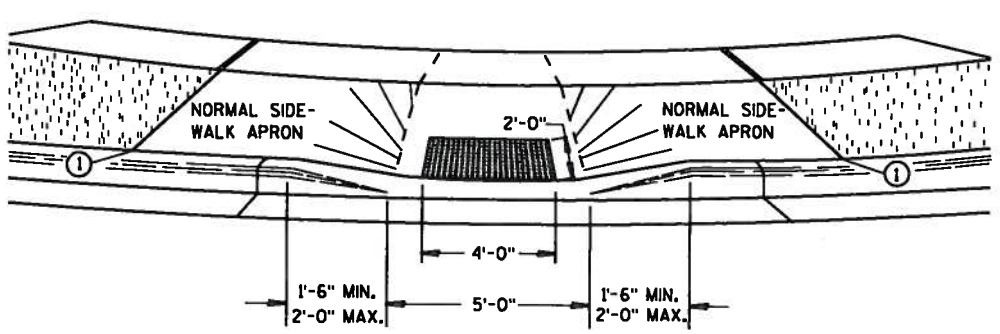

VIEW A-A

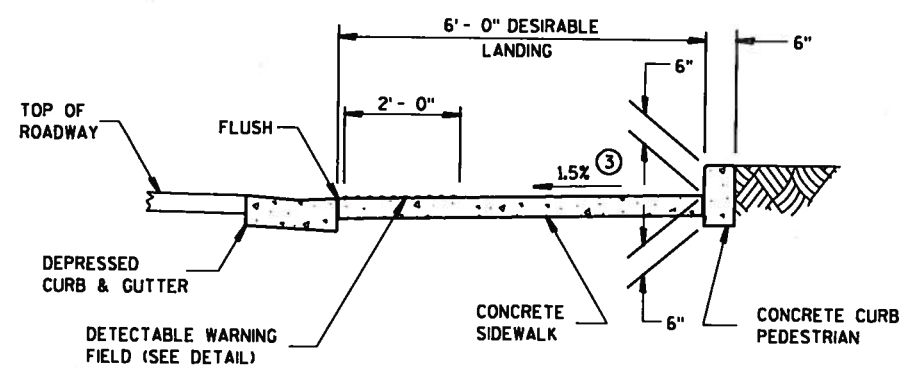

SECTION C-C

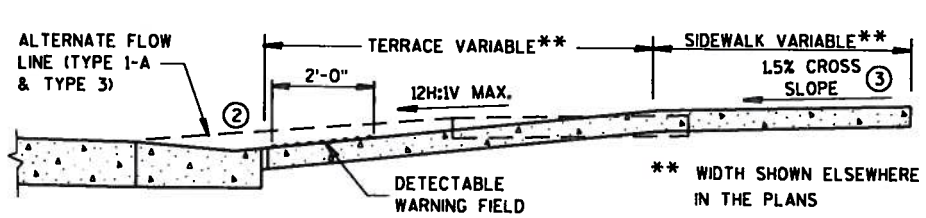

SECTION B-B

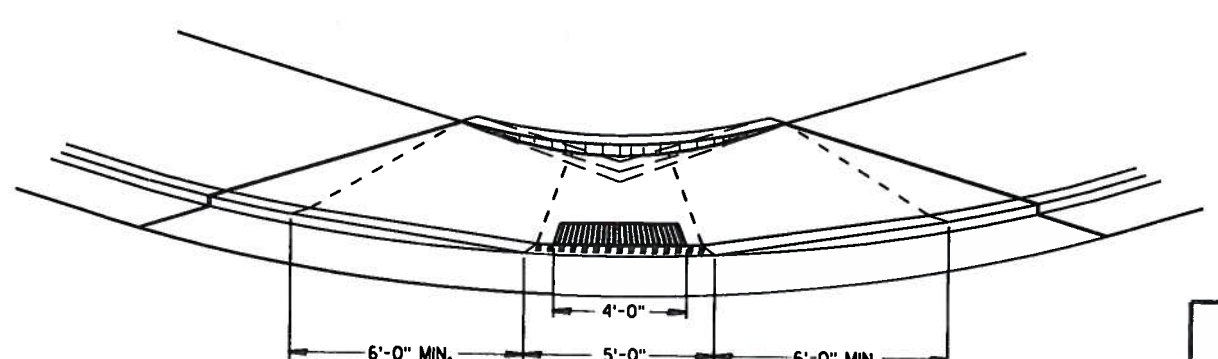

VIEW D-D

CURB RAMPS TYPES 1 AND 1-A

STATE OF WISCONSIN
DEPARTMENT OF TRANSPORTATION

6

6

S.D.D. 8 D 5-15a

S.D.D. 8 D 5-15a

8D5 sheet b: Curb Ramps Types 2 and 3

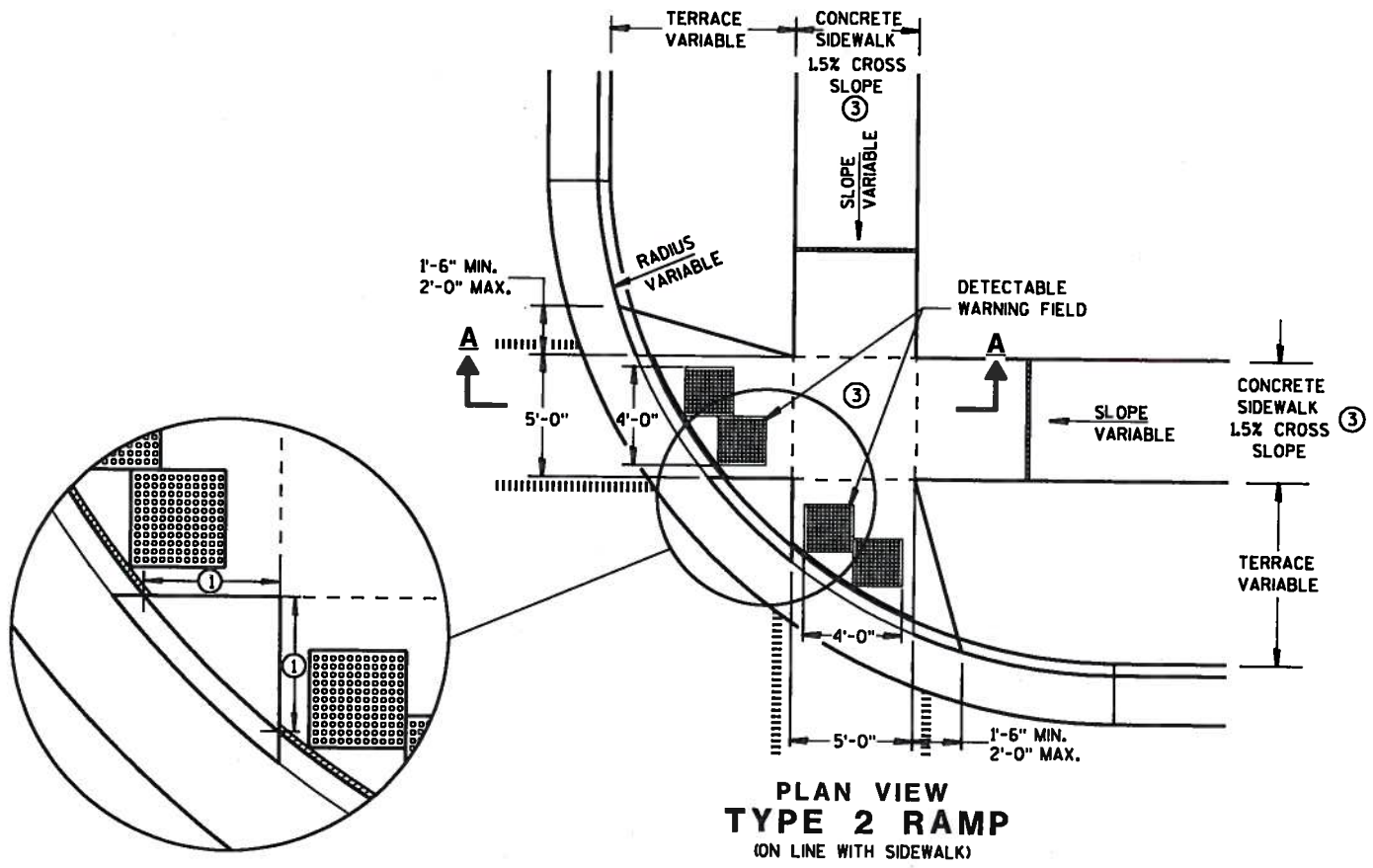

PLAN VIEW
TYPE 2 RAMP
(ON LINE WITH SIDEWALK)

GENERAL NOTES

USE THE TYPE 3 RAMP ONLY WHEN A TYPE 1 OR TYPE 2 CANNOT BE ACHIEVED BECAUSE OF FIELD CONDITIONS.

DETECTABLE WARNING FIELDS THAT ARE INSTALLED AS A GROUP OR SIDE BY SIDE, SHALL BE FROM THE SAME MANUFACTURER.

① WHEN THIS DISTANCE IS LESS THAN 6'-0" IT MAY BE DIFFICULT TO ACHIEVE A 12H:1V SLOPE, OR FLATTER, ON THE RAMP. REDUCE CURB HEIGHT IN TRIANGLE AREA TO ACHIEVE 12H:1V SLOPE, OR FLATTER, ON RAMP. 2" MINIMUM CURB HEIGHT.

② GRADE CHANGE BETWEEN GUTTER FLAG SLOPE AND THE CURB RAMP SLOPE SHALL NOT EXCEED 11%. PROVIDE DRAINAGE AWAY FROM CURB RAMP AT GUTTER FLAG INTERFACE.

③ ±0.5% CONSTRUCTION TOLERANCE IN SIDEWALK CROSS SLOPE. THE SIDEWALK CROSS SLOPE SHALL NOT EXCEED 2% WITHOUT PRIOR APPROVAL FROM THE ENGINEER.

LEGEND

- ½" EXPANSION JOINT-SIDEWALK
- CONTRACTION JOINT FIELD LOCATED
- PAVEMENT MARKING CROSSWALK (WHITE)
- ALTERNATIVE LAYOUT

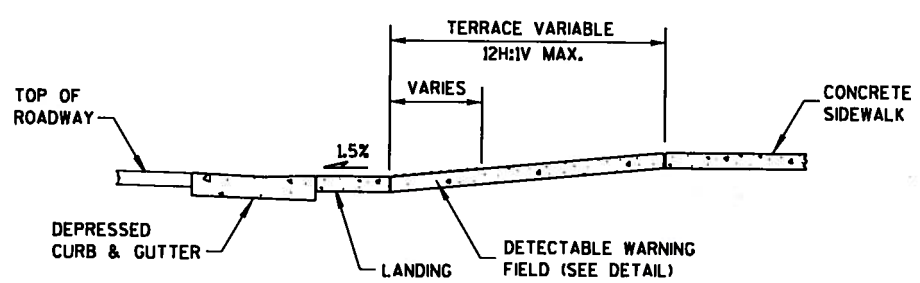

SECTION A-A

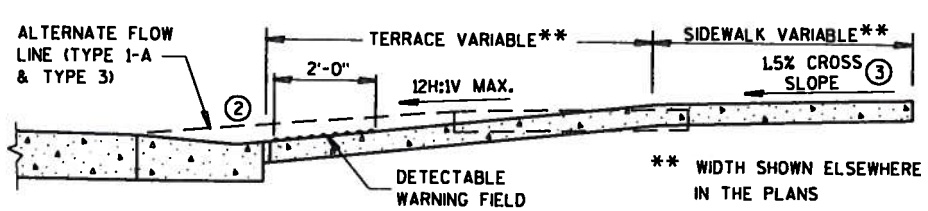

SECTION B-B

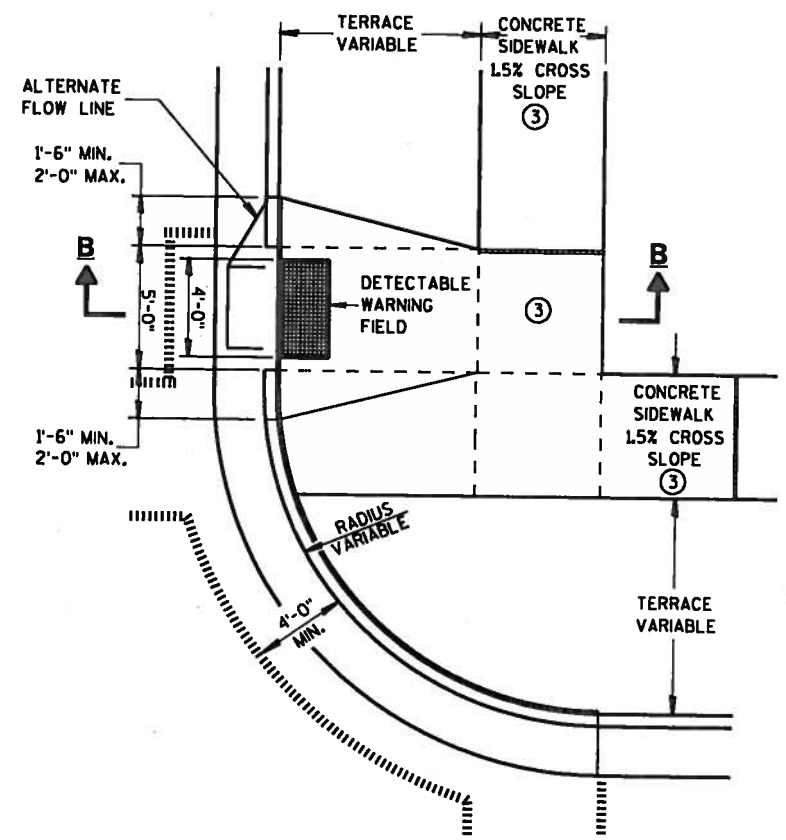

PLAN VIEW
TYPE 3 RAMP
(OUTSIDE OF CROSSWALK AREA)

6

6

S.D.D. 8 D 5-15b

S.D.D. 8 D 5-15b

CURB RAMPS
TYPES 2 AND 3

STATE OF WISCONSIN
DEPARTMENT OF TRANSPORTATION