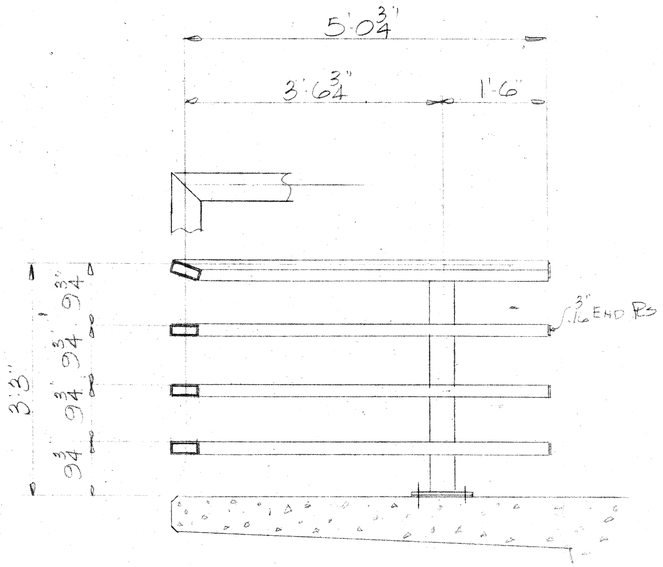

8-RAIL SECTIONS THUS-

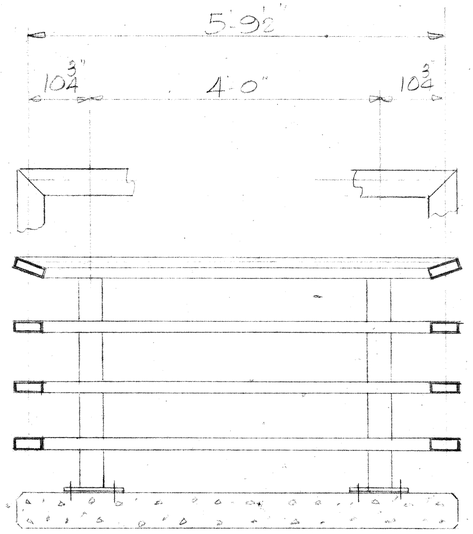

8-RAIL SECTIONS THUS

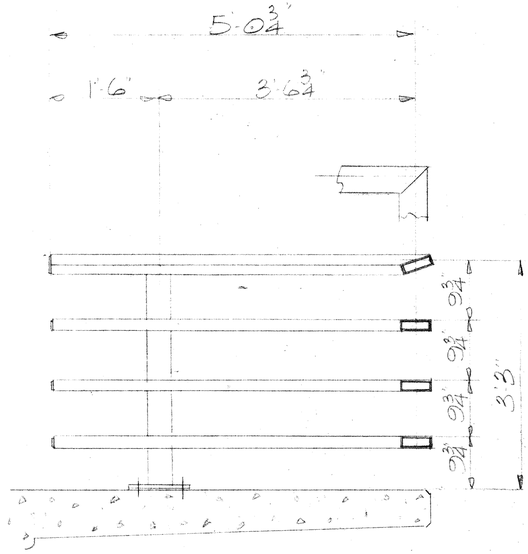

8-RAIL SECTIONS THUS-

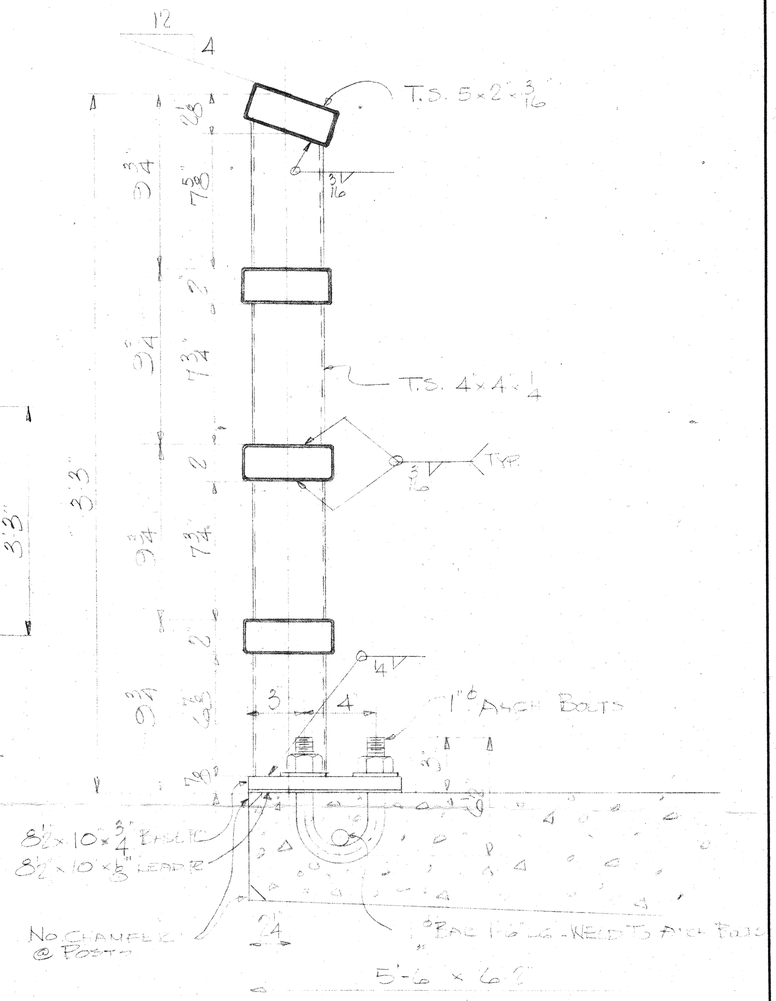

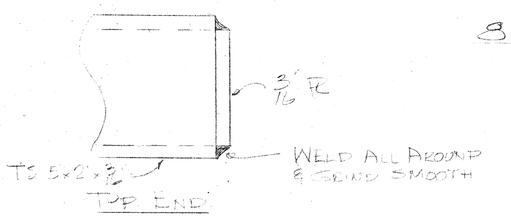

8-HANDRAILS REQUIRED
2-ST PAUL AVE BRIDGE
4-PLEASANT ST BRIDGE
2-CLYBOURN ST BRIDGE

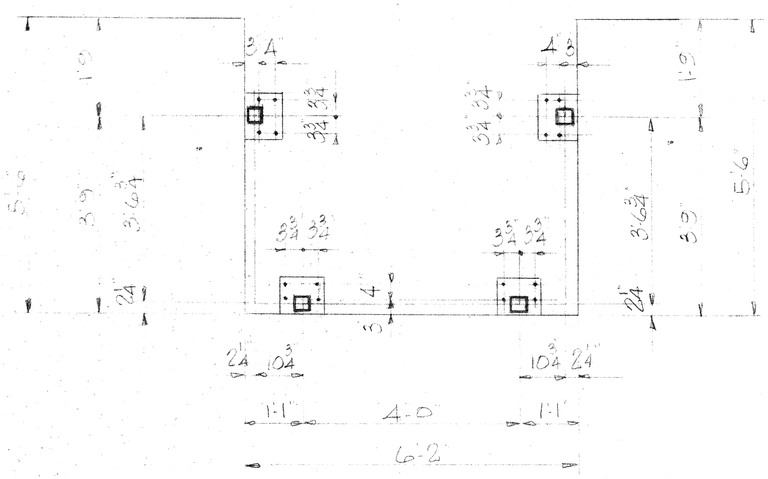

TYPICAL ANCHOR BOLT SETTING PLAN
8 AS SHOWN

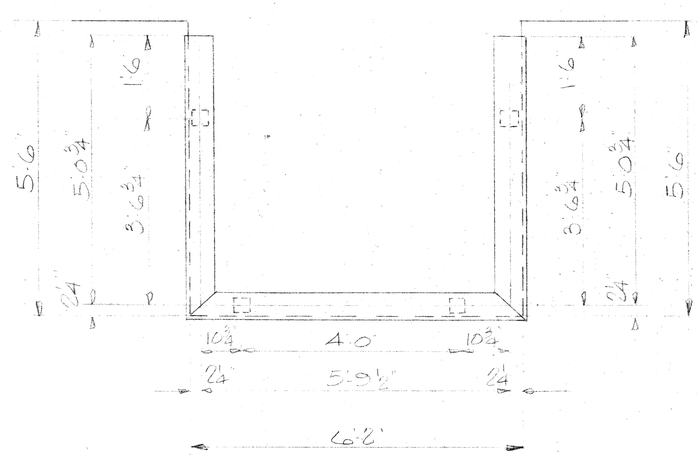

TYPICAL RAILING PLAN
8 AS SHOWN

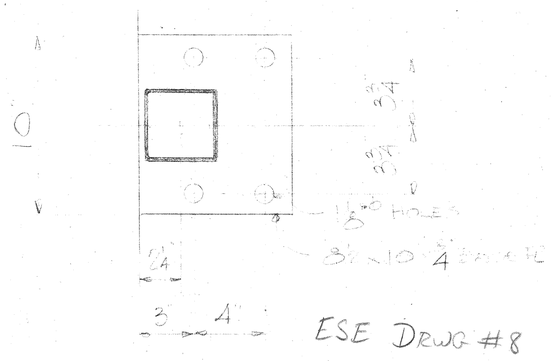

ESE DRWG #8

BADGER WIRE & IRON WORKS, INC.
MILWAUKEE, WISCONSIN

3	APPR.	7-13-77	TITLE STEEL HANDRAILS	JOB NO. 12722
1	SHOP.	8-3-77		
1	CONTR.	8-3-77	BLDG. 2-ST PAUL AVE BRIDGE 4-PLEASANT ST BRIDGE 2-CLYBOURN ST BRIDGE	ITEM NO.
			LOCATION CITY	DRWG. NO. 1
			CONTR. J.C. THEILACKER CO.	
			ARCHT.	DRAWN BY RFS
			REF. DRWG. NO.	
			FINISH SAND BLAST & COMMERCIAL SP-6 PPG UC46837 "AQUAPON" RED INHIBITIVE PRIMER	CHKD. BY

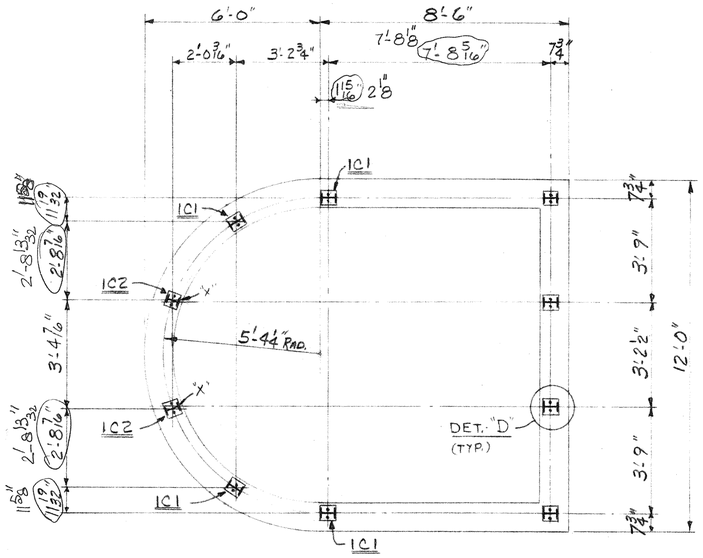

PLAN VIEW "A-A"

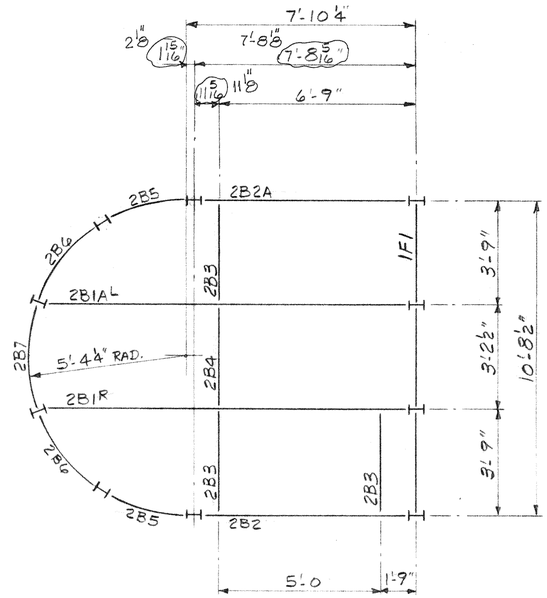

PLAN VIEW "B-B"

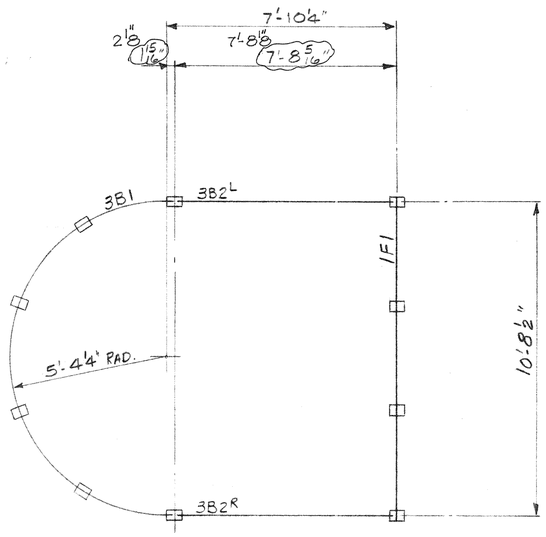

PLAN VIEW "C-C"

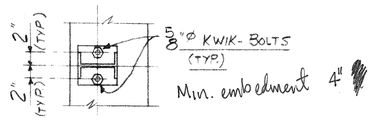

DETAIL "D"

Note: Dimension on plan views were against Plans prepared by B&B. dimensions were taken from plans

Dimensions on plan views prepare were given by Bob's of B&B, full scale model of plan of Br

Bob Fischer.

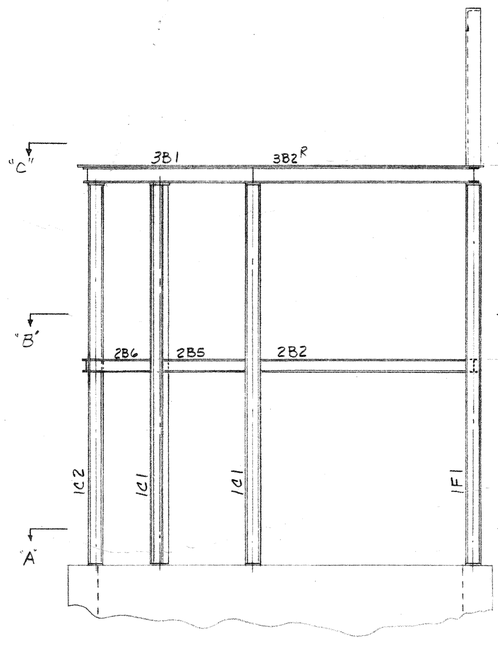

EAST ELEVATION VIEW

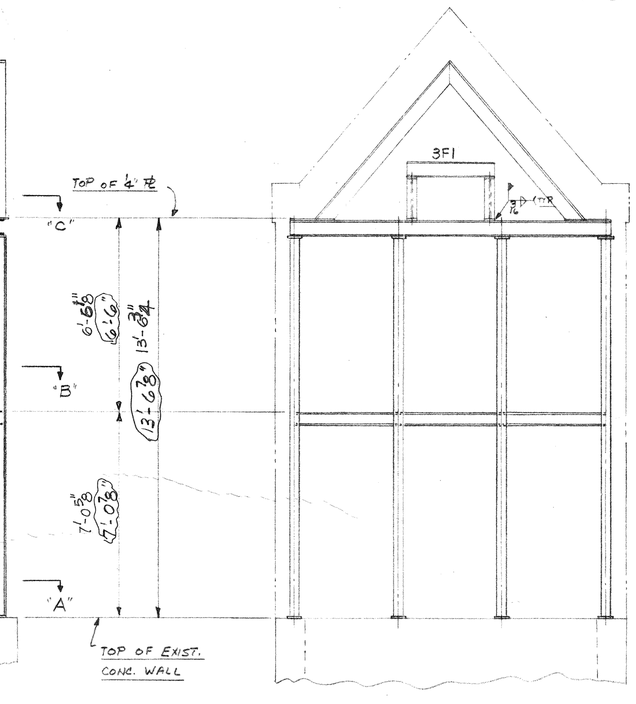

NORTH ELEVATION VIEW

SHOP DRAWING REVIEW

Review is only for general conformance with the design concept of the contract documents. Markings or comments shall not be construed as relieving the contractor from compliance with the project plans and specifications, nor departure therefrom. The contractor remains solely responsible for details and accuracy, for confirming and correlating all quantities and dimensions, for selecting fabrication processes, for techniques of assembly, for safety and for satisfactory performance of his work.

☐ Furnished as Submitted ☒ Furnish as Corrected
☐ Revise & Resubmit ☐ Rejected, See Remarks

Checked By AR for MK Date 11/9/90
G. B. Chief Structural Engineer
CITY OF MILWAUKEE, D.P.W.
BUREAU OF ENGINEERS

DRAWING STATUS

☒ FOR APPROVAL
NOT FOR FIELD/SHOP USE
DATE: 11/1/90

☐ FINAL PLANS
FOR FIELD/SHOP USE
DATE:

☐ REVISED PLANS
FOR FIELD/SHOP USE
DATE:

ERECTION NOTE:

AISC CODE OF STA
AMERICAN INSTITU
SECTION 5; PAGE

7.12 Correction of
Normal erection
misfits by moderat
the drawing of ele
Errors which canno
require major cha
immediately to the
whoever is respons
most efficient and
others.

THIS PROCEDURE
CHARGES CAN BE

Construction Supply
N112 W19515 Mequo
P.O. Box 249
Germantown, WI 530
414-255-3001

PROJECT
PLEASANT ST. BRIDGE HOUSE

LOCATION
MILWAUKEE, WI.

ARCHITECT
CITY OF MILW., DEPT. OF PUBLIC WORKS
BUREAU OF BRIDGES & PUBLIC BLDG'S

CONTRACTOR
CITY OF MILW

West Allis Blueprint 1020-4 537340

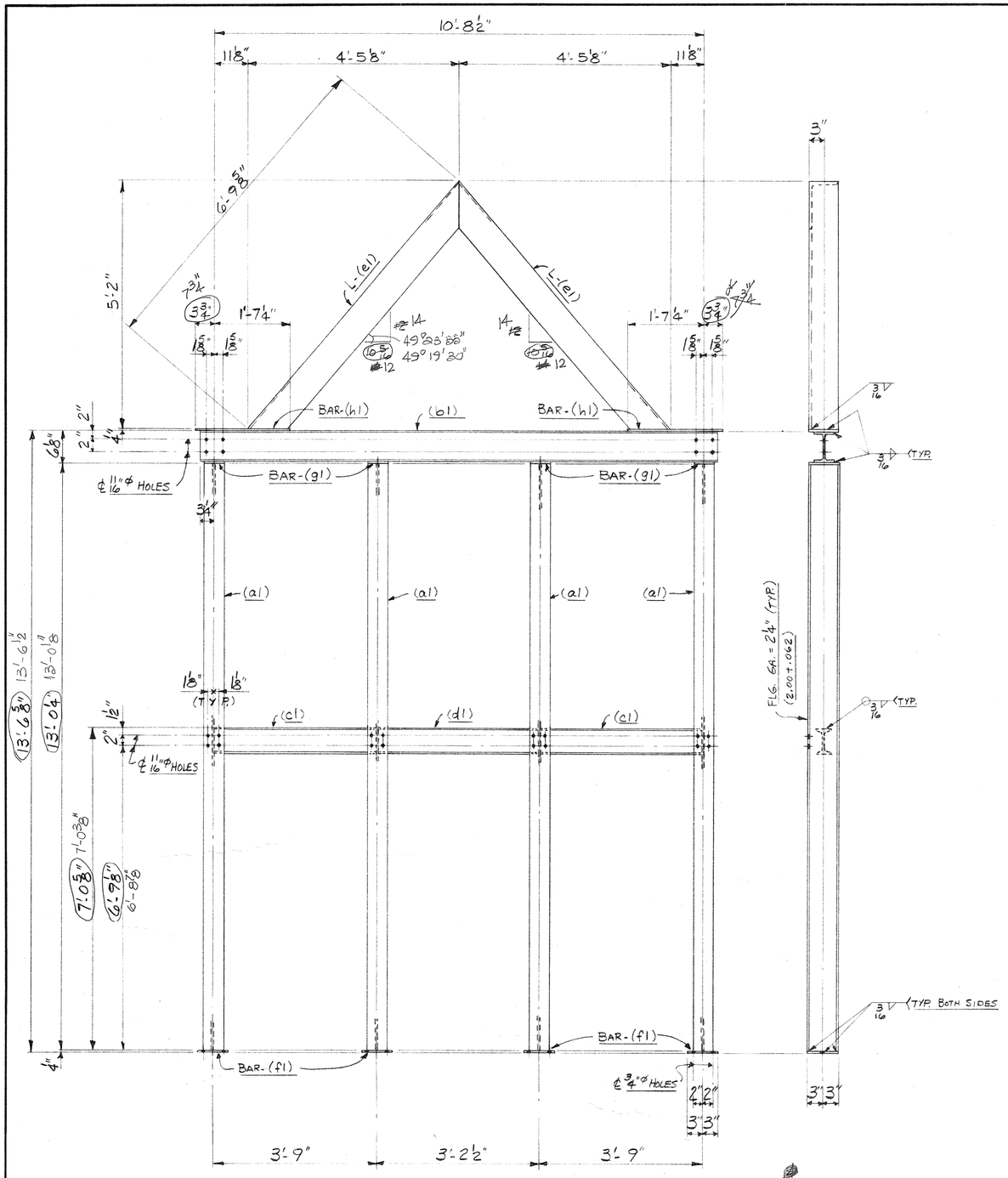

— 1 FRAME 1F1 —

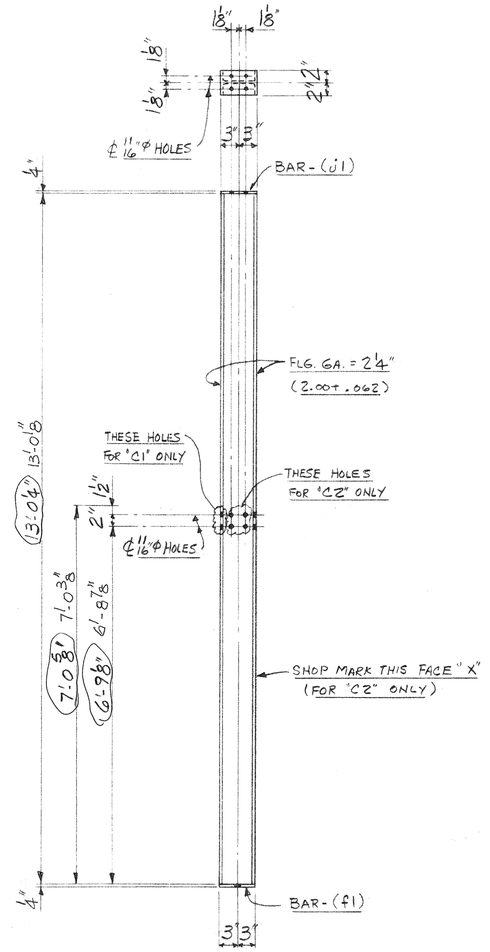

— 6 COLUMNS 1C1 (4) - 1C2 (2) —

BILL OF MATERIAL

PIECE MARK	ASSEMBLY MARK	NO. REQ'D.	DESCRIPTION	LENGTH FT.	LENGTH IN.	REMARKS
1F1	(a1)	4	W6×9	13	0¼	
	(b1)	1	Do.	11	3	
	(c1)	2	S5×10	3	8¾	
	(d1)	1	Do.	3	2¼	
	(e1)	2	L 6"×6"×⅜"	6	9⅝	
	(f1)	4	BAR 6"×¼"	0	6	
	(g1)	4	BAR 4"×¼"	0	6	
	(h1)	2	BAR 6"×¼"	1	11	
1C1		4	W6×9	13	0¼	⅛
1C2		2	Do.	13	0¼	⅛
	(f1)	6	BAR 4"×¼"	0	6	
	(j1)	6	BAR 4"×¼"	0	6	

DRAWING STATUS

- ☒ FOR APPROVAL NOT FOR FIELD/SHOP USE DATE: 11/1/90
- ☐ FINAL PLANS FOR FIELD/SHOP USE DATE:
- ☐ REVISED PLANS FOR FIELD/SHOP USE DATE:

ERECTION NOTE:

AISC CODE OF STANDARD PRACTICE
AMERICAN INSTITUTE OF STEEL CONSTRUCTION
SECTION 5; PAGE 187; PARAGRAPH 7.12

7.12 Correction of Errors
Normal erection operations include the correction of minor misfits by moderate amounts of reaming, chipping or cutting, and the drawing of elements into line through the use of drift pins. Errors which cannot be corrected by the foregoing means or which require major changes in member configuration are reported immediately to the owner and fabricator by the erector, to enable whoever is responsible either to correct the error or to approve the most efficient and economic method of correction to be used by others.

THIS PROCEDURE MUST BE FOLLOWED BEFORE ANY BACK-CHARGES CAN BE ACCEPTED.

CLEANING SP2, SP3
PAINT 1 CT. HENTZEN #4080 RED PRIMER

DATE	REV.	DESCRIPTION	APP'D.

ALL HOLES 13/16" Ø UNLESS OTHERWISE NOTED | ALL MATERIALS A-36 UNLESS OTHERWISE NOTED | ALL WELDS 1/4" FILLET UNLESS OTHERWISE NOTED

ALSO REFERENCE C.S.E. STANDARD DETAILS

SHOP DRAWING REVIEW

Review is only for general conformance with the design concept of the contract documents. Markings or comments shall not be construed as relieving the contractor from compliance with the project plans and specifications, nor departure therefrom. The contractor remains solely responsible for details and accuracy, for confirming and correlating all quantities and dimensions, for selecting fabrication processes, for techniques of assembly, for safety and for satisfactory performance of his work.

- ☐ Furnished as Submitted
- ☒ Furnish as Corrected
- ☐ Revise & Resubmit
- ☐ Rejected, See Remarks

Checked By AR & MAA Date 11/5/90
G. R. Chief Structural Engineer
CITY OF MILWAUKEE, D.P.W.
BUREAU OF ENGINEERS

Construction Supply & Erection, Inc.
N112 W19515 Mequon Road
P.O. Box 249
Germantown, WI 53022-2997
414-255-3003

DRAWN DATE	10/29/90
PROJECT	PLEASANT ST. BRIDGE HOUSE
DRAWN BY	RGF
CHD BY	
LOCATION	MILWAUKEE, WI.
JOB NO.	639
ARCHITECT	CITY OF MILW., DEPT. OF PUBLIC WORKS BUREAU OF BRIDGES & PUBLIC BLDG.'S
CONTRACTOR	CITY OF MILWAUKEE
SHEET NO.	1

West Allis Blueprint 1020-4

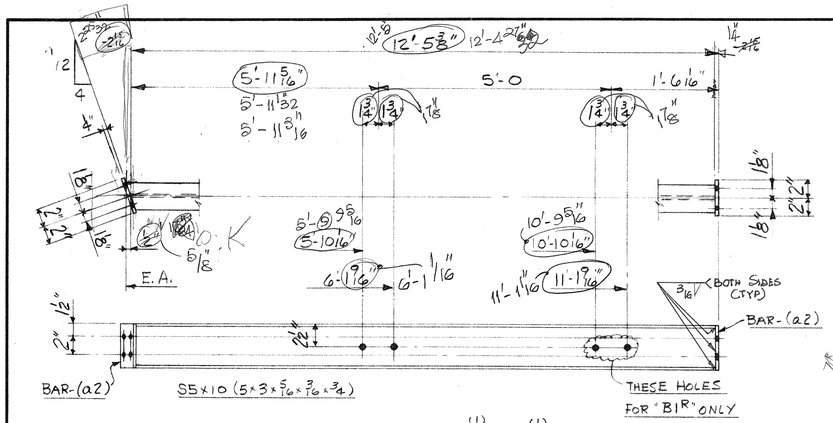

— 2 BEAMS 2B1R (1) - 2B1AL (1) —

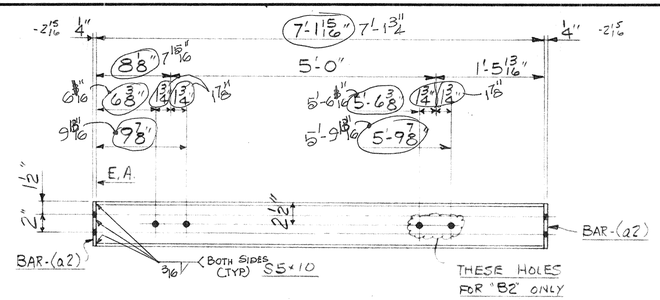

— 2 BEAMS 2B2 (1) - 2B2A (1) —

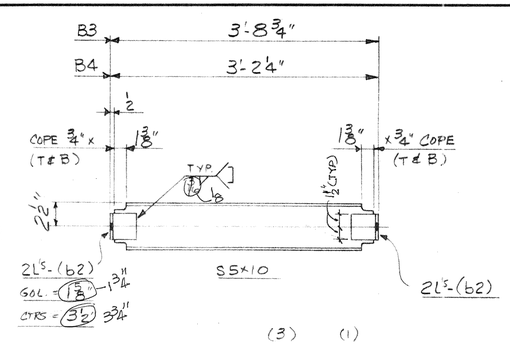

— 4 BEAMS 2B3 (3) - 2B4 (1) —

— SHOP NOTE —

ALL HOLES ARE TO BE 13/16" Ø

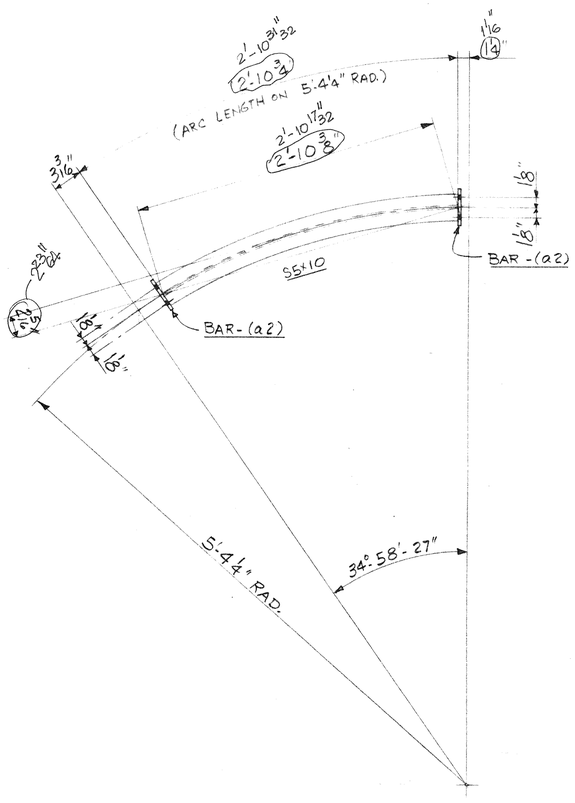

— 2 ROLLED BEAMS 2B5 —

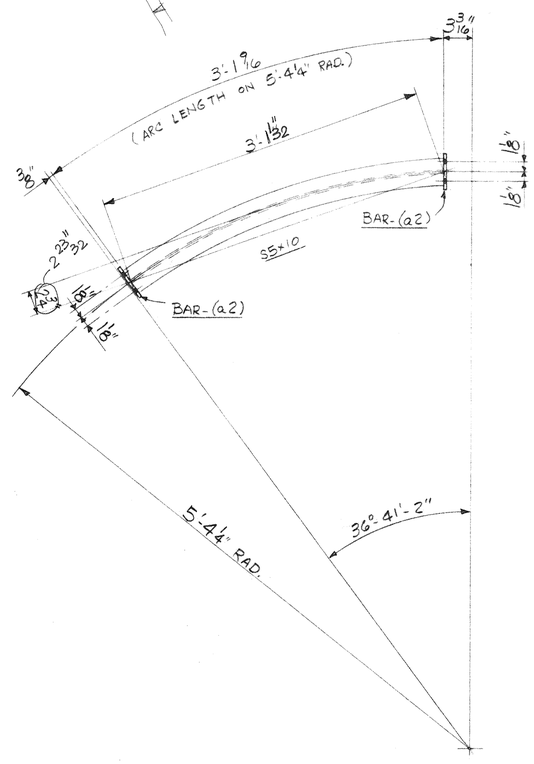

— 2 ROLLED BEAMS 2B6 —

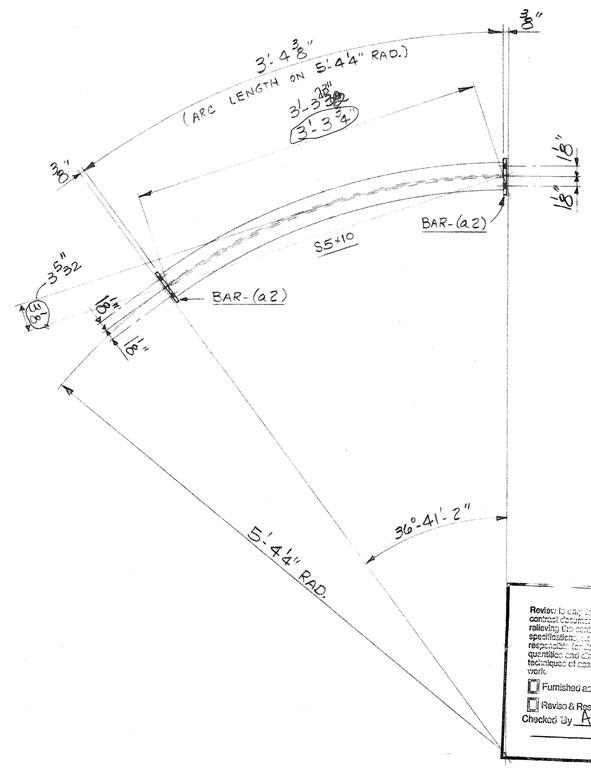

— 1 ROLLED BEAM 2B7 —

Note:
End plate connection detail for 2B5, 2B6 & 2B7 should be shown.

REVIEW

Review: [illegible] design concept of the contract [illegible] shall not be construed as relieving the [illegible] with the project plans and specifications [illegible] The contractor remains solely responsible for [illegible] and correlating all quantities and dimensions [illegible] processes, techniques of assembly, for safety and for satisfactory performance of his work.

☐ Furnished as Submitted ☒ Furnish as Corrected
☐ Revise & Resubmit ☐ Rejected, See Remarks

Checked by AR & MA Date: 11/5/90

G.R. Chief Structural Engineer
CITY OF MILWAUKEE, D.P.W.
BUREAU OF ENGINEERS

BILL OF MATERIAL

PIECE MARK	ASSEMBLY MARK	NO. REQ'D.	DESCRIPTION	LENGTH FT.	LENGTH IN.	REMARKS
2B1R		1	S5x10	12	5 5/8	5 11/32
2B1AL		1	Do.	12	5 5/8	5 11/32
	(a2)	4	BAR 4" x 1/4"	0	5	
2B2		1	S5x10	7	1 15/16	1 3/4
2B2A		1	Do.	7	1 15/16	1 3/4
	(a2)	4				
2B3		3	S5x10	3	7 3/4	
2B4		1	Do.	3	1 1/4	
	(b2)	16	L 3" x 3" x 1/4"	0	3	
2B5		2	Rolled S5x10 Abt.	2	10 3/4	10 31/32
	(a2)	4				
2B6		2	Rolled S5x10 Abt.	3	1 9/16	
	(a2)	4				
2B7		1	Rolled S5x10 Abt.	3	4 3/8	
	(a2)	2				

DRAWING STATUS

☒ FOR APPROVAL
NOT FOR FIELD/SHOP USE
DATE: 11/1/90

☐ FINAL PLANS
FOR FIELD/SHOP USE
DATE:

☐ REVISED PLANS
FOR FIELD/SHOP USE
DATE:

ERECTION NOTE:

AISC CODE OF STANDARD PRACTICE
AMERICAN INSTITUTE OF STEEL CONSTRUCTION
SECTION 5; PAGE 187; PARAGRAPH 7.12

7.12 Correction of Errors
Normal erection operations include the correction of minor misfits by moderate amounts of reaming, chipping or cutting, and the drawing of elements into line through the use of drift pins. Errors which cannot be corrected by the foregoing means or which require major changes in member configuration are reported immediately to the owner and fabricator by the erector, to enable whoever is responsible either to correct the error or to approve the most efficient and economic method of correction to be used by others.

THIS PROCEDURE MUST BE FOLLOWED BEFORE ANY BACK-CHARGES CAN BE ACCEPTED.

CLEANING SP2, SP3

PAINT
1 CT. HENTZEN #4080
RED PRIMER

DATE	REV.	DESCRIPTION	APP'D.

ALL HOLES 13/16" Ø UNLESS OTHERWISE NOTED

ALL MATERIALS A-36 UNLESS OTHERWISE NOTED

ALL WELDS 1/4" FILLET UNLESS OTHERWISE NOTED

ALSO REFERENCE C.S.E. STANDARD DETAILS

Construction Supply & Erection, Inc.
N112 W19515 Mequon Road
P.O. Box 249
Germantown, WI 53022-2997
414-255-3003

DRAWN DATE 11/1/90

PROJECT: PLEASANT ST. BRIDGE HOUSE

DRAWN BY: [illegible] CHD BY:

LOCATION: MILWAUKEE, WI.

JOB NO. 639

ARCHITECT: CITY OF MILW, DEPT. OF PUBLIC WORKS BUREAU OF BRIDGES & PUBLIC BLDG'S

CONTRACTOR: CITY OF MILWAUKEE

SHEET NO. 2

537260
West Allis Blueprint 1020-4

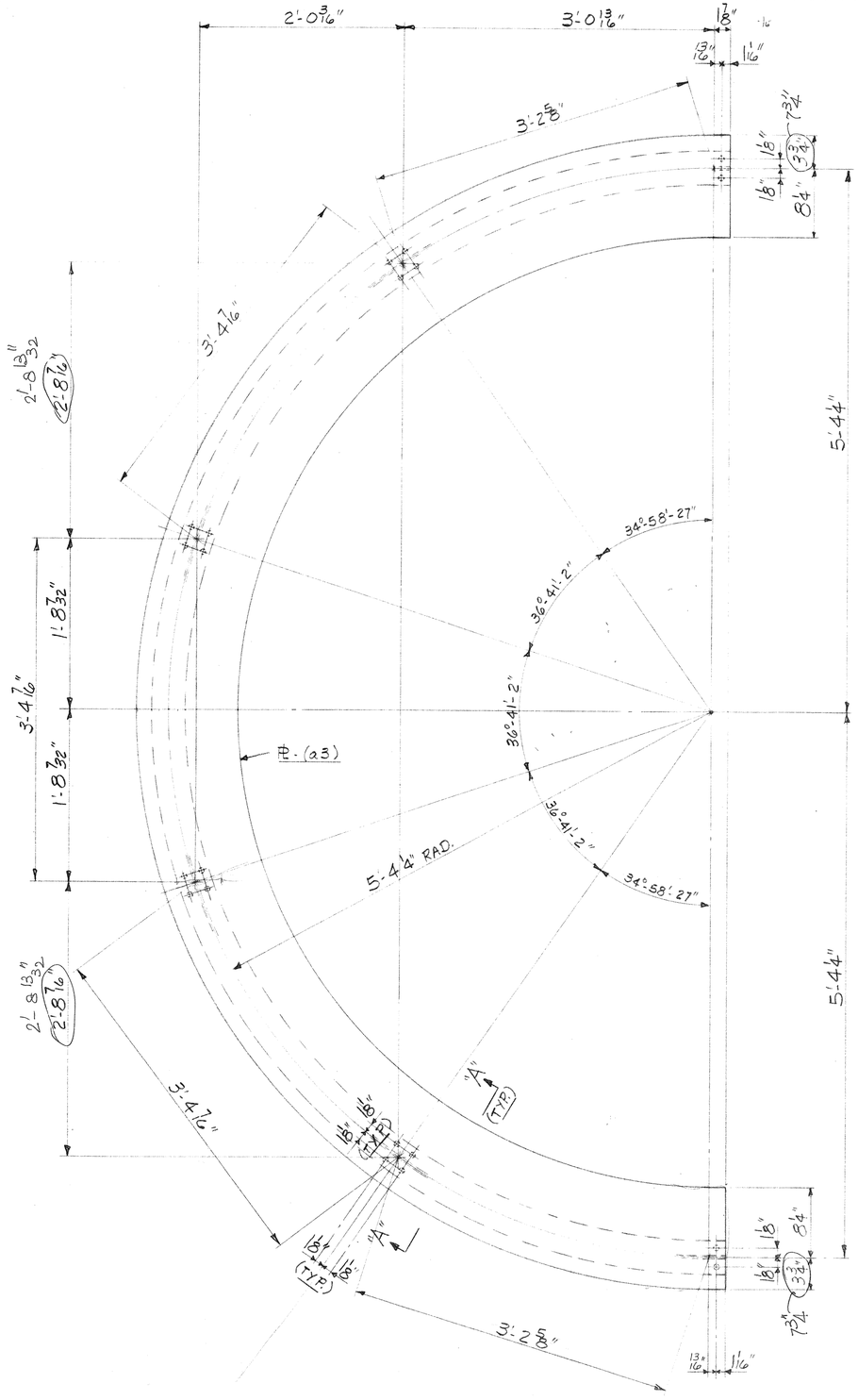

— 1 ROLLED BEAM 3B1 —

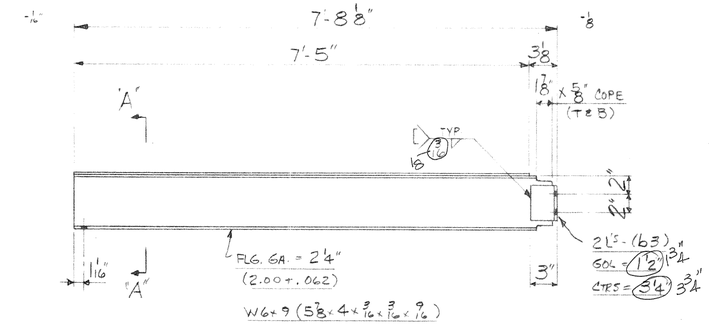

— 2 BEAMS 3B2R(1) - 3B2L(1) —

— SHOP NOTE —
ALL HOLES ARE TO BE 1 1/16"ϕ

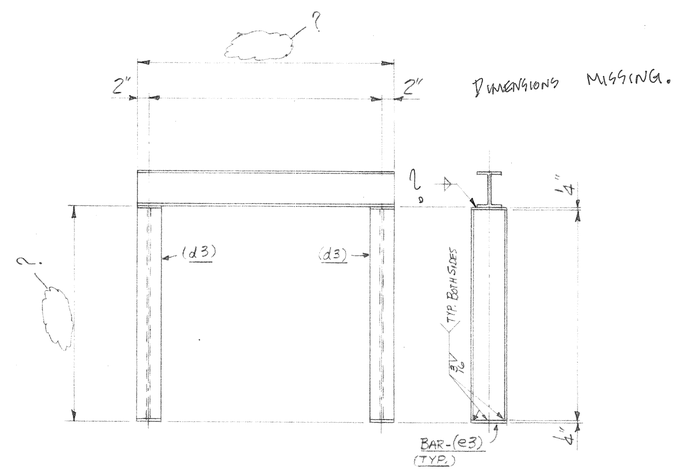

— 1 BELL SUPPORT FRAME 3F1 —

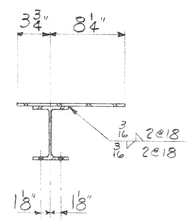

— SECTION A-A —

SHOP DRAWING REVIEW
Review is only for general conformance with the design concept of the project and compliance with the contract documents. Review of a separate item does not indicate review of the assembly in which it functions. Review shall not be construed as approval of dimensions to be confirmed and correlated at the job site. Review of shop drawings does not relieve the contractor from responsibility for deviations from the project plans and specifications. Review of shop drawings does not relieve the contractor from responsibility for errors or omissions in the shop drawings. The contractor remains solely responsible for dimensions, for quantities, for fabrication processes and techniques of construction, for coordination of his work with that of all other trades, for safe conditions and procedures, for coordinating all work, for safety and for satisfactorily performing all of his work.
☐ Furnished as Submitted ☒ Furnish as Corrected
☐ Revise & Resubmit ☐ Rejected - See Remarks
Checked By AR & MA Date 11/5/90
CA&E
CITY OF MILWAUKEE Structural Engineer
BUREAU OF BRIDGES

BILL OF MATERIAL

PIECE MARK	ASSEMBLY MARK	NO. REQ'D.	DESCRIPTION	LENGTH FT.	LENGTH IN.	REMARKS
3B1		1	ROLLED W6x9 ABT.	17	2	
	(a3)	1	℄ 1/4 x ABT. 17 SQ. FT.			
3B2R/L		2	W6x9	7	7 5/8	
	(b3)	4	L3"= 3" x 1/4"	0	4	
	(c3)	~~1~~	℄ 1/4" x 12"	7	5	
		2				
3F1		1	W6x9	5		?
	(d3)	2	Do.			
	(e3)	4	BAR 4" x 1/4"	0	6	
			FIELD BOLTS			
		20	5/8"ϕ KWIK-BOLT	0	6	✓
		100	5/8"ϕ STD. BOLT W/NUT	0	1 1/2	✓
		20	Do. A325	0	1 3/4	✓

DRAWING STATUS
☒ FOR APPROVAL NOT FOR FIELD/SHOP USE DATE: 11/1/90
☐ FINAL PLANS FOR FIELD/SHOP USE DATE:
☐ REVISED PLANS FOR FIELD/SHOP USE DATE:

ERECTION NOTE:
AISC CODE OF STANDARD PRACTICE
AMERICAN INSTITUTE OF STEEL CONSTRUCTION
SECTION 5; PAGE 187; PARAGRAPH 7.12

7.12 Correction of Errors
Normal erection operations include the correction of minor misfits by moderate amounts of reaming, chipping or cutting, and the drawing of elements into line through the use of drift pins. Errors which cannot be corrected by the foregoing means or which require major changes in member configuration are reported immediately to the owner and fabricator by the erector, to enable whoever is responsible either to correct the error or to approve the most efficient and economic method of correction to be used by others.
THIS PROCEDURE MUST BE FOLLOWED BEFORE ANY BACK-CHARGES CAN BE ACCEPTED.

	DATE	REV.	DESCRIPTION	APP'D.
CLEANING SP2, SP3				
PAINT 1CT HENTZEN #4080 RED PRIMER				

ALL HOLES 13/16" ϕ UNLESS OTHERWISE NOTED | ALL MATERIALS A-36 UNLESS OTHERWISE NOTED | ALL WELDS 1/4" FILLET UNLESS OTHERWISE NOTED

ALSO REFERENCE C.S.E. STANDARD DETAILS

Construction Supply & Erection, Inc.
N112 W19515 Mequon Road
P.O. Box 249
Germantown, WI 53022-2997
414-255-3003

DRAWN DATE 11/1/90
PROJECT: PLEASANT ST. BRIDGE HOUSE
DRAWN BY: RJJ
CHD BY:
LOCATION: MILWAUKEE, WI.
JOB NO. 639
ARCHITECT: CITY OF MILW., DEPT. OF PUBLIC WORKS BUREAU OF BRIDGES & PUBLIC BLDG'S
CONTRACTOR: CITY OF MILWAUKEE
SHEET NO. 3

West Allis Blueprint 1020-4

SYM.	PIECE MARK	ITEM	QUAN.	DESCRIPTION	LENGTH	SPECS.	P BILL	TOTAL WEIGHT

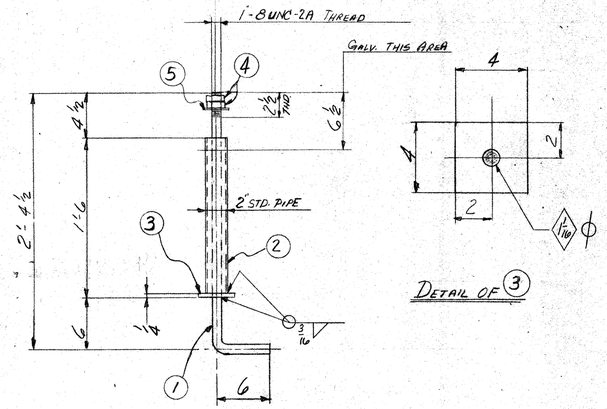

32- ANCHOR BOLTS MK 1-1

WELD FOR MK 1-1
26'-0 OF 3/16 DEP @ 0.15 = 3.9"
3.9"

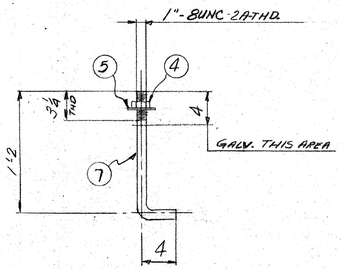

16- ANCHOR BOLTS MK 1-3

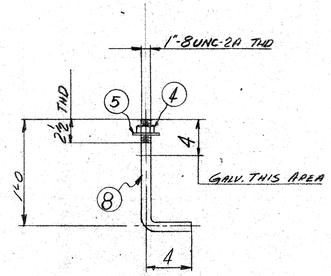

14- ANCHOR BOLTS MK 1-4

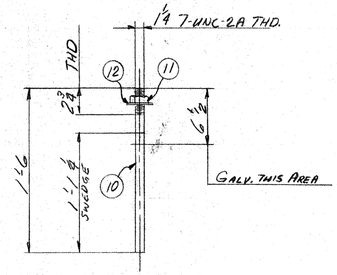

24- SWEDGE ANCHOR BOLTS MK 1-6

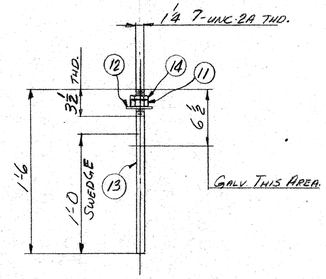

36- SWEDGE ANCHOR BOLTS MK 1-7

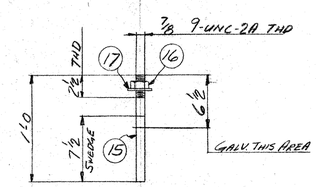

72- SWEDGE ANCHOR BOLTS MK 1-8

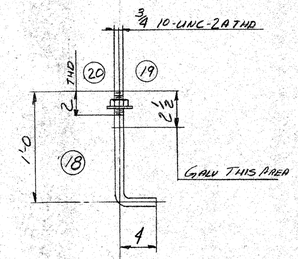

8- ANCHOR BOLTS MK 1-9

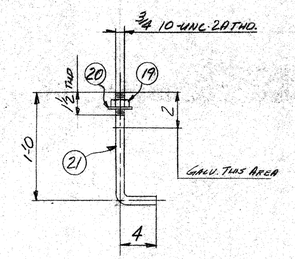

16- ANCHOR BOLTS MK 1-10

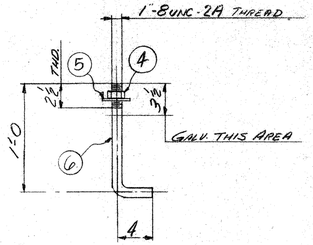

120- ANCHOR BOLTS MK 1-2

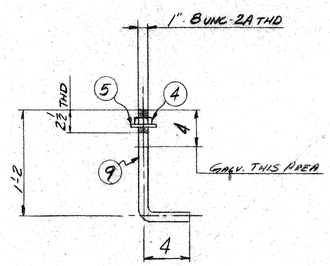

62- ANCHOR BOLTS MK 1-5

PROJECT NO. 2984-0-07
FED. PROJECT NO. ERS T 4195(11)
DESIGN DRG. REF. SHTS 27, 28, 30, 31 & 35

RECORD

APPROVED
MAR 29 1972
Bureau of Bridges & Public Buildings
MILWAUKEE, WIS.

B. + B.

OPEN HOLES AS SHOWN UNLESS NOTED
SHOP PAINT

LAKESIDE BRIDGE & STEEL CO.
MILWAUKEE, WIS.

CUSTOMER EDWARD E. GILLEN COMPANY
LOCATION OF WORK MILWAUKEE WISC.
DESCRIPTION PLEASANT STREET BRIDGE B-40-406
TITLE ANCHOR BOLTS

	DATE	INSPECTED BY	DRAWING NUMBER
DRAWN BY CAK	1-5-72	W.H.D.	8948-1
CHECKED	1-26-72	SYMBOL C	UNIT 3
APPROVED BY			

REV.	ZONE	DESCRIPTION	BY	DATE

SYM.	PIECE MARK	ITEM	QUAN	DESCRIPTION	LENGTH	SPECS.	P BILL	TOTAL WEIGHT

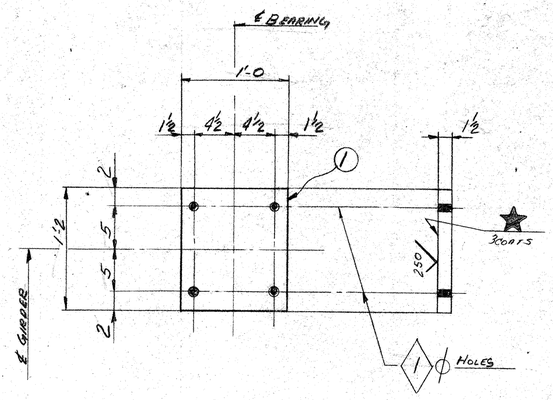

18- BEARING PLATE MK 2-1

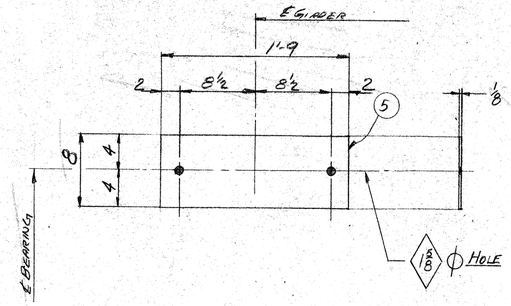

18- LEAD BASE PLATE MK 2-4
(NO PAINT)

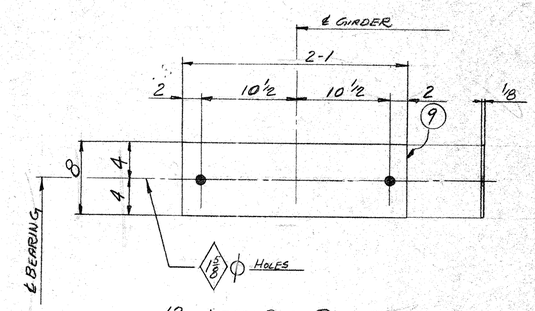

12 - LEAD BASE PLATE MK 2-7
(NO PAINT)

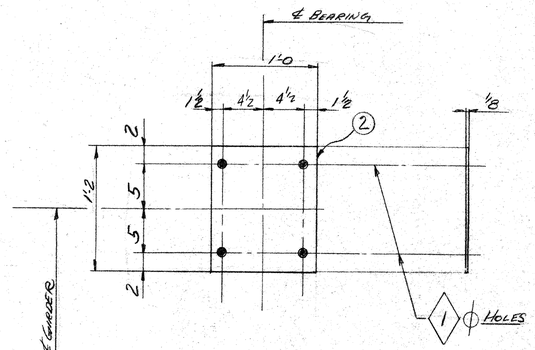

18- LEAD BASE PLATE MK 2-2
(NO PAINT)

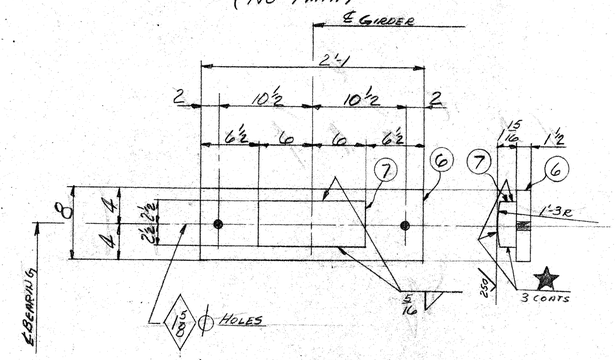

4- BEARING PLATE MK 2-5
WELD FOR 2-5
8'-0 OF 5/16 D @ 0.35 = 2.80"
TOTAL 2.8"

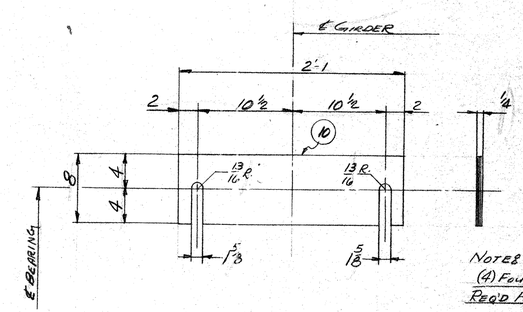

12- SHIM PACKS MK 2-8

NOTES
(A) FOUR ITEM (10) ARE REQ'D FOR EACH SHIM PACK

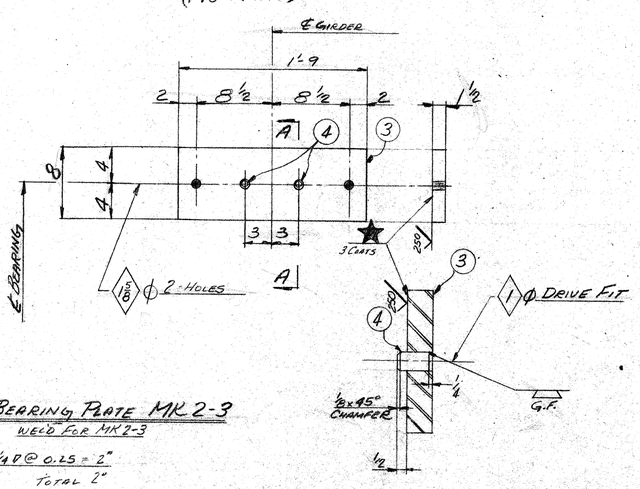

18- BEARING PLATE MK 2-3
WELD FOR MK 2-3
8'-0 OF 1/4 D @ 0.25 = 2"
TOTAL 2"

SECTION "A-A"

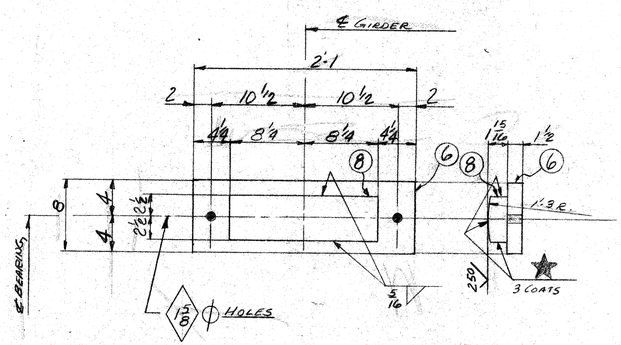

8- BEARING PLATE MK 2-6
WELD FOR 2-6
22'-0 OF 5/16 D @ 0.35 = 7.7"
TOTAL 7.7"

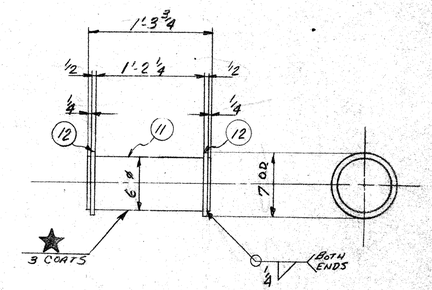

18- BEARING ROLLER MK 2-9
WELD FOR MK 2-9
57'-0 OF 1/4 D @ 0.25 = 14.25"
TOTAL 14.25"

APPROVED
FEB 24 1972
Supt. Bureau of Bridge & Public Buildings
MILWAUKEE, WIS.

OFFICE

PAINT NOTES:

1. ONE SHOP COAT OF RED LEAD PRIMER AASHO, M72 TYPE IV UNLESS OTHERWISE NOTED.
2. SURFACES NOTED THUS ★ SHALL BE COATED WITH (3) THREE COATS OF PAINT.
3. FIRST COAT AS NOTED.
4. SECOND COAT TO BE RED LEAD PRIME AASHO, M72, TYPE IV TINTED BY THE ADDITION OF 0.2 PERCENT BY WEIGHT OF LAMP BLACK OIL CONFORMING TO FEDERAL SPECIFICATIONS, TT-L-71, TO EACH GALLON OF PAINT.
5. THIRD COAT TO BE RED LEAD PRIMER AASHO, M72, TYPE IV.
6. SUCCEEDING COATS OF SHOP PAINT SHALL NOT BE APPLIED UNTIL THE PREVIOUS COAT IS DRY, BUT NOT LESS THAN 48 HOURS.

CHKD 2-24-72 E.A.B

REV.	ZONE	DESCRIPTION	BY	DATE

PROJECT NO. 2984-0-07
FED. PROJECT NO. EPS T 4195(11)
DESIGN DRG. REF. SHT 33

OPEN HOLES: AS SHOWN — UNLESS NOTED
SHOP PAINT: SEE NOTE, THIS SHEET

LAKESIDE BRIDGE & STEEL CO.
MILWAUKEE, WIS.

CUSTOMER: EDWARD F GILLEN COMPANY
LOCATION OF WORK: MILWAUKEE WISC
DESCRIPTION: PLEASANT STREET BRIDGE B-40-406
TITLE: BEARING PLATES & MISC DETAILS

DRAWN BY CAK	DATE 1-11-72	INSPECTED BY WISCONSIN HIGHWAY DEPT	DRAWING NUMBER 8948-2
CHECKED BY	1-26-72	SYMBOL C	UNIT 3
APPROVED BY			

SYM.	PIECE MARK	ITEM	QUAN.	DESCRIPTION	LENGTH	SPECS.	P BILL	TOTAL WEIGHT

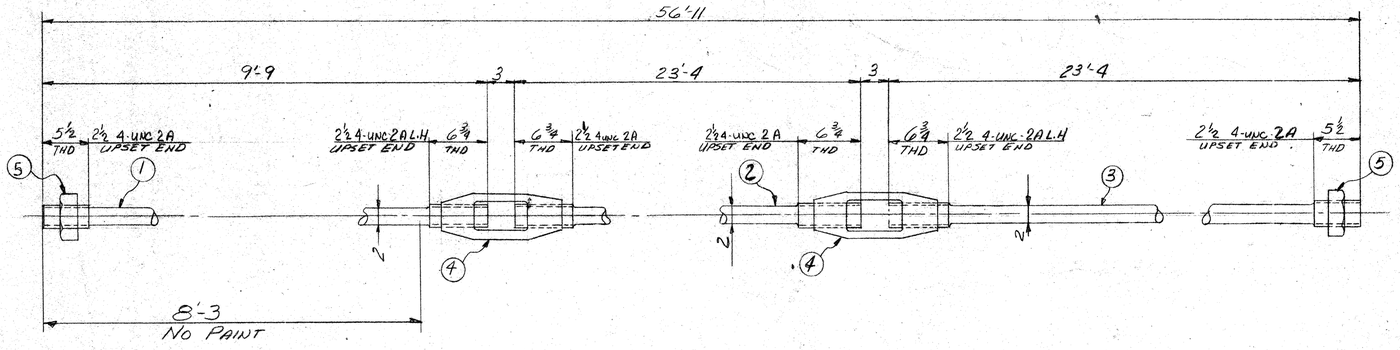

2.0-ANCHOR RODS-MK3-1

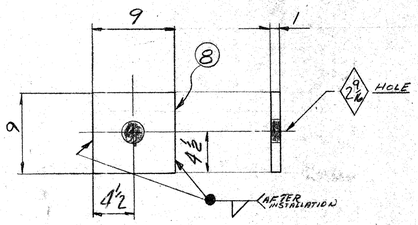

44 ANCHOR BOLT WASHER MK3-4

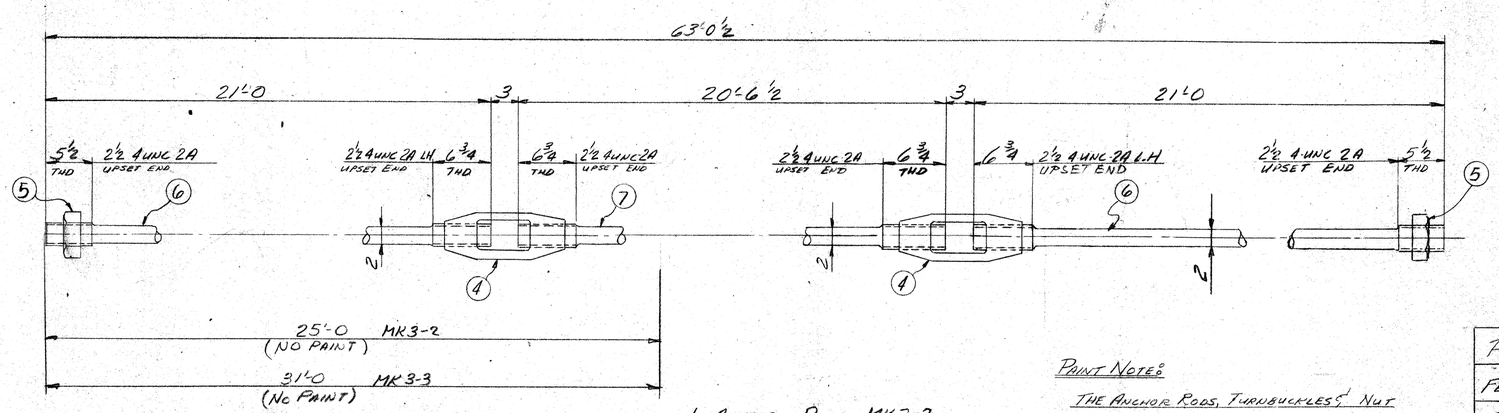

1 ANCHOR RODS MK3-2

1 ANCHOR ROD MK3-3 △1

PAINT NOTE:

THE ANCHOR RODS, TURNBUCKLES & NUT SHALL BE CLEANED AND SHOP COATED WITH KOPPERS BITUMASTIC MILL UNDERCOAT

THREADS SHALL NOT BE PAINTED

SEE PAINT NOTES WHERE REQ'D

RECORD

APPROVED

MAR 10 1972

Bureau of Bridges & Public Buildings

MILWAUKEE, WIS.

PROJECT NO. 2984-0-07

FED. PROJECT NO. EPS T 4195 (11)

DESIGN DRG. REF. SHT. 5

OPEN HOLES AS NOTED UNLESS NOTED

SHOP PAINT SEE NOTE

LAKESIDE BRIDGE & STEEL CO.

MILWAUKEE, WIS.

CUSTOMER EDWARD E GILLEN COMPANY

LOCATION OF WORK MILWAUKEE WISC.

DESCRIPTION PLEASANT STREET BRIDGE B-40-406

TITLE ANCHOR RODS & WASHERS

DRAWN BY CAK DATE 1-7-72

CHECKED BY [signature] 1-10-72

APPROVED BY

INSPECTED BY WISCONSIN HIGHWAY DEPT

SYMBOL B

DRAWING NUMBER 8948-3

UNIT 3

B+B

REV.	ZONE	DESCRIPTION	BY	DATE
△				
△				
△1	A-4	PIECE MK 3-3 ADDED 3-3 BECOMES 3-4	CAK	2-25-72

SYM.	PIECE MARK	ITEM	QUAN.	DESCRIPTION	LENGTH	SPECS.	P BILL	TOTAL WEIGHT

THESE SURFACES TO RECEIVE THREE SHOP COATS OF RED LEAD PRIMER, AASHO M 72, TYPE IV
SECOND COAT TINTED BY THE ADDITION OF 0.2 PERCENT BY WT OF LAMP BLACK OIL CONFORMING TO FED. SPEC. TT-L-71 TO EACH GAL. OF PAINT.

SUCCEEDING COATS OF SHOP PAINT SHALL NOT BE APPLIED UNTILL PREVIOUS COAT IS DRY, BUT NOT LESS THAN 48 HOURS

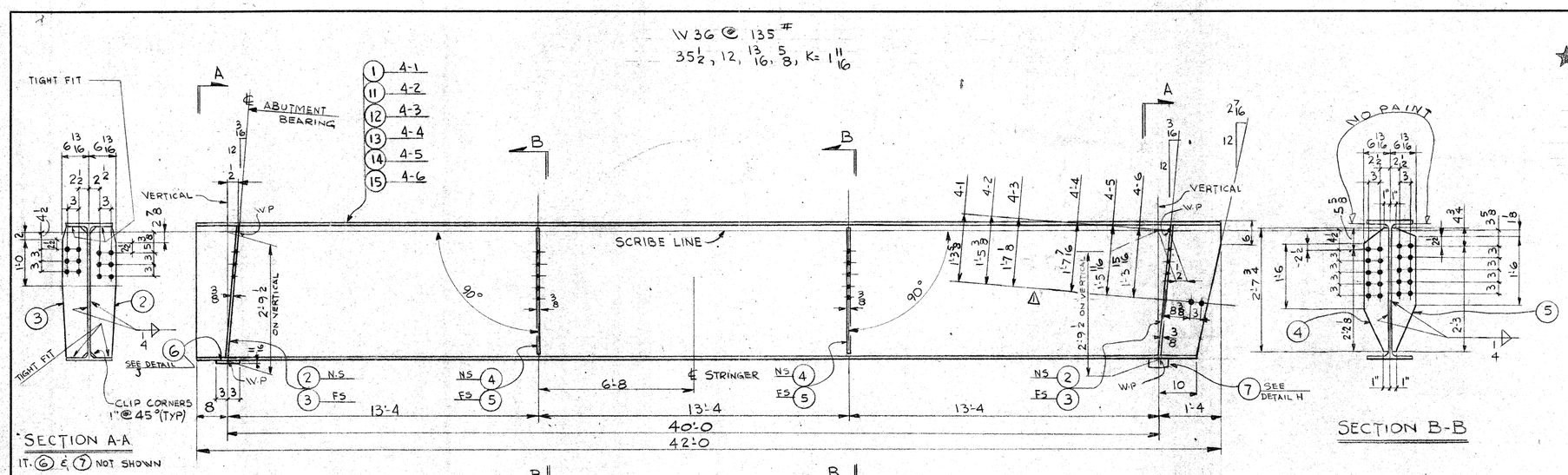

SECTION A-A
IT. ⑥ & ⑦ NOT SHOWN

SECTION B-B

2 INTERIOR STRINGER MK 4-1
2 " " " " " MK 4-2
2 " " " " " MK 4-3

2 INTERIOR STRINGER MK 4-4
2 " " " " " MK 4-5
2 " " " " " MK 4-6

WELD WT:
528' OF ¼ ▽ @ .25 = 132#
48' OF 5/16 ▽ @ .36 = 18#
150#

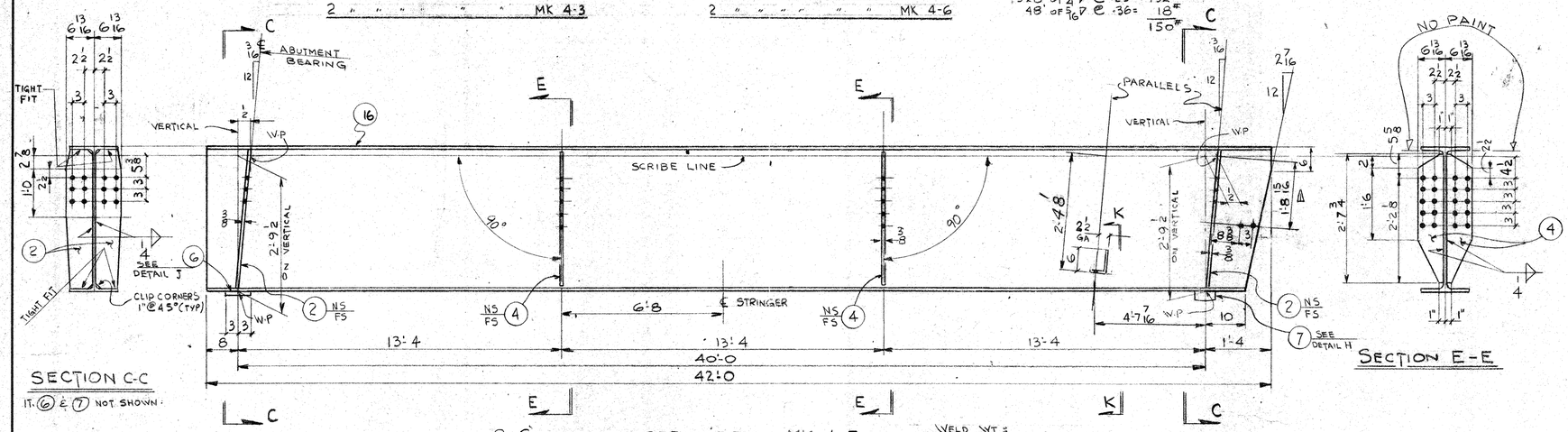

SECTION C-C
IT. ⑥ & ⑦ NOT SHOWN

SECTION E-E

2 CENTRAL STRINGERS MK 4-7

WELD WT:
91' OF ¼ ▽ @ .25 = 23#
8' OF 5/16 ▽ @ .36 = 3#
26#

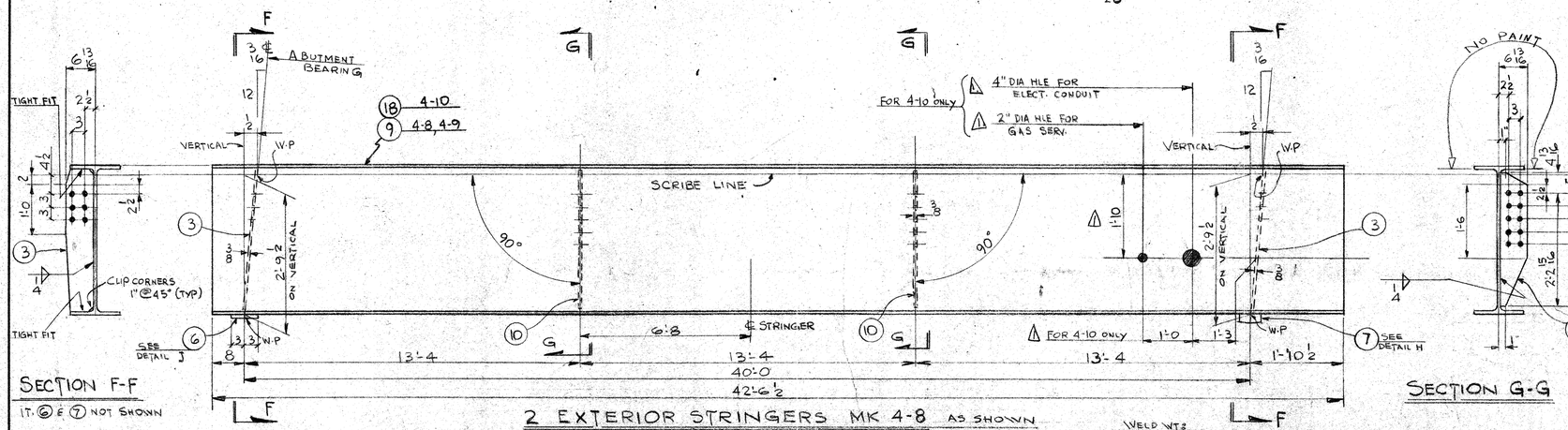

SECTION F-F
IT. ⑥ & ⑦ NOT SHOWN

SECTION G-G

2 EXTERIOR STRINGERS MK 4-8 AS SHOWN
1 " " " STRINGER MK 4-9 OPP HAND TO 4-8
1 " " " STRINGER MK 4-10 OPP HAND TO 4-8 & AS NOTED

WELD WT:
88' OF ¼ ▽ @ .25 = 22#
16' OF 5/16 ▽ @ .36 = 6#
28#

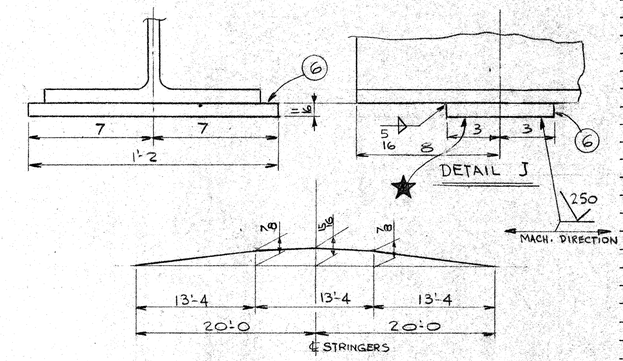

CAMBER DIAGRAM FOR MKS 4-1 THRU 4-7

CAMBER DIAGRAM FOR MKS 4-8; 4-9

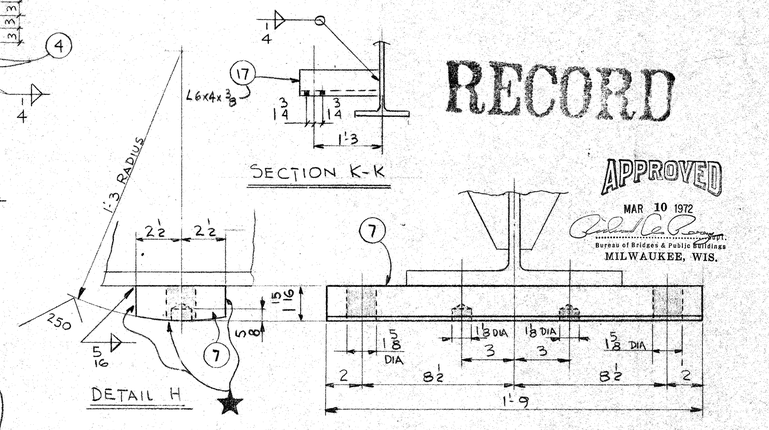

SECTION K-K

RECORD

APPROVED
MAR 10 1972
Bureau of Bridges & Public Buildings
MILWAUKEE, WIS.

NOTES
FOR ERECTION SEE DWG NO-E1
NO PAINT WITHIN 3" OF HOLES UNLESS NOTED

PROJECT NO 2984-0-07
FED. PROJECT NO EPST-4195 (11)
DESIGN DWG REF. SHTS NO 3 & 33

OPEN HOLES 13/16" DIA UNLESS NOTED
SHOP PAINT SEE DWG. -901 & SEE NOTE ★ ABOVE

LAKESIDE BRIDGE & STEEL CO.
MILWAUKEE, WIS.

CUSTOMER EDWARD E. GILLEN CO
LOCATION OF WORK MILWAUKEE - WIS
DESCRIPTION PLEASANT STR. BRIDGE B-40-406
TITLE APPROACH SPANS - STRINGERS
DRAWN BY R. DeNeve DATE JAN-5-72
CHECKED BY 2.3.72
APPROVED BY
INSPECTED BY W.H.D
SYMBOL C
DRAWING NUMBER 8948-4
UNIT 1

REV.	ZONE	DESCRIPTION	BY	DATE
1	DC-4 A5	2 HOLES ADDED, MK 4-10 ADDED. HOLES REVISED	R.D	FEB 17-72

SYM.	PIECE MARK	ITEM	QUAN.	DESCRIPTION	LENGTH

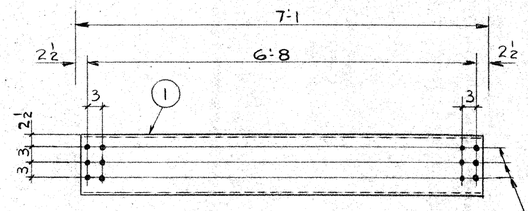

32 BEARING DIAPHRAGMS MK 5-1

NO PAINT WITHIN 3" OF THESE HOLES

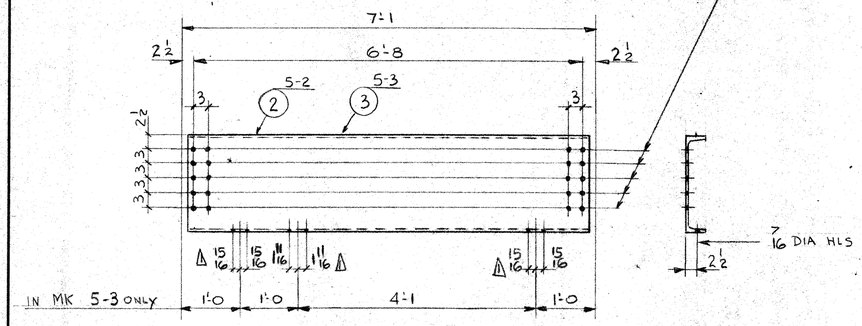

30 INTERMEDIATE DIAPHRAGMS MK 5-2

2 " " " " " " " " MK 5-3

MC 18 @ 42.7#
18, 4, 5/8, 7/16, K= 1 3/8

C 12 @ 20.7#
12, 3, 1/2, 5/16, K= 1 1/8

RECORD

APPRO

MAR 10 19

Bureau of Bridges & Pub

MILWAUKEE

FOR ERECTION SEE DWG -F

PROJECT No 2984-0-07	
FED PROJECT No EPST-	
DESIGN DWG REF: SHTS NO 3	

OPEN HOLES 13/16" DIA

SHOP PAINT SEE DWG - 901

LAKESI

BRIDGE & STE

MILWAUKEE, WI

CUSTOMER EDWARD E. GILLEN

LOCATION OF WORK MILWAUKEE - W

DESCRIPTION PLEASANT ST -

TITLE APPROACH SPANS - DIA

DRAWN BY R. DE NIEVE DATE JAN 7-72 INSPECTED BY W. H. D

CHECKED BY 23,72

APPROVED BY

SYMBOL A

B + B

REV.	ZONE	DESCRIPTION	BY	DATE
		APPROVAL ADDITION	R. DE NIEVE	FEB 25-72

8 7 6 5 4 3 2

SYM.	PIECE MARK	ITEM	QUAN.	DESCRIPTION	LENGTH	SPECS.	P BILL	TOTAL WEIGHT

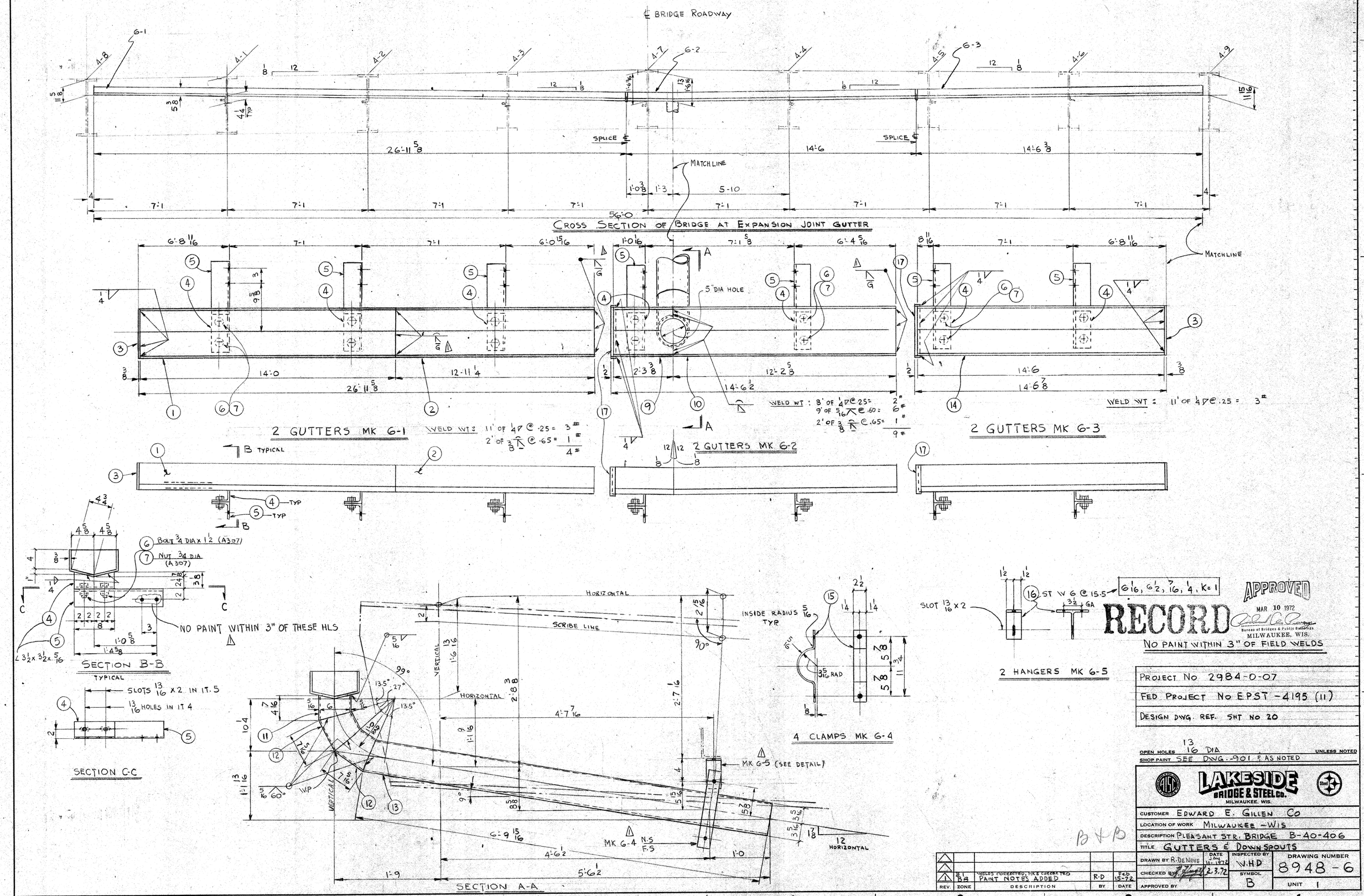

APPROVED
MAR 10 1972
RECORD
Bureau of Bridges & Public Buildings
MILWAUKEE, WIS.

PROJECT NO	2984-0-07
FED PROJECT NO	EPST-4195 (11)
DESIGN DWG. REF.	SHT NO 20

OPEN HOLES 13/16 DIA UNLESS NOTED
SHOP PAINT SEE DWG.-901 & AS NOTED

LAKESIDE BRIDGE & STEEL CO.
MILWAUKEE, WIS.

CUSTOMER	EDWARD E. GILLEN CO
LOCATION OF WORK	MILWAUKEE - WIS
DESCRIPTION	PLEASANT STR. BRIDGE B-40-406
TITLE	GUTTERS & DOWNSPOUTS
DRAWN BY	R. DeNeve — DATE JAN 11-1972
CHECKED BY	2.3.72
APPROVED BY	
INSPECTED BY	W.H.D
SYMBOL	B
DRAWING NUMBER	8948-6
UNIT	1

REV.	ZONE	DESCRIPTION	BY	DATE
1	B1 B8	WELDS CORRECTED, MK'S CORRECTED PAINT NOTES ADDED	R.D	Feb 15-72

B+B

SYM.	PIECE MARK	ITEM	QUAN.	DESCRIPTION	LENGTH	SPECS.	P BILL	TOTAL WEIGHT

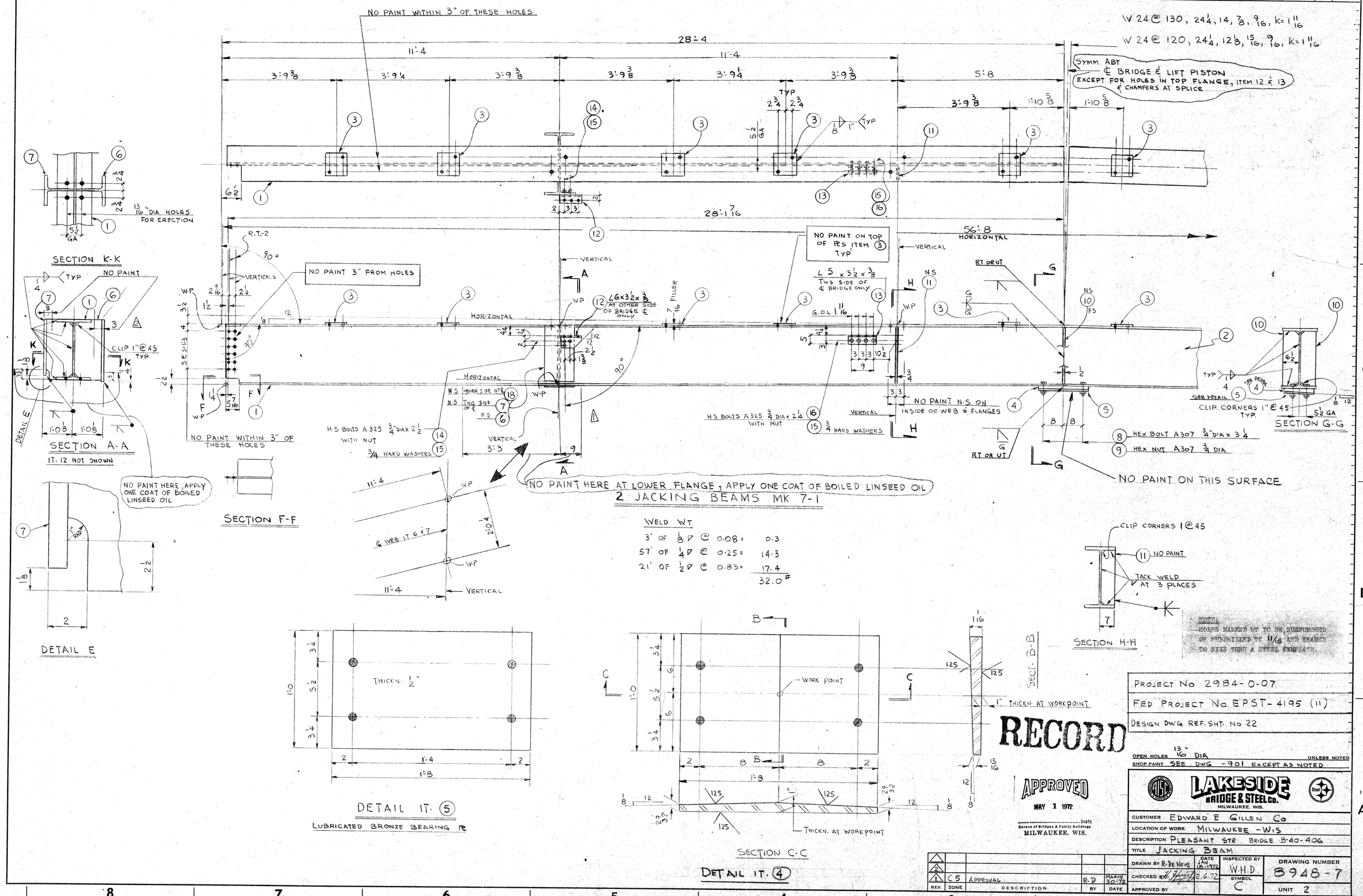

SYM.	PIECE MARK	ITEM	QUAN.	DESCRIPTION	LENGTH	SPECS.	P BILL	TOTAL WEIGHT

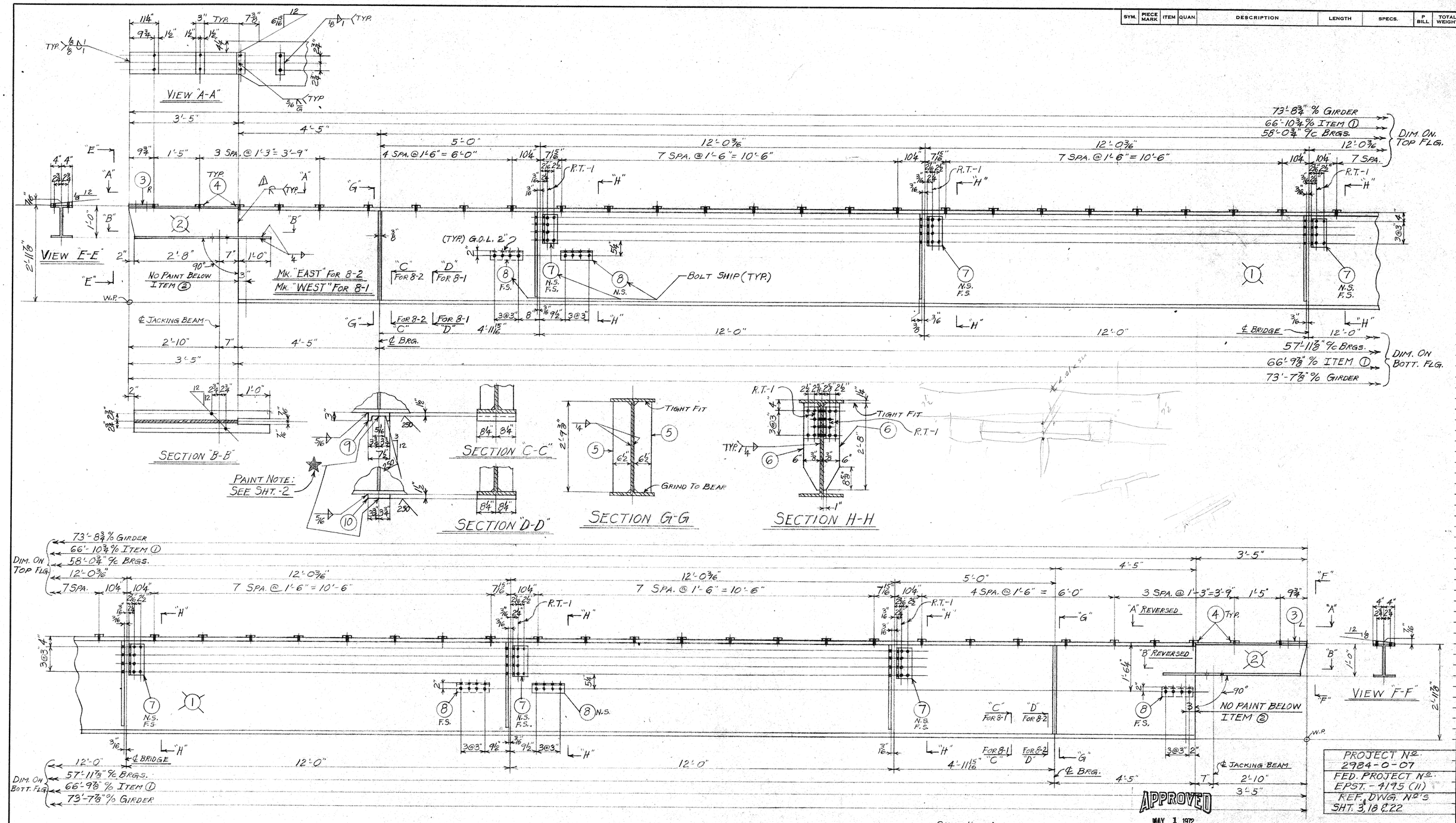

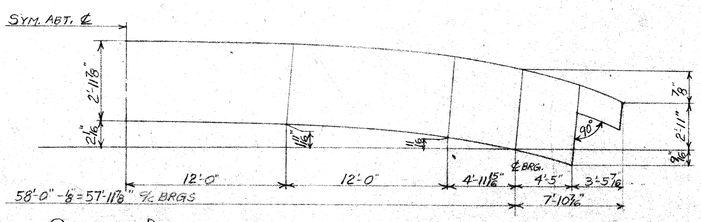

1-GIRDER 8-1 D
1-GIRDER 8-2 C

W 36×230	W 12×40
35⅞×16½×1¼×¾×2⅜	12×8×2×5/16×14

17' OF ⅛ ▽ @ 0.08 =	1.4
164' OF 4 ▽ @ 0.25 =	41.0
11' OF 5/16 ▽ @ 0.35 =	3.9
3' OF 5/16 ⊤ @ 0.35 =	1.1
4' OF ½ ⊤ @ 0.85 =	1.8
4' OF 5/16 ⊸ @ 0.25 =	1.0
TOTAL WELD =	50.2 #

SHOP NOTE:
NO PAINT WITHIN 3" OF HOLES
ALL ANGLES TO BE BOLT SHIP

APPROVED
MAY 1 1972
Supt. Bureau of Bridges & Public Buildings
MILWAUKEE, WIS.

NOTE:
HOLES MARKED NT TO BE SUBPUNCHED OR SUBDRILLED TO 11/16" AND REAMED TO SIZE THRU A STEEL TEMPLATE.

RECORD

REV.	ZONE	DESCRIPTION	BY	DATE
		WELD CHANGE	B.T.	3-31-72

PROJECT No. 2984-0-07
FED. PROJECT No. EPST.-4195 (11)
REF. DWG. No's SHT. 3, 18 & 22

OPEN HOLES 13/16" ϕ ✓ UNLESS NOTED
SHOP PAINT SEE SHT. 901 UNLESS NOTED

LAKESIDE BRIDGE & STEEL CO.
MILWAUKEE, WIS.

CUSTOMER EDWARD E. GILLEN CO.
LOCATION OF WORK MILWAUKEE, WIS.
DESCRIPTION PLEASANT STREET BRIDGE B-40-406
TITLE LIFT SPAN INTERIOR GIRDERS

DRAWN BY B.T.	DATE 1-18-72	INSPECTED BY W.H.D.	DRAWING NUMBER 8948-8
CHECKED BY	2.28.72	SYMBOL C	
APPROVED BY			UNIT 2

SYM.	PIECE MARK	ITEM	QUAN.	DESCRIPTION	LENGTH

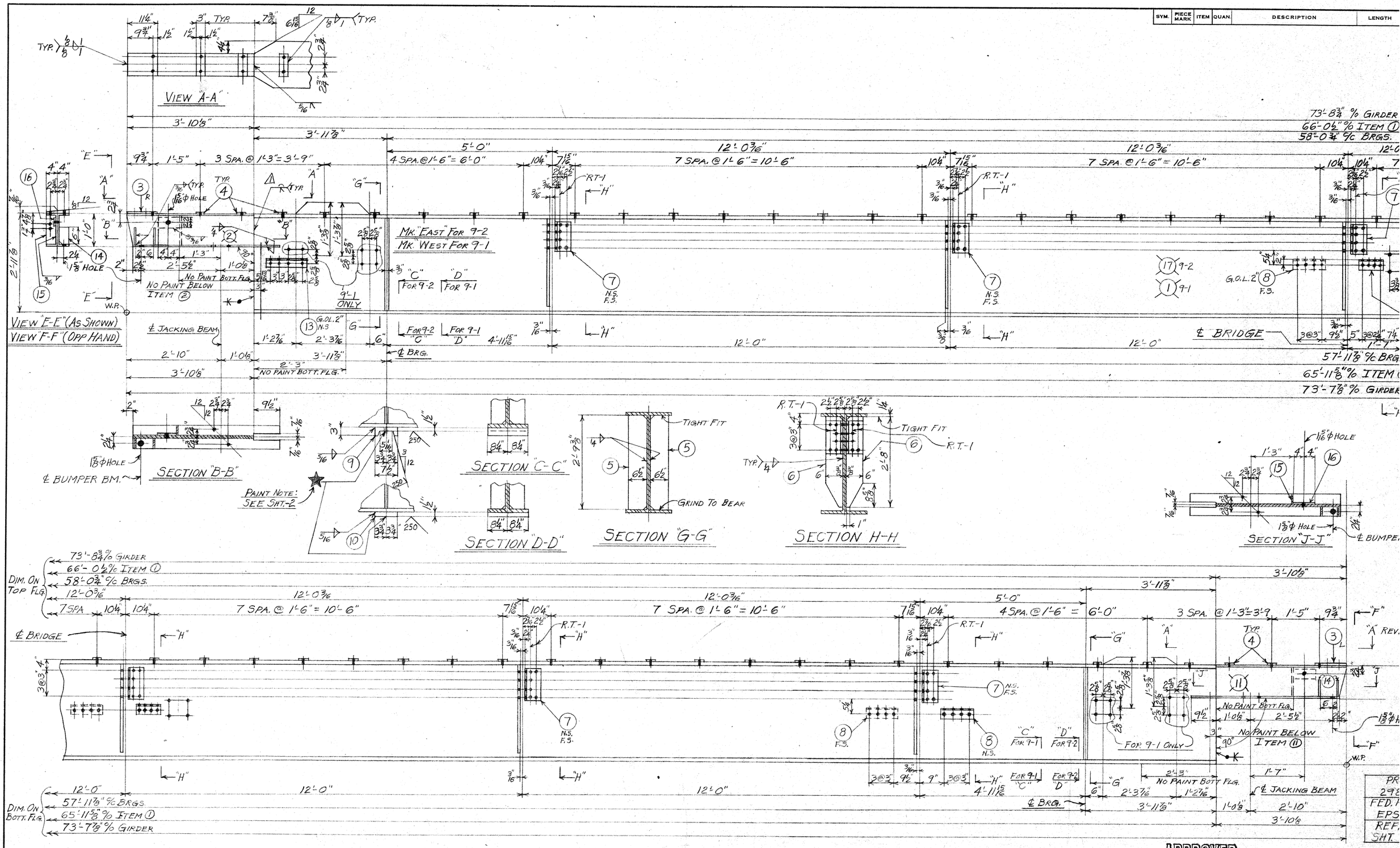

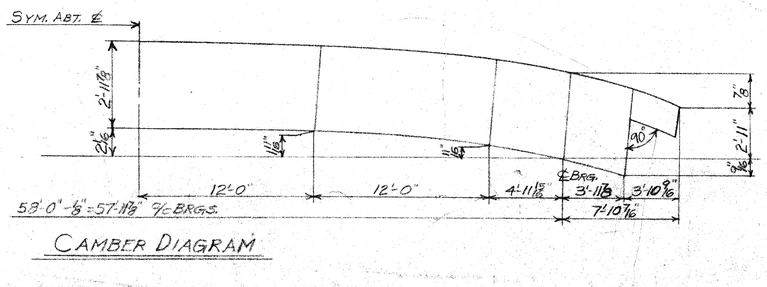

1-GIRDER 9-1
1-GIRDER 9-2

W 36×230	W 12×40
35⅞×16½×1¼×¾×2⅜	12×8×½×5/16×14

24' OF 3/16 ▽ @ 0.15 = 3.6
17' OF 1/8 ▽ @ 0.08 = 1.4
161' OF 1/4 ▽ @ 0.25 = 40.3
11' OF 5/16 ▽ @ 0.35 = 3.9
3' OF 5/16 ⊼ @ 0.35 = 1.1
4' OF ½ ⊼ @ 0.85 = 1.8
4' OF 5/16 ⊽ @ 0.25 = 1.0
TOTAL WELD = 53.1#

SHOP NOTE:
NO PAINT WITHIN 3" OF HOLES
ALL ANGLES TO BE BOLT SHIP

APPROVED
MAY 1 1972
Supt. Bureau of Bridges & Public Buildings
MILWAUKEE, WIS.

NOTE:
HOLES MARKED PT. TO BE SUBPUNCHED OR SUBDRILLED TO 11/16" AND REAMED TO SIZE THRU A STEEL TEMPLATE.

RECORD

REV.	ZONE	DESCRIPTION	BY	DATE
		WELD CHANGE	B.T.	3-31-72

OPEN HOLES 13/16" ⌀
SHOP PAINT SEE SHT. 901 UNLESS

LAKESI
BRIDGE & STE
MILWAUKEE, WIS

CUSTOMER EDWARD E. GILLEN
LOCATION OF WORK MILWAUKEE, W
DESCRIPTION PLEASANT STREET B
TITLE INTERIOR GIRDERS @ LI

	DATE	INSPECTED BY
DRAWN BY B.T.	1-20-72	W.H.D.
CHECKED	2-28-72	SYMBOL C
APPROVED BY		

8 7 6 5 4 3 2

SYM.	PIECE MARK	ITEM	QUAN.	DESCRIPTION	LENGTH	SPECS.	P BILL	TOTAL WEIGHT

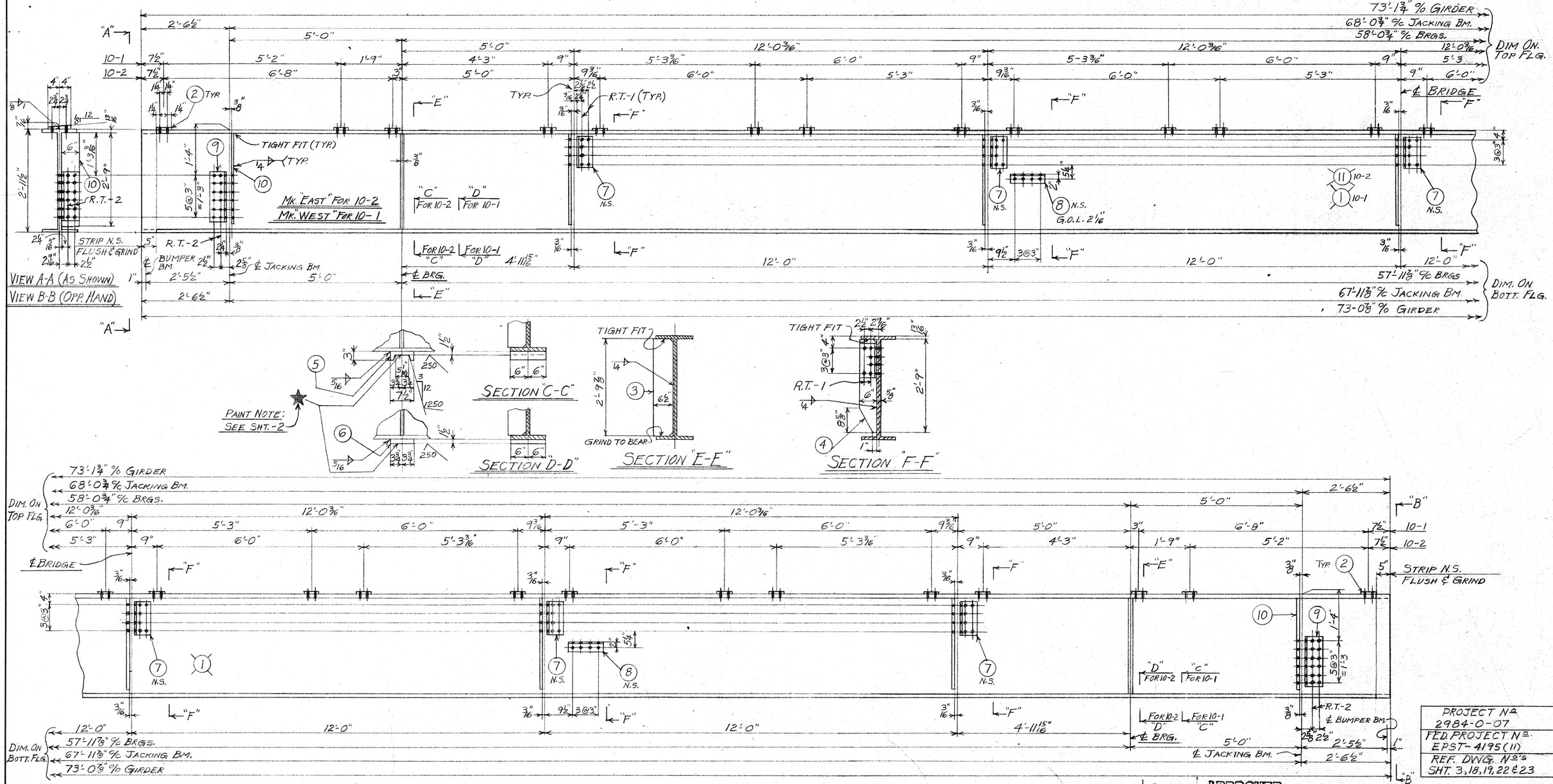

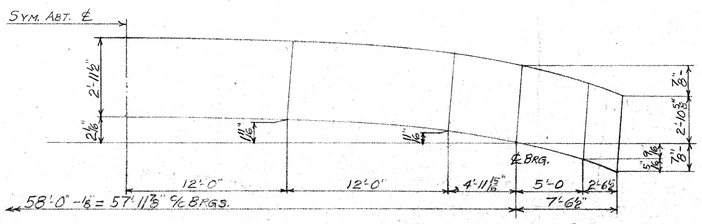

1-GIRDER 10-1 F

1-GIRDER 10-2 A

W 36 x 135
35½ x 12 x 13/16 x 5/8 x 11/16

5' OF 18 ▽ @ 0.08 = 0.4
100' OF 4 ▽ @ 0.25 = 25.0
8' OF 5/16 ▽ @ 0.35 = 2.8
TOTAL WELD = 28.2 #

SHOP NOTE:
NO PAINT WITHIN 3" OF HOLES
ALL ANGLES TO BE BOLT SHIP

APPROVED
MAY 1 1972
Supt. Bureau of Bridges & Public Buildings
MILWAUKEE, WIS.

NOTE:
HOLES MARKED PT TO BE SUBPUNCHED OR SUBDRILLED TO 11/16" AND REAMED TO SIZE THRU A STEEL TEMPLATE

RECORD

PROJECT No. 2984-0-07
FED. PROJECT No. EPST-4195(11)
REF. DWG. No's SHT. 3, 18, 19, 22 & 23

OPEN HOLES 13/16" ϕ UNLESS NOTED
SHOP PAINT SEE SHT. 901 UNLESS NOTED

LAKESIDE BRIDGE & STEEL CO.
MILWAUKEE, WIS.

CUSTOMER EDWARD E. GILLEN CO.
LOCATION OF WORK MILWAUKEE, WIS.
DESCRIPTION PLEASANT STREET BRIDGE B-40-406
TITLE LIFT SPAN OUTSIDE GIRDERS

REV.	ZONE	DESCRIPTION	BY	DATE

DRAWN BY B.T.	DATE 1-25-72	INSPECTED BY W.H.D.	DRAWING NUMBER 8948-10
CHECKED BY	2-28-72	SYMBOL C	UNIT 2
APPROVED BY			

SYM.	PIECE MARK	ITEM	QUAN.	DESCRIPTION	LENGTH	SPECS.	P BILL	TOTAL WEIGHT

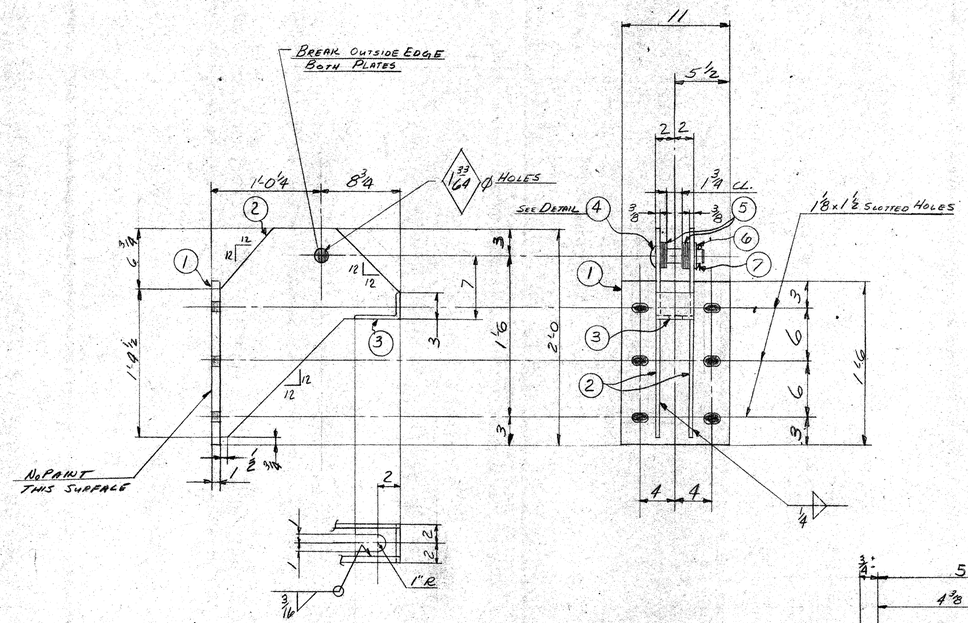

4-SHEAVE BRACKET MK 11-1

WELD FOR MK 11-1

24'-0 OF ¼D @ 0.25 = 6"

6'-6 OF 3/16D @ 0.15 = 1"

TOTAL 7"

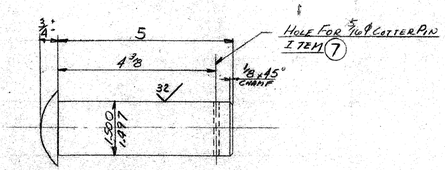

DETAIL OF ITEM 4

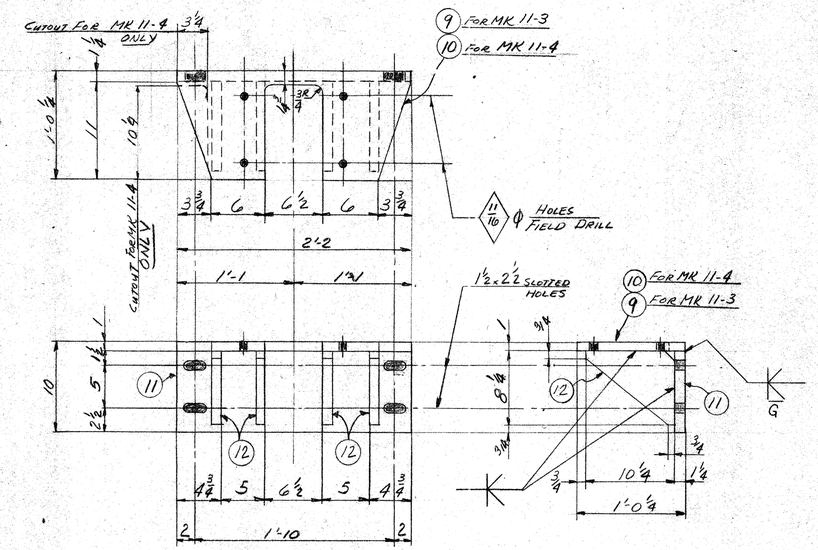

3-ROLLER GUIDE SUPPORTS MK 11-3

1-ROLLER GUIDE SUPPORT MK 11-4

WELD FOR MK 11-3 & MK 11-4

50'-8" OF ½T @ 0.95 = 48.06"

18'-0 OF ⅝T @ 1.35 = 24.3

TOTAL 67.36"

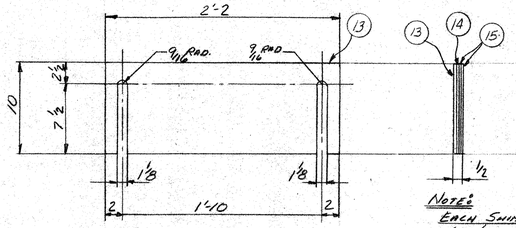

NOTE:
EACH SHIM PACK CONSISTS OF:
ONE (1) ¼ SHIM
ONE (1) 11 GA. SHIM
TWO (2) 16 GA. SHIM

4-SHIM PACKS MK 11-5

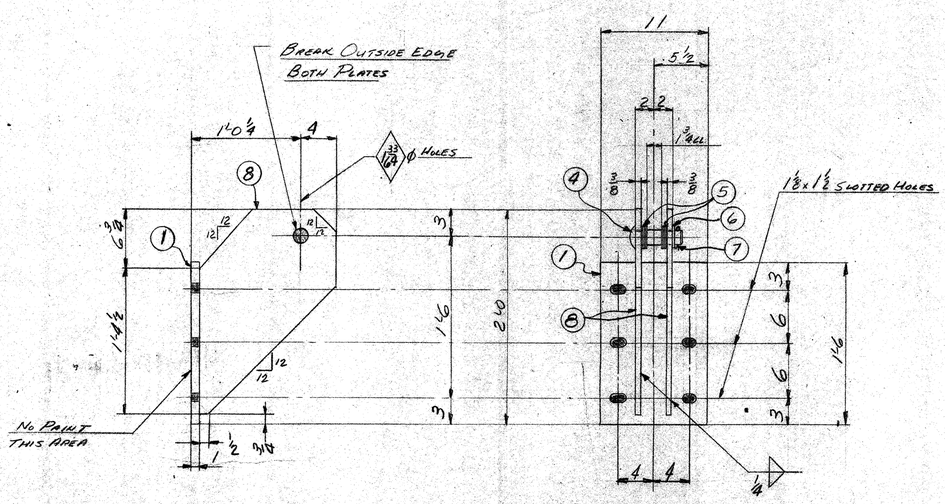

4-SHEAVE BRACKETS MK 11-2

WELD FOR MK 11-2

24'-0 OF ¼D @ 0.25 = 6"

TOTAL 6"

APPROVED MAR 10 1972 Bureau of Bridges & Public Buildings MILWAUKEE, WIS.

RECORD

PROJECT NO. 2984-0-07

FEDERAL PROJECT NO. EPS T 4195 (11)

DESIGN DWG. REF. SHT 30 & 23

OPEN HOLES: AS NOTED — UNLESS NOTED

SHOP PAINT: SEE SHT 901

LAKESIDE BRIDGE & STEEL CO. MILWAUKEE, WIS.

CUSTOMER: EDWARD E. GILLEN COMPANY

LOCATION OF WORK: MILWAUKEE, WISCONSIN

DESCRIPTION: PLEASANT STREET BRIDGE B-40-406

TITLE: MISC. MACHINERY SUPPORT BRACKETS

	DATE	INSPECTED BY	DRAWING NUMBER
DRAWN BY	1-18-72	W.H.D.	8948-11
CHECKED BY	1-8-72	SYMBOL C	UNIT 3
APPROVED BY			

B+B

REV.	ZONE	DESCRIPTION	BY	DATE

SYM.	PIECE MARK	ITEM	QUAN.	DESCRIPTION	LENGTH	SPECS.	P BILL	TOTAL WEIGHT

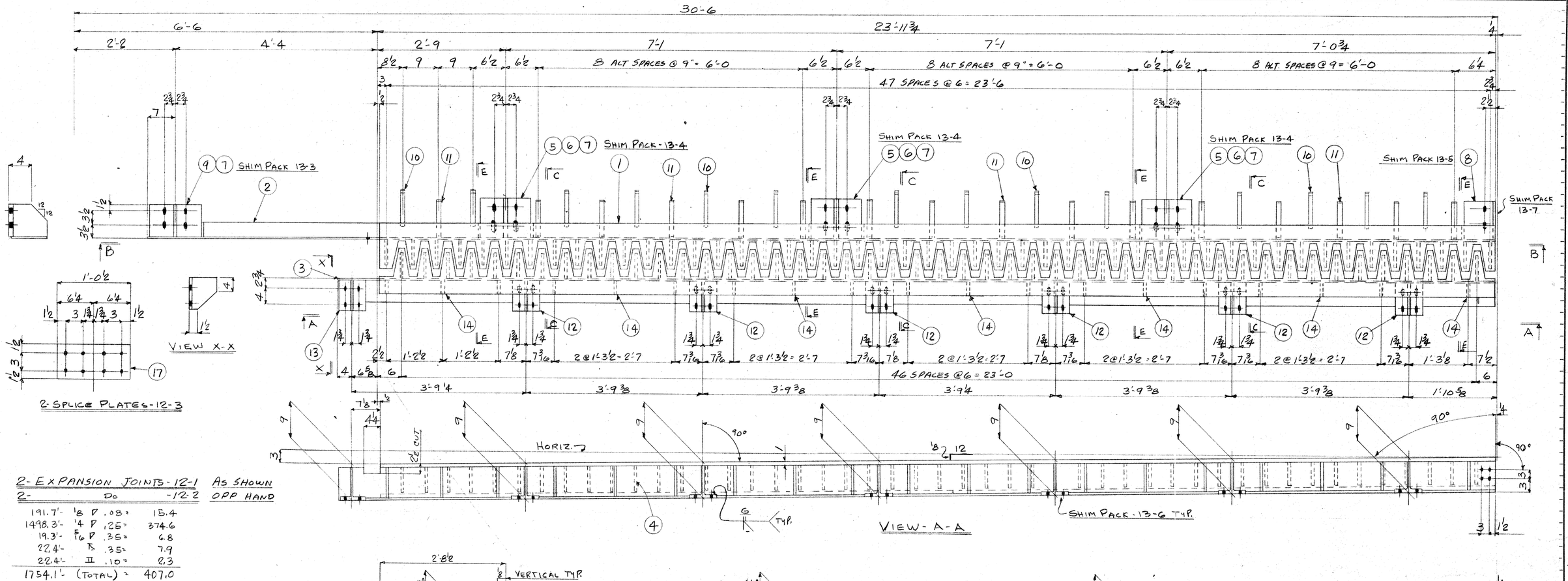

2-EXPANSION JOINTS-12-1 AS SHOWN
2- DO -12-2 OPP HAND

191.7'-	1/8 P	.08 =	15.4
1498.3'-	1/4 P	.25 =	374.6
19.3'-	5/16 P	.35 =	6.8
22.4'-	⅄	.35 =	7.9
22.4'-	II	.10 =	2.3
1754.1'- (TOTAL) =			407.0

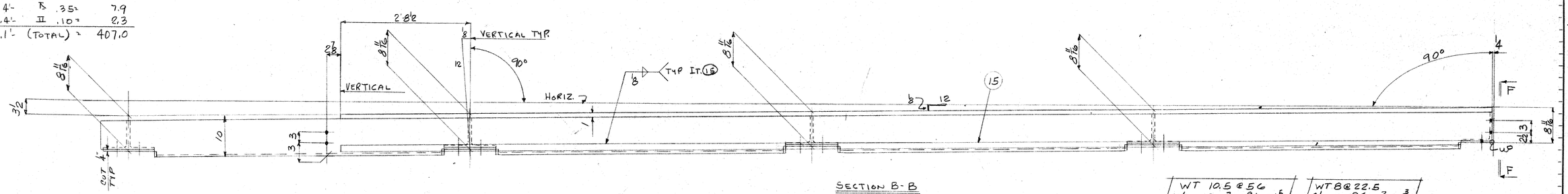

WT 10.5 @ 56
10½ x 13 x ⅞ x 9/16 x 1⅝

WT 8 @ 22.5
8 7/16 x 7 x 9/16 x ⅜ x 13/16

APPROVED
MAY 1 1972
Supt.
Bureau of Bridges & Public Buildings
MILWAUKEE, WIS.

PROJECT Nº 2984-0-07
FED. PROJECT Nº EPS T 4195 (11)
DESIGN DRG. REF SHTS 20 & 21

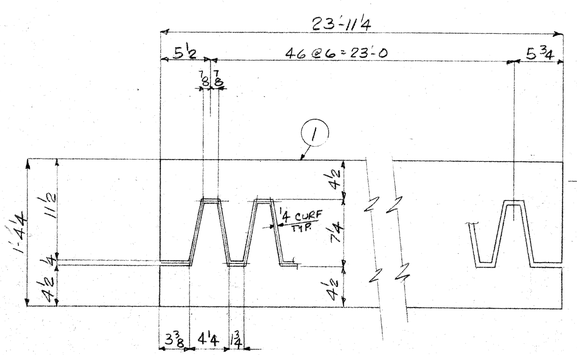

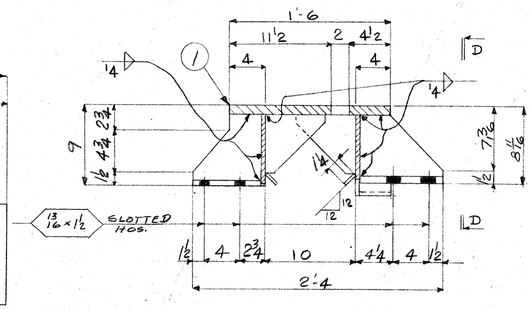

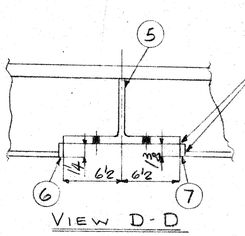

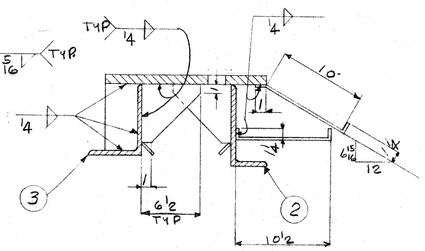

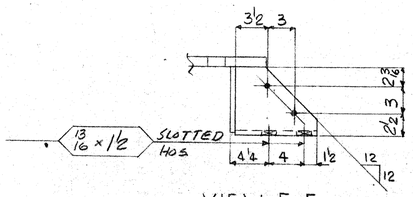

OPEN HOLES 13/16 ø UNLESS NOTED
SHOP PAINT SEE SHT 901

RECORD

LAKESIDE BRIDGE & STEEL CO.
MILWAUKEE, WIS.

CUSTOMER	EDWARD E. GILLEN COMPANY
LOCATION OF WORK	MILW. WIS
DESCRIPTION	PLEASANT ST. BRIDGE - B-40-406
TITLE	EXPANSION JOINTS
DRAWN BY	P. CARR 1-26-72
CHECKED BY	J. Hurd 3-7-72
APPROVED BY	
INSPECTED BY	W.H.C.
SYMBOL	B
DRAWING NUMBER	8948-12
UNIT	2

REV.	ZONE	DESCRIPTION	BY	DATE

SYM.	PIECE MARK	ITEM	QUAN.	DESCRIPTION	LENGTH	SPECS.	P BILL	TOTAL WEIGHT

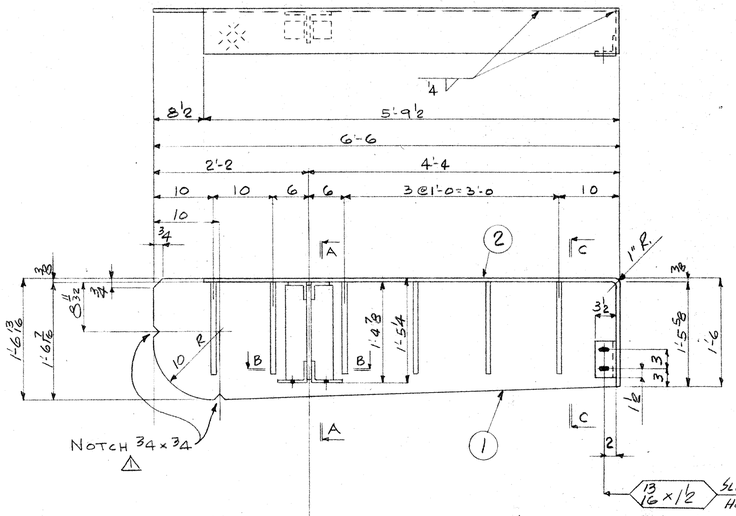

5-WT 16.5
4⅜ x 8 x 7/16 x 5/16 x 15/16

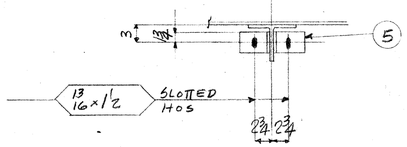

SECTION B-B

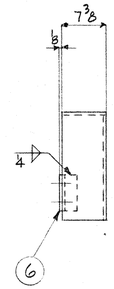

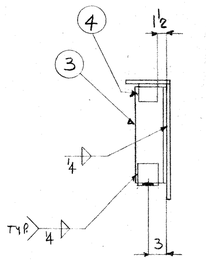

SECTION A-A

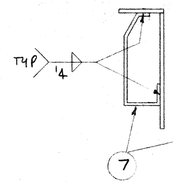

SECTION C-C

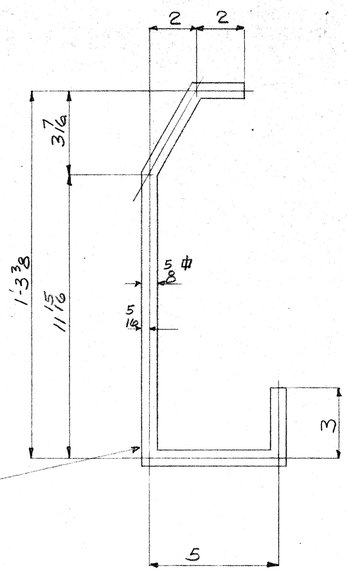

2- CURB EXPANSION JOINTS-13-1 AS SHOWN
2- DO -13-2 OPP. HAND

60.6' - 4 @ .25 = 15.2

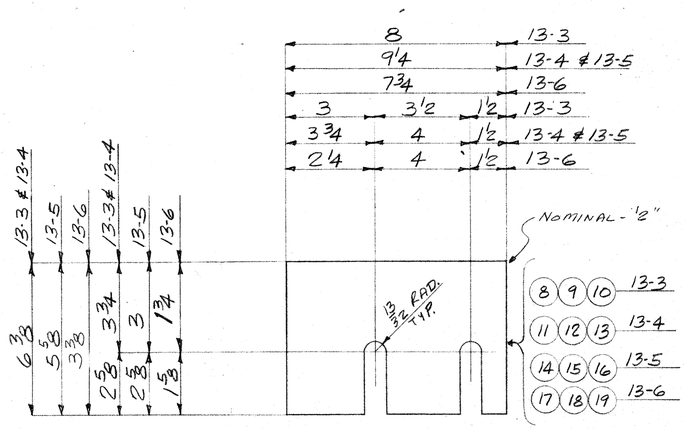

8-SHIM PACKS-13-3
24- DO -13-4
4- DO -13-5
56- DO -13-6

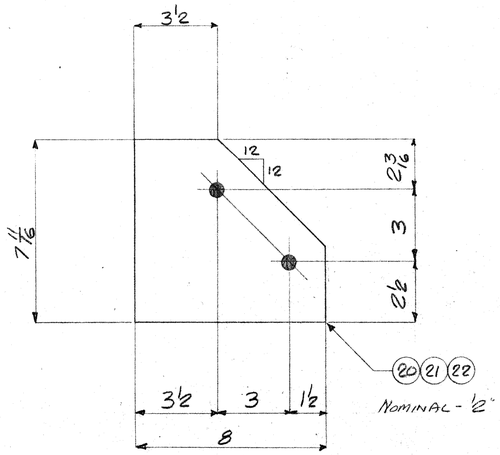

2- SHIM PACKS-13-7

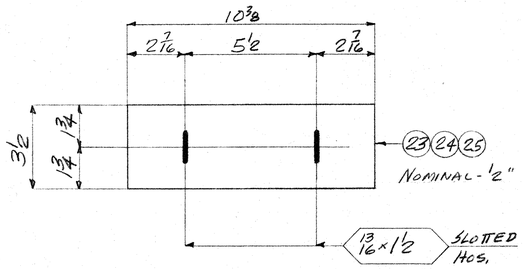

4-SHIM PACKS-13-8

APPROVED
MAY 1 1972
Supt.
Bureau of Bridges & Public Buildings
MILWAUKEE, WIS.

PROJECT Nº 2984-0-07
FED. PROJECT Nº EPS T 4195 (11)
DESIGN DRG REF. SHTS. 20 & 21

OPEN HOLES 13/16 ⌀ UNLESS NOTED
SHOP PAINT

RECORD

REV.	ZONE	DESCRIPTION	BY	DATE
		PER APPROVAL	R.C.	3-31-72

LAKESIDE BRIDGE & STEEL CO.
MILWAUKEE, WIS.

CUSTOMER EDWARD E. GILLEN CO.
LOCATION OF WORK MILW. WIS
DESCRIPTION PLEASANT ST. BRIDGE-B-40-406
TITLE CURB EXP. JOINTS & SHIM PACKS
DRAWN BY R. CARR DATE 2-2-72
CHECKED 3-6-72
APPROVED BY
INSPECTED BY W.H.D.
SYMBOL B
DRAWING NUMBER 8948-13
UNIT 2

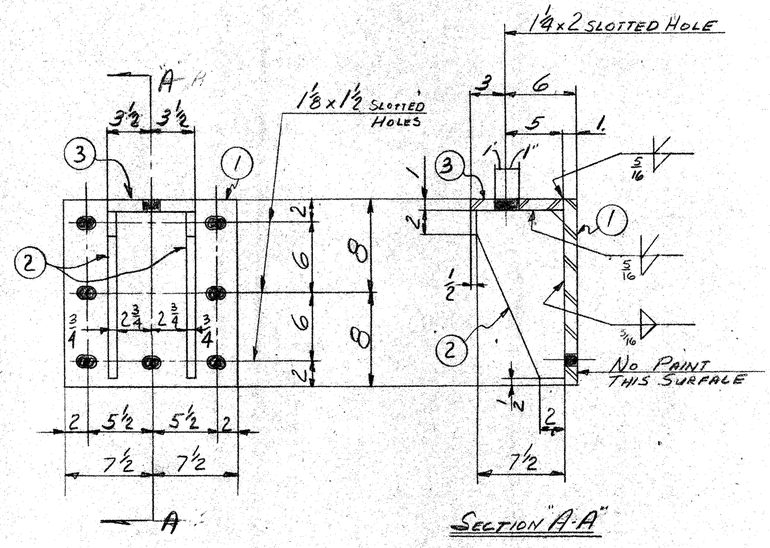

2-CABLE BRACKET MK 14-1

WELD FOR MK 14-1
13'-4" OF 5/16 V @ .35 = 4.6"
3'-8" OF 5/16 V @ .35 = 1.2"
TOTAL 5.8"

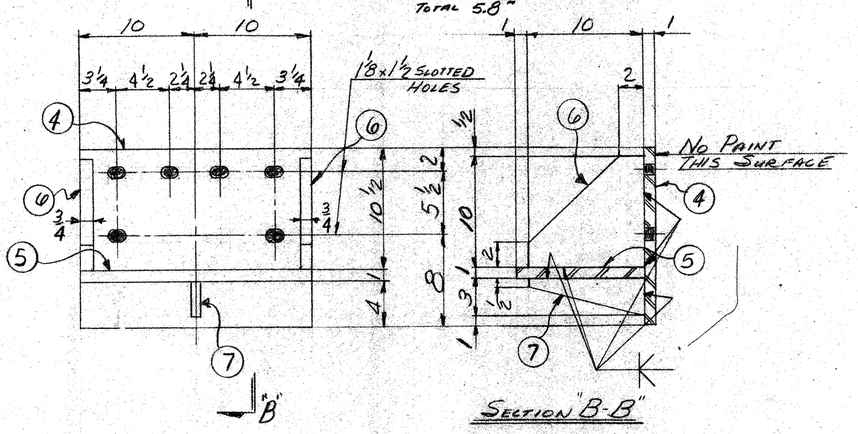

20-BEARING BRACKET MK 14-2

WELD FOR MK 14-2
176'-8" OF ⅜ V @ 0.50 = 89"
66'-8" OF ½ V @ 0.85 = 56.4"
TOTAL 145.4"

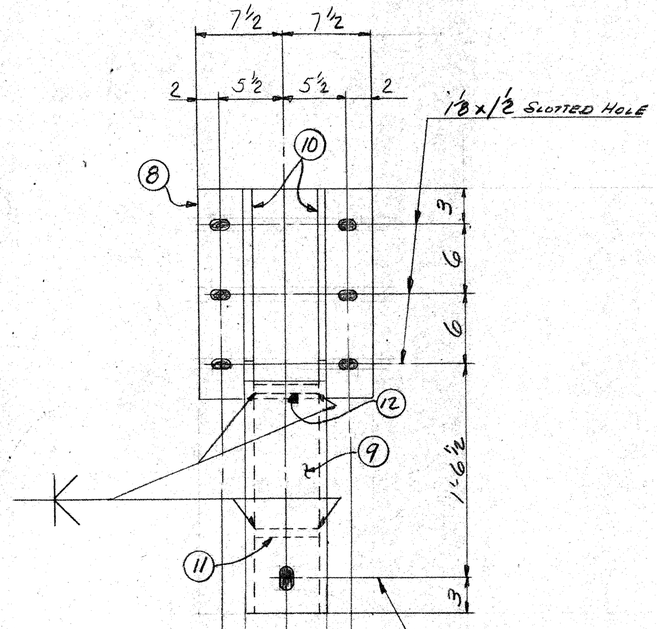

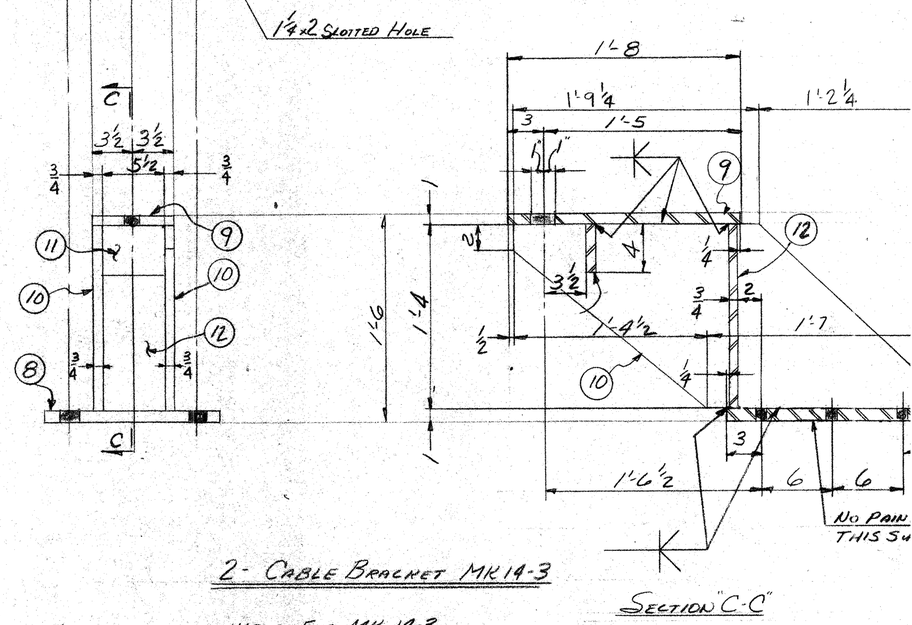

2-CABLE BRACKET MK 14-3

WELD FOR MK 14-3
31'-0" OF ⅜ V @ 0.50 = 15.5"
TOTAL 15.5"

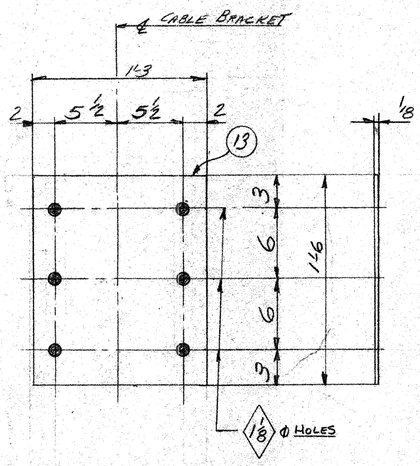

2 LEAD BASE PLATES MK 14-4

REV.	ZONE	DESCRIPTION

SYM.	PIECE MARK	ITEM	QUAN.	DESCRIPTION	LENGTH	SPECS.	P BILL	TOTAL WEIGHT

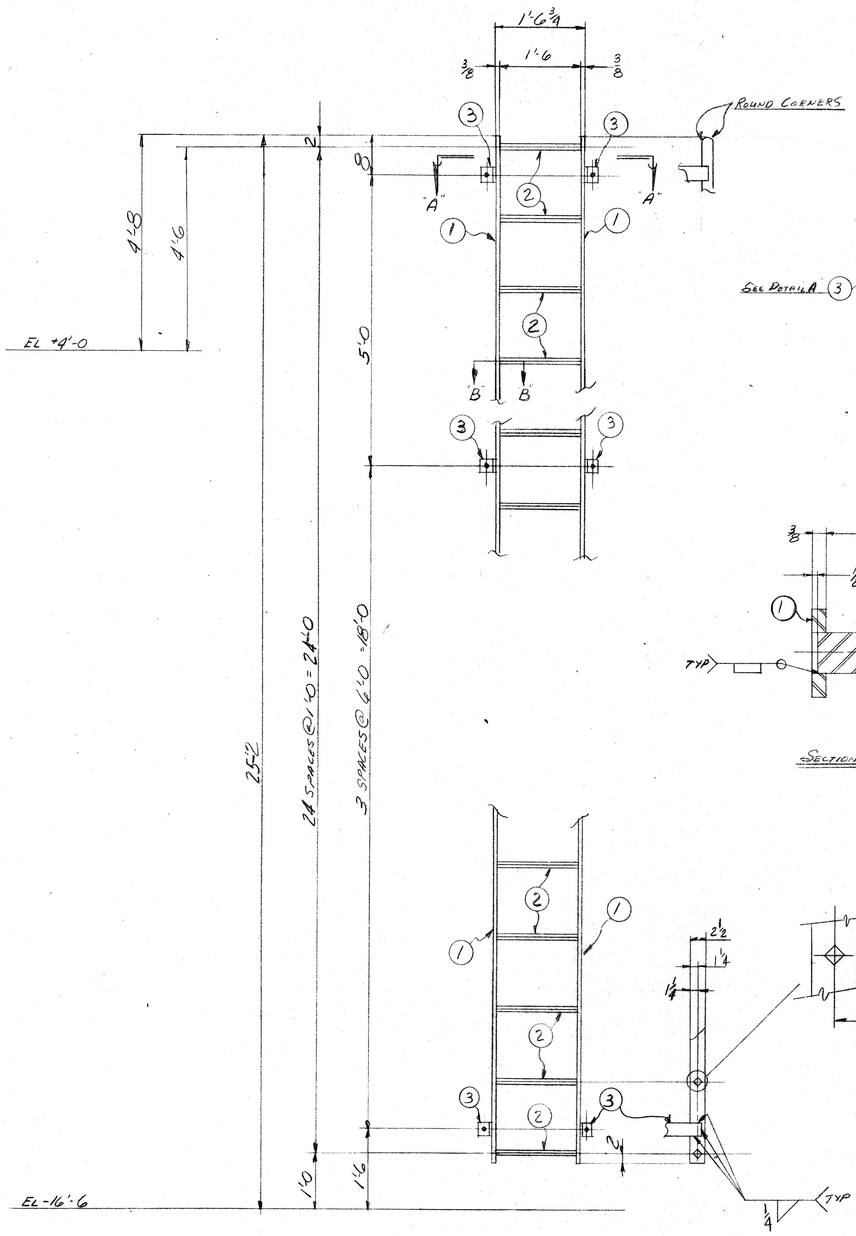

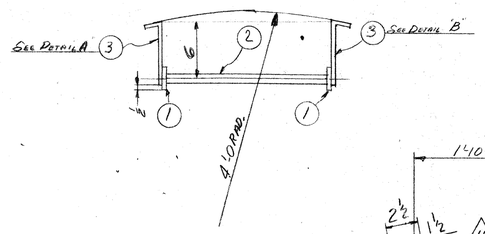

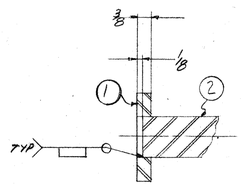

SECTION B-B

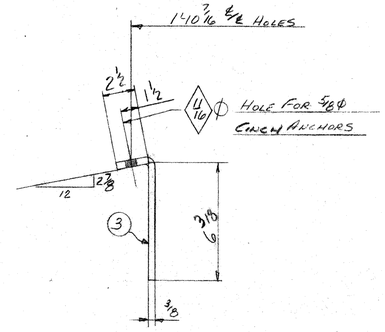

DETAIL A (AS SHOWN)
DETAIL B (OPP. HAND)

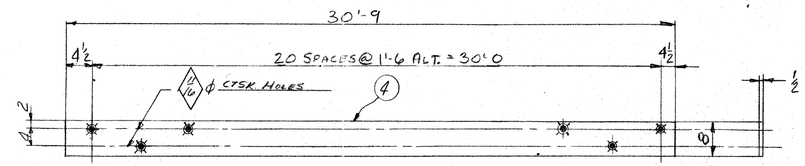

8- BUMPING BARS MK15-2

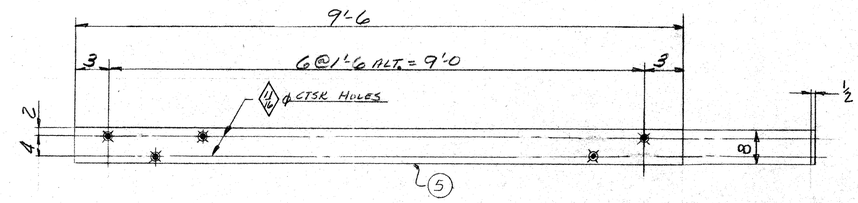

2- BUMPING BARS MK-15-3

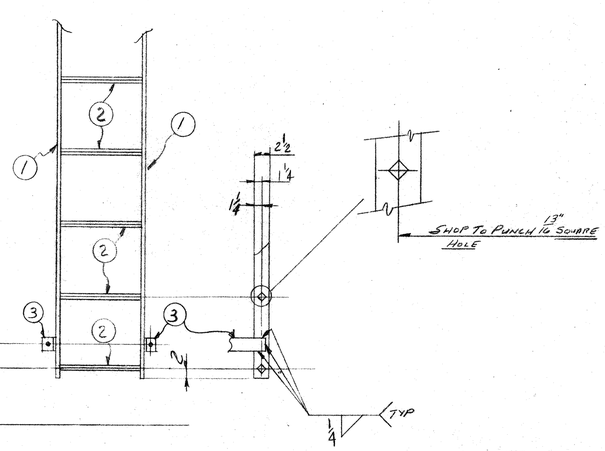

NOTE:
GALV. TO ASTM A123 AFTER FABRICATION MK 15-1 ONLY

2- PIER LADDER MK-15-1
WELD FOR 15-1
18'-0 OF 1/4 D @ 0.25 = 4.6"
TOTAL 5"

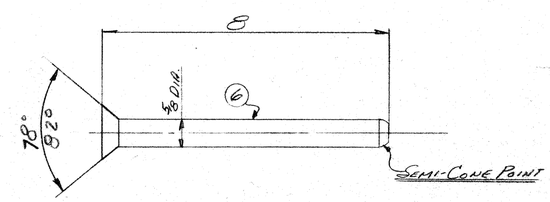

182- TIMBER DRIVE SPIKES MK15-4

APPROVED
MAY 1 1972
Bureau of Bridges & Public Buildings
MILWAUKEE, WIS.

PROJECT No. 2984-0-07
FEDERAL PROJECT No EPS T 4195(11)
DESIGN DWG. REF SHTS 10 & 12

OPEN HOLES AS NOTED UNLESS NOTED
SHOP PAINT SEE SHT 901

LAKESIDE BRIDGE & STEEL CO.
MILWAUKEE, WIS.

CUSTOMER EDWARD E. GILLEN COMPANY
LOCATION OF WORK MILWAUKEE WISC
DESCRIPTION PLEASANT ST BRIDGE
TITLE PIER LADDERS & BUMPING BARS

DRAWN BY	DATE	INSPECTED BY	DRAWING NUMBER
CDR	3-8-72	W.H.D	8948-15
CHECKED BY	3-21-72	SYMBOL	
APPROVED BY		B	UNIT 3

RECORD

REV.	ZONE	DESCRIPTION	BY	DATE

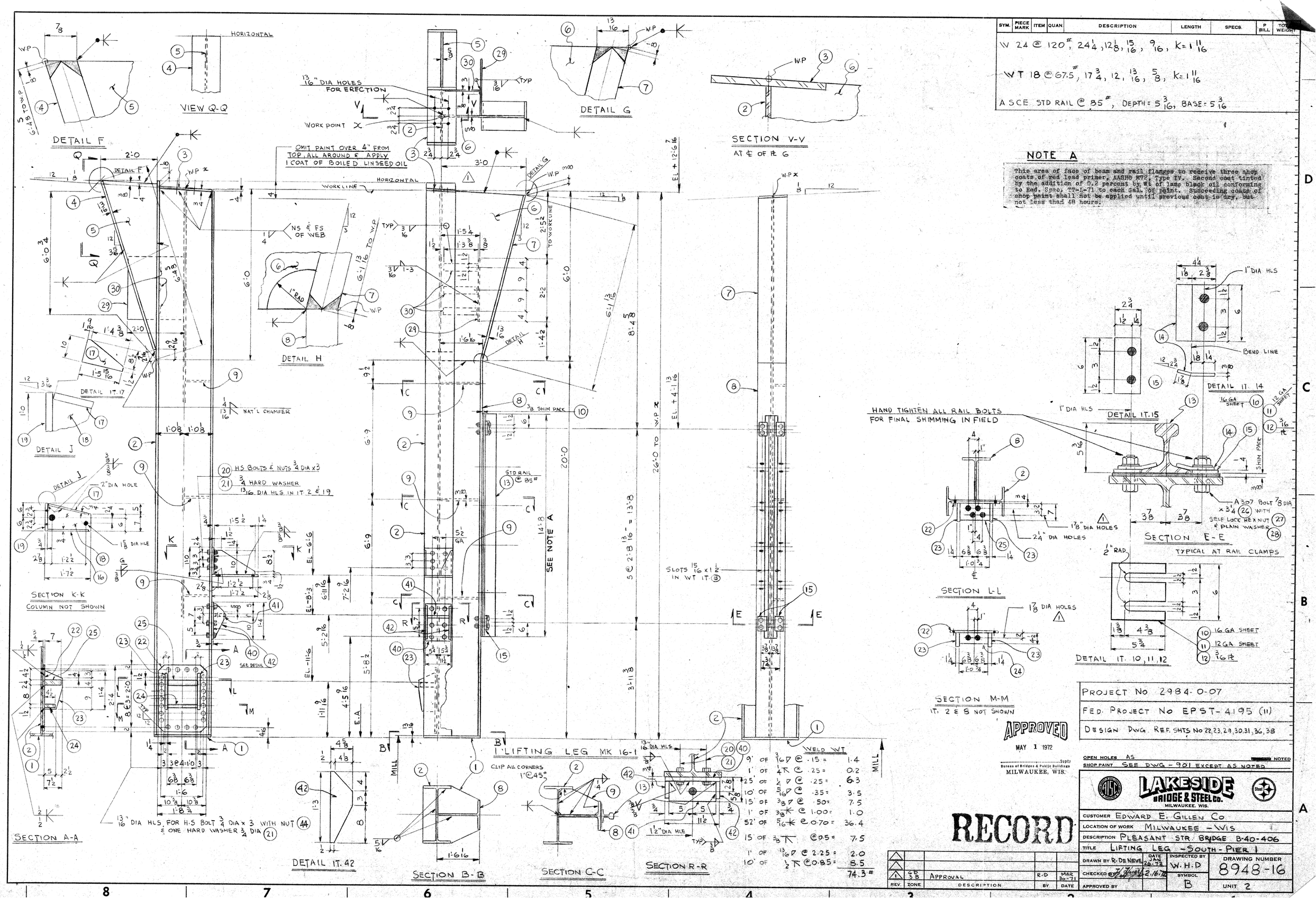

SYM.	PIECE MARK	ITEM	QUAN.	DESCRIPTION	LENGTH	SPECS.	P BILL	TOTAL WEIGHT

W 24 @ 120#, 24 1/4, 12 1/8, 15/16, 9/16, K = 1 11/16

WT 18 @ 67.5#, 17 3/4, 12, 13/16, 5/8, K = 1 11/16

ASCE STD RAIL @ 85#, DEPTH = 5 3/16, BASE = 5 3/16

NOTE A

This area of face of beam and rail flanges to receive three shop coats of red lead primer, AASHO M72, Type IV. Second coat tinted by the addition of 0.2 percent by Wt of lamp black oil conforming to Red. Spec. TT-L-71 to each Gal. of paint. Succeeding coats of shop paint shall not be applied until previous coat is dry, but not less than 48 hours.

PROJECT No 2984-0-07

FED. PROJECT No EPST-4195 (11)

DESIGN DWG. REF. SHTS No 22, 23, 29, 30, 31, 36, 38

APPROVED
MAY 1 1972
Supt.
Bureau of Bridges & Public Buildings
MILWAUKEE, WIS.

OPEN HOLES AS NOTED
SHOP PAINT SEE DWG - 901 EXCEPT AS NOTED

RECORD

LAKESIDE BRIDGE & STEEL CO.
MILWAUKEE, WIS.

CUSTOMER EDWARD E. GILLEN CO
LOCATION OF WORK MILWAUKEE - WIS
DESCRIPTION PLEASANT STR. BRIDGE B-40-406
TITLE LIFTING LEG - SOUTH - PIER 1

REV.	ZONE	DESCRIPTION	BY	DATE
1	6D 3B	APPROVAL	R.D	MAR 30-71

DRAWN BY R. DE NEVE — DATE JAN 26-72
CHECKED BY [signature] — 2.16.72
APPROVED BY
INSPECTED BY W.H.D
SYMBOL B
DRAWING NUMBER 8948-16
UNIT 2

SYM.	PIECE MARK	ITEM	QUAN.	DESCRIPTION	LENGTH	SPECS.	P. BILL	TOTAL WEIGHT

W 24 @ 120#, 24¼, 12⅛, 15/16, 9/16, K=1 11/16

WT 18 @ 67.5#, 17¾, 12, 13/16, ⅝, K=1 11/16

A S C E STD RAIL @ 85#, DEPTH = 5 3/16, BASE = 5 3/16

WELD WT

1' OF ¼ ⊤ @ .25 =		0.2
24' OF ¼ ▷ @ .25 =		6.0
10' OF 5/16 ▷ @ .35 =		3.5
15' OF ⅜ ▷ @ .50 =		7.5
1' OF ⅜ ⊼ @ 1.00 =		1.0
52' OF 5/16 ⊼ @ 0.70 =		36.4
15' OF ⅜ ⊤ @ 0.50 =		7.5
1' OF 13/16 ▷ @ 2.25 =		2.0
10' OF ½ ⊼ @ 0.85 =		8.5
		72.6#

NOTE A

This area of face of beam and rail flanges to receive three shop coats of red lead primer, AASHO M72, Type IV. Second coat tinted by the addition of 0.2 percent by Wt of lamp black oil conforming to Fed. Spec. TT-L-71 to each Gal. of paint. Succeeding coats of shop paint shall not be applied until previous coat is dry, but not less than 48 hours.

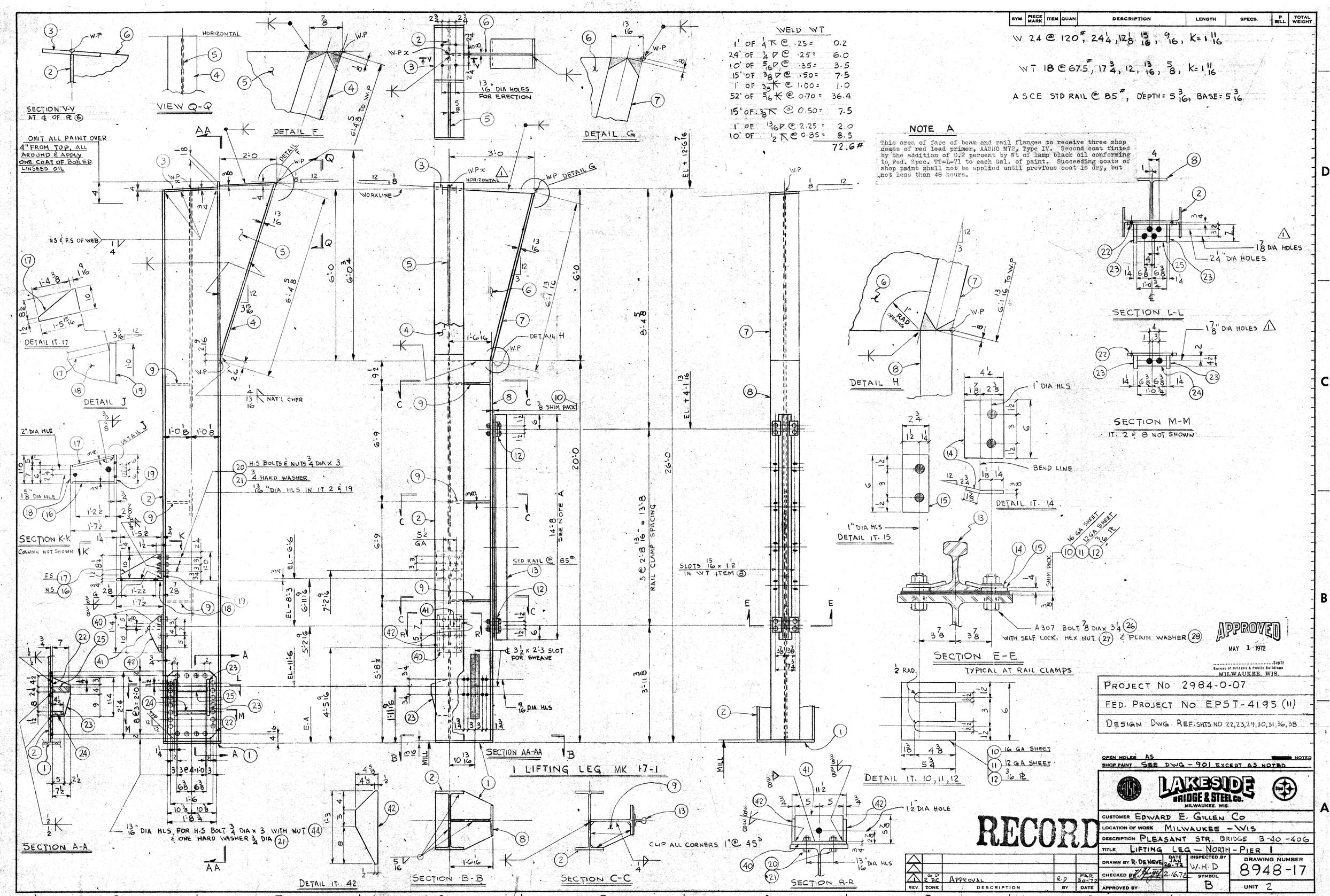

SYM.	PIECE MARK	ITEM	QUAN.	DESCRIPTION	LENGTH	SPECS.	P BILL	TOTAL WEIGHT

W 24 @ 120#, 24 1/4, 12 1/8, 15/16, 9/16, K=1 11/16

WT 18 @ 67.5#, 17 3/4, 12, 13/16, 5/8, K=1 11/16

ASCE STD RAIL @ 85#, DEPTH = 5 3/16, BASE = 5 3/16

NOTE A

This area of face of beam and rail flanges to receive three shop coats of red lead primer, AASHO M71, Type IV. Second coat tinted by the addition of 0.2 percent by Wt of lamp black oil conforming to Fed. Spec. TT-L-71 to each Gal. of paint. Succeeding coats of shop paint shall not be applied until previous coat is dry, but not less than 48 hours.

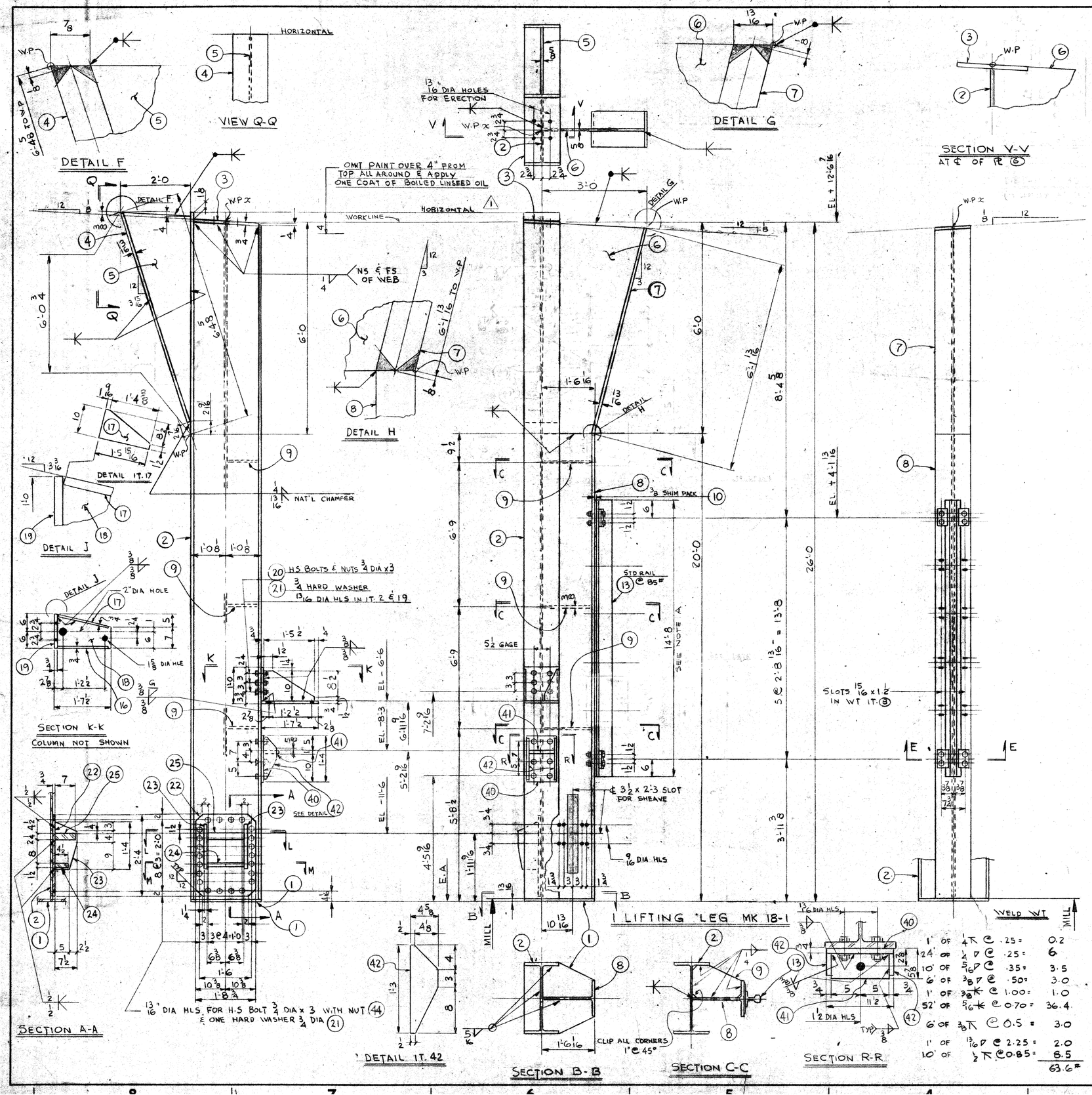

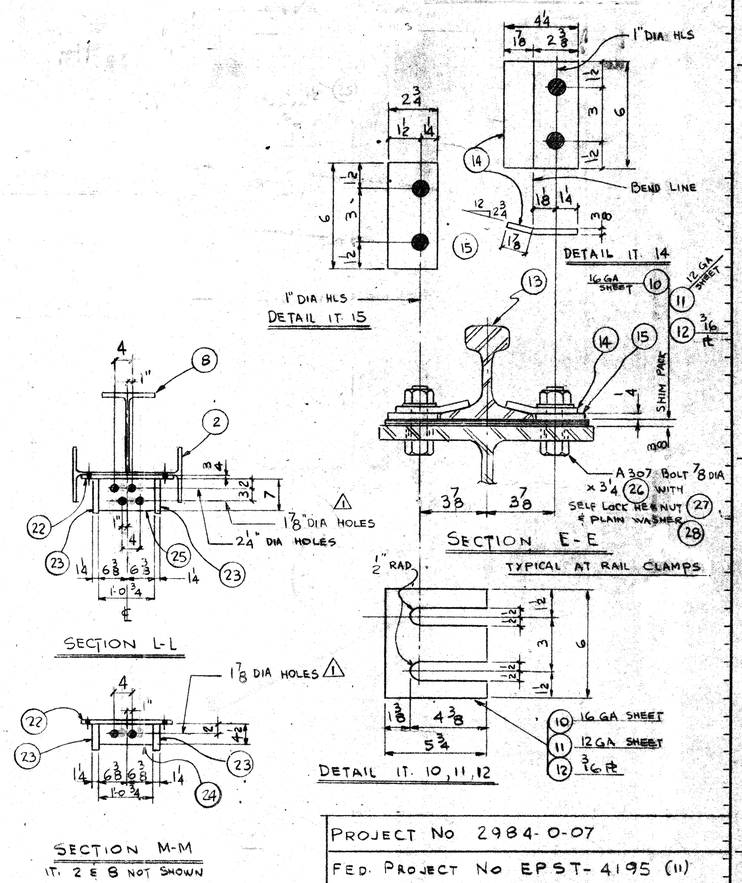

WELD WT

1' OF	1/4 ⊼	@ .25 =	0.2
24' OF	1/4 ▽	@ .25 =	6
10' OF	5/16 ▽	@ .35 =	3.5
6' OF	3/8 ▽	@ .50 =	3.0
1' OF	3/8 ⊼	@ 1.00 =	1.0
52' OF	5/16 ⊼	@ 0.70 =	36.4
6' OF	3/8 ⊼	@ 0.5 =	3.0
1' OF	13/16 ▽	@ 2.25 =	2.0
10' OF	1/2 ⊼	@ 0.85 =	8.5
			63.6#

REV.	ZONE	DESCRIPTION	BY	DATE
1	6D 3B	APPROVAL	R.D	MAR 3-72

RECORD

APPROVED
MAY 1 1972
Supt
Bureau of Bridges & Public Buildings
MILWAUKEE, WIS.

PROJECT No 2984-0-07

FED. PROJECT No EPST-4195 (11)

DESIGN DWG. REF. SHTS No 22, 23, 29, 30, 31, 36, 38

OPEN HOLES AS [redacted] NOTED

SHOP PAINT SEE DWG - 901 EXCEPT AS NOTED

LAKESIDE BRIDGE & STEEL CO.
MILWAUKEE, WIS.

CUSTOMER EDWARD E. GILLEN CO

LOCATION OF WORK MILWAUKEE - WIS

DESCRIPTION PLEASANT STR. BRIDGE B-40-406

TITLE LIFTING LEG - NORTH - PIER 2

DRAWN BY R. DE NEVE DATE JAN 26-72

INSPECTED BY W.H.D

DRAWING NUMBER 8948-18

CHECKED BY [signature] 2.16.72

SYMBOL C

APPROVED BY

UNIT 2

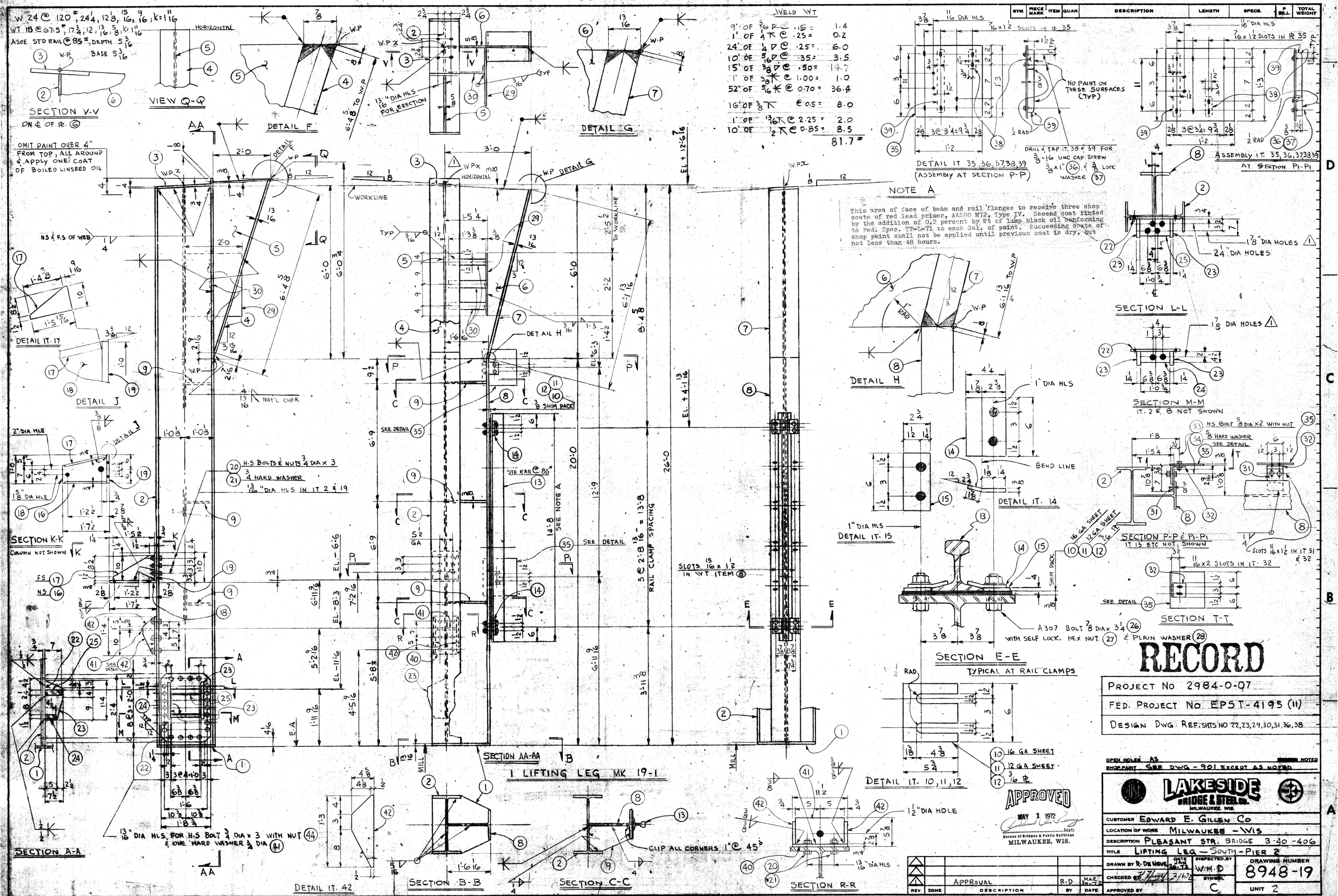

WELD WT

9' OF 3/16 ▷ @ .15 =		1.4
1' OF ¼ ⊼ @ .25 =		0.2
24' OF ¼ ▷ @ .25 =		6.0
10' OF 5/16 ▷ @ .35 =		3.5
15' OF ⅜ ▷ @ .50 =		14.7
1' OF ⅜ ⋈ @ 1.00 =		1.0
52' OF 5/16 ⋈ @ 0.70 =		36.4
16' OF ⅜ ⊼ @ 0.5 =		8.0
1' OF 13/16 ⊼ @ 2.25 =		2.0
10' OF ½ ⊼ @ 0.85 =		8.5
		81.7#

NOTE A

This area of face of beam and rail flanges to receive three shop coats of red lead primer, AASHO M72, Type IV. Second coat tinted by the addition of 0.2 percent by Wt of lamp black oil conforming to Fed. Spec. TT-L-71 to each Gal. of paint. Succeeding coats of shop paint shall not be applied until previous coat is dry, but not less than 48 hours.

RECORD

PROJECT NO 2984-0-07

FED. PROJECT NO EPST-4195 (11)

DESIGN DWG. REF. SHTS NO 22, 23, 29, 30, 31, 36, 38

OPEN HOLES AS NOTED

SHOP PAINT SEE DWG - 901 EXCEPT AS NOTED

APPROVED MAY 1 1972 Supt. Bureau of Bridges & Public Buildings MILWAUKEE, WIS.

LAKESIDE BRIDGE & STEEL CO. MILWAUKEE, WIS.

CUSTOMER EDWARD E. GILLEN CO

LOCATION OF WORK MILWAUKEE - WIS

DESCRIPTION PLEASANT STR. BRIDGE B-40-406

TITLE LIFTING LEG — SOUTH - PIER 2

DRAWN BY R. DE NEVE	DATE JAN 26-72	INSPECTED BY W.H.D	DRAWING NUMBER 8948-19
CHECKED BY	2/16/72	SYMBOL C	UNIT 2
APPROVED BY			

REV.	ZONE	DESCRIPTION	BY	DATE
1		APPROVAL	R.D	MAR 20-72

SYM.	PIECE MARK	ITEM	QUAN	DESCRIPTION	LENGTH	SPECS.	P BILL	TOTAL WEIGHT

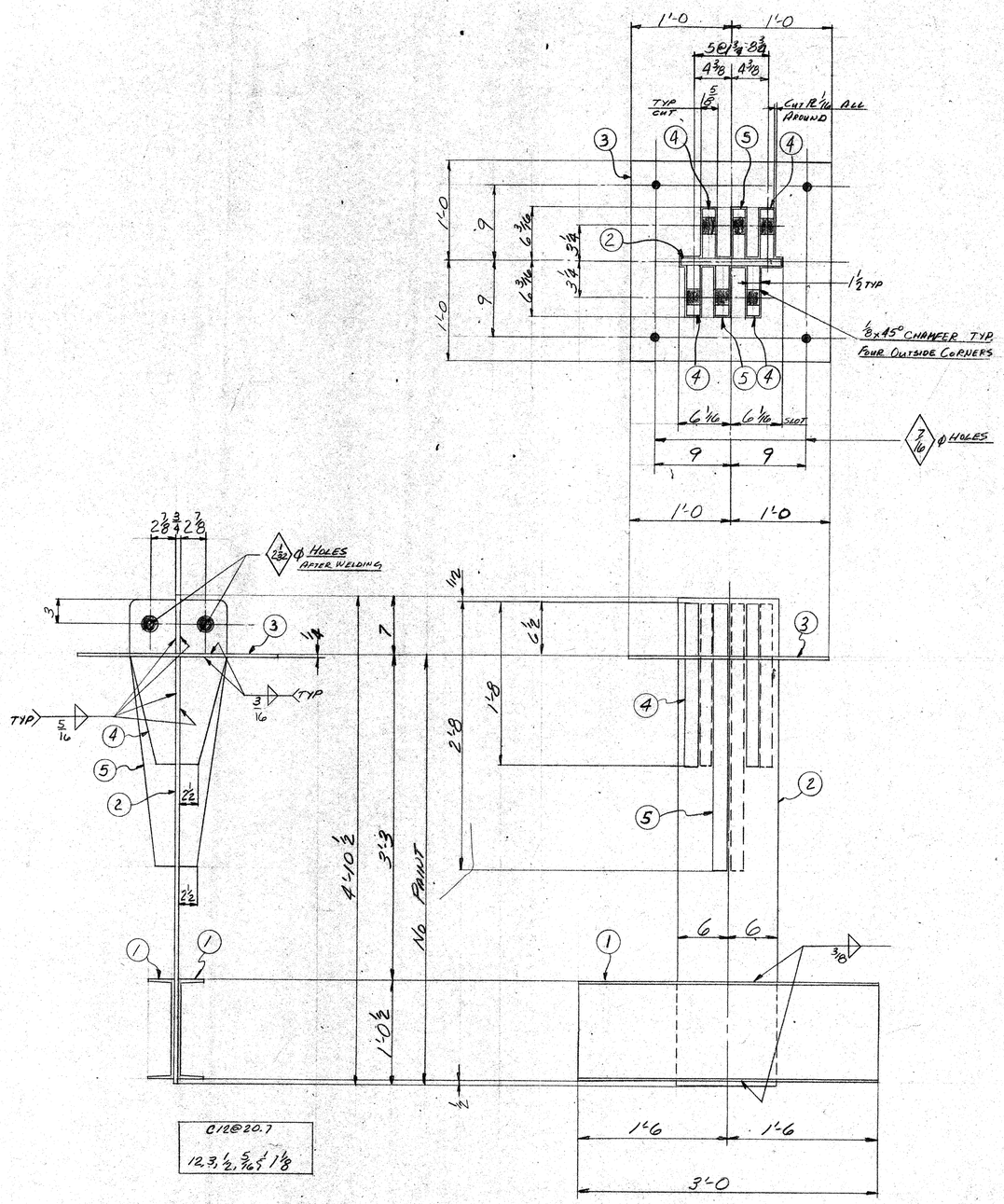

4 COUNTER WEIGHT BRACKET MK 20-1

WELD FOR MK 20-1

46'-0 OF 3/16 D @ 0.15 = 6.9#
96'-0 OF 5/16 D @ 0.35 = 33.6#
17'-0 OF 3/8 D @ 0.50 = 8.5#
TOTAL 49.0#

APPROVED
MAR 10 1972
Bureau of Bridges & Public Buildings
MILWAUKEE, WIS.

RECORD

PROJECT NO. 2984-0-07
FEDERAL PROJECT NO EPS T 4195(11)
DESIGN DRG REF SHT 24 & 31

OPEN HOLES AS SHOWN UNLESS NOTED
SHOP PAINT SEE SHT 701 & AS NOTED

LAKESIDE BRIDGE & STEEL CO.
MILWAUKEE, WIS.

CUSTOMER EDWARD E. GILLEN COMPANY
LOCATION OF WORK MILWAUKEE, WISCONSIN
DESCRIPTION PLEASANT STREET BRIDGE B-40-406
TITLE COUNTERWEIGHT BRACKET & BLOCK RODS

	DATE	INSPECTED BY	DRAWING NUMBER
DRAWN BY CAK	1-26-72	W.H.D	8948-20
CHECKED BY	2-8-72	SYMBOL B	
APPROVED BY			UNIT 3

B & B

REV.	ZONE	DESCRIPTION	BY	DATE
1	D-3	DELETE MK 20-2	CAK	2-25-72

SYM.	PIECE MARK	ITEM	QUAN.	DESCRIPTION	LENGTH	SPECS.	P BILL	TOTAL WEIGHT

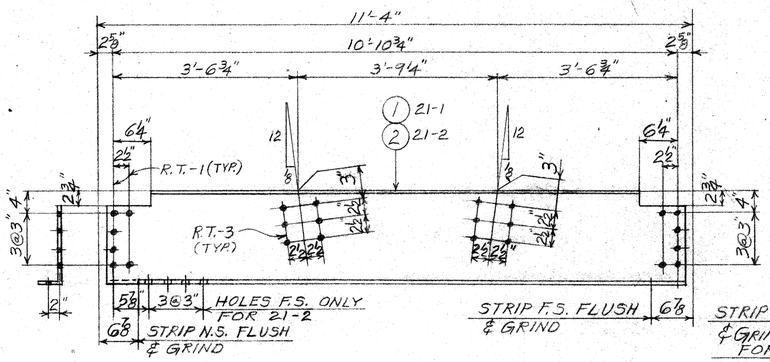

1 - BEAM 21-1
4 - DO 21-2

W 16 x 36
15⅞ x 7 x 7/16 x 3/16 x 1 1/16

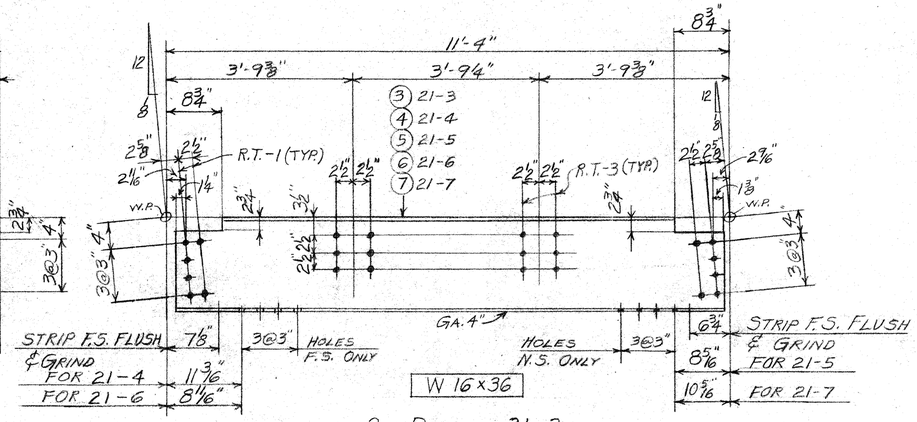

W 16 x 36

2 - BEAMS 21-3
2 - DO 21-4
2 - DO 21-5
2 - DO 21-6
2 - DO 21-7

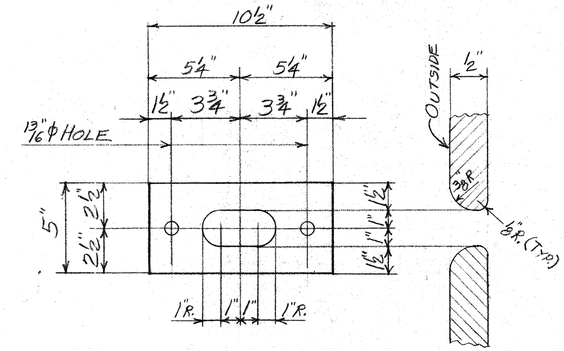

DETAIL BAR 16

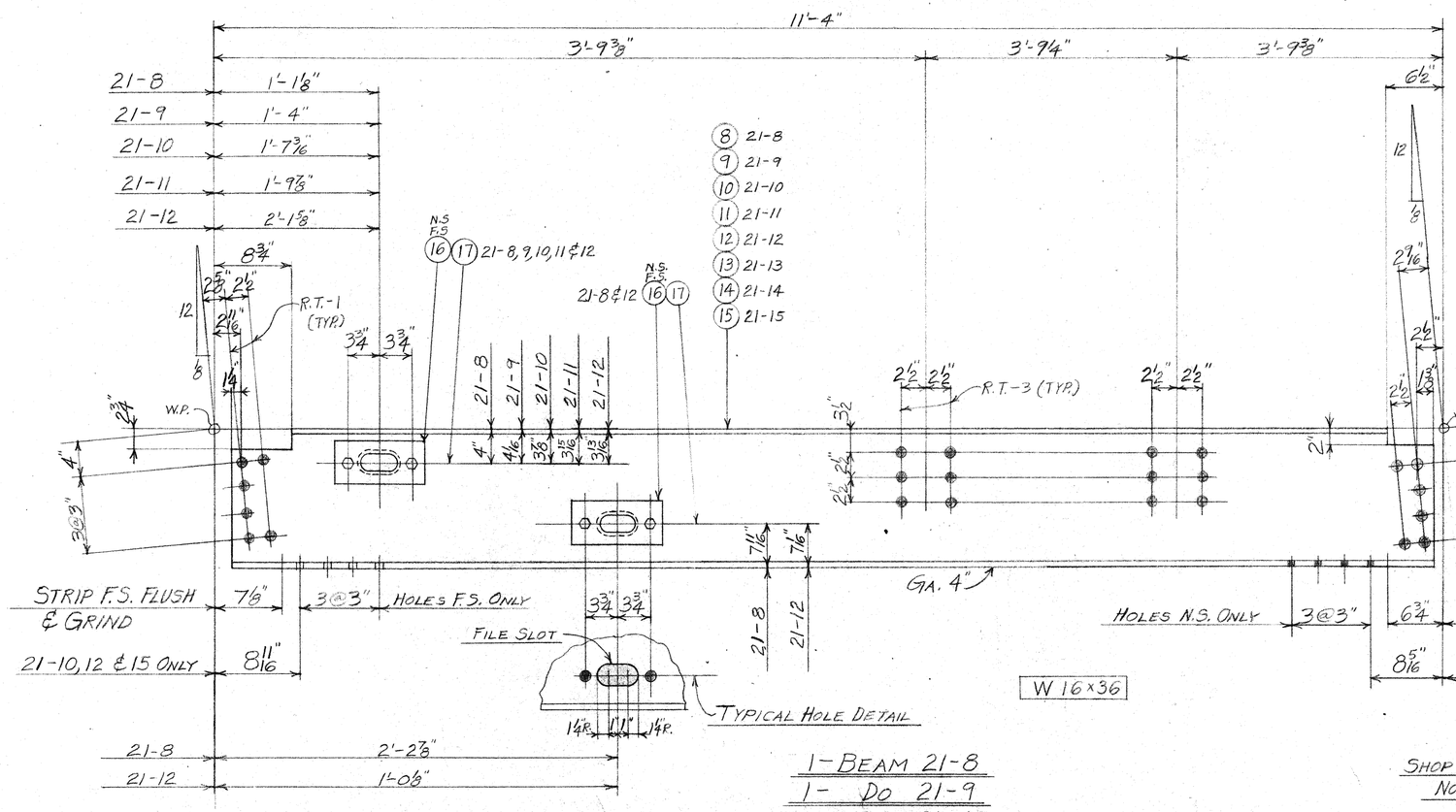

W 16 x 36

1 - BEAM 21-8
1 - DO 21-9
1 - DO 21-10
1 - DO 21-11
1 - DO 21-12
1 - DO 21-13
2 - DO 21-14
2 - DO 21-15

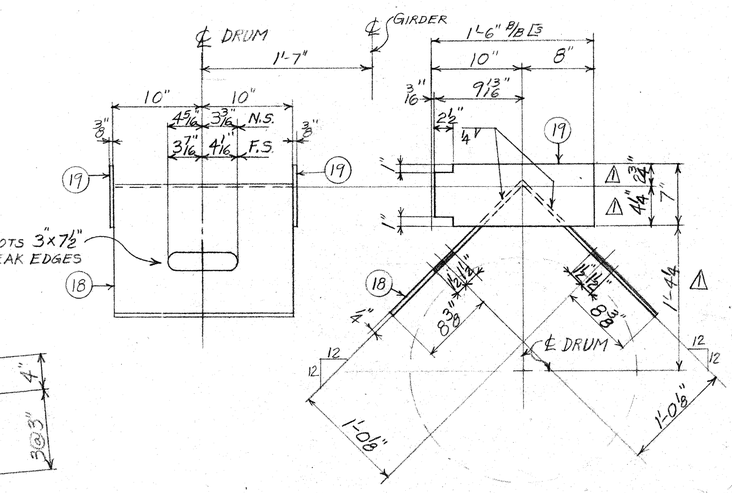

1 - DRUM CANOPY 21-16

2' OF 4 ∇ @ 0.25 = 0.5#

SHOP NOTE:
NO PAINT WITHIN 3" OF HOLES.

NOTE:
HOLES MARKED RT TO BE SUBPUNCHED OR SUBDRILLED TO 11/16" AND REAMED TO SIZE THRU A STEEL TEMPLATE.

RECORD

APPROVED
MAY 1 1972
Bureau of Bridges & Public Buildings Supt.
MILWAUKEE, WIS.

PROJECT No. 2984-0-07
FED. PROJECT No. EPST-4195 (11)
REF. DWG. No.s SHT. 3, 18, 19, 20 & 26

OPEN HOLES 11/16" UNLESS NOTED
SHOP PAINT SEE SHT. 901 UNLESS NOTED

LAKESIDE BRIDGE & STEEL CO.
MILWAUKEE, WIS.

CUSTOMER EDWARD F. GILLEN CO.
LOCATION OF WORK MILWAUKEE, WIS.
DESCRIPTION PLEASANT STREET BRIDGE B-40-406
TITLE LIFT SPAN INTERIOR BEAMS

	DATE	INSPECTED BY	DRAWING NUMBER
DRAWN BY B.T.	1-31-72	W.H.D	8948-21
CHECKED BY	2-29-72	SYMBOL C	
APPROVED BY			UNIT 2

REV.	ZONE	DESCRIPTION	BY	DATE
1		PER APPROV.	B.T	3-31-72

SYM.	PIECE MARK	ITEM	QUAN.	DESCRIPTION	LENGTH	SPECS.	P BILL	TOTAL WEIGHT

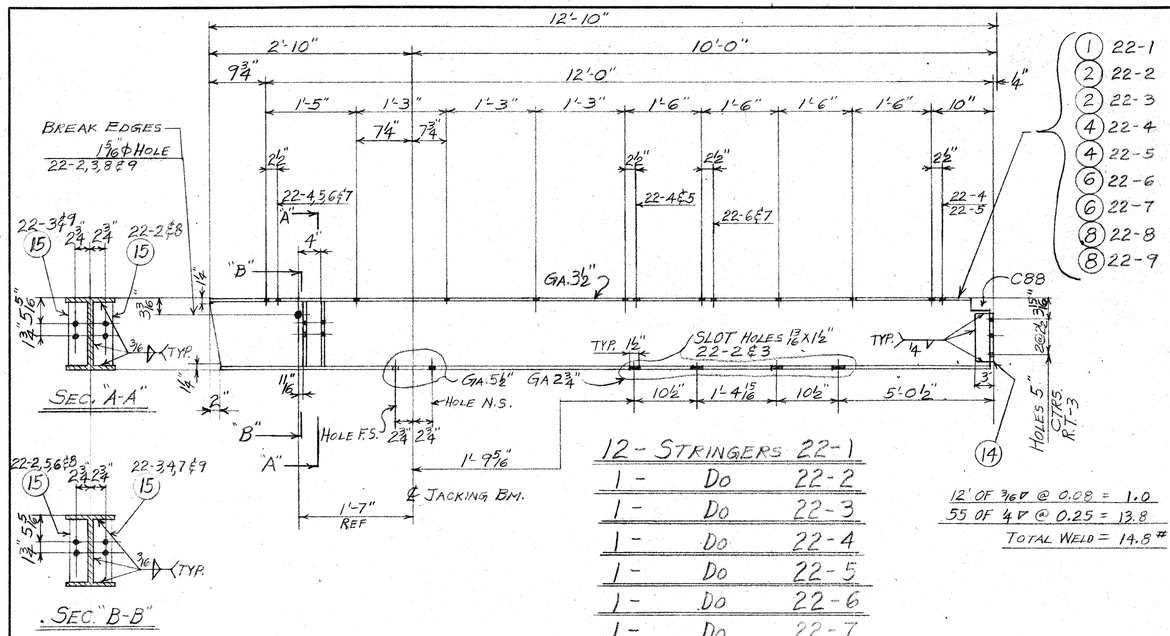

1	22-1	
2	22-2	
2	22-3	
4	22-4	
4	22-5	
6	22-6	
6	22-7	
8	22-8	
8	22-9	

12 - STRINGERS		
1 -	Do	22-1
1 -	Do	22-2
1 -	Do	22-3
1 -	Do	22-4
1 -	Do	22-5
1 -	Do	22-6
1 -	Do	22-7
1 -	Do	22-8
1 -	Do	22-9

W12x40
12 x 8 x ½ x 5/16 x 14

12' OF 3/16▽ @ 0.08 = 1.0
55 OF 4▽ @ 0.25 = 13.8
TOTAL WELD = 14.8#

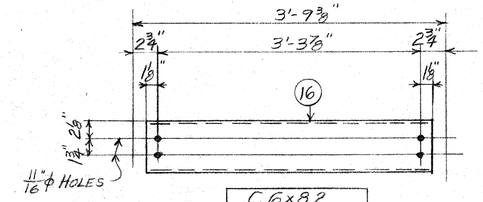

C 6x8.2
6x1⅜x5/16x3/16x1 3/16

4-CHANNELS 22-14

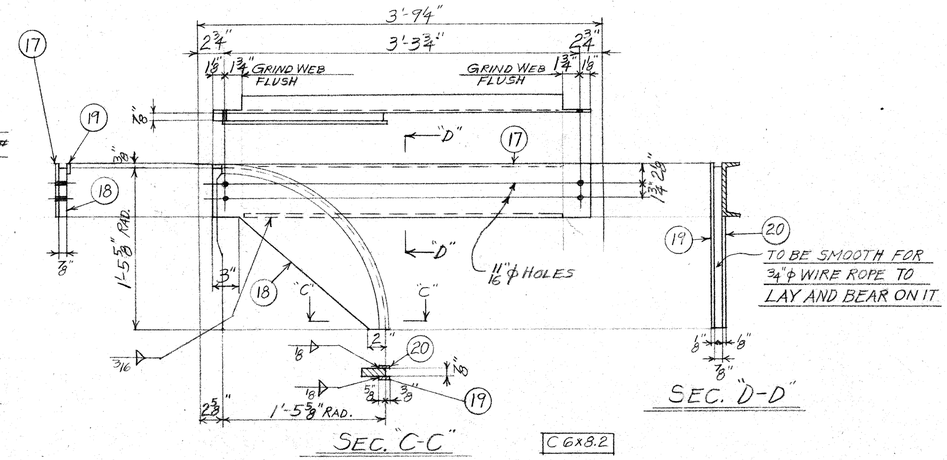

C 6x8.2

2 - CHANNELS	22-15 (AS SHOWN)
2 - DO	22-16 (OPP. HAND)

28' OF 6▽ @ 0.08 = 2.3
8' OF 4▽ @ 0.25 = 2.0
TOTAL WELD = 4.3#

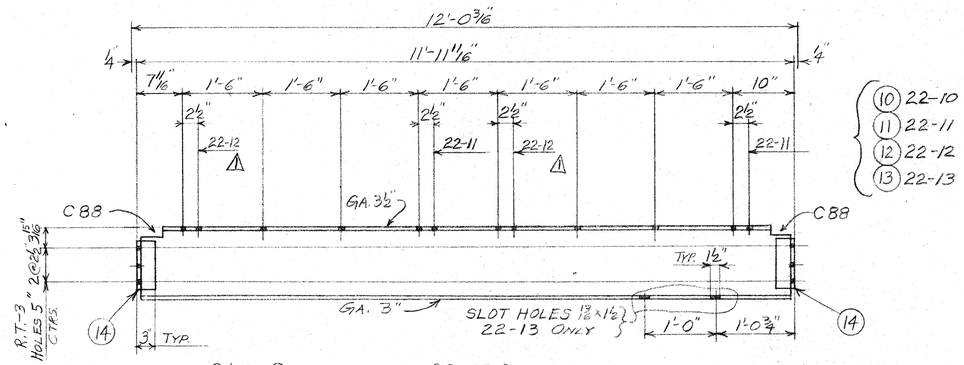

31 - STRINGERS	-	22-10
4 -	Do	- 22-11
4 -	Do	- 22-12
1 -	Do	- 22-13

22-10, 22-11, 22-12 → W12x31 (12⅛ x 6½ x 7/16 x ¼ x 1)
22-13 → W12x40

180' OF 4▽ @ 0.25 = 45.0
TOTAL WELD = 45.0#

SHOP NOTE:
NO PAINT WITHIN 3" OF HOLES

APPROVED
MAY 1 1972
Supt.
Bureau of Bridges & Public Buildings
MILWAUKEE, WIS.

PROJECT No.	2984-0-07
FED. PROJECT No.	EPST-4195(11)
REF. DWG. No's	SHT. 3, 18, 19, 26 & 31

OPEN HOLES 13/16" ϕ UNLESS NOTED
SHOP PAINT SEE SHT. 901 UNLESS NOTED

RECORD

NOTE:
HOLES MARKED RT TO BE SUBPUNCHED OR SUBDRILLED TO 1/8" AND REAMED TO SIZE THRU A STEEL TEMPLATE.

LAKESIDE BRIDGE & STEEL CO.
MILWAUKEE, WIS.

CUSTOMER	EDWARD E. GILLEN CO.
LOCATION OF WORK	MILWAUKEE, WIS.
DESCRIPTION	PLEASANT STREET BRIDGE B-40-406
TITLE	LIFT SPAN STRINGERS & CHANNELS

REV.	ZONE	DESCRIPTION	BY	DATE
3				
2				
1		PER APPROV.	B.T.	3-31-72

DRAWN BY B.T.	DATE 2-1-72	INSPECTED BY W.H.D	DRAWING NUMBER 8948-22
CHECKED	2-29-72	SYMBOL B	
APPROVED BY			UNIT 2

SYM.	PIECE MARK	ITEM	QUAN.	DESCRIPTION	LENGTH	SPECS.	P BILL	TOTAL WEIGHT

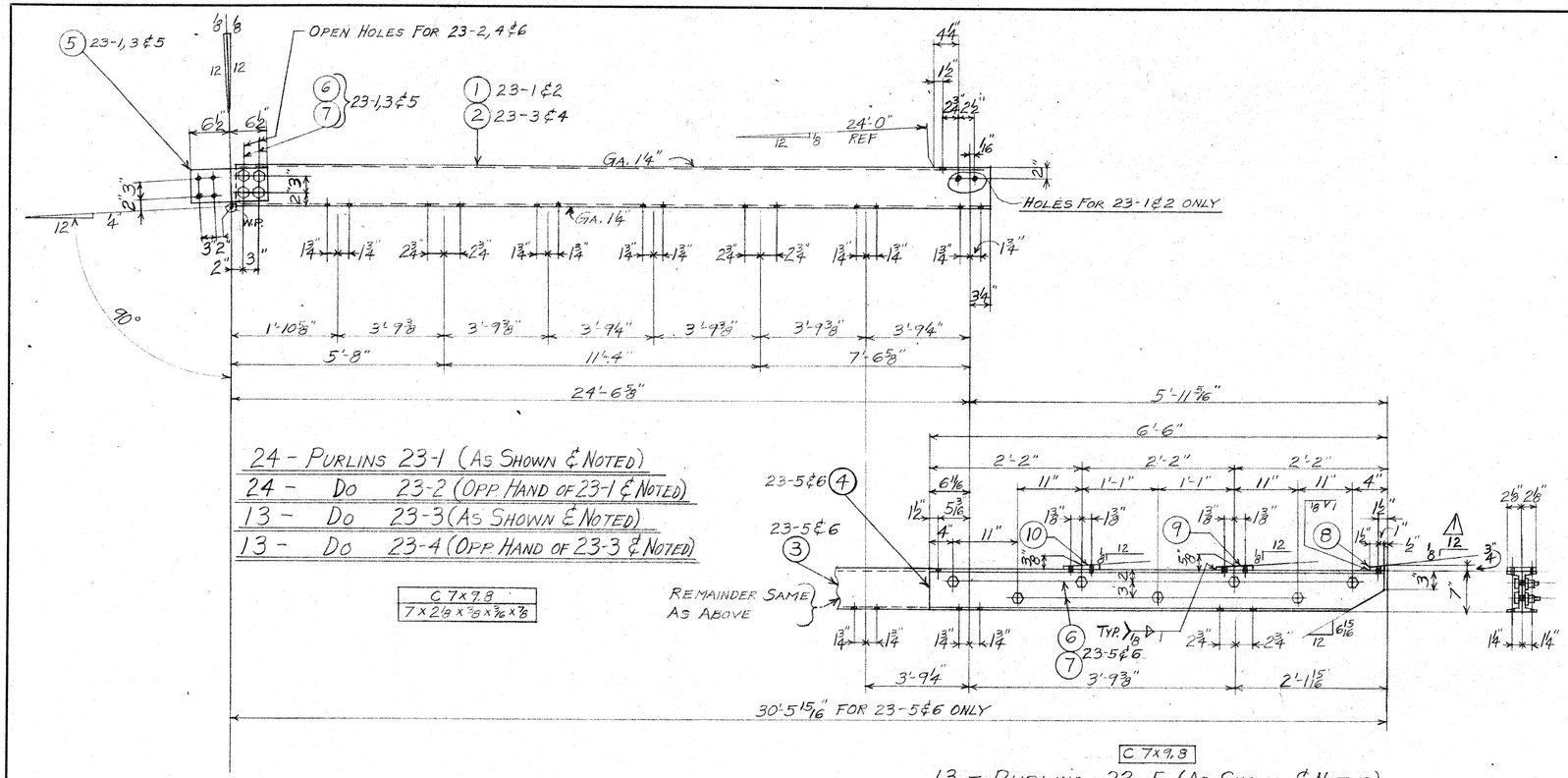

24 - PURLINS 23-1 (AS SHOWN ℄ NOTED)
24 - DO 23-2 (OPP HAND OF 23-1 ℄ NOTED)
13 - DO 23-3 (AS SHOWN ℄ NOTED)
13 - DO 23-4 (OPP HAND OF 23-3 ℄ NOTED)

C 7x9.8
7x2 1/8x5/8x3/16x1/8

C 7x9.8

13 - PURLINS 23-5 (AS SHOWN ℄ NOTED)
13 - DO 23-6 (OPP HAND OF 23-5 ℄ NOTED)

11' OF 1/8▽ @ 0.08 = 0.9
TOTAL WELD = 1 #

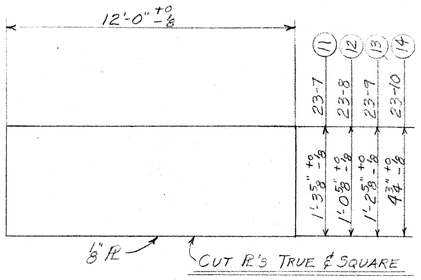

16 - PLATES 23-7
24 - DO 23-8
8 - DO 23-9
8 - DO 23-10

SHOP NOTE:
NO PAINT WITHIN 3" OF HOLES

APPROVED
MAY 1 1972
Supt. Bureau of Bridges & Public Buildings
MILWAUKEE, WIS.

PROJECT No. 2984-0-07
FED. PROJECT No. EPST-4195 (11)
REF. DWG. No.'S SHT. 18 & 19

OPEN HOLES 13/16" Ø UNLESS NOTED
SHOP PAINT SEE SHT. 901 UNLESS NOTED

RECORD

LAKESIDE BRIDGE & STEEL CO.
MILWAUKEE, WIS.

CUSTOMER EDWARD E. GILLEN CO.
LOCATION OF WORK MILWAUKEE, WIS.
DESCRIPTION PLEASANT STREET BRIDGE B-40-406
TITLE LIFT SPAN PURLINS

REV.	ZONE	DESCRIPTION	BY	DATE
△				
△				
△		PER APPROV	B.T.	3-31-72

DRAWN BY B.T.	DATE 2-3-72	INSPECTED BY W.H.D.	DRAWING NUMBER 8948-23
CHECKED BY	3-6-72	SYMBOL C	
APPROVED BY			UNIT 2

SYM.	PIECE MARK	ITEM	QUAN.	DESCRIPTION	LENGTH	SPECS.	P BILL	TOTAL WEIGHT

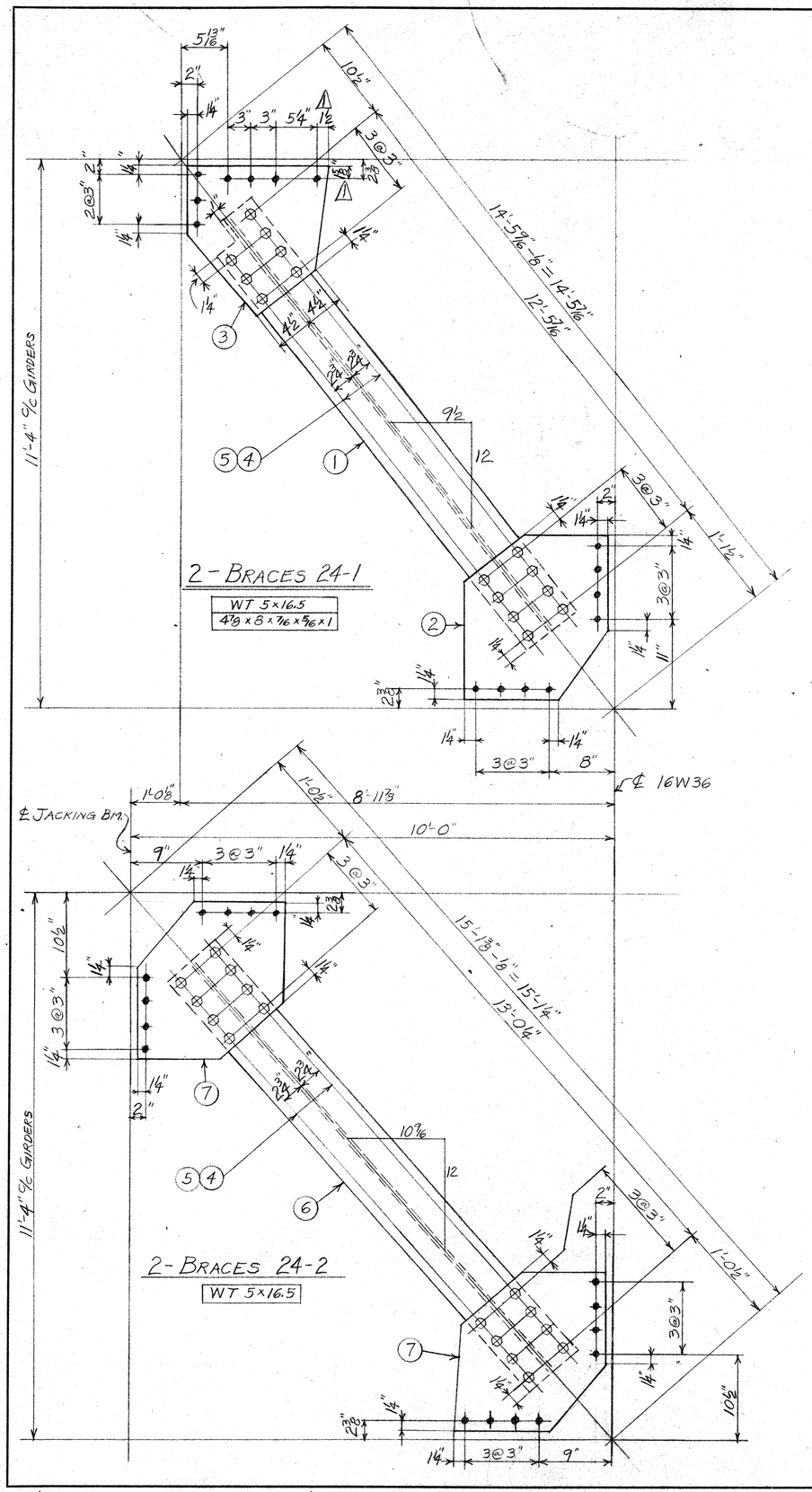

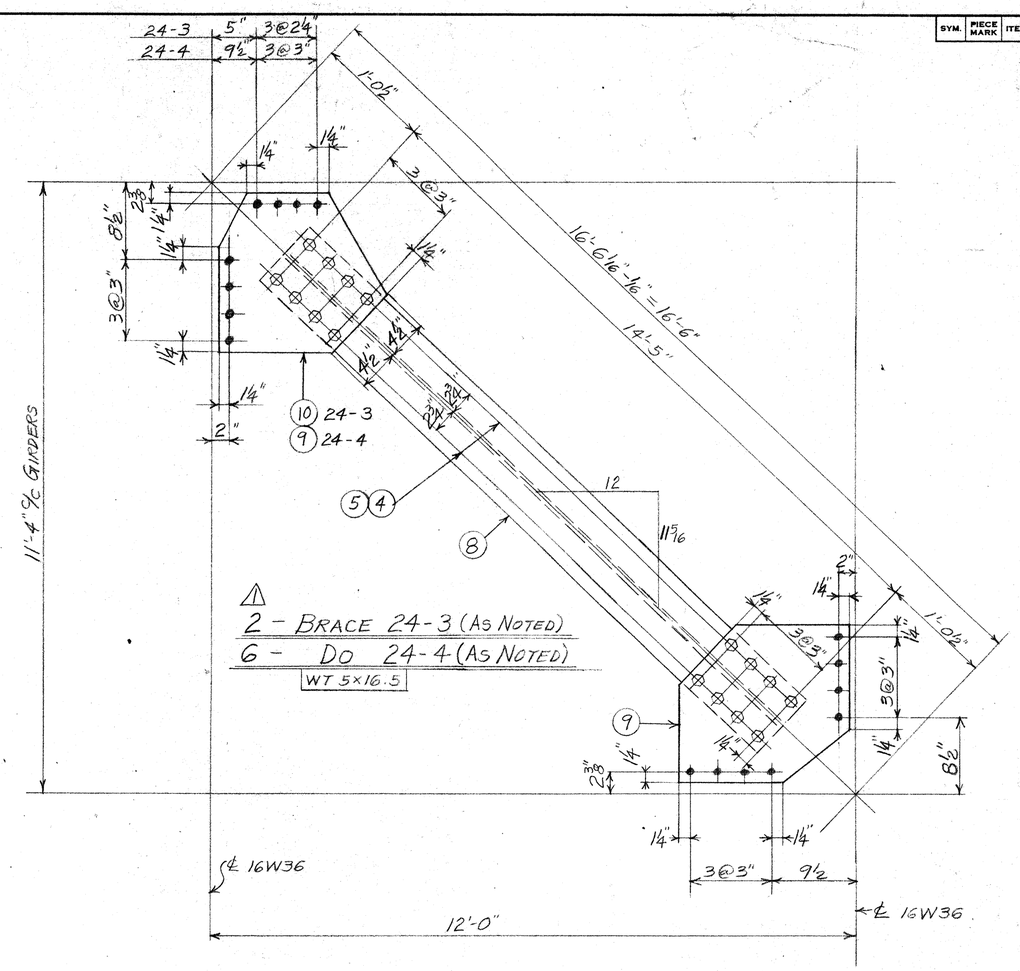

SHOP NOTE:
NO PAINT WITHIN 3" OF HOLES

APPROVED
MAY 1 1972
Supt.
Bureau of Bridges & Public Buildings
MILWAUKEE, WIS.

PROJECT No	2984-0-07
FED. PROJECT No	EPST-4195(11)
REF. DWG. No's	SHT. 18.

OPEN HOLES 13/16" ϕ UNLESS NOTED
SHOP PAINT SEE SHT. 901 UNLESS NOTED

RECORD

LAKESIDE BRIDGE & STEEL CO.
MILWAUKEE, WIS.

CUSTOMER	EDWARD E. GILLEN CO.
LOCATION OF WORK	MILWAUKEE, WIS.
DESCRIPTION	PLEASANT STREET BRIDGE B-40-406
TITLE	LIFT SPAN BRACES
DRAWN BY B.T.	DATE 2-7-72
CHECKED BY	2-29-72
APPROVED BY	
INSPECTED BY	W.H.D.
SYMBOL	B
DRAWING NUMBER	8948-24
UNIT	2

REV.	ZONE	DESCRIPTION	BY	DATE
1		PER APPROV.	B.T	3-31-72

SYM.	PIECE MARK	ITEM	QUAN.	DESCRIPTION	LENGTH	SPECS.	P BILL	TOTAL WEIGHT

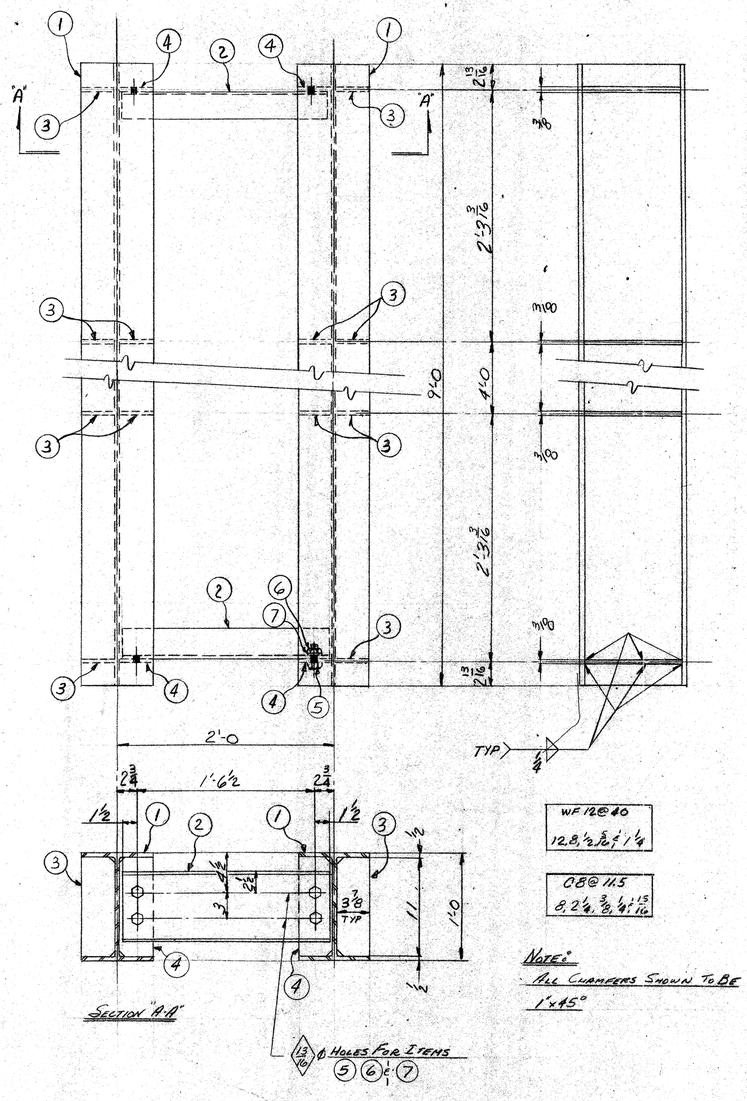

WF 12@40
12, 8, 1/2, 5/16 & 1 1/4

C8@11.5
8, 2 1/4, 3/8, 1/4 & 15/16

NOTE:
ALL CHAMFERS SHOWN TO BE 1"x45°

SECTION "A-A"

13/16 ϕ HOLES FOR ITEMS 5 6 & 7

4-TEMPORARY COUNTERWEIGHT SUPPORTS MK 25-1

WELD FOR MK 25-1
210'-8 OF 1/4 ∇ @ 0.25 = 52.6"
TOTAL 52.6"

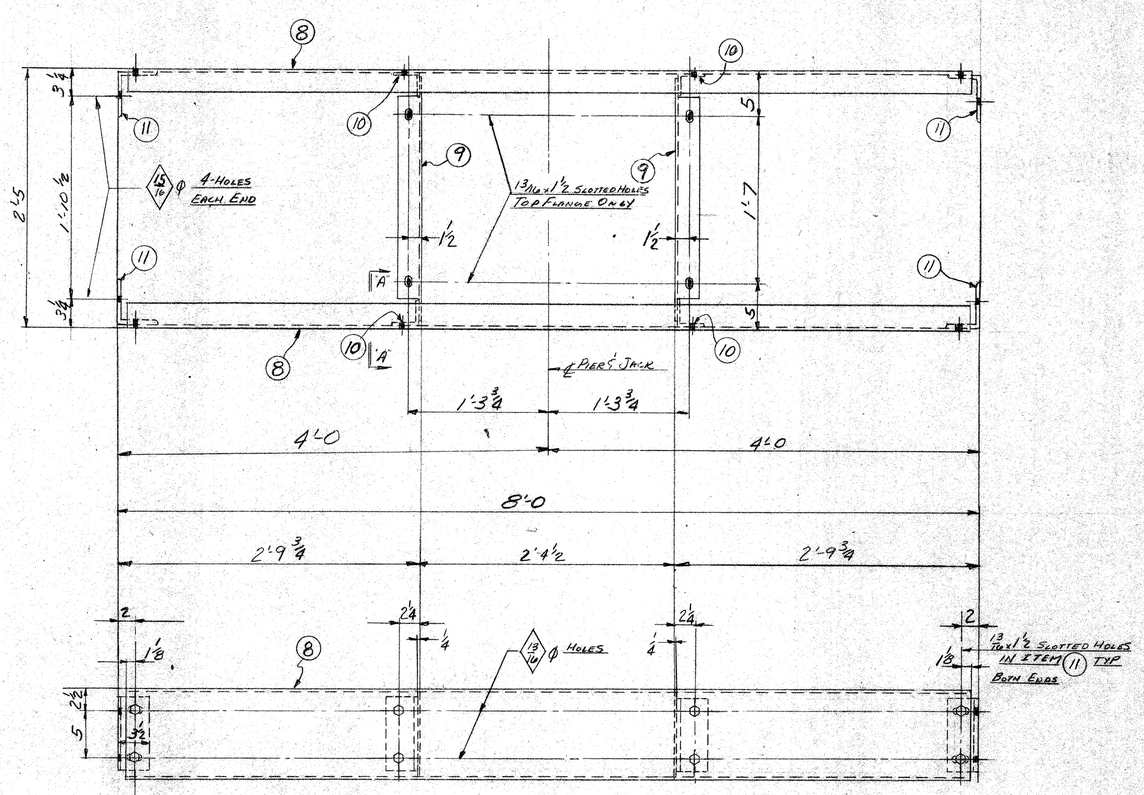

10 C 15.3
10, 2 5/8, 2/16, 1/4 & 15/16

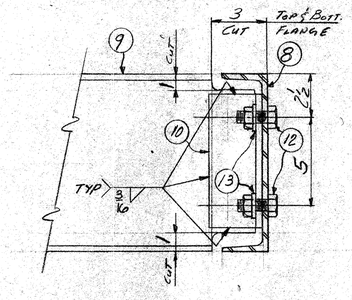

SECTION "A-A"
TYPICAL BOTH ENDS

2 - JACK SUPPORT FRAMES MK 25-2

WELD FOR MK 25-2
9'-0 OF 3/16 ∇ @ 0.15 = 1.4
TOTAL 1.4

PROJECT NO 2984-0-07
FEDERAL PROJECT NO EPS T 4195(11)
DESIGN DWG REF SHT 25 & 40

RECORD

APPROVED
MAR 10 1972
Supt.
Bureau of Bridges & Public Buildings
MILWAUKEE, WIS.

OPEN HOLES AS SHOWN UNLESS NOTED
SHOP PAINT SEE SHT 901

LAKESIDE BRIDGE & STEEL CO.
MILWAUKEE, WIS.

CUSTOMER EDWARD E GILLEN COMPANY
LOCATION OF WORK MILWAUKEE, WISCONSIN
DESCRIPTION PLEASANT ST BRIDGE B-40-406
TITLE FRAMING SUPPORTS

DRAWN BY	DATE	INSPECTED BY	DRAWING NUMBER
CAK	1-28-72	W.H.D.	8948-25
CHECKED	2.8.72	SYMBOL	
APPROVED BY		B	UNIT 3

REV.	ZONE	DESCRIPTION	BY	DATE

SYM.	PIECE MARK	ITEM	QUAN.	DESCRIPTION	LENGTH	SPECS.	P. BILL	TOTAL WEIGHT

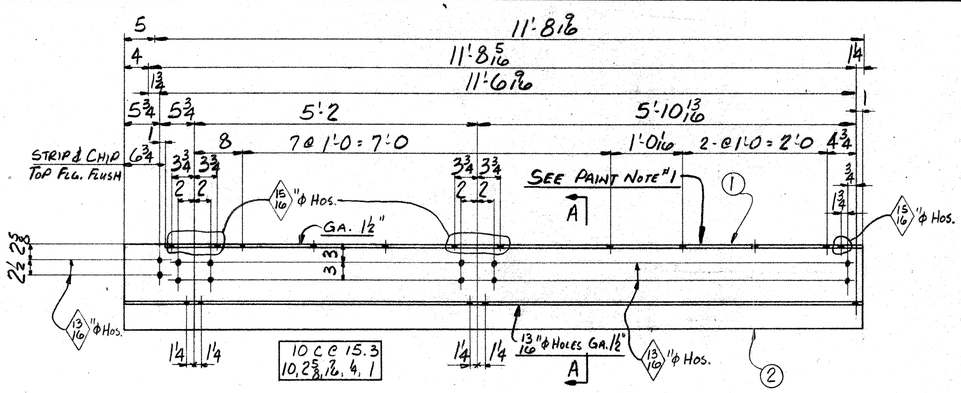

1- CHANNEL 26-1 AS SHOWN
1- do 26-2 OPP. HAND

24.0' 3/8 PL @ .06# = 1.4#
24.0' 7/16 PL @ .15# = 3.6
48.0' TOTAL = 5.0#

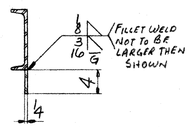

SECTION "A-A"

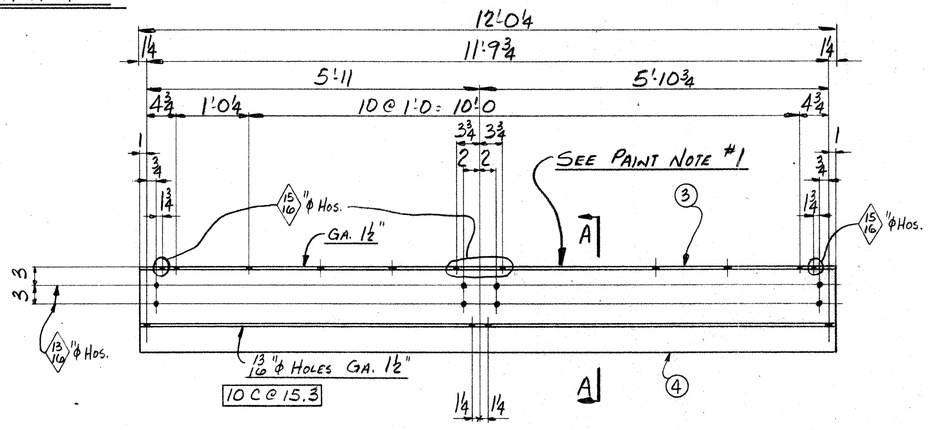

3 - CHANNELS 26-3 AS SHOWN
3- do 26-4 OPP. HAND

96.2' 3/8 PL @ .06# = 5.8#
96.2' 7/16 PL @ .15# = 14.4
192.4' TOTAL 20.2#

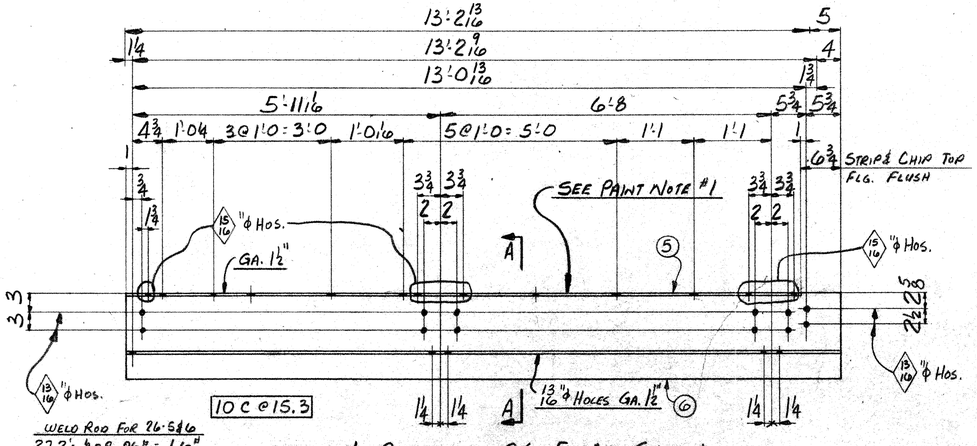

WELD ROD FOR 26-5 & 6
27.2' 3/8 @ .06# = 1.6#
27.2' 7/16 @ .15# = 4.1
54.4' TOTAL = 5.7#

1- CHANNEL 26-5 AS SHOWN
1- do 26-6 OPP. HAND

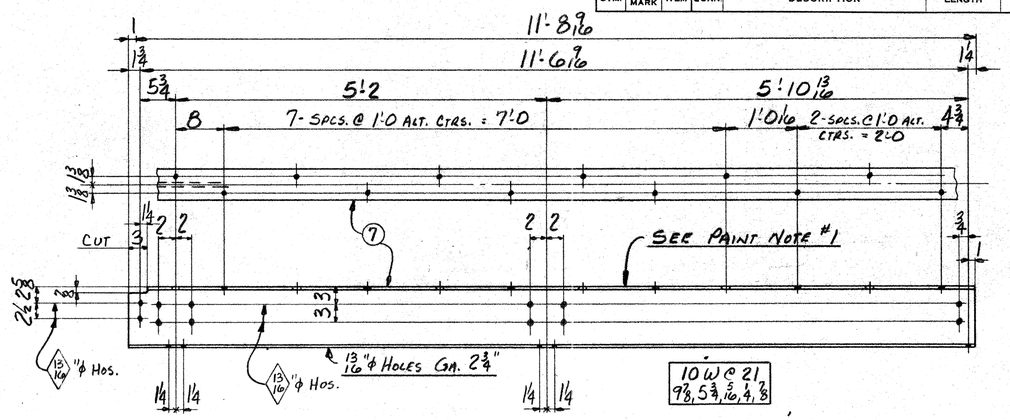

1- BEAM 26-7 AS SHOWN
1- do 26-8 OPP. HAND

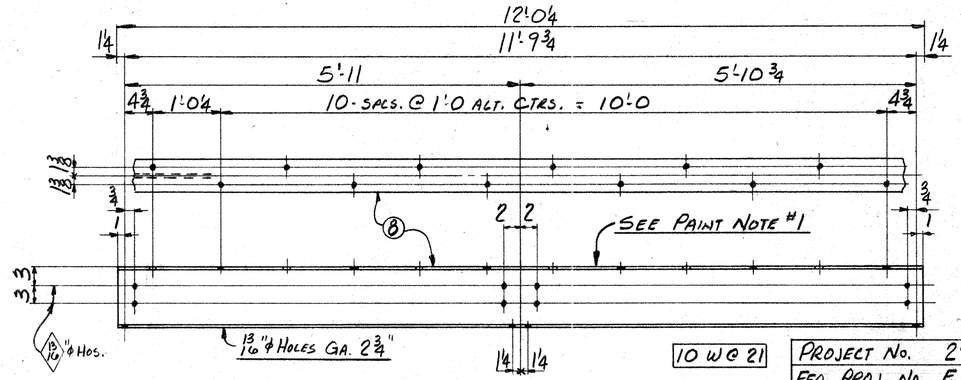

3- BEAMS 26-9 AS SHOWN 3 - BEAMS 26-10 OPP. HAND

PROJECT No.	2984-0-07
FED. PROJ. No.	EPS T-4195 (11)
DESIGN DRWG. REF.	SHEETS #18, 19 & 21

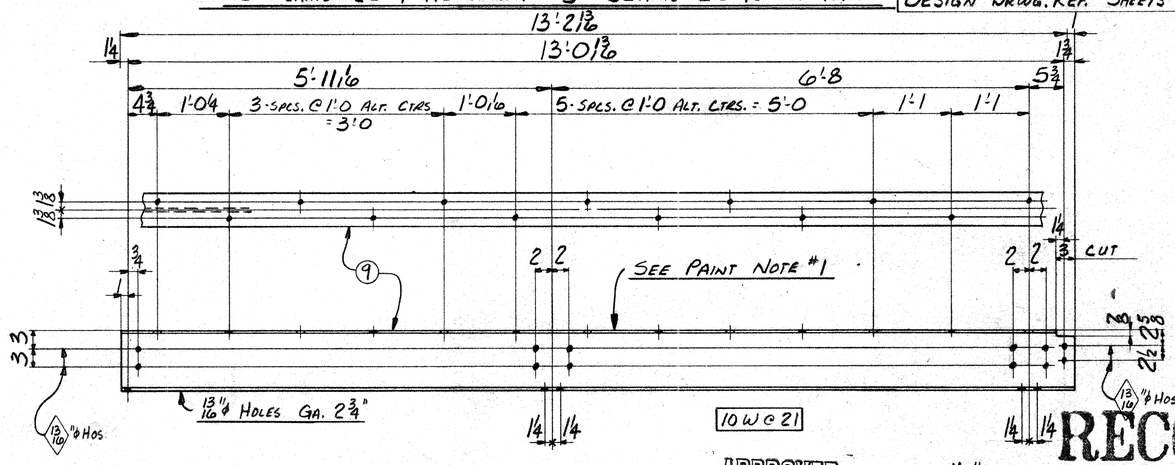

1- BEAM 26-11 AS SHOWN
1- do 26-12 OPP. HAND

PAINT NOTE #1

TOP FLANGES OF CHANNELS AND BEAMS TO BE GIVEN ONE COAT OF HEAVY BODIED BITUMINOUS PAINT. SHOP TO USE "BITUMASTIC 50" BY KOPPERS CO. REMAINDER OF CHANNELS AND BEAMS TO BE PAINTED PER SHEET #901

PAINT NOTE #2

NO PAINT WITHIN 3" OF ANY HOLE IN THE WEBS & BOTTOM FLANGES

APPROVED
MAY 1 1972
Supt. Bureau of Bridges & Public Buildings
MILWAUKEE, WIS.

RECORD

OPEN HOLES 11/16" ϕ UNLESS NOTED
SHOP PAINT PER SHEET #901

REV.	ZONE	DESCRIPTION	BY	DATE

LAKESIDE BRIDGE & STEEL CO.
MILWAUKEE, WIS.

CUSTOMER	EDWARD E GILLEN CO.		
LOCATION OF WORK	MILW., WISC.		
DESCRIPTION	PLEASANT ST. BRIDGE B-40-406		
TITLE	WALKWAY SUPPORT STEEL		
DRAWN BY PHR	DATE 1-31-72	INSPECTED BY W.H.O.	DRAWING NUMBER 8948-26
CHECKED BY	2-28-72	SYMBOL B	UNIT #2
APPROVED BY			

SYM.	PIECE MARK	ITEM	QUAN	DESCRIPTION	LENGTH	SPECS.	P BILL	TOTAL WEIGHT

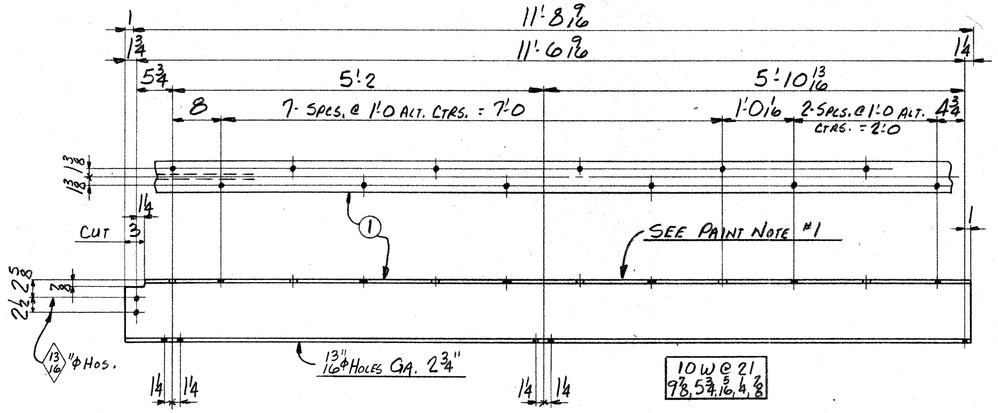

1-BEAM 27-1 AS SHOWN
1- do 27-2 OPP. HAND

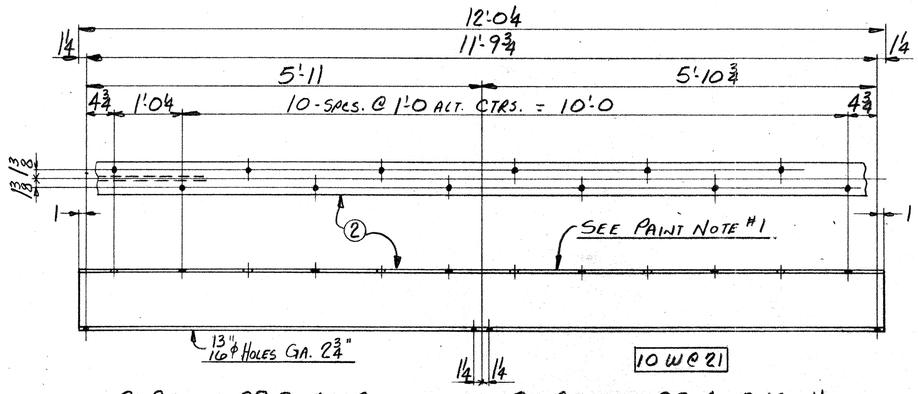

3-BEAMS 27-3 AS SHOWN
3- BEAMS 27-4 OPP. HAND

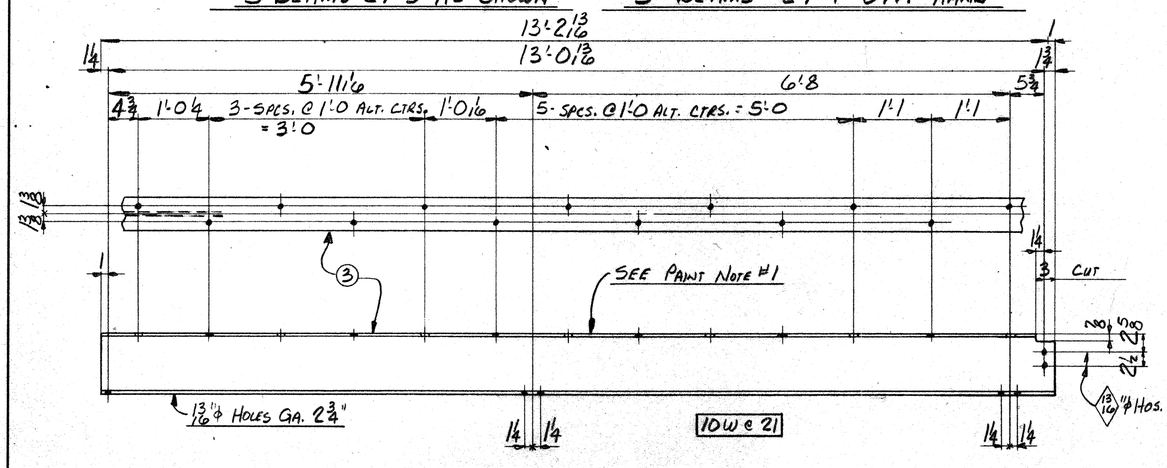

1-BEAM 27-5 AS SHOWN
1- do 27-6 OPP. HAND

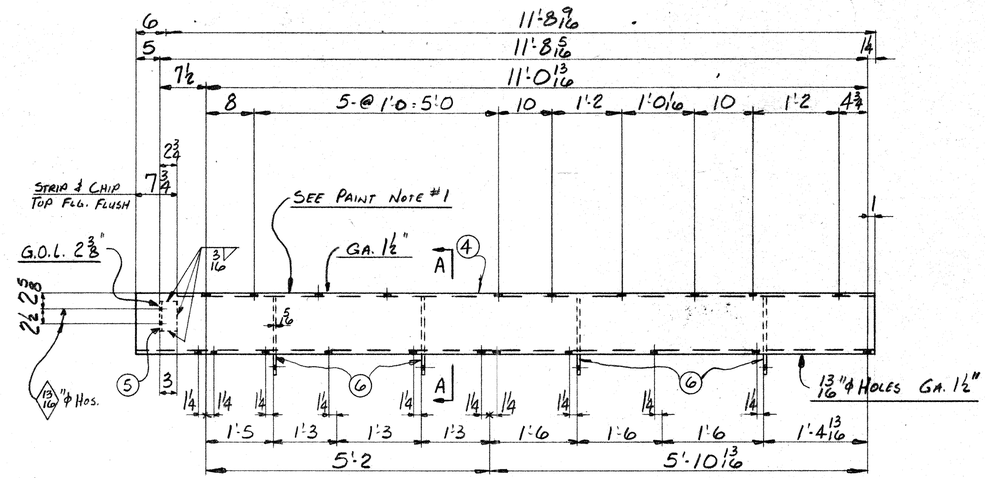

10 C @ 20
10, 2 3/4, 1/16, 3/8, 1

1- CHANNEL 27-7 AS SHOWN
1- do 27-8 OPP. HAND
19.3' 3/16" @ .15# = 2.9#

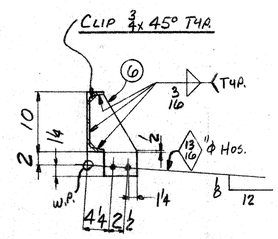

SECTION "A-A"

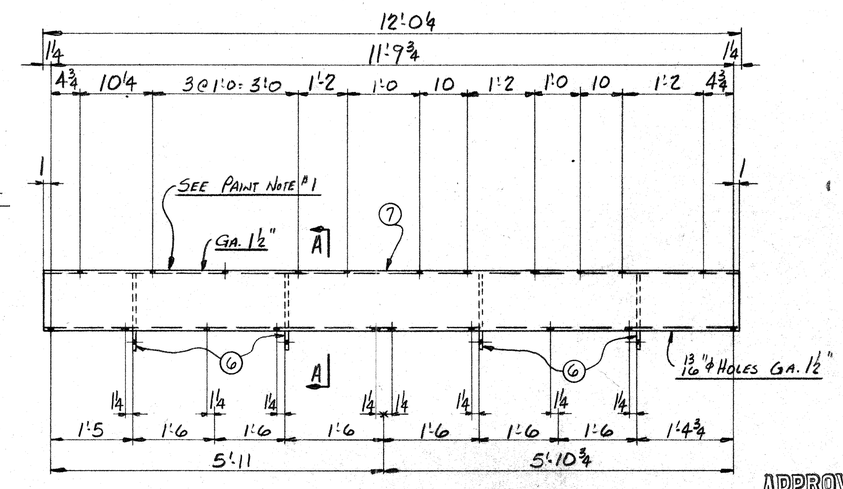

10 C @ 20

2 - CHANNELS 27-9 AS SHOWN
2 - do 27-10 OPP. HAND
34.7' 3/16" @ .15# = 5.2#

APPROVED
MAY 1 1972
Supt.
Bureau of Bridges & Public Buildings
MILWAUKEE, WIS.

PAINT NOTE #1
TOP FLANGES OF BEAMS AND CHANNELS TO BE GIVEN ONE COAT OF HEAVY BODIED BITUMINOUS PAINT. SHOP TO USE "BITUMASTIC 50" BY KOPPERS CO. REMAINDER OF BEAMS AND CHANNELS TO BE PAINTED PER SHEET #901

PAINT NOTE #2
NO PAINT WITHIN 3" OF ANY HOLE ON BOTTOM FLANGES OR ON ANGLES AND GUSSET PLATES

RECORD

REV.	ZONE	DESCRIPTION	BY	DATE

PROJECT No. 2984-0-07
FED. PROJECT No EPS T-4195 (11)
DESIGN DRWG. REF. SHEETS # 18, 19 & 20

OPEN HOLES 11/16" ϕ UNLESS NOTED
SHOP PAINT PER SHEET #901

LAKESIDE BRIDGE & STEEL CO.
MILWAUKEE, WIS.

CUSTOMER EDWARD E. GILLEN CO.
LOCATION OF WORK MILW., WISC.
DESCRIPTION PLEASANT ST. BRIDGE B-40-406
TITLE WALKWAY SUPPORT STEEL

DRAWN BY PAK	DATE 1-31-72	INSPECTED BY W.H.O	DRAWING NUMBER 8948-27
CHECKED BY	2-17-72	SYMBOL B	UNIT #2
APPROVED BY			

SYM.	PIECE MARK	ITEM	QUAN.	DESCRIPTION	LENGTH	SPECS.	P BILL	TOTAL WEIGHT

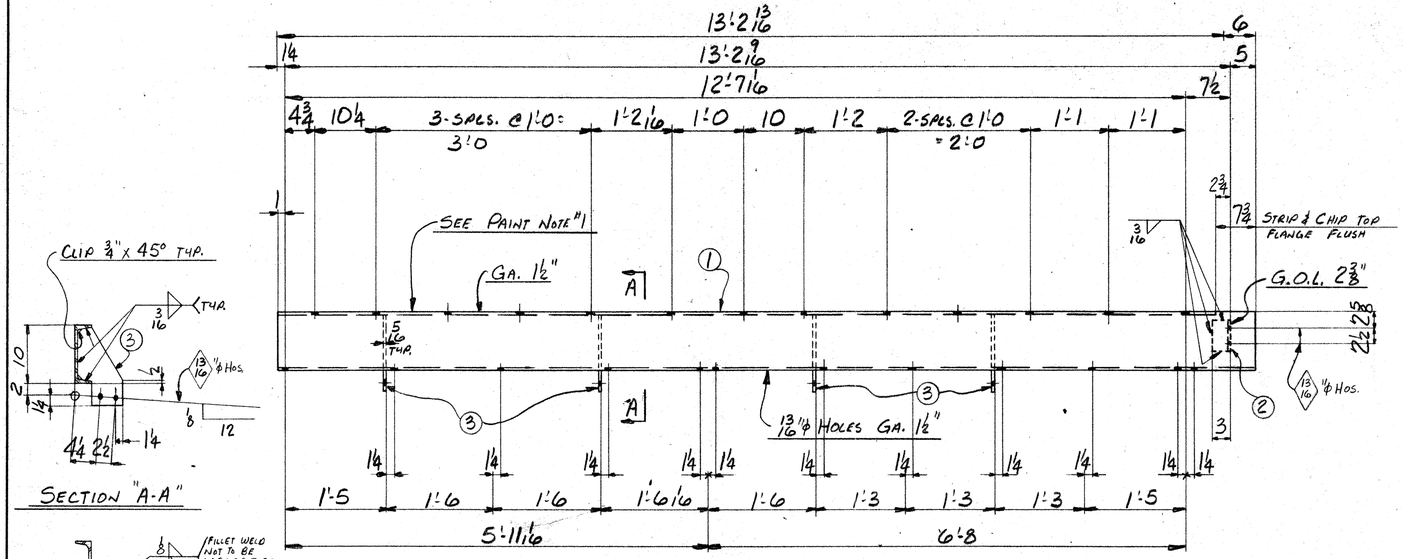

SECTION "A-A"

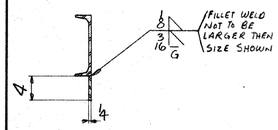

SECTION "B-B"

10 C @ 20
10, 2 3/4, 7/16, 3/8, 1

1- CHANNEL 28-1 AS SHOWN
1- do 28-2 OPP. HAND
19.3' 3/16 @ .15# = 2.9#

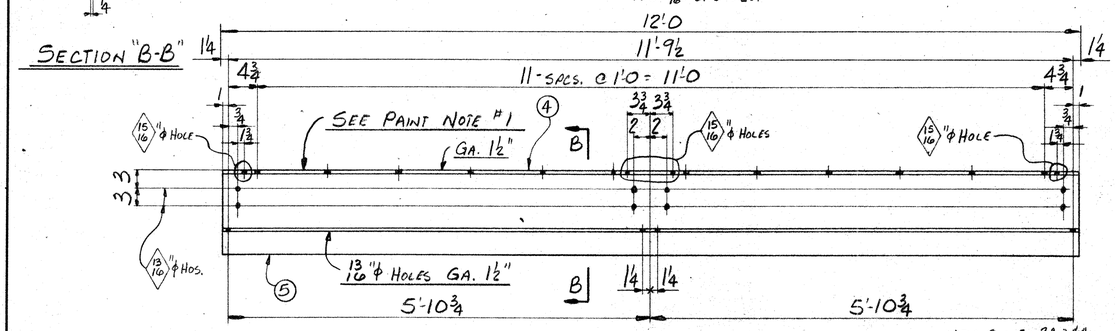

10 C @ 15.3
10, 2 5/8, 7/16, 4, 1

1- CHANNEL 28-3 AS SHOWN
1- do 28-4 OPP. HAND

WELD ROD FOR 28-3 & 4
24.0' 1/4 @ .06# = 1.4#
24.0' 1/8 @ .15# = 3.6
48.0' TOTAL = 5.0#

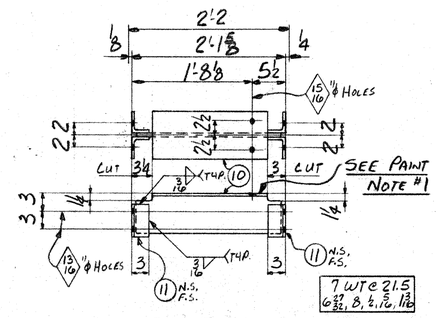

7 WT @ 21.5
6 27/32, 8, 4, 7/16, 1 3/16

26- TEES 28-13
91.0' 3/16 @ .15# = 13.6#

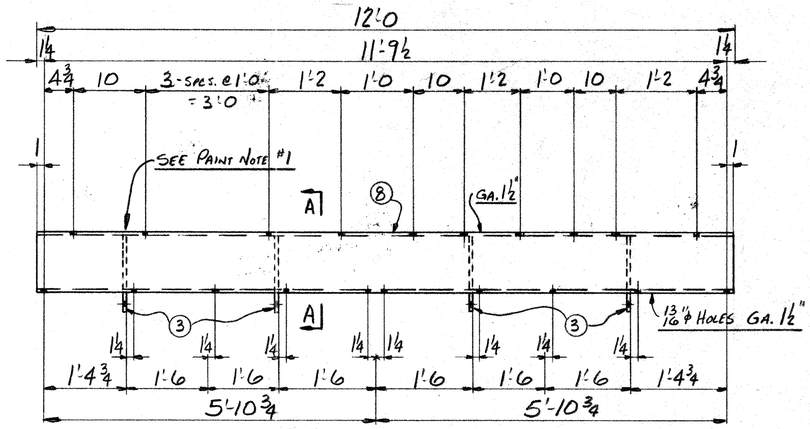

10 C @ 20

1- CHANNEL 28-9 AS SHOWN
1- do 28-10 OPP. HAND
19.3' 3/16 @ .15# = 2.9#

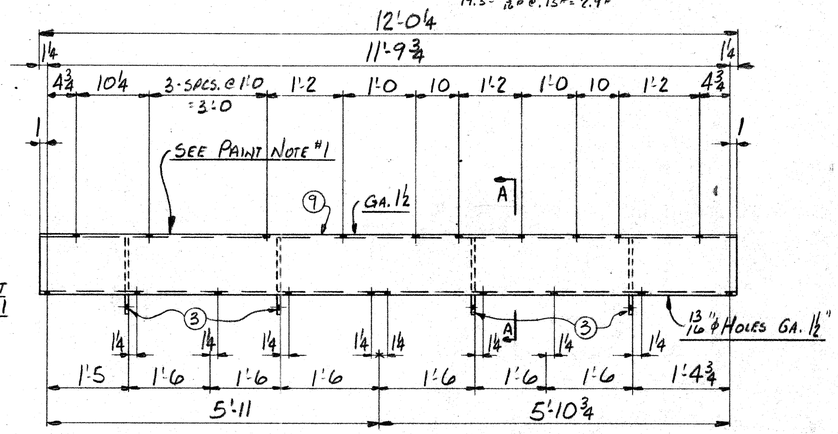

10 C @ 20

1- CHANNEL 28-11 AS SHOWN
1- do 28-12 OPP. HAND
19.3' 3/16 @ .15# = 2.9#

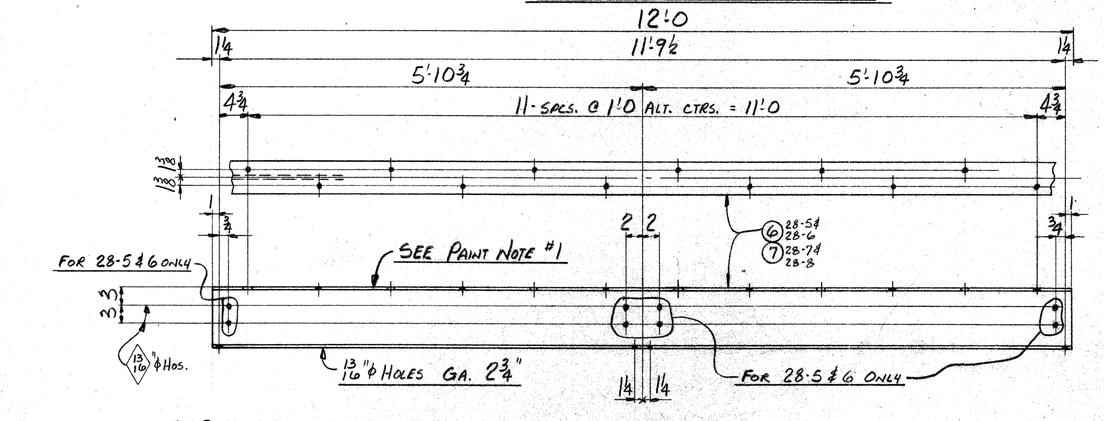

1- BEAM 28-5 AS SHOWN & NOTED
1- do 28-6 OPP. HAND TO 28-5

10 W @ 21
9 7/8, 5 3/4, 5/16, 4, 7/8

1- BEAM 28-7 AS SHOWN & NOTED
1- do 28-8 OPP. HAND TO 28-7

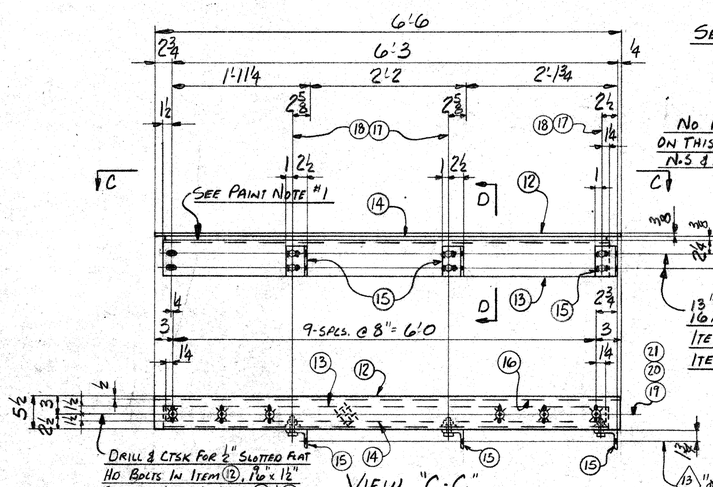

DRILL & CTSK FOR 1/2" SLOTTED FLAT HD BOLTS IN ITEM 12, 13/16 x 1 1/2" SLOTTED HOLES IN ITEMS 13 & 14

VIEW "C-C"

2- EXPANSION JOINTS 28-14 AS SHOWN
2- do do 28-15 OPP. HAND

26.0' 1/4 @ .09# = 2.3#
26.0' 1/8 @ .15# = 3.9
52.0' TOTAL 6.2#

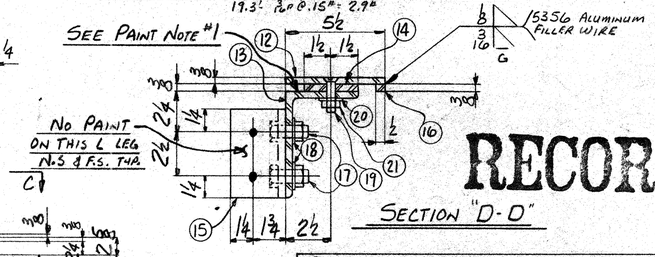

SECTION "D-D"

RECORD

APPROVED
MAY 1 1972
Bureau of Bridges & Public Buildings
MILWAUKEE, WIS.

PAINT NOTE #1

TOP FLANGES OF BEAMS, CHANNELS, TEES AND INDICATED LEG OF ANGLE TO BE GIVEN ONE COAT OF HEAVY BODIED BITUMINOUS PAINT SHOP TO USE "BITUMASTIC 50" BY KOPPERS CO.

REMAINDER OF BEAMS ETC. TO BE PAINTED PER SHEET #701 NO PAINT ON CHECKER SURFACE

PAINT NOTE #2

NO PAINT WITHIN 3" OF ANY HOLE ON BOTTOM FLG'S. & WEBS & GUSSET R's. PAINT MK's 28-14 & 28-15 COMPLETE EXCEPT AS NOTED

REV.	ZONE	DESCRIPTION	BY	DATE

PROJECT NO. 2984-0-07
FED. PROJECT NO. EPS T-4195 (11)
DESIGN DRWG. REF. SHEETS 18, 19 & 21

OPEN HOLES 11/16" ϕ UNLESS NOTED
SHOP PAINT PER SHEET #701

LAKESIDE BRIDGE & STEEL CO.
MILWAUKEE, WIS.

CUSTOMER	EDWARD E. GILLEN CO.		
LOCATION OF WORK	MILW., WISC.		
DESCRIPTION	PLEASANT ST. BRIDGE B-40-406		
TITLE	WALKWAY SUPPORT STEEL		
DRAWN BY PHL	DATE 2-1-72	INSPECTED BY W.H.D.	DRAWING NUMBER 8948-28
CHECKED		SYMBOL B	UNIT #2
APPROVED BY			

SYM.	PIECE MARK	ITEM	QUAN.	DESCRIPTION	LENGTH	SPECS.	P BILL	TOTAL WEIGHT

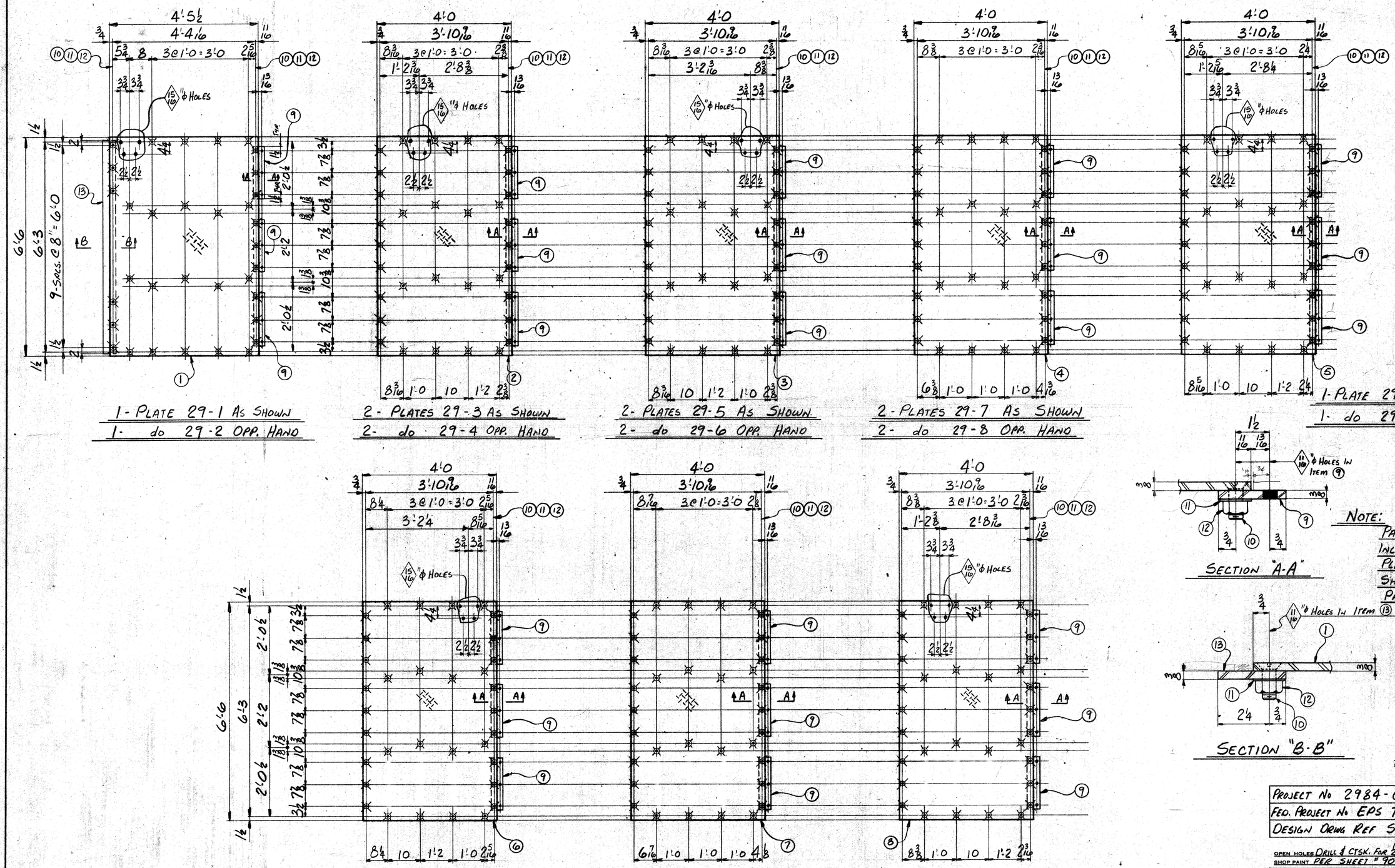

1- PLATE 29-1 AS SHOWN
1- do 29-2 OPP. HAND

2- PLATES 29-3 AS SHOWN
2- do 29-4 OPP. HAND

2- PLATES 29-5 AS SHOWN
2- do 29-6 OPP. HAND

2- PLATES 29-7 AS SHOWN
2- do 29-8 OPP. HAND

1- PLATE 29-9 AS SHOWN
1- do 29-10 OPP. HAND

1- PLATE 29-11 AS SHOWN
1- do 29-12 OPP. HAND

1- PLATE 29-13 AS SHOWN
1- do 29-14 OPP. HAND

2- PLATES 29-15 AS SHOWN
2- do 29-16 OPP. HAND

SECTION "A-A"

NOTE:
PAINT ALL SURFACES INCLUDING SHOP CONNECTION PLATE SURFACES PER SHEET #901 DO NOT PAINT CHECKER SURFACE

SECTION "B-B"

APPROVED
MAY 1 1972
Supt.
Bureau of Bridges & Public Buildings
MILWAUKEE, WIS.

PROJECT No 2984-0-07
FED. PROJECT No EPS T-4195 (11)
DESIGN DRWG REF SHEETS 18, 19 & 21

OPEN HOLES DRILL & CTSK. FOR ½" ϕ SLOT. FLAT HD. BOLTS UNLESS NOTED
SHOP PAINT PER SHEET #901

RECORD

LAKESIDE BRIDGE & STEEL CO.
MILWAUKEE, WIS.

CUSTOMER	EDWARD E. GILLEN CO.
LOCATION OF WORK	MILW., WISC.
DESCRIPTION	PLEASANT ST. BRIDGE B-40-406
TITLE	ALUMINUM FLOOR PLATE WALKWAYS
DRAWN BY PAIL	DATE 1-27-72
CHECKED BY	DATE 3-7-72
APPROVED BY	
INSPECTED BY	W.H.O.
SYMBOL	B
DRAWING NUMBER	8948-29
UNIT	#2

REV.	ZONE	DESCRIPTION	BY	DATE

SYM.	PIECE MARK	ITEM	QUAN.	DESCRIPTION	LENGTH	SPECS.	P BILL	TOTAL WEIGHT

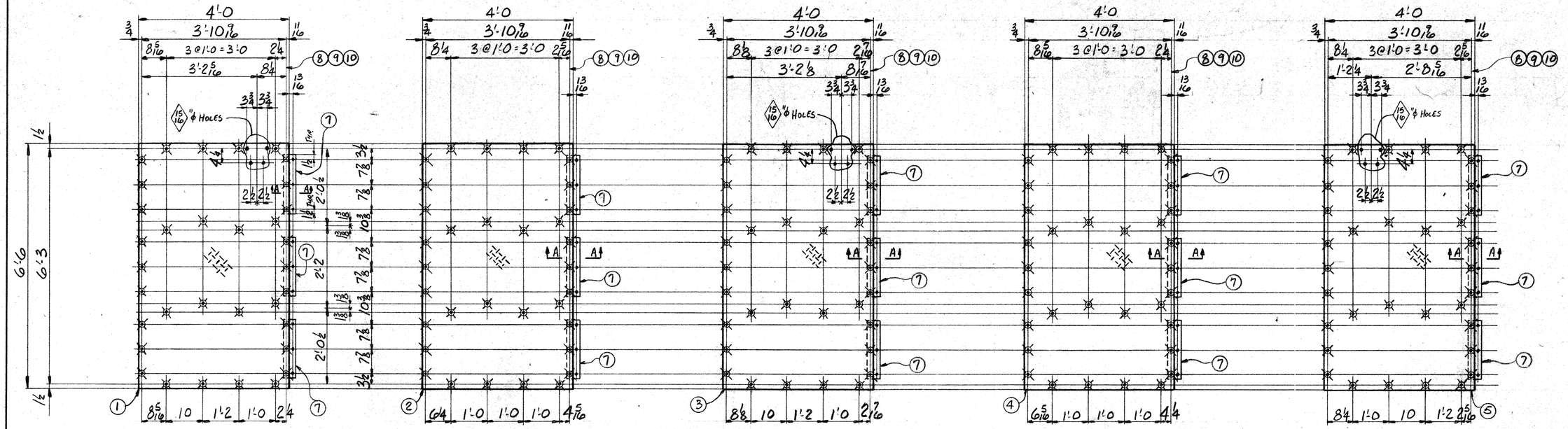

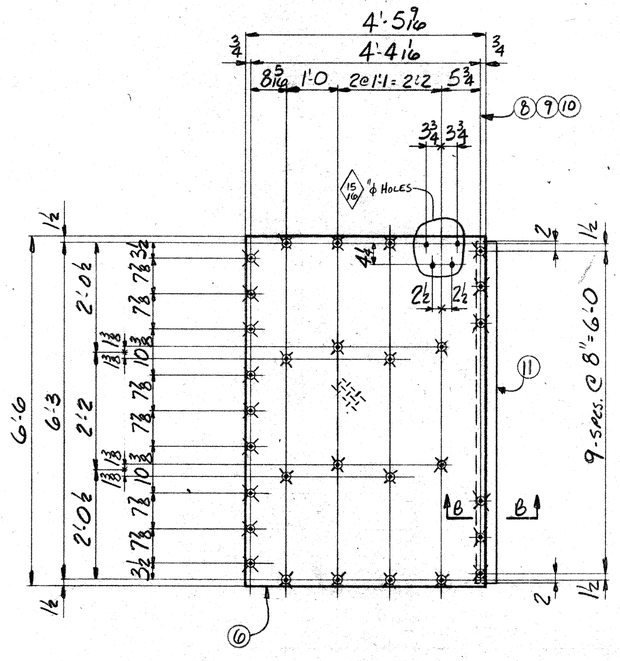

1- PLATE 30-11 AS SHOWN
1- do 30-12 OPP. HAND

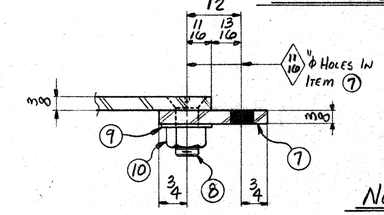

SECTION "A-A"

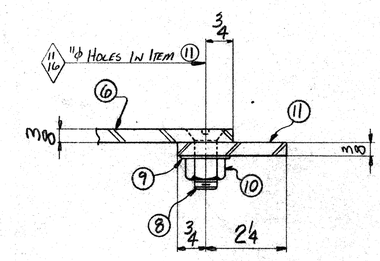

SECTION "B-B"

NOTE:
PAINT ALL SURFACE INCLUDING SHOP CONNECTION PLATE SURFACES PER SHEET # 901 DO NOT PAINT CHECKER SURFACE

APPROVED
MAY 1 1972
Supt
Bureau of Bridges & Public Buildings
MILWAUKEE, WIS.

PROJECT No 2984-0-07
FED. PROJECT No EPS T-4195 (11)
DESIGN DRWG REF SHEETS 18, 19 & 21

OPEN HOLES DRILL & CTSK. FOR 1/2" ϕ SLOT. FLAT HD. BOLTS UNLESS NOTED
SHOP PAINT PER SHEET # 901

RECORD

REV.	ZONE	DESCRIPTION	BY	DATE

LAKESIDE BRIDGE & STEEL CO.
MILWAUKEE, WIS.

CUSTOMER EDWARD E. GILLEN CO.
LOCATION OF WORK MILW., WISC.
DESCRIPTION PLEASANT ST. BRIDGE B-40-406
TITLE ALUMINUM FLOOR PLATE WALKWAYS

	DATE	INSPECTED BY	DRAWING NUMBER
DRAWN BY PHL	1-28-72	W.H.Q.	8948-30
CHECKED BY	3-7-72	SYMBOL B	
APPROVED BY			UNIT # 2

SYM.	PIECE MARK	ITEM	QUAN.	DESCRIPTION	LENGTH	SPECS.	P BILL	TOTAL WEIGHT

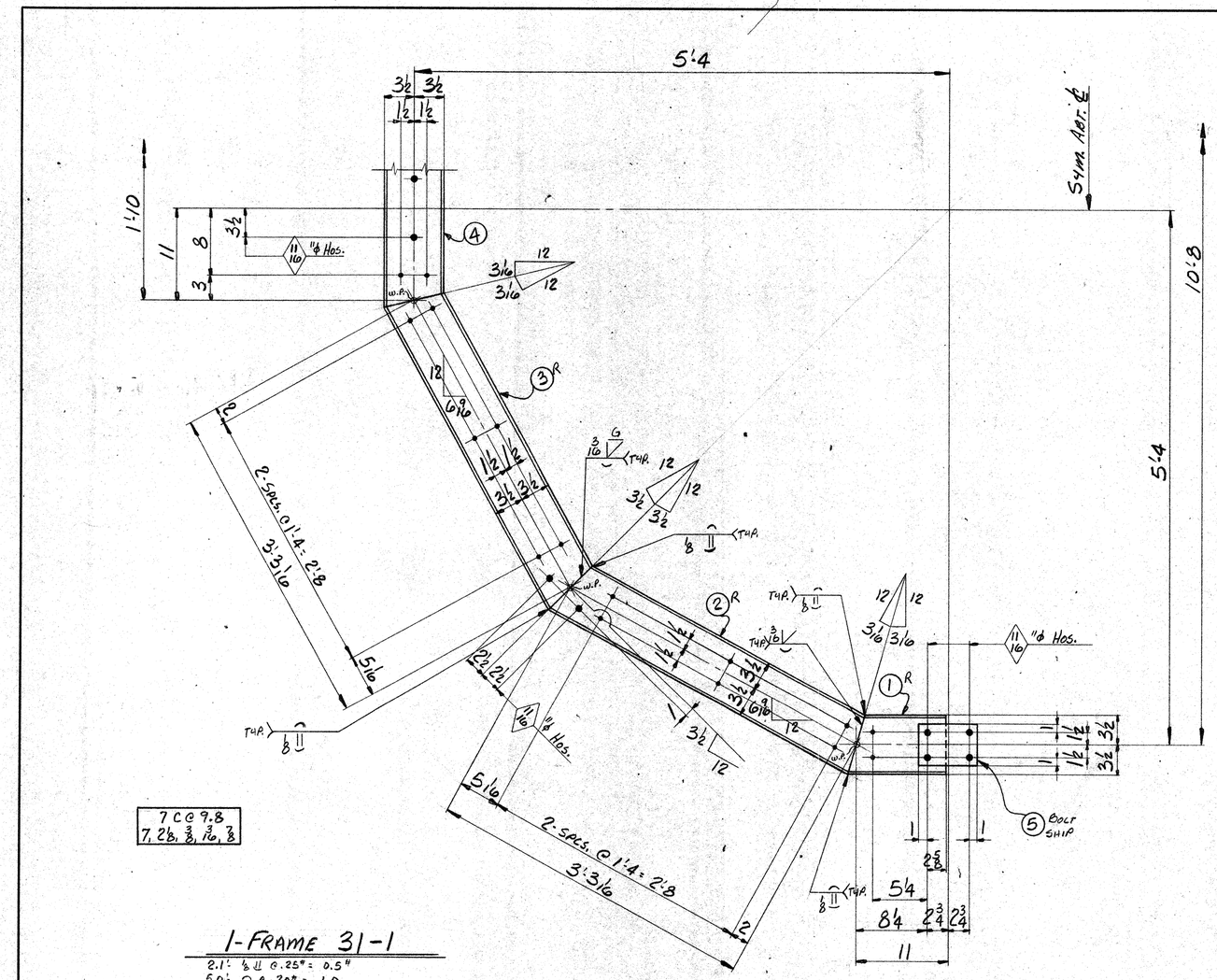

1-FRAME 31-1

2.1'	⅛ ⌒ @ .25# =	0.5#
5.0'	⌒ @ .20# =	1.0
3.6'	3/16 R @ .15# =	0.5
10.7'	TOTAL =	2.0#

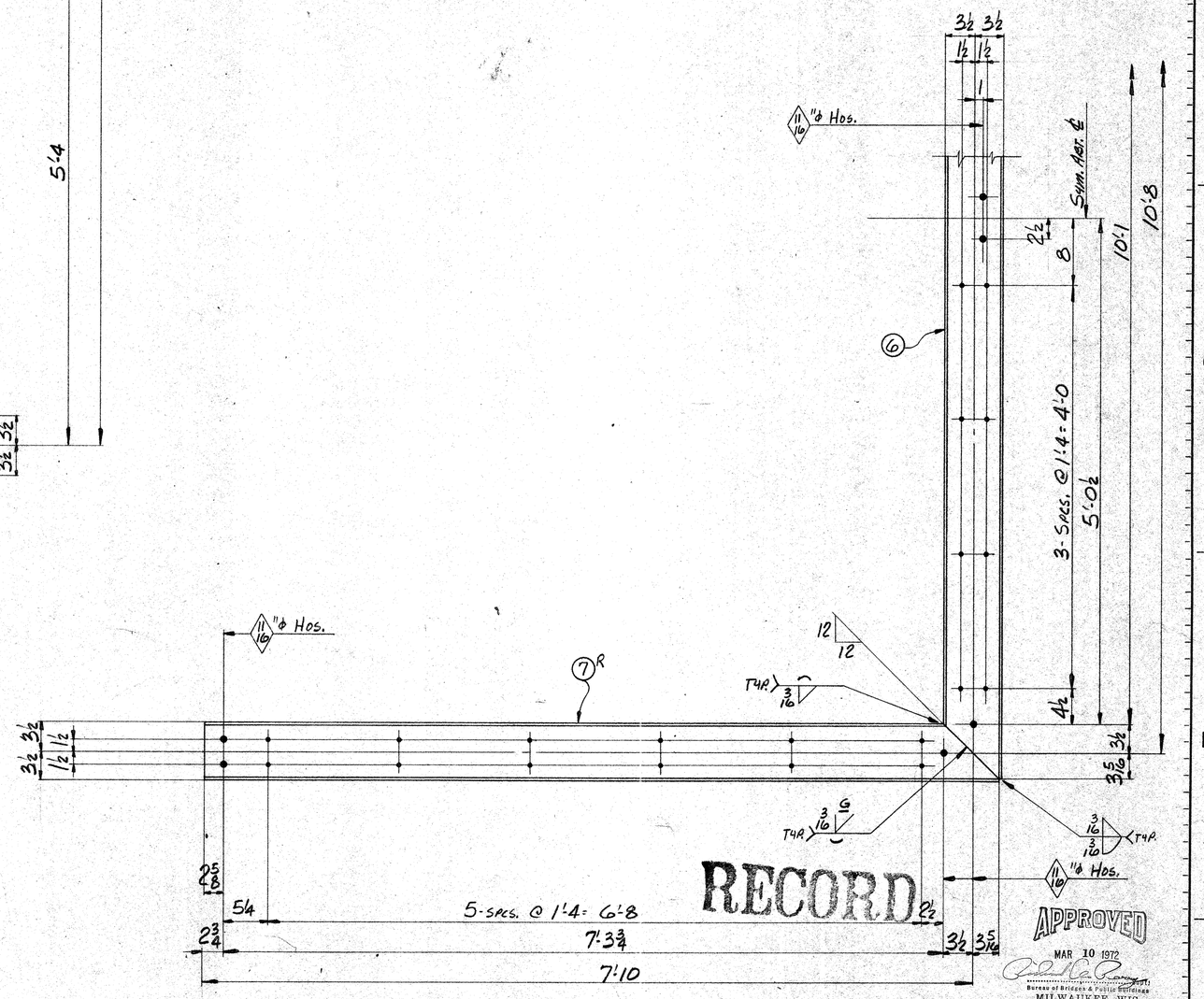

RECORD

APPROVED
MAR 10 1972
Bureau of Bridges & Public Buildings
MILWAUKEE, WIS.

NOTE:
NO PAINT WITHIN 3½" OF ANY 11/16"ϕ HOLE

1-FRAME 31-2

1.8'	⌒ @ .20# =	0.4#
1.0'	3/16 D @ .15# =	0.2
1.7'	3/16 R @ .15# =	0.3
4.5'	TOTAL =	0.9#

OPEN HOLES 9/16 "ϕ UNLESS NOTED
SHOP PAINT PER SHEET #901

LAKESIDE BRIDGE & STEEL CO.
MILWAUKEE, WIS.

CUSTOMER	EDWARD E GILLEN CO.
LOCATION OF WORK	MILW. WISC.
DESCRIPTION	PLEASANT ST. BRIDGE B-40-406
TITLE	FRAME, OPERATORS HOUSE
DRAWN BY	PHL — DATE 1-12-72
CHECKED BY	2-9-72
APPROVED BY	
INSPECTED BY	W.H.O
SYMBOL	B
DRAWING NUMBER	8948-31
UNIT	#3

B+B

PROJECT No. 2984-0-07
FED. PROJECT No. EPS T-4195 (11)
DESIGN DRWG. REF. SHEETS 15 & 16

REV.	ZONE	DESCRIPTION	BY	DATE

SYM.	PIECE MARK	ITEM	QUAN.	DESCRIPTION	LENGTH	SPECS.	P BILL	TOTAL WEIGHT

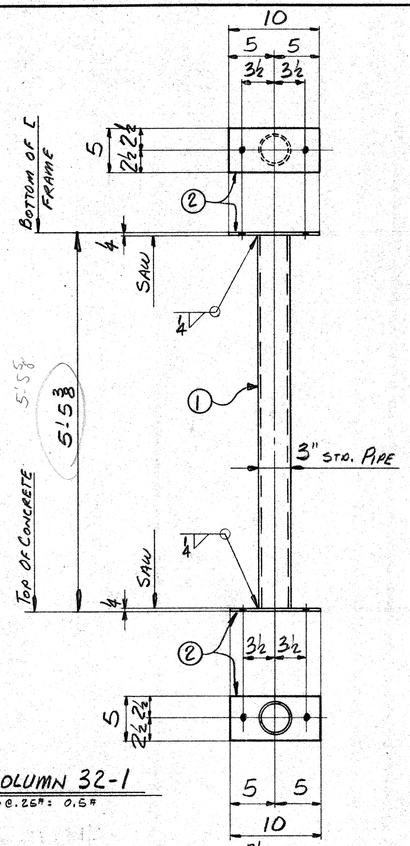

1- COLUMN 32-1

1.8' 4P@.25# = 0.5#

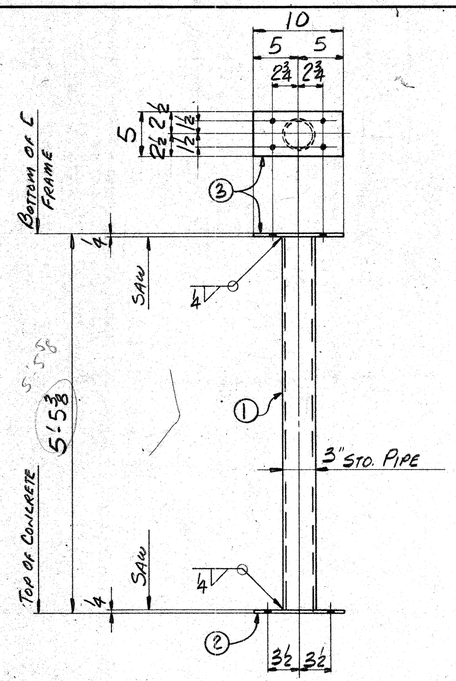

BASE PL DETAIL
SAME AS MK.32-1

2- COLUMNS 32-2

3.7' 4P@.25# = 0.9#

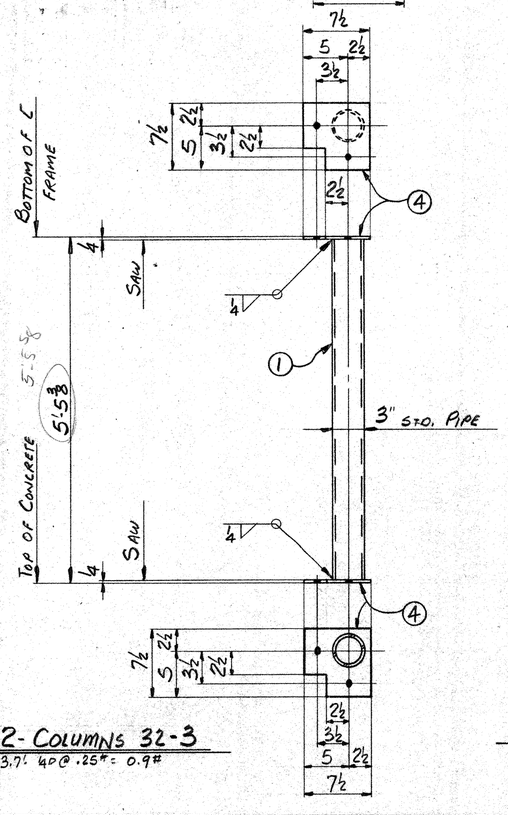

2- COLUMNS 32-3

3.7' 4P@.25# = 0.9#

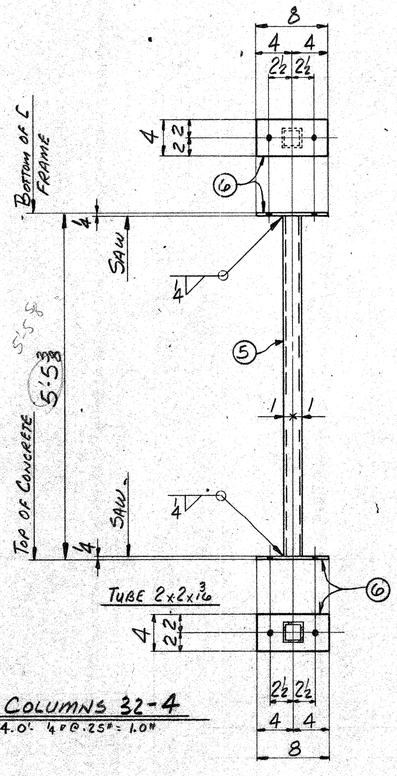

3- COLUMNS 32-4

4.0' 4P@.25# = 1.0#

17- CINCH ANCHORS 32-5 BAG FOR SHIPMENT

(7) 17 2 UNIT THRD. RING WEDGE CINCH ANCHOR TYPE 2 FOR ⅝"φ BOLT

(8) 17 HEX. HD. BOLTS ⅝"φ x 0'-2 A307

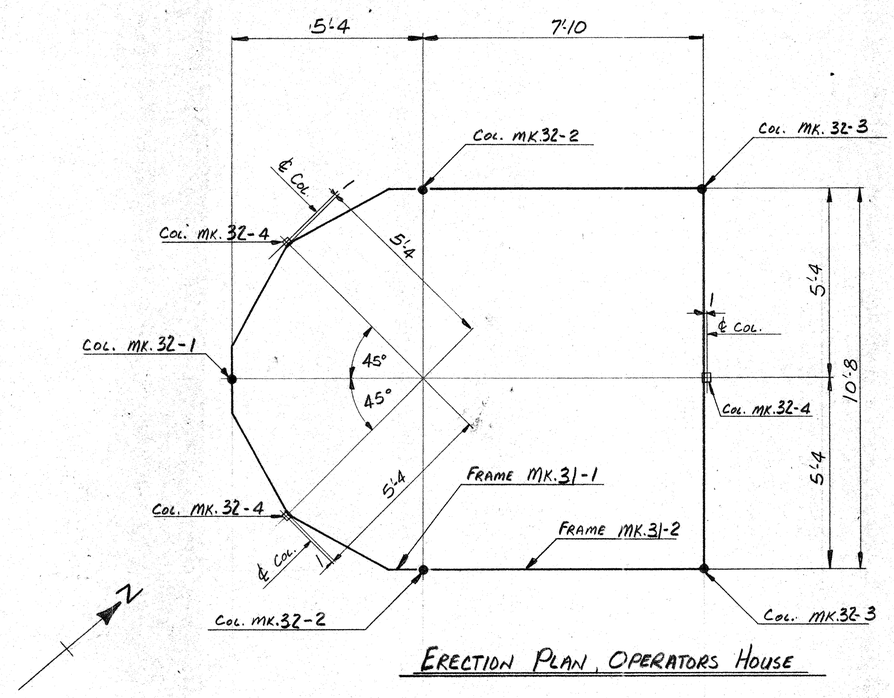

ERECTION PLAN, OPERATORS HOUSE

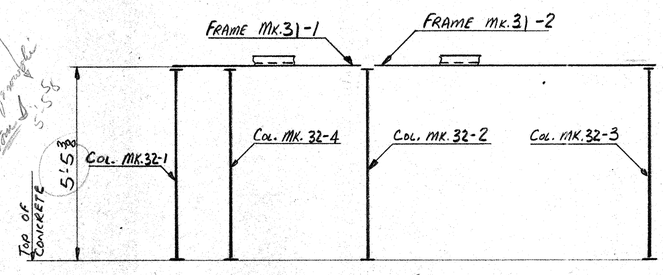

ERECTOR TO USE ANCHORS MK.32-5 TO ANCHOR BASE PL TO CONCRETE WALL

ELEVATION

3-28-72
These dim. incorrect & to allow for change in midline dim. - fabricator will add 4" filler on top 2" PL & change overall height of 3rd by 4" Top plate to Top of Kpp provided for fabricator - [illegible]
5'-5⅝

NOTE:
NO PAINT ON COLUMN CAP PL

B&B

REV.	ZONE	DESCRIPTION	BY	DATE
△				
△				
△				

RECORD

APPROVED
MAR 10 1972
Bureau of Bridges & Public Buildings
MILWAUKEE, WIS.

PROJECT No. 2984-0-07
FED. PROJECT No EPS T-4195 (11)
DESIGN DRWG. REF. SHEETS 15 & 16

OPEN HOLES 11/16" φ UNLESS NOTED
SHOP PAINT PER SHEET #901

LAKESIDE BRIDGE & STEEL CO.
MILWAUKEE, WIS.

CUSTOMER EDWARD E GILLEN CO.
LOCATION OF WORK MILW., WISC.
DESCRIPTION PLEASANT ST. BRIDGE B-40-406
TITLE COLUMNS & ERECTION PLAN, OPERATORS HOUSE

DRAWN BY PHL	DATE 1-12-72	INSPECTED BY W.H.O	DRAWING NUMBER
CHECKED BY [illegible]	2.9.72	SYMBOL B	8948-32
APPROVED BY			UNIT #3

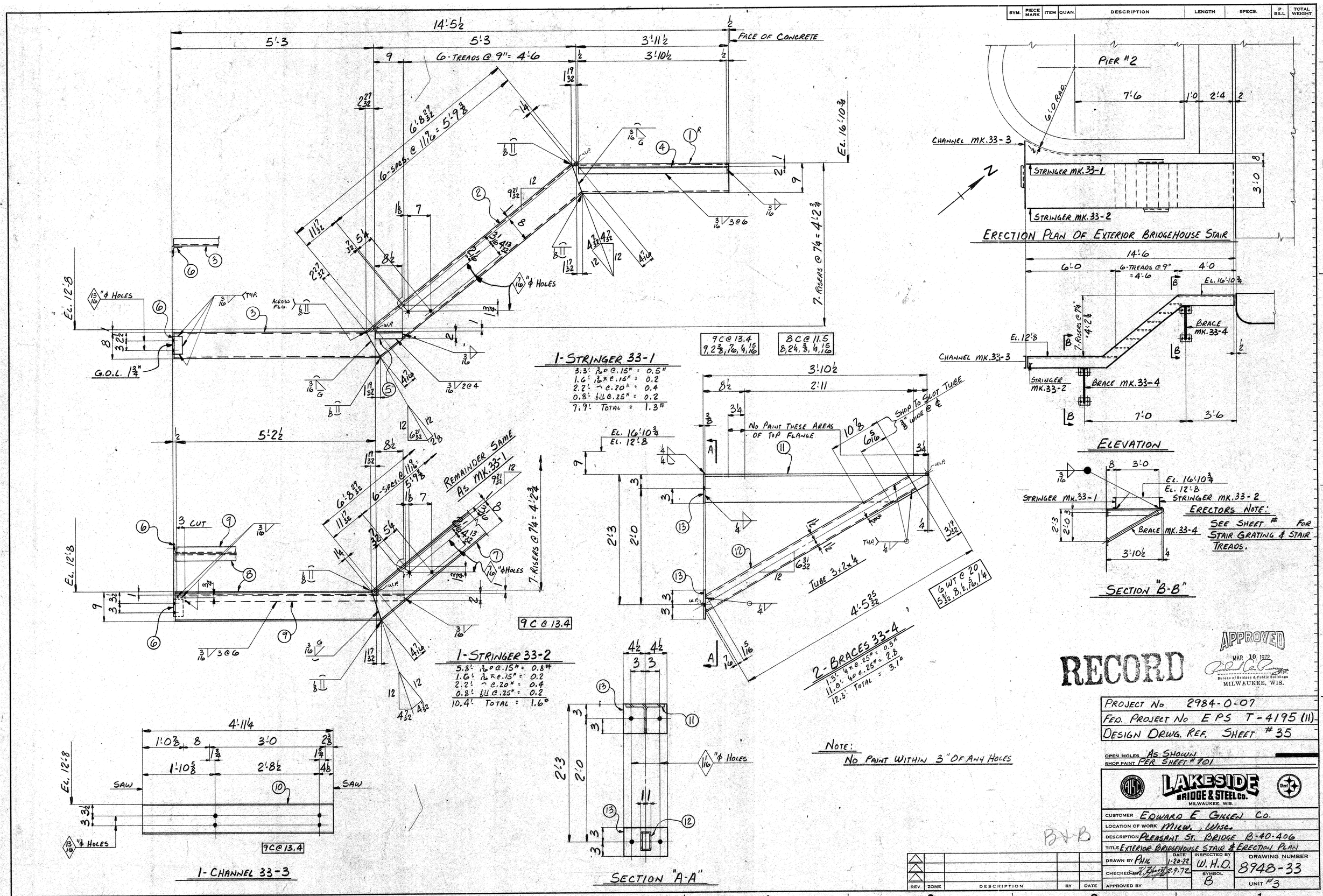

RECORD

APPROVED
MAR 10 1972
Bureau of Bridges & Public Buildings
MILWAUKEE, WIS.

PROJECT No	2984-0-07
FED. PROJECT No	EPS T-4195 (11)
DESIGN DRWG. REF.	SHEET #35
OPEN HOLES	AS SHOWN
SHOP PAINT	PER SHEET #701

LAKESIDE BRIDGE & STEEL CO.
MILWAUKEE, WIS.

CUSTOMER	EDWARD E GILLEN CO.
LOCATION OF WORK	MILW., WISC.
DESCRIPTION	PLEASANT ST. BRIDGE B-40-406
TITLE	EXTERIOR BRIDGEHOUSE STAIR & ERECTION PLAN
DRAWN BY	PHK
DATE	1-20-72
INSPECTED BY	W.H.D.
CHECKED BY	2.9.72
SYMBOL	B
APPROVED BY	
DRAWING NUMBER	8948-33
UNIT	#3

B+B

REV.	ZONE	DESCRIPTION	BY	DATE

SYM.	PIECE MARK	ITEM	QUAN.	DESCRIPTION	LENGTH	SPECS.	P. BILL	TOTAL WEIGHT

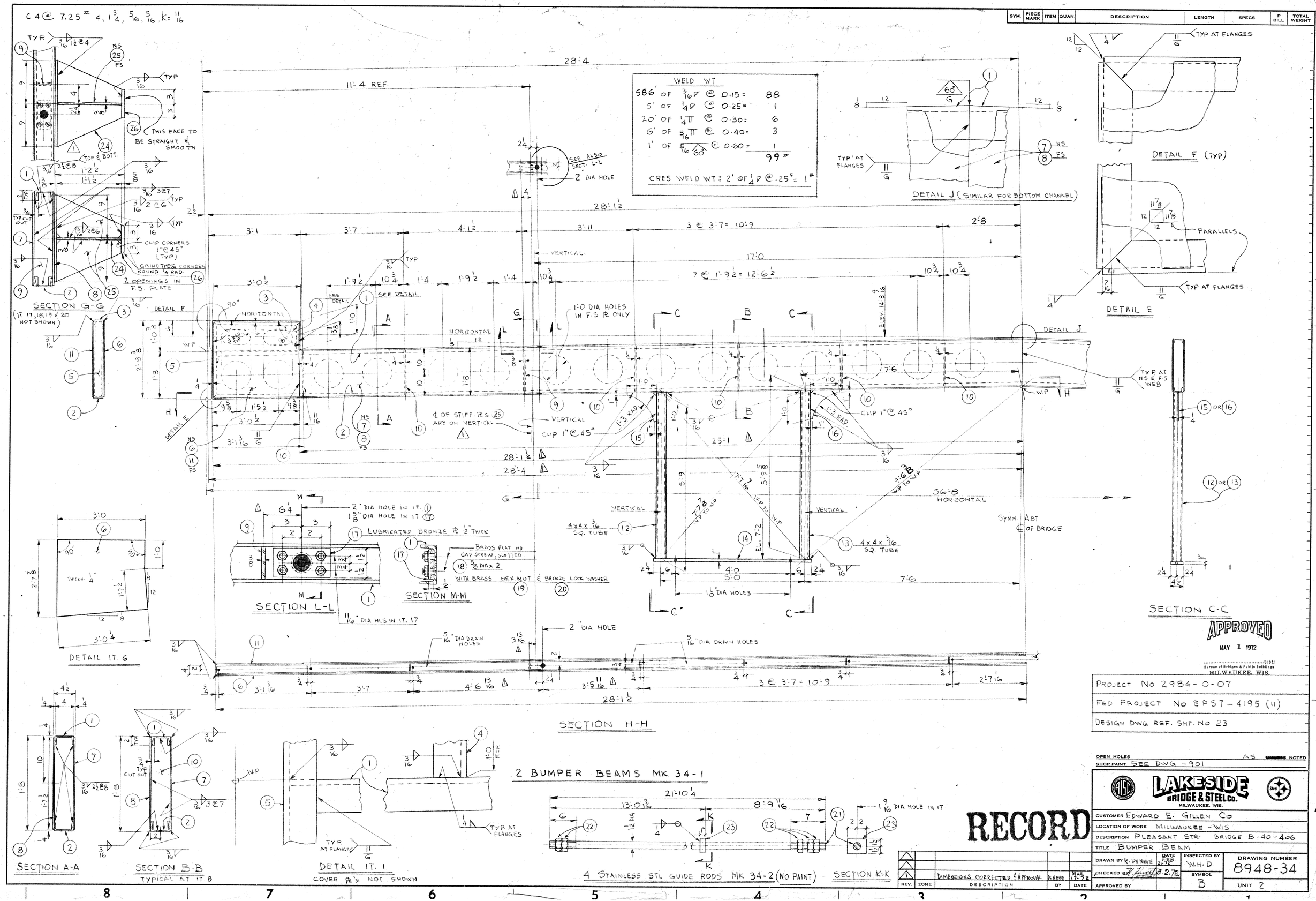

SYM.	PIECE MARK	ITEM	QUAN.	DESCRIPTION	LENGTH	SPECS.	P BILL	TOTAL WEIGHT

GENERAL NOTES

Bridge B-40-406 steel structure to be fabricated in accordance with the State of Wisconsin Department of Transportation, Division of Highways, Standard Specifications for Road and Bridge Construction 1969 except as noted otherwise.

MATERIAL:

Structural carbon steel to conform to ASTM-A36.
High-Strength low alloy steel to conform to ASTM-A242.
Lubricated bronze plates to conform to ASTM-B-438-67, Gr. 1 TYPE 2 △1
Sheet lead to conform to ASTM-B29.
Paint to be furnished and applied in conformance with requirements of System I as set forth in the Standard Specifications for Road and Bridge Construction for the State of Wisconsin except as noted under painting specs.
Drain pipe conforming to Yoloy as manufactured by Youngstown Steel in accordance with Federal Specification W-W-P-404c, and must meet Wisconsin Div. of Highways Spec. for nickel-copper pipe.
Aluminum checkered plate to conform to alloy C102 6061-T6.
Stainless steel ASTM 276, Type 304 and ASTM 240, Type 304.
Material not noted See Drawings and Specs. grid floor framing, etc.

FABRICATION:

When flame cutting re-entrant cuts shall be filleted to a radius of not less than 3/4 inch.
Fasteners will be furnished in accordance with specifications for this project.
Flame cut surfaces of members carrying calculated stress shall have their corners rounded to 1/16 inch radius by grinding.
Structural steel permitted by these specifications or wrought iron may be flame cut, provided a smooth surface free from cracks and notches is secured and provided that an accurate profile is secured by the uses of a mechanical guide. Hand cutting shall be done only where approved by the engineer.
Tack welding permitted on welded items when tacks are incorporated into the required welds.
Identification of Steel:

a. Color code if other than A36 steel per ASTM A6.
b. Heat numbers to be painted on main stress carrying members.
c. Record of heat numbers for main stress carrying members to be furnished at time of inspection. See information Form E-B-43.
d. Weight of members 3 ton or more.
e. Piece marks
f. Match marks when required.

Certified welders must be used. Must be certified with Wisconsin Department of Industry, Labor and Human Relations.
Certified copies of test reports are required covering electrodes (stick), bare wire and flux combinations (submerged arc), all electrodes and combinations of shielding (Gas Metal-Arc Welding and Flux-Cored Arc Welding). For Gas Metal-Arc Welding and Flux-Cored Arc Welding the gas or gas mixture shall have a dew point of -40°F. or lower. Certification of dew point and that the gas or gas mixture is suitable for the intended use is required.

Non-Destructive Inspection:

Non-Destructive inspection to be accomplished in accordance with aforementioned State of Wisconsin Specifications, Section 506.3.19.3, and supplemental specifications #7, September 1970 and per drawings.

Facing of Bearing Surfaces:

The top and bottom of surfaces of steel slabs and the base plate and cap plates of pedestals shall be straight, smooth and free from warp and must bear evenly throughout. Contact steel surfaces subject to sliding motion shall be finished in the direction of motion U.S.A.S.I. No. 125.

Cleaning of Surfaces:

All structural steel shall be cleaned by blast cleaning. Blast cleaning shall remove all mill scale and other substances down to the bare metal. Special attention shall be given to cleaning of corners and re-entrant angles. Before painting, sand, grit or shot adhering to the steel in corners and elsewhere shall be removed. Blast clean per SSPC #6 Commercial Blast.

Assembly:

Floor beam connections shall be sub-punched or sub-drilled and reamed to a steel template with hardened bushings.
Holes marked or circled and noted R.T.# are to be reamed to that respective numbered template.

PAINTING:

Paint shall conform to the requirements of the Standard Specifications for Road and Bridge Construction, System I modified. System I shall consist of a prime shop coat of red lead primer, AASHO M72-Type IV.

Areas which are inaccessible after erection shall receive three shop coats of paint.

1. The first coat shall be red lead primer AASHO, M72, Type IV.
2. The second coat shall be red lead primer AASHO, M72, Type IV, tinted by the addition of 0.2 percent by weight of lamp black oil conforming to Federal Specification, TT-L-71 to each gallon of paint.
3. The third coat to be red lead primer AASHO, M72, Type IV.

"See respective detail drawings for noted areas". SEE ALUMINUM NOTE BELOW

HANDLING MATERIAL:

Material shall be handled during and after fabrication so as not to damage flanges, etc. Particular care shall be used to see that chains are not wrapped on any heavy section, as corners will be damaged.

Areas to be field welded shall be coated with boiled linseed oil.

PROTECTIVE COATING FOR ALUMINUM CONTACT SURFACES:

Aluminum surfaces except top of sidewalk plate to be painted one shop coat zinc chromate primer U.S. Navy Spec. TT-P-86C, Type II steel surfaces in contact with aluminum to be given one coat of heavy bodied Bituminous paint. "Bitumastic "50" by Koppers Co.

PROJECT NO. 2984-0-07
FED. PROJECT NO. EPS T 4195 (11)

RECORD

APPROVED
MAY 1 1972
Supervisor
Bureau of Bridges & Public Buildings
MILWAUKEE, WIS.

OPEN HOLES NONE UNLESS NOTED
SHOP PAINT NONE

LAKESIDE BRIDGE & STEEL CO.
MILWAUKEE, WIS.

CUSTOMER EDWARD E. GILLEN COMPANY
LOCATION OF WORK MILWAUKEE, WISCONSIN
DESCRIPTION PLEASANT STREET BRIDGE B-40-406
TITLE GENERAL NOTES

	DATE	INSPECTED BY	DRAWING NUMBER
DRAWN BY OAK	2-18-72	W.H.D.	8948-901
CHECKED BY	3.7.72	SYMBOL W	UNIT 3
APPROVED BY			

REV.	ZONE	DESCRIPTION	BY	DATE
1	D-7	REVISED SPEC FOR ENGINEER	OAK	3-31-72

SYM.	PIECE MARK	ITEM	QUAN.	DESCRIPTION	LENGTH

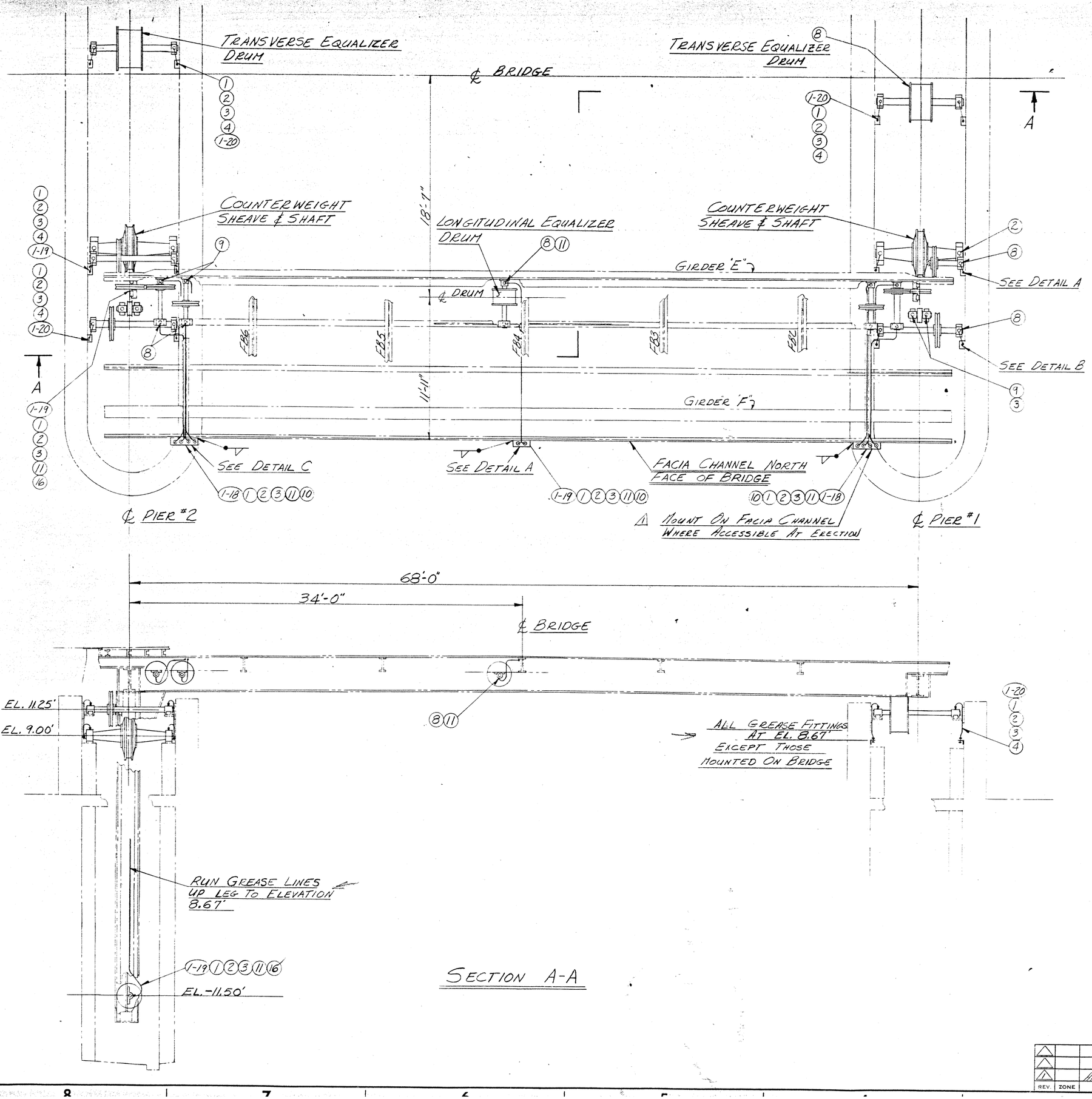

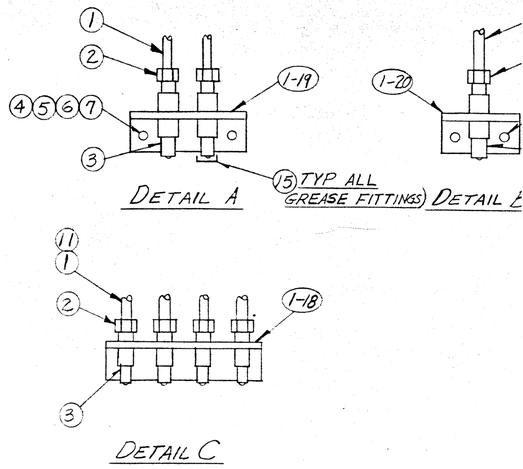

NOTES:

1. ALL GREASE LINES, FITTINGS AND CLAMPS IN THE FIELD.
2. LOCATE GREASE LINES ON WEBS OF BEAMS, OR OTHER AREAS PROTECTED FROM DIRT DRO ROADWAY OR ACCUMULATING ON TUBING IF P
3. MOUNT GREASE HEADERS WHERE THEY WILL B REACHED. THE GREASE GUN DOES NOT HAVE HOSE.
4. ITEMS 12, GREASE GUND, 13 GREASE GUN L POUND PAIL OF GREASE FOR ALL WEATHER SH SHOWN ON THIS SHEET.
5. ALL BENDS SHALL HAVE THE LARGEST POSSI A 90° COMPRESSION ELBOW IF RADIUS WILL 3".
6. NO GREASE LINE SHALL BE UNSUPPORTED FOR GREATER THAN 5.0 FEET.

RECORD

APPR
MAY 29
Bureau of Bridges &
MILWAUK

OPEN HOLES
SHOP PAINT

LAKESID
BRIDGE & STEEL
MILWAUKEE, WIS.

CUSTOMER	EDWARD E. GILLEN
LOCATION OF WORK	PLEASANT STR
DESCRIPTION	PLEASANT STREE
TITLE	LUBRICATION ASSEM
DRAWN BY JP	DATE 1-27-72
CHECKED BY J. DICKINSON	DATE 2-7-72
APPROVED BY GMR	DATE 2-15-72
INSPECTED BY WISC H.D	SYMBOL H

REV.	ZONE	DESCRIPTION	BY	DATE
△				
△				
△		APPROVAL CHANGE	JP	3-20-71

SYM.	PIECE MARK	ITEM	QUAN.	DESCRIPTION	LENGTH	SPECS.	P BILL	TOTAL WEIGHT

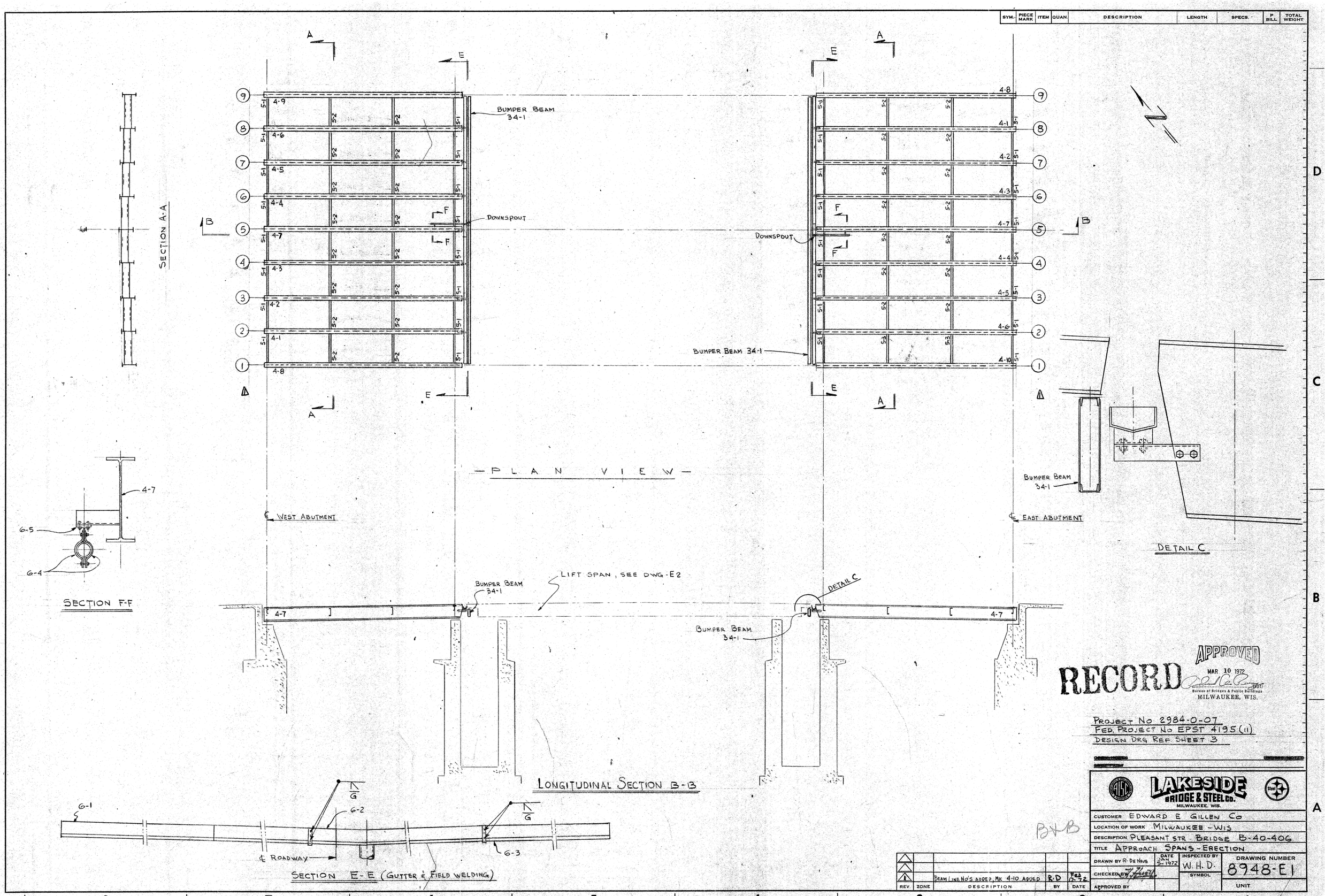

SYM.	PIECE MARK	ITEM	QUAN.	DESCRIPTION	LENGTH	SPECS.	P. BILL	TOTAL WEIGHT

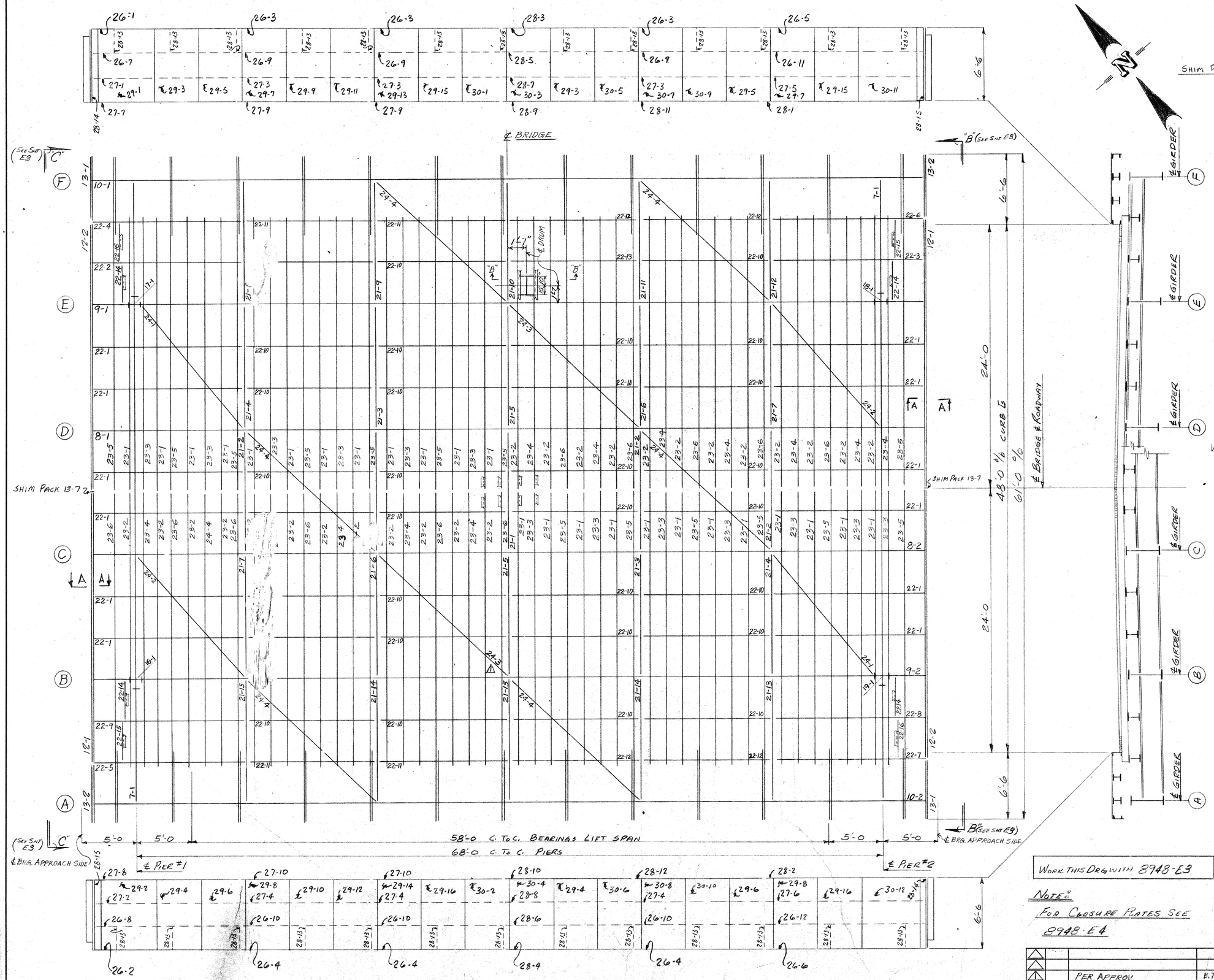

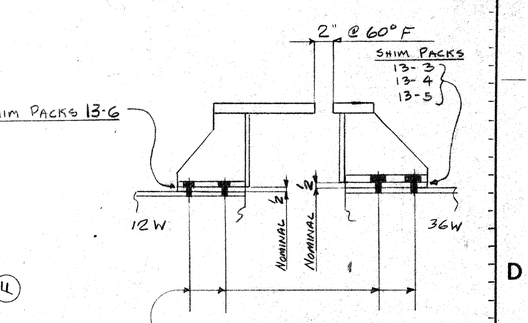

FIELD DRILL 13/16" ϕ HOLES IN GIRDER 12 WT & 36 WT TO MATCH HOLES IN EXP JOINT BR'TS AFTER CORRECTLY POSITIONING EXP. JOINT.

SECTION A-A

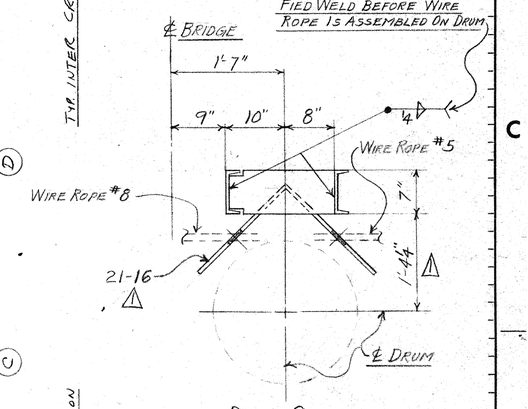

DRUM CANOPY
SECTION "B-B"

PRINTED
APR 20 1972

PROJECT Nº 2984-0-07
FED. PROJECT Nº EPS T 4195 (11)
DESIGN DRG. REF SHT. 18

APPROVED
MAY 1 1972
Bureau of Bridges & Public Buildings
MILWAUKEE, WIS.

RECORD

SHOP PAINT ..... UNLESS NOTED

WORK THIS DRG WITH 8948-E3

NOTE:
FOR CLOSURE PLATES SEE 8948-E4

REV.	ZONE	DESCRIPTION	BY	DATE
1		PER APPROV.	B.T.	3-31-72

LAKESIDE BRIDGE & STEEL CO.
MILWAUKEE, WIS.

CUSTOMER EDWARD E. GILLEN COMPANY
LOCATION OF WORK MILW. WIS
DESCRIPTION PLEASANT ST. BRIDGE B-40-406
TITLE ERECTION PLAN LIFT SPAN

DRAWN BY P.CARR	DATE 2-5-72	INSPECTED BY W.H.D.	DRAWING NUMBER 8948-E2
CHECKED BY	3-6-72	SYMBOL	
APPROVED BY			UNIT

SYM.	PIECE MARK	ITEM	QUAN.	DESCRIPTION	LENGTH	SPECS.	P. BILL	TOTAL WEIGHT

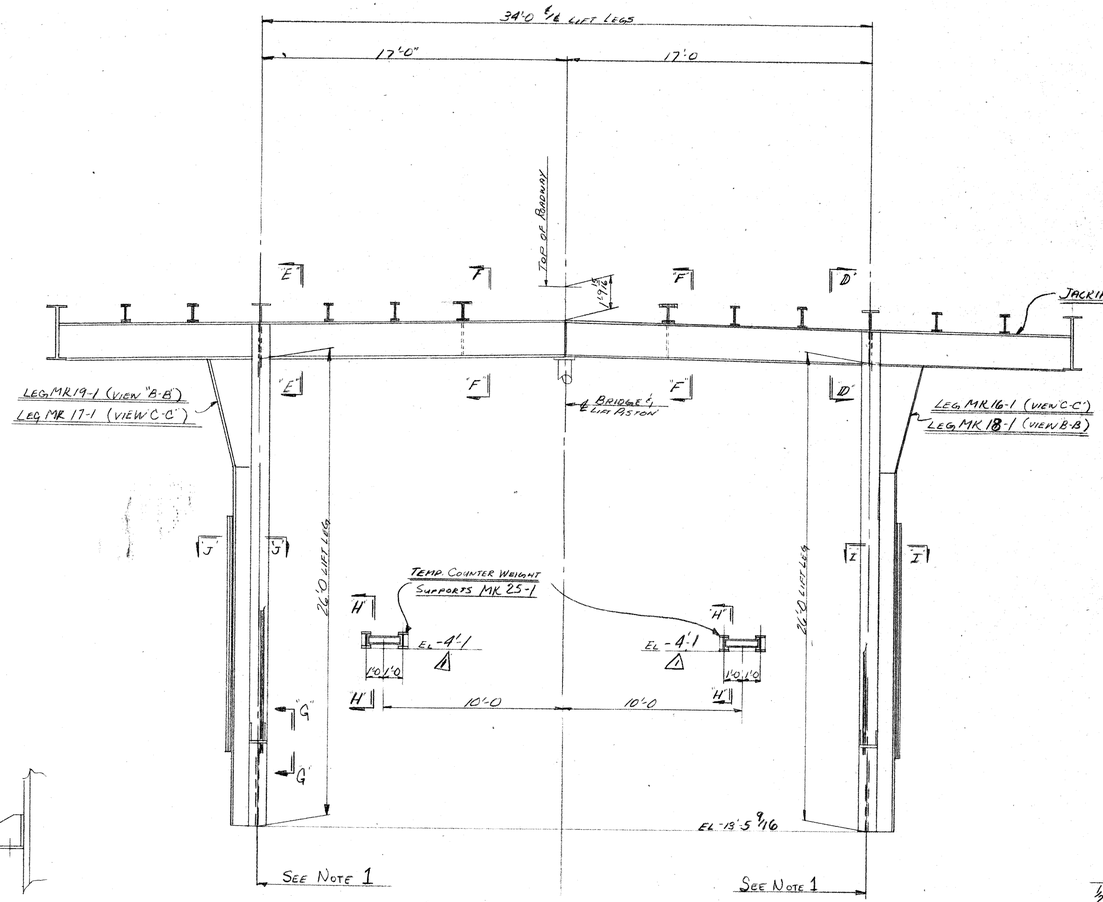

VIEW "B-B"
VIEW "C-C"

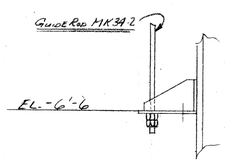

VIEW "G-G"
TYPICAL

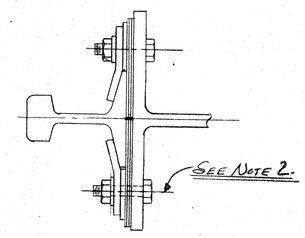

SECTION "J-J"
SECTION I-I (OPP.)

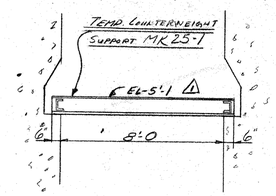

SECTION "H-H"

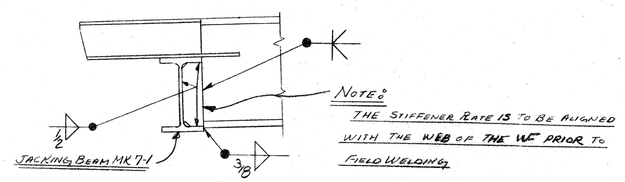

SECTION "E-E"

NOTE:
1 CARE MUST BE TAKEN TO INSURE THAT THE JACKING LEGS ARE VERTICAL IN THEIR FINAL POSITION
2. BOLTS FOR RAIL CLAMPS ARE TO BE TIGHTENED AFTER PROPER RUNNING ALIGNMENT WITH GUIDE ROLLERS HAS BEEN OBTAINED

NOTE:
WORK THIS SHEET WITH 8948-E2

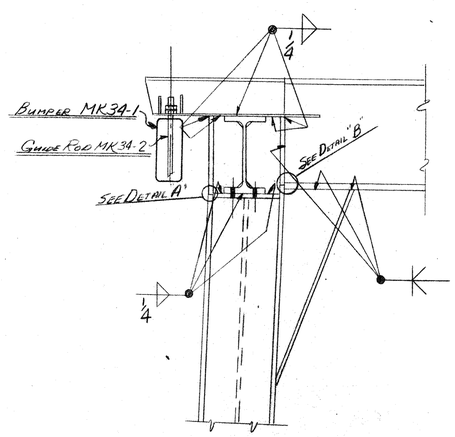

SECTION "E-E"
SECTION D-D (OPP)

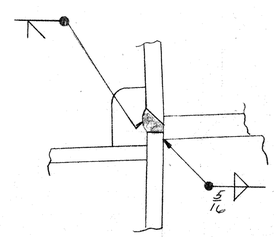

DETAIL B

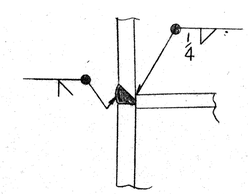

DETAIL "A"

PROJECT No 2984-0-07
FEDERAL PROJECT No. E PS-T-4195(11)
DESIGN DWG REF SHT 22

APPROVED
MAY 1 1972
Supt.
Bureau of Bridges & Public Buildings
MILWAUKEE, WIS. UNLESS NOTED

RECORD

OPEN HOLES NONE
SHOP PAINT SEE SHT 901

LAKESIDE BRIDGE & STEEL CO.
MILWAUKEE, WIS.

CUSTOMER	EDWARD E GILLEN COMPANY
LOCATION OF WORK	MILWAUKEE WISCONSIN
DESCRIPTION	PLEASANT ST BRIDGE B-40 406
TITLE	LIFT SPAN ERECTION DWG.
DRAWN BY	CAK DATE 2-22-72
CHECKED BY	3-6-72
APPROVED BY	
INSPECTED BY	W.H.D
SYMBOL	X
DRAWING NUMBER	8948-E3
UNIT	2

REV.	ZONE	DESCRIPTION	BY	DATE
1		APPROVAL CHANGES	CAK	3-20-72

SYM.	PIECE MARK	ITEM	QUAN.	DESCRIPTION	LENGTH	SPECS.	P BILL	TOTAL WEIGHT

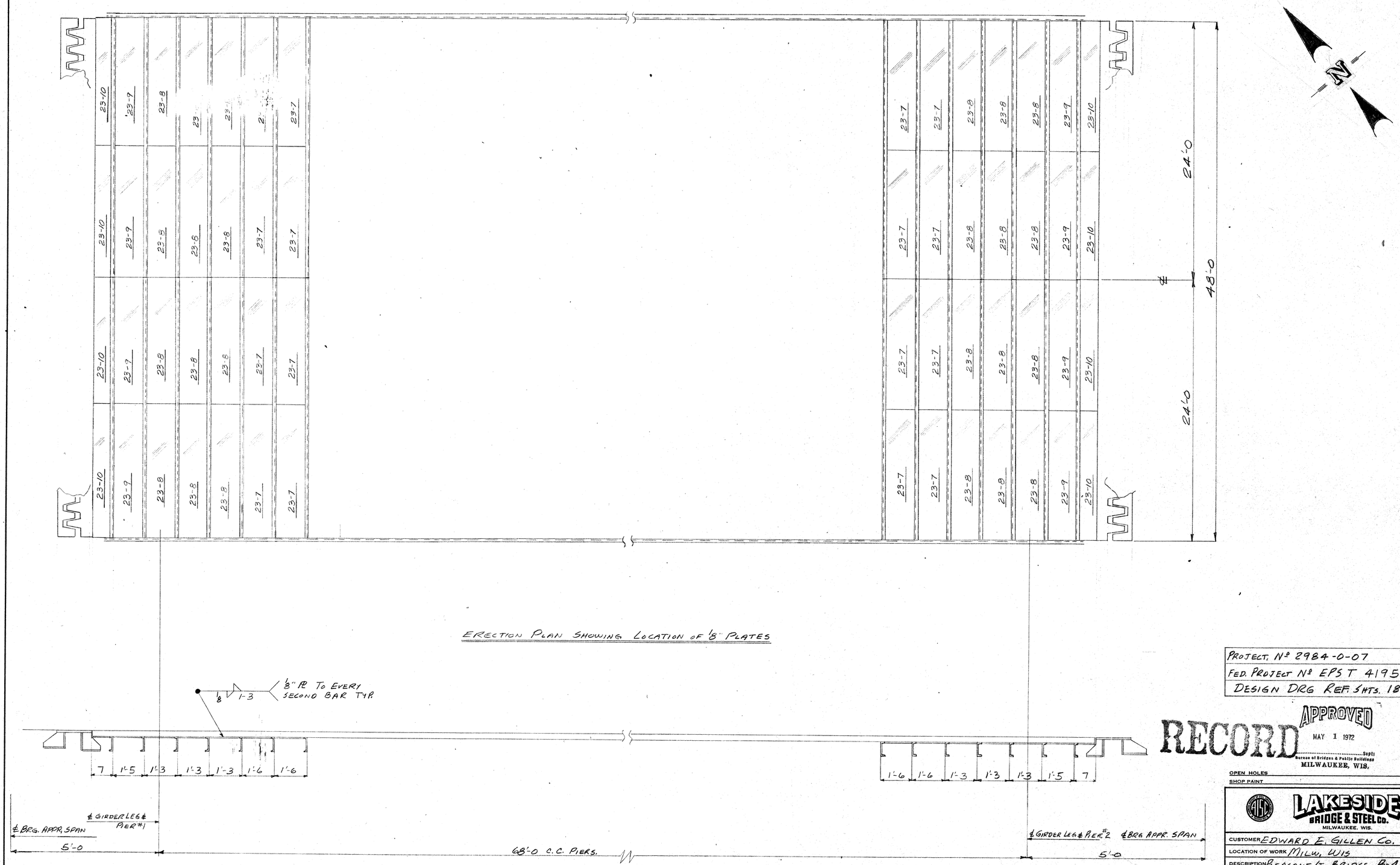

ERECTION PLAN SHOWING LOCATION OF 1/8" PLATES

PROJECT. Nº 2984-0-07
FED. PROJECT Nº EPST 4195 (11)
DESIGN DRG REF. SHTS. 18 & 20

RECORD

APPROVED
MAY 1 1972
Supt.
Bureau of Bridges & Public Buildings
MILWAUKEE, WIS.

OPEN HOLES UNLESS NOTED
SHOP PAINT

LAKESIDE BRIDGE & STEEL Co.
MILWAUKEE, WIS.

CUSTOMER EDWARD E. GILLEN Co.
LOCATION OF WORK MILW, WIS
DESCRIPTION PLEASANT ST. BRIDGE B-40-406
TITLE ERECTION PLAN OF CLOSURE PLATES

DRAWN BY P. CARR	DATE 2-17-72	INSPECTED BY W.H.D.	DRAWING NUMBER 8948-E4
CHECKED BY [signature]	2-29-72	SYMBOL	
APPROVED BY			UNIT

REV.	ZONE	DESCRIPTION	BY	DATE

SYM.	PIECE MARK	ITEM	QUAN.	DESCRIPTION	LENGTH	SPECS.	P BILL	TOTAL WEIGHT

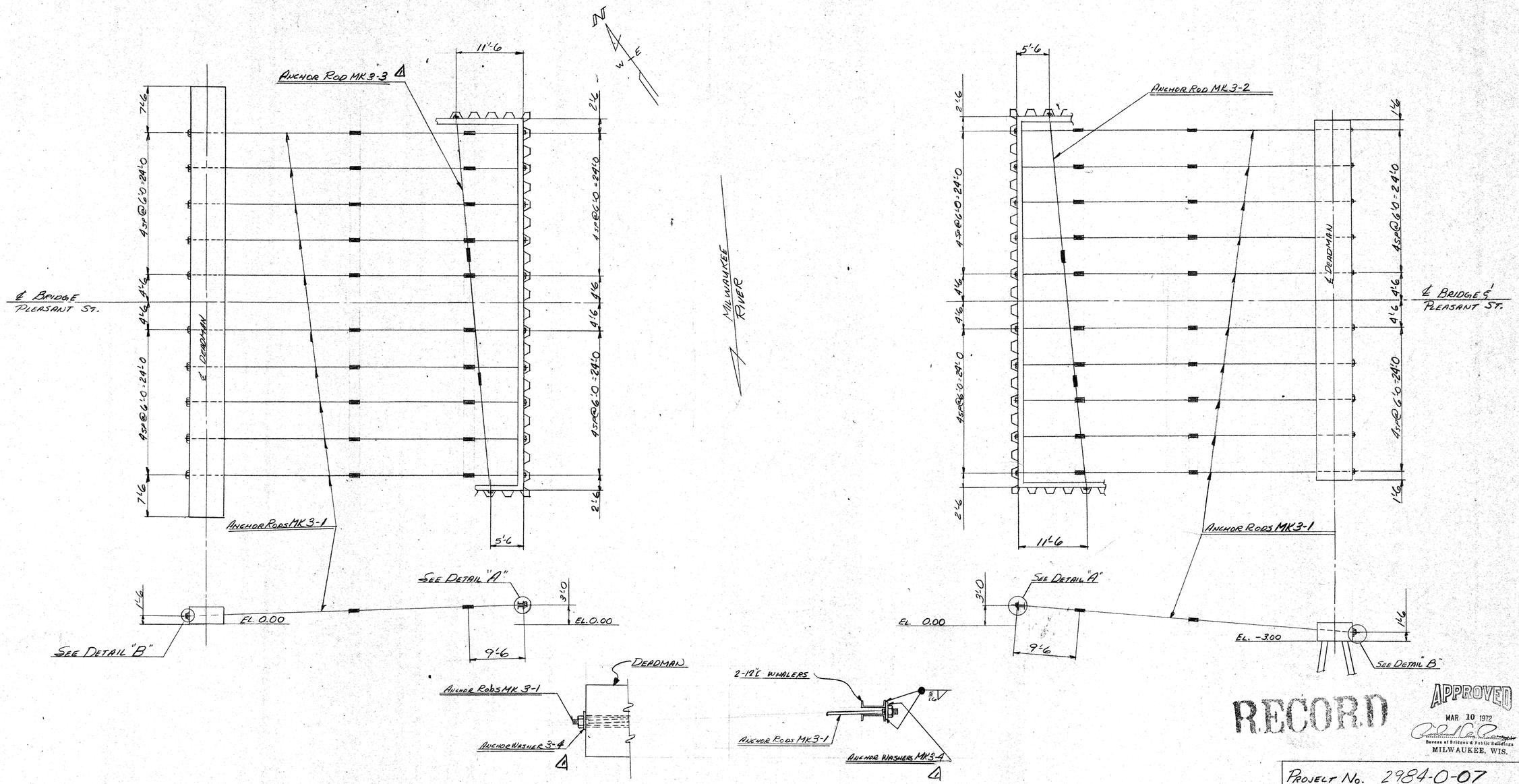

DETAIL "B"
(TYPICAL)

DETAIL "A"
(TYPICAL)

PAINT NOTE:
AFTER ERECTION, THE ANCHOR ROD SYSTEM SHALL BE CLEANED AND GIVEN TWO COATS OF KOPPERS BITUMASTIC No.50

RECORD

APPROVED
MAR 10 1972
Bureau of Bridges & Public Buildings
MILWAUKEE, WIS.

PROJECT No. 2984-0-07
FED. PROJECT No. EPS T 4195 (11)
DESIGN DWG REF SHT. 4

OPEN HOLES NONE UNLESS NOTED
SHOP PAINT SEE NOTE

LAKESIDE BRIDGE & STEEL CO.
MILWAUKEE, WIS.

CUSTOMER EDWARD E. GILLEN COMPANY
LOCATION OF WORK MILWAUKEE, WISC.
DESCRIPTION PLEASANT STREET BRIDGE "B-40-406"
TITLE ANCHOR ROD SETTING PLAN

	DATE
DRAWN BY CAK	2-10-72
CHECKED BY	1-10-72
APPROVED BY	

INSPECTED BY WISCONSIN HIGHWAY DEPT. SYMBOL

DRAWING NUMBER 8948-F1
UNIT 3

B + B

REV.	ZONE	DESCRIPTION	BY	DATE
3				
2				
1		REVISED PIECE MARKS	CAK	2-25-72

ANCHOR ROD SETTING PLAN

SYM.	PIECE MARK	ITEM	QUAN.	DESCRIPTION	LENGTH	SPECS.	P BILL	TOTAL WEIGHT

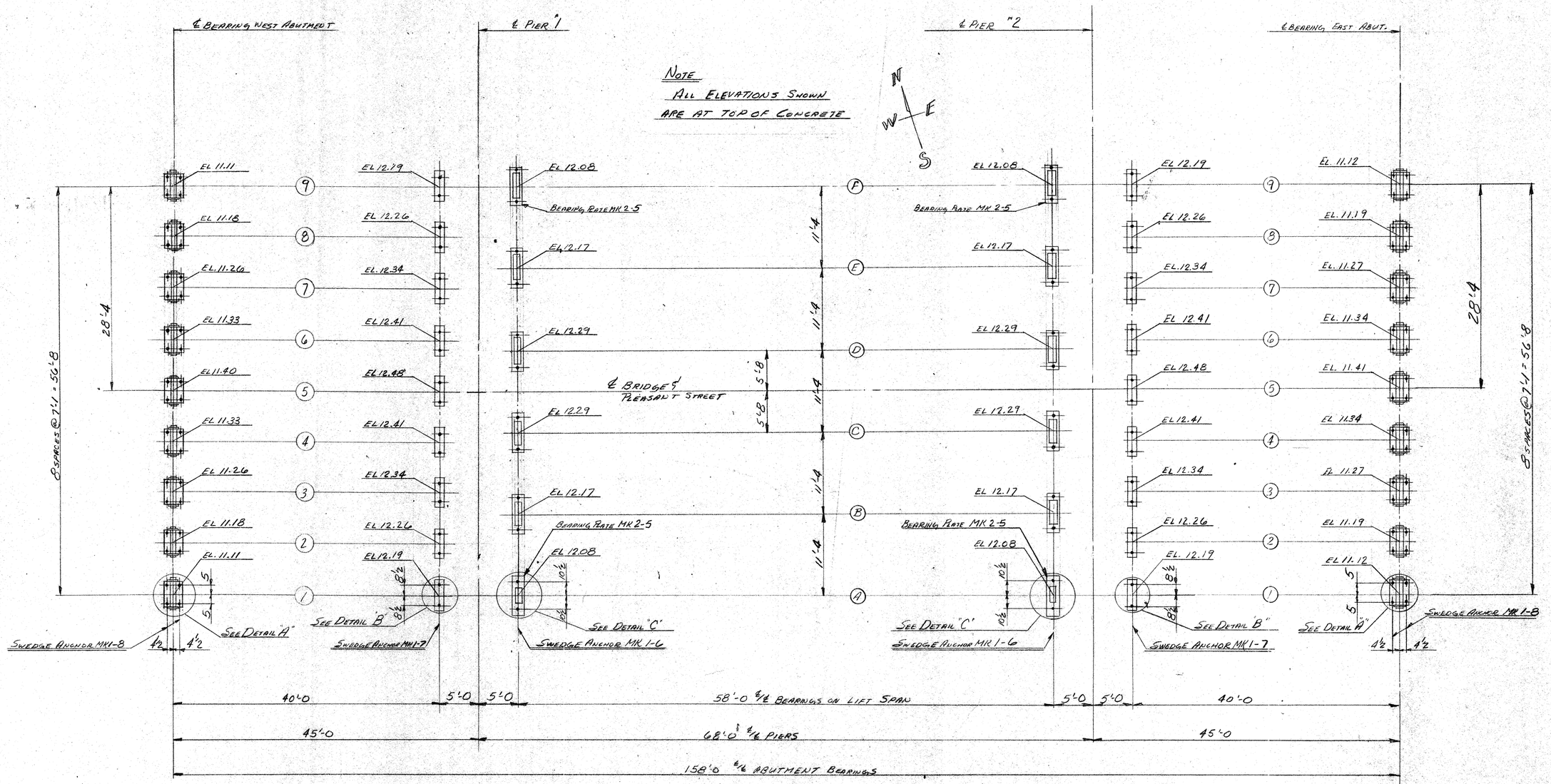

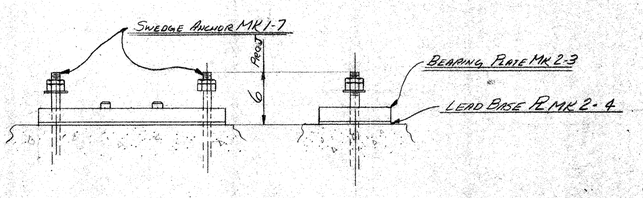

DETAIL "B"
(TYPICAL)

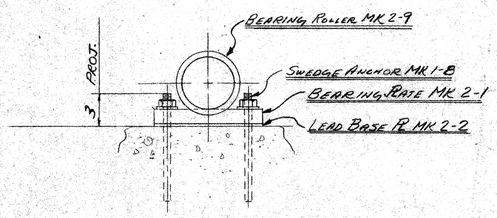

DETAIL "A"
(TYPICAL)

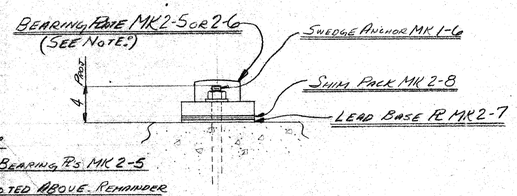

NOTES:
LOCATE BEARING ℞S MK 2-5 WHERE NOTED ABOVE. REMAINDER WILL BE BEARING ℞ MK 2-6

DETAIL "C"

APPROVED
MAR 10 1972
Bureau of Bridges & Public Buildings
MILWAUKEE, WIS.

RECORD

PROJECT NO 2984-0-07
FED PROJECT NO EPS T. 4195(11)
DESIGN DRG REF SHTS 3, 5, 9, 11

OPEN HOLES NONE UNLESS NOTED
SHOP PAINT

LAKESIDE BRIDGE & STEEL CO.
MILWAUKEE, WIS.

CUSTOMER EDWARD E. GILLEN COMPANY
LOCATION OF WORK MILWAUKEE WISC
DESCRIPTION PLEASANT ST BRIDGE B-40-406
TITLE SWEDGE ANCHOR SETTING PLAN & BEARING LAYOUT

	DATE	INSPECTED BY	DRAWING NUMBER
DRAWN BY CAK	1-12-72	W.H.D	8948-F2
CHECKED BY	1.26.72	SYMBOL	
APPROVED BY			UNIT

REV.	ZONE	DESCRIPTION	BY	DATE

B2 & B

SYM.	PIECE MARK	ITEM	QUAN.	DESCRIPTION	LENGTH	SPECS.	P BILL	TOTAL WEIGHT

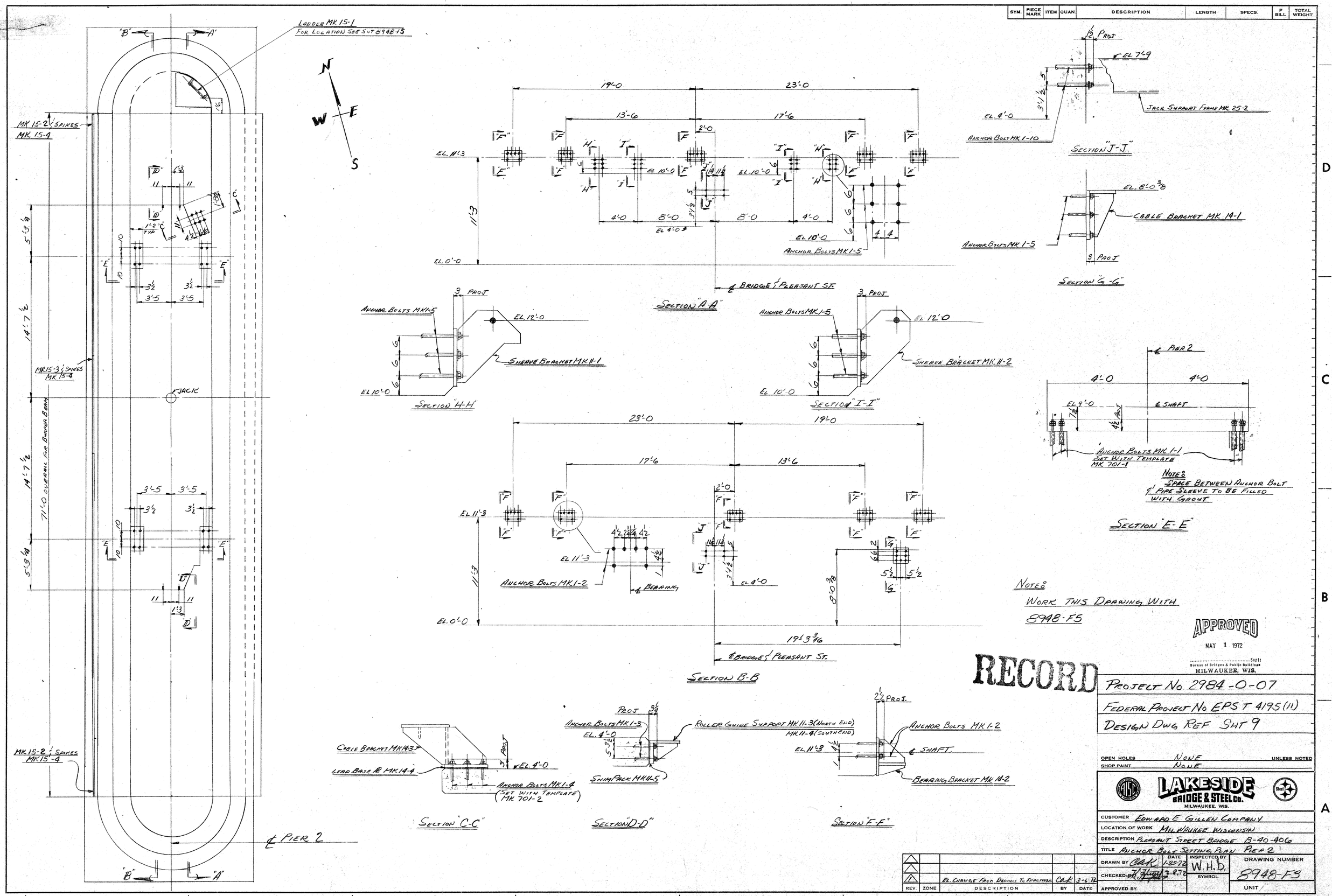

NOTE:
WORK THIS DRAWING WITH
8948-F5

APPROVED
MAY 1 1972
Supt.
Bureau of Bridges & Public Buildings
MILWAUKEE, WIS.

RECORD

PROJECT No. 2984-0-07
FEDERAL PROJECT No. EPS T 4195(11)
DESIGN DWG. REF SHT 9

OPEN HOLES NONE
SHOP PAINT NONE
UNLESS NOTED

LAKESIDE BRIDGE & STEEL CO.
MILWAUKEE, WIS.

CUSTOMER EDWARD E. GILLEN COMPANY
LOCATION OF WORK MILWAUKEE WISCONSIN
DESCRIPTION PLEASANT STREET BRIDGE B-40-406
TITLE ANCHOR BOLT SETTING PLAN PIER 2

	DATE	INSPECTED BY	DRAWING NUMBER
DRAWN BY CLK	1-25-72	W.H.D.	8948-F3
CHECKED BY	2-8-72	SYMBOL	
APPROVED BY			UNIT

REV.	ZONE	DESCRIPTION	BY	DATE
3				
2				
1		EL. CHANGE FROM DECIMAL TO FRACTIONS	CLK	3-6-72

SYM.	PIECE MARK	ITEM	QUAN.	DESCRIPTION	LENGTH	SPECS.	P BILL	TOTAL WEIGHT

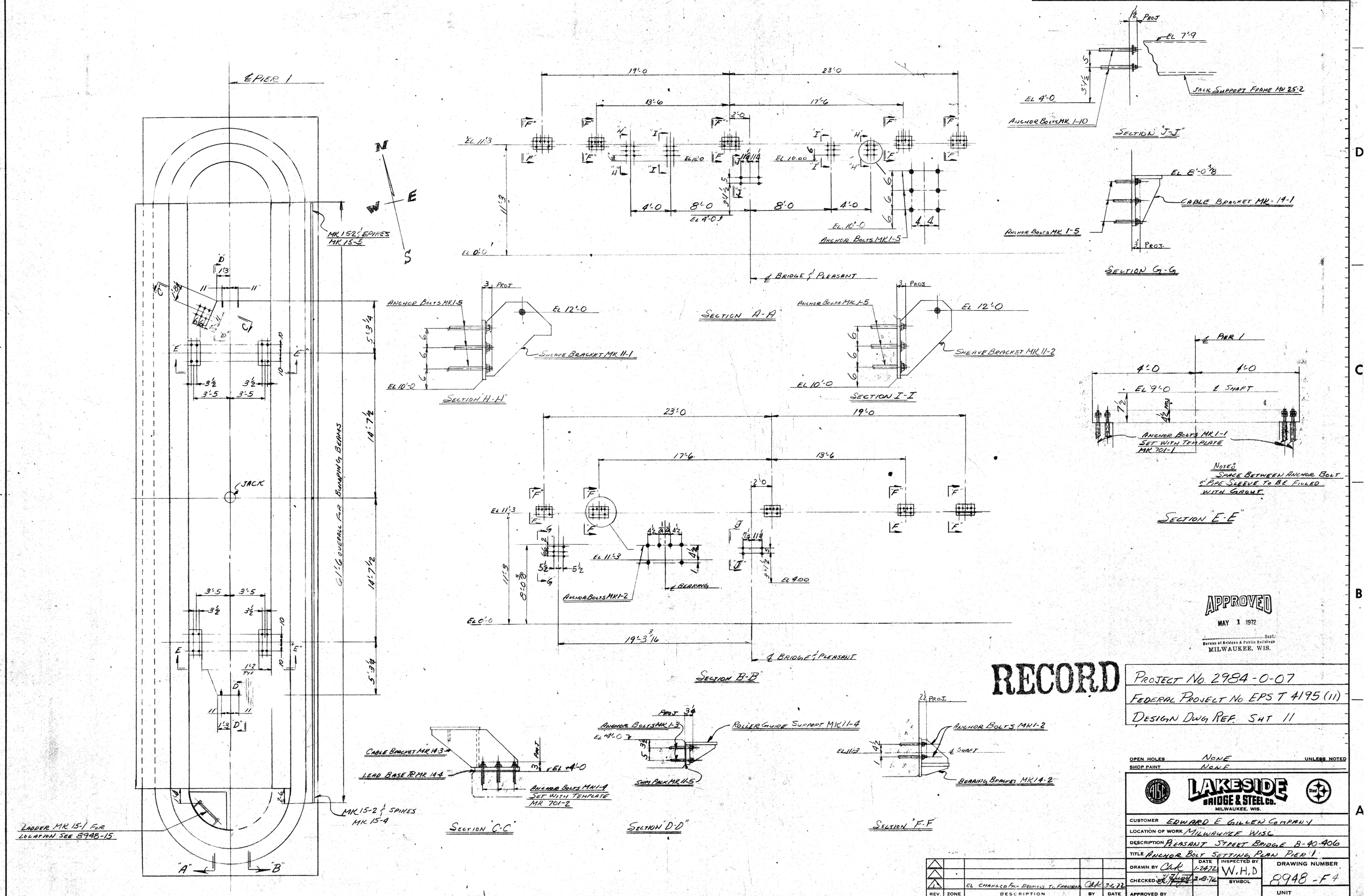

APPROVED
MAY 1 1972
Bureau of Bridges & Public Buildings
MILWAUKEE, WIS.

RECORD

PROJECT No. 2984-0-07
FEDERAL PROJECT No EPS T 4195 (11)
DESIGN DWG REF. SHT 11

OPEN HOLES NONE UNLESS NOTED
SHOP PAINT NONE

LAKESIDE BRIDGE & STEEL CO.
MILWAUKEE, WIS.

CUSTOMER EDWARD E GILLEN COMPANY
LOCATION OF WORK MILWAUKEE WISC
DESCRIPTION PLEASANT STREET BRIDGE B-40-406
TITLE ANCHOR BOLT SETTING PLAN PIER 1

REV.	ZONE	DESCRIPTION	BY	DATE
1		EL CHANGED FROM DECIMALS TO FRACTIONS	CAK	3-6-72

DRAWN BY CAK DATE 1-24-72
CHECKED BY [signature] 2-8-72
APPROVED BY
INSPECTED BY W.H.D
SYMBOL
DRAWING NUMBER 8948-F4
UNIT