PROJECT I.D.
2984-0-0
FEDERAL PROJECT DES
T-4195 (11)

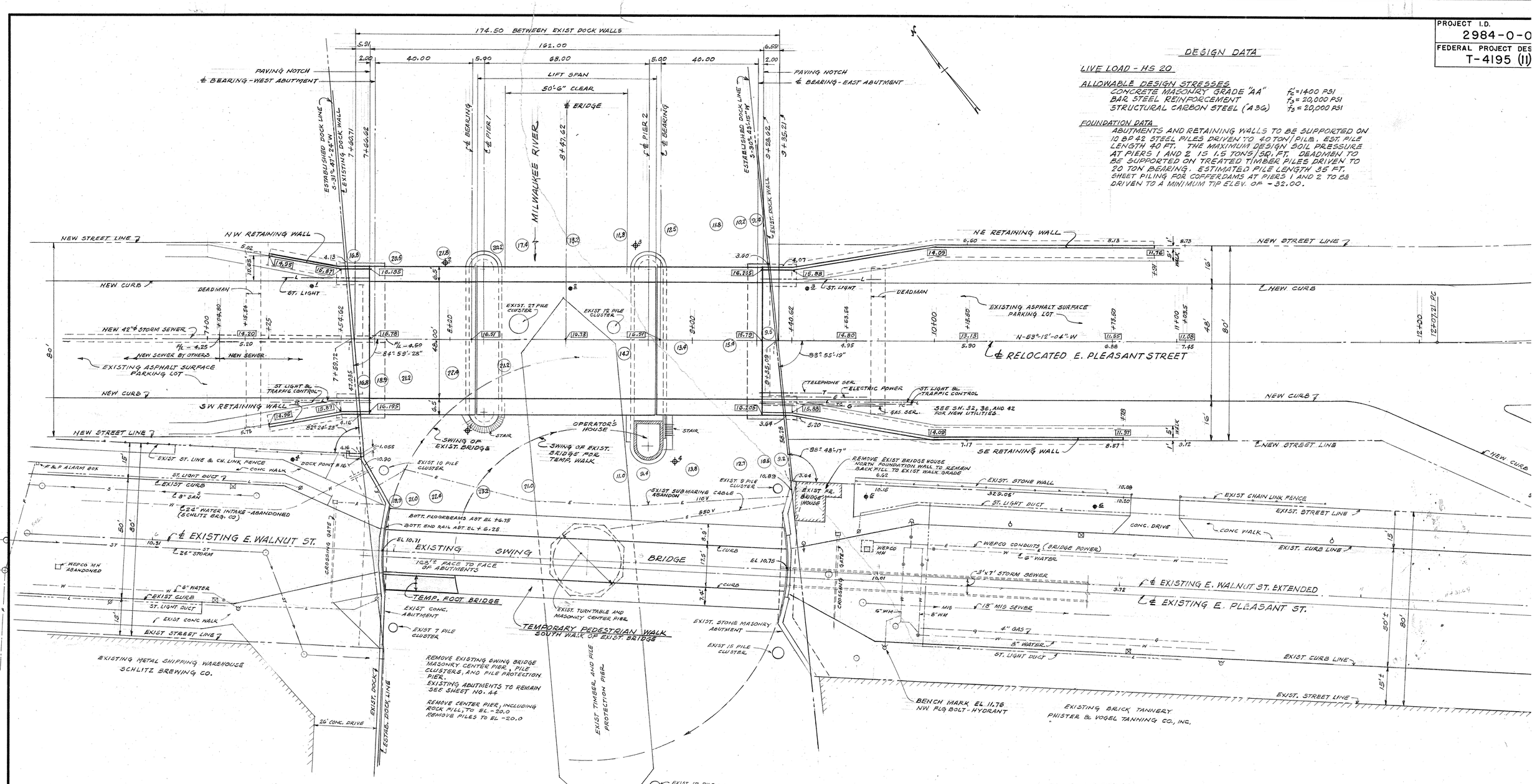

DESIGN DATA

LIVE LOAD - HS 20

ALLOWABLE DESIGN STRESSES

CONCRETE MASONRY GRADE "AA"	f'_c = 1400 PSI
BAR STEEL REINFORCEMENT	f'_s = 20,000 PSI
STRUCTURAL CARBON STEEL (A 36)	f'_s = 20,000 PSI

FOUNDATION DATA

ABUTMENTS AND RETAINING WALLS TO BE SUPPORTED ON 10 BP 42 STEEL PILES DRIVEN TO 40 TON/PILE. EST. PILE LENGTH 40 FT. THE MAXIMUM DESIGN SOIL PRESSURE AT PIERS 1 AND 2 IS 1.5 TONS/SQ. FT. DEADMEN TO BE SUPPORTED ON TREATED TIMBER PILES DRIVEN TO 20 TON BEARING. ESTIMATED PILE LENGTH 35 FT. SHEET PILING FOR COFFERDAMS AT PIERS 1 AND 2 TO BE DRIVEN TO A MINIMUM TIP ELEV. OF -32.00.

SITE PLAN

SCALE 1" = 20'

DRAWING INDEX

1	SITE PLAN	X44298
1A	ESTIMATE OF QUANTITIES	X44299
2	TEST BORINGS & PILES	X44300
3	FRAMING PLAN AND GRADE PROFILE	X44301
4	PLAN - ABUTMENTS AND RETAINING WALLS	X44302
5	EAST AND WEST ABUTMENTS	X44303
6	SHEET PILING DETAILS AND WEST RETAINING WALLS	X44304
7	EAST RETAINING WALLS	X44305
8	COFFERDAM PIERS 1 AND 2 - SEWER AT WEST ABUT.	X44306
9	PIER 2	X44307
10	PLAN PIER 2 AT ELEV. + 4.00	X44308
11	PIER 1	X44309
12	APPROACH SPAN BEAM - PIERS 1 AND 2	X44310
13	BRIDGE OPERATOR'S HOUSE	X44311
14	OPERATOR'S HOUSE - CONCRETE DETAILS	X44312
15	OPERATOR'S HOUSE - WINDOW AND DOOR DETAILS	X44313
16	OPERATOR'S HOUSE - STEEL AND ROOF DETAILS	X44314
17	OPERATOR'S HOUSE - SIGNAL BALL	X44315
18	LIFT SPAN - PLAN	X44316
19	LIFT SPAN - CROSS SECTION	X44317
20	LIFT SPAN - END SECTION & EXPANSION JOINT	X44318
21	LIFT SPAN - EXPANSION JOINT DETAILS	X44319
22	LIFT SPAN - JACKING BEAM AND LIFT LEG	X44320
23	LIFT SPAN - BUMPER BEAM	X44321
24	LIFT SPAN - COUNTERWEIGHT	X44322
25	MACHINERY - PLAN OF TRANSVERSE EQUALIZER AND COUNTERWEIGHT	X44323
26	MACHINERY - PLAN OF LONGITUDINAL EQUALIZER	X44324
27	MACHINERY - COUNTERWEIGHT SYSTEM	X44325
28	MACHINERY - EQUALIZER SYSTEM - TRANSVERSE	X44326
29	MACHINERY - EQUALIZER SYSTEM - LONGITUDINAL	X44327
30	MACHINERY - ROLLER GUIDE SYSTEM	X44328
31	MACHINERY - CABLE AND BEARING BRACKETS	X44329
32	APPROACH SPAN - DECK PLAN AND SECTION	X44330
33	APPROACH SPAN - STRINGERS, DIAPHRAGMS, & BEARINGS	X44331
34	LIGHT POLE AND RAILING DETAILS	X44332
35	CIRCULAR STAIR	X44333
36	ELECTRICAL - LAYOUT PLANS AND ELEVATIONS	X44334
37	ELECTRICAL - SECTIONS AND DETAILS	X44335
38	ELECTRICAL - LIMIT SWITCH & TERMINAL CABINETS	X44336
39	ELECTRICAL - SCHEMATIC DIAGRAM	X44337
40	HYDRAULIC - PLAN OF EQUIPMENT	X44338
41	HYDRAULIC - HOIST AND PIPING DETAILS	X44339
42	OPERATORS HOUSE - HEATING AND PLUMBING	X44340
43	NAME PLATE	X44341
44	EXISTING SWING BRIDGE - ABUTMENT ALTERATIONS	X44342
45	TEMPORARY FOOT BRIDGE AND WALK	X44343
46	BILL OF REINFORCEMENT	X44344

EXISTING SWING BRIDGE DRAWINGS

CENTER PIER
PROTECTION PIER
M9 - GENERAL PLAN & DETAILS FOR ALTERATIONS
M11 AND M12 - MISCELLANEOUS DETAILS OF REPAIRS

EXISTING BRIDGE OPERATION

THE EXISTING BRIDGE SHALL BE KEPT OPEN TO VEHICULAR AND PEDESTRIAN TRAFFIC UNTIL THE EAST AND WEST ABUTMENTS AND PIER 2 HAVE BEEN CONSTRUCTED COMPLETELY; AND PIER 1 UP TO EL. + 4.00.

AFTER PIER 1 IS CONSTRUCTED UP TO EL. + 4.00, THE EXISTING BRIDGE SHALL BE BE CLOSED TO VEHICULAR TRAFFIC.

THE BRANCH 1 CONTRACTOR SHALL REMOVE THE WEST 30 FEET OF THE EXISTING BRIDGE AND BUILD A TEMPORARY FOOT BRIDGE TO PROVIDE A TEMPORARY PEDESTRIAN WALK ON THE SOUTH WALK OF THE EXISTING BRIDGE.

THE EXISTING BRIDGE SHALL REMAIN IN SERVICE UNTIL PEDESTRIAN TRAFFIC IS PROVIDED ON THE NEW BRIDGE.

EXISTING BRIDGE TO BE OPERATED BY CITY OF MILWAUKEE DURING CONSTRUCTION.

LEGEND

100.00	EXISTING GRADE
100.00	NEW FINISH GRADE
○ OR □	MANHOLE
⊠	CATCH BASIN
	POWER POLE
	STREET LIGHT POLE
	HYDRANT
	GATE VALVE
	TRAFFIC SIGNAL
2 BORING NO.	TEST BORING
—S—	SANITARY SEWER
—ST—	STORM SEWER
—MIS—	METROPOLITAN INTERCEPTOR SEWER
—G—	GAS MAIN
—W—	WATER MAIN
—F—	FIRE AND POLICE - UNDERGROUND
—E—	ELECTRIC POWER - UNDERGROUND
—T—	TELEPHONE - UNDERGROUND
—L—	STREET LIGHTING - UNDERGROUND
	PROPERTY OR STREET LINE - ESTABLISHED DOCK LINE
12.0	SOUNDINGS - ELEVATIONS OF RIVER BOTTOM BELOW CITY DATUM EL. 0.00. SOUNDINGS TAKEN APR. 5, 1951
2 PILE NO.	TEST PILE

BIDS OPENED	12-21-71
OPENED TO TRAFFIC	1-4-73
FINAL ACCEPTANCE	8-24-73

X 44298

STATE OF WIS
DEPARTMENT OF TR
DIVISION OF H

STRUCTURE B-

PLEASANT ST. VERTICA

County MILWAUKEE		City
Design Spec. AASHO 1969		Load
Designed By	Design Checked	Draw. By

Approved _____
Chief Bridge Engineer

WISCONSIN GEORGE C. ASHTON MILWAUKEE, WISCONSIN PROFESSIONAL ENGINEER

DEPARTMENT OF PUBLIC W
BUREAU OF BRIDGES AND PUBLIC
CITY OF MILWAUKEE

REVISIONS		
MARK	DATE	BY
A		
B		
C		
D		
E		
F		
G		
H		
I		
J		
K		
L		
M		

PLEASANT ST. VERTICA
OVER MILWAUKEE
SITE PL

DESIGNED BY: T. E. S. TRACED BY:
DRAWN BY: T. E. S. CHECKED BY
APPROVED:—

Morris G. Bataldon DATE: 12-
DESIGNER IN CHARGE

George C. Ashton DATE: 1-
CHIEF OF BRIDGES AND PUBLIC BUILDINGS

Kenneth W. Lathrop DATE: 1-2
DEPUTY COMMISSIONER OF PUBLIC WORKS

PROJECT I.D.
2984-0-0
FEDERAL PROJECT DES
T-4195 (2)

ESTIMATE OF QUANTITIES

ITEM NO.	BID ITEM	UNIT	WALLS	ABUTMENTS	PIERS	SUPERSTRUCTURE LIFT SPAN	SUPERSTRUCTURE APPR. SPANS
20351	REMOVING OLD BRIDGE	LUMP SUM					
20411	REMOVING GUARD RAIL	LIN. FT.	140				
20601	EXCAVATION FOR STRUCTURES, BRIDGES	CU. YD.	530	440	1680		
20901	GRANULAR BACKFILL	CU. YD.	1000	1,400			
40701	BITUMINOUS CONCRETE PAVEMENT ●	TON				14	58
40702	BITUMINOUS MATERIAL FOR SURFACE COURSE ●	TON				1	3
50201	CONCRETE MASONRY, BRIDGES	CU. YD.	410	426	1,470	74	157
50211	CONCRETE MASONRY, SEAL ● ●	CU. YD.			1,210		
50501	BAR STEEL REINFORCEMENT, BRIDGES	POUND	29,430	26,600	143,740		58,430
50601	STRUCTURAL CARBON STEEL *	POUND		16,125	9,200	238,175	123,355
50605	STRUCTURAL LOW ALLOY STEEL * *	POUND				12,990	14,200
50624	BEARING PADS * * *	SQ. FT.					
50702	TREATED LUMBER AND TIMBER	M.B.M.			4		
50810	UNTREATED TIMBER PILING, DELIVERED	LIN. FT.		2905			
50813	UNTREATED TIMBER PILING, DRIVEN	LIN. FT.		2905			
50840	PREBORING, TIMBER PILING	LIN. FT.		18			
51205	STEEL SHEET PILING, DELIVERED	SQ. FT.		7,300			
51206	STEEL SHEET PILING, DRIVEN	SQ. FT.		7,300			
51426	DOWNSPOUT, 6"	LIN. FT.			16		
51601	DAMPPROOFING	SQ. YD.	570	184			
64001	LIGHTING UNITS	EACH					4
90001	BRIDGE OPERATORS HOUSE	LUMP SUM			✓		
90002	ELECTRICAL WORK	LUMP SUM		✓	✓	✓	✓
90003	HYDRAULIC EQUIPMENT	LUMP SUM			✓	✓	
90004	HEATING AND PLUMBING	LUMP SUM			✓		
90005	MACHINERY	LUMP SUM			✓		
90006	COAL TAR, INTERLAYER PROTECTIVE COAT	SQ. YD.					390
90007	STEEL TUBE RAILING, TYPE A	LIN. FT.	396			148	176
90008	STEEL PIPE RAILING, TYPE B	LIN. FT.			224		
90009	STEEL TUBE RAILING, TYPE C	LUMP SUM			✓		
90010	STEEL PIPE RAILING, TYPE D	LUMP SUM		✓			
90011	ALUMINUM CIRCULAR RAILING, TYPE E	LUMP SUM			✓		
90012	2½-INCH, OPEN STEEL GRID FLOOR	SQ. FT.				3,496	
90013	1-INCH, OPEN STEEL GRID FLOOR	LUMP SUM			✓		
90014	ALUMINUM FLOOR PLATES	LUMP SUM				✓	
	REINFORCED CONCRETE PIPE, CLASS IV, STORM SEWER, 42-INCH ‡	LIN. FT.		64			
	NON-BID ITEMS						
	COPPER WATERSTOP	LIN. FT.			344		
	POLYVINYL CHLORIDE WATERSTOP	LIN. FT	240		360		

	ANCHOR RODS	16,125 PO
	A36 STEEL	360,750 PO
	STEEL SLABS (COUNTERWEIGHT)	8,160 PO
	GUIDE RAILS	1,820 PO
*	STRUCTURAL CARBON STEEL	386,855 PO
	A 242 STEEL	23,785 PO
	A 588 STEEL	2,830 PO
	STAINLESS STEEL	575 PO
* *	STRUCTURAL LOW ALLOY STEEL	27,190 PO
	LUBRICATED BRONZE	250 PO

INCLUDED IN PRICE BID FOR STRUCTURAL CARBON ST

* * * ALL BEARING PADS TO BE SHEET LEAD.

● SHOWN ON PLANS AS ASPHALT AND ASPHALT FILL - SEE

● ● SHOWN ON PLANS AS TREMIE SEAL.

‡ ITEM - REINFORCED CONCRETE PIPE, CLASS IV, STORM
42-INCH IS INCLUDED IN THE QUANTITIES FOR RO
ITEMS.

GENERAL NOTES

DESIGN SPECIFICATIONS: AASHO SPECIFICATIONS 1969

ALL MATERIALS WORK AND FABRICATION SHALL BE IN ACCORDANCE WITH AND SHALL CONFORM TO THE REQUIREMENTS OF THE STATE OF WISCONSIN, DEPARTMENT OF TRANSPORTATION, DIVISION OF HIGHWAYS, STANDARD SPECIFICATIONS FOR ROAD AND BRIDGE CONSTRUCTION 1969 EXCEPT AS OTHERWISE NOTED.

ALL ELEVATIONS ARE REFERRED TO CITY OF MILWAUKEE DATUM.

DRAWINGS SHALL NOT BE SCALED

ALL CONCRETE MASONRY SHALL BE GRADE AA EXCEPT FOR CONCRETE MASONRY SEAL.

BEVEL EXPOSED EDGES OF CONCRETE ¾" UNLESS OTHERWISE NOTED

ALL BAR STEEL REINFORCEMENT SHALL BE ASTM 615, GRADE 40

ALL REINFORCEMENT SHALL HAVE 2" CLEARANCE UNLESS OTHERWISE NOTED.

SEE SPECIAL PROVISIONS FOR OPERATORS HOUSE, ELECTRICAL WORK, HYDRAULIC EQUIPMENT, HEATING AND PLUMBING, MACHINERY, ETC.

X 44299

STATE OF WIS
DEPARTMENT OF TRA
DIVISION OF HI

STRUCTURE B-

DEPARTMENT OF PUBLIC W
BUREAU OF BRIDGES AND PUBLIC
CITY OF MILWAUKEE

REVISIONS		
MARK	DATE	BY
A		
B		
C		
D		
E		
F		
G		
H		
I		
J		
K		
L		
M		

PLEASANT ST. VERTICAL
OVER MILWAUKEE
ESTIMATE OF QUA

DESIGNED BY: TRACED BY:
DRAWN BY: TES CHECKED BY

APPROVED:—

Norris C. Batelden DATE: 12-
DESIGNER IN CHARGE

George C. Ashton DATE: 1-2
SUPT. OF BRIDGES AND PUBLIC BUILDINGS

Donald W. Keating DATE: 1-2
DEPUTY COMMISSIONER OF PUBLIC WORKS

BORING NO. 1

ELEVATION	SAMPLE NO.	BLOWS/FT.	CLASSIFICATION
+5.0			ASPHALT SURFACE +5.0
+2.0	1	1	FILL- LOOSE BROWN FINE TO MEDIUM SAND WITH SMALL GRAVEL (MOIST TO WET)
EL 0.0	0.0	2	1
-3.0	3	1	
-5.0	4	1	
-8.0	5	1	
-10.0	-10.0	6	1
-13.0	7	2	VERY LOOSE GREY FINE TO MEDIUM SAND - SILTY, TRACE OF ORGANIC SILT AND MARINE SHELLS (WET)
-15.0	8	2	
-18.0	9	3	
-20.0	-20.0	10	2
-23.0	11	2	
-25.0	12	10	LOOSE GREY FINE TO MEDIUM SAND WITH SMALL TO MEDIUM GRAVEL-SILTY- (WET)
-27.0	13	50/4"	COBBLES AND BOULDERS (WET)
-30.0	-30.0	14	50/2"
-35.0	15	50/2"	VERY HARD GREY CLAY - VERY SANDY, TRACE OF SILT, SOME SMALL TO MEDIUM GRAVEL, WIDELY SCATTERED COBBLES AND BOULDERS (MOIST)
-40.0	-40.0	16	60/1"
-45.0	-45.0	17	50/2" END OF BORING

BORING NO. 2

ELEVATION	SAMPLE NO.	BLOWS/FT.	CLASSIFICATION
+5.0			
EL. 0.0			WATER SURFACE
			WATER
-10.0	-11.0	1	0
			VERY SOFT MUCK (WET)
	-15.0	2	0
			VERY LOOSE GREY FINE TO MEDIUM SAND, SILTY (WET)
	-18.0	3	1
-20.0	-20.0	4	1
			VERY LOOSE GREY MEDIUM SAND, - SILTY SCATTERED SMALL GRAVEL (WET)
			FIRM GREY COARSE SAND WITH SMALL TO MEDIUM GRAVEL (WET)
	-25.0	5	30
			DENSE GREY COARSE SAND WITH SMALL TO LARGE GRAVEL, COBBLES AND BOULDERS (WET)
-30.0			END OF BORING - UNABLE TO PENETRATE COBBLES AND BOULDERS WITH BARGE MOUNTED RIG
-40.0			
-45.0			

BORING NO. 3

ELEVATION	SAMPLE NO	BLOWS/FT.	CLASSIFICATION
+5.0			ASPHALT SURFACE +5.0
+2.0	1	2	FILL- ASPHALT, GRAVEL AND CINDERS (MOIST)
EL. 0.0	0.0	2	2
-3.0	3	2	VERY LOOSE GREY MEDIUM SAND - SILTY, TRACE OF GRAVEL AND MARINE SHELLS (WET)
-5.0	4	1	
-8.0	5	1	VERY LOOSE GREY FINE TO COARSE SAND - TRACE OF SMALL GRAVEL (WET)
-10.0	-10.0	6	1
-13.0	7	1	
-15.0	8	3	VERY LOOSE GREY FINE SAND - VERY SILTY (WET)
-18.0	9	4	
-20.0	-20.0	10	21
-23.0	11	25	FIRM GREY FINE TO MEDIUM SAND WITH SMALL TO MEDIUM GRAVEL. (WET)
-25.0	12	38	DENSE GREY FINE TO MEDIUM SAND WITH SMALL TO LARGE GRAVEL, SCATTERED COBBLES AND BOULDERS. (WET)
-28.0	13	42	
-30.0	-30.0	14	50/5"
-33.0	15	50/4"	
-35.0	16	100/3"	VERY HARD GREY CLAY - SILTY TO SANDY, TRACE OF SMALL GRAVEL, SCATTERED SEAMS OF LARGE GRAVEL, COBBLES AND BOULDERS. (MOIST)
-38.0	17	50/2"	
-40.0	-40.0	18	50/2"
-43.0	-45.0	19	50/4" END OF BORING

BORING NO. 4

ELEVATION	SAMPLE NO	BLOWS/FT	CLASSIFICATION
+10.0			SURFACE +10.6
+7.6	1	5	FILL-MIXED BROWN AND BLACK CLAY TRACE OF CINDERS. (MOIST)
+5.6	2	7	FILL-BROWN CLAY-TRACE OF TOPSOIL (MOIST)
+2.6	3	8	STIFF BROWN CLAY - SILTY, TRACE OF SAND. (MOIST)
EL. 0.0	+0.6	4	8
-2.4	5	6	MEDIUM BROWN CLAY-SILTY, TRACE OF SAND (MOIST)
-4.4	6	3	
-7.4	7	4	LOOSE GREY FINE TO MEDIUM SAND - TRACE OF SILT AND SMALL TO MEDIUM GRAVEL (WET)
-10.0	-9.4	8	6
-14.4	9	2	VERY LOOSE GREY FINE SAND - SILTY (WET)
-20.0	-19.4	10	6
			LOOSE GREY FINE TO MEDIUM SAND - TRACE OF SMALL GRAVEL (WET)
-24.4	11	69	
-30.0	-29.4	12	100/4"
			VERY DENSE GREY FINE SAND - SILTY AND CLAYEY WITH SMALL TO LARGE GRAVEL - (MOIST)
-34.4	13	100/6"	
			VERY DENSE GREY FINE SAND - TRACE OF SILT (MOIST)
-40.0	-39.4	14	75/6" END OF BORING

BORING NO. 5

ELEVATION	SAMPLE NO.	BLOWS/FT	CLASSIFICATION
+10.0			SURFACE +10.1
			TOP SOIL
+7.0	1	6	FILL-BROWN CLAY-SANDY, TRACE OF TOPSOIL AND GRAVEL. (MOIST)
+5.0	2	6	
+2.0	3	3	VERY LOOSE BROWN FINE TO MEDIUM SAND - TRACE OF SMALL GRAVEL (MOIST TO WET)
EL 0.0	0.0	4	2
			LOOSE GREY ORGANIC SILT - TRACE OF MARINE SHELLS (WET)
-5.0	5	1	
-7.0	6	2	
-8.0	7	1	
-10.0	-10.0	8	1
			VERY LOOSE GREY FINE TO MEDIUM SAND - SILTY, SCATTERED MARINE SHELLS, SCATTERED THIN SEAMS OF ORGANIC SILT (WET)
-15.0	9	1	
-20.0	-20.0	10	1
			VERY LOOSE GREY FINE SAND - SILTY (WET)
-25.0	11	17	FIRM GREY FINE TO COURSE SAND WITH SMALL TO LARGE GRAVEL, COBBLES AND BOULDERS (WET)
-30.0	-30.0	12	30
-35.0	13	80	VERY DENSE GREY FINE SAND WITH SMALL TO LARGE GRAVEL, COBBLES AND BOULDERS, TRACE OF SILT AND CLAY
-40.0	-40.0	14	50/2" END OF BORING

BORING NO. 6

ELEVATION	SAMPLE NO	BLOWS/FT	CLASSIFICATION
+10.0			SURFACE +10.1
			TOPSOIL
+7.0	1	5	FILL-BROWN CLAY-SANDY, SCATTERED GRAVEL (MOIST)
+5.0	2	3	POSSIBLE FILL - BROWN CLAY - SILTY, SEAMS OF FINE SAND (MOIST)
+3.0	3	4	
			LOOSE BROWN FINE TO MEDIUM SAND (MOIST)
EL. 0.0	0.0	4	4
			LOOSE BROWN FINE TO MEDIUM SAND - TRACE OF ORGANIC SILT & MARINE SHELLS (WET)
-5.0	5	1	
-7.0	6	1	VERY LOOSE ORGANIC SILT - SCATTERED MARINE SHELLS, TRACE OF CLAY AND FINE SAND (MOIST)
-8.0	7	2	
-10.0	-10.0	8	1
			VERY LOOSE GREY FINE SAND - SILTY (WET)
-15.0	9	1	
-20.0	-20.0	10	1
			VERY LOOSE GREY FINE TO COARSE SAND TRACE OF SMALL GRAVEL (WET)
-25.0	11	2	
			VERY DENSE GREY FINE TO COARSE SAND WITH GRAVEL, COBBLES & BOULDERS (WET)
-30.0	-30.0	12	50/4"
			VERY HARD GREY CLAY - SILTY AND VERY SANDY, SCATTERED GRAVEL (MOIST)
-35.0	13	50/5"	
-40.0	-40.0	14	50/1" END OF BORING

SUBSU
TO OL
AND UPO
WERE MA
DATA PR
EXPLOR
LIMITED
IN RELAT
WARRAN
CLASSIF
TYPICAL

X 44300

Form E-B-45-69

PROJECT I.D.	SHEET NUMBER	TOTAL SHEETS
2984-0-07	15	78
FEDERAL PROJECT DESIGNATION ERS T4195(11)		

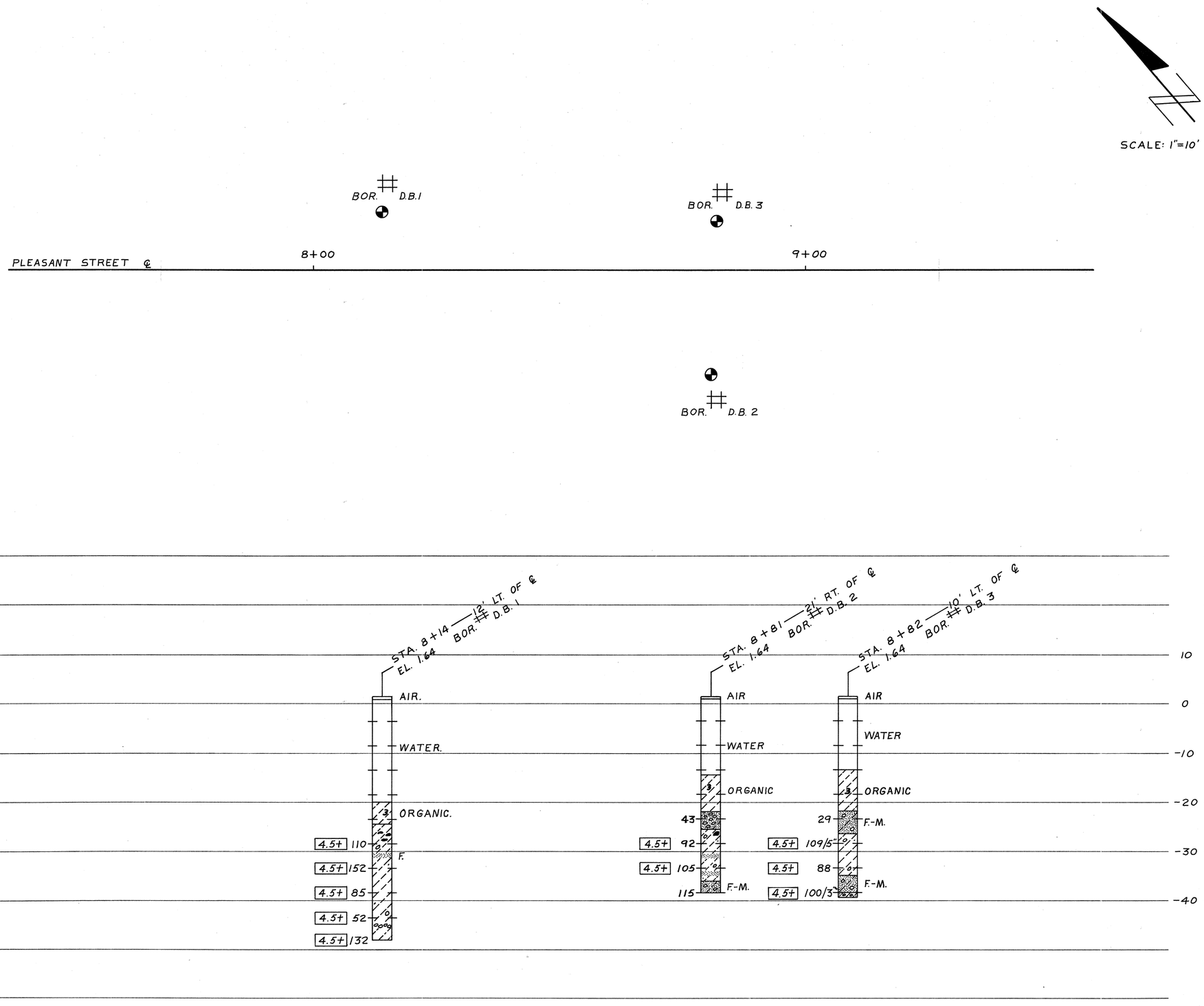

ABBREVIATIONS

F — Fine M — Medium C — Coarse
Ws — Weathered So — Sound

MATERIAL SYMBOLS

Topsoil, Silt, Sandstone, Sand, Peat, Limestone, Gravel, Clay, Igneous Rock

LEGEND OF PROBING

95/6=95 Blows for 6" Penetration
Probing taken with a 350# wt. Falling 18" on a 2" O. D. Point.

Probing No.
Sta.
Elevation
7 Average Blows Per Foot
Refusal 95/6

LEGEND OF BORING

Boring No.
Elev.
Sta.
Unconfined Strength — 7.7
7
Blows Per Ft. Using 140# Wt. Falling 30"
Wash Sample
Shelby Tube — S. T.
Ground Water Elevation
No Ground Water Observed Above This Elevation
Sandy Gravel
F.
Boulders or Cobbles
Sand
Silty Clay
So
Limestone

Unless otherwise specified, the blows per foot at the locations indicated are based on driving a 2" O. D. x 1.4" I. D. split spoon sampler with a 140# hammer having a free fall of 30". The blow count is taken in undisturbed soil immediately below a cased or open hole eliminating side friction on the drive pipe.

SUBSURFACE EXPLORATION FOR FOUNDATION DESIGN AND BIDDERS INFORMATION

To obtain relative data concerning the character of material in and upon which the foundation might be built, borings and/or soundings were made at points approximately as indicated on this drawing. The data presented herein represents the findings of the subsurface explorations made. However, because the depths investigated are limited and the area of the borings and/or soundings is very small in relation to the entire area, the Division of Highways does not warrant conditions below the depths investigated or that the classification of material encountered in these investigations is necessarily typical of the entire site.

No.	Date	Revision	By

STATE OF WISCONSIN
DEPARTMENT OF TRANSPORTATION
DIVISION OF HIGHWAYS

STRUCTURE B-40-406

Const. Spec. | Drawn By D. C. M. | Plans Checked

SUBSURFACE EXPLORATION

SHEET 2A OF 47

X44300A

PROJECT I.D.	SHEET NUMBER	TOTAL SHEETS
2984-0-07		
FEDERAL PROJECT DESIGNATION T-4195 (11)		

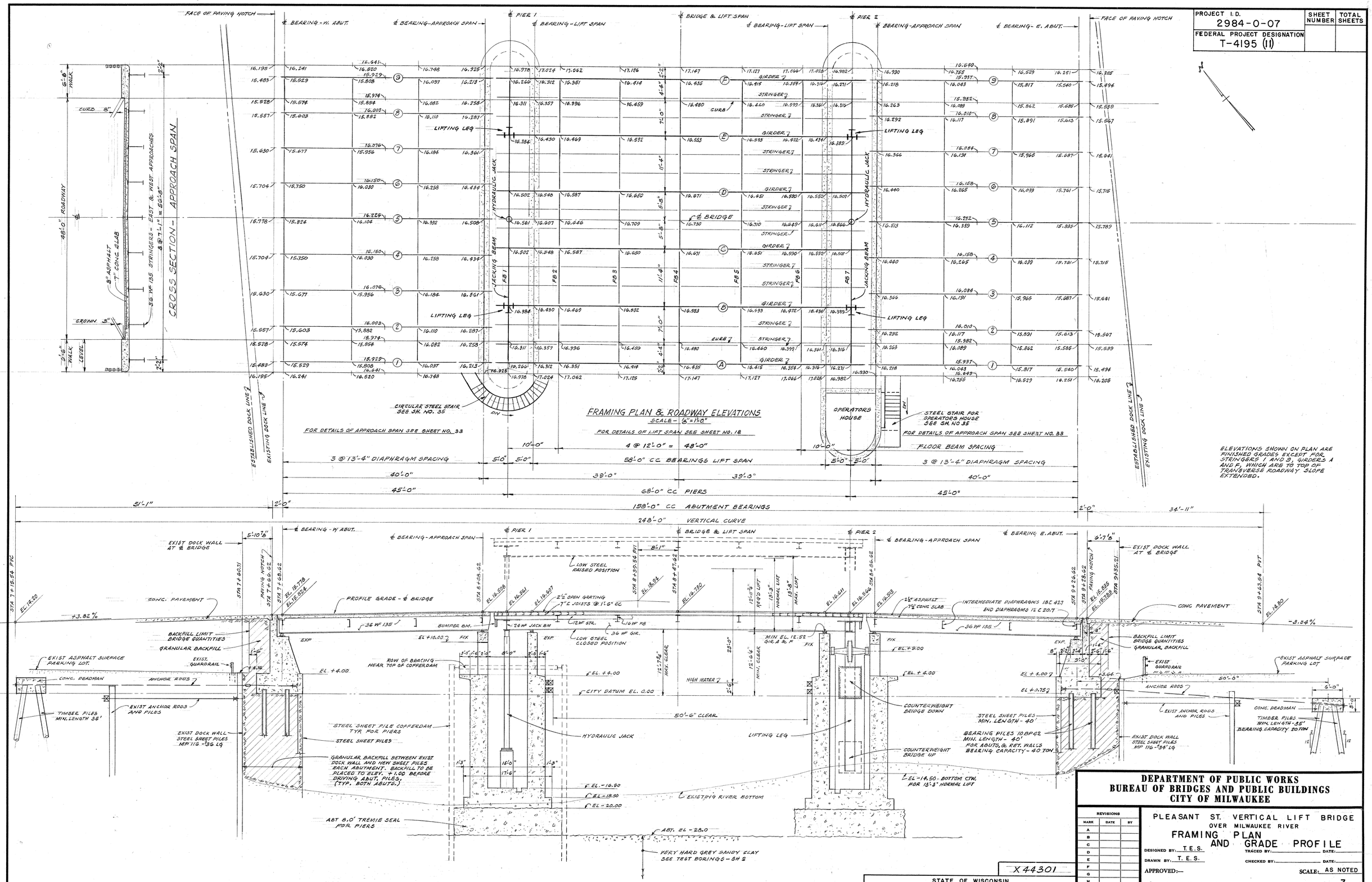

FRAMING PLAN & ROADWAY ELEVATIONS
SCALE - 1/8" = 1'-0"

ELEVATIONS SHOWN ON PLAN ARE FINISHED GRADES EXCEPT FOR STRINGERS 1 AND 9, GIRDERS A AND F, WHICH ARE TO TOP OF TRANSVERSE ROADWAY SLOPE EXTENDED.

LONGITUDINAL SECTION & PROFILE

X44301

STATE OF WISCONSIN
DEPARTMENT OF TRANSPORTATION
DIVISION OF HIGHWAYS

STRUCTURE B-40-406

DEPARTMENT OF PUBLIC WORKS
BUREAU OF BRIDGES AND PUBLIC BUILDINGS
CITY OF MILWAUKEE

REVISIONS		
MARK	DATE	BY
A		
B		
C		
D		
E		
F		
G		
H		
I		
J		
K		
L		
M		

PLEASANT ST. VERTICAL LIFT BRIDGE
OVER MILWAUKEE RIVER
FRAMING PLAN AND GRADE PROFILE

DESIGNED BY: T.E.S. TRACED BY: DATE:
DRAWN BY: T.E.S. CHECKED BY: DATE:
APPROVED:— SCALE: AS NOTED
Norris G. Batalden DESIGNER IN CHARGE DATE: 12-16-70 SHEET NUMBER 3
George C. Ashtone SUPT. OF BRIDGES AND PUBLIC BUILDINGS DATE: 1-20-71 SET OF 47 SHEETS
Donald D. Lothig COMMISSIONER OF PUBLIC WORKS DATE: 1-25-71 JOB NO. 512-74

PROJECT I. D.	SHEET NUMBER	TOTAL SHEETS
2984-0-07		
FEDERAL PROJECT DESIGNATION T-4195 (11)		

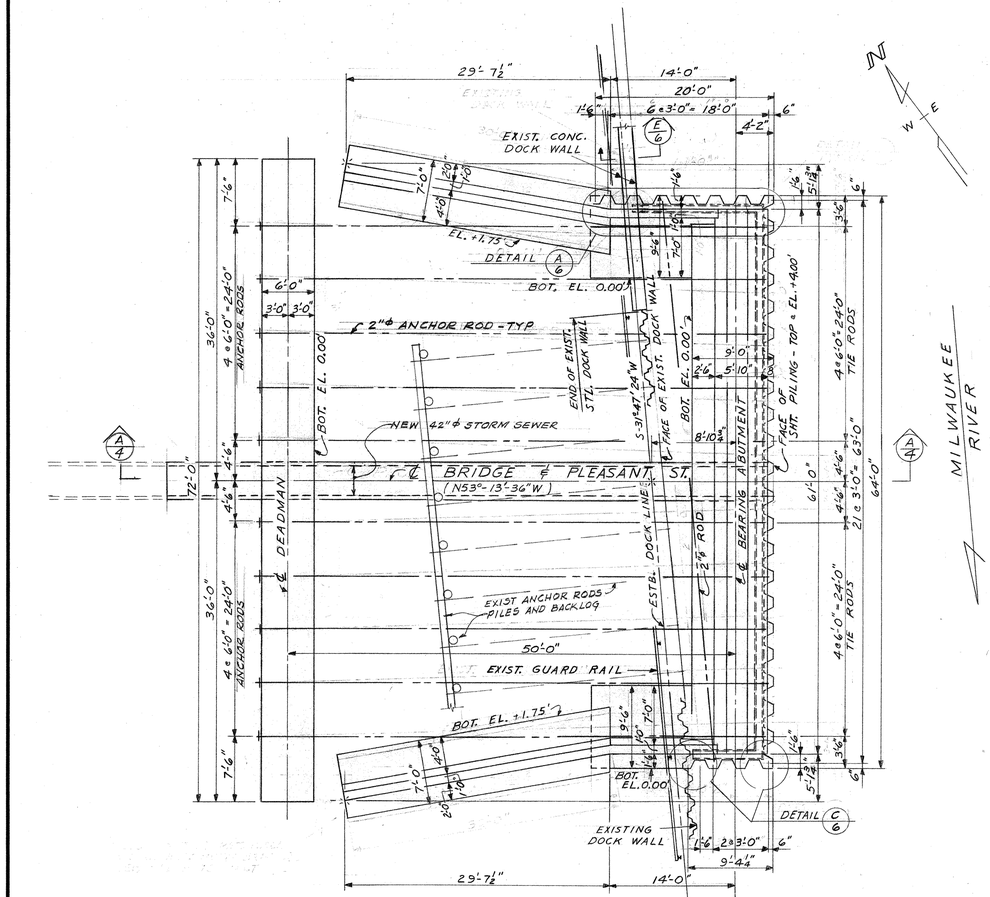

PLAN OF WEST ABUTMENT AND RETAINING WALLS
SCALE 1/8" = 1'-0"

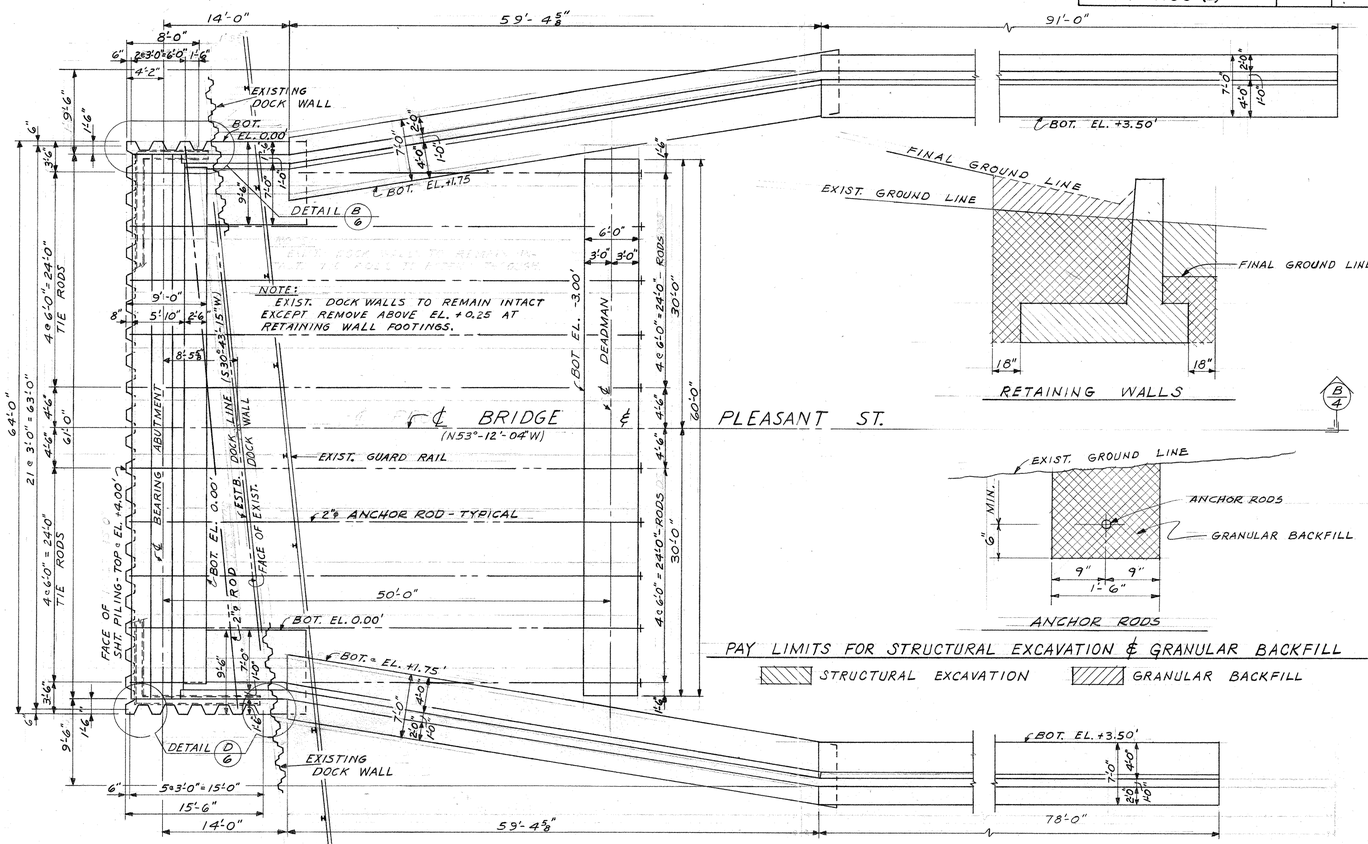

PLAN OF EAST ABUTMENT AND RETAINING WALLS
SCALE 1/8" = 1'-0"

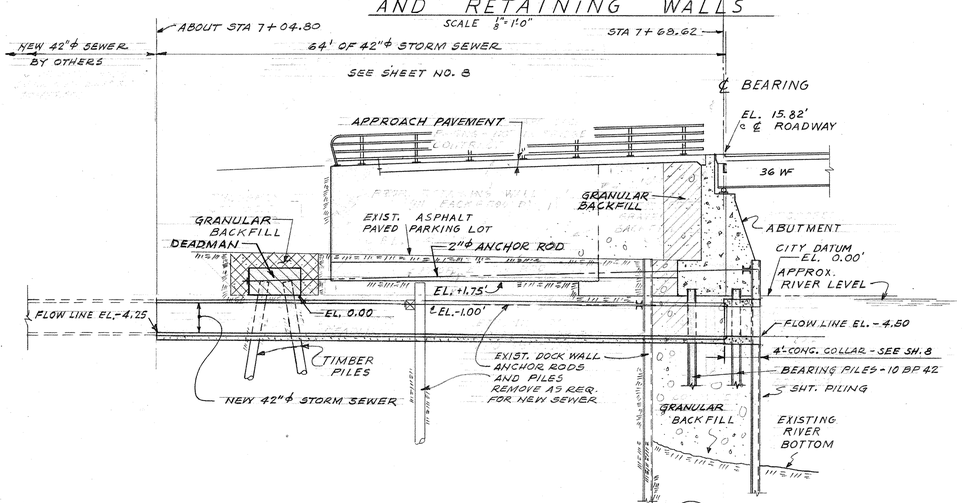

CROSS-SECTION A/4
SCALE 1/8" = 1'-0"

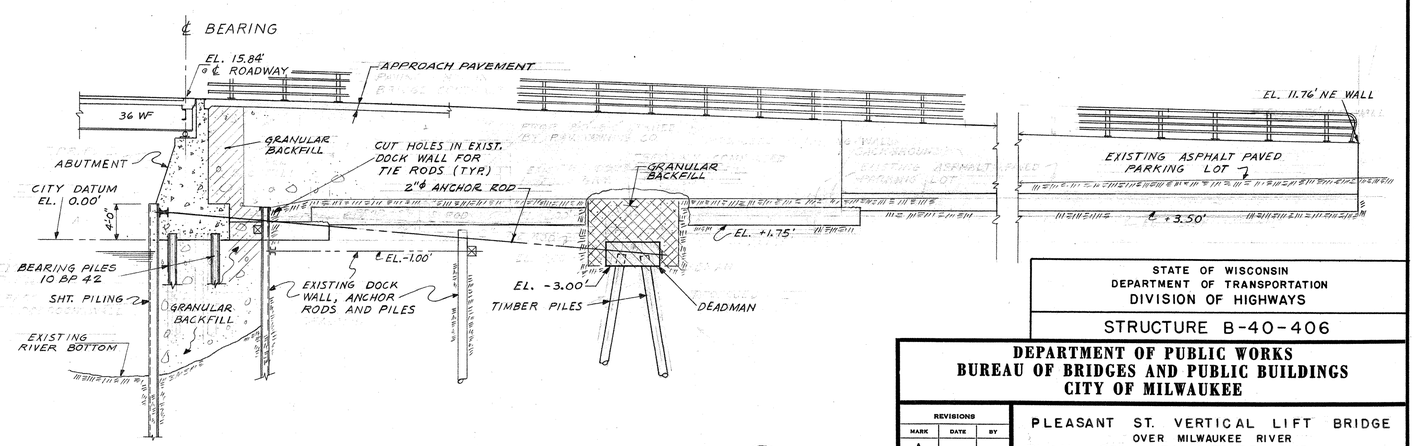

CROSS-SECTION B/4
SCALE 1/8" = 1'-0"

DAMPPROOFING
DAMPPROOF THE BACKS OF ALL CONCRETE ABUTMENTS AND RETAINING WALLS TO BE IN CONTACT WITH EARTH OR GRANULAR BACKFILL, INCLUDING THE TOPS OF FOOTINGS.

X 44302

STATE OF WISCONSIN
DEPARTMENT OF TRANSPORTATION
DIVISION OF HIGHWAYS

STRUCTURE B-40-406

DEPARTMENT OF PUBLIC WORKS
BUREAU OF BRIDGES AND PUBLIC BUILDINGS
CITY OF MILWAUKEE

REVISIONS		
MARK	DATE	BY
A		
B		
C		
D		
E		
F		
G		
H		
I		
J		
K		
L		
M		

PLEASANT ST. VERTICAL LIFT BRIDGE
OVER MILWAUKEE RIVER
PLAN OF ABUTMENTS AND RETAINING WALLS

DESIGNED BY: L. F. R. TRACED BY: DATE:
DRAWN BY: L. F. R. CHECKED BY: DATE:
APPROVED:— SCALE: AS NOTED

Norris C. Batalden — DESIGNER IN CHARGE — DATE: 12-16-70 — SHEET NUMBER 4
George C. Ashton — SUPT. OF BRIDGES AND PUBLIC BUILDINGS — DATE: 1-20-71 — SET OF 47 SHEETS
Donald H. Bailey — DEPUTY COMMISSIONER OF PUBLIC WORKS — DATE: 1-25-71 — JOB NO. 512-74

PROJECT I.D.	SHEET NUMBER	TOTAL SHEETS
2984-0-07		
FEDERAL PROJECT DESIGNATION T-4195 (11)		

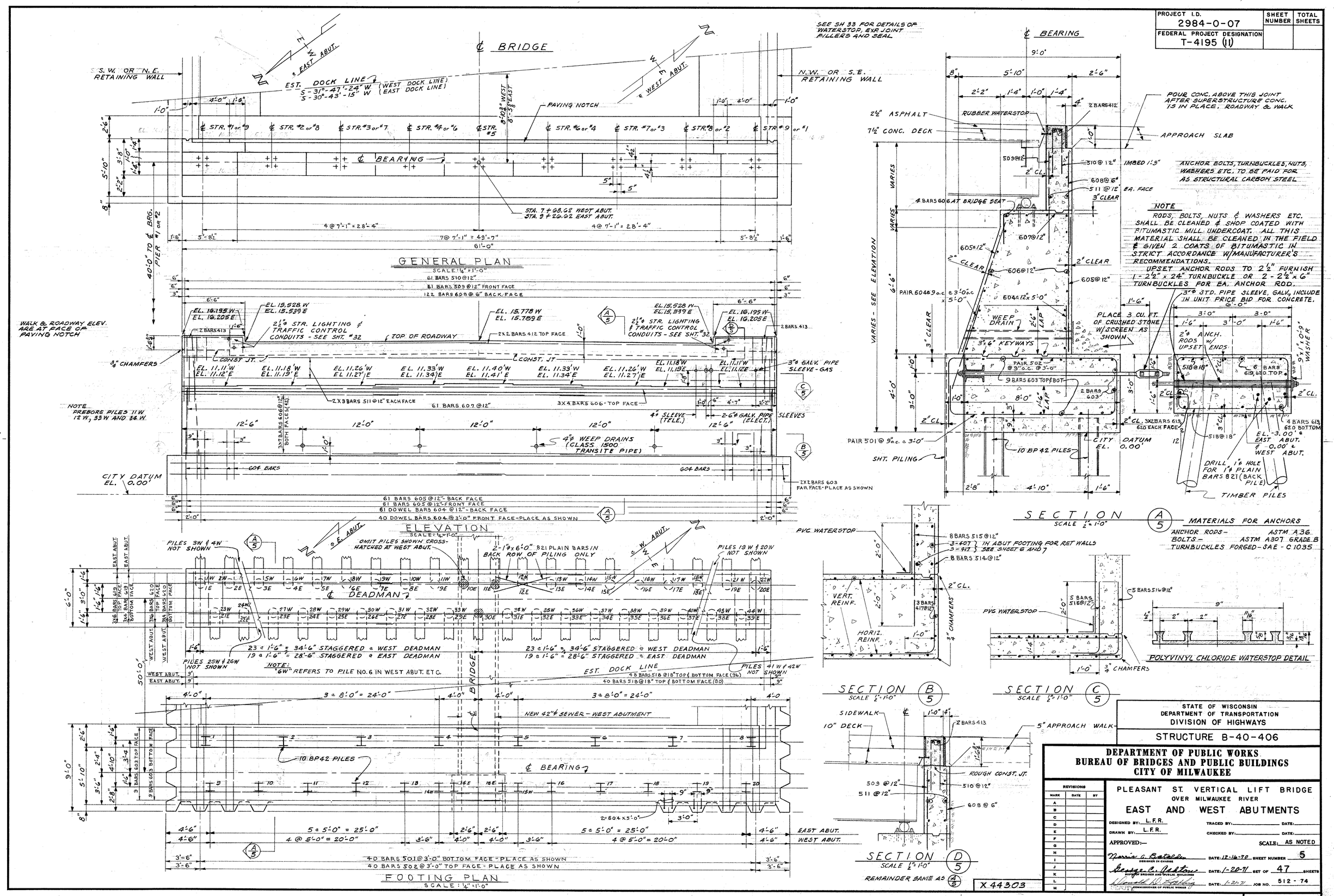

STATE OF WISCONSIN
DEPARTMENT OF TRANSPORTATION
DIVISION OF HIGHWAYS

STRUCTURE B-40-406

DEPARTMENT OF PUBLIC WORKS
BUREAU OF BRIDGES AND PUBLIC BUILDINGS
CITY OF MILWAUKEE

PLEASANT ST. VERTICAL LIFT BRIDGE
OVER MILWAUKEE RIVER
EAST AND WEST ABUTMENTS

DESIGNED BY: L.F.R. TRACED BY: DATE:
DRAWN BY: L.F.R. CHECKED BY: DATE:
APPROVED:- SCALE: AS NOTED
Norris A. Batelden DESIGNER IN CHARGE DATE: 12-16-70 SHEET NUMBER 5
George C. Ashton SUPT. OF BRIDGES AND PUBLIC BUILDINGS DATE: 1-20-71 SET OF 47 SHEETS
Donald D. Fielding COMMISSIONER OF PUBLIC WORKS DATE: 1-21-71 JOB NO. 512 - 74

X 44303

PROJECT I.D.	SHEET NUMBER	TOTAL SHEETS
2984-0-07		
FEDERAL PROJECT DESIGNATION T-4195 (II)		

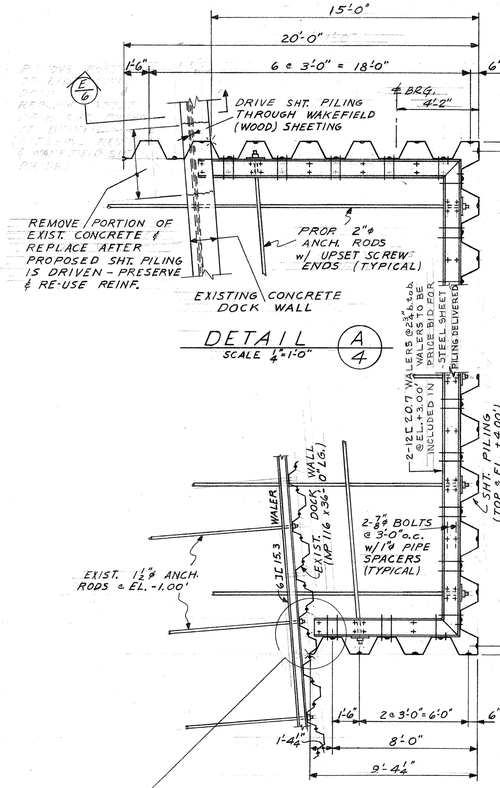

DETAIL (A/4)
SCALE ¼"=1'-0"

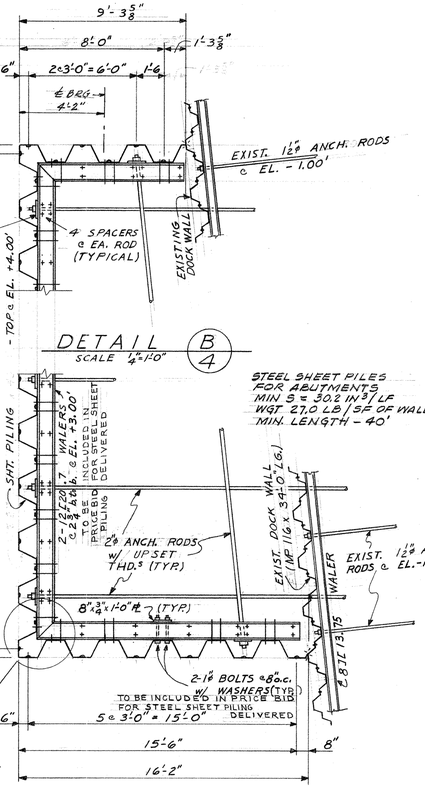

DETAIL (B/4)
SCALE ¼"=1'-0"

STEEL SHEET PILES FOR ABUTMENTS
MIN S = 30.2 IN³/LF
WGT 27.0 LB/SF OF WALL
MIN. LENGTH - 40'

DETAIL (C/4)
SCALE ¼"=1'-0"

DETAIL (D/4)
SCALE ¼"=1'-0"

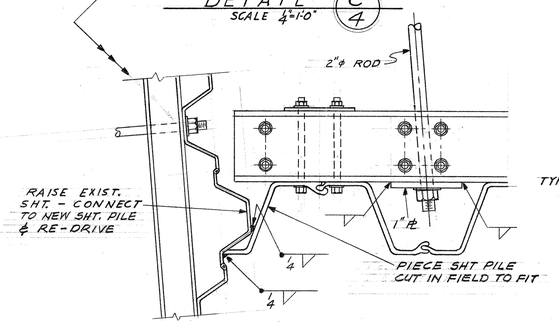

TYPICAL CONNECTION
SCALE 1"=1'-0"

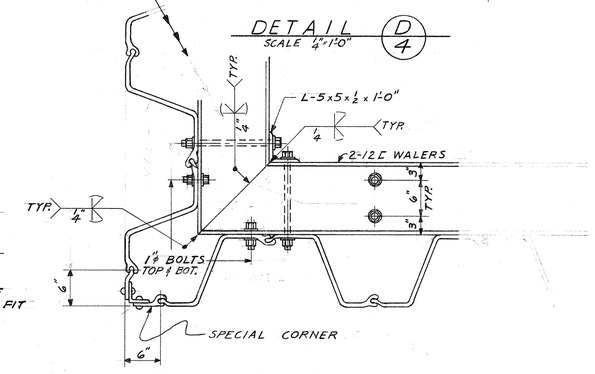

TYPICAL CORNER
SCALE 1"=1'-0"

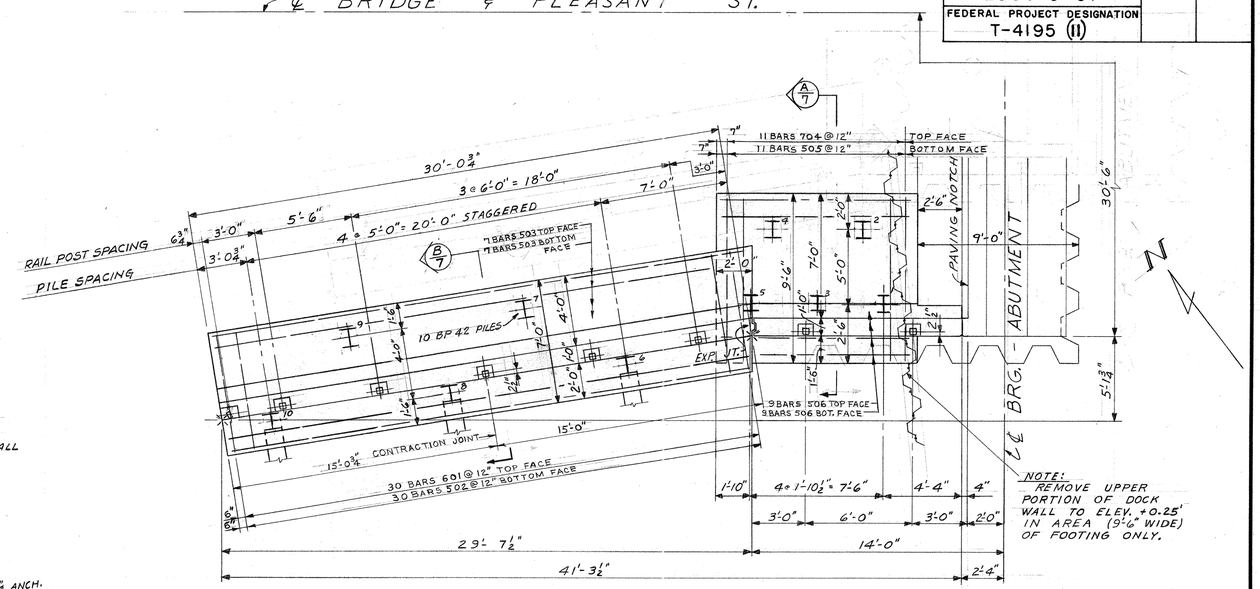

GENERAL PLAN OF S.W. RETAINING WALL - SHOWN
GENERAL PLAN OF N.W. RETAINING WALL - OPP. HAND
SCALE ¼"=1'-0"

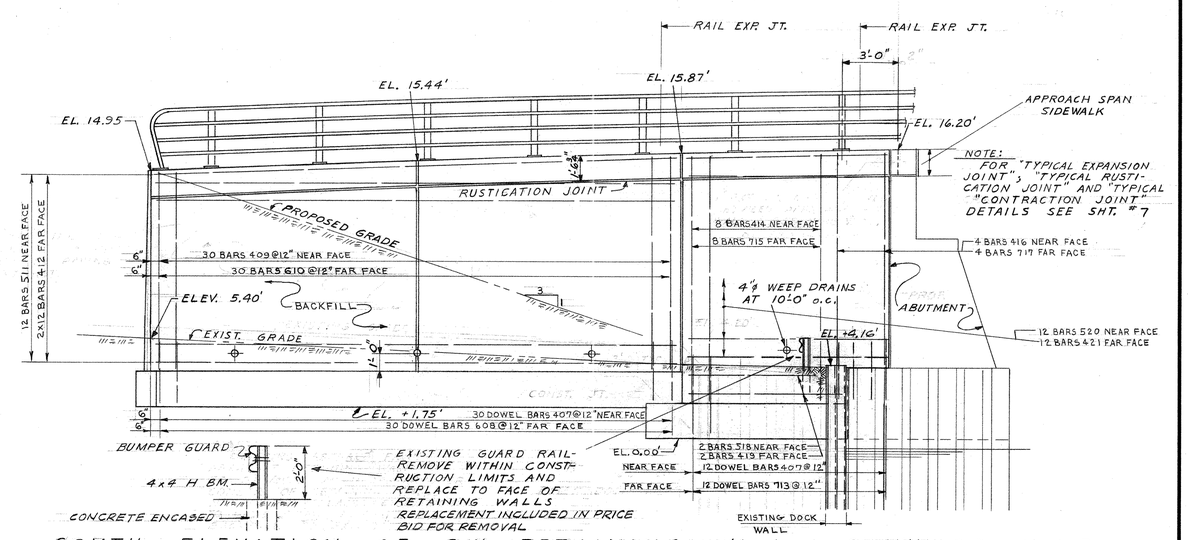

SOUTH ELEVATION OF S.W. RETAINING WALL - SHOWN
NORTH ELEVATION OF N.W. RETAINING WALL - OPP. HAND
SCALE ¼" = 1'-0"

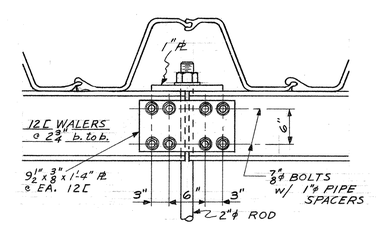

TYPICAL WALER SPLICE
SCALE 1"=1'-0"

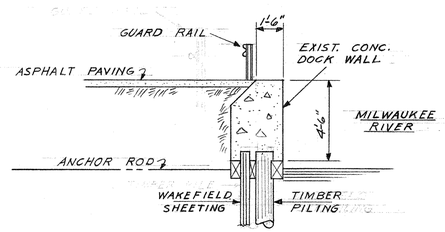

SECTION (E/6)
SCALE ¼"=1'-0"

STATE OF WISCONSIN
DEPARTMENT OF TRANSPORTATION
DIVISION OF HIGHWAYS

STRUCTURE B-40-406

DEPARTMENT OF PUBLIC WORKS
BUREAU OF BRIDGES AND PUBLIC BUILDINGS
CITY OF MILWAUKEE

REVISIONS		
MARK	DATE	BY
A		
B		
C		
D		
E		
F		
G		
H		
I		
J		
K		
L		
M		

PLEASANT ST. VERTICAL LIFT BRIDGE
OVER MILWAUKEE RIVER
SHEET PILING DETAILS AND WEST RETAINING WALLS

DESIGNED BY: L.F.R. TRACED BY: DATE:
DRAWN BY: L.F.R. CHECKED BY: DATE:
APPROVED:- SCALE: AS NOTED
Norris G. Batalden — DESIGNER IN CHARGE — DATE: 12-16-70 SHEET NUMBER 6
George C. Ashton — SUPT. OF BRIDGES AND PUBLIC BUILDINGS — DATE: 1-20-71 SET OF 47 SHEETS
Wendell W. Sutting — DEPUTY COMMISSIONER OF PUBLIC WORKS — DATE: 1-25-71 JOB NO. 512-74

X44304

PROJECT I.D.	SHEET NUMBER	TOTAL SHEETS
2984-0-07		
FEDERAL PROJECT DESIGNATION T-4195 (11)		

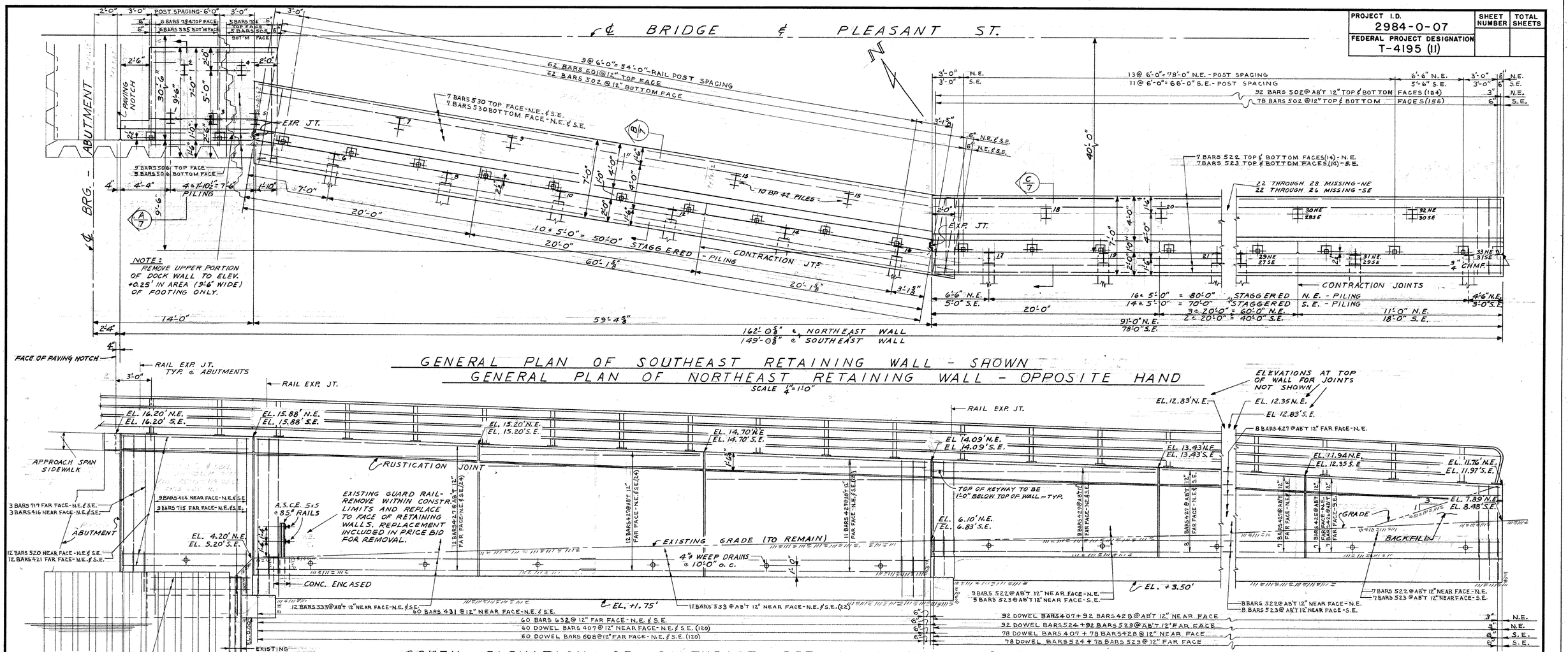

GENERAL PLAN OF SOUTHEAST RETAINING WALL - SHOWN
GENERAL PLAN OF NORTHEAST RETAINING WALL - OPPOSITE HAND
SCALE 4"=1'-0"

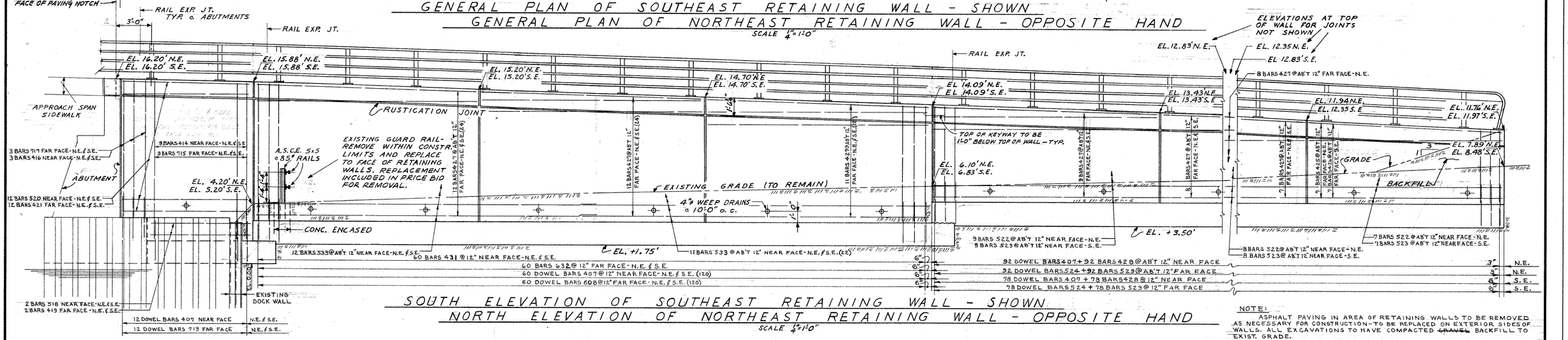

SOUTH ELEVATION OF SOUTHEAST RETAINING WALL - SHOWN
NORTH ELEVATION OF NORTHEAST RETAINING WALL - OPPOSITE HAND
SCALE ¼"=1'-0"

NOTE:
ASPHALT PAVING IN AREA OF RETAINING WALLS TO BE REMOVED AS NECESSARY FOR CONSTRUCTION - TO BE REPLACED ON EXTERIOR SIDES OF WALLS. ALL EXCAVATIONS TO HAVE COMPACTED ~~GRAVEL~~ BACKFILL TO EXIST. GRADE.

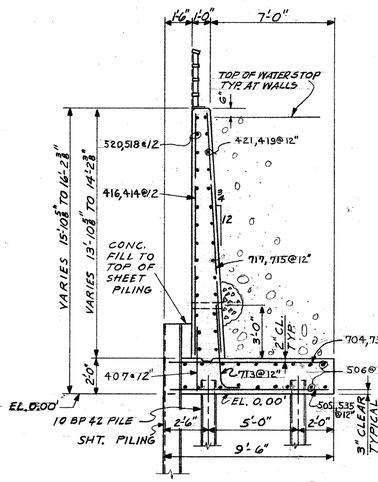

SECTION A 6&7
SCALE ¼"=1'-0"

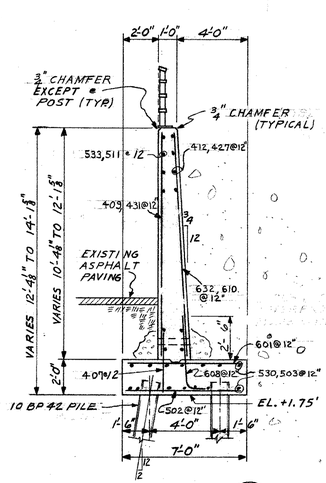

SECTION B 6&7
SCALE ¼"=1'-0"

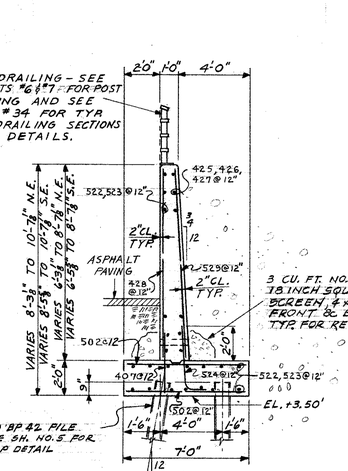

SECTION C 7
SCALE ¼"=1'-0"

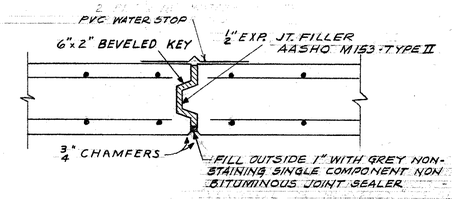

TYPICAL EXPANSION JOINT FOR RETAINING WALLS
SCALE 1"=1'-0"

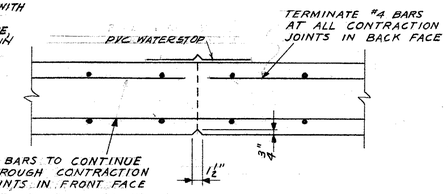

TYPICAL CONTRACTION JOINT FOR RETAINING WALLS
SCALE 1"=1'-0"

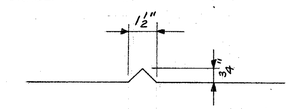

TYPICAL RUSTICATION JOINT FOR RETAINING WALLS
SCALE 3"=1'-0"

STATE OF WISCONSIN
DEPARTMENT OF TRANSPORTATION
DIVISION OF HIGHWAYS

STRUCTURE B-40-406

DEPARTMENT OF PUBLIC WORKS
BUREAU OF BRIDGES AND PUBLIC BUILDINGS
CITY OF MILWAUKEE

REVISIONS		
MARK	DATE	BY
A		
B		
C		
D		
E		
F		
G		
H		
I		
J		
K		
L		
M		

PLEASANT ST. VERTICAL LIFT BRIDGE
OVER MILWAUKEE RIVER
EAST RETAINING WALLS

DESIGNED BY: L.F.R. TRACED BY: DATE:
DRAWN BY: L.F.R. CHECKED BY: DATE:
APPROVED:— SCALE: AS NOTED
Morris C. Bataglia DATE: 12-16-70 SHEET NUMBER 7
George B. Neiteer DATE: 1-20-71 SET OF 47 SHEETS
Donald W. Rothe DATE: 1-25-71 JOB NO. 512-74
DEPUTY COMMISSIONER OF PUBLIC WORKS / DESIGNED IN CHARGE / CITY ENGR. OF BRIDGES AND PUBLIC BUILDINGS

X 44305

corrected 10-7-70 tos

PROJECT I.D.	SHEET NUMBER	TOTAL SHEETS
2984-0-07		
FEDERAL PROJECT DESIGNATION T-4195 (11)		

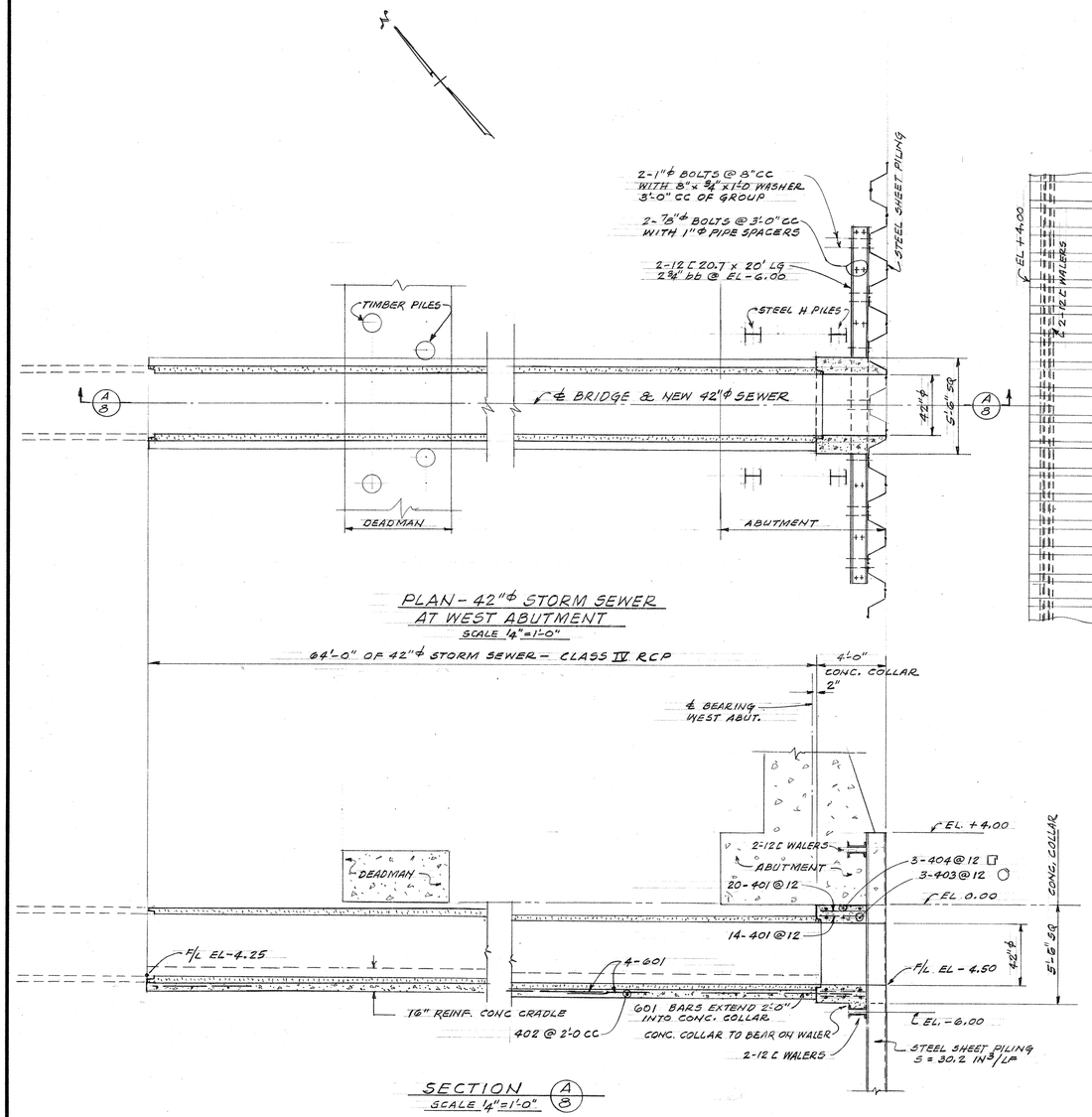

PLAN - 42"φ STORM SEWER AT WEST ABUTMENT
SCALE 1/4" = 1'-0"

SECTION (A/B)
SCALE 1/4" = 1'-0"

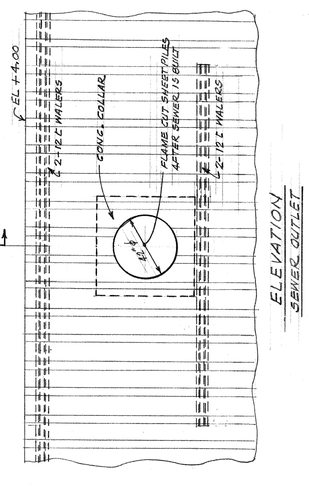

ELEVATION
SEWER OUTLET

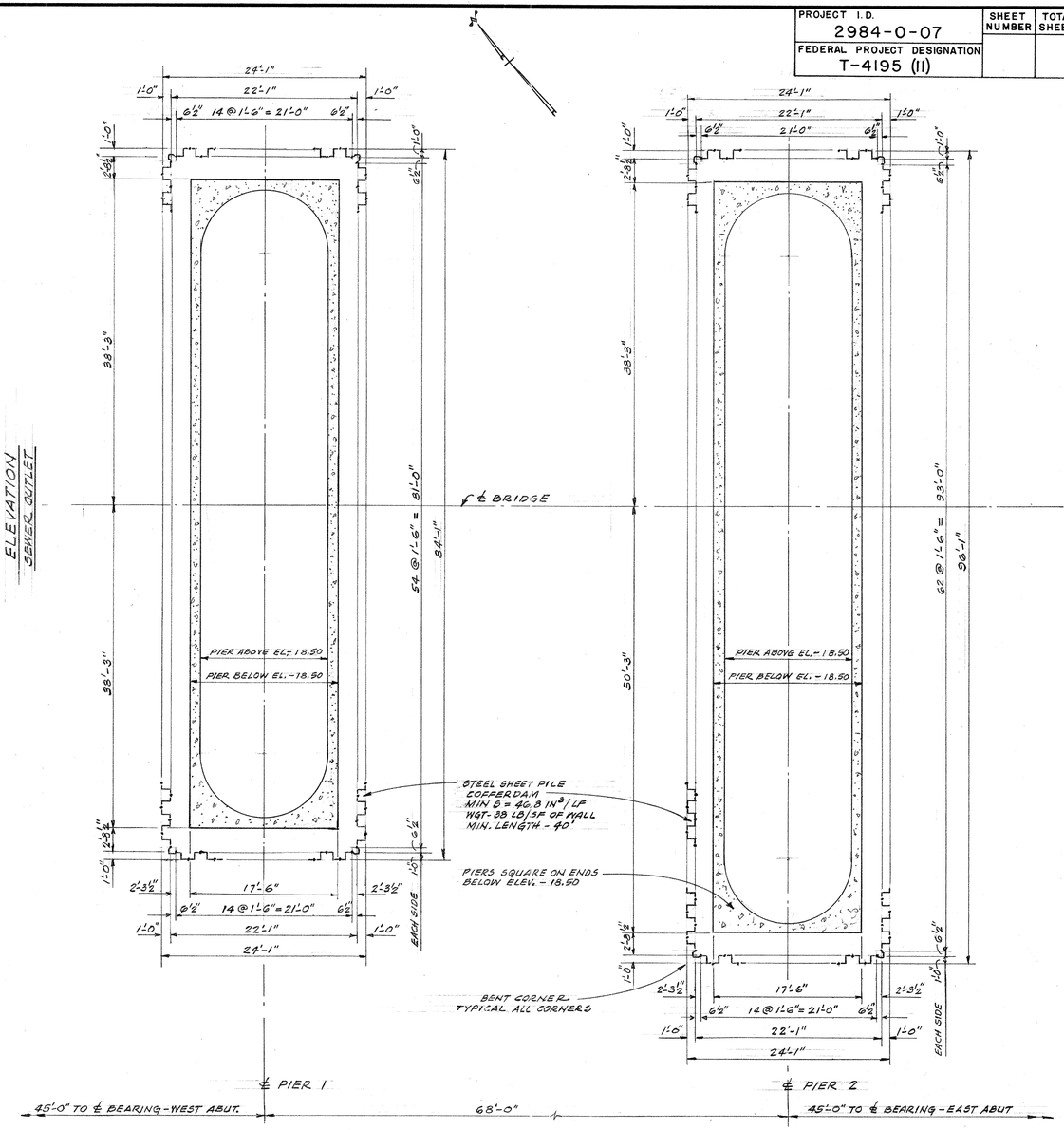

COFFERDAM PLAN - PIERS 1 AND 2
SCALE 1/8" = 1'-0"

BILL OF REINFORCEMENT							
MARK	NO. REQD	LENGTH	TYPE	DIMENSIONS A	B	C	O
401	34	2'-8"	STR				
402	32	4'-10"	STR				
403	3	15'-6"	T3				4'-7"
404	3	21'-4"	T2	5'-2"	5'-2"	4"	
601	8	33'-4"	STR				

REINFORCEMENT AND CONCRETE BEDDING INCLUDED IN PRICE OF 42" φ STORM SEWER.

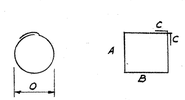

TYPE T3 TYPE T2

THE FIRST DIGIT OF THE BAR MARK INDICATES THE SIZE OF THE BAR.

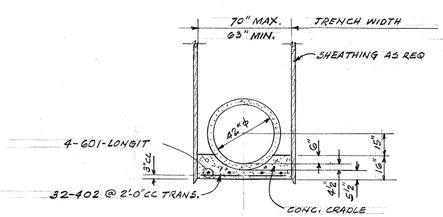

TYPICAL SEWER SECTION

STATE OF WISCONSIN
DEPARTMENT OF TRANSPORTATION
DIVISION OF HIGHWAYS

STRUCTURE B-40-406

DEPARTMENT OF PUBLIC WORKS
BUREAU OF BRIDGES AND PUBLIC BUILDINGS
CITY OF MILWAUKEE

REVISIONS		
MARK	DATE	BY
A		
B		
C		
D		
E		
F		
G		
H		
I		
J		
K		
L		
M		

PLEASANT ST. VERTICAL LIFT BRIDGE
OVER MILWAUKEE RIVER
COFFERDAM - PIERS 1 AND 2 & SEWER AT WEST ABUTMENT

DESIGNED BY: T.E.S. TRACED BY: DATE:
DRAWN BY: T.E.S. CHECKED BY: DATE:
APPROVED:— SCALE: AS NOTED

Harris C. Batelder — DESIGNER IN CHARGE — DATE: 12-16-70 — SHEET NUMBER 8
George R. Ashton — ASST. OF BRIDGES AND PUBLIC BUILDINGS — DATE: 1-20-71 — SET OF 47 SHEETS
Harold W. Kelly — DEPUTY COMMISSIONER OF PUBLIC WORKS — DATE: 1-25-71 — JOB NO. 512-74

X 44306

PROJECT I.D.	SHEET NUMBER	TOTAL SHEETS
2984-0-07		
FEDERAL PROJECT DESIGNATION T-4195 (II)		

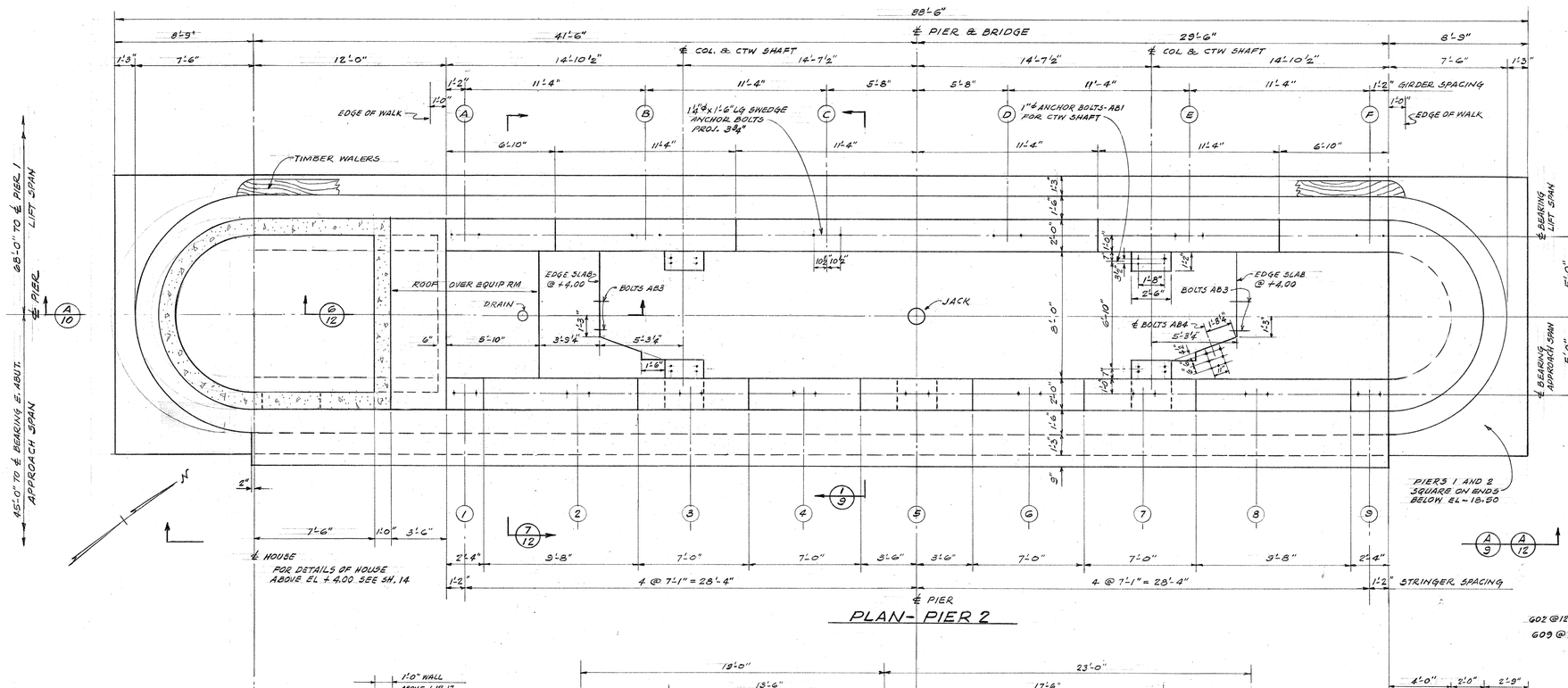

PLAN- PIER 2

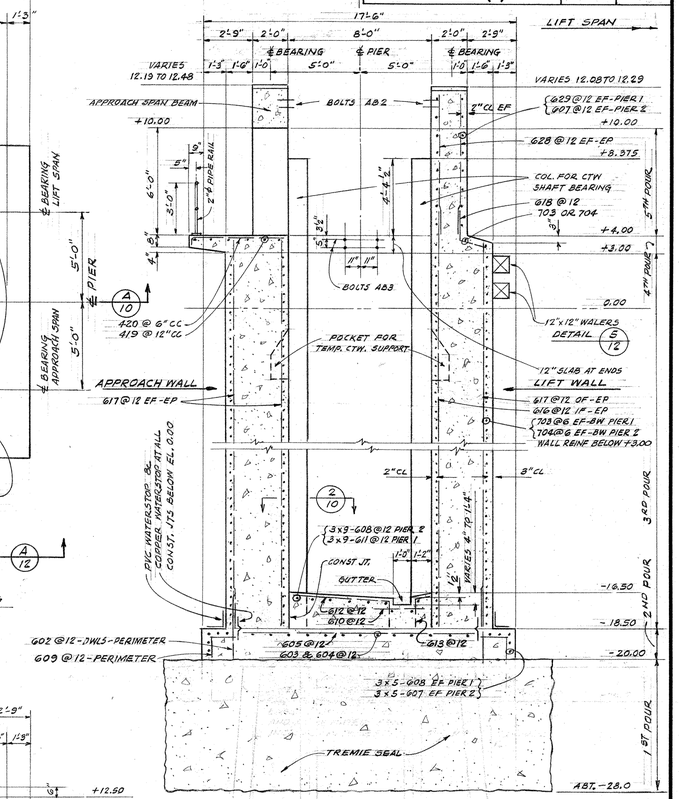

COPPER WATERSTOP - 24 OZ. 90FT COPPER STRIP 12" WIDE RIVETED AND SOLDERED AT JOINTS - EDGES SNIPPED 1" DEEP AT 4" CC AND ALTERNATELY BENT - INCLUDED IN PRICE BID FOR CONC. MASONRY, BRIDGES.

PIERS 1 & 2 - TYPICAL SECTION (1/9/10/11)

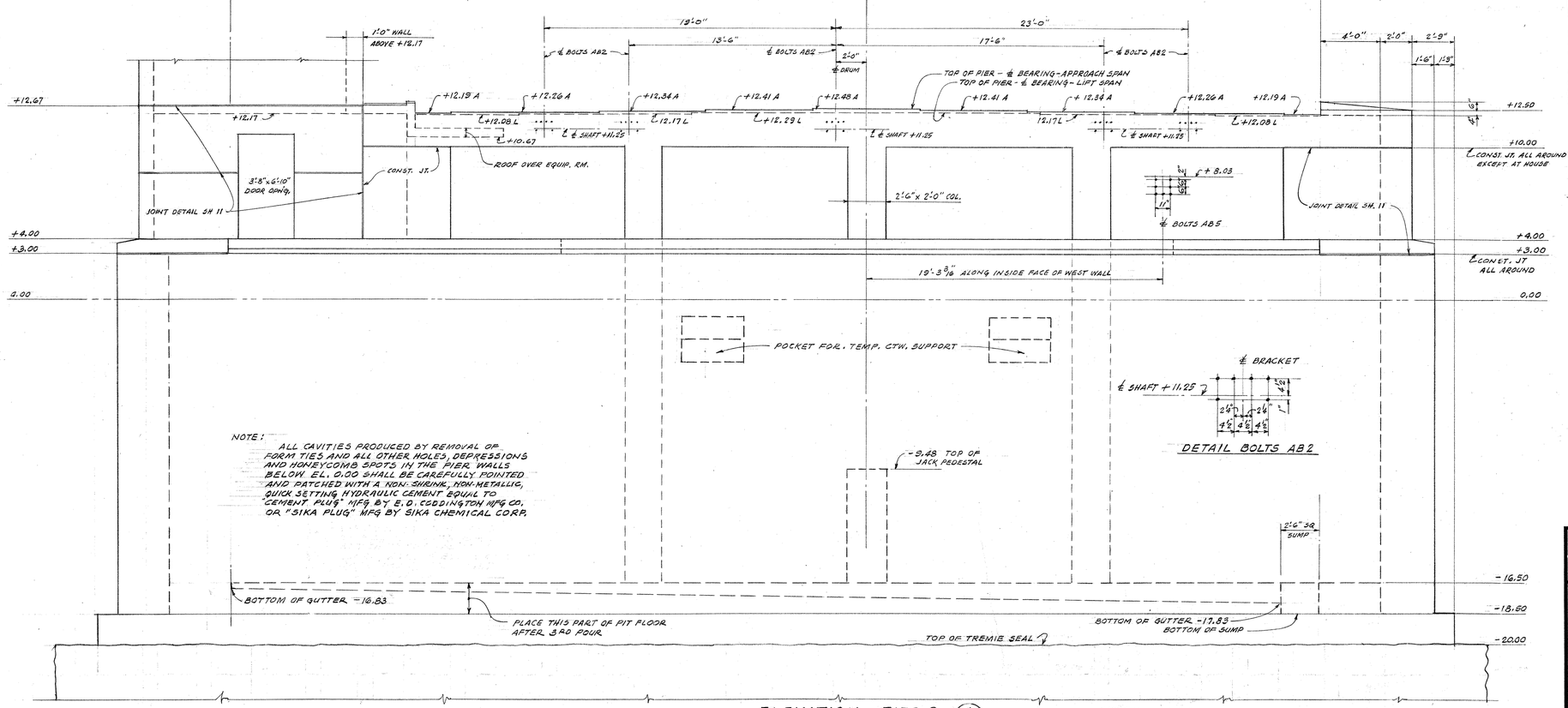

ELEVATION - PIER 2 (A/9)
LOOKING WEST

NOTE:
ALL CAVITIES PRODUCED BY REMOVAL OF FORM TIES AND ALL OTHER HOLES, DEPRESSIONS AND HONEYCOMB SPOTS IN THE PIER WALLS BELOW EL. 0.00 SHALL BE CAREFULLY POINTED AND PATCHED WITH A NON-SHRINK, NON-METALLIC, QUICK SETTING HYDRAULIC CEMENT EQUAL TO "CEMENT PLUG" MFG BY E.O. CODDINGTON MFG CO. OR "SIKA PLUG" MFG BY SIKA CHEMICAL CORP.

NOTE:
ANCHOR BOLTS FOR STRINGERS & GIRDERS SHALL BE DRILLED & LEADED. MACHINERY ANCHOR BOLTS SHALL BE SET WITH A TEMPLATE AND BUILT INTO CONCRETE.

MACHINERY ANCHOR BOLTS

AB1 - 1"φ BOLTS - PROJECT 4½"
FOR COUNTERWEIGHT SHAFT BEARINGS
AB2 - 1"φ BOLTS - PROJECT 2½"
FOR BEARING BRACKETS - TRANSVERSE EQUALIZER
AB3 - 1"φ BOLTS - PROJECT 3¼"
FOR ROLLER GUIDES
AB4 - 1"φ BOLTS - PROJECT 3"
FOR CABLE BRACKET - LONGITUDINAL EQUALIZER
AB5 - 1"φ BOLTS - PROJECT 3"
FOR CABLE BRACKET - LONGITUDINAL EQUALIZER
AB6 - 1"φ BOLTS - PROJECT 3"
FOR SHEAVE BRACKET - BUMPER BEAM - SEE SH. 12

+12.19 A - INDICATES ELEV. TOP OF PIER - APPROACH SPAN
+12.08 L - INDICATES ELEV TOP OF PIER - LIFT SPAN
BEVEL ALL EXPOSED EDGES OF CONCRETE ¾"

STATE OF WISCONSIN
DEPARTMENT OF TRANSPORTATION
DIVISION OF HIGHWAYS

STRUCTURE B-40-406

DEPARTMENT OF PUBLIC WORKS
BUREAU OF BRIDGES AND PUBLIC BUILDINGS
CITY OF MILWAUKEE

REVISIONS		
MARK	DATE	BY
A		
B		
C		
D		
E		
F		
G		
H		
I		
J		
K		
L		
M		

PLEASANT ST. VERTICAL LIFT BRIDGE
OVER MILWAUKEE RIVER
PIER #2

DESIGNED BY: T. E. S.
DRAWN BY: T. E. S.
TRACED BY: DATE:
CHECKED BY: DATE:
SCALE: AS NOTED

APPROVED:-
Thomas E. Bostelder — DESIGNER IN CHARGE — DATE: 12-16-70 — SHEET NUMBER 9
George C. Ashton — BUREAU BRIDGES AND PUBLIC BUILDINGS — DATE: 1-20-71 — SET OF 47 SHEETS
Donald W. Schmidt — DEPUTY COMMISSIONER OF PUBLIC WORKS — DATE: 1-25-71 — JOB NO. 512-74

X 44307

PROJECT I.D.	SHEET NUMBER	TOTAL SHEETS
2984-0-07		
FEDERAL PROJECT DESIGNATION T-4195 (II)		

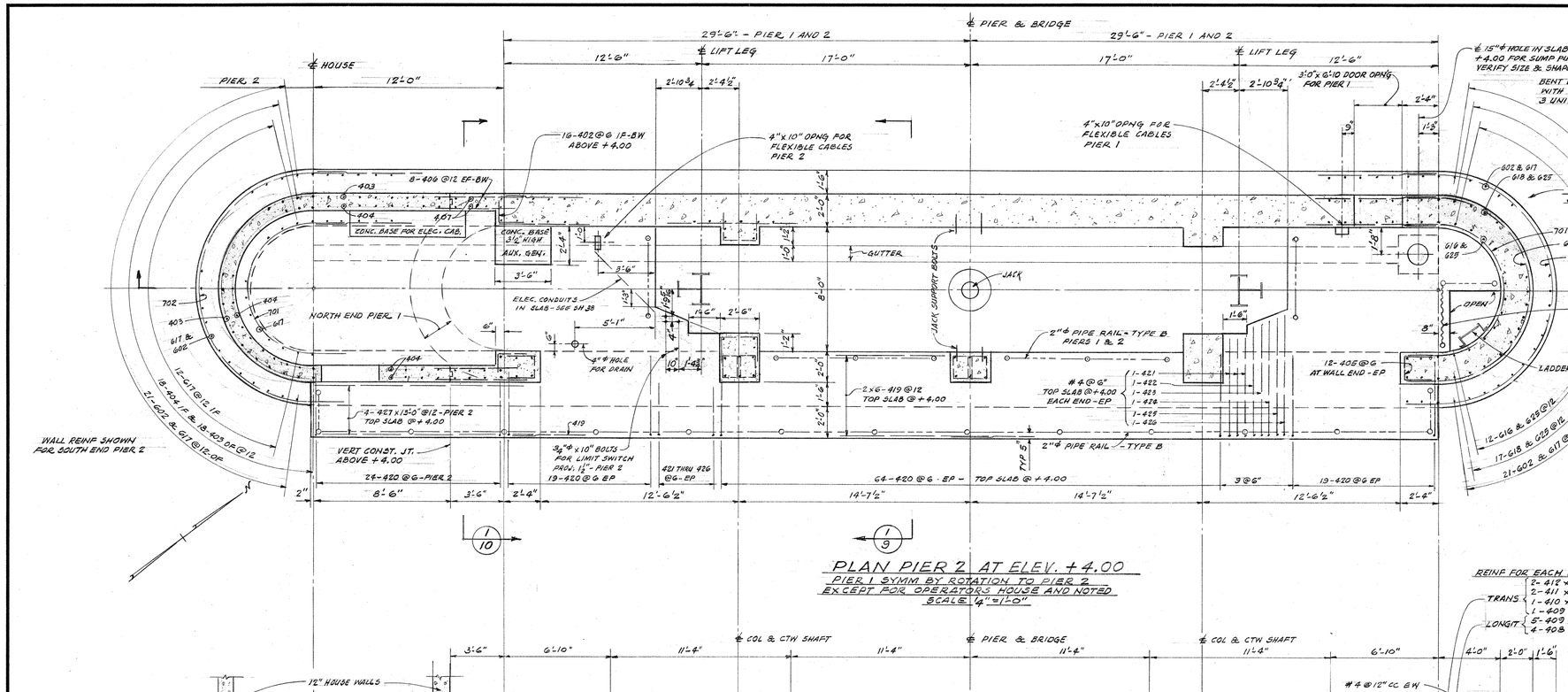

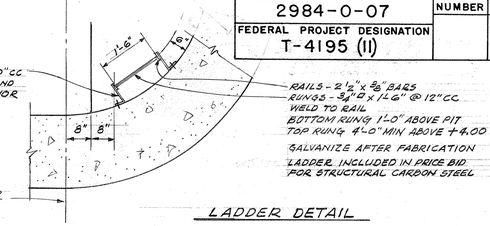

LADDER DETAIL

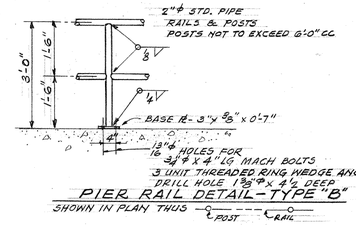

PIER RAIL DETAIL-TYPE "B"

SHOWN IN PLAN THUS POST RAIL

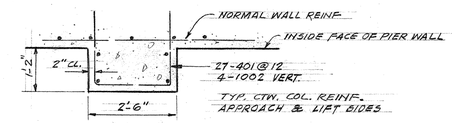

SECTION 2/9/11/12

4 EACH PIER

REINF FOR EACH PIER ROOF - 3 REQD

TRANS { 2-412 x 11'-0"; 2-411 x 9'-6"; 1-410 x 7'-6"; 1-409 x 5'-0" }

LONGIT { 5-409 x 5'-0"; 4-408 x 3'-6" }

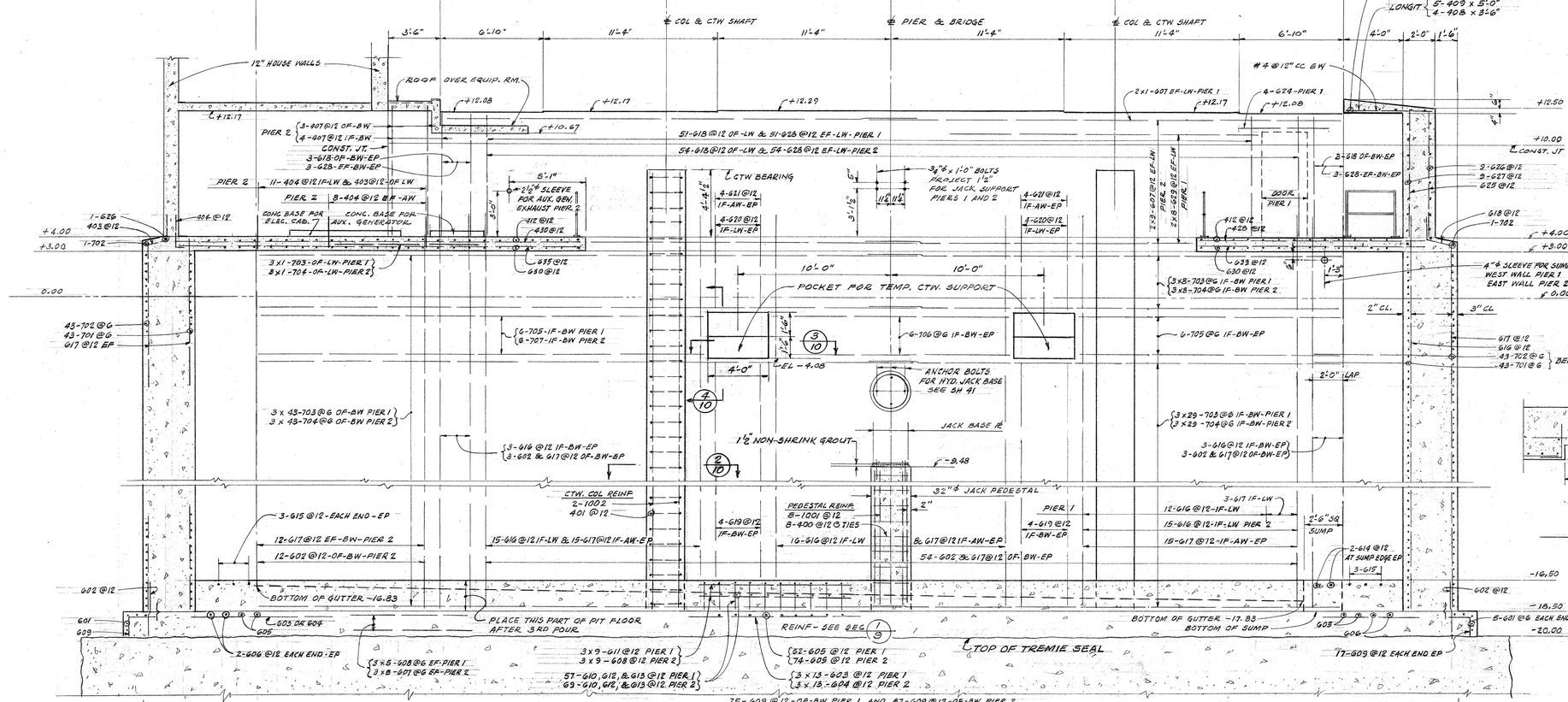

TYPICAL PIER LONGITUDINAL SECTION

SCALE 1/4" = 1'-0"

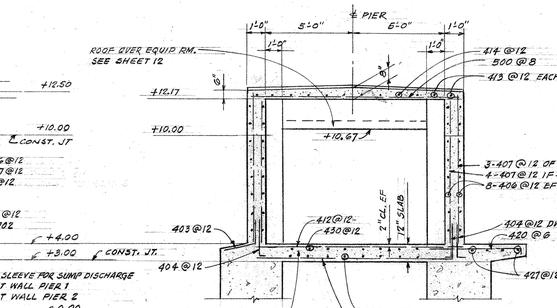

SECTION 1/10

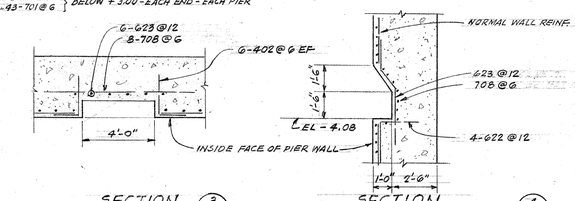

SECTION 3/10 — 4 - EACH PIER

SECTION 4/10/11 — POCKET FOR TEMP. CTW. SUPPORT

ABBREVIATIONS

EF	EACH FACE	BW	BOTH WALLS
IF	INSIDE FACE	LW	LIFT WALL
OF	OUTSIDE FACE	AW	APPROACH WALL
EW	EACH WAY	EP	EACH PIER

THE FIRST DIGIT OF A THREE DIGIT BAR MARK AND THE FIRST TWO DIGITS OF A FOUR DIGIT BAR MARK INDICATES THE SIZE OF THE BAR

X 44308

STATE OF WISCONSIN
DEPARTMENT OF TRANSPORTATION
DIVISION OF HIGHWAYS

STRUCTURE B-40-406

DEPARTMENT OF PUBLIC WORKS
BUREAU OF BRIDGES AND PUBLIC BUILDINGS
CITY OF MILWAUKEE

REVISIONS		
MARK	DATE	BY
A		
B		
C		
D		
E		
F		
G		
H		
I		
J		
K		
L		
M		

PLEASANT ST. VERTICAL LIFT BRIDGE
OVER MILWAUKEE RIVER
PLAN OF PIER #2 @ ELEV. +4.00

DESIGNED BY: T. E. S. — TRACED BY: — DATE:
DRAWN BY: T. E. S. — CHECKED BY: — DATE:
APPROVED:— SCALE: AS NOTED

Norris C. Batalden, DESIGNER IN CHARGE — DATE: 12-16-70 — SHEET NUMBER 10
George R. Rahtz, CHIEF OF BRIDGES AND PUBLIC BUILDINGS — DATE: 1-20-71 — SET OF 47 SHEETS
Donald W. Seeling, DEPUTY COMMISSIONER OF PUBLIC WORKS — DATE: 1-25-71 — JOB NO: 512-74

PROJECT I.D.	SHEET NUMBER	TOTAL SHEETS
2984-0-07		
FEDERAL PROJECT DESIGNATION T-4195 (11)		

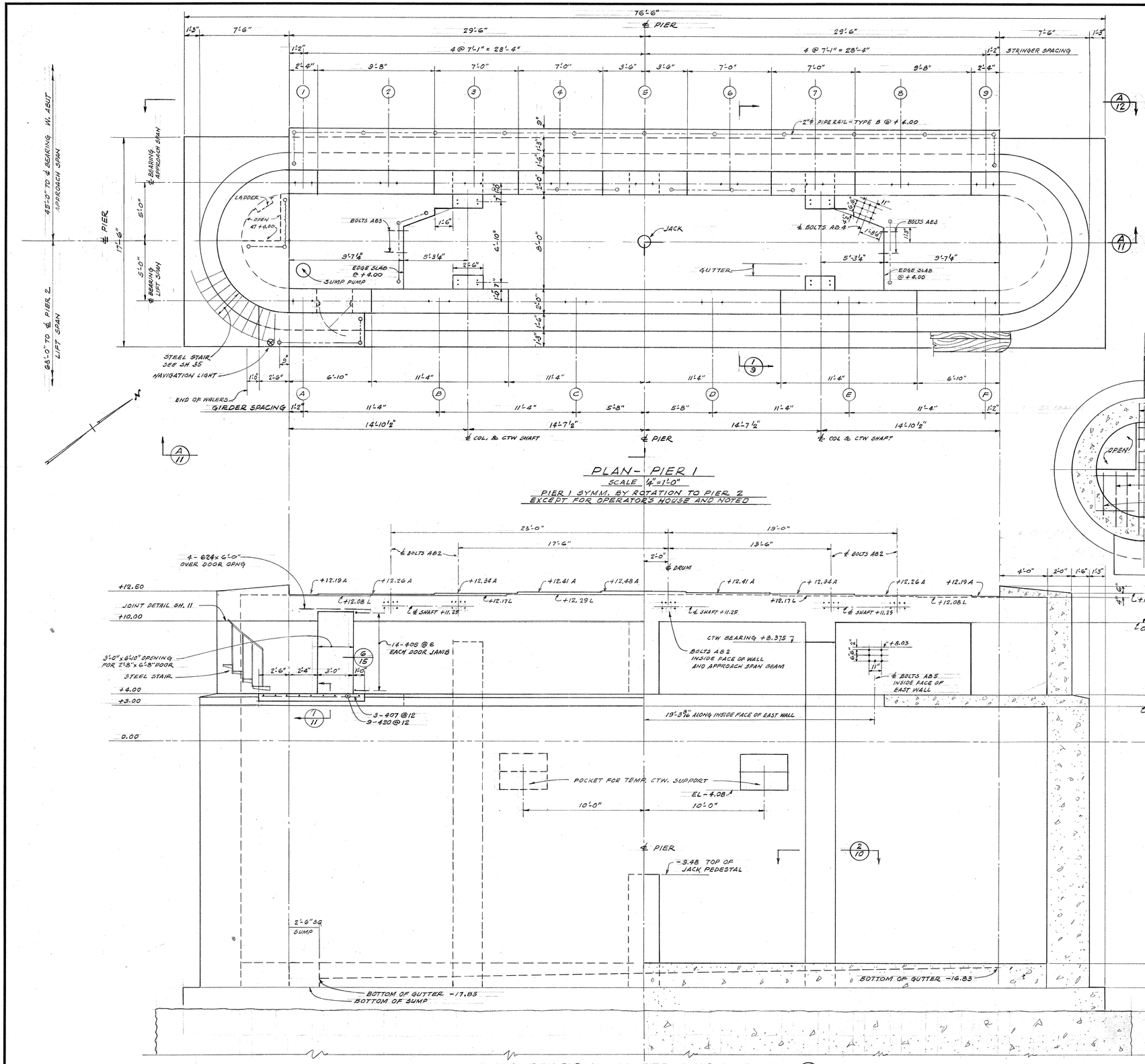

PLAN - PIER 1
SCALE 1/4" = 1'-0"
PIER 1 SYMM. BY ROTATION TO PIER 2 EXCEPT FOR OPERATORS HOUSE AND NOTED

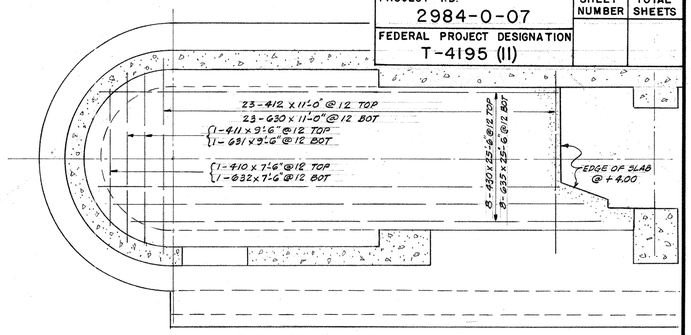

PLAN REINF. BARS - 12" SLAB AT +4.00
SOUTH END - PIER 2

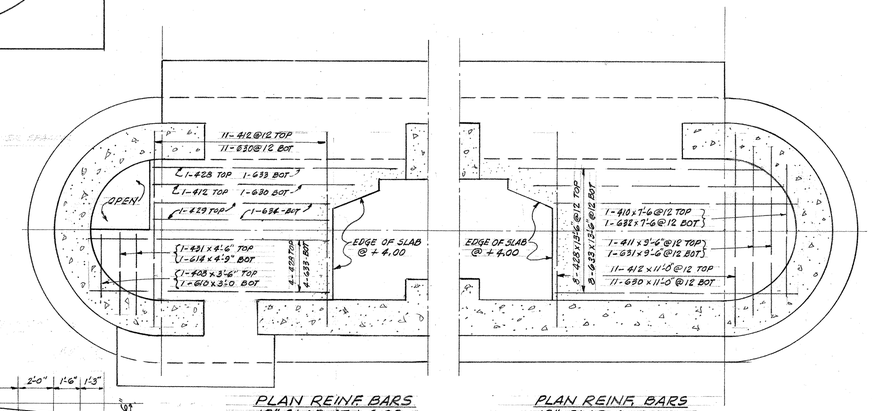

PLAN REINF BARS
12" SLAB AT +4.00
SOUTH END PIER 1
NORTH END PIER 2

PLAN REINF BARS
12" SLAB AT +4.00
NORTH END PIER 1

HALF SECTION AND ELEVATION - PIER 1 (A/11)
LOOKING WEST

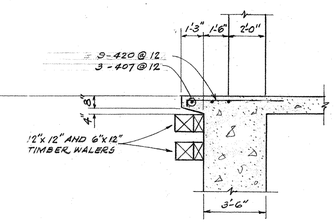

SECTION (1/11)
THRU STAIR LANDING

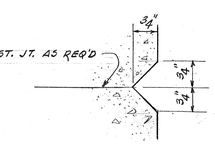

JOINT DETAIL

12.19 A - INDICATES ELEV. TOP OF PIER - APPROACH SPAN
12.08 L - INDICATES ELEV. TOP OF PIER - LIFT SPAN

STATE OF WISCONSIN
DEPARTMENT OF TRANSPORTATION
DIVISION OF HIGHWAYS

STRUCTURE B-40-406

DEPARTMENT OF PUBLIC WORKS
BUREAU OF BRIDGES AND PUBLIC BUILDINGS
CITY OF MILWAUKEE

REVISIONS		
MARK	DATE	BY
A		
B		
C		
D		
E		
F		
G		
H		
I		
J		
K		
L		
M		

PLEASANT ST. VERTICAL LIFT BRIDGE
OVER MILWAUKEE RIVER
PIER #1

DESIGNED BY: T. E. S. TRACED BY: DATE:
DRAWN BY: T. E. S. CHECKED BY: DATE:
APPROVED:— SCALE: AS NOTED

Morris C. Batalden DESIGNER IN CHARGE DATE: 12-16-70 SHEET NUMBER 11
George C. Ashton SUPT. OF BRIDGES AND PUBLIC BUILDINGS DATE: 1-20-71 SET OF 47 SHEETS
Donald H. Leahy DEPUTY COMMISSIONER OF PUBLIC WORKS DATE: 1-25-71 JOB NO. 512-74

X 44309

PROJECT I.D.	SHEET NUMBER	TOTAL SHEETS
2984-0-07		
FEDERAL PROJECT DESIGNATION T-4195 (11)		

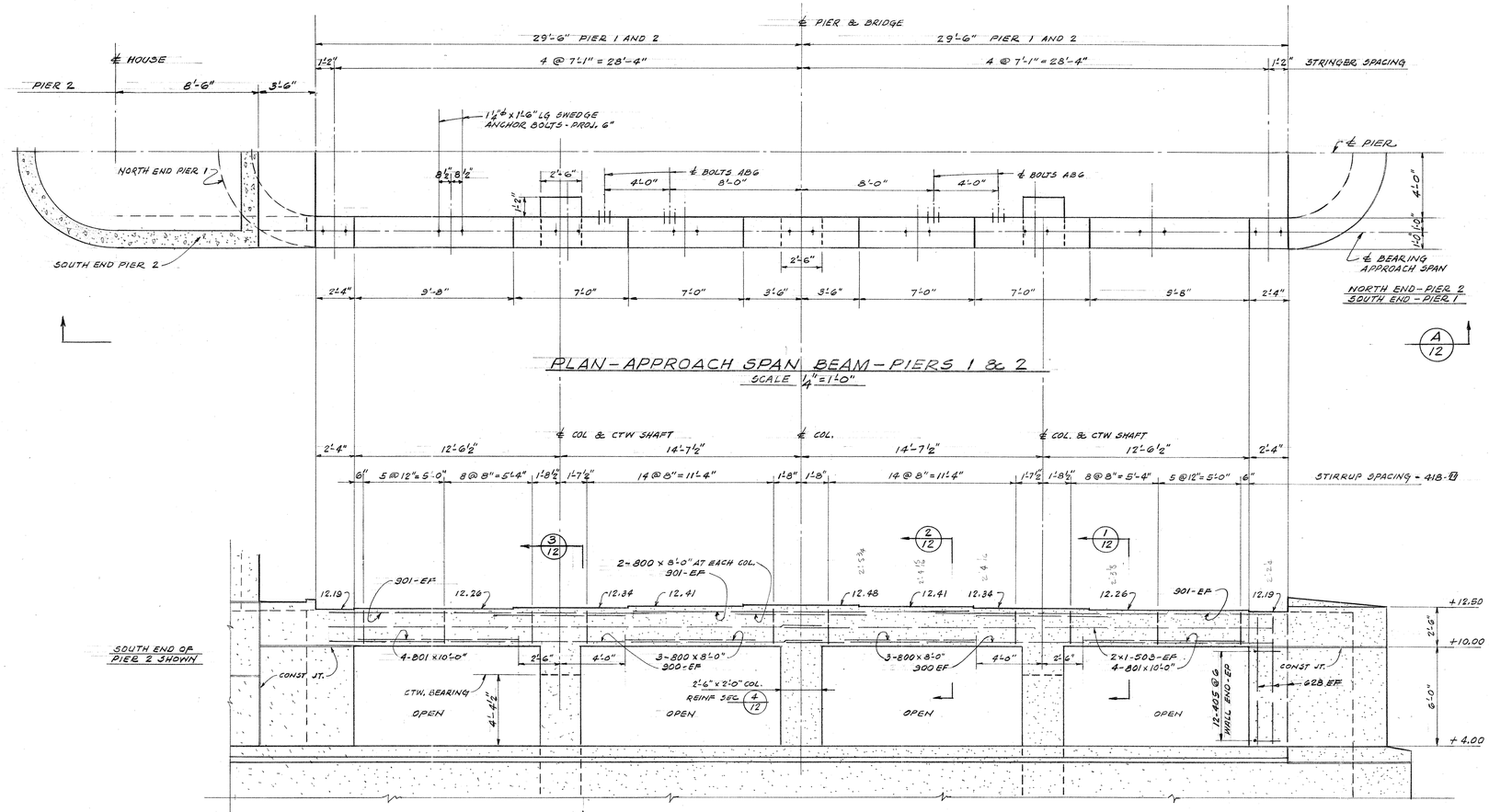

PLAN - APPROACH SPAN BEAM - PIERS 1 & 2 (A/12)
SCALE 1¼" = 1'-0"

ELEVATION - APPROACH SPAN BEAM - PIERS 1 & 2 (A/9) (A/11) (4/12)
LOOKING EAST - PIER 1
LOOKING WEST - PIER 2
SCALE ¼" = 1'-0"

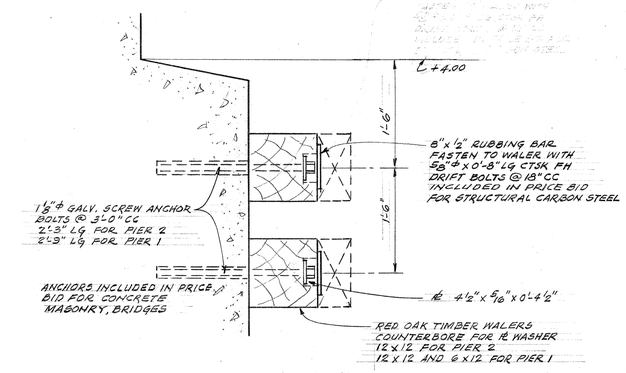

WALER DETAIL (5/9)
SCALE 1" = 1'-0"

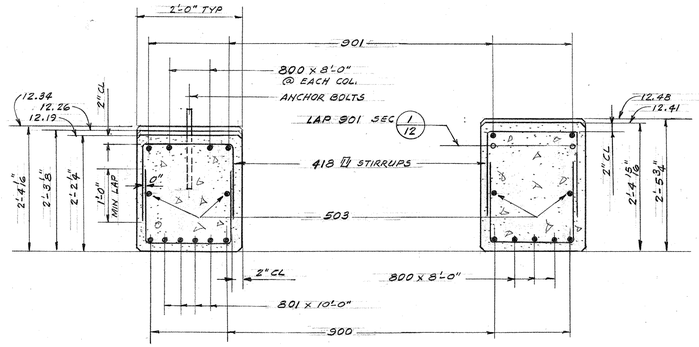

SECTION (1/12)

SECTION (2/12)

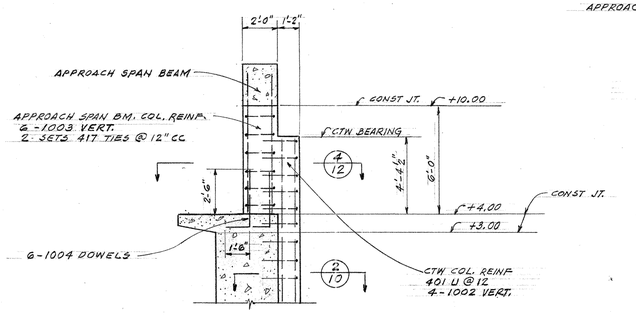

SECTION (3/12)

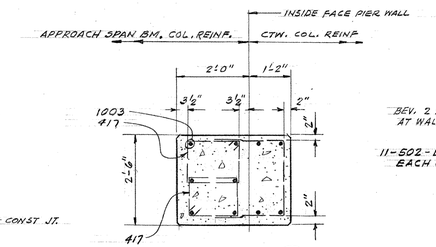

SECTION (4/12)

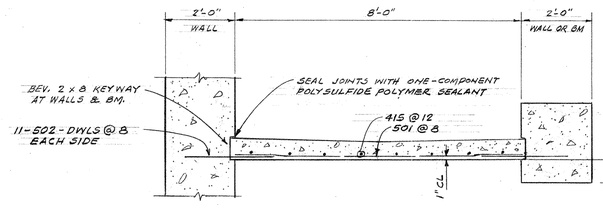

SECTION (7/9)

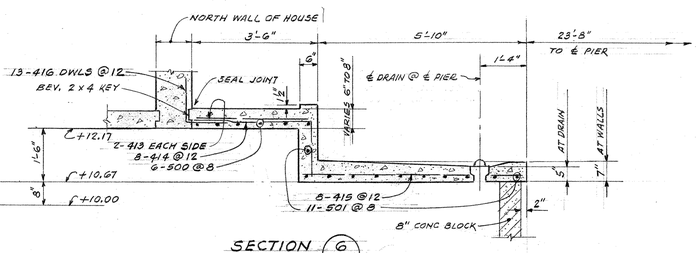

SECTION (6/9)

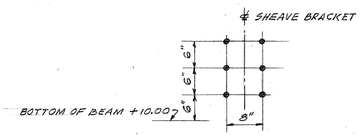

DETAIL BOLTS ABG
FOR BUMPER BEAM

STATE OF WISCONSIN
DEPARTMENT OF TRANSPORTATION
DIVISION OF HIGHWAYS

STRUCTURE B-40-406

DEPARTMENT OF PUBLIC WORKS
BUREAU OF BRIDGES AND PUBLIC BUILDINGS
CITY OF MILWAUKEE

REVISIONS		
MARK	DATE	BY
A		
B		
C		
D		
E		
F		
G		
H		
I		
J		
K		
L		
M		

PLEASANT ST. VERTICAL LIFT BRIDGE
OVER MILWAUKEE RIVER
APPROACH SPAN BEAM - PIERS #1 & #2

DESIGNED BY: T. E. S. TRACED BY: DATE:
DRAWN BY: T. E. S. CHECKED BY: DATE:
APPROVED:— SCALE: AS NOTED

Norris A. Batalden — DESIGNER IN CHARGE — DATE: 12-16-70 SHEET NUMBER 12
George P. Ashton — CHIEF OF BRIDGES AND PUBLIC BUILDINGS — DATE: 1-20-71 SET OF 47 SHEETS
Donald N. Lasky — DEPUTY COMMISSIONER OF PUBLIC WORKS — DATE: 1-25-71 JOB NO. 512-74

X44310

PROJECT I.D.	SHEET NUMBER	TOTAL SHEETS
2984-0-07		
FEDERAL PROJECT DESIGNATION T-4195 (II)		

USE EXISTING BELL WHICH IS MOUNTED ON THE TOP OF THE CENTER OF EXISTING PLEASANT ST. SWING BRIDGE. FURNISH & INSTALL CABLE, SHEAVES, PULLEYS, SLEEVES IN CEILING AND ROOF, ETC. SIMILAR AS REQ'D TO OPERATE SIGNAL BALL.

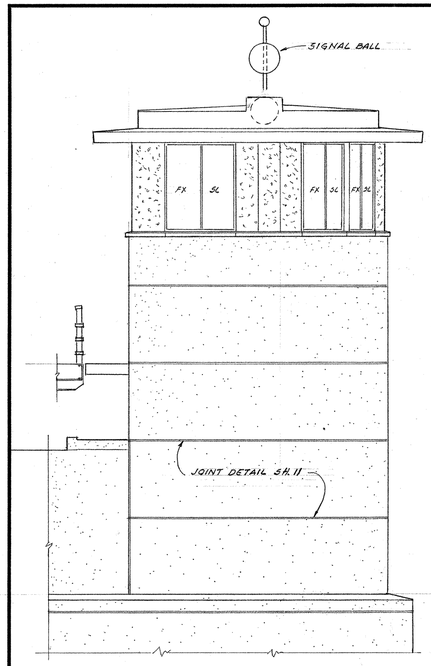

WEST ELEVATION

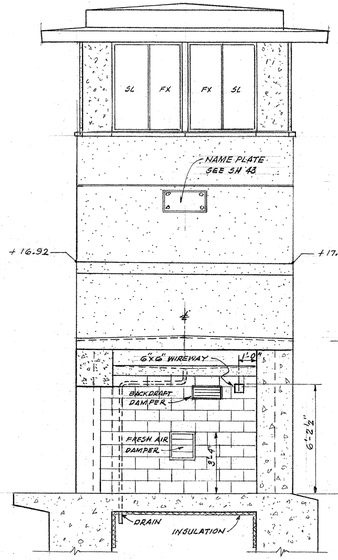

NORTH ELEVATION

FRAMES FOR DAMPERS TO BE BUILT IN BLOCK WALL

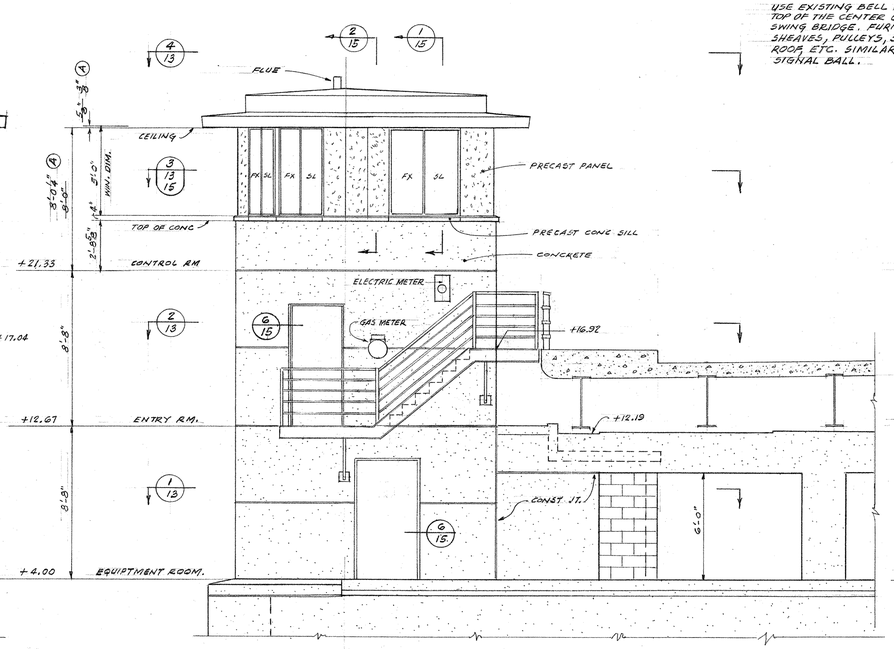

EAST ELEVATION

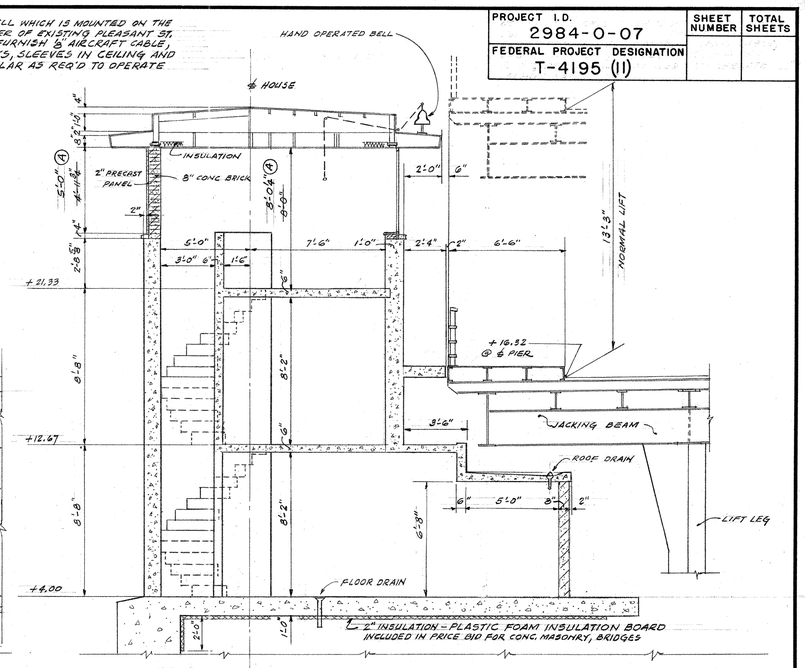

CROSS SECTION (5/13)

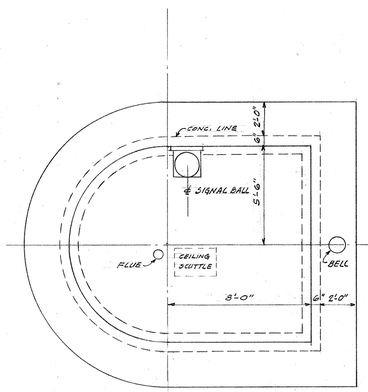

ROOF PLAN (4/13)

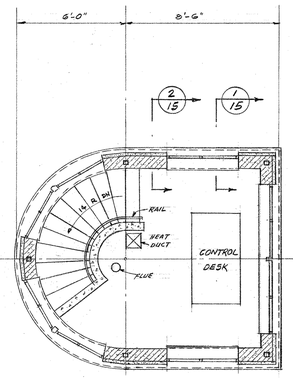

CONTROL ROOM PLAN (3/13, 15)
FLOOR EL. + 21.83

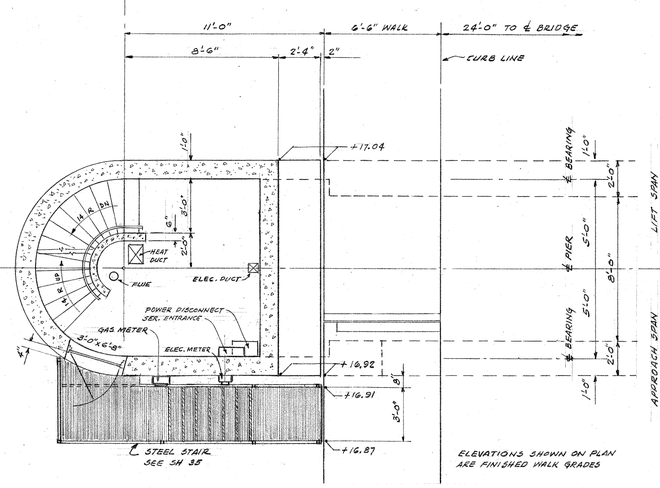

ELEVATIONS SHOWN ON PLAN ARE FINISHED WALK GRADES

ENTRY ROOM PLAN (2/13)
FLOOR EL. + 12.67

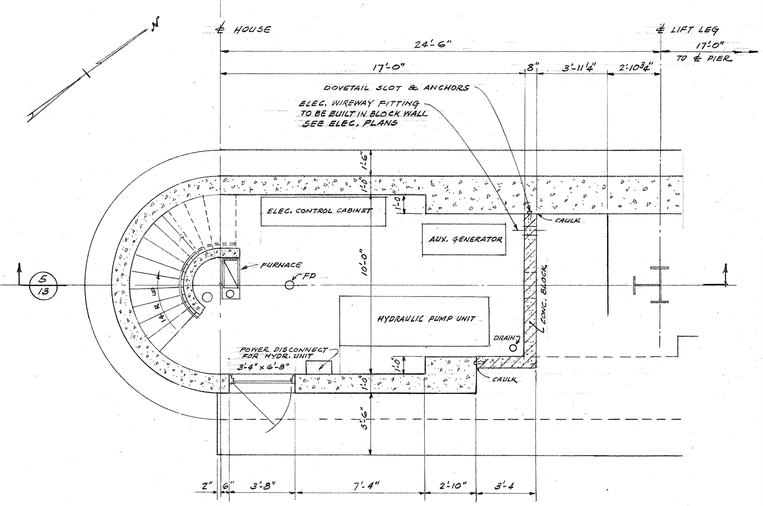

EQUIPMENT ROOM PLAN (1/13)
FLOOR EL. + 4.00

REVISION (A)
DIMENSION CHANGES BASED ON WINDOW SHOP DRAWINGS

STATE OF WISCONSIN
DEPARTMENT OF TRANSPORTATION
DIVISION OF HIGHWAYS

STRUCTURE B-40-406

DEPARTMENT OF PUBLIC WORKS
BUREAU OF BRIDGES AND PUBLIC BUILDINGS
CITY OF MILWAUKEE

REVISIONS		
MARK	DATE	BY
(A)	3-29-72	TES
B		
C		
D		
E		
F		
G		
H		
I		
J		
K		
L		
M		

PLEASANT ST. VERTICAL LIFT BRIDGE
OVER MILWAUKEE RIVER
BRIDGE OPERATOR'S HOUSE

DESIGNED BY: T. E. S. TRACED BY: DATE:
DRAWN BY: T. E. S. CHECKED BY: DATE:
APPROVED:— SCALE: 1/4 = 1'-0"

Morris A. Batalden, DESIGNER IN CHARGE — DATE: 12-16-70 SHEET NUMBER 13
George C. Ashton, BUREAU OF BRIDGES AND PUBLIC BUILDINGS — DATE: 1-20-71 SET OF 47 SHEETS
Donald W. Boeting, DEPUTY COMMISSIONER OF PUBLIC WORKS — DATE: 1-25-71 JOB NO. 512-74

X44311

PROJECT I.D.	SHEET NUMBER	TOTAL SHEETS
2984-0-07		
FEDERAL PROJECT DESIGNATION T-4195 (11)		

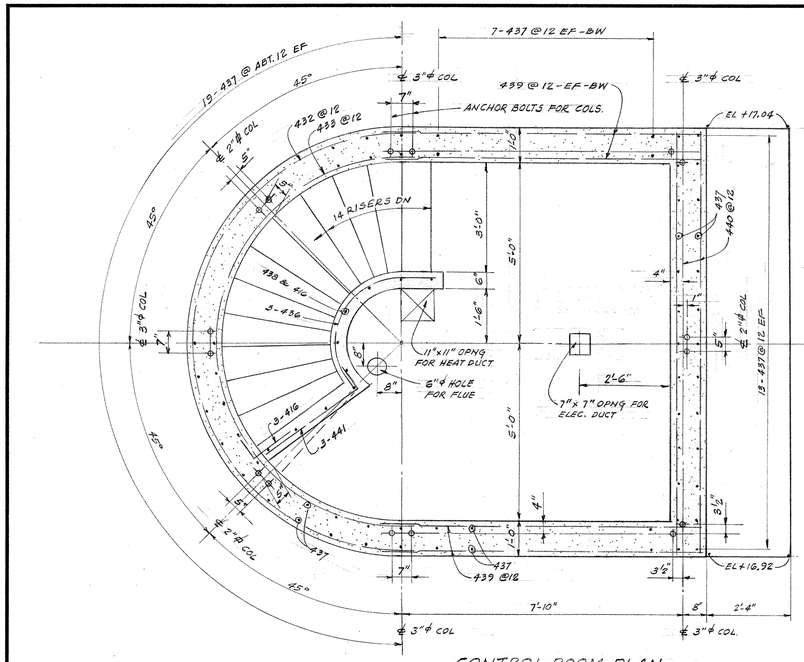

CONTROL ROOM PLAN
FLOOR ELEV. +21.33

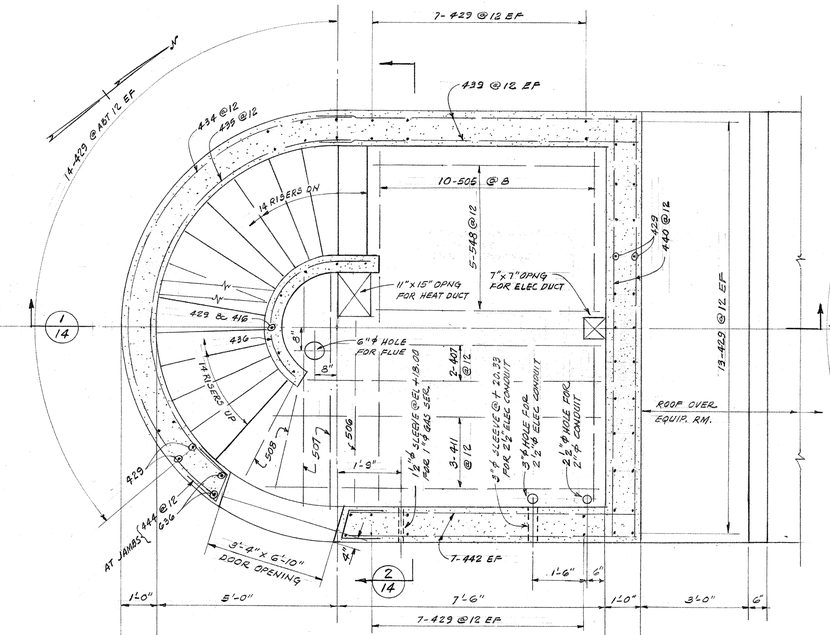

ENTRY ROOM PLAN
FLOOR ELEV. +12.67

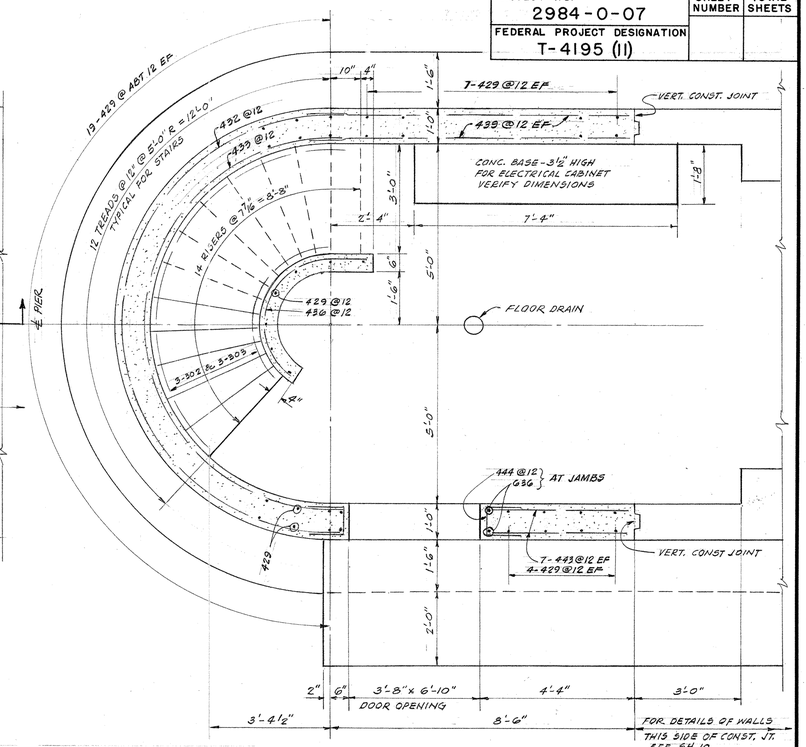

EQUIPMENT ROOM PLAN
FLOOR ELEV. +4.00

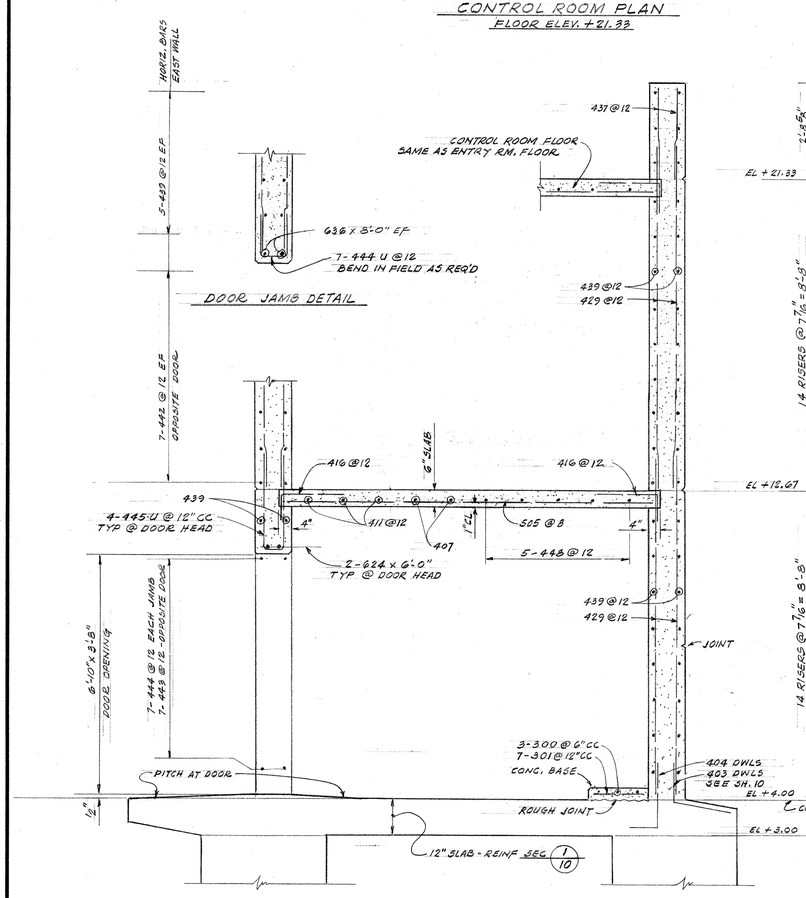

SECTION 2/14

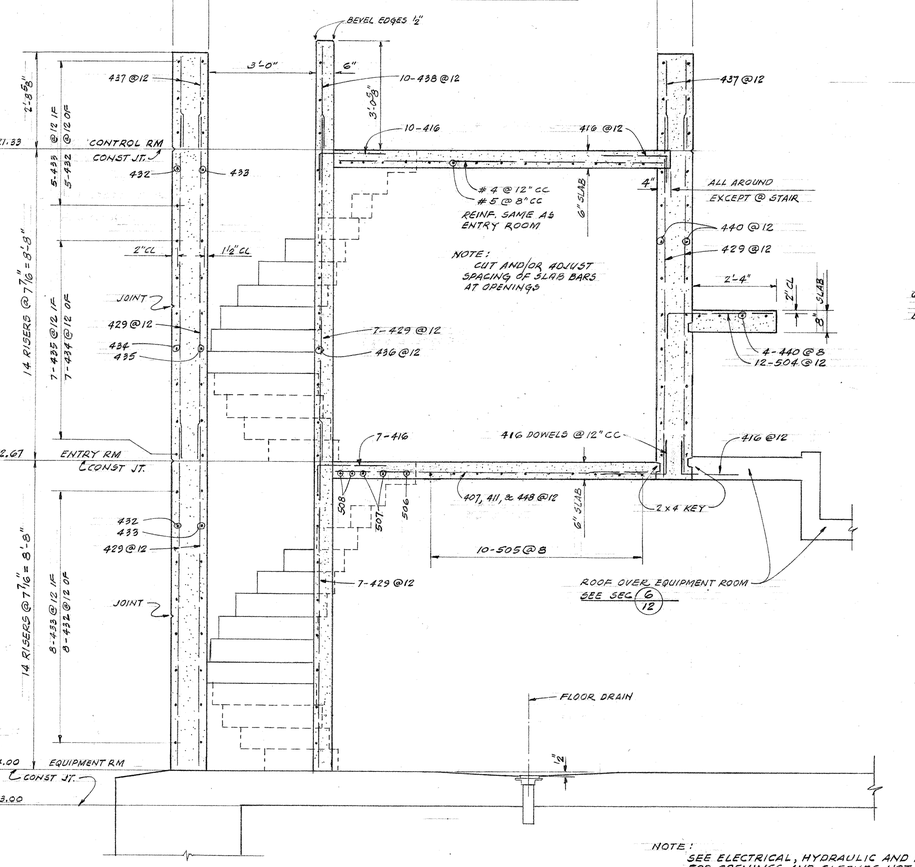

SECTION 1/14

NOTE:
SEE ELECTRICAL, HYDRAULIC AND HEATING DRAWINGS FOR OPENINGS AND SLEEVES NOT SHOWN.
OPERATORS HOUSE TO HAVE RUBBED SURFACE FINISH ON ALL INTERIOR AND EXTERIOR SURFACES ABOVE EL. + 4.00

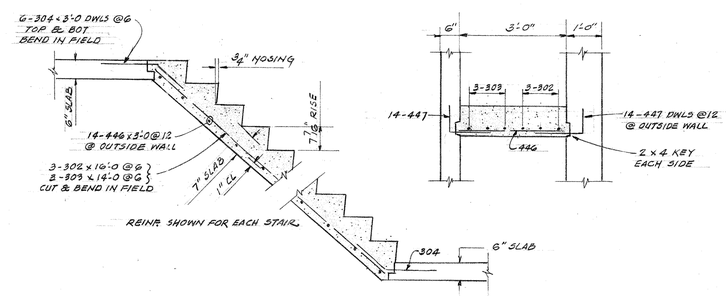

SECTIONS THRU STAIRS

STATE OF WISCONSIN
DEPARTMENT OF TRANSPORTATION
DIVISION OF HIGHWAYS

STRUCTURE B-40-406

DEPARTMENT OF PUBLIC WORKS
BUREAU OF BRIDGES AND PUBLIC BUILDINGS
CITY OF MILWAUKEE

REVISIONS		
MARK	DATE	BY
A		
B		
C		
D		
E		
F		
G		
H		
I		
J		
K		
L		
M		

PLEASANT ST. VERTICAL LIFT BRIDGE
OVER MILWAUKEE RIVER
OPERATOR'S HOUSE - CONCRETE DETAILS

DESIGNED BY: T. E. S. TRACED BY: DATE:
DRAWN BY: T. E. S. CHECKED BY: DATE:
APPROVED:— SCALE: ½" = 1'-0"

Morris G. Batalden — DESIGNER IN CHARGE — DATE: 12-16-70 SHEET NUMBER 14
George C. Paxton — CITY OF BRIDGES AND PUBLIC BUILDINGS — DATE: 1-20-71 SET OF 47 SHEETS
Harold D. Keeling — DEPUTY COMMISSIONER OF PUBLIC WORKS — DATE: 1-25-71 JOB NO. 512-74

X 44312

PROJECT I.D.	SHEET NUMBER	TOTAL SHEETS
2984-0-07		
FEDERAL PROJECT DESIGNATION T-4195 (11)		

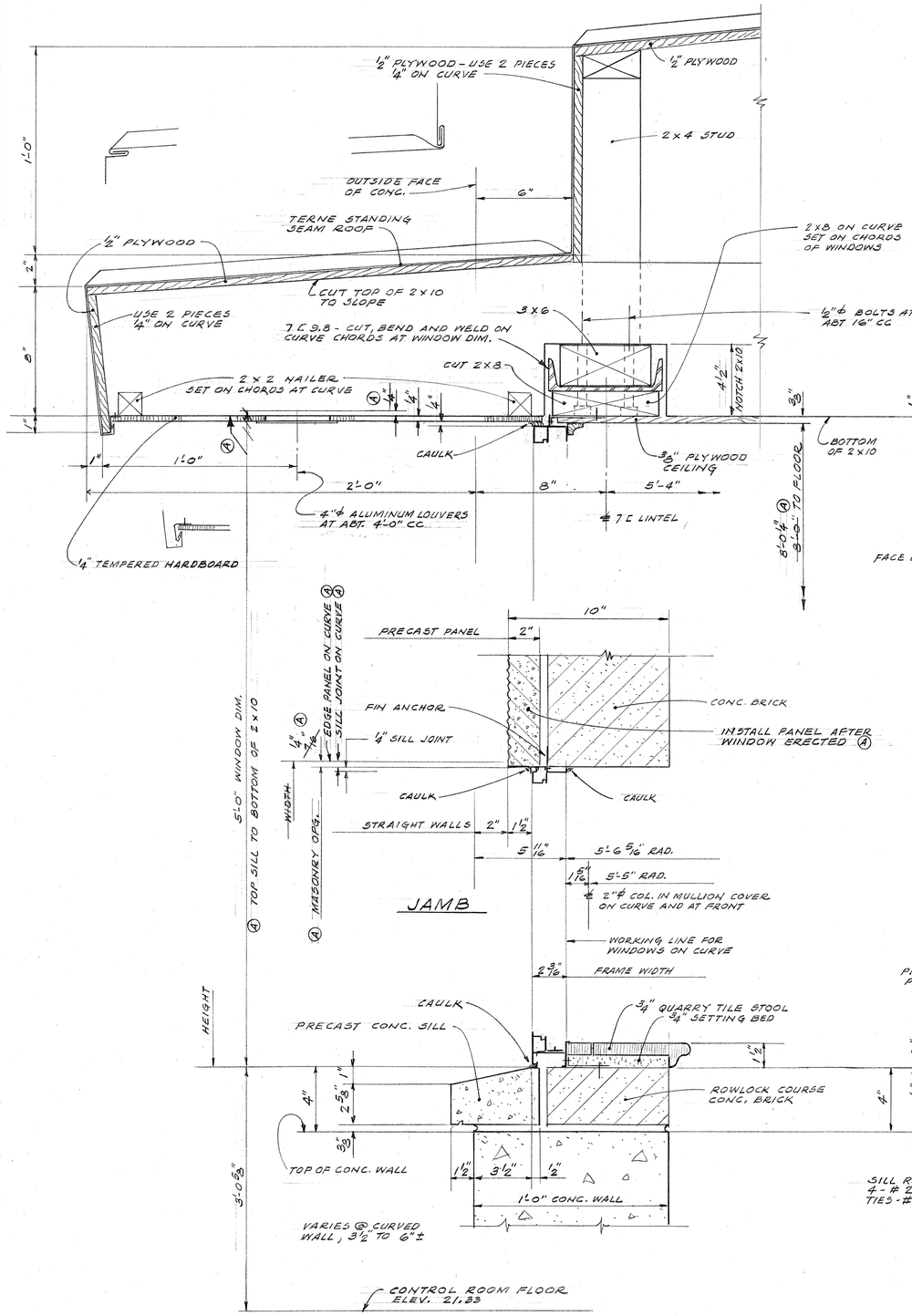

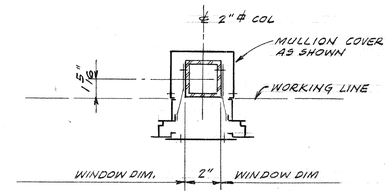

MULLION DETAIL (4/15)
SCALE 3" = 1'-0"

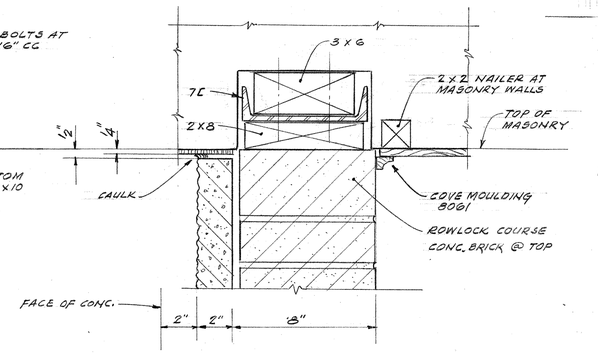

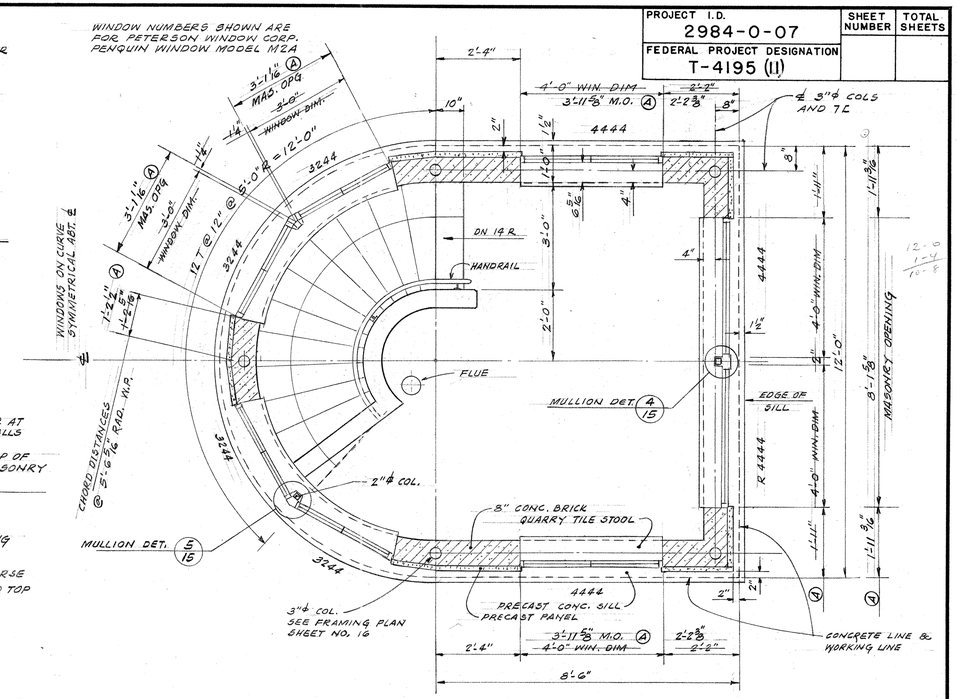

OPERATOR'S HOUSE HANDRAIL - TYPE E

RAILS - 1 1/2" NOMINAL DIA. - ALUM. ALLOY 6063-T832, SATIN FINISH. RAIL 2'-9" ABOVE RISER.
WALL BRACKETS - J. G. BRAUN CO. # 4401 OR JULIUS BLUM & CO. # 31G HEAVY DUTY BRACKETS. FASTEN TO WALL WITH 3/8"ϕ x 4" LG ALUMINUM LAG BOLTS WITH LEAD EXPANSION SHIELD. BRACKETS AT ABT 3'-0" CC.

CONTROL ROOM PLAN (3/13)
FLOOR EL. + 21.67
SCALE 1/2" = 1'-0"

JAMB

SECTION (1/13)
SCALE 3" = 1'-0"

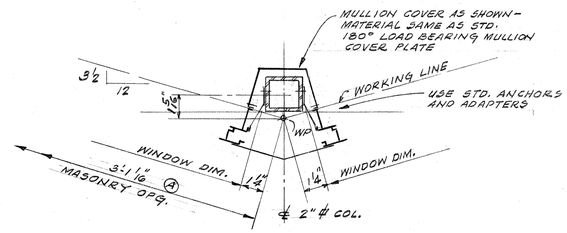

MULLION DETAIL (5/15)
SCALE 3" = 1'-0"

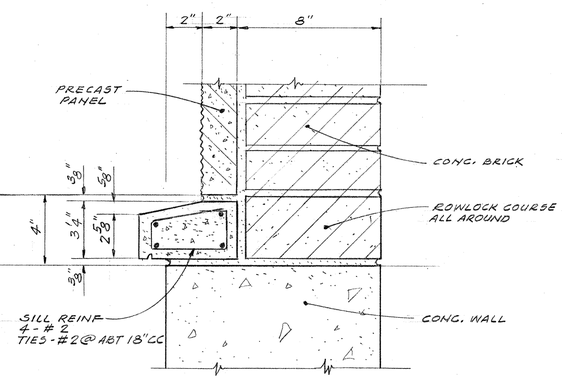

SECTION (2/13)
SCALE 3" = 1'-0"

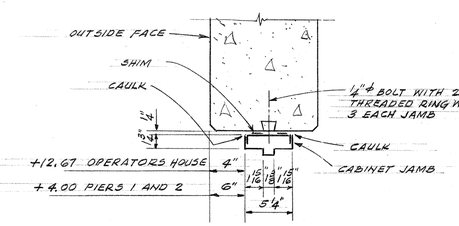

JAMB (6/11/13)

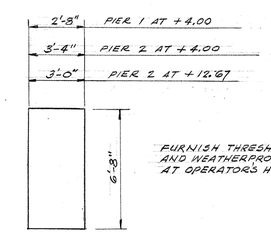

FURNISH THRESHOLDS AND WEATHERPROOF DOORS AT OPERATOR'S HOUSE.

DOOR TYPE F

REVISION (A) DIMENSION CHANGES BASED ON WINDOW SHOP DRAWINGS

STATE OF WISCONSIN
DEPARTMENT OF TRANSPORTATION
DIVISION OF HIGHWAYS

STRUCTURE B-40-406

DEPARTMENT OF PUBLIC WORKS
BUREAU OF BRIDGES AND PUBLIC BUILDINGS
CITY OF MILWAUKEE

REVISIONS		
MARK	DATE	BY
(A)	3-29-72	TES
B		
C		
D		
E		
F		
G		
H		
I		
J		
K		
L		
M		

PLEASANT ST. VERTICAL LIFT BRIDGE
OVER MILWAUKEE RIVER
OPERATOR'S HOUSE - WINDOW & DOOR DETAILS

DESIGNED BY: T. E. S. TRACED BY: DATE:
DRAWN BY: T. E. S. CHECKED BY: DATE:
APPROVED:— SCALE: AS NOTED
Morris C. Bastable DESIGNER IN CHARGE DATE: 12-16-70 SHEET NUMBER 15
George C. Ashtaw STAFF, OF BRIDGES AND PUBLIC BUILDINGS DATE: 1-20-71 SET OF 47 SHEETS
Donald W. Lathy COMMISSIONER OF PUBLIC WORKS DATE: 1-25-71 JOB NO. 512 - 74

X44313

PROJECT I.D.	SHEET NUMBER	TOTAL SHEETS
2984-0-07		
FEDERAL PROJECT DESIGNATION T-4195 (11)		

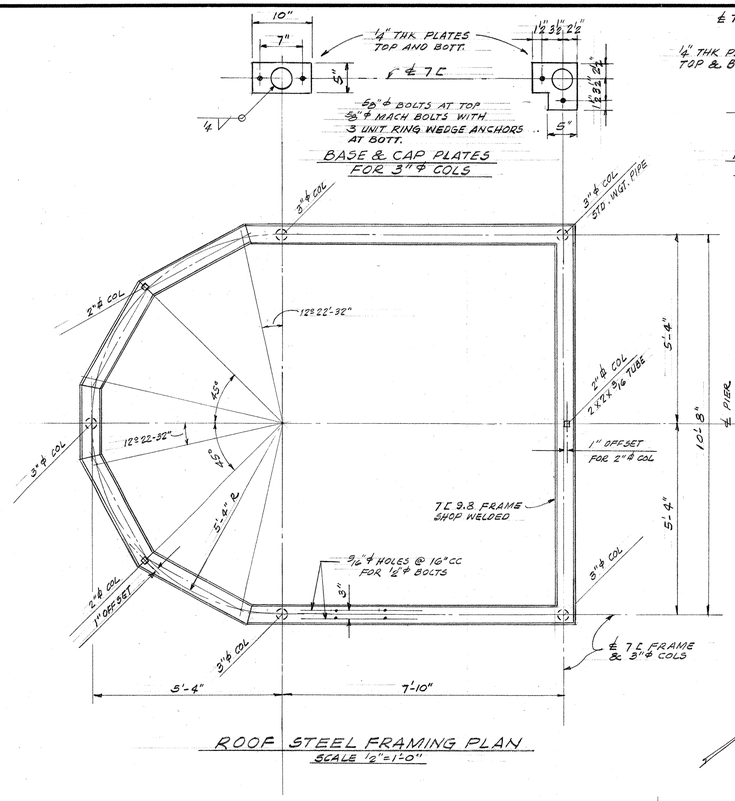

ROOF STEEL FRAMING PLAN
SCALE 1/2"=1'-0"

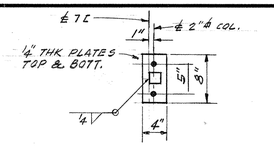

BASE & CAP PLATES FOR 2"ϕ COLS

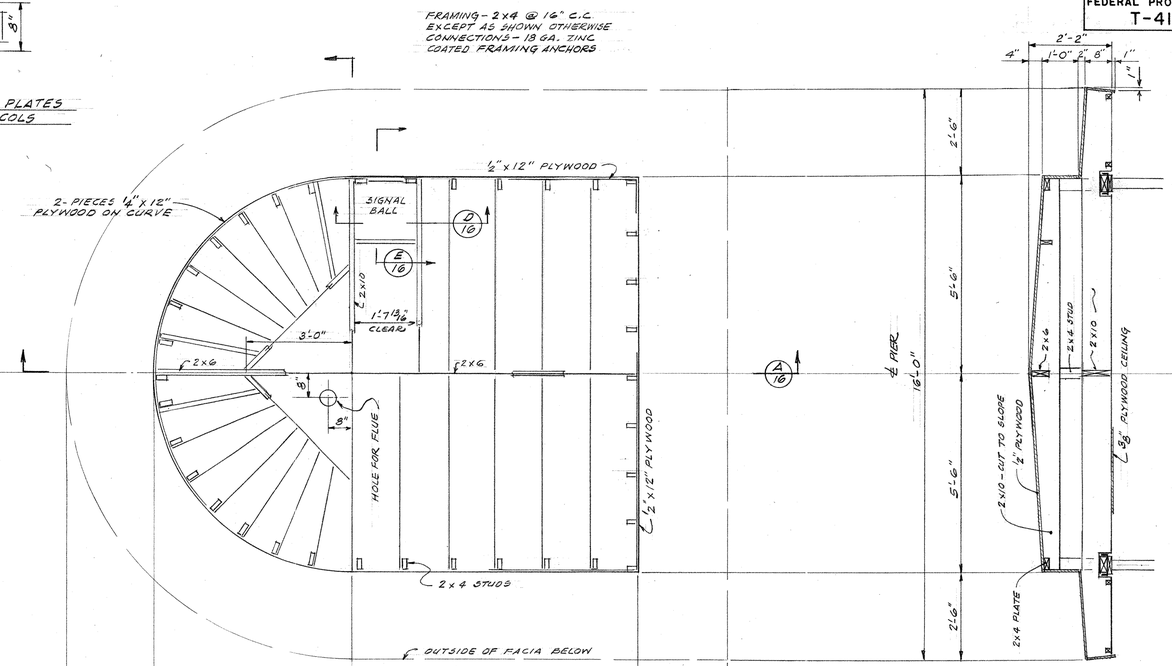

UPPER ROOF FRAMING PLAN
SCALE 1/2"=1'-0"

SECTION B/16
SCALE 1/2"=1'-0"

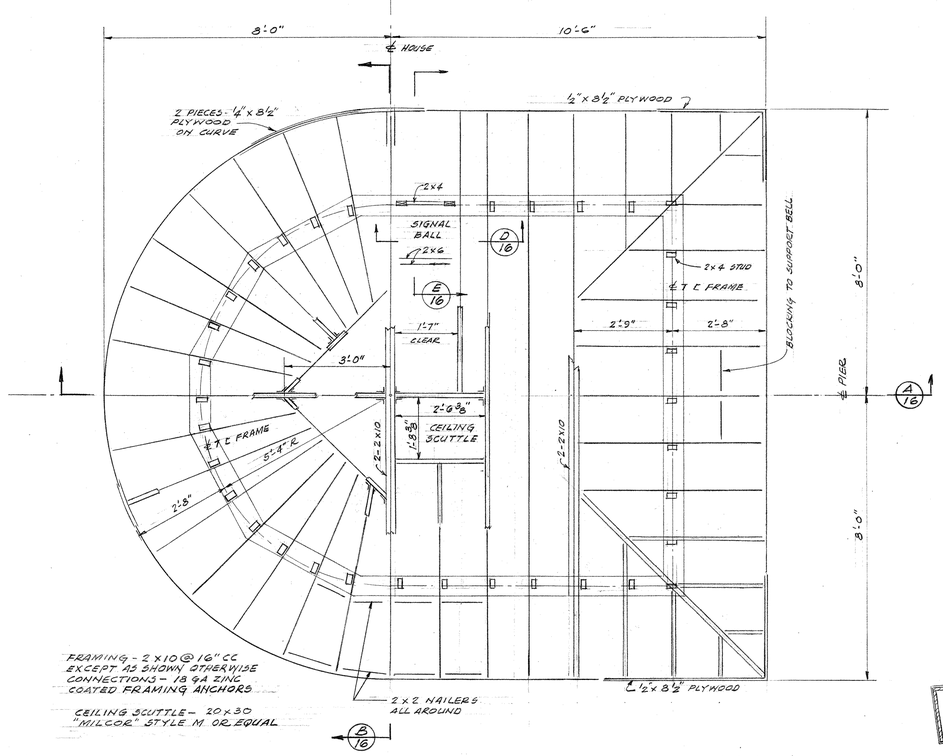

LOWER ROOF & CEILING FRAMING PLAN
SCALE 1/2"=1'-0"

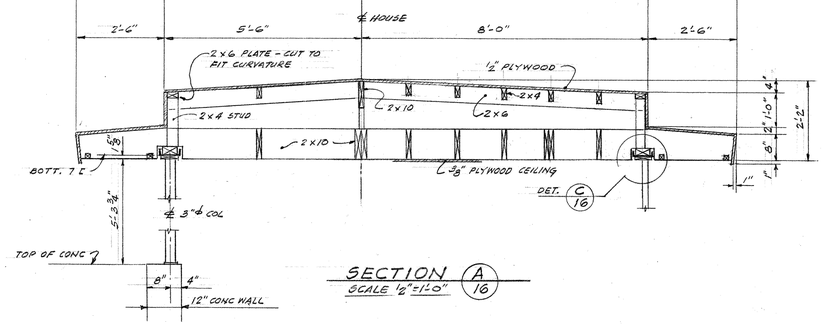

SECTION A/16
SCALE 1/2"=1'-0"

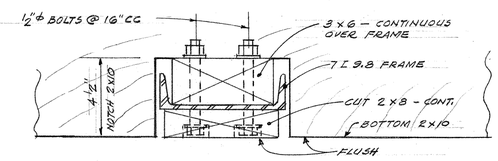

DETAIL C/16
SCALE 3"=1'-0"

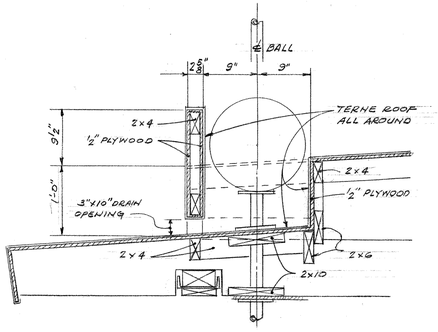

SECTION E/16
SCALE 1"=1'-0"

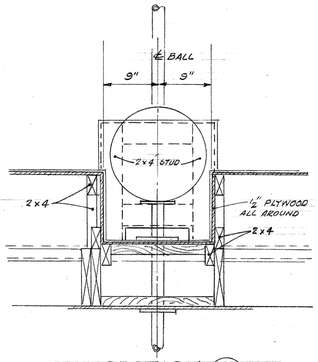

SECTION D/16
SCALE 1"=1'-0"

STATE OF WISCONSIN
DEPARTMENT OF TRANSPORTATION
DIVISION OF HIGHWAYS

STRUCTURE B-40-406

DEPARTMENT OF PUBLIC WORKS
BUREAU OF BRIDGES AND PUBLIC BUILDINGS
CITY OF MILWAUKEE

REVISIONS		
MARK	DATE	BY
A		
B		
C		
D		
E		
F		
G		
H		
I		
J		
K		
L		
M		

PLEASANT ST. VERTICAL LIFT BRIDGE
OVER MILWAUKEE RIVER
OPERATOR'S HOUSE - STEEL & ROOF DETAILS

DESIGNED BY: T. E. S. TRACED BY: DATE:
DRAWN BY: T. E. S. CHECKED BY: DATE:
APPROVED:— SCALE: AS NOTED

Morris C. Batacka — DESIGNER IN CHARGE — DATE: 12-16-70 SHEET NUMBER 16
George C. Ashton — SUPT. OF BRIDGES AND PUBLIC BUILDINGS — DATE: 1-20-71 SET OF 47 SHEETS
Wendell W. Lindsay — DEPUTY COMMISSIONER OF PUBLIC WORKS — DATE: 1-25-71 JOB NO. 512-74

X44314

PROJECT I.D.	SHEET NUMBER	TOTAL SHEETS
2984-0-07		
FEDERAL PROJECT DESIGNATION T-4195 (11)		

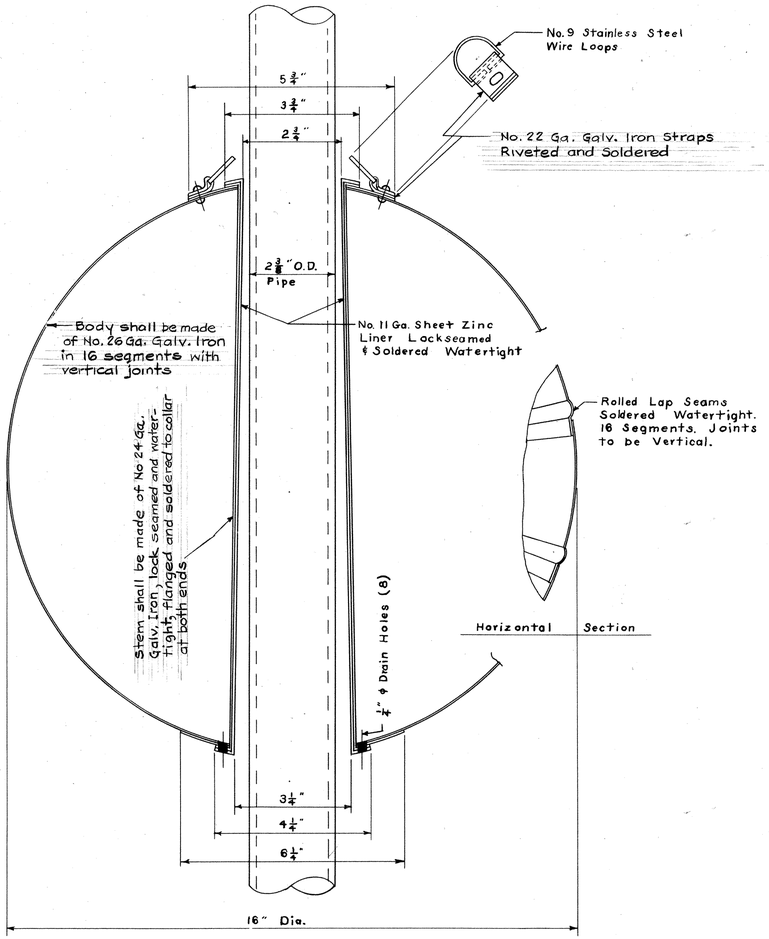

CROSS SECTION OF SIGNAL BALL

Half Size

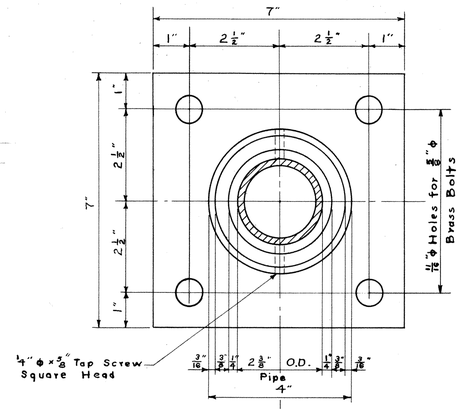

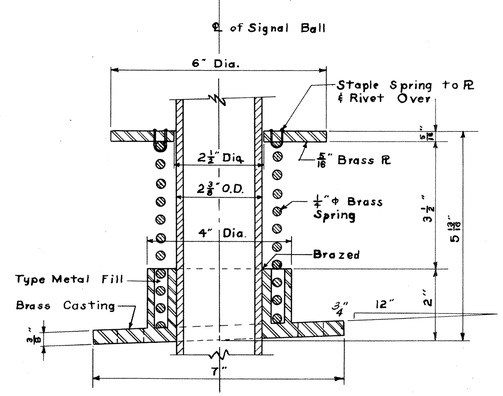

DETAIL OF BASE FLANGE FOR SIGNAL BALL

Half Size

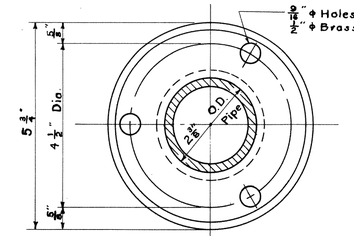

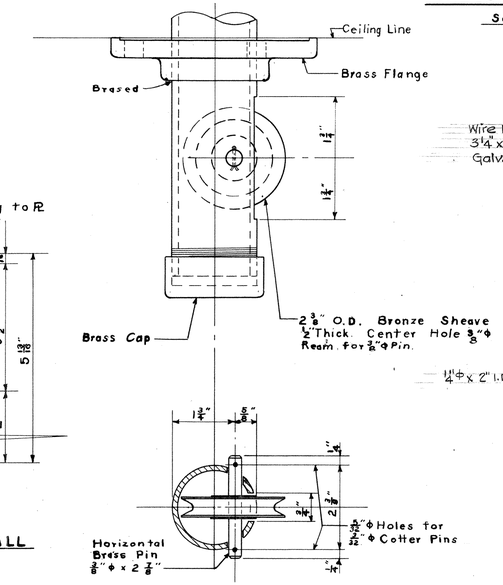

DETAIL OF CEILING SHEAVE BLOCK FOR SIGNAL BALL

Half Size

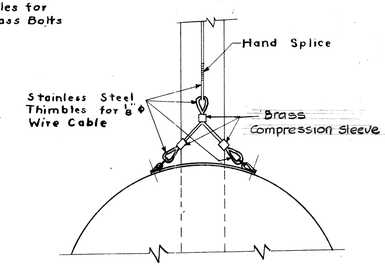

CABLE FASTENER DETAIL

Scale: 3" = 1'-0"

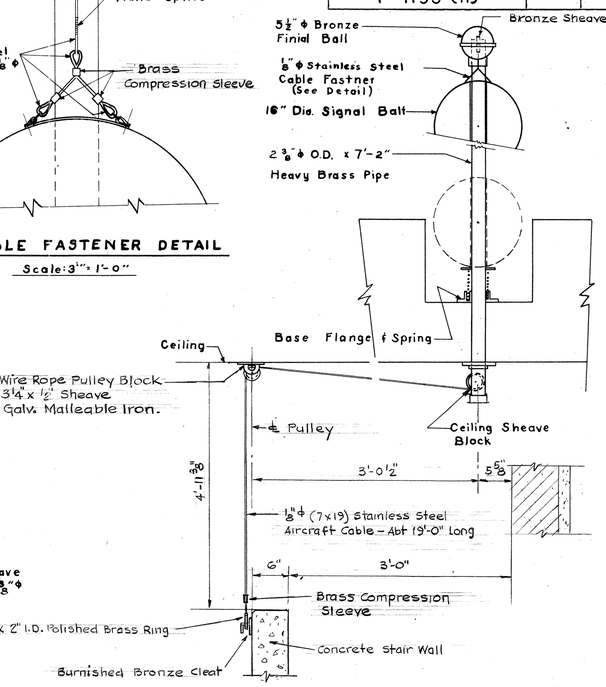

ELEVATION - SIGNAL BALL ASSEMBLY

Scale 1" = 1'-0"

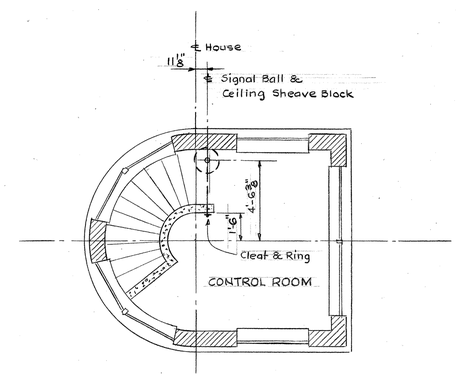

PLAN - SIGNAL BALL ASSEMBLY

Scale: 1/4" = 1'-0"

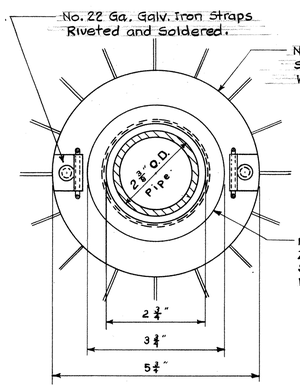

PLAN OF TOP COLLAR

Half Size

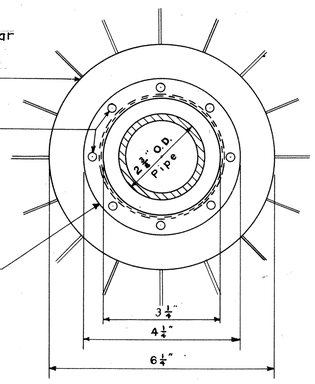

PLAN OF BOTTOM COLLAR

Half Size

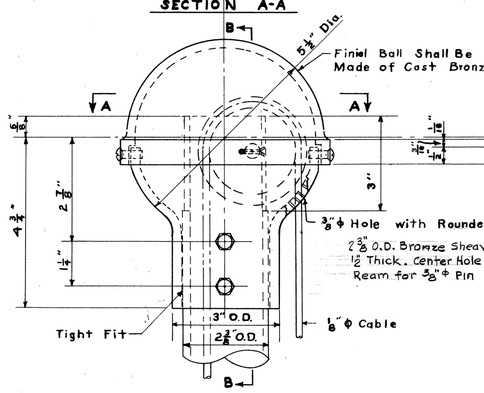

FINIAL BALL FOR SIGNAL BALL STAFF

Half Size

(JUNEAU AVE. BRIDGE PATTERN)

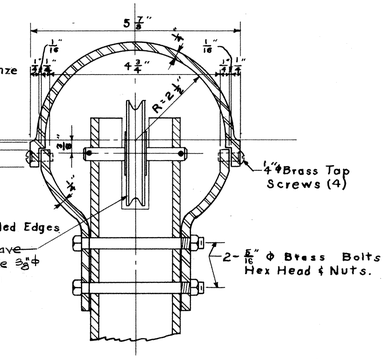

SECTION B-B

STATE OF WISCONSIN
DEPARTMENT OF TRANSPORTATION
DIVISION OF HIGHWAYS

STRUCTURE B-40-406

DEPARTMENT OF PUBLIC WORKS
BUREAU OF BRIDGES AND PUBLIC BUILDINGS
CITY OF MILWAUKEE

REVISIONS		
MARK	DATE	BY
A		
B		
C		
D		
E		
F		
G		
H		
I		
J		
K		
L		
M		

PLEASANT ST. VERTICAL LIFT BRIDGE
OVER MILWAUKEE RIVER

OPERATOR'S HOUSE-SIGNAL BALL

DESIGNED BY: _____ TRACED BY: _____ DATE: _____
DRAWN BY: REVISED TES 1-8-69 CHECKED BY: _____ DATE: _____
APPROVED:— SCALE: AS NOTED
Norris G. Batakhin — DESIGNER IN CHARGE — DATE: 12-16-70 SHEET NUMBER 17
George C. Ashton — BUREAU ENGINEER AND BUILDING BUILDINGS — DATE: 1-20-71 SET OF 47 SHEETS
Lonnie W. Lathing — DEPUTY COMMISSIONER OF PUBLIC WORKS — DATE: 1-25-71 JOB NO. 512-74

X 44315

PROJECT I.D.	SHEET NUMBER	TOTAL SHEETS
2984-0-07		
FEDERAL PROJECT DESIGNATION T-4195 (11)		

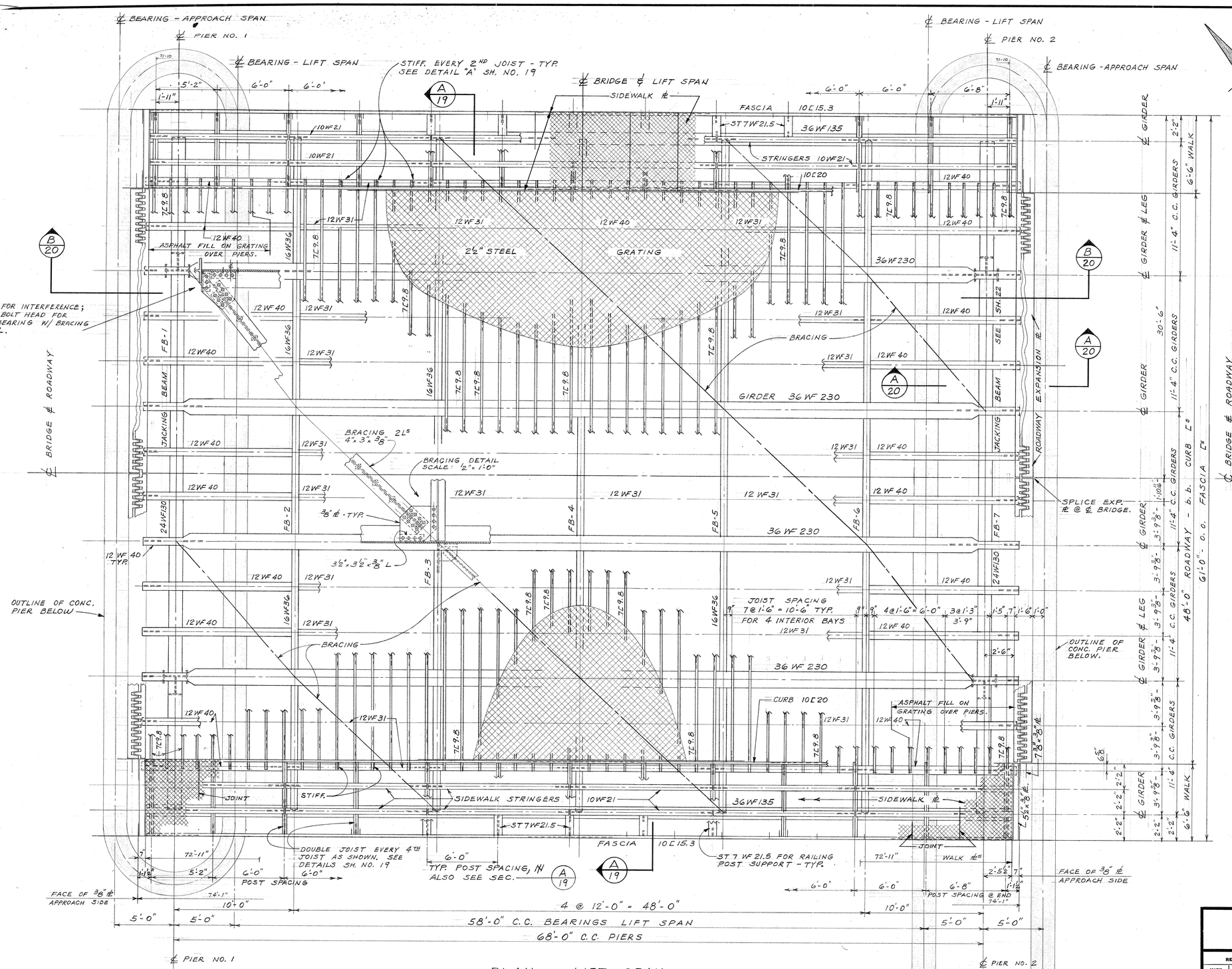

PLAN — LIFT SPAN

SCALE: 1/4" = 1'-0"

NOTE:
SEE MACHINERY, ELECTRICAL & HYDRAULIC DRAWINGS FOR MISCELLANEOUS STRUCT. STEEL.
N = EXCEPT AS NOTED

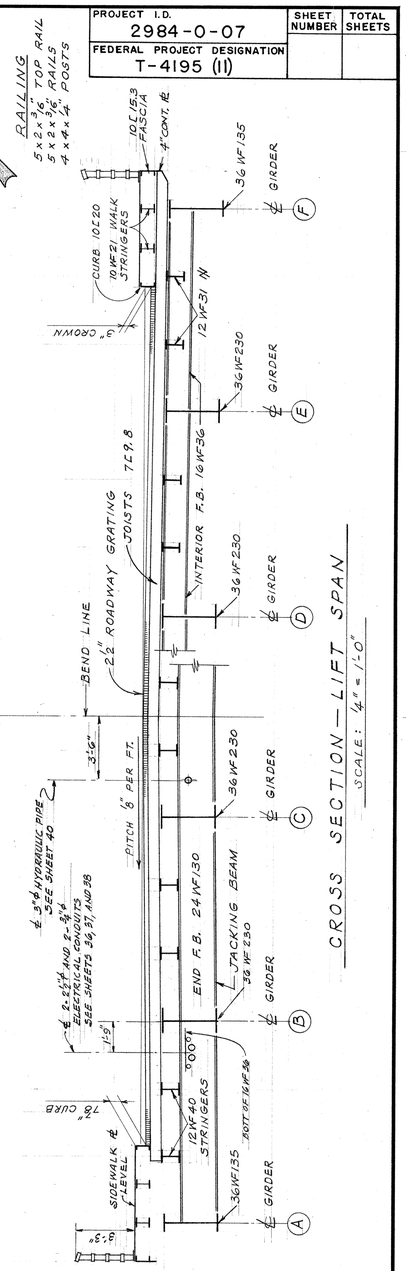

CROSS SECTION — LIFT SPAN

SCALE: 1/4" = 1'-0"

STATE OF WISCONSIN
DEPARTMENT OF TRANSPORTATION
DIVISION OF HIGHWAYS

STRUCTURE B-40-406

DEPARTMENT OF PUBLIC WORKS
BUREAU OF BRIDGES AND PUBLIC BUILDINGS
CITY OF MILWAUKEE

REVISIONS		
MARK	DATE	BY
A		
B		
C		
D		
E		
F		
G		
H		
I		
J		
K		
L		
M		

PLEASANT ST. VERTICAL LIFT BRIDGE
OVER MILWAUKEE RIVER
LIFT SPAN - PLAN

DESIGNED BY: P.C.B. TRACED BY: DATE: 2-25-69
DRAWN BY: P.C.B. CHECKED BY: DATE:
APPROVED:— SCALE: AS NOTED
Norris C. Batalden — DESIGNER IN CHARGE — DATE: 12-16-70 SHEET NUMBER 18
George C. Ashton — ASST. OF BRIDGES AND PUBLIC BUILDINGS — DATE: 1-28-71 SET OF 47 SHEETS
Howard W. Stocking — DEPUTY COMMISSIONER OF PUBLIC WORKS — DATE: 1-28-71 JOB NO. 512 - 74

X44316

PROJECT I.D.	SHEET NUMBER	TOTAL SHEETS
2984-0-07		
FEDERAL PROJECT DESIGNATION T-4195 (11)		

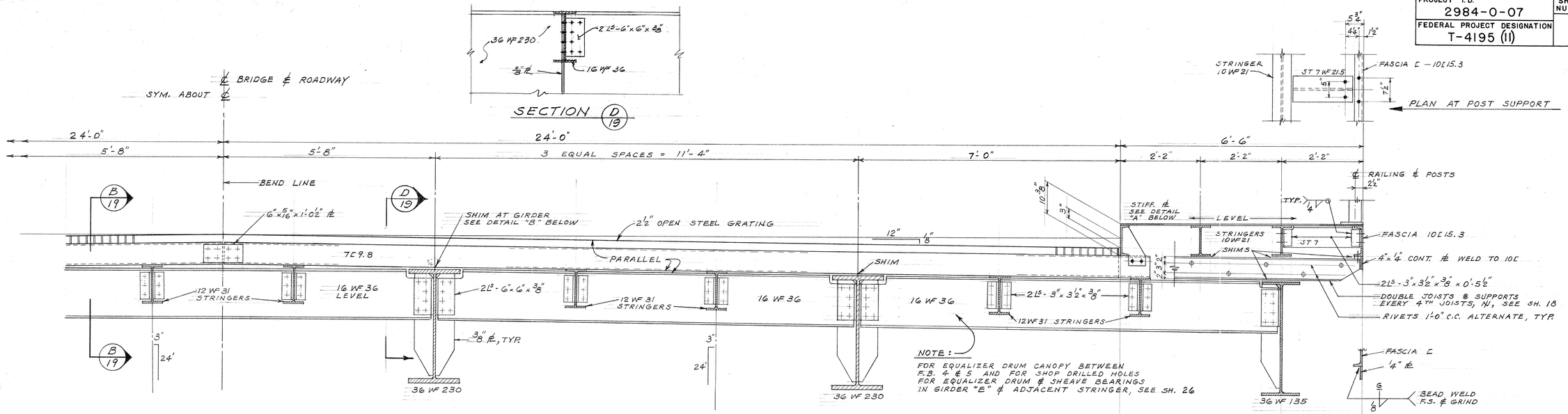

INTERIOR FLOORBEAM — SECTION — (A/18) F.B. 2 THRU F.B. 6

SCALE: 3/4" = 1'-0"

FOR EXTERIOR (JACKING BEAM) FLOORBEAM SEE SH. 22

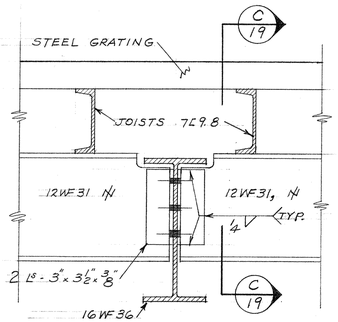

SECTION — (B/18, 19)

SCALE: 1 1/2" = 1'-0"

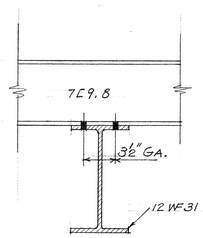

SECTION — (C/19)

SCALE: 1 1/2" = 1'-0

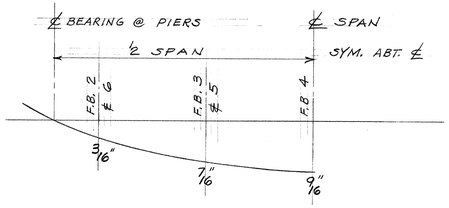

DEAD LOAD DEFLECTION DIAGRAM

FOR ALL 36 WF GIRDERS - LIFT SPAN

CAMBER GIRDERS FOR DEAD LOAD DEFLECTION + VERTICAL CURVES

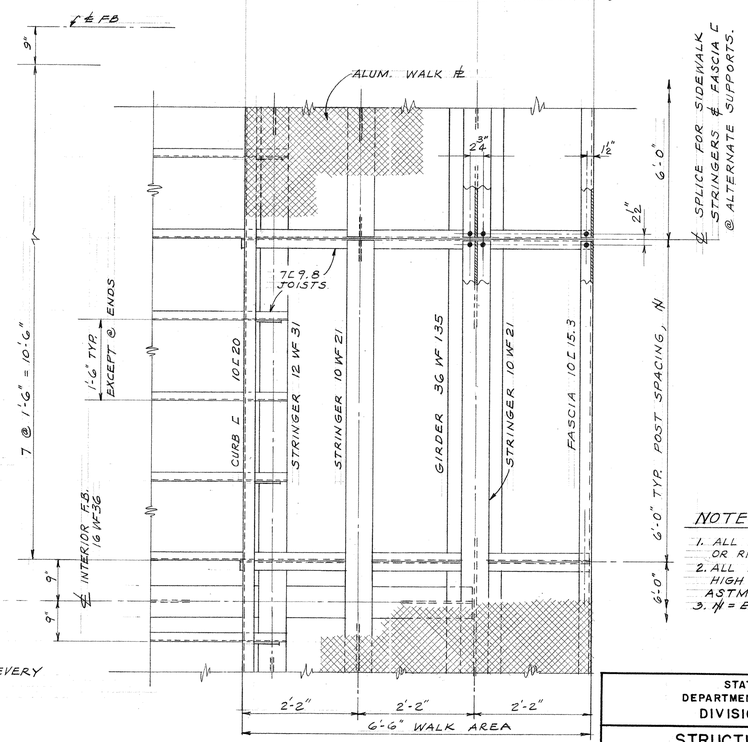

PARTIAL PLAN @ WALK

SCALE: 3/4" = 1'-0"

NOTES:

1. ALL SHOP CONNECTIONS - WELDED OR RIVETED.
2. ALL FIELD CONNECTIONS 3/4" ϕ HIGH STRENGTH BOLTS, N ASTM A-325 FRICTION TYPE.
3. N = EXCEPT AS NOTED

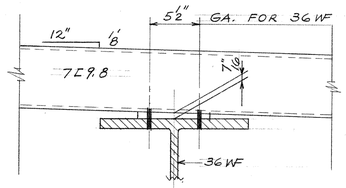

SHIM PL @ GIRDERS

SCALE: 1 1/2" = 1'-0"

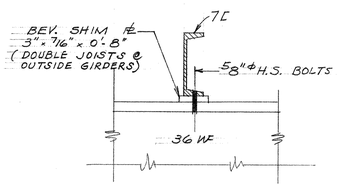

DETAIL "B"

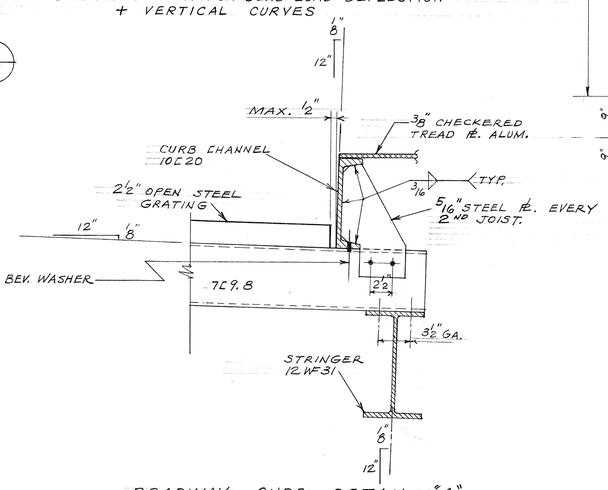

ROADWAY CURB DETAIL "A"

SCALE: 1 1/2" = 1'-0"

STATE OF WISCONSIN
DEPARTMENT OF TRANSPORTATION
DIVISION OF HIGHWAYS

STRUCTURE B-40-406

DEPARTMENT OF PUBLIC WORKS
BUREAU OF BRIDGES AND PUBLIC BUILDINGS
CITY OF MILWAUKEE

REVISIONS		
MARK	DATE	BY
A		
B		
C		
D		
E		
F		
G		
H		
I		
J		
K		
L		
M		

PLEASANT ST. VERTICAL LIFT BRIDGE
OVER MILWAUKEE RIVER

LIFT SPAN - CROSS-SECTION

DESIGNED BY: P.C.B. TRACED BY: DATE: 3-4-69
DRAWN BY: P.C.B. CHECKED BY: DATE:
APPROVED:— SCALE: AS NOTED
Norris C. Batelden — DESIGNER IN CHARGE — DATE: 12-16-70 SHEET NUMBER 19
George A. Ashton — BUR. OF BRIDGES AND PUBLIC BUILDINGS — DATE: 1-20-71 SET OF 47 SHEETS
Harold W. Keating — DEPUTY COMMISSIONER OF PUBLIC WORKS — DATE: 1-25-71 JOB NO. 512-74

X 44317

PROJECT I.D.	SHEET NUMBER	TOTAL SHEETS
2984-0-07		
FEDERAL PROJECT DESIGNATION T-4195 (11)		

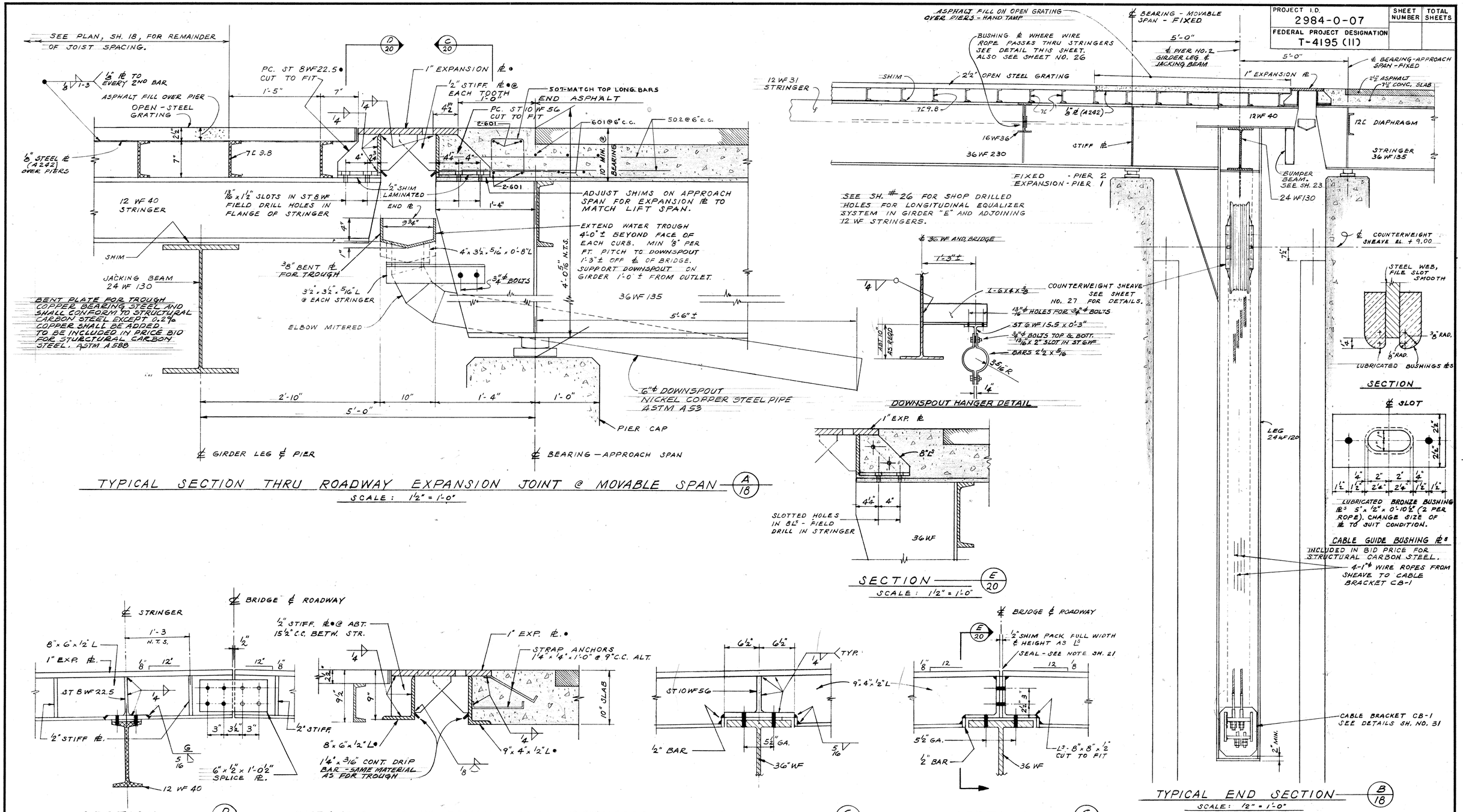

TYPICAL SECTION THRU ROADWAY EXPANSION JOINT @ MOVABLE SPAN — A/18

SCALE: 1 1/2" = 1'-0"

SECTION — E/20

SCALE: 1 1/2" = 1'-0"

TYPICAL END SECTION — B/18

SCALE: 1 1/2" = 1'-0"

SECTION — D/20

SCALE: 1 1/2" = 1'-0"

EXPANSION JOINT DETAIL BETW. STRINGERS

SCALE: 1 1/2" = 1'-0"

SECTION — C/20

SCALE: 1 1/2" = 1'-0"

SECTION — C/20

SCALE: 1 1/2" = 1'-0"

SPLICE DETAIL - APPROACH SIDE

EXPANSION JOINT MATERIAL MARKED THIS ⌀ SHALL BE ASTM A 242 - ALL OTHER MATERIAL SHALL BE ASTM A 36

X 44318

STATE OF WISCONSIN
DEPARTMENT OF TRANSPORTATION
DIVISION OF HIGHWAYS

STRUCTURE B-40-406

DEPARTMENT OF PUBLIC WORKS
BUREAU OF BRIDGES AND PUBLIC BUILDINGS
CITY OF MILWAUKEE

REVISIONS		
MARK	DATE	BY
A		
B		
C		
D		
E		
F		
G		
H		
I		
J		
K		
L		
M		

PLEASANT ST. VERTICAL LIFT BRIDGE
OVER MILWAUKEE RIVER
LIFT SPAN - END SECTION AND EXPANSION JOINT

DESIGNED BY: P.C.B. TRACED BY: DATE:
DRAWN BY: P.C.B. CHECKED BY: DATE:
APPROVED:— SCALE: AS NOTED

Morris C. Batelden — DESIGNER IN CHARGE — DATE: 12-16-70 — SHEET NUMBER 20
George C. Ashton — ASST. CITY ENGINEER & CHIEF BRIDGE & PUBLIC BUILDINGS — DATE: 1-20-71 — SET OF 47 SHEETS
Leonard N. Kopitzky — Deputy — COMMISSIONER OF PUBLIC WORKS — DATE: 1-25-71 — JOB NO. 512-74

CITY

PROJECT I. D.	SHEET NUMBER	TOTAL SHEETS
2984-0-07		
FEDERAL PROJECT DESIGNATION T-4195 (11)		

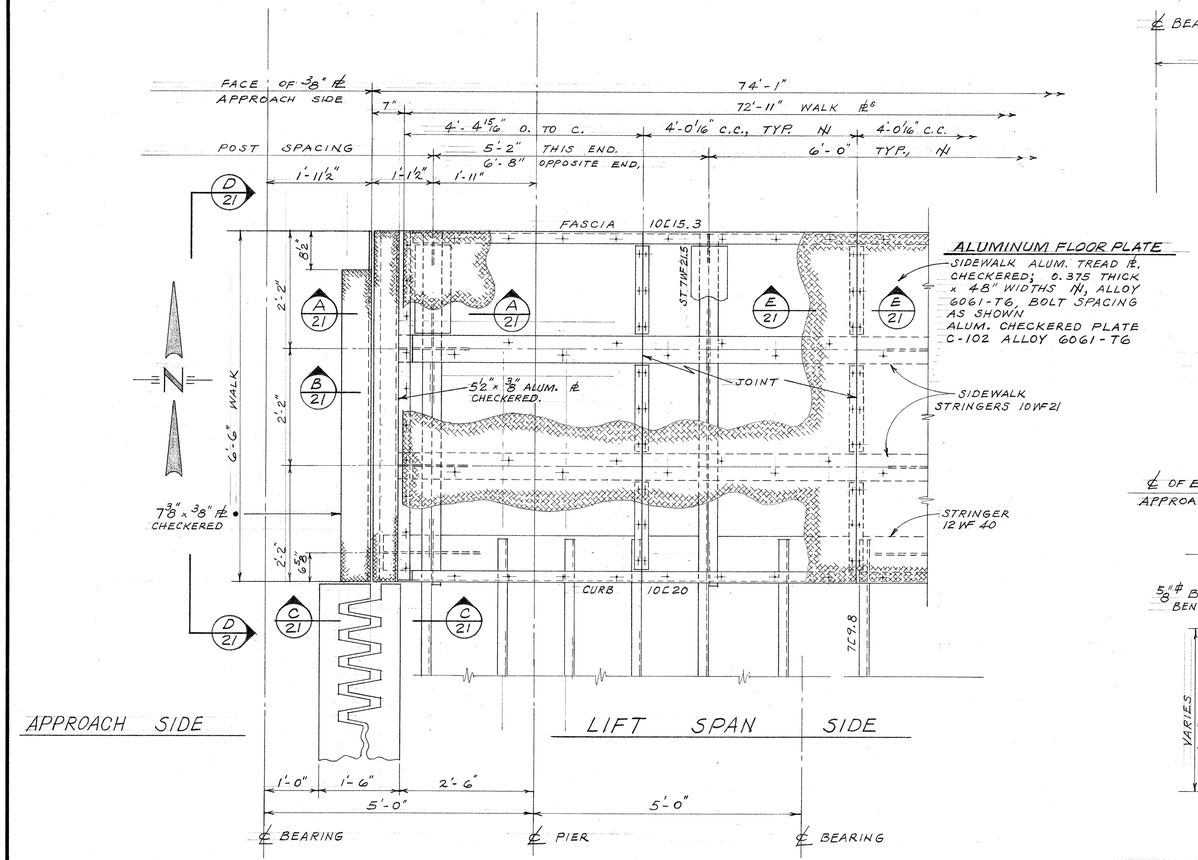

PLAN AT SIDEWALK EXPANSION JOINT

SCALE: 3/4" = 1'-0"

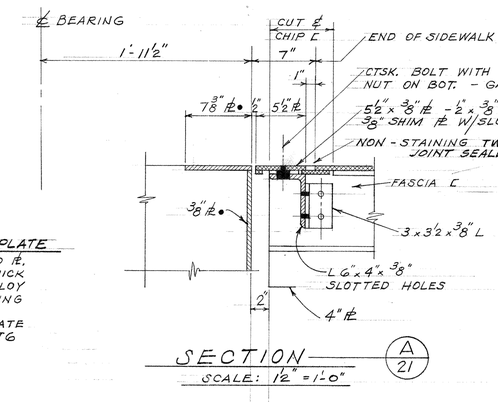

SECTION A/21

SCALE: 1 1/2" = 1'-0"

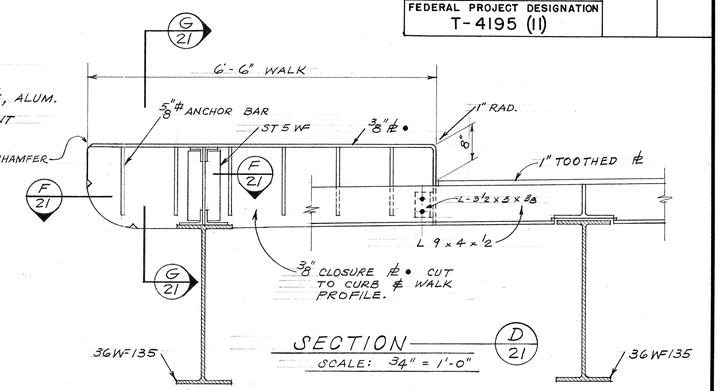

SECTION D/21

SCALE: 3/4" = 1'-0"

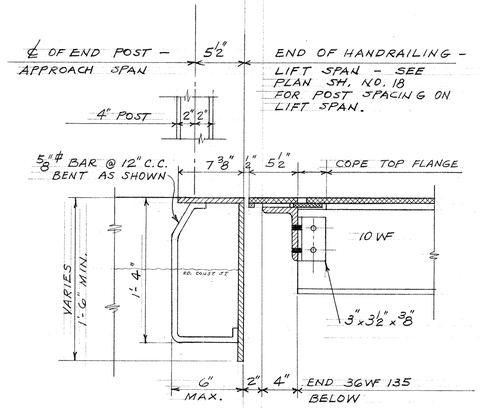

SECTION B/21

SCALE: 1 1/2" = 1'-0"

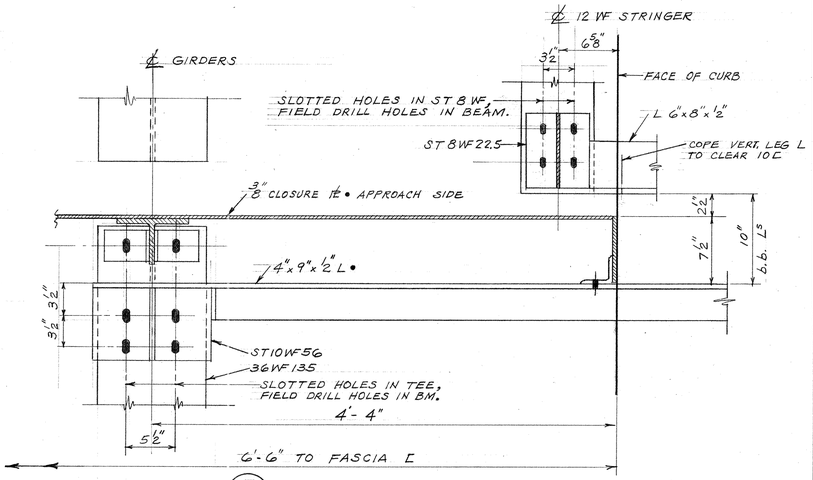

SECTION F/21

SCALE: 1 1/2" = 1'-0"

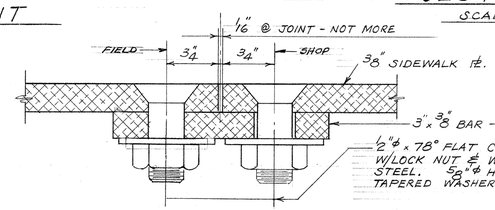

SECTION E/21

SCALE: FULL

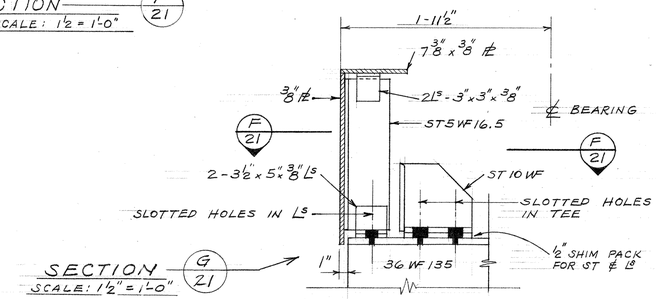

SECTION G/21

SCALE: 1 1/2" = 1'-0"

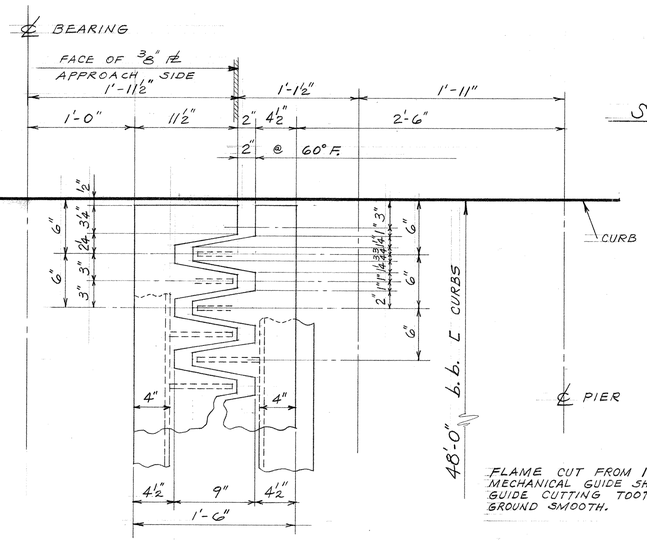

FLAME CUT FROM 1" PL U.M. • MECHANICAL GUIDE SHALL BE USED TO GUIDE CUTTING TOOTH. ALL BURRS GROUND SMOOTH.

TOOTHED EXPANSION PL DETAIL

SCALE: 1 1/2" = 1'-0"

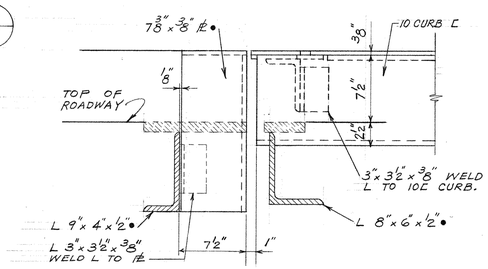

SECTION C/21

SCALE: 1 1/2" = 1'-0"

ALUMINUM SURFACES EXCEPT TOP OF SIDEWALK PLATE - ONE SHOP COAT ZINC CHORMATE PRIMER, U.S. NAVY SPEC. TT-P-86C TYPE II. STEEL SURFACES IN CONTACT WITH ALUMINUM TO BE GIVEN ONE COAT OF HEAVY BODIED BITUMINOUS PAINT.

NOTE:

NON-STAIN JOINT SEALER: NON-STAINING GRAY TWO-COMPONENT POLYSULFIDE LIQUID POLYMER (GUN GRADE) WITH SURFACE PRIMER

ALL SHOP CONNECTIONS WELDED.
ALL FIELD CONNECTIONS HIGH STRENGTH BOLTS.
EXPANSION JOINT MATERIAL MARKED THUS • SHALL BE ASTM A242 - ALL OTHER STEEL SHALL BE ASTM A36.

X44319

STATE OF WISCONSIN
DEPARTMENT OF TRANSPORTATION
DIVISION OF HIGHWAYS

STRUCTURE B-40-406

DEPARTMENT OF PUBLIC WORKS
BUREAU OF BRIDGES AND PUBLIC BUILDINGS
CITY OF MILWAUKEE

REVISIONS		
MARK	DATE	BY
A		
B		
C		
D		
E		
F		
G		
H		
I		
J		
K		
L		
M		

PLEASANT ST. VERTICAL LIFT BRIDGE
OVER MILWAUKEE RIVER
LIFT SPAN - EXPANSION JOINT DETAILS

DESIGNED BY: P.C.B. TRACED BY: DATE:
DRAWN BY: P.C.B. CHECKED BY: DATE:
APPROVED:— SCALE: AS NOTED

Norris A. Batalden — DESIGNER IN CHARGE — DATE: 12-16-70 SHEET NUMBER 21
George C. Pelton — CHIEF OF BRIDGES AND PUBLIC BUILDINGS — DATE: 1-20-71 SET OF 47 SHEETS
Leonard L. Lisch — DEPUTY COMMISSIONER OF PUBLIC WORKS — DATE: 1-25-71 JOB NO. 512-74

PROJECT I. D.	SHEET NUMBER	TOTAL SHEETS
2984-0-07		
FEDERAL PROJECT DESIGNATION T-4195 (II)		

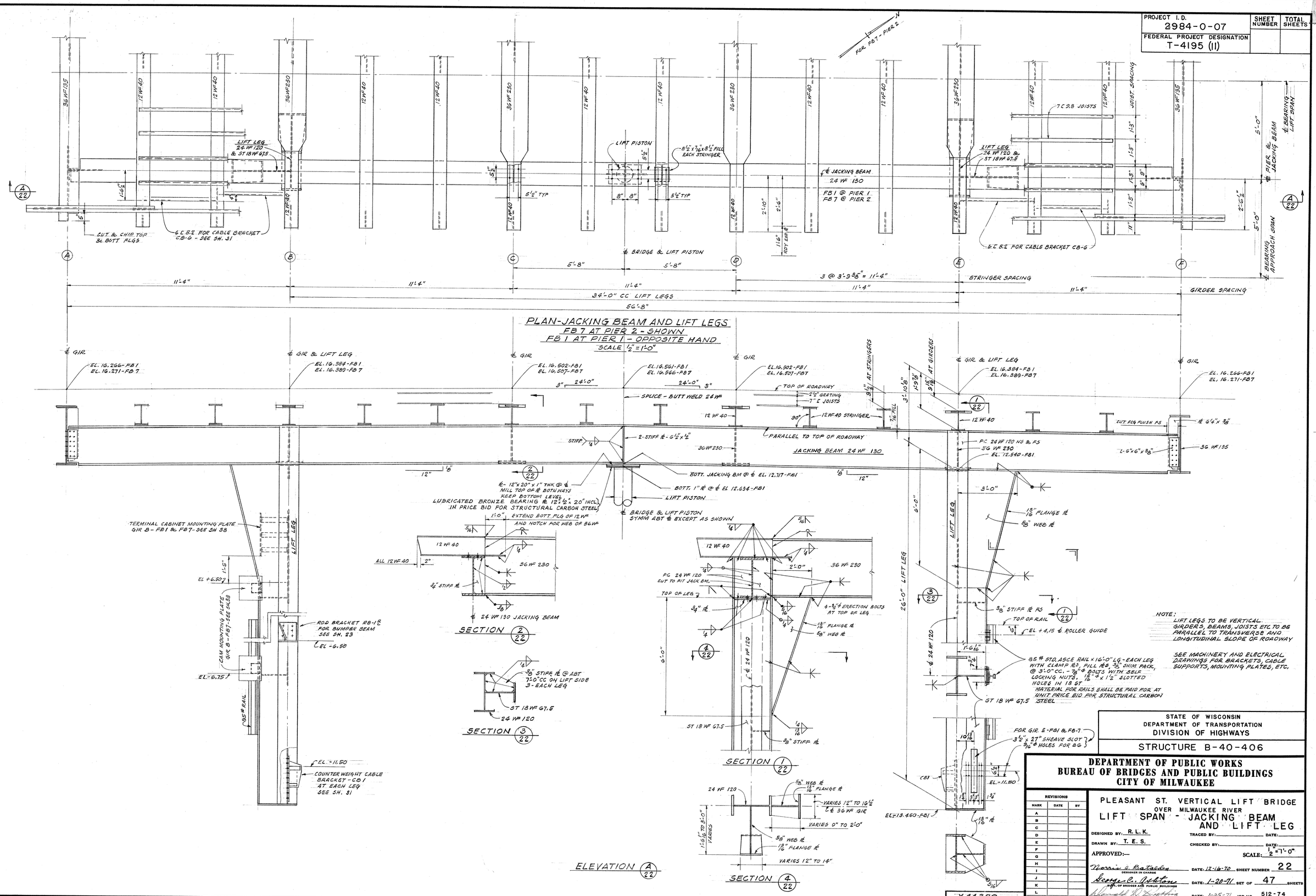

NOTE:
LIFT LEGS TO BE VERTICAL.
GIRDERS, BEAMS, JOISTS ETC. TO BE PARALLEL TO TRANSVERSE AND LONGITUDINAL SLOPE OF ROADWAY

SEE MACHINERY AND ELECTRICAL DRAWINGS FOR BRACKETS, CABLE SUPPORTS, MOUNTING PLATES, ETC.

STATE OF WISCONSIN
DEPARTMENT OF TRANSPORTATION
DIVISION OF HIGHWAYS

STRUCTURE B-40-406

DEPARTMENT OF PUBLIC WORKS
BUREAU OF BRIDGES AND PUBLIC BUILDINGS
CITY OF MILWAUKEE

REVISIONS		
MARK	DATE	BY
A		
B		
C		
D		
E		
F		
G		
H		
I		
J		
K		
L		
M		

PLEASANT ST. VERTICAL LIFT BRIDGE
OVER MILWAUKEE RIVER
LIFT SPAN - JACKING BEAM AND LIFT LEG

DESIGNED BY: R. L. K.
DRAWN BY: T. E. S.
APPROVED:—
TRACED BY: DATE:
CHECKED BY: DATE:
SCALE: 1/2" = 1'-0"

Morris C. Rotaldes, DESIGNER IN CHARGE — DATE: 12-16-70 — SHEET NUMBER 22
George C. Ashton, ASST. OF BRIDGES AND PUBLIC BUILDINGS — DATE: 1-20-71 — SET OF 47 SHEETS
Donald W. Reisberg, DEPUTY COMMISSIONER OF PUBLIC WORKS — DATE: 1-25-71 — JOB NO. 512-74

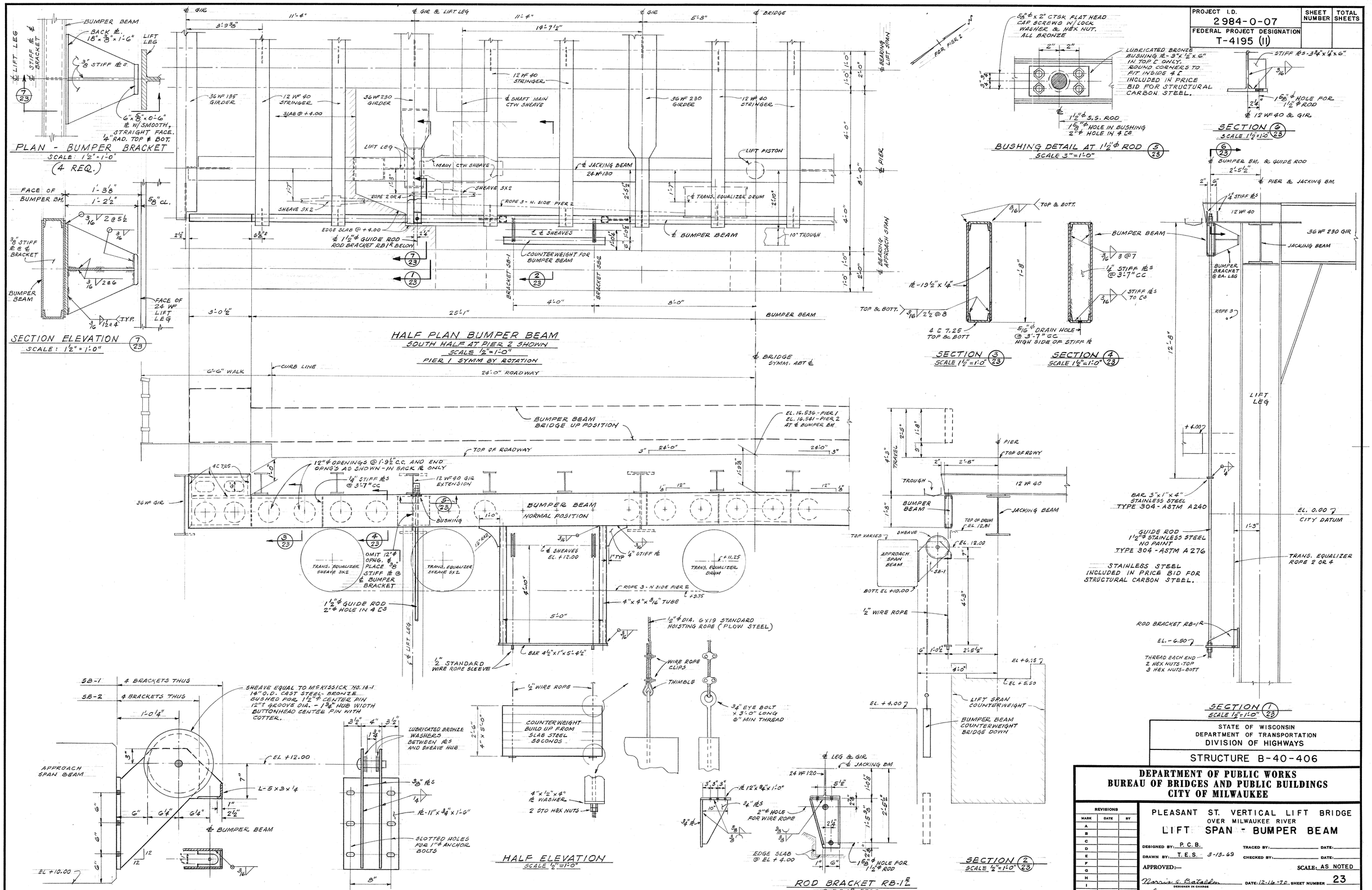

PROJECT I.D.	SHEET NUMBER	TOTAL SHEETS
2984-0-07		
FEDERAL PROJECT DESIGNATION T-4195 (11)		

STATE OF WISCONSIN
DEPARTMENT OF TRANSPORTATION
DIVISION OF HIGHWAYS

STRUCTURE B-40-406

DEPARTMENT OF PUBLIC WORKS
BUREAU OF BRIDGES AND PUBLIC BUILDINGS
CITY OF MILWAUKEE

PLEASANT ST. VERTICAL LIFT BRIDGE
OVER MILWAUKEE RIVER
LIFT SPAN - BUMPER BEAM

REVISIONS		
MARK	DATE	BY
A		
B		
C		
D		
E		
F		
G		
H		
I		
J		
K		
L		
M		

DESIGNED BY: P. C. B. TRACED BY: DATE:
DRAWN BY: T. E. S. 3-13-69 CHECKED BY: DATE:
APPROVED:— SCALE: AS NOTED
Norris C. Batalden DESIGNER IN CHARGE DATE: 12-16-70 SHEET NUMBER 23
George C. Ashton SUPT. OF BRIDGES AND PUBLIC BUILDINGS DATE: 1-20-71 SET OF 47 SHEETS
Donald W. Loehlig COMMISSIONER OF PUBLIC WORKS DATE: 1-25-71 JOB NO. 512-74

PROJECT I.D.	SHEET NUMBER	TOTAL SHEETS
2984-0-07		
FEDERAL PROJECT DESIGNATION T-4195 (11)		

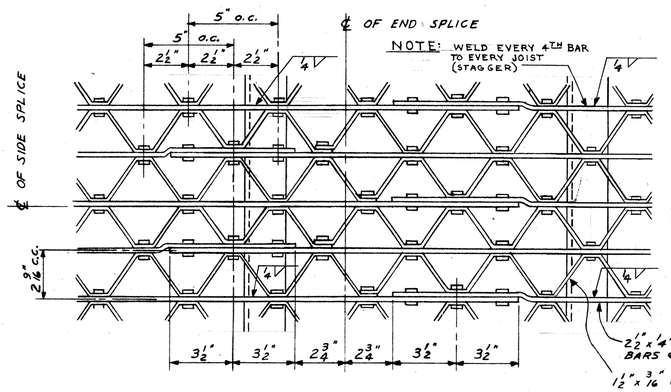

DETAIL OF SIDE & END SPLICE
SCALE: 3" = 1'-0"

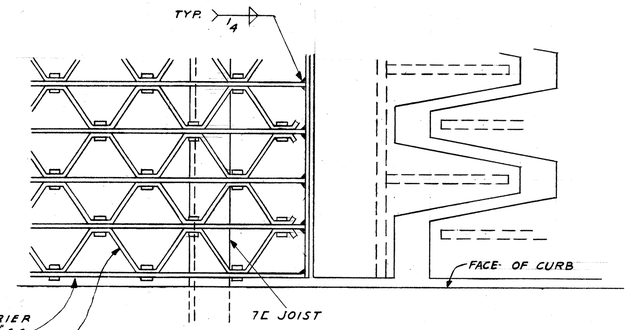

END DETAIL @ EXP. #

SCALE: 3" = 1'-0"

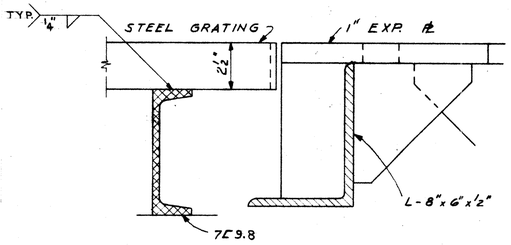

SECTION @ GRATING FASTENERS
SCALE: 3" = 1'-0"

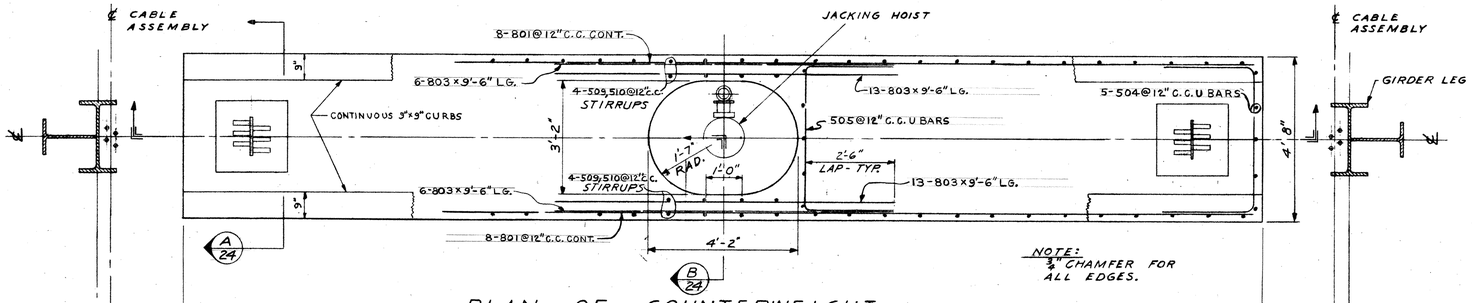

NOTE: ¾" CHAMFER FOR ALL EDGES.

PLAN OF COUNTERWEIGHT
SCALE ½" = 1'-0"

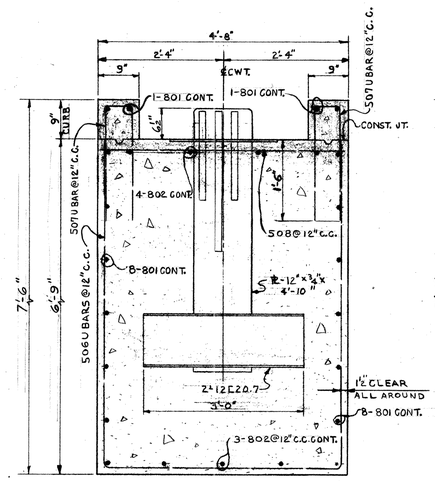

SECTION A/24
SCALE: ¾" = 1'-0"

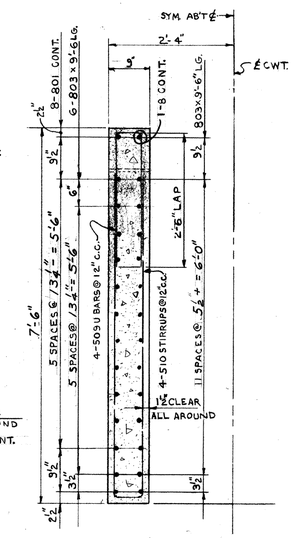

SECTION B/24
SCALE: ¾" = 1'-0"

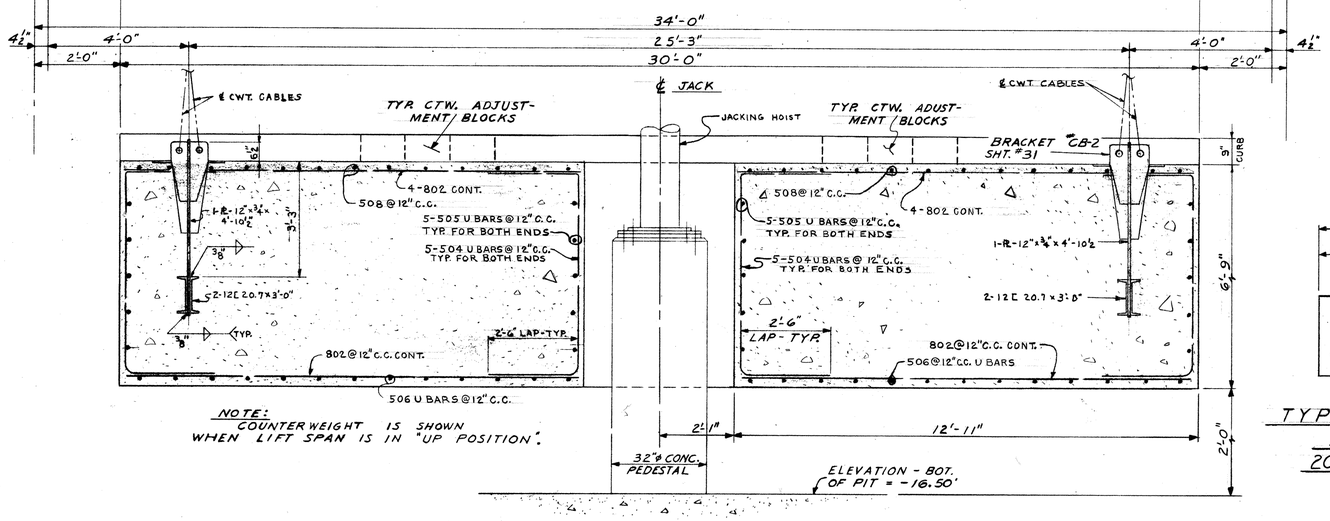

NOTE: COUNTERWEIGHT IS SHOWN WHEN LIFT SPAN IS IN "UP POSITION".

SECTION ELEVATION
SCALE ½" = 1'-0"

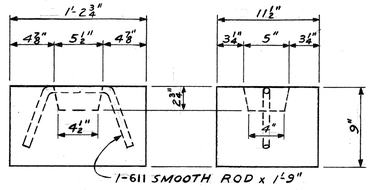

TYPICAL COUNTERWEIGHT ADJUSTMENT BLOCK
200 REQ'D. - WEIGHT 125# EA.
SCALE 1½" = 1'-0"

X 44322

STATE OF WISCONSIN
DEPARTMENT OF TRANSPORTATION
DIVISION OF HIGHWAYS

STRUCTURE B-40-406

DEPARTMENT OF PUBLIC WORKS
BUREAU OF BRIDGES AND PUBLIC BUILDINGS
CITY OF MILWAUKEE

REVISIONS		
MARK	DATE	BY
A		
B		
C		
D		
E		
F		
G		
H		
I		
J		
K		
L		
M		

PLEASANT ST. VERTICAL LIFT BRIDGE
OVER MILWAUKEE RIVER
LIFT SPAN - COUNTERWEIGHT

DESIGNED BY: L. F. R. TRACED BY: DATE:
DRAWN BY: L.F.R. & P.C.B. CHECKED BY: DATE:
APPROVED:— SCALE: AS NOTED

Norris C. Batalden — DESIGNER IN CHARGE — DATE: 12-16-70 — SHEET NUMBER 24
George A. Ashton — CHIEF OF BRIDGES AND PUBLIC BUILDINGS — DATE: 1-20-71 — SET OF 47 SHEETS
Donald W. Reisky — COMMISSIONER OF PUBLIC WORKS — DATE: 1-25-71 — JOB NO. 512-74

Specs: Jenny

PROJECT I.D.	SHEET NUMBER	TOTAL SHEETS
2984-0-07		
FEDERAL PROJECT DESIGNATION T-4195 (11)		

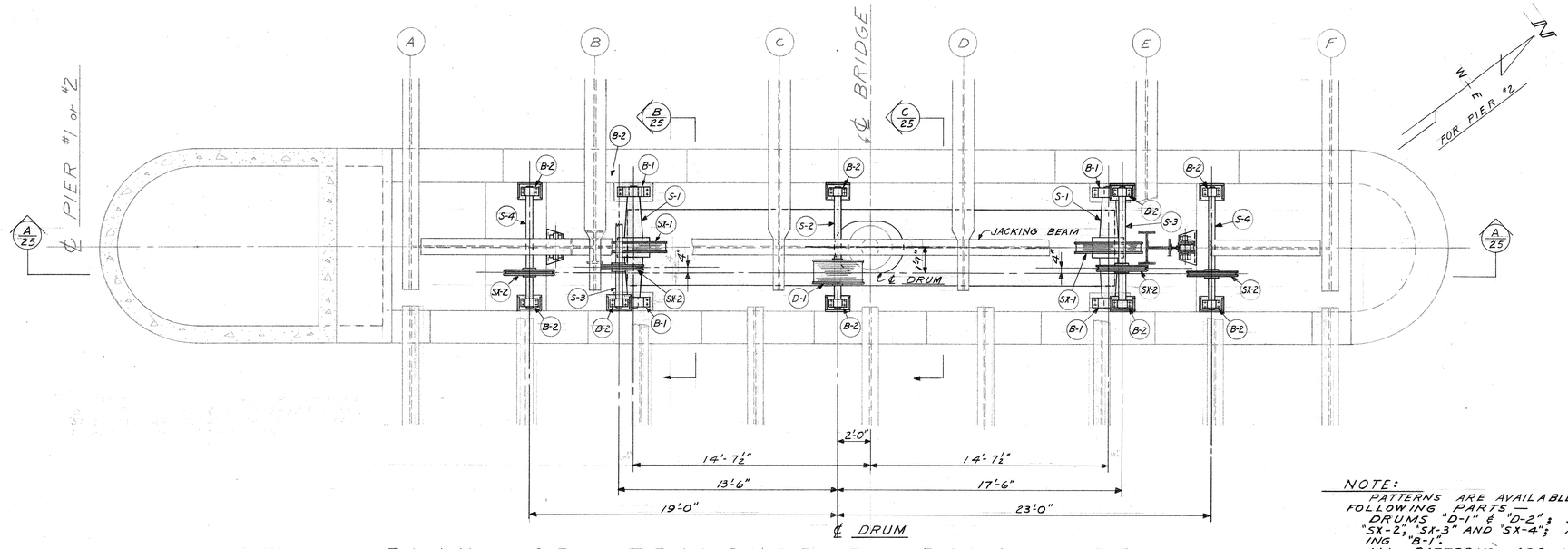

PLAN OF TRANSVERSE EQUALIZER & COUNTERWEIGHT

PIER #2 IS SHOWN FOR PIER #1 ROTATE 180°

SCALE ¼" = 1'-0"

NOTE:
PATTERNS ARE AVAILABLE FOR THE FOLLOWING PARTS — DRUMS "D-1" & "D-2"; SHEAVES "SX-1", "SX-2", "SX-3" AND "SX-4"; AND ON BEARING "B-1".
ALL PATTERNS ARE IN EXCELLENT CONDITION AND NEED NO REVISION.

PATTERNS MAY BE PICKED UP FROM AND RETURNED AFTER USE AND RECONDITIONING TO CITY OF MILWAUKEE BRIDGE SHOP AT 400 W. TRASER ST.

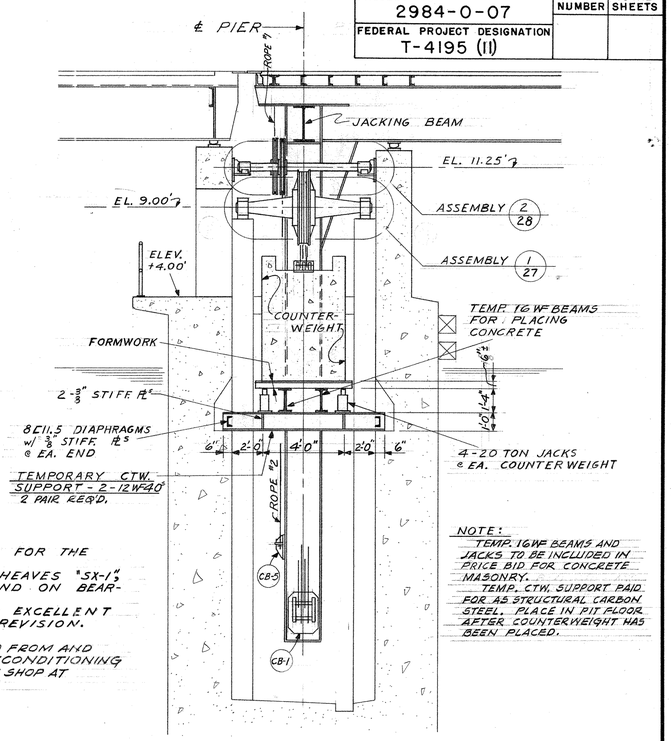

NOTE:
TEMP. 16 WF BEAMS AND JACKS TO BE INCLUDED IN PRICE BID FOR CONCRETE MASONRY.
TEMP. CTW. SUPPORT PAID FOR AS STRUCTURAL CARBON STEEL. PLACE IN PIT FLOOR AFTER COUNTERWEIGHT HAS BEEN PLACED.

SECTION B/25

SCALE ¼" = 1'-0"

FOR COUNTERWEIGHT SHEAVES, SHAFTS AND BEARINGS SEE SHT. #27

FOR ROLLER GUIDE SEE SHT. #30

FOR CABLE BRACKETS SEE SHT. #31

FOR EQUALIZER SHEAVES, DRUM, SHAFTS AND BEARINGS SEE SHT. #28

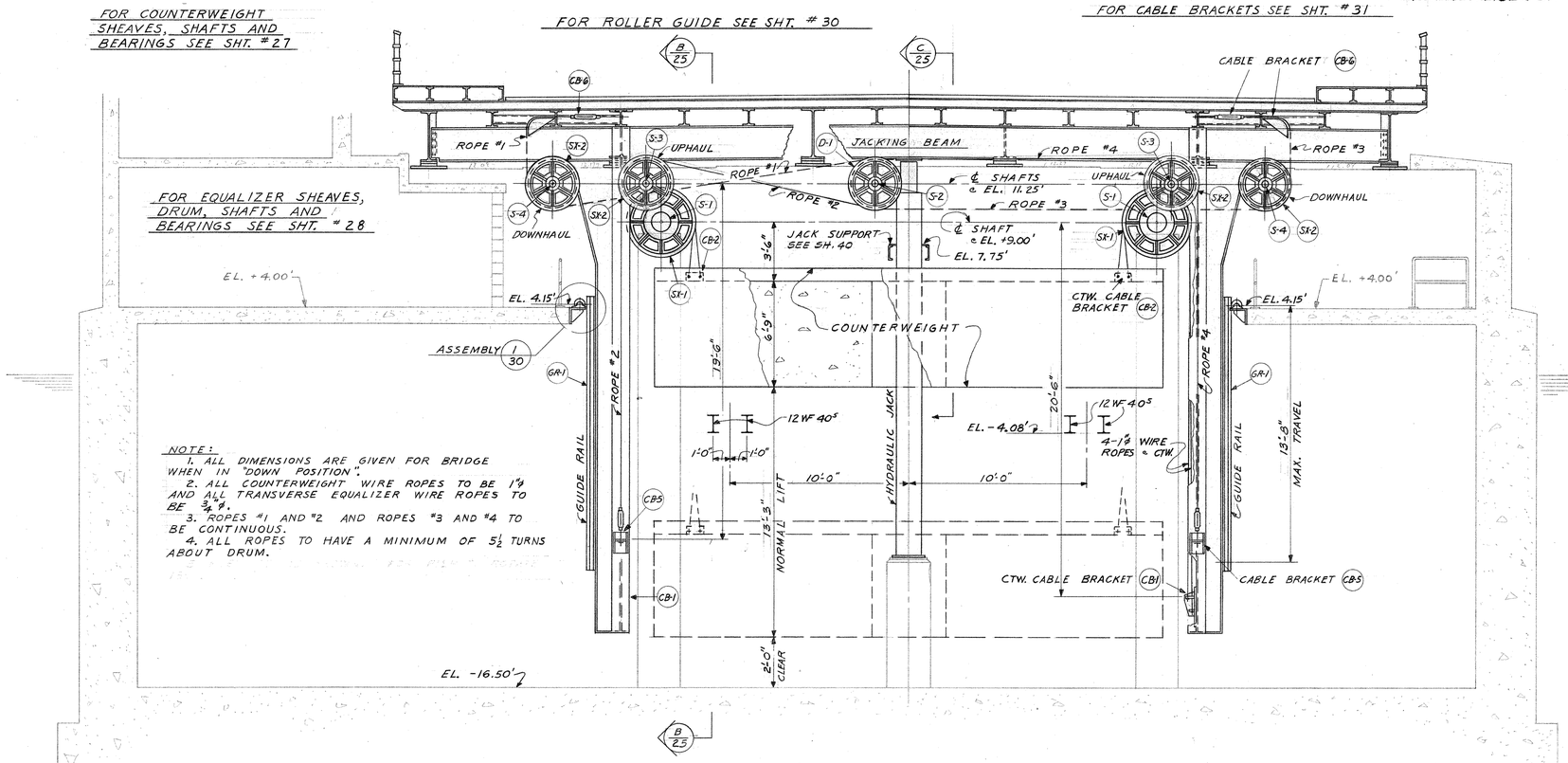

NOTE:
1. ALL DIMENSIONS ARE GIVEN FOR BRIDGE WHEN IN "DOWN POSITION".
2. ALL COUNTERWEIGHT WIRE ROPES TO BE 1⅛" AND ALL TRANSVERSE EQUALIZER WIRE ROPES TO BE ¾".
3. ROPES #1 AND #2 AND ROPES #3 AND #4 TO BE CONTINUOUS.
4. ALL ROPES TO HAVE A MINIMUM OF 5½ TURNS ABOUT DRUM.

CROSS - SECTION A/25

SCALE ¼" = 1'-0"

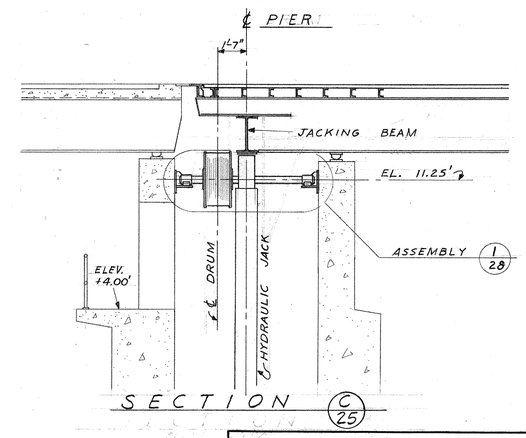

SECTION C/25

STATE OF WISCONSIN
DEPARTMENT OF TRANSPORTATION
DIVISION OF HIGHWAYS

STRUCTURE B-40-406

DEPARTMENT OF PUBLIC WORKS
BUREAU OF BRIDGES AND PUBLIC BUILDINGS
CITY OF MILWAUKEE

REVISIONS		
MARK	DATE	BY
A		
B		
C		
D		
E		
F		
G		
H		
I		
J		
K		
L		
M		

PLEASANT ST. VERTICAL LIFT BRIDGE
OVER MILWAUKEE RIVER

MACHINERY - PLAN OF TRANSVERSE EQUALIZER & COUNTERWEIGHT

DESIGNED BY: L. F. R. TRACED BY: DATE:
DRAWN BY: L. F. R. CHECKED BY: DATE:
APPROVED:— SCALE: AS NOTED

Norris G. Batacdon, DESIGNER IN CHARGE — DATE: 12-16-70 — SHEET NUMBER 25
George A. Pelton, SUPT. OF BRIDGES AND PUBLIC BUILDINGS — DATE: 1-20-71 — OF 47 SHEETS
Arnold W. Kolling, DEPUTY COMMISSIONER OF PUBLIC WORKS — DATE: 1-25-71 — JOB NO. 512 - 74

X 44323

PROJECT I.D.	SHEET NUMBER	TOTAL SHEETS
2984-0-07		
FEDERAL PROJECT DESIGNATION T-4195 (11)		

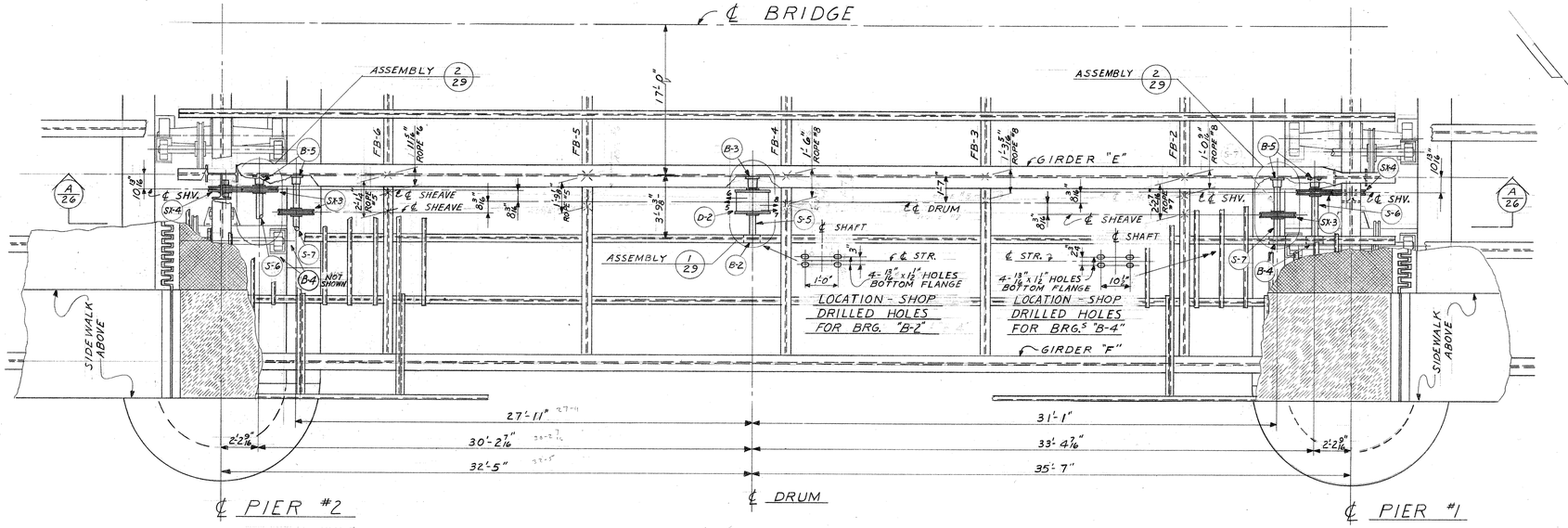

PLAN OF LONGITUDINAL EQUALIZER

SCALE 1/4" = 1'-0"

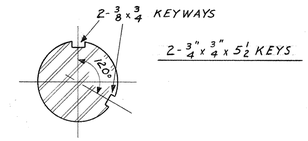

SECTION B/26

SCALE 3" = 1'-0"

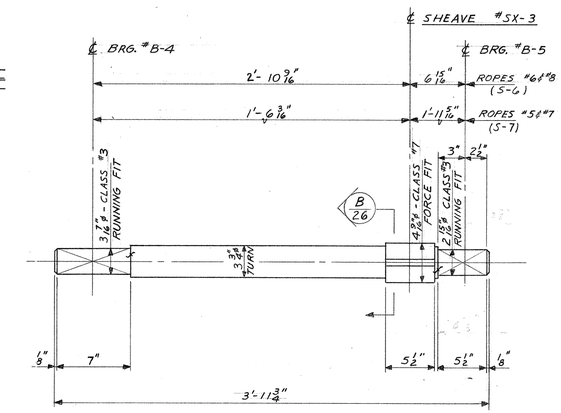

EQUALIZER UPPER SHEAVE SHAFTS

2 - (ROPES #6 & #8) - S-6

2 - (ROPES #5 & #7) - S-7

FOR EQAULIZER SHEAVES, DRUMS, SHAFTS AND BEARINGS SEE SHEET #29

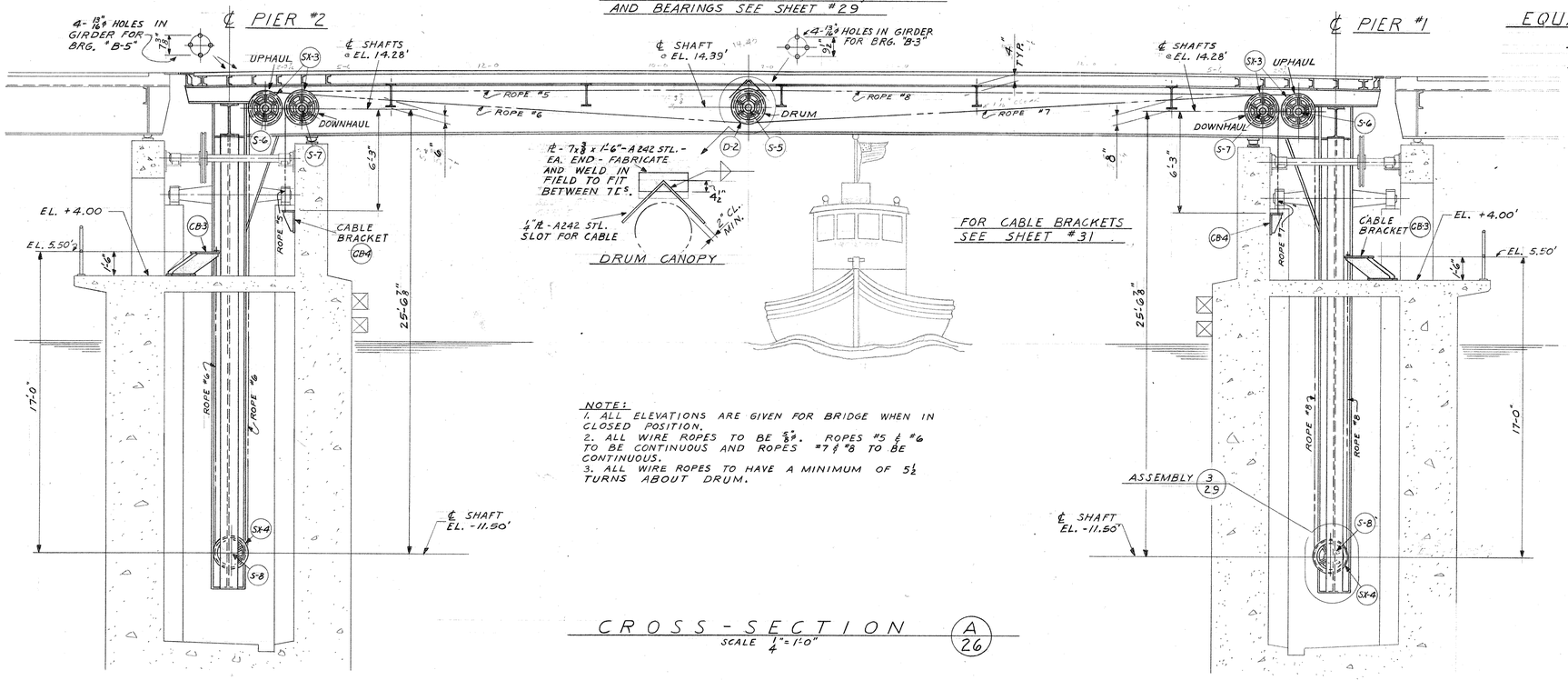

FOR CABLE BRACKETS SEE SHEET #31

NOTE:
1. ALL ELEVATIONS ARE GIVEN FOR BRIDGE WHEN IN CLOSED POSITION.
2. ALL WIRE ROPES TO BE 5/8". ROPES #5 & #6 TO BE CONTINUOUS AND ROPES #7 & #8 TO BE CONTINUOUS.
3. ALL WIRE ROPES TO HAVE A MINIMUM OF 5 1/2 TURNS ABOUT DRUM.

CROSS-SECTION A/26

SCALE 1/4" = 1'-0"

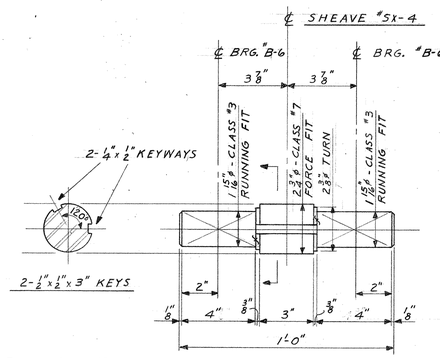

2 - LOWER SHEAVE SHAFTS - S-8

SAE C-1045 STEEL - TURN AND POLISH

STATE OF WISCONSIN
DEPARTMENT OF TRANSPORTATION
DIVISION OF HIGHWAYS

STRUCTURE B-40-406

DEPARTMENT OF PUBLIC WORKS
BUREAU OF BRIDGES AND PUBLIC BUILDINGS
CITY OF MILWAUKEE

REVISIONS		
MARK	DATE	BY
A		
B		
C		
D		
E		
F		
G		
H		
I		
J		
K		
L		
M		

PLEASANT ST. VERTICAL LIFT BRIDGE
OVER MILWAUKEE RIVER

MACHINERY - PLAN OF LONGITUDINAL EQUALIZER

DESIGNED BY: L. F. R. TRACED BY: DATE:
DRAWN BY: L. F. R. CHECKED BY: DATE:
APPROVED:— SCALE: AS NOTED

Norris C. Batelka — DESIGNER IN CHARGE — DATE: 12-16-70 SHEET NUMBER 26
George C. Ashton — SUPT. OF BRIDGES AND PUBLIC BUILDINGS — DATE: 1-20-71 SET OF 47 SHEETS
Donald A. Stalking — DEPUTY COMMISSIONER OF PUBLIC WORKS — DATE: 1-25-71 JOB NO. 512 - 74

X 44324

PROJECT I.D.	SHEET NUMBER	TOTAL SHEETS
2984-0-07		
FEDERAL PROJECT DESIGNATION T-4195 (11)		

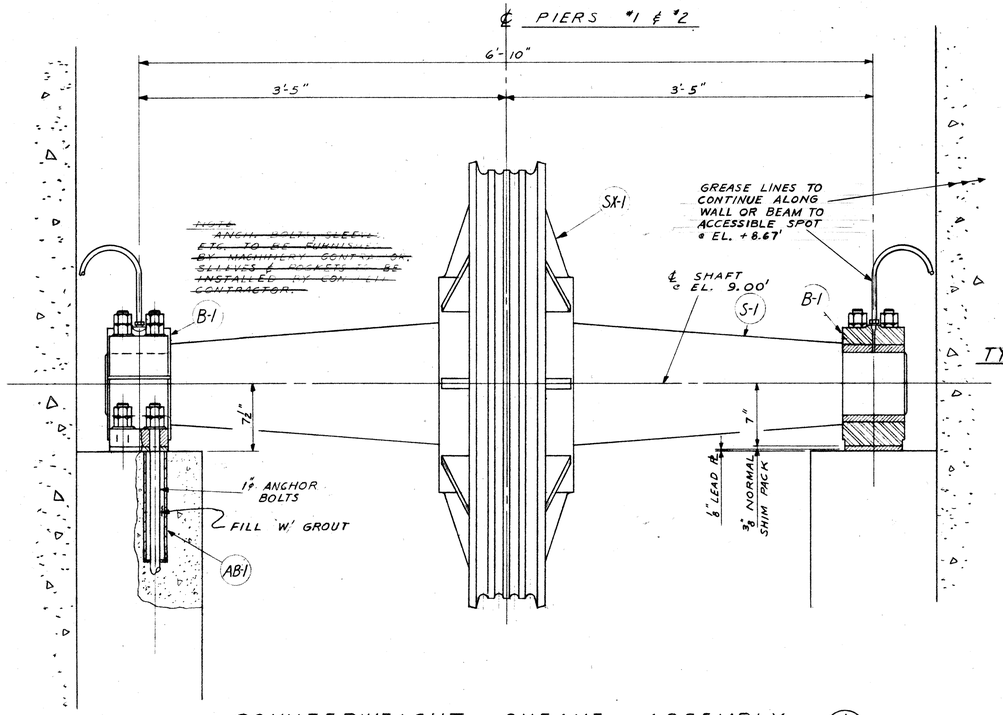

COUNTERWEIGHT SHEAVE ASSEMBLY (1/25)
SCALE 1½" = 1'-0"

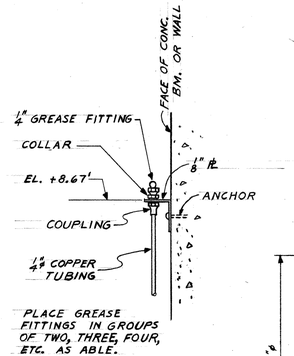

TYPICAL GREASE FITTING DETAIL
N. T. S.

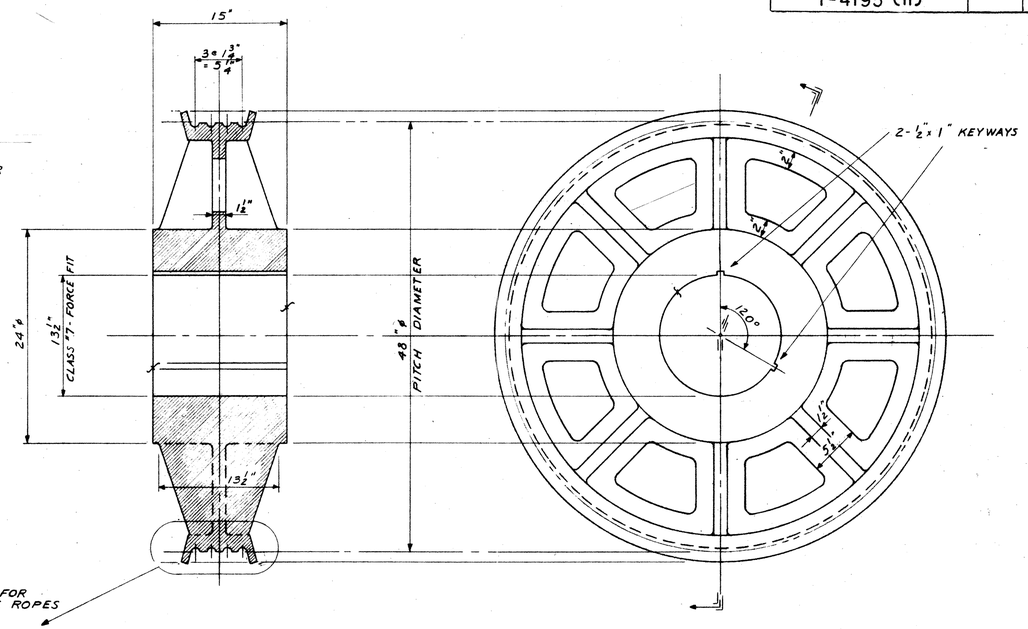

4-COUNTERWEIGHT SHEAVES #SX-1
CAST STEEL

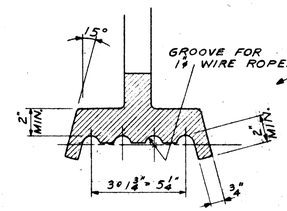

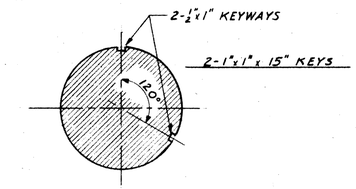

SECTION (A/27)
SCALE 1½" = 1'-0"

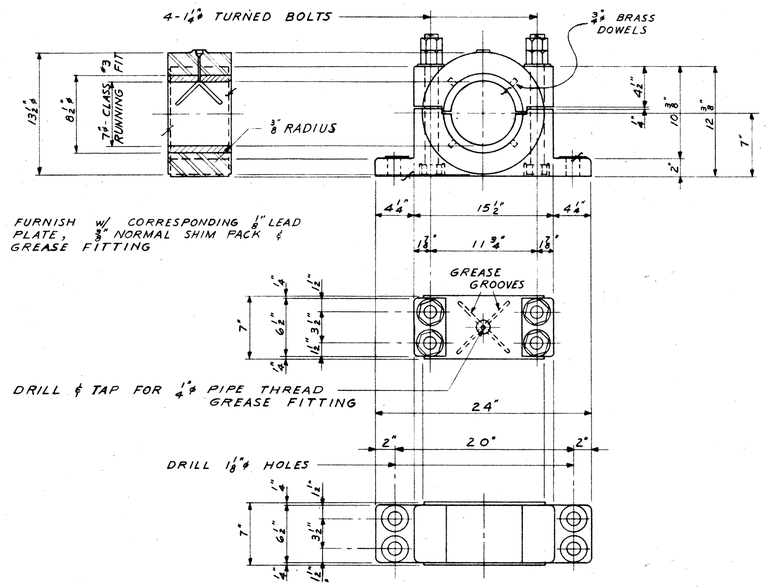

8-COUNTERWEIGHT BEARINGS #B-1
CAST STEEL
PHOSPHOR BRONZE BUSHING

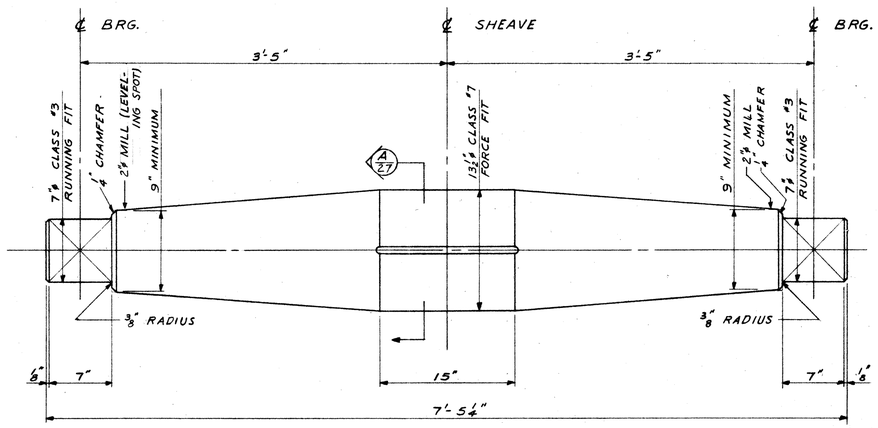

4-COUNTERWEIGHT SHAFTS #S-1
FORGED STEEL (ANNEALED)

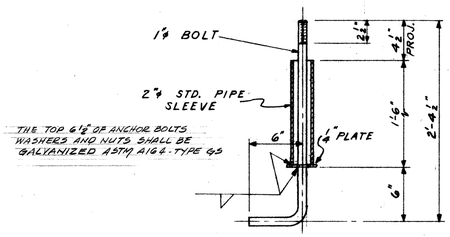

THE TOP 6½" OF ANCHOR BOLTS WASHERS AND NUTS SHALL BE GALVANIZED ASTM A153 - TYPE G5

32 - COUNTERWEIGHT BEARING ANCHOR BOLTS #AB-1
WGT OF ANCHOR BOLTS PAID FOR AS STRUCTURAL CARBON STEEL

X 44325

STATE OF WISCONSIN
DEPARTMENT OF TRANSPORTATION
DIVISION OF HIGHWAYS

STRUCTURE B-40-406

DEPARTMENT OF PUBLIC WORKS
BUREAU OF BRIDGES AND PUBLIC BUILDINGS
CITY OF MILWAUKEE

REVISIONS		
MARK	DATE	BY
A		
B		
C		
D		
E		
F		
G		
H		
I		
J		
K		
L		
M		

PLEASANT ST. VERTICAL LIFT BRIDGE
OVER MILWAUKEE RIVER

MACHINERY - COUNTERWEIGHT SYSTEM

DESIGNED BY: L. F. R. TRACED BY: DATE:
DRAWN BY: L. F. R. CHECKED BY: DATE:
APPROVED:— SCALE: AS NOTED

Morris C. Batalden — DESIGNER IN CHARGE — DATE: 12-16-70 SHEET NUMBER 27
George C. Ashton — DIV. OF BRIDGES & PUBLIC BUILDINGS — DATE: 1-20-71 SET OF 47 SHEETS
Kenneth N. Spalding — COMMISSIONER OF PUBLIC WORKS — DATE: 1-25-71 JOB NO. 512-74

Special Deputy

PROJECT I.D.	SHEET NUMBER	TOTAL SHEETS
2984-0-07		
FEDERAL PROJECT DESIGNATION T-4195 (11)		

THE TOP 3½" OF ANCHOR BOLTS, WASHERS AND NUTS SHALL BE GALVANIZED ASTM A164 TYPE GS

ASSEMBLY 1/25
SCALE 1½" = 1'-0"

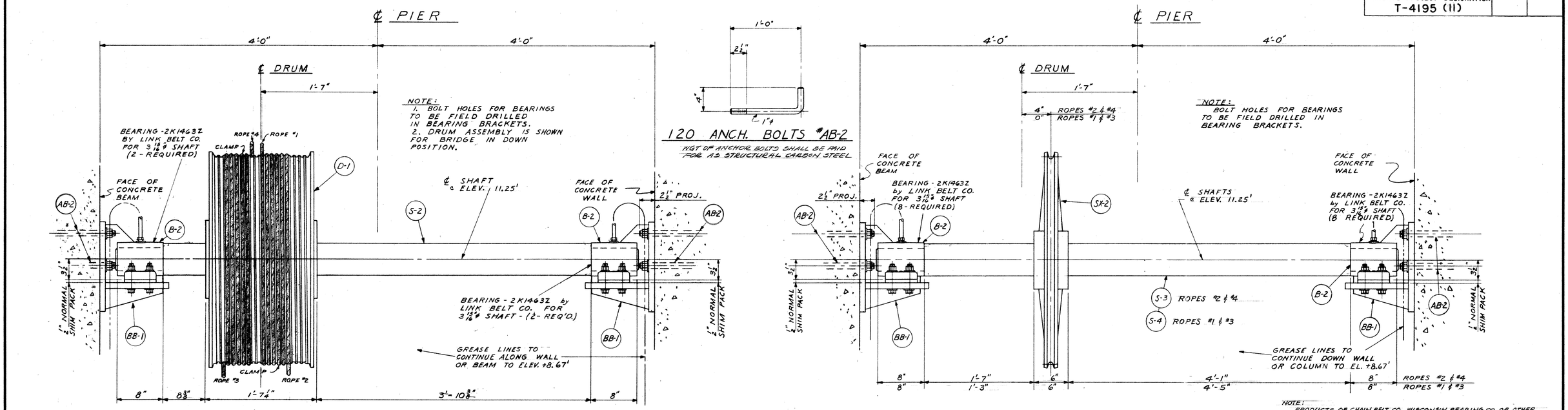

ASSEMBLY 2/25
SCALE 1½" = 1'-0"

NOTE:
PRODUCTS OF CHAIN BELT CO., WISCONSIN BEARING CO., OR OTHER MANUFACTURERS APPROVED EQUAL AS TO DESIGN, APPLICATION, AND OPERATING CHARACTERISTICS TO LINK BELT CO., AS SHOWN ON THE DRAWINGS, WILL BE ACCEPTED.

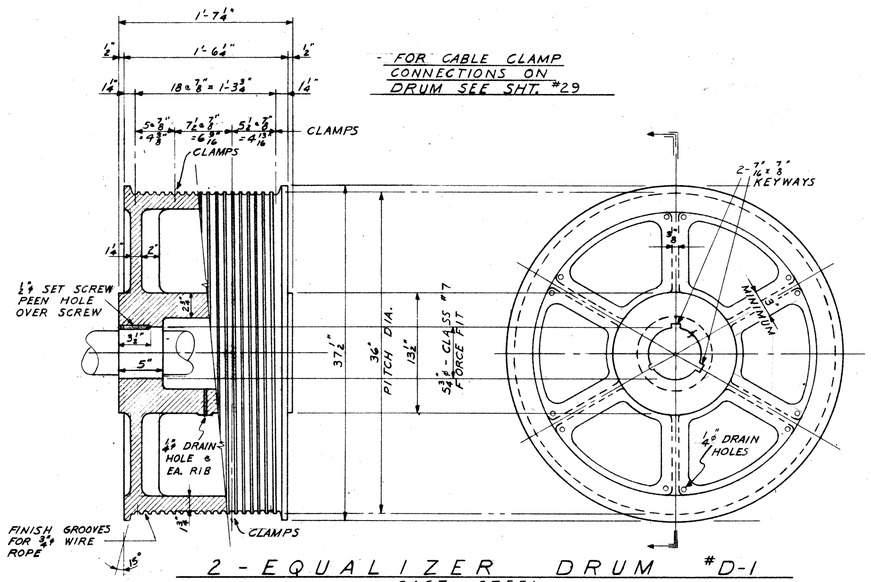

2 - EQUALIZER DRUM #D-1
CAST STEEL

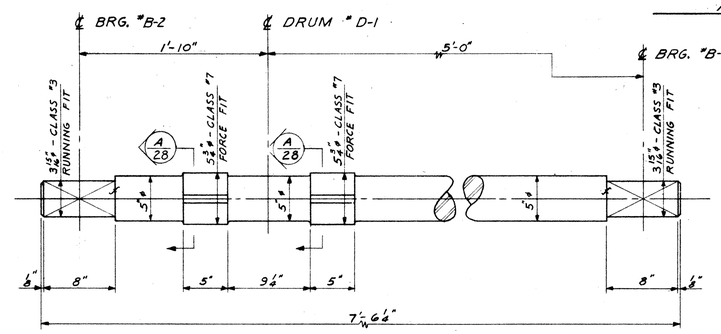

2 - EQUALIZER DRUM SHAFTS #S-2
SAE C-1045 STEEL - TURN AND POLISH

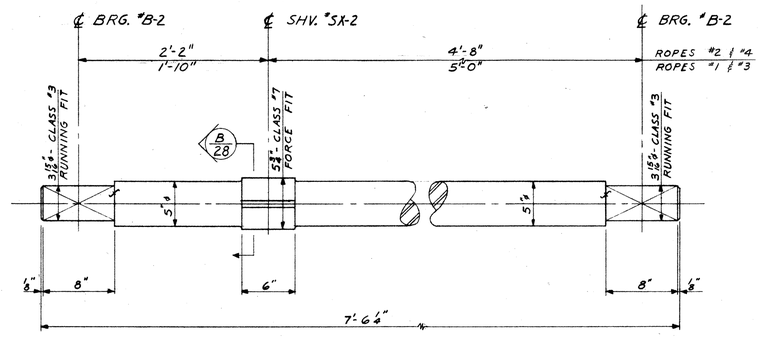

4 - EQUALIZER SHEAVE SHAFTS #S-3 (ROPES #2 & #4)
4 - " " " S-4 (ROPES #1 & #3)
SAE C-1045 STEEL - TURN AND POLISH

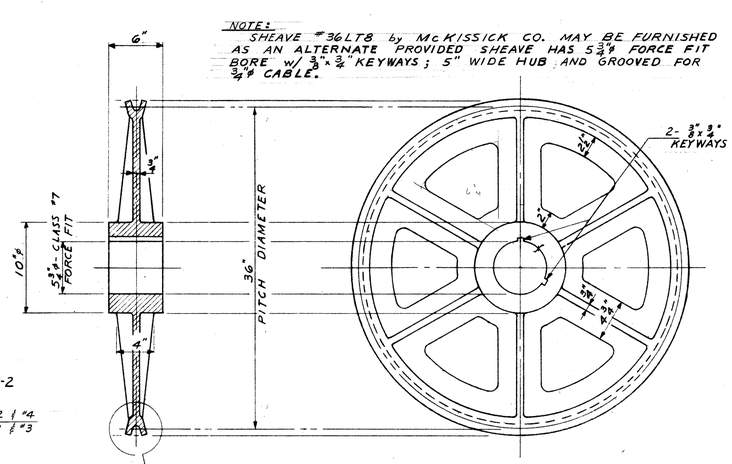

8 - SHEAVES #SX-2
CAST STEEL

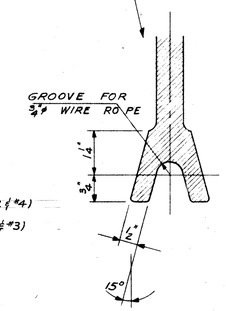

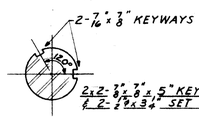

SECTION A/28
SCALE 1½" = 1'-0"

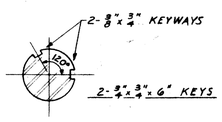

SECTION B/28
SCALE 1½" = 1'-0"

STATE OF WISCONSIN
DEPARTMENT OF TRANSPORTATION
DIVISION OF HIGHWAYS

STRUCTURE B-40-406

DEPARTMENT OF PUBLIC WORKS
BUREAU OF BRIDGES AND PUBLIC BUILDINGS
CITY OF MILWAUKEE

REVISIONS		
MARK	DATE	BY
A		
B		
C		
D		
E		
F		
G		
H		
I		
J		
K		
L		
M		

PLEASANT ST. VERTICAL LIFT BRIDGE
OVER MILWAUKEE RIVER
MACHINERY - EQUALIZER SYSTEM - TRANSVERSE

DESIGNED BY: L. F. R. TRACED BY: DATE:
DRAWN BY: L. F. R. CHECKED BY: DATE:
APPROVED:— SCALE: AS NOTED

Norris A. Batalden — DESIGNER IN CHARGE — DATE: 12-16-70 SHEET NUMBER 28
Jesse C. Ashton — CHIEF OF BRIDGES AND PUBLIC BUILDINGS — DATE: 1-20-71 SET OF 47 SHEETS
Donald W. Zeisling — COMMISSIONER OF PUBLIC WORKS — DATE: 1-25-71 JOB NO. 512 - 74

Deputy

X44326

PROJECT I.D.	SHEET NUMBER	TOTAL SHEETS
2984-0-07		
FEDERAL PROJECT DESIGNATION T-4195 (II)		

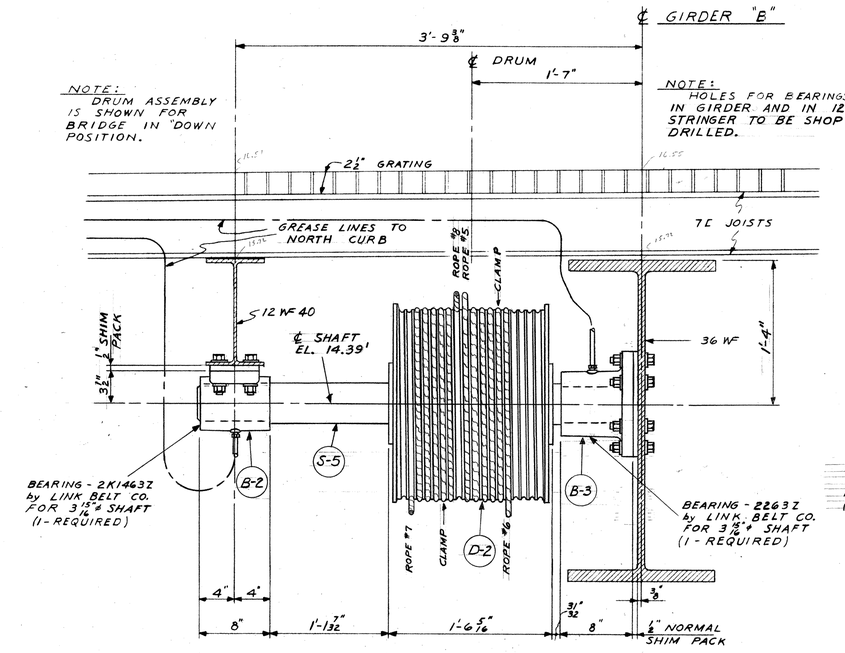

LONGITUDINAL EQUALIZER DRUM ASSEMBLY (1/26)
SCALE 1 1/2" = 1'-0"

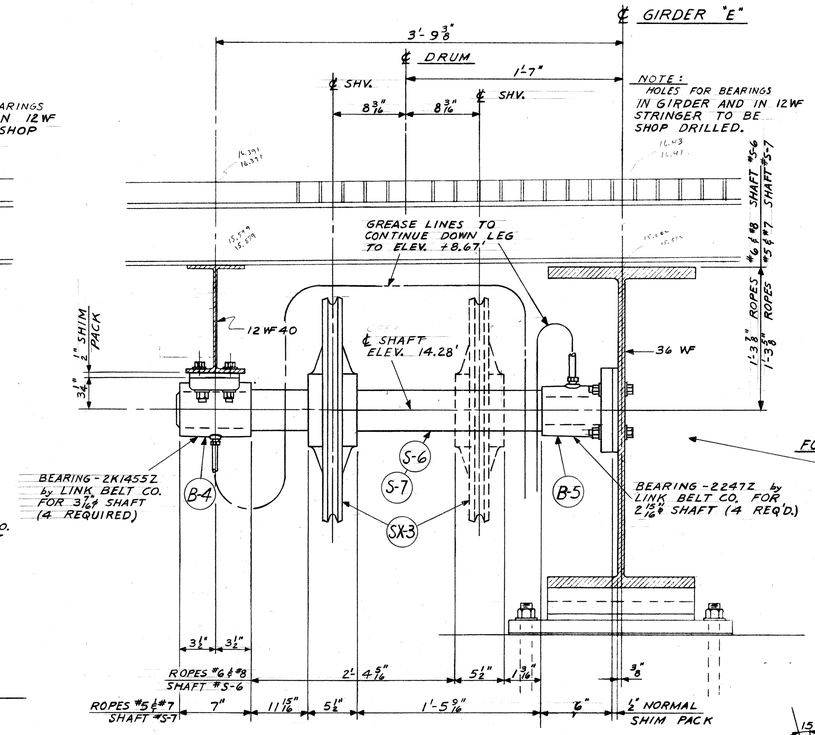

LONGITUDINAL EQUALIZER UPPER SHEAVE ASSEMBLIES (2/26)
SCALE 1 1/2" = 1'-0"

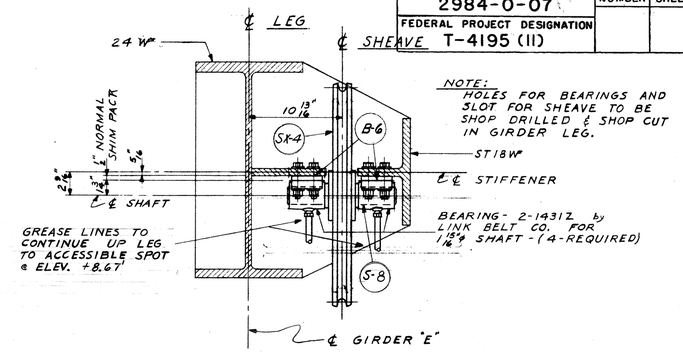

PLAN VIEW

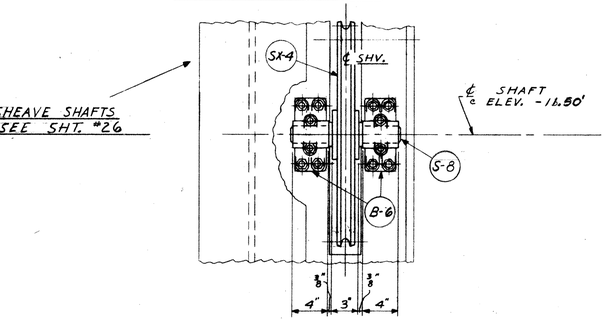

ELEVATION

LONGITUDINAL EQUALIZER LOWER SHEAVE ASSEMBLY (3/26)
SCALE 1 1/2" = 1'-0"

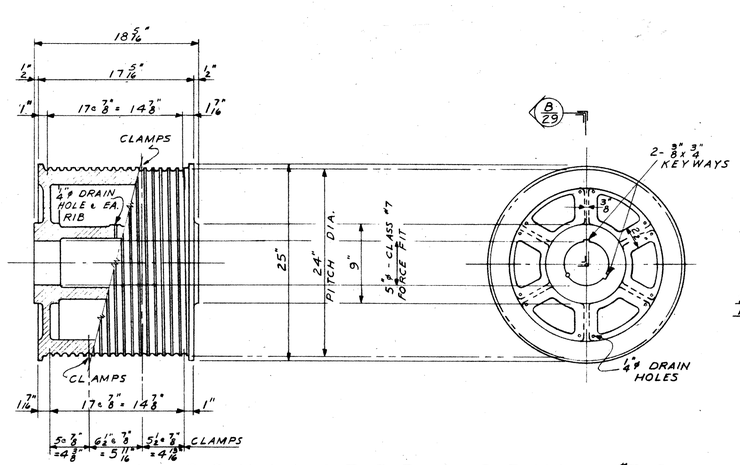

1 - EQUALIZER DRUM #D-2
CAST STEEL

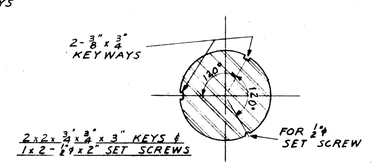

SECTION (A/29)
SCALE 3" = 1'-0"

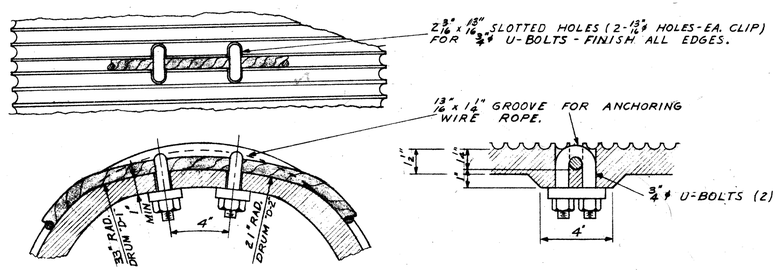

DRUM CABLE CLAMP CONNECTION
SCALE 3" = 1'-0"

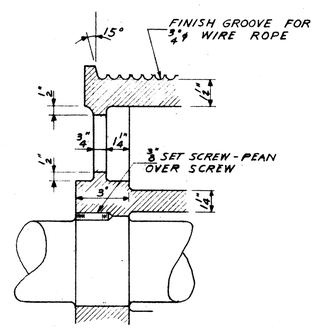

SECTION (B/29)
SCALE 3 1/2" = 1'-0"

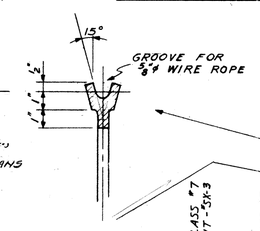

NOTE: JOHNSON SHEAVES AS MFG BY DON R. HINDERLITER INC., TULSA, OKLAHOMA OR OTHER MANUFACTURERS APPROVED EQUAL TO "MC KISSICK" SHEAVES AS SHOWN ON THE PLANS WILL BE ACCEPTED.

NOTE:
1. SHEAVE #24-12 by McKISSICK CO. MAY BE FURNISHED AS AN ALTERNATE FOR "SX-3" PROVIDED SHEAVE HAS A 5 1/8" ø FORCE FIT BORE w/ 3/8" x 3/4" KEYWAYS; 4 3/4" HUB WIDTH AND IS GROOVED FOR 5/8" ø WIRE ROPE.
2. SHEAVE #24-7 by McKISSICK CO. MAY BE FURNISHED AS AN ALTERNATE FOR "SX-4" PROVIDED SHEAVE HAS A 2 3/8" ø FORCE FIT BORE w/ 1/4" x 1/2" KEYWAYS; 2 1/2" HUB WIDTH AND IS GROOVED FOR 5/8" ø WIRE ROPE.

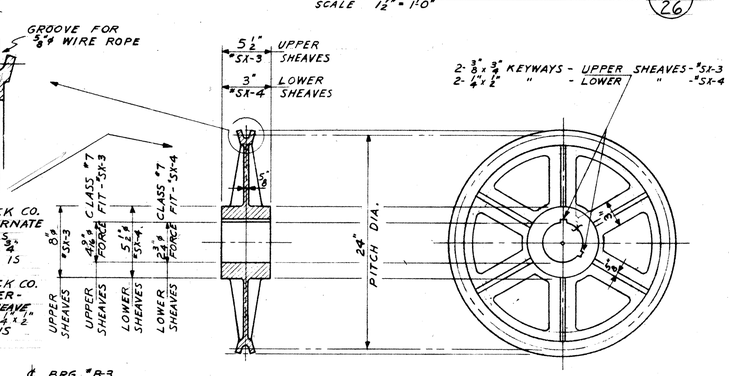

4 - UPPER SHEAVES #SX-3
2 - LOWER " #SX-4
CAST STEEL

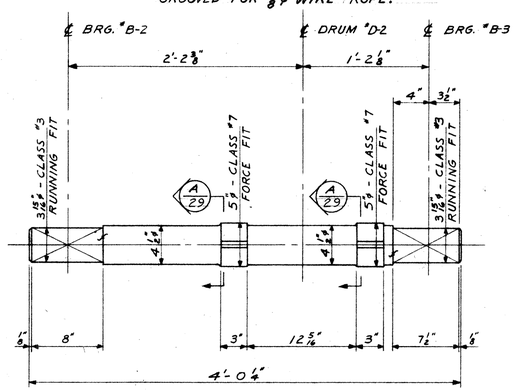

1 - EQUALIZER DRUM SHAFT #S-5
SAE C-1045 STEEL - TURN AND POLISH

STATE OF WISCONSIN
DEPARTMENT OF TRANSPORTATION
DIVISION OF HIGHWAYS

STRUCTURE B-40-406

DEPARTMENT OF PUBLIC WORKS
BUREAU OF BRIDGES AND PUBLIC BUILDINGS
CITY OF MILWAUKEE

REVISIONS		
MARK	DATE	BY
A		
B		
C		
D		
E		
F		
G		
H		
I		
J		
K		
L		
M		

PLEASANT ST. VERTICAL LIFT BRIDGE
OVER MILWAUKEE RIVER
MACHINERY - EQUALIZER SYSTEM - LONGITUDINAL

DESIGNED BY: L.F.R. TRACED BY: DATE:
DRAWN BY: L.F.R. CHECKED BY: DATE:
APPROVED:— SCALE: AS NOTED
Norris C. Batelson — DESIGNER IN CHARGE — DATE: 12-16-70 SHEET NUMBER 29
George C. Ashton — DATE: 1-20-71 SET OF 47 SHEETS
Donald W. Kelling — Special Deputy, COMMISSIONER OF PUBLIC WORKS — DATE: 1-25-71 JOB NO. 512-74

X44327

PROJECT I.D.	SHEET NUMBER	TOTAL SHEETS
2984-0-07		
FEDERAL PROJECT DESIGNATION T-4195 (11)		

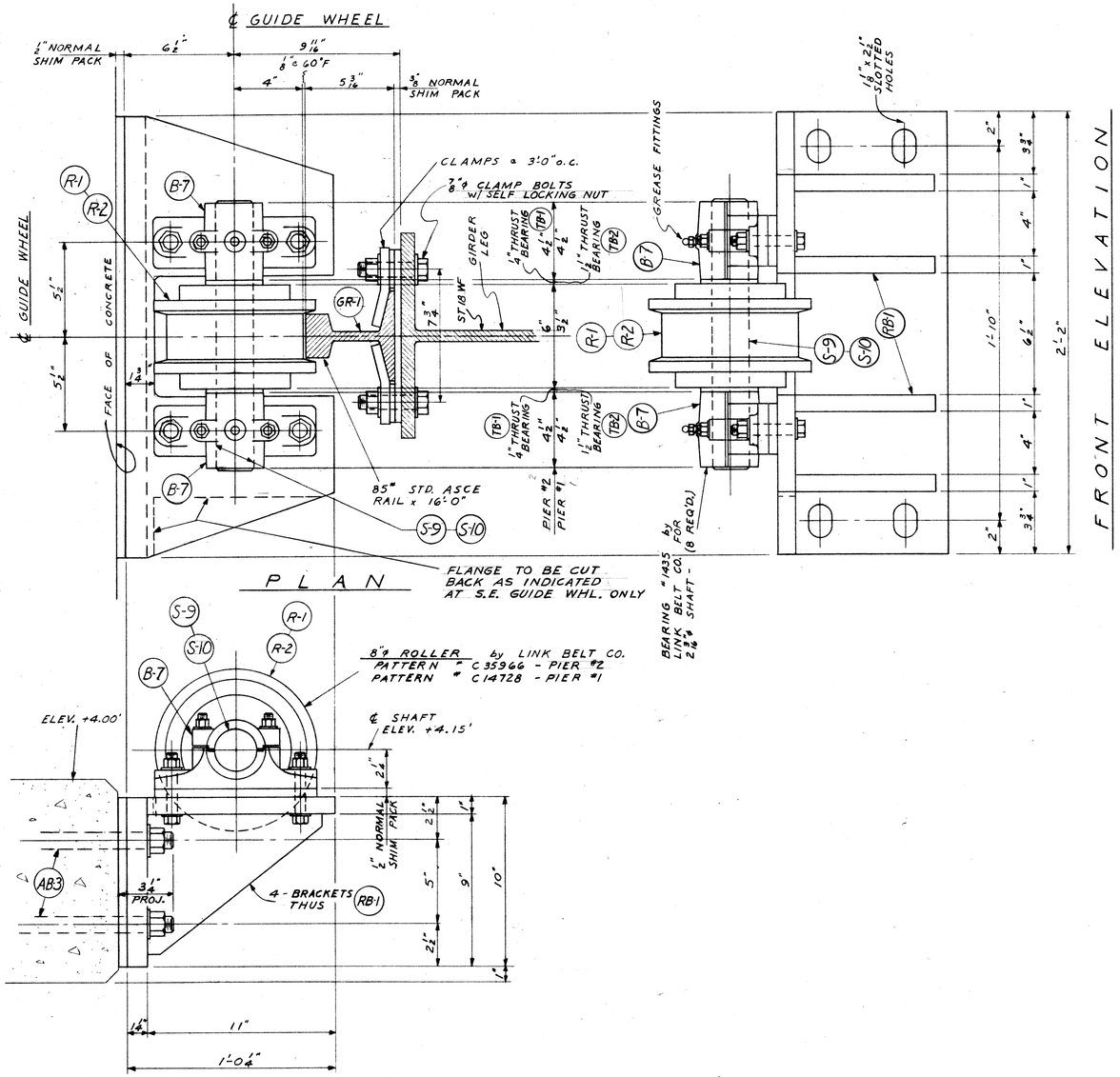

SIDE ELEVATION

ROLLER GUIDE ASSEMBLY (1/25)

SCALE 3" = 1'-0"

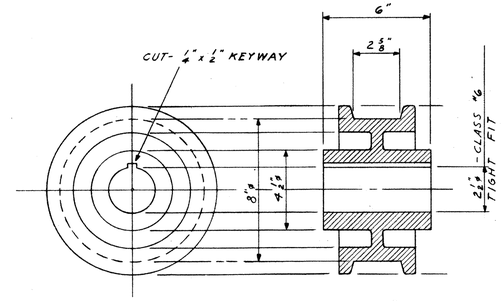

2 - ROLLERS - PIER #2 #R-1

LINK BELT CO. - PATTERN #C35966

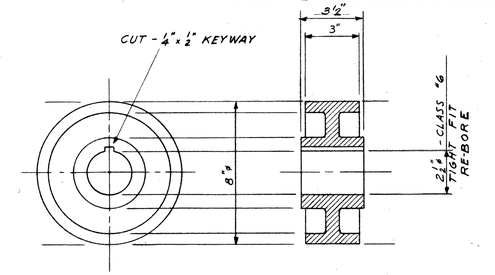

2 - ROLLERS - PIER #1 #R-2

LINK BELT CO. - PATTERN #C14728

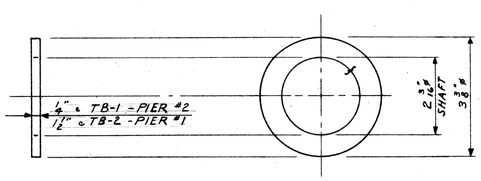

4 - 1/4" ROLLER GUIDE THRUST BEARINGS #TB-1

4 - 1/2" " " " " #TB-2

SELF LUBRICATING BRONZE

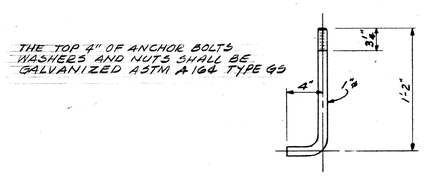

16-ROLLER GUIDE BRACKET ANCHOR BOLTS #AB-3

WGT. OF ANCHOR BOLTS PAID FOR AS STRUCTURAL CARBON STEEL

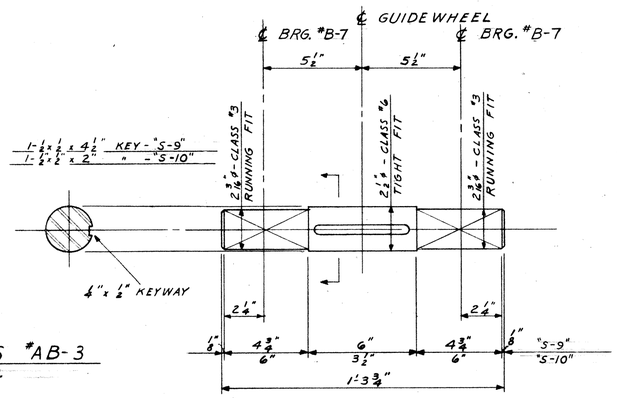

2-ROLLER GUIDE SHAFTS - PIER #2 #S-9

2- " " " - PIER #1 #S-10

SAE C-1045 STEEL - TURN AND POLISH

X 44328

STATE OF WISCONSIN
DEPARTMENT OF TRANSPORTATION
DIVISION OF HIGHWAYS

STRUCTURE B-40-406

DEPARTMENT OF PUBLIC WORKS
BUREAU OF BRIDGES AND PUBLIC BUILDINGS
CITY OF MILWAUKEE

REVISIONS		
MARK	DATE	BY
A		
B		
C		
D		
E		
F		
G		
H		
I		
J		
K		
L		
M		

PLEASANT ST. VERTICAL LIFT BRIDGE
OVER MILWAUKEE RIVER

MACHINERY - ROLLER GUIDE SYSTEM

DESIGNED BY: L.F.R. TRACED BY: DATE:
DRAWN BY: L.F.R. CHECKED BY: DATE:
APPROVED:— SCALE: AS NOTED

Norris G. Batalden — DESIGNER IN CHARGE — DATE: 12-16-70 — SHEET NUMBER 30

George C. Ashton — BUREAU OF BRIDGES AND PUBLIC BUILDINGS — DATE: 1-20-71 — SET OF 47 SHEETS

Donald W. Hoffberg — Deputy COMMISSIONER OF PUBLIC WORKS — DATE: 1-25-71 — JOB NO. 512 - 74

PROJECT I.D.	SHEET NUMBER	TOTAL SHEETS
2984-0-07		
FEDERAL PROJECT DESIGNATION T-4195 (II)		

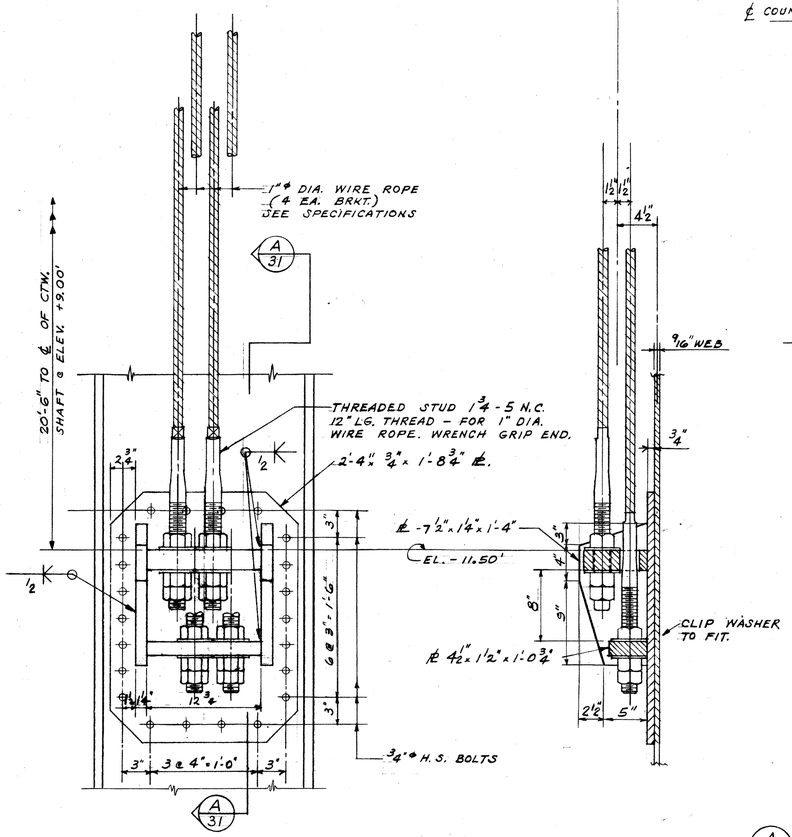

CABLE BRACKET CB-1 4 REQ.
SCALE: 1½" = 1'-0"

SECTION A/31
SCALE: 1½" = 1'-0"

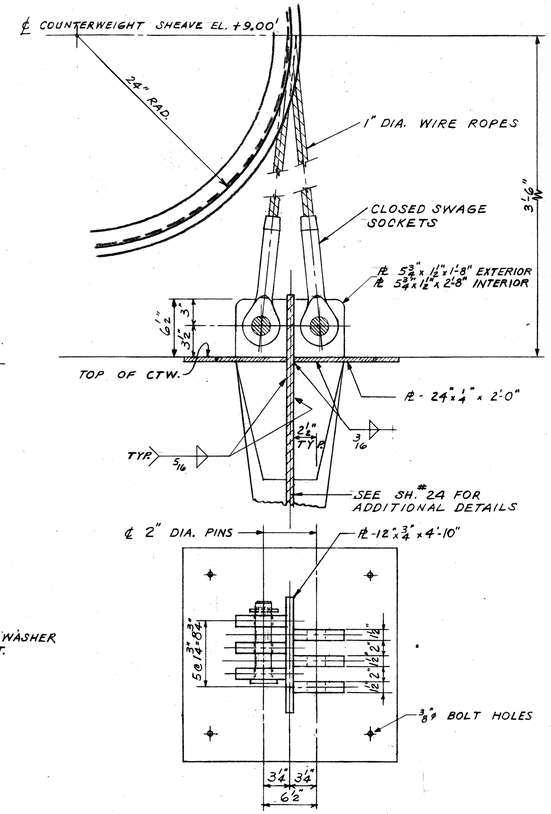

PLAN OF CB-2
SCALE: 1½" = 1'-0"
4 REQ.

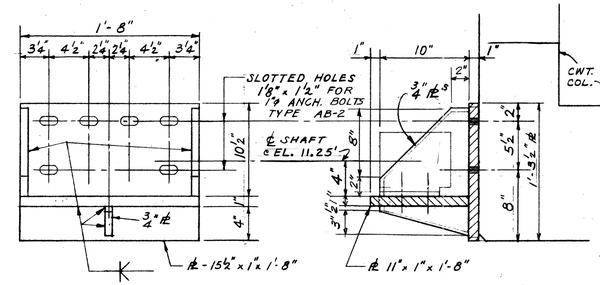

BEARING BRACKET BB-1
SCALE: 1½" = 1'-0"
20 REQ.

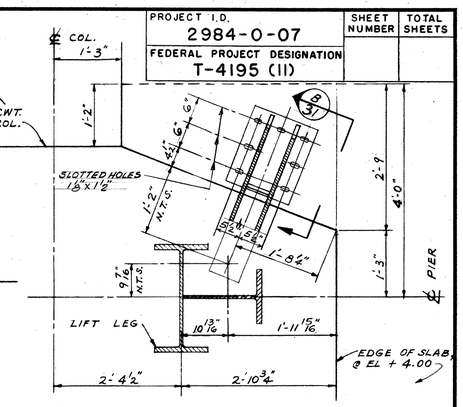

CABLE BRACKET CB-3 2 REQ.
SCALE: ¾" = 1'-0"

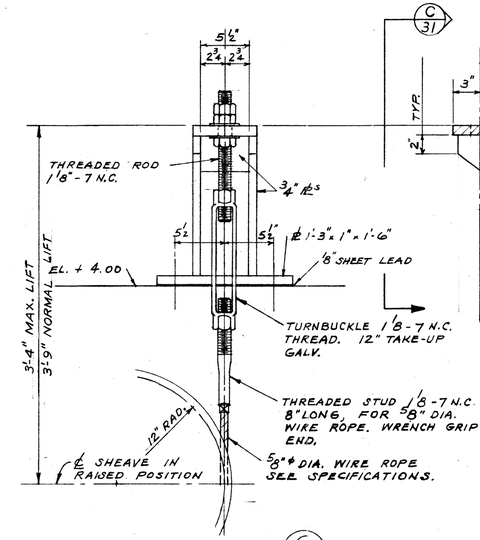

CB-3 SECTION C/31
SCALE: 1½" = 1'-0"

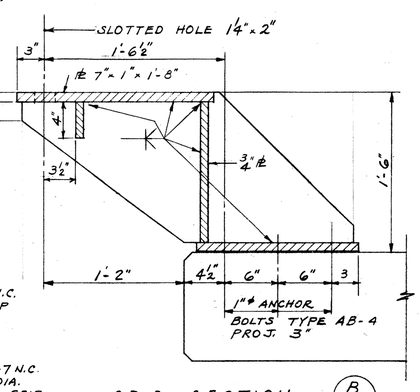

CB-3 SECTION B/31
SCALE: 1½" = 1'-0"

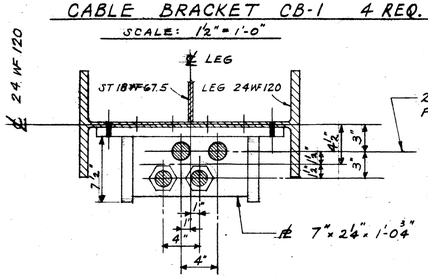

PLAN OF CB-1
SCALE: 1½" = 1'-0"

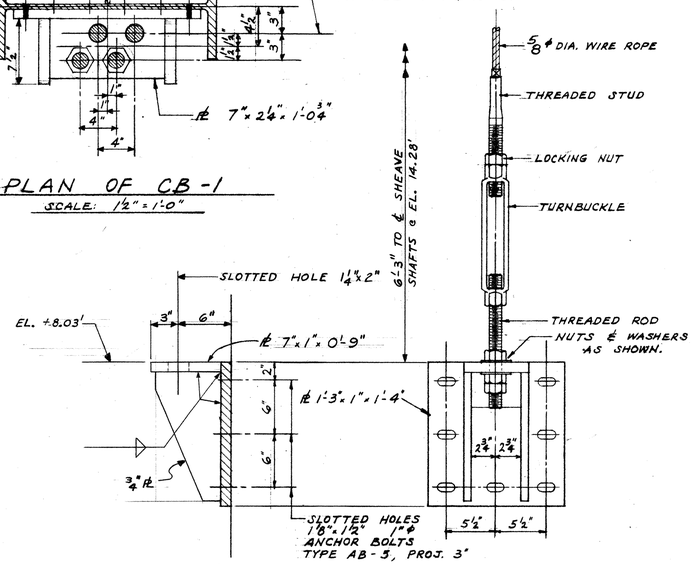

CABLE BRACKET CB-4
SCALE: 1½" = 1'-0"
4 REQUIRED

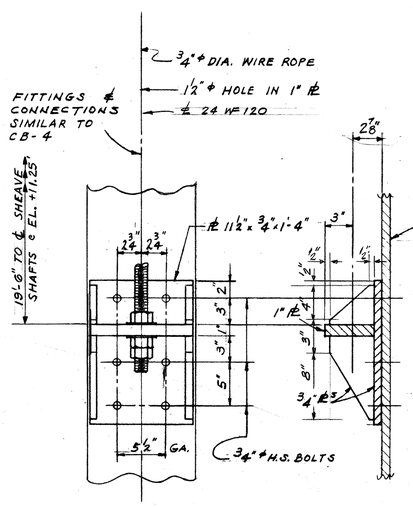

CABLE BRACKET CB-5
SCALE: 1½" = 1'-0"
4 REQUIRED

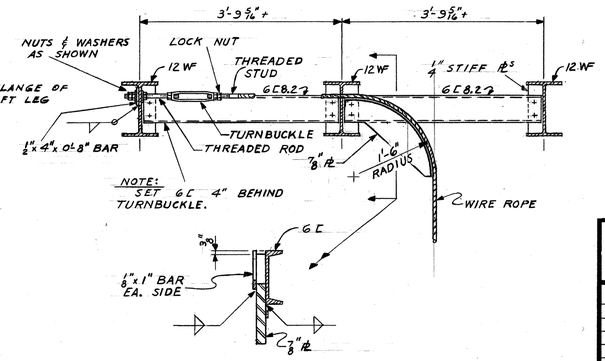

CABLE BRACKET CB-6
SCALE ¾" = 1'-0"
4 REQUIRED

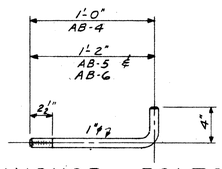

14	-	ANCHOR BOLTS	AB-4
14	-	" "	AB-5
48	-	" "	AB-6

SCALE: 1½" = 1'-0"

WGT OF ANCHOR BOLTS TO BE PAID FOR AS STR. CARBON STEEL

THE TOP 4" OF ANCHOR BOLTS, WASHERS AND NUTS SHALL BE GALVANIZED ASTM. A 164 TYPE 93

STATE OF WISCONSIN
DEPARTMENT OF TRANSPORTATION
DIVISION OF HIGHWAYS

STRUCTURE B-40-406

DEPARTMENT OF PUBLIC WORKS
BUREAU OF BRIDGES AND PUBLIC BUILDINGS
CITY OF MILWAUKEE

REVISIONS		
MARK	DATE	BY
A		
B		
C		
D		
E		
F		
G		
H		
I		
J		
K		
L		
M		

PLEASANT ST. VERTICAL LIFT BRIDGE
OVER MILWAUKEE RIVER

MACHINERY - CABLE & BEARING BRACKETS

DESIGNED BY: P.C.B. TRACED BY: DATE:
DRAWN BY: P.C.B. CHECKED BY: DATE:
APPROVED:- SCALE: AS NOTED

Norris G. Batelldor — DESIGNER IN CHARGE — DATE: 12-16-70 SHEET NUMBER 31
George C. Ashton — CHIEF OF BRIDGES AND PUBLIC BUILDINGS — DATE: 1-20-71 SET OF 47 SHEETS
Donald A. Fuchs — Deputy COMMISSIONER OF PUBLIC WORKS — DATE: 1-25-71 JOB NO. 512-74

X 44329

CITY

PROJECT I.D.	SHEET NUMBER	TOTAL SHEETS
2984-0-07		
FEDERAL PROJECT DESIGNATION T-4195 (II)		

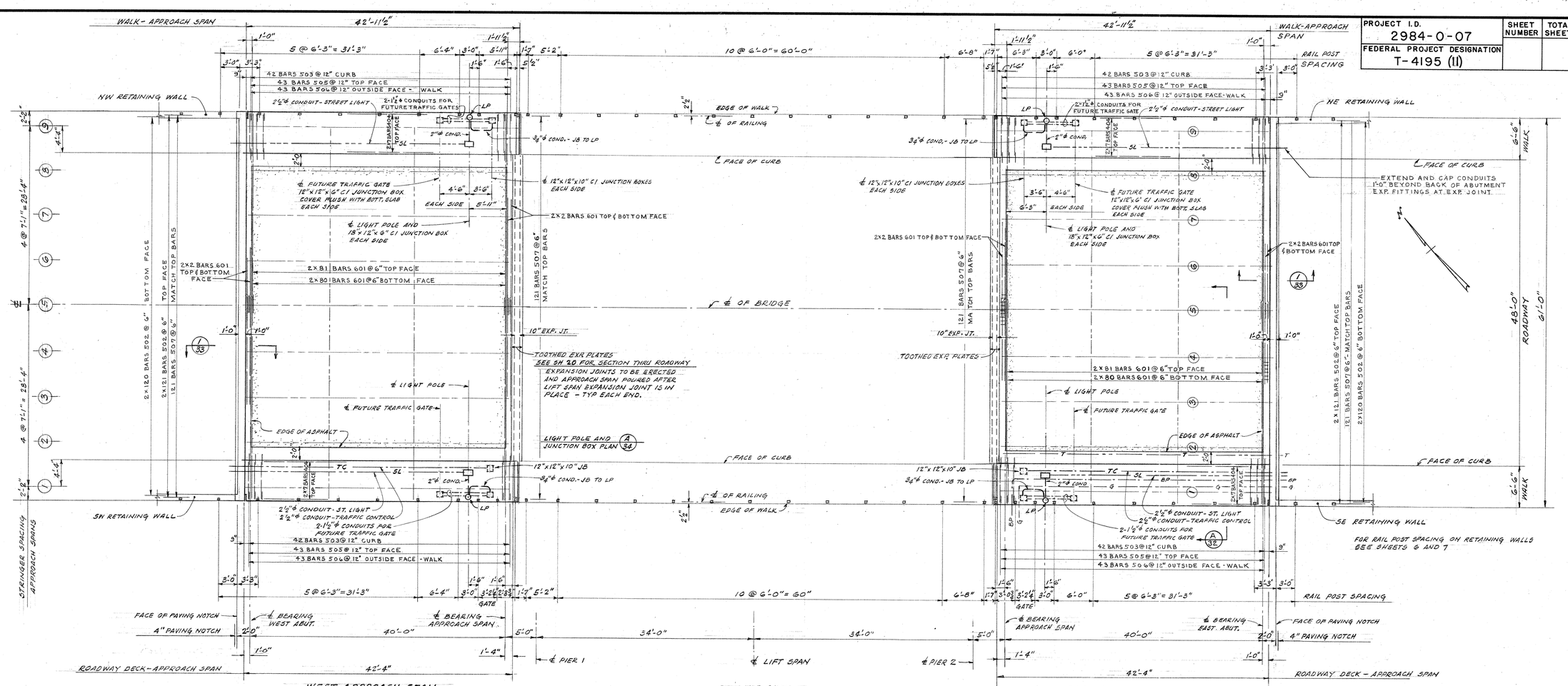

DECK PLAN
SCALE - ⅛" = 1'-0"

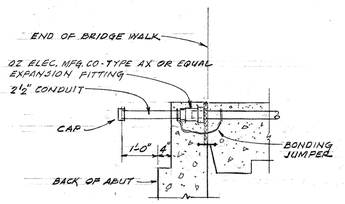

CONDUIT EXPANSION FITTING DETAIL

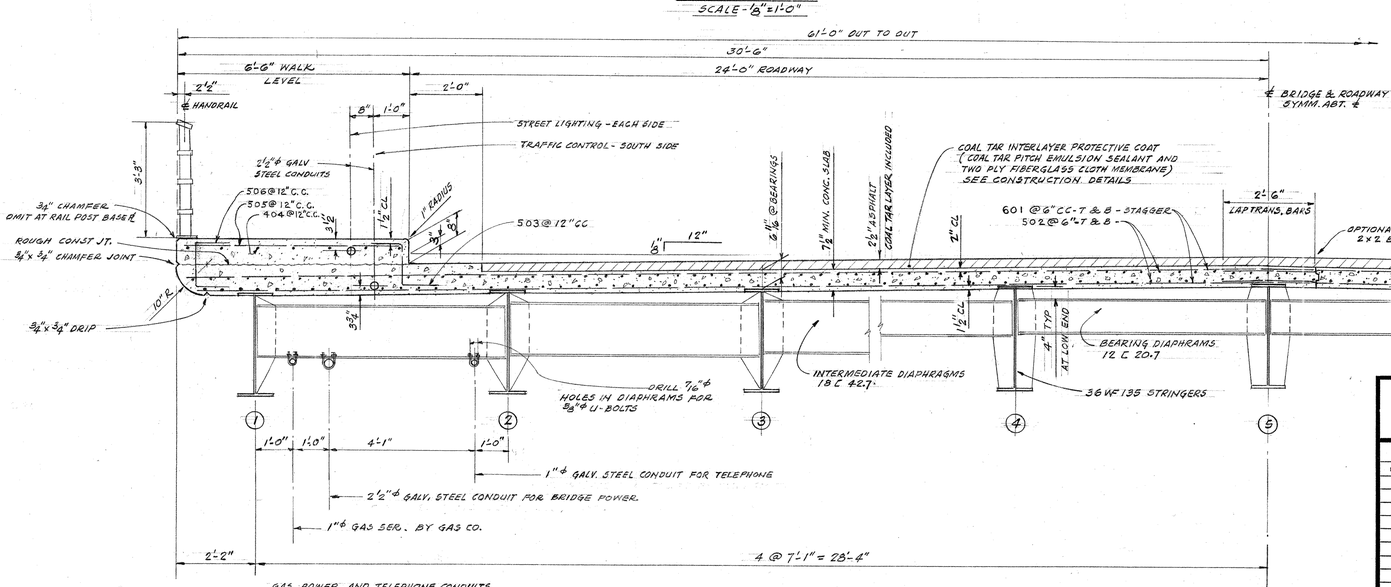

APPROACH SPAN - DECK CROSS SECTION A 32
SCALE ½" = 1'-0"

LEGEND

SL	STREET LIGHTING
TC	TRAFFIC CONTROL
BP	BRIDGE POWER
JB	JUNCTION BOX
LP	LIGHT POLE
G	GAS
T	TELEPHONE

NOTES:
1. FOR FINISHED ROADWAY ELEVATIONS SEE SH. 3
2. CONDUITS, EXPANSION FITTINGS, JUNCTION BOXES FOR STREET LIGHTING, TRAFFIC CONTROL, TELEPHONE, AND BRIDGE POWER INCLUDED IN PRICE BID FOR ELECTRICAL WORK.
3. CONDUITS SHALL BE STANDARD GALVANIZED RIGID CONDUIT.

STATE OF WISCONSIN
DEPARTMENT OF TRANSPORTATION
DIVISION OF HIGHWAYS

STRUCTURE B-40-406

DEPARTMENT OF PUBLIC WORKS
BUREAU OF BRIDGES AND PUBLIC BUILDINGS
CITY OF MILWAUKEE

REVISIONS		
MARK	DATE	BY
A		
B		
C		
D		
E		
F		
G		
H		
I		
J		
K		
L		
M		

PLEASANT ST. VERTICAL LIFT BRIDGE
OVER MILWAUKEE RIVER
APPROACH SPAN - DECK PLAN AND SECTION

DESIGNED BY: TES — TRACED BY: — DATE:
DRAWN BY: T.E.S. 12-17-73 — CHECKED BY: — DATE:
APPROVED:—
SCALE: AS NOTED
Norris C. Batcellor, DESIGNER IN CHARGE — DATE: 12-16-70 — SHEET NUMBER 32
George R. Ashton, SUPT. OF BRIDGES AND PUBLIC BUILDINGS — DATE: 1-20-71 — SET OF 47 SHEETS
Donald W. Stalking, DEPUTY COMMISSIONER OF PUBLIC WORKS — DATE: 1-25-71 — JOB NO. 512-74

X44330

PROJECT I.D.	SHEET NUMBER	TOTAL SHEETS
2984-0-07		
FEDERAL PROJECT DESIGNATION T-4195 (11)		

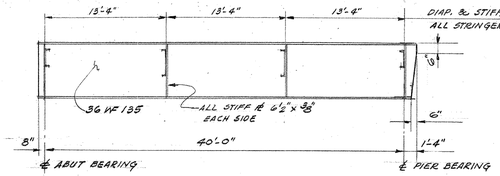

INTERIOR STRINGERS - 2 THRU 8

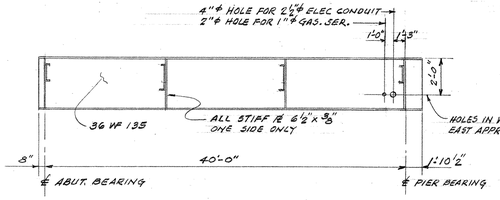

EXTERIOR STRINGERS - 1 AND 9

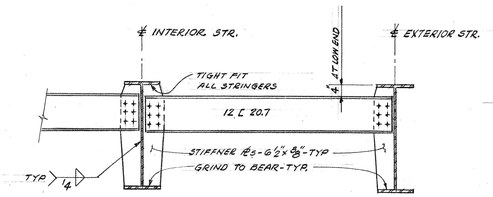

BEARING DIAPHRAGM DETAILS

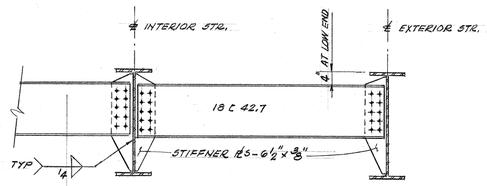

INTERMEDIATE DIAPHRAGM DETAILS

FIELD CONNECTIONS SHALL BE MADE WITH ASTM-A325 ¾" ϕ HIGH STRENGTH BOLTS UNLESS NOTED OTHERWISE

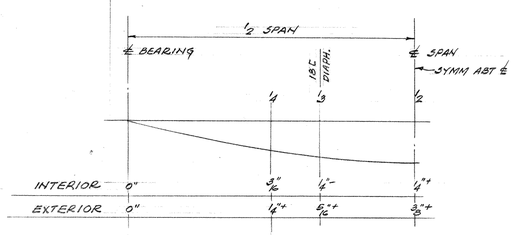

DEAD LOAD DEFLECTION DIAGRAM
APPROACH SPAN STRINGERS
CAMBER FOR DEAD LOAD + VERTICAL CURVE

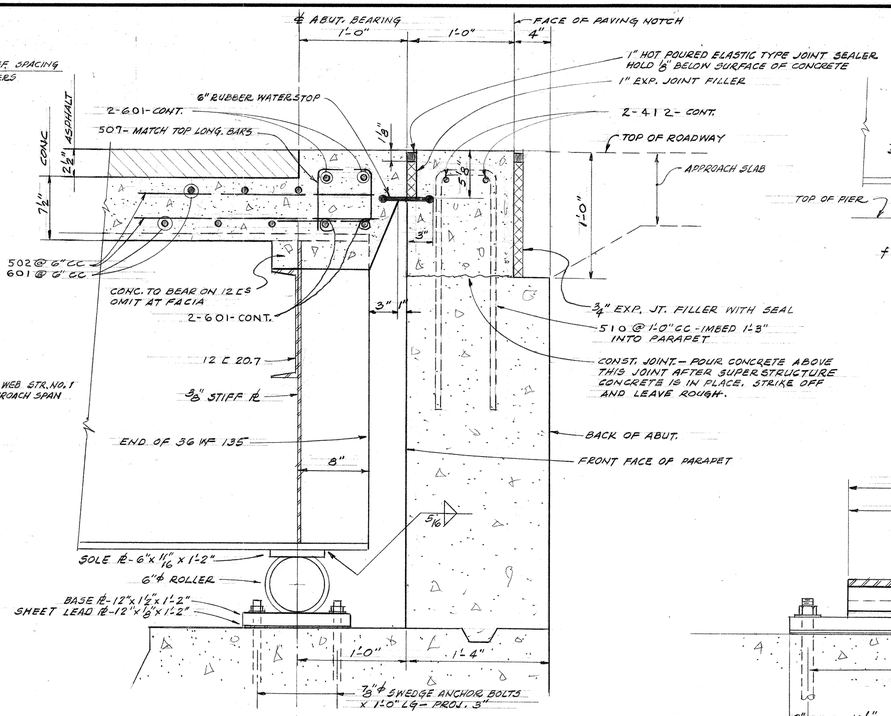

BEARING AND ROADWAY SECTION (1/32)
EAST & WEST ABUTMENTS
SCALE 1½" = 1'-0"

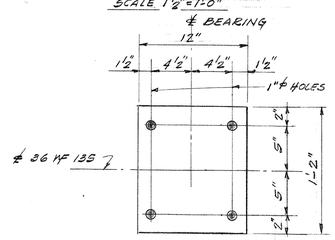

BASE PLATE
ABUTMENT BEARING

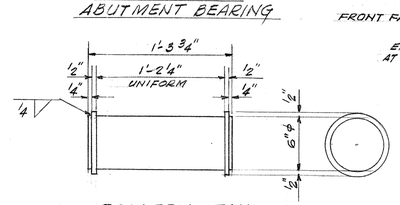

ROLLER DETAIL
SCALE 1½" = 1'-0"

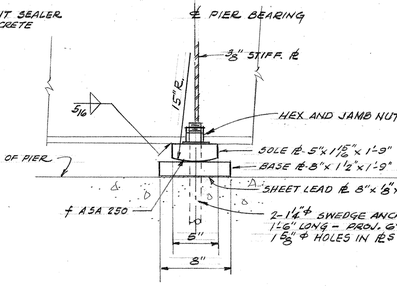

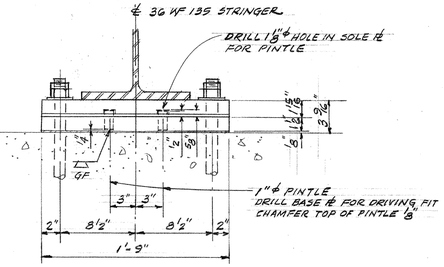

FIXED BEARING - APPROACH SPANS
PIERS 1 AND 2
SCALE 1½" = 1'-0"

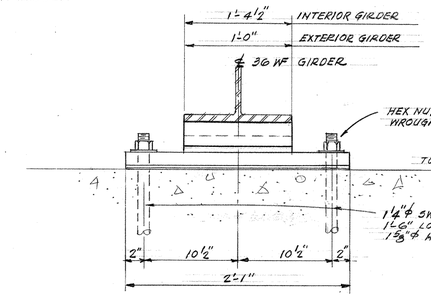

FIXED BEARING
EXPANSION BEARING - SIMILAR
SCALE 1½" = 1'-0"

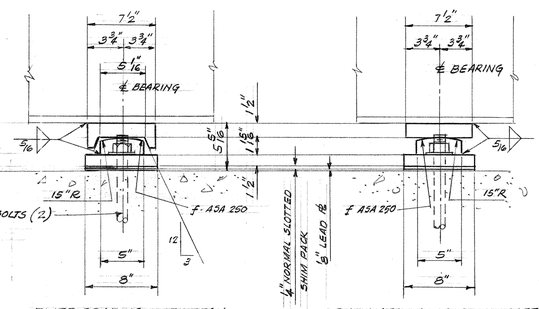

FIXED BEARING - LIFT SPAN
PIER NO. 2
SCALE 1½" = 1'-0"

EXPANSION BEARING - LIFT SPAN
PIER NO. 1
SCALE 1½" = 1'-0"

BEARINGS - LIFT SPAN

BEARING NOTES
PLATES SHALL BE A242 STEEL WITH ALL SURFACES SMOOTH AND FREE FROM WARP AND ALL ANGLES SMOOTH, STRAIGHT AND VERTICAL
ROLLERS SHALL BE COLD FINISHED STEEL ASTM A108 (GRADE 1045) TURNED AND POLISHED
THE TOP 6½" OF ANCHOR BOLTS, WASHERS AND NUTS SHALL BE GALVANIZED, ASTM A153 TYPE 45
ANCHOR BOLTS FOR STRINGERS AND GIRDERS SHALL BE DRILLED AND LEADED AFTER THE PIERS AND ABUTMENTS HAVE BEEN PLACED

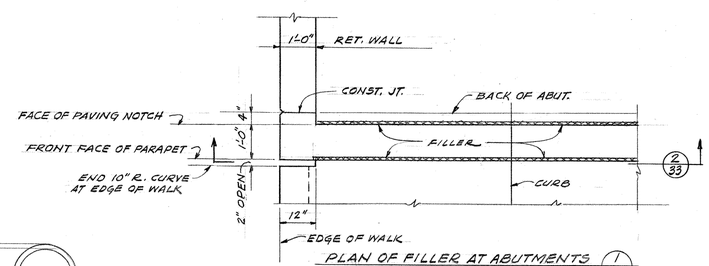

PLAN OF FILLER AT ABUTMENTS (1/33)

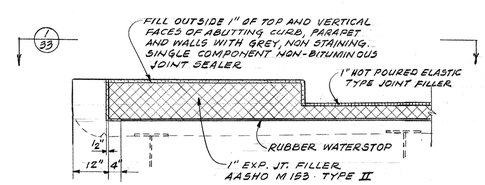

SECTION THRU CURB AND WALK AT FILLER (2/33)
EAST & WEST ABUTMENTS

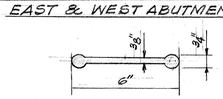

RUBBER WATERSTOP DETAIL

STATE OF WISCONSIN
DEPARTMENT OF TRANSPORTATION
DIVISION OF HIGHWAYS

STRUCTURE B-40-406

DEPARTMENT OF PUBLIC WORKS
BUREAU OF BRIDGES AND PUBLIC BUILDINGS
CITY OF MILWAUKEE

REVISIONS		
MARK	DATE	BY
A		
B		
C		
D		
E		
F		
G		
H		
I		
J		
K		
L		
M		

PLEASANT ST. VERTICAL LIFT BRIDGE
OVER MILWAUKEE RIVER
APPROACH SPAN - STRINGERS, DIAPHRAMS & BEARINGS

DESIGNED BY: TES — TRACED BY: — DATE:
DRAWN BY: T. E. S. — CHECKED BY: — DATE:
APPROVED:— SCALE: AS NOTED
Morris C. Batalden — DESIGNER IN CHARGE — DATE: 12-16-70 — SHEET NUMBER 33
George C. Ashton — DIRECT. OF BRIDGES AND PUBLIC BUILDINGS — DATE: 1-20-71 — SET OF 47 SHEETS
Donald N. Stehly — COMMISSIONER OF PUBLIC WORKS — DATE: 1-25-71 — JOB NO. 512-74

X 44331

REVISED 10-7-70

PROJECT I.D.	SHEET NUMBER	TOTAL SHEETS
2984-0-07		
FEDERAL PROJECT DESIGNATION T-4195 (II)		

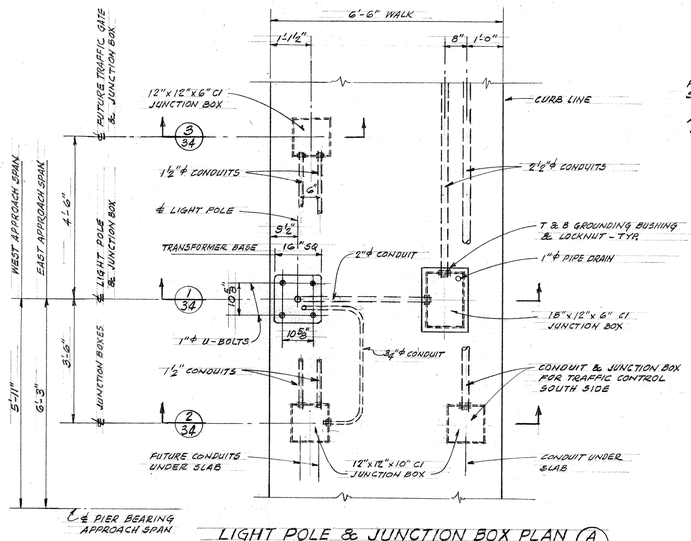

LIGHT POLE & JUNCTION BOX PLAN (A/32)
SCALE ½"=1'-0"

NOTE:
ALL JUNCTION BOXES AND CONDUITS INCLUDED IN PRICE BID FOR ELECTRICAL WORK

TOP 4" OF BOLTS, NUTS, AND WASHERS TO BE GALVANIZED ASTM 164, TYPE GS, U-BOLTS, NUTS, ¾" BASES ETC. TO BE STR. CARBON STEEL. PRICE TO BE INCLUDED IN PRICE BID FOR CONCRETE MASONRY.

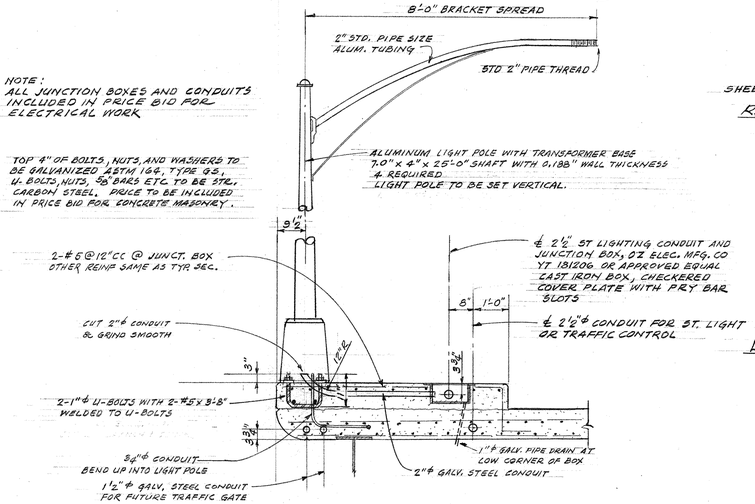

LIGHT POLE & JUNCTION BOX SECTION (1/34)

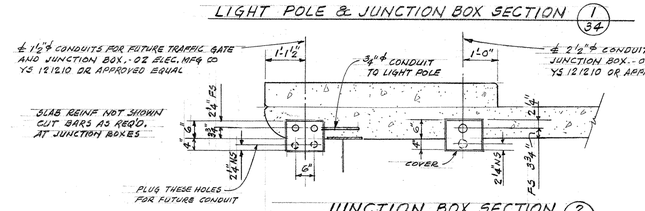

JUNCTION BOX SECTION (2/34)
SCALE ½"=1'-0"

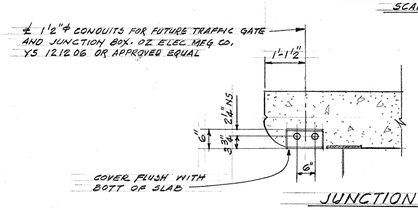

JUNCTION BOX SECTION (3/34)
SCALE ½"=1'-0"

JUNCTION BOXES YS 121210 AND YS 121206 TO BE CAST IRON, HOT DIPPED GALVANIZED FINISH WITH NEOPRENE GASKETS AND BRASS COVER SCREWS

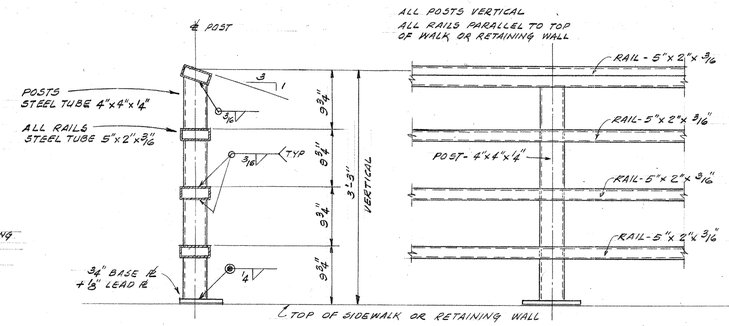

TYPICAL RAILING SECTION
TYPE A
SCALE 1"=1'-0"

TYPICAL RAILING ELEVATION
SCALE 1"=1'-0"

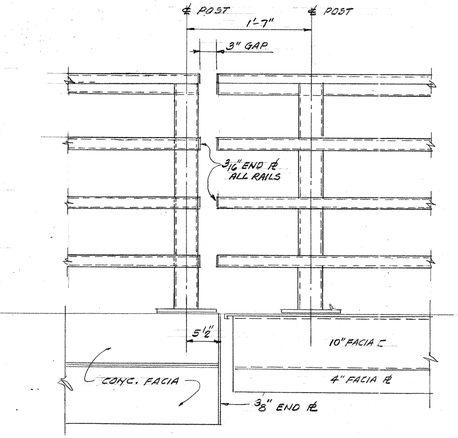

RAILING DETAIL AT JOINT BETWEEN APPROACH & LIFT SPAN
SCALE 1"=1'-0"

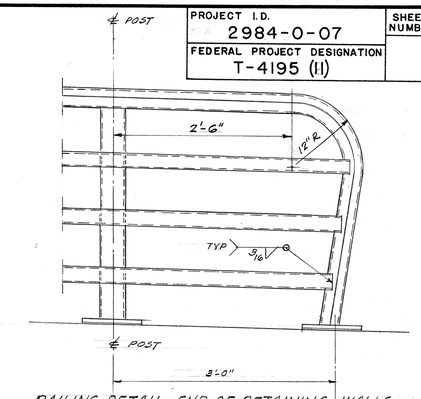

RAILING DETAIL - END OF RETAINING WALLS
SCALE 1"=1'-0"

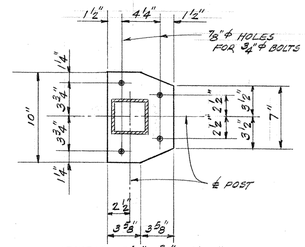

BASE PL - 7¼"x 8¾"x 0'-10"
SHEET LEAD PL - 7¼"x 8¾"x 0'-10"

RAIL POST BASE PLATE
LIFT SPAN
SCALE 1½"=1'-0"

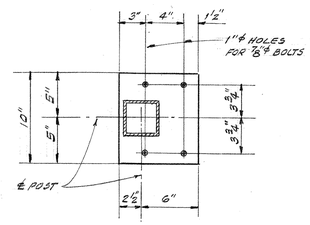

BASE PL - 8½"x 8¾"x 0'-10"
SHEET LEAD PL - 8½"x 8¾"x 0'-10"

RAIL POST BASE PLATE
APPROACH SPAN & RETAINING WALL
SCALE 1½"=1'-0"

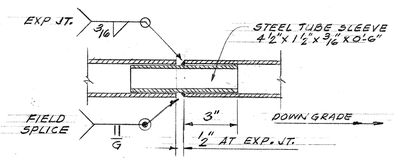

DETAIL - RAIL FIELD SPLICE
AND RAIL EXPANSION JT.
SCALE 3"=1'-0"

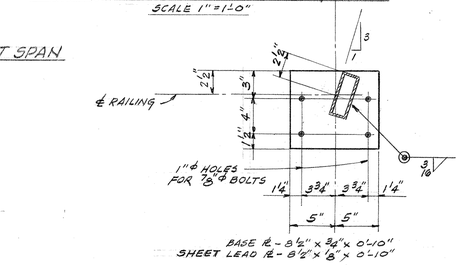

BASE PL - 8½"x 8¾"x 0'-10"
SHEET LEAD PL - 8½"x ⅛"x 0'-10"

BASE PLATE FOR END OF RAILING
SCALE 1½"=1'-0"

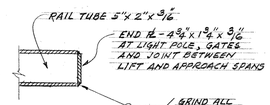

DETAIL AT END OF RAIL

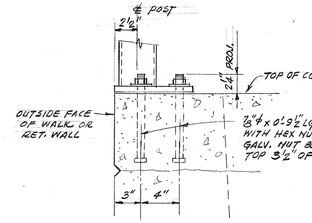

ANCHOR BOLT DETAIL
APPROACH SPAN & RET. WALLS

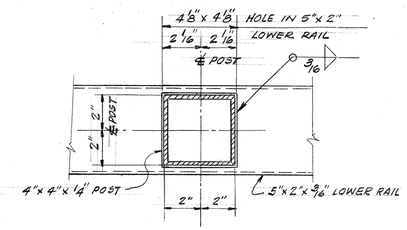

SECTION THRU RAILING
SCALE 3"=1'-0"

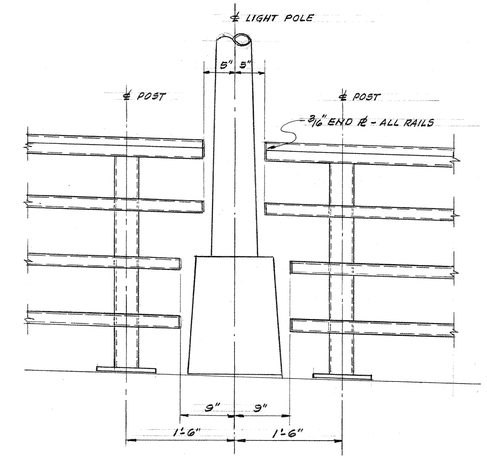

RAILING DETAIL AT LIGHT POLE
SCALE 1"=1'-0"

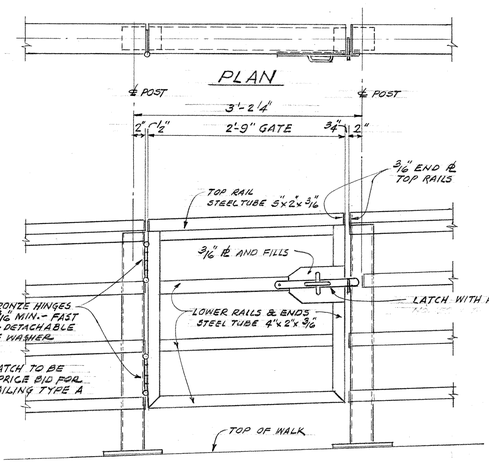

HINGES AND LATCH TO BE INCLUDED IN PRICE BID FOR TUBE STEEL RAILING TYPE A

GATE ELEVATION
SCALE 1"=1'-0"

NOTE:
BEFORE RAILING IS FABRICATED, TAKE FIELD MEASUREMENTS TO DETERMINE EXACT LENGTHS AND ELEVATIONS.

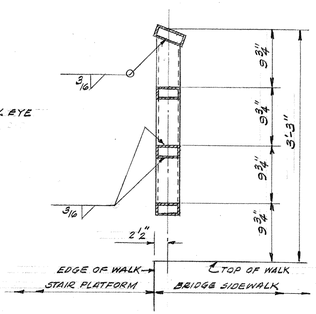

GATE SECTION

STATE OF WISCONSIN
DEPARTMENT OF TRANSPORTATION
DIVISION OF HIGHWAYS

STRUCTURE B-40-406

DEPARTMENT OF PUBLIC WORKS
BUREAU OF BRIDGES AND PUBLIC BUILDINGS
CITY OF MILWAUKEE

REVISIONS		
MARK	DATE	BY
A		
B		
C		
D		
E		
F		
G		
H		
I		
J		
K		
L		
M		

PLEASANT ST. VERTICAL LIFT BRIDGE
OVER MILWAUKEE RIVER
LIGHT POLE & RAILING DETAILS

DESIGNED BY: TRACED BY: DATE:
DRAWN BY: T. E. S. CHECKED BY: DATE:
APPROVED:— SCALE: AS NOTED
Norris C. Bratsolis DESIGNER IN CHARGE DATE: 12-16-70 SHEET NUMBER 34
George C. Ashton CHIEF, BUREAU OF BRIDGES AND PUBLIC BUILDINGS DATE: 1-20-71 SET OF 47 SHEETS
Donald N. Hardy DEPUTY COMMISSIONER OF PUBLIC WORKS DATE: 1-25-71 JOB NO. 512-74

X 44332

PROJECT I.D.	SHEET NUMBER	TOTAL SHEETS
2984-0-07		
FEDERAL PROJECT DESIGNATION T-4195 (11)		

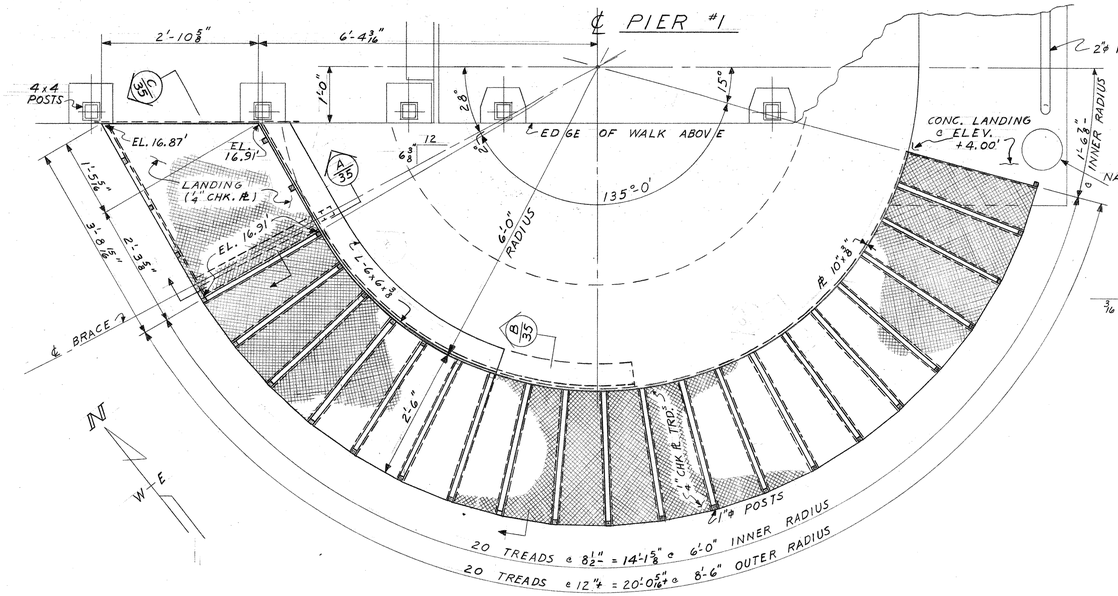

PLAN OF CIRCULAR STAIR
SCALE ¾" = 1'-0"

CIRCULAR STAIR TREADS, POSTS, RAILS, PLATES ETC. INCLUDED IN PRICE BID FOR STRUCTURAL CARBON STEEL

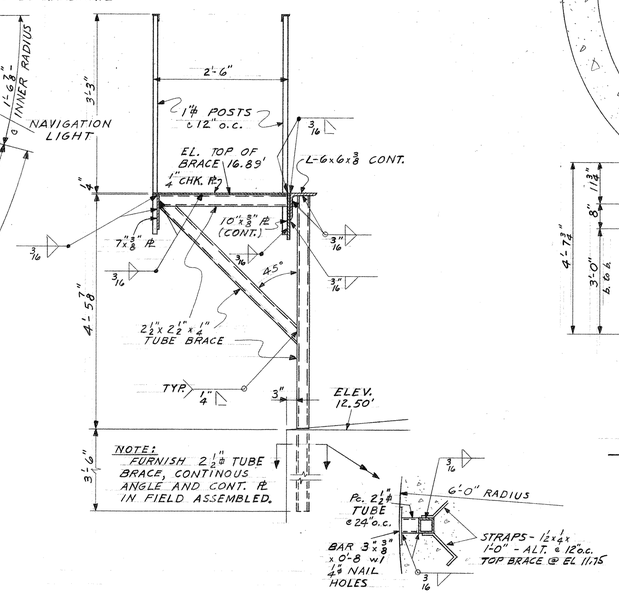

SECTION A/35
SCALE ¾" = 1'-0"

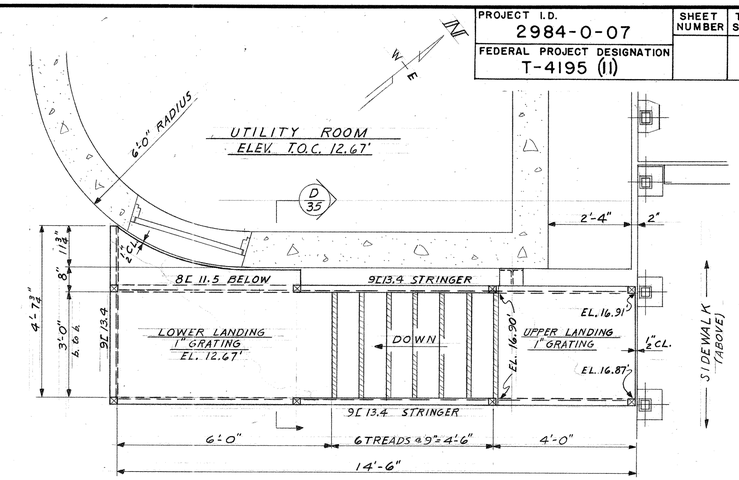

PLAN OF EXTERIOR BRIDGEHOUSE STAIR
SCALE ½" = 1'-0"

NOTE:
1. ALL STAIR LANDING SHALL BE OPEN GRID "X-BAR" PRESS LOCKED TYPE "A-A" W/ 1"x⅛" BARS AND CHECKER PL NOSING.
2. ALL STAIR TREADS TO BE 9¾" WIDE x 1" GRATING w/ CHECKERED PL NOSING.

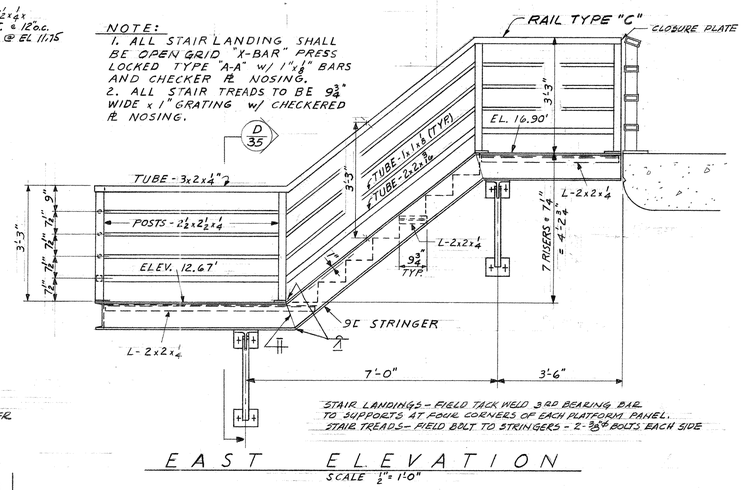

STAIR LANDINGS - FIELD TACK WELD 3 PER BEARING BAR TO SUPPORTS AT FOUR CORNERS OF EACH PLATFORM PANEL.
STAIR TREADS - FIELD BOLT TO STRINGERS - 2-⅜"ϕ BOLTS EACH SIDE

EAST ELEVATION
SCALE ½" = 1'-0"

STAIR TREADS AND LANDING INCLUDED IN PRICE BID FOR AND IS ITEM - 1" OPEN STEEL GRID FLOOR".

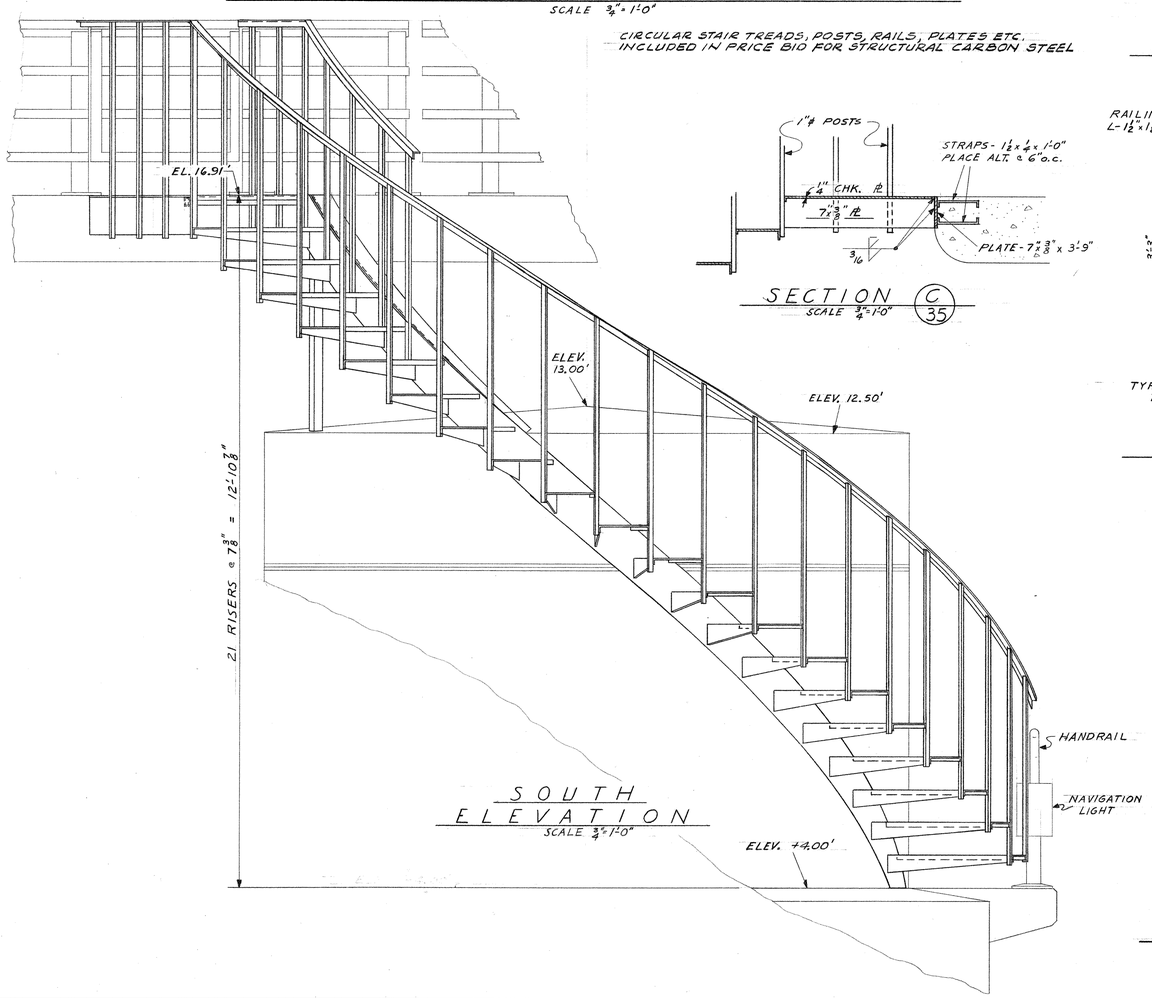

SOUTH ELEVATION
SCALE ¾" = 1'-0"

SECTION C/35
SCALE ¾" = 1'-0"

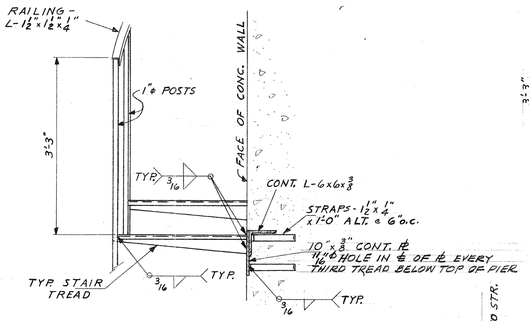

SECTION B/35
SCALE ¾" = 1'-0"

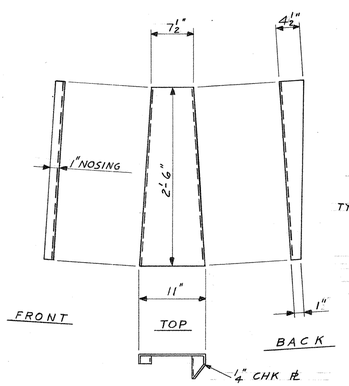

TYPICAL TREAD FOR CIRCULAR STAIR
SCALE 1" = 1'-0"

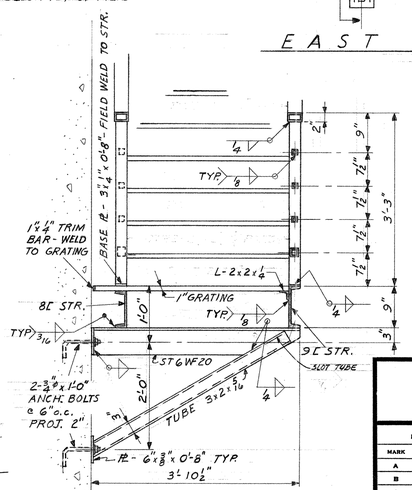

SECTION D/35
SCALE ¾" = 1'-0"

THE TOP 2½" OF ANCHOR BOLTS, NUTS, AND WASHERS SHALL BE GALVANIZED ASTM A164 TYPE 85

X 44333

STATE OF WISCONSIN
DEPARTMENT OF TRANSPORTATION
DIVISION OF HIGHWAYS

STRUCTURE B-40-406

DEPARTMENT OF PUBLIC WORKS
BUREAU OF BRIDGES AND PUBLIC BUILDINGS
CITY OF MILWAUKEE

REVISIONS		
MARK	DATE	BY
A		
B		
C		
D		
E		
F		
G		
H		
I		
J		
K		
L		
M		

PLEASANT ST. VERTICAL LIFT BRIDGE
OVER MILWAUKEE RIVER
CIRCULAR STAIR

DESIGNED BY: R. L. K. — TRACED BY: — DATE:
DRAWN BY: L. F. R. — CHECKED BY: — DATE:
APPROVED:— SCALE: AS NOTED

Morris G. Bastalden — DATE: 12-16-70 — SHEET NUMBER 35
DESIGNER IN CHARGE
George C. Ashton — DATE: 1-20-71 — SET OF 47 SHEETS
CHIEF OF BRIDGES AND PUBLIC BUILDINGS
Wendell W. Lathey — DATE: 1-25-71 — JOB NO. 512 - 74
DEPUTY COMMISSIONER OF PUBLIC WORKS

PROJECT I.D.	SHEET NUMBER	TOTAL SHEETS
2984-0-07		
FEDERAL PROJECT DESIGNATION T-4195 (11)		

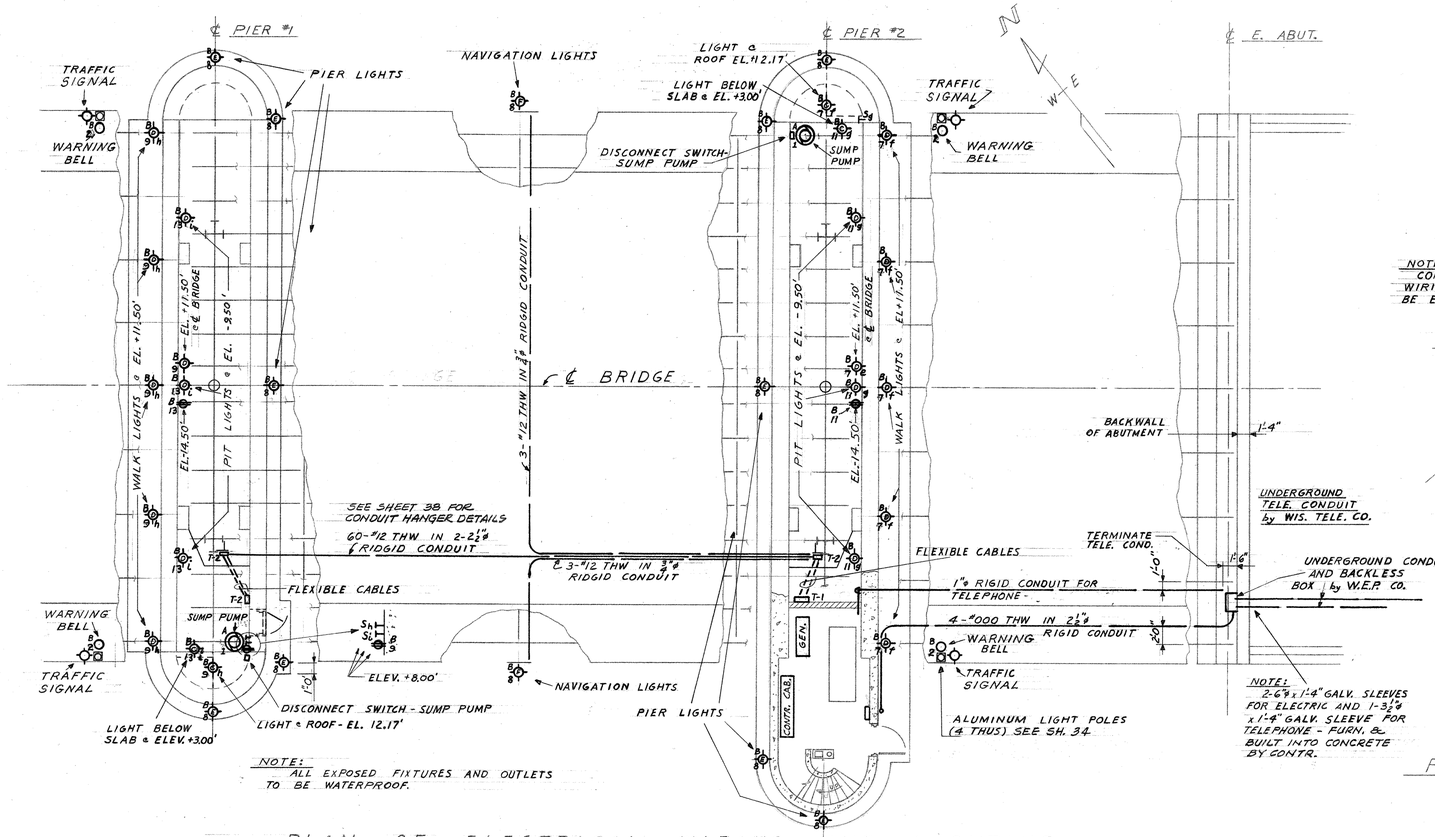

NOTE: ALL EXPOSED FIXTURES AND OUTLETS TO BE WATERPROOF.

PLAN OF ELECTRICAL WIRING AND LIGHTING

SCALE 1/8" = 1'-0"

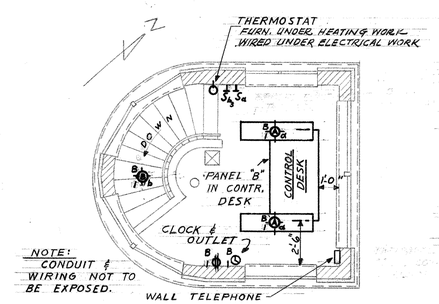

PLAN OF CONTROL ROOM

SCALE 1/4" = 1'-0"

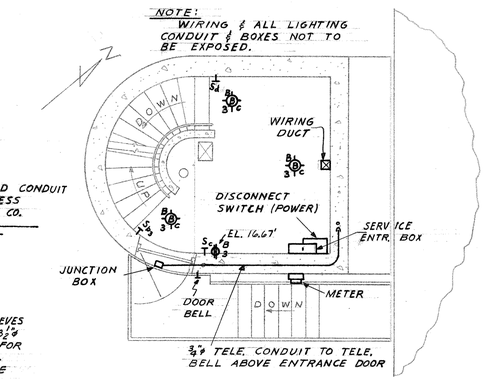

PLAN OF ENTRY ROOM

SCALE 1/4" = 1'-0"

LEGEND:

- BREAKER PANEL — TYPE FIXTURE - SEE SHEET; CIRCUIT; SWITCH NUMBER — INDICATES LIGHTING FIXTURE
- SWITCH NUMBER — INDICATES TOGGLE SWITCH (48" ABOVE FLOOR - NORMAL)
- BREAKER PANEL; CIRCUIT — INDICATES CONVIENCE OUTLET (24" ABOVE FLOOR-NORMAL)
- BREAKER PANEL; CIRCUIT — INDICATES TRAFFIC BELL
- BREAKER PANEL; CIRCUIT — INDICATES ELECTRIC MOTOR
- CIRCUIT — INDICATES DISCONNECT SWITCH OR JUNCTION BOX

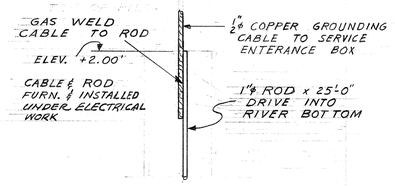

ELECTRICAL GROUNDING DETAIL

N. T. S.

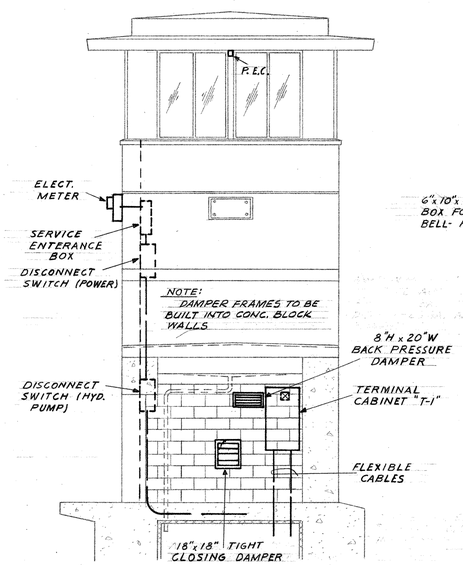

NORTH ELEVATION

SCALE 1/4" = 1'-0"

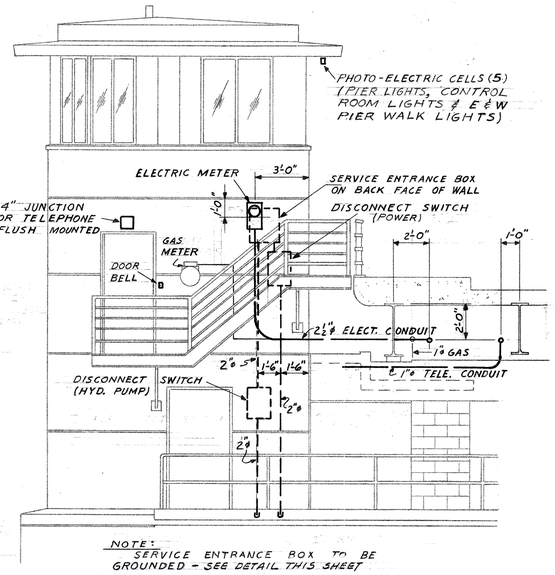

EAST ELEVATION

SCALE 1/4" = 1'-0"

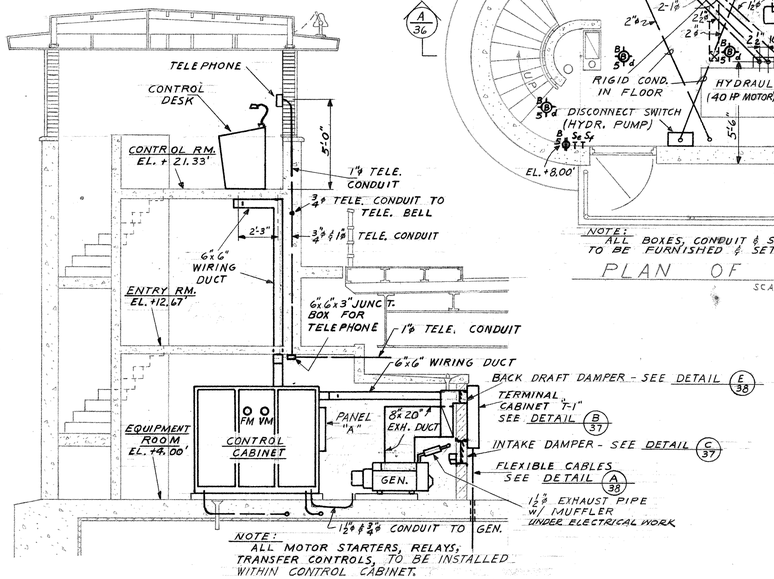

CROSS-SECTION A/36

SCALE 1/4" = 1'-0"

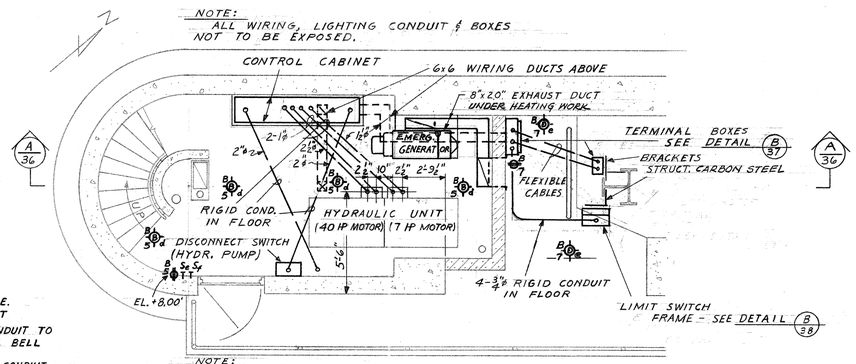

PLAN OF EQUIPMENT ROOM

SCALE 1/4" = 1'-0"

STATE OF WISCONSIN
DEPARTMENT OF TRANSPORTATION
DIVISION OF HIGHWAYS

STRUCTURE B-40-406

DEPARTMENT OF PUBLIC WORKS
BUREAU OF BRIDGES AND PUBLIC BUILDINGS
CITY OF MILWAUKEE

REVISIONS		
MARK	DATE	BY
A		
B		
C		
D		
E		
F		
G		
H		
I		
J		
K		
L		
M		

PLEASANT ST. VERTICAL LIFT BRIDGE
OVER MILWAUKEE RIVER

ELECTRICAL - LAYOUT PLANS & ELEVATIONS

DESIGNED BY: J.D.P. & L.F.R. TRACED BY: DATE:
DRAWN BY: L.F.R. CHECKED BY: DATE:
APPROVED:— SCALE: AS NOTED

Norris A. Bratelen — DESIGNER IN CHARGE — DATE: 12-16-70 SHEET NUMBER 36
George C. Pastor — SUPT. OF BRIDGES AND PUBLIC BUILDINGS — DATE: 1-20-71 SET OF 47 SHEETS
Harold W. Kelley — COMMISSIONER OF PUBLIC WORKS — DATE: 1-25-71 JOB NO. 512-74

X44334

PROJECT I.D.	SHEET NUMBER	TOTAL SHEETS
2984-0-07		
FEDERAL PROJECT DESIGNATION T-4195 (11)		

NAMEPLATE MARKING :

1. VOLTMETER TRANSFER
2. LINE VOLTAGE
3. POWER PUMP CURRENT
4. PIER LIGHTS
5. NAVIGATION LIGHTS
6. EMERGENCY BY-PASS
7. EMERGENCY CHANGEOVER SW.
8. WEST TRAFFIC GATES
9. EAST TRAFFIC GATES
10. MAIN POWER LIGHT (GREEN)
11. EMERGENCY POWER LIGHT (RED)
12. TRAFFIC LIGHTS
13. SPAN FULLY OPEN
14. SPAN IN MOTION
15. SPAN FULLY CLOSED
16. GATE UP (GREEN)
17. GATE DOWN (RED)
18. OFF ON BELL OFF

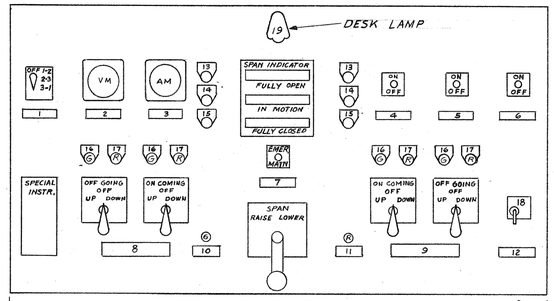

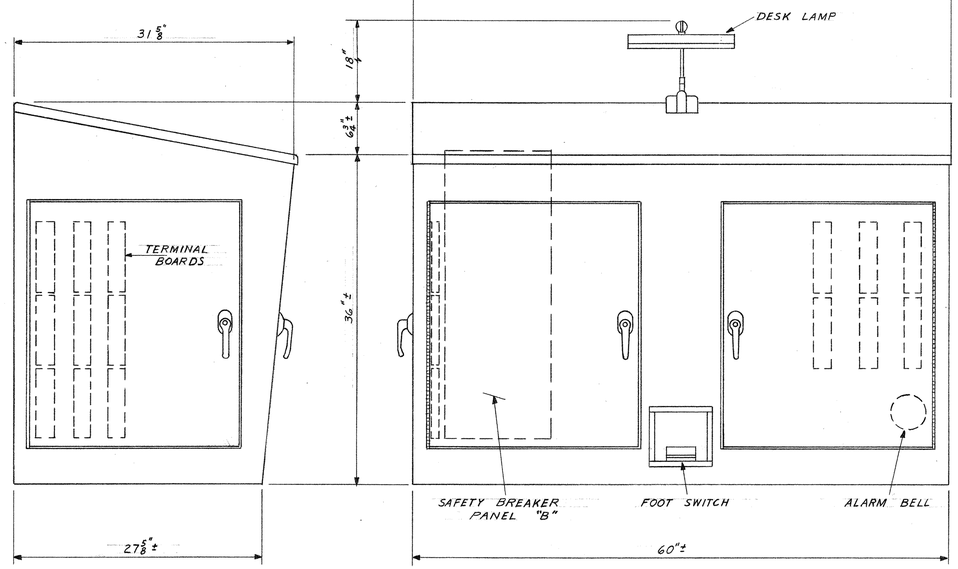

CONTROL DESK
SCALE 1½"=1'-0"

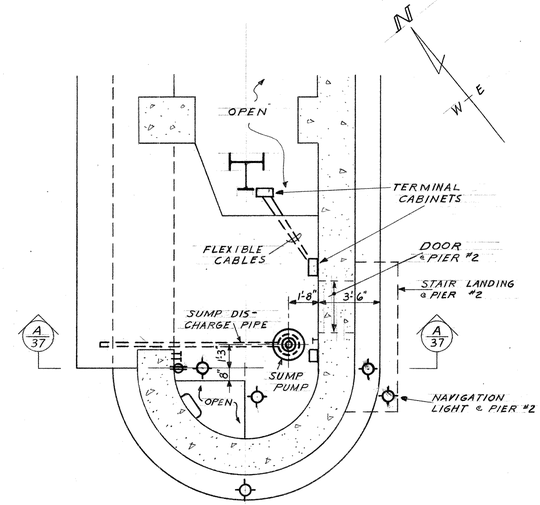

PLAN OF S. END OF PIER #1
N. END OF PIER #2 - OPPOSITE HAND
SCALE 1/4"=1'-0"

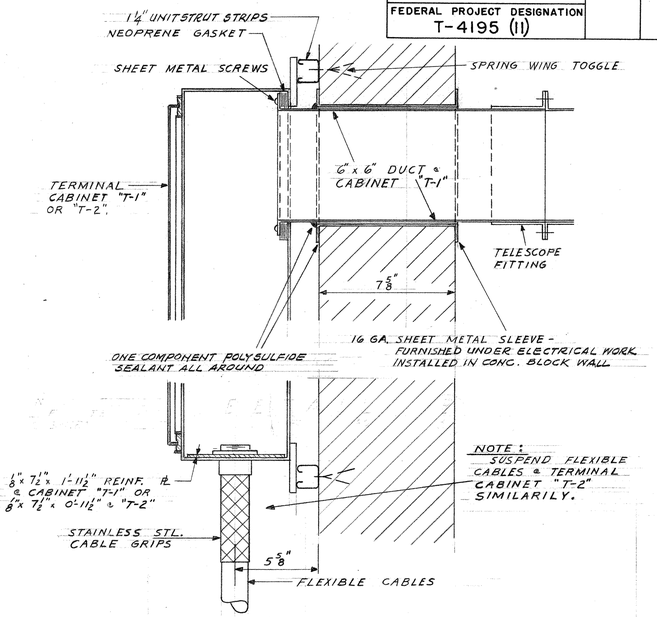

TYPICAL TERMINAL CABINET DETAIL (B/36)
SCALE 3"=1'-0"

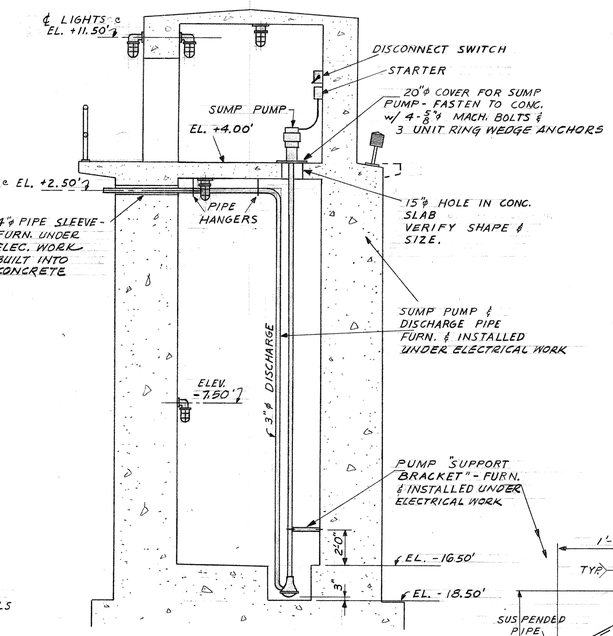

SECTION (A/37)
SCALE 1/4"=1'-0"

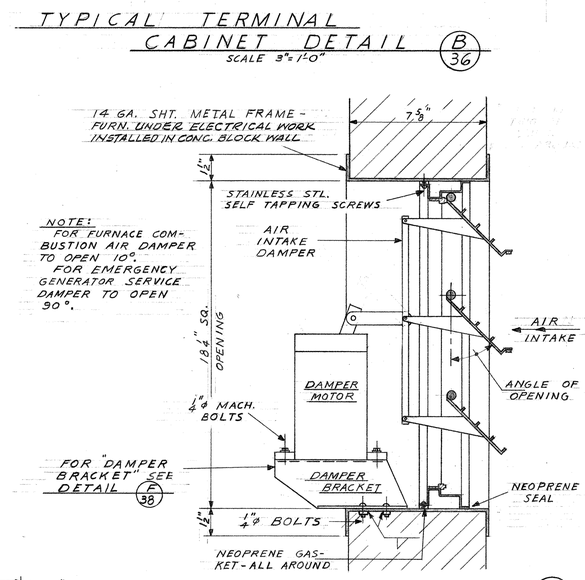

INTAKE DAMPER DETAIL (C/36)

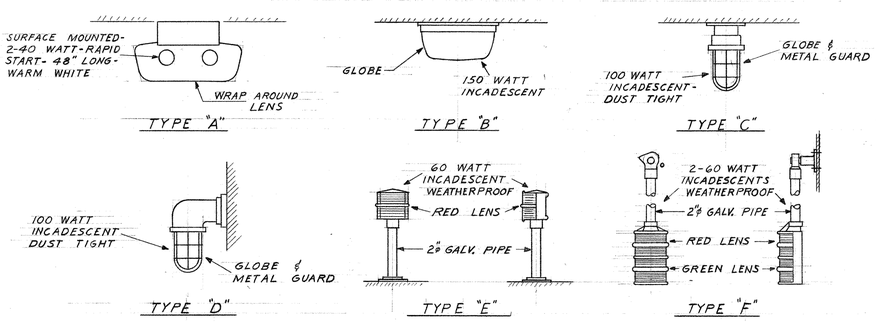

LIGHTING FIXTURE TYPES
N. T. S.

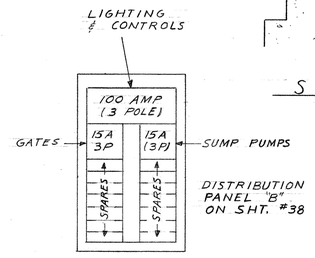

DISTRIBUTION PANEL "A"
3 PHASE - 4WIRE - 125 AMP LUGS - 30 SPACES

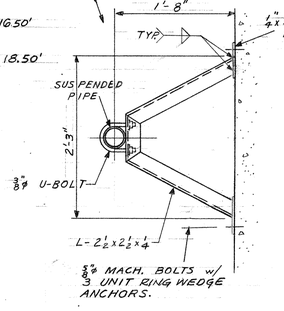

STATE OF WISCONSIN
DEPARTMENT OF TRANSPORTATION
DIVISION OF HIGHWAYS

STRUCTURE B-40-406

DEPARTMENT OF PUBLIC WORKS
BUREAU OF BRIDGES AND PUBLIC BUILDINGS
CITY OF MILWAUKEE

REVISIONS		
MARK	DATE	BY
A		
B		
C		
D		
E		
F		
G		
H		
I		
J		
K		
L		
M		

PLEASANT ST. VERTICAL LIFT BRIDGE
OVER MILWAUKEE RIVER
ELECTRICAL - SECTIONS AND DETAILS

DESIGNED BY: J.D.P. & L.F.R. TRACED BY: DATE:
DRAWN BY: L.F.R. CHECKED BY: DATE:
APPROVED:— SCALE: AS NOTED

Norris A. Batalden — DESIGNER IN CHARGE — DATE: 12-16-70 SHEET NUMBER 37
George C. Ashton — CHIEF OF BRIDGES AND PUBLIC BUILDINGS — DATE: 1-20-71 SET OF 47 SHEETS
Harold W. Seeling — DEPUTY COMMISSIONER OF PUBLIC WORKS — DATE: 1-25-71 JOB NO. 512-74

X 44335

PROJECT I.D.	SHEET NUMBER	TOTAL SHEETS
2984-0-07		
FEDERAL PROJECT DESIGNATION T-4195 (II)		

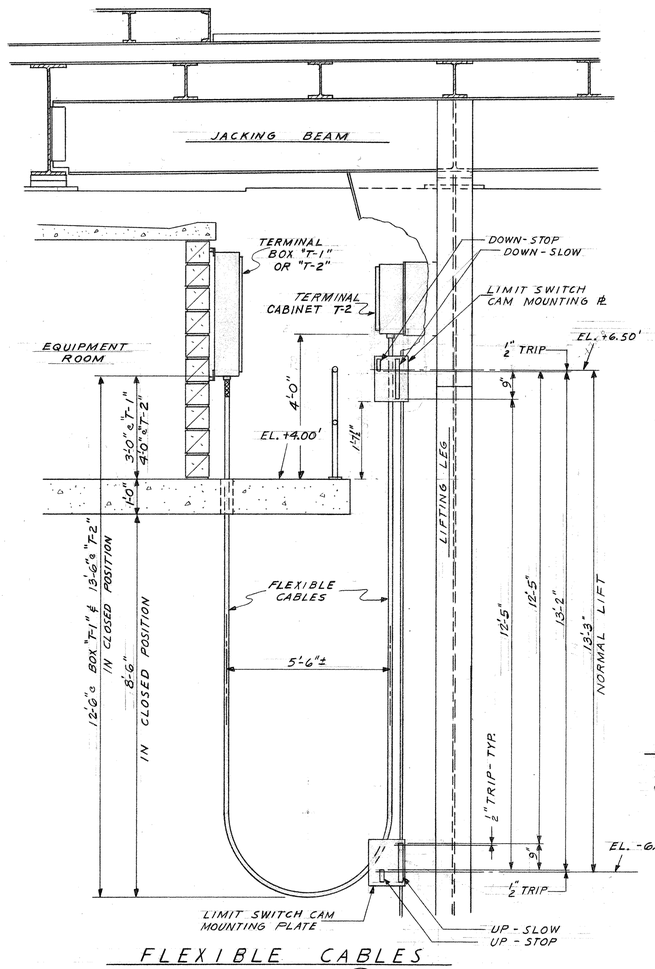

FLEXIBLE CABLES
DETAIL A 36
SCALE 1/2"=1'-0"

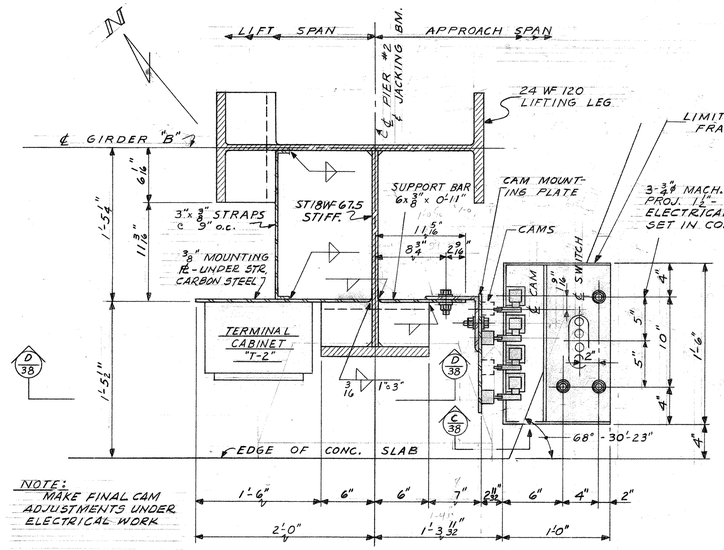

PLAN OF TERMINAL CABINETS "T-2" AND OF LIMIT SWITCHES
DETAIL B 36
SCALE 1 1/2"=1'-0"

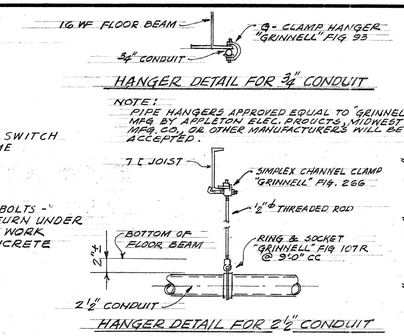

HANGER DETAIL FOR 3/4" CONDUIT

NOTE: PIPE HANGERS APPROVED EQUAL TO "GRINNELL" AS MFG. BY APPLETON ELEC. PRODUCTS, MIDWEST ELEC. MFG. CO., OR OTHER MANUFACTURERS WILL BE ACCEPTED.

HANGER DETAIL FOR 2 1/2" CONDUIT

NOTE: LIMIT SWITCH & CAMS ARE SHOWN MESHED w/ LIFT SPAN FULLY CLOSED.

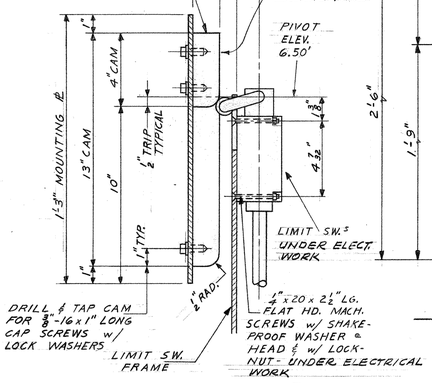

SECTION C 38
SCALE 3"=1'-0"

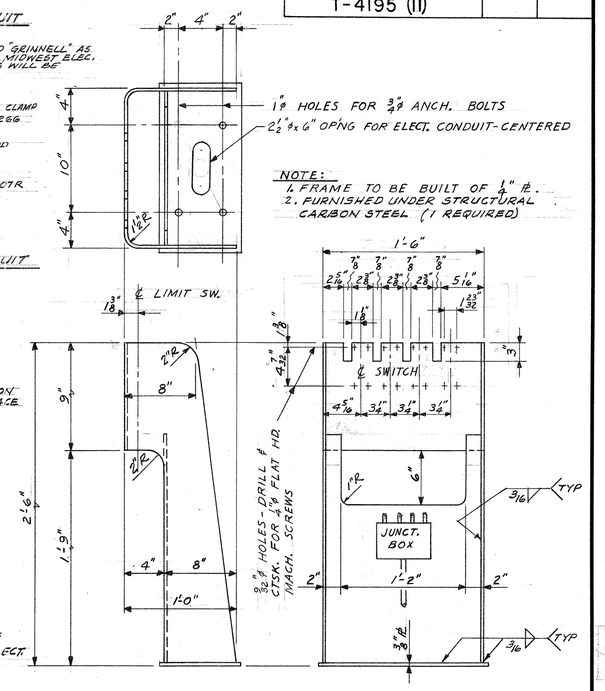

NOTE:
1. FRAME TO BE BUILT OF 1/4" PL.
2. FURNISHED UNDER STRUCTURAL CARBON STEEL (1 REQUIRED)

LIMIT SWITCH FRAME
SCALE 1 1/2"=1'-0"

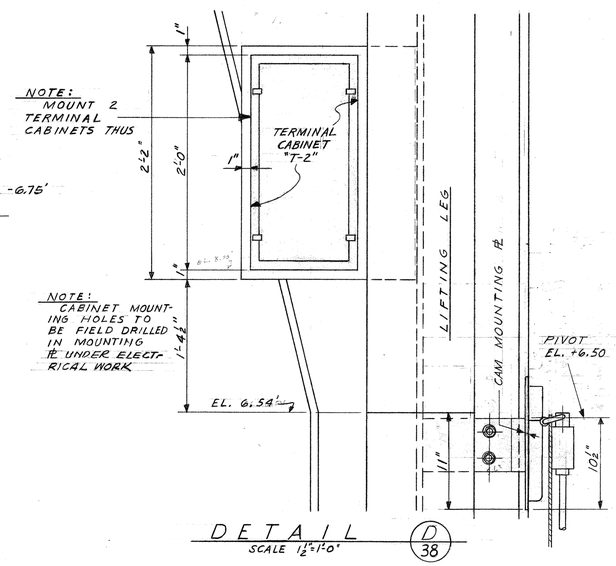

DETAIL D 38
SCALE 1 1/2"=1'-0"

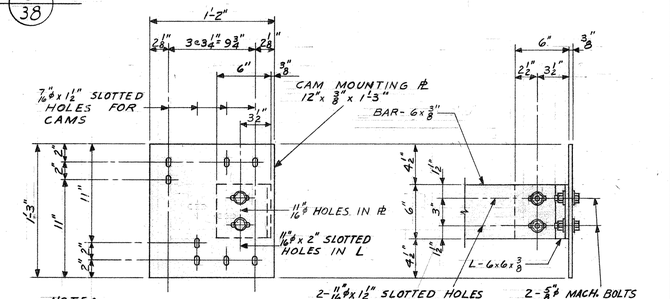

NOTE: TWO THUS REQUIRED - FURN. UNDER STURCTURAL CARBON STEEL

LIMIT SWITCH CAM MOUNTING PLATE
SCALE 1 1/2"=1'-0"

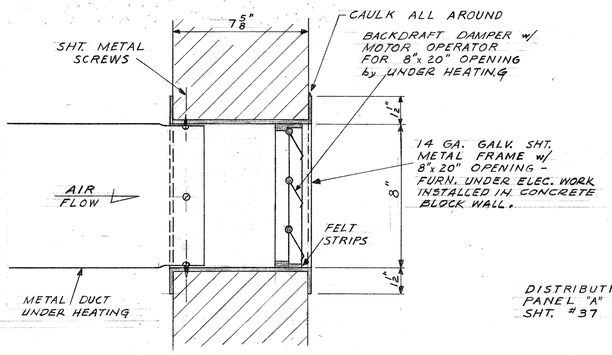

BACK DRAFT DAMPER
DETAIL E 36
SCALE 3"=1'-0"

1	2
3	4
5	6
7	8
9	10
11	12
13	14
15	
SPARES	SPARES

DISTRIBUTION PANEL "A" ON SHT. #37

1. HOUSE LIGHTS - CONTROL ROOM
2. TRAFFIC BELLS
3. HOUSE LIGHTS - ENTRY ROOM
4. CONTROL DESK - GATE SIGNAL LTS
5. HOUSE LIGHTS - EQUIPMENT RM.
6. CONTROL DESK - LIFTING SIGNAL LTS
7. EAST PIER WALK LIGHTS
8. PIER & NAVIGATION LIGHTS
9. WEST PIER WALK LIGHTS
10. BRIDGE TRAFFIC SIGNALS
11. EAST PIER PIT LIGHTS
12. TRAFFIC SIGNALS - B.E.S.
13. WEST PIER PIT LIGHTS
14. LIFTING MECHANISM CONTROLS

DISTRIBUTION PANEL "B"
3 PHASE - 4 WIRE - 125 AMP LUGS - 30 SPACES

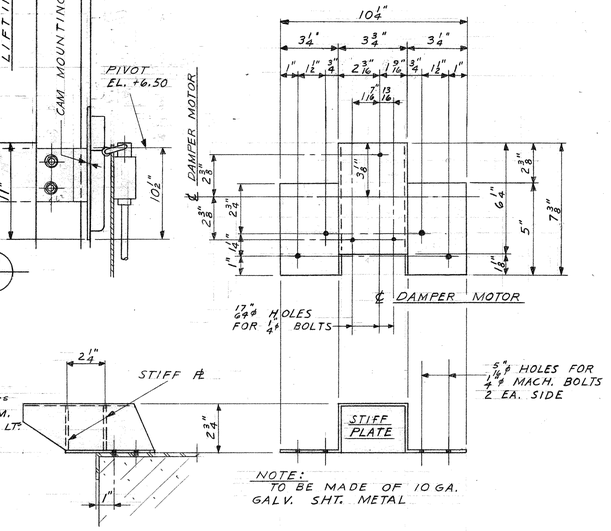

NOTE: TO BE MADE OF 10 GA. GALV. SHT. METAL

DAMPER BRACKET
DETAIL F 37
SCALE 3"=1'-0"

STATE OF WISCONSIN
DEPARTMENT OF TRANSPORTATION
DIVISION OF HIGHWAYS

STRUCTURE B-40-406

DEPARTMENT OF PUBLIC WORKS
BUREAU OF BRIDGES AND PUBLIC BUILDINGS
CITY OF MILWAUKEE

REVISIONS		
MARK	DATE	BY
A		
B		
C		
D		
E		
F		
G		
H		
I		
J		
K		
L		
M		

PLEASANT ST. VERTICAL LIFT BRIDGE
OVER MILWAUKEE RIVER
ELECTRICAL - LIMIT SWITCH & TERMINAL CABINETS

DESIGNED BY: J. D. P. TRACED BY: DATE:
DRAWN BY: L. F. R. CHECKED BY: DATE:
APPROVED:— SCALE: AS NOTED
Morris C. Batselier DESIGNER IN CHARGE DATE: 12-16-70 SHEET NUMBER 38
George A. Ashton CHIEF BRIDGE AND PUBLIC BUILDINGS DATE: 1-20-71 SET OF 47 SHEETS
Wendell W. Lee DEPUTY COMMISSIONER OF PUBLIC WORKS DATE: 1-25-71 JOB NO. 512-74

X 44336

PROJECT I.D.	SHEET NUMBER	TOTAL SHEETS
2984-0-07		
FEDERAL PROJECT DESIGNATION T-4195 (11)		

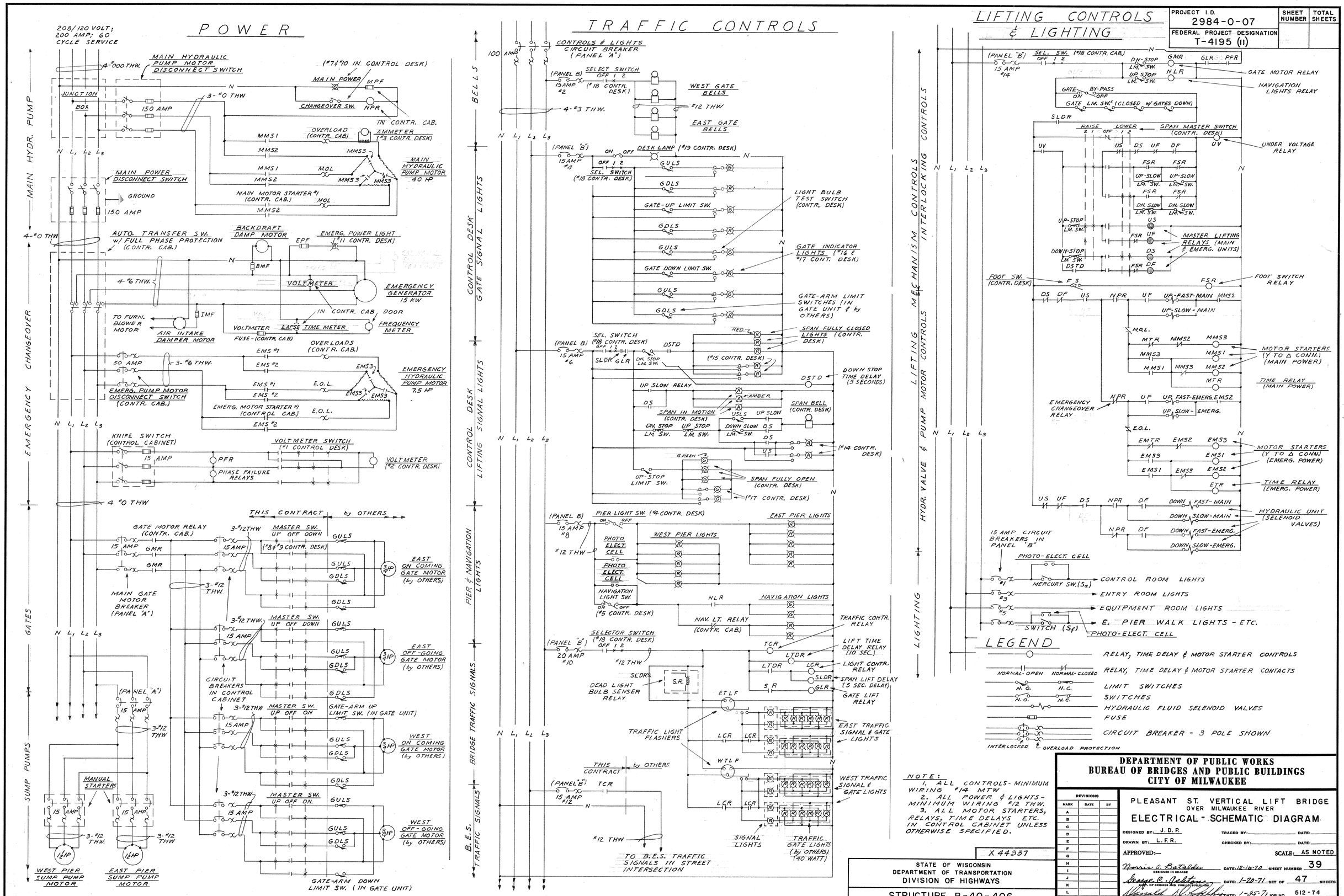

NOTE:
1. ALL CONTROLS - MINIMUM WIRING #14 MTW
2. ALL POWER & LIGHTS - MINIMUM WIRING #12 THW.
3. ALL MOTOR STARTERS, RELAYS, TIME DELAYS ETC. IN CONTROL CABINET UNLESS OTHERWISE SPECIFIED.

X 44337

STATE OF WISCONSIN
DEPARTMENT OF TRANSPORTATION
DIVISION OF HIGHWAYS

STRUCTURE B-40-406

DEPARTMENT OF PUBLIC WORKS
BUREAU OF BRIDGES AND PUBLIC BUILDINGS
CITY OF MILWAUKEE

REVISIONS		
MARK	DATE	BY
A		
B		
C		
D		
E		
F		
G		
H		
I		
J		
K		
L		
M		

PLEASANT ST. VERTICAL LIFT BRIDGE
OVER MILWAUKEE RIVER
ELECTRICAL - SCHEMATIC DIAGRAM

DESIGNED BY: J. D. P. TRACED BY: DATE:
DRAWN BY: L. F. R. CHECKED BY: DATE:
APPROVED:— SCALE: AS NOTED

Norris C. Batelden DESIGNER IN CHARGE DATE: 12-16-70 SHEET NUMBER 39
George C. Ashton DIV. OF BRIDGES AND PUBLIC BUILDINGS DATE: 1-20-71 SET OF 47 SHEETS
Wendell N. Kelley COMMISSIONER OF PUBLIC WORKS DATE: 1-25-71 JOB NO. 512-74

PROJECT I. D.	SHEET NUMBER	TOTAL SHEETS
2984-0-07		
FEDERAL PROJECT DESIGNATION T-4195 (11)		

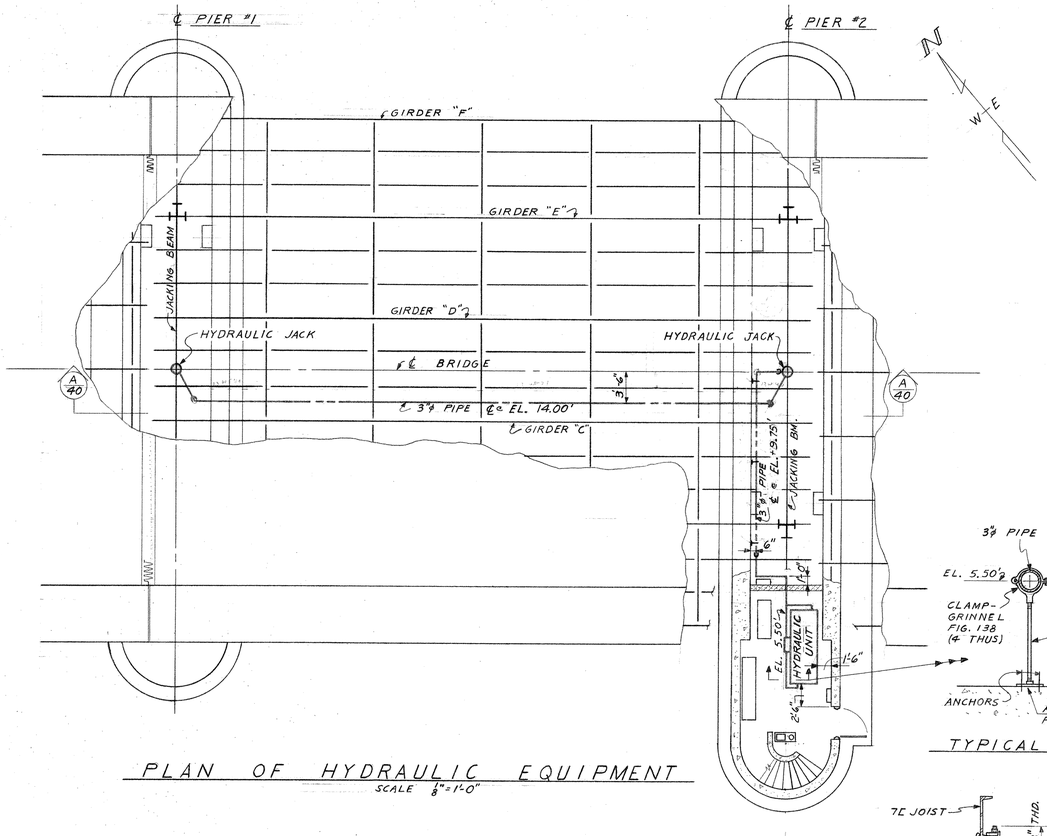

PLAN OF HYDRAULIC EQUIPMENT
SCALE 1/8" = 1'-0"

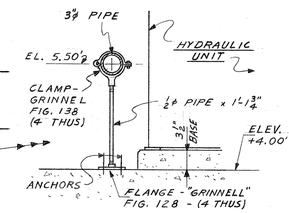

TYPICAL SUPPORT

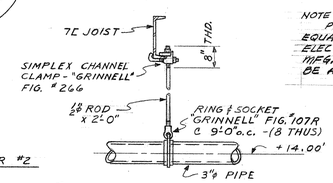

TYPICAL HANGER

NOTE:
PIPE SUPPORTS AND HANGERS APPROVED EQUAL TO "GRINNELL" AS MFG. BY APPLETON ELECTRIC PRODUCTS CO., MIDWEST ELECTRICAL MFG. CO. OR OTHER MANUFACTURERS WILL BE ACCEPTED

NOTE:
ALL ELECTRICAL WORK TO JUNCTION BOXES INCLUDING STARTER CONTROLS & RELAYS - UNDER ELECTRICAL WORK

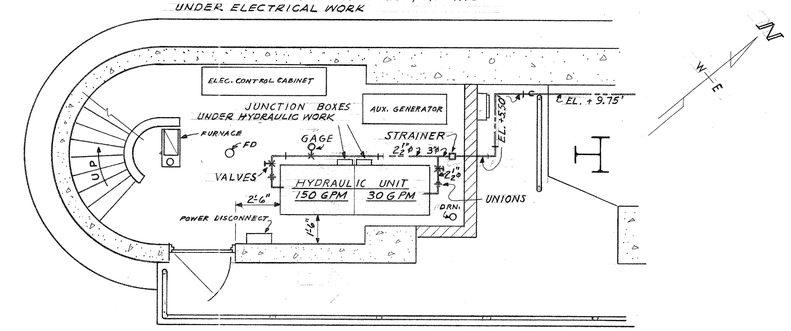

PLAN OF HYDRAULIC UNIT AND PIPING IN EQUIPMENT ROOM - ELEV. +4.00'
SCALE 1/4" = 1'-0"

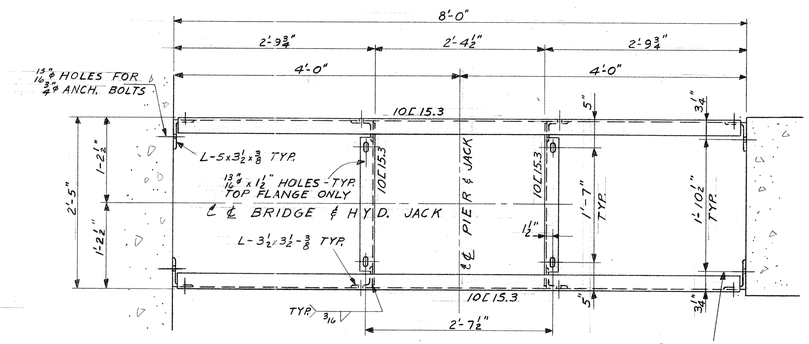

ALL BOLTS 3/4"ϕ H.S. w/ WASHERS

PLAN

FURNISHED AND PAID FOR AS STRUCTURAL CARBON STEEL

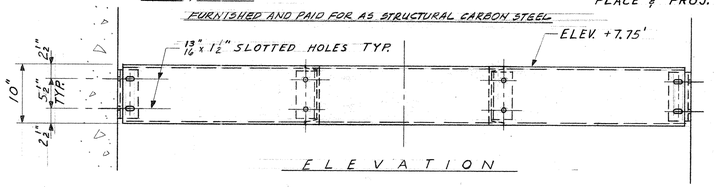

ELEVATION

JACK SUPPORT FRAME
2 REQUIRED
SCALE 1" = 1'-0"

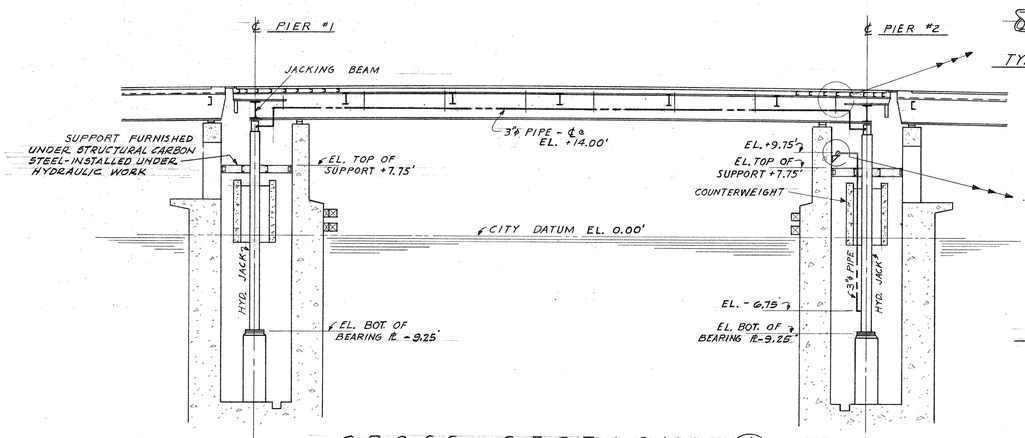

CROSS - SECTION (A 40)
SCALE 1/8" = 1'-0"

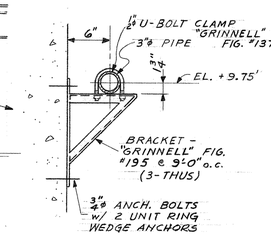

TYPICAL SUPPORT

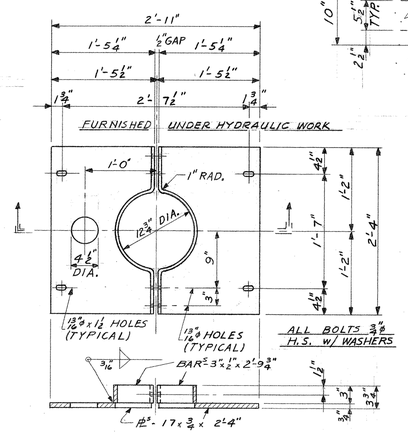

JACK SUPPORT PLATE
2 REQUIRED
SCALE 1" = 1'-0"

X 44338

STATE OF WISCONSIN
DEPARTMENT OF TRANSPORTATION
DIVISION OF HIGHWAYS

STRUCTURE B-40-406

DEPARTMENT OF PUBLIC WORKS
BUREAU OF BRIDGES AND PUBLIC BUILDINGS
CITY OF MILWAUKEE

REVISIONS		
MARK	DATE	BY
A		
B		
C		
D		
E		
F		
G		
H		
I		
J		
K		
L		
M		

PLEASANT ST. VERTICAL LIFT BRIDGE
OVER MILWAUKEE RIVER
HYDRAULIC - PLAN OF EQUIPMENT

DESIGNED BY: J. D. P. TRACED BY: DATE:
DRAWN BY: L. E. R. CHECKED BY: DATE:
APPROVED:— SCALE: AS NOTED

Norris C. Batalden, DESIGNER IN CHARGE — DATE: 12-16-70 SHEET NUMBER 40
George C. Ashton, SUP. OF BRIDGES AND PUBLIC BUILDINGS — DATE: 1-20-71 SET OF 47 SHEETS
Wesley W. Kolbig, DEPUTY COMMISSIONER OF PUBLIC WORKS — DATE: 1-25-71 JOB NO. 512-74

PROJECT I.D.	SHEET NUMBER	TOTAL SHEETS
2984-0-07		
FEDERAL PROJECT DESIGNATION T-4195 (11)		

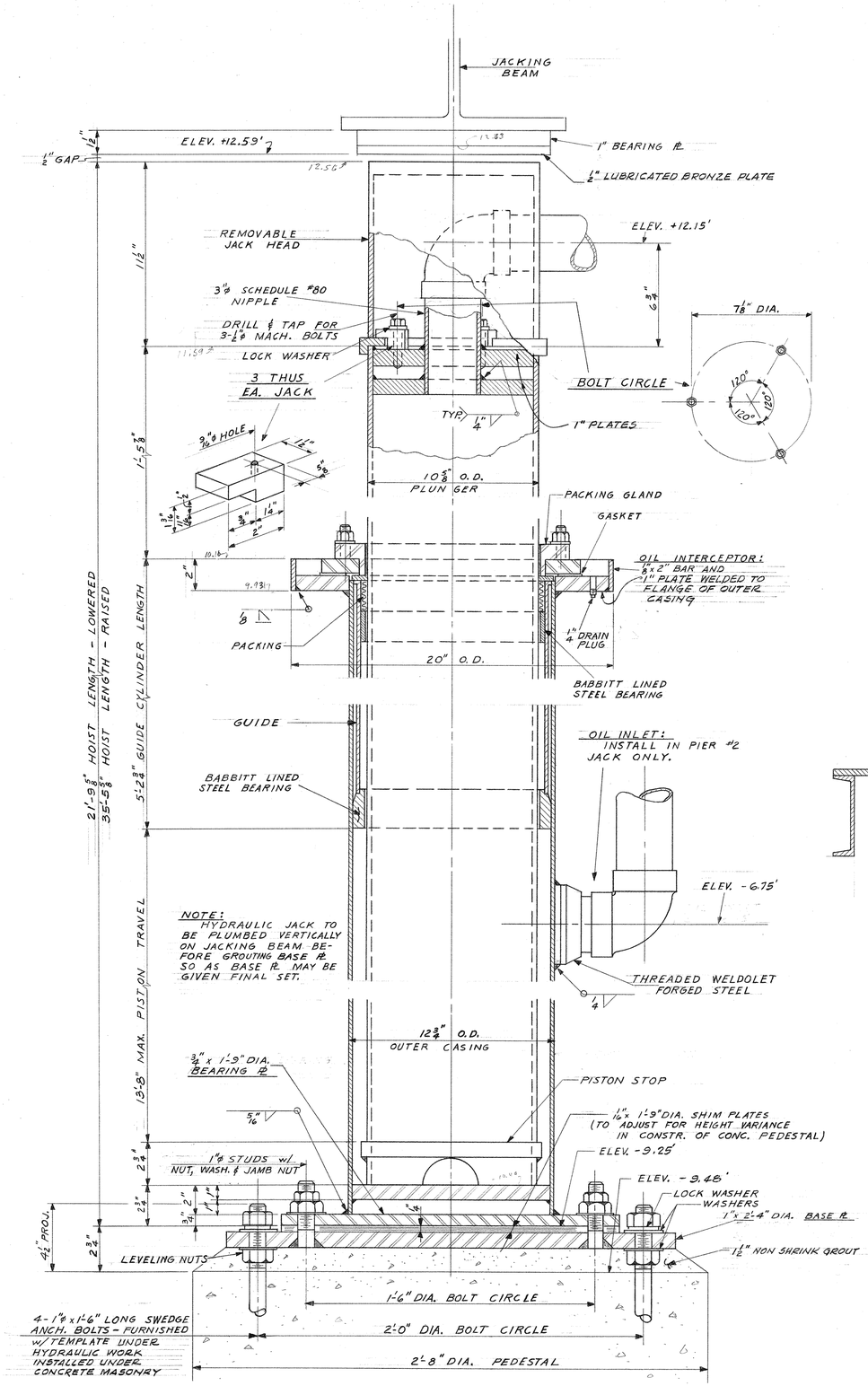

HOISTING MECHANISM ASSEMBLY
SCALE 1 1/2" = 1'-0"

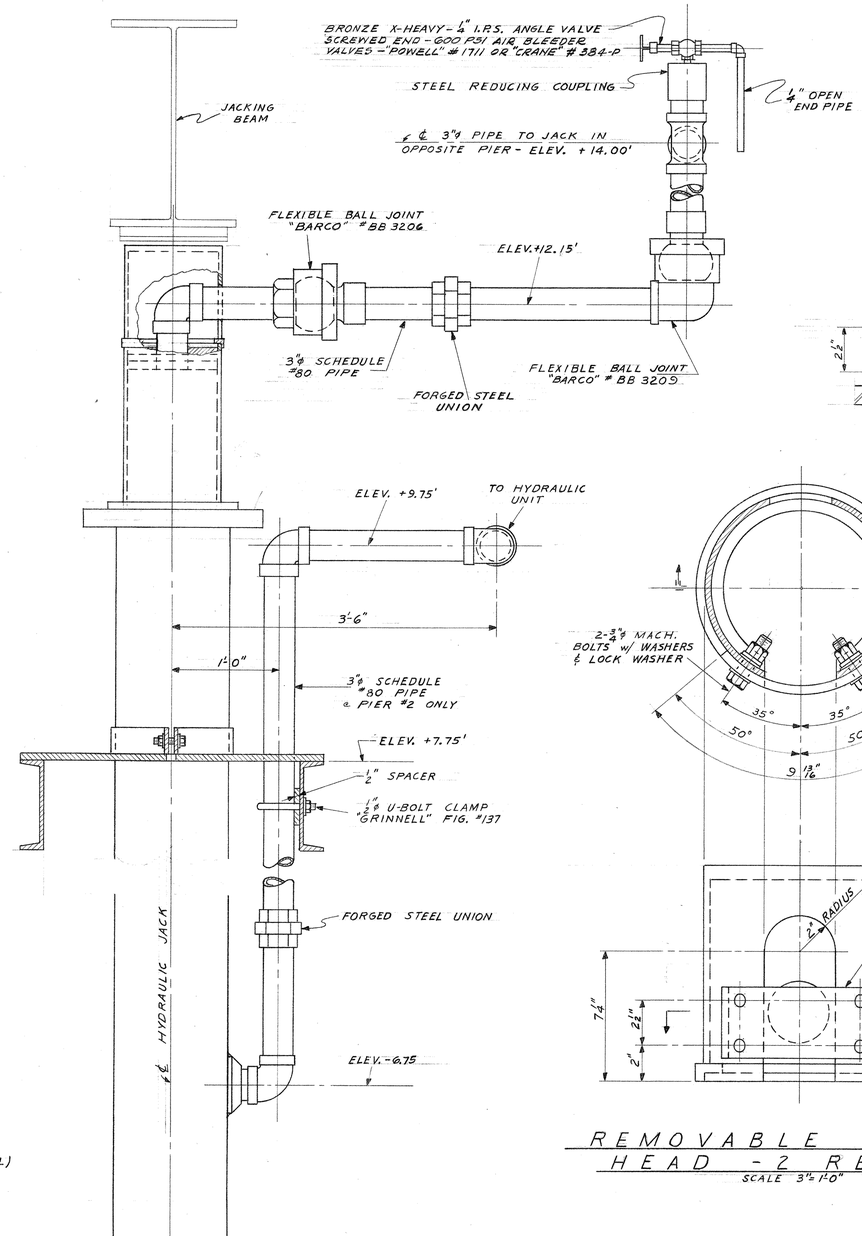

TYPICAL HYDRAULIC JACK PIPING ASSEMBLY
SCALE 1 1/2" = 1'-0"

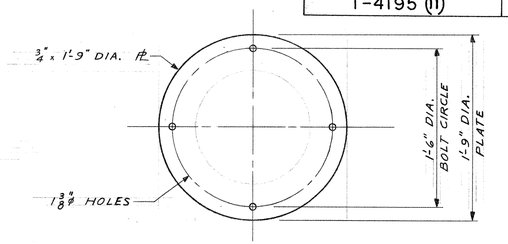

BEARING PLATE - 2 REQ'D.
SCALE 1 1/2" = 1'-0"

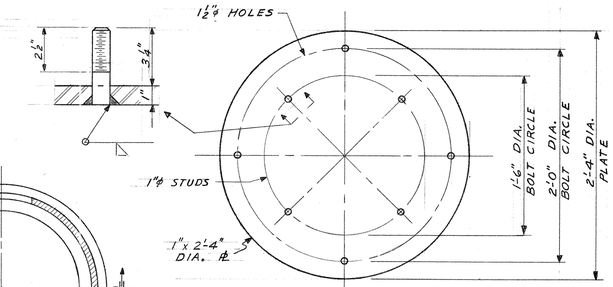

BASE PLATE - 2 REQ'D.
SCALE 1 1/2" = 1'-0"

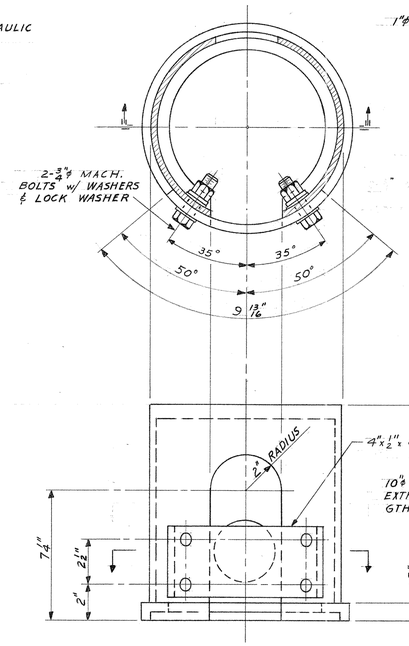

REMOVABLE JACK HEAD - 2 REQ'D
SCALE 3/4" = 1'-0"

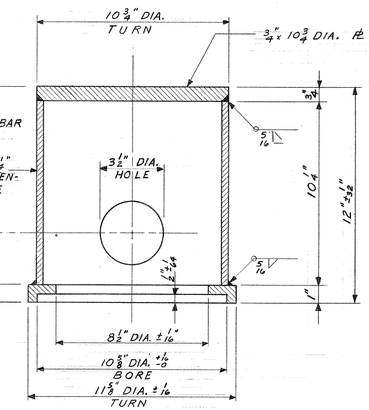

X 44339

STATE OF WISCONSIN
DEPARTMENT OF TRANSPORTATION
DIVISION OF HIGHWAYS

STRUCTURE B-40-406

DEPARTMENT OF PUBLIC WORKS
BUREAU OF BRIDGES AND PUBLIC BUILDINGS
CITY OF MILWAUKEE

REVISIONS		
MARK	DATE	BY
A		
B		
C		
D		
E		
F		
G		
H		
I		
J		
K		
L		
M		

PLEASANT ST. VERTICAL LIFT BRIDGE
OVER MILWAUKEE RIVER
HYDRAULIC - HOIST AND PIPING DETAILS

DESIGNED BY: J. D. P. TRACED BY: DATE:
DRAWN BY: L. F. R. CHECKED BY: DATE:
APPROVED:— SCALE: AS NOTED

Norris O. Batalden — DESIGNER IN CHARGE — DATE: 12-16-70 SHEET NUMBER 41
George C. Sexton — CHIEF OF BRIDGES AND PUBLIC BUILDINGS — DATE: 1-20-71 SET OF 47 SHEETS
Donald H. Kurtz — DEPUTY COMMISSIONER OF PUBLIC WORKS — DATE: 1-25-71 JOB NO. 512-74

PROJECT I.D. 2984-0-07	SHEET NUMBER	TOTAL SHEETS
FEDERAL PROJECT DESIGNATION T-4195 (11)		

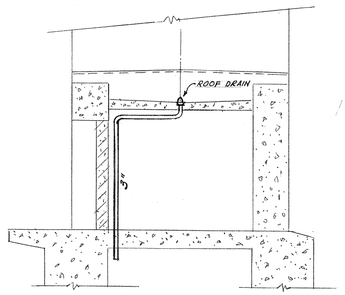

SECTION 5/42

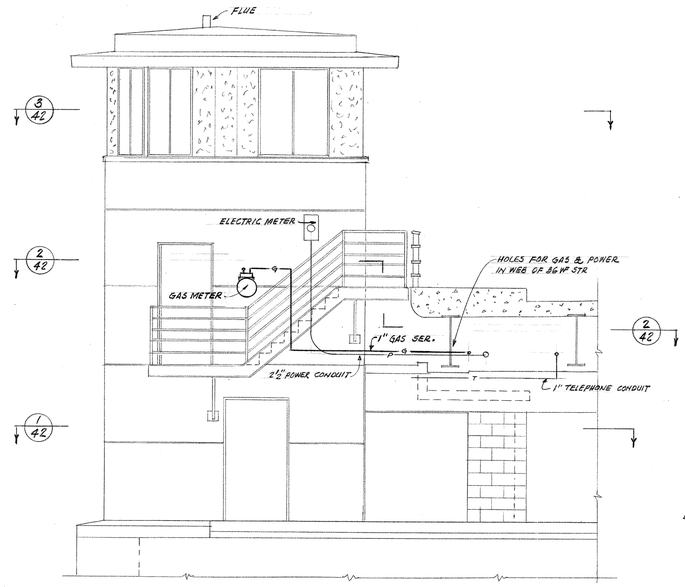

EAST ELEVATION

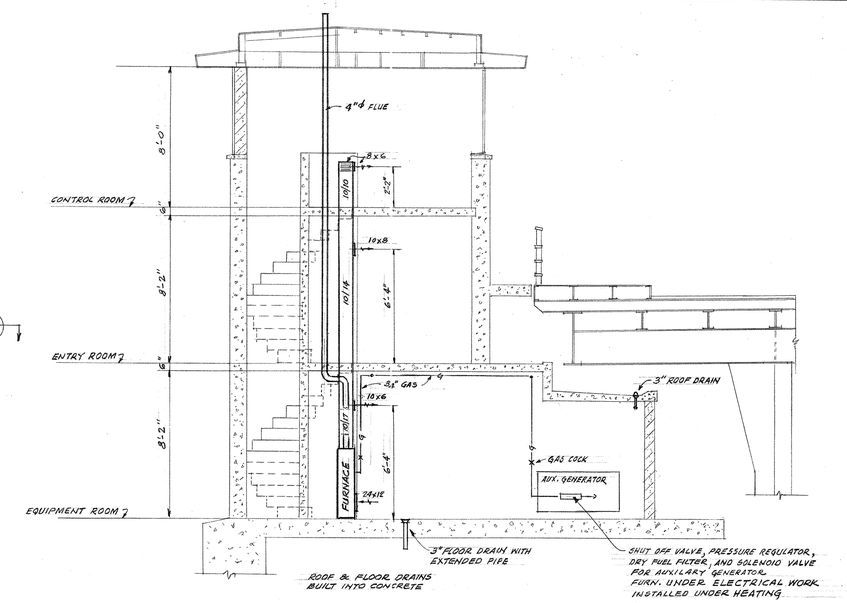

CROSS SECTION 4/42

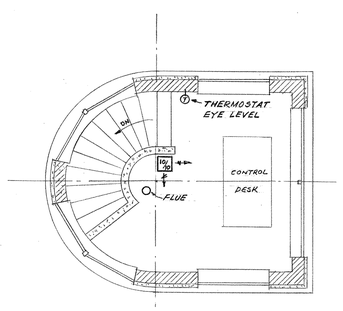

CONTROL ROOM PLAN 3/42

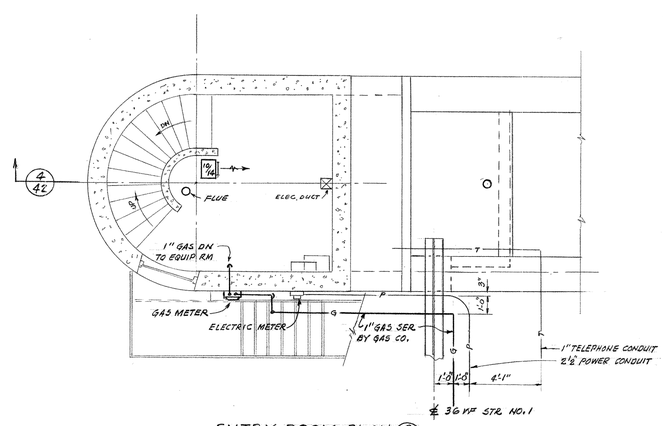

ENTRY ROOM PLAN 2/42

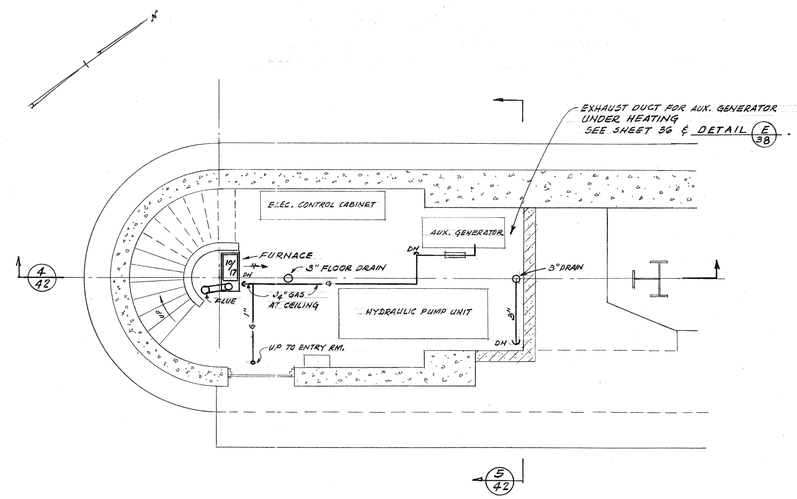

EQUIPMENT ROOM PLAN 1/42

STATE OF WISCONSIN
DEPARTMENT OF TRANSPORTATION
DIVISION OF HIGHWAYS

STRUCTURE B-40-406

DEPARTMENT OF PUBLIC WORKS
BUREAU OF BRIDGES AND PUBLIC BUILDINGS
CITY OF MILWAUKEE

REVISIONS		
MARK	DATE	BY
A		
B		
C		
D		
E		
F		
G		
H		
I		
J		
K		
L		
M		

PLEASANT ST. VERTICAL LIFT BRIDGE
OVER MILWAUKEE RIVER

OPERATOR'S HOUSE - HEATING AND PLUMBING

DESIGNED BY: T. E. S. TRACED BY: DATE:
DRAWN BY: T. E. S. CHECKED BY: DATE:
APPROVED:— SCALE: 1/4" = 1'-0"

Norris A. Batalden DESIGNER IN CHARGE DATE: 12-16-70 SHEET NUMBER 42
George C. Ashton SUPT. OF BRIDGES AND PUBLIC BUILDINGS DATE: 1-20-71 SET OF 47 SHEETS
Donald W. Hoehig COMMISSIONER OF PUBLIC WORKS DATE: 1-25-71 JOB NO. 512-74

X 44340

PROJECT I.D. 2984-0-07	SHEET NUMBER	TOTAL SHEETS
FEDERAL PROJECT DESIGNATION T-4195 (11)		

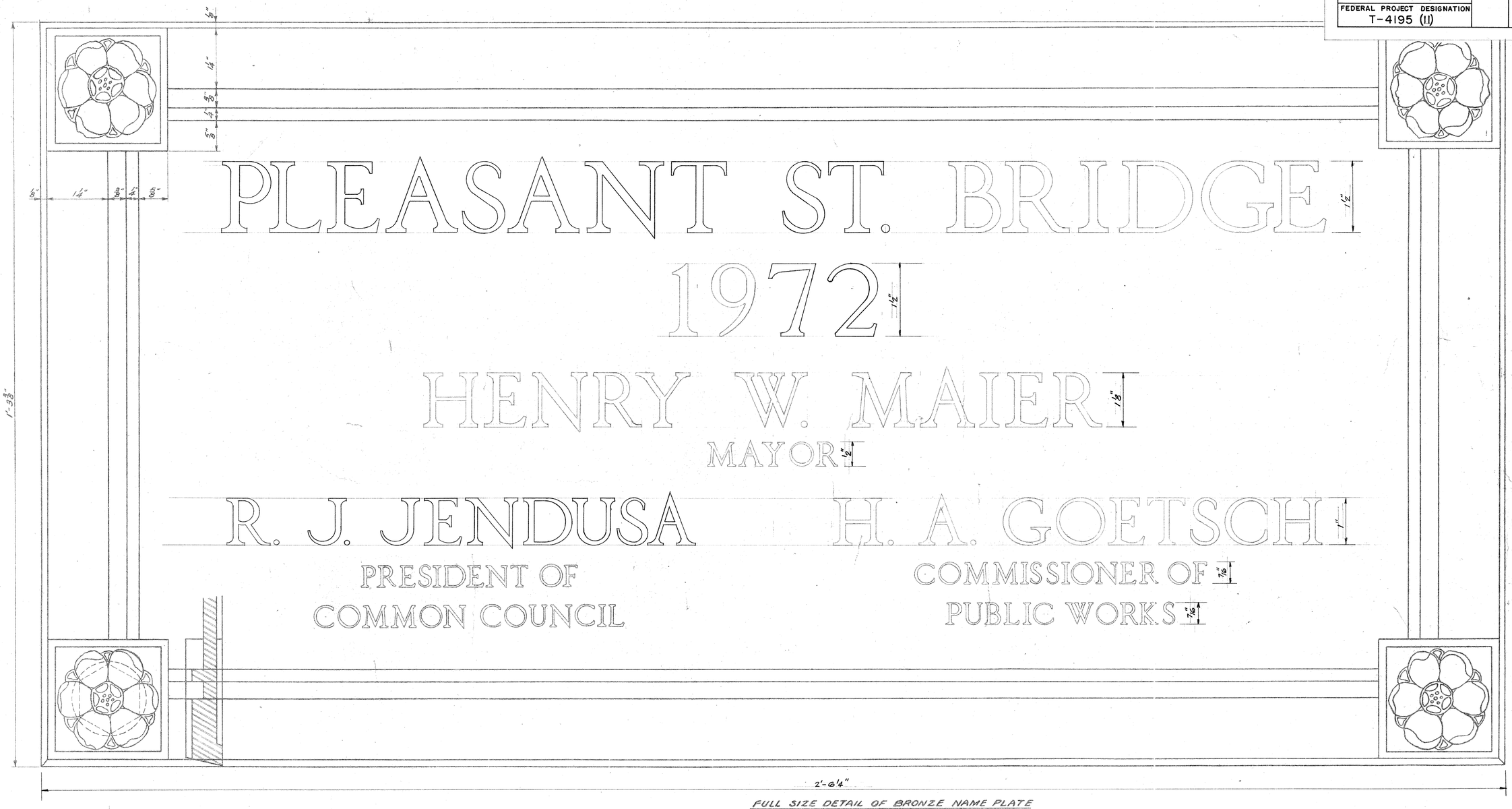

FULL SIZE DETAIL OF BRONZE NAME PLATE
1 REQUIRED

SEE SH. NO. 13 FOR LOCATION ON NORTH ELEVATION OF BRIDGE HOUSE.

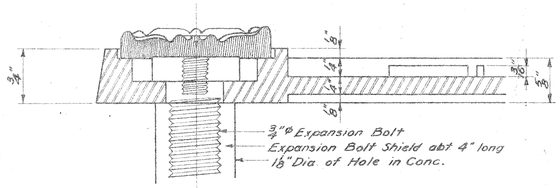

Finish:
Highlights fine emery finish.
Background oxidized statuary bronze finish.

STATE OF WISCONSIN
DEPARTMENT OF TRANSPORTATION
DIVISION OF HIGHWAYS

STRUCTURE B-40-406

DEPARTMENT OF PUBLIC WORKS
BUREAU OF BRIDGES AND PUBLIC BUILDINGS
CITY OF MILWAUKEE

PLEASANT ST. VERTICAL LIFT BRIDGE
OVER MILWAUKEE RIVER
NAME PLATE

P.C.B. 3-17-69

AS NOTED

Norris A. Batalden 12-16-70 43
George C. Ashton 1-20-71 47
Donald W. Loethy 1-25-71 512-74
DEPUTY

X 44341

PROJECT I.D.	SHEET NUMBER	TOTAL SHEETS
2984-0-07		
FEDERAL PROJECT DESIGNATION T-4195 (11)		

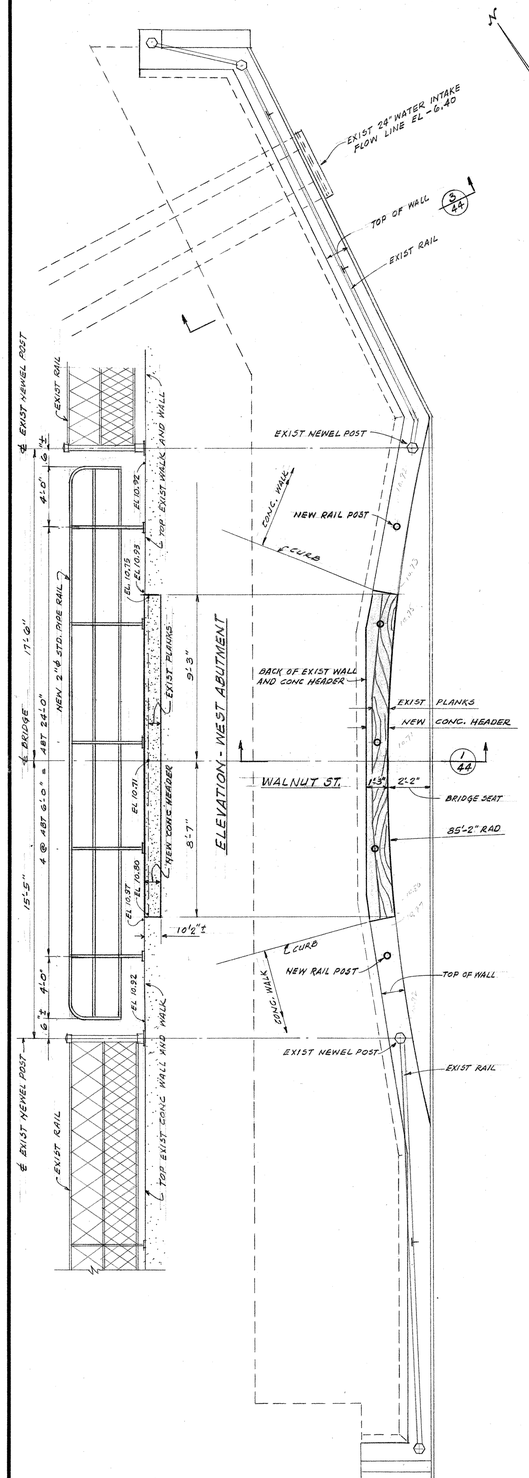

PLAN - WEST ABUTMENT
SCALE 1/4" = 1'-0"

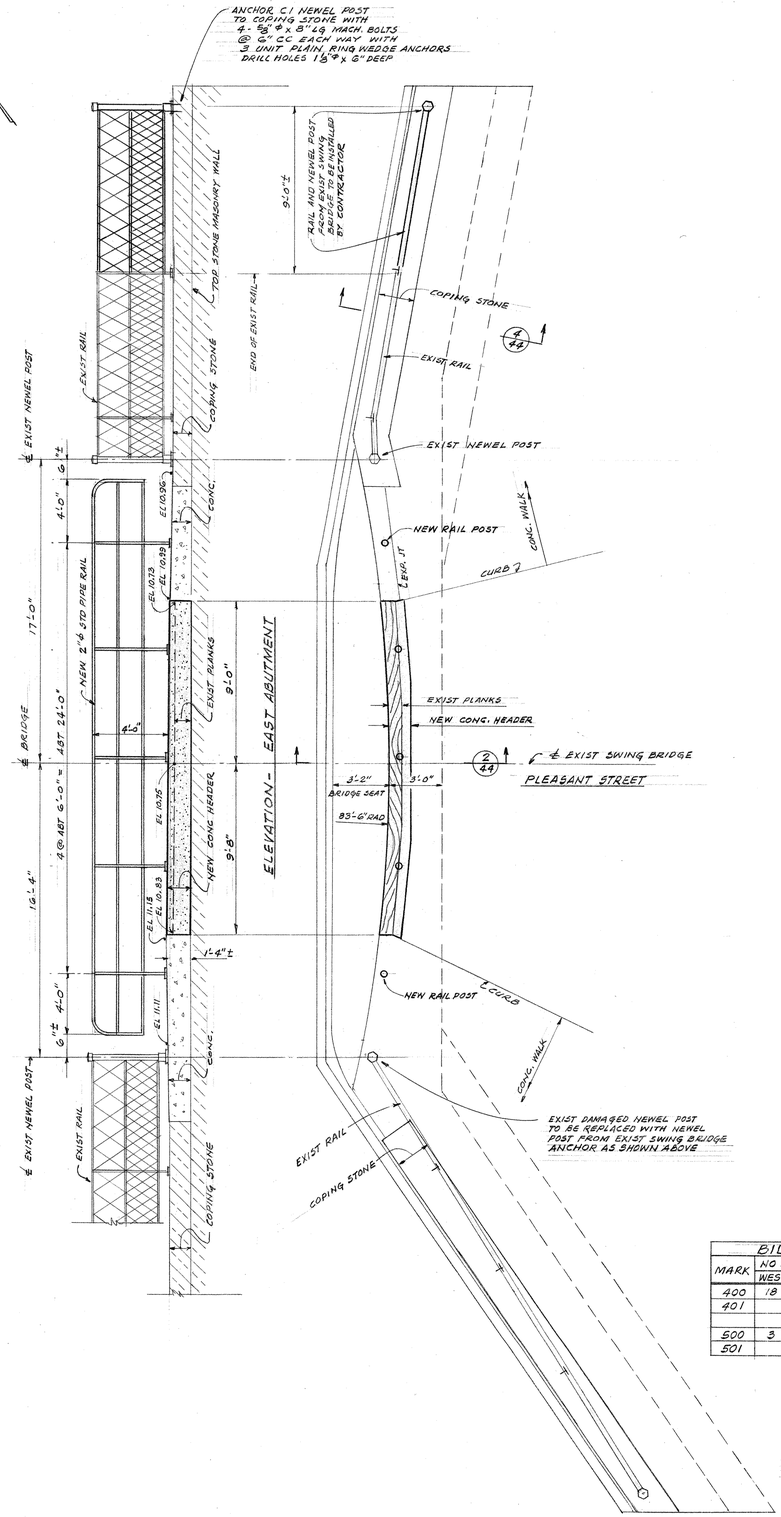

PLAN - EAST ABUTMENT
SCALE 1/4" = 1'-0"

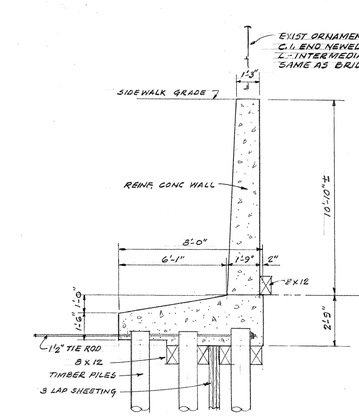

EXIST. WINGWALL SECTION (3/44)
WEST ABUTMENT
SCALE 1/4" = 1'-0"

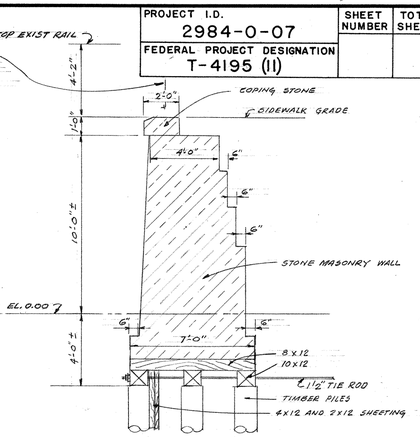

EXIST. WINGWALL SECTION (4/44)
EAST ABUTMENT
SCALE 1/4" = 1'-0"

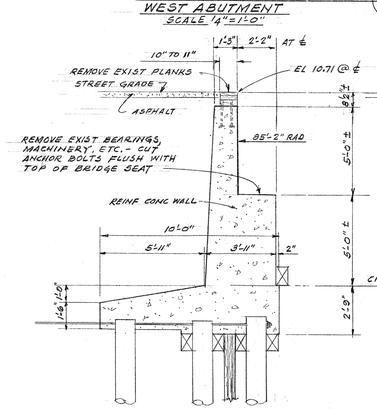

EXIST ROADWAY SECTION (1/44)
WEST ABUTMENT
SCALE 1/4" = 1'-0"

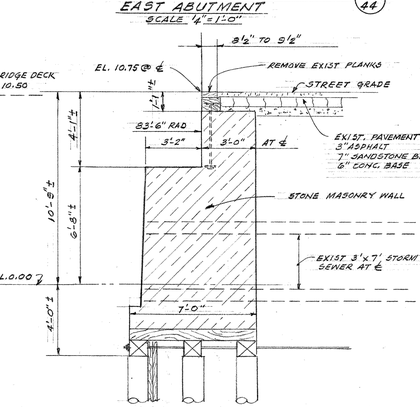

EXIST ROADWAY SECTION (2/44)
EAST ABUTMENT
SCALE 1/4" = 1'-0"

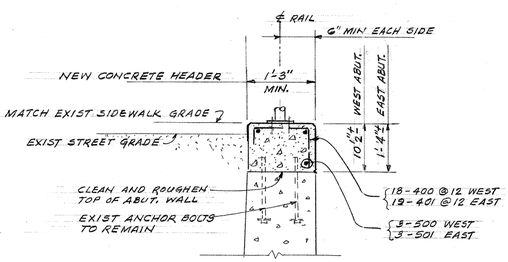

NEW ROADWAY SECTION (1/44)
WEST ABUTMENT
SIMILAR DETAIL - EAST ABUTMENT
SCALE 3/4" = 1'-0"

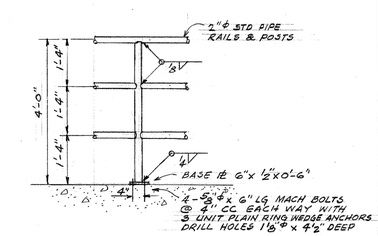

NEW RAIL DETAIL
TYPE D

NOTE:
TAKE FIELD MEASUREMENTS BEFORE FABRICATING RAIL

BILL OF REINFORCEMENT							
MARK	NO REQ'D		LENGTH	TYPE	DIMENSIONS		
	WEST	EAST			A	B	C
400	18		2'-3"	S10	6"	12"	9"
401		19	2'-8"	S10	6"	12"	1'-2"
500	3		17'-0"	STR			
501		3	18'-4"	STR			

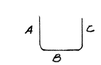

TYPE S10

THE FIRST DIGIT OF THE BAR MARK INDICATES THE SIZE OF THE BAR.

NOTE:
ESTIMATED QUANTITIES OF CONCRETE AND REINFORCING STEEL FOR EXISTING BRIDGE ABUTMENT ALTERATIONS ARE INCLUDED IN CONCRETE MASONRY BRIDGES AND BAR STEEL REINFORCENT BRIDGES FOR THE NEW BRIDGE ABUTMENTS.
REMODELING AND RELIVING OF EXISTING BRIDGE RAILINGS TO BE INCLUDED IN LUMP SUM BID FOR STEEL PIPE RAILING TYPE D

X 44342

STATE OF WISCONSIN
DEPARTMENT OF TRANSPORTATION
DIVISION OF HIGHWAYS

STRUCTURE B-40-406

DEPARTMENT OF PUBLIC WORKS
BUREAU OF BRIDGES AND PUBLIC BUILDINGS
CITY OF MILWAUKEE

REVISIONS		
MARK	DATE	BY
A		
B		
C		
D		
E		
F		
G		
H		
I		
J		
K		
L		
M		

PLEASANT ST. VERTICAL LIFT BRIDGE
OVER MILWAUKEE RIVER
EXISTING SWING BRIDGE - ABUTMENT ALTERATIONS

DESIGNED BY: T. E. S. TRACED BY: DATE:
DRAWN BY: T. E. S. CHECKED BY: DATE:
APPROVED:— SCALE: AS NOTED
DESIGNER IN CHARGE DATE: 12-16-70 SHEET NUMBER 44
CHIEF, BUREAU OF BRIDGES AND PUBLIC BUILDINGS DATE: 1-20-71 SET OF 47 SHEETS
DEPUTY COMMISSIONER OF PUBLIC WORKS DATE: 1-25-71 JOB NO. 512-74

PROJECT I.D.	SHEET NUMBER	TOTAL SHEETS
2984-0-07		
FEDERAL PROJECT DESIGNATION T-4195 (II)		

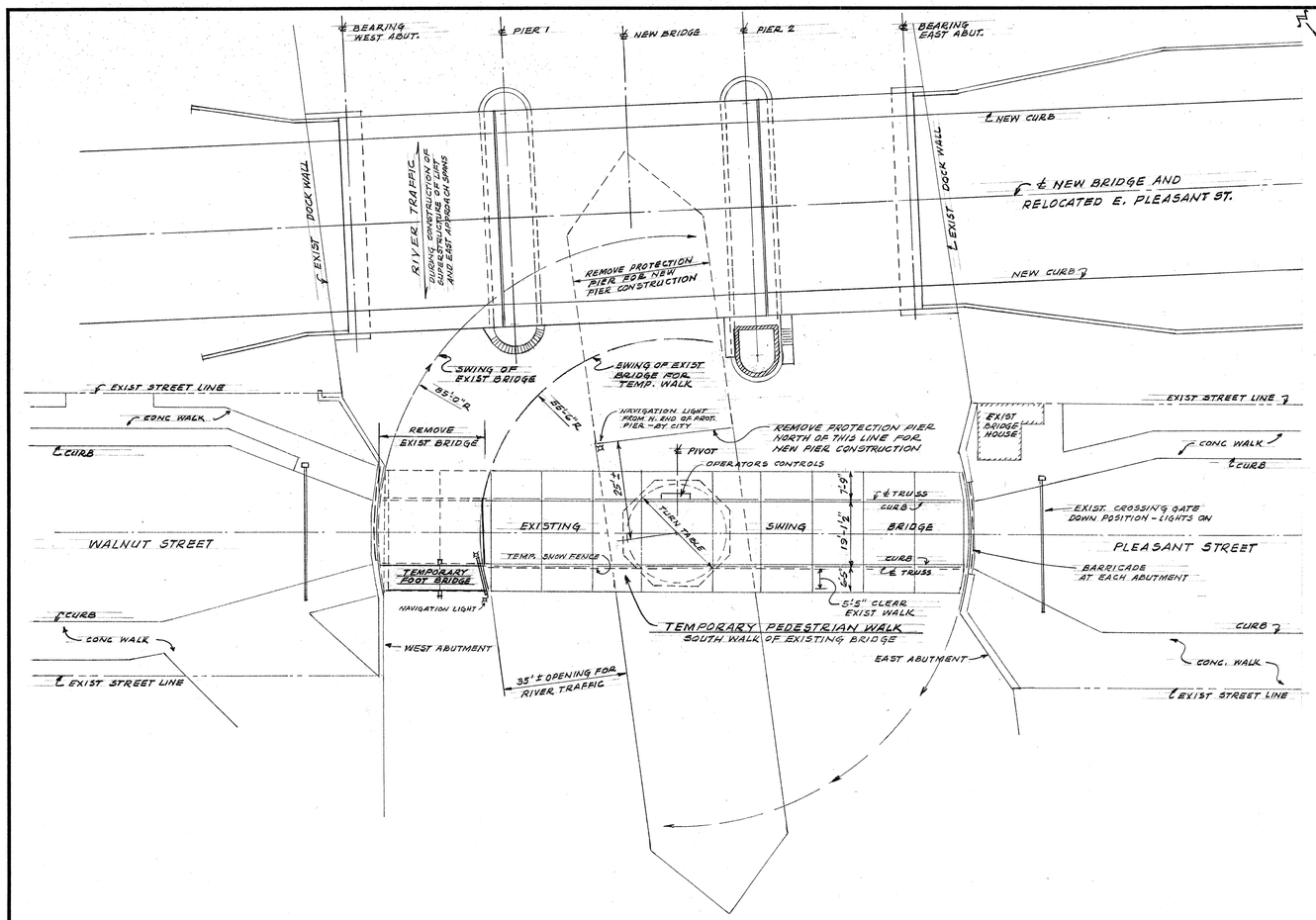

PLAN - EXISTING SWING BRIDGE
SHOWING TEMPORARY FOOT BRIDGE AND WALK
SCALE 1" = 20'

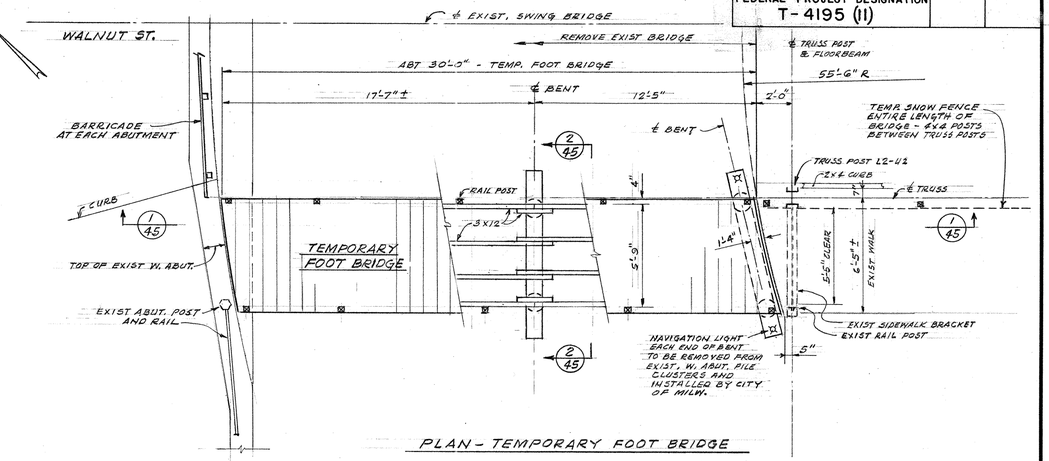

PLAN - TEMPORARY FOOT BRIDGE

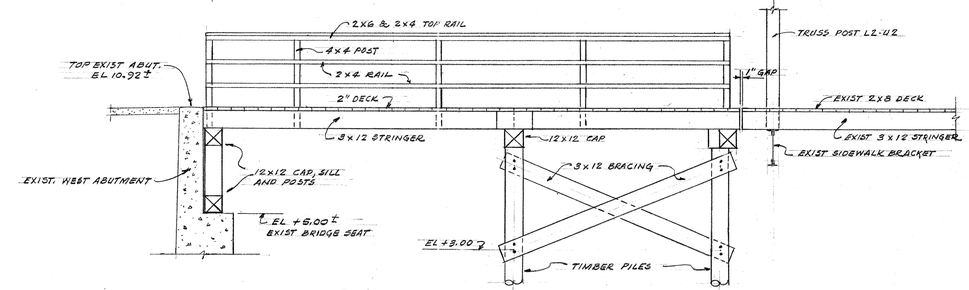

TEMP. FOOT BRIDGE SEC. (1/45)
SCALE 1/4" = 1'-0"

NOTES:
ALL WORK ON THIS SHEET BY CONTRACTOR AFTER NEW PIER NO. 1 IS CONSTRUCTED TO EL. +4.00
TEMPORARY FOOT BRIDGE AND ALTERATION OF EXISTING BRIDGE TO BE INCLUDED IN LUMP SUM BID FOR REMOVING OLD BRIDGE

EXISTING TRUSS MATERIAL

L0 - U1	2-10 CS 15.3
U1 - U2	2-9 CS 13.4
U2 - U3	DO
U3 - U4	DO
U4 - U5	2 BARS 4 x 1 9/16
U5 - U5'	DO
L0 - L1	2-10 CS 15.3
L1 - L2	DO
L2 - L3	DO
L3 - L4	DO
L4 - L5'	DO
L1 - U1	2-6 LS 8.2
L2 - U2	2-7 LS 9.8
L3 - U3	2-8 LS 11.5
L4 - U4	2 PL 10 x 1/2 & LS - 2 x 2 x 3/8
L5 - U5	2 PL 12 x 9/16, & LS - 2 1/2 x 2 1/2 x 3/8
L1 - U2	2 BARS - 2 x 3/4
L5 - U1	1 BAR - 1 1/8 x 1/8
L2 - U3	2 BARS - 3 x 7/8
L3 - U4	2 BARS - 4 x 7/8
L4 - L5	2 BARS - 4 x 13/16
L5 - L5'	1 BAR - 3 1/4 x 7/8

SEE SHEETS M9 & M11 FOR STRINGERS, FLOOR BEAMS ETC

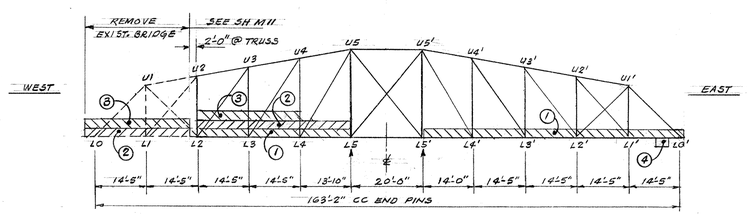

ELEVATION OF SWING BRIDGE
SHOWING ALTERATIONS
FOR TEMPORARY FOOT BRIDGE

SEQUENCE OF OPERATIONS

1. REMOVE UPPER ROADWAY DECK (3") - L5' TO EAST END PLACE ON WEST SIDE - L2 TO L5
2. REMOVE WALK AND ROADWAY DECK - L2 TO WEST END - SEE SH. M9 PLACE ON WEST SIDE - L2 TO L5
3. REMOVE STEEL - L2 TO WEST END - SEE SH. M9 AND M11 PLACE ON WEST SIDE - L2 TO L4
4. REMOVE CONCRETE COUNTERWEIGHT EAST END - SEE SH. M11 REPLACE LOWER DECK

ALL MATERIAL TO BE PLACED UNIFORMLY ON ROADWAY DECK

LOCATION OF MATERIALS BASED ON THEORETICAL WEIGHTS. CONTRACTOR SHALL SHIFT MATERIALS IF REQUIRED TO BALANCE BRIDGE IN OPEN POSITION.

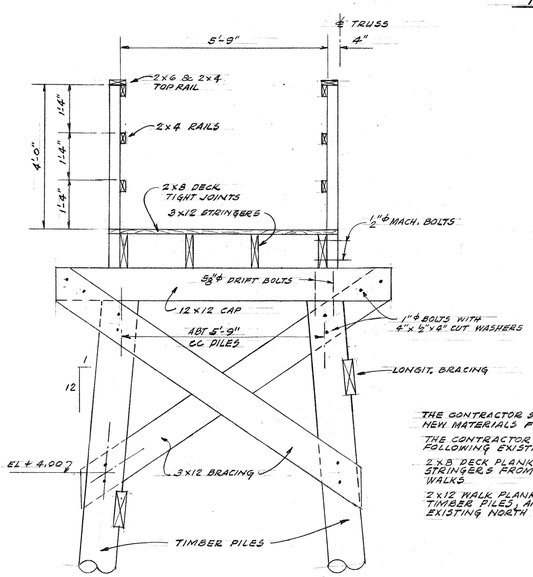

TEMP. FOOT BRIDGE SEC. (2/45)
CENTER BENT - SHOWN
END BENT - SIMILAR
SCALE 1/2" = 1'-0"

THE CONTRACTOR SHALL FURNISH ALL NEW MATERIALS FOR THE HAND RAILS.

THE CONTRACTOR MAY USE THE FOLLOWING EXISTING MATERIALS

2x8 DECK PLANKS AND 3x12 STRINGERS FROM EXIST. BRIDGE WALKS

2x12 WALK PLANKS, 12x12 TIMBERS, TIMBER PILES, AND BOLTS FROM EXISTING NORTH PROTECTION PIER

STATE OF WISCONSIN
DEPARTMENT OF TRANSPORTATION
DIVISION OF HIGHWAYS

STRUCTURE B-40-406

DEPARTMENT OF PUBLIC WORKS
BUREAU OF BRIDGES AND PUBLIC BUILDINGS
CITY OF MILWAUKEE

REVISIONS		
MARK	DATE	BY
A		
B		
C		
D		
E		
F		
G		
H		
I		
J		
K		
L		
M		

PLEASANT ST. VERTICAL LIFT BRIDGE
OVER MILWAUKEE RIVER
TEMPORARY FOOT BRIDGE AND WALK

DESIGNED BY: T. E. S. TRACED BY: DATE:
DRAWN BY: T. E. S. 5-19-69 CHECKED BY: DATE:
APPROVED:— SCALE: AS NOTED
Norris C. Batelden DESIGNER IN CHARGE DATE: 12-16-70 SHEET NUMBER 45
George C. Ashton ENGR. OF BRIDGES AND PUBLIC BUILDINGS DATE: 1-20-71 SET OF 47 SHEETS
Donald D. Lindsay DEPUTY COMMISSIONER OF PUBLIC WORKS DATE: 1-25-71 JOB NO. 512-74

X 44343

PROJECT I.D.	SHEET NUMBER	TOTAL SHEETS
2984-0-07		
FEDERAL PROJECT DESIGNATION T-4195 (11)		

PIERS 1 AND 2

MARK	NO. REQD. PIER 1	NO. REQD. PIER 2	LENGTH	TYPE	DIMENSIONS A	B	C	H	K	O	R
FOOTINGS EL -18.50 TO EL -20.00											
601	10	10	17'-0"	STR							
602	182	182	3'-6"	STR							
603	39		25-0"	STR							
604		39	29'-0"	STR							
605	62	74	13'-4"	STR							
606	4	4	12'-0"	STR							
607		30	30'-0"	STR							
608	30		27'-0"	STR							
609	184	208	2'-6"	2	1'-2"	1'-4"					
PIT FLOOR EL -16.50 TO EL -18.50											
400	8	8	8'-4"	T3							2'-4"
608		27	27'-0"	STR							
610	57	69	8'-0"	STR							
611	27		23'-0"	STR							
612	57	69	7'-3"	2	1'-9"	5'-6"					
613	57	69	2'-7"	2	10"	1'-9"					
614	2	2	4'-9"	STR							
615	6	6	6'-0"	STR							
1001	8	8	10'-0"	2	1'-6	8'-6"					
WALLS EL + 4.00 TO EL -18.50											
401	108	108	6'-2"	510	2'-0"	2'-2"	2'-0"				
402	48	48	3'-0"	2	1'-4"	1'-8"					
403		29	3'-8"	19		1'-8"	2'-0"	1'-6"	0'-3"		
404		45	2'-8"	2	0'-8"	2'-0"					
616	79	70	24'-6"	STR							
617	211	268	22'-0"	STR							
618	97	83	3'-8"	19		1'-8"	2'-0"	1'-6"	0'-3"		
619	16	16	14'-2"	STR							
620	8	8	7'-0"	STR							
621	8	8	4'-9"	STR							
622	16	16	4'-0"	2		2'-0"	2'-0"				
623	24	24	6'-4"	25	1'-6"	1'-10"	3'-0"	1'-0"	1'-6"		
701	86	86	17'-4"	10	2'-0"	13'-4"	2'-0"			8'-6"	4'-3"
702	88	88	26'-9"	10	2'-0"	22'-9"	2'-0"			14'-6"	7'-3"
703	483		21'-0"	STR							
704		483	25'-0"	STR							
705	24	12	17'-4"	STR							
706	12	12	15'-8"	STR							
707		12	29'-4"	STR							
708	32	32	8'-0"	STR							
1002	16	16	26'-8"	STR							
WALLS ABOVE EL + 4.00											
402		32	3'-0"	2	1'-4"	1'-8"					
405	52	24	5'-0"	510	1'-8"	1'-8"	1'-8"				
406		32	5'-6"	STR							
407		14	8'-4"	STR							
607	4	36	30'-0"	STR							
624	4		6'-0"	STR							
625	58	29	8'-2"	STR							
626	18	10	22'-4"	10	2'-4"	18'-4"	2'-0"			11'-8"	5'-10"
627	18	9	17'-4"	10	2'-0"	13'-4"	2'-0"			8'-6"	4'-3"
628	126	132	7'-11"	STR							
629	32		27'-9"	STR							
PIER ROOF											
408	8	4	3'-6"	STR							
409	12	6	5'-0"	STR							
410	2	1	7'-6"	STR							
411	4	2	9'-6"	STR							
412	4	2	11'-0"	STR							
EQUIPMENT ROOM ROOF											
413		4	3'-4"	STR							
414		8	4'-10"	2	3'-4"	1'-6"					
415		8	6'-0"	STR							
416		13	2'-8"	2	1'-0"	1'-8"					
500		6	11'-8"	STR							
501		11	8'-0"	STR							
502		22	2'-6"	STR							
APPROACH SPAN BEAMS & COLUMNS											
417	36	36	6'-4"	T1	7"	1'-5"	1'-2"				
418	116	116	4'-10"	510	1'-7"	1'-8"	1'-7"				
503	4	4	30'-0"	STR							
800	12	12	8'-0"	STR							
801	8	8	10'-0"	STR							
900	4	4	30'-0"	STR							
901	6	6	20'-0"	STR							
1003	18	18	7'-6"	STR							
1004	18	18	4'-9"	2	1'-6"	3'-3"					

PIERS 1 AND 2

MARK	NO. REQD. PIER 1	NO. REQD. PIER 2	LENGTH	TYPE	DIMENSIONS A	B	C	H	K	O	R
12" SLABS AT EL + 4.00											
410	1	1	7'-6"	STR							
411	2	2	9'-6"	STR							
412	23	35	11'-0"	STR							
419	12	12	30'-0"	STR							
420	102	126	5'-6"	2	4"	5'-2"					
421	6	6	6'-8"	2	4"	6'-4"					
422	2	2	7'-5"	2	4"	7'-1"					
423	2	2	7'-7"	2	4"	7'-3"					
424	2	2	7'-9"	2	4"	7'-5"					
425	2	2	8'-0"	2	4"	7'-8"					
426	2	2	8'-2"	2	4"	7'-10"					
427		4	13'-0"	STR							
428	13	5	13'-6"	STR							
429	2	2	10'-0"	STR							
430		8	25'-6"	STR							
431	2	2	4'-6"	STR							
408	1	1	3'-6"	STR							
610	1	1	3'-0"	STR							
614	2	2	4'-9"	STR							
630	23	35	11'-0"	STR							
631	2	2	9'-6"	STR							
632	1	1	7'-6"	STR							
633	13	5	13'-6"	STR							
634	2	2	10'-0"	STR							
635		8	25'-6"	STR							
STAIR LANDING EL + 4.00 PIER 1											
407	3		8'-4"	STR							
420	9		5'-6"	2	4"	5'-2"					
OPERATORS HOUSE											
300		3	7'-0"	STR							
301		8	1'-4"	STR							
302		6	16'-0"	STR							
303		6	14'-0"	STR							
304		24	3'-0"	STR							
407		4	8'-4"	STR							
411		6	9'-6"	STR							
416		80	2'-8"	2	1'-0"	1'-8"					
429		156	10'-0"	STR							
432		13	19'-0"	10	4"	18'-4"	4"			11'-8"	5'-10"
433		13	16'-10"	10	4"	16'-2"	4"			10'-3"	5'-1½"
434		7	14'-10"	A	4"	14'-6"					5'-10"
435		7	12'-10"	A	4"	12'-6"					5'-1½"
436		20	5'-6"	A	12"	4'-6"					1'-10"
437		92	2'-6"	STR							
438		10	2'-10"	STR							
439		52	3'-0"	STR							
440		28	11'-8"	STR							
441		3	3'-8"	2	6"	3'-2"					
442		14	8'-0"	STR							
443		14	4'-0"	STR							
444		28	2'-8"	510	1'-0"	8"	1'-0"				
445		8	6'-8"	510	3'-0"	8"	3'-0"				
446		28	3'-0"	STR							
447		56	2'-0"	2	8"	1'-4"					
448		10	6'-4"	STR							
504		12	3'-9"	2	9"	3'-0"					
505		20	10'-0"	STR							
506		2	5'-4"	STR							
507		4	6'-6"	STR							
508		4	3'-0"	STR							
624		4	6'-0"	STR							
636		8	8'-0"	STR							

EAST & WEST APPROACH SPANS

MARK	NO REQD	LENGTH	TYPE	DIMENSIONS A	B	C	D
601	676	31'-6"	STR				
502	964	22'-0"	STR				
503	168	2'-11"	8	9"	14"	12"	
404	56	22'-0"	STR				
505	172	6'-3"	STR				
506	172	3'-2"	2	12"	14"	12"	
507	484	2'-7"	8	7"	6"	6"	12"

COUNTERWEIGHTS

MARK	NO REQD	LENGTH	TYPE	DIMENSIONS A	B	C
801	36	29'-8"	STR			
802	28	12'-8"	STR			
803	76	9'-6"	STR			
804	40	11'-5"	2	2'-6"	6'-5"	2'-6"
805	40	9'-4"	2	2'-6"	4'-4"	2'-6"
806	52	17'-7"	2	6'-7"	4'-5"	6'-7"
807	104	4'-10"	2	2'-2"	6"	2'-2"
508	52	4'-6"	STR			
809	16	5'-6"	2	2'-6"	6"	2'-6"
510	16	13'-8"	2	6'-7"	6"	6'-7"
611	200	1'-9"	14	7"	7"	7"

ABUTMENTS

MARK	NO. REQD	LENGTH	TYPE	DIMENSIONS A	B	C
501	80	11'-6"	2	1'-6"	8'-6"	1'-6"
502	80	15'-6"	2	3'-6"	8'-6"	3'-6"
603	80	33'-0"	STR			
604	202	5'-0"	STR			
605	244	7'-0"	STR			
606	108	22'-0"	STR			
607	122	5'-4"	2	2'-0"	3'-4"	
608	244	4'-6"	STR			
509	122	4'-6"	STR			
510	122	5'-0"	2	2'-3"	6"	2'-3"
511	24	31'-0"	STR			
412	8	26'-0"	STR			
413	8	7'-8"	2	1'-6"	6'-2"
514	32	7'-6"	2	1'-0"	6'-6"
515	32	4'-0"	STR			
516	40	3'-2"	2	1'-0"	2'-2"
417	12	7'-0"	STR			
518	176	10'-0"	2	2'-3"	5'-6"	2'-3"
619	42	21'-0"	STR			
620	42	25'-0"	STR			
821	172	6'-0"	STR	PLAIN BAR		

RETAINING WALLS

MARK	NO. REQD WEST RW	NO. REQD EAST RW	LENGTH	TYPE	DIMENSIONS A	B	C
601	60	124	6'-8"	STR			
502	60	464	6'-8"	STR			
503	28		29'-9"	STR			
704	22	10	9'-2"	STR			
505	22	10	9'-2"	STR			
506	36	36	11'-0"	STR			
407	84	314	3'-6"	STR			
608	60	120	5'-2"	2	11"	4'-3"	
409	30		23'-0"	STR ●			
610	30		23'-0"	STR ●			
511	24		29'-8"	STR			
412	48		14'-9"	STR			
713	24	24	5'-10"	2	1'-1"	4'-9"	
414	16	18	13'-9"	STR			
715	16	18	13'-9"	STR			
416	8	6	11'-10"	STR			
717	8	6	11'-10"	STR			
518	4	4	9'-0"	STR			
419	4	4	9'-0"	STR			
520	24	24	11'-6"	STR			
421	24	24	11'-6"	STR			
522		45	31'-3"	STR			
523		45	27'-0"	STR			
524		170	4'-6"	2	9"	3'-9"	
425		7	10'-8"	STR			
426		7	17'-8"	STR			
427		126	19'-8"	STR			
428		85	14'-4"	STR ●			
529		85	14'-4"	STR ●			
530		28	31'-7"	STR			
431		60	21'-10"	STR ●			
632		60	21'-10"	STR ●			
533		46	80'-7"	STR			
734		12	8'-4"	STR			
535		12	8'-4"	STR			

● CUT 2 BARS - ONE LONG AND ONE SHORT

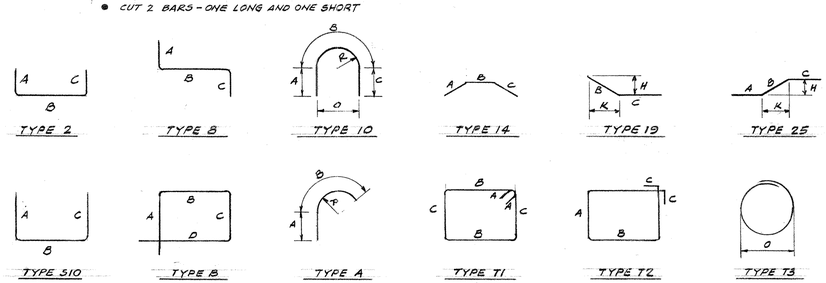

BENDING DIAGRAMS

NOTE:
THE FIRST DIGIT OF A THREE DIGIT BAR MARK AND THE FIRST TWO DIGITS OF A FOUR DIGIT BAR MARK INDICATES THE SIZE OF THE BAR.

FOR ADDITIONAL BAR LISTS SEE SHEETS 8 AND 44

X 44344

STATE OF WISCONSIN
DEPARTMENT OF TRANSPORTATION
DIVISION OF HIGHWAYS

STRUCTURE B-40-406

DEPARTMENT OF PUBLIC WORKS
BUREAU OF BRIDGES AND PUBLIC BUILDINGS
CITY OF MILWAUKEE

REVISIONS MARK	DATE	BY
A		
B		
C		
D		
E		
F		
G		
H		
I		
J		
K		
L		
M		

PLEASANT ST. VERTICAL LIFT BRIDGE
OVER MILWAUKEE RIVER
BILL OF REINFORCEMENT

DESIGNED BY: _____ TRACED BY: _____ DATE: _____
DRAWN BY: TES 12-7-70 CHECKED BY: _____ DATE: _____
APPROVED:— SCALE: _____
Norris A. Batalden — DESIGNER IN CHARGE — DATE: 12-16-70 SHEET NUMBER 46
George C. Ashton — BUREAU OF BRIDGES AND PUBLIC BUILDINGS — DATE: 1-20-71 SET OF 47 SHEETS
Ronald W. Kelley — DEPUTY COMMISSIONER OF PUBLIC WORKS — DATE: 1-25-71 JOB NO. 512-74