CITY OF MILWAUKEE

REHABILITATION OF

PLEASANT STREET

VERTICAL LIFT BRIDGE
OVER MILWAUKEE RIVER
LOCAL STREET
MILWAUKEE COUNTY

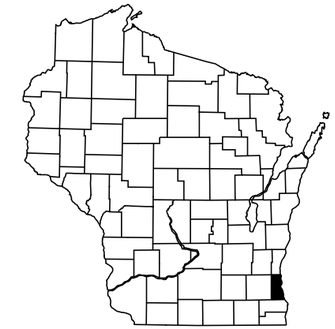

DRAWING INDEX

SHEET NO.	SHEET TITLE	SHEET NO.	SHEET TITLE
1	TITLE SHEET	E13	SCHEMATIC 3
2	GENERAL NOTES	E14	SCHEMATIC 4
3	ESTIMATED BRIDGE QUANTITIES	E15	SCHEMATIC 5
4	PLAN OF EXISTING UTILITIES	E16	WIRING SCHEDULE
5	FRAMING PLAN AND GRADE PROFILE	E17	CIRCUIT SCHEDULE
6	EAST ABUTMENT	E18	RACEWAY SCHEDULE
7	WEST ABUTMENT	H1	HYDRAULIC EQUIPMENT PLAN
8	WEST RETAINING WALLS	H2	HYDRAULIC SCHEMATIC
9	EAST RETAINING WALLS	H3	HPU AND FLEX ENCLOSURE
10	PIER 1	H4	HYDRAULIC JACK AND PIPING DEMOLITION
11	PIER 2	H5	HYDRAULIC NOTES
12	PIER 1 AND PIER 2 AT ELEV. +4.00	H6	HYDRAULIC JACK AND PIPING DETAILS
13	APPROACH SPAN BEAM - PIERS 1 AND 2	M1	GENERAL MACHINERY NOTES AND SCHEDULE
14	BRIDGE OPERATORS HOUSE	M2	COUNTERWEIGHT AND TRANSVERSE EQUALIZER MACHINERY
15	EXISTING LIFT SPAN	M3	LONGITUDINAL EQUALIZER MACHINERY
16	PROPOSED LIFT SPAN	M4	COUNTERWEIGHT MACHINERY
17	LIFT SPAN - CROSS SECTION	M5	COUNTERWEIGHT MACHINERY DETAILS
18	LIFT SPAN - CROSS SECTION THRU LIGHTWEIGHT CONCRETE	M6	EQUALIZER MACHINERY ASSEMBLIES 1
19	EXISTING LIFTING LEG AND EXPANSION JOINT	M7	EQUALIZER MACHINERY ASSEMBLIES 2
20	LIFTING LEG AND EXPANSION JOINT	M8	EQUALIZER MACHINERY BRACKETS
21	LIFTING LEG AND EXPANSION JOINT DETAILS	M9	EQUALIZER MACHINERY DETAILS
22	EXISTING EXPANSION JOINT AT LIFT SPAN	M10	SPAN GUIDE
23	EXPANSION JOINT AT LIFT SPAN		
24	EXPANSION JOINT AT LIFT SPAN DETAILS		
25	LIFT SPAN JACKING BEAM AND LIFTING LEG		
26	MACHINERY SLAB		
27	LIFT SPAN GIRDER END DETAILS		
28	EXISTING COUNTERWEIGHT		
29	STEEL GRID DETAIL		
30	APPROACH SPANS		
31	APPROACH SPAN DECK ENDS		
32	APPROACH SPAN DECK SECTION		
33	APPROACH SPAN DIAPHRAGMS, BILL OF BARS AND SHEAR STUDS		
34	APPROACH SPAN STRINGERS AND BEARINGS		
35	TRAFFIC BARRIER GATE OVERHANG		
36	EXPANSION JOINTS AT ABUTMENTS		
37	RAILING LOCATION PLAN		
38	RAILING DETAILS		
39	EXISTING LIGHTPOLE, RAILING AND ACCESS HATCHES		
40	CIRCULAR STAIRS		
T1	PAVEMENT MARKING		
T2	PAVEMENT MARKING DETAILS		
T3	FULL BRIDGE CLOSURE		
T4	TRAFFIC CONTROL MISCELLANEOUS QUANTITIES		
T5	DETOUR PLAN		
A1	EQUIPMENT ROOM (1ST) LEVEL PLAN		
A2	ENTRY / STREET (2ND) LEVEL PLAN		
A3	CONTROL ROOM (3RD) LEVEL PLAN		
A4	ROOF PLAN		
A5	SOUTH & EAST ELEVATIONS		
A6	NORTH & WEST ELEVATIONS		
A7	BUILDING SECTION & DETAILS		
E1	ONE LINE DIAGRAM		
E2	CONTROL HOUSE POWER WIRING		
E3	WEST APPROACH SPAN AND LIFT SPAN POWER WIRING		
E4	EAST APPROACH SPAN AND LIFT SPAN POWER WIRING		
E5	TRAFFIC BARRIER DETAILS		
E6	PANELBOARD AND TRANSFORMER SCHEDULES		
E7	CONTROL CONSOLE LAYOUT		
E8	CONTROL CONSOLE RELAY CABINET DETAILS		
E9	480 VOLT & 208 VOLT CABINET DETAILS		
E10	SCHEMATIC LEGEND AND SYMBOL LIST		
E11	SCHEMATIC 1		
E12	SCHEMATIC 2		

STRUCTURE B-40-406
STA. 14+80.79

BEGIN PROJECT
STA. 7+72.55

END PROJECT
STA. 18+88.44

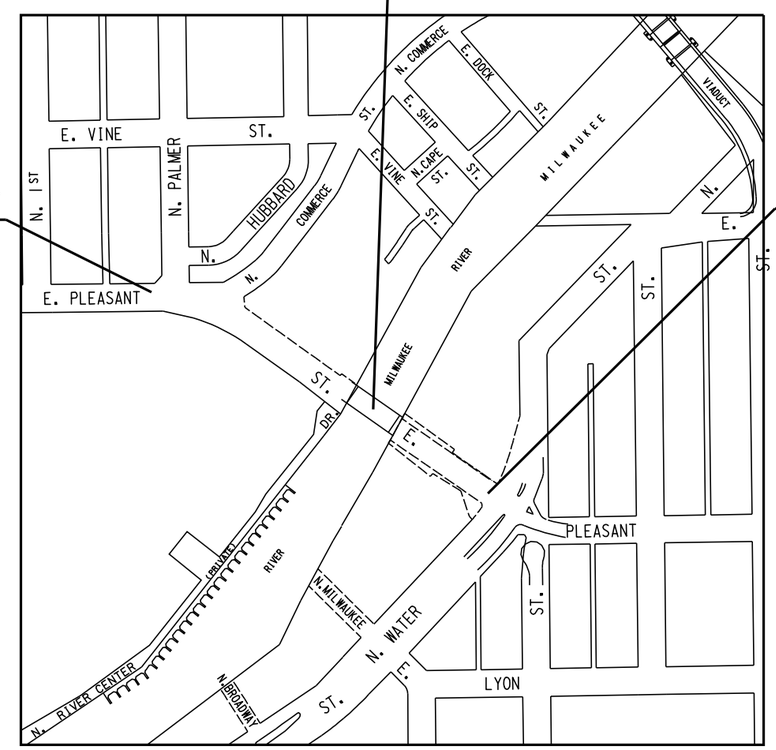

N

SCALE 0 200 400 FEET

TOTAL NET LENGTH OF CENTERLINE = 0.031 MI. (URBAN)

ELEVATIONS SHOWN ON THIS PLAN ARE REFERENCED TO THE CITY OF MILWAUKEE DATUM.

TO CONVERT ELEVATIONS SHOWN ON THIS PLAN TO NATIONAL GEODEDIC VERTICAL DATUM OF 1929, ADD 580.603 TO ELEVATIONS SHOWN ON THIS PLAN.

WISCONSIN
CRAIG S. LIBERTO
E-23746
MILWAUKEE, WI
PROFESSIONAL ENGINEER
Craig S. Liberto 6-6-12

City of Milwaukee
Department of Public Works
Infrastructure Services Division

APPROVED BY: INFRASTRUCTURE OPERATIONS MANAGER 6/7/12 DATE
CITY ENGINEER / COMMISSIONER OF PUBLIC WORKS / DEPUTY COMMISSIONER 6/8/12 DATE

PLEASANT STREET LIFT BRIDGE
OVER THE MILWAUKEE RIVER
TITLE SHEET

REVISIONS

DESIGNED BY J.J.K.	
DRAWN BY G.J.R.	
CHECKED BY H.J.R.	
DATE 06/2012	SCALE NONE
JOB NUMBER BR100-07-0104	
SHEET NUMBER 1 OF 40	
OF 86	

W:\STR\B0112\ 2012 WORK\ 01.DGN 06-06-2012

DESIGN SPECIFICATIONS

AASHTO STANDARD SPECIFICATIONS FOR HIGHWAY BRIDGES, 17TH EDITION.

AASHTO STANDARD SPECIFICATIONS FOR MOVABLE HIGHWAY BRIDGES, SECOND EDITION, 2007, AND INTERIMS THROUGH 2011.

CONSTRUCTION SPECIFICATIONS

WISCONSIN DEPARTMENT OF TRANSPORTAION STANDARD SPECIFICATIONS FOR HIGHWAY AND STANDARD CONSTRUCTION, 2012 EDITION, EXCEPT AS NOTED.

AWS BRIDGE WELDING CODE D1.5, LATEST EDITION.

AWS STRUCTURAL WELDING CODE-STEEL D1.1, LATEST EDITION.

DESIGN DATA

DEAD LOAD

CONCRETE = 150 PCF
FWS = 20 PSF
RAILING = 100 PLF

LIVE LOAD

DESIGN RATING: HS-20
INVENTORY RATING: HS-26
OPERATING RATING: HS-45
MAXIMUM STANDARD PERMIT VEHICLE LOAD: 250 KIPS *

* - PERMIT VEHICLE CANNOT TRAVEL MORE THAN 5 MPH

ULTIMATE DESIGN STRESSES:

CONCRETE MASONRY (SLAB) ..... f'c = 4,000 PSI
CONCRETE MASONRY (OTHERS) ..... f'c = 3,500 PSI

BAR STEEL REINFORCEMENT:
HIGH STRENGTH, GRADE 60 ..... fy = 60,000 PSI

NEW W SECTION
ASTM A709 ..... Fy = 50,000 PSI

NEW PLATES, BARS, AND WT-SECTIONS
(UNLESS OTHERWISE NOTED) ASTM A709 ... Fy = 50,000 PSI

NEW ANGLES AND CHANNELS
ASTM A709 ..... Fy = 50,000 PSI

NEW RECTANGULAR HOLLOW STRUCTURAL
SECTION ASTM A500, GR. B ..... Fy = 46,000 PSI

NEW ROUND HOLLOW STRUCTURAL
SECTION ASTM A500, GR. B ..... Fy = 42,000 PSI

TRAFFIC DATA

EXISTING 2011 ADT = 7,500 VEHICLES/DAY
PROJECTED 2021 ADT = 8,600 VEHICLES/DAY
ROADWAY DESIGN SPEED = 35 MPH

GENERAL NOTES - APPROACH AND LIFT SPANS

EXISTING STRUCTURE (B-40-406) IS A STEEL VERTICAL LIFT BRIDGE, 162.00' LONG X 61.00' WIDE, TO BE REHABILIATED AS DETAILED IN DRAWINGS AND AS DESCRIBED IN SPECIAL PROVISIONS.

DRAWINGS SHALL NOT BE SCALED.

PLACE BAR STEEL REINFORCEMENT WITH 2" OF CLEAR CONCRETE COVER UNLESS OTHERWISE NOTED.

BEVEL EXPOSED EDGES OF CONCRETE 3/4" UNLESS OTHERWISE NOTED.

STATIONS AND ELEVATIONS ARE IN FEET.

ELEVATIONS ARE REFERENCED TO CITY OF MILWAUKEE DATUM.

CITY OF MILWAUKEE DATUM = 580.6 NGVD.

REINFORCING BARS ARE ENGLISH, FIRST DIGIT OF A THREE DIGIT BAR MARK OR FIRST TWO DIGITS OF A FOUR DIGIT BAR MARK SIGNIFY BAR SIZE.

EXISTING GROUND LINE SHALL BE UPPER LIMIT OF EXCAVATION AT ABUTMENTS.

AT ABUTMENT AND RETAINING WALLS, EXCAVATED VOLUME NOT OCCUPIED BY STRUCTURE SHALL BE BACKFILLED WITH BACKFILL STRUCTURE.

FOR LIFT SPAN CONCRETE AND APPROACH SPAN DECK AND SIDEWALK AND EXPANSION JOINT CONCRETE, APPLY PROTECTIVE SURFACE TREATMENT TO TOP AND SIDES OF CONCRETE DECK AND SIDEWALKS.

JOINT FILLER SHALL CONFORM TO AASHTO DESIGNATION M153 TYPE I, II, OR III, OR AASHTO DESIGNATION M213.

EXISTING STRUCTURE REMOVALS SHOWN IN THESE DRAWINGS ARE INCLUDED IN LUMP SUM PAY ITEMS THAT COVER ALL EXISTING STRUCTURE REMOVAL REQUIRED IN THE CONTRACT. SEE SPECIAL PROVISIONS.

DIMENSIONS SHOWN ARE BASED ON THE ORIGINAL STRUCTURE DRAWINGS, THEREFORE, PRIOR TO ACCEPTANCE, CONTRACTOR SHALL FIELD VERIFY AS SPECIFIED IN BID ITEM "FIELD VERIFICATION SURVEY". SEE SPECIAL PROVISIONS.

THE UTILITY INFORMATION SHOWN ON THESE DRAWINGS CONCERNING TYPE AND LOCATION OF UNDERGROUND UTILITIES IS NOT GUARANTEED TO BE ACCURATE OR ALL INCLUSIVE. THE CONTRACTOR IS RESPONSIBLE FOR MAKING HIS OWN DETERMINATIONS AS TO TYPE AND LOCATION OF UNDERGROUND UTILITIES AS MAY BE NECESSARY TO AVOID DAMAGE.

FOR NEW STRUCTURAL STEEL CONNECTION DETAILS, REFER TO ORIGINAL STRUCTURAL STEEL SHOP DRAWINGS UNLESS OTHERWISE NOTED. ORIGINAL STRUCTURAL STEEL SHOP DRAWINGS ARE STORED IN ROOM 907, FRANK P. ZEIDLER MUNICIPAL BUILDING, 841 N BROADWAY, MILWAUKEE, WISCONSIN, AND CAN BE MADE AVAILABLE TO CONTRACTOR UPON ADVANCED NOTICE.

FIELD CONNECTIONS IN LIFT SPAN SHALL BE FRICTION TYPE MADE WITH 3/4" DIA. GALVANIZED HIGH-TENSILE STRENGTH BOLTS UNLESS SHOWN OR NOTED OTHERWISE.

EXISTING ABUTMENTS, RETAINING WALLS AND PIERS ARE TO REMAIN IN PLACE AS SHOWN AND INCORPORATED INTO NEW CONSTRUCTION.

VARIATIONS TO EXISTING GRADE LINE OVER 1/4" MUST BE SUBMITTED TO FIELD ENGINEER FOR REVIEW.

CLEAN, STRAIGHTEN, EPOXY COAT AND INCORPORATE EXISTING BAR STEEL REINFORCEMENT INTO NEW WORK, WHERE APPLICABLE.

CONCRETE REMOVALS SHALL BE DEFINED BY A 1" DEEP SAW CUT.

IF THERE IS A CONFLICT BETWEEN THE STANDARD SPECIFICATIONS AND DRAWINGS OR SPECIAL PROVISIONS, THEN DRAWINGS OR SPECIAL PROVISIONS SHALL GOVERN.

IF AN ITEM IS LISTED OR DESCRIBED IN SPECIAL PROVISIONS AND IS NOT SPECIFICALLY SHOWN ON DRAWINGS, THEN IT SHALL BE CONSIDERED A PART OF THE WORK AND NO ADDITIONAL COMPENSATION WILL BE ALLOWED, IF IT IS NOT OBVIOUS AS TO WHICH PAY ITEM IT BELONGS, THEN ENGINEER SHALL BE CONSULTED FOR INTERPRETATION, AND THE ENGINEERS DECISION SHALL GOVERN.

IF AN ITEM IS SHOWN ON DRAWINGS AND IS NOT SPECIFICALLY LISTED OR DESCRIBED IN SPECIAL PROVISIONS, THEN IT SHALL BE CONSIDERED A PART OF THE WORK AND NO ADDITIONAL COMPENSATION WILL BE ALLOWED, IF IT IS NOT OBVIOUS AS TO WHICH PAY ITEM IT BELONGS, THEN ENGINEER SHALL BE CONSULTED FOR INTERPRETATION, AND THE ENGINEERS DECISION SHALL GOVERN.

WELDING NOT SHOWN ON THE PLANS WILL NOT BE PERMITTED, EXCEPT BY WRITTEN PERMISSION FROM THE ENGINEER AND WITH AN APPROVED WELD PROCEDURE PROVIDED BY THE CONTRACTOR.

FOR BENT PLATES, CONFORM TO ASTM A143 TO PREVENT EMBRITTLEMENT CAUSED BY THE GALVANIZING PROCESS.

ALL EXISTING STRUCTURAL STEEL SHALL BE SANDBLASTED, PRIMED AND PAINTED UNLESS OTHERWISE NOTED.

PAINTING SHALL BE IN ACCORDANCE WITH SPECIAL PROVISIONS. FINISH COAT COLOR FOR STRUCTURAL STEEL SHALL BE AS SELECTED BY CITY OF MILWAUKEE.

GLAVANIZED PARTS THAT ARE TO BE SHOP ASSEMBELED WITH BOLTS SHALL BE GALVANIZED BEFORE SHOP ASSEMBLY.

FIELD WELDING WILL NOT BE PERMITTED UNLESS SHOWN ON THE PLANS OR AUTHORIZED IN WRITING BY THE ENGINEER.

NATURAL CAMBER OF THE ROLLED SECTIONS SHALL BE UP.

ALL INTERIOR AND RE-ENTRANT CUTS SHALL HAVE A MINIMUM RADIUS OF 1" UNLESS NOTED OTHERWISE ON THE PLANS, AND SHALL BE NOTED ON THE SHOP DRAWINGS WHERE THEY OCCUR.

ALL FLAME CUT EDGES OF PLATES THAT WILL BE PAINTED SHALL BE GROUND OR PLANED TO REMOVE THE HARDENED SURFACE CAUSED BY THE FLAME. REMOVAL OF THIS SURFACE IS NECESSARY TO OBTAIN A PROPER BLASTED SURFACE FOR THE ADHESION OF THE PAINT.

NEW STRUCTURAL STEEL SHALL BE GALVANIZED AND SHOP PAINTED WITH A TWO COAT SYSTEM FOLLOWING ASTM D6386.

NEW RAILINGS SHALL BE GALVANIZED AND SHOP PAINTED WITH A TWO COAT SYSTEM.

NEW STEEL SECTIONS SHALL BE GALVANIZED FOLLOWING ASTM A123

NEW STEEL HARDWARE SHALL BE GALVANIZED FOLLOWING ASTM A153

ORIGINAL STRUCTURAL STEEL SECTIONS IN LIFT SPAN ARE TO BE REPLACED AS SHOWN ON STRUCTURAL DRAWINGS. ORIGINAL STRUCTURAL STEEL SECTIONS WHICH ARE OBSOLETE OR NO LONGER AVAILABLE FROM STEEL FABRICATORS HAVE BEEN IDENTIFIED. FOR EACH ORIGINAL OBSOLETE OR NO LONGER AVAILABLE SECTION, A COMPARABLE AND CURRENTLY AVAILABLE STEEL SECTION HAS BEEN SELECTED AS A REPLACEMENT. REFER TO TABLE BELOW.

MEMBER DESIGNATION	ORIGINAL STEEL SECTION NOW OBSOLETE	COMPARABLE STEEL SECTION CURRENTLY AVAILABLE
SIDEWALK MEMBER	10WF21 (D=9 7/8")	W10X22 (D=10 1/8")
SIDEWALK CURB	10C20 (D=10")	C10X20 (D=10")
PURLIN SECTION	7C9.8 (D=7")	C7X9.8 (D=7")
STRINGER SECTION	12WF31 (D=12 1/8")	W12X30 (D=12 3/8")
FLOOR BEAM	16WF36 (D=15 7/8")	W16X36 (D=15 7/8")
BRACING MEMBER	2LS 4X3X3/8"	2LS 4X3X3/8"
FASCIA MEMBER	10C 15.3	C10 X 15.3
SIDEWALK BEAM	ST7WF21.5	WT7X21.5
STRINGER SECTION (AT LAST BAY NEAR ROADWAY EXP. JOINT)	12WF40 (D=12")	W12X40 (D=12")
EXP. JOINT MEMBER (SEE SHEET 19)	8"X6"X1/2" L	L8X6X1/2
END DIAPHRAGM (RET. PAGE 33)	12C20.7 (D=12")	C12X20.7 (D=12")
INT. DIAPHRAGM (RET. PAGE 33)	18C42.7 (D=18")	MC18X42.7 (D=18")

REFER TO DRAWINGS FOR SHIM LOCATIONS

PROPOSED IMPROVEMENTS

THE PROJECT AS PROPOSED CONSISTS OF: SURFACE REPAIRS TO THE ABUTMENTS AND PIERS, REPAIR OF BEARING ASSEMBLIES AS NEEDED, SAND BLASTING AND PAINTING STEEL GIRDERS ON LIFT SPAN AND APPROACH SPANS, WELDING SHEAR STUDS TO THE TOP FLANGE OF GIRDERS, REPLACING STEEL FLOOR BEAMS, STRINGERS, PURLINS, AND GRATING ON THE LIFT SPAN, REPLACE ASPHALT FILL WITH LIGHTWEIGHT CONCRETE DECK ON LIFT SPAN, REPLACING THE APPROACH SPAN CONCRETE DECK, REPLACING EXPANSION JOINTS AT THE ABUTMENTS AND LIFT SPAN, TUCK POINTING OF THE BRIDGE OPERATORS HOUSE, CONCRETE STAINING OF ABUTMENTS AND PIERS, REPLACING BRIDGE RAILING, REHABILITATING OR REPLACING HYDRAULIC MACHINERY, UPGRADING BRIDGE ELECTRICAL SERVICE AND REPLACING ELECTRICAL SYSTEM. (NOTE CITY FORCES WILL PERFORM SOME OF THE ELECTRICAL WORK.)

City of Milwaukee
Department of Public Works
Infrastructure Services Division

PLEASANT STREET LIFT BRIDGE
OVER THE MILWAUKEE RIVER
GENERAL NOTES

REVISIONS

DESIGNED BY J.J.K.
DRAWN BY G.J.R.
CHECKED BY H.J.R.
DATE 06/2012 | SCALE NONE
JOB NUMBER BR100-07-0104
SHEET NUMBER 2 OF 40
OF 86

W:\STR\B0112\ 2012 WORK\ 02.DGN 03-21-2012

ESTIMATED BRIDGE QUANTITIES

ITEM NUMBER	BID ITEMS	UNIT	BRIDGE B-40-406								
			SUBSTRUCTURE					SUPERSTRUCTURE			TOTAL
			WEST ABUTMENT	PIER 1	PIER 2	EAST ABUTMENT	BRIDGE HOUSE	WEST APPROACH	EAST APPROACH	LIFT SPAN	
203.0600.S	REMOVING OLD STRUCTURE OVER WATERWAY WITH MINIMAL DEBRIS	LS									1
502.0100	CONCRETE MASONRY BRIDGES	CY	3			3		83	83		172
502.3100	EXPANSION DEVICE (B-40-406)	LS									1
502.3200	PROTECTIVE SURFACE TREATMENT	SY						305	305	94	704
505.0605	BAR STEEL REINFORCEMENT HS COATED BRIDGES	LB	214			214		21,519	21,519	4,880	48,346
506.3005	WELDED STUD SHEAR CONNECTORS 7/8" x 4"	EA						56	56	96	208
506.3015	WELDED STUD SHEAR CONNECTORS 7/8" x 6"	EA						864	864	336	2,064
509.1500	CONCRETE SURFACE REPAIR	SF	15	600	100	30				100	845
515.4000	STEEL GRID FLOOR OPEN (2 1/2-INCH)	SF								2,664	2,664
517.0600	PAINTING EPOXY SYSTEM (B-40-406)	LS									1
517.0900.S	PREPARATION AND COATING OF TOP FLANGES (B-40-406)	LS									1
517.1010.S	CONCRETE STAINING (B-40-406)	SF	1,250	1,450	1,350	1,960	675	333	333		7,351
517.1800.S	STRUCTURE REPAINTING RECYCLED ABRASIVE (B-40-406)	LS									1
517.4500.S	NEGATIVE PRESSURE CONTAINMENT AND COLLECTION OF WASTE MATERIAL (B-40-406)	LS									1
517.6001.S	PORTABLE DECONTAMINATION FACILITY	EA									1
SPV.0035	LIGHTWEIGHT CONCRETE MASONRY	CY								20	20
SPV.0060	REMOVE AND REPLACE ACCESS HATCH	EA		1	1						2
SPV.0060	RECONDITION EXISTING COUNTERWEIGHT	EA		1	1						2
SPV.0060	REMOVE AND REPLACE EXISTING HYDRAULIC JACK PEDESTAL	EA		1	1						2
SPV.0060	REMOVE AND REPLACE CONCRETE BEAM	EA		1	1						2
SPV.0060	BEARING MAINTENANCE (B-40-406)	EA								12	12
SPV.0085	BRIDGE STRUCTURAL STEEL	LB						8,060	8,060	95,000	111,120
SPV.0090	REMOVE AND REPLACE BRIDGE RAILING	LF						205	131	151	487
SPV.0090	MARINE DOCK FENDER	LF		127	145						272
SPV.0090	EPOXY CRACK SEALING	LF	35	100	145	65					345
SPV.0105	LIFT SPAN ROADWAY JOINTS	LS									1
SPV.0105	LIFT SPAN SIDEWALK JOINTS	LS									1
SPV.0105	REMOVE AND REPLACE EXISTING PIER RAILING	LS									1
SPV.0105	COUNTERWEIGHT BALANCING CALCULATIONS	LS									1
SPV.0105	REFURBISHING EXISTING NAMEPLATES	LS									1
SPV.0105	FIELD VERIFICATION SURVEY	LS									1
SPV.0105	MODIFY EXISTING NORTHEAST RAILING	LS							1		1
SPV.0105	REMOVE AND REPLACE SAFETY CAGES	LS									1
SPV.0165	FIBERGLASS SIDEWALK FLOOR PLATES	SF								980	980
SPV.0165	GALVANIZIED ABRASIVE PERFORATED PLATES	SF								444	444

City of Milwaukee

Department of Public Works

Infrastructure Services Division

PLEASANT STREET LIFT BRIDGE
OVER THE MILWAUKEE RIVER
ESTIMATED BRIDGE QUANTITIES

REVISIONS

DESIGNED BY J.J.K.

DRAWN BY K.P.S.

CHECKED BY H.J.R.

DATE 06/2012 | SCALE NONE

JOB NUMBER BR100-07-0104

SHEET NUMBER 3 OF 40

OF 86

W:\STR\B0112\ 2012\WORK\ 03.DGN 01-12-2012

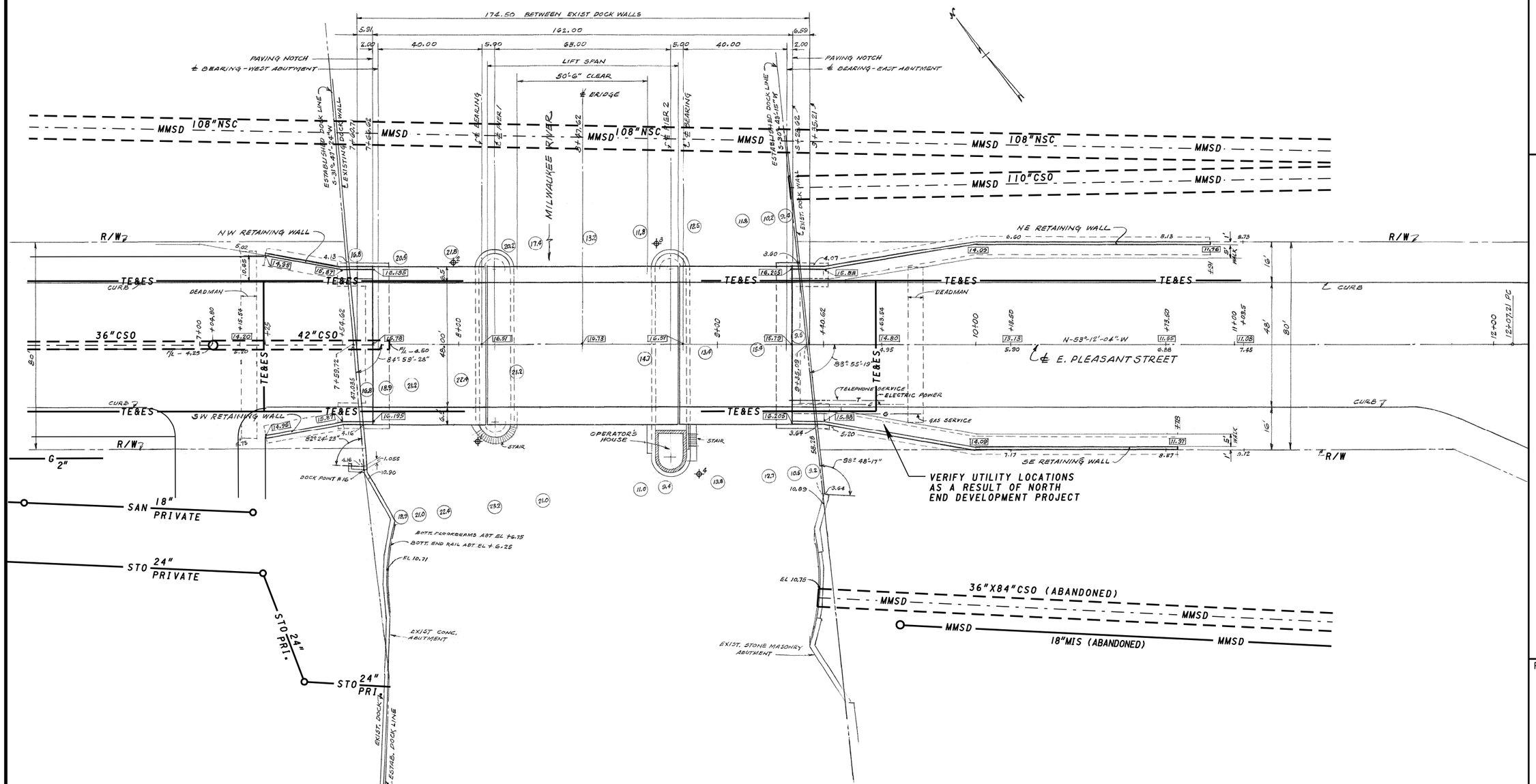

PLAN OF EXISTING UTILITIES

(FOR INFORMATION ONLY)

City of Milwaukee

Department of Public Works

Infrastructure Services Division

PLEASANT STREET LIFT BRIDGE OVER THE MILWAUKEE RIVER PLAN OF EXISTING UTILITIES

REVISIONS

DESIGNED BY J.J.K.	
DRAWN BY K.P.S.	
CHECKED BY H.J.R.	
DATE 06/2012	SCALE 1"=40'
JOB NUMBER BR100-07-0104	
SHEET NUMBER 4 OF 40	
OF 86	

W:\STRUBO12\ 2012WORK\ 04.DGN 04-20-2012

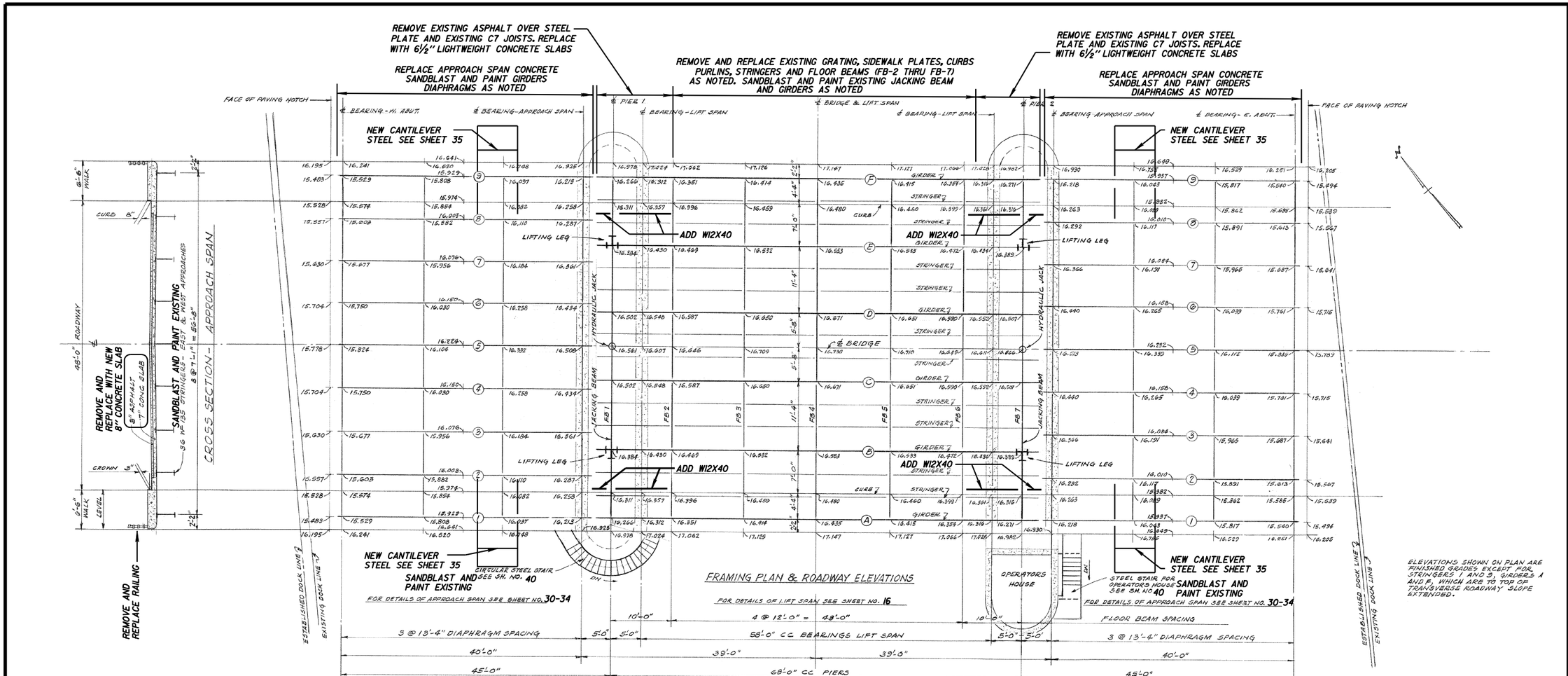

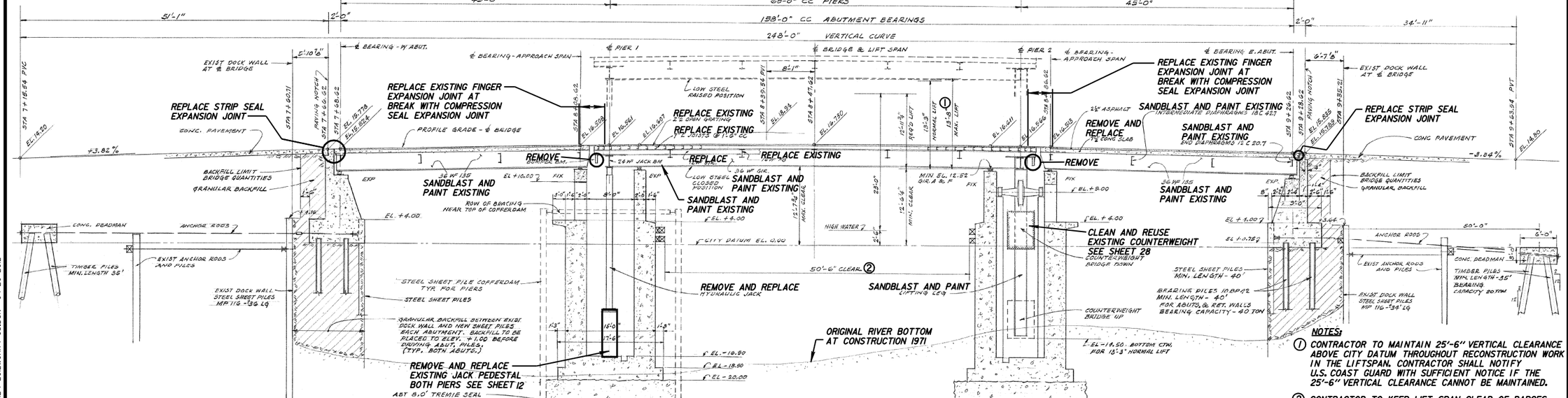

SOUTH ELEVATION AT CENTERLINE

NOTES:

① CONTRACTOR TO MAINTAIN 25'-6" VERTICAL CLEARANCE ABOVE CITY DATUM THROUGHOUT RECONSTRUCTION WORK IN THE LIFTSPAN. CONTRACTOR SHALL NOTIFY U.S. COAST GUARD WITH SUFFICIENT NOTICE IF THE 25'-6" VERTICAL CLEARANCE CANNOT BE MAINTAINED.

② CONTRACTOR TO KEEP LIFT SPAN CLEAR OF BARGES WHICH MAY OBSTRUCT NAVIGATION. CONTRACTOR SHALL NOTIFY U.S. COAST GUARD WITH SUFFICIENT NOTICE IF THE SPANS CANNOT BE KEPT CLEAR OF BARGES.

City of Milwaukee

Department of Public Works

Infrastructure Services Division

PLEASANT STREET LIFT BRIDGE OVER THE MILWAUKEE RIVER FRAMING PLAN AND GRADE PROFILE

REVISIONS

DESIGNED BY J.J.K.	
DRAWN BY K.P.S.	
CHECKED BY H.J.R.	
DATE 06/2012	SCALE NONE
JOB NUMBER BR100-07-0104	
SHEET NUMBER 5 OF 40	
OF 86	

W:\STR\B012\ 2012WORK\ 05.DGN 04-20-2012

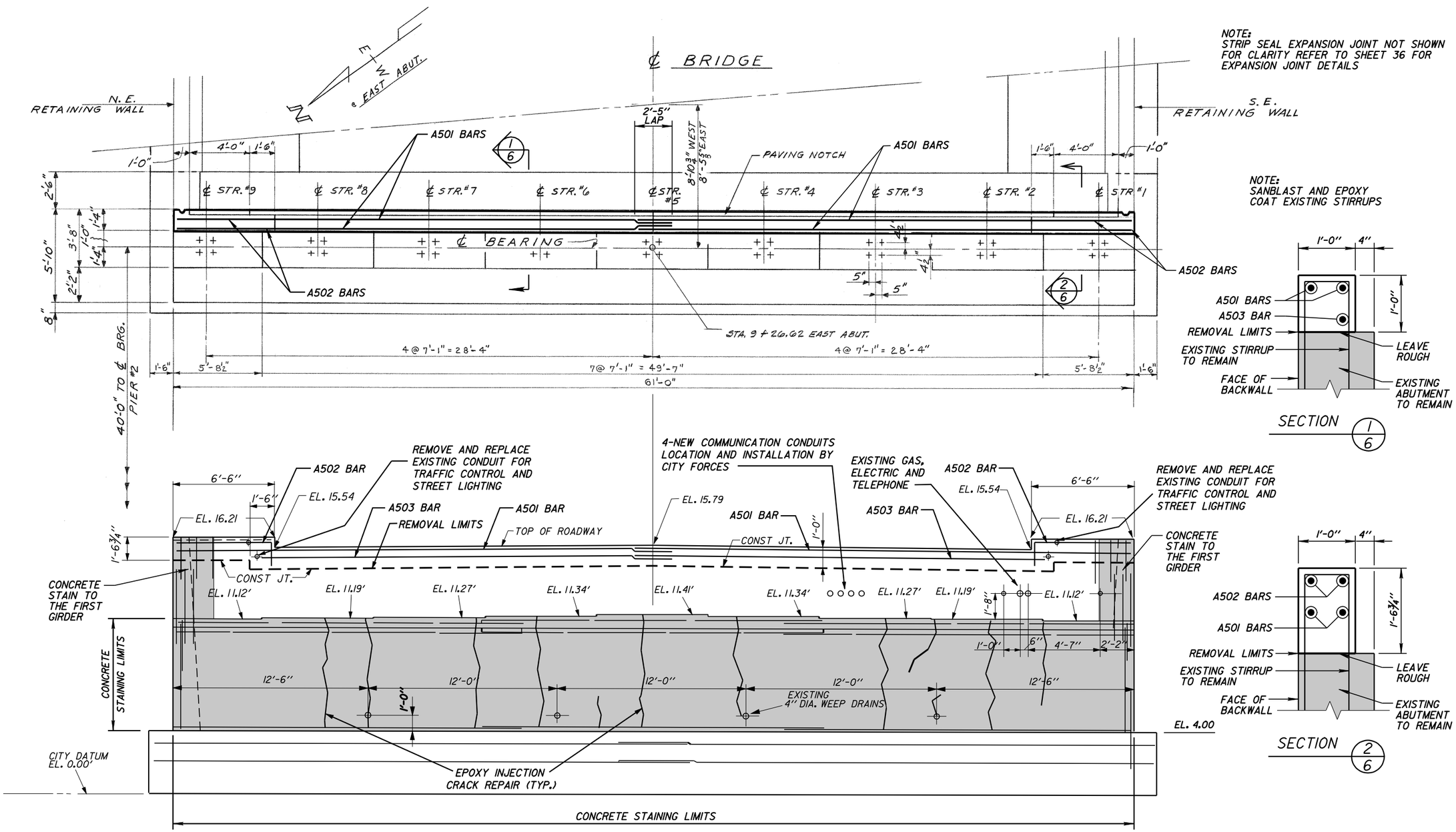

EAST ELEVATION

NOTE:
STRIP SEAL EXPANSION JOINT NOT SHOWN FOR CLARITY REFER TO SHEET 36 FOR EXPANSION JOINT DETAILS

NOTE:
SANBLAST AND EPOXY COAT EXISTING STIRRUPS

SECTION 1/6

SECTION 2/6

ESTIMATED BRIDGE QUANTITIES SHEET 6

BID ITEM	UNIT	QUANTITY
CONCRETE MASONRY BRIDGES	CY	3
BAR STEEL REINFORCEMENT HS COATED BRIDGES	LB	214
CONCRETE STAINING (B-40-406)	SF	500
EPOXY CRACK SEALING	LF	65

BILL OF BARS - EAST ABUTMENT

BAR MARK	COAT	NO. REQ'D	LENGTH	BENT	LOCATION
A501	X	4	31'-7"		EAST ABUTMENT - BACKWALL
A502	X	4	6'-11"	X	EAST ABUTMENT - BACKWALL AT SIDEWALL
A503	X	2	25'-3"		EAST ABUTMENT - BACKWALL

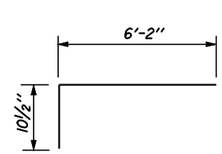

A502

City of Milwaukee
Department of Public Works
Infrastructure Services Division

PLEASANT STREET LIFT BRIDGE
OVER THE MILWAUKEE RIVER
EAST ABUTMENT

REVISIONS

DESIGNED BY J.J.K.
DRAWN BY K.P.S.
CHECKED BY H.J.R.
DATE 06/2012
SCALE NONE
JOB NUMBER BR100-07-0104
SHEET NUMBER 6 OF 40
OF 86

W:\STR\B012\ 2012WORK\ 08.DGN 04-23-2012

NOTE:
STRIP SEAL EXPANSION JOINT NOT SHOWN FOR CLARITY REFER TO SHEET 36 FOR EXPANSION JOINT DETAILS

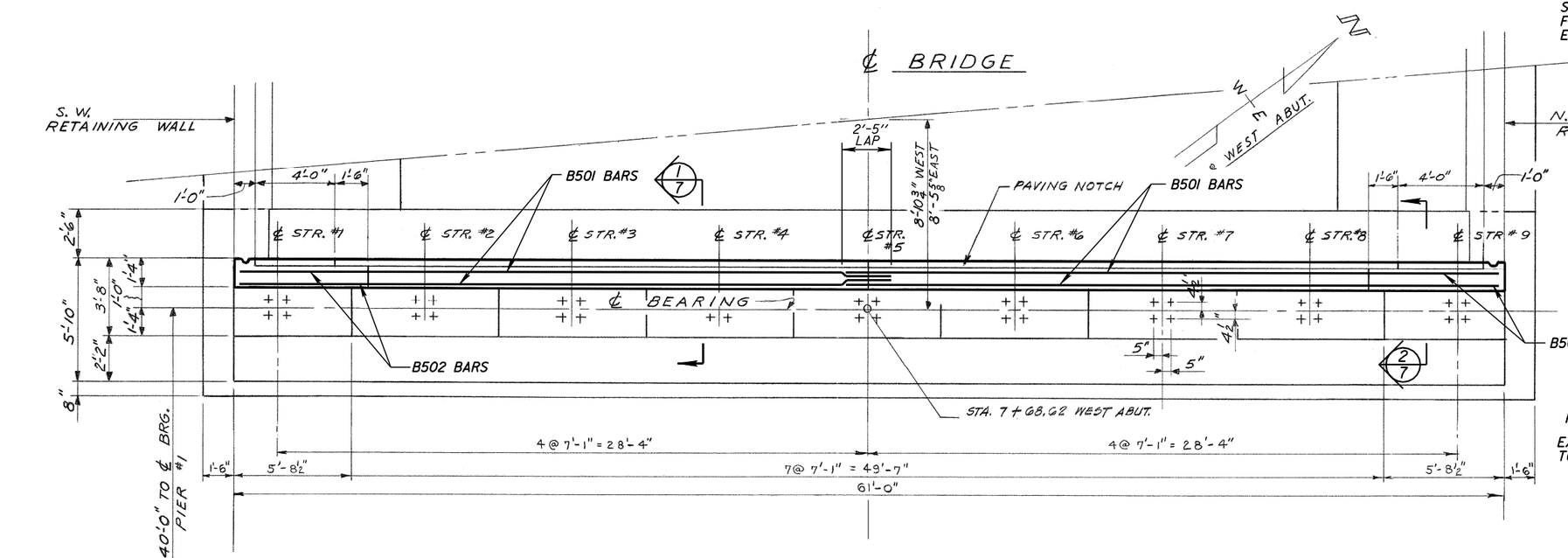

NOTE:
SANBLAST AND EPOXY COAT EXISTING STIRRUPS

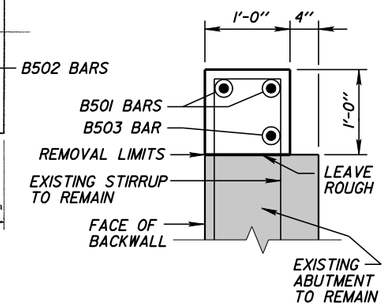

SECTION 1/7

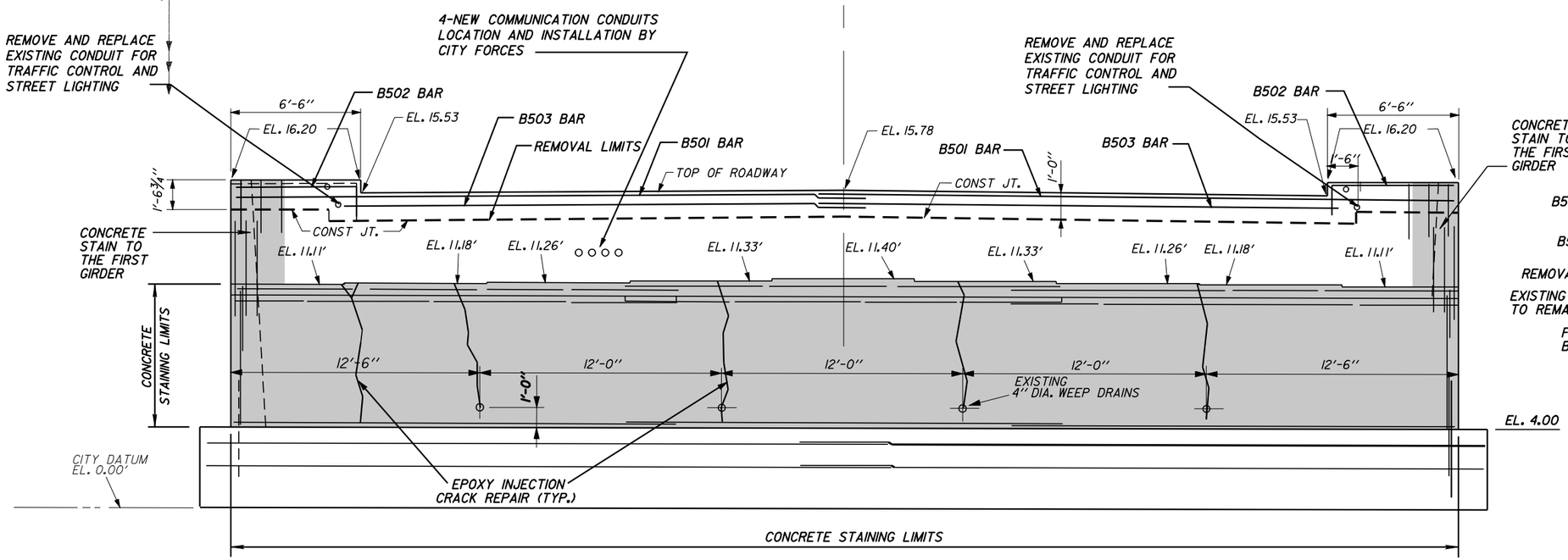

WEST ELEVATION

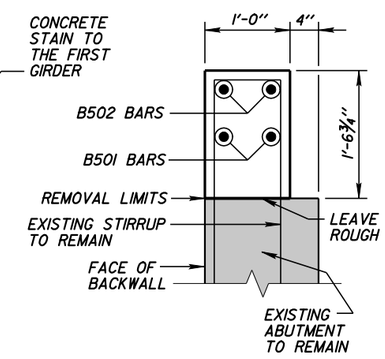

SECTION 2/7

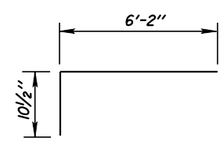

B502

ESTIMATED BRIDGE QUANTITIES SHEET 7

BID ITEM	UNIT	QUANTITY
CONCRETE MASONRY BRIDGES	CY	3
BAR STEEL REINFORCEMENT HS COATED BRIDGES	LB	214
CONCRETE STAINING (B-40-406)	SF	500
EPOXY CRACK SEALING	LF	65

BILL OF BARS -WEST ABUTMENT

BAR MARK	COAT	NO. REQ'D	LENGTH	BENT	LOCATION
B501	X	4	31'-7"		EAST ABUTMENT - BACKWALL
B502	X	4	6'-11"	X	EAST ABUTMENT - BACKWALL AT SIDEWALL
B503	X	2	25'-3"		EAST ABUTMENT - BACKWALL

City of Milwaukee

Department of Public Works

Infrastructure Services Division

PLEASANT STREET LIFT BRIDGE
OVER THE MILWAUKEE RIVER
WEST ABUTMENT

REVISIONS

DESIGNED BY J.J.K.
DRAWN BY K.P.S.
CHECKED BY H.J.R.
DATE 06/2012
SCALE NONE
JOB NUMBER BR100-07-0104
SHEET NUMBER 7 OF 40
OF 86

W:\STR\B0121\ 2012WORK\ 08.DGN 04-23-2012

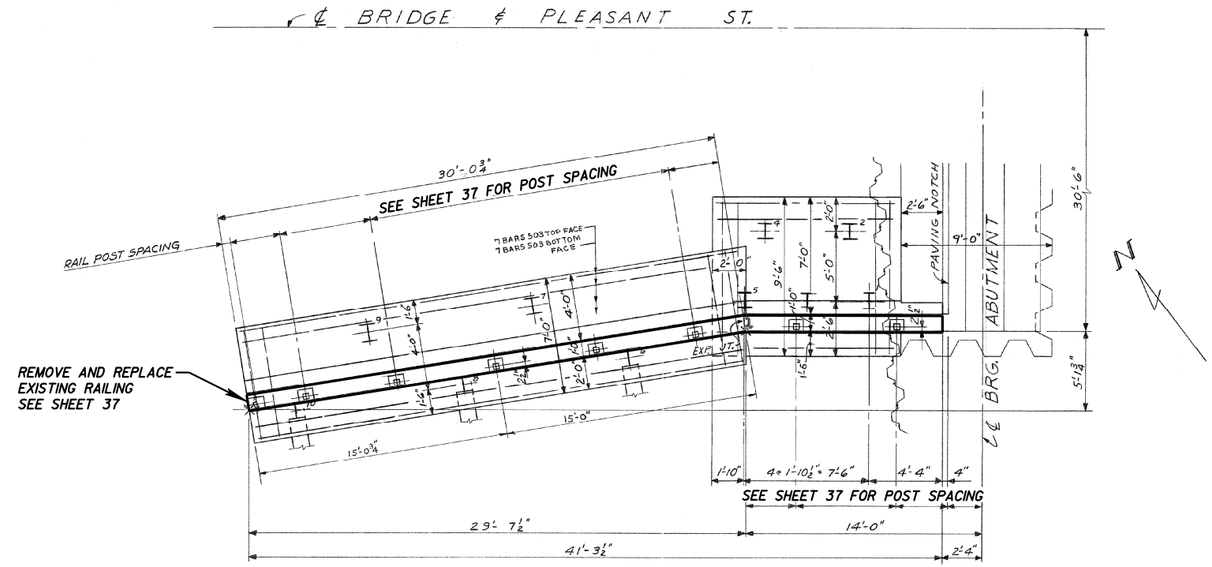

GENERAL PLAN OF S.W. RETAINING WALL - SHOWN
GENERAL PLAN OF N.W. RETAINING WALL - OPP. HAND

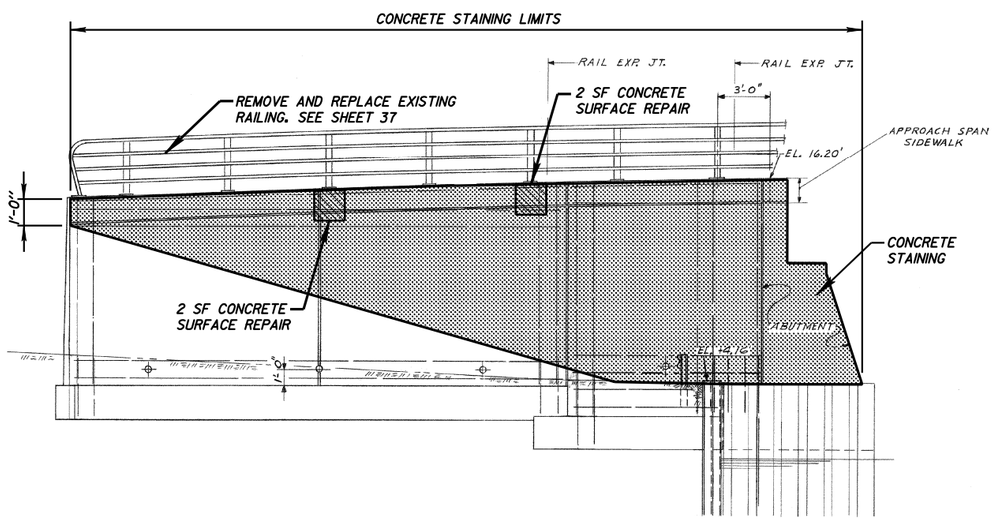

SOUTH ELEVATION OF N.W. RETAINING WALL OPPOSITE HAND

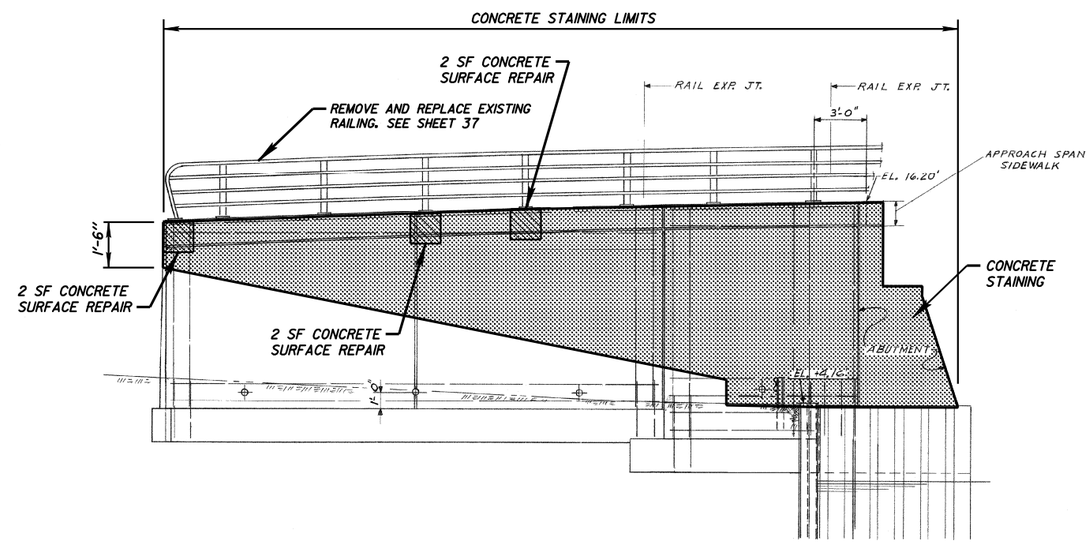

SOUTH ELEVATION OF S.W. RETAINING WALL

ESTIMATED BRIDGE QUANTITIES SHEET 8

BID ITEM	UNIT	QUANTITY
CONCRETE SURFACE REPAIR	SF	15
CONCRETE STAINING (B-40-406)	SF	750

City of Milwaukee

Department of Public Works

Infrastructure Services Division

PLEASANT STREET LIFT BRIDGE
OVER THE MILWAUKEE RIVER
WEST RETAINING WALLS

REVISIONS

DESIGNED BY J.D.T.
DRAWN BY K.P.S.
CHECKED BY H.J.R.
DATE 06/2012
SCALE NONE
JOB NUMBER BR100-07-0104
SHEET NUMBER 8 OF 40
OF 86

W:\STR\BO12\ 2012WORK\ 08.DGN 05-24-2012

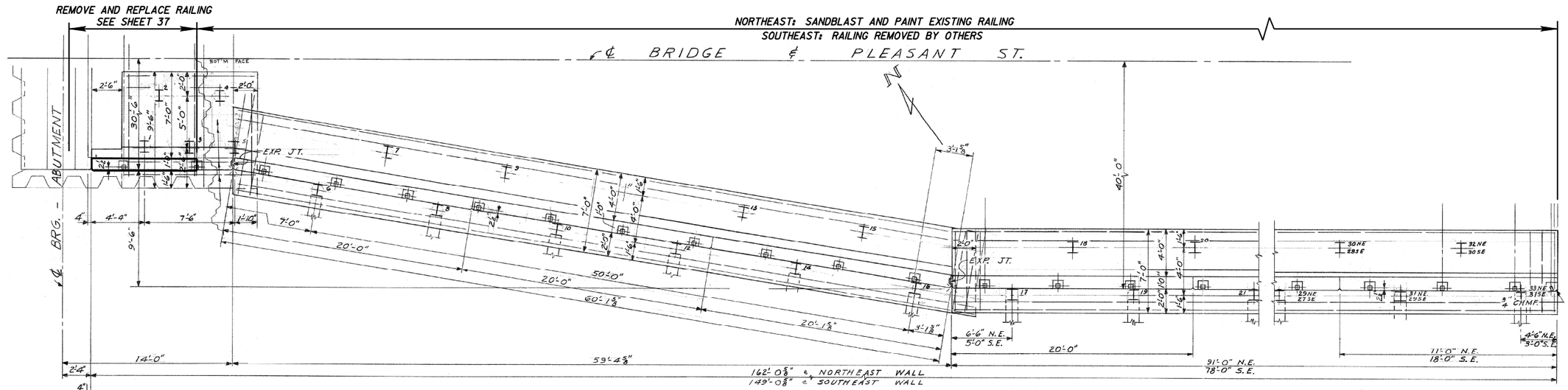

GENERAL PLAN OF SOUTHEAST RETAINING WALL - SHOWN
GENERAL PLAN OF NORTHEAST RETAINING WALL - OPPOSITE HAND

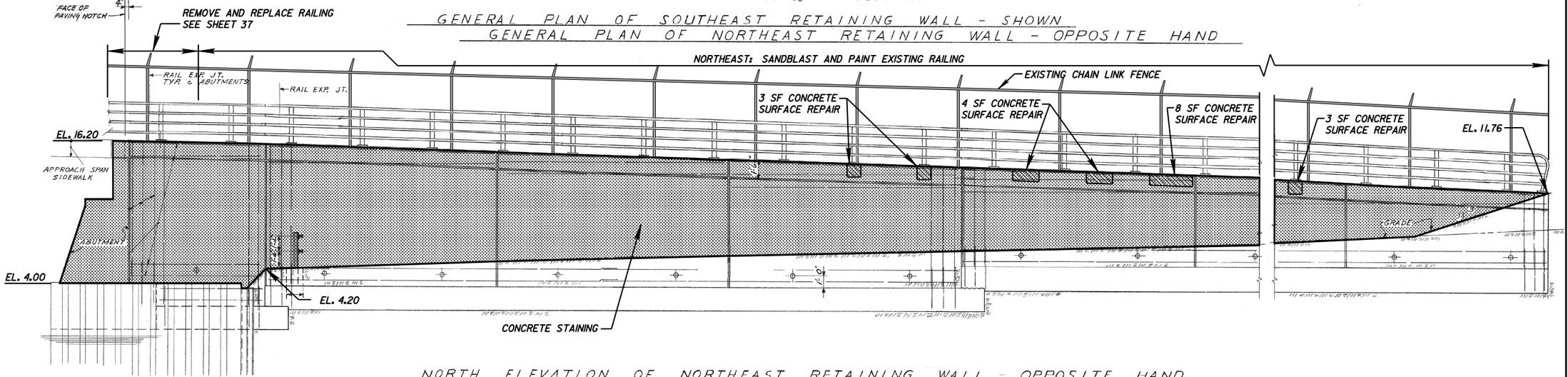

NORTH ELEVATION OF NORTHEAST RETAINING WALL - OPPOSITE HAND

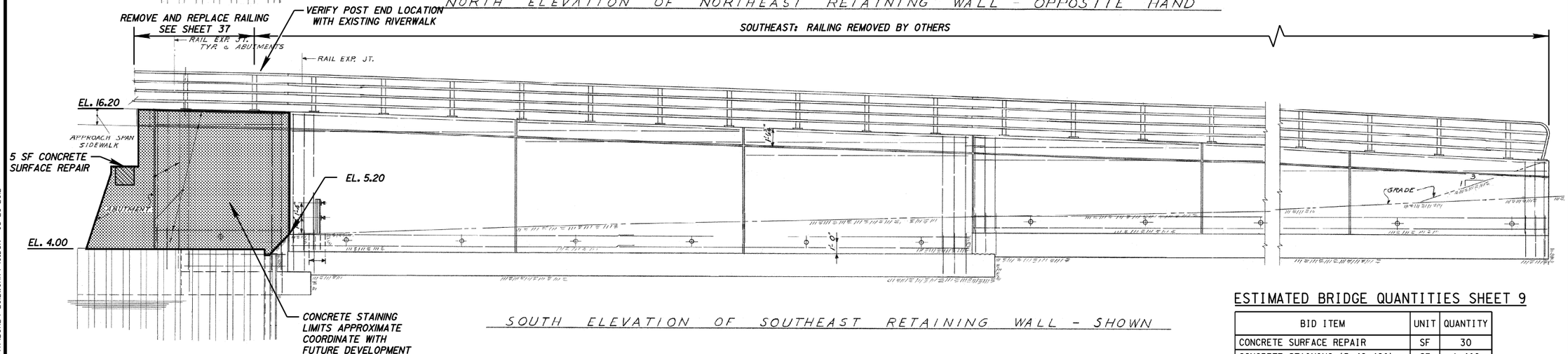

SOUTH ELEVATION OF SOUTHEAST RETAINING WALL - SHOWN

ESTIMATED BRIDGE QUANTITIES SHEET 9

BID ITEM	UNIT	QUANTITY
CONCRETE SURFACE REPAIR	SF	30
CONCRETE STAINING (B-40-406)	SF	1,460

City of Milwaukee
Department of Public Works
Infrastructure Services Division

PLEASANT STREET LIFT BRIDGE OVER THE MILWAUKEE RIVER
EAST RETAINING WALLS

REVISIONS

DESIGNED BY J.D.T.
DRAWN BY K.P.S.
CHECKED BY H.J.R.
DATE 06/2012
SCALE NONE
JOB NUMBER BR100-07-0104
SHEET NUMBER 9 OF 40
OF 86

W:\STR\B0112\ 2012WORK\ 10.DGN 05-29-2012

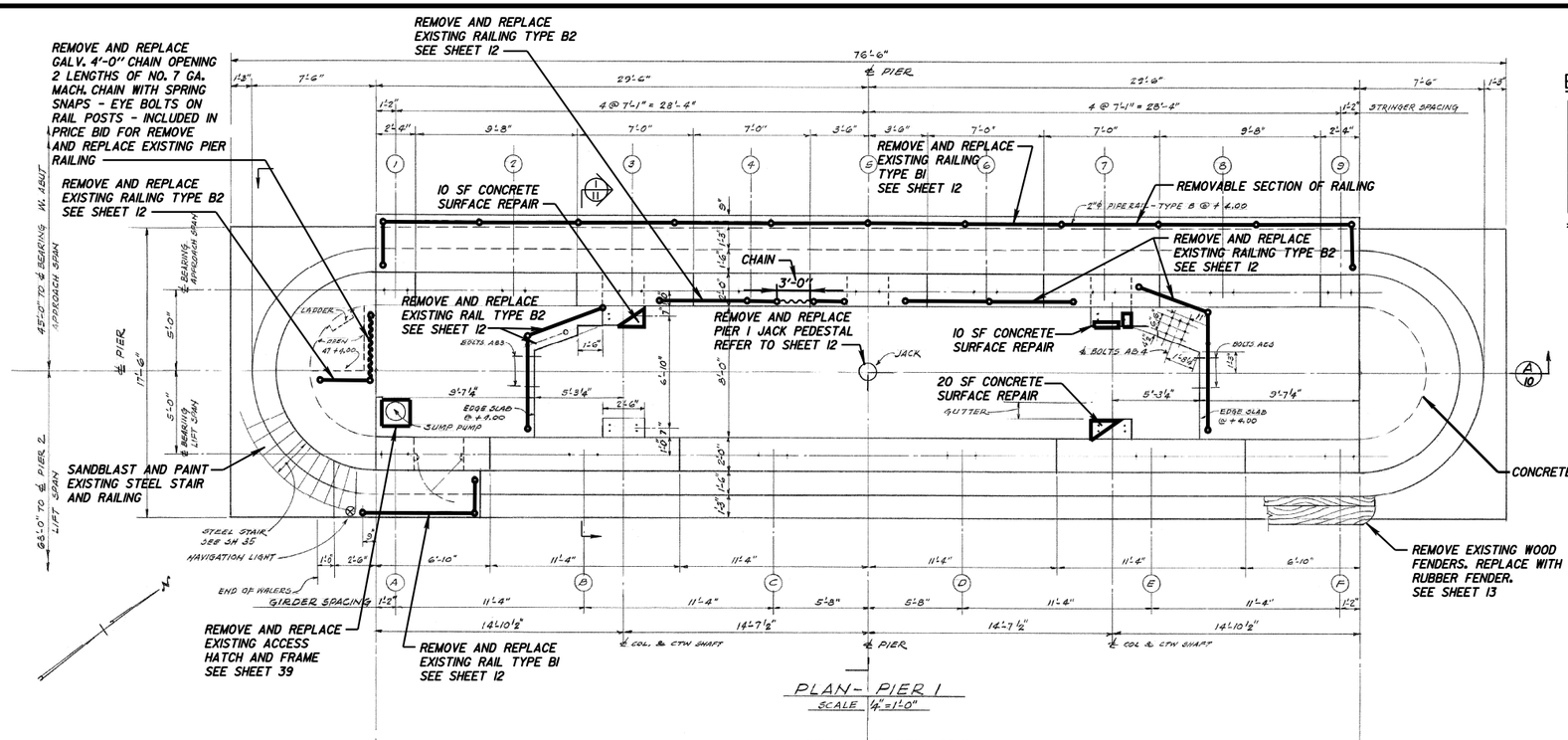

PLAN - PIER 1
SCALE 1/4" = 1'-0"

ESTIMATED BRIDGE QUANTITIES SHEET 10

BID ITEM	UNIT	QUANTITY
CONCRETE SURFACE REPAIR	SF	600
CONCRETE STAINING (B-40-406)	SF	1,450
EPOXY CRACK SEALING*	LF	100
REMOVE AND REPLACE EXISTING PIER RAILING	LS	1

*QUANTITY INCLUDES CRACK SEALING ON EAST FACE. NOT SHOWN HERE FOR CLARITY.

NOTE:
ALL EXTERIOR WALLS, COLUMNS, AND BEAMS FROM ELEVATION +4.00 TO UNDERSIDE OF SUPERSTRUCTURE TO RECEIVE CONCRETE STAIN EXCEPT AT BRICK PLANTER LOCATIONS.

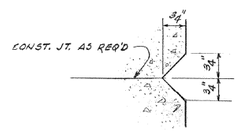

JOINT DETAIL

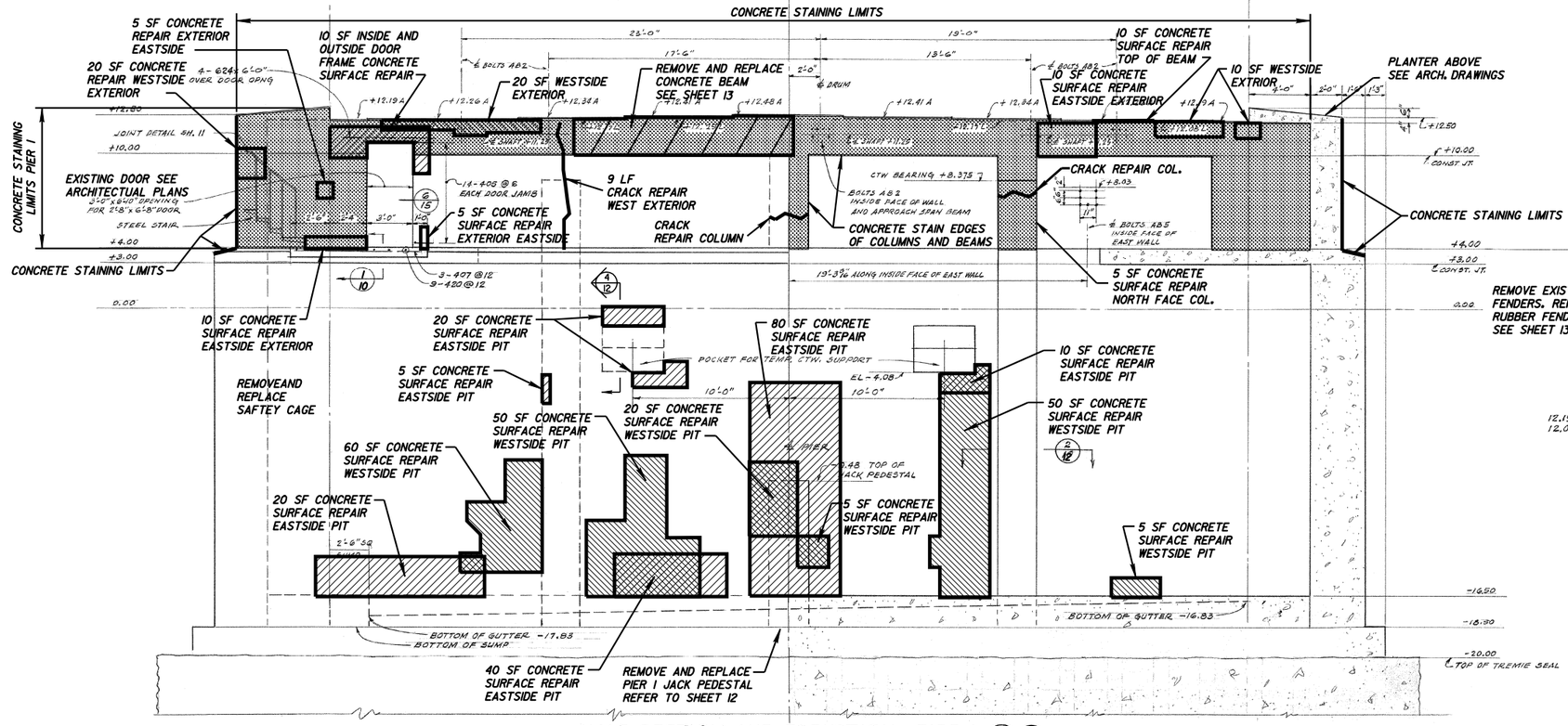

HALF SECTION AND ELEVATION - PIER 1

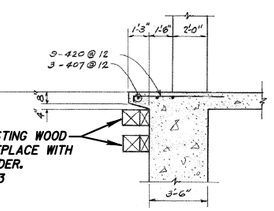

SECTION
THRU STAIR LANDING

12.19 A - INDICATES ELEV. TOP OF PIER - APPROACH SPAN
12.08 L - INDICATES ELEV. TOP OF PIER - LIFT SPAN

City of Milwaukee
Department of Public Works
Infrastructure Services Division

PLEASANT STREET LIFT BRIDGE OVER THE MILWAUKEE RIVER PIER 1

REVISIONS

DESIGNED BY J.J.K.	
DRAWN BY K.P.S.	
CHECKED BY H.J.R.	
DATE 06/2012	SCALE NONE
JOB NUMBER BR100-07-0104	
SHEET NUMBER 10 OF 40	
OF 86	

W:\STR\BO12\ 2012WORK\ 11.DGN 05-29-2012

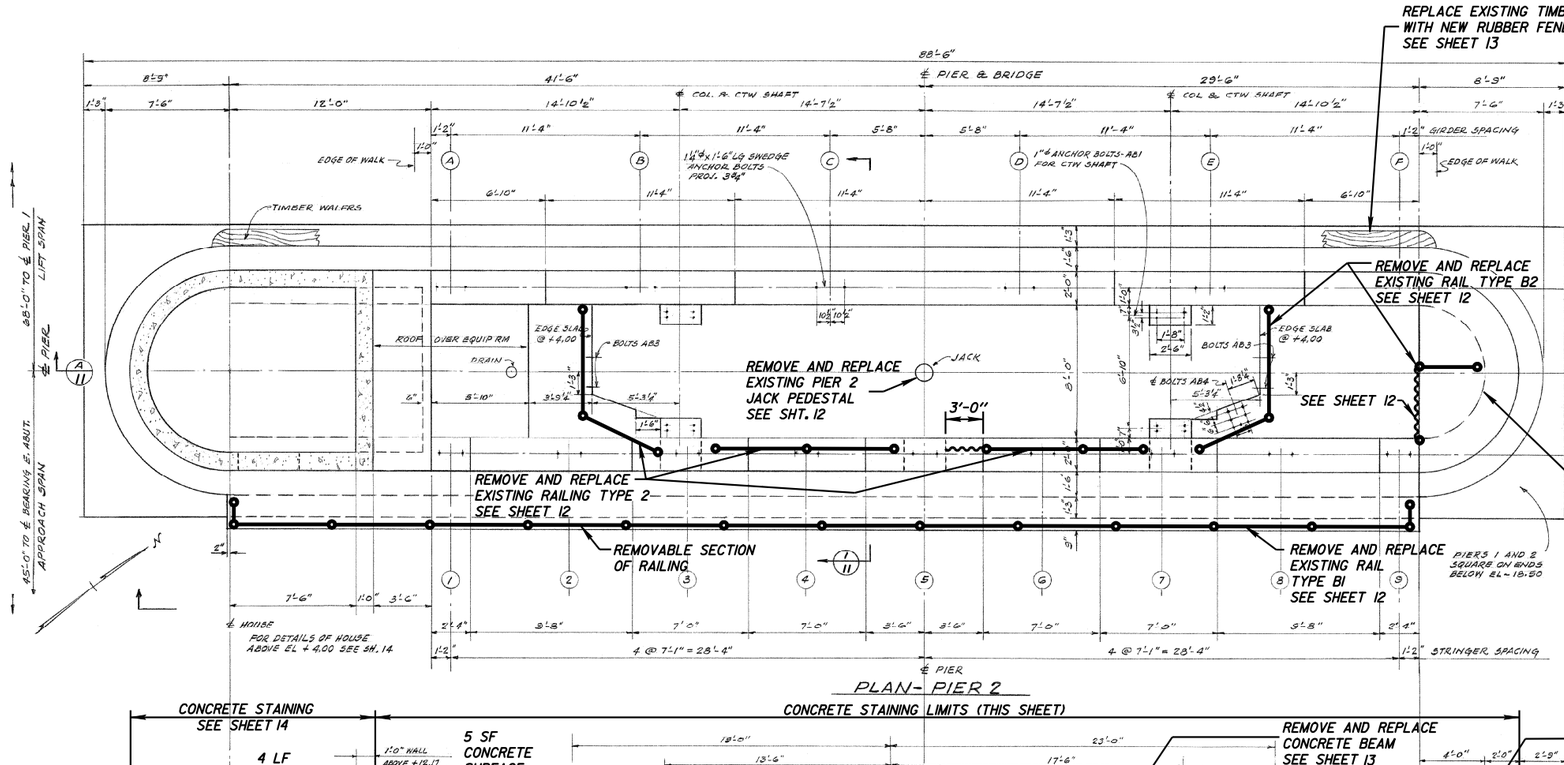

PLAN- PIER 2

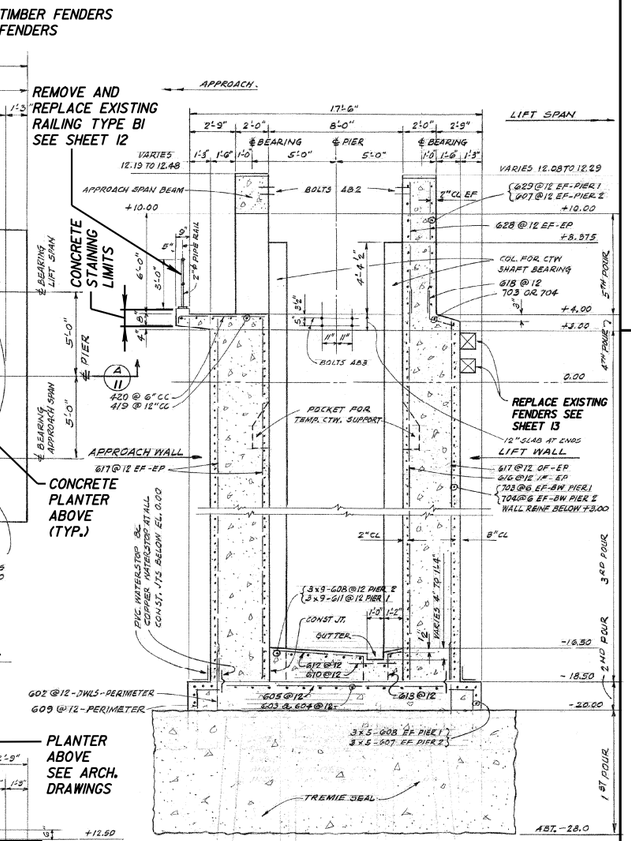

PIERS 1 & 2 - TYPICAL SECTION (1/10, 1/12, 1/11)

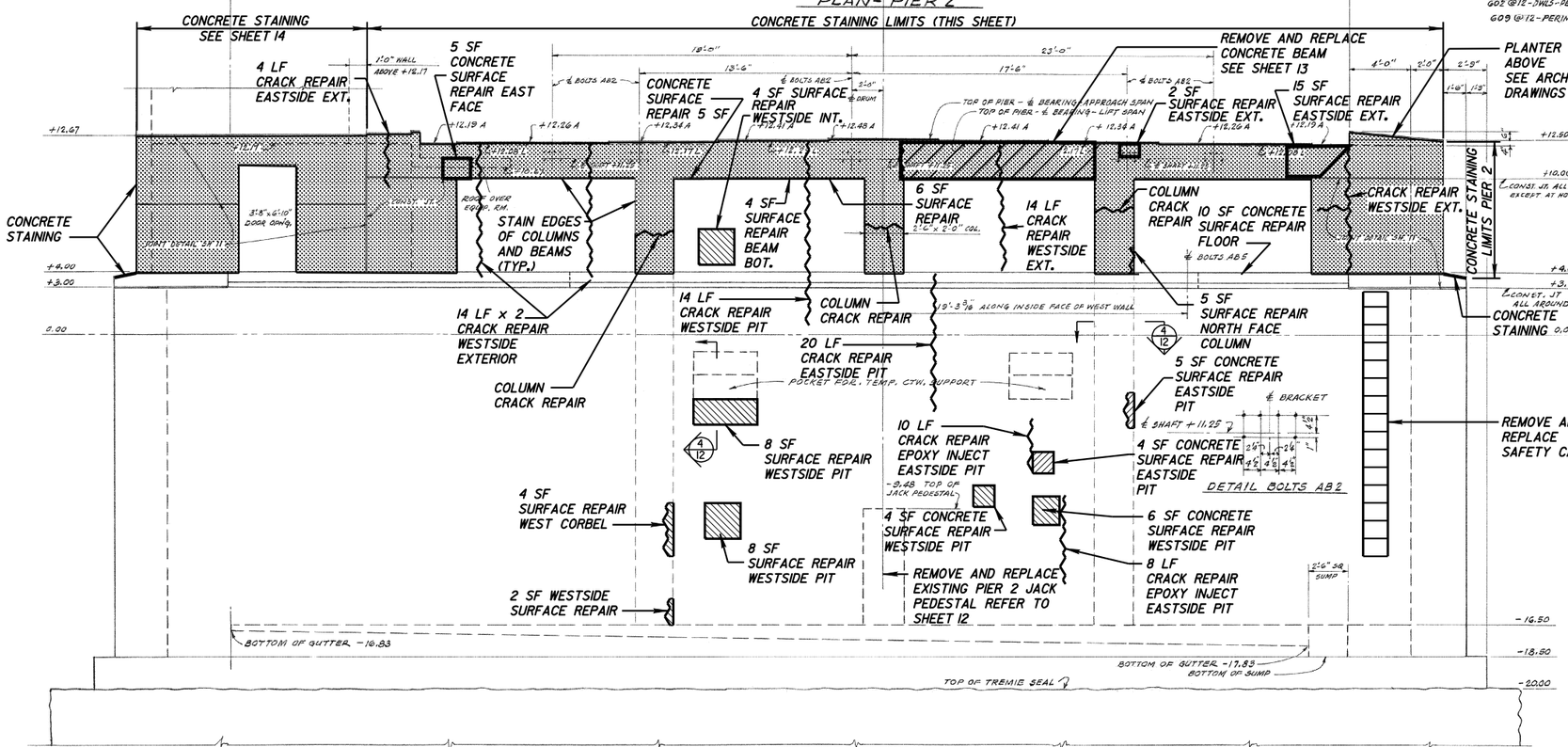

ELEVATION - PIER 2 (A/12)

+12.19 A - INDICATES ELEV. TOP OF PIER - APPROACH SPAN
+12.08 L - INDICATES ELEV. TOP OF PIER - LIFT SPAN
BEVEL ALL EXPOSED EDGES OF CONCRETE 3/4"

NOTE:
ALL EXTERIOR WALLS, COLUMNS, AND BEAMS FROM ELEVATION +4.00 TO UNDERSIDE OF SUPERSTRUCTURE TO RECEIVE CONCRETE STAIN EXCEPT AT BRICK PLANTER LOCATIONS.

NOTE:
ANCHOR BOLTS FOR STRINGERS & GIRDERS SHALL BE DRILLED & LEADED. MACHINERY ANCHOR BOLTS SHALL BE SET WITH A TEMPLATE AND BUILT INTO CONCRETE.

ESTIMATED BRIDGE QUANTITIES SHEET 11

BID ITEM	UNIT	QUANTITY
CONCRETE SURFACE REPAIR	SF	100
CONCRETE STAINING (B-40-406)	SF	1,350
EPOXY CRACK SEALING	LF	145
REMOVE AND REPLACE SAFETY CAGES	LS	1

City of Milwaukee
Department of Public Works
Infrastructure Services Division

PLEASANT STREET LIFT BRIDGE OVER THE MILWAUKEE RIVER
PIER 2

REVISIONS

DESIGNED BY J.J.K.
DRAWN BY K.P.S.
CHECKED BY H.J.R.
DATE 06/2012
SCALE NONE
JOB NUMBER BR100-07-0104
SHEET NUMBER 11 OF 40
OF 86

W:\STR\B012\ 2012WORK\ 12.DGN 05-29-2012

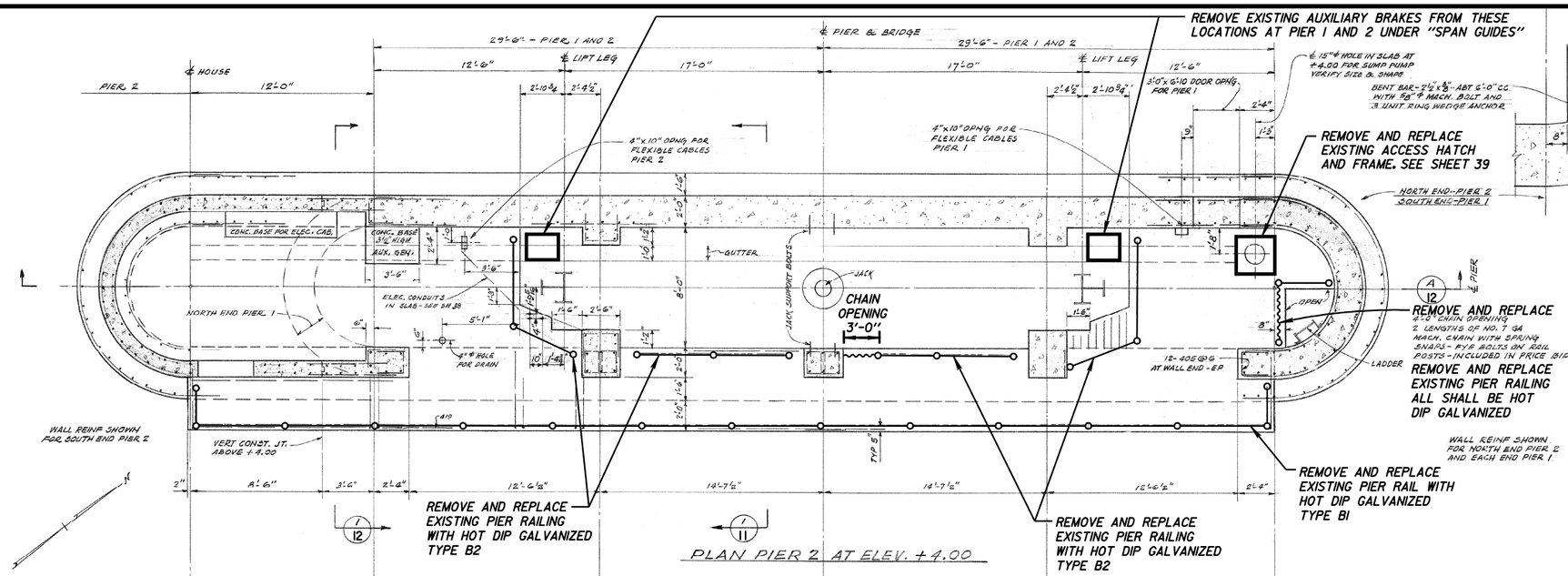

PLAN PIER 2 AT ELEV. +4.00

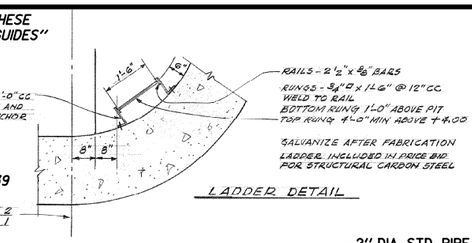

LADDER DETAIL

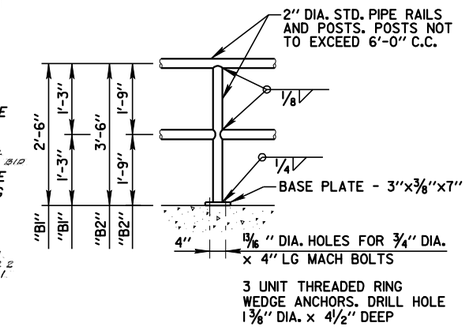

NEW PIER RAIL DETAIL
TYPES "B1" & "B2"

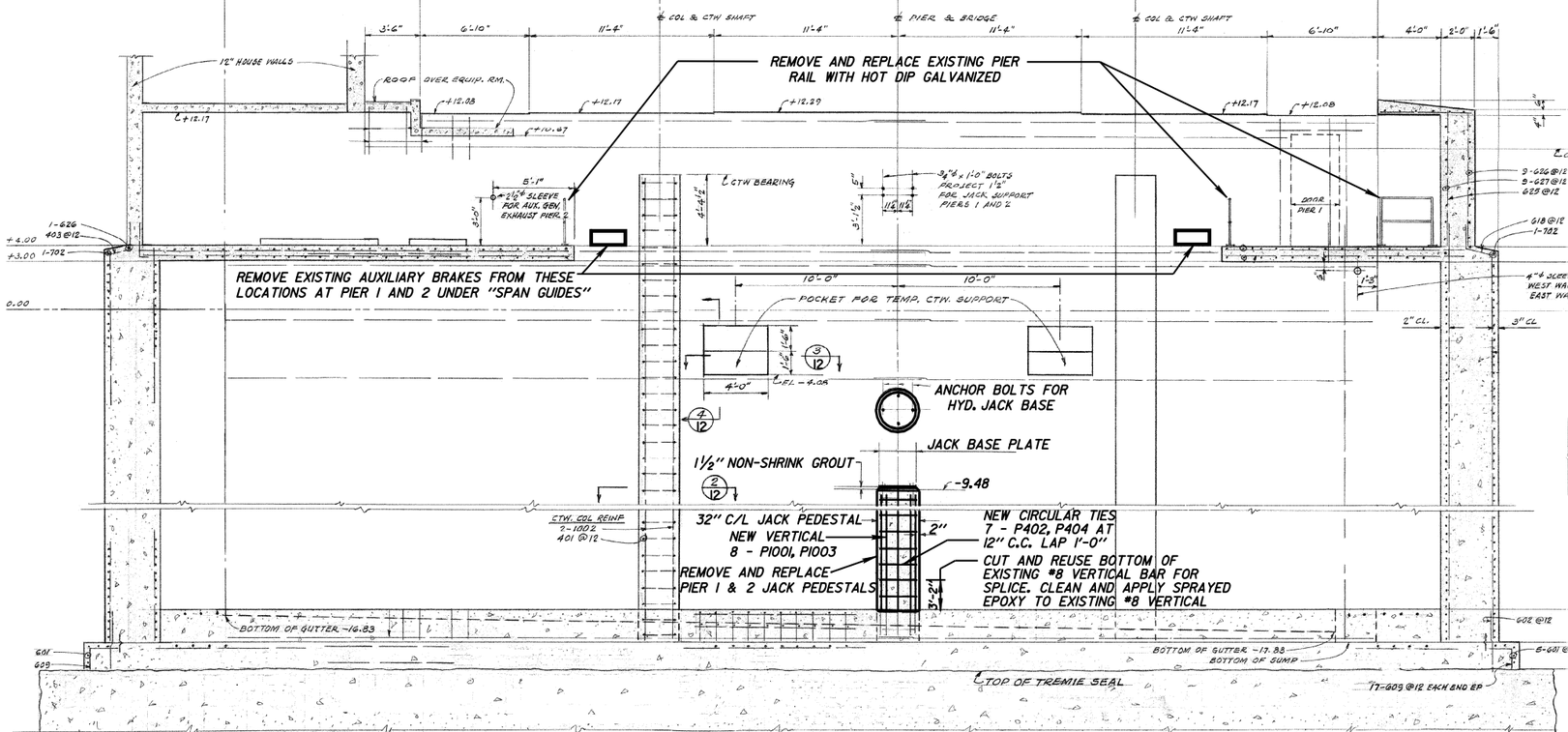

SECTION 1/12

SECTION 3/12 4 - EACH PIER

SECTION 4/10 11 12 POCKET FOR TEMP. CTW. SUPPORT

SECTION 2/10 11 12 4 EACH PIER

TYPICAL PIER LONGITUDINAL SECTION A/10 11 12

BILL OF BARS - JACK PEDESTAL*

BAR MARK	COAT	NO. REQ'D	LENGTH	BENT	LOCATION
P1001	X	8	6'-10"		JACK PEDESTAL - PIER 1
P402	X	7	8'-4"	X	JACK PEDESTAL - PIER 1
P1003	X	8	6'-10"		JACK PEDESTAL - PIER 2
P404	X	7	8'-4"	X	JACK PEDESTAL - PIER 2

*TO BE INCLUDED UNDER "REMOVE AND REPLACE EXISTING HYDRAULIC JACK PEDESTAL". NOT INCLUDED UNDER "BAR STEEL REINFORCEMENT HS COATED BRIDGES".

ABBREVIATIONS

EF	EACH FACE	BW	BOTH WALLS
IF	INSIDE FACE	LW	LIFT WALL
OF	OUTSIDE FACE	AW	APPROACH WALL
EW	EACH WAY	EP	EACH PIER

ESTIMATED BRIDGE QUANTITIES SHEET 12

BID ITEM	UNIT	QUANTITY
REMOVE AND REPLACE EXISTING HYDRAULIC JACK PEDESTAL	EA	2

City of Milwaukee
Department of Public Works
Infrastructure Services Division

PLEASANT STREET LIFT BRIDGE OVER THE MILWAUKEE RIVER
PIER 1 AND PIER 2 AT ELEV. +4.00

REVISIONS

DESIGNED BY J.J.K.
DRAWN BY K.P.S.
CHECKED BY H.J.R.
DATE 06/2012
SCALE NONE
JOB NUMBER BR100-07-0104
SHEET NUMBER 12 OF 40
OF 86

W:\STR\B0112\ 2012WORK\ 12.DGN 05-29-2012

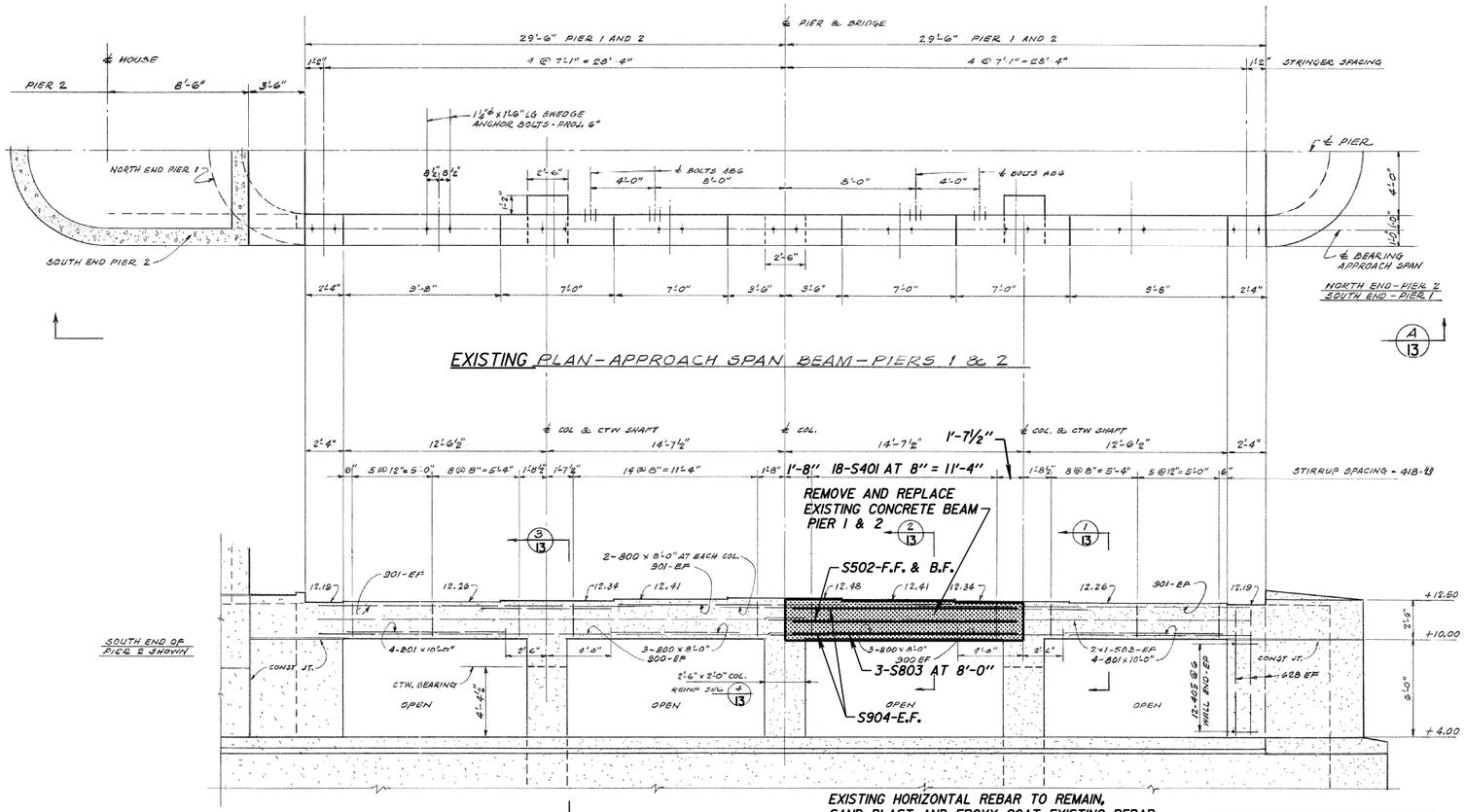

EXISTING PLAN - APPROACH SPAN BEAM - PIERS 1 & 2

EXISTING ELEVATION - APPROACH SPAN BEAM - PIERS 1 & 2 (A/10) (A/11) (4/13)

LOOKING EAST-PIER 1
LOOKING WEST-PIER 2

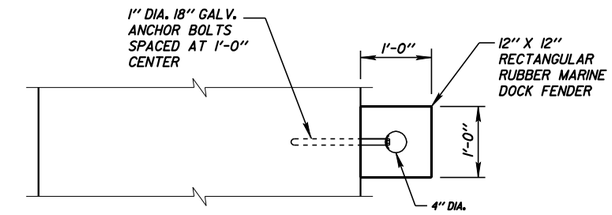

PIER 2 (EAST PIER) MARINE DOCK FENDER DETAIL

(ESTIMATED LENGTH EACH ROW = 75 FT)
(TWO ROWS TOTAL LENGTH = 150 FT)

NOTE:
NEW RUBBER MARINE DOCK FENDERS TO BE INSTALLED IN THE SAME LOCATIONS AS THE EXISTING WOOD FENDERS.

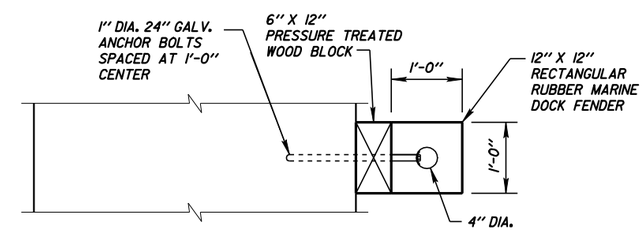

PIER 1 (WEST PIER) MARINE DOCK FENDER DETAIL

(ESTIMATED LENGTH EACH ROW = 62 FT)
(TWO ROWS TOTAL LENGTH = 124 FT)

TABLE I	
BAR SIZE	REQUIRED LAP LENGTH
4	2'-1"
5	3'-3"
8	6'-9"
9	8'-7"

BILL OF BARS

BAR MARK	COAT	NO. REQ.	LENGTH	BENT	LOCATION
S401	X	72	5'-6"	X	APPROACH BEAM STIRRUP
S502	X	4	14'-5"		APPROACH BEAM HORIZONTAL - F.F. & B.F.
S803	X	6	8'-0"		APPROACH BEAM HORIZONTAL - BOTTOM
S904	X	8	14'-5"		APPROACH BEAM HORIZONTAL - EACH FACE

NOTE: BEAM REINFORCEMENT SHALL BE INCLUDED IN BID ITEM "REMOVE AND REPLACE CONCRETE BEAM"

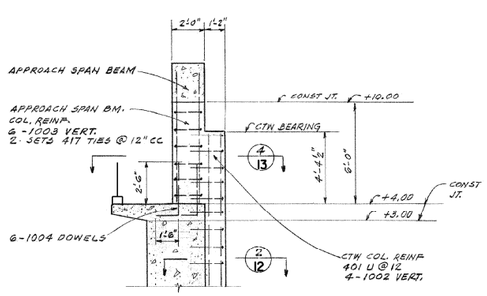

EXISTING SECTION (3/13)

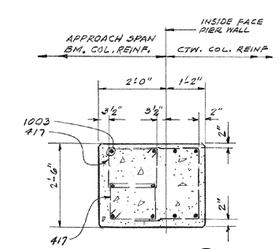

EXISTING SECTION (4/13)

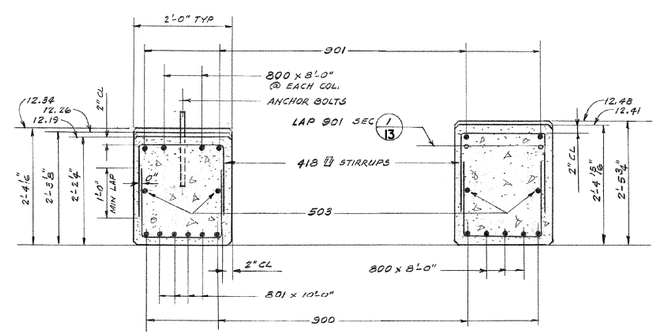

EXISTING SECTION (1/13)

EXISTING SECTION (2/13)

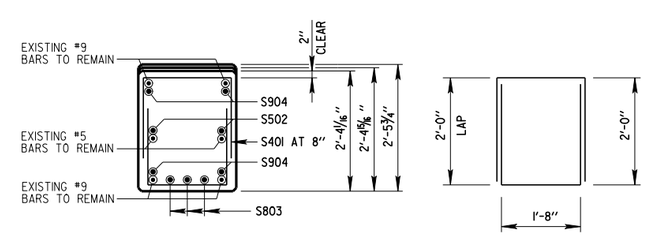

PROPOSED SECTION (2/13)

S401

ESTIMATED BRIDGE QUANTITIES SHEET 13

BID ITEM	UNIT	QUANTITY
REMOVE AND REPLACE CONCRETE BEAM	EA	2
MARINE DOCK FENDER	LF	272

City of Milwaukee
Department of Public Works
Infrastructure Services Division

PLEASANT STREET LIFT BRIDGE OVER THE MILWAUKEE RIVER
APPROACH SPAN BEAM - PIERS 1 AND 2

REVISIONS

DESIGNED BY J.D.T.
DRAWN BY K.P.S.
CHECKED BY H.J.R
DATE 06/2012
SCALE NONE
JOB NUMBER BR100-07-0104
SHEET NUMBER 13 OF 40
OF 86

W:\STR\BOI2\ 2012WORK\ 13.DGN 05-09-2012

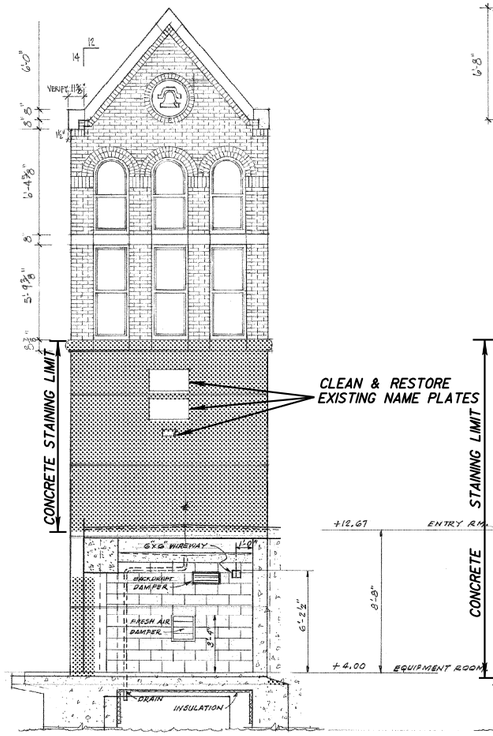

EXISTING NORTH ELEVATION

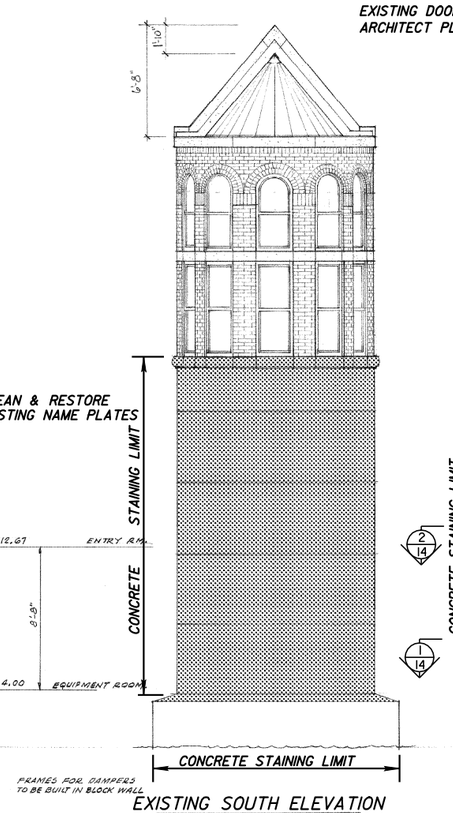

EXISTING SOUTH ELEVATION

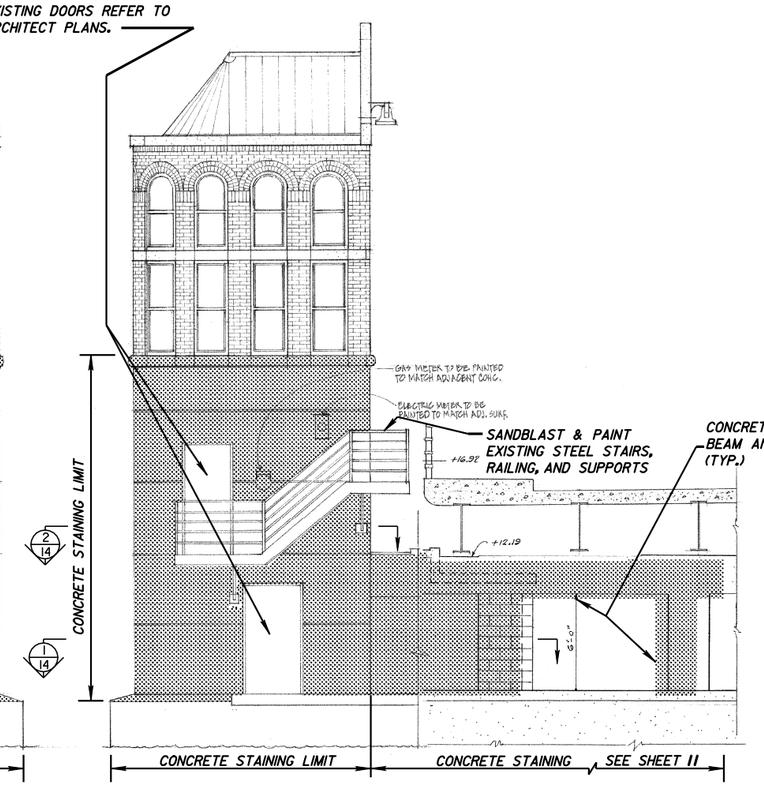

EXISTING EAST ELEVATION

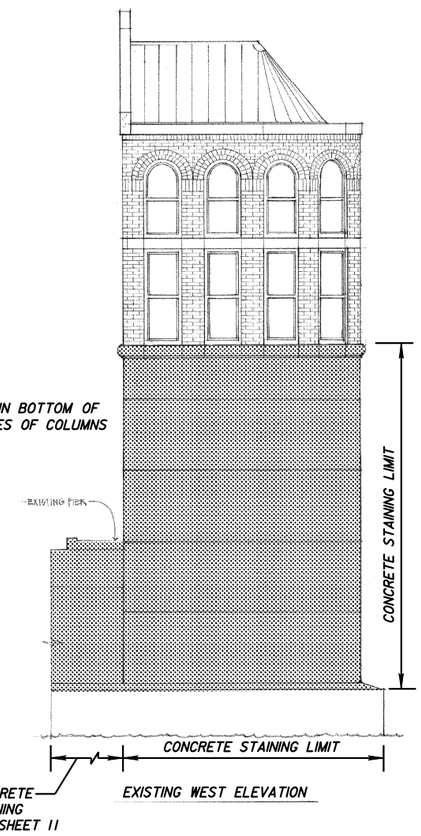

EXISTING WEST ELEVATION

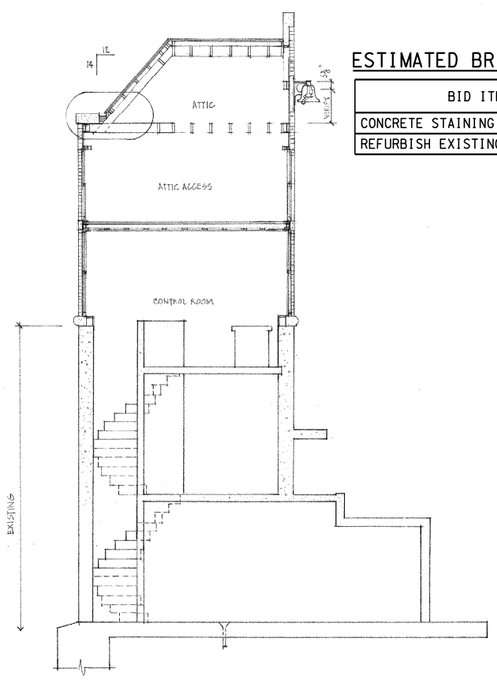

EXISTING SECTION LOOKING WEST

ESTIMATED BRIDGE QUANTITIES SHEET 14

BID ITEM	UNIT	QUANTITY
CONCRETE STAINING (B-40-406)	SF	675
REFURBISH EXISTING NAMEPLATES	LS	1

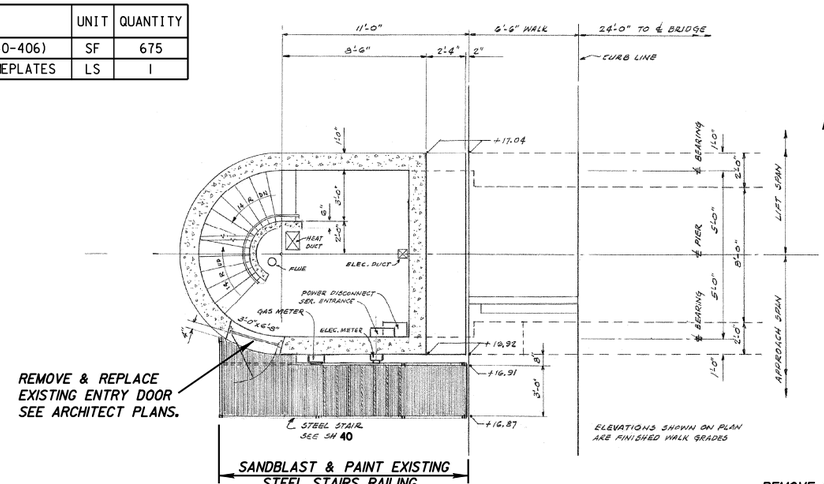

ENTRY ROOM PLAN (2/14)
FLOOR EL. + 12.67

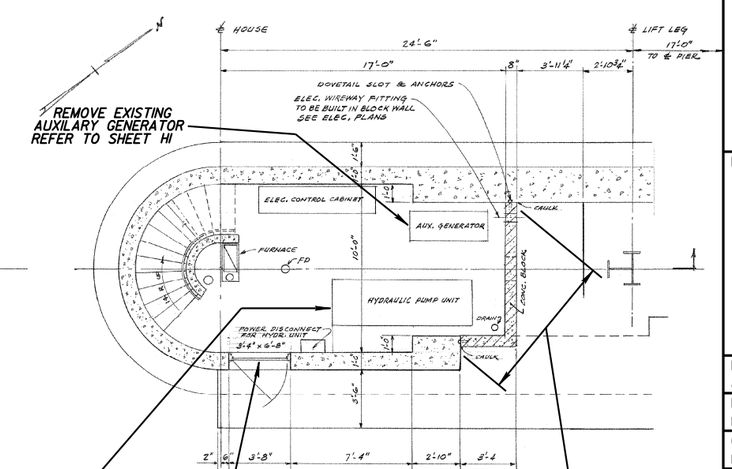

EQUIPMENT ROOM PLAN (1/14)
FLOOR EL. + 4.00

REVISION (A) DIMENSION CHANGES BASED ON WINDOW SHOP DRAWINGS

City of Milwaukee

Department of Public Works

Infrastructure Services Division

PLEASANT STREET LIFT BRIDGE OVER THE MILWAUKEE RIVER
BRIDGE OPERATORS HOUSE

REVISIONS

DESIGNED BY J.D.T.	
DRAWN BY K.P.S.	
CHECKED BY H.J.R.	
DATE 06/2012	SCALE NONE
JOB NUMBER BR100-07-0104	
SHEET NUMBER 14 OF 40	
OF 86	

W:\STR\B012\ 2012WORK\ 14.DGN 04-13-2012

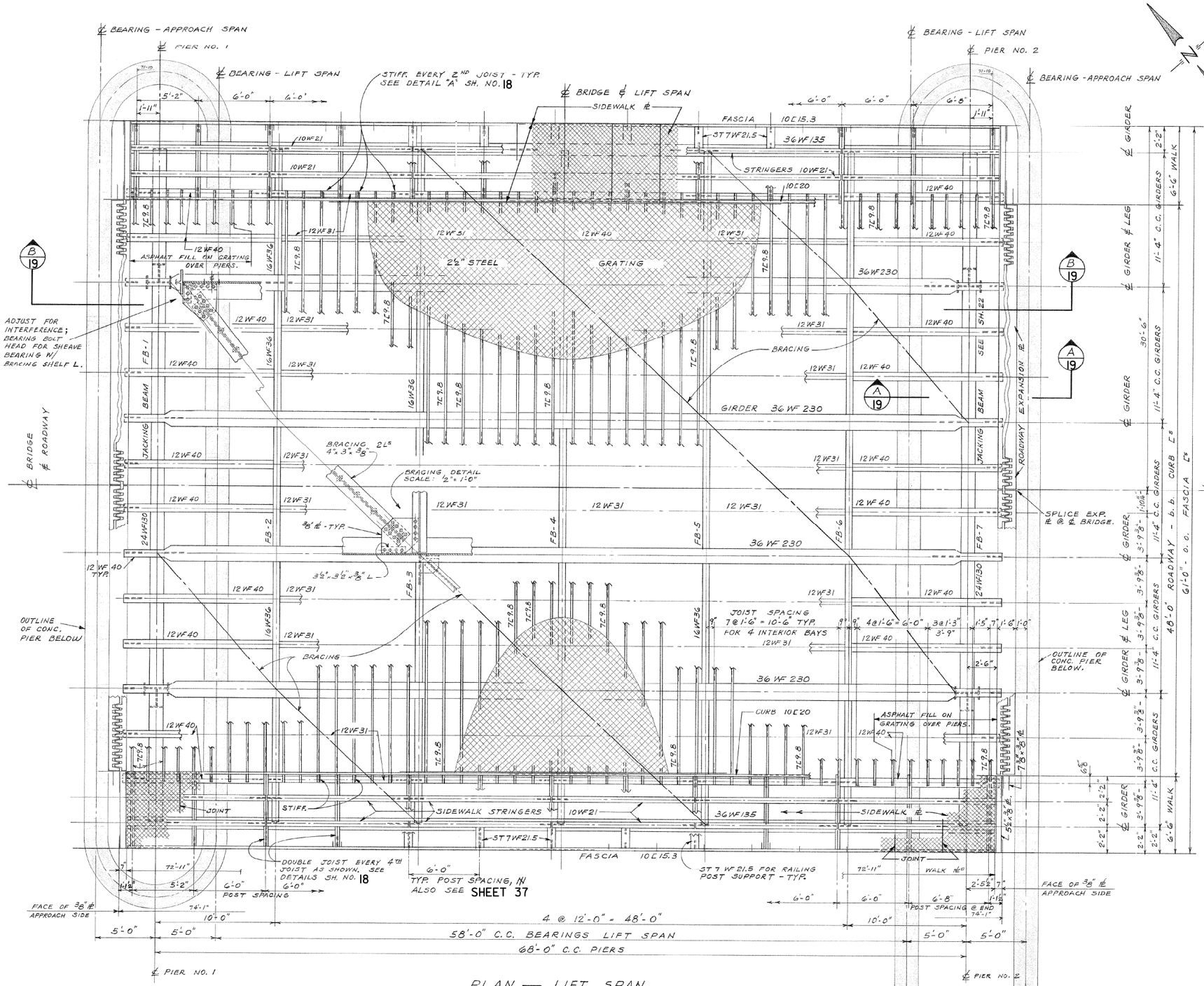

PLAN — LIFT SPAN

CROSS SECTION LIFT SPAN

NOTE:
SEE MACHINERY, ELECTRICAL & HYDRAULIC DRAWINGS FOR MISCELLANEOUS STRUCT. STEEL.
N = EXCEPT AS NOTED

City of Milwaukee

Department of Public Works

Infrastructure Services Division

PLEASANT STREET LIFT BRIDGE OVER THE MILWAUKEE RIVER EXISTING LIFT SPAN

REVISIONS

DESIGNED BY J.J.K.	
DRAWN BY K.P.S.	
CHECKED BY H.J.R.	
DATE 06/2012	SCALE NONE
JOB NUMBER BR100-07-0104	
SHEET NUMBER 15 OF 40	
OF 86	

W:\STR\B012\ 2012WORK\ 15.DGN 04-13-2012

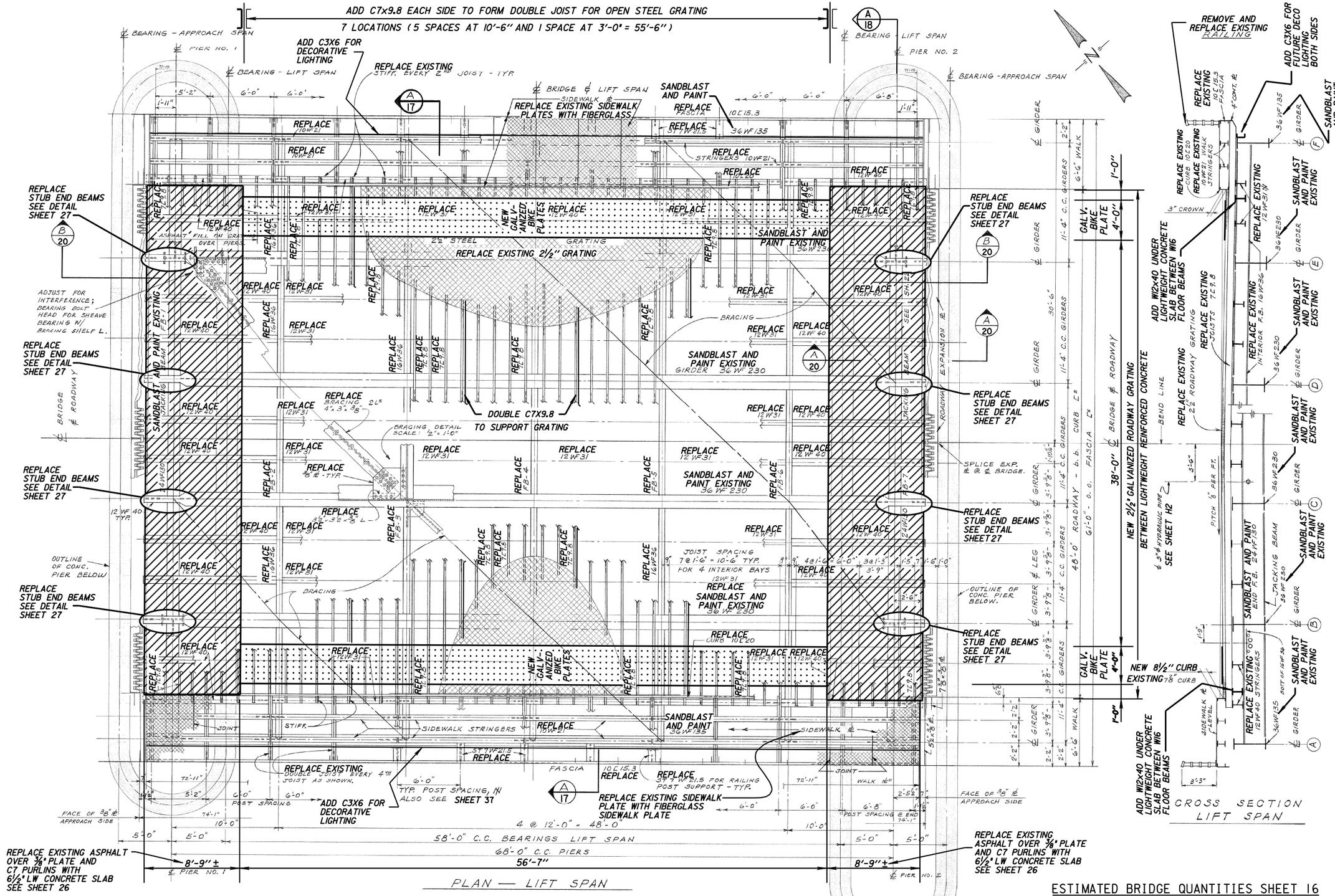

ESTIMATED BRIDGE QUANTITIES SHEET 16

BID ITEM	UNIT	QUANTITY
BRIDGE STRUCTURAL STEEL	LB	95,000

City of Milwaukee

Department of Public Works

Infrastructure Services Division

PLEASANT STREET LIFT BRIDGE OVER THE MILWAUKEE RIVER PROPOSED LIFT SPAN

REVISIONS

DESIGNED BY J.J.K.

DRAWN BY K.P.S.

CHECKED BY H.J.R.

DATE 06/2012 | SCALE NONE

JOB NUMBER BR100-07-0104

SHEET NUMBER 16 OF 40

OF 86

W:\STR\BO12\ 2012WORK\ 16.DGN 04-13-2012

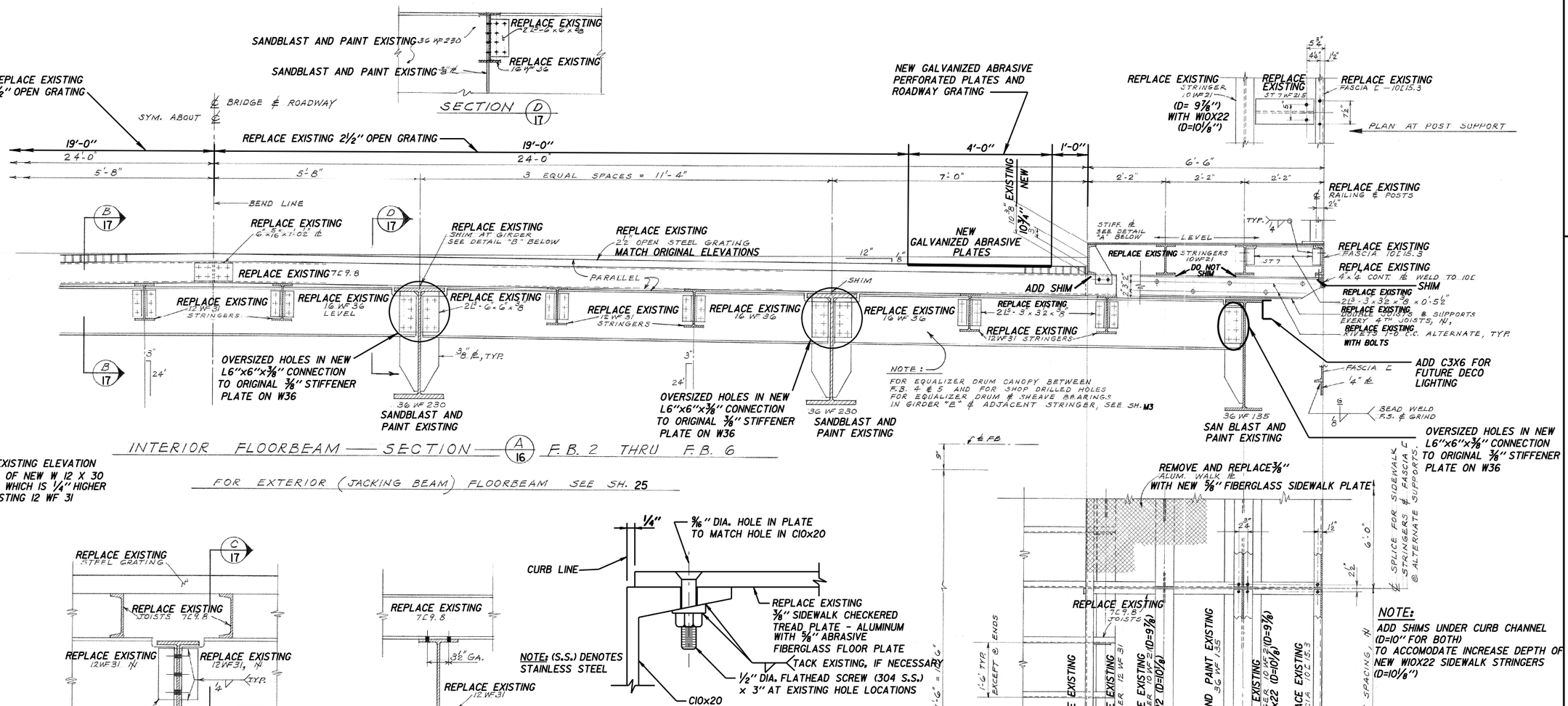

NOTE:
MATCH EXISTING ELEVATION FOR TOP OF NEW W 12 X 30 STRINGER WHICH IS ¼" HIGHER THAN EXISTING 12 WF 31

NOTE:
ADD SHIMS UNDER CURB CHANNEL (D=10" FOR BOTH) TO ACCOMODATE INCREASE DEPTH OF NEW W10X22 SIDEWALK STRINGERS (D=10⅛")

NOTES: ORIGINAL CONSTRUCTION

1. ALL SHOP CONNECTIONS - WELDED OR RIVETED.
2. ALL FIELD CONNECTIONS ¾"⊘ HIGH STRENGTH BOLTS, N ASTM A-325 FRICTION TYPE.
3. N = EXCEPT AS NOTED

REHAB NOTES:

1. REPLACE EXISTING STRUCTURAL STEEL ELEMENTS (JOISTS, STRINGERS, FLOOR BEAMS, BRACING, GUSSET PLATES, CONNECTIONS, ETC.) WITH PAINTED GALVANIZED STEEL.
2. EXISTING W36 GIRDERS AND W24 JACKING BEAMS TO REMAIN FOR SANDBLASTING AND PAINTING.
3. PROVIDE OVERSIZED HOLES (⅞" DIAMETER HOLES FOR ¾" DIAMETER BOLTS) IN NEW GALVANIZED STEEL WHERE NEW GALVANIZED STEEL IS FIELD BOLTED TO ORIGINAL STEEL.
4. PROVIDE OVERSIZED HOLES (⅞" DIAMETER FOR ¾" DIAMETER BOLTS) IN NEW GALVANIZED STEEL WHERE NEW GALVANIZED IS FIELD BOLTED TO NEW GALVANIZED STEEL.
5. USE BOLT PLATE CONNECTIONS FOR DECK GRATING TO FRAMES.
6. TOUCH UP WELDED AREAS OF GALVANIZED ELEMENTS WHERE APPLICABLE.

City of Milwaukee
Department of Public Works
Infrastructure Services Division

PLEASANT STREET LIFT BRIDGE OVER THE MILWAUKEE RIVER
LIFT SPAN - CROSS SECTION

REVISIONS

DESIGNED BY J.J.K.	
DRAWN BY K.P.S.	
CHECKED BY H.J.R.	
DATE 06/2012	SCALE NONE
JOB NUMBER BR100-07-0104	
SHEET NUMBER 17 OF 40	
OF 86	

W:\STR\BOI2\ 2012WORK\ 17.DGN 04-13-2012

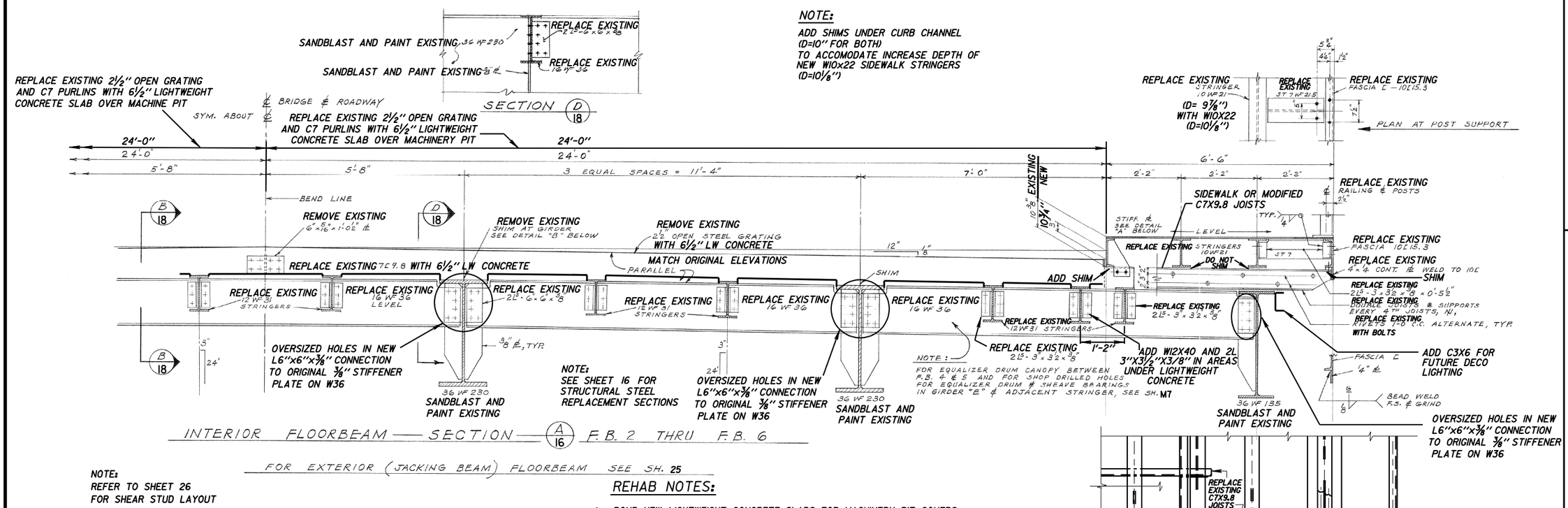

NOTE:
REFER TO SHEET 26
FOR SHEAR STUD LAYOUT

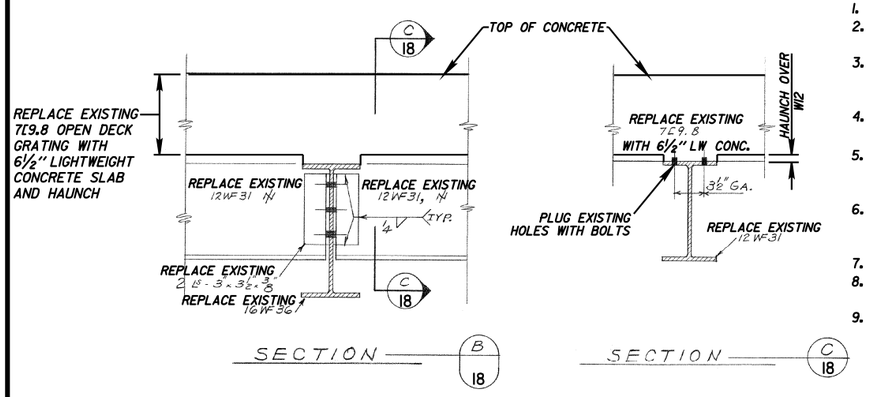

REHAB NOTES:

1. POUR NEW LIGHTWEIGHT CONCRETE SLABS FOR MACHINERY PIT COVERS.
2. PLUG ABANDONED HOLES IN TOP FLANGES OR STRINGERS, FLOOR BEAMS AND GIRDERS (BELOW NEW CONCRETE HAUNCHES) WITH BOLTS.
3. REPLACE EXISTING STRUCTURAL STEEL ELEMENTS (JOISTS, STRINGERS, FLOOR BEAMS, BRACING, GUSSET PLATES, CONNECTIONS, ETC.) WITH PAINTED GALVANIZED STEEL.
4. EXISTING W36 GIRDERS AND W24 JACKING BEAMS TO REMAIN FOR SANDBLASTING AND PAINTING.
5. PROVIDE OVERSIZED HOLES (⅞" DIAMETER HOLES FOR ¾" DIAMETER BOLTS) IN NEW GALVANIZED STEEL TYPICALLY WHERE NEW GALVANIZED STEEL IS FIELD BOLTED TO ORIGINAL STEEL.
6. PROVIDE OVERSIZED HOLES (1" DIAMETER FOR ⅞" DIAMETER BOLTS) IN NEW GALVANIZED STEEL WHERE NEW GALVANIZED IS FIELD BOLTED TO NEW GALVANIZED STEEL.
7. USE BOLT PLATE CONNECTIONS FOR DECK GRATING TO FRAMES.
8. TOUCH UP WELDED AREAS OF GALVANIZED ELEMENTS WHERE APPLICABLE.
9. INSTALL OPEN GRATING AND LIFT SPAN COMPRESSION SEAL JOINT PRIOR TO POURING LIGHTWEIGHT LIFT SPAN CONCRETE SLAB MACHINERY PIT COVERS.

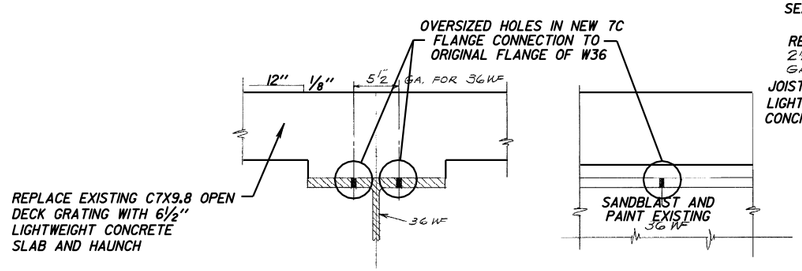

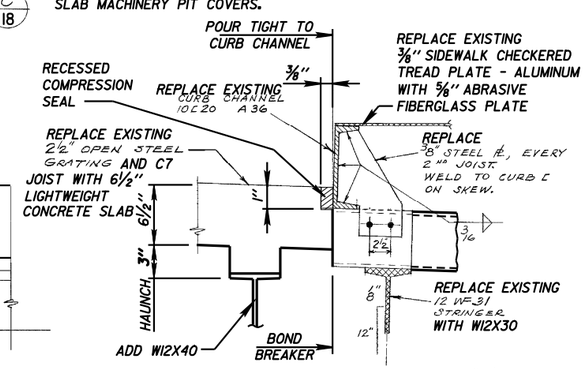

NOTE:
RECESSED COMPRESSION SEAL WILL BE INCLUDED UNDER BID ITEM "LIGHTWEIGHT CONCRETE"

City of Milwaukee
Department of Public Works
Infrastructure Services Division

PLEASANT STREET LIFT BRIDGE OVER THE MILWAUKEE RIVER
LIFT SPAN - CROSS SECTION THRU LIGHTWEIGHT CONCRETE

REVISIONS

DESIGNED BY J.J.K.	
DRAWN BY K.P.S.	
CHECKED BY H.J.R.	
DATE 06/2012	SCALE NONE
JOB NUMBER BR100-07-0104	
SHEET NUMBER 18 OF 40	
OF 86	

W:\STR\B0112\ 2012WORK\ 18.DGN 04-13-2012

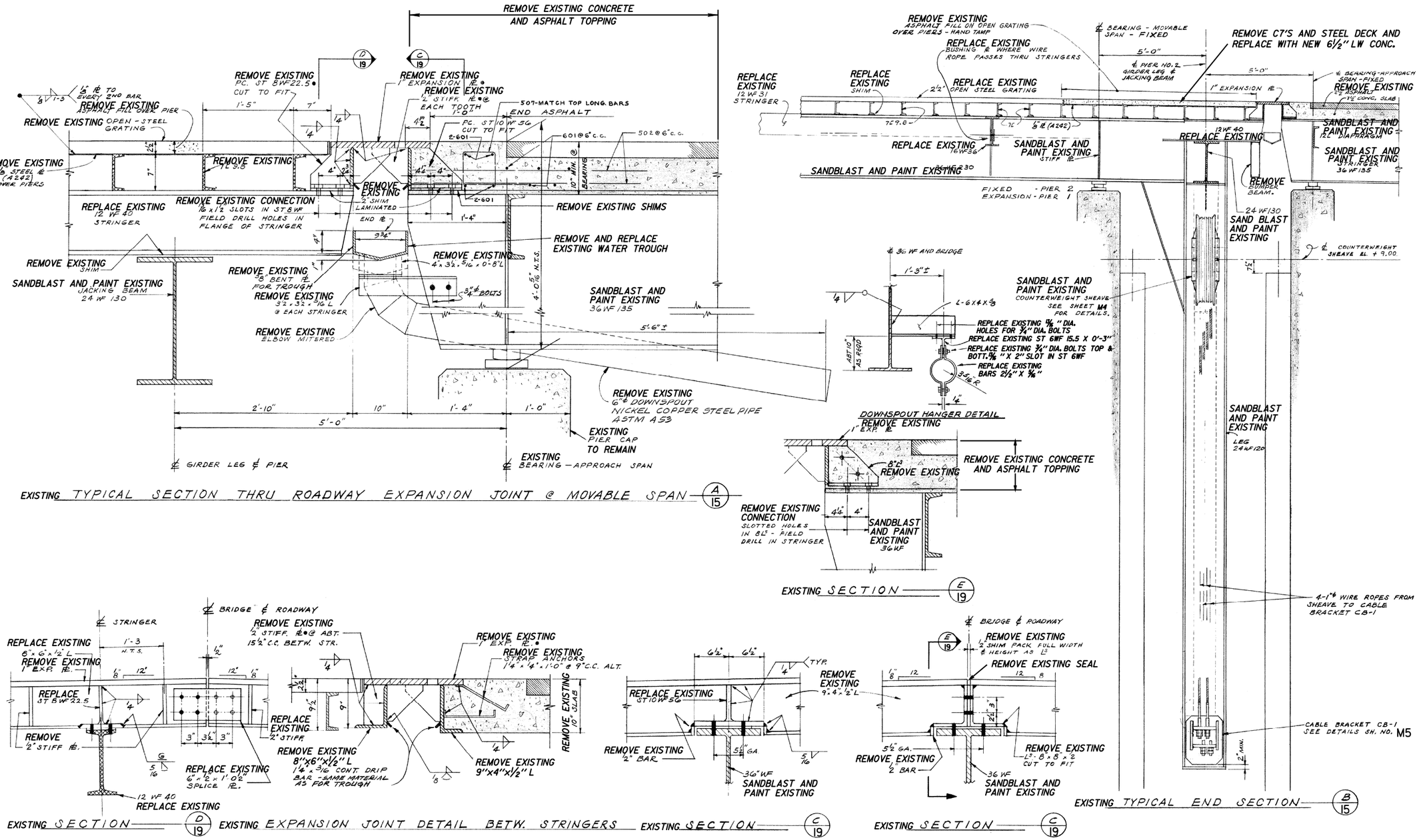

REMOVAL OF EXISTING FINGER EXPANSION JOINT - THIS SHEET
NEW EXPANSION JOINT AT BREAK - SHEETS 20, 21 AND 23

EXPANSION JOINT MATERIAL MARKED THUS ● SHALL BE ASTM A242 - ALL OTHER MATERIAL SHALL BE ASTM A36

City of Milwaukee
Department of Public Works
Infrastructure Services Division

PLEASANT STREET LIFT BRIDGE OVER THE MILWAUKEE RIVER
EXISTING LIFTING LEG AND EXPANSION JOINT

REVISIONS

DESIGNED BY J.J.K.	
DRAWN BY K.P.S.	
CHECKED BY H.J.R.	
DATE 06/2012	SCALE NONE
JOB NUMBER BR100-07-0104	
SHEET NUMBER 19 OF 40	
OF 86	

W:\STR\BO12\ 2012WORK\ 19.DGN 04-24-2012

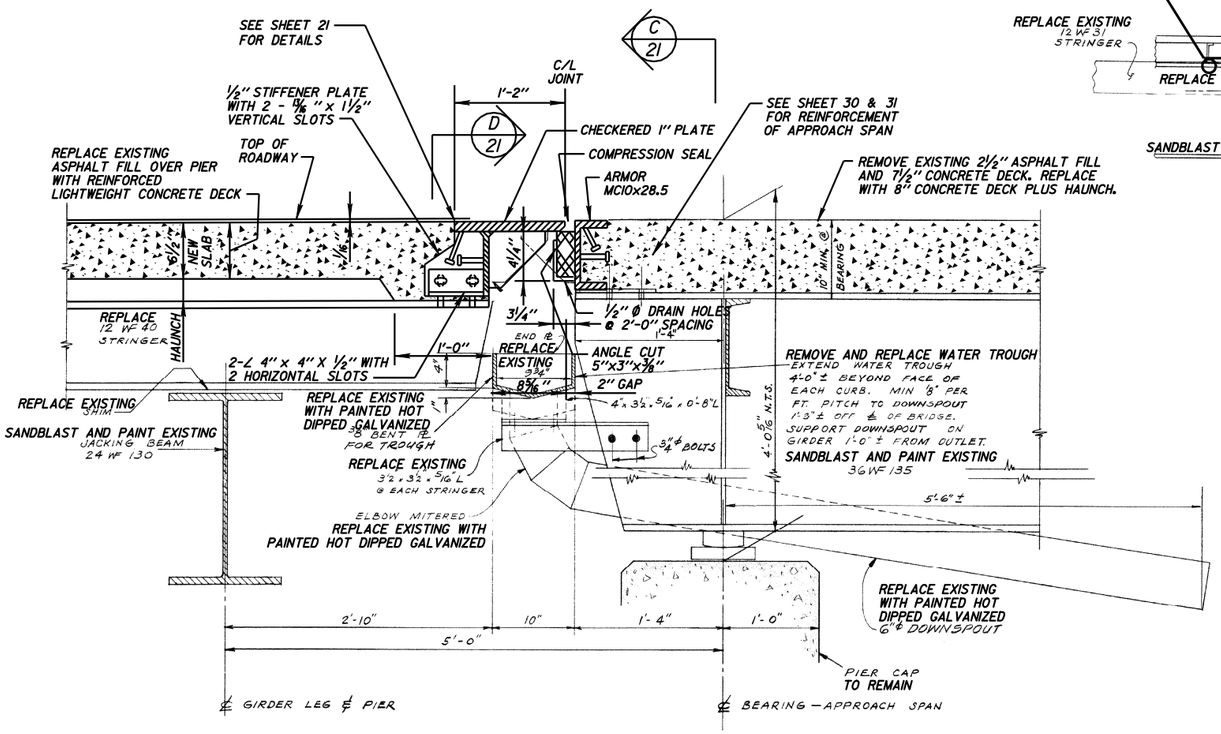

TYPICAL SECTION THRU ROADWAY EXPANSION JOINT @ MOVABLE SPAN (A/16)

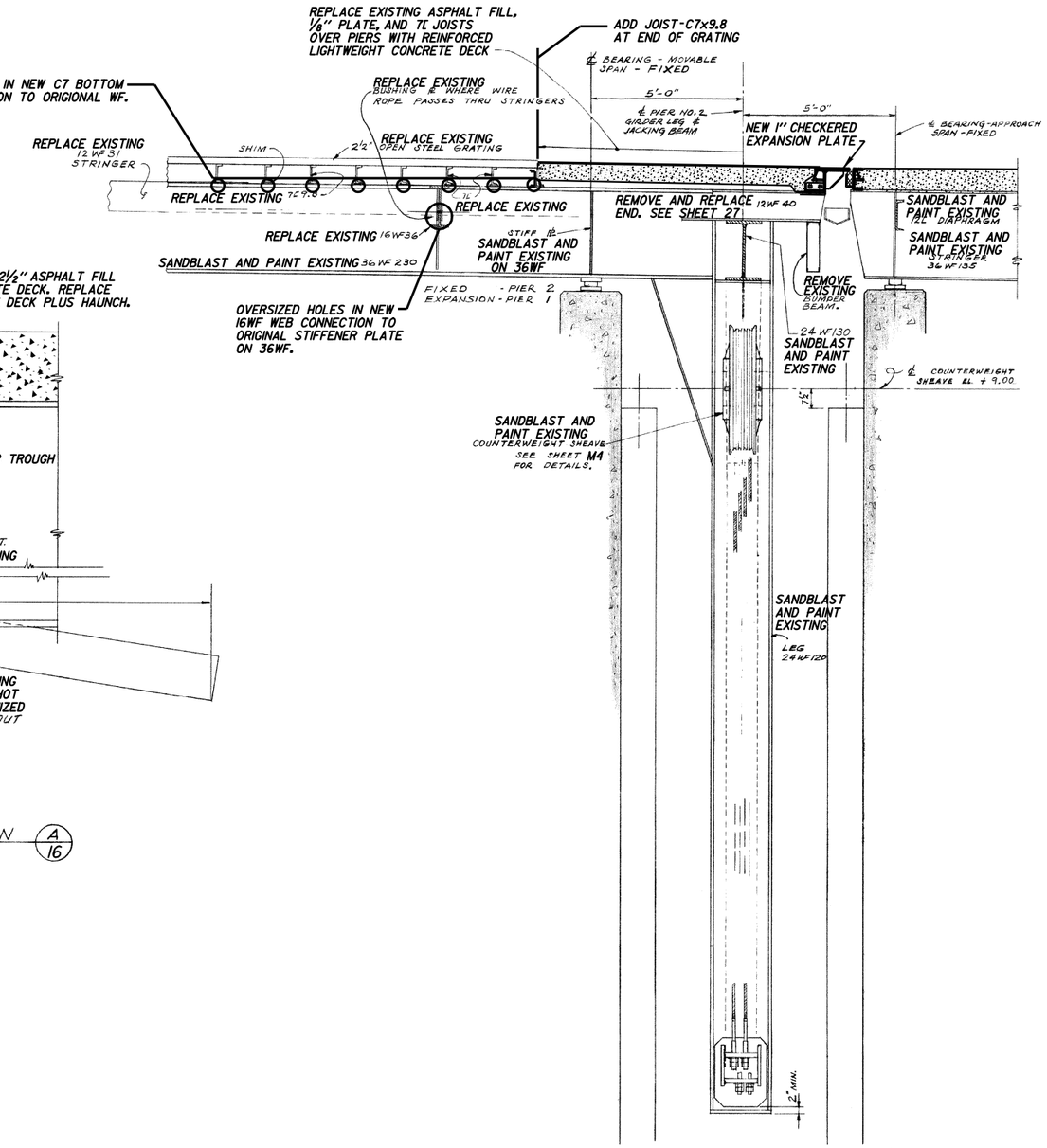

TYPICAL NEW END SECTION (B/16)

NEW EXPANSION JOINT AT BREAK - THIS SHEET
REMOVAL OF EXISTING FINGER JOINT - SHEET 19 AND 22

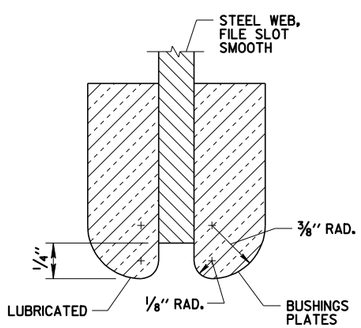

CABLE GUIDE BUSHING PLATE SECTION

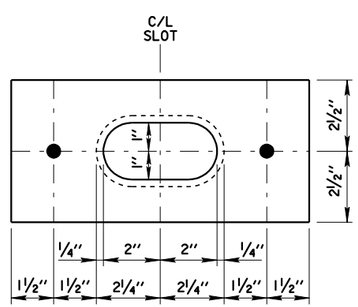

LUBRICATED BRONZE BUSHING PLATES 5"x1/2"x10 1/2" (2 PER ROPE). CHANGE SIZE OF PLATE TO SUIT CONDITIONS.

CABLE GUIDE BUSHING PLATE

NOTE:
REFER TO MECHANICAL DRAWINGS FOR DETAILS, QUNTANTIES AND FLOORBEAM LOCATIONS FOR CABLE GUIDE BUSHING PLATES

City of Milwaukee
Department of Public Works
Infrastructure Services Division

PLEASANT STREET LIFT BRIDGE OVER THE MILWAUKEE RIVER LIFTING LEG AND EXPANSION JOINT

REVISIONS

DESIGNED BY J.D.T.	
DRAWN BY K.P.S.	
CHECKED BY H.J.R.	
DATE 06/2012	SCALE NONE
JOB NUMBER BRI00-07-0104	
SHEET NUMBER 20 OF 40	
OF 86	

W:\STR\B012\ 2012WORK\ 20.DGN 04-24-2012

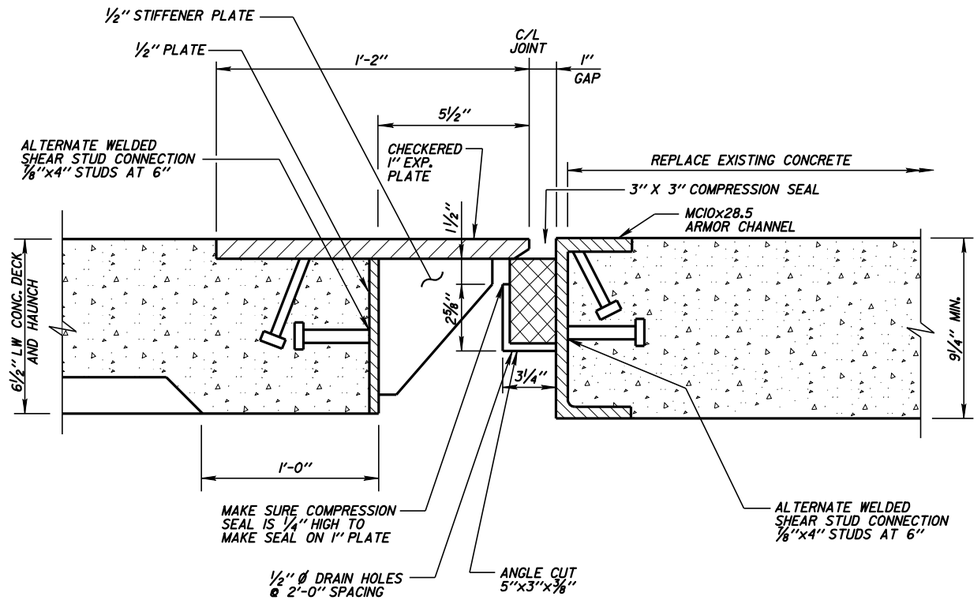

EXPANSION JOINT DETAIL BETWEEN STRINGERS

REINFORCING STEEL NOT SHOWN

NOTE:
SEE SHEETS 30 AND 31 FOR APPROACH STEEL
SEE SHEET 26 FOR MACHINERY PIT COVER STEEL

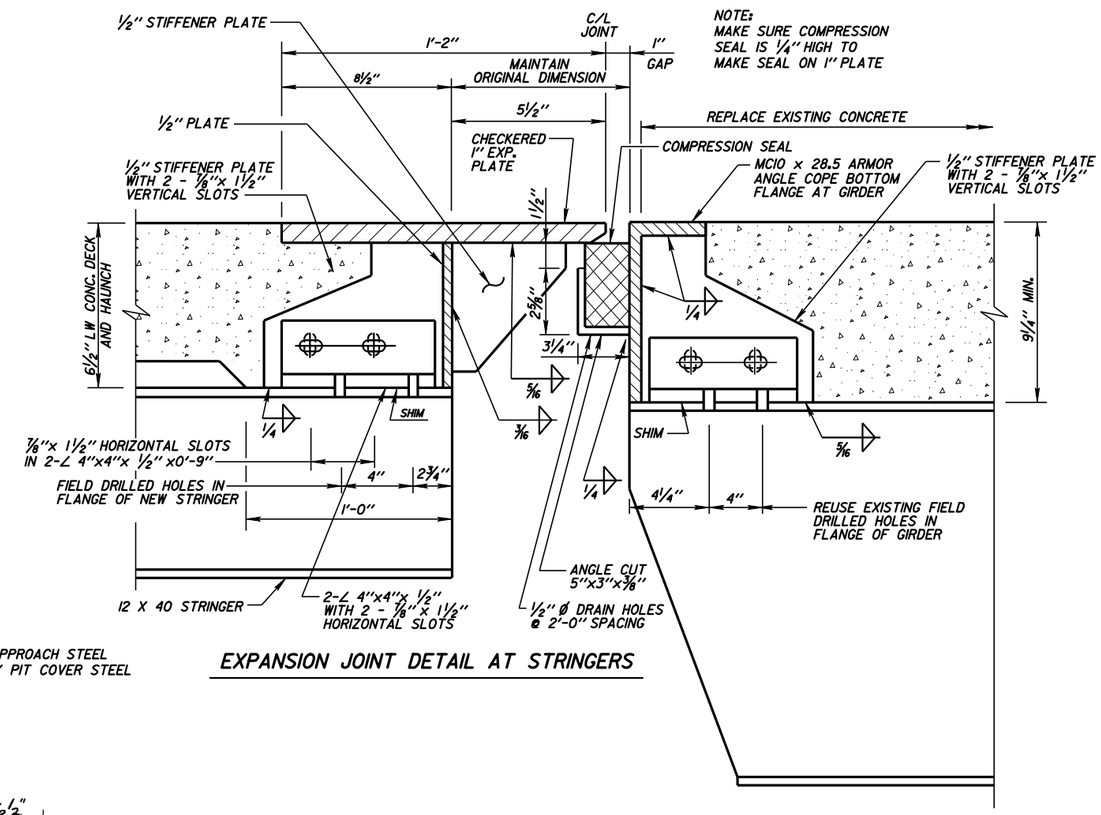

EXPANSION JOINT DETAIL AT STRINGERS

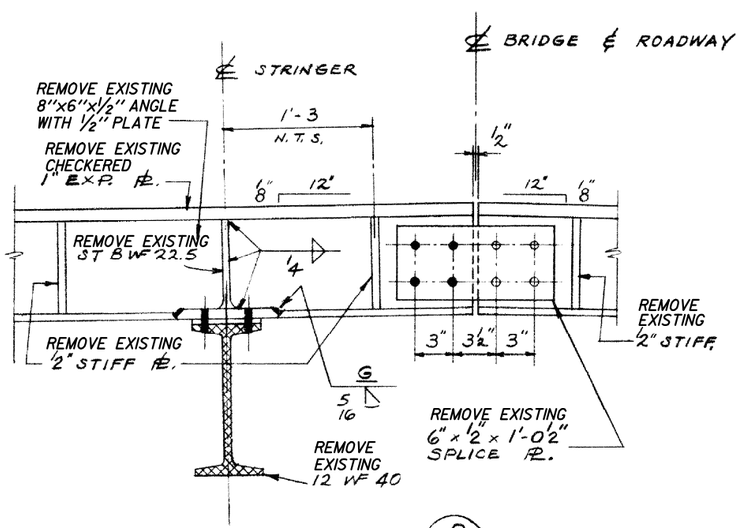

SECTION D/20

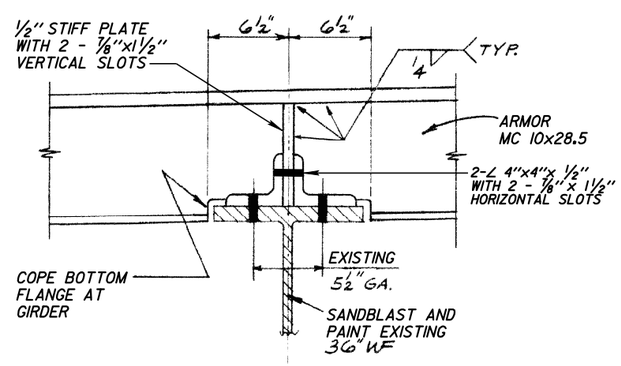

SECTION C/20

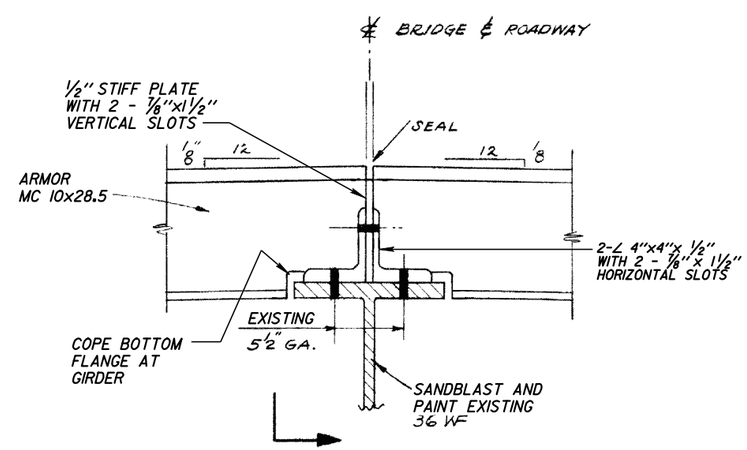

SECTION C/20

SPLICE DETAIL - APPROACH SIDE

NOTE:
STRUCTURAL STEEL SHOWN ON THIS SHEET (EXCEPT STRINGERS AND GIRDERS) WILL BE INCLUDED UNDER "LIFT SPAN ROADWAY JOINTS"

City of Milwaukee
Department of Public Works
Infrastructure Services Division

PLEASANT STREET LIFT BRIDGE
OVER THE MILWAUKEE RIVER
LIFTING LEG AND EXPANSION JOINT DETAILS

REVISIONS

DESIGNED BY J.D.T.
DRAWN BY K.P.S.
CHECKED BY H.J.R.
DATE 06/2012 | SCALE NONE
JOB NUMBER BR100-07-0104
SHEET NUMBER 21 OF 40
OF 86

W:\STR\B0112\ 2012WORK\ 21.DGN 04-24-2012

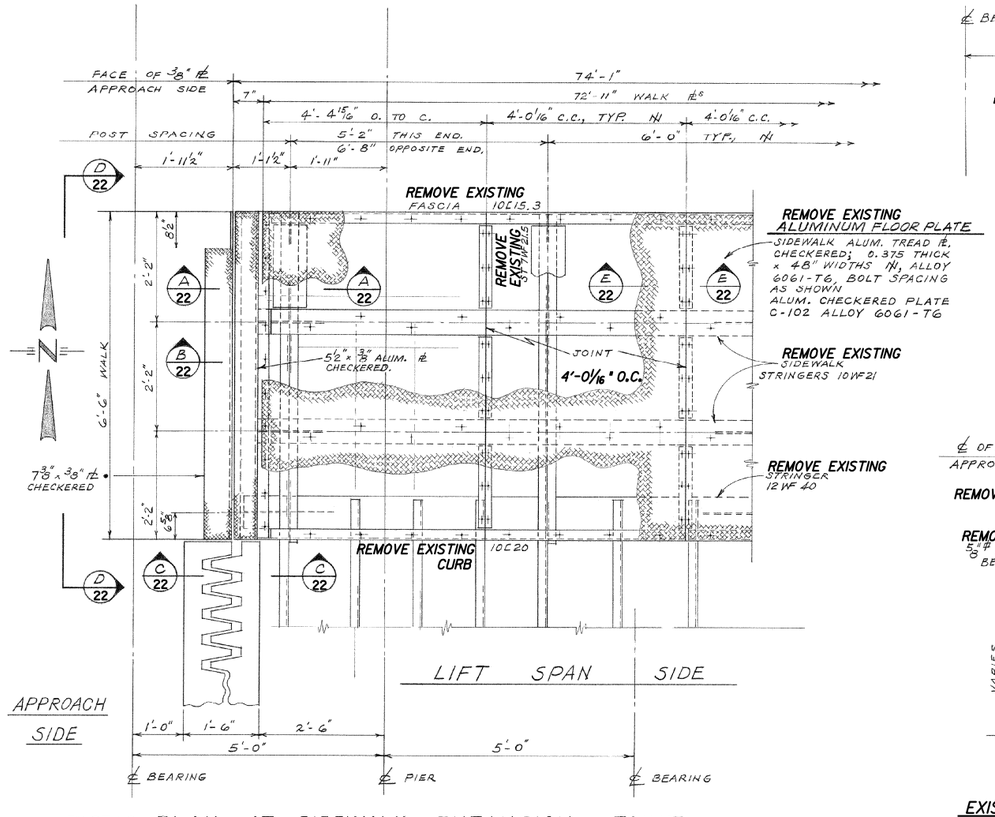

EXISTING PLAN AT SIDEWALK EXPANSION JOINT

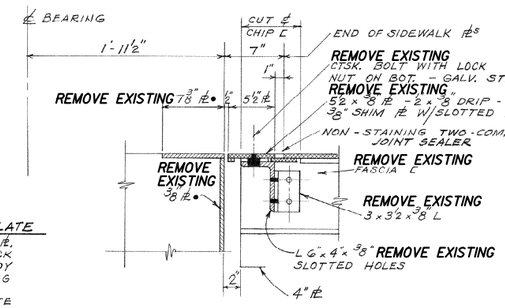

EXISTING SECTION A/22

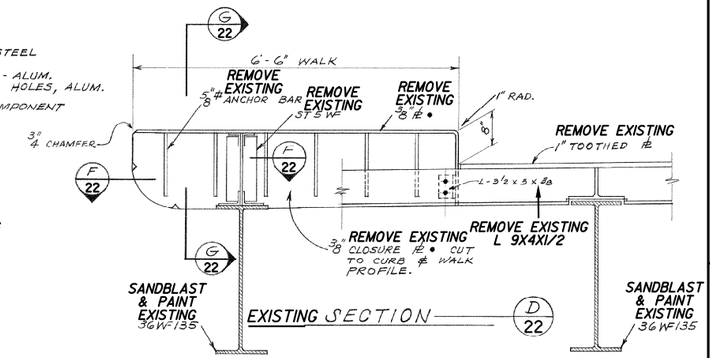

EXISTING SECTION D/22

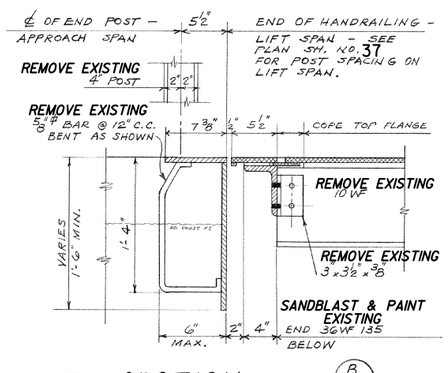

EXISTING SECTION B/22

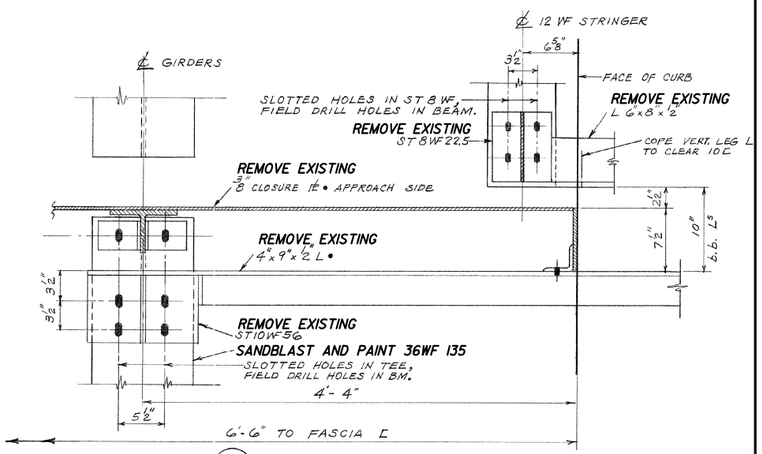

EXISTING SECTION F/22

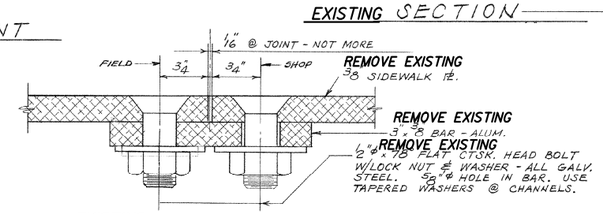

EXISTING SECTION E/22

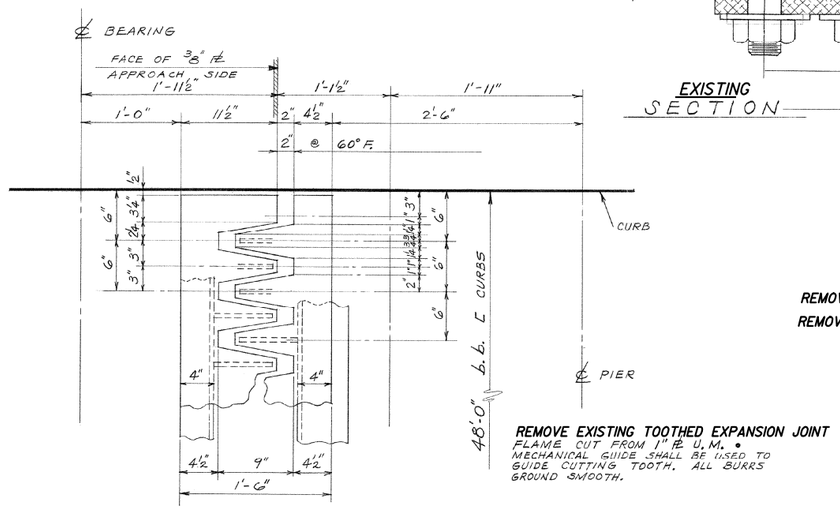

REMOVE EXISTING TOOTHED EXPANSION PL
FLAME CUT FROM 1" PL U.M. • MECHANICAL GUIDE SHALL BE USED TO GUIDE CUTTING TOOTH. ALL BURRS GROUND SMOOTH.

EXISTING TOOTHED EXPANSION PL DETAIL

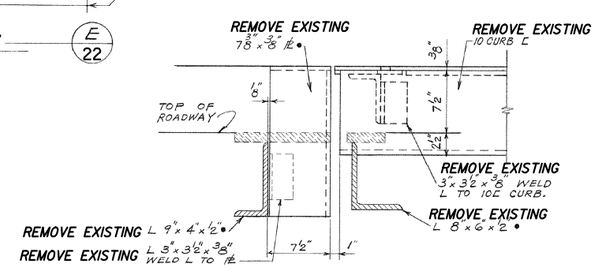

EXISTING SECTION C/22

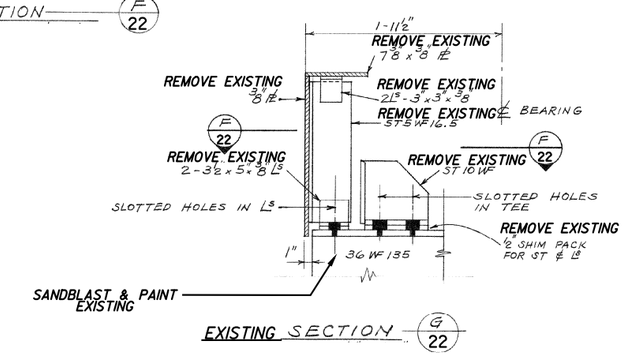

EXISTING SECTION G/22

REMOVAL OF EXISTING SIDEWALK AND FINGER JOINT- THRU STREET

NEW SIDEWALK AND BREAK JOINT - SHEET 23

City of Milwaukee

Department of Public Works

Infrastructure Services Division

PLEASANT STREET LIFT BRIDGE OVER THE MILWAUKEE RIVER
EXISTING EXPANSION JOINT AT LIFT SPAN

REVISIONS

DESIGNED BY J.J.K.	
DRAWN BY K.P.S.	
CHECKED BY H.J.R.	
DATE 06/2012	SCALE NONE
JOB NUMBER BR100-07-0104	
SHEET NUMBER 22 OF 40	
OF 86	

W:\STR\B0112\ 2012WORK\ 22.DGN 04-17-2012

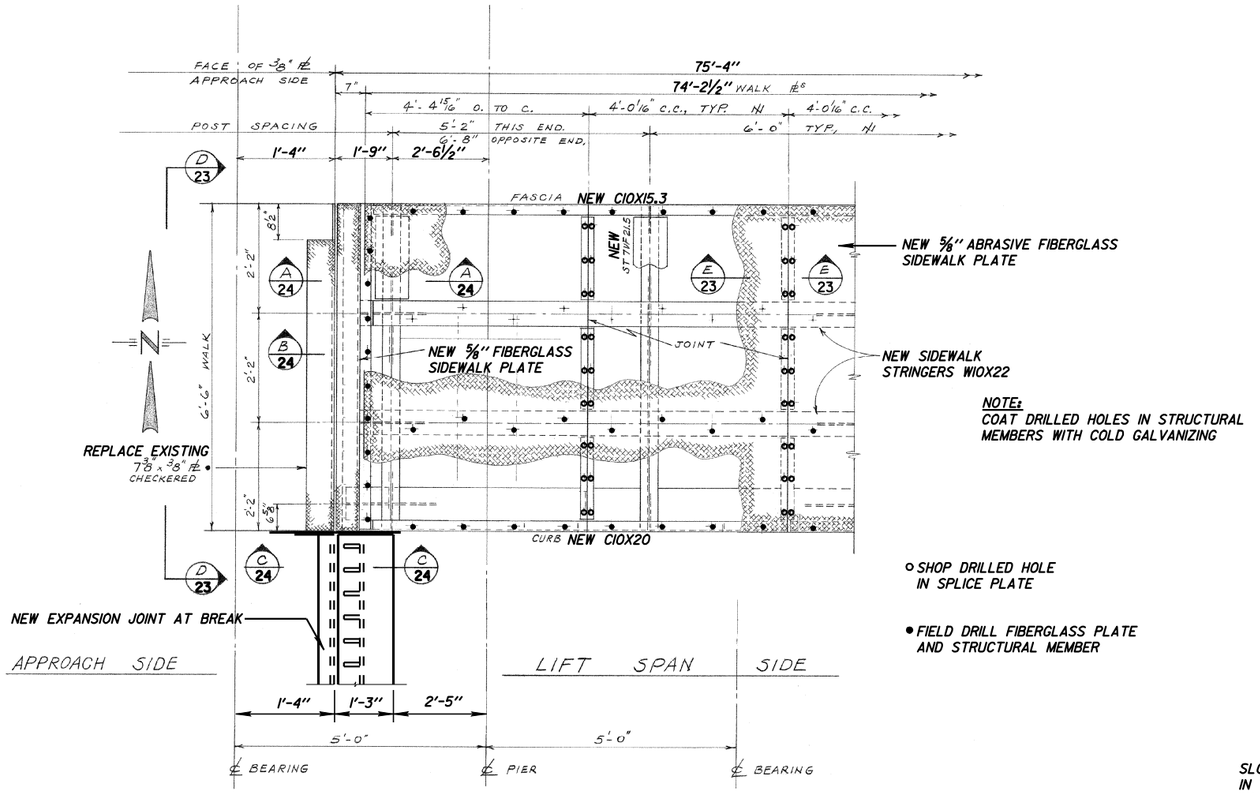

PLAN AT SIDEWALK EXPANSION JOINT AT BREAK

NOTE:
COAT DRILLED HOLES IN STRUCTURAL MEMBERS WITH COLD GALVANIZING

○ SHOP DRILLED HOLE IN SPLICE PLATE

● FIELD DRILL FIBERGLASS PLATE AND STRUCTURAL MEMBER

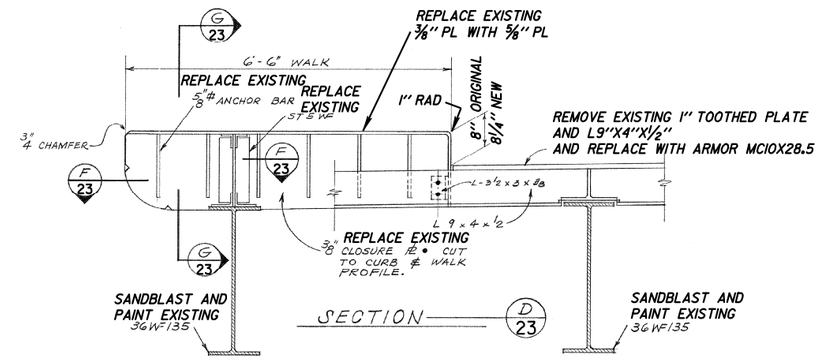

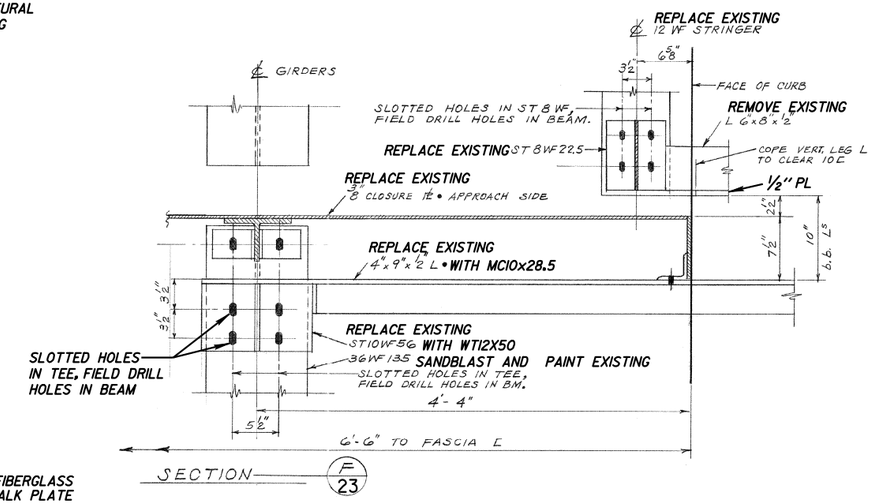

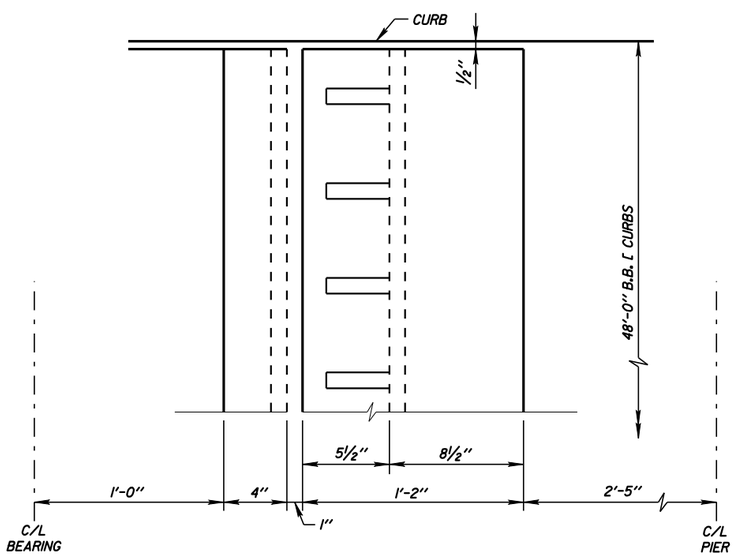

EXPANSION PLATE DETAIL AT BREAK PLAN

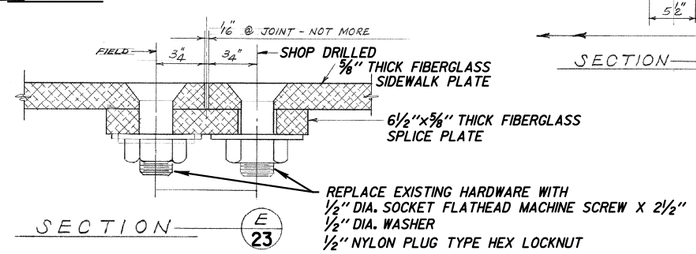

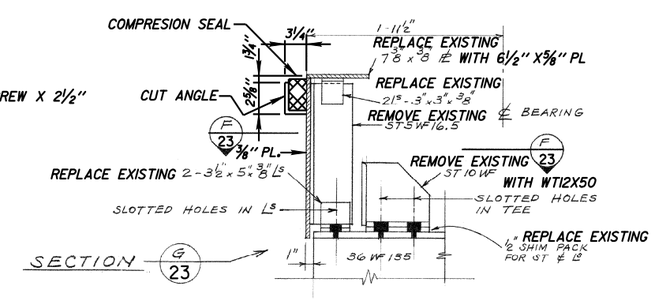

ESTIMATED BRIDGE QUANTITIES SHEET 23

BID ITEM	UNIT	QUANTITY
FIBERGLASS SIDEWALK FLOOR PLATES	SF	980

NOTE:
REMOVE EXISTING TOOTHED EXPANSION JOINT.

NEW SIDEWALK AND BREAK JOINT - THIS SHEET

FOR REMOVAL OF EXISTING SIDEWALK AND FINGER JOINT SEE SHEET 22

NOTE:

NON-STAIN JOINT SEALER:
NON-STAINING GRAY TWO-COMPONENT POLYSULFIDE LIQUID POLYMER (GUN GRADE) WITH SURFACE PRIME

ALL SHOP CONNECTIONS WELDED.
ALL FIELD CONNECTIONS HIGH STRENGTH BOLTS.
EXPANSION JOINT MATERIAL MARKED THUS ● SHALL BE ASTM A242 - ALL OTHER STEEL SHALL BE ASTM A36.

STUCTURAL STEEL SHOWN ON THIS SHEET (EXCEPT CURBS, STRINGERS, JOIST, AND GIRDERS) WILL BE INCLUDED UNDER "LIFTSPAN SIDEWALK JOISTS".

City of Milwaukee

Department of Public Works

Infrastructure Services Division

PLEASANT STREET LIFT BRIDGE OVER THE MILWAUKEE RIVER EXPANSION JOINT AT LIFT SPAN

REVISIONS

DESIGNED BY J.D.T.	
DRAWN BY K.P.S.	
CHECKED BY H.J.R.	
DATE 06/2012	SCALE NONE
JOB NUMBER BR100-07-0104	
SHEET NUMBER 23 OF 40	
OF 86	

W:\STR\B0112\ 2012WORK\ 23.DGN 04-17-2012

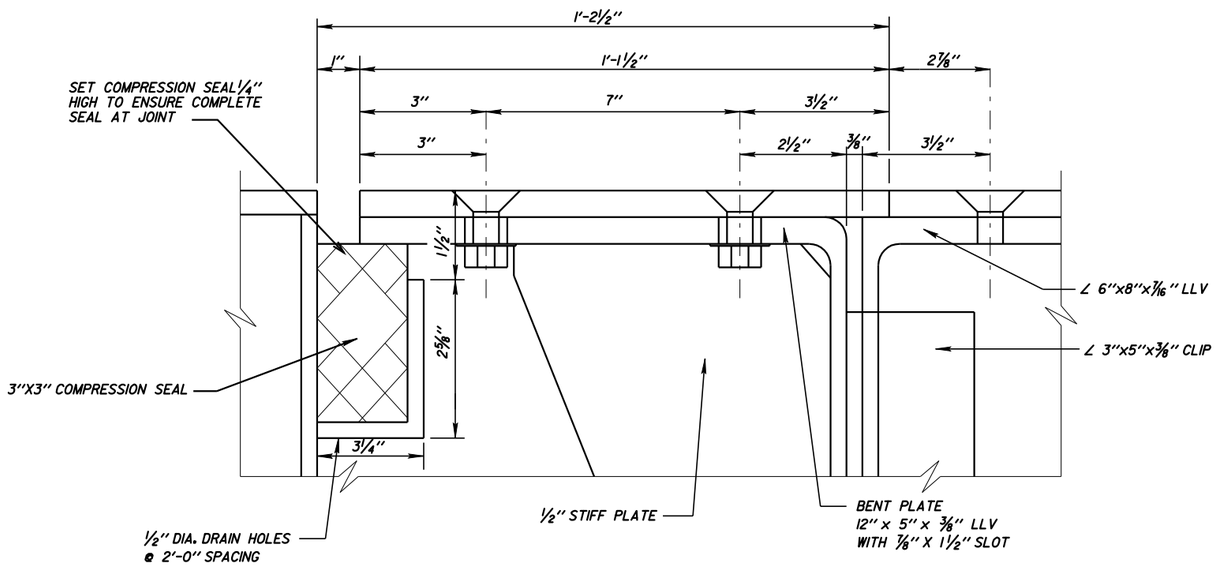

DETAIL A

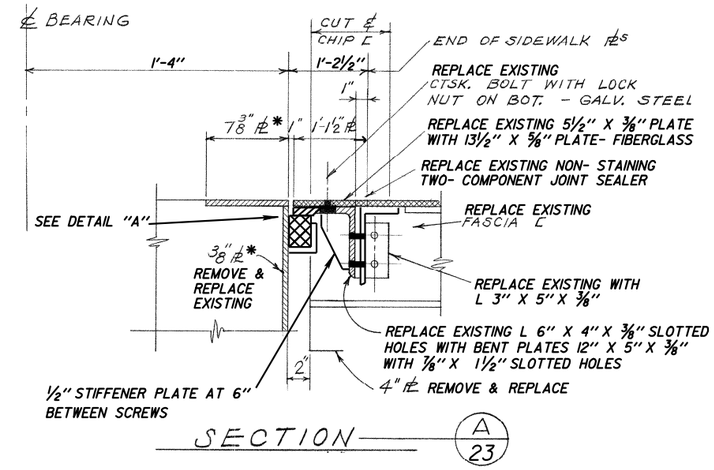

SECTION A/23

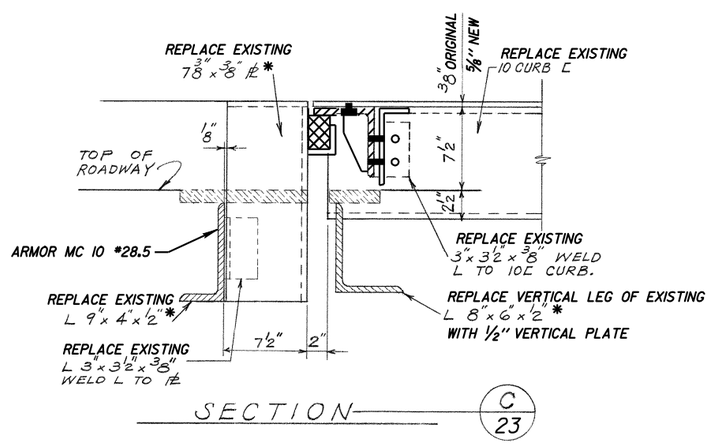

SECTION C/23

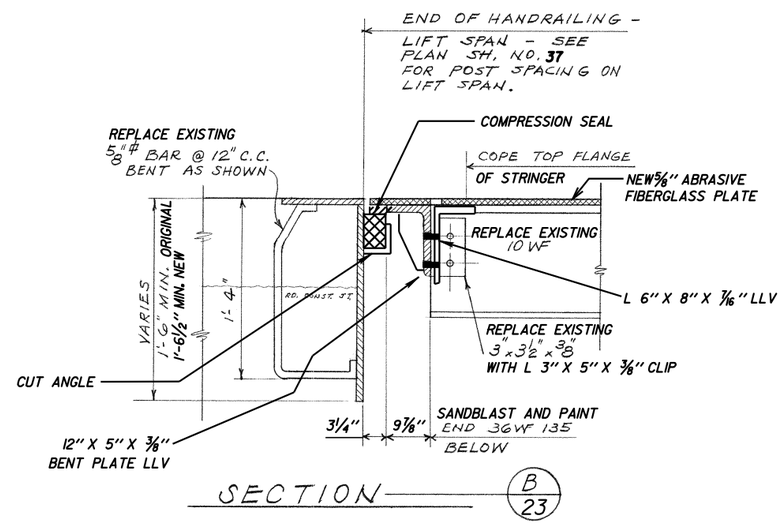

SECTION B/23

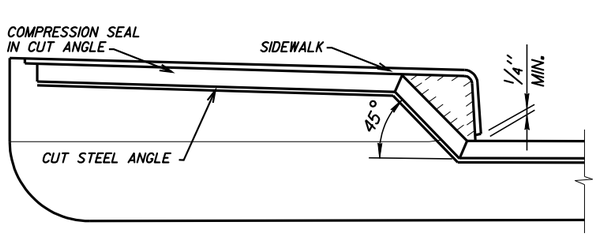

NEW PARTIAL ELEVATION
SECTION AT PARTIAL SIDEWALK

NOTE:

STRUCTURAL STEEL SHOWN ON THIS SHEET (EXCEPT FASCIA AND STRINGERS) WILL BE INCLUDED UNDER "LIFT SPAN SIDEWALK JOINTS".

ALL SHOP CONNECTIONS WELDED.

ALL FIELD CONNECTIONS GALVANIZED HIGH STRENGTH BOLTS.

EXPANSION JOINT MATERIAL MARKED THUS * SHALL BE ASTM A242 - ALL OTHER STEEL SHALL BE ASTM A36

City of Milwaukee

Department of Public Works

Infrastructure Services Division

PLEASANT STREET LIFT BRIDGE
OVER THE MILWAUKEE RIVER
EXPANSION JOINT AT LIFT SPAN DETAILS

REVISIONS

DESIGNED BY J.D.T.	
DRAWN BY K.P.S.	
CHECKED BY H.J.R.	
DATE 06/2012	SCALE NONE
JOB NUMBER BR100-07-0104	
SHEET NUMBER 24 OF 40	
OF 86	

W:\STR\B0112\ 2012WORK\ 24.DGN 04-17-2012

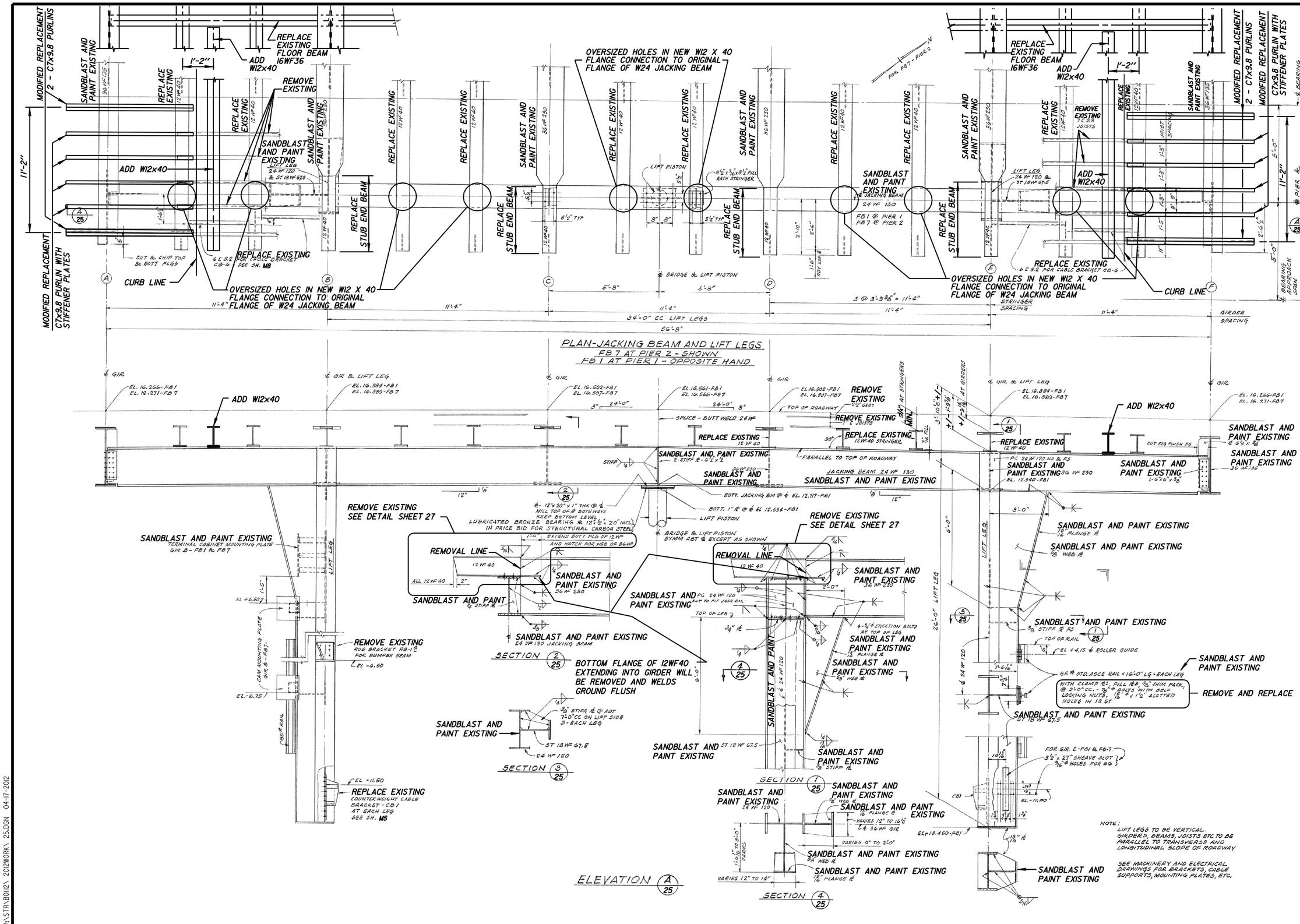

City of Milwaukee

Department of Public Works

Infrastructure Services Division

PLEASANT STREET LIFT BRIDGE OVER THE MILWAUKEE RIVER

LIFT SPAN JACKING BEAM AND LIFTING LEG

REVISIONS

DESIGNED BY J.J.K.	
DRAWN BY K.P.S.	
CHECKED BY H.J.R.	
DATE 06/2012	SCALE NONE
JOB NUMBER BR100-07-0104	
SHEET NUMBER 25 OF 40	
OF 86	

W:\STR\BO12\ 2012WORK\ 25.DGN 04-17-2012

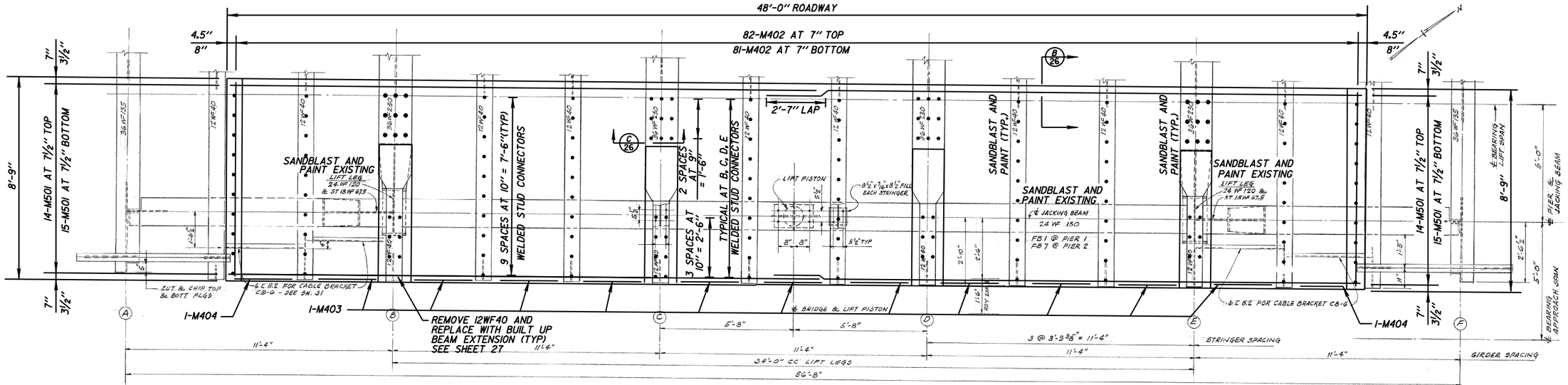

PLAN - LIGHTWEIGHT CONCRETE MACHINERY PIT SLAB

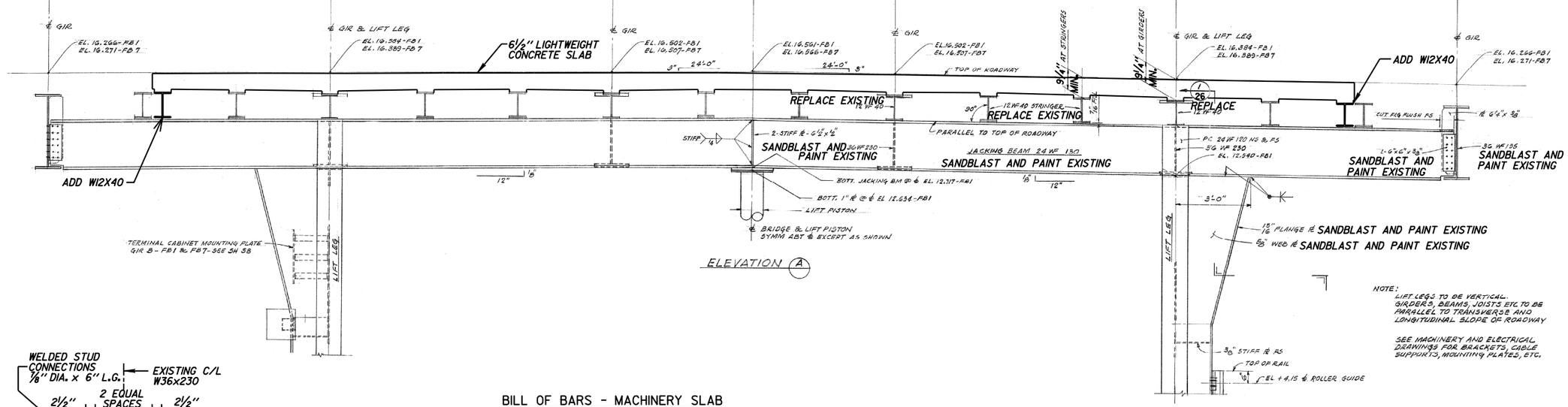

ELEVATION (A)

NOTE:
LIFT LEGS TO BE VERTICAL.
GIRDERS, BEAMS, JOISTS ETC TO BE PARALLEL TO TRANSVERSE AND LONGITUDINAL SLOPE OF ROADWAY

SEE MACHINERY AND ELECTRICAL DRAWINGS FOR BRACKETS, CABLE SUPPORTS, MOUNTING PLATES, ETC.

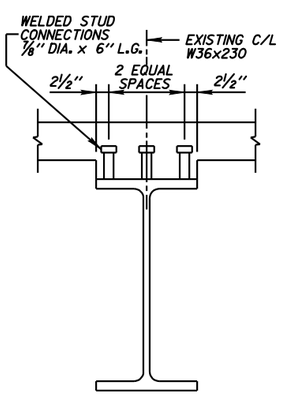

SECTION (C) 26

BILL OF BARS - MACHINERY SLAB

BAR MARK	EPOXY COATED	NO. REQ'D.	LENGTH	BENT
M501	X	116	25'-2"	
M402	X	326	8'-5"	
M403	X	22	3'-5"	
M404	X	4	2'-7"	

ESTIMATED BRIDGE QUANTITIES SHEET 26

BID ITEM	UNIT	QUANTITY
PROTECTIVE SURFACE TREATMENT	SY	94
BAR STEEL REINFORCEMENT HS COATED BRIDGES	LB	4,880
* WELDED STUD SHEAR CONNECTORS 7/8" X 4"	EA	96
WELDED STUD SHEAR CONNECTORS 7/8" X 6"	EA	336
LIGHTWEIGHT CONCRETE MASONRY	CY	20

*LOCATION - BACK OF C7 DOUBLE JOIST

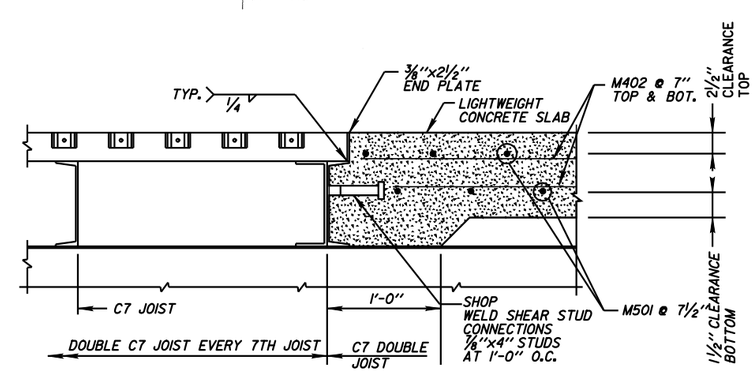

SECTION (B) 26

City of Milwaukee
Department of Public Works
Infrastructure Services Division

PLEASANT STREET LIFT BRIDGE OVER THE MILWAUKEE RIVER
MACHINERY SLAB

REVISIONS

DESIGNED BY J.D.T./J.J.K.
DRAWN BY K.P.S.
CHECKED BY H.J.R.
DATE 06/2012
SCALE NONE
JOB NUMBER BR100-07-0104
SHEET NUMBER 26 OF 40
OF 86

W:\STR\BOI2\ 2012WORK\ 26.DGN 03-17-2012

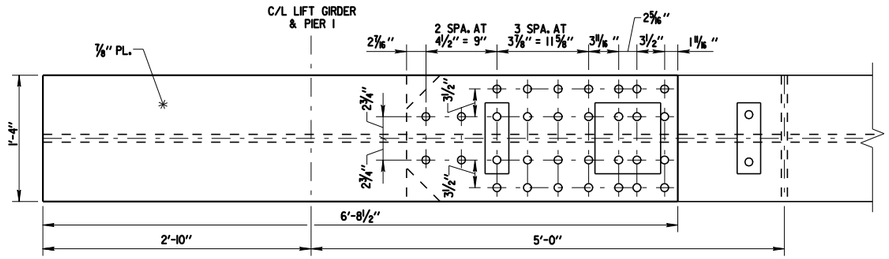

SECTION 4/27

AT GIRDERS 'B' AND 'E'

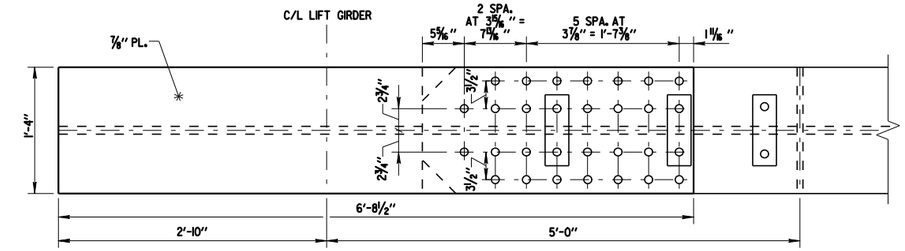

SECTION 6/27

AT GIRDERS 'C' AND 'D'

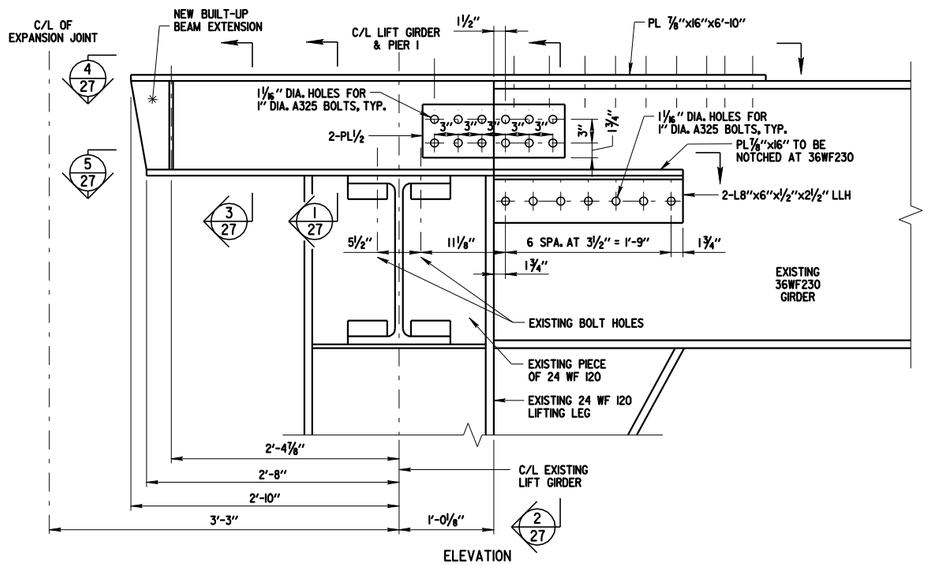

ELEVATION

AT GIRDERS 'B' AND 'E'

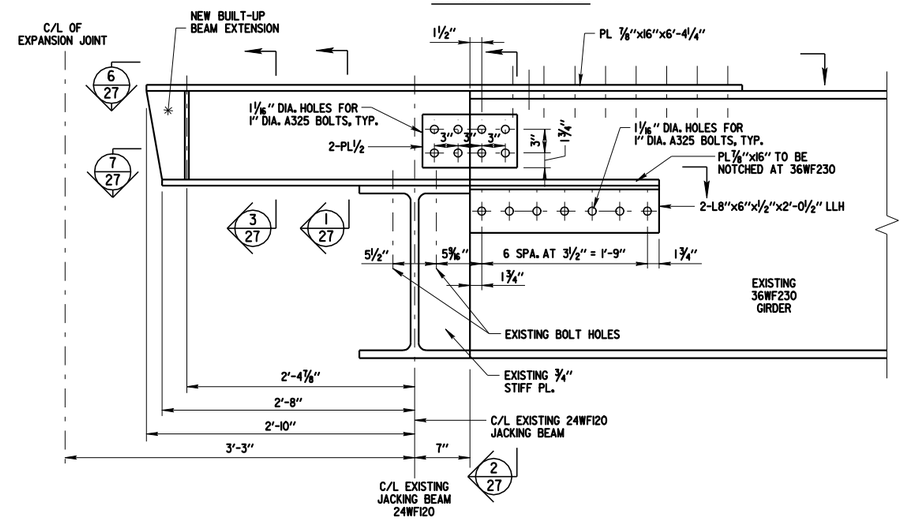

ELEVATION

AT GIRDERS 'C' AND 'D'

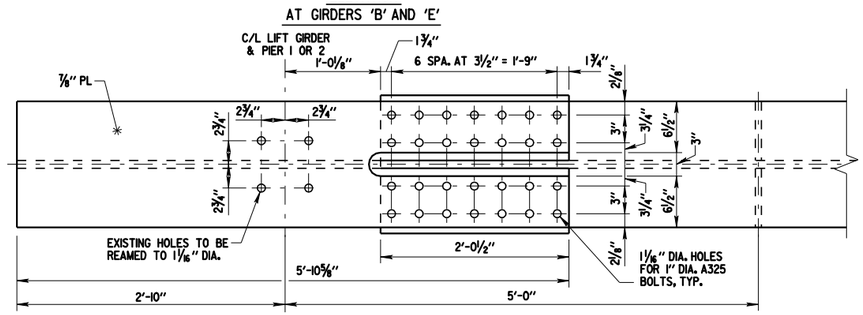

SECTION 5/27

GIRDERS 'B' AND 'E' TO LIFT GIRDER

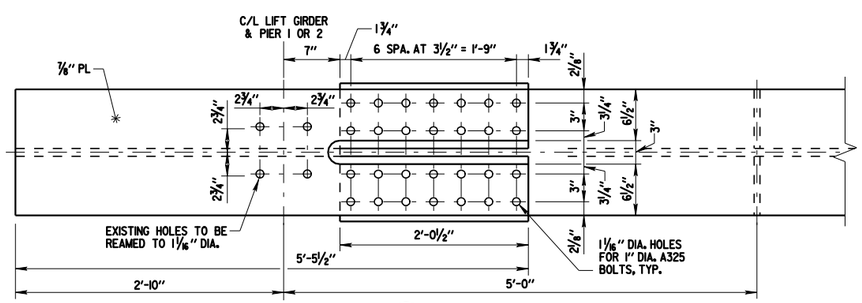

SECTION 7/27

GIRDERS 'C' AND 'D' TO LIFT GIRDER

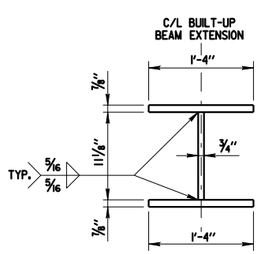

SECTION 1/27

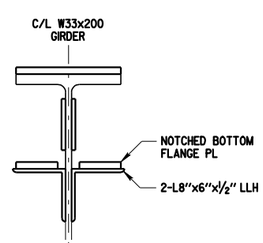

SECTION 2/27

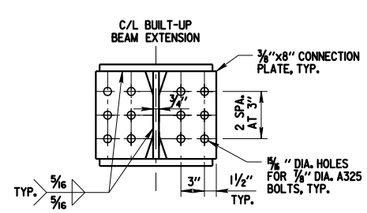

SECTION 3/27

NOTES:

PLAN DIMENSION AND DETAILS RELATIVE TO EXISTING PLANS ARE SUBJECT TO NOMINAL CONSTRUCTION VARIATIONS. THE CONTRACTOR SHALL FIELD VERIFY EXISTING DIMENSIONS AND DETAILS AFFECTING NEW CONSTRUCTION AND MAKE NECESSARY APPROVED ADJUSTMENTS PRIOR TO CONSTRUCTION OR ORDERING OF MATERIALS.

NEW STUB END STEEL SHALL BE PAID FOR UNDER BID ITEM "BRIDGE STRUCTURAL STEEL"

City of Milwaukee

Department of Public Works

Infrastructure Services Division

PLEASANT STREET LIFT BRIDGE OVER THE MILWAUKEE RIVER LIFT SPAN GIRDER END DETAILS

REVISIONS

DESIGNED BY J.D.T.	
DRAWN BY K.P.S.	
CHECKED BY H.J.R.	
DATE 06/2012	SCALE NONE
JOB NUMBER BR100-07-0104	
SHEET NUMBER 27 OF 40	
OF 86	

W:\STR\B0112\ 2012WORK\ 27.DGN 04-17-2012

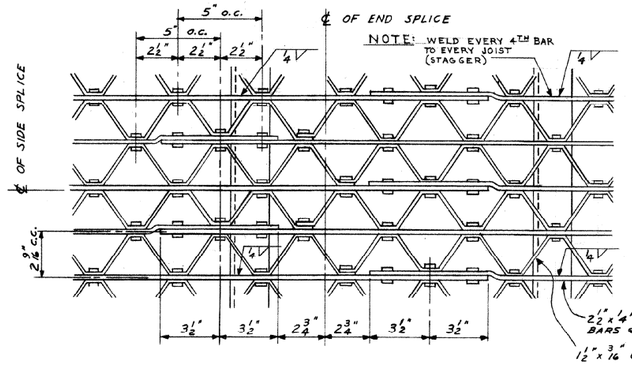

EXISTING DETAIL
OF SIDE & END SPLICE

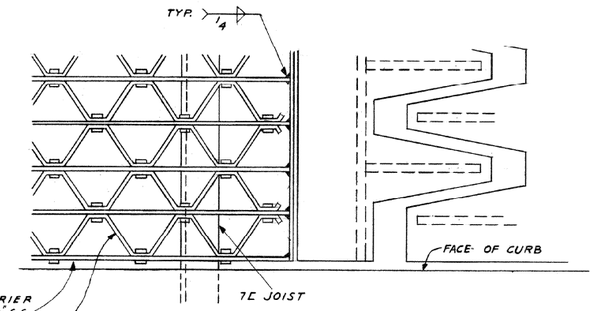

EXISTING END DETAIL @ EXP. #

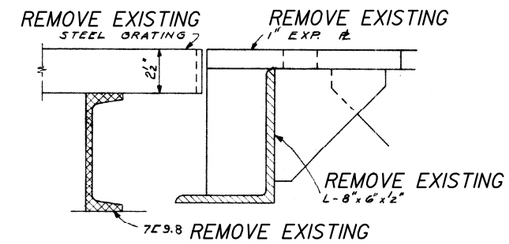

EXISTING SECTION @ GRATING FASTENERS

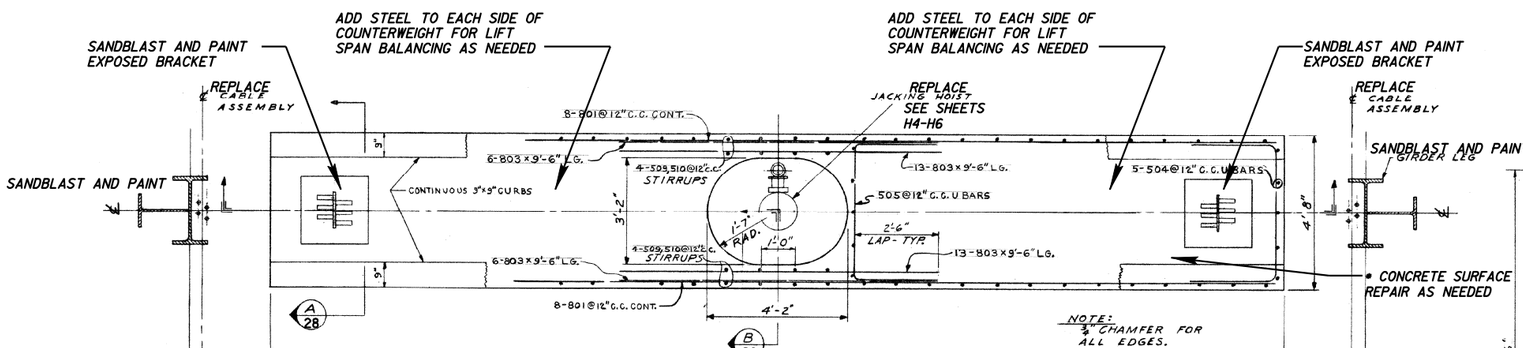

EXISTING PLAN OF COUNTERWEIGHT

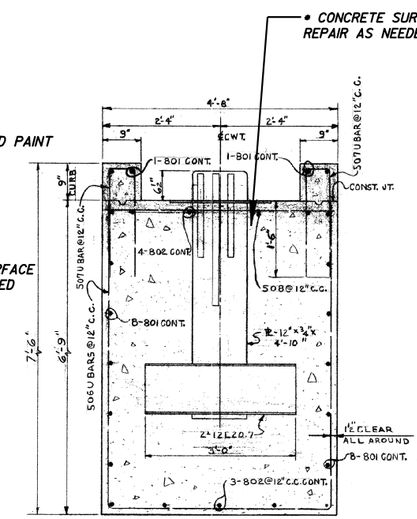

EXISTING SECTION — A 28

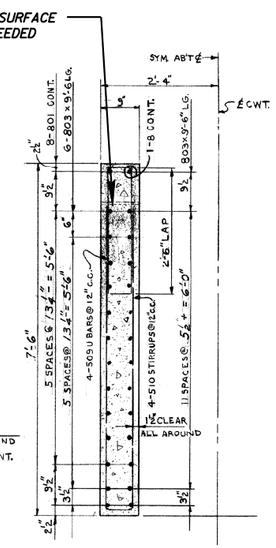

EXISTING SECTION — B 28

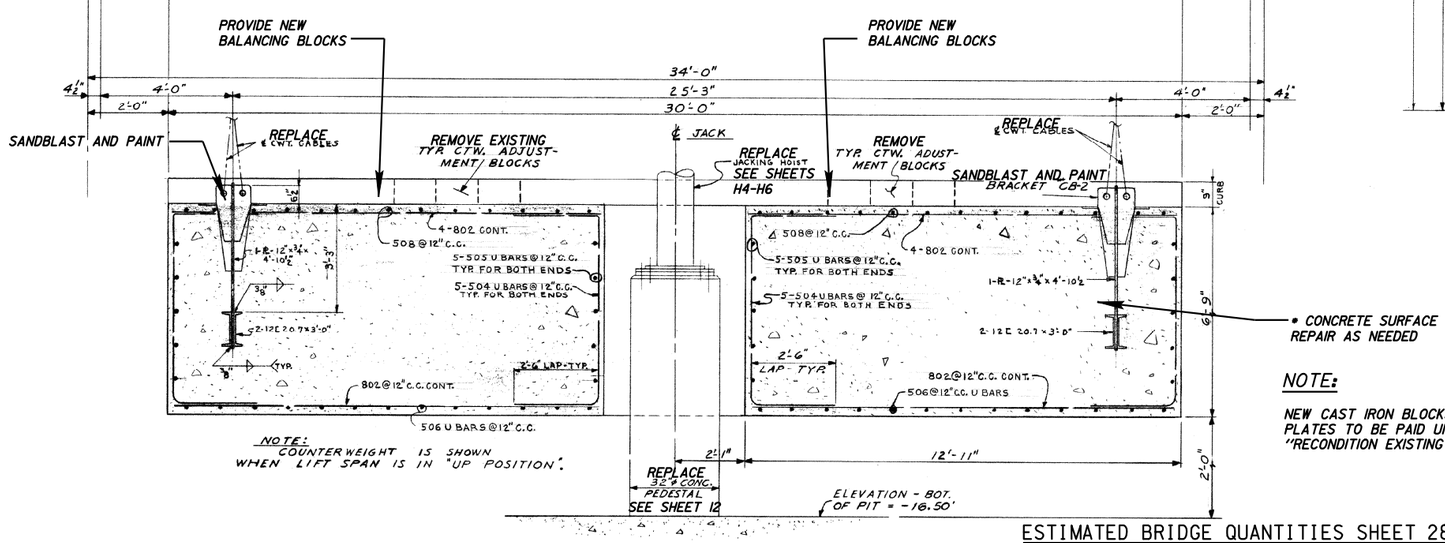

NOTE:
COUNTERWEIGHT IS SHOWN WHEN LIFT SPAN IS IN "UP POSITION".

EXISTING SECTION ELEVATION

NOTE:

NEW CAST IRON BLOCKS AND STEEL PLATES TO BE PAID UNDER BID ITEM "RECONDITION EXISTING COUNTERWEIGHT"

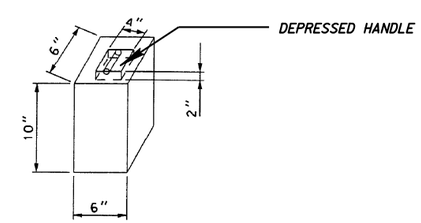

NEW CAST IRON OR STEEL BALANCE BLOCK DETAIL

220 BLOCKS REQUIRED AT 85 LBS. PER BLOCK

NOTE:

CASTING MUST BE MADE OF SOLID MATERIAL WITH NO BUILT UP SECTIONS

ESTIMATED BRIDGE QUANTITIES SHEET 28

	BID ITEM	UNIT	QUANTITY
*	CONCRETE SURFACE REPAIR	SF	100
	RECONDITION EXISTING COUNTERWEIGHT	EA	2

* ESTIMATED QUANTITY OF CONCRETE SURFACE REPAIR ON COUNTERWEIGHTS MAY VARY DURING CONSTRUCTION

City of Milwaukee
Department of Public Works
Infrastructure Services Division

PLEASANT STREET LIFT BRIDGE OVER THE MILWAUKEE RIVER EXISTING COUNTERWEIGHT

REVISIONS

DESIGNED BY J.D.T.
DRAWN BY K.P.S.
CHECKED BY J.J.K.
DATE 06/2012
SCALE NONE
JOB NUMBER BR100-07-0104
SHEET NUMBER 28 OF 40
OF 86

W:\STRUBOI12\ 2012WORK\ 28.DGN 02-20-2012

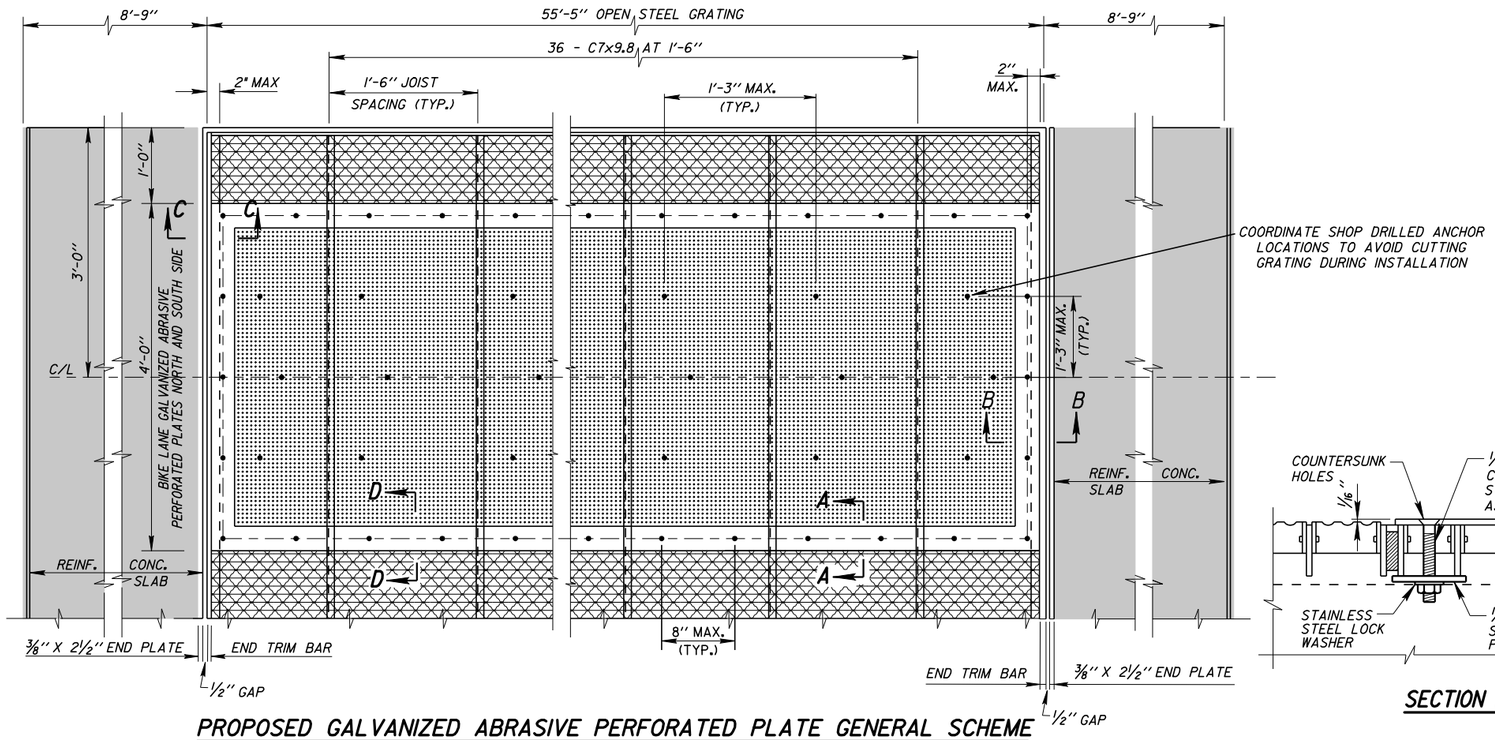

PROPOSED GALVANIZED ABRASIVE PERFORATED PLATE GENERAL SCHEME
NORTH BICYCLE LANE SHOWN, SOUTH BICYCLE LANE SIMILAR

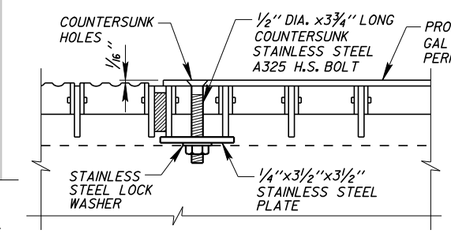

SECTION D-D

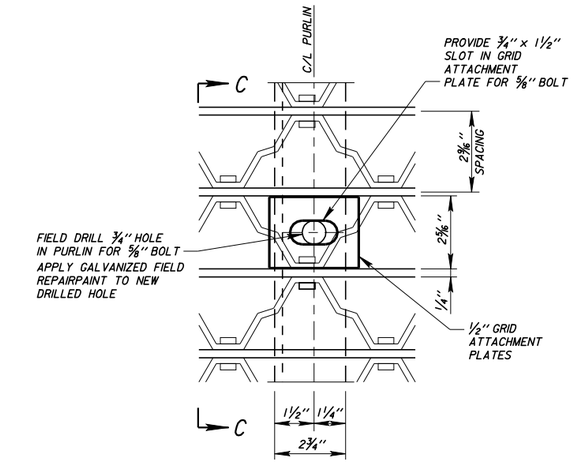

DETAIL 1

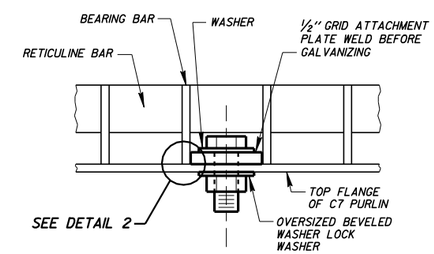

SECTION C-C

(SEE SPECIAL PROVISIONS FOR SIZE AND SPACING OF BEARING AND RETICULINE BARS.)

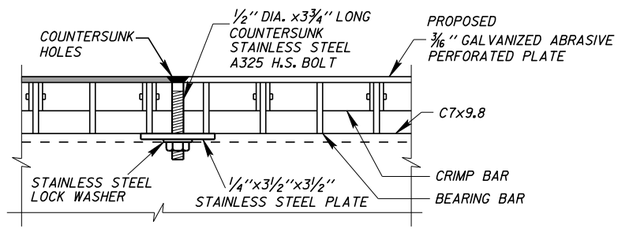

SECTION A-A

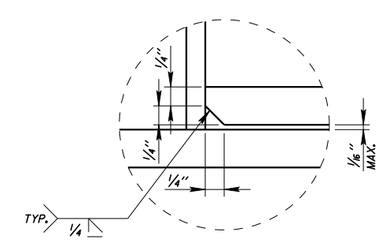

DETAIL 2

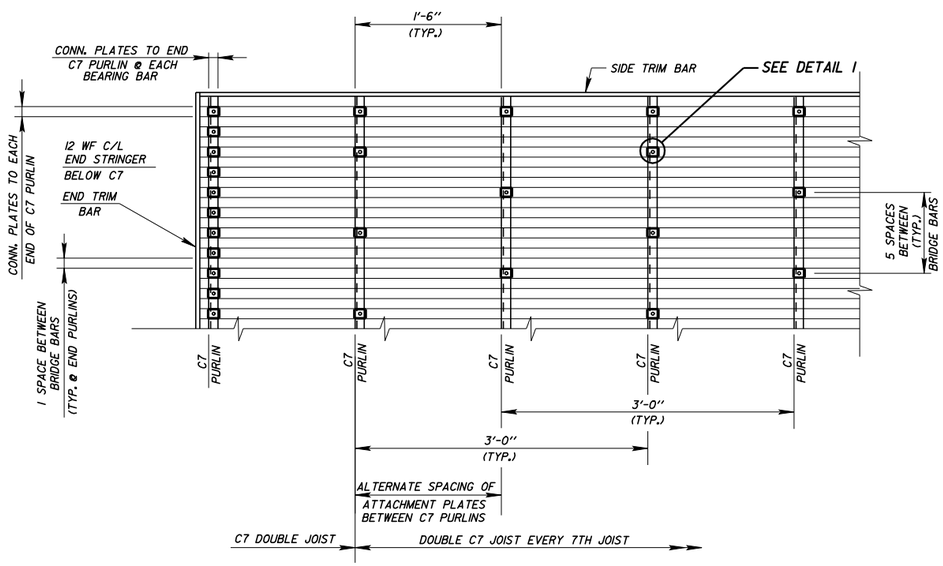

GRID ATTACHMENT DETAIL

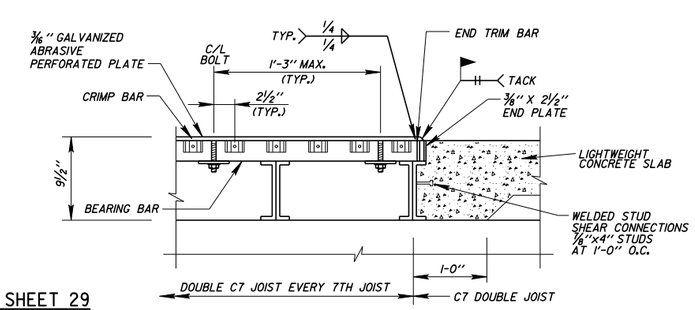

SECTION B-B

ESTIMATED BRIDGE QUANTITIES SHEET 29

BID ITEM	UNIT	QUANTITY
STEEL GRID FLOOR OPEN (2 1/2-INCH)	SF	2,664
GALVANIZED ABRASIVE PERFORATED PLATE	SF	444

PERFORATED PLATE NOTES:

1. 3/16" PLATE SHALL CONFORM TO ASTM A36 AND SHALL BE GALVANIZED IN ACCORDANCE WITH ASTM A123.
2. ABRASIVE COATING SHALL BE APPLIED TO TOP SURFACE OF BICYCLE PLATE ACCORDING TO MANUFACTURE'S SPECIFICATIONS. PLATE IS TO BE HOT DIP GALVANIZED AFTER APPLICATION OF ABRASIVE COATING.
3. ALL WELD SURFACES AND THE ADJACENT PLATE AREAS WHERE THE GALVANIZED COATING IS DAMAGED BY THE FIELD-WELDING PROCESS SHALL RECEIVE A GALVANIZED REPAIR PAINT ACCORDING TO ASTM A780 AND MANUFACTURE'S WRITTEN INSTRUCTIONS.
4. CONTRACTOR TO FIELD VERIFY ALL DIMENSIONS.

GRATING NOTES:

1. ATTACH ALL ENDS AND EDGES OF EACH PANEL TO EACH C7 PURLIN. ATTACH INTERIOR OF EACH PANEL TO ALTERNATE C7 PURLINS AS SHOWN. AT A MINIMUM, EVERY BEARING BAR MUST BE CONNECTED TO EVERY OTHER PURLIN.

City of Milwaukee
Department of Public Works
Infrastructure Services Division

PLEASANT STREET LIFT BRIDGE
OVER THE MILWAUKEE RIVER
STEEL GRID DETAIL

REVISIONS

DESIGNED BY J.D.T./J.J.K.
DRAWN BY K.P.S.
CHECKED BY H.J.R.
DATE 06/2012
SCALE NONE
JOB NUMBER BRI00-07-0104
SHEET NUMBER 29 OF 40
OF 86

W:\STR\BOI12\ 2012WORK\ 29.DGN 06-01-2012

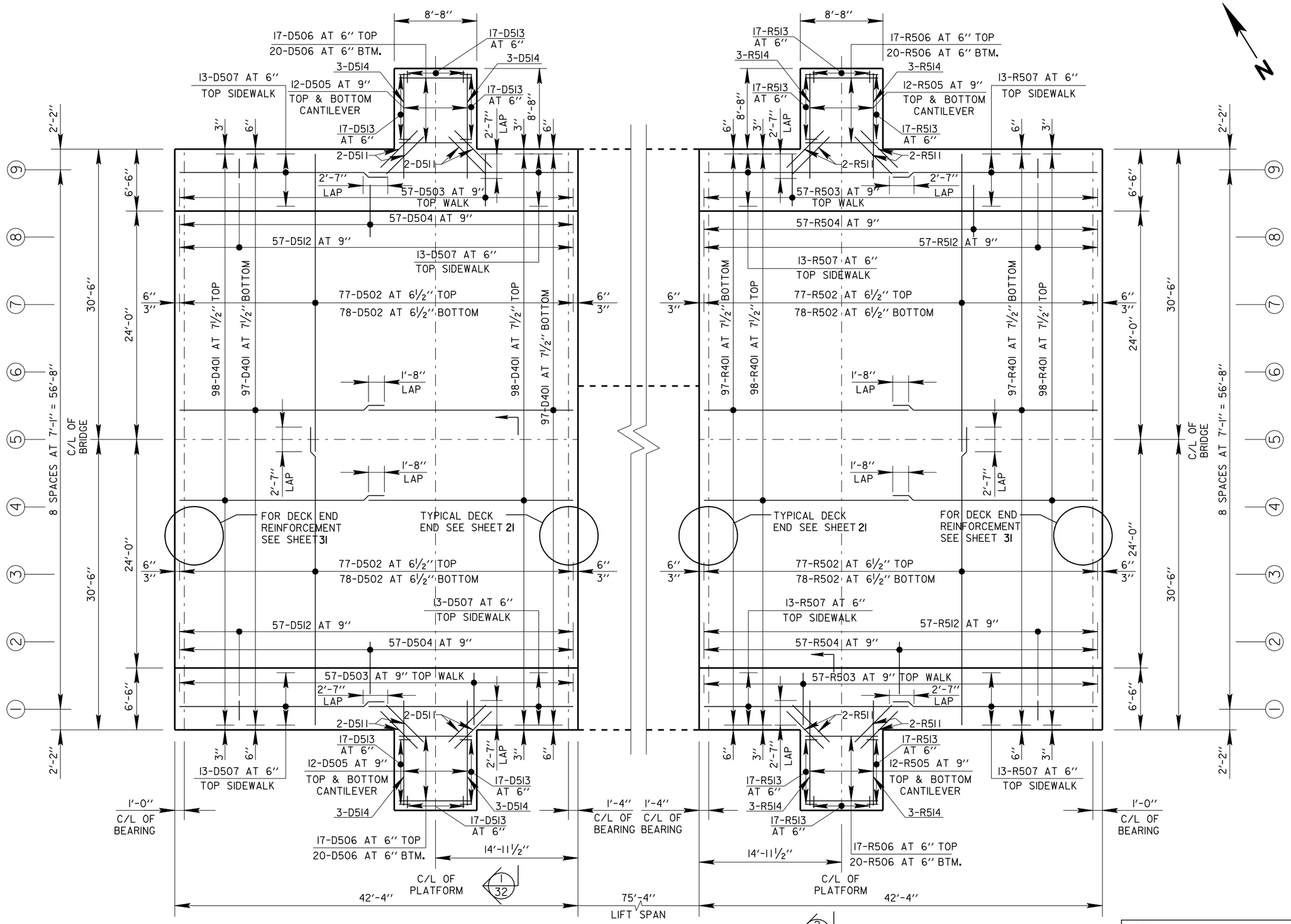

NOTE:
PAGE QUANTITIES FOR SHEET 30 ARE LOCATED ON SHEET 33

City of Milwaukee
Department of Public Works
Infrastructure Services Division

PLEASANT STREET LIFT BRIDGE OVER THE MILWAUKEE RIVER APPROACH SPANS

REVISIONS

DESIGNED BY J.J.K.	
DRAWN BY K.P.S.	
CHECKED BY H.J.R.	
DATE 06/2012	SCALE NONE
JOB NUMBER BR100-07-0104	
SHEET NUMBER 30 OF 40	
OF 86	

W:\STR\B0\12\ 2012WORK\ 30.DGN 04-17-2012

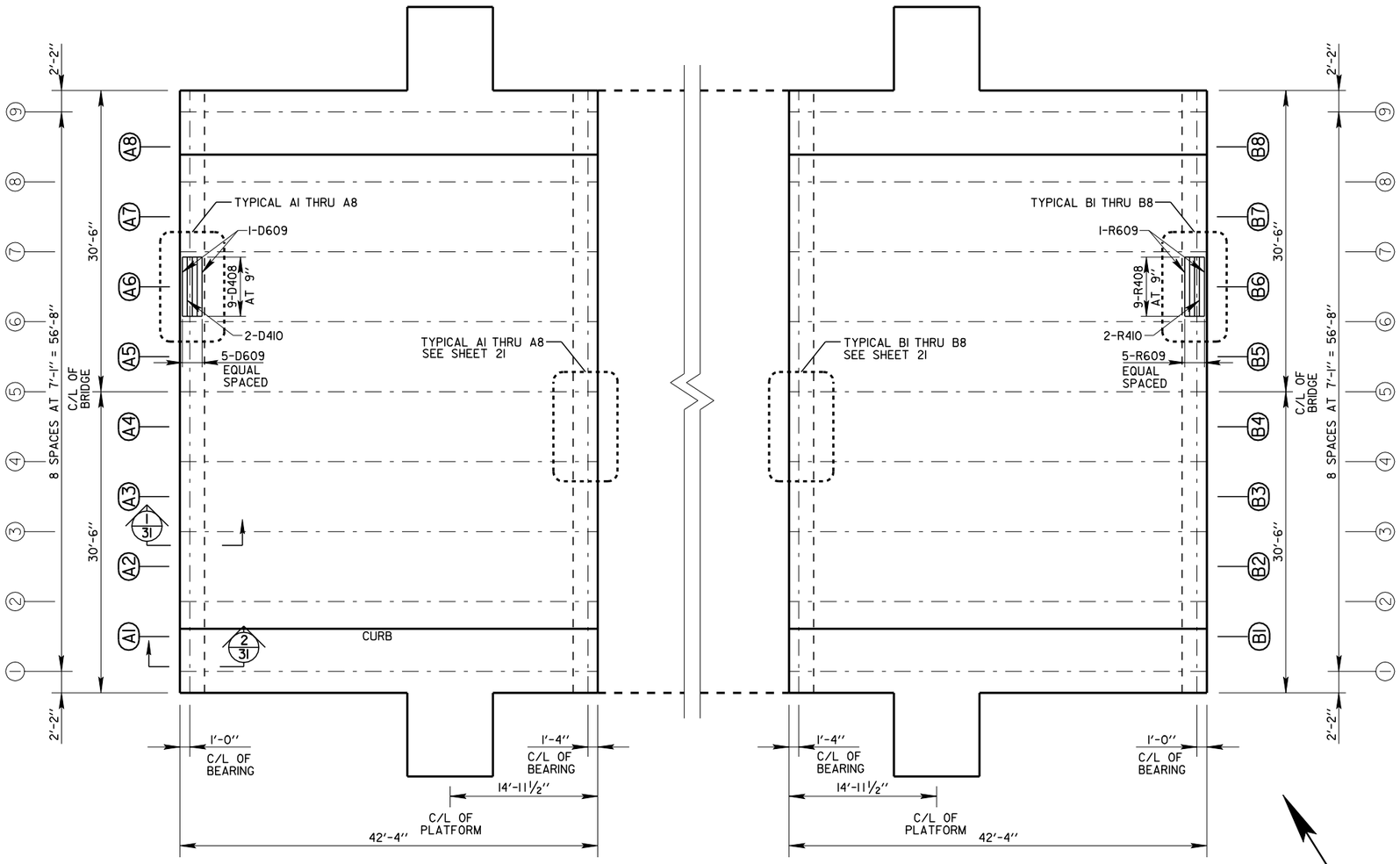

WEST APPROACH SPAN

EAST APPROACH SPAN

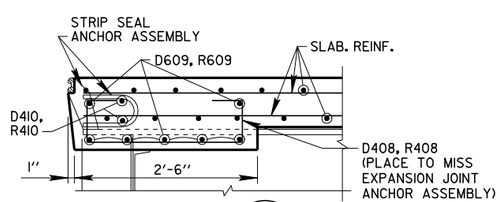

SECTION 1/31

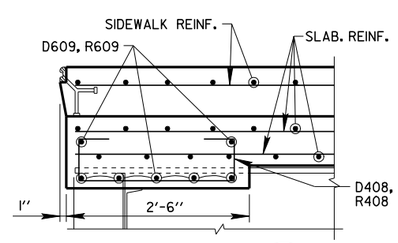

SECTION 2/31

NOTE:
PAGE QUANTITIES FOR SHEET 31 ARE LOCATED ON SHEET 33

TOP OF DECK ELEVATIONS WEST APPROACH

SPAN NO.	SPAN LENGTH "L"	GIRDER NO.	DESC.	C/L BEARING W. ABUT.	0.33L	0.5L	0.67L	C/L BEARING PIER 1
1	40'-0"	1	T. DECK	15.529	15.808	15.929	16.037	16.213
			HAUNCH	0.141	0.167	0.173	0.167	0.141
			DL DEFL.	0	0.026	0.032	0.026	0
		2	T. DECK	15.603	15.882	16.003	16.11	16.287
			HAUNCH	0.145	0.165	0.166	0.165	0.145
			DL DEFL.	0	0.02	0.021	0.02	0
		3	T. DECK	15.677	15.956	16.076	16.184	16.361
			HAUNCH	0.139	0.159	0.16	0.159	0.139
			DL DEFL.	0	0.02	0.021	0.02	0
		4	T. DECK	15.75	16.03	16.15	16.258	16.434
			HAUNCH	0.142	0.162	0.163	.162	0.142
			DL DEFL.	0	0.02	0.021	0.02	0
		5	T. DECK	15.824	16.104	16.224	16.332	16.508
			HAUNCH	0.146	0.166	0.167	0.166	0.146
			DL DEFL.	0	0.02	0.021	0.02	0
		6	T. DECK	15.75	16.03	16.15	16.258	16.434
			HAUNCH	0.142	0.162	0.163	.162	0.142
			DL DEFL.	0	0.02	0.021	0.02	0
		7	T. DECK	15.677	15.956	16.076	16.184	16.361
			HAUNCH	0.139	0.159	0.16	0.159	0.139
			DL DEFL.	0	0.02	0.021	0.02	0
		8	T. DECK	15.603	15.882	16.003	16.11	16.287
			HAUNCH	0.145	0.165	0.166	0.165	0.145
			DL DEFL.	0	0.02	0.021	0.02	0
		9	T. DECK	15.529	15.808	15.929	16.037	16.213
			HAUNCH	0.141	0.167	0.173	0.167	0.141
			DL DEFL.	0	0.026	0.032	0.026	0

TOP OF DECK ELEVATIONS EAST APPROACH

SPAN NO.	SPAN LENGTH "L"	GIRDER NO.	DESC.	C/L BEARING W. ABUT.	0.33L	0.5L	0.67L	C/L BEARING PIER 1
3	40'-0"	1	T. DECK	15.54	15.817	15.937	16.043	16.218
			HAUNCH	0.144	0.168	0.174	0.168	0.146
			DL DEFL.	0	0.026	0.032	0.026	0
		2	T. DECK	15.613	15.891	16.01	16.117	16.292
			HAUNCH	0.145	0.165	0.166	0.165	0.150
			DL DEFL.	0	0.02	0.021	0.02	0
		3	T. DECK	15.687	15.965	16.084	16.191	16.366
			HAUNCH	0.139	0.159	0.16	0.159	0.144
			DL DEFL.	0	0.02	0.021	0.02	0
		4	T. DECK	15.761	16.039	16.158	16.265	16.44
			HAUNCH	0.143	0.163	0.164	0.163	0.147
			DL DEFL.	0	0.02	0.021	0.02	0
		5	T. DECK	15.835	16.112	16.232	16.339	16.513
			HAUNCH	0.147	0.167	0.168	0.167	0.151
			DL DEFL.	0	0.02	0.021	0.02	0
		6	T. DECK	15.761	16.039	16.158	16.265	16.44
			HAUNCH	0.143	0.163	0.164	0.163	0.147
			DL DEFL.	0	0.02	0.021	0.02	0
		7	T. DECK	15.687	15.965	16.084	16.191	16.366
			HAUNCH	0.139	0.159	0.16	0.159	0.144
			DL DEFL.	0	0.02	0.021	0.02	0
		8	T. DECK	15.613	15.891	16.01	16.117	16.292
			HAUNCH	0.145	0.165	0.166	0.165	0.150
			DL DEFL.	0	0.02	0.021	0.02	0
		9	T. DECK	15.54	15.817	15.937	16.043	16.218
			HAUNCH	0.144	0.168	0.174	0.168	0.146
			DL DEFL.	0	0.026	0.032	0.026	0

City of Milwaukee

Department of Public Works

Infrastructure Services Division

PLEASANT STREET LIFT BRIDGE
OVER THE MILWAUKEE RIVER
APPROACH SPAN DECK ENDS

REVISIONS

DESIGNED BY J.J.K.
DRAWN BY K.P.S.
CHECKED BY H.J.R.
DATE 06/2012
SCALE NONE
JOB NUMBER BR100-07-0104
SHEET NUMBER 31 OF 40
OF 86

W:\STR\BOI2\ 2012WORK\ 31.DGN 04-17-2012

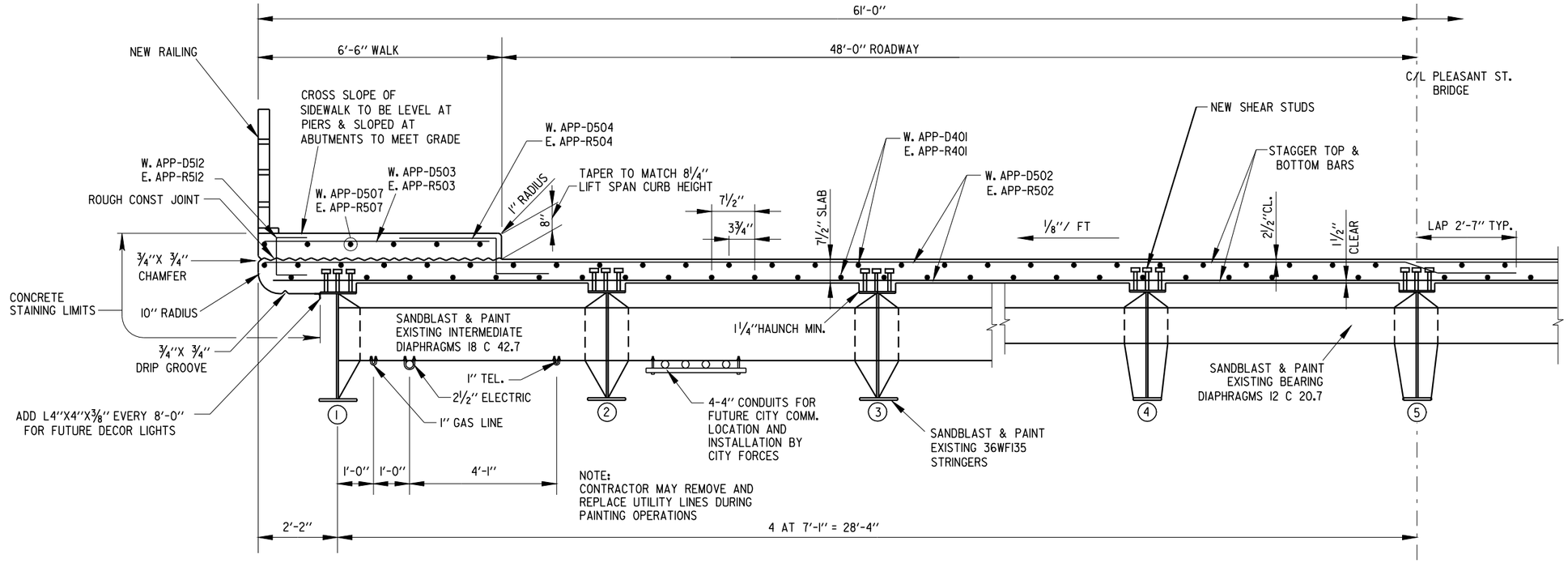

APPROACH SPAN - DECK CROSS SECTION (1/30)

SCALE ½"= 1'-0"

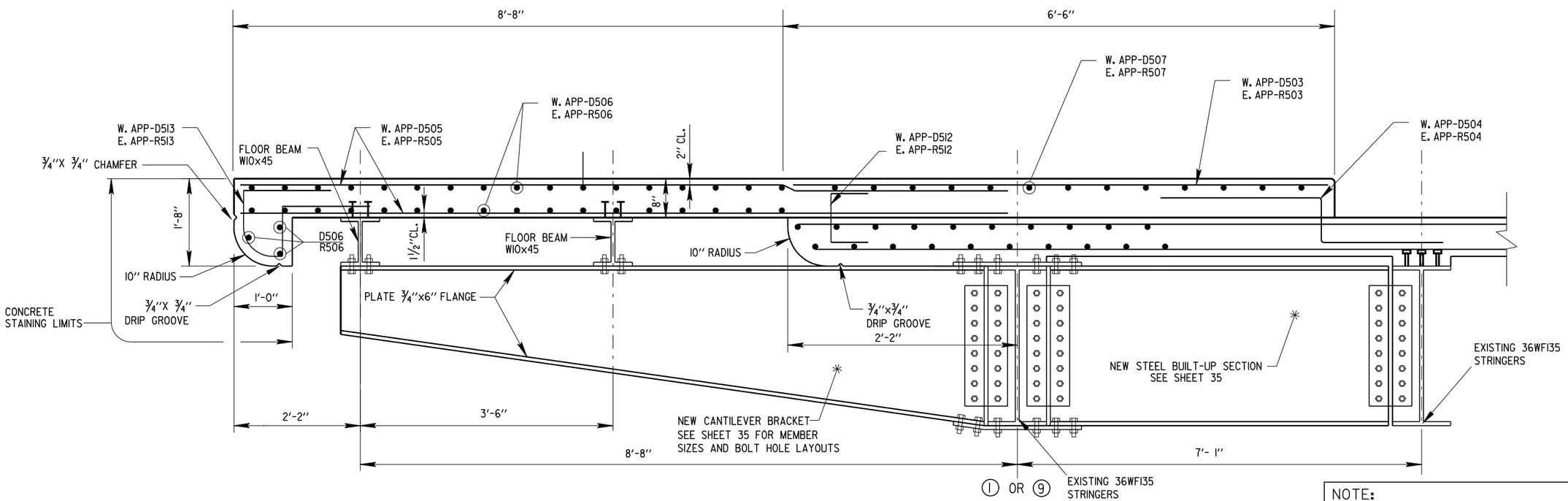

CANTILEVER BRACKET ELEVATION (2/30)

NOTE:
PAGE QUANTITIES FOR SHEET 32 ARE LOCATED ON SHEET 33

City of Milwaukee
Department of Public Works
Infrastructure Services Division

PLEASANT STREET LIFT BRIDGE
OVER THE MILWAUKEE RIVER
APPROACH SPAN DECK SECTION

REVISIONS

DESIGNED BY J.J.K.
DRAWN BY K.P.S.
CHECKED BY H.J.R.
DATE 06/2012
SCALE NONE
JOB NUMBER BR100-07-0104
SHEET NUMBER 32 OF 40
OF 86

W:\STR\B0121\ 2012\WORK\ 32.DGN 04-17-2012

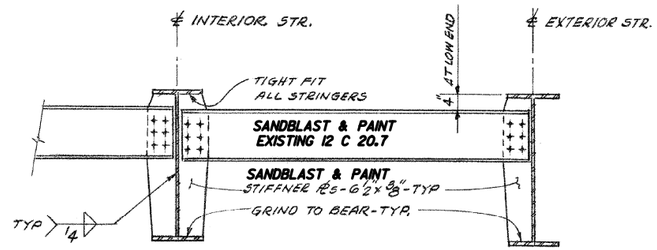

BEARING DIAPHRAGM DETAILS

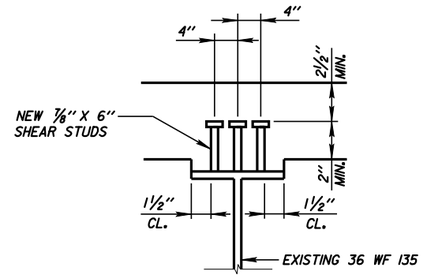

NEW SHEAR CONNECTOR DETAIL

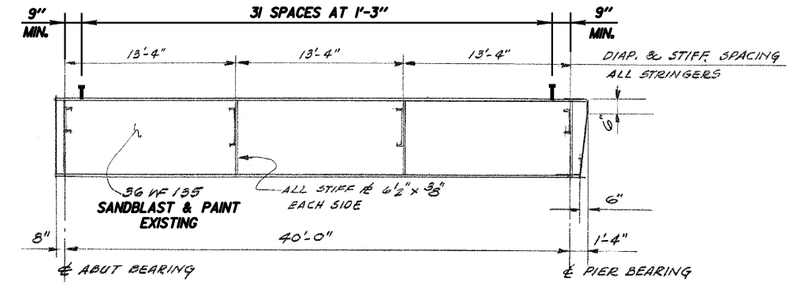

INTERIOR STRINGERS - 2 THRU 8

NEW SHEAR CONNECTOR SPACING

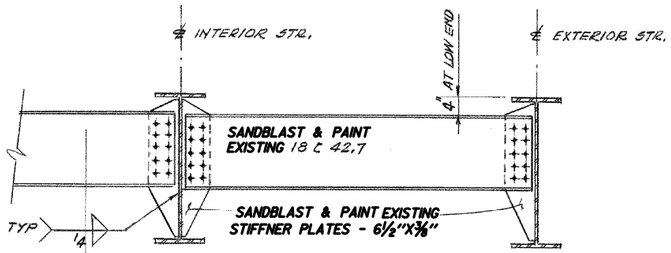

INTERMEDIATE DIAPHRAGM DETAILS

FIELD CONNECTIONS SHALL BE MADE WITH ASTM-A 325
¾"ϕ HIGH STRENGTH BOLTS UNLESS NOTED OTHERWISE

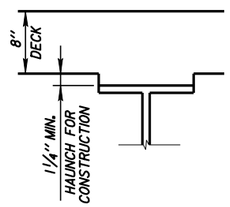

HAUNCH DETAIL

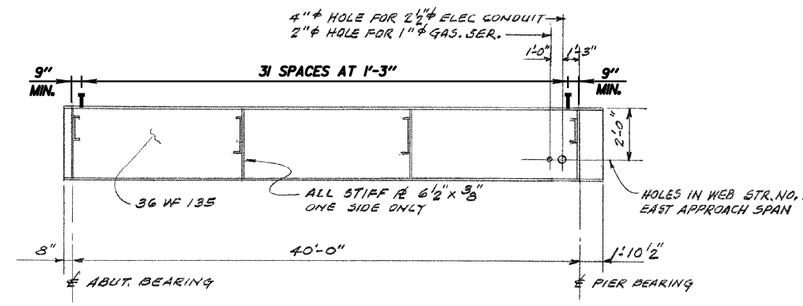

EXTERIOR STRINGERS - 1 AND 9

NEW SHEAR CONNECTOR SPACING

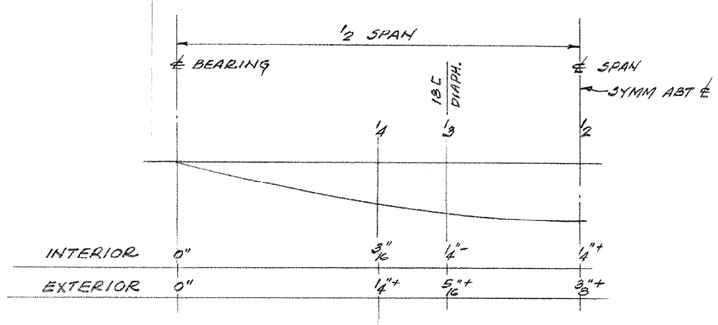

DEAD LOAD DEFLECTION DIAGRAM
APPROACH SPAN STRINGERS
CAMBER FOR DEAD LOAD + VERTICAL CURVE

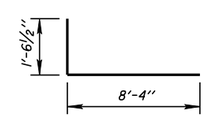

R514, D514

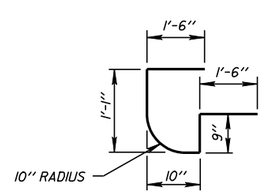

R513, D513

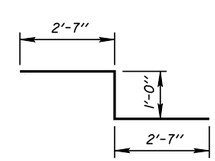

R504, D504

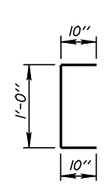

R512, D512

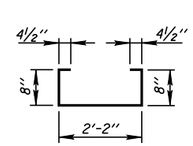

R408, D408

ESTIMATED BRIDGE QUANTITIES SHEET 30-33

BID ITEM	UNIT	QUANTITY
CONCRETE MASONRY BRIDGES	CY	166
PROTECTIVE SURFACE TREATMENT	SY	610
BAR STEEL REINFORCEMENT HS COATED BRIDGES	LB	43,038
WELDED STUD SHEAR CONNECTORS ⅞"x6"	EA	1,728
CONCRETE STAINING (B-40-406)	SF	666

BILL OF BARS - WEST APPROACH

BAR MARK	EPOXY COAT	NO. REQ'D.	LENGTH	BENT	LOCATION
D401	X	390	21'-10"		DECK - TOP & BOTTOM
D502	X	310	31'-7"		DECK - TOP & BOTTOM TRANSVERSE
D503	X	114	6'-2"		SIDEWALK - TOP
D504	X	114	5'-11"	X	SLAB - SIDEWALK CONNECTOR
D505	X	48	11'-4"		CANTILEVER TOP & BTM LONG
D506	X	74	8'-4"		CANTILEVER TOP & BTM LONG
D507	X	52	21'-10"		SIDEWALK TOP LONG
D408	X	72	3'-11"	X	END DIAPHRAGMS
D609	X	56	6'-0"		END DIAPHRAGMS
D410	X	16	7'-1"		END DIAPHRAGMS
D511	X	8	6'-0"		SIDEWALK - CANTILEVER CORNER
D512	X	114	2'-5"	X	SLAB - SIDEWALK CONNECTOR
D513	X	102	5'-3"	X	CANTILEVER - ROUNDED BOTTOM
D514	X	12	9'-9"	X	CANTILEVER - LONGITUDINAL ROUNDED BOTTOM

BILL OF BARS - EAST APPROACH

BAR MARK	EPOXY COAT	NO. REQ'D.	LENGTH	BENT	LOCATION
R401	X	390	21'-10"		DECK - TOP & BOTTOM
R502	X	310	31'-7"		DECK - TOP & BOTTOM TRANSVERSE
R503	X	114	6'-2"		SIDEWALK - TOP
R504	X	114	5'-11"	X	SLAB - SIDEWALK CONNECTOR
R505	X	48	11'-4"		CANTILEVER TOP & BTM LONG
R506	X	74	8'-4"		CANTILEVER TOP & BTM LONG
R507	X	52	21'-10"		SIDEWALK TOP LONG
R408	X	72	3'-11"	X	END DIAPHRAGMS
R609	X	56	6'-0"		END DIAPHRAGMS
R410	X	16	7'-1"		END DIAPHRAGMS
R511	X	8	6'-0"		SIDEWALK - CANTILEVER CORNER
R512	X	114	2'-5"	X	SLAB - SIDEWALK CONNECTOR
R513	X	102	5'-3"	X	CANTILEVER - ROUNDED BOTTOM
R514	X	12	9'-9"	X	CANTILEVER - LONGITUDINAL ROUNDED BOTTOM

City of Milwaukee

Department of Public Works

Infrastructure Services Division

PLEASANT STREET LIFT BRIDGE
OVER THE MILWAUKEE RIVER
APPROACH SPAN DIAPHRAGMS,
BILL OF BARS AND SHEAR STUDS

REVISIONS

DESIGNED BY J.J.K.
DRAWN BY K.P.S.
CHECKED BY H.J.R.
DATE 06/2012
SCALE NONE
JOB NUMBER BR100-07-0104
SHEET NUMBER 33 OF 40
OF 86

W:\STR\B0112\ 2012WORK\ 33.DGN 04-17-2012

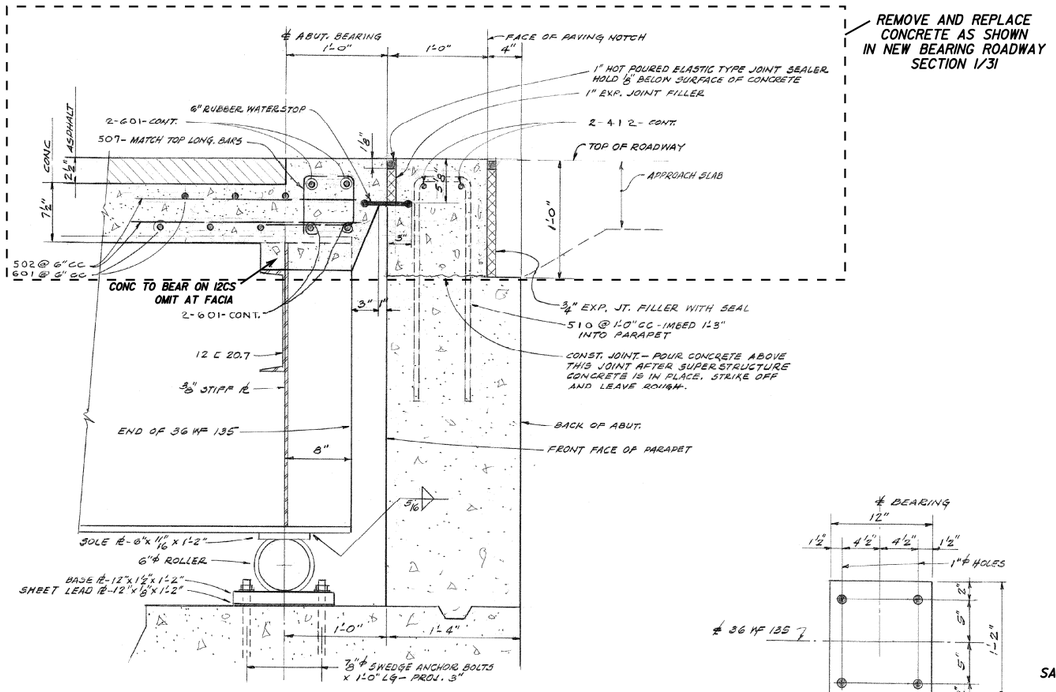

EXISTING BEARING AND ROADWAY SECTION (1/31)
EAST & WEST ABUTMENTS
SCALE 1½"=1'-0"

BASE PLATE
ABUTMENT BEARING

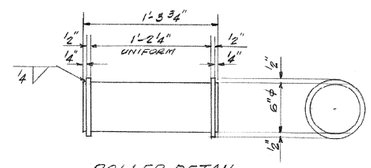

ROLLER DETAIL
SCALE 1½"=1'-0"

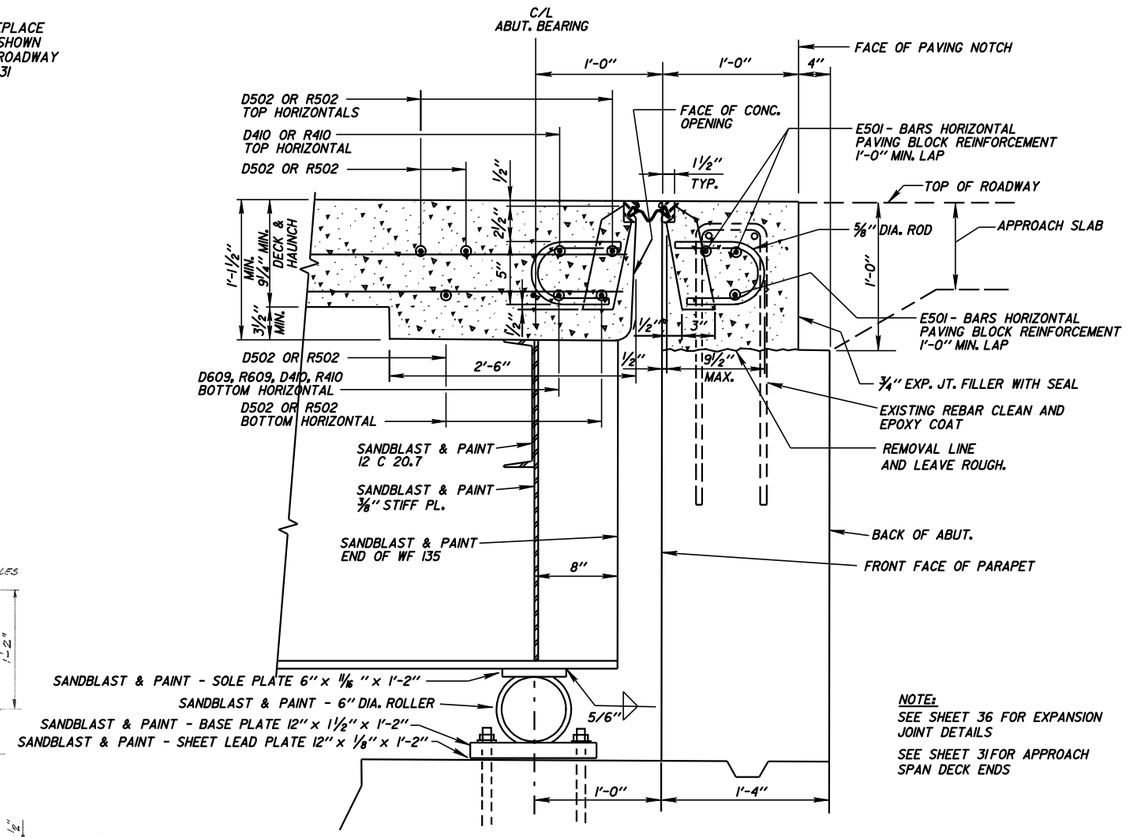

NOTE:
SEE SHEET 36 FOR EXPANSION JOINT DETAILS
SEE SHEET 31 FOR APPROACH SPAN DECK ENDS

NEW BEARING AND ROADWAY SECTION (1/31)
EAST AND WEST ABUTMENTS

BILL OF BARS - EXPANSION JOINT

BAR MARK	EPOXY COAT	NO. REQ'D.	LENGTH	BENT	LOCATION
E501	X	42	8'-0"		HORIZONTAL PAVING BLOCK

NOTE:
ALL REINFORCEMENT FOR PAVING BLOCK WILL BE PAID UNDER BID ITEM "EXPANSION DEVICE"

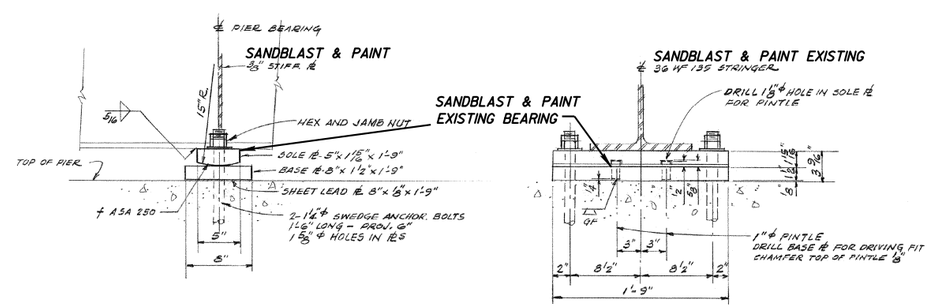

FIXED BEARING - APPROACH SPANS
PIERS 1 AND 2
SCALE 1½"=1'-0"

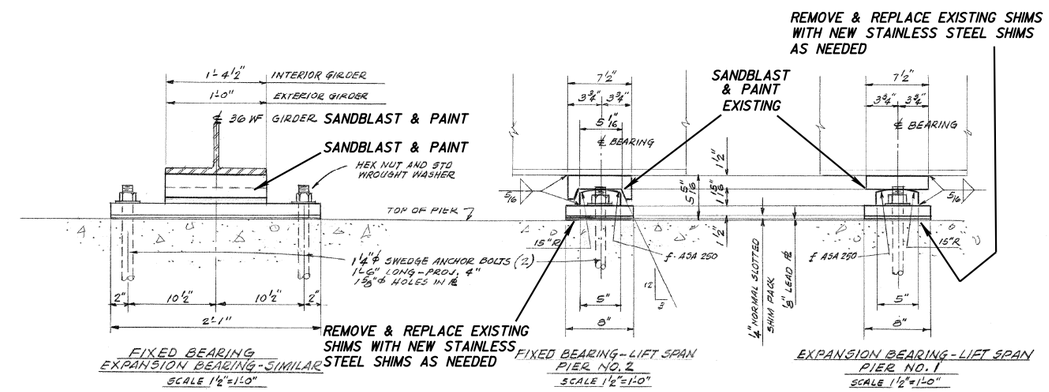

FIXED BEARING
EXPANSION BEARING - SIMILAR
SCALE 1½"=1'-0"

FIXED BEARING - LIFT SPAN
PIER NO. 2
SCALE 1½"=1'-0"

EXPANSION BEARING - LIFT SPAN
PIER NO. 1
SCALE 1½"=1'-0"

BEARINGS - LIFT SPAN

EXISTING BEARING NOTES
PLATES SHALL BE A242 STEEL WITH ALL SURFACES SMOOTH AND FREE FROM WARP AND ALL ANGLES SMOOTH, STRAIGHT AND VERTICAL
ROLLERS SHALL BE COLD FINISHED STEEL
ASTM A108 (GRADE 1045) TURNED AND POLISHED THE TOP 6½" OF ANCHOR BOLTS, WASHERS AND NUTS SHALL BE GALVANIZED. ASTM A164 TYPE 93
ANCHOR BOLTS FOR STRINGERS AND GIRDERS SHALL BE DRILLED AND LEADED AFTER THE PIERS AND ABUTMENTS HAVE BEEN PLACED

ESTIMATED BRIDGE QUANTITIES SHEET 34

BID ITEM	UNIT	QUANTITY
BEARING MAINTENANCE (B-40-406)	EA	12

City of Milwaukee
Department of Public Works
Infrastructure Services Division

PLEASANT STREET LIFT BRIDGE
OVER THE MILWAUKEE RIVER
APPROACH SPAN STRINGERS AND BEARINGS

REVISIONS

DESIGNED BY J.J.K.
DRAWN BY K.P.S.
CHECKED BY H.J.R.
DATE 06/2012
SCALE NONE
JOB NUMBER BR100-07-0104
SHEET NUMBER 34 OF 40
OF 86

W:\STR\B0I2\ 2012WORK\ 34.DGN 04-18-2012

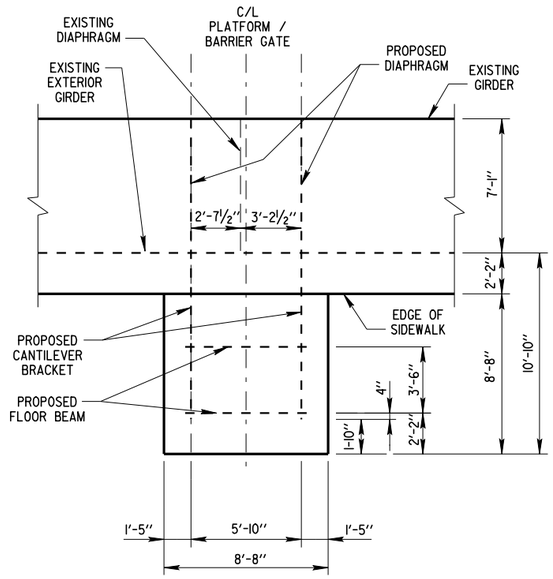

BARRIER CANTILEVER FRAMING PLAN

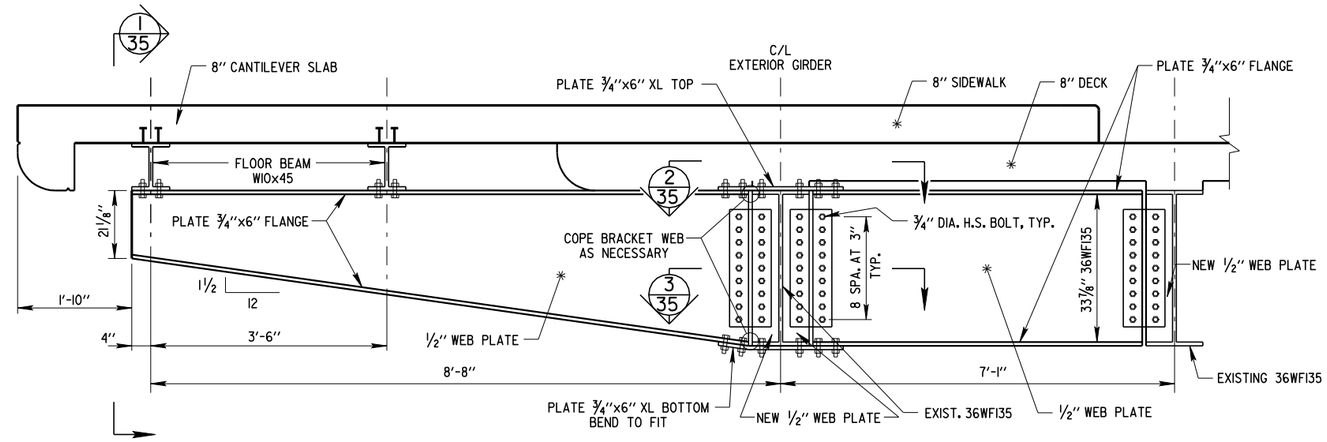

CANTILEVER BRACKET ELEVATION

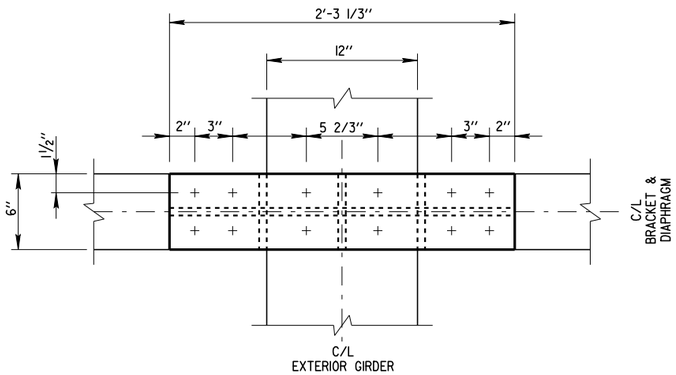

SECTION 2/35

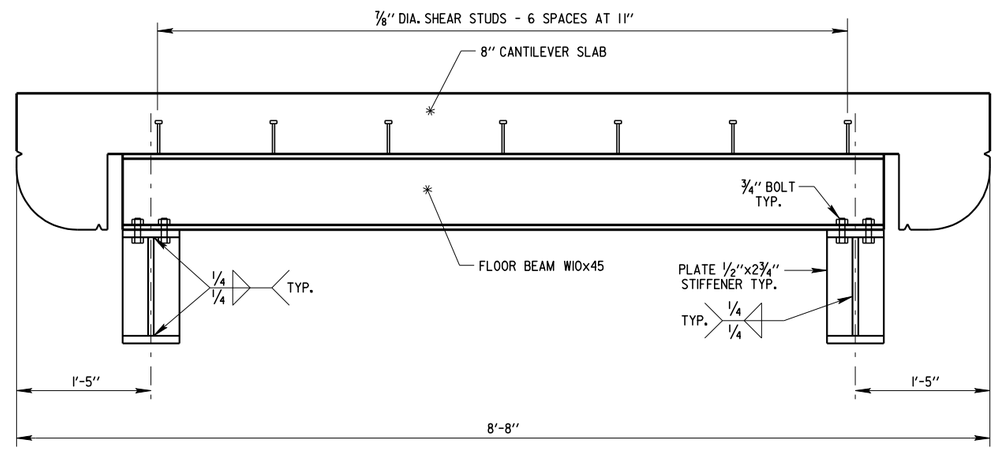

SECTION 1/35

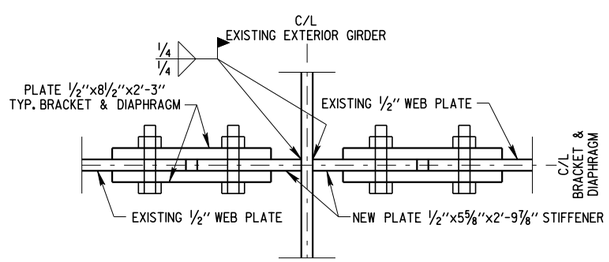

SECTION 3/35

ESTIMATED BRIDGE QUANTITIES SHEET 35

BID ITEM	UNIT	QUANTITY
WELDED STUD SHEAR CONNECTORS ⅞"x4"	EA	112
BRIDGE STRUCTURAL STEEL	LB	16,120

NOTES:

PLAN DIMENSIONS AND DETAILS RELATIVE TO EXISTING PLANS ARE SUBJECT TO NORMAL CONSTRUCTION VARIATIONS. THE CONTRACTOR SHALL FIELD VERIFY EXISTING DIMENSIONS AND DETAILS AFFECTING NEW CONSTRUCTION AND MAKE NECESSARY APPROVED ADJUSTMENTS PRIOR TO CONSTRUCTION OR ORDERING OF MATERIAL.

ALL NEW STEEL SHALL BE GALVANIZED AND PAINTED.

City of Milwaukee

Department of Public Works

Infrastructure Services Division

PLEASANT STREET LIFT BRIDGE
OVER THE MILWAUKEE RIVER
TRAFFIC BARRIER GATE OVERHANG

REVISIONS

DESIGNED BY J.J.K.
DRAWN BY K.P.S.
CHECKED BY H.J.R.
DATE 06/2012
SCALE NONE
JOB NUMBER BR100-07-0104
SHEET NUMBER 35 OF 40
OF 86

W:\STR\B0112\ 2012WORK\ 35.DGN 04-18-2012

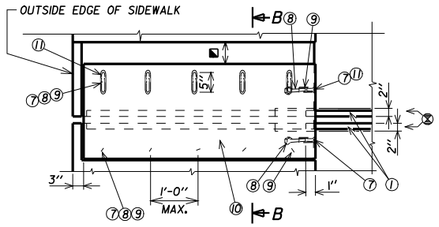

PLAN AT NEW SIDEWALK

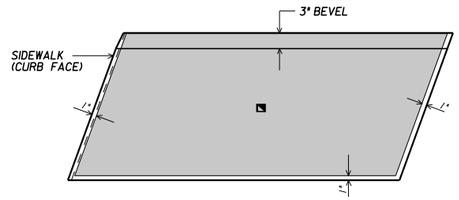

PLAN OF SIDEWALK COVER PLATE WITH SLIP-RESISTANT SURFACE

APPROVED SLIP-RESISTANT APPLIED SURFACES FOR STEEL PLATES		
PRODUCT	MANUFACTURER	CONTACT AT
SLIPNOT GRADE 2, STEEL	W. S. MOLNAR COMPANY	1-800-SLIPNOT
ALGRIP, STEEL	ROSS TECHNOLOGY CORP.	1-800-345-8170

PLACE SLIP-RESISTANT SURFACE ON TOP WALKING SURFACE IN SHADED AREA ONLY (NOT ON CURB FACE). GALVANIZE PLATE AFTER SLIP-RESISTANT SURFACE IS APPLIED.

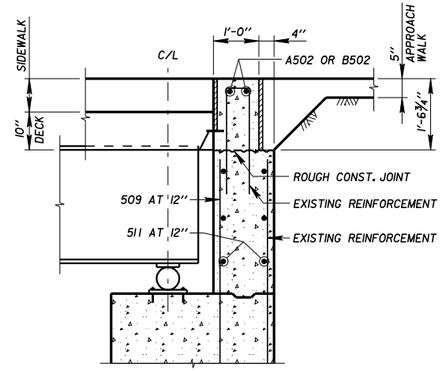

EXISTING SECTION THRU SIDEWALK

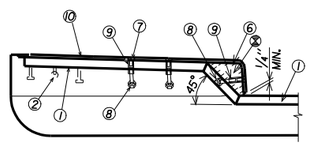

NEW PARTIAL ELEVATION SECTION AT PARTIAL SIDEWALK

LEGEND

1. NEOPRENE STRIP SEAL (2 -INCH) & STEEL EXTRUSIONS. SET JOINT OPENING AT 1¾" WHEN EXPANSION LENGTH ≤ 230'-0". WHEN EXPANSION LENGTH > 230'-0", PREPARE A TEMPERATURE TABLE SHOWING JOINT OPENINGS AT 85°F, 45°F, & -5°F.
2. STUDS ⅝" Ø x 6⅜" LONG AT 6" ALTERNATE CENTERS. WELD TO EXTRUSIONS & BEND AS SHOWN AFTER WELDING.
2A. ½" THICK ANCHOR PLATE WITH ⅝" Ø ROD (OR ALTERNATE STRIP SEAL ANCHOR). WELD ROD TO ANCHOR PLATE. WELD ANCHOR PL. TO NO. 1 AT 1'-6" CTRS. BETWEEN GIRDERS.
3. ¾" Ø THREADED ROD WITH 2 NUTS AND WASHERS. FOR PRESTRESSED GIRDERS FIELD SET ON C/L OF GIRDER. FOR STEEL GIRDERS WELD THREADED ROD TO TOP FLANGE OR ATTACH BY BOLTING THRU FLANGE. ON ABUTMENT SIDE GROUT THREADED ROD INTO FIELD DRILLED HOLES IN ABUTMENT BACKWALL AS SHOWN.
4. ¾" Ø THREADED ROD WITH NUT. TACK WELD NUT TO NO. 5.
5. FABRICATE SUPPORT FROM 3" x ½" BAR AS SHOWN OR EQUIVALENT. ONE PER GIRDER PER SIDE. SHOP OR FIELD WELD TO NO. 1. IF FIELD WELDED, COVER WELDED AREAS WITH EPOXY-COATING MATERIAL. PROVIDE 1½" Ø HOLE FOR NO. 3 & 1" Ø HOLE FOR NO. 4.

REFER TO SIDEWALK EXPANSION JOINTS:

6. GALVANIZED PLATE ⅜" x 10½" x (2'-0" LONG FOR SKEWS TO 45° & 3'-0" LONG FOR SKEWS > 45°) WITH HOLES FOR NO. 7. BEND AS SHOWN.
7. ¾" Ø x 1½" STAINLESS STEEL SOCKET FLAT HEAD SCREWS WITH ANTI-SEIZE LUBRICANT. RECESS 1/16" BELOW PLATE SURFACE.
8. ¾" Ø x 4" GALVANIZED HEX HEAD BOLT. BEND 45°.
9. ¾" Ø x 2¼" GALVANIZED THREADED COUPLING.
10. GALVANIZED SIDEWALK PLATE ⅜" x (2'-0" WIDE FOR SKEWS TO 45° & 3'-0" WIDE FOR SKEWS > 45°) x LIMITS SHOWN. BEND DOWN FACE OF SIDEWALK WITH HOLES FOR NO. 7.
11. 1" x 5" SLOTTED CSK. HOLE FOR NO. 7. SLOT PARALLEL TO DIRECTION OF MOVEMENT.

NOTES

ONE FIELD SPLICE PERMITTED IN STEEL EXTRUSIONS. IF USED, DETAILS SHALL BE SUBMITTED FOR APPROVAL. NO SPLICING PERMITTED IN NEOPRENE STRIP SEAL.

AFTER FABRICATION, BUT BEFORE SHIPMENT, STRAIGHTEN STEEL EXTRUSIONS SUCH THAT THEY SHALL BE FREE FROM WARP, TWIST & SWEEP.

FABRICATOR SHALL PROVIDE MEANS OF KEEPING GALVANIZED EXTRUSIONS CLEAN & SMOOTH DURING SHIPMENT AND PRIOR TO APPLYING LUBRICANT ADHESIVE FOR NEOPRENE GLAND INSTALLATION.

SANDBLAST PLATES & EXTRUSIONS AFTER FABRICATION IN ACCORDANCE WITH SSPC SP. #6 "COMMERCIAL BLAST CLEANING". AFTER BLAST CLEANING, THE PLATES & EXTRUSIONS SHALL BE HOT DIPPED GALVANIZED.

ANCHOR SYSTEM NO. 8 & NO. 9 SHALL CONFORM TO ASTM A307 & SHALL BE GALVANIZED IN ACCORDANCE WITH ASTM A153 CLASS C & D.

STRIP SEAL EXPANSION JOINT ASSEMBLY, INCLUDING ANCHOR STUDS & HARDWARE WILL BE PAID FOR AT THE LUMP SUM PRICE BID FOR "EXPANSION DEVICE (B-40-406)".

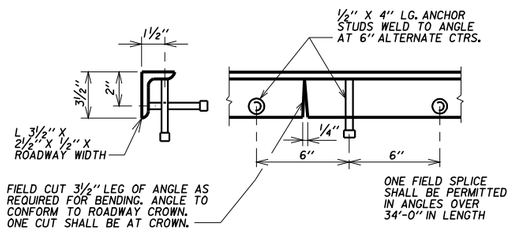

DETAIL
NEW PROTECTION ANGLE ARMOR

INCLUDE UNDER "EXPANSION DEVICE", BID ITEM 502.3100

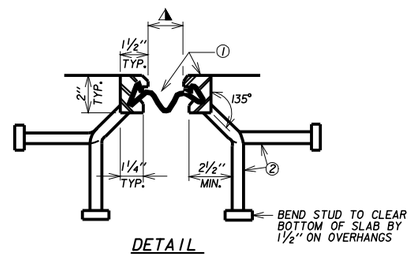

DETAIL
SECTION THRU NEW JOINT

EXTERIOR GIRDER TO EDGE OF SLAB & AT PARAPETS, MEDIUMS & SIDEWALKS

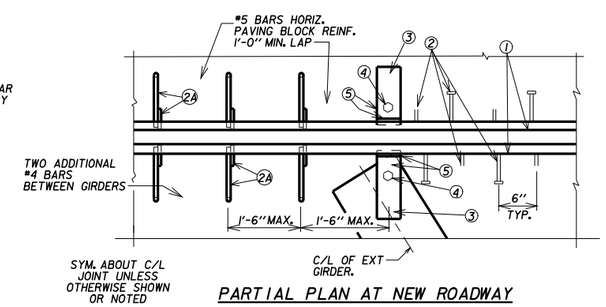

PARTIAL PLAN AT NEW ROADWAY

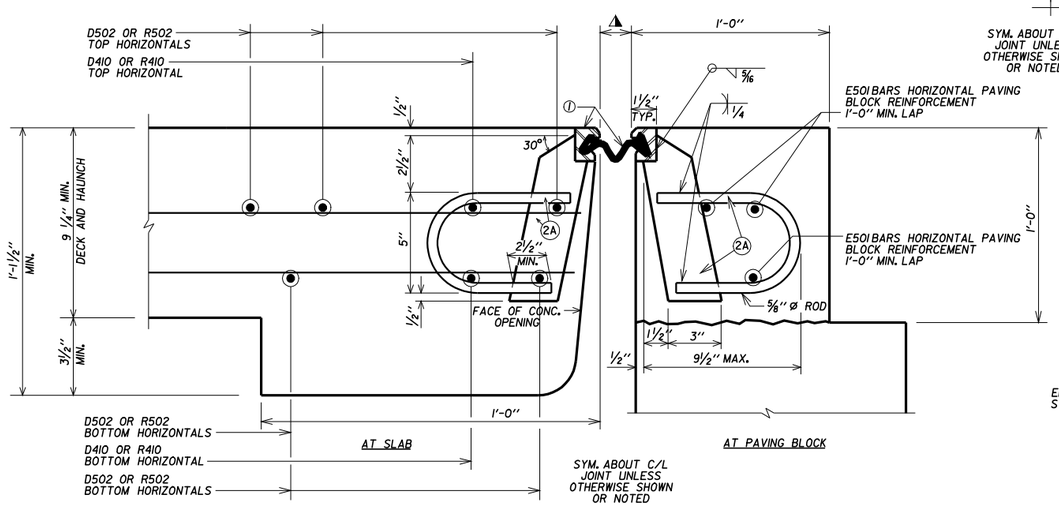

SECTION THRU NEW ROADWAY JOINT

ROADWAY TRAFFIC AREA BETWEEN EXTERIOR GIRDERS

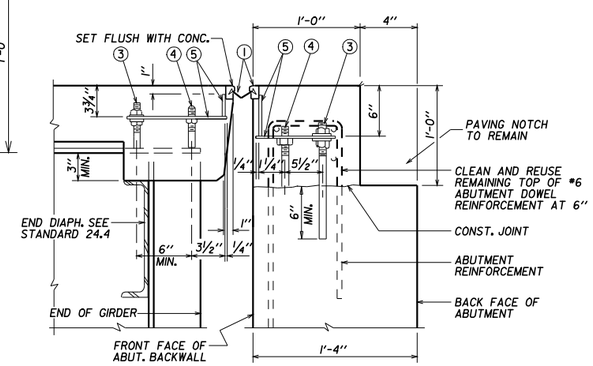

TYPICAL SECTION THRU NEW ROADWAY JOINT AT NEW STEEL GIRDER

NORMAL TO C/L SUBSTRUCTURE

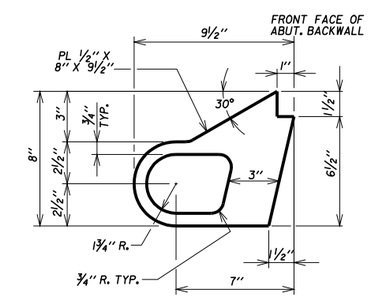

NEW ALTERNATE STRIP SEAL ANCHOR

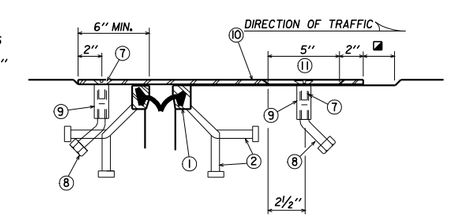

EXPANSION JOINT AT SIDEWALK SECTION B-B

City of Milwaukee

Department of Public Works

Infrastructure Services Division

PLEASANT STREET LIFT BRIDGE OVER THE MILWAUKEE RIVER EXPANSION JOINTS AT ABUTMENTS

REVISIONS

DESIGNED BY J.J.K.	
DRAWN BY K.P.S.	
CHECKED BY H.J.R.	
DATE 06/2012	SCALE NONE
JOB NUMBER BR100-07-0104	
SHEET NUMBER 36 OF 40	
OF 86	

W:\STR\B012\ 2012WORK\ 36.DGN 04-18-2012

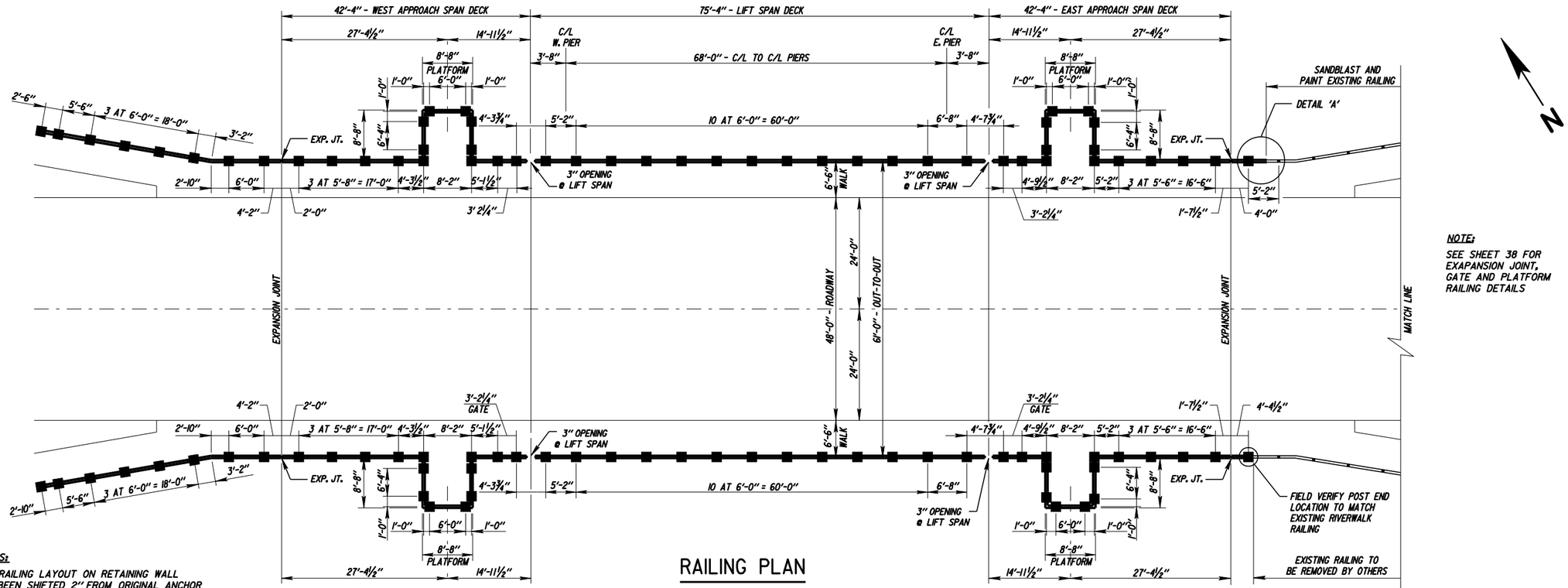

NOTE:
SEE SHEET 38 FOR EXAPANSION JOINT, GATE AND PLATFORM RAILING DETAILS

NOTES:
NEW RAILING LAYOUT ON RETAINING WALL HAS BEEN SHIFTED 2'' FROM ORIGINAL ANCHOR LOCATIONS TO AVOID EXISTING ANCHOR BOLTS

EXISTING ANCHOR BOLTS SHALL BE CUT OFF AND GROUND SMOOTH

RAILING PLAN

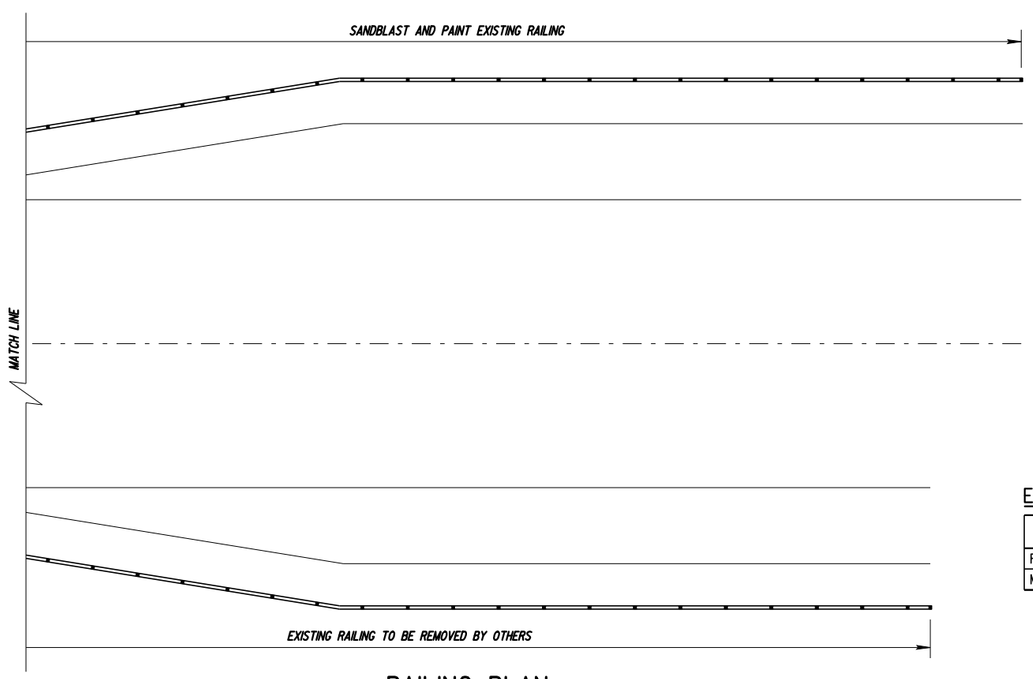

RAILING PLAN

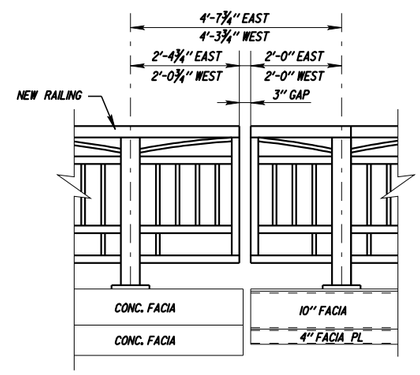

LIFT SPAN EXPANSION JOINT DETAIL

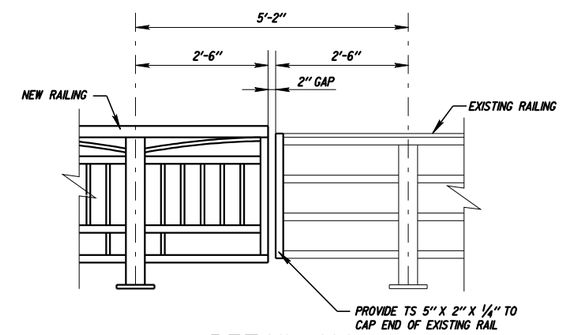

DETAIL 'A'

NEW RAILING TO EXISTING RAILING

ESTIMATED BRIDGE QUANTITIES SHEET 37

BID ITEM	UNIT	QUANTITY
REMOVE AND REPLACE BRIDGE RAILING	LF	487
MODIFY EXISTING NORTHEAST RAILING	LS	1

SHOP NOTES:

1. ALL FABRICATION SHALL BE DONE IN ACCORDANCE WITH WI/DOT STD. SPECS. FOR ROADS & BRIDGES (2012 EDITION) AND SUPPLEMENT SPEC. UNLESS NOTED.
2. ALL MATERIALS USED IN FABRICATION SHALL BE MADE FROM MATERIALS CONFORMING TO ASTM DESIGNATION A500, GRADE B, UNLESS OTHERWISE NOTED IN THE BILL OF MATERIALS.
3. HARDWARE SHALL BE AS NOTED. WELDING SHALL BE IN ACCORDANCE WITH AASHTO/AWS D1.5 UNLESS NOTED. DEBURR/BREAK ALL EDGES, CORNERS & HOLES.
4. GALVANIZED SHIMS SHALL BE PROVIDED & USED UNDER BASE PLATES WERE REQUIRED. VENT MEMBERS AS NEEDED TO FACILITATE GALVANIZING.
5. NEW RAILING SHALL BE GALVANIZED AND PAINTED.

City of Milwaukee
Department of Public Works
Infrastructure Services Division

PLEASANT STREET LIFT BRIDGE OVER THE MILWAUKEE RIVER
RAILING LOCATION PLAN

REVISIONS

DESIGNED BY J.D.T.
DRAWN BY K.P.S.
CHECKED BY J.J.K. / H.J.R
DATE 06/2012
SCALE NONE
JOB NUMBER BR100-07-0104
SHEET NUMBER 37 OF 40
OF 86

W:\STR\B012\ 2012WORK\ 37.DGN 04-12-2012

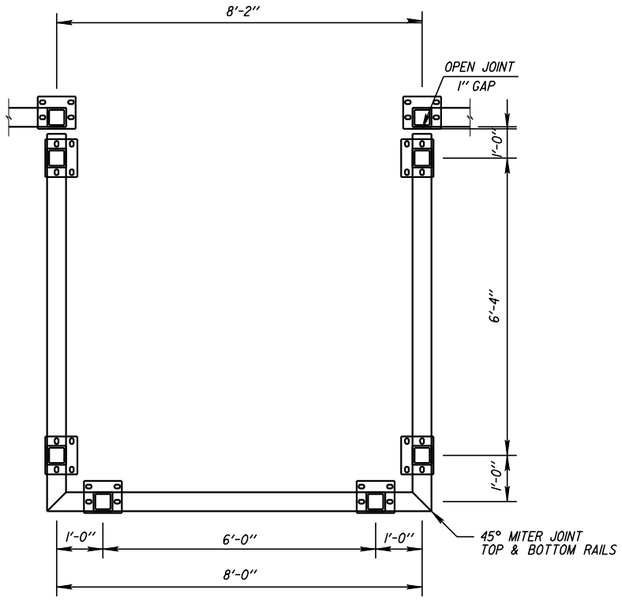

PROPOSED RAILING LAYOUT
AT BARRIER GATE PLATFORMS

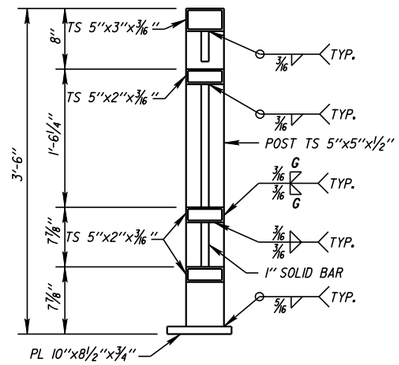

PROPOSED RAILING SECTION

NOTE:

- PROVIDE 1/8" FABRIC PAD UNDER RAILING BASE PLATES
- CAULK AROUND ALL EDGES OF BASE PLATES
- ANCHOR BOLTS ON NW AND SW RETAINING WALLS WILL BE CUT FLUSH AND GROUND SMOOTH

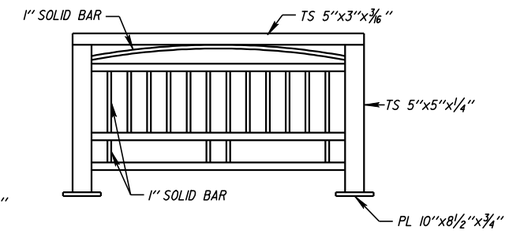

PROPOSED TYPICAL RAILING SECTION

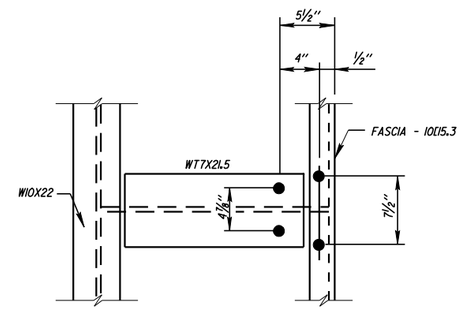

PLAN AT POST SUPPORT
LIFT SPAN

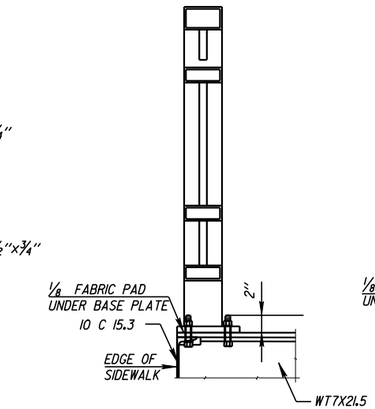

ANCHOR BOLT DETAIL
AT LIFTSPAN

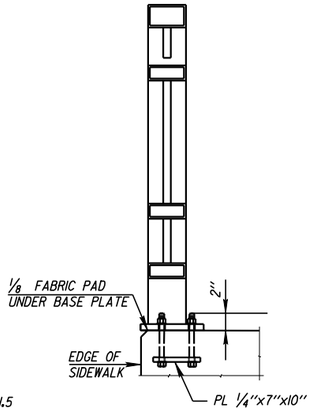

ANCHOR BOLT DETAIL
AT APPROACHES

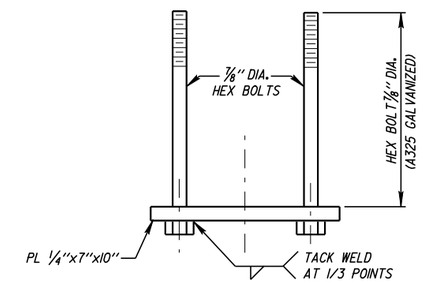

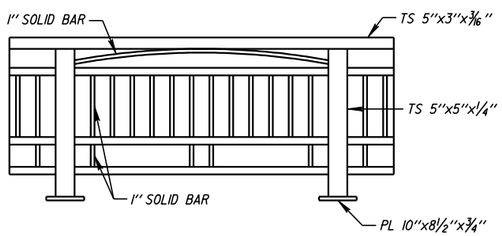

PROPOSED RAILING AT GATE ARM

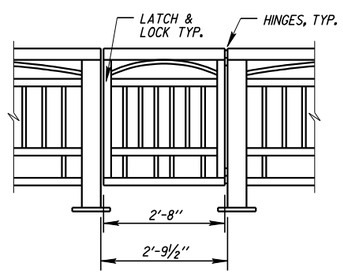

PROPOSED RAILING AT GATE

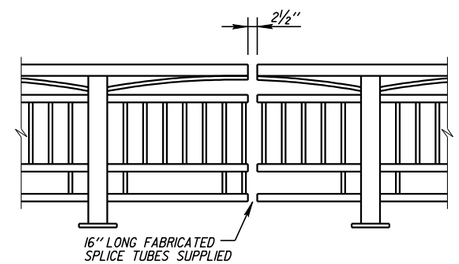

PROPOSED RAILING AT EXPANSION JOINT

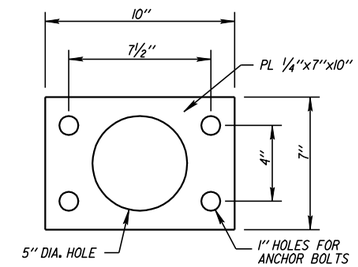

ANCHORAGE DETAIL
AT APPROACHES

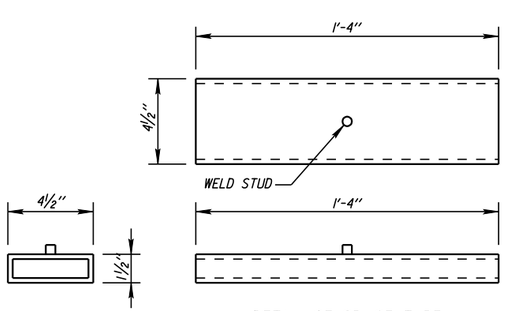

DETAIL OF SPLICE TUBE
FOR 5"x2"X3/16" TUBING

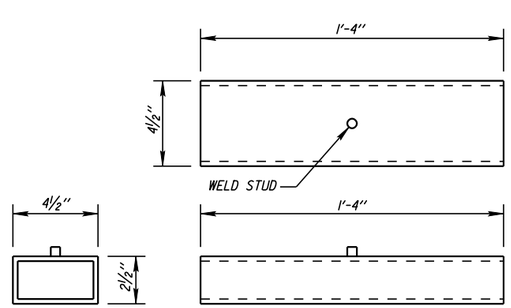

DETAIL OF SPLICE TUBE
FOR 5"x3"X3/16" TUBING

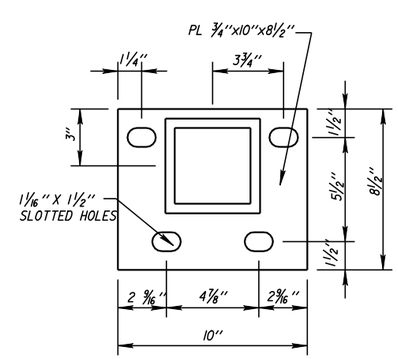

DETAIL OF BASE PLATE
AT LIFT SPAN

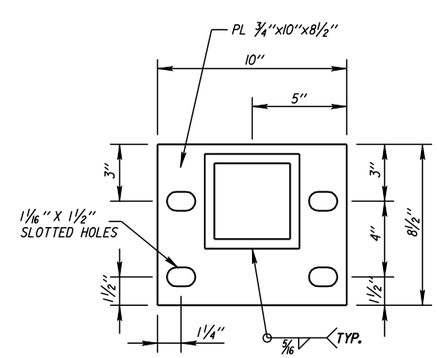

DETAIL OF BASE PLATE AT
APPROACHES & RET. WALLS

City of Milwaukee

Department of Public Works

Infrastructure Services Division

PLEASANT STREET LIFT BRIDGE OVER THE MILWAUKEE RIVER
RAILING DETAILS

REVISIONS

DESIGNED BY J.D.T.	
DRAWN BY K.P.S.	
CHECKED BY J.J.K. / H.J.R.	
DATE 06/2012	SCALE NONE
JOB NUMBER BR100-07-0104	
SHEET NUMBER 38 OF 40	
OF 86	

W:\STR\BO12\ 2012WORK\ 38.DGN 04-18-2012

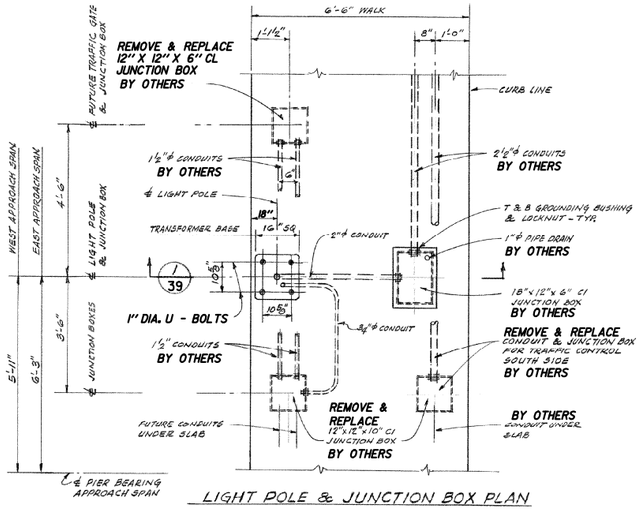

LIGHT POLE & JUNCTION BOX PLAN

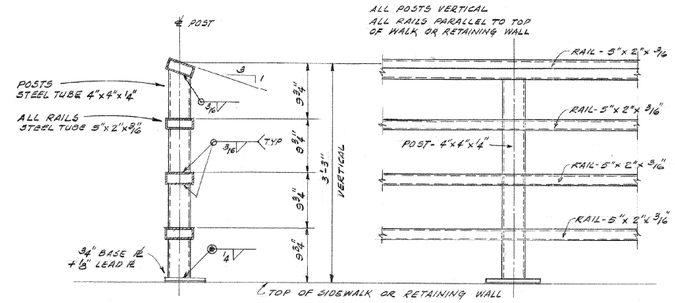

EXISTING TYPICAL RAILING SECTION
NE RETAINING WALL

EXISTING TYPICAL RAILING ELEVATION
NE RETAINING WALL

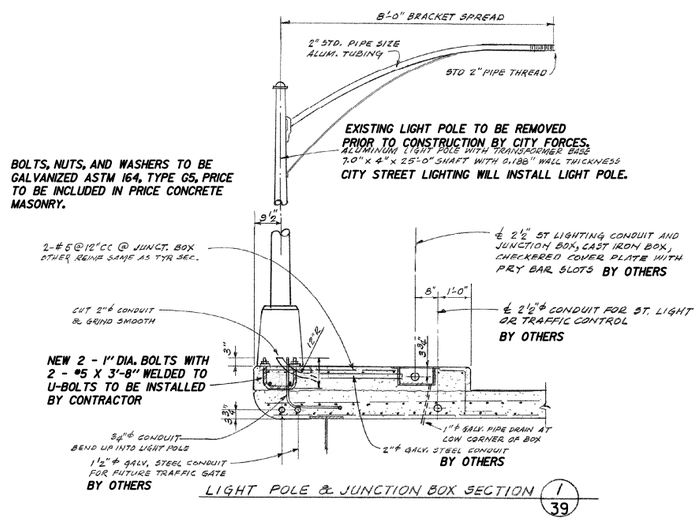

LIGHT POLE & JUNCTION BOX SECTION 1/39

NOTE:

ALL JUNCTION BOXES, CONDUIT, AND ELECTRICAL SHOWN IN THE ABOVE WORK WILL BE PERFORMED BY CIYT FORCES. CONTRACTOR TO PROVIDE GLAVANIZED U-BOLT, NUTS, WASHERS AND 2 - #5 X ⅜" EPOXY COATED REBAR. CONTRACTOR TO COORDINATE CONCRETE POURS WITH CITY FORCES TO ALLOW PLACEMENT OF ABOVE ELECTRICAL WORK.

BILL OF BARS - APPROACH SIDEWALKS

BAR MARK	NO. REQ'D.	LENGTH	BENT	EPOXY COATED
H601	8	7'-2"	X	X
H602	8	7'-10"	X	X

NOTE:
BAR STEEL REINFORCEMENT FOR ACCESS HATCHES TO BE INCLUDED UNDER BID ITEM "REMOVE AND REPLACE ACCESS HATCH"

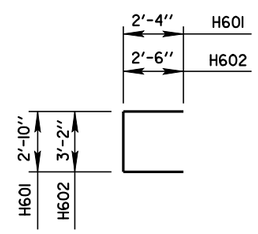

H601, H602

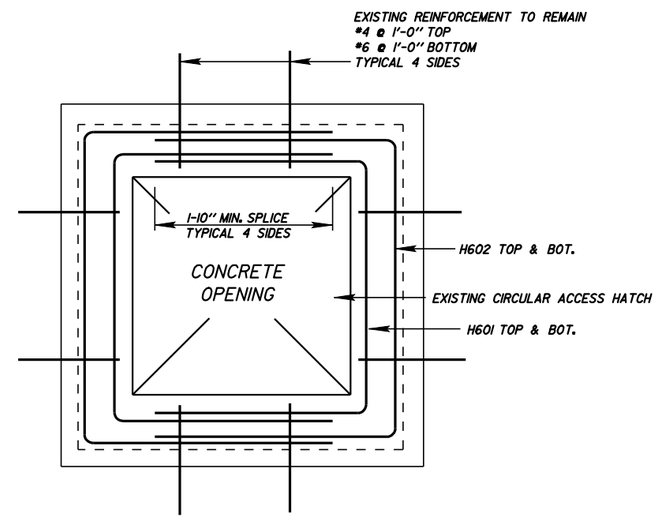

SECTION B/39
CASTING NOT SHOWN FOR CLARITY

ESTIMATED BRIDGE QUANTITIES SHEET 39

BID ITEM	UNIT	QUANTITY
REMOVE AND REPLACE ACCESS HATCH	EA	2

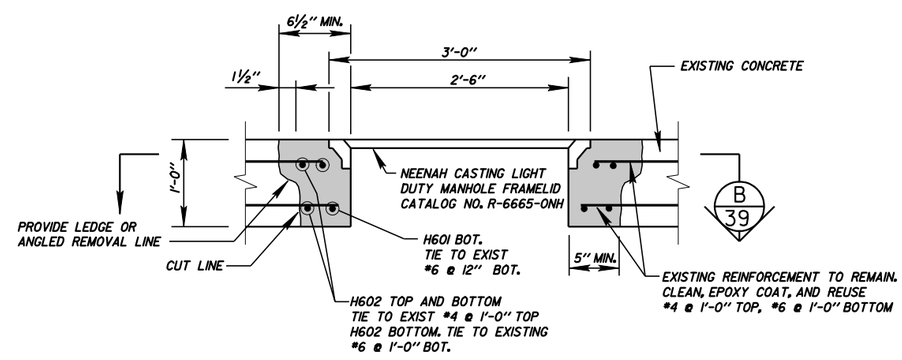

ACCESS HATCHES
SEE PIER SHEETS 10 AND 12

City of Milwaukee
Department of Public Works
Infrastructure Services Division

PLEASANT STREET LIFT BRIDGE
OVER THE MILWAUKEE RIVER
EXISTING LIGHTPOLE, RAILING AND ACCESS HATCHES

REVISIONS

DESIGNED BY J.D.T.
DRAWN BY K.P.S.
CHECKED BY H.J.R.
DATE 06/2012
SCALE NONE
JOB NUMBER BR100-07-0104
SHEET NUMBER 39 OF 40
OF 86

W:\STRUBOI2\ 2012WORK\ 40.DGN 04-18-2012

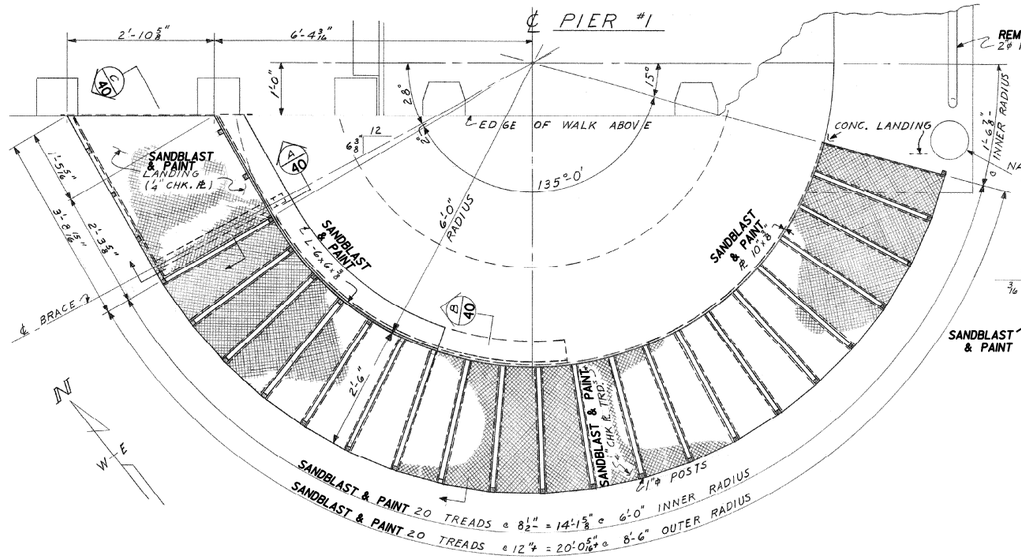

PLAN OF CIRCULAR STAIR

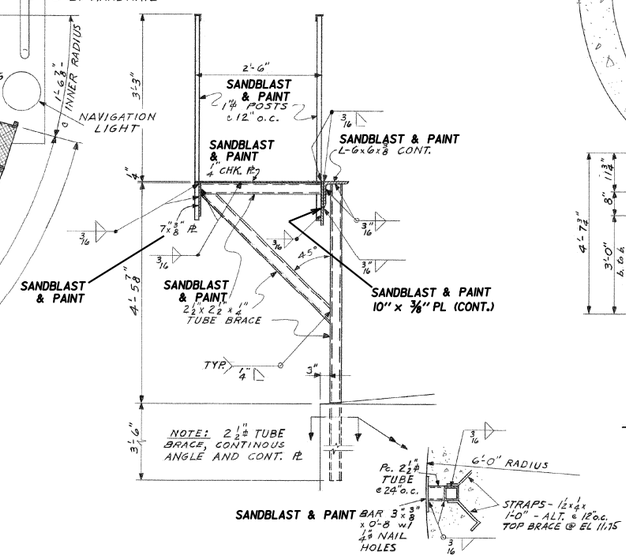

SECTION A/40

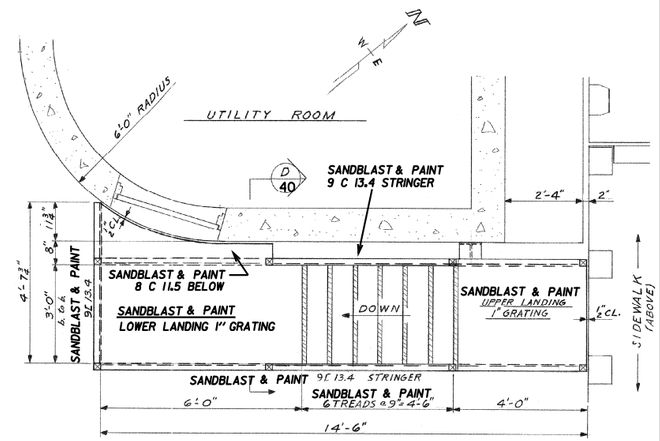

PLAN OF EXTERIOR BRIDGEHOUSE STAIR

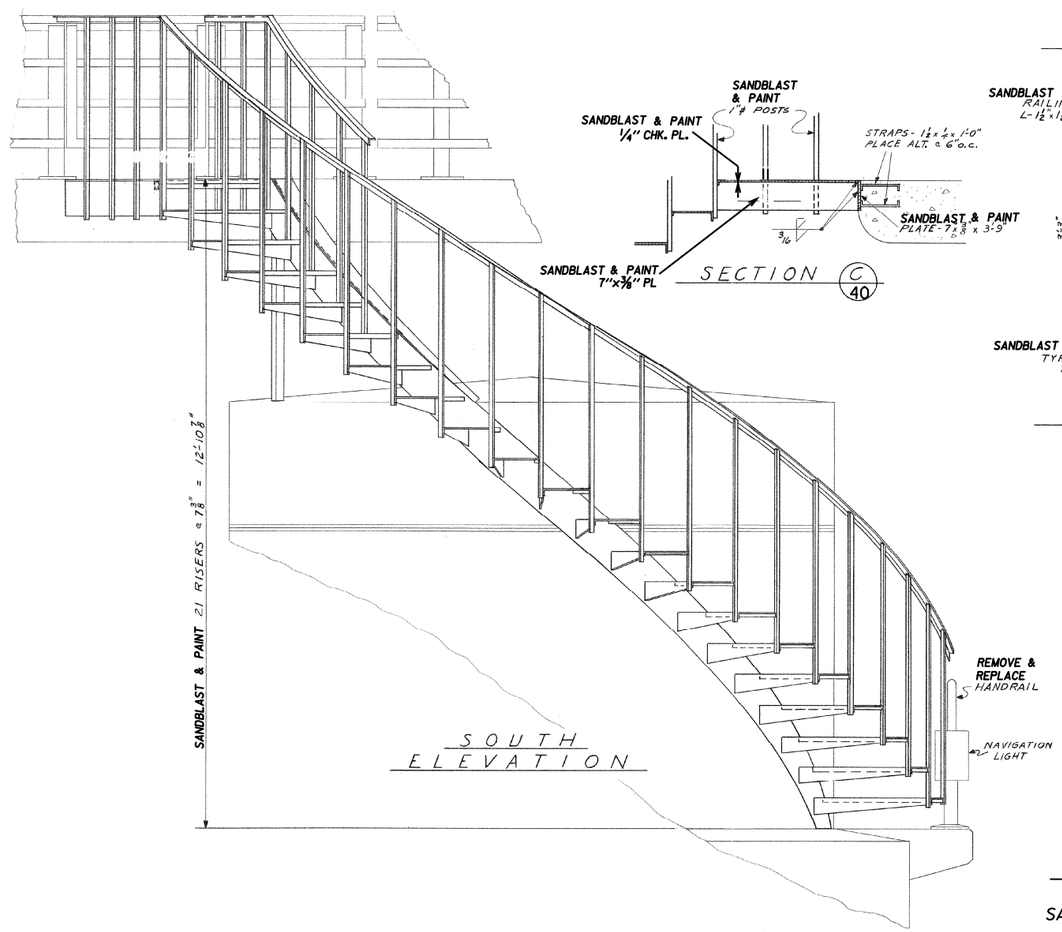

SOUTH ELEVATION

SECTION C/40

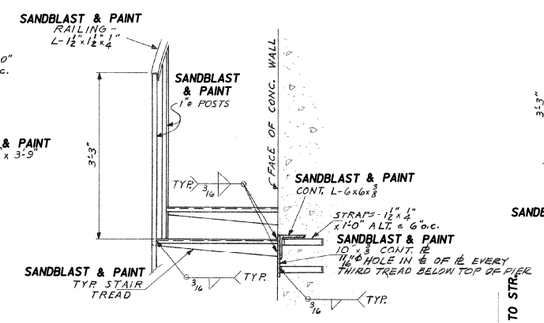

SECTION B/40

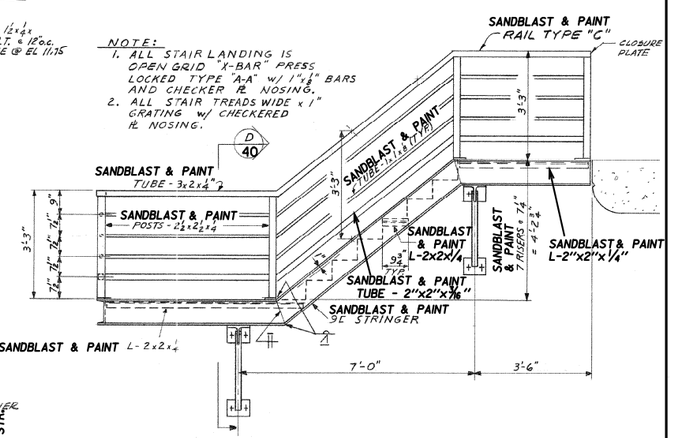

EAST ELEVATION

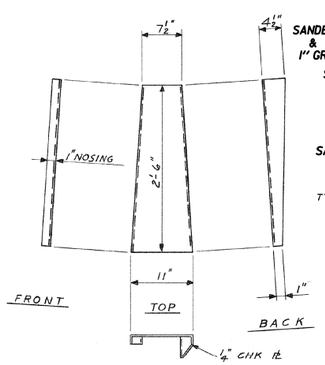

TYPICAL TREAD FOR CIRCULAR STAIR

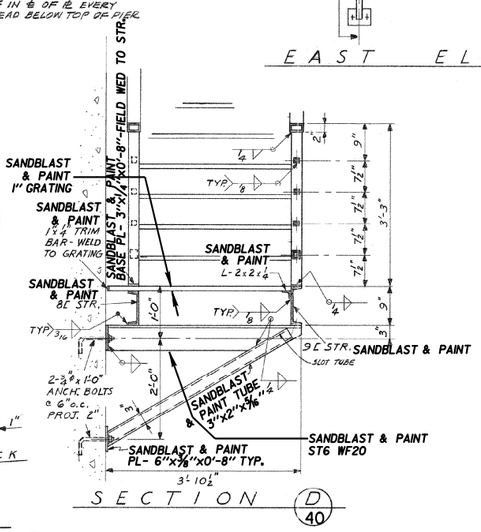

SECTION D/40

SANDBLAST & PAINT ALL SURFACES OF ALL STAIR TREADS

City of Milwaukee

Department of Public Works

Infrastructure Services Division

PLEASANT STREET LIFT BRIDGE OVER THE MILWAUKEE RIVER CIRCULAR STAIRS

REVISIONS

DESIGNED BY J.J.K.	
DRAWN BY K.P.S.	
CHECKED BY H.J.R.	
DATE 06/2012	SCALE NONE
JOB NUMBER BR100-07-0104	
SHEET NUMBER 40 OF 40	
OF 86	

W:\STR\B0112\ 2012WORK\ 41.DGN 04-18-2012

PAVEMENT MARKING

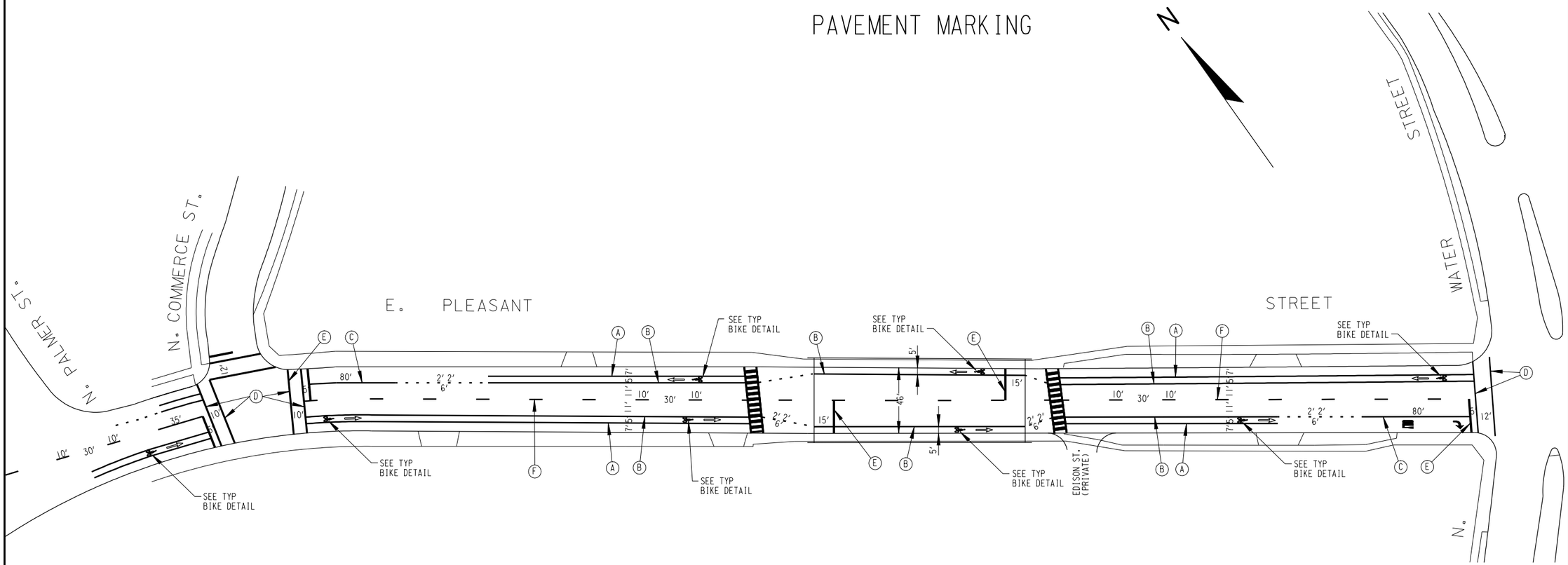

(A) PAVEMENT MARKING, SOLID WHITE EPOXY 4''
(B) PAVEMENT MARKING, SOLID WHITE EPOXY 6''
(C) PAVEMENT MARKING, SOLID WHITE EPOXY 8''
(D) PAVEMENT MARKING, SOLID WHITE EPOXY 12''
(E) PAVEMENT MARKING, SOLID WHITE EPOXY 24''
(F) PAVEMENT MARKING, SOLID YELLOW EPOXY 4''

City of Milwaukee

Department of Public Works

Infrastructure Services Division

PLEASANT STREET LIFT BRIDGE
OVER THE MILWAUKEE RIVER
PAVEMENT MARKING

REVISIONS

DESIGNED BY
GS

DRAWN BY
GJR

CHECKED BY
HJR

DATE
?

SCALE
NONE

JOB NUMBER
BR100-07-0104

SHEET NUMBER
T1 OF T5

OF

W:\STR\B0112\ 2012 WORK\T1.DGN 03-14-2012

GENERAL PAVEMENT MARKING NOTES

ALL DOUBLE YELLOW CENTERLINES SHALL HAVE A 4 INCH (+/- 1 INCH) SPACE BETWEEN TWO (2) 4 INCH WIDE LINES. THE DIMENSIONS ARE FROM FACE OF CURB TO THE CENTER OF THE 4 INCH SPACE, UNLESS OTHERWISE NOTED.

ALL WHITE LANE LINES SHALL BE 4 INCHES WIDE, 10 FEET LONG WITH A 30 FOOT SPACING. THE DIMENSIONS ARE FROM THE FACE OF CURB TO CENTER OF PAVEMENT MARKING, UNLESS OTHERWISE NOTED.

ALL WHITE CROSSWALK LINES ARE 12 INCHES WIDE.

ALL WHITE STOP LINES ARE 24 INCHES WIDE.

ALL PAVEMENT MARKINGS ARE TO BE EPOXY.

INCLUDE SANDBLASTING PRIOR TO INSTALLATION OF PAVEMENT MARKINGS.

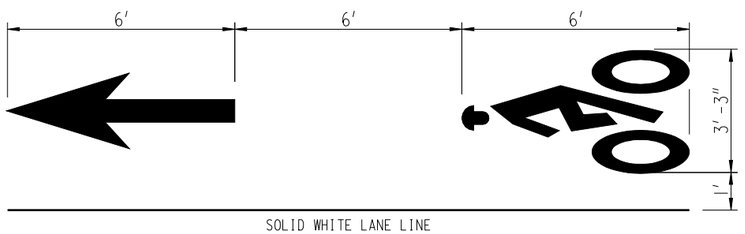

TYPICAL DETAIL
BIKE LANE

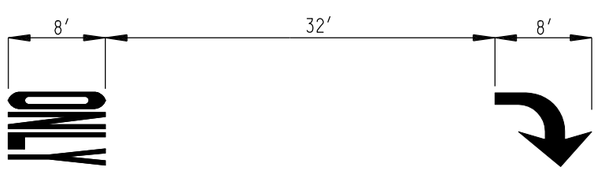

TYPICAL DETAIL
ARROW AND ONLY

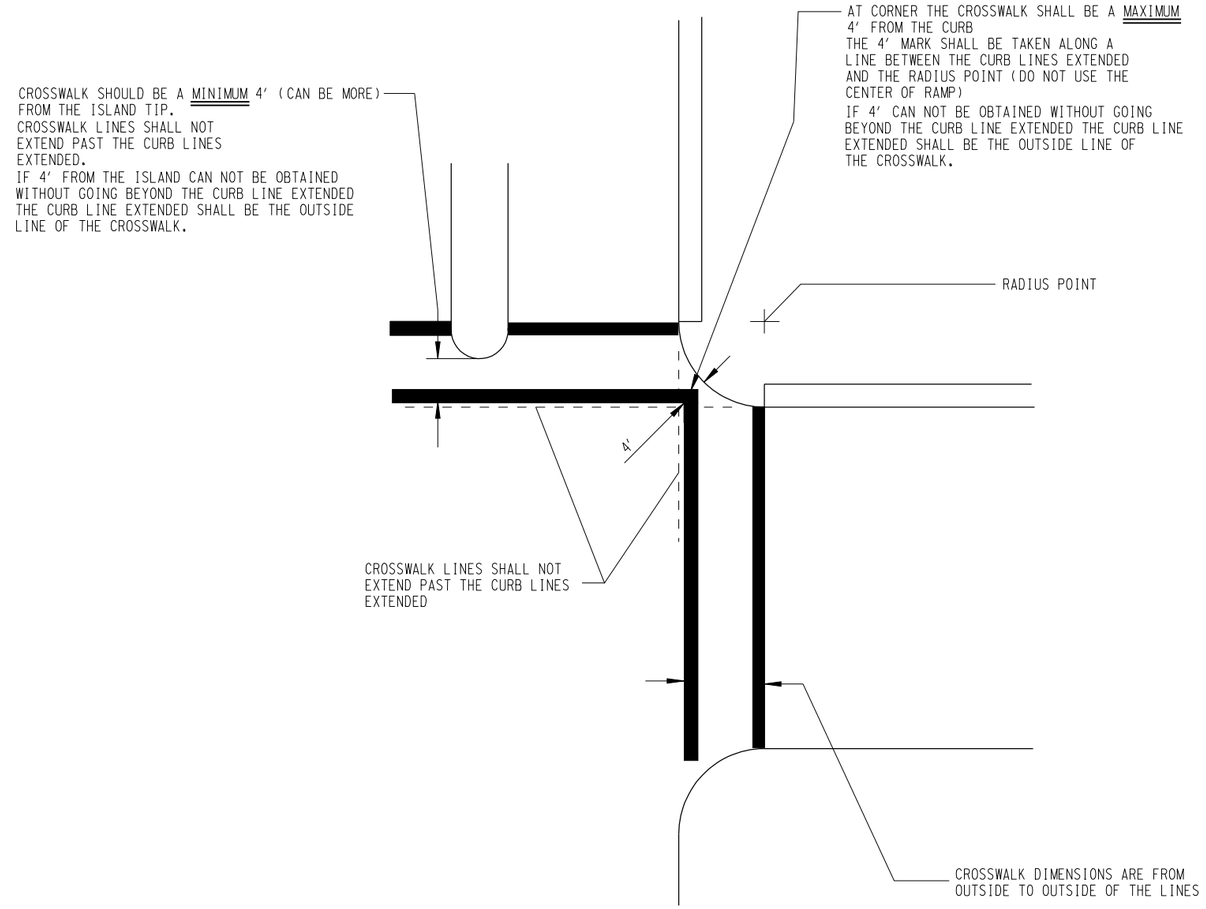

TYPICAL
CROSSWALK INSTALLATION

City of Milwaukee

Department of Public Works

Infrastructure Services Division

PLEASANT STREET LIFT BRIDGE
OVER THE MILWAUKEE RIVER
PAVEMENT MARKING DETAILS

REVISIONS

DESIGNED BY G.S.	
DRAWN BY K.P.S.	
CHECKED BY H.J.R.	
DATE	SCALE NONE
JOB NUMBER BR100-07-0104	
SHEET NUMBER T2 OF T5	
OF	

W:\STR\B0112\ 2012 WORK\T2.DGN 03-14-2012

FULL BRIDGE CLOSURE

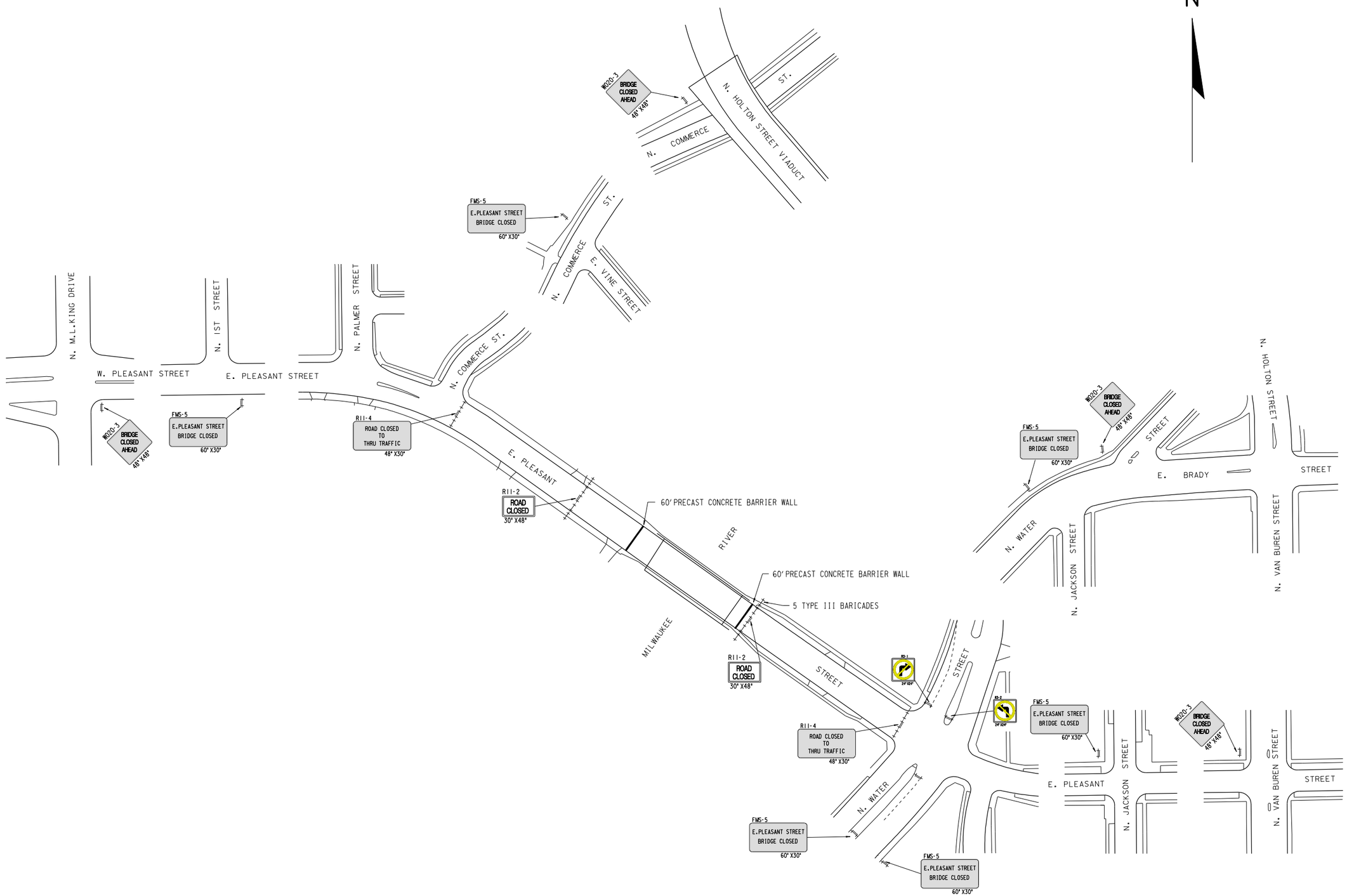

City of Milwaukee

Department of Public Works

Infrastructure Services Division

PLEASANT STREET LIFT BRIDGE
OVER THE MILWAUKEE RIVER
FULL BRIDGE CLOSURE

REVISIONS

DESIGNED BY G.S.	
DRAWN BY K.P.S.	
CHECKED BY H.J.R.	
DATE	SCALE NONE
JOB NUMBER BR100-07-0104	
SHEET NUMBER T3 OF T5	
OF	

W:\STR\B0112\ 2012 WORK\T3.DGN 03-20-2012

ESTIMATE OF TRAFFIC CONTROL ITEMS REQUIRED

ITEMS		BRIDGE FULL CLOSURE 290 DAYS (EACH)	(DAYS)	TOTAL (DAYS)
① 643.0420	TRAFFIC CONTROL BARRICADES TYPE III	47	13,630	13,630
643.0705	TRAFFIC CONTROL WARNING LIGHTS TYPE A	94	27,260	27,260
603.800	CONCRETE BARRIER TEMPORARY PRECAST DELIVERED	120 L.F.		120 L.F.
603.8125	CONCRETE BARRIER TEMPORARY PRECAST INSTALLED	120 L.F.		120 L.F.

ITEMS	SIZE	DESCRIPTION	BRIDGE FULL CLOSURE	TOTAL (DAYS)
FMS-5	60"X30"	E. PLEASANT STREET BRIDGE CLOSED	6	1,740
R3-1	24"X24"	NO RIGHT TURN SYMBOL	1	290
R11-2	48"X30"	ROAD CLOSED	2	580
R11-4	48"X30"	ROAD CLOSED TO THRU TRAFFIC	2	580
R3-2	24"X24"	NO LEFT TURN SYMBOL	1	290
W020-3	48"X48"	BRIDGE CLOSED AHEAD	4	1,160
ITEMS	**SIZE**	**DESCRIPTION**	**DETOUR**	**TOTAL (DAYS)**
W020-2	48"X48"	DETOUR AHEAD	6	1,740
FMS-5	42"X42"	DETOUR E. PLEASANT STREET	6	1,740
W01-6	24"X48"	"UP ARROW"	1	290
W01-6R	48"X24"	"RIGHT ARROW"	2	580
W01-6L	48"X24"	"LEFT ARROW"	3	870
M4-9L	30"X24"	DETOUR "LEFT ARROW"	3	870
M4-9R	30"X24"	DETOUR "RIGHT ARROW"	3	870
M4-8A	24"X18"	END DETOUR	2	580
ITEM 643.0900		TOTAL	42	12,180

"WO" SIGNS ARE THE SAME AS "W" SIGNS EXCEPT THE BACKGROUND IS ORANGE.

① ALL TYPE III BARRICADES HAVE 2 FLASHING YELLOW LIGHTS

MISCELLANEOUS QUANTITIES

ITEM NUMBER	ITEM DESCRIPTION	ESTIMATED QUANTITY	ITEM UNIT
603.8000	CONCRETE BARRIER TEMPORARY PRECAST DELIVERED	120	LF
603.8125	CONCRETE BARRIER TEMPORARY PRECAST INSTALLED	120	LF
642.5201	FIELD OFFICE TYPE C (PROJECT)	1	EACH
643.0100	TRAFFIC CONTROL (PROJECT)	1	EACH
643.0420	TRAFFIC CONTROL BARRICADES TYPE III	13,630	DAYS
643.0705	TRAFFIC CONTROL WARNING LIGHTS TYPE A	27,260	DAYS
643.0900	TRAFFIC CONTROL SIGNS	12,180	DAYS

City of Milwaukee

Department of Public Works

Infrastructure Services Division

PLEASANT STREET LIFT BRIDGE OVER THE MILWAUKEE RIVER TRAFFIC CONTROL MISCELLANEOUS QUANTITIES

REVISIONS

DESIGNED BY GS

DRAWN BY DESU BEKELE

CHECKED BY JJK

DATE | SCALE NONE

JOB NUMBER BR100-07-0104

SHEET NUMBER T4 OF T5

OF

W:\STR\B0112\ 2012WORK\T4.DGN

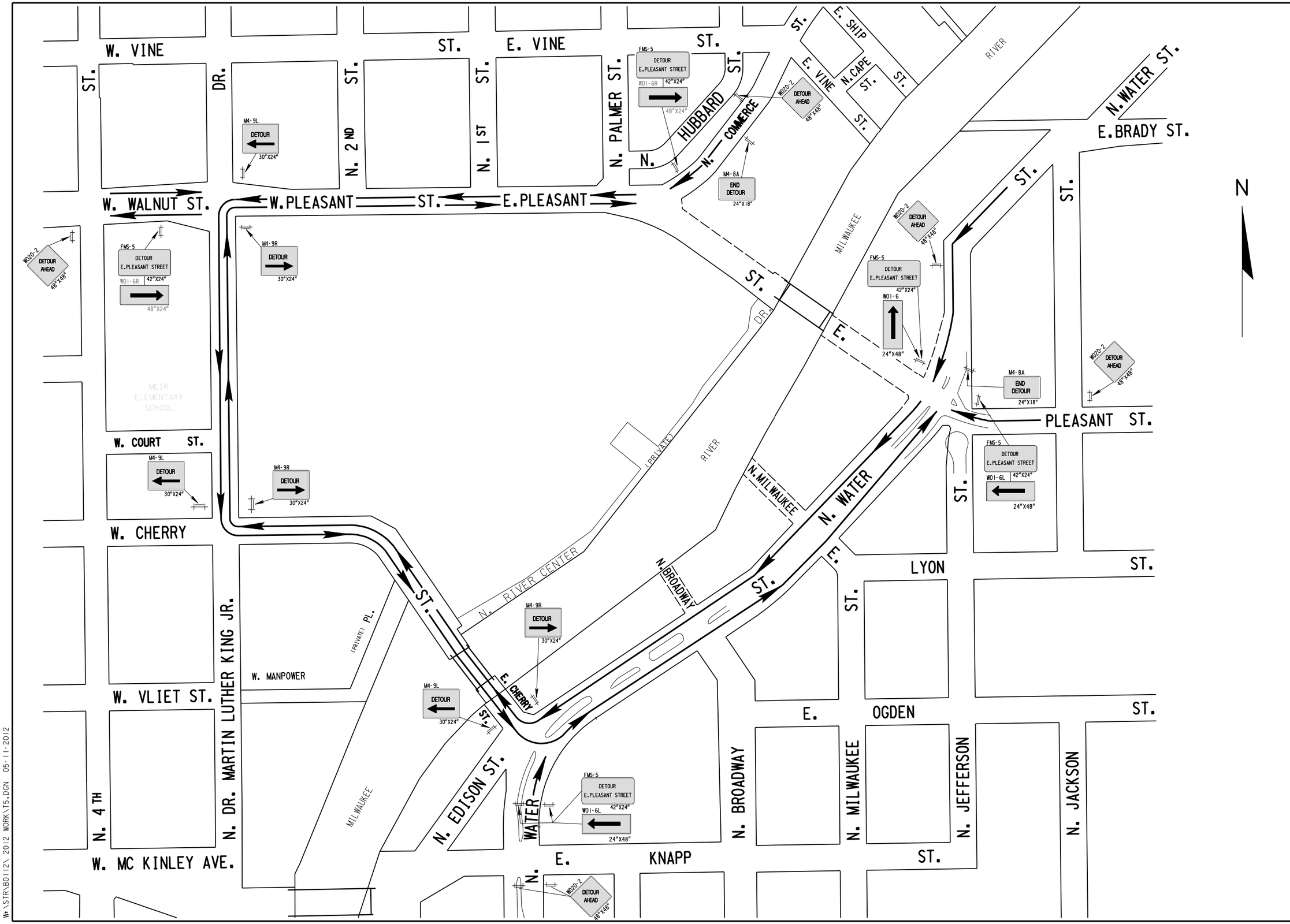

City of Milwaukee

Department of Public Works

Infrastructure Services Division

PLEASANT STREET LIFT BRIDGE
OVER THE MILWAUKEE RIVER
DETOUR PLAN

REVISIONS

DESIGNED BY JJK	
DRAWN BY KPS	
CHECKED BY HJR	
DATE	SCALE NONE
JOB NUMBER BR100-07-0104	
SHEET NUMBER T5 OF T5	
OF	

W:\STR\B0112\ 2012 WORK\T5.DGN 05-11-2012

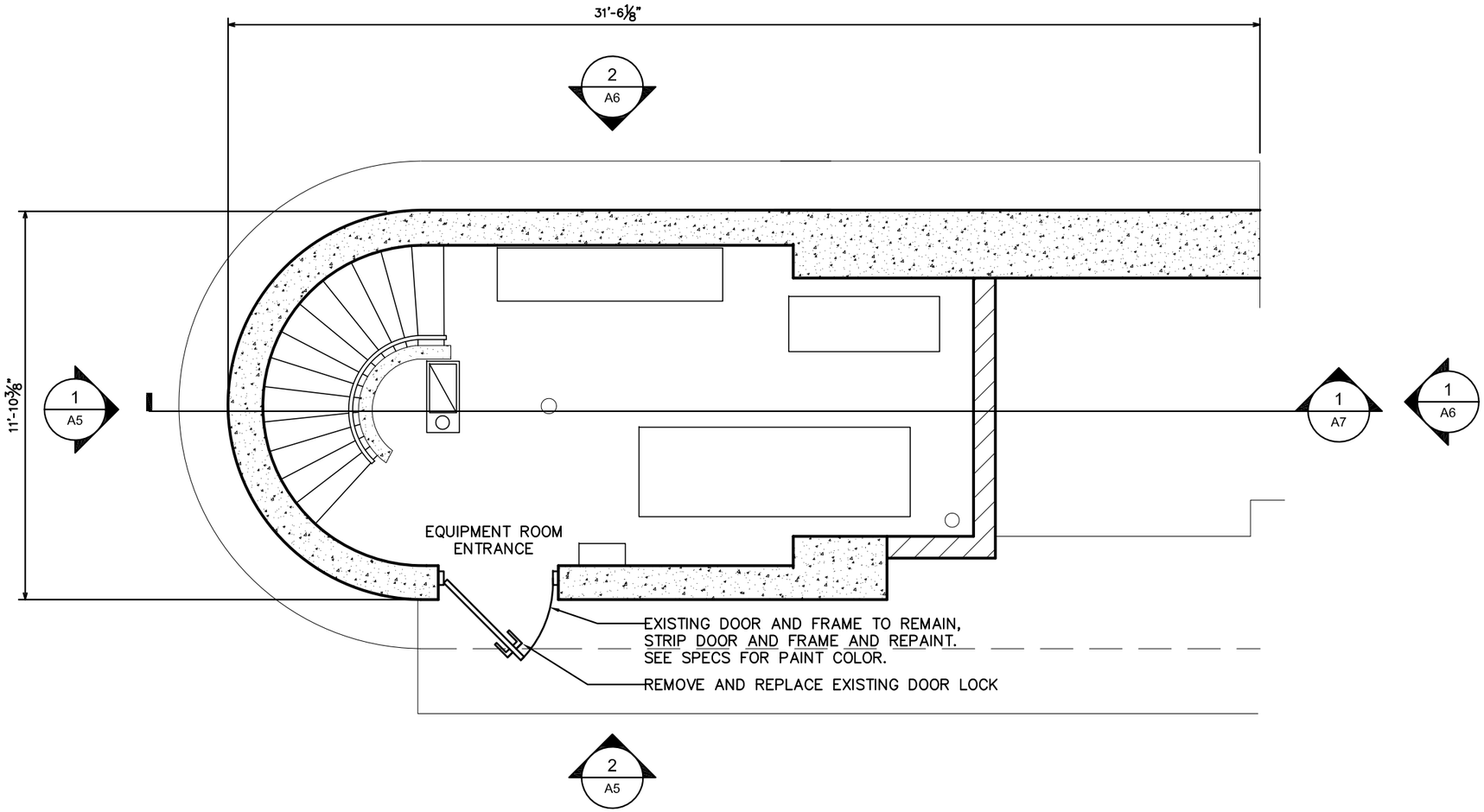

1 / A1 EQUIPMENT ROOM (1ST) LEVEL PLAN

PLAN NORTH TRUE NORTH

City of Milwaukee

Department of Public Works

Infrastructure Services Division

AMERICAN DESIGN INCORPORATED Architectural Services

PLEASANT STREET LIFT BRIDGE
OVER THE MILWAUKEE RIVER
EQUIPMENT ROOM (1ST) LEVEL PLAN

REVISIONS

DESIGNED BY

DRAWN BY
ANDY BLASER

CHECKED BY
ZACH RASMUSSEN

DATE
6/2012

SCALE

JOB NUMBER
BR100-07-0104

SHEET NUMBER
A1 OF A7

OF
86

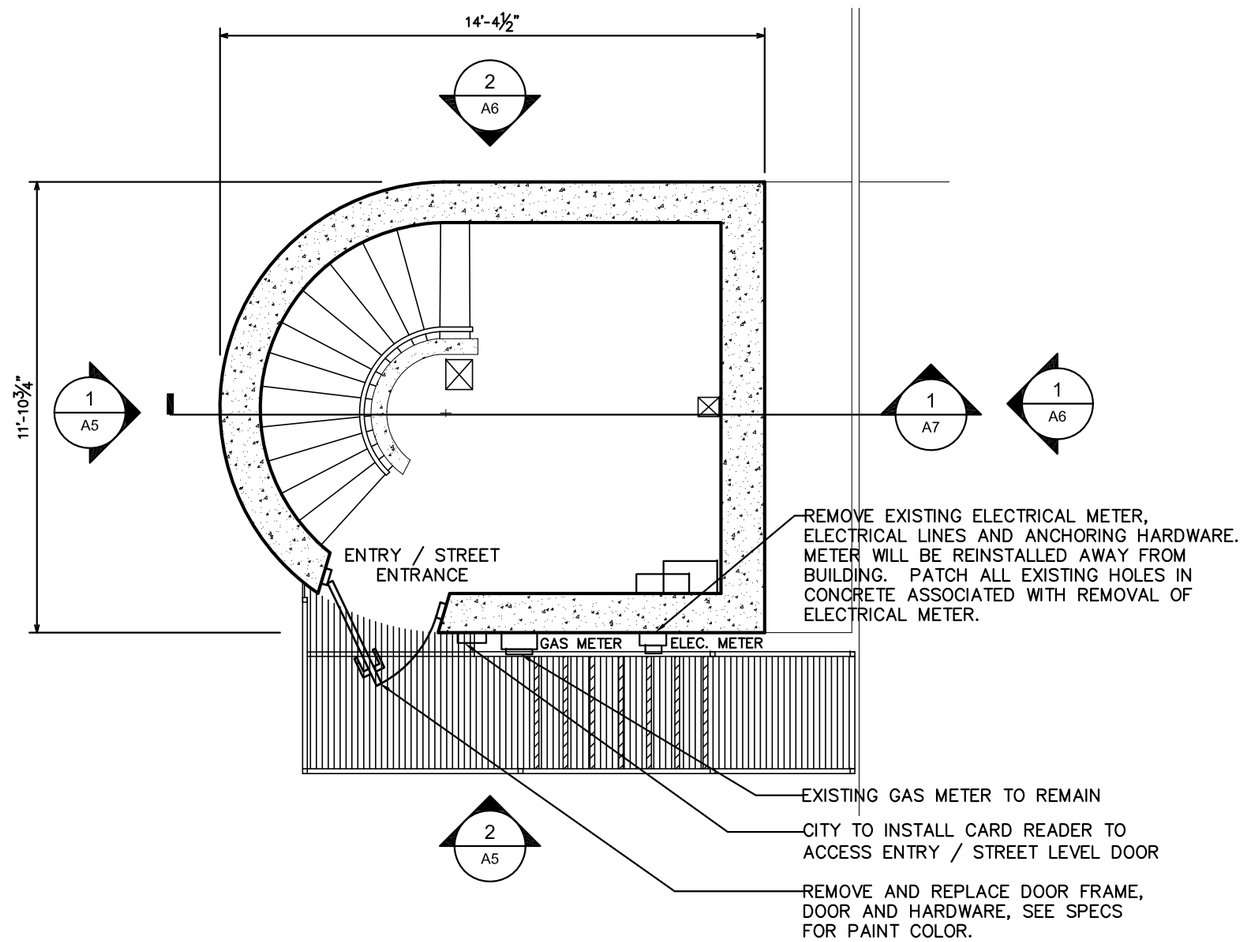

1 / A2 ENTRY/STREET (2ND) LEVEL PLAN

PLAN NORTH TRUE NORTH

City of Milwaukee

Department of Public Works

Infrastructure Services Division

AMERICAN DESIGN INCORPORATED Architectural Services

PLEASANT STREET LIFT BRIDGE
OVER THE MILWAUKEE RIVER
ENTRY / STREET (2ND) LEVEL PLAN

REVISIONS

DESIGNED BY

DRAWN BY
ANDY BLASER

CHECKED BY
ZACH RASMUSSEN

DATE
6/2012

SCALE

JOB NUMBER
BR100-07-0104

SHEET NUMBER
A2 OF A7

OF
86

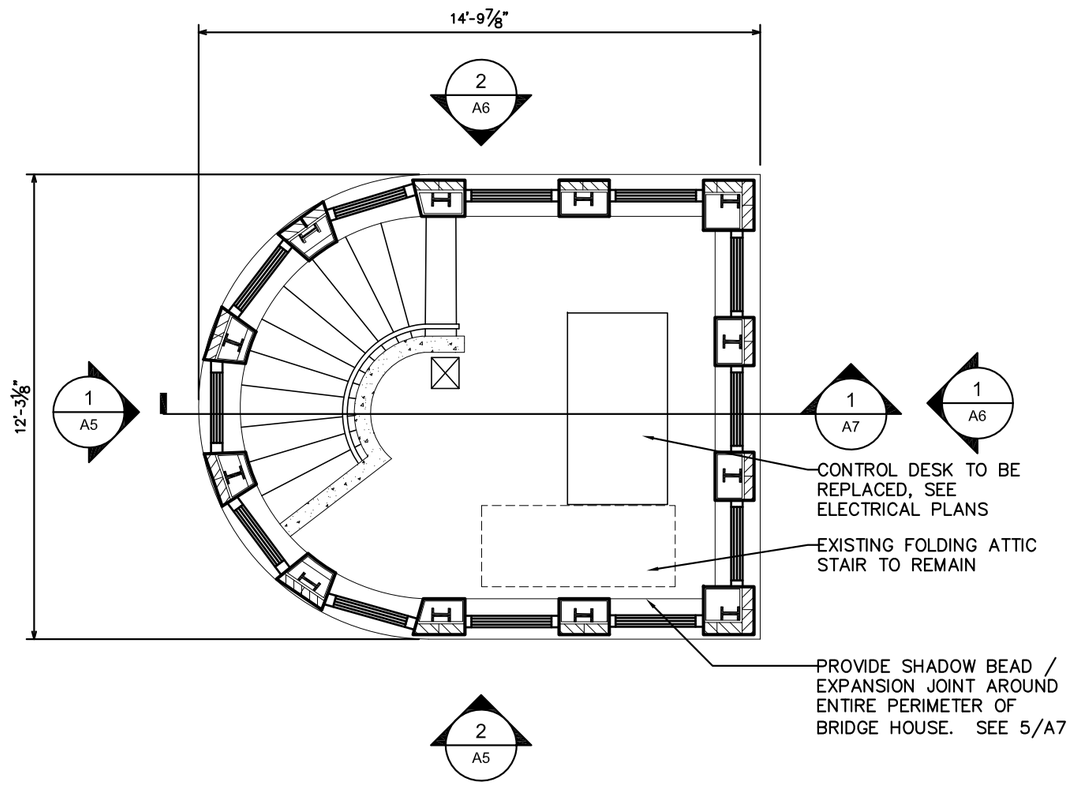

1/A3 CONTROL ROOM (3RD) LEVEL PLAN

PLAN NORTH TRUE NORTH

City of Milwaukee

Department of Public Works

Infrastructure Services Division

AMERICAN DESIGN INCORPORATED Architectural Services

PLEASANT STREET LIFT BRIDGE OVER THE MILWAUKEE RIVER CONTROL ROOM (3RD) LEVEL PLAN

REVISIONS

DESIGNED BY

DRAWN BY ANDY BLASER

CHECKED BY ZACH RASMUSSEN

DATE 6/2012

SCALE

JOB NUMBER BR100-07-0104

SHEET NUMBER A3 OF A7

OF 86

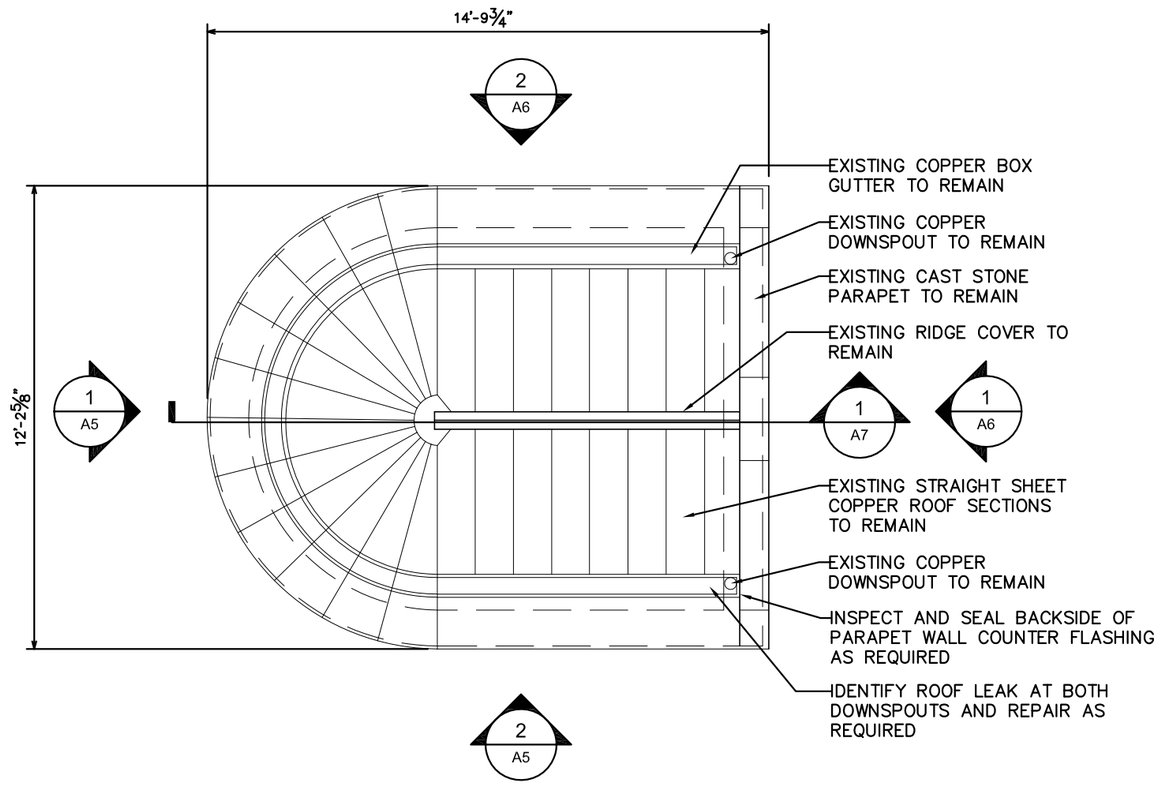

1 / A4 ROOF PLAN

PLAN NORTH TRUE NORTH

City of Milwaukee

Department of Public Works

Infrastructure Services Division

AMERICAN DESIGN INCORPORATED Architectural Services

PLEASANT STREET LIFT BRIDGE OVER THE MILWAUKEE RIVER ROOF PLAN

REVISIONS

DESIGNED BY

DRAWN BY ANDY BLASER

CHECKED BY ZACH RASMUSSEN

DATE 6/2012

SCALE

JOB NUMBER BR100-07-0104

SHEET NUMBER A4 OF A7

OF 86

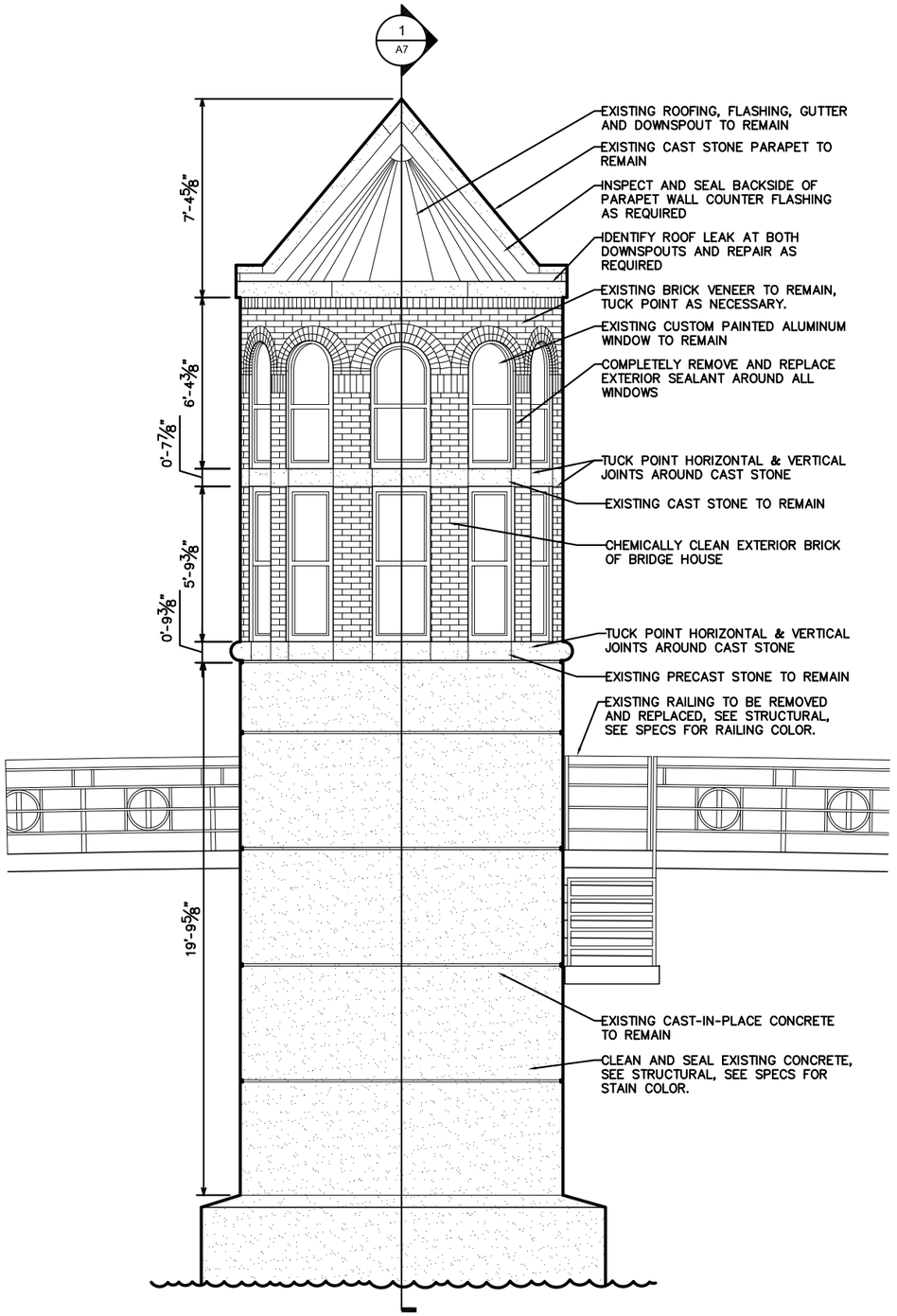

1 A5 SOUTH ELEVATION

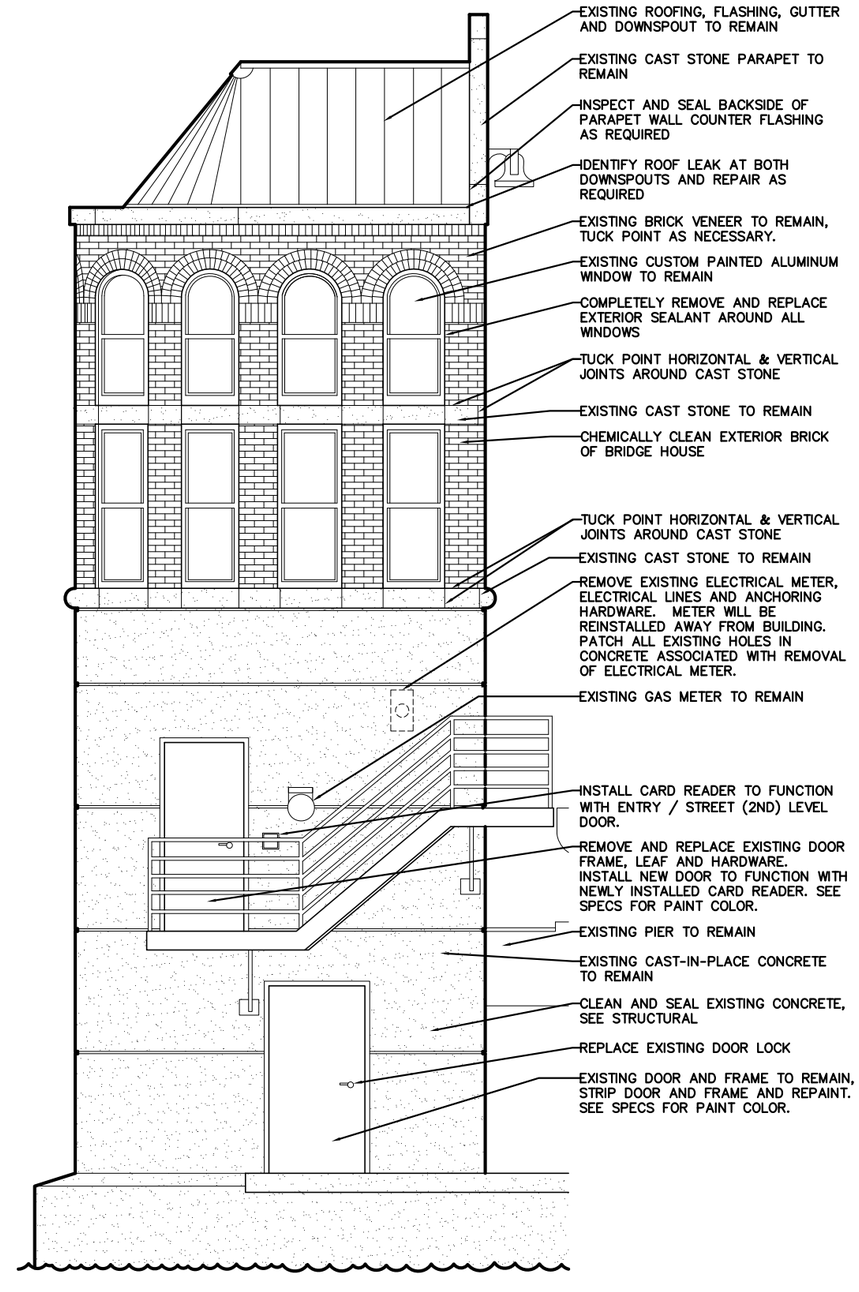

2 A5 EAST ELEVATION

City of Milwaukee

Department of Public Works

Infrastructure Services Division

AMERICAN DESIGN INCORPORATED Architectural Services

PLEASANT STREET LIFT BRIDGE OVER THE MILWAUKEE RIVER SOUTH & EAST ELEVATIONS

REVISIONS

DESIGNED BY

DRAWN BY ANDY BLASER

CHECKED BY ZACH RASMUSSEN

DATE 6/2012

SCALE

JOB NUMBER BR100-07-0104

SHEET NUMBER A5 OF A7

OF 86

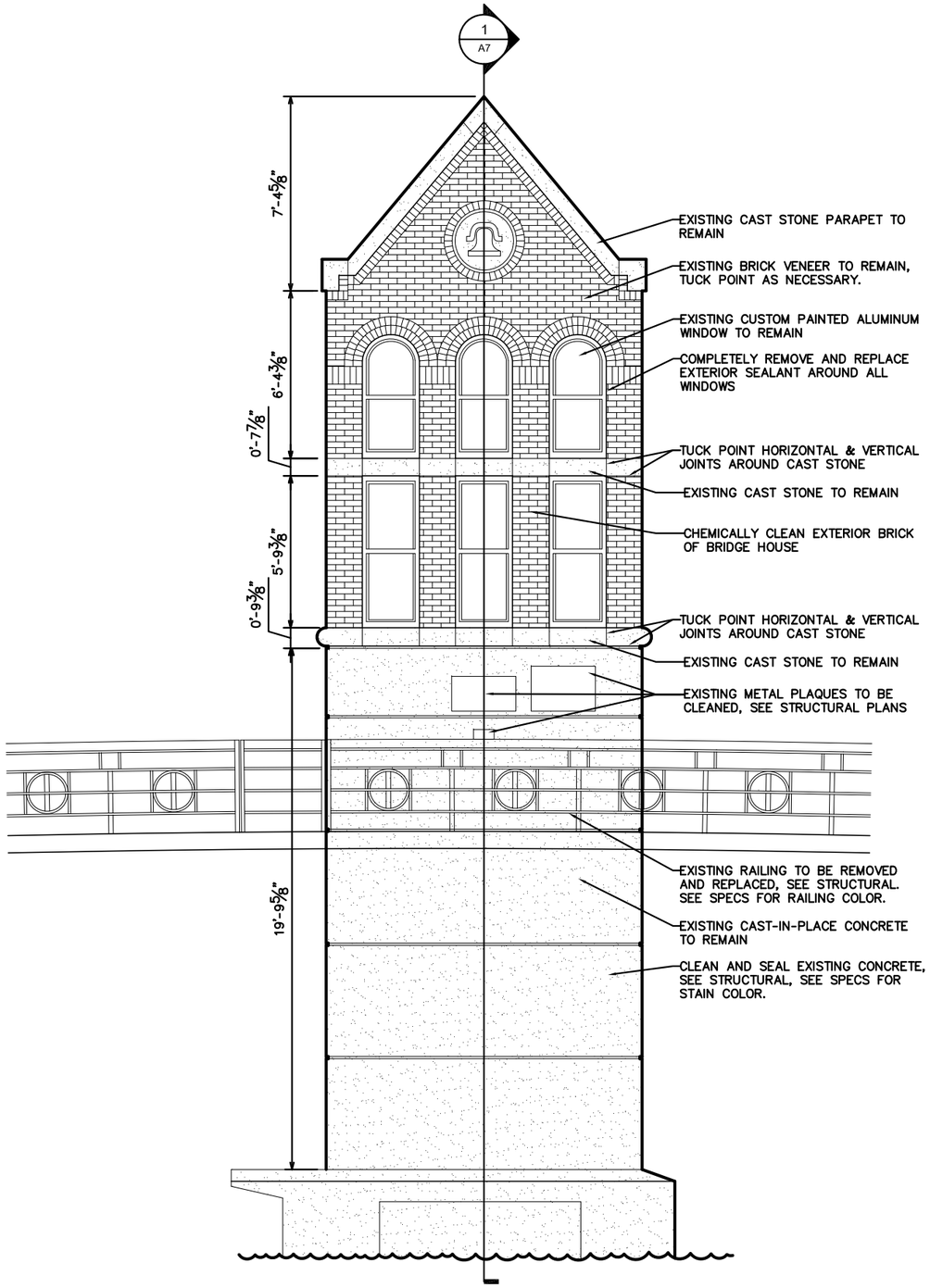

1 / A6 NORTH ELEVATION

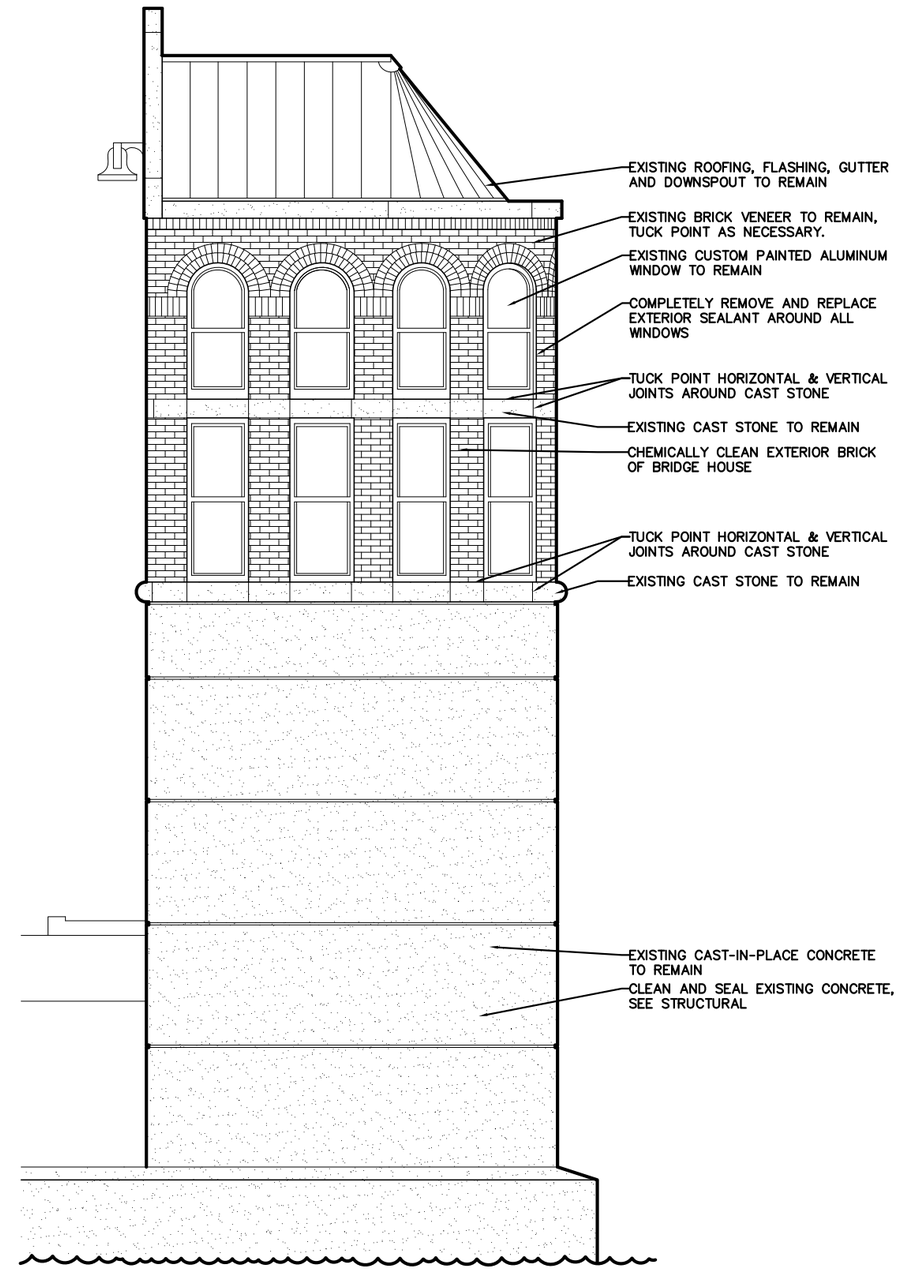

2 / A6 WEST ELEVATION

City of Milwaukee

Department of Public Works

Infrastructure Services Division

AMERICAN DESIGN INCORPORATED Architectural Services

PLEASANT STREET LIFT BRIDGE OVER THE MILWAUKEE RIVER NORTH & WEST ELEVATIONS

REVISIONS

DESIGNED BY

DRAWN BY ANDY BLASER

CHECKED BY ZACH RASMUSSEN

DATE 6/2012

SCALE

JOB NUMBER BR100-07-0104

SHEET NUMBER A6 OF A7

OF 86

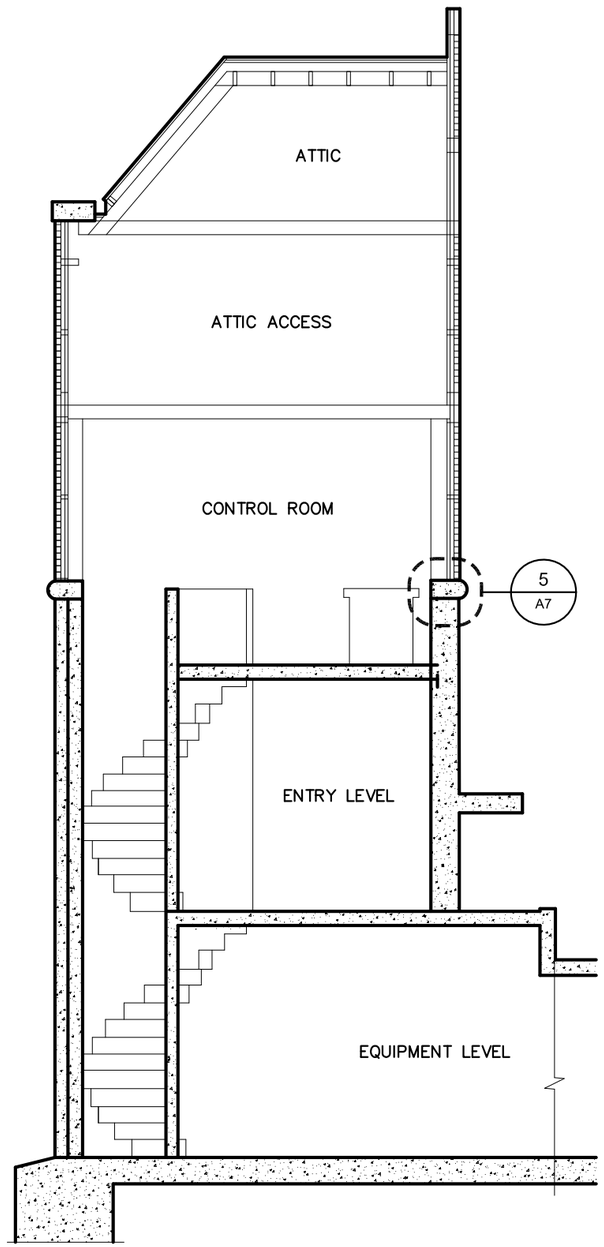

1 / A7 BUILDING SECTION

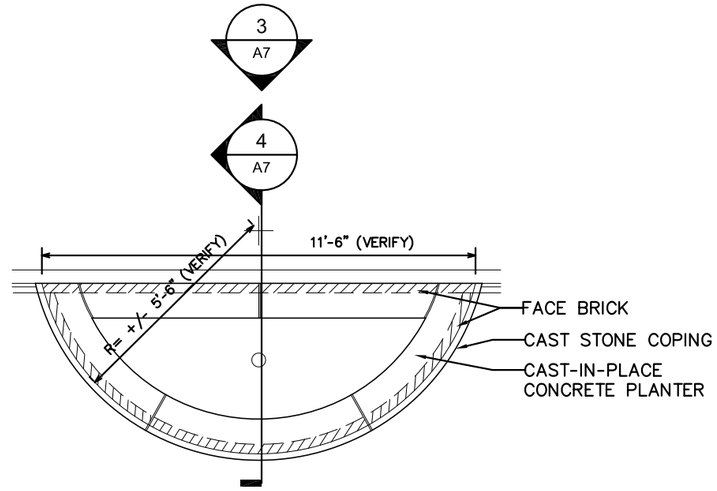

2 / A7 PLANTER PLAN

NOTE: NOTES APPLICABLE TO ALL (3) PLANTERS ON BRIDGE

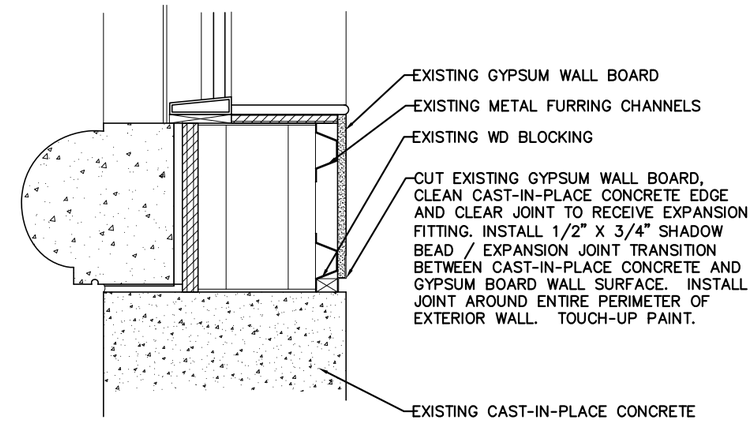

5 / A7 SHADOW BEAD / EXPANSION JOINT

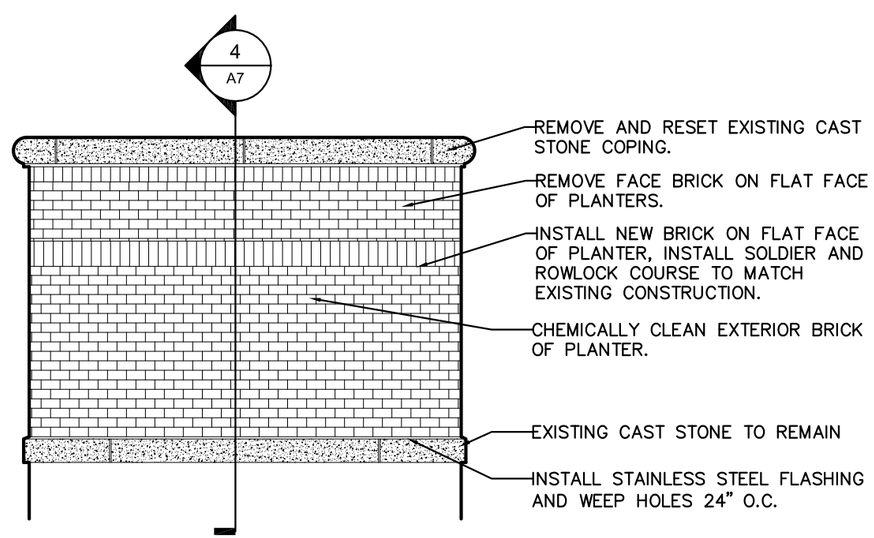

3 / A7 PLANTER ELEVATION

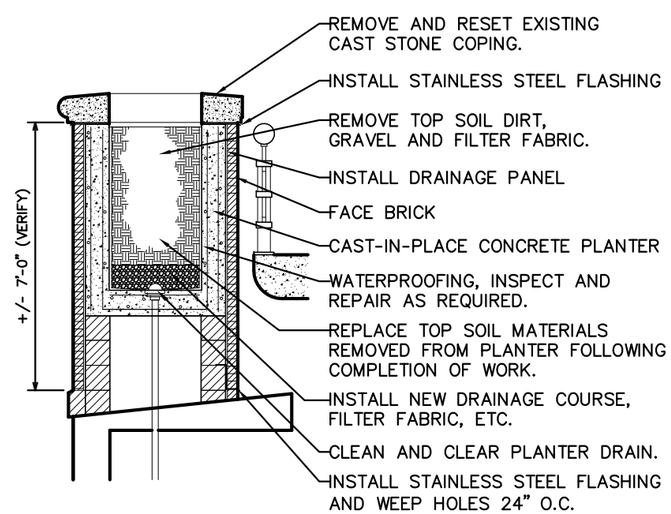

4 / A7 PLANTER SECTION

City of Milwaukee

Department of Public Works

Infrastructure Services Division

AMERICAN DESIGN INCORPORATED Architectural Services

PLEASANT STREET LIFT BRIDGE
OVER THE MILWAUKEE RIVER
BUILDING SECTION & DETAILS

REVISIONS

DESIGNED BY

DRAWN BY
ANDY BLASER

CHECKED BY
ZACH RASMUSSEN

DATE
6/2012

SCALE

JOB NUMBER
BR100-07-0104

SHEET NUMBER
A7 OF A7

OF
86

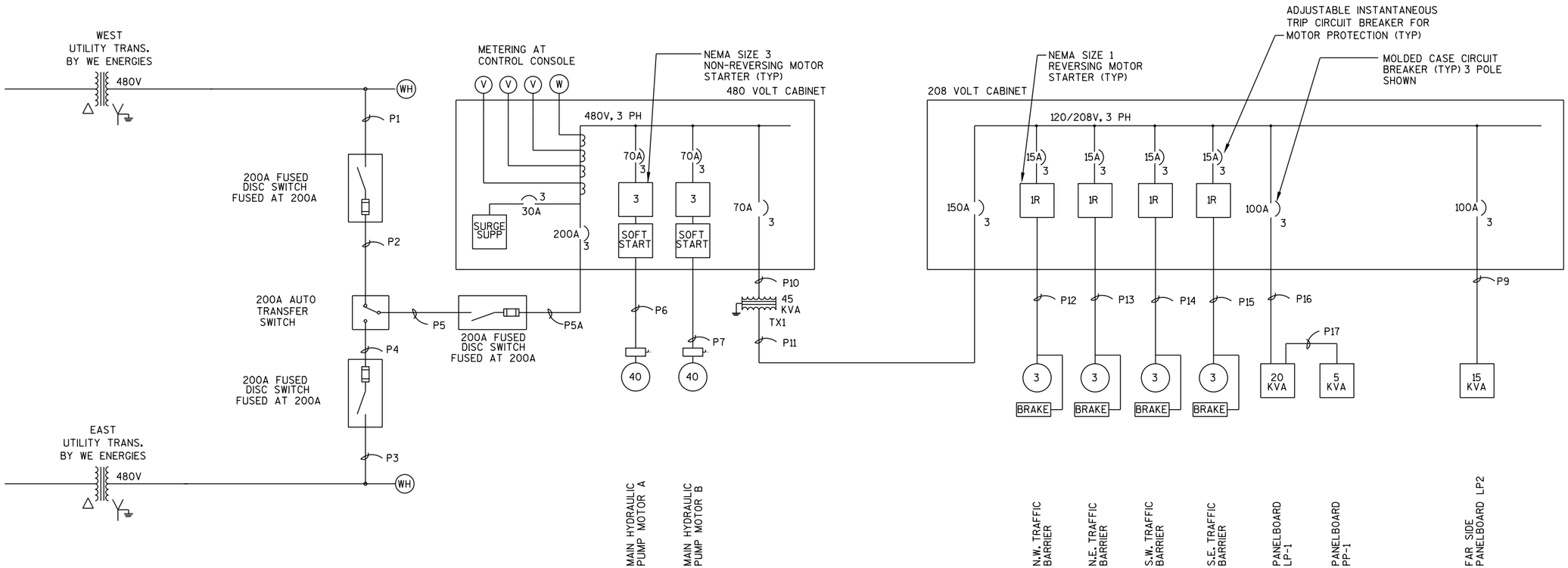

NOTES:

1. PROVIDE INSIGHT DISCONNECT SWITCHES SIZED IN ACCORDANCE WITH THE NEC AND LOCAL CODES. MOUNT SWITCHES NEAR MOTORS AS REQUIRED.

City of Milwaukee

Department of Public Works

Infrastructure Services Division

HNTB
11414 West Park Place, Suite 300
Milwaukee, WI 53224
414-359-2300

PLEASANT STREET LIFT BRIDGE
OVER THE MILWAUKEE RIVER
ONE LINE DIAGRAM

REVISIONS

DESIGNED BY
GLP

DRAWN BY
SMS

CHECKED BY

DATE
4/2012

SCALE

JOB NUMBER
BR100-07-0104

SHEET NUMBER
E1 OF E18

OF
86

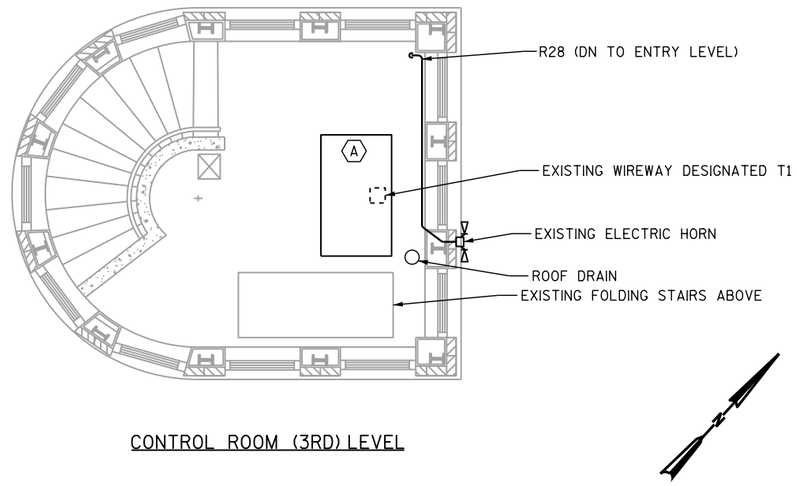

CONTROL ROOM (3RD) LEVEL

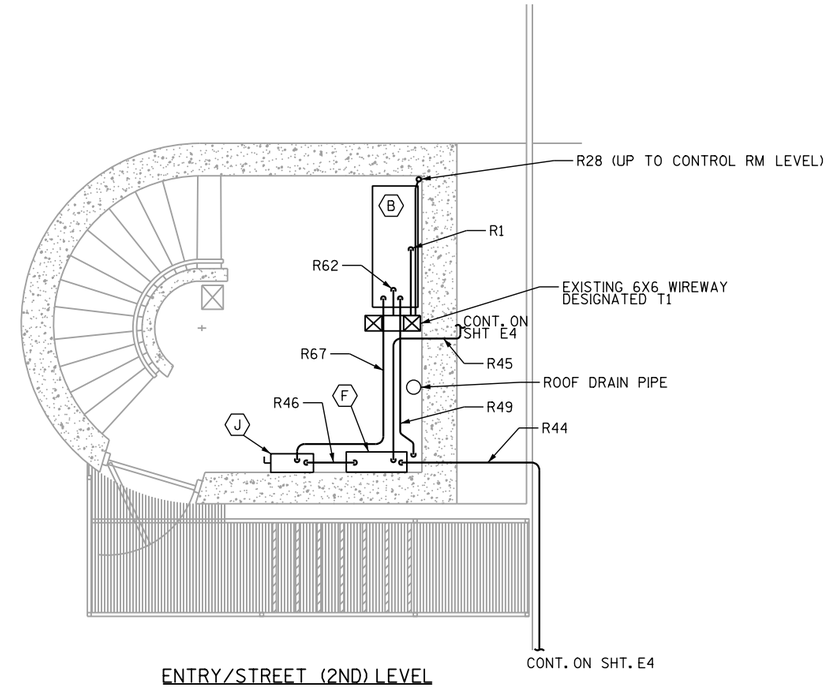

ENTRY/STREET (2ND) LEVEL

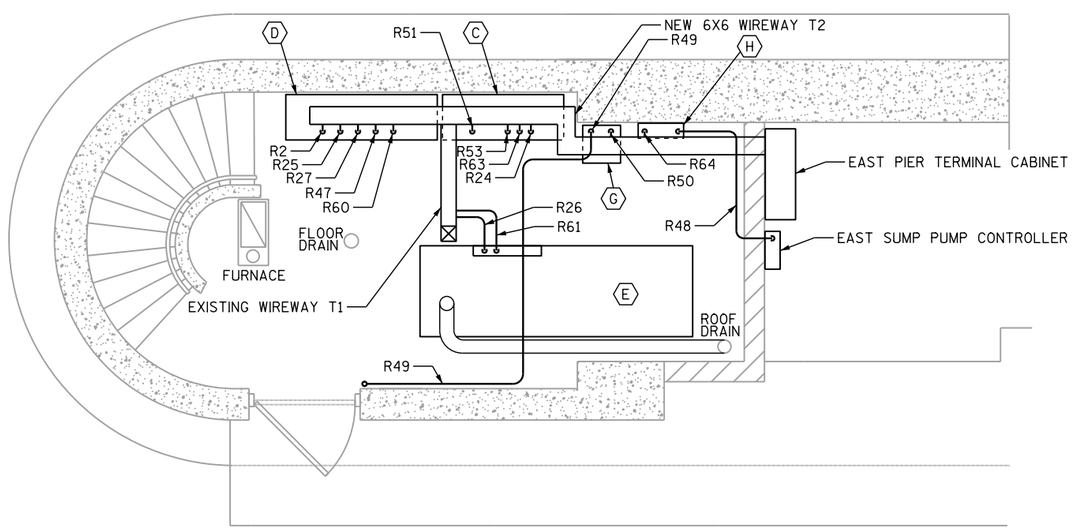

EQUIPMENT ROOM (1ST) LEVEL

- A CONTROL DESK
- B 480 VOLT SWITCHBOARD CABINET
- C 208 VOLT SWITCHBOARD CABINET
- D RELAY CABINET
- E HYDRAULIC SKID
- F AUTO TRANSFER SWITCH
- G TRANSFORMER TX1
- H PANELBOARD LP-1
- J CONTROL HOUSE DISCONNECT SWITCH

WORK BY CITY FORCES

City of Milwaukee

Department of Public Works

Infrastructure Services Division

HNTB
11414 West Park Place, Suite 300
Milwaukee, WI 53224
414-359-2300

PLEASANT STREET LIFT BRIDGE
OVER THE MILWAUKEE RIVER
CONTROL HOUSE POWER WIRING

REVISIONS

DESIGNED BY GLP

DRAWN BY SMS

CHECKED BY

DATE 4/2012

SCALE

JOB NUMBER BR100-07-0104

SHEET NUMBER E2 OF E18

OF 86

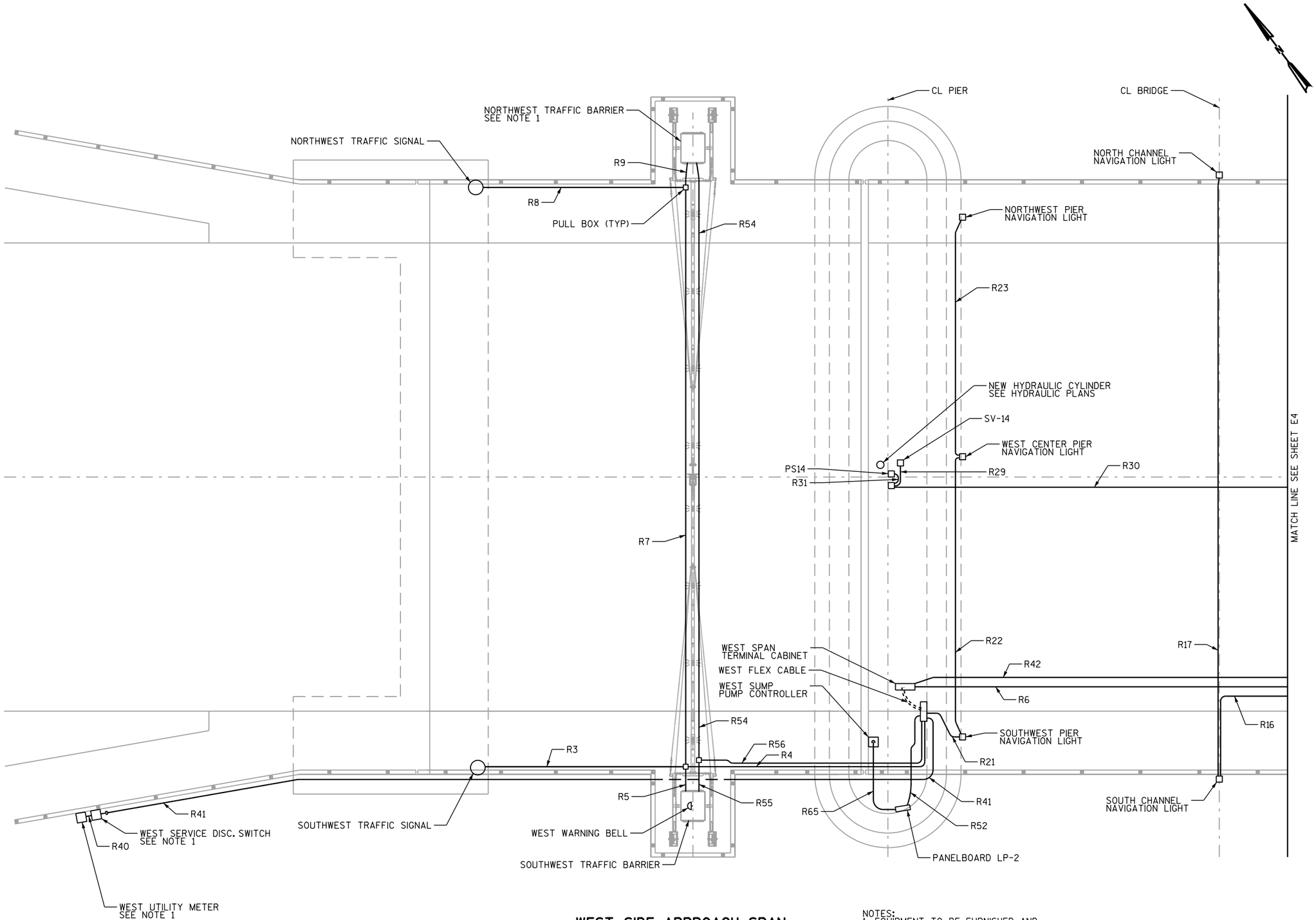

WEST SIDE APPROACH SPAN

NOTES:
1. EQUIPMENT TO BE FURNISHED AND INSTALLED BY CONTRACTOR.

WORK BY CITY FORCES

City of Milwaukee
Department of Public Works
Infrastructure Services Division

HNTB
11414 West Park Place, Suite 300
Milwaukee, WI 53224
414-359-2300

PLEASANT STREET LIFT BRIDGE
OVER THE MILWAUKEE RIVER
WEST APPROACH SPAN AND
LIFT SPAN POWER WIRING

REVISIONS

DESIGNED BY GLP
DRAWN BY SMS
CHECKED BY
DATE 4/2012
SCALE
JOB NUMBER BR100-07-0104
SHEET NUMBER E3 OF E18
OF 86

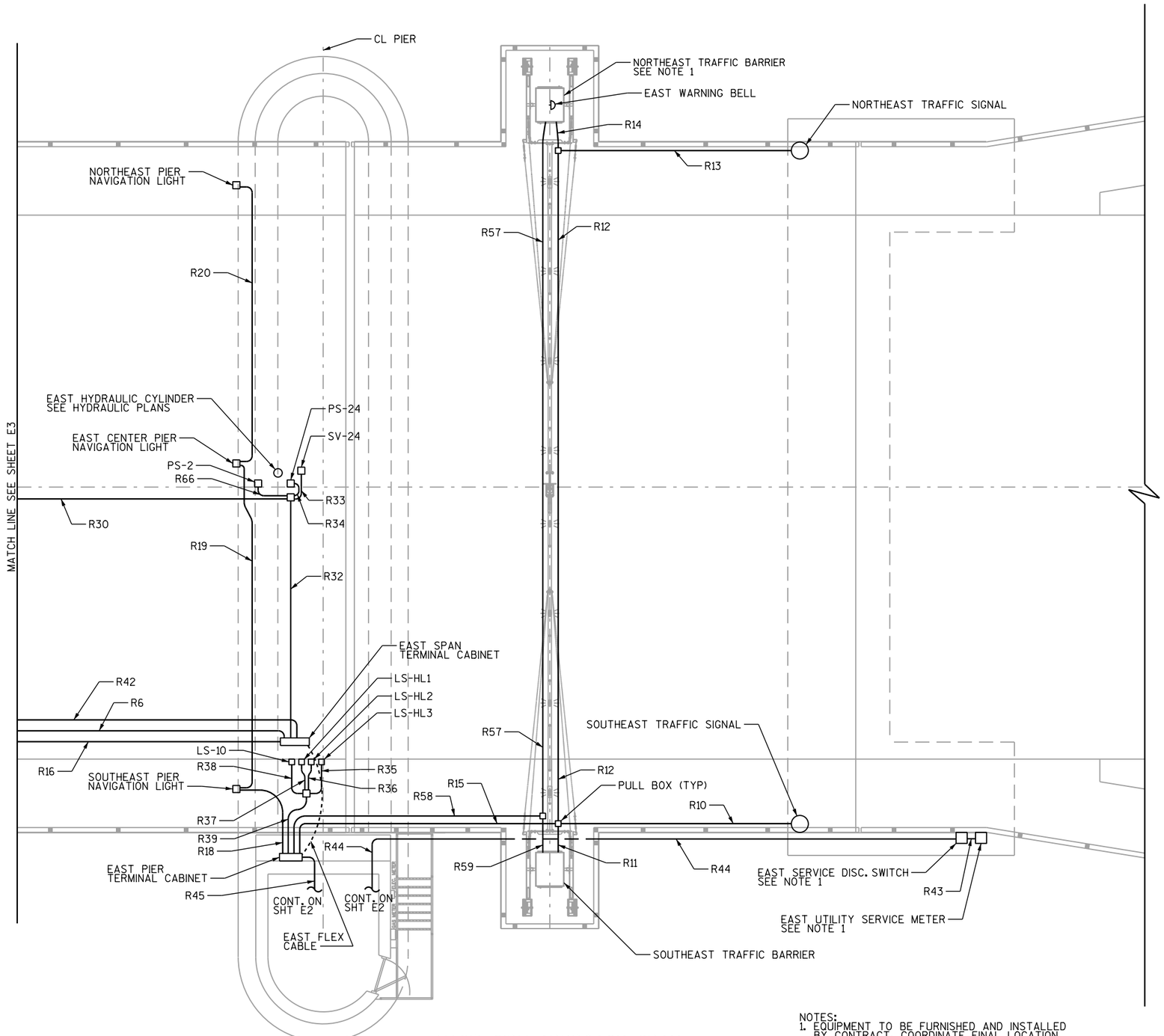

EAST SIDE APPROACH SPAN

NOTES:
1. EQUIPMENT TO BE FURNISHED AND INSTALLED BY CONTRACT. COORDINATE FINAL LOCATION WITH CITY OF MILWAUKEE AND We ENERGIES.

WORK BY CITY FORCES

City of Milwaukee
Department of Public Works
Infrastructure Services Division

HNTB
11414 West Park Place, Suite 300
Milwaukee, WI 53224
414-359-2300

PLEASANT STREET LIFT BRIDGE
OVER THE MILWAUKEE RIVER
EAST APPROACH SPAN AND
LIFT SPAN POWER WIRING

REVISIONS

DESIGNED BY GLP
DRAWN BY SMS
CHECKED BY
DATE 4/2012
SCALE
JOB NUMBER BR100-07-0104
SHEET NUMBER E4 OF E18
OF 86

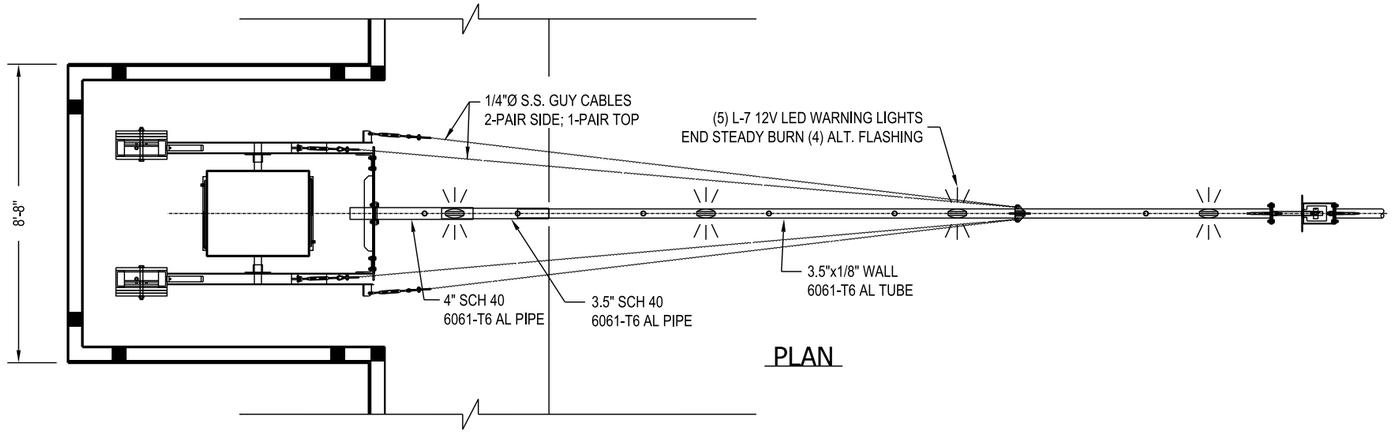

PLAN

NOTES:
1. CONTRACTOR TO VERIFY ALL DIMENSIONS, PAYING CLOSE ATTENTION TO BOXED DIMENSIONS. FACTORY CANNOT ASSUME ALTERATION COSTS AFTER FINAL SUBMITTAL DRAWINGS HAVE BEEN APPROVED.
2. OPERATOR HOUSING, SIDE ARM TUBES, & COUNTERWEIGHTS TO BE HOT DIP GALVANIZED STEEL. DOORS TO HAVE KEYED DRAW LATCHES, PADLOCK STRAP & HASP FOR PADLOCKS. PADLOCKS FURNISHED BY OTHERS.
3. (4) BARRIER GATES REQUIRED AS SHOWN (2) WITH MALE ENDLOCKS & (2) WITH FEMALE ENDLOCKS.
4. MANUFACTURER TO FURNISH TEMPLATES & (8) 1"Ø ANCHOR BOLTS PER CUSTOMER INSTRUCTION. FOUNDATION & ANCHOR BOLT DETAILS BY OTHERS.
5. SEE SCHEMATICS 2 AND 3, SHEET E12 AND E13 FOR WIRING DIAGRAMS.
6. ADJUST GATE ARM POSITION SUCH THAT THE ARM C/L HEIGHT ABOVE HIGH POINT OF ROADWAY SURFACE IS 24" ± 2". REFER TO INSTALLATION INSTRUCTION IN O&M MANUAL FOR SETTING GATE ARM POSITION.

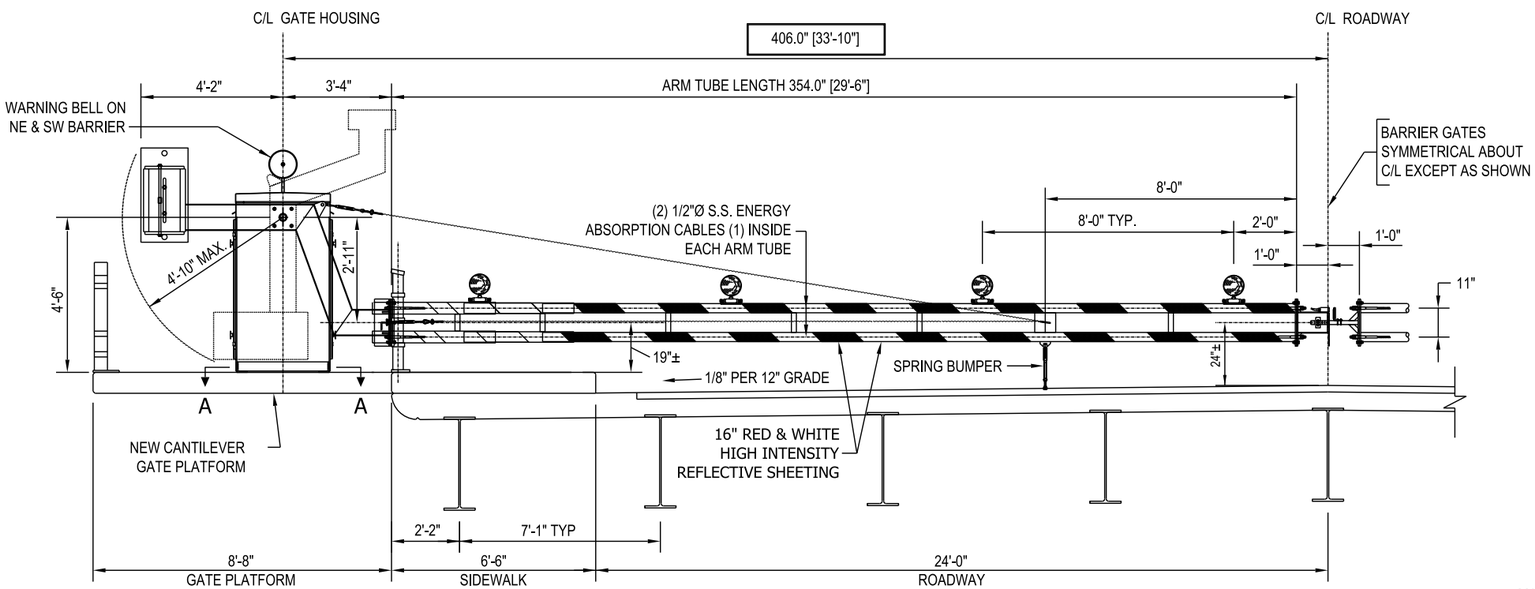

ELEVATION

EAST APPROACH SPAN DECK SECTION

(LOOKING NORTH WEST)

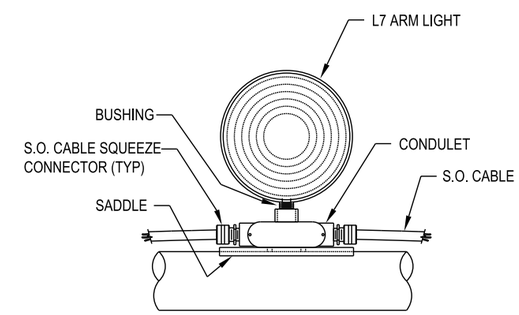

ARM LIGHT DETAILS - MODEL L7

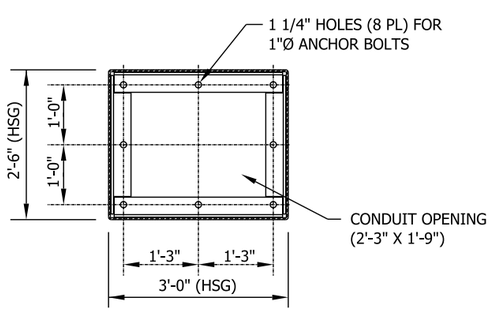

SECTION A-A

BARRIER GATE MTG DIMS

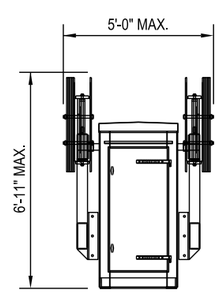

REAR VIEW

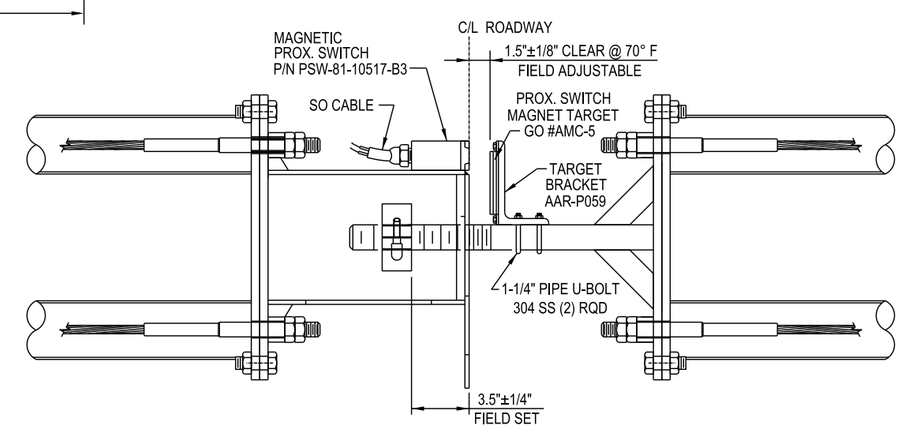

END LOCK DETAILS

City of Milwaukee

Department of Public Works

Infrastructure Services Division

HNTB
11414 West Park Place, Suite 300
Milwaukee, WI 53224
414-359-2300

PLEASANT STREET LIFT BRIDGE
OVER THE MILWAUKEE RIVER
TRAFFIC BARRIER DETAILS

REVISIONS

DESIGNED BY JJK/GLP	
DRAWN BY KPS/SMS	
CHECKED BY HJR/JGS	
DATE 4/2012	SCALE NONE
JOB NUMBER BRI00-07-0104	
SHEET NUMBER E5 OF E18	
OF 86	

DESIGNATION: PANELBOARD LP-1
VOLTAGE: 120/208, THREE PHASE — MAIN BREAKER: 100 AMPS
MOUNTING: SURFACE, NEMA 12 — PANEL BUS: 100 AMPS

CIRCUIT ID	CONN. WATTS	BKR AMP	BKR POLE	CKT NO.		BKR AMP	BKR POLE	CONN. WATTS	CIRCUIT ID
EAST PIER WALKWAY LTS	150	15	1	1	2	20	1	750	FURNACE
EAST PIER PIT RECEPTACLES	900	20	1	3	4	20	1	950	CONTROL HOUSE LIGHT
EAST PIER PIT LIGHTING	100	15	1	5	6	20	1	1350	CONTROL HOUSE RECEPT
DECORATIVE LIGHTING	810	15	1	7	8	20	1	675	OPERATOR LVL RECEPT
SPARE		15	1	9	10	15	1		SPARE
TIME CLOCK	375	15	1	11	12	20	1		SPARE
HEAT TAPE	700	20	1	13	14	20	1		SPARE
FIBER OPTICS	500	15	1	15	16	20	1		SPARE
SPARE		15	1	17	18	15	1		SPARE
	1050			19	20	15	1		SPARE
EAST PIER SUMP PUMP	1050	20	3	21	22		2	925	PANELBOARD PP-1
	1050			23	24	60		1440	

TOTAL PHASE A LOAD = 4135 VA = 34.5 AMPS
TOTAL PHASE B LOAD = 4325 VA = 36 AMPS
TOTAL PHASE C LOAD = 4315 VA = 36 AMPS

WORK BY CITY FORCES

DESIGNATION: PANELBOARD LP-2
VOLTAGE: 120/208, THREE PHASE — MAIN BREAKER: 100 AMPS
MOUNTING: SURFACE, NEMA 4X — PANEL BUS: 100 AMPS

CIRCUIT ID	CONN. WATTS	BKR AMP	BKR POLE	CKT NO.		BKR AMP	BKR POLE	CONN. WATTS	CIRCUIT ID
WEST PIER WALKWAY LTS	150	15	1	1	2			1050	
WEST PIT RECEPTACLES	900	20	1	3	4	20	3	1050	WEST PIER SUMP PUMP
WEST PIER PIT LIGHTING	100	15	1	5	6			1050	
SPARE		15	1	7	8	20	1		SPARE
SPARE		20	1	9	10	20	1		SPARE
SPARE		15	1	11	12	20	1		SPARE
SPACE				13	14				SPACE
SPACE				15	16				SPACE
SPACE				17	18				SPACE
SPACE				19	20				SPACE

TOTAL PHASE A LOAD = 1200 VA = 10 AMPS
TOTAL PHASE B LOAD = 1950 VA = 16.3 AMPS
TOTAL PHASE C LOAD = 1150 VA = 9.58 AMPS

WORK BY CITY FORCES

NOTES:

1) PANEL BOARDS LP-1 AND LP-2 FURNISHED AND INSTALLED BY CITY FORCES.

2) PANEL BOARDS PP-1 FURNISHED AND INSTALLED WITH THE RELAY CABINET AS PART OF THE ELECTRICAL CONTROL EQUIPMENT.

DESIGNATION: PANELBOARD PP-1
VOLTAGE: 120/208, SINGLE PHASE — MAIN BREAKER: 60 AMP
MOUNTING: SURFACE, NEMA 12 — PANEL BUS: 100 AMP

CIRCUIT ID	CONN. WATTS	BKR AMP	BKR POLE	CKT NO.		BKR AMP	BKR POLE	CONN. WATTS	CIRCUIT ID
TRAFFIC SIGNAL	115	15	1	1	2	20	1	65	WARNING BELLS
NAVIGATION LIGHTS	140	15	1	3	4	20	1	200	NE & SE TRAFFIC BARRIERS
PUMP CONTROL	320	15	1	5	6	20	1	200	SW & NW TRAFFIC BARRIERS
CYLINDERS/MAINT PANEL	200	15	1	7	8	15	1	450	BARRIER GATE WARNING LIGHTS
ELECTRIC HORN	225	15	1	9	10	15	1		SPARE
SPARE		15	1	11	12	20	1		SPARE
SPARE		20	1	13	14	15	1		SPARE
SPARE		15	1	15	16	15	1		SPARE

TOTAL PHASE A LOAD = 925 VA = 7.71 AMPS
TOTAL PHASE B LOAD = 990 VA = 8.25 AMPS

WORK BY CONTRACT

TRANSFORMER SCHEDULE

MARK	PRIMARY	SECONDARY	KVA	MOUNTING	LOCATION
TX-1	480 V, 3 PH	120/208 V, 3 PH	45	FLOOR	CONTROL TOWER

PANELBOARD SCHEDULE

MARK	VOLTAGE & PHASE	MOUNTING	MAINS	LOCATION
LP-1	120/208 V, 3 PHASE	SURFACE	100 AMPS	CONTROL TOWER
LP-2	120/208 V, 3 PHASE	SURFACE	100 AMPS	WEST PIER
PP-1	120/208 V, SINGLE PH	SURFACE	60 AMPS	RELAY CABINET

City of Milwaukee
Department of Public Works
Infrastructure Services Division

HNTB
11414 West Park Place, Suite 300
Milwaukee, WI 53224
414-359-2300

PLEASANT STREET LIFT BRIDGE OVER THE MILWAUKEE RIVER
PANELBOARD AND TRANSFORMER SCHEDULES

REVISIONS

DESIGNED BY GLP
DRAWN BY SMS
CHECKED BY
DATE 4/2012
SCALE
JOB NUMBER BR100-07-0104
SHEET NUMBER E6 OF E18
OF 86

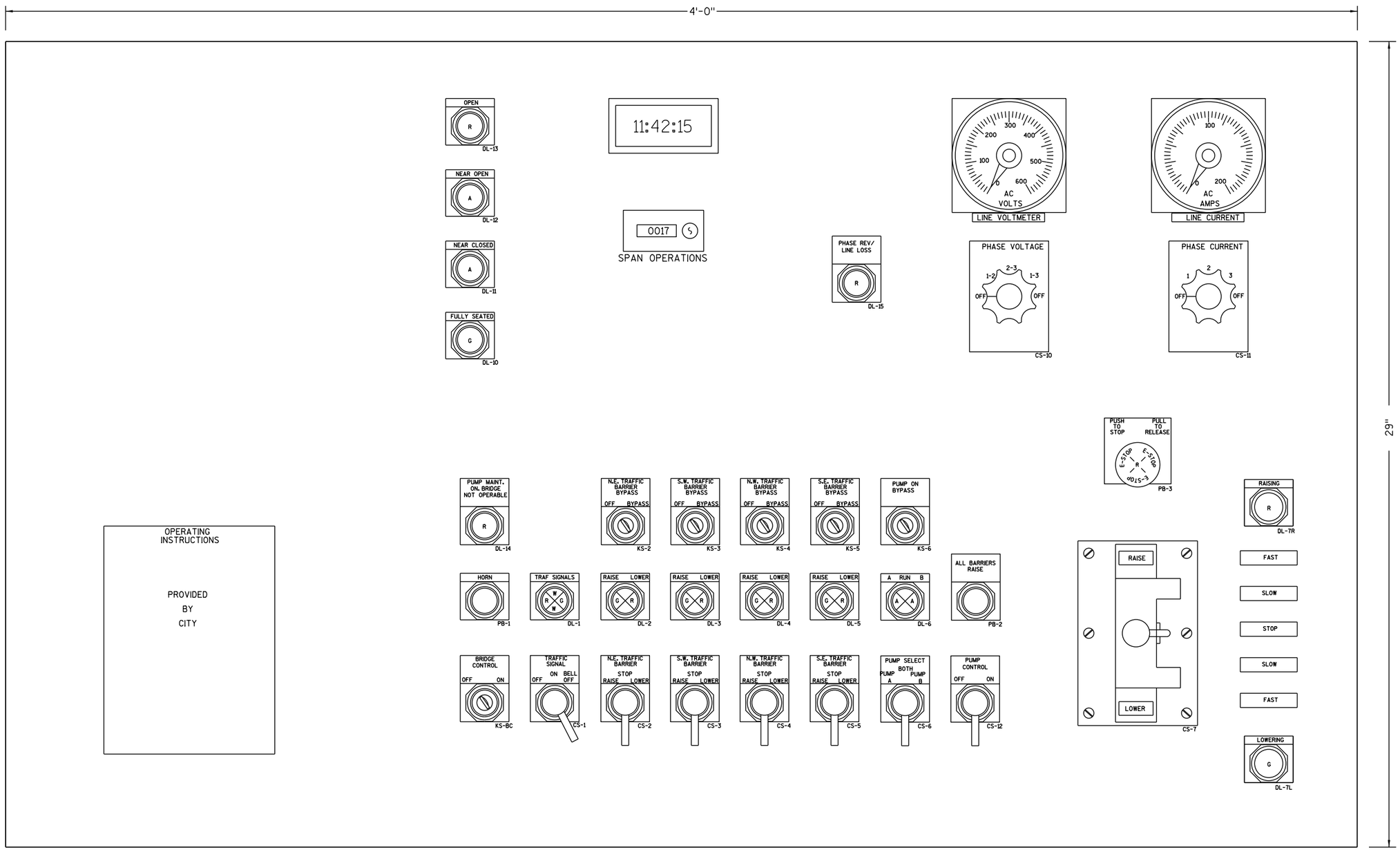

CONTROL CONSOLE LOWER SECTION

NOTES:

1. BYPASS KS-2 THRU KS-5 SHALL BE MOMENTARY SPRING RETURN TO "OFF". KS-6 SHALL BE MAINTAINED IN BOTH POSITIONS. UNITS SHALL BE CUTLER HAMMER TYPE 10250T AND SHALL BE KEYED TO TYPE "MD2" KEY.
2. ALL KEY SWITCHES SHALL HAVE THE KEYS CAPTIVE WHEN TURNED TO THE RIGHT.
3. KEY SWITCH KS-BC SHALL BE CUTLER-HAMMER TYPE 10250T AND SHALL BE KEYED TO TYPE "MD1" KEY.

City of Milwaukee

Department of Public Works

Infrastructure Services Division

HNTB
11414 West Park Place, Suite 300
Milwaukee, WI 53224
414-359-2300

PLEASANT STREET LIFT BRIDGE
OVER THE MILWAUKEE RIVER
CONTROL CONSOLE LAYOUT

REVISIONS

DESIGNED BY GLP

DRAWN BY SMS

CHECKED BY

DATE 4/2012

SCALE

JOB NUMBER BR100-07-0104

SHEET NUMBER E7 OF E18

OF 86

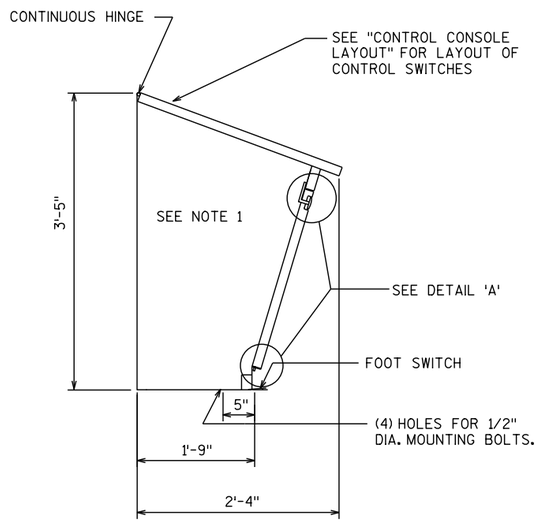

SIDE VIEW

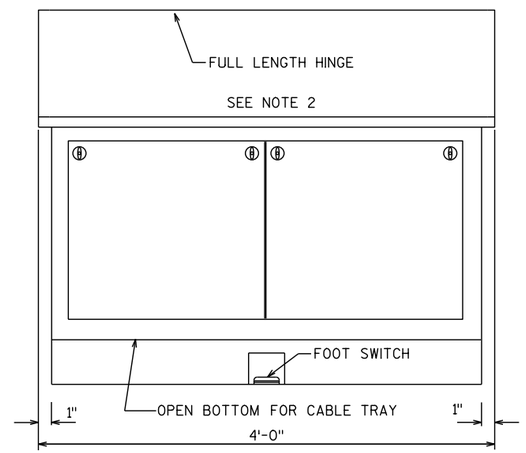

FRONT VIEW

CONTROL CONSOLE DETAILS

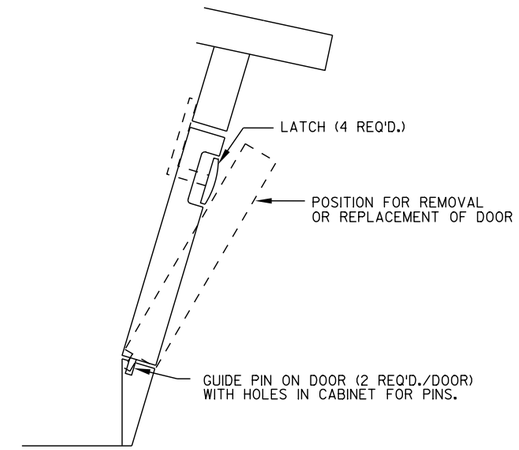

DETAIL 'A'

NOTES:
1) BASE OF CONTROL CONSOLE SHALL BE PROVIDED AS A 4-PART ASSEMBLY CONSISTING OF A FRONT, LEFT SIDE, RIGHT SIDE AND BACK TO PERMIT FIELD INSTALLATION AND ASSEMBLY AT THE BRIDGE SITE CONTROL TOWER.
2) TOP SECTION AND TERMINAL STRIP BACK PANEL SHALL BE ASSEMBLED AND WIRED FOR FIELD INSTALLATION ON THE CONSOLE BASE ASSEMBLY AT THE BRIDGE SITE CONTROL TOWER.

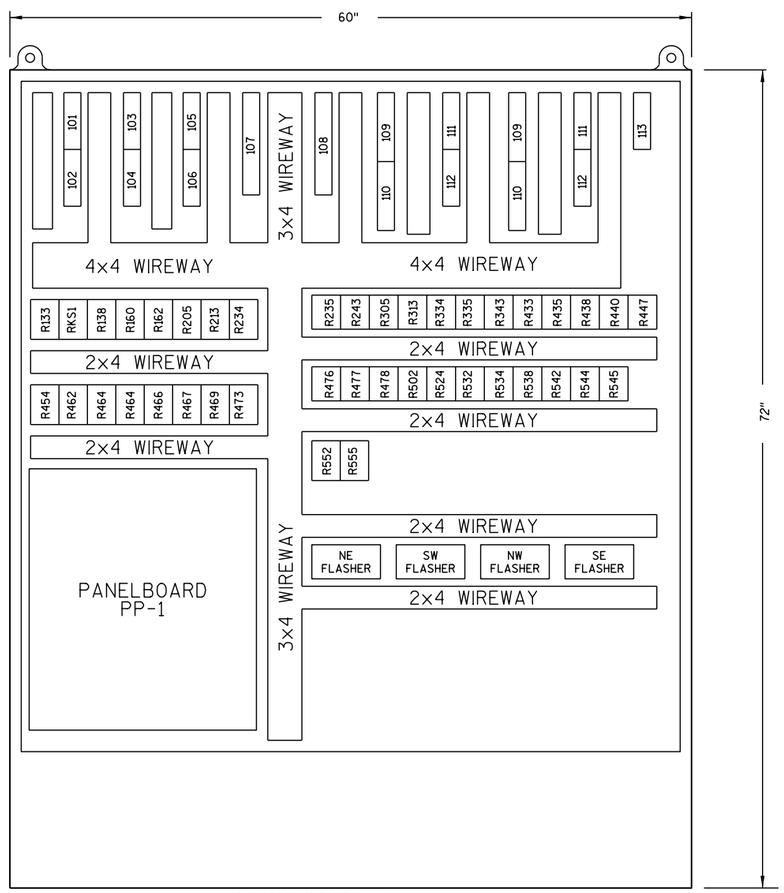

RELAY CABINET

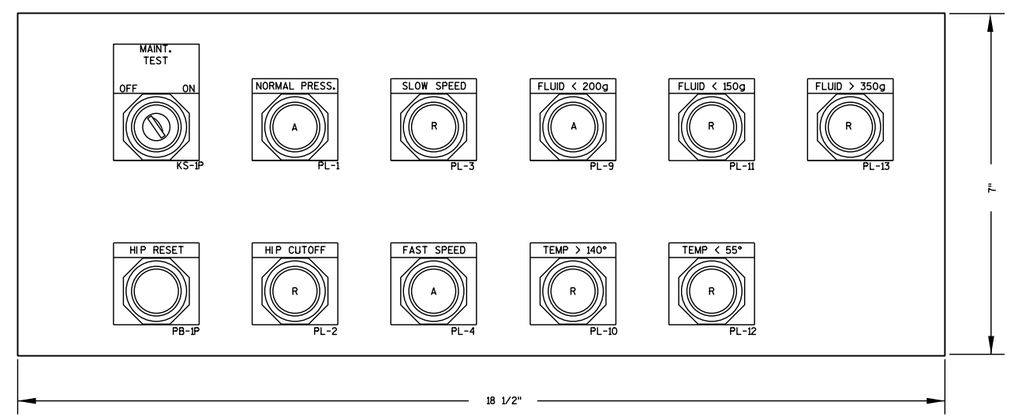

MAINTENANCE PANEL
(MOUNT ON RELAY CABINET DOOR)

CABINET SHALL BE HOFFMAN ENGINEERING CATALOG NUMBER A-726018FSD WITH BACK PANEL A-72P60F1 OR APPROVED EQUAL.

City of Milwaukee
Department of Public Works
Infrastructure Services Division

HNTB
11414 West Park Place, Suite 300
Milwaukee, WI 53224
414-359-2300

PLEASANT STREET LIFT BRIDGE OVER THE MILWAUKEE RIVER
CONTROL CONSOLE
RELAY CABINET DETAILS

REVISIONS

DESIGNED BY GLP
DRAWN BY SMS
CHECKED BY
DATE 4/2012
SCALE
JOB NUMBER BR100-07-0104
SHEET NUMBER E8 OF E18
OF 86

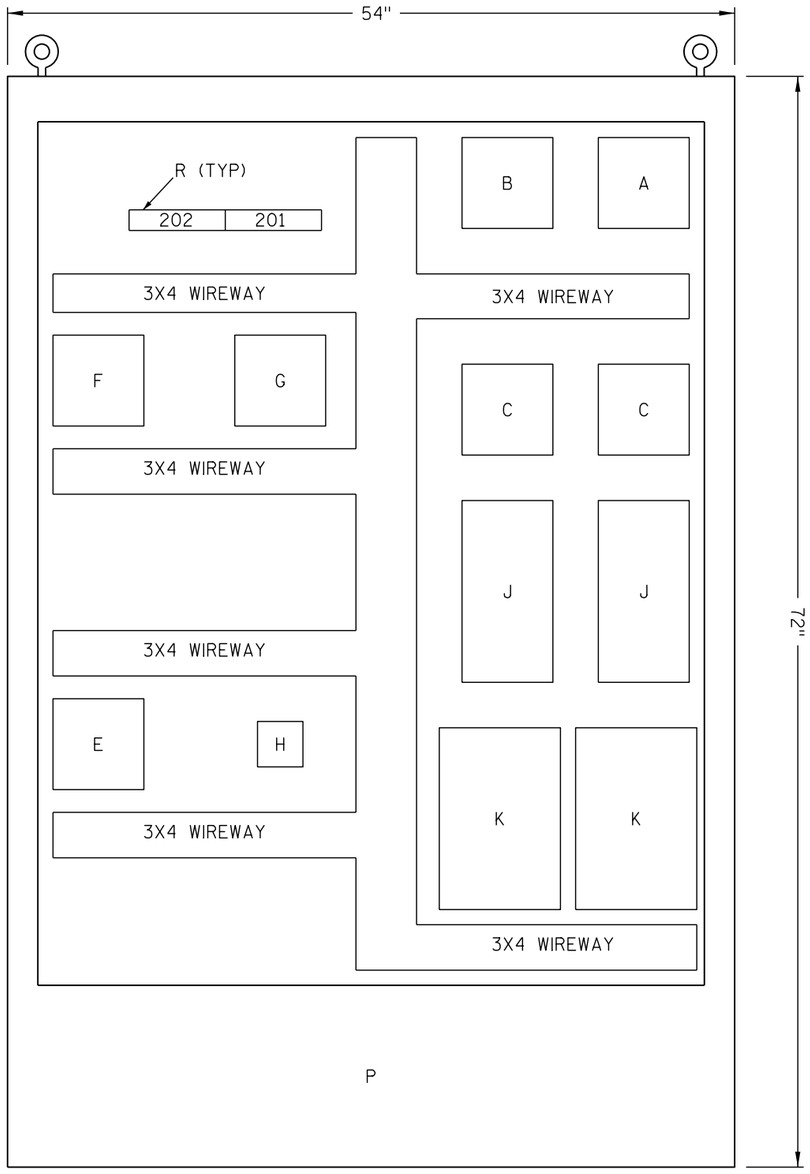

480 VOLT SWITCHBOARD CABINET

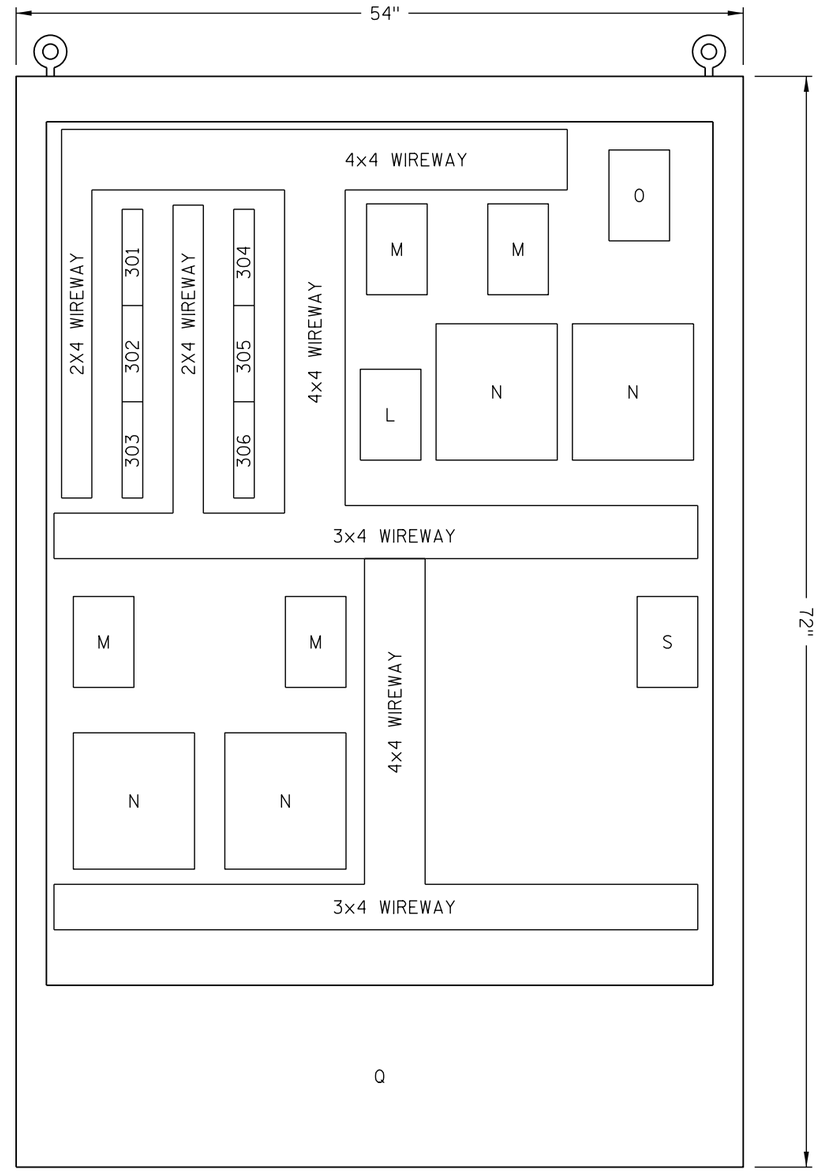

208 VOLT SWITCHBOARD CABINET

A MAIN 480 VOLT CABINET CB - 200A CUTLER HAMMER KS360200D

B TVSS CB - 30A - CUTLER HAMMER FS340030A

C HYDRAULIC PUMP MOTOR CB's - CUTLER HAMMER C370HMCP3

D NOT USED

E TRANSFORMER TX1 CB - 70A - CUTLER HAMMER FS34070A

F CT/PT EQUIPMENT

G TVSS MODULE NLP CORP MODULE XA-04-20-E1

H PHASE REVERSE/LINE LOSS RELAY - TIME MARK MODEL 269

J HYDRAULIC PUMP MOTOR STARTER - NEMA 3NR - CUTLER HAMMER AN16KNOC

K PUMP MOTOR SOFT START MODULE - ALLEN BRADLEY 150-F85NBD

L PANELBOARD LP1 CB - 100A - CUTLER HAMMER JS340100A

M BARRIER GATE CB - CUTLER HAMMER C370HMCP0

N BARRIER GATE MOTOR STARTER - NEMA 0 REV - CUTLER HAMMER AN56BN0C

O MAIN 208 VOLT CABINET CB - 150A - JH360150A

P 480 VOLT CABINET ENCLOSURE - HAMMOND MANUFACTURING CAT. NO. 2UHD725418A WITH 60AWFW BACK PANEL

Q 208 VOLT CABINET ENCLOSURE - HAMMOND MANUFACTURING CAT. NO. 2UHD725418A WITH 60AWFW BACK PANEL

R TERMINAL BLOCK - 12 POINT - DIN RAIL MOUNTED - ALLEN BRADLEY CAT. NO. 1492-CA1 WITH END CAP BARRIERS

S PANELBOARD LP2 CB -100A- CUTLER HAMMER FS340100A

NOTE:

MANUFACTURER AND CATALOG NUMBERS ARE SHOWN TO ESTABLISH THE QUALITY STANDARDS REQUIRED AND IS NOT INTENDED TO EXCLUDE PRODUCTS EQUAL IN QUALITY AND SIMILAR IN DESIGN, THE TERM "OR APPROVED EQUAL" SHALL BE IMPLIED.

City of Milwaukee
Department of Public Works
Infrastructure Services Division

HNTB
11414 West Park Place, Suite 300
Milwaukee, WI 53224
414-359-2300

PLEASANT STREET LIFT BRIDGE
OVER THE MILWAUKEE RIVER
480 VOLT & 208 VOLT
CABINET DETAILS

REVISIONS

DESIGNED BY GLP
DRAWN BY SMS
CHECKED BY
DATE 4/2012
SCALE
JOB NUMBER BR100-07-0104
SHEET NUMBER E9 OF E18
OF 86

SWITCHES

PUSHBUTTON (MOMENTARY)

"PUSH TO STOP" CS-3
OPEN CLOSE

COMBINATION SELECTOR SWITCH WITH PUSHBUTTON
ARROWS INDICATE SPRING RETURN TO POSITION SHOWN
X INDICATES SWITCH CLOSURE IN EACH POSITION
CS-3 INDICATES SWITCH NUMBER-SEE CONTROL PANEL
VIEWS FOR SWITCH LOCATIONS.

LIMIT SWITCH, (LS-) NORMALLY CLOSED

LIMIT SWITCH, NORMALLY OPEN

BYPASS SWITCH (KS-) MAINTAINED CONTACT

BYPASS SWITCH (KS-) MOMENTARY CONTACT

PRESSURE SWITCH (PS-) NORMALLY OPEN

PRESSURE SWITCH (PS-) NORMALLY CLOSED

TEMPERATURE SWITCH (TS-) NORMALLY OPEN

RELAYS

2 R 302 7,34, 725

RELAY COIL, ON SCHEMATIC 3, LINE 2. REFERENCE NUMBERS:
7 INDICATES A NORMALLY OPEN CONTACT OF R2 ON LINE 7.
UNDERLINED 34 INDICATES A NORMALLY CLOSED CONTACT ON
ON LINE 34. EACH SCHEMATIC SHEET HAS 99 OR FEWER LINES.
THE 725 INDICATES A CONTACT ON LINE 25 OF SCHEMATIC SHEET 7.

R302

NORMALLY OPEN INSTANTANEOUS CONTACT OF RELAY R2. COIL IS
ON SAME SHEET AS CONTACT.

R702

NORMALLY CLOSED INSTANTANEOUS CONTACT OF RELAY WHOSE COIL IS
ON SCHEMATIC SHEET 7, LINE 2.

R63

MACHINE TOOL RELAY

ABBREVIATIONS

KS KEY SWITCH
CB CIRCUIT BREAKER

MISC. DEVICES

TRANSFORMER SECONDARY

FUSE

GROUND CONNECTION

LAMP

CS-3 R "PUSH TO START"

LAMP ON PANEL. R INDICATES RED LENSE. CS-3 INDICATES DEVICE
NUMBER. SEE CONTROL PANEL VIEWS FOR SWITCH LOCATIONS. WORDS
IN MARGIN INDICATE LENSE ENGRAVING.

WARNING HORN

STEP DOWN TRANSFORMER
WITH ELECTROSTATIC SHIELDS

SOLENOID VALVE (SV-)

WIRING

LINE CONNECTIONS

LINES CROSSING WITHOUT BEING CONNECTED

WIRING TERMINAL--SEE TERMINAL LOCATION LEGEND

4 4

HEAVY LINE INDICATES FIELD WIRING BETWEEN
TERMINAL POINTS

TIMING RELAYS

NORMALLY OPEN, TIME DELAY CLOSING

NORMALLY CLOSED, TIME DELAY OPENING

30 SEC. T24

TIME RELAY-30 SEC. DENOTES
TIMING INTERVAL

TERMINAL LOCATION LEGEND

- TERMINAL IN CONTROL CONSOLE
- TERMINAL IN RELAY CABINET
- TERMINAL IN 480V SWITCHBOARD CABINET
- TERMINAL IN 208V SWITCHBOARD CABINET

SWITCHES, RECEPTACLES AND CIRCUITRY

$ SINGLE POLE SWITCH

$D DIMMER SWITCH, 600V

$3 THREE WAY SWITCH

$WP SWITCH IN WEATHERPROOF HOUSING

20A, 125V, DUPLES CONVIENCE OUTLET

GFCI 20A, 125V, GROUNDFAULT INTERRUPTER OUTLET

WP 20A, 120V, WEATHERPROOF OUTLET

INTERCOM STATION

TELEPHONE STATION

COMBINATION FAX & INTERNET OUTLET

S SMOKE DETECTOR

JB JUNCTION/PULL BOX

HOME RUN TO PANELBOARD CIRCUIT BREAKER INDICATED
WITH 1 CIRCUIT CONDUCTOR, 1 CIRCUIT NEUTRAL AND 1 CIRCUIT
GROUND CONDUCTOR IN CIRCUIT CONDUIT

CIRCUIT RUN WITH 3 CIRCUIT CONDUCTORS, 1 NEUTRAL AND
1 CIRCUIT GROUND. EACH SMALL MARK TYPICAL FOR A
SINGLE CIRCUIT CONDUCTOR

SWITCH CIRCUIT WITH TWO (2) CIRCUIT CONDUCTORS

A

FLUORESCENT LIGHT FIXTURE, RECESSED, SUSPENDED OR
SURFACE MOUNTED, LETTER DESIGNATES TYPE AS SHOWN
ON LIGHTING FIXTURE SHEET

A

SURFACE MOUNTED LIGHT FIXTURE, LETTER DESIGNATES
TYPE AS SHOWN ON LIGHTING FIXTURE SHEET

A

TRACK LIGHT WITH TRACK AND FIXTURES, NUMBER OF TRIANGLES
INDICATES NUMBER OF LAMPS AND GENERAL AREA OF AIMING.
LETTER DESIGNATES TYPE

A

CEILING MOUNTED LIGHT FIXTURE, LETTER INDICATES TYPE

A

EMERGENCY EGRESS LIGHT, BATTERY POWERED, LETTER
DESIGNATES TYPE

CONDUIT - TURN DOWN

CONDUIT - TURN UP

CABLE TRAY

CABLE TRAY - TURN UP

CABLE TRAY - TURN DOWN

3

CIRCUIT BREAKER, # OF PHASES SHOWN

City of Milwaukee
Department of Public Works
Infrastructure Services Division

HNTB
11414 West Park Place, Suite 300
Milwaukee, WI 53224
414-359-2300

PLEASANT STREET LIFT BRIDGE OVER THE MILWAUKEE RIVER
SCHEMATIC LEGEND AND SYMBOL LIST

REVISIONS

DESIGNED BY GLP
DRAWN BY SMS
CHECKED BY
DATE 4/2012
SCALE
JOB NUMBER BR100-07-0104
SHEET NUMBER E10 OF E18
OF 86

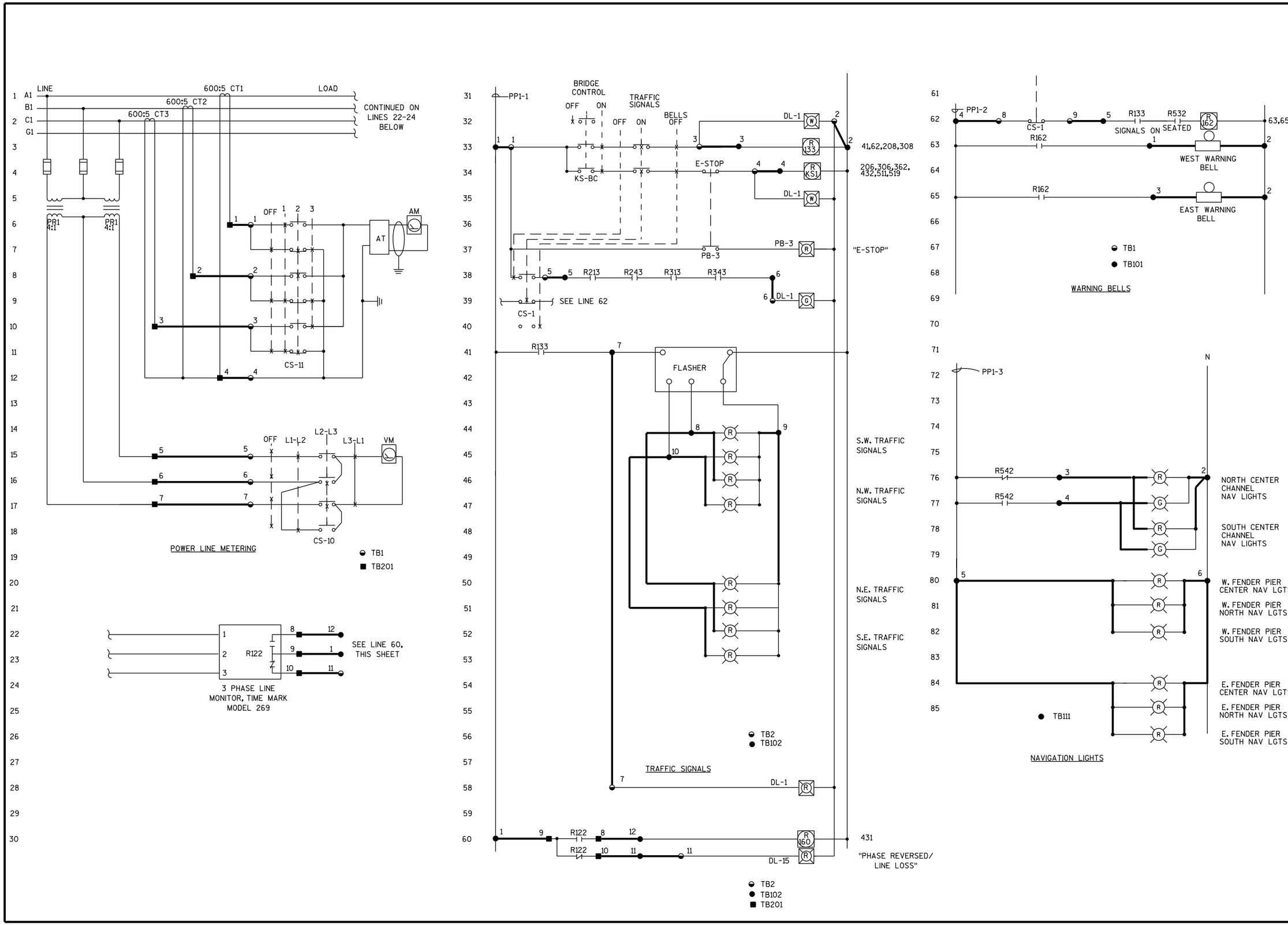

City of Milwaukee

Department of Public Works

Infrastructure Services Division

HNTB
11414 West Park Place, Suite 300
Milwaukee, WI 53224
414-359-2300

PLEASANT STREET LIFT BRIDGE OVER THE MILWAUKEE RIVER SCHEMATIC 1

REVISIONS

DESIGNED BY GLP

DRAWN BY SMS

CHECKED BY

DATE 4/2012

SCALE

JOB NUMBER BR100-07-0104

SHEET NUMBER E11 OF E18

OF 86

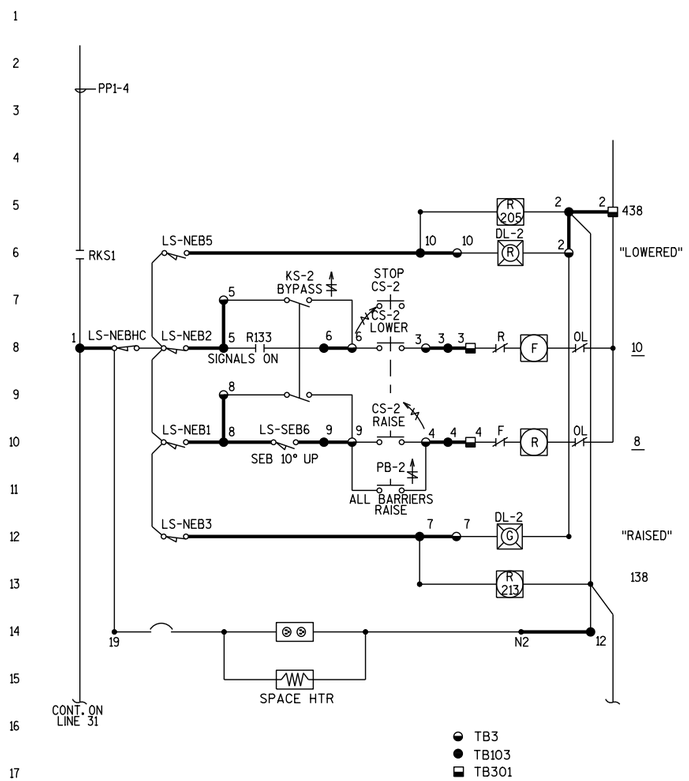

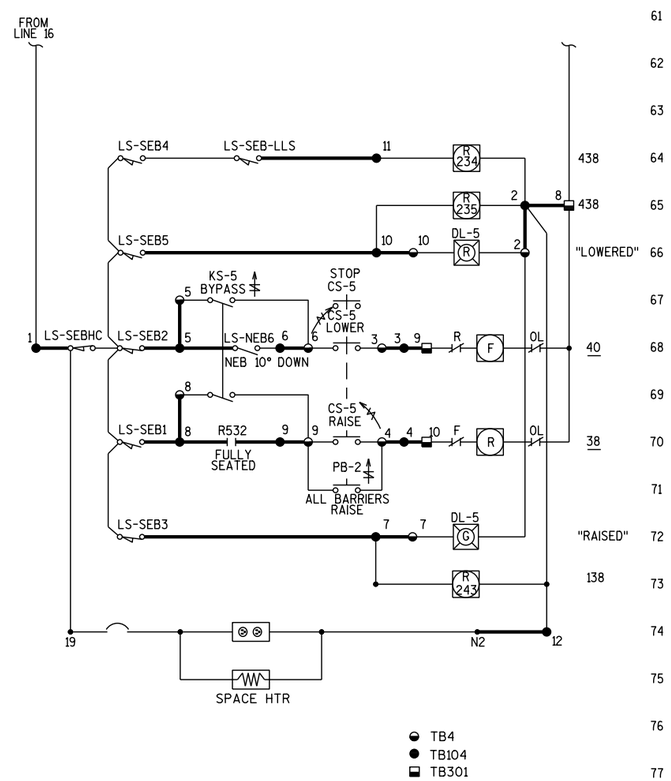

LIMIT SWITCH CONTACT DEVELOPMENT

CONTACT	LOWERED	OPERATOR POSITION	RAISED	FUNCTION THIS DWG OR DWG WHERE CONTACT IS SHOWN
LS-NEB1	———	———	— — —	RAISE LIMIT
LS-NEB2	— — —	———	———	LOWER LIMIT
LS-NEB3	— — —	— — —	———	IND LIGHT
LS-NEB4	———	— — —	— — —	SPARE
LS-NEB5	———	— — —	— — —	IND LIGHT
LS-NEB6	———	———	— — —	LINE 38, THIS SHEET
LS-NEB7	———	———	— — —	SPARE

0° 10° 80° 90°

LS-NEBHC IS HAND CRANK LIMIT SWITCH

NORTHEAST BARRIER

LIMIT SWITCH CONTACT DEVELOPMENT

CONTACT	LOWERED	OPERATOR POSITION	RAISED	FUNCTION THIS DWG OR DWG WHERE CONTACT IS SHOWN
LS-SEB1	———	———	— — —	RAISE LIMIT
LS-SEB2	— — —	———	———	LOWER LIMIT
LS-SEB3	— — —	— — —	———	IND LIGHT
LS-SEB4	———	— — —	— — —	SPARE
LS-SEB5	———	— — —	— — —	IND LIGHT
LS-SEB6	— — —	———	———	LINE 10, THIS SHEET
LS-SEB7	———	———	— — —	SPARE

0° 10° 80° 90°

LS-SEBHC IS HAND CRANK LIMIT SWITCH

SOUTHEAST BARRIER

City of Milwaukee

Department of Public Works

Infrastructure Services Division

HNTB
11414 West Park Place, Suite 300
Milwaukee, WI 53224
414-359-2300

PLEASANT STREET LIFT BRIDGE
OVER THE MILWAUKEE RIVER
SCHEMATIC 2

REVISIONS

DESIGNED BY GLP

DRAWN BY SMS

CHECKED BY

DATE 4/2012

SCALE

JOB NUMBER BR100-07-0104

SHEET NUMBER E12 OF E18

OF 86

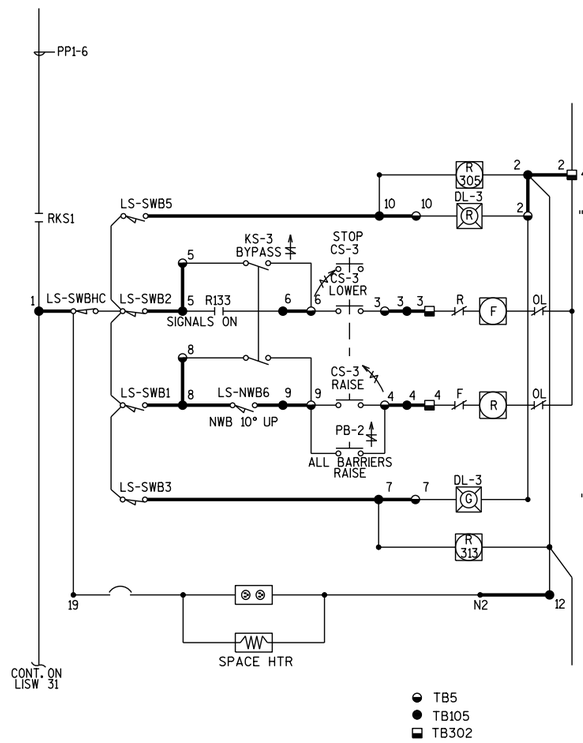

LIMIT SWITCH CONTACT DEVELOPMENT

CONTACT	LOWERED	OPERATOR POSITION	RAINWD	FUNCTION THIS DWG OR DWG WHERE CONTACT IS SHOWN
LS-SWB1				RAISE LIMIT
LS-SWB2				LOWER LIMIT
LS-SWB3				IND LIGHT
LS-SWB4				SPARE
LS-SWB5				IND LIGHT
LS-SWB6				LINE 38, THIS SHEET
LS-SWB7				SPARE

0° 10° 80° 90°

LS-SWBHC IS HAND CRANK LIMIT SWITCH

SOUTHWEST BARRIER

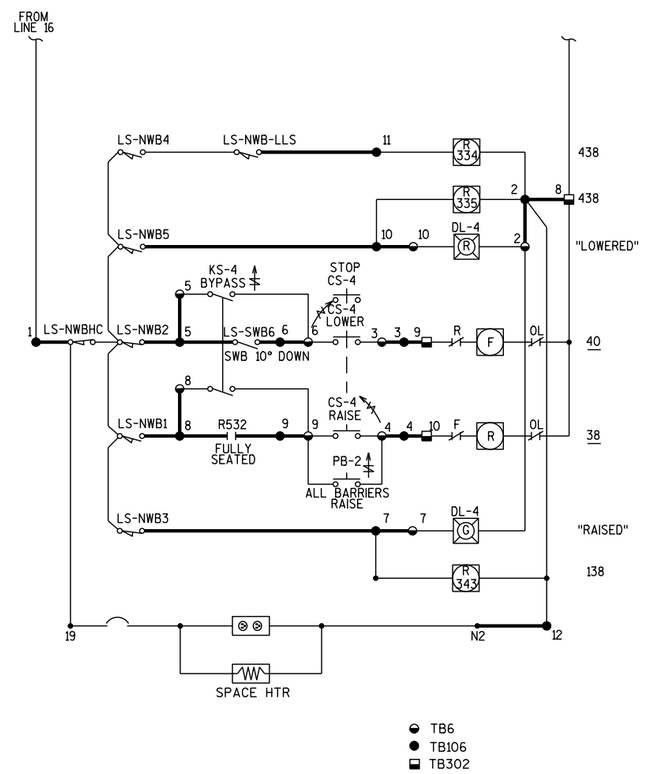

LIMIT SWITCH CONTACT DEVELOPMENT

CONTACT	LOWERED	OPERATOR POSITION	RAINWD	FUNCTION THIS DWG OR DWG WHERE CONTACT IS SHOWN
LS-NWB1				RAISE LIMIT
LS-NWB2				LOWER LIMIT
LS-NWB3				IND LIGHT
LS-NWB4				SPARE
LS-NWB5				IND LIGHT
LS-NWB6				LINE 10, THIS SHEET
LS-NWB7				SPARE

0° 10° 80° 90°

LS-NWBHC IS HAND CRANK LIMIT SWITCH

NORTHWEST BARRIER

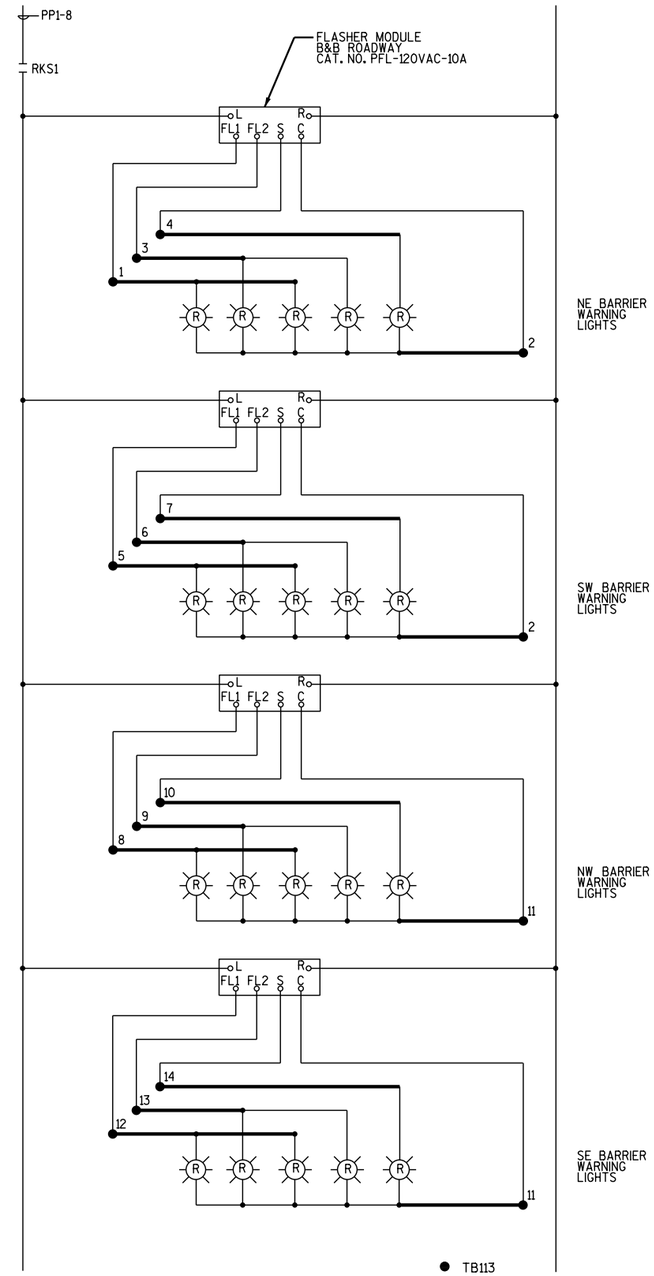

BARRIER WARNING LIGHTS

City of Milwaukee

Department of Public Works

Infrastructure Services Division

HNTB
11414 West Park Place, Suite 300
Milwaukee, WI 53224
414-359-2300

PLEASANT STREET LIFT BRIDGE OVER THE MILWAUKEE RIVER SCHEMATIC 3

REVISIONS

DESIGNED BY GLP

DRAWN BY SMS

CHECKED BY

DATE 4/2012

SCALE

JOB NUMBER BR100-07-0104

SHEET NUMBER E13 OF E18

OF 86

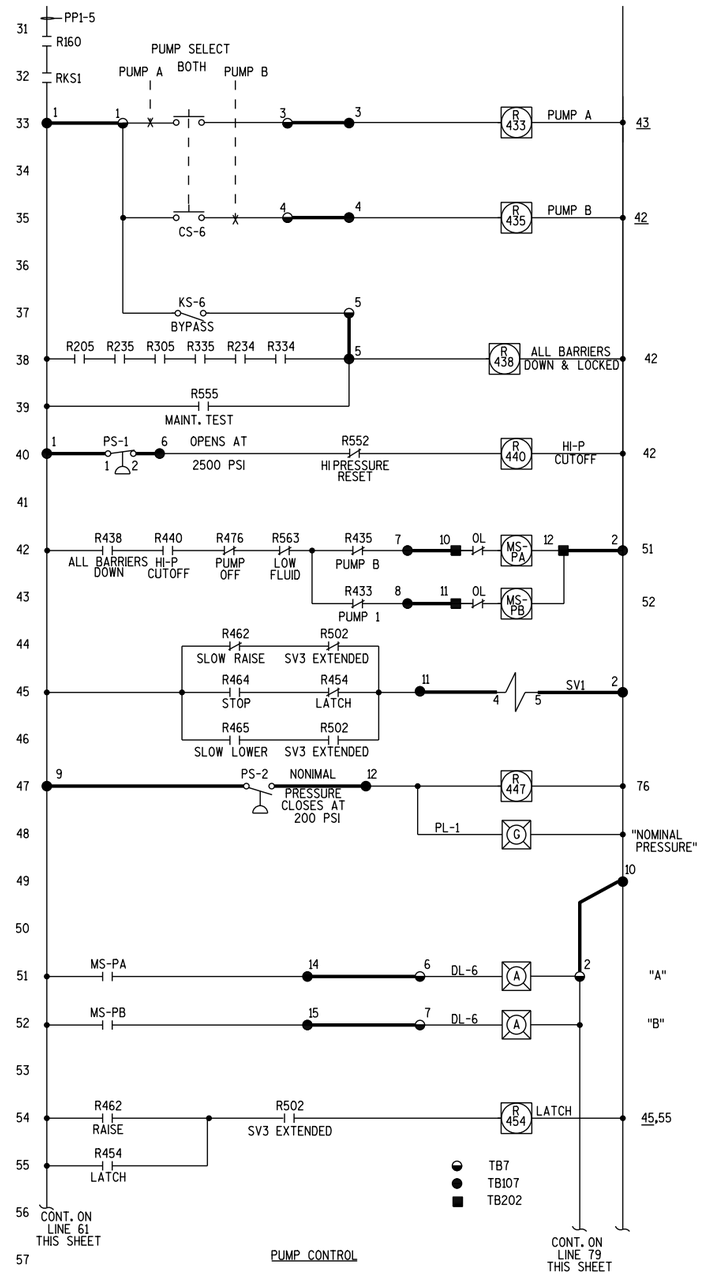

PUMP CONTROL

SOLENOID VALVE SV3

CONTACT	FULLY EXTENDED	OPERATOR POSITION	FULLY RETRACTED	FUNCTION THIS DWG OR DWG WHERE CONTACT IS SHOWN
LS-SV3E1	———	— — — — — —	— — — —	LINE 74 SCHEM 4
LS-SV3E2	— — —	———	———	NOT USED
LS-SV3R1	— — —	— — — — — —	———	NOT USED
LS-SV3R2	———	———	— — —	LINE 2 SCHEM 5

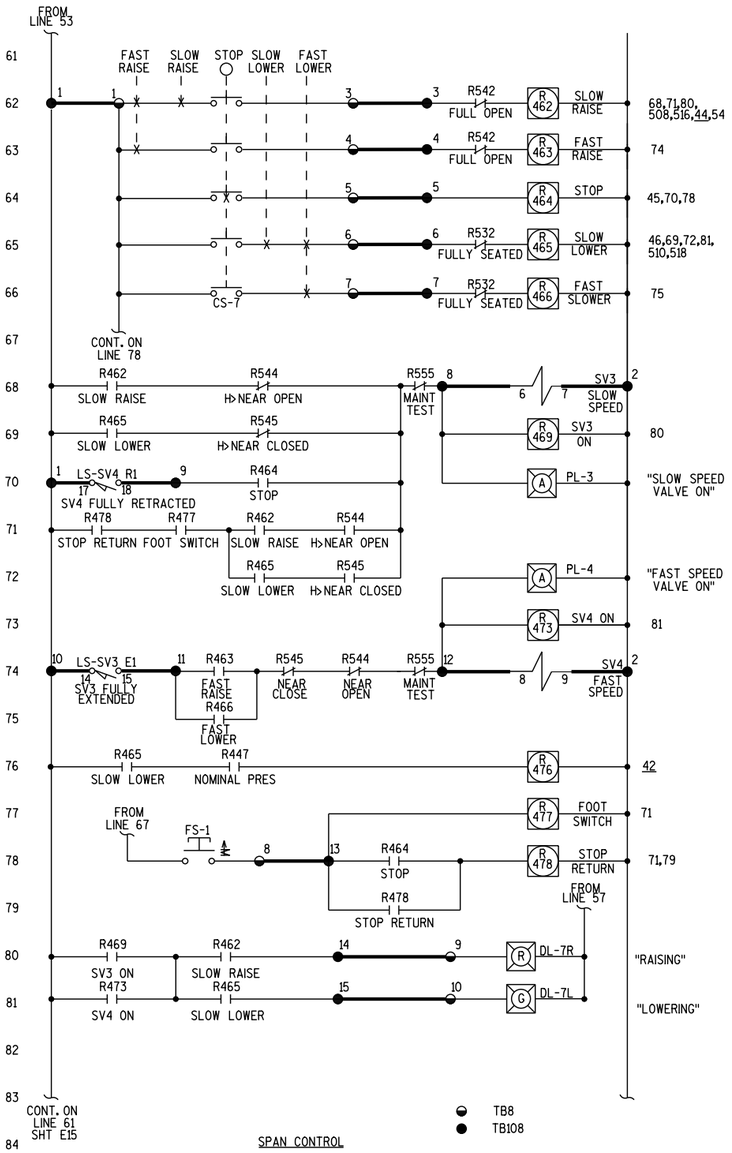

SPAN CONTROL

SOLENOID VALVE SV4

CONTACT	FULLY EXTENDED	OPERATOR POSITION	FULLY RETRACTED	FUNCTION THIS DWG OR DWG WHERE CONTACT IS SHOWN
LS-SV4E1	———	— — — — — —	— — — —	NOT USED
LS-SV4E2	— — —	———	———	NOT USED
LS-SV4R1	— — —	— — — — — —	———	LINE 70 SCHEM 4
LS-SV4R2	———	———	— — —	NOT USED

City of Milwaukee

Department of Public Works

Infrastructure Services Division

HNTB
11414 West Park Place, Suite 300
Milwaukee, WI 53224
414-359-2300

PLEASANT STREET LIFT BRIDGE OVER THE MILWAUKEE RIVER SCHEMATIC 4

REVISIONS

DESIGNED BY GLP

DRAWN BY SMS

CHECKED BY

DATE 4/2012

SCALE

JOB NUMBER BR100-07-0104

SHEET NUMBER E14 OF E18

OF 86

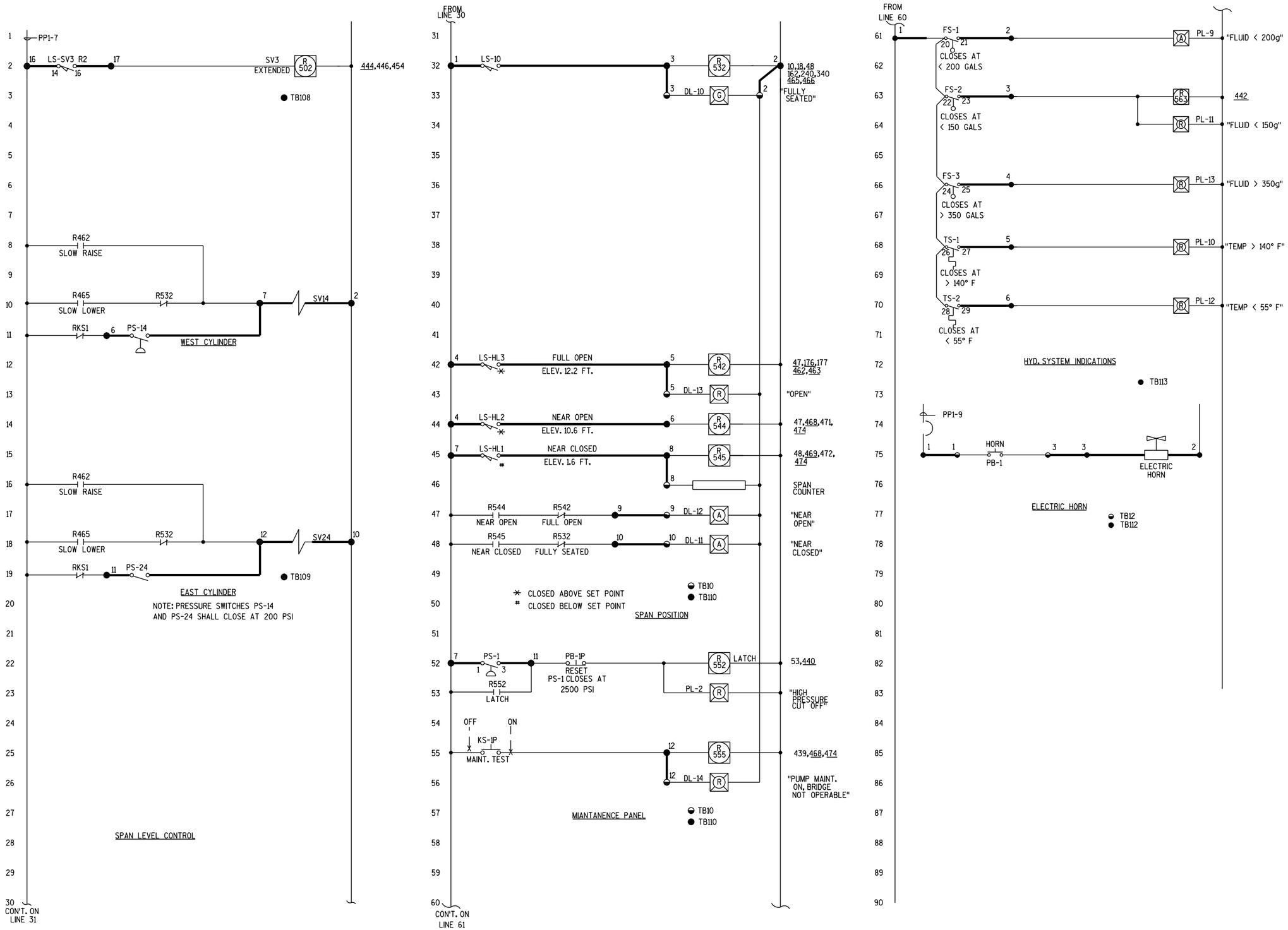

City of Milwaukee

Department of Public Works

Infrastructure Services Division

HNTB
11414 West Park Place, Suite 300
Milwaukee, WI 53224
414-359-2300

PLEASANT STREET LIFT BRIDGE OVER THE MILWAUKEE RIVER SCHEMATIC 5

REVISIONS

DESIGNED BY GLP

DRAWN BY SMS

CHECKED BY

DATE 4/2012

SCALE

JOB NUMBER BR100-07-0104

SHEET NUMBER E15 OF E18

OF 86

CIRCUIT NUMBER	COND COLOR	FROM	TO
POWER LINE METERING			
C1		480 V SWBD CAB	CONTROL DESK
	B	TB201-1	TB1-1
	R	TB201-2	TB1-2
	BL	TB201-3	TB1-3
	O	TB201-4	TB1-4
C2		480 V SWBD CAB	CONTROL DESK
	B	TB201-5	TB1-5
	R	TB201-6	TB1-6
	BL	TB201-7	TB1-7
	O	SPARE	SPARE
TRAFFIC SIGNALS			
C3		RELAY CABINET	CONTROL DESK
	B	TB102-1	TB2-1
	R	TB102-2	TB2-2
	BL	TB102-3	TB2-3
	O	TB102-4	TB2-4
	Y	TB102-5	TB2-5
	BN	TB102-6	TB2-6
	RB	TB102-7	TB2-7
	BLB	TB102-11	TB2-11
	OB	SPARE	SPARE
C4		SW TRAFFIC SIG	RELAY CABINET
	B	UPPER RED	TB102-8
	R	LOWER RED	TB102-9
	BL	COMMON	TB102-10
	O	SPARE	SPARE
C5		NW TRAFFIC SIG	SW TRAFFIC SIG
	B	UPPER RED	UPPER RED
	R	LOWER RED	LOWER RED
	BL	COMMON	COMMON
	O	SPARE	SPARE
C6		SE TRAFFIC SIG	RELAY CABINET
	B	UPPER RED	TB102-8
	R	LOWER RED	TB102-9
	BL	COMMON	TB102-10
	O	SPARE	SPARE
C7		SE TRAFFIC SIG	NE TRAFFIC SIG
	B	UPPER RED	UPPER RED
	R	LOWER RED	LOWER RED
	BL	COMMON	COMMON
	O	SPARE	SPARE
C8		480 V SWBD CAB	RELAY CAB
	B	TB201-9	TB102-1
	R	TB201-10	TB102-11
	BL	TB201-8	TB102-12
	O	SPARE	SPARE
WARNING BELLS			
C9		W WARNING BELL	RELAY CABINET
	B	LINE	TB101-1
	R	COMMON	TB101-2
C10		E WARNING BELL	RELAY CABINET
	B	LINE	TB101-3
	R	COMMON	TB101-2
C11		RELAY CAB	CONTROL DESK
	B	TB101-4	TB1-8
	R	TB101-5	TB1-9
NAVIGATION LIGHTS			
C12		S CHANNEL LT	RELAY CABINET
	B	RED	TB111-3
	R	GREEN	TB111-4
	BL	COMMON	TB111-2
	O	SPARE	SPARE
C13		N CHANNEL LT	S CHANNEL LT
	B	RED	RED
	R	GREEN	GREEN
	BL	COMMEN	COMMON
	O	SPARE	SPARE

CIRCUIT NUMBER	COND COLOR	FROM	TO
C14		SE PIER NAV LT	RELAY CAB
	B	LINE	TB111-5
	R	COMMON	TB111-6
C15		E CNTR PIER LT	SE PIER NAV LT
	B	LINE	LINE
	R	COMMON	COMMON
C16		E CNTR PIER LT	NE PIER NAV LT
	B	LINE	LINE
	R	COMMON	COMMON
C17		SW PIER NAV LT	RELAY CAB
	B	LINE	TB111-5
	R	COMMON	TB111-6
C18		W CNTR PIER LT	SW PIER NAV LT
	B	LINE	LINE
	R	COMMON	COMMON
C19		W CNTR PIER LT	NW PIER NAV LT
	B	LINE	LINE
	R	COMMON	COMMON
NE BARRIER			
C20		208 V SWBD CAB	RELAY CABINET
	B	SPARE	SPARE
	R	TB301-2	TB103-2
	BL	TB301-3	TB103-3
	O	TB301-4	TB103-4
C21		RELAY CABINET	CONTROL DESK
	B	SPARE	SPARE
	R	TB103-2	TB3-2
	BL	TB103-3	TB3-3
	O	TB103-4	TB3-4
	Y	TB103-5	TB3-5
	BN	TB103-6	TB3-6
	RB	TB103-7	TB3-7
	BLB	TB103-8	TB3-8
	OB	TB103-9	TB3-9
	YB	TB103-10	TB3-10
	BNB	SPARE	SPARE
	BR	SPARE	SPARE
C22		NE BARRIER	RELAY CAB
	B	LS-NEBHC COM	TB103-1
	R	LS-NEB2 NC	TB103-5
	BL	LS-NEB5 NO	TB103-10
	O	LS-NEB3 NC	TB103-7
	Y	LS-NEB1 NO	TB103-8
	BN	N2	TB103-12
	RB	SPARE	SPARE
C57		SE BARRIER	208 V SWBD CAB
	B	LS-SEB6 NO	TB103-9
	R	LS-SEB6 COM	TB103-8
P13		NE BARRIER	208 V SWBD CAB
	B1	T1	TB303-1
	B2	T2	TB303-2
	B3	T3	TB303-3
	B4	GRD	TB303-4
SE BARRIER			
C23		208 V SWBD CAB	RELAY CABINET
	B	SPARE	SPARE
	R	TB301-8	TB104-2
	BL	TB301-9	TB104-3
	O	TB301-10	TB104-4
C24		RELAY CABINET	CONTROL DESK
	B	SPARE	SPARE
	R	TB104-2	TB4-2
	BL	TB104-3	TB4-3
	O	TB104-4	TB4-4
	Y	TB104-5	TB4-5
	BN	TB104-6	TB4-6
	RB	TB104-7	TB4-7
	BLB	TB104-8	TB4-8
	OB	TB104-9	TB4-9
	YB	TB104-10	TB4-10
	BNB	SPARE	SPARE
	BR	SPARE	SPARE

CIRCUIT NUMBER	COND COLOR	FROM	TO
C25		SE BARRIER	RELAY CAB
	B	LS-SEBHC COM	TB104-1
	R	LS-SEB2 NC	TB104-5
	BL	LS-SEB5 NO	TB104-10
	O	LS-SEB3 NC	TB104-7
	Y	LS-SEB1 NO	TB104-8
	BN	LS-SEB-LLS NO	TB104-11
	RB	N2	TB104-12
C26		NE BARRIER	RELAY CAB
	B	LS-NEB4 NO	TB104-6
	R	LS-NEB4 COM	TB104-5
P15		SE BARRIER	208 V SWBD CAB
	B1	T1	TB301-9
	B2	T2	TB301-10
	B3	T3	TB301-11
	B4	GRD	TB301-12
SW BARRIER			
C27		208 V SWBD CAB	RELAY CABINET
	B	SPARE	SPARE
	R	TB302-2	TB105-2
	BL	TB302-3	TB105-3
	O	TB302-4	TB105-4
C28		RELAY CABINET	CONTROL DESK
	B	SPARE	SPARE
	R	TB105-2	TB5-2
	BL	TB105-3	TB5-3
	O	TB105-4	TB5-4
	Y	TB105-5	TB5-5
	BN	TB105-6	TB5-6
	RB	TB105-7	TB5-7
	BLB	TB105-8	TB5-8
	OB	TB105-9	TB5-9
	YB	TB105-10	TB3-10
	BNB	SPARE	SPARE
	BR	SPARE	SPARE
C29		SW BARRER	RELAY CAB
	B	LS-SWBHC	TB105-1
	R	LS-SWB2 NC	TB105-5
	BL	LS-SWB5 NO	TB105-10
	O	LS-SWB3 NC	TB105-7
	Y	LS-SWB1 NO	TB105-8
	BN	N2	TB105-12
	RB	SPARE	SPARE
C58		NW BARRER	RELAY CAB
	B	LS-NWB6 NO	TB105-9
	R	LS-NWB6 COM	TB105-8
P14		SW BARRER	208 V SWBD CAB
	B1	T1	TB304-1
	B2	T2	TB304-2
	B3	T3	TB304-3
	B4	GRD	TB304-4
NW BARRIER			
C30		208 V SWBD CAB	RELAY CABINET
	B	SPARE	SPARE
	R	TB302-8	TB106-2
	BL	TB301-9	TB106-3
	O	TB301-10	TB106-4
C31		RELAY CABINET	CONTROL DESK
	B	SPARE	SPARE
	R	TB106-2	TB6-2
	BL	TB106-3	TB6-3
	O	TB106-4	TB6-4
	Y	TB106-5	TB6-5
	BN	TB106-6	TB6-6
	RB	TB106-7	TB6-7
	BLB	TB106-8	TB6-8
	OB	TB106-9	TB6-9
	YB	TB106-10	TB3-10
	BNB	SPARE	SPARE
	BR	SPARE	SPARE
C32		NW BARRER	RELAY CAB
	B	LS-NWBHC	TB106-1
	R	LS-NWB2 NC	TB106-5
	BL	LS-NWB5 NO	TB106-10
	O	LS-NWB3 NC	TB106-7
	Y	LS-NWB1 NO	TB106-8
	BN	LS-NWB-LLS NO	TB106-11
	RB	N2	TB106-12

CIRCUIT NUMBER	COND COLOR	FROM	TO
C33		SW BARRIER	RELAY CAB
	B	LS-SWB4 NO	TB105-6
	R	LS-SWB4 COM	TB106-5
P12		NW BARRIER	MCC-1
	B1	T1	TB304-9
	B2	T2	TB304-10
	B3	T3	TB304-11
	B4	GRD	TB305-12
BARRIER WARNING LIGHTS			
C34		NE BARRIER LTS	RELAY CAB
	B	FL1	TB113-1
	R	COMMON	TB113-2
	BL	FL2	TB113-3
	O	STEADY	TB113-4
C35		SE BARRIER LTS	RELAY CAB
	B	FL1	TB113-5
	R	COMMON	TB113-2
	BL	FL2	TB113-6
	O	STEADY	TB113-7
C36		SW BARRIER LTS	RELAY CAB
	B	FL1	TB113-8
	R	COMMON	TB113-11
	BL	FL2	TB113-9
	O	STEADY	TB113-10
C37		NW BARRIER LTS	RELAY CAB
	B	FL1	TB113-12
	R	COMMON	TB113-11
	BL	FL2	TB113-13
	O	STEADY	TB113-14
PUMP CONTROL			
C38		RELAY CAB	CONTROL DESK
	B	TB107-1	TB7-1
	R	TB107-2	TB7-2
	BL	TB107-3	TB7-3
	O	TB107-4	TB7-4
	Y	TB107-5	TB7-5
	BN	TB107-14	TB7-6
	RB	TB107-15	TB7-7
	BLB	SPARE	SPARE
	OB	SPARE	SPARE
C39		480 V SWBD CAB	RELAY CAB
	B	TB107-10	TB107-10
	R	TB107-11	TB107-11
	BL	TB107-12	TB107-12
	O	SPARE	SPARE
C40		HYD SKID	RELAY CAB
	B	PS-1 COM	TB107-1
	R	PS-1 NC	TB107-6
	BL	SV-1 LINE	TB107-11
	O	SV-1 COMMON	TB107-2
	Y	SPARE	SPARE
	BN	SPARE	SPARE
	RB	SPARE	SPARE
C41		PS-2	RELAY CAB
	B	PS-2 COM	TB107-9
	R	PS-2 NO	1B107-12
P6		PUMP MTR A	480 V SWBD CAB
	B1	T1	T1
	B2	T2	T2
	B3	T3	T3
	B4	GND	GND
P7		PUMP MTR B	480 V SWBD CAB
	B1	T1	T1
	B2	T2	T2
	B3	T3	T3
	B4	GND	GND

CIRCUIT NUMBER	COND COLOR	FROM	TO
SPAN CONTROL			
C42		RELAY CAB	CONTROL DESK
	B	TB108-1	TB8-1
	R	SPARE	SPARE
	BL	TB108-3	TB8-3
	O	TB108-4	TB8-4
	Y	TB108-5	TB8-5
	BN	TB108-6	TB8-6
	RB	TB108-7	TB8-7
	BLB	TB108-13	TB8-8
	OB	TB108-14	TB8-9
	YB	TB108-15	TB8-10
	BNB	SPARE	SPARE
	BR	SPARE	SPARE
C43		HYD SKID	RELAY CAB
	B	LS-SV4 R1 COM	TB108-1
	R	LS-SV4 R1 NO	TB108-9
	BL	LS-SV3 E1 COM	TB108-10
	O	LS-SV3 E1 NO	TB108-11
	Y	SV3 LINE	TB108-8
	BN	SV3 COM	TB108-2
	RB	SV4 LINE	TB108-12
	BLB	SV4 COM	TB108-2
	OB	LS-SV3 R2 COM	TB108-16
	YB	LS-SV3 R2 NO	TB108-17
	BNB	SPARE	SPARE
	BR	SPARE	SPARE
LIFT CYLINDERS			
C44		WEST CYLINDER	RELAY CAB
	B	SV14 LINE	TB109-7
	R	SV14 COM	TB109-2
C45		PS-14	RELAY CAB
	B	PS-14 NO	TB109-7
	R	PS-14 COM	TB109-6
C46		EAST CYLINDER	RELAY CAB
	B	SV24 LINE	TB109-12
	R	SV24 COM	TB109-10
C47		PS-24	RELAY CAB
	B	PS-24 NO	TB109-12
	R	PS-24 COM	TB109-11
SPAN POSITION			
C48		RELAY CAB	CONTROL DESK
	B	SPARE	SPARE
	R	TB110-2	TB10-2
	BL	TB110-3	TB10-3
	O	TB110-5	TB10-5
	Y	TB110-8	TB10-8
	BN	TB110-9	TB10-9
	RB	TB110-10	TB10-9
	BLB	TB110-12	TB10-12
	OB	SPARE	SPARE
C49		LS-10	RELAY CAB
	B	NO	TB110-1
	R	COM	TB110-3
C50		LS-HL3	RELAY CAB
	B	NO	TB110-4
	R	COM	TB110-5
C51		LS-HL2	RELAY CAB
	B	NO	TB110-4
	R	COM	TB110-6
C52		LS-HL1	RELAY CAB
	B	NO	TB110-7
	R	COM	TB110-8
C53		HYD SKID	RELAY CAB
	B	PS-1 NO (1)	TB110-7
	R	PS-1 COM (3)	TB110-11

CIRCUIT NUMBER	COND COLOR	FROM	TO
HYD. SYSTEMS INDICATIONS			
C54		HYD SKID	RELAY CAB
	B	FS-1 COM (20)	TB113-1
	R	FS-1 NO (21)	TB113-2
	BL	FS-2 NO (23)	TB113-3
	O	FS-3 NO (25)	TB113-4
	Y	TS-1 NO (27)	TB113-5
	BN	TS-2 NO (29)	TB113-6
	RB	SPARE	SPARE
ELECTRIC HORN			
C55		RELAY CAB	CONTROL DESK
	B	TB112-1	TB12-1
	R	TB112-3	TB12-3
C56		ELECT HORN	RELAY CAB
	B	LINE	TB112-3
	R	NEUTRAL	TB113-2

1. PROVIDE INTERNAL JUMPER WIRES IN ACCORDANCE WITH SCHEMATIC DRAWINGS.

2. CONDUCTOR COLOR CODE:

B	BLACK
R	RED
BL	BLUE
O	ORANGE
Y	YELLOW
BN	BROWN
RB	RED/BLACK
BLB	BLUE/BLACK
OB	ORANGE/BLACK
YB	YELLOW/BLACK
BNB	BROWN/BLACK
BR	BLACK/RED

WORK BY CITY FORCES

City of Milwaukee
Department of Public Works
Infrastructure Services Division

HNTB
1414 West Park Place, Suite 300
Milwaukee, WI 53224
414-359-2300

PLEASANT STREET LIFT BRIDGE
OVER THE MILWAUKEE RIVER
WIRING SCHEDULE

REVISIONS

DESIGNED BY GLP
DRAWN BY SMS
CHECKED BY

DATE 4/2012
SCALE

JOB NUMBER BR100-07-0104

SHEET NUMBER E16 OF E18

OF 86

CKT NUMBER	FROM	TO	CABLE NO.	CABLE SIZE/ TYPE	AREA (SQ. IN.)	ROUTING 1	2	3	4	5	6	7	8	9	10
C1	480 VOLT SWBD CAB	CONTROL DESK	1	12D4	0.193	R1	T1								
C2	480 VOLT SWBD CAB	CONTROL DESK	1	12D4	0.193	R1	T1								
C3	RELAY CABINET	CONTROL DESK	1	12D9	0.391	R2	T2	T1							
C4	SW TRAFFIC SIGNAL	RELAY CABINET	1	12D4	0.193	R3	R4	WFLX	R6	EFLX	T2	R2			
C5	NW TRAFFIC SIGNAL	SW TRAFFIC SIGNAL	1	12D4	0.193	R8	R7	R3							
C6	SE TRAFFIC SIGNAL	RELAY CABINET	1	12D4	0.193	R10	R15	T2	R2						
C7	SE TRAFFIC SIGNAL	NE TRAFFIC SIGNAL	1	12D4	0.193	R10	R12	R13							
C8	480 VOLT SWBD CAB	RELAY CABINET	1	12D4	0.193	R1	T1	T2	R2						
C9	WEST WARNING BELL	RELAY CABINET	1	12D2	0.142	R5	R4	WFLX	R6	EFLX	T2	R2			
C10	EAST WARNING BELL	RELAY CABINET	1	12D2	0.142	R11	R15	T2	R2						
C11	RELAY CABINET	CONTROL DESK	1	12D2	0.142	R2	T2	T1							
C12	SOUTH CHANNEL NAV LT	RELAY CABINET	1	12D4	0.193	R16	EFLX	T2	R2						
C13	NORTH CHANNEL NAV LT	SOUTH CHANNEL NAV LT	1	12D4	0.193	R17									
C14	SE PIER NAV LIGHT	RELAY CABINET	1	12D2	0.142	R18	T2	R2							
C15	EAST CENTER PIER LIGHT	SE PIER LIGHT	1	12D2	0.142	R19									
C16	EAST CENTER PIER LIGHT	NE PIER LIGHT	1	12D2	0.142	R20									
C17	SW PIER NAV LIGHT	RELAY CABINET	1	12D2	0.142	R21	WFLX	R6	EFLX	T2	R2				
C18	WEST CENTER PIER LIGHT	SW PIER LIGHT	1	12D2	0.142	R22									
C19	WEST CENTER PIER LIGHT	NW PIER LIGHT	1	12D2	0.142	R23									
C20	208 VOLT SWBD CAB	RELAY CABINET	1	12D4	0.193	R24	T2	R2							
C21	RELAY CABINET	CONTROL DESK	1	12D12	0.497	R2	T2	T1							
C22	NE TRAFFIC BARRIER	RELAY CABINET	1	12D7	0.294	R14	R12	R15	T2	R2					
C23	208 VOLT SWBD CAB	RELAY CABINET	1	12D4	0.193	R24	T2	R2							
C24	RELAY CABINET	CONTROL DESK	1	12D12	0.497	R2	T2	T1							
C25	SE TRAFFIC BARRIER	RELAY CABINET	1	12D7	0.294	R11	R15	T2	R2						
C26	NE TRAFFIC BARRIER	RELAY CABINET	1	12D2	0.142	R14	R12	R15	T2	R2					
C27	208 VOLT SWBD CAB	RELAY CABINET	1	12D4	0.193	R24	T2	R25							
C28	RELAY CABINET	CONTROL DESK	1	12D12	0.497	R25	T2	T1							
C29	SW TRAFFIC BARRIER	RELAY CABINET	1	12D7	0.294	R5	R4	WFLX	R6	EFLX	T2	R25			
C30	208 VOLT SWBD CAB	RELAY CABINET	1	12D4	0.193	R24	T2	R25							
C31	RELAY CABINET	CONTROL DESK	1	12D12	0.497	R25	T2	T1							
C32	NW TRAFFIC BARRIER	RELAY CABINET	1	12D7	0.294	R9	R7	R4	WFLX	R6	EFLX	T2	R25		
C33	SW TRAFFIC BARRIER	RELAY CABINET	1	12D2	0.142	R5	R4	WFLX	R6	EFLX	T2	R25			
C34	NE TRAFFIC BARRIER LTS	RELAY CABINET	1	12D4	0.193	R14	R12	R15	T2	R25					
C35	SE TRAFFIC BARRIER LTS	RELAY CABINET	1	12D4	0.193	R11	R15	T2	R25						
C36	SW TRAFFIC BARRIER LTS	RELAY CABINET	1	12D4	0.193	R5	R4	WFLX	R6	EFLX	T2	R25			
C37	NW TRAFFIC BARRIER LTS	RELAY CABINET	1	12D4	0.193	R9	R7	R4	WFLX	R6	EFLX	T2	R25		
C38	RELAY CABINET	CONTROL DESK	1	12D9	0.391	R47	T2	T1							
C39	480 VOLT SWBD CAB	RELAY CABINET	1	12D4	0.193	R1	T1	T2	R47						
C40	HYDRAULIC SKID	RELAY CABINET	1	12D7	0.294	R26	T1	T2	R47						
C41	PS-2	RELAY CABINET	1	12D2	0.142	R66	R32	EFLX	T2	R27					
C42	RELAY CABINET	CONTROL DESK	1	12D12	0.497	R47	T2	T1							
C43	HYDRAULIC SKID	RELAY CABINET	1	12D12	0.497	R26	T1	T2	R47						
C44	WEST HYD CYL (SV-14)	RELAY CABINET	1	12D2	0.142	R29	R30	R32	EFLX	T2	R47				
C45	WEST HYD CYL (PS-14)	RELAY CABINET	1	12D2	0.142	R31	R30	R32	EFLX	T2	R47				
C46	EAST HYD CYL (SV-24)	RELAY CABINET	1	12D2	0.142	R33	R32	EFLX	T2	R47					
C47	EAST HYD CYL (PS-24)	RELAY CABINET	1	12D2	0.142	R34	R32	EFLX	T2	R27					
C48	RELAY CABINET	CONTROL DESK	1	12D9	0.391	R27	T2	T1							
C49	LS-10 (FULL SEAT)	RELAY CABINET	1	12D2	0.142	R38	R39	T2	R27						
C50	LS-HL3 (FULL OPEN)	RELAY CABINET	1	12D2	0.142	R35	R39	T2	R27						
C51	LS-HL2 (NEAR OPEN)	RELAY CABINET	1	12D2	0.142	R36	R39	T2	R27						
C52	LS-HL1 (NEAR CLOSED)	RELAY CABINET	1	12D2	0.142	R37	R39	T2	R27						
C53	HYDRAULIC SKID	RELAY CABINET	1	12D2	0.142	R26	T1	T2	R27						
C54	HYDRAULIC SKID	RELAY CABINET	1	12D7	0.294	R26	T1	T2	R27						
C55	RELAY CABINET	CONTROL DESK	1	12D2	0.142	R27	T2	T1							
C56	ELECTRIC HORN	RELAY CABINET	1	12D2	0.142	R28	T1	T2	R27						
C57	SE TRAFFIC BARRIER	RELAY CABINET	1	12D2	0.142	75	R11	R15	T2	R2					
C58	NW TRAFFIC BARRIER	RELAY CABINET	1	12D2	0.142	315	R9	R7	R4	WFLX	R6	EFLX	T2	R25	
P1	WEST UTILITY METER	WEST SERVICE DISC SW	5	4/0B1	2.01	R40									
P2	WEST SERVICE DISC SW	AUTO TRANSFER SW	5	4/0B1	2.01	R41	WFLX	R42	EFLX	R45					
P3	EAST UTILITY METER	EAST SERVICE DISC SW	5	4/0B1	2.01	R43									
P4	EAST SERVICE DISC SW	AUTO TRANSFER SW	5	4/0B1	2.01	R44									
P5	AUTO TRANSFER SW	CONTROL HOUSE DISC SW	5	4/0B1	2.01	R46									
P5A	CONTROL HOUSE DISC SW	480 VOLT SWBD CAB	5	4/0B1	2.01	R67									
P6	PUMP MOTOR A	480 VOLT SWBD CAB	1	4H3	0.62	R61	T1	R62							
P7	PUMP MOTOR B	480 VOLT SWBD CAB	1	4H3	0.62	R61	T1	R62							
P8	E. SUMP PUMP CONTROLLER	PANELBOARD LP1	1	12H3	0.212	R48									
P9	208 VOLT SWBD CAB	PANELBOARD LP2	5	1/0B1	0.59	R51	T2	EFLX	R42	WFLX	R52				
P10	480 VOLT SWBD CAB	TRANSFORMER TX-1	5	4B1	0.42	R49									
P11	208 VOLT SWBD CAB	TRANSFORMER TX-1	5	2B1	0.59	R53	T2	R50							
P12	NW TRAFFIC BARRIER	208 VOLT SWBD CAB	1	12H3	0.212	R54	R56	WFLX	R6	EFLX	T2	R53			
P13	NE TRAFFIC BARRIER	208 VOLT SWBD CAB	1	12H3	0.212	R57	R58	T2	R53						
P14	SW TRAFFIC BARRIER	208 VOLT SWBD CAB	1	12H3	0.212	R55	R56	WFLX	R6	EFLX	T2	R53			
P15	SE TRAFFIC BARRIER	208 VOLT SWBD CAB	1	12H3	0.212	R59	R58	T2	R53						
P16	PANELBOARD LP1	208 VOLT SWBD CAB	5	1B1	0.795	R64	T2	R63							
P17	PANELBOARD LP1	PANELBOARD PP1	1	6H3	0.529	R64	T2	R60							
P18	W SUMP PUMP CONTROLLER	PANELBOARD LP2	1	12H3	0.212	R65									

NUMBER OF CABLES
CONDUCTOR AWG
NUMBER OF CONDUCTORS
CABLE TYPE (SEE CABLE DESCRIPTIONS)

CABLE DESCRIPTIONS

TYPE B - 600 VOLT SINGLE CONDUCTOR FLAME RESISTANT POWER CABLE, CLASS B STRANDING, 90 DEG C STANDARD ROUND UNCOATED COPPER, UL LISTING TWHN.

DETAILS:

SIZE (AWG)	INSULATION THICKNESS - INCHES	OUTSIDE DIAMETER - INCHES	AREA SQ. INCHES
12	0.03	0.16	0.038
8	0.045	0.24	0.045
4	0.045	0.35	0.084
2	0.045	0.04	0.118
1	0.055	0.46	0.159
4/0	0.055	0.57	0.226
2/0	0.055	0.66	0.327

TYPE D - 600 VOLT MULTI-CONDUCTOR NO. 12 AWG FLAME RESISTANT CONTROL CABLE, CLASS B STRANDING, 90 DEG C, STANDARD ROUND UNCOATED CPPER UL LISTING XHHW, TYPE TC TRAY CABLE.

DETAILS:

NUMBER OF CONDUCTORS	JACKET THICKNESS - INCHES	OUTSIDE DIAMETER - INCHES	AREA SQ. INCHES
2	0.045	0.365	0.142
4	0.045	0.422	0.193
7	0.061	0.501	0.197
9	0.061	0.614	0.296
12	0.061	0.689	0.383

TYPE H - 600 VOLT THREE CONDUCTOR WITH GROUND POWER CABLE, CLASS B STRANDING, 90 DEG C FLAME RESISTANT, UNCOATED COPPER, UL LISTING XHHW.

DETAILS:

PHASE CONDUCTOR SIZE (AWG)	GROUND CONDUCTOR SIZE (AWG)	OUTSIDE DIAMETER - INCHES	AREA SQ. INCHES
12	12	0.045	0.212
10	10	0.045	0.268
6	8	0.075	0.349
4	3X10	0.075	0.621
2	6	0.075	0.819

WORK BY CITY FORCES

City of Milwaukee
Department of Public Works
Infrastructure Services Division

HNTB
11414 West Park Place, Suite 300
Milwaukee, WI 53224
414-359-2300

PLEASANT STREET LIFT BRIDGE OVER THE MILWAUKEE RIVER
CIRCUIT SCHEDULE

REVISIONS

DESIGNED BY GLP
DRAWN BY SMS
CHECKED BY
DATE 4/2012
SCALE
JOB NUMBER BR100-07-0104
SHEET NUMBER E17 OF E18
OF 86

RCWY NUMBER	TYPE	SIZE	AREA (SQ. IN.)	CIRCUIT ASSIGNMENTS																				
				1	2	3	4	5	6	7	8	9	10	11	12	13	14	15	16	17	18	19	20	21
R1	GRS	1.5	0.772	C1	C2	C8	C39																	
R2	GRS	4	4.125	C3	C4	C6	C8	C9	C10	C11	C12	C14	C17	C20	C21	C22	C23	C24	C25	C26	C57			
R3	PVGR	1.25	0.386	C4	C5																			
R4	PVGR	2.5	1.451	C4	C9	C29	C32	C33	C36	C37	C58													
R5	PVGR	1.5	1.593	C9	C29	C33	C36																	
R6	PVGR	3	2.017	C4	C9	C17	C29	C32	C33	C36	C37	P12	P14	C58										
R7	PVGR	2	0.82	C5	C32	C37	C58																	
R8	PVGR	0.75	0.193	C5																				
R9	PVGR	1.5	0.629	C32	C37	C58																		
R10	PVGR	1.25	0.386	C6	C7																			
R11	PVGR	1.5	0.771	C10	C25	C35	C57																	
R12	PVGR	2	0.822	C7	C22	C26	C34																	
R13	PVGR	0.75	0.193	C7																				
R14	PVGR	2	0.629	C22	C26	C34																		
R15	PVGR	2.5	1.593	C6	C10	C22	C25	C26	C34	C35	C57													
R16	PVGR	0.75	0.193	C12																				
R17	PVGR	0.75	0.193	C13																				
R18	PVGR	0.75	0.142	C14																				
R19	PVGR	0.75	0.142	C15																				
R20	PVGR	0.75	0.142	C16																				
R21	PVGR	0.75	0.142	C17																				
R22	PVGR	0.75	0.142	C18																				
R23	PVGR	0.75	0.142	C19																				
R24	GRS	1.5	0.772	C20	C23	C27	C30																	
R25	GRS	4	3.024	C27	C28	C29	C30	C31	C32	C33	C34	C35	C36	C37	C58									
R26	GRS	2.5	1.227	C40	C43	C53	C54																	
R27	GRS	3	1.963	C41	C47	C48	C49	C50	C51	C52	C53	C54	C55	C56										
R28	GRS	0.75	0.142	C56																				
R29	PVGR	0.75	0.142	C44																				
R30	PVGR	1.25	0.284	C44	C45																			
R31	PVGR	0.75	0.142	C45																				
R32	PVGR	1.5	0.71	C41	C44	C45	C46	C47																
R33	PVGR	0.75	0.142	C46																				
R34	PVGR	0.75	0.142	C47																				
R35	PVGR	0.75	0.142	C50																				
R36	PVGR	0.75	0.142	C51																				
R37	PVGR	0.75	0.142	C52																				
R38	PVGR	0.75	0.142	C49																				
R39	PVGR	1.25	0.568	C49	C50	C51	C52																	
R40	PVGR	3	1.635	P1																				
R41	PVGR	3	1.635	P2																				
R42	PVGR	3	2.225	P2	P9																			
R43	PVGR	3	1.635	P3																				
R44	PVGR	3	1.635	P4																				
R45	PVGR	3	1.635	P2																				
R46	GRS	3	1.635	P5																				
R47	GRS	3	2.298	C38	C39	C40	C42	C43	C44	C45	C46													
R48	GRS	0.75	0.212	P8																				
R49	GRS	1.25	0.42	P10																				
R50	GRS	1.25	0.59	P11																				
R51	GRS	1.25	0.59	P9																				
R52	PVGR	1.25	0.59	P9																				
R53	GRS	2.5	1.438	P11	P12	P13	P14	P15																
R54	PVGR	0.75	0.212	P12																				
R55	PVGR	0.75	0.212	P14																				
R56	PVGR	1.25	0.424	P12	P14																			
R57	PVGR	0.75	0.212	P13																				
R58	PVGR	1.25	0.424	P13	P15																			
R59	PVGR	0.75	0.212	P15																				
R60	GRS	1.25	0.529	P17																				
R61	GRS	2.5	1.24	P6	P7																			
R62	GRS	2.5	1.24	P6	P7																			
R63	GRS	1.5	0.795	P16																				
R64	GRS	2	1.324	P16	P17																			
R65	PVGR	0.75	0.212	P18																				
R66	PVGR	0.75	0.142	C41																				
R67	GRS	3	1.635	P5A																				
WFLX	CBL	5x9	4.384	C4	C9	C17	C29	C32	C33	C36	C37	P2	P9	P12	P14	C58								
EFLX	CBL	5x9	5.287	C4	C9	C12	C17	C29	C32	C33	C36	C37	C41	C44	C45	C46	C47	P2	P9	P12	P14	C58		
T1	WW	6x6	7.323	C1	C2	C3	C8	C11	C21	C24	C28	C31	C38	C39	C40	C42	C43	C48	C53	C54	C55	C56	P6	P7
T2	WW	6x6	14.92	C3	C4	C6	C8	C9	C10	C11	C12	C14	C17	C20	C21	C22	C23	C24	C25	C26	C27	C28	C29	C30
				C31	C32	C33	C34	C35	C36	C37	C38	C39	C40	C41	C42	C43	C44	C45	C46	C47	C48	C49	C50	C51
				C52	C53	C54	C55	C56	P9	P11	P12	P13	P14	P15	P16	P17	P5A	C57	C58					

KEY:

GRS - DENOTES GALVANIZED RIGID STEEL

PVGR - DENOTES PVC COATED RIGID STEEL

PVC - DENOTES SCHEDULE 80 PVC CONDUIT

CBL - DENOTES FLEXIBLE CABLE LOOP BETWEEN PIER AND SPAN. ROUTE IN FLEXIBLE HOSE AND CABLE ENCLOSURE PROVIDED BY HYDRAULIC.

WW - DENOTES WIREWAY

WFLX - WEST FLEXIBLE CABLE

EFLX - EAST FLEXIBLE CABLE

WORK BY CITY FORCES

City of Milwaukee

Department of Public Works

Infrastructure Services Division

HNTB

1414 West Park Place, Suite 300
Milwaukee, WI 53224
414-359-2300

PLEASANT STREET LIFT BRIDGE
OVER THE MILWAUKEE RIVER
RACEWAY SCHEDULE

REVISIONS

DESIGNED BY GLP

DRAWN BY SMS

CHECKED BY

DATE 4/2012

SCALE

JOB NUMBER BRI00-07-0104

SHEET NUMBER E18 OF E18

OF 86

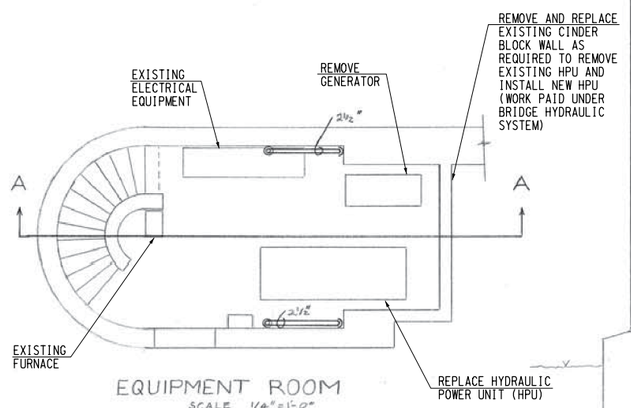

EQUIPMENT ROOM
SCALE 1/4"=1'-0"

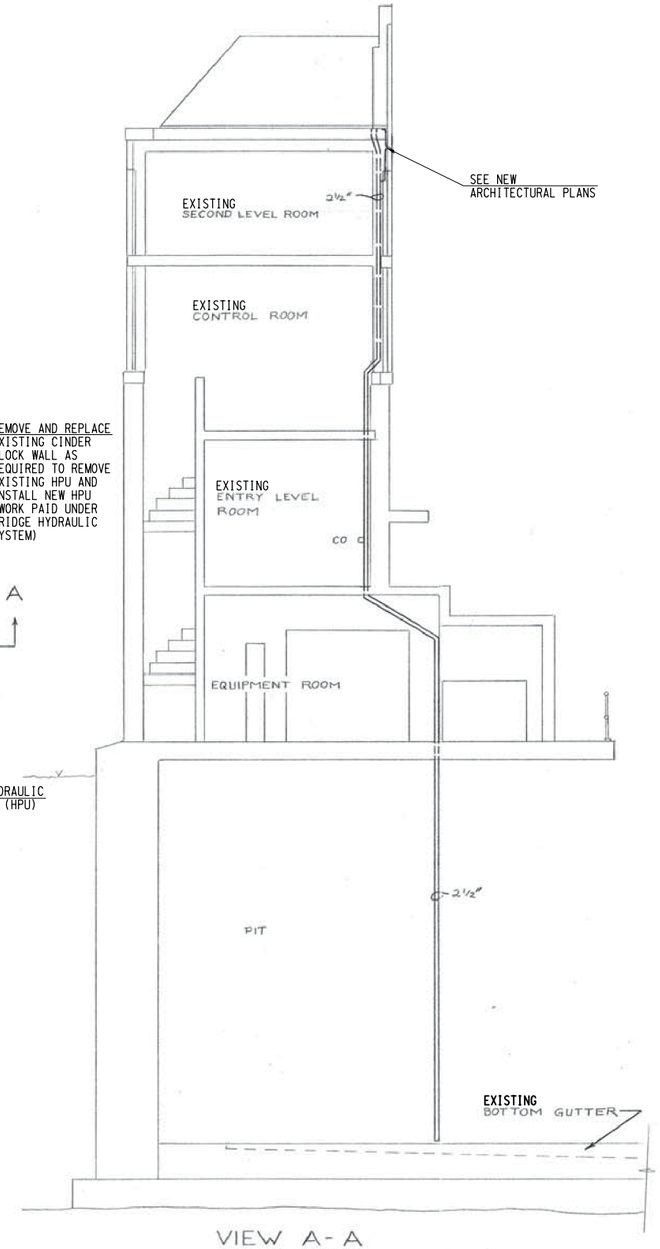

VIEW A-A

City of Milwaukee

Department of Public Works

Infrastructure Services Division

HNTB
11414 West Park Place, Suite 300
Milwaukee, WI 53224
414-359-2300

PLEASANT STREET LIFT BRIDGE
OVER THE MILWAUKEE RIVER
HYDRAULIC EQUIPMENT PLAN

REVISIONS

DESIGNED BY W.E.N.

DRAWN BY P.R.E.

CHECKED BY W.E.N.

DATE APR. 2012 | SCALE NONE

JOB NUMBER BR100-07-0104

SHEET NUMBER H1 OF H6

OF 86

PELLA
04-JUN-2012
\\NTWOO\DEPT\CADD\39834 CLYBOURN AVE\PLEASANT STREET\H1.DGN

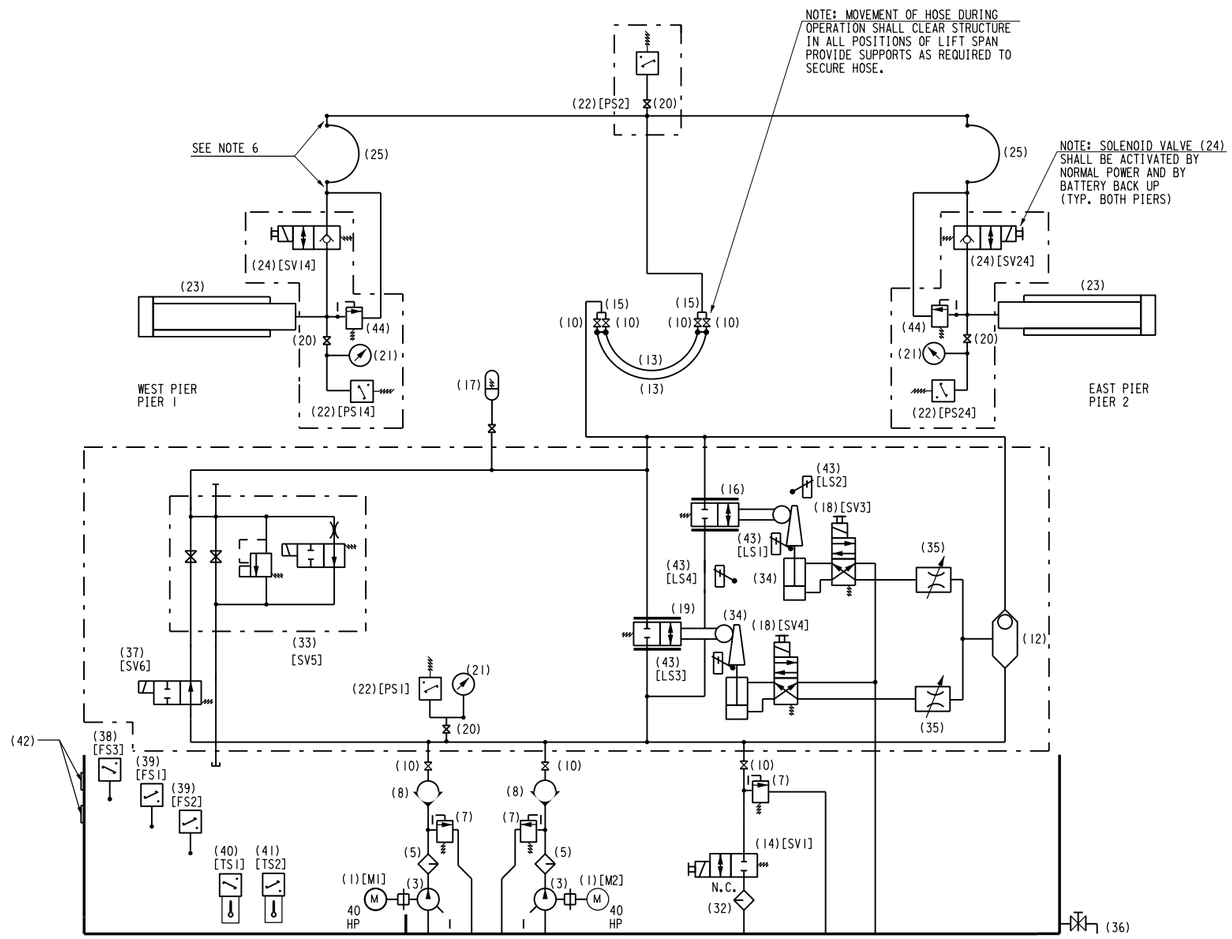

HYDRAULIC SYSTEM-FLOW DIAGRAM

HYDRAULIC BILL OF MATERIALS			
ITEM	QTY.	DESCRIPTION	
1	2	MAIN MOTOR	
2			
3	2	MAIN PUMP	
4			
5	2	MAIN PUMP PRESSURE FILTER	
6			
7	3	PRESSURE RELIEF VALVE	
8	2	CHECK VALVE	
9			
10	8	SHUTOFF VALVE	
11			
12	1	SHUTTLE VALVE	
13	2	2" I.D. HOSE ASSEMBLY WITH CONNECTION	
14	1	SOLENOID VALVE-TWO POSITION	
15	2	HOSE CONNECTION MANIFOLD	
16	1	ACCEL/DECEL VALVE - UP-START/LEVELING*	* SEE NOTE 2 REGARDING QUANTITY AND SIZES OF VALVES (16) AND (19)
17	1	ACCUMULATOR	
18	2	SOLENOID VALVE - TWO POSITION	
19	1	ACCEL/DECEL VALVE- FULL SPEED*	
20	4	SHUTOFF VALVE	
21	3	PRESSURE GAUGE	
22	4	PRESSURE SWITCH (1-N.O, 1-NC)	
23	2	JACKING CYLINDER	
24	2	SOLENOID VALVE - TWO POSITION	
25	2	HOSE ASSEMBLY WITH CONNECTION FITTINGS	
26			NOT USED
27			
28			
29			
30			
31			
32	1	RETURN LINE FILTER	
33	1	ACCUMULATOR SAFETY BLOCK	
34	2	ACCEL/DECEL ACTUATOR	
35	2	FLOW CONTROL	
36	1	DRAIN VALVE	
37	1	SOLENOID VALVE - TWO POSITION	
38	1	FLOAT SWITCH (1 N.O. & 1 N.C. CONTACT)	
		NC CONTACT OPENS AT HIGH FLUID LEVEL	
39	2	FLOAT SWITCH (1 N.O. & 1 N.C. CONTACT)	
		NC CONTACT OPENS AT LOW FLUID LEVEL	
40	1	HIGH TEMP SWITCH (1 N.O. & 1 N.C.	
		CONTACT) NC CONTACT OPENS AT HIGH TEMP	
41	1	LOW TEMP SWITCH (1 N.O. & 1 N.C.	
		CONTACT) NC CONTACT OPENS AT LOW TEMP	
42	2	PORTS IN RESERVOIR FOR FUTURE HEAT	
		EXCHANGER INSTALLATION	
43	4	LIMIT SWITCH - 1 N.O. AND 1 N.C. CONTACT	
44	2	PRESSURE RELIEF VALVE	

SOLENOID VALVE LIMIT SWITCH CONTACT DEVELOPEMENT					
SOLENOID VALVE	CONTACT	FULLY RETRACTED	OPERATOR POSITION	FULLY EXTENDED	FUNCTION
SV3	LS-3E	- - - - -	- - - - - - - - - -		SHT E3, LINE 65
SV3	LS-3E			- - - - -	NOT USED
SV3	LS-3R		- - - - - - - - - -	- - - - -	SHT E3, LINE 90
SV3	LS-3R	- - - - -			NOT USED
SV4	LS-4E	- - - - -	- - - - - - - - - -		SHT E3, LINE 91
SV4	LS-4E			- - - - -	NOT USED
SV4	LS-4R1		- - - - - - - - - -	- - - - -	SHT E3, LINE 55
SV4	LS-4R1	- - - - -			NOT USED
SV4	LS-4R2		- - - - - - - - - -	- - - - -	SHT E3, LINE 92
SV4	LS-4R2	- - - - -			NOT USED

KEY:

HYDRAULIC COMPONENTS: (N) AND (NN)

ELECTRICAL COMPONENTS: [XXN] AND [XXNN]
SINGLE DIGIT NUMERALS - AT HPU
10-SERIES - PIER #1
20-SERIES - PIER #2

N = NUMERIC DESIGNATION
X = ALPHABETICAL DESIGNATION

NOTES:

1. SEE SPECIAL PROVISIONS FOR REQUIREMENTS OF HYDRAULIC POWER UNIT AND HYDRAULIC SYSTEM, AND FOR REQUIRED CAPACITIES AND FEATURES OF ALL COMPONENTS LISTED.
2. TOTAL FLOW CAPACITY THROUGH VALVES (16) AND (19) SHALL BE AS STATED IN THE SPECIAL PROVISIONS FOR JACK CYLINDER DETAILED ON SHEET H5, OR SHALL BE ADJUSTED IN PROPORTION TO THE BORE AREA OF CYLINDERS PROVIDED. CONTRACTOR MAY USE PAIRS OF SMALLER VALVES FOREACH TO OBTAIN THE REQUIRED FLOW CAPACITY.
3. SEE SHEET H3 FOR HPU ARRANGEMENT AND DETAILS.
4. RESERVOIR AND ALL HYDRAULIC LINES AND VALVES SHALL BE STAINLESS STEEL.
5. HYDRAULIC CYLINDER VALVES (24) SHALL STOP SPAN AND HOLD IN POSITION IN CASE OF PIPE FAILURE AUTOMATICALLY, AND UPON DEMAND.
6. PROVIDE SHUT OFF VALVES (10) AT ALL HOSE CONNECTIONS (NOT ALL SHOWN, FOR CLARITY).

City of Milwaukee

Department of Public Works

Infrastructure Services Division

HNTB
11414 West Park Place, Suite 300
Milwaukee, WI 53224
414-359-2300

PLEASANT STREET LIFT BRIDGE
OVER THE MILWAUKEE RIVER
HYDRAULIC SCHEMATIC

REVISIONS

DESIGNED BY W.E.N.
DRAWN BY P.R.E.
CHECKED BY W.E.N.
DATE APR. 2012
SCALE NONE
JOB NUMBER BR100-07-0104
SHEET NUMBER H2 OF H6
OF 86

PELLA
04-JUN-2012
\\NTWOO\DEPT\CADD\39834 CLYBOURN AVE\PLEASANT STREET\H2.DGN

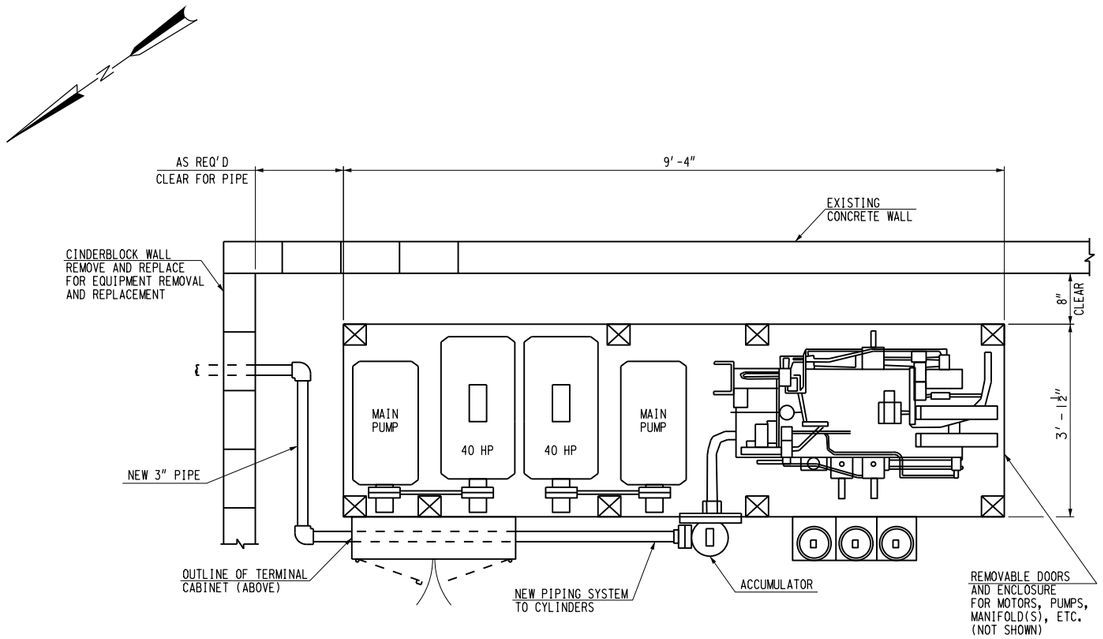

SECTION 1/H3

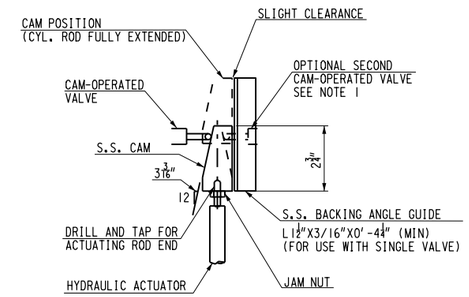

HYDRAULIC ACTUATOR ON HPU

LIMIT SWITCHES NOT SHOWN FOR CLARITY. SEE NOTES 1-3

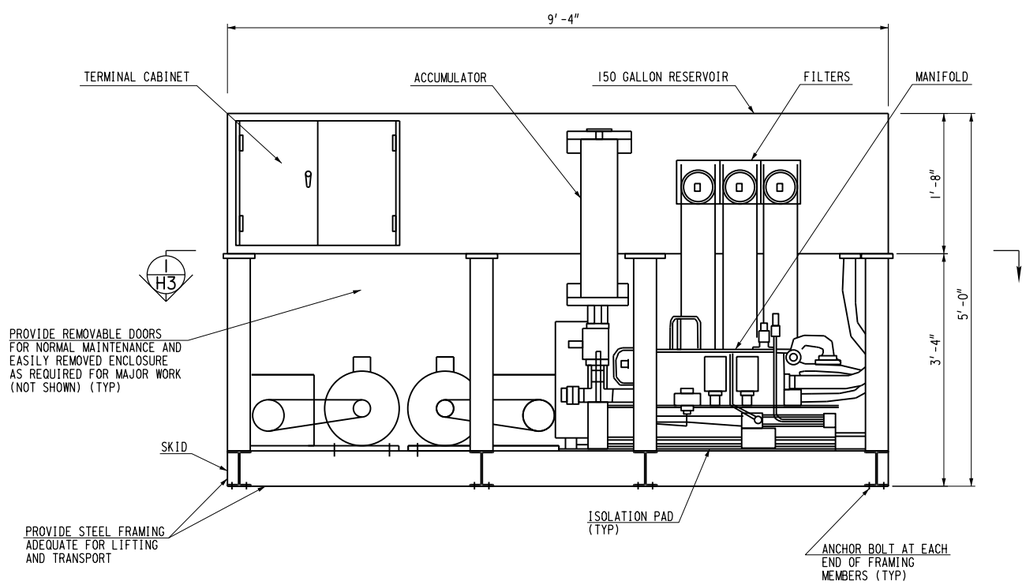

NEW HPU ELEVATION (FRONT)

(SEE NOTE 4)

NOTES:

1. EACH VALVE ACTUATOR ASSEMBLY, ONE FOR FAST AND ONE FOR SLOW SPEEDS, SHALL CONSIST OF A HYDRAULIC ACTUATOR WITH CAM ATTACHMENT, PLUS TWO ADJUSTABLE LIMIT SWITCHES (ONE AT EACH END OF STROKE), AND ONE OR TWO CAM-OPERATED VALVES MOUNTED ON STAINLESS STEEL MOUNTING PLATE. IF ONE VALVE IS USED, STAINLESS STEEL BACKING ANGLE SHALL BE PROVIDED TO PREVENT SIDE LOADING OF ACTUATOR ROD. CAM SHALL NOT BE ALLOWED TO ROTATE. ALL FABRICATED COMPONENTS SHALL BE STAINLESS STEEL.

2. ACTUATOR CAMS, VALVE PLUNGERS, AND LIMIT SWITCHES SHALL BE EFFECTIVELY GUARDED BY A BOLTED STEEL GUARD.

3. CAM POSITION AND LIMIT SWITCHES SHALL BOTH BE ADJUSTED FOR SMOOTH OPERATION, ACCELERATION, AND DECELERATION OF SPAN.

4. HPU RESERVOIR, REMOVABLE DOORS, ENCLOSURE, AND DRIP PAN SHALL BE STAINLESS STEEL. ENCLOSURE DOORS SHALL BE 10 GAUGE MINIMUM THICKNESS, SUITABLY REINFORCED FOR RIGIDITY, AND PROVIDED WITH STAINLESS STEEL HARDWARE. HPU SKID FRAMING SHALL BE STRUCTURAL STEEL.

5. SUGGESTED ARRANGEMENT IS SHOWN FOR RESERVOIR AND MOUNTED COMPONENTS ON HPU SKID. LOCATE MOTORS, PUMPS, MANIFOLD AND ALL SERVICEABLE COMPONENTS IN ACCESSIBLE LOCATIONS ON SKID WITH RESPECT TO INSTALLED POSITION WITHIN EQUIPMENT ROOM.

City of Milwaukee
Department of Public Works
Infrastructure Services Division

HNTB
11414 West Park Place, Suite 300
Milwaukee, WI 53224
414-359-2300

PLEASANT STREET LIFT BRIDGE
OVER THE MILWAUKEE RIVER
HPU AND FLEX ENCLOSURE

REVISIONS

DESIGNED BY W.E.N.	
DRAWN BY P.R.E.	
CHECKED BY W.E.N.	
DATE APR. 2012	SCALE NONE
JOB NUMBER BR100-07-0104	
SHEET NUMBER H3 OF H6	
OF 86	

PELLA
04-JUN-2012
\\NYWOO\DEPT\CADD\39834 CLYBOURN AVE\PLEASANT STREET\H3.DGN

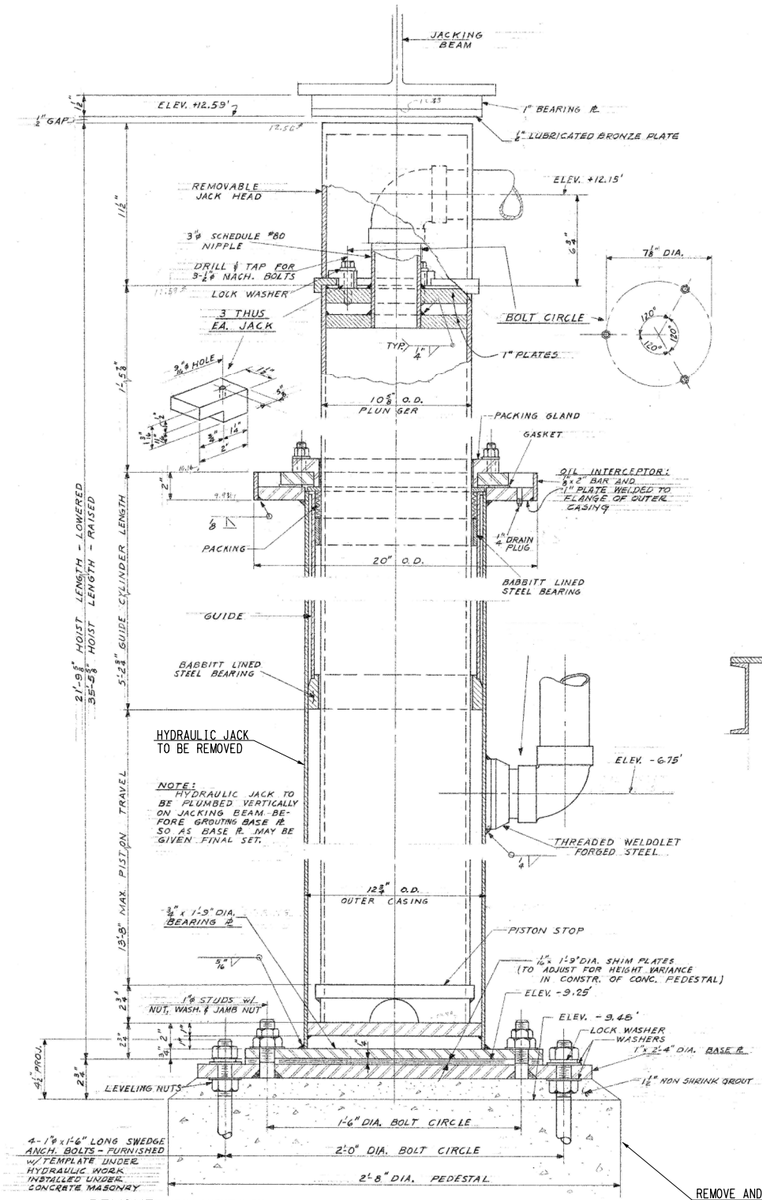

REMOVE HOISTING MECHANISM ASSEMBLY

REMOVE AND REPLACE EXISTING PEDESTAL TO SUPPORT NEW HYDRAULIC JACKING CYLINDER ASSEMBLY (SEE STRUCTURAL DRAWINGS)

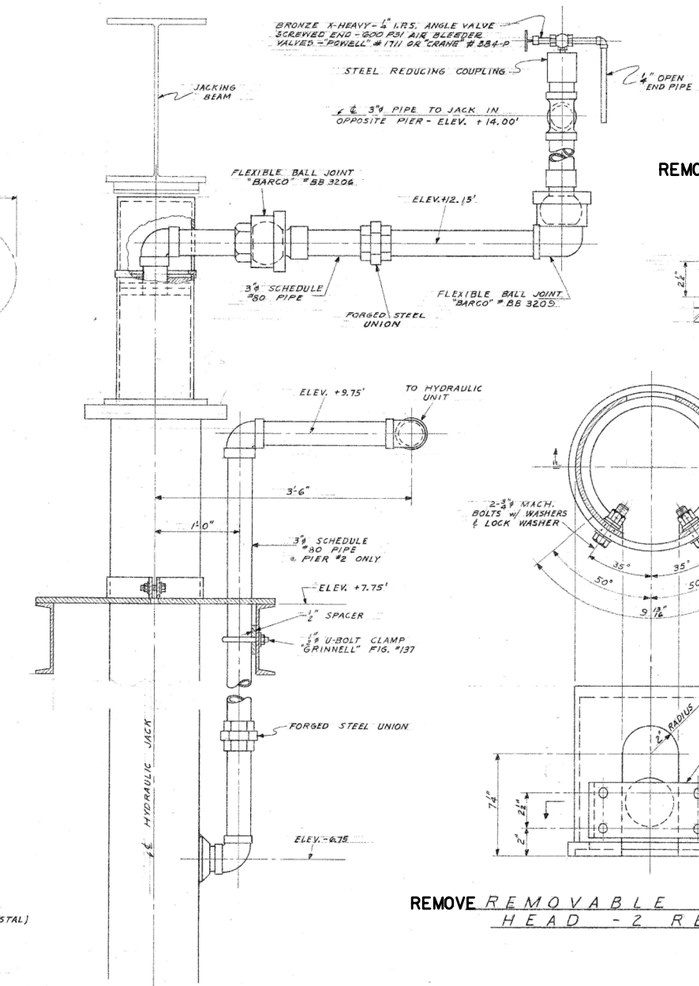

REMOVE TYPICAL HYDRAULIC JACK PIPING ASSEMBLY

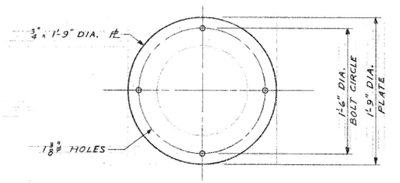

REMOVE BEARING PLATE - 2 REQ'D.

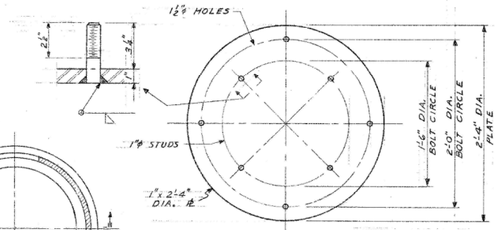

REMOVE BASE PLATE - 2 REQ'D.

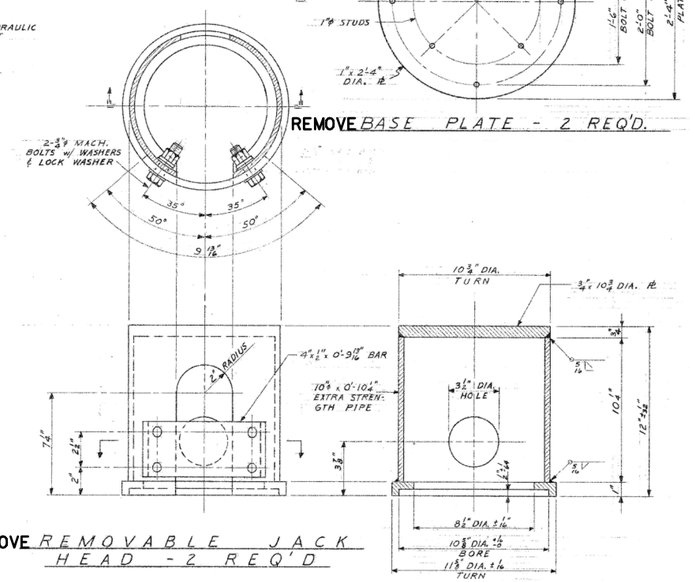

REMOVE REMOVABLE JACK HEAD - 2 REQ'D

City of Milwaukee

Department of Public Works

Infrastructure Services Division

HNTB
11414 West Park Place, Suite 300
Milwaukee, WI 53224
414-359-2300

PLEASANT STREET LIFT BRIDGE OVER THE MILWAUKEE RIVER HYDRAULIC JACK AND PIPING DEMOLITION

REVISIONS

DESIGNED BY W.E.N.	
DRAWN BY P.R.E.	
CHECKED BY W.E.N.	
DATE APR. 2012	SCALE NONE
JOB NUMBER BR100-07-0104	
SHEET NUMBER H4 OF H6	
OF 86	

PELLA
04-JUN-2012
\\NYWOO\DEPT\CADD\39834 CLYBOURN AVE\PLEASANT STREET\H4.DGN

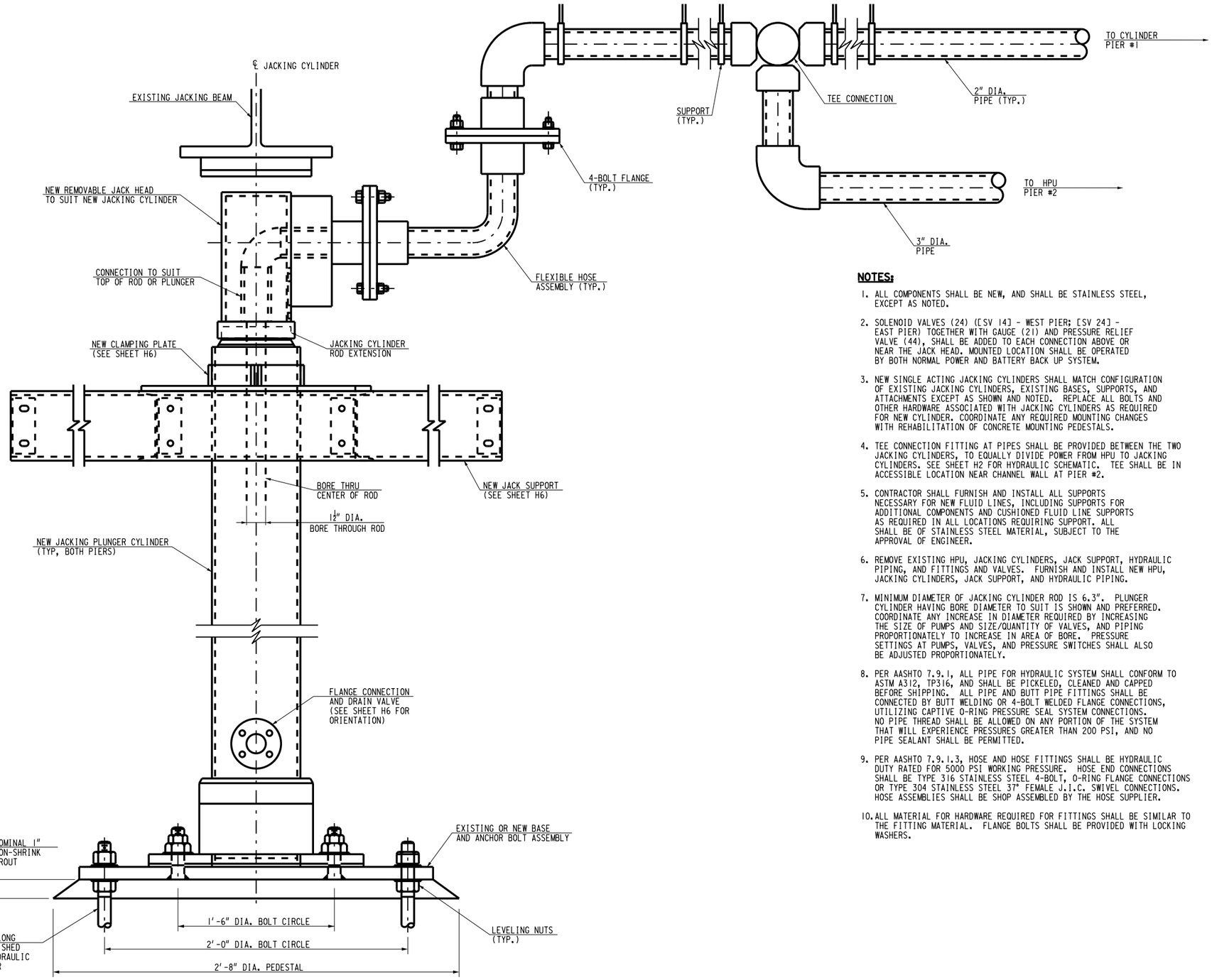

NEW JACKING CYLINDER MECHANISM ASSEMBLY

NOTES:

1. ALL COMPONENTS SHALL BE NEW, AND SHALL BE STAINLESS STEEL, EXCEPT AS NOTED.
2. SOLENOID VALVES (24) ([SV 14] - WEST PIER; [SV 24] - EAST PIER) TOGETHER WITH GAUGE (21) AND PRESSURE RELIEF VALVE (44), SHALL BE ADDED TO EACH CONNECTION ABOVE OR NEAR THE JACK HEAD. MOUNTED LOCATION SHALL BE OPERATED BY BOTH NORMAL POWER AND BATTERY BACK UP SYSTEM.
3. NEW SINGLE ACTING JACKING CYLINDERS SHALL MATCH CONFIGURATION OF EXISTING JACKING CYLINDERS, EXISTING BASES, SUPPORTS, AND ATTACHMENTS EXCEPT AS SHOWN AND NOTED. REPLACE ALL BOLTS AND OTHER HARDWARE ASSOCIATED WITH JACKING CYLINDERS AS REQUIRED FOR NEW CYLINDER. COORDINATE ANY REQUIRED MOUNTING CHANGES WITH REHABILITATION OF CONCRETE MOUNTING PEDESTALS.
4. TEE CONNECTION FITTING AT PIPES SHALL BE PROVIDED BETWEEN THE TWO JACKING CYLINDERS, TO EQUALLY DIVIDE POWER FROM HPU TO JACKING CYLINDERS. SEE SHEET H2 FOR HYDRAULIC SCHEMATIC. TEE SHALL BE IN ACCESSIBLE LOCATION NEAR CHANNEL WALL AT PIER #2.
5. CONTRACTOR SHALL FURNISH AND INSTALL ALL SUPPORTS NECESSARY FOR NEW FLUID LINES, INCLUDING SUPPORTS FOR ADDITIONAL COMPONENTS AND CUSHIONED FLUID LINE SUPPORTS AS REQUIRED IN ALL LOCATIONS REQUIRING SUPPORT. ALL SHALL BE OF STAINLESS STEEL MATERIAL, SUBJECT TO THE APPROVAL OF ENGINEER.
6. REMOVE EXISTING HPU, JACKING CYLINDERS, JACK SUPPORT, HYDRAULIC PIPING, AND FITTINGS AND VALVES. FURNISH AND INSTALL NEW HPU, JACKING CYLINDERS, JACK SUPPORT, AND HYDRAULIC PIPING.
7. MINIMUM DIAMETER OF JACKING CYLINDER ROD IS 6.3". PLUNGER CYLINDER HAVING BORE DIAMETER TO SUIT IS SHOWN AND PREFERRED. COORDINATE ANY INCREASE IN DIAMETER REQUIRED BY INCREASING THE SIZE OF PUMPS AND SIZE/QUANTITY OF VALVES, AND PIPING PROPORTIONATELY TO INCREASE IN AREA OF BORE. PRESSURE SETTINGS AT PUMPS, VALVES, AND PRESSURE SWITCHES SHALL ALSO BE ADJUSTED PROPORTIONATELY.
8. PER AASHTO 7.9.1, ALL PIPE FOR HYDRAULIC SYSTEM SHALL CONFORM TO ASTM A312, TP316, AND SHALL BE PICKELED, CLEANED AND CAPPED BEFORE SHIPPING. ALL PIPE AND BUTT PIPE FITTINGS SHALL BE CONNECTED BY BUTT WELDING OR 4-BOLT WELDED FLANGE CONNECTIONS, UTILIZING CAPTIVE O-RING PRESSURE SEAL SYSTEM CONNECTIONS. NO PIPE THREAD SHALL BE ALLOWED ON ANY PORTION OF THE SYSTEM THAT WILL EXPERIENCE PRESSURES GREATER THAN 200 PSI, AND NO PIPE SEALANT SHALL BE PERMITTED.
9. PER AASHTO 7.9.1.3, HOSE AND HOSE FITTINGS SHALL BE HYDRAULIC DUTY RATED FOR 5000 PSI WORKING PRESSURE. HOSE END CONNECTIONS SHALL BE TYPE 316 STAINLESS STEEL 4-BOLT, O-RING FLANGE CONNECTIONS OR TYPE 304 STAINLESS STEEL 37° FEMALE J.I.C. SWIVEL CONNECTIONS. HOSE ASSEMBLIES SHALL BE SHOP ASSEMBLED BY THE HOSE SUPPLIER.
10. ALL MATERIAL FOR HARDWARE REQUIRED FOR FITTINGS SHALL BE SIMILAR TO THE FITTING MATERIAL. FLANGE BOLTS SHALL BE PROVIDED WITH LOCKING WASHERS.

City of Milwaukee
Department of Public Works
Infrastructure Services Division

HNTB
11414 West Park Place, Suite 300
Milwaukee, WI 53224
414-359-2300

PLEASANT STREET LIFT BRIDGE
OVER THE MILWAUKEE RIVER
HYDRAULIC NOTES

REVISIONS

DESIGNED BY W.E.N.	
DRAWN BY P.R.E.	
CHECKED BY W.E.N.	
DATE APR. 2012	SCALE NONE
JOB NUMBER BR100-07-0104	
SHEET NUMBER H5 OF H6	
OF 86	

PELLA
04-JUN-2012
\\NYWOO\DEPT\CADD\39834 CLYBOURN AVE\PLEASANT STREET\H5.DGN

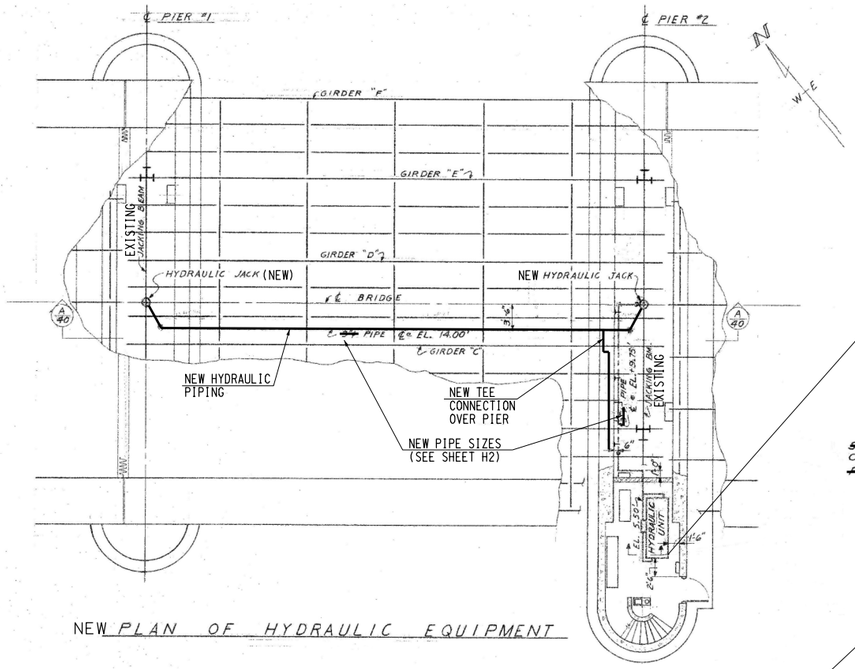

NEW PLAN OF HYDRAULIC EQUIPMENT

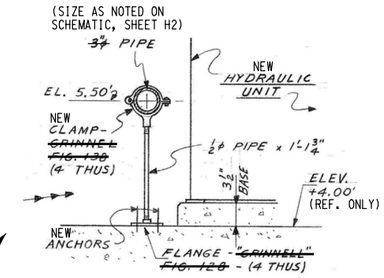

TYPICAL SUPPORT

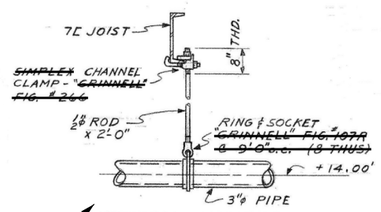

TYPICAL HANGER

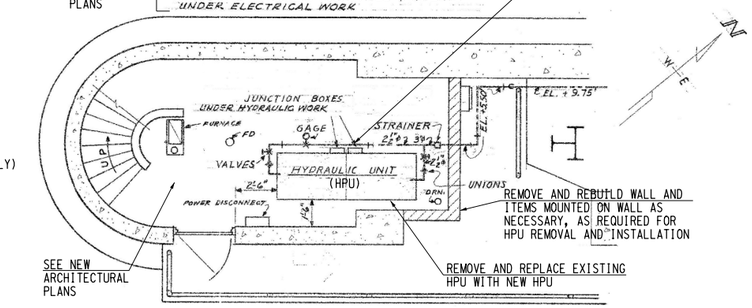

PLAN OF HYDRAULIC UNIT AND PIPING IN EQUIPMENT ROOM-ELEV. +4.00'

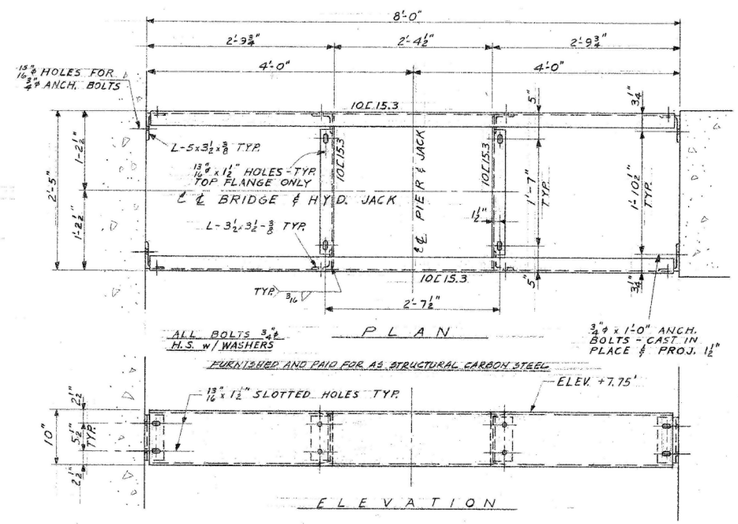

NEW JACK SUPPORT FRAME (REPLACE EXISTING JACK SUPPORT FRAMES)
2 REQUIRED

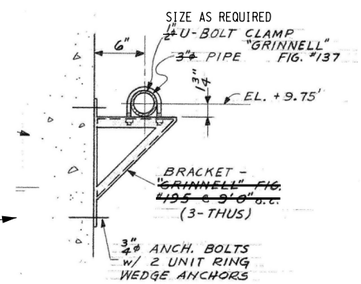

TYPICAL SUPPORT
NEW-FURNISHED AND INSTALLED UNDER HYDRAULIC WORK.

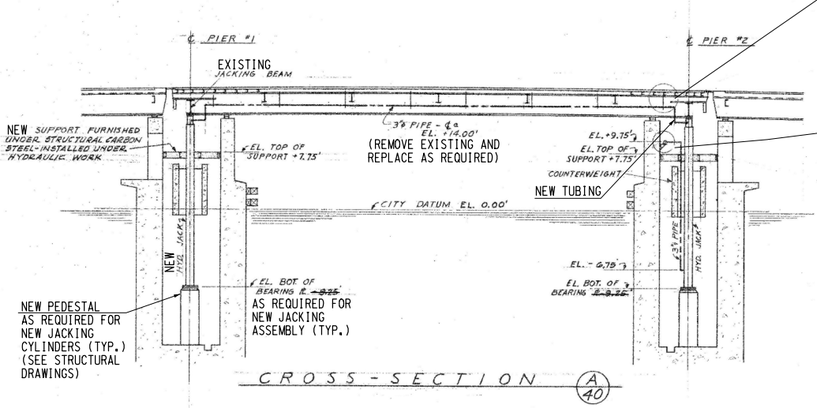

CROSS-SECTION (A/40)

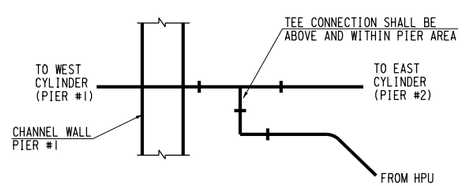

NEW TEE DETAIL

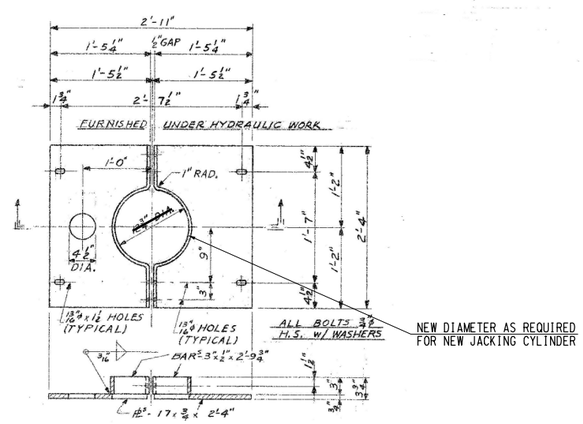

NEW JACK SUPPORT PLATE (REPLACE EXISTING)
2 REQUIRED

NOTES:

1. ALL PIPE CONNECTIONS OVER WATERWAY SHALL BE WELDED.
2. ALL NEW ITEMS MADE OF STRUCTURAL STEEL SHALL BE HOT-DIPPED GALVANIZED AND PAINTED.
3. SEE SPECIFICATIONS FOR PIPE SUPPORTS AND HANGERS.

City of Milwaukee

Department of Public Works

Infrastructure Services Division

HNTB
11414 West Park Place, Suite 300
Milwaukee, WI 53224
414-359-2300

PLEASANT STREET LIFT BRIDGE
OVER THE MILWAUKEE RIVER
HYDRAULIC JACK
AND PIPING DETAILS

REVISIONS

DESIGNED BY W.E.N.	
DRAWN BY P.R.E.	
CHECKED BY W.E.N.	
DATE APR. 2012	SCALE NONE
JOB NUMBER BR100-07-0104	
SHEET NUMBER H6 OF H6	
OF 86	

PELLA
04-JUN-2012
\\NYWOO\DEPT\CADD\39834 CLYBOURN AVE\PLEASANT STREET\H6.DGN

GENERAL MACHINERY NOTES

GENERAL:

A. ALL NEW MACHINERY SHALL CONFORM TO THE AASHTO LRFD MOVABLE HIGHWAY BRIDGE DESIGN SPECIFICATIONS 2ND EDITION, 2007 WITH 2010 INTERIM REVISIONS. HEREIN REFERRED TO AS AASHTO SPECIFICATIONS.
B. ALL WORK SHOWN ON SHEETS M01-M10 ARE PAID FOR UNDER THE LUMP SUM BID ITEMS COUNTERWEIGHT MACHINERY (SPV.0105.09), EQUALIZER MACHINERY (SPV.0105.10) AND SPAN GUIDES (SPV.0105.11).
C. SEE MACHINERY SPECIAL PROVISIONS FOR ADDITIONAL MACHINERY REQUIREMENTS.

ALTERNATE EQUIPMENT:

A. WHERE A PARTICULAR MANUFACTURER'S PRODUCT HAS BEEN SPECIFIED AS SUITABLE EQUIPMENT, ANOTHER MANUFACTURER'S EQUIVALENT PRODUCT MAY BE SUBSTITUTED SUBJECT TO THE APPROVAL OF THE ENGINEER.
B. THE CONTRACTOR SHALL BEAR ALL COSTS ASSOCIATED WITH MODIFICATIONS OR ADJUSTMENT TO ALTERNATE EQUIPMENT REQUIRED TO MEET THE REQUIREMENTS OF THE CONTRACT.

MACHINERY ATTACHMENT:

A. ALL MACHINERY CONNECTIONS SHALL BE MADE WITH GALVANIZED HIGH STRENGTH BOLTS, NUTS, AND WASHERS CONFORMING TO THE REQUIREMENTS OF ASTM A449, ASTM A563, AND ASTM F436 RESPECTIVELY.
B. FULL SIZE SHIMS SHALL BE PROVIDED AS REQUIRED AT THE MACHINERY SUPPORTS. THE SHIMS SHALL BE THE THICKNESS NECESSARY FOR ALIGNMENT OF MACHINERY UNDER FULL SPAN DEAD LOAD CONDITIONS.

FITS AND FINISHES:

FIT AND FINISHES OF ALL MACHINERY ITEMS AND MACHINERY SUPPORTS SHALL BE AS SPECIFIED IN THE AASHTO SPECIFICATIONS AND CONFORM TO ANSI B4.1 AND ANSI B46.1, RESPECTIVELY.

MISCELLANEOUS:

A. WHERE WELDS ARE NOT SHOWN USE 5/16" FILLET WELDS FOR SHOP FABRICATION.
B. SHIM PACKS SHALL BE CAPABLE OF ADJUSTMENT FROM 0 INCHES TO TWICE THE NOMINAL SHIM PACK DIMENSION IN 1/64" INCREMENTS. FOR EXAMPLE: EACH 1/2" NOMINAL SHIM PACK SHALL CONSIST OF FULL LENGTH AND WIDTH PLATES WITH HOLES DRILLED IN ALL PLATES. FURNISH ONE 1/2", ONE 1/4", ONE 1/8", ONE 1/16", ONE 1/32", AND TWO 1/64" PLATES. THE CONTRACTOR SHALL AUGMENT SHIM PACKS WITH PRECISION THICKNESS SHIMS IF REQUIRED FOR OPTIMUM ADJUSTMENT.
C. SHIM PLATES AND FILL PLATES LESS THAN 1/4" THICK SHALL BE STAINLESS STEEL MEETING THE REQUIREMENTS OF ASTM A480 OR A240.
D. MISCELLANEOUS SHIMS AND BOLTS IN ADDITION TO THOSE DETAILED ON THE PLANS WILL BE REQUIRED AND SHALL BE PROVIDED BY THE CONTRACTOR.
E. KEYS SHALL BE SPECIFIED ON THE PLANS. MISCELLANEOUS KEYS MAY BE REQUIRED AND SHALL BE PROVIDED BY THE CONTRACTOR PER THE MANUFACTURER'S RECOMMENDATIONS.
F. ALL MISCELLANEOUS HARDWARE WHICH IS SPECIFIED TO BE GALVANIZED SHALL BE COATED IN CONFORMANCE WITH ASTM A153 AFTER FABRICATION. DAMAGED GALVANIZED COATS THAT ARE NOT TO BE EMBEDDED IN MORE THEN 3" OF CONCRETE SHALL BE REPAIRED WITH COLD APPLIED ZINC RICH, ORGANIC PAINT, USING AN APPROVED METHOD OF REPAIR.

TO BE FABRICATED OR PURCHASED NEW

MK	ITEM	QTY.	MATERIAL/MANUFACTURER
	COUNTERWEIGHT MACHINERY		
B-1A	COUNTERWEIGHT BEARING BUSHING	8	ASTM B22 C91300
B-1B	COUNTERWEIGHT BEARING BUSHING PINS	64	ASTM B21
C-1	COUNTERWEIGHT CABLE (SHORT)	8	1 1/4" DIA. DGXIP 6X36 WS FW WITH IWRC
C-2	COUNTERWEIGHT CABLE (LONG)	8	1 1/4" DIA. DGXIP 6X36 WS FW WITH IWRC
CB-1	COUNTERWEIGHT CABLE BRACKET	4	ASTM A572 GR50, GALVANIZED & PAINTED
P-1	COUNTERWEIGHT CABLE PIN FOR CB-2	4	ASTM A668 CLASS D
-	SHIM PACK FOR COUNTERWEIGHT BEARING	8	ASTM A36, A480
-	TURNED BOLTS FOR B-1	32	ASTM A449
-	ALL REQUIRED BOLTS, NUTS, WASHERS	AS REQ'D	ASTM A449, A563, F436 GALVANIZED
-	GREASE FITTINGS AND TUBING	AS REQ'D	
	EQUALIZER MACHINERY		
B-2	TRANS. EQUALIZER BEARING/LONG. EQUALIZER DRUM BEARING	23	LINK BELT 2K1463Z
B-3	NORTH LONG. EQUALIZER DRUM INBOARD BEARING	1	LINK BELT F2263Z
B-4	LONG. EQUALIZER UPPER SHEAVE BEARING	12	LINK BELT 2K1455Z
B-5	NORTH LONG. EQUALIZER UPPER SHEAVE INBOARD BEARING	4	LINK BELT F2247Z
B-6	LONG. EQUALIZER LOWER SHEAVE BEARING	8	LINK BELT 2-1431Z
BS-1	SOUTH LONG. EQUALIZER DRUM BEARING SEAT	1	ASTM A36, GALVANIZED & PAINTED
BS-2	SOUTH LONG. EQUALIZER SHEAVE BEARING SEAT	4	ASTM A36, GALVANIZED & PAINTED
BB-2	TRANS.EQUALIZER BEARING BRACKET	20	ASTM A36, GALVANIZED & PAINTED
C-3	LONG. EQUALIZER CABLE (LONG)	2	5/8" DIA. DGXIP 6X25 FW WITH IWRC
C-4	LONG. EQUALIZER CABLE (SHORT)	2	5/8" DIA. DGXIP 6X25 FW WITH IWRC
C-5	TRANS. EQUALIZER CABLE (LONG)	2	3/4" DIA. DGXIP 6X25 FW WITH IWRC
C-6	TRANS. EQUALIZER CABLE (SHORT)	2	3/4" DIA. DGXIP 6X25 FW WITH IWRC
CB-3	LONG. EQUALIZER CABLE BRACKET	4	ASTM A36, GALVANIZED & PAINTED
CB-4	LONG. EQUALIZER CABLE BRACKET	3	ASTM A36, GALVANIZED & PAINTED
CB-4A	LONG. EQUALIZER CABLE BRACKET	1	ASTM A36, GALVANIZED & PAINTED
CB-5	TRANS. EQUALIZER CABLE BRACKET	4	ASTM A36, GALVANIZED & PAINTED
CB-6	TRANS. EQUALIZER CABLE BRACKET	4	ASTM A36, GALVANIZED & PAINTED
SP-1	COMPRESSION SPRING	16	
SP-2	SPRING PROTECTOR SLEEVE	16	ASTM A36, GALVANIZED & PAINTED
TR-1	THREADED ROD	16	1 1/4" DIA. - 7 UNC THREADED ROD - 2'-0" LONG ASTM A449
-	TURNBUCKLE	16	1 1/4" DIA. - 7 UNC WITH 12" TAKE UP. MINIMUM WORKING LOAD OF 15,200 LB.
-	ALL REQUIRED FILL PLATES AND SHIM PACKS	AS REQ'D	ASTM A36, A480
-	ALL REQUIRED BOLTS, NUTS, WASHERS	AS REQ'D	ASTM A449, A 563, F436 GALVANIZED
-	ANCHOR BOLT ASSEMBLIES FOR BB-2, CB3, CB4, CB4A	AS REQ'D	7/8" DIA. HILTI HVA/HAS. S.S.
-	GREASE FITTINGS AND TUBING	AS REQ'D	
-	LONG. EQUALIZER DRUM COVER ASSEMBLY	2	ASTM A36, GALVANIZED & PAINTED
-	CABLE GUIDE BUSHINGS	28	ASTM B438
	SPAN GUIDE		
RB-1	ROLLER GUIDE BRACKET	4	ASTM A36, GALVANIZED & PAINTED
R-1	SPAN GUIDE ROLLER - FIXED END	2	ASTM A148, GRADE 80-50
R-2	SPAN GUIDE ROLLER - EXPANSION END	2	ASTM A148, GRADE 80-50
S-9	ROLLER GUIDE SHAFT	2	ASTM A576, 1141 HR
S-10	ROLLER GUIDE SHAFT	2	ASTM A576, 1141 HR
B-7	SPAN GUIDE ROLLER BEARING	8	LINK BELT 21239Z
TB-1	ROLLER GUIDE THRUST BEARING	4	ASTM B438
TB-2	ROLLER GUIDE THRUST BEARING	4	ASTM B438
-	ALL REQUIRED SHIM PACKS	AS REQ'D	ASTM A36, A480
-	ALL REQUIRED BOLTS, NUTS, WASHERS	AS REQ'D	ASTM A449, A563, F436 GALVANIZED
-	KEYS	AS REQ'D	
-	GREASE FITTINGS AND TUBING	AS REQ'D	
-	ANCHOR BOLT ASSEMBLIES	AS REQ'D	1" DIA. HILTI HVA/HAS S.S.

TO BE REFURBISHED

MK	ITEM	QTY.
	COUNTERWEIGHT MACHINERY	
SX-1	COUNTERWEIGHT SHEAVE	4
S-1	COUNTERWEIGHT SHAFT	4
B-1	COUNTERWEIGHT BEARING HOUSING	8
CB-2	COUNTERWEIGHT CABLE BRACKET	4
	EQUALIZER MACHINERY	
D-1	TRANS. EQUALIZER DRUM	2
D-2N	NORTH LONG. EQUALIZER DRUM	1
D-2S	SOUTH LONG. EQUALIZER DRUM	1
SX-2	TRANS. EQUALIZER SHEAVE	8
SX-3N	NORTH LONG. EQUALIZER UPPER SHEAVE	4
SX-3S	SOUTH LONG. EQUALIZER UPPER SHEAVE	4
SX-4N	NORTH LONG. EQUALIZER LOWER SHEAVE	2
SX-4S	SOUTH LONG. EQUALIZER LOWER SHEAVE	2
S-2	TRANS. EQUALIZER DRUM SHAFT	2
S-3	TRANS. EQUALIZER SHEAVE SHAFT	4
S-4	TRANS. EQUALIZER SHEAVE SHAFT	4
S-5N	NORTH LONG. EQUALIZER DRUM SHAFT	1
S-5S	SOUTH LONG. EQUALIZER DRUM SHAFT	1
S-6N	NORTH LONG. EQUALIZER UPPER SHEAVE SHAFT	2
S-6S	SOUTH LONG. EQUALIZER UPPER SHEAVE SHAFT	2
S-7N	NORTH LONG. EQUALIZER UPPER SHEAVE SHAFT	2
S-7S	SOUTH LONG. EQUALIZER UPPER SHEAVE SHAFT	2
S-8	LONG. EQUALIZER LOWER SHEAVE SHAFT	4
	SPAN GUIDE	
GR-1	SPAN GUIDE RAIL	4

TOTAL COUNTERWEIGHT SHEAVE/SHAFT ASSEMBLIES TO BE REFURBISHED - 4

TOTAL EQUALIZER SHEAVE/SHAFT ASSEMBLIES TO BE REFURBISHED - 20

TOTAL EQUALIZER DRUM/SHAFT ASSEMBLIES TO BE REFURBISHED - 4

City of Milwaukee
Department of Public Works
Infrastructure Services Division

HNTB
11414 West Park Place, Suite 300
Milwaukee, WI 53224
414-359-2300

PLEASANT STREET LIFT BRIDGE
OVER THE MILWAUKEE RIVER
GENERAL MACHINERY NOTES
AND SCHEDULE

REVISIONS

DESIGNED BY D.G.A.
DRAWN BY D.J.J.
CHECKED BY -.-.-.
DATE 4-2012
SCALE NONE
JOB NUMBER
SHEET NUMBER M01 OF M10
OF 86

DJamison
07-JUN-2012 15:29
\\kcow00\jobs2\39834\Bridges\PleasantStreet\Plans\Drawings\Submittal-100\M01.dgn (Default)

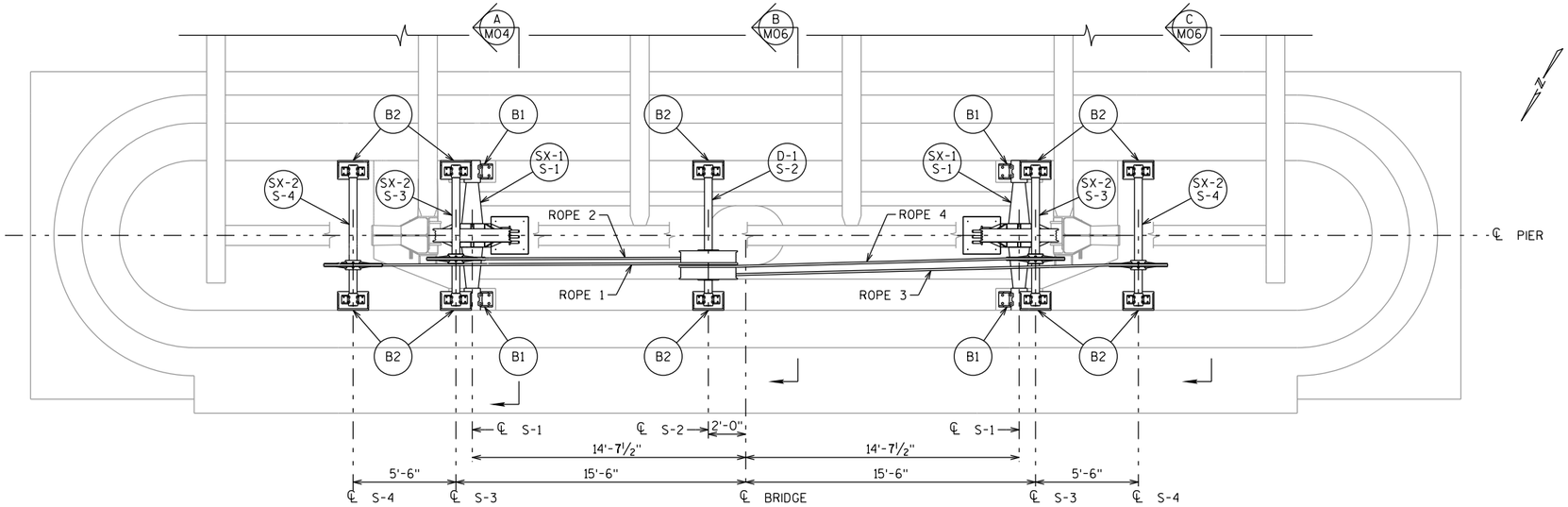

TRANSVERSE EQUALIZER AND COUNTERWEIGHT MACHINERY - PLAN

PIER 1 SHOWN, PIER 2 SIMILAR

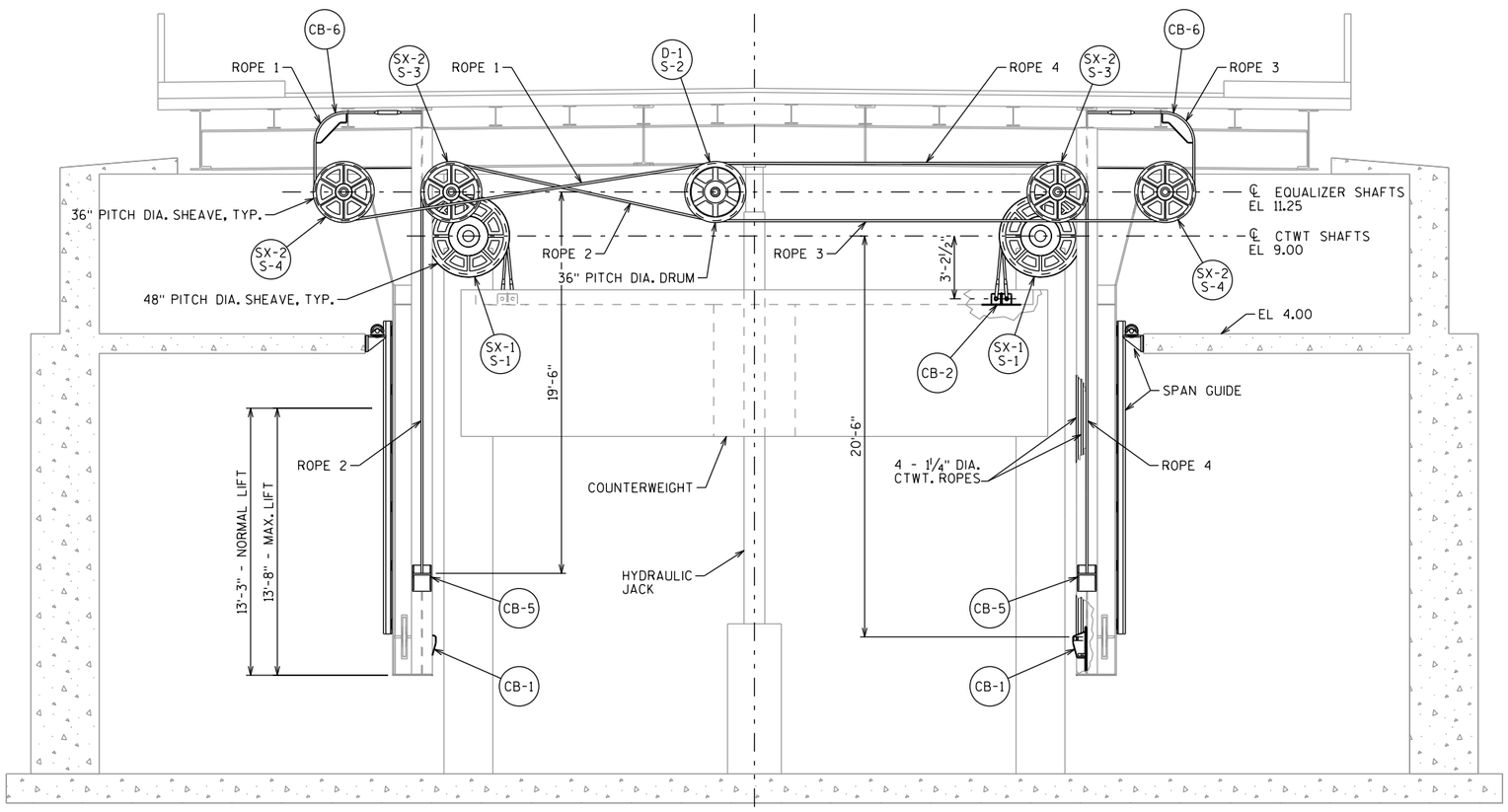

TRANSVERSE EQUALIZER AND COUNTERWEIGHT MACHINERY - ELEVATION

PIER 1 - LOOKING EAST
PIER 2 - LOOKING WEST

NOTES:
ALL ELEVATIONS GIVEN FOR BRIDGE IN CLOSED POSITION.

ROPE 1 AND ROPE 2 ARE CONTINUOUS. ROPE 3 AND ROPE 4 ARE CONTINUOUS.

FOR HYDRAULIC JACK DETAILS, SEE SHEETS H1-H6.

FOR SPAN GUIDE DETAILS SEE SHEET M10.

FOR EQUALIZER ROPE SCHEMATIC SEE SHEET M09.

City of Milwaukee
Department of Public Works
Infrastructure Services Division

HNTB
11414 West Park Place, Suite 300
Milwaukee, WI 53224
414-359-2300

PLEASANT STREET LIFT BRIDGE
OVER THE MILWAUKEE RIVER
COUNTERWEIGHT AND TRANSVERSE EQUALIZER MACHINERY

REVISIONS

DESIGNED BY D.G.A.
DRAWN BY D.J.J.
CHECKED BY -.-.-.
DATE 4-2012
SCALE NONE
JOB NUMBER
SHEET NUMBER M02 OF M10
OF 86

DJamison
07-JUN-2012 15:29
\\kcow00\jobs2\39834\Bridges\PleasantStreet\Plans\Drawings\Submittal-100\M02.dgn (Default)

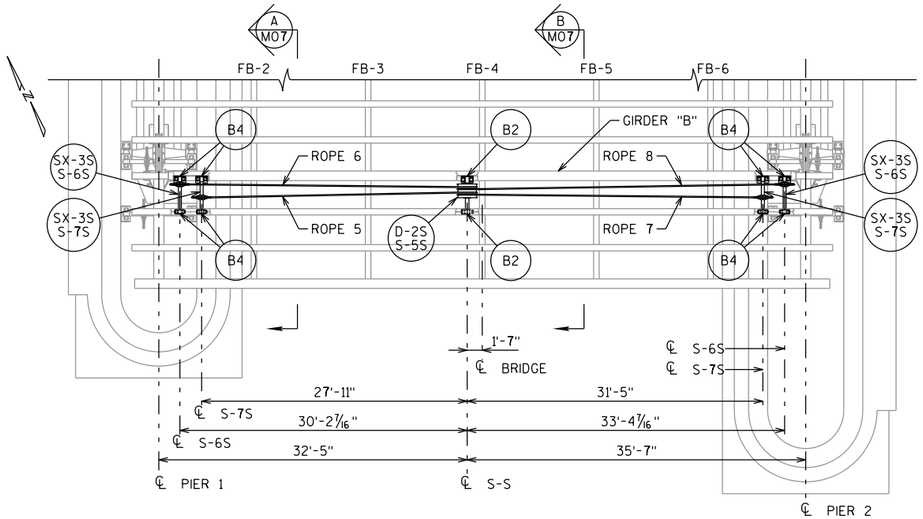

SOUTH LONGITUDINAL EQUALIZER

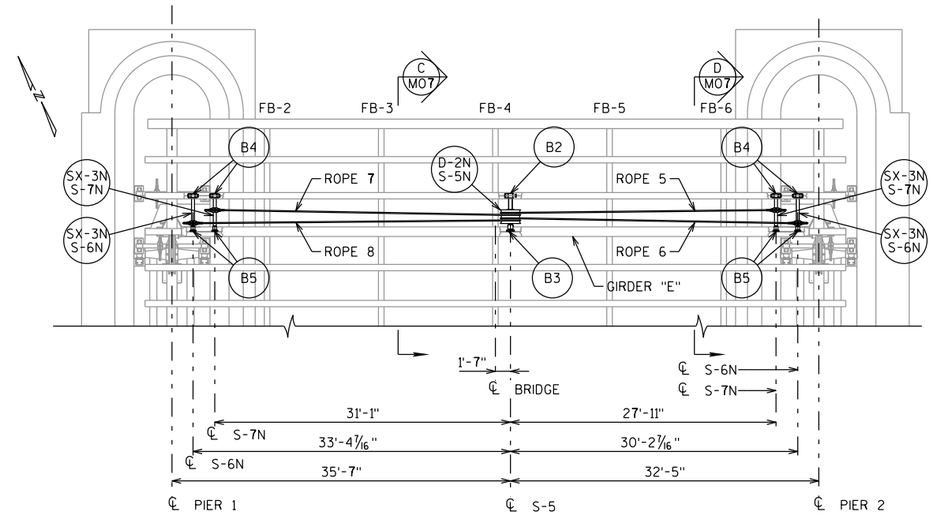

NORTH LONGITUDINAL EQUALIZER

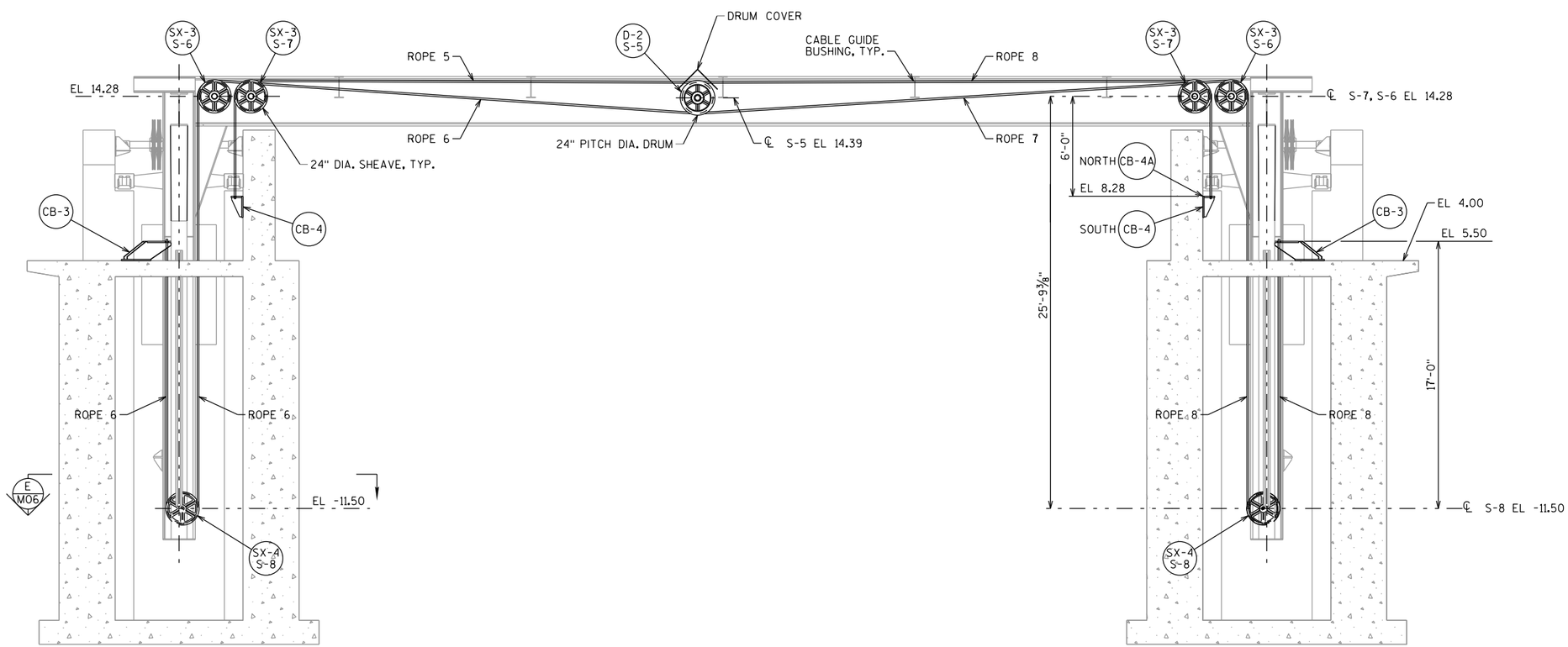

LONGITUDINAL EQUALIZER MACHINERY

NORTH SYSTEM (LOOKING SOUTH)
SOUTH SYSTEM (LOOKING NORTH)

NOTES:
ALL ELEVATIONS GIVEN FOR BRIDGE IN CLOSED POSITION.

ROPE 5 AND ROPE 6 ARE CONTINUOUS. ROPE 7 AND 8 ARE CONTINUOUS.

FOR ROPE SCHEMATIC SEE SHEET [M09].

FOR DETAILS OF CABLE GUIDE BUSHINGS AND DRUM COVER SEE SHEET M09.

City of Milwaukee
Department of Public Works
Infrastructure Services Division

HNTB
11414 West Park Place, Suite 300
Milwaukee, WI 53224
414-359-2300

PLEASANT STREET LIFT BRIDGE
OVER THE MILWAUKEE RIVER
LONGITUDINAL EQUALIZER MACHINERY

REVISIONS

DESIGNED BY D.G.A.	
DRAWN BY D.J.J.	
CHECKED BY -.-.-.	
DATE 4-2012	SCALE NONE
JOB NUMBER	
SHEET NUMBER M03 OF M10	
OF 86	

DJamison
07-JUN-2012 15:29
\\kcow00\jobs2\39834\Bridges\PleasantStreet\Plans\Drawings\Submittal-100\M03.dgn (Default)

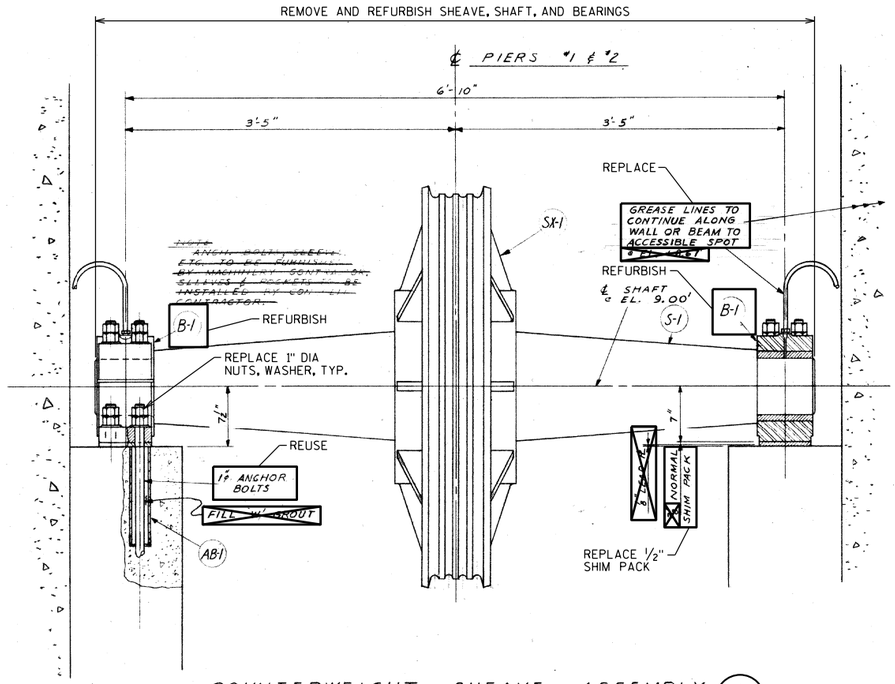

COUNTERWEIGHT SHEAVE ASSEMBLY (A / M02)

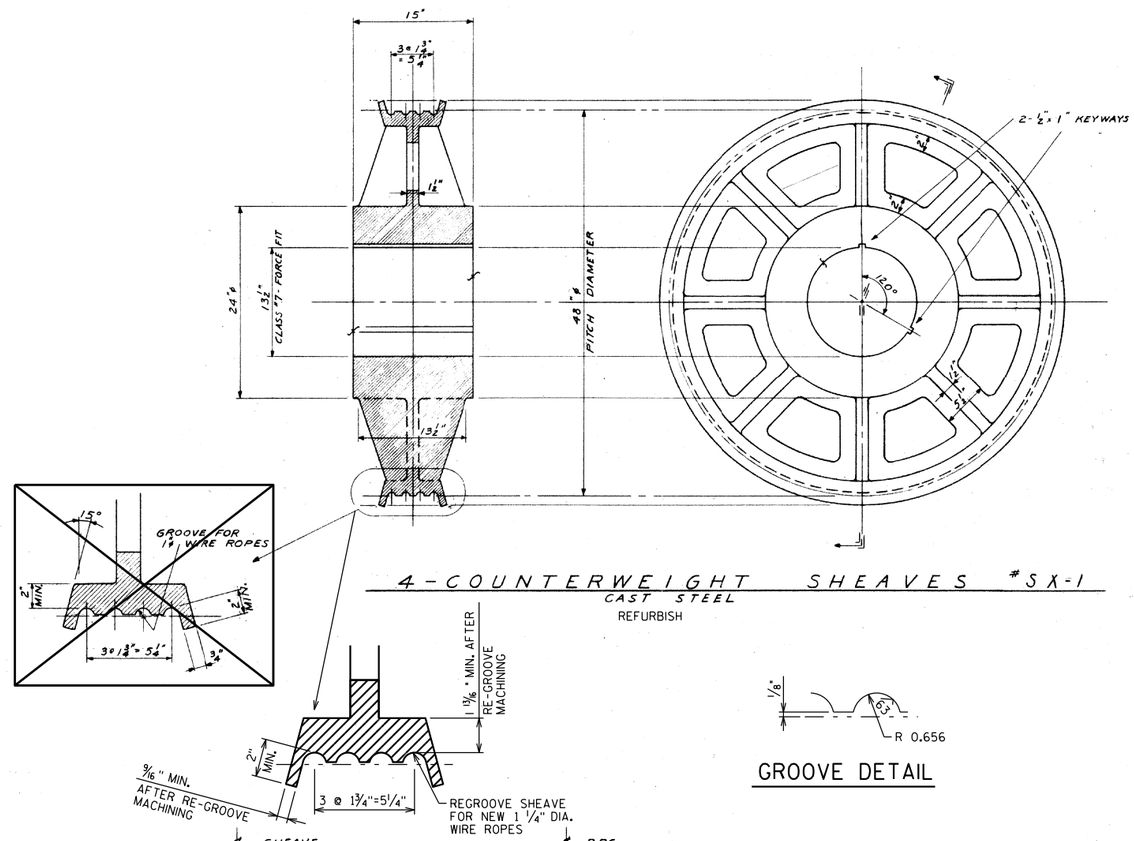

4-COUNTERWEIGHT SHEAVES #SX-1
CAST STEEL
REFURBISH

GROOVE DETAIL

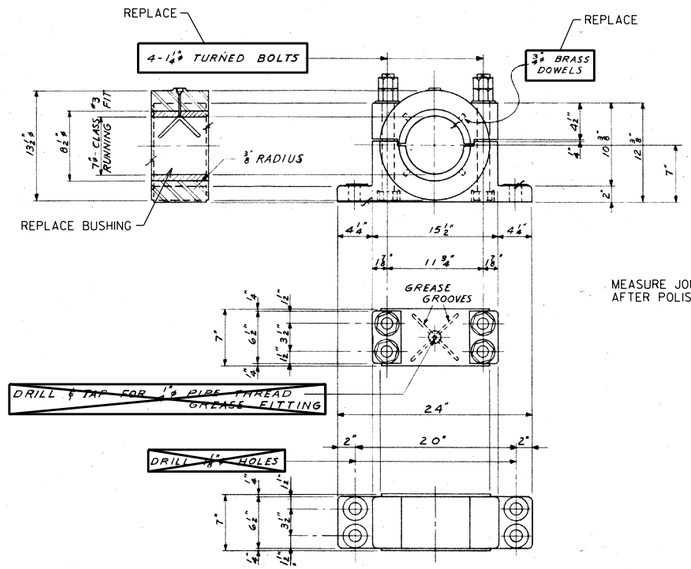

8-COUNTERWEIGHT BEARINGS #B-1
CAST STEEL
PHOSPHOR BRONZE BUSHING
REFURBISH HOUSING
REPLACE BUSHING

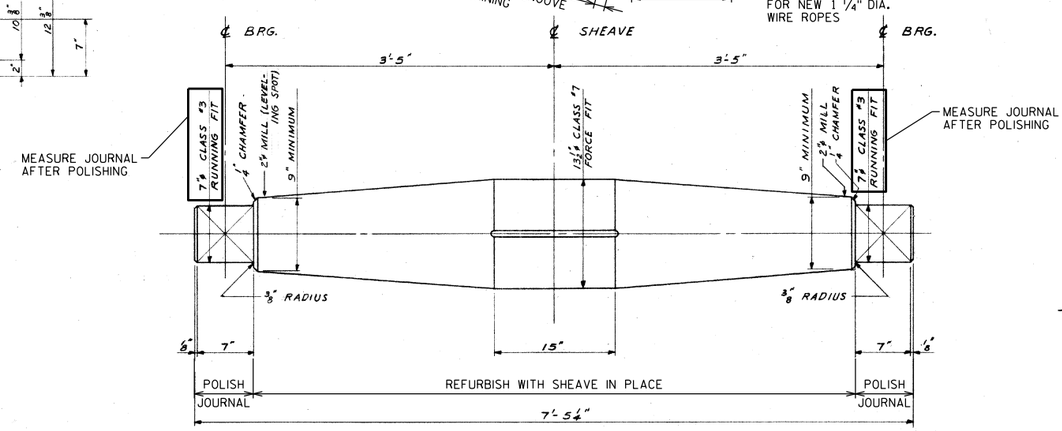

4-COUNTERWEIGHT SHAFTS #S-1
FORGED STEEL (ANNEALED)
REFURBISH

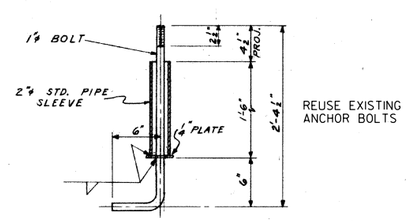

32 - COUNTERWEIGHT BEARING ANCHOR BOLTS #AB-1

NOTES:
FOR COUNTERWEIGHT BEARING BUSHING DETAILS, SEE SHEET M05.

City of Milwaukee
Department of Public Works
Infrastructure Services Division

HNTB
11414 West Park Place, Suite 300
Milwaukee, WI 53224
414-359-2300

PLEASANT STREET LIFT BRIDGE
OVER THE MILWAUKEE RIVER
COUNTERWEIGHT MACHINERY

REVISIONS

DESIGNED BY D.G.A.
DRAWN BY D.J.J.
CHECKED BY ------
DATE 4-2012
SCALE NONE
JOB NUMBER
SHEET NUMBER M04 OF M10
OF 86

DJamison
07-JUN-2012 15:29
\\kcow00\jobs2\39834\Bridges\PleasantStreet\Plans\Drawings\Submittal-100\M04.dgn (Default)

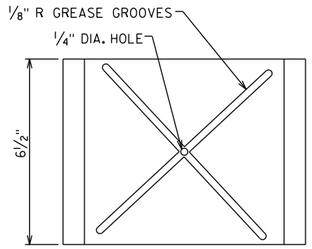

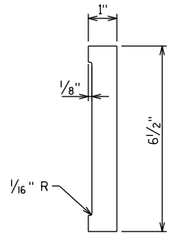

BRASS LAMINATE

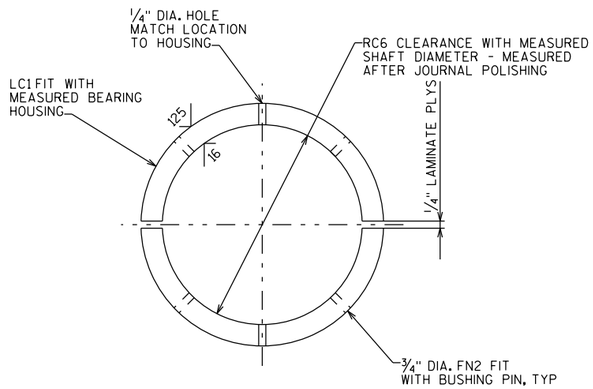

BUSHING FOR COUNTERWEIGHT BEARING B-1

QUANTITY: 8 ASSEMBLIES
MATERIAL: ASTM B22 C91300

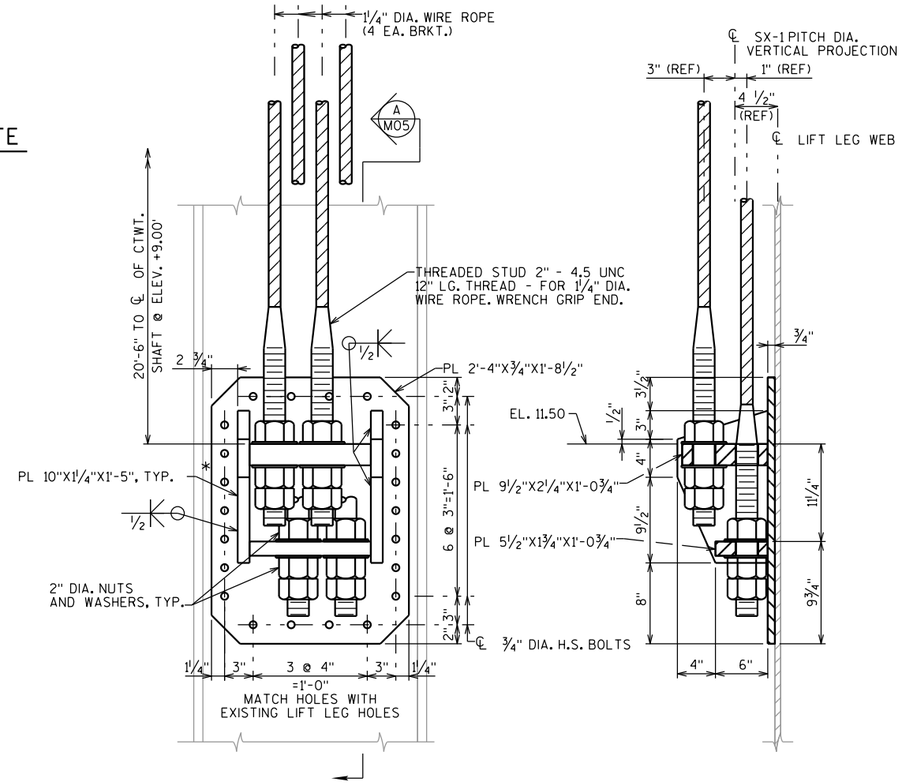

CABLE BRACKET CB-1

QUANTITY: 8
MATERIAL: ASTM A36

SECTION A M05

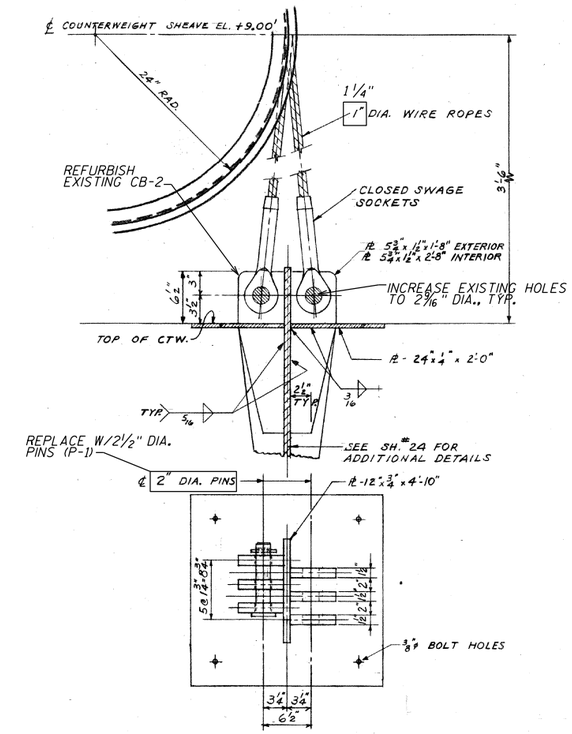

PLAN OF CB-2

4 REQ.

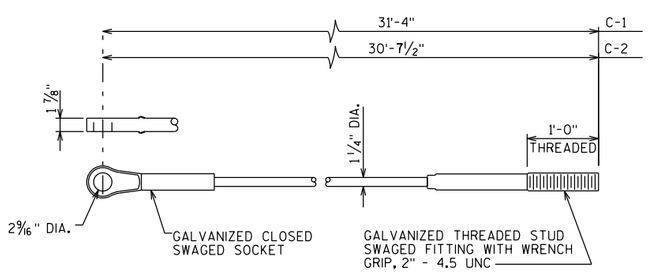

COUNTERWEIGHT CABLES - C-1, C-2

QUANTITY: 8 C-1, 8 C-2
MATERIAL: 1 1/4" DIA. DGXIP 6X36 WS WITH IWRC

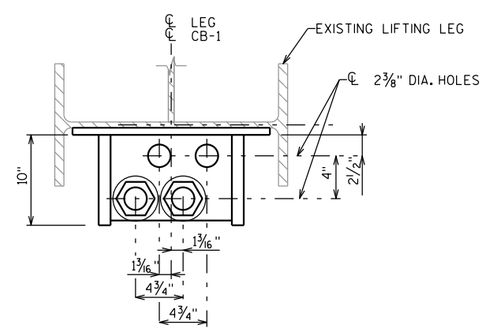

PLAN OF CB-1

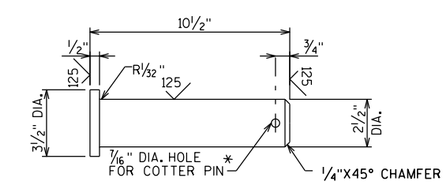

COUNTERWEIGHT CABLE PIN - P1

QUANTITY: 8
MATERIAL: ASTM A668 CLASS D

NOTES:
ALL ELEVATION GIVEN FOR BRIDGE IN CLOSED POSITION.

CONTRACTOR TO VERIFY ALL WIRE ROPE LENGTHS.

City of Milwaukee
Department of Public Works
Infrastructure Services Division

HNTB
11414 West Park Place, Suite 300
Milwaukee, WI 53224
414-359-2300

PLEASANT STREET LIFT BRIDGE
OVER THE MILWAUKEE RIVER
COUNTERWEIGHT MACHINERY DETAILS

REVISIONS

DESIGNED BY D.G.A.
DRAWN BY D.J.J.
CHECKED BY ----
DATE 4-2012
SCALE NONE
JOB NUMBER
SHEET NUMBER M05 OF M10
OF 86

DJamison
07-JUN-2012 15:31
\\kcow00\jobs2\39834\Bridges\PleasantStreet\Plans\Drawings\Submittal-100\M05.dgn (Default)

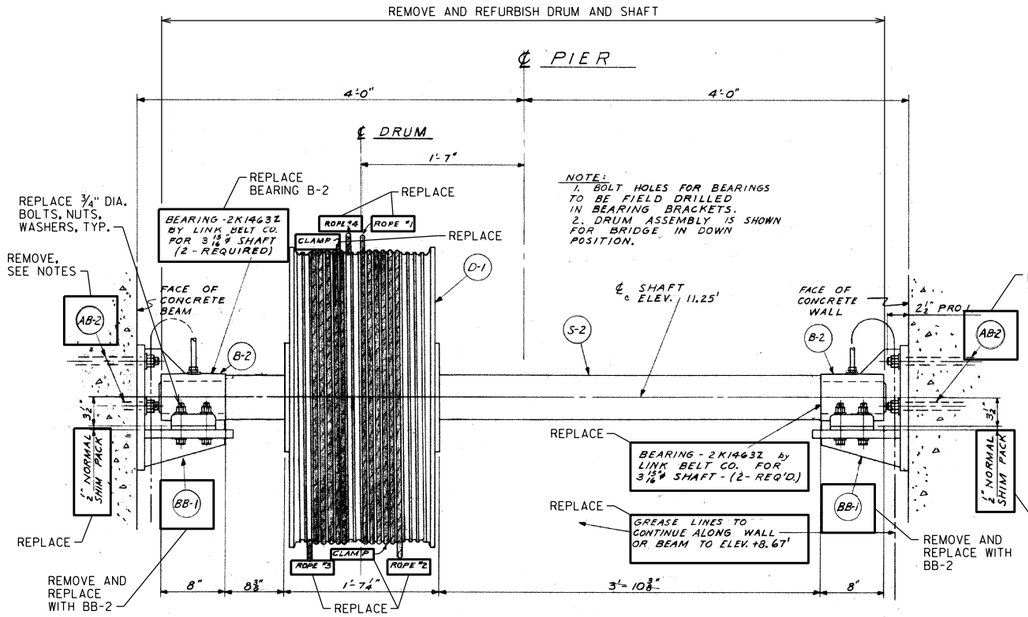

TRANSVERSE EQUALIZER DRUM ASSEMBLY

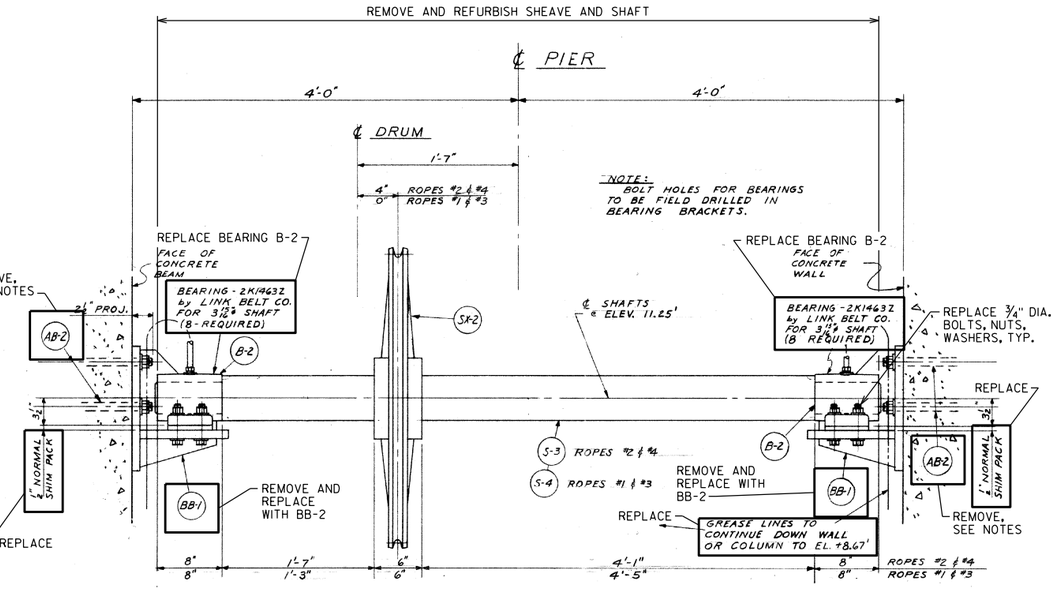

TRANSVERSE EQUALIZER SHEAVE ASSEMBLY

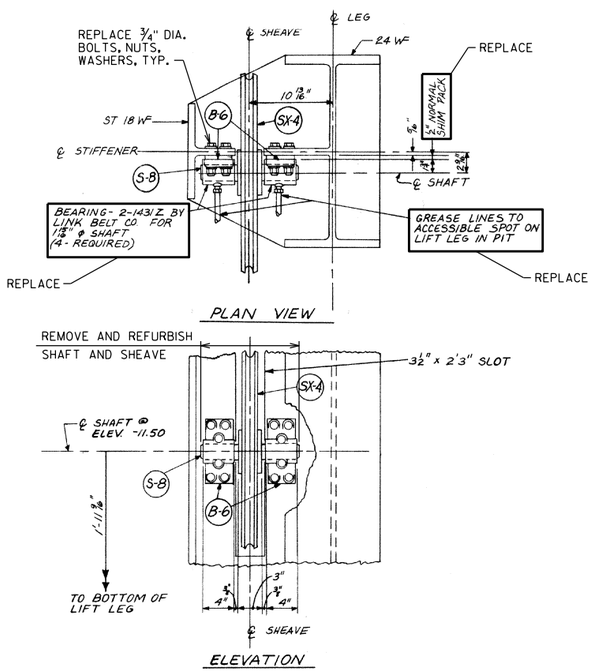

LONGITUDINAL EQUALIZER
LOWER SHEAVE ASSEMBLY
TYPICAL ALL 4 LIFT LEGS

E
M03

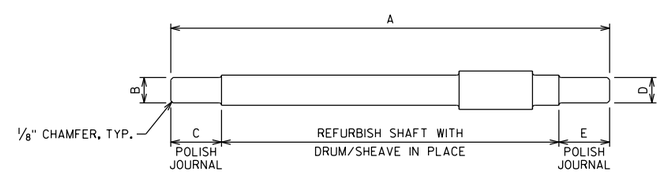

TYPICAL EQUALIZER SHAFT

EQUALIZER SHAFT DIMENSIONS					
SHAFT	TOTAL LENGTH	OUTBOARD JOURNAL NOMINAL DIA.	OUTBOARD JOURNAL LENGTH	INBOARD JOURNAL NOMINAL DIA.	INBOARD JOURNAL LENGTH
	A	B	C	D	E
S-2	7'-6 1/4"	3 15/16"	8"	3 15/16"	8"
S-3	7'-6 1/4"	3 15/16"	8"	3 15/16"	8"
S-4	7'-6 1/4"	3 15/16"	8"	3 15/16"	8"
S-5N	4'-0 1/4"	3 15/16"	8"	3 15/16"	7 1/2"
S-5S	4'-0 1/4"	3 15/16"	8"	3 15/16"	8"
S-6N	3'-11 3/4"	3 7/16"	7"	2 15/16"	5 1/2"
S-6S	4'-0 1/4"	3 7/16"	7"	3 7/16"	7"
S-7N	3'-11 3/4"	3 7/16"	7"	2 15/16"	5 1/2"
S-7S	4'-0 1/4"	3 7/16"	7"	3 7/16"	7"
S-8	1'-0"	1 15/16"	4"	1 15/16"	4"

NOTES:
FOR DETAILS OF BEARING BRACKET BB-2 SEE SHEET M08.

EXISTING ANCHOR BOLTS SHALL BE REMOVED TO THE FACE OF CONCRETE.

NEW ANCHOR BOLTS SHALL BE 7/8" DIA. HILTI HAS/HVA STAINLESS STEEL ANCHORS OR EQUIVALENT WITH A MINIMUM EMBEDMENT OF 6 5/8"

ALL ELEVATIONS GIVEN FOR BRIDGE IN CLOSED POSITION.

City of Milwaukee
Department of Public Works
Infrastructure Services Division

HNTB
1414 West Park Place, Suite 300
Milwaukee, WI 53224
414-359-2300

PLEASANT STREET LIFT BRIDGE
OVER THE MILWAUKEE RIVER
EQUALIZER MACHINERY ASSEMBLIES I

REVISIONS

DESIGNED BY D.G.A.
DRAWN BY D.J.J.
CHECKED BY ------
DATE 4-2012
SCALE NONE
JOB NUMBER
SHEET NUMBER M06 OF M10
OF 86

DJamison
07-JUN-2012 15:31
\\kcow00\jobs2\39834\Bridges\PleasantStreet\Plans\Drawings\Submittal-100\M06.dgn (Default)

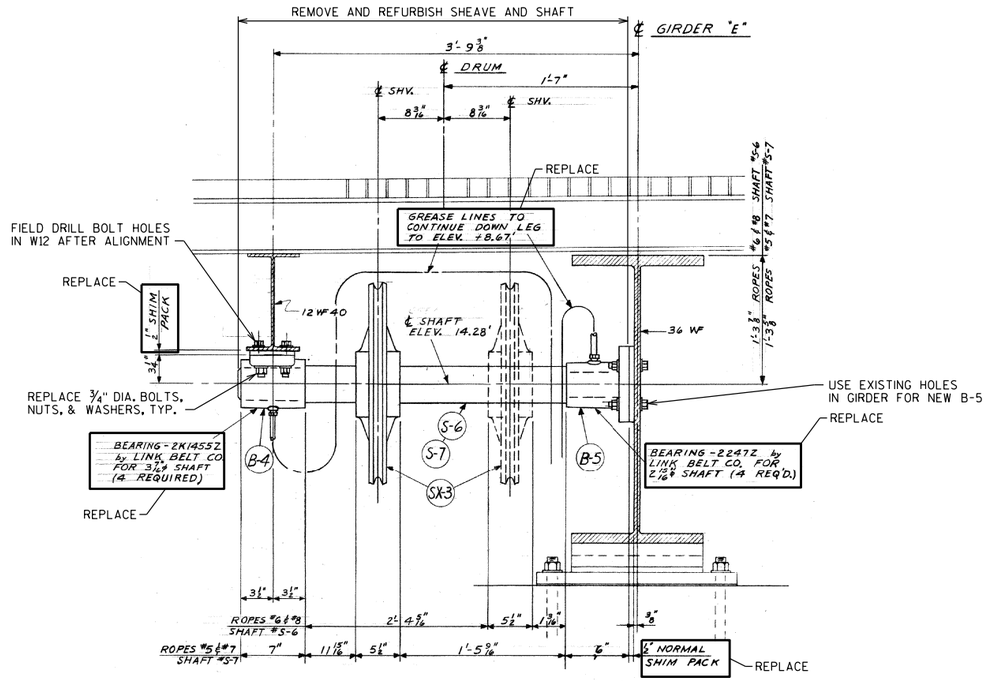

NORTH LONGITUDINAL EQUALIZER
UPPER SHEAVE ASSEMBLY

D
M03

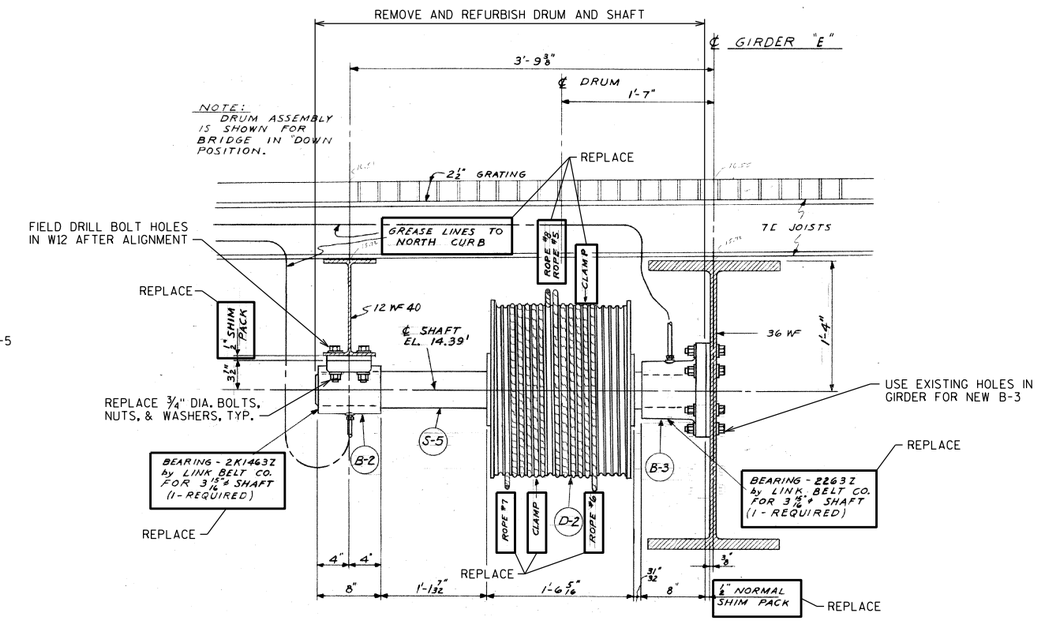

NORTH LONGITUDINAL EQUALIZER
DRUM ASSEMBLY

C
M03

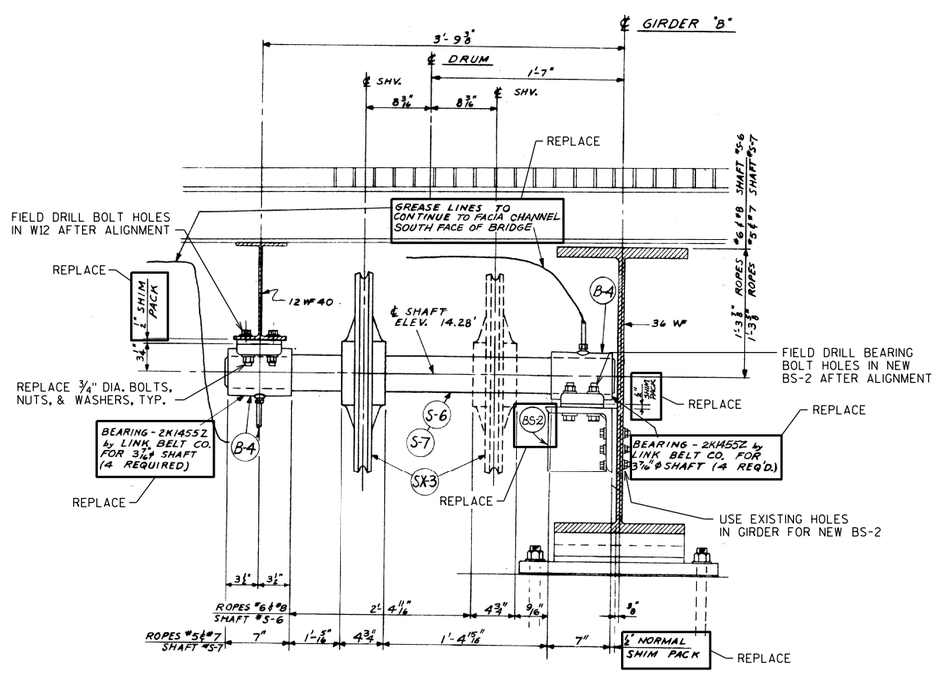

SOUTH LONGITUDINAL EQUALIZER
UPPER SHEAVE ASSEMBLY

A
M03

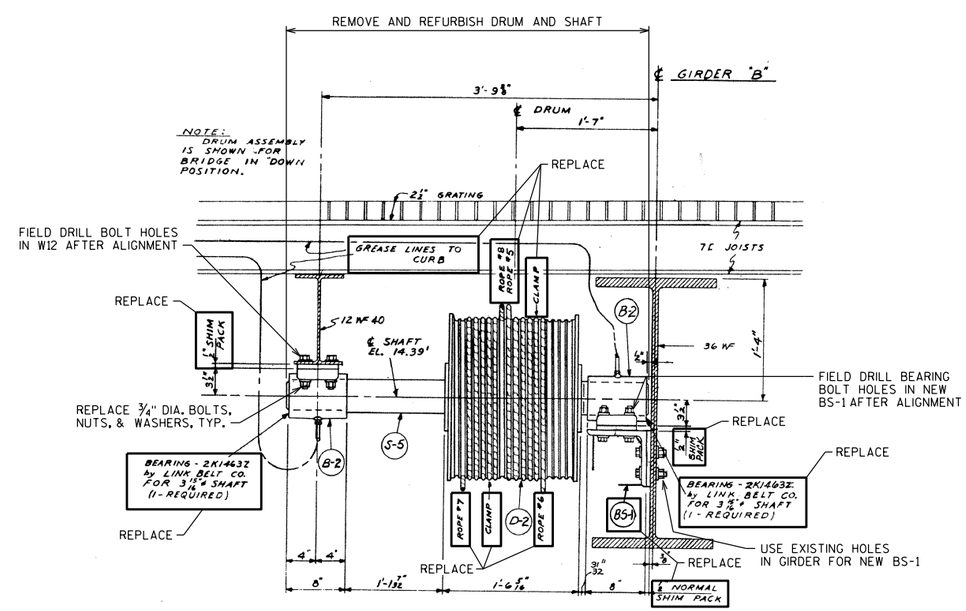

SOUTH LONGITUDINAL EQUALIZER
DRUM ASSEMBLY

B
M03

NOTES:
ALL ELEVATIONS GIVEN FOR BRIDGE IN CLOSED POSITION.

City of Milwaukee

Department of Public Works

Infrastructure Services Division

HNTB
11414 West Park Place, Suite 300
Milwaukee, WI 53224
414-359-2300

PLEASANT STREET LIFT BRIDGE
OVER THE MILWAUKEE RIVER
EQUALIZER MACHINERY
ASSEMBLIES II

REVISIONS

DESIGNED BY D.G.A.
DRAWN BY D.J.J.
CHECKED BY ----
DATE 4-2012
SCALE NONE
JOB NUMBER
SHEET NUMBER M07 OF M10
OF 86

DJamison
07-JUN-2012 15:32
\\kcow00\jobs2\39834\Bridges\PleasantStreet\Plans\Drawings\Submittal-100\M07.dgn (Default)

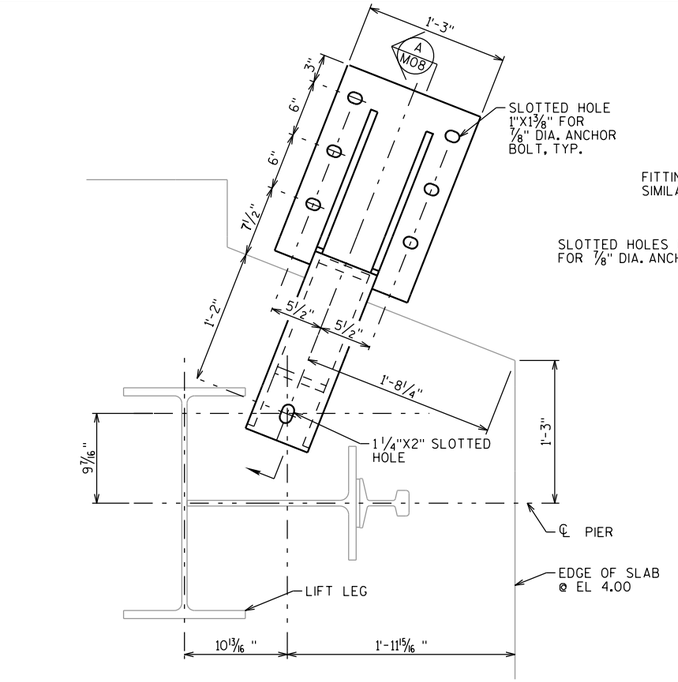

CABLE BRACKET CB-3

QUANTITY: 4
MATERIAL: ASTM A36

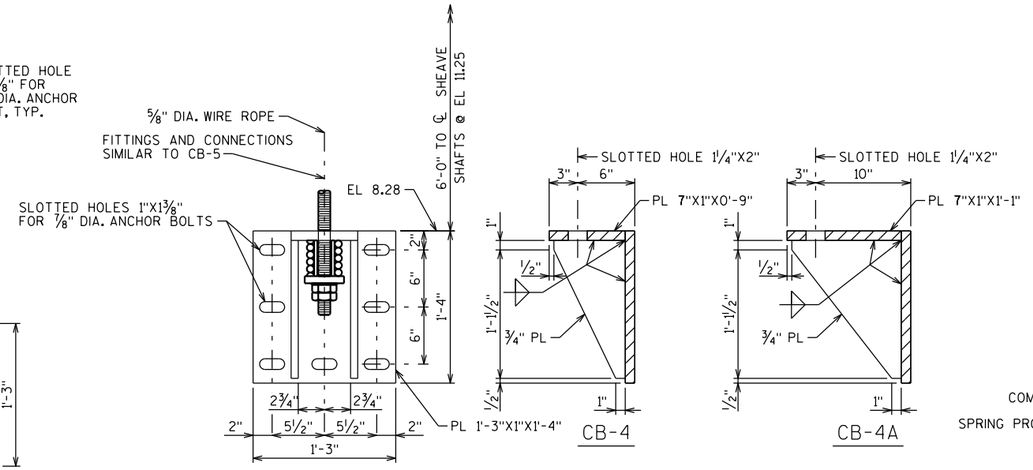

CABLE BRACKET CB-4, CB-4A

QUANTITY: 3 CB-4, 1 CB-4A
MATERIAL: ASTM A36

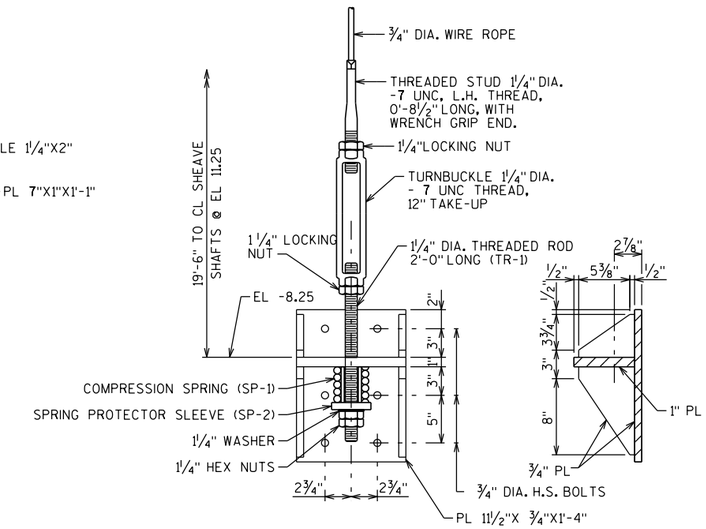

CABLE BRACKET CB-5

QUANTITY: 4
MATERIAL: ASTM A36

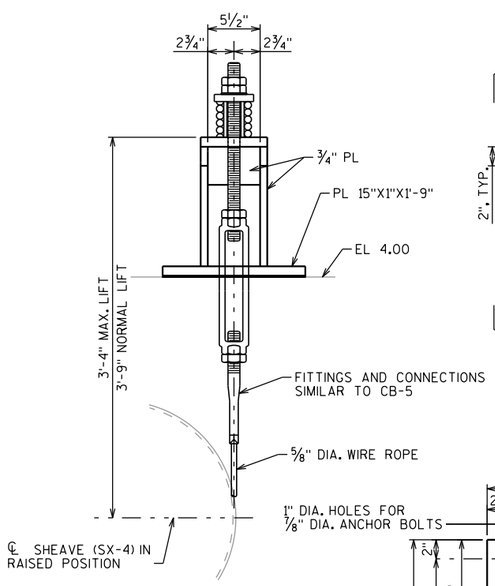

CB-3 SECTION (B / M08)

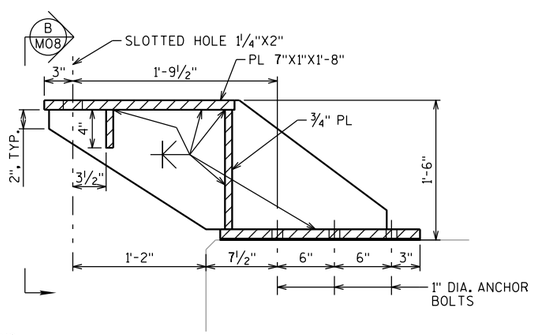

CB-3 SECTION (A / M08)

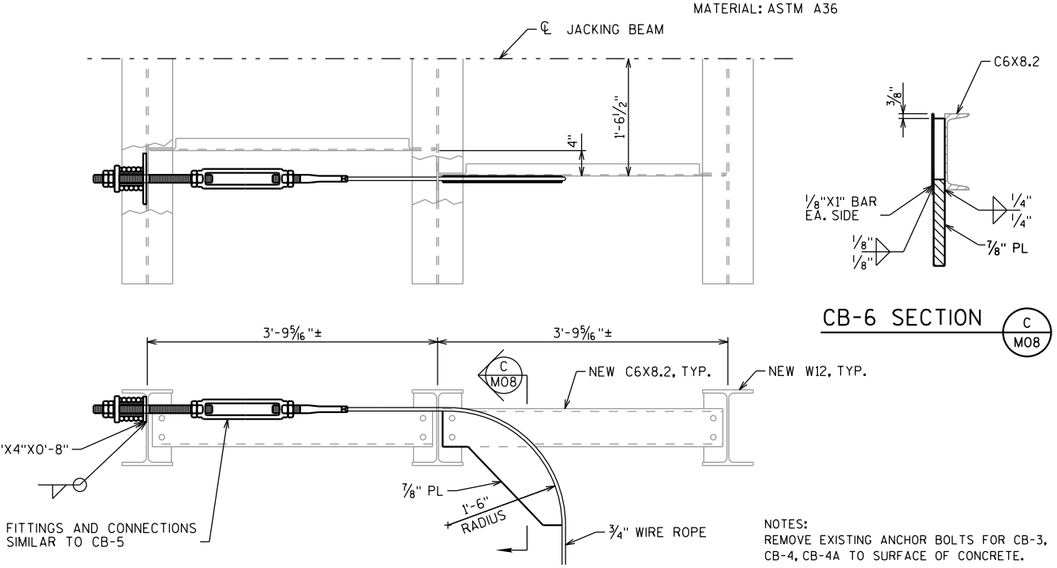

CB-6 SECTION (C / M08)

CABLE BRACKET CB-6

QUANTITY: 4
MATERIAL: ASTM A36
NEW C6X8.2 AND W12 TO BE
FURNISHED WITH STRUCTURAL STEEL

NOTES:
REMOVE EXISTING ANCHOR BOLTS FOR CB-3, CB-4, CB-4A TO SURFACE OF CONCRETE.

NEW ANCHORS FOR CB-3, CB-4, CB-4A SHALL BE ⅞" DIA. HILTI HVA/HAS SS OR EQUIVALENT WITH A MINIMUM EMBEDMENT OF 6⅝".

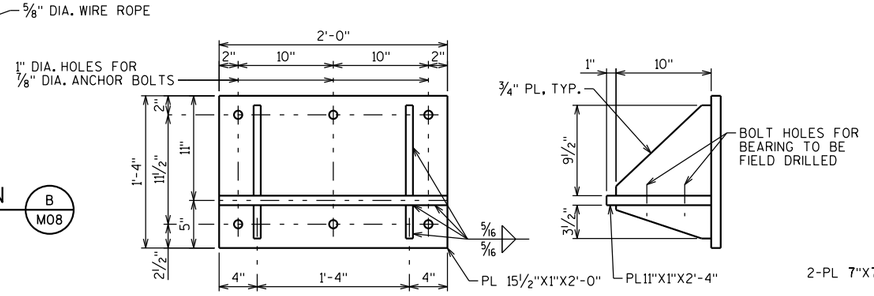

BEARING BRACKET BB-2

QUANTITY: 20
MATERIAL: ASTM A36

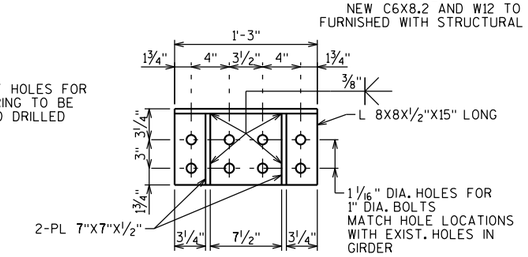

BEARING BRACKET BS-1

QUANTITY: 1
MATERIAL: ASTM A36

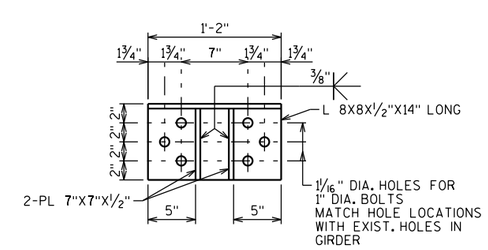

BEARING BRACKET BS-2

QUANTITY: 4
MATERIAL: ASTM A36

City of Milwaukee

Department of Public Works

Infrastructure Services Division

HNTB
11414 West Park Place, Suite 300
Milwaukee, WI 53224
414-359-2300

PLEASANT STREET LIFT BRIDGE OVER THE MILWAUKEE RIVER
EQUALIZER MACHINERY BRACKETS

REVISIONS

DESIGNED BY D.G.A.	
DRAWN BY D.J.J.	
CHECKED BY --.--.--	
DATE 4-2012	SCALE NONE
JOB NUMBER	
SHEET NUMBER M08 OF M10	
OF 86	

DJamison
07-JUN-2012 15:33
\\kcow00\jobs2\39834\Bridges\PleasantStreet\Plans\Drawings\Submittal-100\M08.DGN (Default)

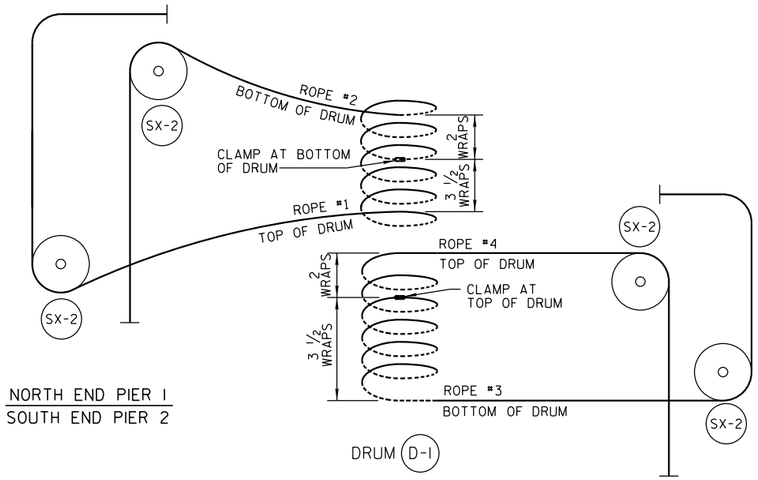

NORTH END PIER 1
SOUTH END PIER 2

SOUTH END PIER 1
NORTH END PIER 2

TRANSVERSE EQUALIZER ROPE SCHEMATIC

SHOWN FOR BRIDGE IN CLOSED POSITION

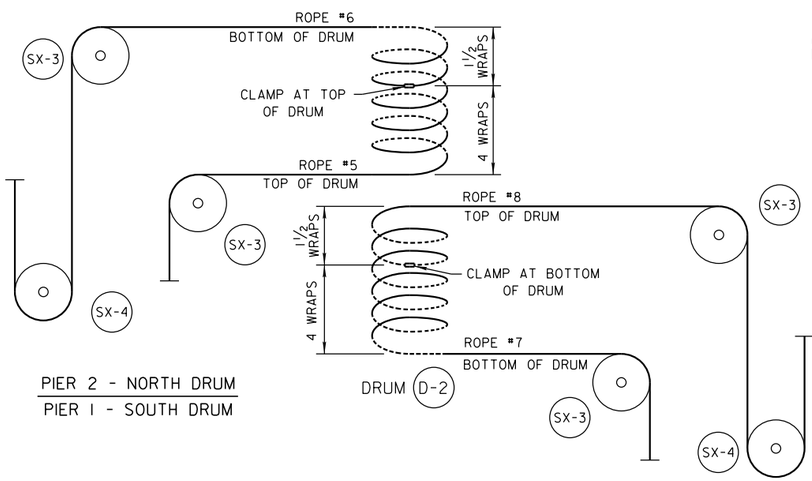

PIER 2 - NORTH DRUM
PIER 1 - SOUTH DRUM

PIER 1 - NORTH DRUM
PIER 2 - SOUTH DRUM

LONGITUDINAL EQUALIZER ROPE SCHEMATIC

SHOWN FOR BRIDGE IN CLOSED POSITION

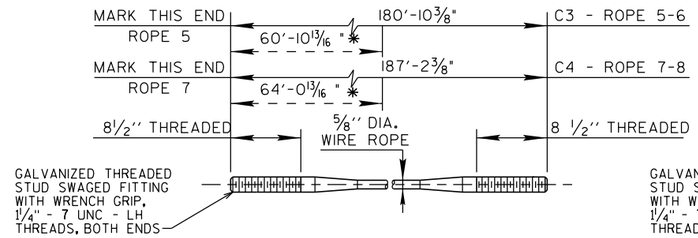

LONGITUDINAL EQUALIZER CABLES - C-3, C-4

QUANTITY: 2 C-3, 2 C-4
MATERIAL 5/8" DIA. DGXIP 6X25FW WITH IWRC

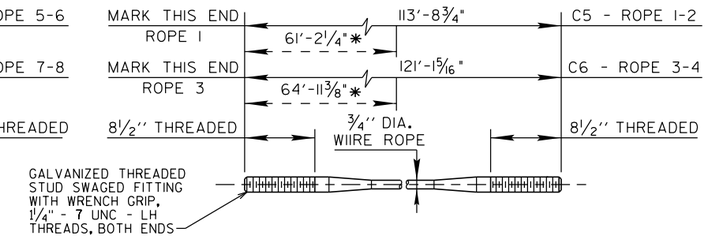

TRANSVERSE EQUALIZER CABLES - C-5, C-6

QUANTITY: 2 C-5, 2 C-6
MATERIAL 3/4" DIA. DGXIP 6X25FW WITH IWRC

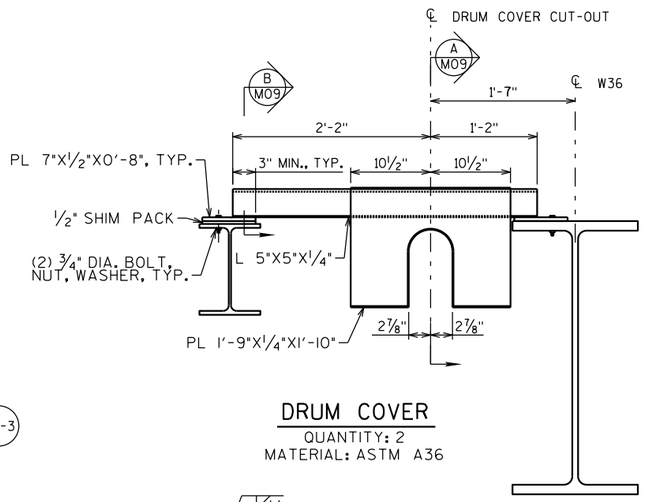

DRUM COVER

QUANTITY: 2
MATERIAL: ASTM A36

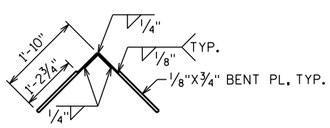

DRUM COVER SECTION A M09

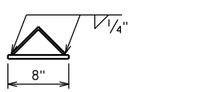

DRUM COVER SECTION B M09

WIRE ROPE FABRICATOR SHALL LEAVE * MARK WITH ORANGE PAINT (OR SIMILAR) AT LOCATION OF CONNECTION TO DRUM.

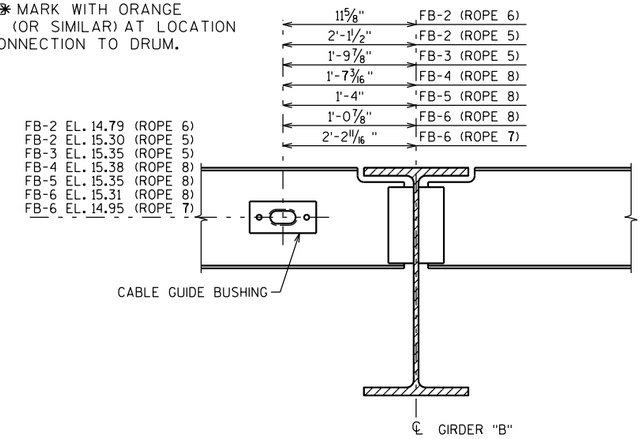

TYPICAL SECTION THRU GIRDER "B"

LOOKING WEST, NORMAL TO FLOORBEAM
ELEVATIONS GIVEN FOR BRIDGE IN CLOSED POSITION

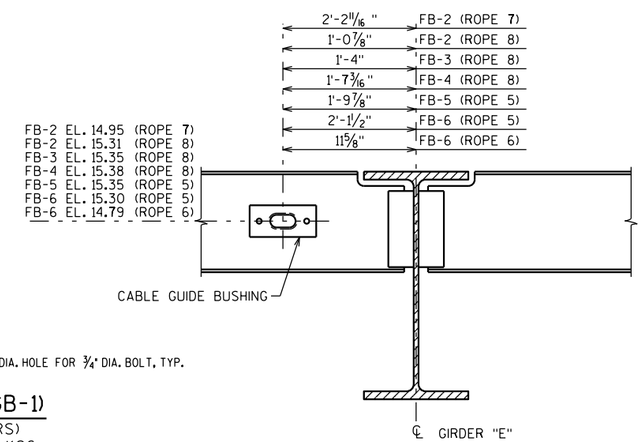

TYPICAL SECTION THRU GIRDER "E"

LOOKING EAST, NORMAL TO FLOORBEAM
ELEVATIONS GIVEN FOR BRIDGE IN CLOSED POSITION

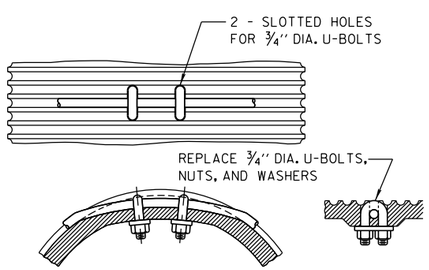

DRUM CABLE CLAMP CONNECTION

(DETAIL SIMILAR FOR DRUMS D-1 AND D-2)
UNDO EXISTING CABLE (ROPE) CONNECTION
REATTACH NEW CABLE (ROPE)

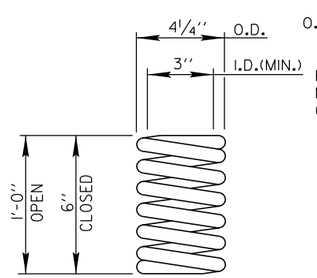

BOTH ENDS TO BE SQUARED & GROUNDED

COMPRESSION SPRING - SP-1

QUANTITY: 16

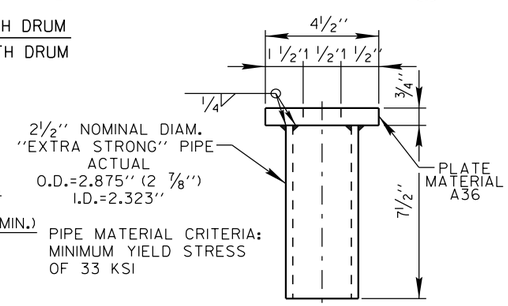

SPRING PROTECTOR SLEEVE - SP-2

QUANTITY: 16

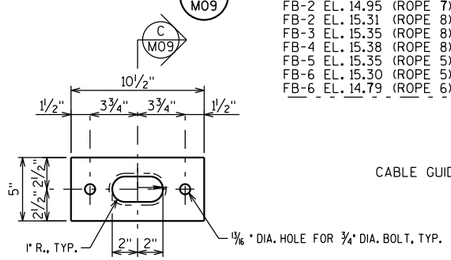

CABLE GUIDE BUSHING (GB-1)

QUANTITY: 28 PLATES (14 PAIRS)
MATERIAL: ASTM B438 CT 1000 K26

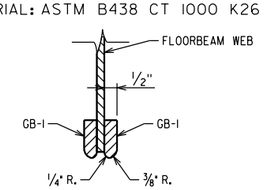

INSTALLED CABLE GUIDE BUSHING C M09

NOTES:
CONTRACTOR TO VERIFY ALL WIRE ROPE LENGTHS.

City of Milwaukee
Department of Public Works
Infrastructure Services Division

HNTB
11414 West Park Place, Suite 300
Milwaukee, WI 53224
414-359-2300

PLEASANT STREET LIFT BRIDGE
OVER THE MILWAUKEE RIVER
EQUALIZER MACHINERY DETAILS

REVISIONS

DESIGNED BY D.G.A.
DRAWN BY D.J.J.
CHECKED BY ----
DATE 4-2012
SCALE NONE
JOB NUMBER
SHEET NUMBER M09 OF M10
OF 86

DJamison
07-JUN-2012 15:33
\\kcow00\jobs2\39834\Bridges\PleasantStreet\Plans\Drawings\Submittal-100\M09.DGN (Default)

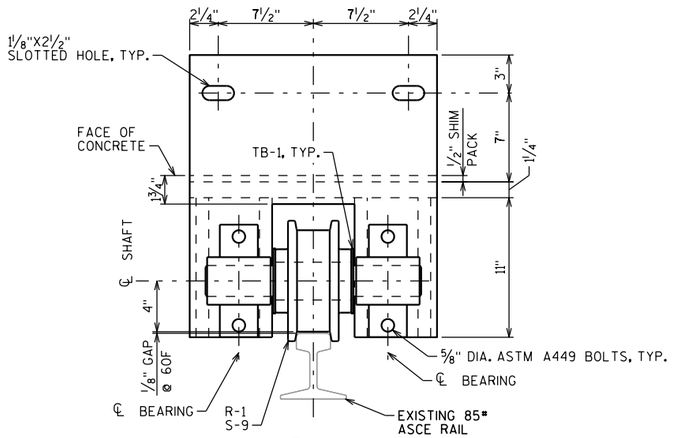

PLAN

FIXED ROLLERS SHOWN
EXPANSION ROLLERS SIMILAR

KEY SCHEDULE			
ID	SIZE	QTY.	MATERIAL
RK-1	½"x½"x5"	2	ASTM A576 1141 HOT ROLLED
RK-2	½"x½"x2½"	2	ASTM A576 1141 HOT ROLLED

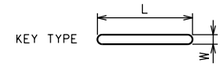

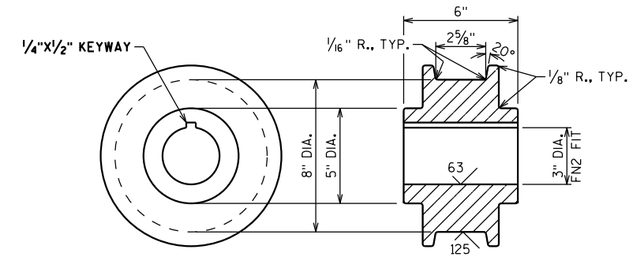

FIXED ROLLERS - PIER #2 R-1

QUANTITY: 2
MATERIAL: ASTM A148 GRADE 80-50

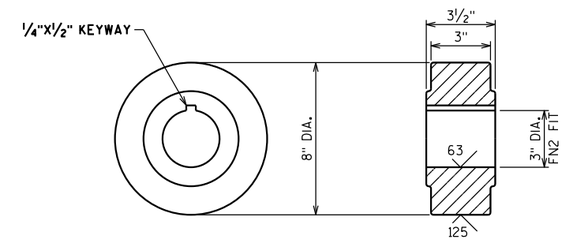

EXPANSION ROLLERS - PIER #1 R-2

QUANTITY: 2
MATERIAL: ASTM A148 GRADE 80-50

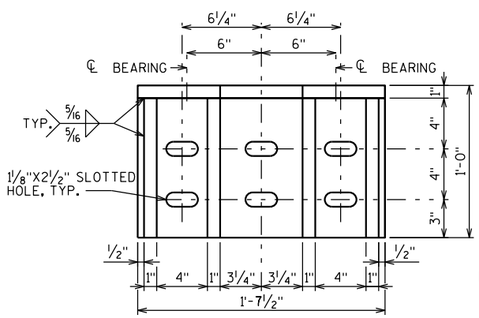

FRONT ELEVATION

ROLLER AND BEARING
NOT SHOWN FOR CLARITY

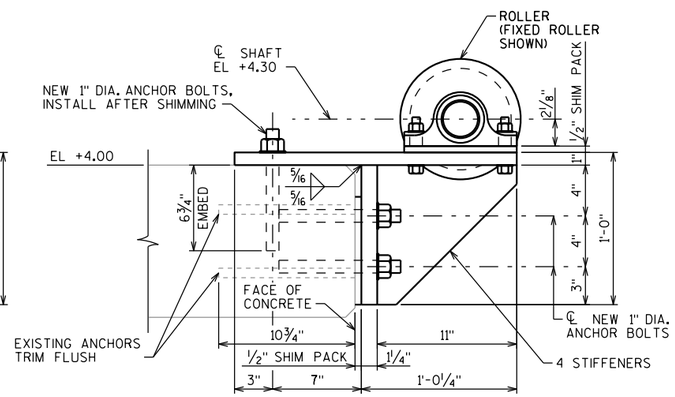

SIDE ELEVATION

NOTE: DRILL HOLES FOR BEARING BASE BOLTS IN SUPPORT AFTER FINAL ALIGNMENT

SPAN GUIDE ASSEMBLY

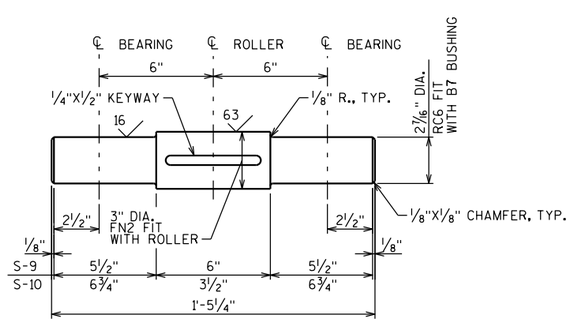

ROLLER GUIDE SHAFT

PIER #2 - S-9 (QTY. 2)
PIER #1 - S-10 (QTY. 2)
MATERIAL: ASTM A576 1141 HOT ROLLED

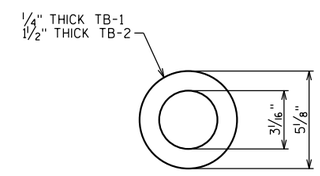

ROLLER GUIDE THRUST BEARING

PIER #2 TB-1
PIER #1 TB-2

City of Milwaukee

Department of Public Works

Infrastructure Services Division

HNTB
11414 West Park Place, Suite 300
Milwaukee, WI 53224
414-359-2300

PLEASANT STREET LIFT BRIDGE
OVER THE MILWAUKEE RIVER
SPAN GUIDE

REVISIONS

DESIGNED BY D.G.A.
DRAWN BY D.J.J.
CHECKED BY -.-.-.
DATE 4-2012
SCALE NONE
JOB NUMBER
SHEET NUMBER M10 OF M10
OF 86

DJamison
07-JUN-2012 15:33
\\kcow00\jobs2\39834\Bridges\PleasantStreet\Plans\Drawings\Submittal-100\M10.dgn (Default)