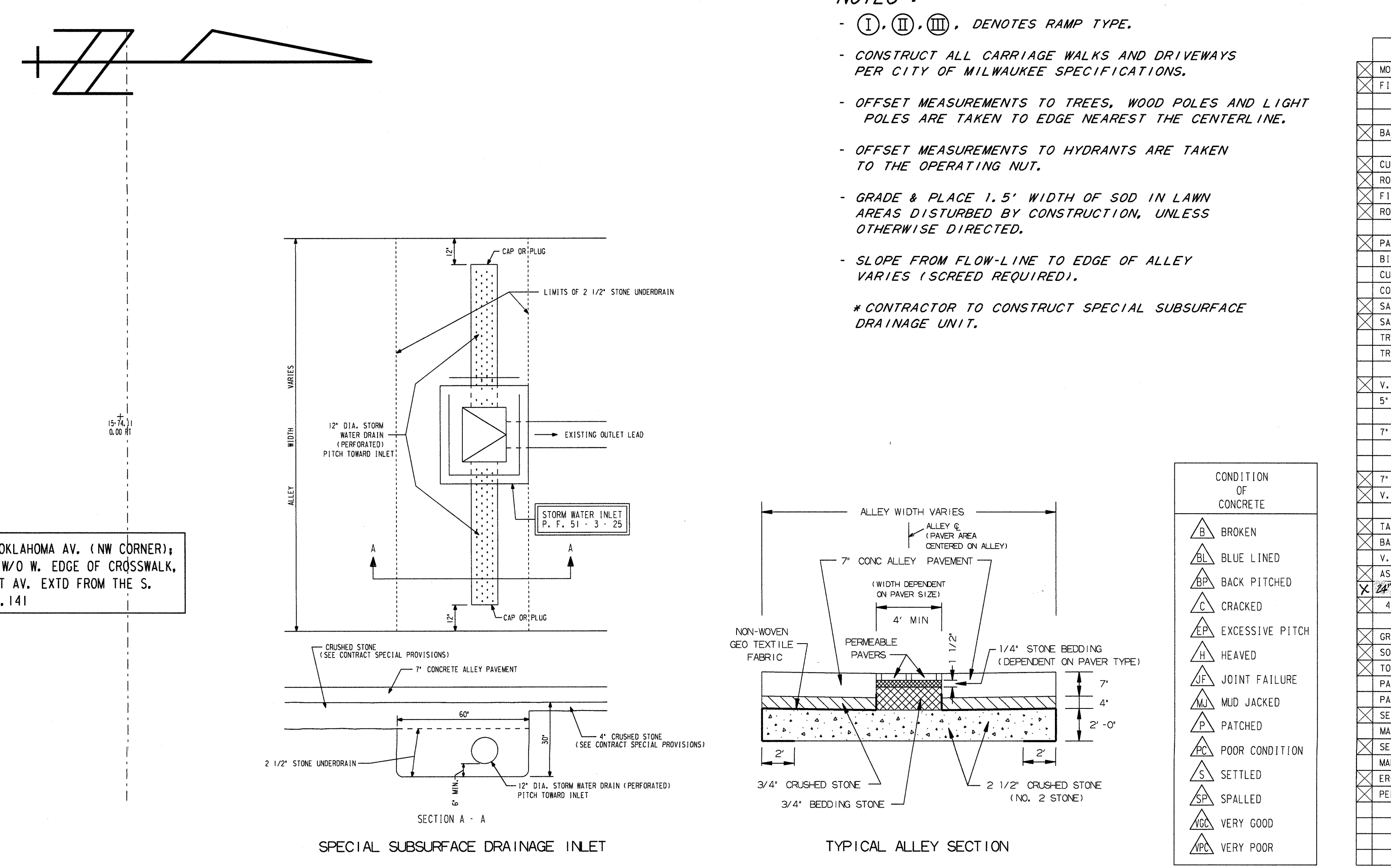

SPECIAL SUBSURFACE DRAINAGE INLET

TYPICAL ALLEY SECTION

NOTES :

- (I), (II), (III), DENOTES RAMP TYPE.
- CONSTRUCT ALL CARRIAGE WALKS AND DRIVEWAYS PER CITY OF MILWAUKEE SPECIFICATIONS.
- OFFSET MEASUREMENTS TO TREES, WOOD POLES AND LIGHT POLES ARE TAKEN TO EDGE NEAREST THE CENTERLINE.
- OFFSET MEASUREMENTS TO HYDRANTS ARE TAKEN TO THE OPERATING NUT.
- GRADE & PLACE 1.5' WIDTH OF SOD IN LAWN AREAS DISTURBED BY CONSTRUCTION, UNLESS OTHERWISE DIRECTED.
- SLOPE FROM FLOW-LINE TO EDGE OF ALLEY VARIES (SCREED REQUIRED).

* CONTRACTOR TO CONSTRUCT SPECIAL SUBSURFACE DRAINAGE UNIT.

ESTIMATE / CERTIFICATE QUANTITIES

	DESCRIPTION	UNIT	ASSESS.	X-ING			PLAN TOT.	PROJ.TOT.
X	MOBILIZATION	L.S.						
X	FINISHING ROADWAY	L.S.						
X	BARRICADING AND SIGNING	L.S.						
X	CUTTING	C.Y.						
X	ROADWAY CUTTING	C.Y.						
X	FILLING	C.Y.						
X	ROADWAY FILLING	C.Y.						
X	PAVEMENT REMOVAL	S.Y.						
	BITUMINOUS SURFACE REMOVAL	S.Y.						
	CURB &/OR CURB & GUTTER REMOVAL	L.F.						
	CONC.WALK &/OR DRIVEWAY REMOVAL	S.F.						
X	SAWING (FULL DEPTH)	L.F.						
X	SAWING	L.F.						
	TREES CLEARING	I.D.						
	TREES GRUBBING	I.D.						
	CONCRETE CURB & GUTTER	L.F.						
X	V.T. CONC.WALK &/OR DRIVEWAY	C.Y.						
	5" CONCRETE WALK	S.F.						
	7" CONCRETE DRIVEWAY	S.F.						
	CONCRETE PAVEMENT	S.Y.						
X	7" CONCRETE ALLEY PAVEMENT	S.Y.						
X	V.T. CONCRETE BASE	C.Y.						
	CONCRETE BASE	S.Y.						
X	TACK COAT	GAL.						
X	BASE PREP. FOR ASPHALT SURFACE	L.S.						
	V.T.ASPH.CONC.PAV'T.(MAX.)	S.Y.						
X	ASPH. CONC. PAV'T.	TONS						
X	24" #2 CRUSHED STONE BASE	S.Y.						
X	4" CRUSHED STONE BASE	S.Y.						
	CRUSHED GRAVEL BASE							
X	GRAVEL FILLING	TON						
X	SODDING	S.Y.						
X	TOPSOIL	C.Y.						
	PAVEMENT GRINDING (ASPHALT)	S.Y.						
	PAVEMENT GRINDING (CONCRETE)	S.Y.						
X	SEALING PAV'T JOINTS & CRACKS	S.Y.						
	MANHOLE RINGS	EACH						
X	SEWER FRAME ADJUSTMENT	V.F.						
	MANHOLE SEAL (CITY FURNISHED)	EACH						
X	EROSION CONTROL (TYPE M)	EACH						
X	PERMEABLE PAVERS	S.F.						

STORM DRAINAGE UNITS
C.B.W.- I | RESET- 0 | ABANDON- I
PROJECT IN (COMB) AREA

FILE NO. 50

DEPARTMENT OF PUBLIC WORKS
INFRASTRUCTURE SERVICES DIVISION
FIELD OPERATIONS
FIELD & DESIGN ENGINEERING
MILWAUKEE, WISCONSIN

PLAN OF: ALLEY BETW.- E. FERNWOOD AVE., S. ILLINOIS AVE., S. INDIANA AVE., E. OKLAHOMA AVE

THIS SECTION:
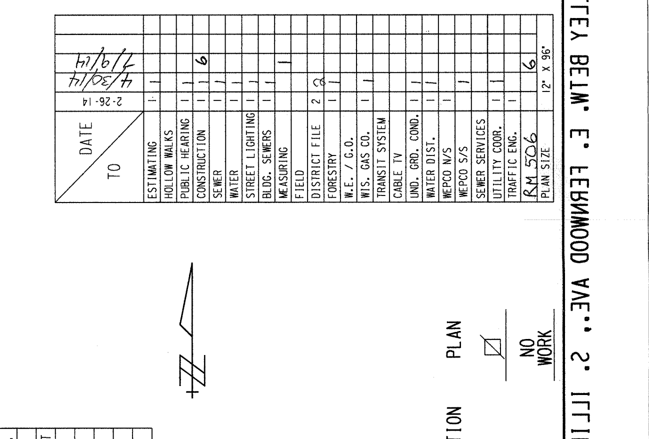
DRAWN BY D. BEKELE | DATE: 11-6-13 | PROJECT NO.