NOTES :
- (I),(II),(III), DENOTES RAMP TYPE.
- CONSTRUCT ALL CARRIAGE WALKS AND DRIVEWAYS PER CITY OF MILWAUKEE SPECIFICATIONS.
- OFFSET MEASUREMENTS TO TREES, WOOD POLES AND LIGHT POLES ARE TAKEN TO EDGE NEAREST THE CENTERLINE.
- OFFSET MEASUREMENTS TO HYDRANTS ARE TAKEN TO THE OPERATING NUT.
- SLOPE FROM FLOW-LINE TO EDGE OF ALLEY VARIES (SCREED REQUIRED).
- GRADE AND PLACE 1.5' WIDTH OF SOD IN LAWN AREAS DISTURBED BY CONSTRUCTION, UNLESS OTHERWISE DIRECTED.

* CONTRACTOR TO CONSTRUCT SPECIAL SUBSURFACE DRAINAGE UNIT.

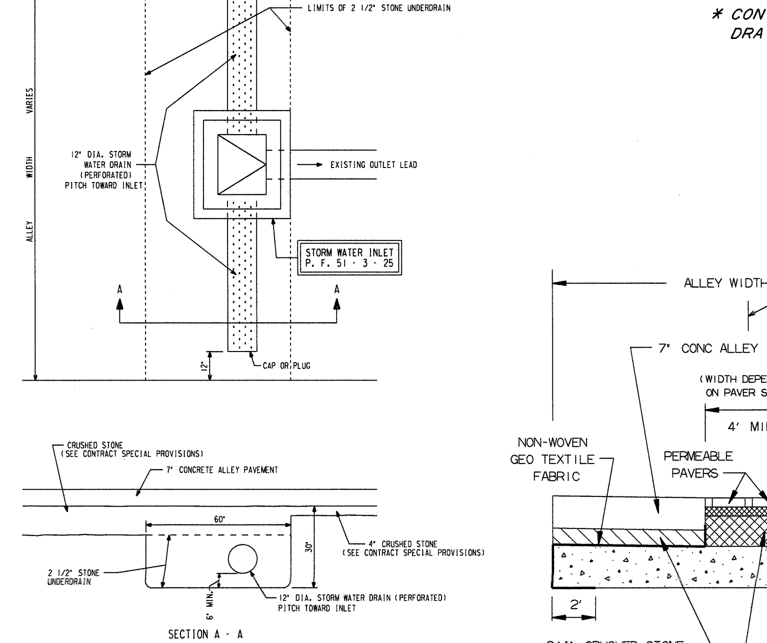

* SPECIAL SUBSURFACE DRAINAGE INLET

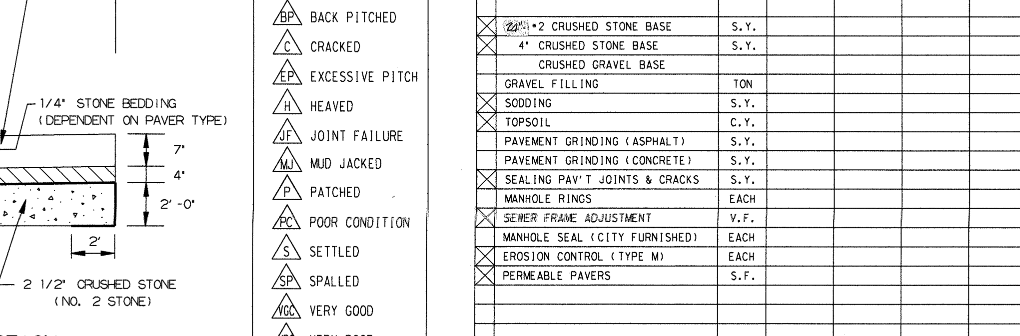

TYPICAL ALLEY SECTION

CONDITION OF CONCRETE
B BROKEN
BL BLUE LINED
BP BACK PITCHED
C CRACKED
EP EXCESSIVE PITCH
H HEAVED
JF JOINT FAILURE
MJ MUD JACKED
P PATCHED
PC POOR CONDITION
S SETTLED
SP SPALLED
VG VERY GOOD
VP VERY POOR

ESTIMATE / CERTIFICATE QUANTITIES

	DESCRIPTION	UNIT	ASSESS.	X-ING			PLAN TOT.	PROJ. TOT.
X	MOBILIZATION	L.S.						
X	FINISHING ROADWAY	L.S.						
X	BARRICADING AND SIGNING	L.S.						
X	CUTTING	C.Y.						
	ROADWAY CUTTING	C.Y.						
X	FILLING	C.Y.						
	ROADWAY FILLING	C.Y.						
X	PAVEMENT REMOVAL	S.Y.						
	BITUMINOUS SURFACE REMOVAL	S.Y.						
	CURB &/OR CURB & GUTTER REMOVAL	L.F.						
X	CONC. WALK &/OR DRIVEWAY REMOVAL	S.F.						
X	SAWING (FULL DEPTH)	L.F.						
	SAWING	L.F.						
	TREES CLEARING	I.D.						
	TREES GRUBBING	I.D.						
	CONCRETE CURB & GUTTER	L.F.						
X	V.T. CONC. WALK &/OR DRIVEWAY	C.Y.						
	5" CONCRETE WALK	S.F.						
	7" CONCRETE DRIVEWAY	S.F.						
	CONCRETE PAVEMENT	S.Y.						
X	7" CONCRETE ALLEY PAVEMENT	S.Y.						
	V.T. CONCRETE BASE	C.Y.						
	CONCRETE BASE	S.Y.						
	TACK COAT	GAL.						
	BASE PREP. FOR ASPHALT SURFACE	L.S.						
X	V.T.ASPH.CONC.PAV'T.(MAX.)	TONS						
X	~~2"~~ 2" CRUSHED STONE BASE	S.Y.						
	4" CRUSHED STONE BASE	S.Y.						
	CRUSHED GRAVEL BASE							
	GRAVEL FILLING	TON						
X	SODDING	S.Y.						
X	TOPSOIL	C.Y.						
	PAVEMENT GRINDING (ASPHALT)	S.Y.						
	PAVEMENT GRINDING (CONCRETE)	S.Y.						
X	SEALING PAV'T JOINTS & CRACKS	S.Y.						
	MANHOLE RINGS	EACH						
X	SEWER FRAME ADJUSTMENT	V.F.						
	MANHOLE SEAL (CITY FURNISHED)	EACH						
X	EROSION CONTROL (TYPE M)	EACH						
X	PERMEABLE PAVERS	S.F.						

DEPARTMENT OF PUBLIC WORKS
INFRASTRUCTURE SERVICES DIVISION
FIELD OPERATIONS
FIELD & DESIGN ENGINEERING
MILWAUKEE, WISCONSIN

PLAN OF: ALLEY BETW. W. HADLEY ST., W. LOCUST ST., N. 81ST ST. & N. 82ND ST.

FILE NO. 147 — 2800N, 8100W

THIS SECTION:				
DRAWN BY	B. MATHENY	DATE: 11-7-13	PROJECT NO. ST212140124	SHEET 1 OF 1
DESCRIPTIONS BY	B. MATHENY	DATE: 11-7-13		
LEVELS BY	V. RIVERA	DATE: 4-26-13	SCALE 1"=10'	1/4 SEC. 303 / ALD. DIST. 5
LEVELS TRANSF. BY	C. BANACH	DATE: 10-15-13		
DESIGNED BY	M. SCHULTZ	DATE: 1-24-14	OBSTRUCTIONS - SEE OBSTRUCTION LIST	
GRADES TRANSF. BY	S. SALAPAT	DATE: 1-30-14	REVISED: 4/9/14 PERMEABLE PAVERS	
CHECKED BY	[signature]	DATE: 4/9/14	REVISED:	
APPROVED BY	[signature]	DATE: 4/21/14	REVISED:	
PLOT DATE: 24-APR-2014				

STORM DRAINAGE UNITS
C.B.W.- 1 RESET- 0 ABANDON- 1
PROJECT IN (SEPARATED) AREA

EROSION CONTROL AND C.B. REQUISITION PLAN

EROSION	CONTROL	AND	C.B.	REQUISITION	PLAN
TYPE M	☒-CBW	☐-RESET	X-ABANDON		NO WORK
1	1	0	1		

W. LOCUST ST. — W. HADLEY ST. — (N. 82ND ST.) — (N. 81ST ST.)

ALLEY BETW. W. HADLEY ST., W. LOCUST ST., N. 81ST ST., N. 82ND ST. 12' X 113' S8330 # 1 OF 1 ST212140124