APPENDIX I

B-40-414C Record Drawings

STATE PROJECT I.D.	SHEET NUMBER
2235-00-70	8.642

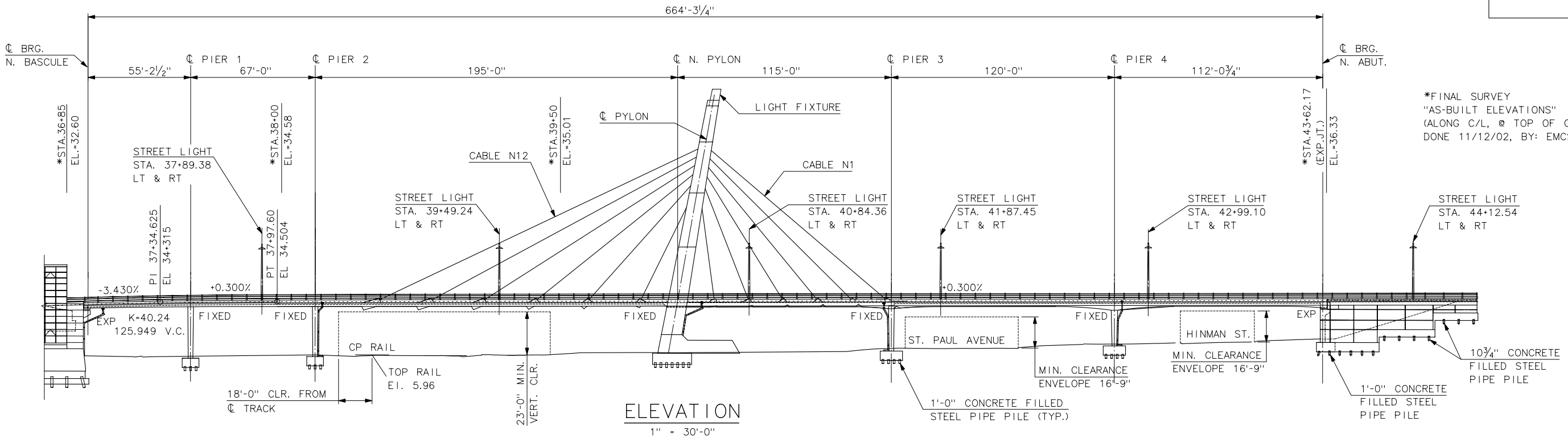

*FINAL SURVEY
"AS-BUILT ELEVATIONS"
(ALONG C/L, @ TOP OF OVERLAY @ 40°F)
DONE 11/12/02, BY: EMCS

ELEVATION
1" = 30'-0"

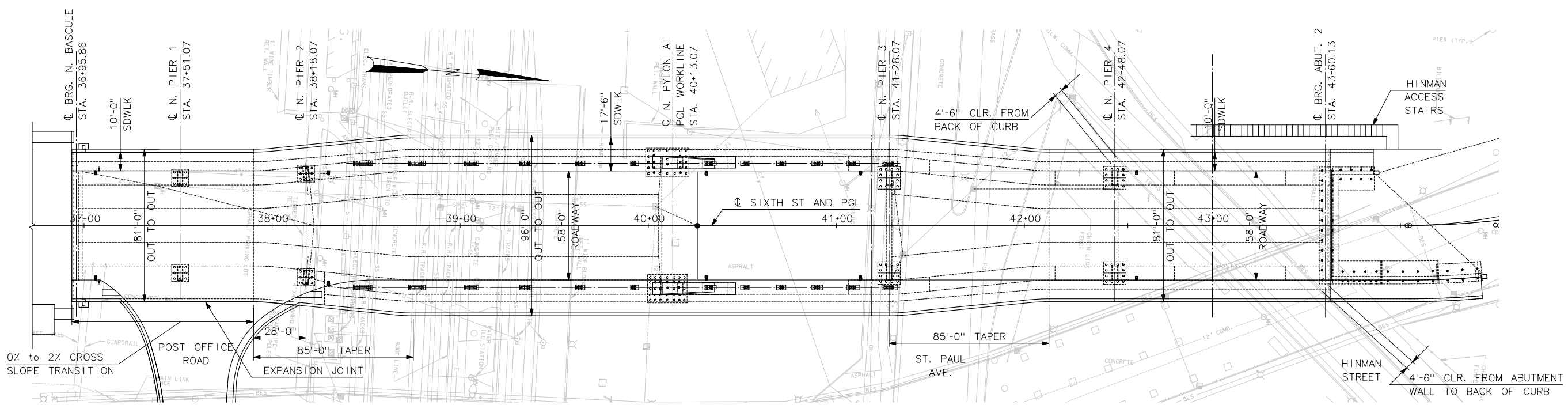

PLAN
1" = 30'-0"

NOTES:

1. FOR BRIDGE RAILING AND UTILITIES, SEE SHEETS NC99 - NC101.
2. FOR DECK PLAN GEOMETRY, SEE SHEETS NC37 - NC45.
3. FOR FOUNDATION GEOMETRY, SEE SHEET NC02.

No.	Date	Revisions	By

HNTB

HNTB CORPORATION
ARCHITECTS ENGINEERS PLANNERS
ONE PARK PLAZA SUITE 500
11270 WEST PARK PLACE
MILWAUKEE WISCONSIN 53224
(414) 359-2300

RECORD DRAWING

STATE OF WISCONSIN
DEPARTMENT OF TRANSPORTATION

STRUCTURE B-40-414C

6TH ST. OVER CP RAILROAD & ST. PAUL AVE.

County MILWAUKEE		City MILWAUKEE	
Design Spec. AASHTO 1996		Load HS20	Const. Spec. 1996
Designed By SL	Design Checked AP	Drawn By BM	Plans Checked AP

Approved _____ State Bridge Engineer _____ Date

NORTH CABLE STAY GENERAL PLAN AND ELEVATION

SHEET NC01

Plotted by: SLam
Date: 3:19:08 PM

FILE NAME: J:\cadd\ff31185\dgn\AS BUILT\NORTH CABLESTAY\NC01-GP&E.dgn

DESIGN SPECIFICATIONS

1. AASHTO "STANDARD SPECIFICATIONS FOR HIGHWAY BRIDGES," 16TH EDITION INCLUDING INTERIMS THROUGH 2000.
2. WISCONSIN BRIDGE MANUAL, VOLUMES 1 AND 2, JANUARY 1997 BY STATE OF WISCONSIN D.O.T., DIVISION OF TRANSPORTATION INFRASTRUCTURE DEVELOPMENT, BUREAU OF STRUCTURES.
3. WISCONSIN D.O.T. FACILITIES DEVELOPMENT MANUAL.
4. AASHTO "A POLICY ON GEOMETRIC DESIGN OF HIGHWAYS AND STREETS," 1990.
5. CITY OF MILWAUKEE ROADWAY DESIGN CRITERIA.
6. AWS BRIDGE WELDING CODE D1.5-1996.
7. AWS STRUCTURAL WELDING CODE D1.1.-1996.
8. AASHTO "GUIDE SPECIFICATIONS FOR FRACTURE CRITICAL NON-REDUNDANT STEEL BRIDGE MEMBERS," 1978, INCLUDING 1991 INTERIMS.
9. WIND DESIGN SPECIFICATIONS FOR CABLE-STAYED SPANS: ASCE MINIMUM DESIGN LOADS FOR BUILDINGS AND OTHER STRUCTURES, ANSI/ASCE 7-95 APPROVED JUNE 6, 1996.
10. RECOMMENDATIONS FOR STAY CABLE DESIGN, TESTING AND INSTALLATION, POST-TENSIONING INSTITUTE (PTI RECOMMENDATIONS), COMMITTEE ON CABLE-STAYED BRIDGES, AUGUST 1993.
11. CEB/FIP MODEL CODE 1990, COMITE EURO-INTERNATIONAL DU BETON, 1991.
12. CEB/FIP "MODEL CODE FOR CONCRETE STRUCTURES," 3RD EDITION, 1978, APPENDIX E, TIME-DEPENDENT BEHAVIOR OF CONCRETE, CREEP AND SHRINKAGE.
13. "SIXTH STREET VIADUCT PROJECT REQUEST FOR PROPOSAL", APPENDIX B WITH ADDENDUMS 1-4 WITH MODIFICATIONS AND ADDITIONS SPECIFIED HEREWITH. WISDOT PROJECT ID 2235-00-00.
14. P.T.I. "SPECIFICATION FOR GROUTING OF POST-TENSIONED STRUCTURES," 1ST EDITION, FEBRUARY 2001.

DATUM

ALL ELEVATIONS ARE IN FEET AND ARE BASED UPON THE MILWAUKEE CITY DATUM.

DESIGN LOADS

DEAD LOADS

WEIGHT OF REINFORCED CONCRETE:	150 PCF
WEIGHT OF PRESTRESSED CONCRETE:	155 PCF
WEIGHT OF STEEL:	490 PCF
WEIGHT OF STAY-CABLES:	490 PCF
INITIAL CONCRETE WEARING SURFACE:	25 PSF
FUTURE WEARING SURFACE:	20 PSF
RAILING	50 PLF
BRIDGE SUPPORTED UTILITIES (ALLOWANCE):	400 PLF

LIVE LOADS

HIGHWAY DESIGN LIVE LOAD: AASHTO HS-20.

MAXIMUM NUMBER OF DESIGN LANES IS 4 WITH REDUCTION FOR MULTIPLE LANE LOADING.

IMPACT IS IN ACCORDANCE WITH AASHTO ARTICLE 3.8 IN REFERENCE 1.

SIDEWALK LIVE LOAD: 85 PSF, BRIDGE INSPECTION TRUCK "REACH ALL UB 50." W/ WHEEL SP. = 6'-4", AXLE LOADS = 17K, 21K, 21K, AND AXLE SP. = 16', 4'

LIVE LOAD RATING

INVENTORY	HS-32
OPERATING	HS-53
STANDARD PERMIT VEHICLE	750 KIPS

SEISMIC LOAD

THE STRUCTURE IS DESIGNED FOR AN ACCELERATION COEFFICIENT OF 0.04g IN ROCK WITH 90% PROBABILITY OF NON-EXCEEDANCE IN 50 YEARS.

BRIDGE SHALL BE DESIGNED FOR SEISMIC PERFORMANCE CATEGORY A.

DAMPING COEFFICIENT FOR THE BRIDGE SHALL BE 5%.

500 YR RETURN PERIOD

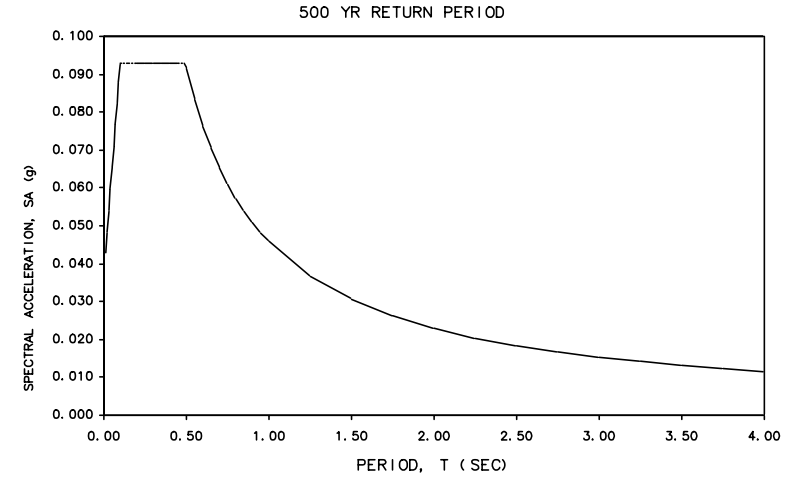

2500 YR RETURN PERIOD

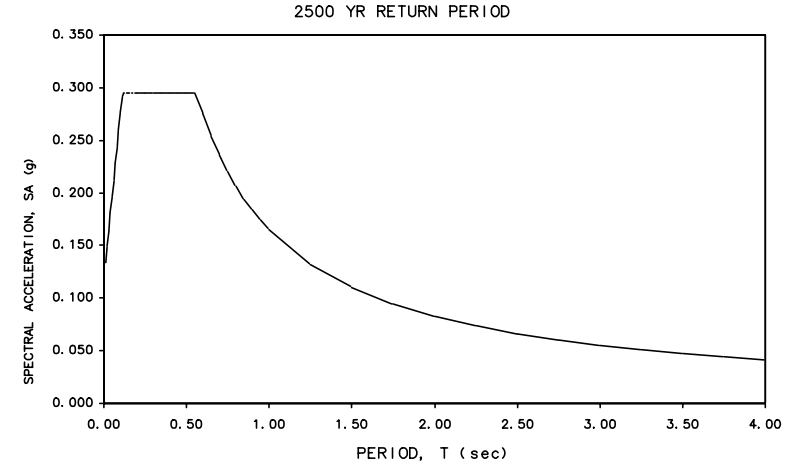

WIND LOADS

FOR THE CABLE STAYED BRIDGES, WIND LOADS SHALL BE IN ACCORDANCE WITH ASCE MINIMUM DESIGN LOADS FOR BUILDINGS AND OTHER STRUCTURES, ANSI/ASCE 7-95 WITH A RETURN PERIOD OF 100 YEARS.

THE EFFECT OF WIND ON THE STAY CABLES AND THE PYLON SHALL BE EVALUATED BY A WIND ENGINEERING CONSULTANT.

TEMPERATURE LOAD

THE DESIGN MEAN TEMPERATURE SHALL BE:	45 DEG F
THERMAL COEFFICIENT FOR CONCRETE:	0.000006 PER DEG F

UNIFORM SEASONAL TEMPERATURE RISE AND FALL FOR CONCRETE STRUCTURAL DESIGN:

TEMPERATURE RISE =	35 DEG F
TEMPERATURE FALL =	45 DEG F

FOR STEEL STRUCTURAL DESIGN:

TEMPERATURE RISE =	75 DEG F
TEMPERATURE FALL =	75 DEG F

FOR DECK MOVEMENTS FOR DESIGN OF BEARINGS AND EXPANSION JOINTS:

TEMPERATURE RISE =	35 DEG F
TEMPERATURE FALL =	1.2 X THE COMBINED EFFECT OF CREEP, SHRINKAGE, ELASTIC SHORTENING AND TEMPERATURE FALL.

UNIFORM TEMPERATURE CHANGE FOR THE CABLE FROM THE TEMPERATURE OF THE GIRDERS, TOWER AND PIER:

TEMPERATURE RISE =	18 DEG F
TEMPERATURE FALL =	18 DEG F

THERMAL GRADIENT BETWEEN TOP & BOTTOM OF SUPERSTRUCTURE:	18 DEG F
THERMAL GRADIENT BETWEEN NORTH & SOUTH FACES OF TOWER:	10 DEG F

CREEP AND SHRINKAGE

STRAINS CALCULATED IN ACCORDANCE WITH REFERENCE 11.

AVERAGE RELATIVE HUMIDITY IS TAKEN AS 70%.

STAY CABLE REPLACEMENT AND LOSS

TWO LANES OF TRAFFIC SHALL BE MAINTAINED IN THE AREA OF CABLE REPLACEMENT.

THE CABLE-STAYED STRUCTURES SHALL BE DESIGNED TO WITHSTAND THE LOSS OF ANY ONE STAY CABLE.

DESIGN METHOD

ALL PRESTRESSED CONCRETE:	DESIGNED ASD, CHECKED LFD
ALL REINFORCED CONCRETE:	LFD
STAY CABLES:	ASD
PILES:	ASD

RECORD DRAWING

No.	Date	Revisions	By

HNTB CORPORATION

STATE OF WISCONSIN
DEPARTMENT OF TRANSPORTATION

STRUCTURE B-40-414C

Designed By	SL	Design Checked	TZ	Drawn By	SL	Plans Checked	AP

NORTH CABLE STAY GENERAL NOTES 1 OF 2

SHEET NC01a OF

MATERIALS

CONCRETE

ALL CONCRETE PROPERTIES SHALL BE IN ACCORDANCE WITH 28-DAY SPECIFIED COMPRESSIVE STRENGTH (f'c) AND CONCRETE CLASS AS FOLLOWS:

A) ABUTMENTS, MASONRY SEALS AND PIERS SHALL PROVIDE A COMPRESSIVE STRENGTH OF 4000 PSI (CLASS D).

B) PYLON AND SUPERSTRUCTURE SLAB SHALL PROVIDE A COMPRESSIVE STRENGTH OF 6000 PSI.

C) ALL OTHER CONCRETE SHALL PROVIDE A COMPRESSIVE STRENGTH OF 3500 PSI (CLASS A).

REINFORCING STEEL

REINFORCING SHALL CONFORM TO THE REQUIREMENTS OF AASHTO M31, (ASTM A996) GRADE 60. ALL REINFORCING BARS USED IN STRUCTURAL MEMBERS PARTIALLY OR ENTIRELY ABOVE FINISHED GROUND LEVEL SHALL BE EPOXY COATED IN ACCORDANCE WITH AASHTO M284 (ASTM A775).

CONCRETE COVER

CONCRETE COVER SHOWN ON PLANS DOES NOT INCLUDE PLACEMENT AND FABRICATION TOLERANCES UNLESS SHOWN AS "MINIMUM COVER."

A) SUPERSTRUCTURE

TOP OF CONCRETE DECK SLAB:	2 IN
BOTTOM OF CONCRETE DECK SLAB:	1 1/2 IN
TOP AND SIDE OF SIDEWALK AND CURB:	2 IN
BOTTOM OF SIDEWALK AND CURB:	1 1/2 IN

B) SUBSTRUCTURE

ABUTMENT AND RETAINING WALL:	2 IN
PIER:	2 1/2 IN
CONCRETE CAST AGAINST EARTH:	3 IN

STRUCTURAL STEEL

A) ALL STRUCTURAL STEEL SHALL BE HOT-DIPPED GALVANIZED IN ACCORDANCE WITH ASTM A 153. ALL EMBEDDED ANCHOR PLATES OTHER THAN STAINLESS STEEL SHALL BE HOT-DIPPED GALVANIZED.

B) STRUCTURAL CARBON STEEL SHALL CONFORM TO THE REQUIREMENTS OF ASTM A 709, GRADE 36 OR GRADE 50 (AASHTO M 270, GRADE 36 OR GRADE 50).

C) HIGH-STRENGTH LOW-ALLOY STRUCTURAL STEEL SHALL CONFORM TO THE REQUIREMENTS OF ASTM A 709, GRADE 50 (AASHTO M 270, GRADE 50).

D) WELDED CONNECTIONS WILL BE MADE USING ELECTRODES WITH A MINIMUM TENSILE STRENGTH OF 70 KSI. ALL WELDS WILL BE AWS PREQUALIFIED WELDS UNLESS NOTED OR SHOWN OTHERWISE.

E) BOLTED CONNECTIONS ARE MADE WITH 7/8 IN DIAMETER ASTM A325 TYPE 1 BOLTS IN 15/16 IN DIAMETER HOLES, UNLESS NOTED OTHERWISE. ALL BOLTS NOT ENCASED IN CONCRETE SHALL BE GALVANIZED. ALLOWABLE SHEAR FOR SLIP CRITICAL CONNECTIONS PER AASHTO - CLASS A SURFACE ARE AS PER AASHTO TABLE 10.57A.

F) ANCHOR BOLTS: RAILING ANCHOR BOLTS SHALL BE STAINLESS STEEL TYPE 304 WITH A MINIMUM TENSILE STRENGTH OF 90 KSI. ALL OTHER ANCHOR BOLTS SHALL BE STAINLESS STEEL TYPE 304 WITH A MINIMUM TENSILE STRENGTH OF 70 KSI.

STAY CABLES

STRANDS SHALL BE 0.6 IN DIAMETER LOW RELAXATION SEVEN WIRE WELDLESS STRANDS CONFORMING TO ASTM A 416, GRADE 270.

STAYS SHALL BE PLACED INSIDE A WHITE, HIGH-DENSITY POLYETHYLENE (HDPE) PIPE MEETING THE REQUIREMENTS OF P.T.I. RECOMMENDATIONS (REFERENCE 10, SECTION 3.4.3.2.)

POST-TENSIONING - STRAND

ALL STRANDS SHALL CONFORM TO THE REQUIREMENTS OF ASTM A416 GRADE 270 FOR LOW RELAXATION, WELDLESS STRANDS.

STRANDS SHALL BE PLACED INSIDE A POLYETHYLENE (PE) PIPE.

POST-TENSIONING PARAMETERS:

MODULUS OF ELASTICITY:	28,500 KSI
FRICTION COEFFICIENT:	0.23
WOBBLE COEFFICIENT:	0.0002/FT
MAXIMUM STRESS DURING JACKING:	0.80 f's
MAXIMUM STRESS AT ANCHOR AFTER SEATING:	0.70 f's
MAXIMUM STRESS AT END OF SEATING LOSS ZONE:	0.75 f's
MAXIMUM STRESS AFTER LOSSES:	0.72 f's
ASSUMED ANCHOR SET:	1/4 IN

ALLOWABLE STRESSES/LOADS

REINFORCED CONCRETE

IN ACCORDANCE WITH AASHTO STANDARD SPECIFICATIONS FOR HIGHWAY BRIDGES.

STRUCTURAL STEEL

IN ACCORDANCE WITH AASHTO STANDARD SPECIFICATIONS FOR HIGHWAY BRIDGES.

POST-TENSIONED CONCRETE

A) TEMPORARY STRESSES BEFORE LOSSES DUE TO CREEP AND SHRINKAGE AT TIME OF TRANSFER:

COMPRESSION:	0.55 f'ci
TENSION AT TOP OF DECK:	$3\sqrt{f'c}$
TENSION AT BOTTOM OF DECK:	$6\sqrt{f'c}$

B) STRESSES AT SERVICE LEVEL AFTER ALL LOSSES HAVE OCCURRED:

COMPRESSION:	
PERMANENT SERVICE LOADS:	0.45 f'c
PERMANENT AND LIVE SERVICE LOADS:	0.60 f'c
TENSION AT TOP OF DECK:	$3\sqrt{f'c}$
TENSION AT BOTTOM OF DECK:	$6\sqrt{f'c}$

C) REPLACEMENT OF ANY ONE STAY CABLE WITH THE REDUCTION OF LIVE LOAD TO TWO LANES IN THE AREA OF THE CABLE UNDER EXCHANGE - ALLOWABLE STRESSES ARE 125% OF THE DESIGN VALUES.

D) LOSS OF ANY ONE STAY CABLE - ALLOWABLE STRESSES ARE 133% OF THE DESIGN VALUES UNDER FULL LIVE LOAD.

STAY CABLES

A) AASHTO GROUP I (INCLUDING "LOCKED IN" ERECTION STRESSES, AND CREEP AND SHRINKAGE):

B) OTHER AASHTO GROUPS (WITH NO OVERSTRESS FACTORS):

C) DURING CONSTRUCTION OF CABLE-REPLACEMENT:

FOUNDATION DATA

ABUTMENT SHALL BE SUPPORTED ON 10 3/4" AND 12" DIA. CONCRETE FILLED STEEL PIPE PILES DRIVEN TO ALLOWABLE BEARING CAPACITIES VARYING FROM 70 TONS TO 130 TONS AS SPECIFIED ON ABUTMENT DRAWINGS.

PIERS SHALL BE SUPPORTED ON 12" DIA. CONCRETE FILLED STEEL PIPE PILES DRIVEN TO AN ALLOWABLE BEARING CAPACITY OF 110 TONS FOR PIERS 1 AND 2, 120 TONS FOR PIERS 3 AND 4.

PYLONS SHALL BE SUPPORTED ON 12" DIA. CONCRETE FILLED STEEL PIPE PILES DRIVEN TO AN ALLOWABLE BEARING CAPACITY OF 185 TONS.

RECORD DRAWING

No.	Date	Revisions	By

HNTB CORPORATION

STATE OF WISCONSIN
DEPARTMENT OF TRANSPORTATION

STRUCTURE B-40-414C

Designed By	SL	Design Checked	TZ	Drawn By	SL	Plans Checked	AP

NORTH CABLE STAY GENERAL NOTES 2 OF 2

SHEET NC01b OF

STATE PROJECT I.D.	SHEET NUMBER
2235-00-70	8.645

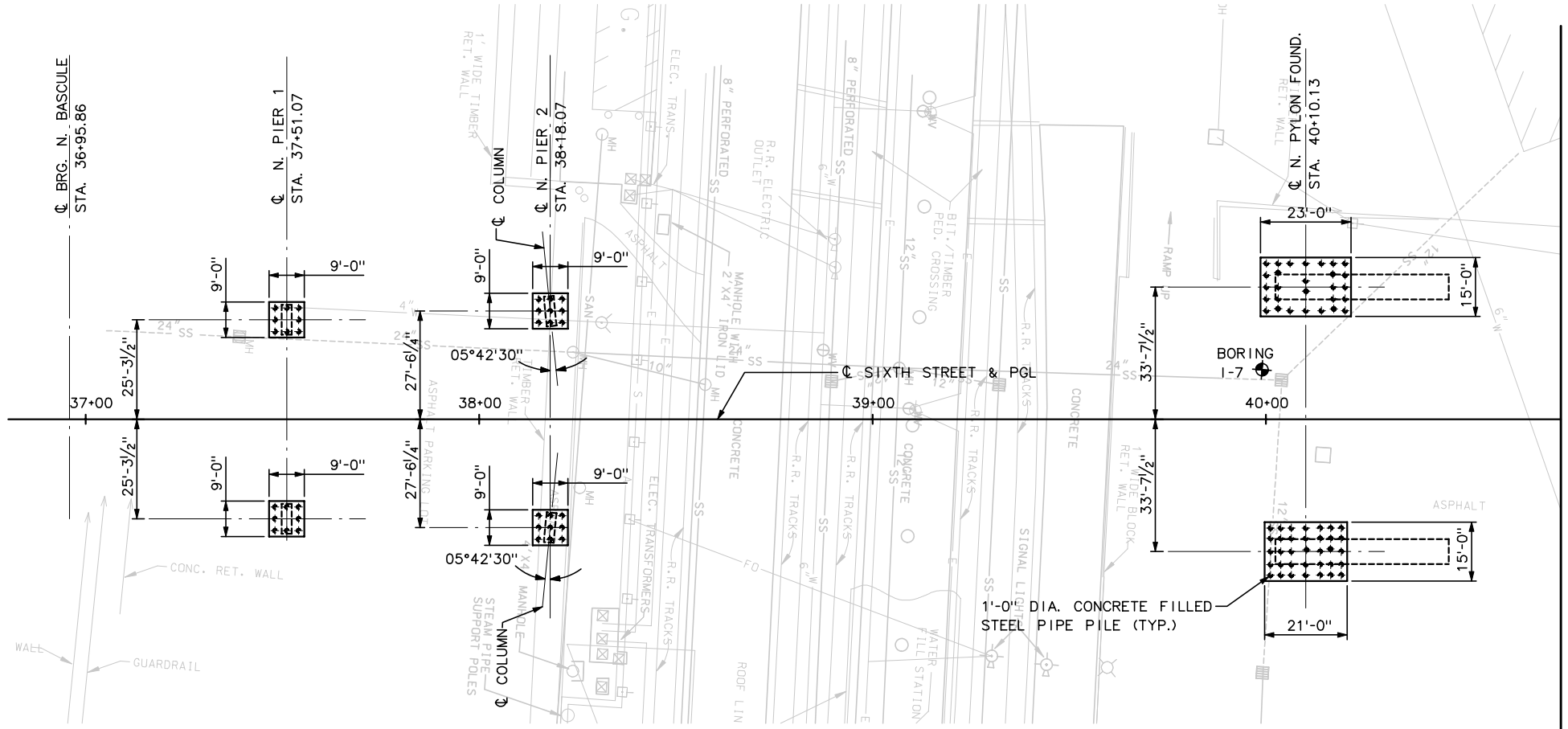

MATCH LINE STA 40+75

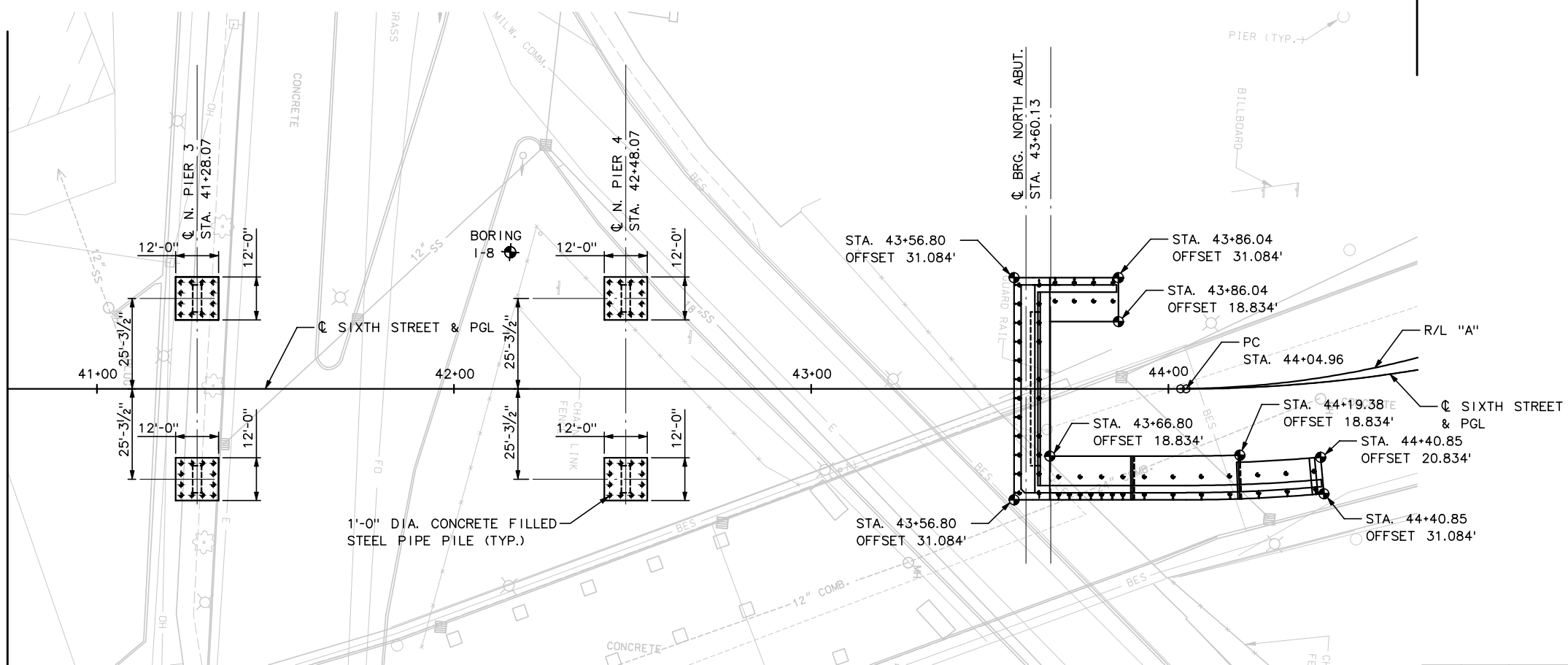

MATCH LINE STA 40+75

PLAN

1 " = 20'-0"

NOTES:

1. ALL FOUNDATIONS ARE PERPENDICULAR, PARALLEL AND/OR RADIAL TO ℄ SIXTH STREET AND PGL.
2. FOR ADDITIONAL ABUTMENT GEOMETRY, SEE ABUTMENT DWGS.
3. FOR ℄ SIXTH STREET AND PGL CURVE GEOMETRY, SEE CIVIL DWGS.

RECORD DRAWING

No.	Date	Revisions	By
1	4-01-02	REV ABUTMENT WW PILES	AP

HNTB CORPORATION

STATE OF WISCONSIN
DEPARTMENT OF TRANSPORTATION

STRUCTURE B-40-414C

Designed By	AP	Design Checked	BM	Drawn By	CE	Plans Checked	AP

NORTH CABLE STAY FOUNDATION LAYOUT

SHEET NC02 OF .

STATE PROJECT I.D.	SHEET NUMBER
2235-00-70	8.646

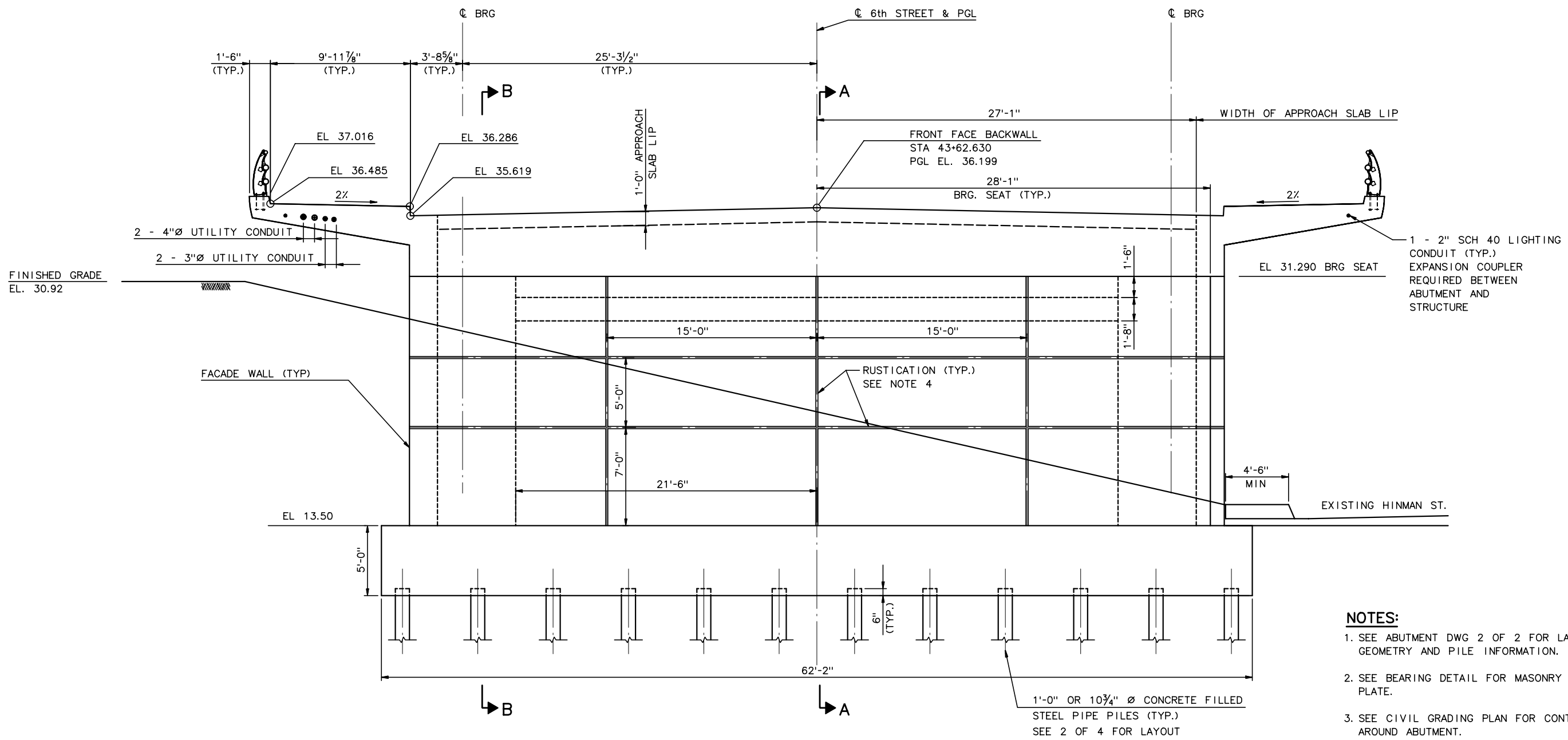

NORTH ABUTMENT ELEVATION

¼" = 1'-0"

NOTES:

1. SEE ABUTMENT DWG 2 OF 2 FOR LAYOUT GEOMETRY AND PILE INFORMATION.
2. SEE BEARING DETAIL FOR MASONRY PLATE.
3. SEE CIVIL GRADING PLAN FOR CONTOURS AROUND ABUTMENT.
4. SEE GEOMETRY SHEET 3 OF 4 FOR RUSTICATION DETAIL.
5. ROUGHEN BEARING SEAT WITH STIFF BRUSH TO APPROX. ⅛" AMPLITUDE PRIOR TO CONCRETE SETTING.

RECORD DRAWING

No.	Date	Revisions	By
3	8-10-01	ADD UTILITIES	AP
2	6-07-01	REV GEOMETRY, RUSTICATION	AP
1	5-17-01	ADD RUSTICATION	AP

HNTB CORPORATION

STATE OF WISCONSIN
DEPARTMENT OF TRANSPORTATION

STRUCTURE B-40-414C

Designed By	GD	Design Checked	AP	Drawn By	JE	Plans Checked	GD

NORTH CABLE STAY ABUTMENT GEOMETRY 1 OF 4

SHEET NC03 OF .

STATE PROJECT I.D.	SHEET NUMBER
2235-00-70	8.647

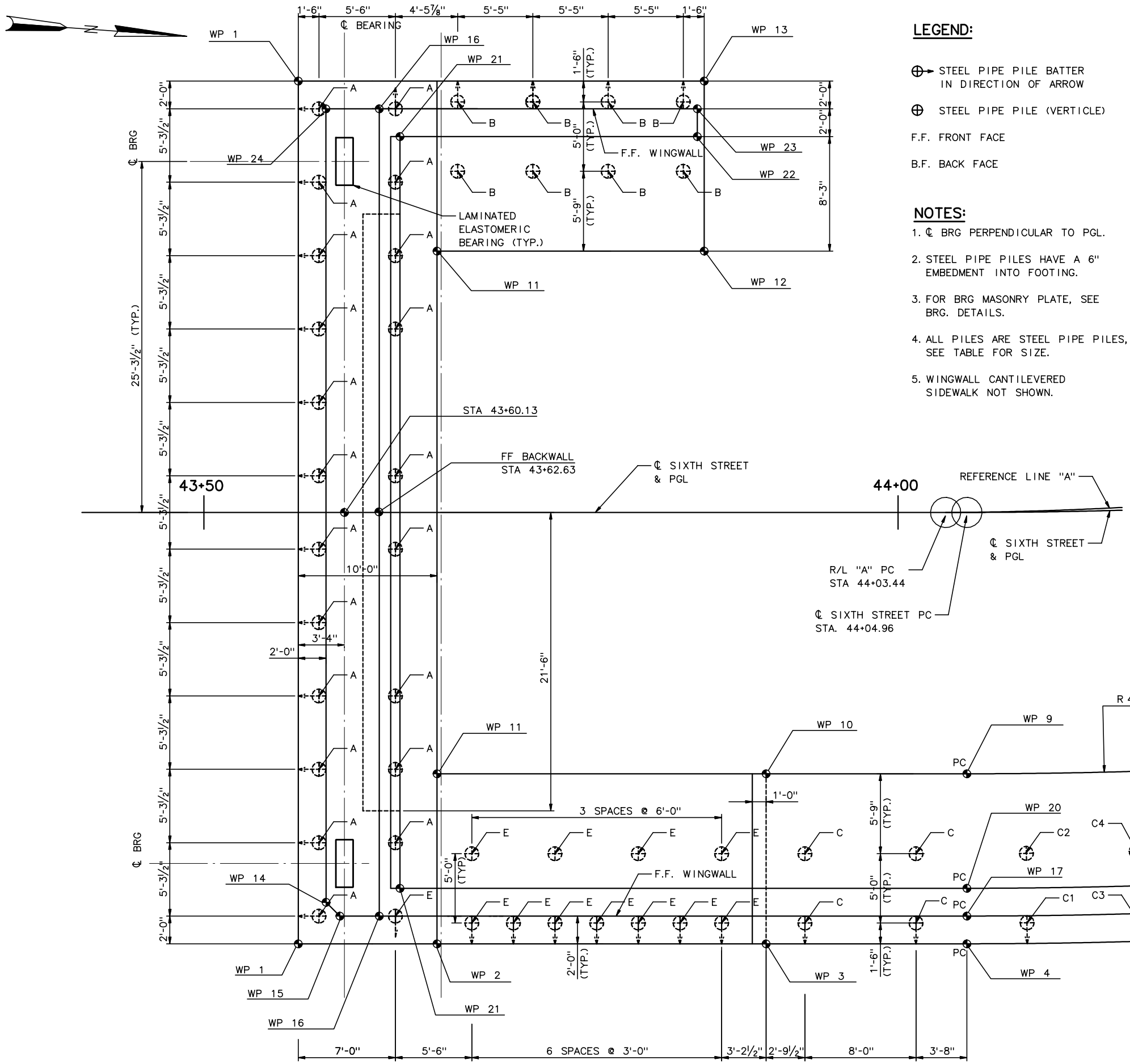

ABUTMENT PLAN

¼" = 1'-0"

LEGEND:

STEEL PIPE PILE BATTER IN DIRECTION OF ARROW

STEEL PIPE PILE (VERTICLE)

F.F. FRONT FACE

B.F. BACK FACE

NOTES:

1. ℄ BRG PERPENDICULAR TO PGL.
2. STEEL PIPE PILES HAVE A 6" EMBEDMENT INTO FOOTING.
3. FOR BRG MASONRY PLATE, SEE BRG. DETAILS.
4. ALL PILES ARE STEEL PIPE PILES, SEE TABLE FOR SIZE.
5. WINGWALL CANTILEVERED SIDEWALK NOT SHOWN.

WORK POINT GEOMETRY

WK POINT	STATIONS	OFFSET
1	43+56.80	31.084'
2	43+66.80	31.084'
3	43+90.50	31.084'
4	44+04.96	31.084'
5	44+19.38	31.084'
6	44+40.85	31.084'
7	44+40.85	20.834'
8	44+19.38	18.834'
9	44+04.96	18.834
10	43+90.50	18.834'
11	43+66.80	18.834'
12	43+86.04	18.834'
13	43+86.04	31.084'
14	43+58.80	28.084'
15	43+59.80	29.084'
16	43+62.63	29.084'
17	44+04.96	29.084'
18	44+40.42	29.084'
19	44+40.42	27.084'
20	44+04.96	27.084'
21	43+64.13	27.084'
22	43+85.54	27.084'
24	43+58.80	29.084'
23	43+85.54	29.084'

PILE GEOMETRY IN CURVE

PILE	STATIONS	OFFSET
C1	44+09.00	29.583'
C2	44+09.00	24.583'
C3	44+16.45	29.583'
C4	44+16.45	24.583'
D1	44+23.90	29.583'
D2	44+23.90	24.583'
D3	44+31.35	29.583'
D4	44+31.35	24.583'
D5	44+38.80	29.583'
D6	44+38.80	24.583'

PILE CAPACITY

PILE	PIPE DIAM.	TONS	BATTER
A	12	130	3.5/12
B	12	125	3.5/12
C	10¾	90	3.5/12
D	10¾	70	1.5/12
E	10¾	80	3.5/12

RECORD DRAWING

No.	Date	Revisions	By
2	4-01-02	REV EAST WW PILES	AP
1	6-07-01	REV BRG LABEL	AP

HNTB CORPORATION

STATE OF WISCONSIN
DEPARTMENT OF TRANSPORTATION

STRUCTURE B-40-414C

Designed By GD | Design Checked AP | Drawn By JE | Plans Checked GD

NORTH CABLE STAY
ABUTMENT GEOMETRY
2 OF 4

SHEET NC04 OF .

STATE PROJECT I.D.	SHEET NUMBER
2235-00-70	8.648

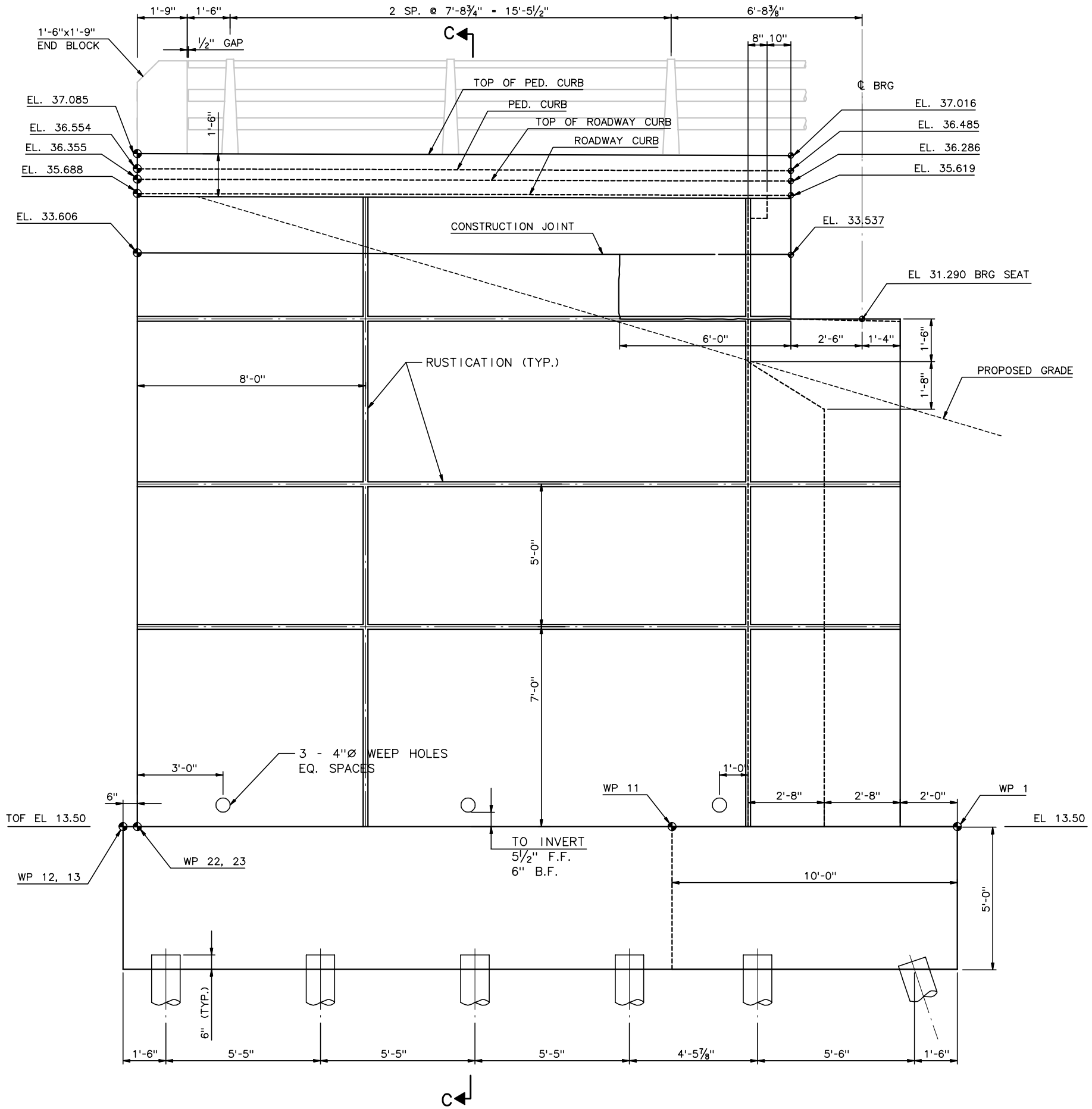

WEST WALL ELEVATION

½" = 1'-0"

NOTES:

1. FOR ABUTMENT PLAN VIEW GEOMETRY AND WORKING POINTS, SEE GEOMETRY SHEET 2 OF 4.
2. FOR PILE LAYOUT, SEE GEOMETRY SHEET 2 OF 4.
3. FOR REINFORCEMENT, SEE ABUTMENT DETAIL SHEETS 1 THRU 8.
4. FOR BRIDGE RAILING, SEE 3 RAIL BRIDGE RAILING DWG.
5. FOR SECTION C, SEE ABUTMENT DETAILS SHEET 3 OF 8.

LEGEND:

F.F. FRONT FACE

B.F. BACK FACE

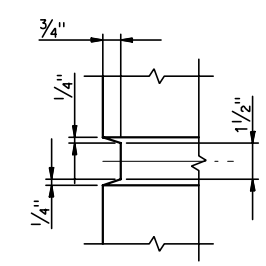

RUSTICATION DETAIL

3" = 1'-0"

RECORD DRAWING

No.	Date	Revisions	By
5	0-21-01	REV RAILING SPACING	AP
4	0-17-01	REV RAILING, END POST	AP
3	8-09-01	REV RAILING SPACING	AP
2	6-06-01	REV GEOMETRY, RUSTICATION	AP
1	5-17-01	ADD RUSTICATION	AP

HNTB CORPORATION

STATE OF WISCONSIN
DEPARTMENT OF TRANSPORTATION

STRUCTURE B-40-414C

Designed By	AP	Design Checked	DG	Drawn By	JE	Plans Checked	AP

NORTH CABLE STAY
ABUTMENT GEOMETRY
3 OF 4

SHEET NC05 OF .

J:\cadd\FF31185\Dgn\AS BUILT\NORTH CABLESTAY\NC05-AbGeo3.dgn 02/12/03 11:58:24 AM

STATE PROJECT I.D.	SHEET NUMBER
2235-00-70	8.649

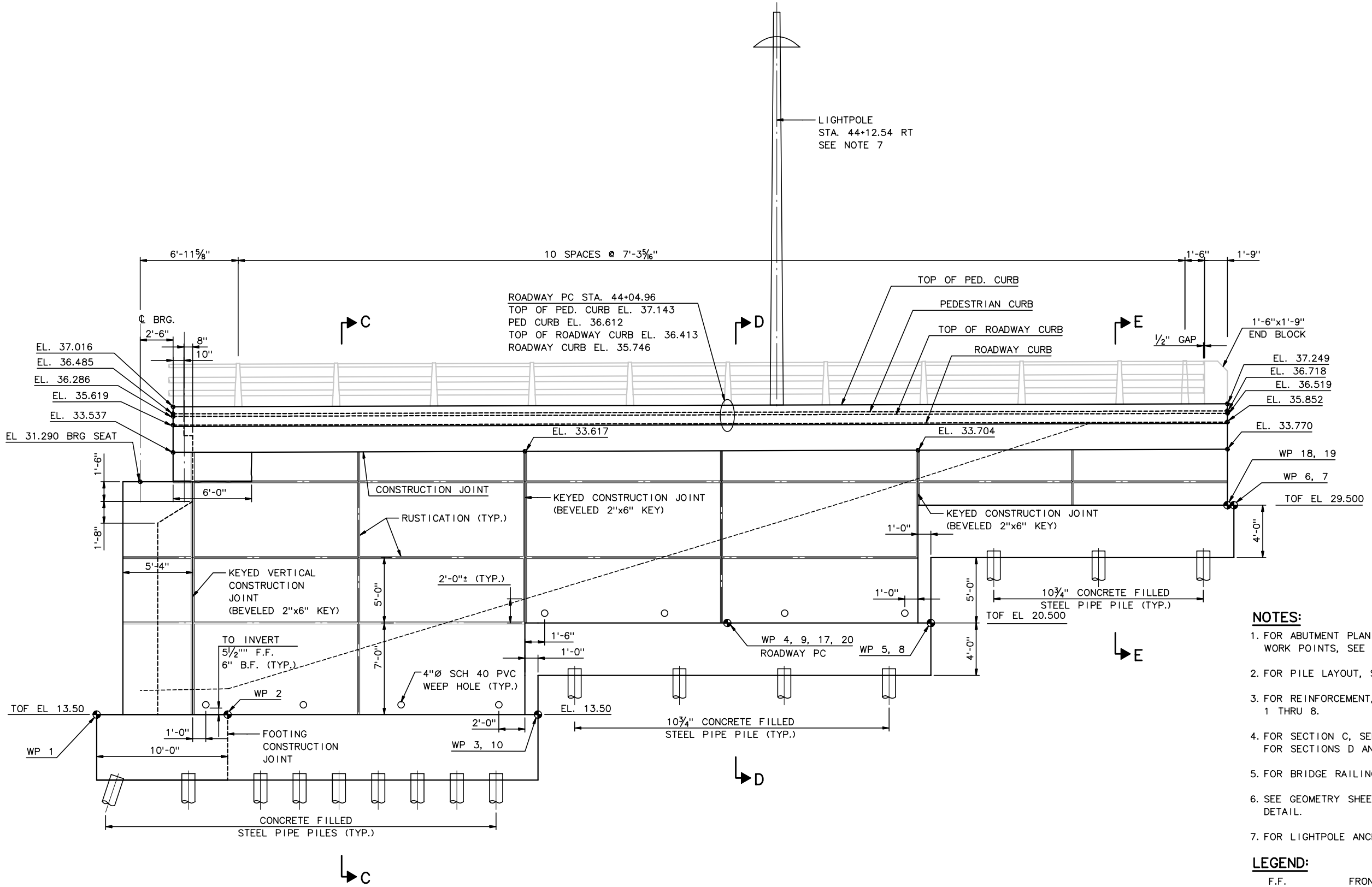

EAST WALL ELEVATION

¼" = 1'-0"

NOTES:

1. FOR ABUTMENT PLAN VIEW GEOMETRY AND WORK POINTS, SEE GEOMETRY SHEET 2 OF 4.
2. FOR PILE LAYOUT, SEE GEOMETRY SHEET 2 OF 4.
3. FOR REINFORCEMENT, SEE ABUTMENT DETAILS 1 THRU 8.
4. FOR SECTION C, SEE DETAILS SHEET 3 OF 8 FOR SECTIONS D AND E, SEE DETAIL SHEET 4 OF 8.
5. FOR BRIDGE RAILING, SEE 3 RAIL BRIDGE RAIL DWG.
6. SEE GEOMETRY SHEET 3 OF 4 FOR RUSTICATION DETAIL.
7. FOR LIGHTPOLE ANCHORAGE DETAILS, SEE NC66.

LEGEND:

F.F. FRONT FACE

B.F. BACK FACE

RECORD DRAWING

No.	Date	Revisions	By
5	4-01-02	REV PILE LAYOUT	AP
4	10-17-01	REV RAILING, END POST	AP
3	8-29-01	REV RAILING, ADD LIGHTPOLE	AP
2	8-09-01	REV RAILING SPACING	AP
1	6-07-01	REV GEOMETRY, RUSTICATION	AP

HNTB CORPORATION

STATE OF WISCONSIN
DEPARTMENT OF TRANSPORTATION

STRUCTURE B-40-414C

Designed By	DG	Design Checked	AP	Drawn By	JE	Plans Checked	AP

NORTH CABLE STAY
ABUTMENT GEOMETRY
4 OF 4

SHEET NC06 OF .

J:\cadd\FF31185\Dgn\AS BUILT\NORTH CABLESTAY\NC06-AbGeo4.dgn 02/12/03 11:59:46 AM

STATE PROJECT I.D.	SHEET NUMBER
2235-00-70	8.650

NOTES:

1. ALL REINFORCEMENT IS ASTM A615 OR ASTM A996, GRADE 60.
2. ALL REINFORCEMENT IS EPOXY COATED, EXCEPT BARS DESIGNATED BY Fxxx AND PLxxx.
3. SYMMETRICAL BARS ARE LABELED "SYM".
4. SEE ABUTMENT DETAILS SHEET 2 OF 8 FOR CONTINUATION OF MATCH LINE A.
5. FOR WORK POINTS SEE ABUTMENT GEOMETRY SHEET 2 OF 4.

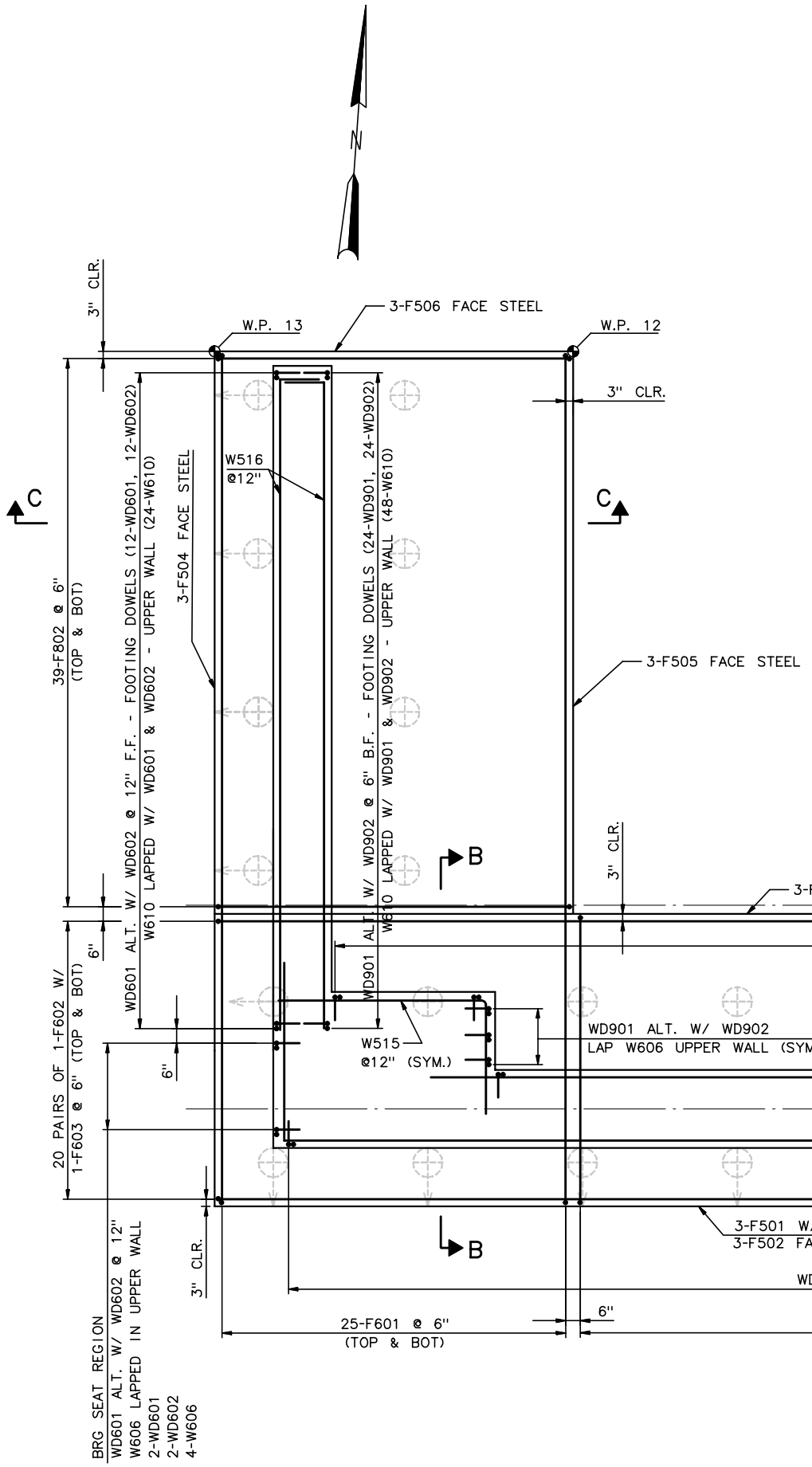

PARTIAL ABUTMENT PLAN

3/8" = 1'-0"

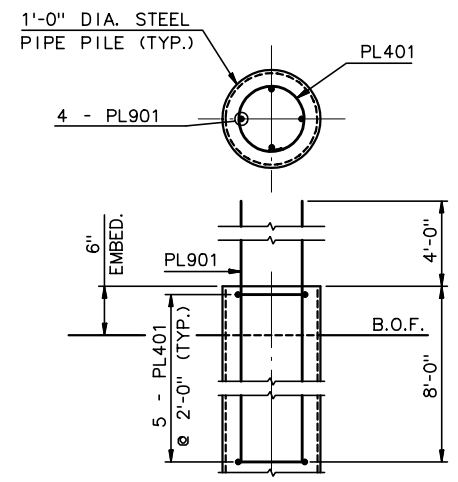

12"Ø PILE REINF. DETAIL

1" = 1'-0"

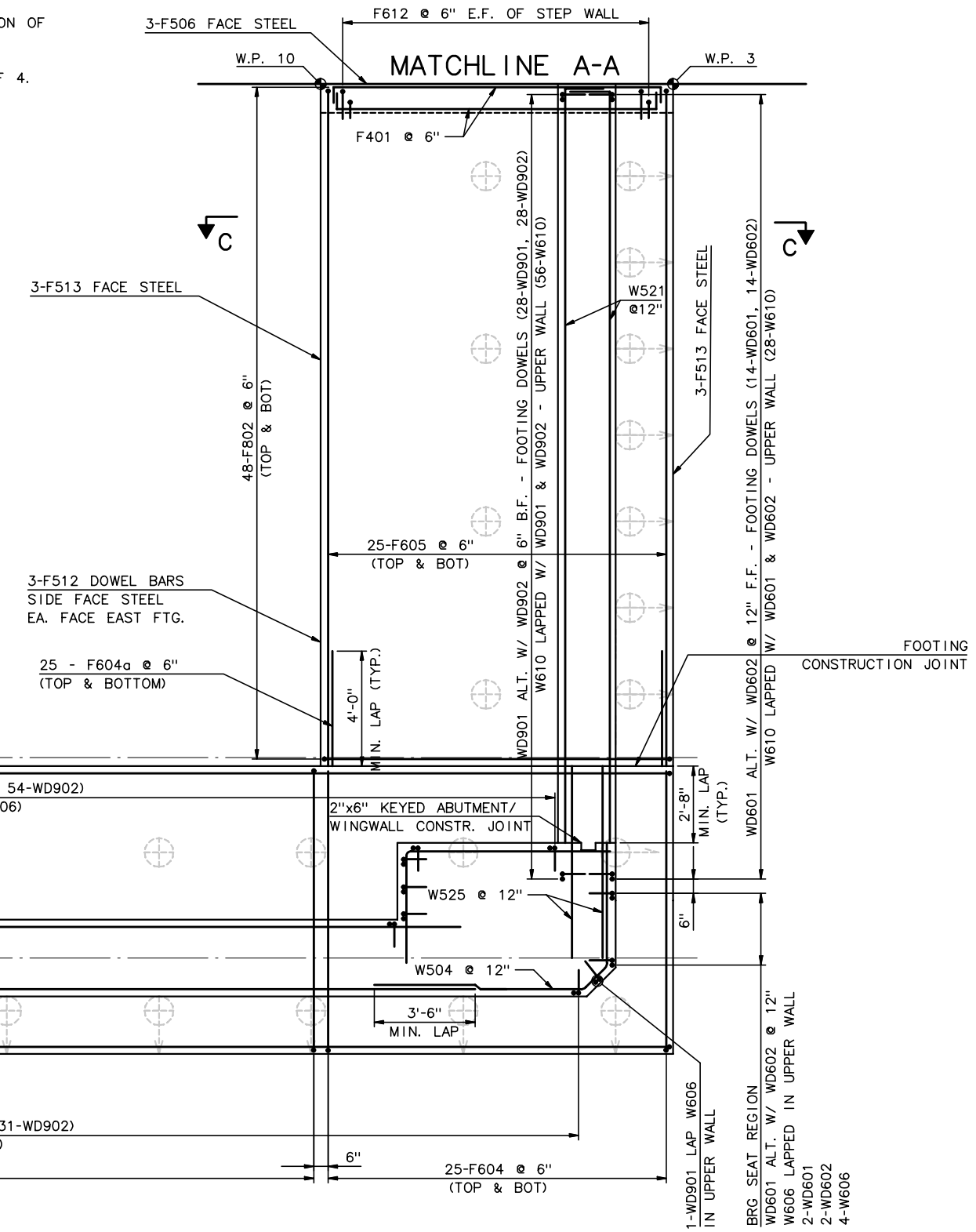

RECORD DRAWING

No.	Date	Revisions	By
1	4-01-02	REV EAST WW PILES	AP

HNTB CORPORATION

STATE OF WISCONSIN
DEPARTMENT OF TRANSPORTATION

STRUCTURE B-40-414C

Designed By	GD	Design Checked	AP	Drawn By	JE	Plans Checked	AP

NORTH CABLE STAY
ABUTMENT DETAILS
1 OF 8

SHEET NC07 OF .

j:\cadd\ff31185\dgn\as built\north cablestay\nc07-abdet1.dgn 02/11/03 01:51:39 PM

STATE PROJECT I.D.	SHEET NUMBER
2235-00-70	8.651

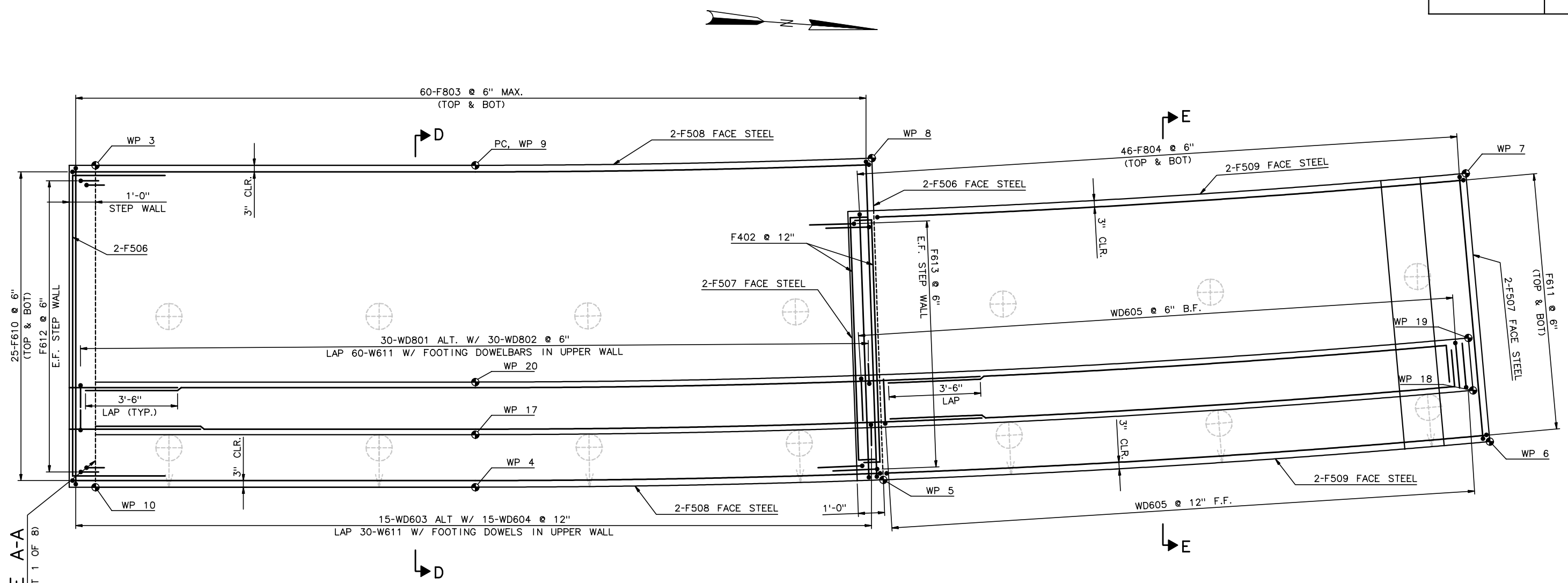

ABUTMENT PLAN II

1/2" = 1'-0"

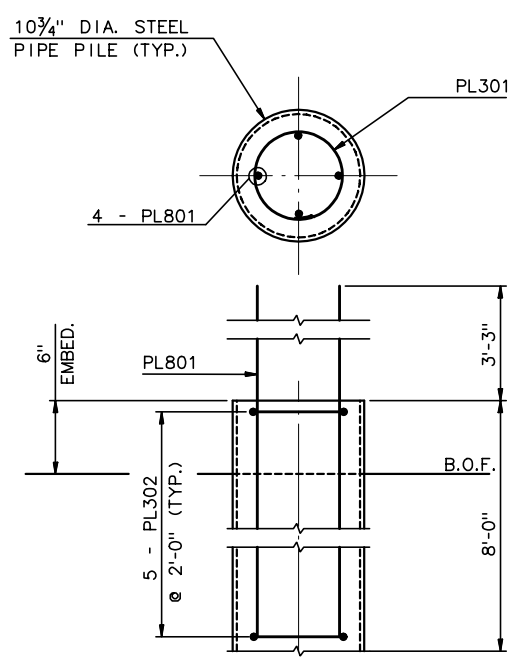

10¾"Ø PILE REINF. DETAIL

1½" = 1'-0"

NOTES:

1. ALL REINFORCEMENT IS ASTM A615 OR ASTM A996, GRADE 60.
2. ALL REINFORCEMENT IS EPOXY COATED, EXCEPT BARS DESIGNATED BY Fxxx AND PLxxx.
3. FOR LAYOUT GEOMETRY AND WORK POINTS SEE ABUTMENT GEOMETRY SHEET 2 OF 4.

RECORD DRAWING

No.	Date	Revisions	By

HNTB CORPORATION

STATE OF WISCONSIN
DEPARTMENT OF TRANSPORTATION

STRUCTURE B-40-414C

Designed By	GD	Design Checked	AP	Drawn By	JE	Plans Checked	AP

NORTH CABLE STAY
ABUTMENT DETAILS
2 OF 8

SHEET NC08 OF .

STATE PROJECT I.D.	SHEET NUMBER
2235-00-70	8.652

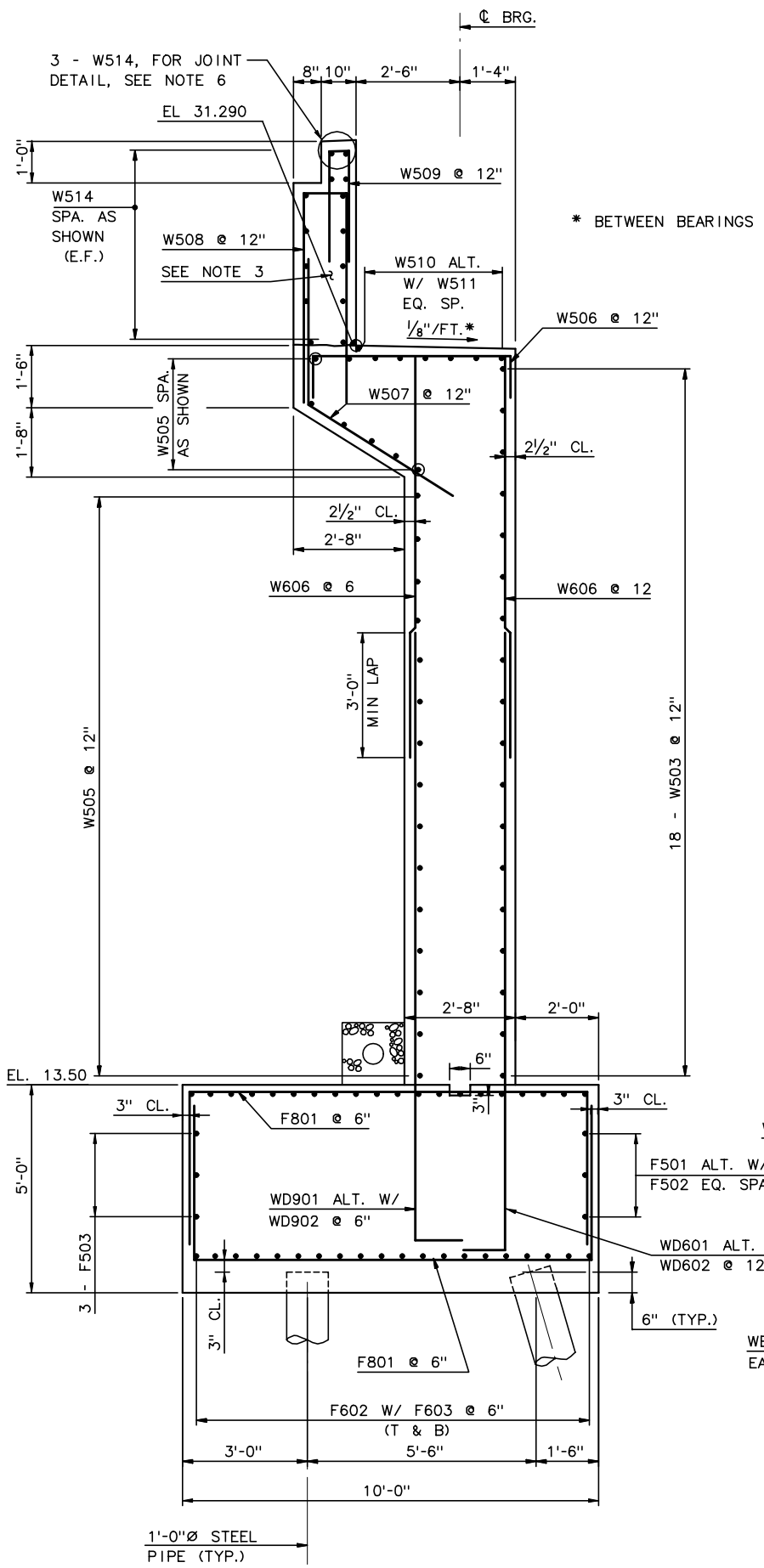

SECTION A-A

½" = 1'-0"

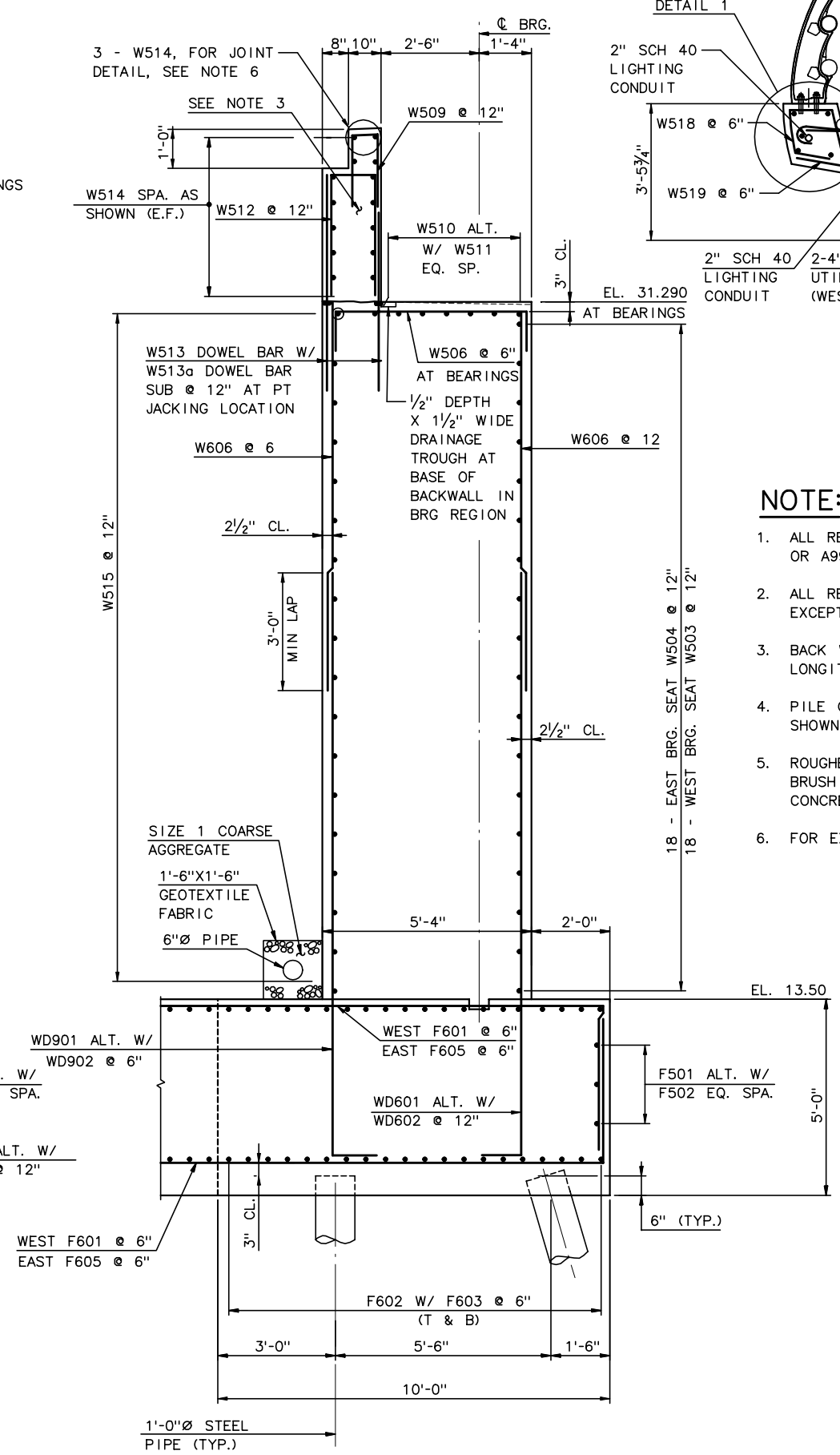

SECTION B-B

½" = 1'-0"

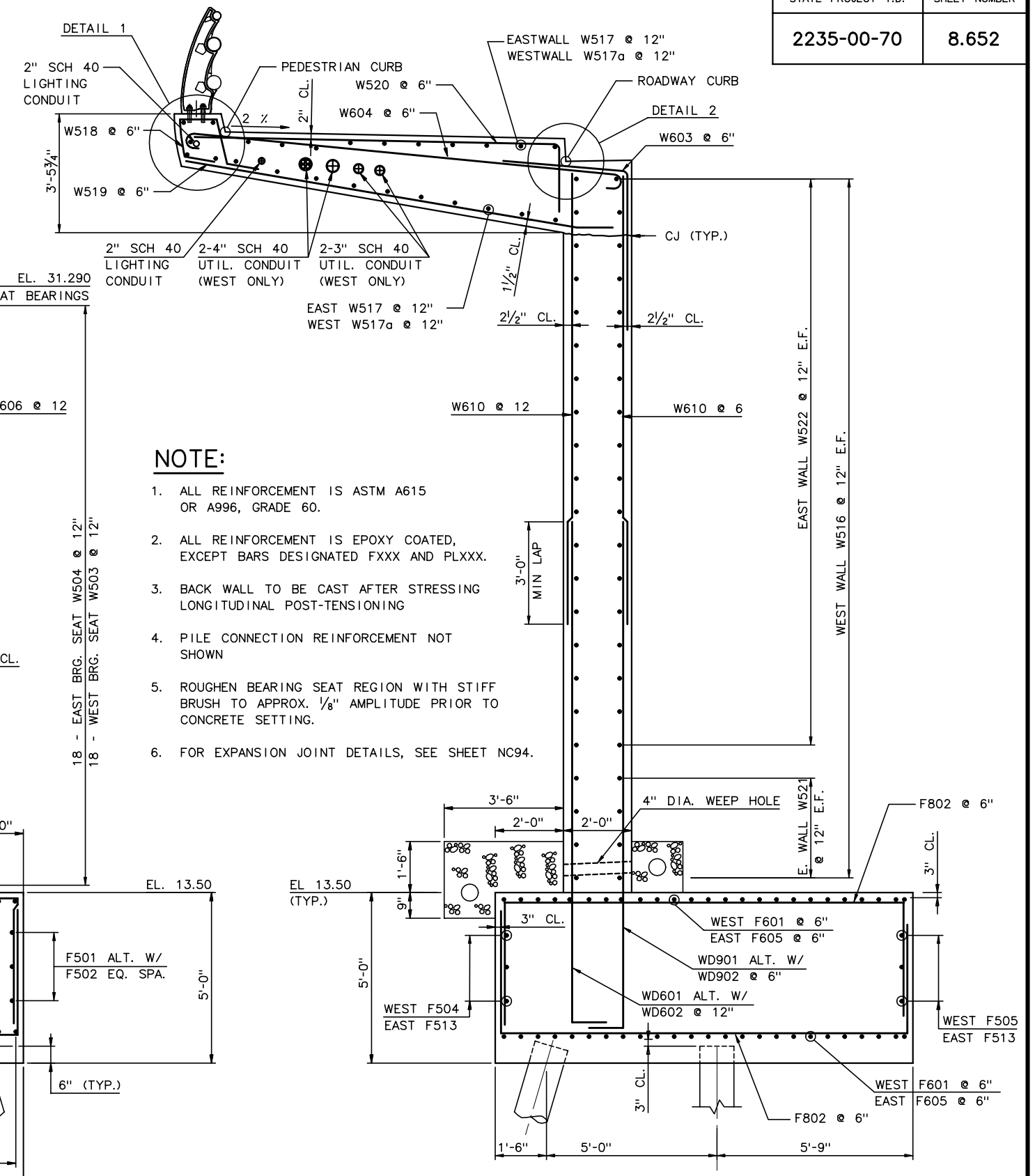

SECTION C-C

½" = 1'-0"

NOTE:

1. ALL REINFORCEMENT IS ASTM A615 OR A996, GRADE 60.
2. ALL REINFORCEMENT IS EPOXY COATED, EXCEPT BARS DESIGNATED FXXX AND PLXXX.
3. BACK WALL TO BE CAST AFTER STRESSING LONGITUDINAL POST-TENSIONING
4. PILE CONNECTION REINFORCEMENT NOT SHOWN
5. ROUGHEN BEARING SEAT REGION WITH STIFF BRUSH TO APPROX. 1/8" AMPLITUDE PRIOR TO CONCRETE SETTING.
6. FOR EXPANSION JOINT DETAILS, SEE SHEET NC94.

RECORD DRAWING

No.	Date	Revisions	By
1	12/5/01	Add Utilities	AP

HNTB CORPORATION

STATE OF WISCONSIN
DEPARTMENT OF TRANSPORTATION

STRUCTURE B-40-414A

Designed By	GD	Design Checked	AP	Drawn By	JE	Plans Checked	AP

NORTH CABLE STAY ABUTMENT DETAILS 3 OF 8

SHEET NC09 OF .

STATE PROJECT I.D.	SHEET NUMBER
2235-00-70	8.653

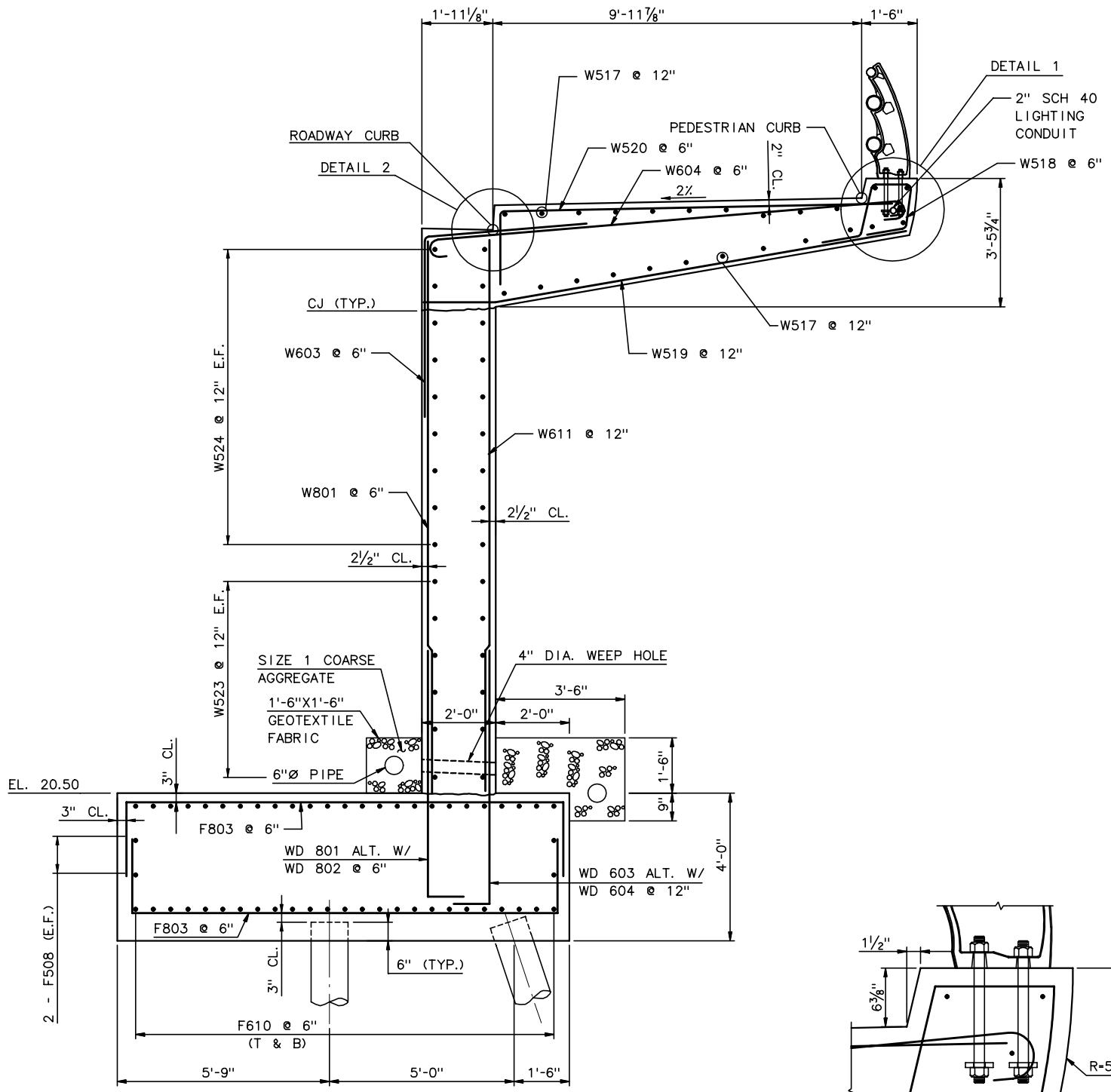

SECTION D-D

½" = 1'-0"

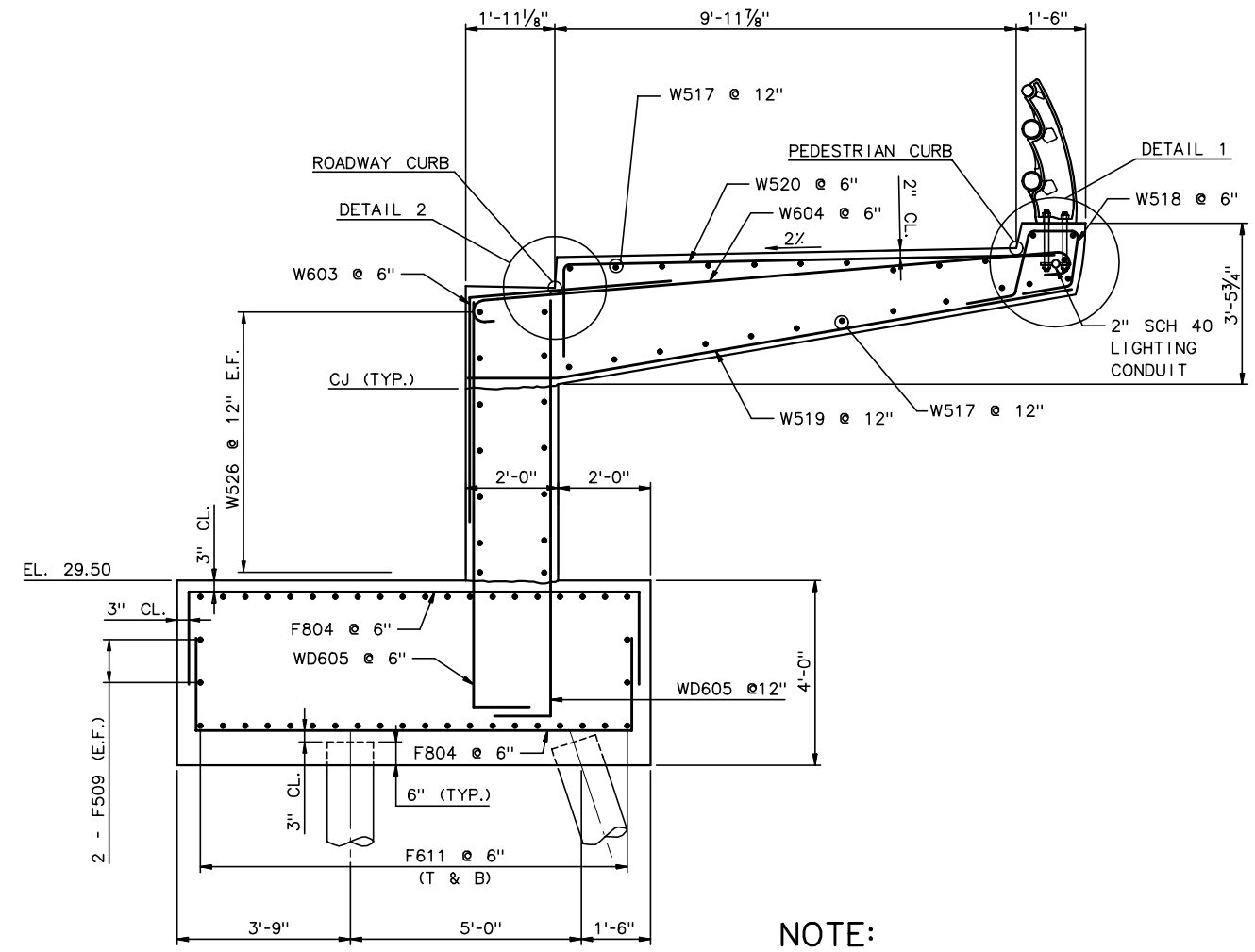

SECTION E-E

½" = 1'-0"

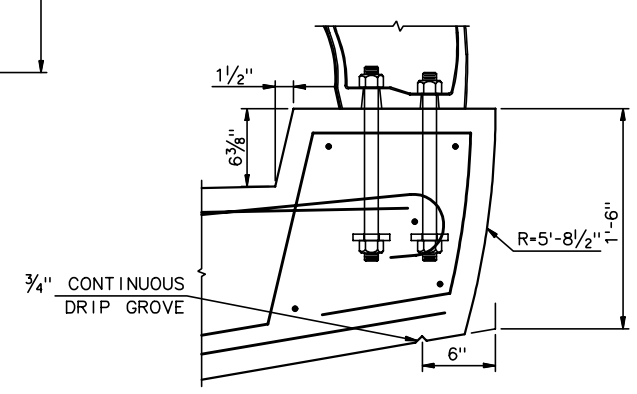

DETAIL 1

1½" = 1'-0"

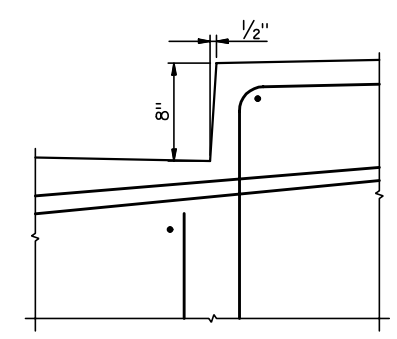

DETAIL 2

1½" = 1'-0"

NOTE:

1. ALL REINFORCEMENT IS ASTM A615 OR A996, GRADE 60.
2. ALL REINFORCEMENT IS EPOXY COATED, EXCEPT BARS DESIGNATED FXXX AND PLXXX.
3. BACK WALL TO BE CAST AFTER STRESSING LONGITUDINAL POST-TENSIONING
4. COVER: 3" BOT, TOP AND SIDES OF FOOTING
   2½" ABUTMENT WALLS
   2" TOP OF SIDEWALK
   1½" BOTTOM OF SIDEWALK
5. FOR RAILING ANCHOR BOLT DETAILS, SEE THREE TUBE RAILING SHEET.
6. PILE CONNECTION REINFORCEMENT NOT SHOWN.

RECORD DRAWING

No.	Date	Revisions	By

HNTB CORPORATION

STATE OF WISCONSIN
DEPARTMENT OF TRANSPORTATION

STRUCTURE B-40-414C

Designed By	GD	Design Checked	AP	Drawn By	JE	Plans Checked	AP

NORTH CABLE STAY ABUTMENT DETAILS 4 OF 8

SHEET NC10 OF .

STATE PROJECT I.D.	SHEET NUMBER
2235-00-70	8.654

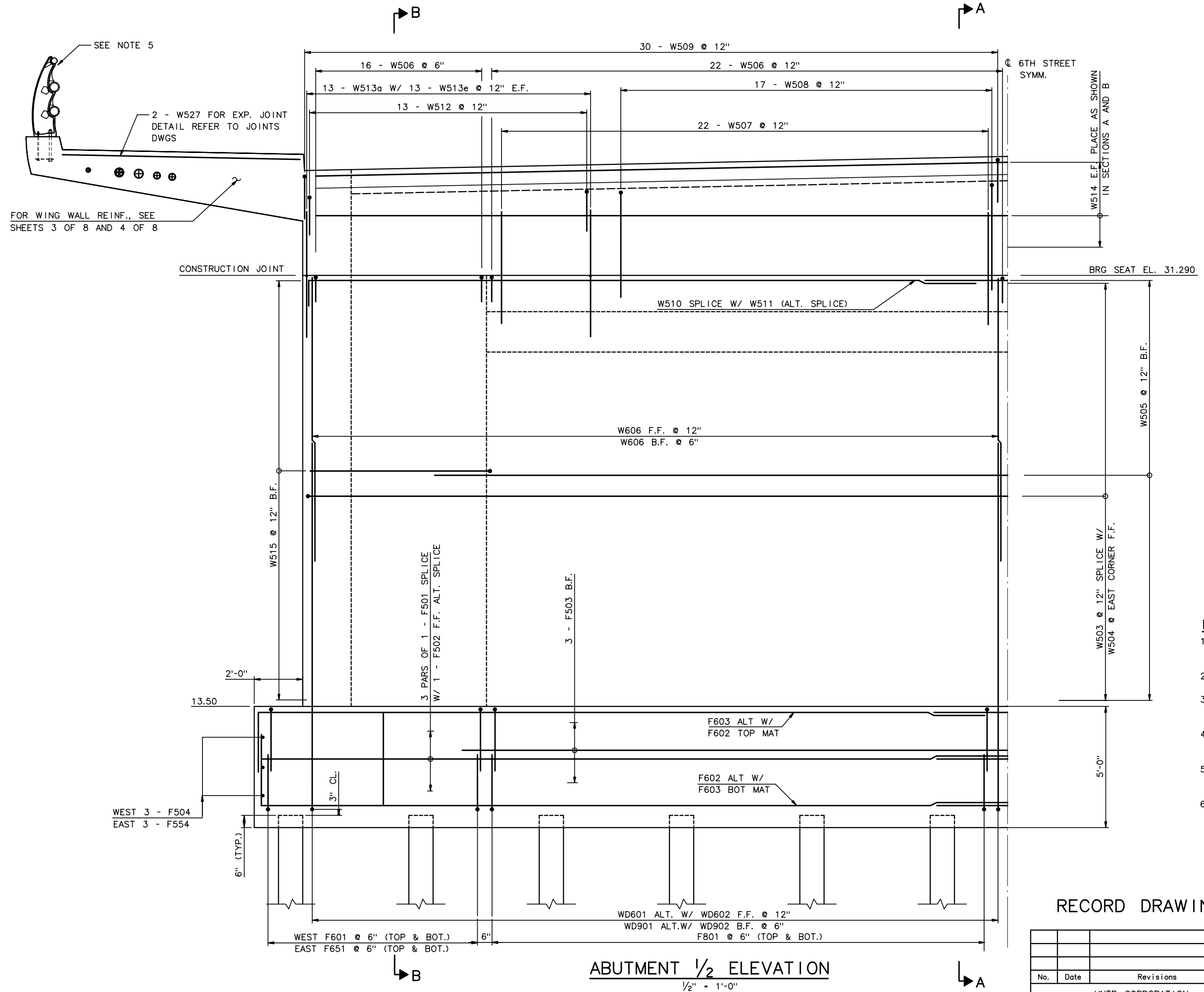

ABUTMENT 1/2 ELEVATION

1/2" = 1'-0"

NOTES:

1. FOR LOCATION OF SECTIONS A-A AND B-B SEE SHEET 4 OF 4
2. REINFORCEMENT IS SYMMETRICAL ABOUT ℄
3. ALL REINFORCEMENT IS ASTM A615 OR A996, GRADE 60
4. ALL REINFORCEMENT IS EPOXY COATED EXCEPT BARS DESIGNATED FXXX AND FPXXX
5. FOR RAILING DETAILS, SEE THREE TUBE RAILING SHEET.
6. ROUGHEN BEARING SEAT WITH STIFF BRUSH TO APPROX. 1/8" AMPLITUDE PRIOR TO CONCRETE SETTING.

RECORD DRAWING

No.	Date	Revisions	By

HNTB CORPORATION

STATE OF WISCONSIN
DEPARTMENT OF TRANSPORTATION

STRUCTURE B-40-414C

Designed By	GD	Design Checked	AP	Drawn By	JE	Plans Checked	AP

NORTH CABLE STAY
ABUTMENT DETAILS
5 OF 8

SHEET NC11 OF

STATE PROJECT I.D.	SHEET NUMBER
2235-00-70	8.655

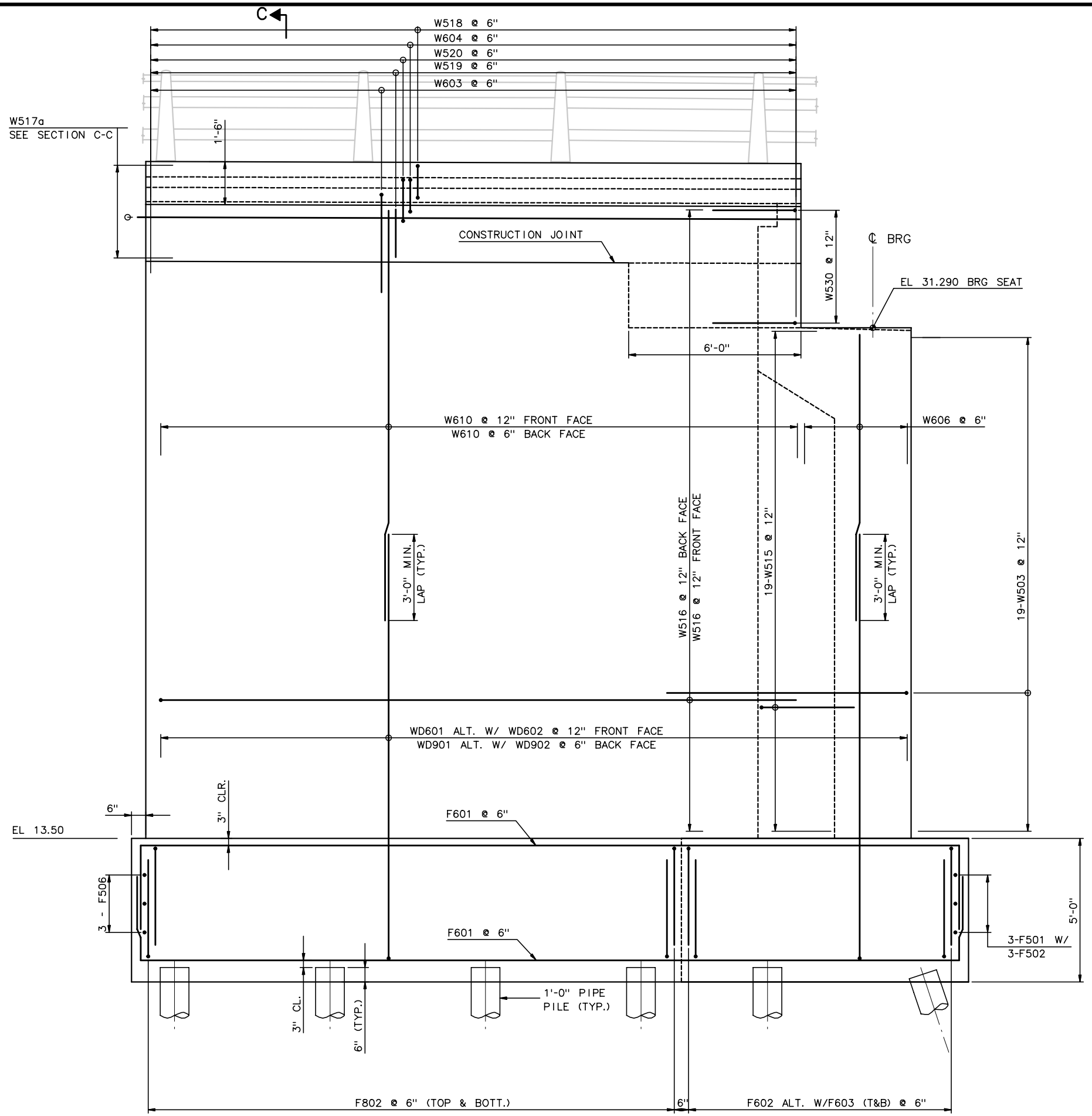

WEST WING WALL ELEVATION

½" = 1'-0"

NOTE:

1. ALL REINFORCEMENT IS ASTM A615 OR A996, GRADE 60.
2. ALL REINFORCEMENT IS EPOXY COATED, EXCEPT BARS DESIGNATED FXXX AND PLXXX.
3. FOR WEST WING WALL GEOMETRY SEE ABUTMENT GEOMETRY SHEET 3 OF 4.
4. FOR PILE LAYOUT, SEE ABUTMENT GEOMETRY SHEET 2 OF 4.
5. FOR RAILING DETAILS SEE 3 RAIL BRIDGE RAILING DWG.
6. FOOTING CLEAR COVER = 3".
   WALL CLEAR COVER = 2½".

RECORD DRAWING

No.	Date	Revisions	By

HNTB CORPORATION

STATE OF WISCONSIN
DEPARTMENT OF TRANSPORTATION

STRUCTURE B-40-414C

Designed By	GD	Design Checked	AP	Drawn By	JE	Plans Checked	AP

NORTH CABLE STAY ABUTMENT DETAILS 6 OF 8

SHEET NC12 OF .

j:\cadd\ff31185\dgn\as built\north cablestay\nc12-abdet6.dgn 02/11/03 01:51:57 PM

STATE PROJECT I.D.	SHEET NUMBER
2235-00-70	8.656

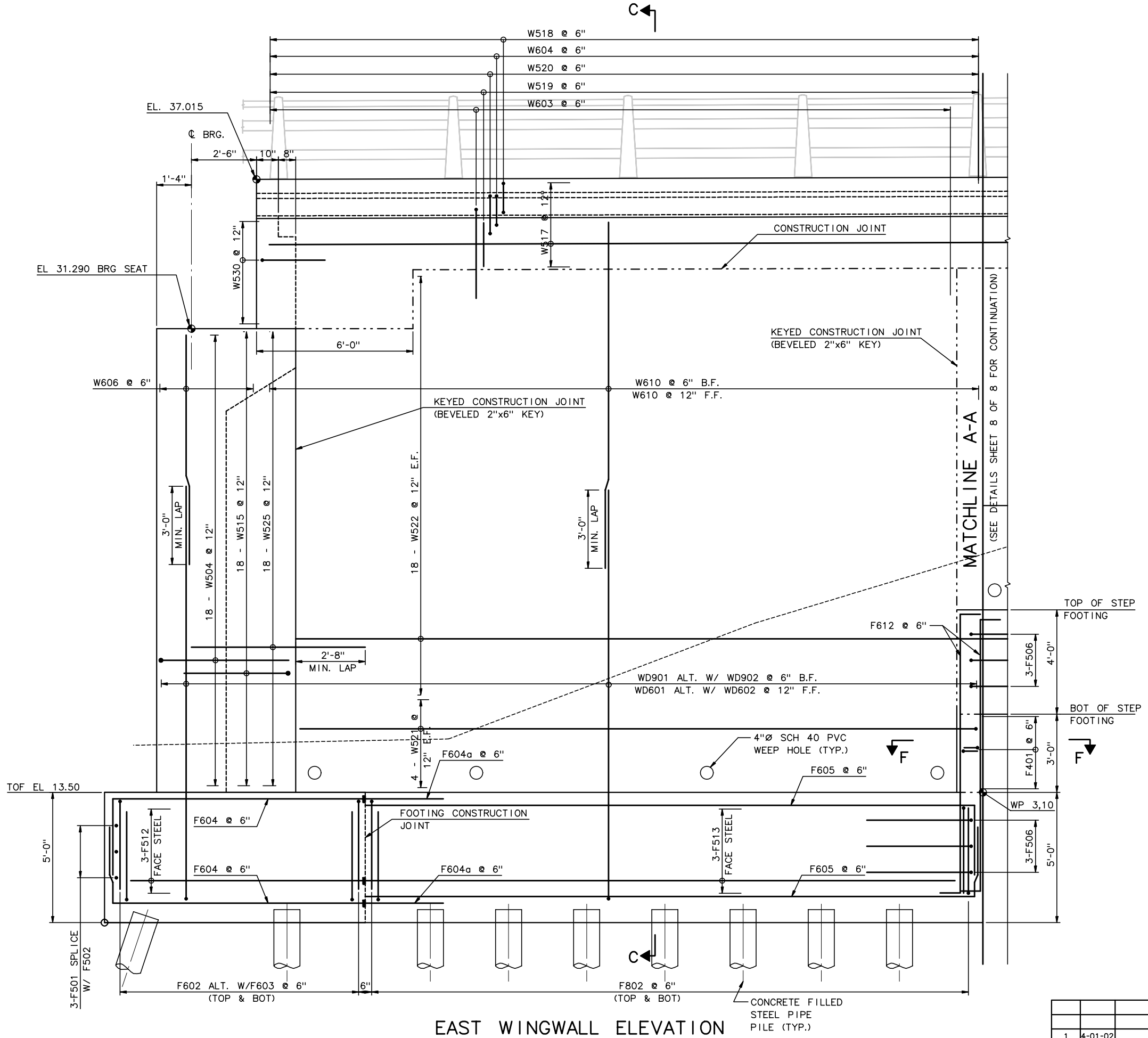

EAST WINGWALL ELEVATION

½" = 1'-0"

NOTES:

1. ALL REINFORCEMENT IS ASTM A615 OR A996, GRADE 60.
2. ALL REINFORCEMENT IS EPOXY COATED, EXCEPT BARS DESIGNATED FXXX AND PLXXX.
3. BACK WALL TO BE CAST AFTER STRESSING LONGITUDINAL POST-TENSIONING
4. COVER: 3" BOT, TOP AND SIDES OF FOOTING
   2½" ABUTMENT WALLS
   2" TOP OF SIDEWALK
   1½" BOTTOM OF SIDEWALK
5. FOR RAILING ANCHOR BOLT DETAILS, SEE THREE TUBE RAILING SHEET.
6. FOR EAST WINGWALL GEOMETRY, SEE ABUTMENT GEOMETRY SHEET 4 OF 4.
7. FOR SECTION C-C SEE SHEET AD3.

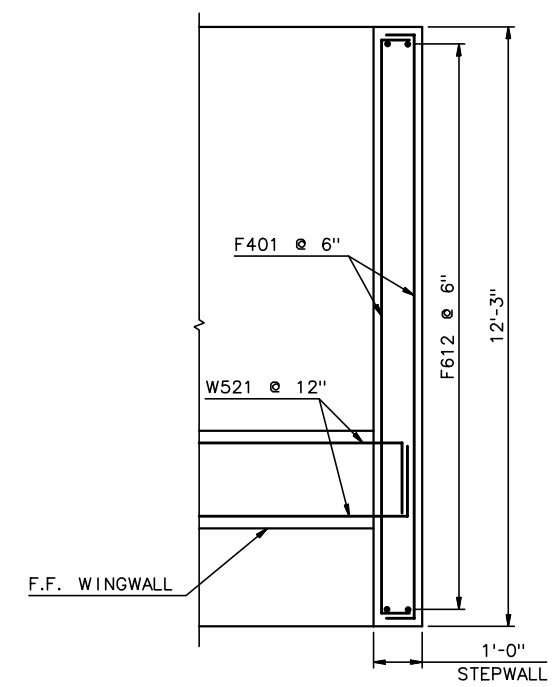

SECTION F-F

½" = 1'-0"

RECORD DRAWING

No.	Date	Revisions	By
1	4-01-02	REV WW PILES	AP

HNTB CORPORATION

STATE OF WISCONSIN
DEPARTMENT OF TRANSPORTATION

STRUCTURE B-40-414C

Designed By	GD	Design Checked	AP	Drawn By	JE	Plans Checked	AP

NORTH CABLE STAY ABUTMENT DETAILS 7 OF 8

SHEET NC13 OF .

STATE PROJECT I.D.	SHEET NUMBER
2235-00-70	8.657

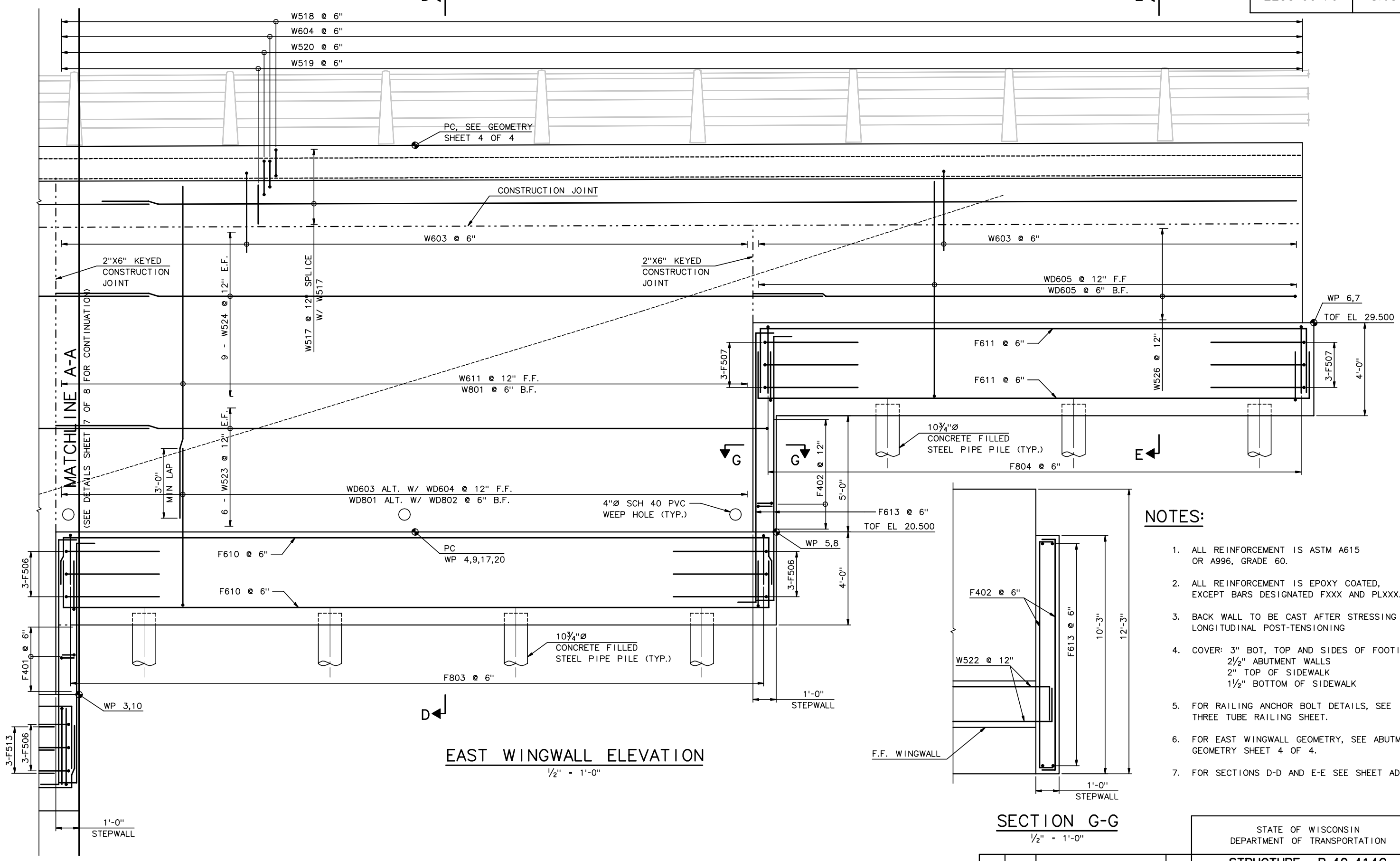

EAST WINGWALL ELEVATION

½" = 1'-0"

SECTION G-G

½" = 1'-0"

NOTES:

1. ALL REINFORCEMENT IS ASTM A615 OR A996, GRADE 60.
2. ALL REINFORCEMENT IS EPOXY COATED, EXCEPT BARS DESIGNATED FXXX AND PLXXX.
3. BACK WALL TO BE CAST AFTER STRESSING LONGITUDINAL POST-TENSIONING
4. COVER: 3" BOT, TOP AND SIDES OF FOOTING
   2½" ABUTMENT WALLS
   2" TOP OF SIDEWALK
   1½" BOTTOM OF SIDEWALK
5. FOR RAILING ANCHOR BOLT DETAILS, SEE THREE TUBE RAILING SHEET.
6. FOR EAST WINGWALL GEOMETRY, SEE ABUTMENT GEOMETRY SHEET 4 OF 4.
7. FOR SECTIONS D-D AND E-E SEE SHEET AD3_.

RECORD DRAWING

No.	Date	Revisions	By

HNTB CORPORATION

STATE OF WISCONSIN
DEPARTMENT OF TRANSPORTATION

STRUCTURE B-40-414C

Designed By	GD	Design Checked	AP	Drawn By	JE	Plans Checked	AP

NORTH CABLE STAY ABUTMENT DETAILS 8 OF 8

SHEET NC14 OF .

STATE PROJECT I.D.	SHEET NUMBER
2235-00-70	8.658

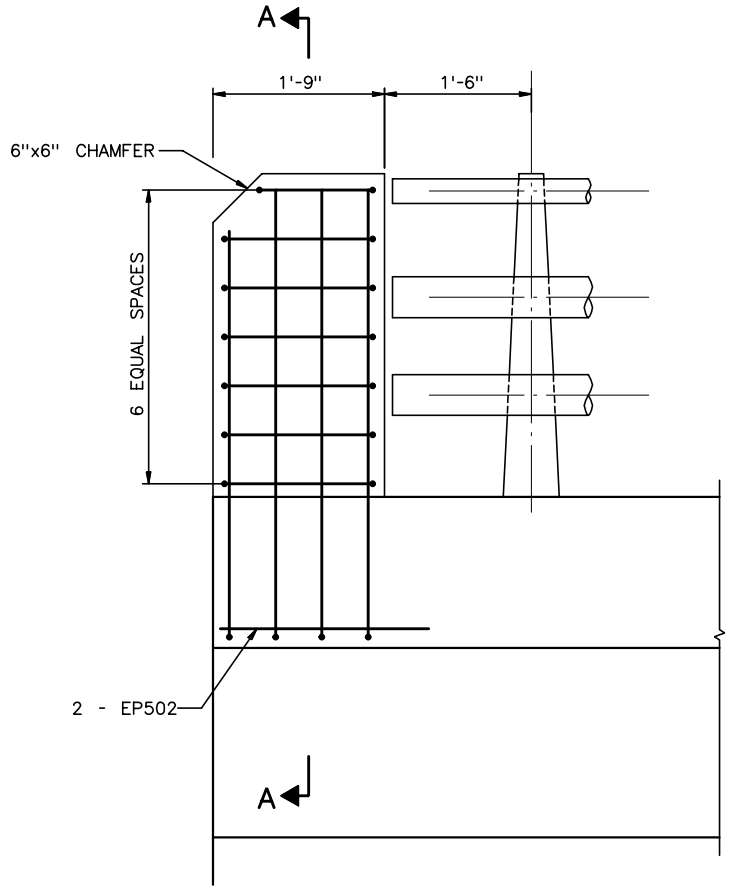

END POST
(SIDE ELEVATION)
1" = 1'-0"

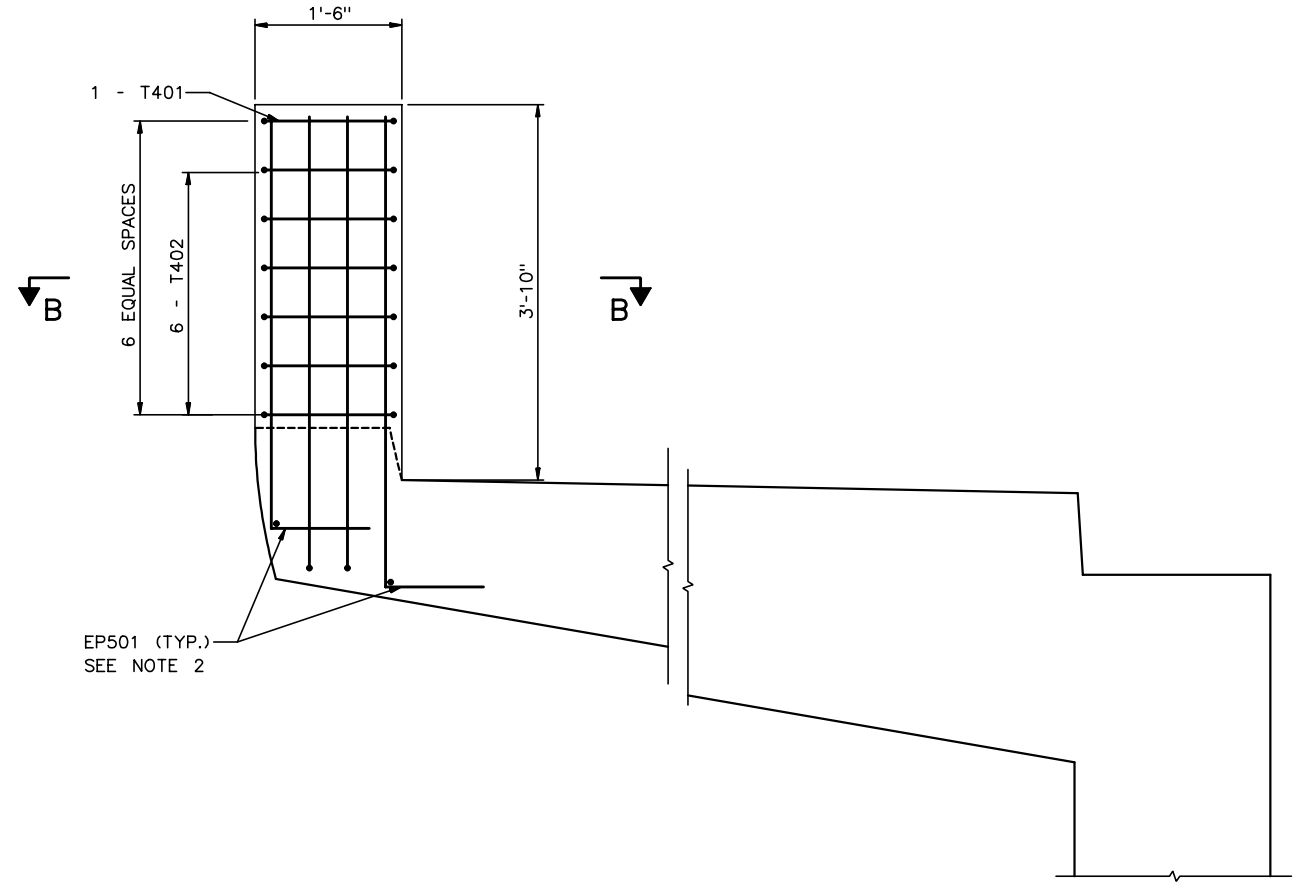

SECTION A-A
1" = 1'-0"

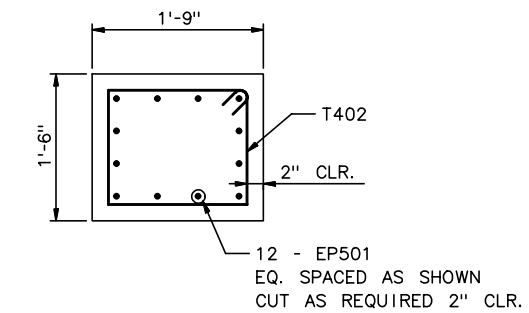

SECTION B-B
1" = 1'-0"

NORTH CABLE STAY ABUTMENT END POST BARLIST

NOTE: QUANTITY SHOWN IS FOR 1 END POST. DOUBLE QUANTITIES FOR 2 END POSTS.

BAR MARK	BAR SIZE	LOCATION COMMENT	NO.	LTH/BAR DECIMAL FT	TOTAL WT (LB)	BEND TYPE	A			B			C			D			E			F/R			G			H			I			J			K			O		
							FT	IN	1/4	FT	IN	1/4	FT	IN	1/4	FT	IN	1/4	FT	IN	1/4	FT	IN	1/4	FT	IN	1/4	FT	IN	1/4	FT	IN	1/4	FT	IN	1/4	FT	IN	1/4	FT	IN	1/4
T401	4	Epoxy Coated	1	5.083	3.4	T1		2	2	1	1	0	1	2	0	1	1	0	1	2	0					4	2															
T402	4	Epoxy Coated	6	5.917	23.7	T1		4	2	1	5	0	1	2	0	1	5	0	1	2	0					4	2															
EP501	5	Epoxy Coated	12	5.583	69.9	17				1	0	0	4	7	0	0	0	0																								
EP502	5	Epoxy Coated	2	3.000	6.3	STR				3	0	0																														
				TOTAL WT =	103.2																																					

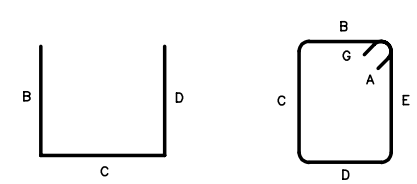

TYPE 17 TYPE T1

NOTES:

1. 2" COVER TYPICAL ON END POSTS
2. CUT EP501 BARS AS REQUIRED
   2" CLR. ON TOP OF POST
   REPAIR EPOXY ACCORDINGLY

RECORD DRAWING

No.	Date	Revisions	By
1	10-25-01	DIMS T401, T402	AP

HNTB CORPORATION

STATE OF WISCONSIN
DEPARTMENT OF TRANSPORTATION

STRUCTURE B-40-414C

Designed By	AP	Design Checked	GD	Drawn By	JE	Plans Checked	AP

NORTH CABLE STAY ABUTMENT
END POST DETAIL

SHEET NC14a OF .

STATE PROJECT I.D.	SHEET NUMBER
2235-00-70	8.659

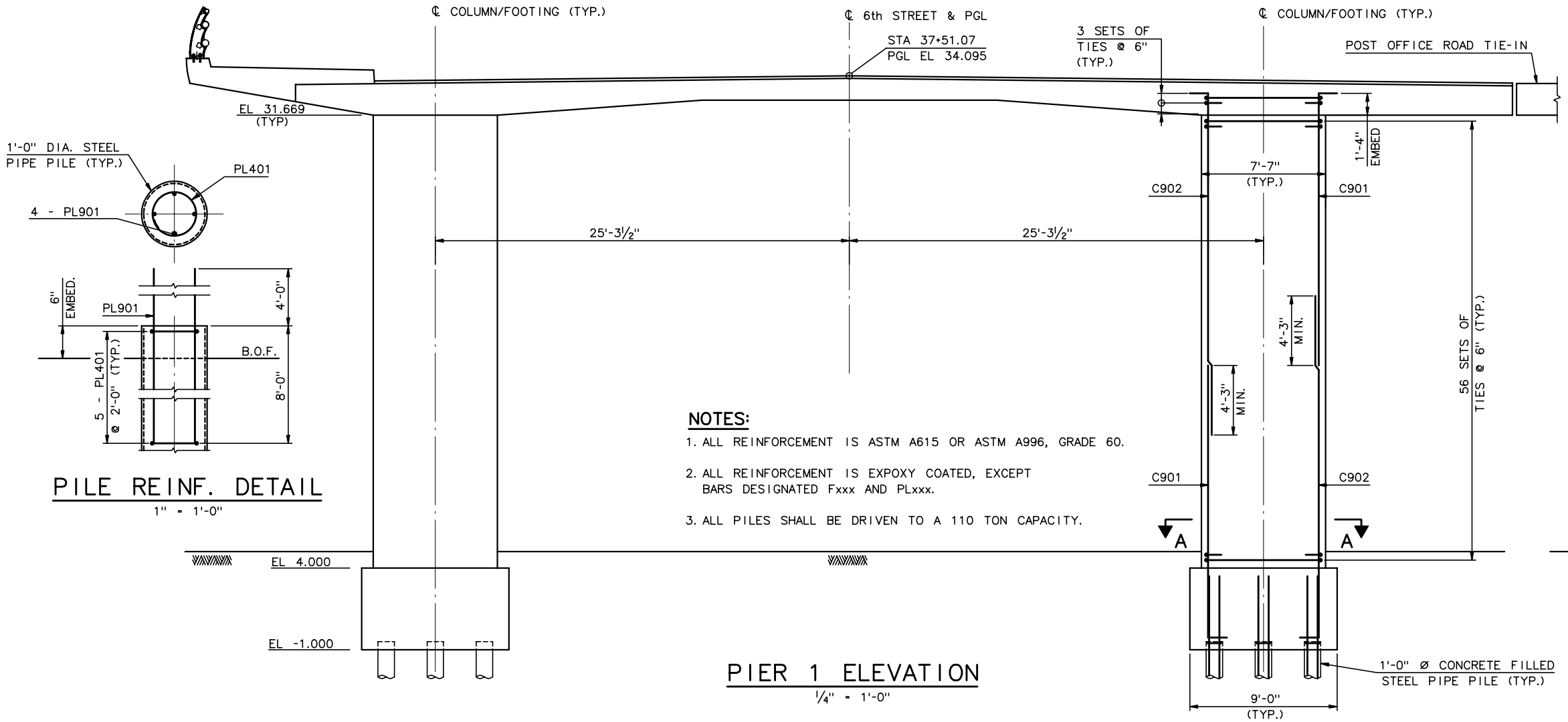

PIER 1 ELEVATION

¼" = 1'-0"

PILE REINF. DETAIL

1" = 1'-0"

NOTES:

1. ALL REINFORCEMENT IS ASTM A615 OR ASTM A996, GRADE 60.
2. ALL REINFORCEMENT IS EPOXY COATED, EXCEPT BARS DESIGNATED Fxxx AND PLxxx.
3. ALL PILES SHALL BE DRIVEN TO A 110 TON CAPACITY.

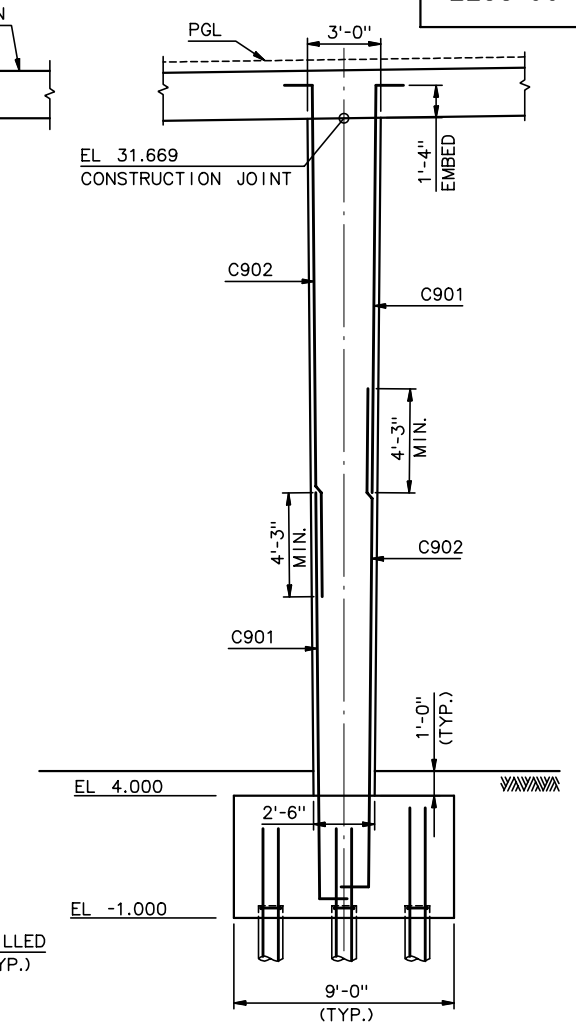

PIER 1 SIDE ELEVATION

¼" = 1'-0"

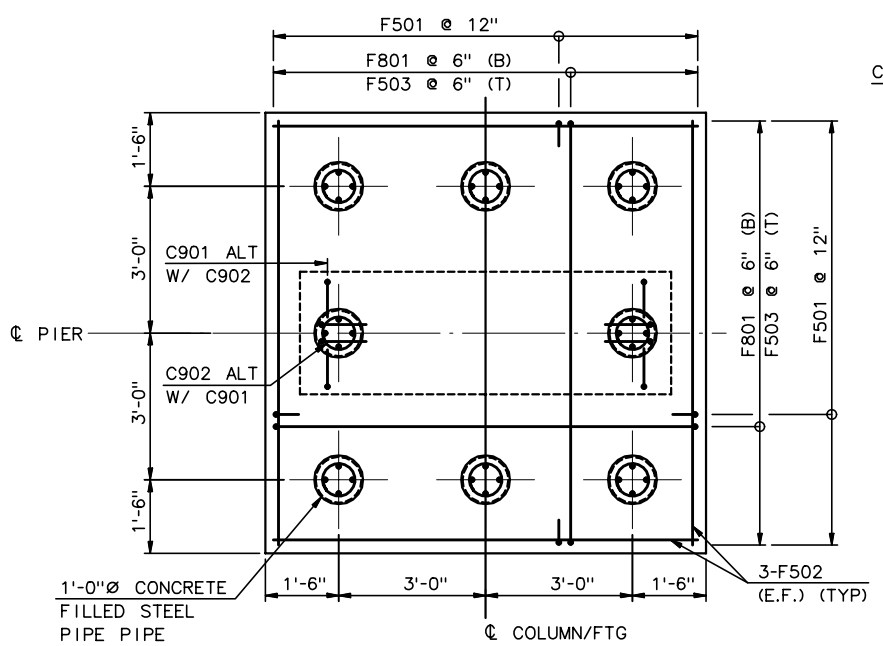

FOOTING PLAN

½" = 1'-0"

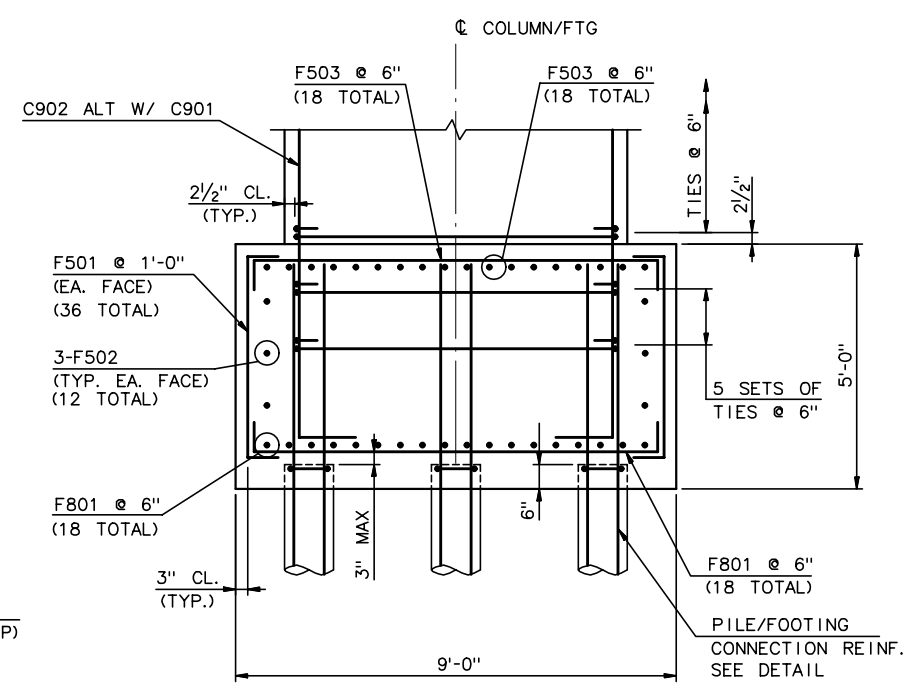

FOOTING ELEVATION

½" = 1'-0"

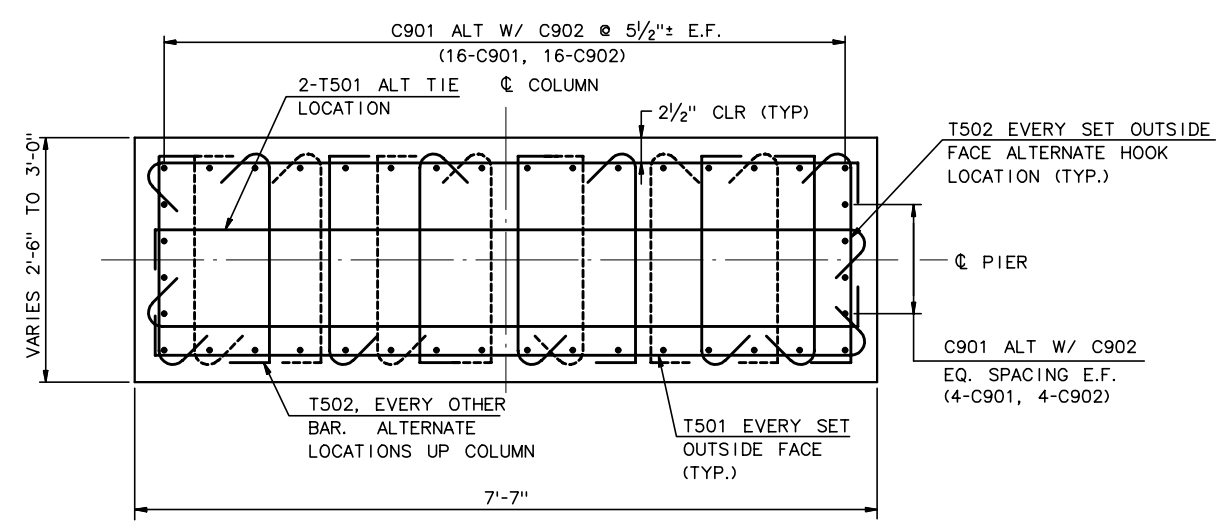

SECTION A-A

1" = 1'-0"

RECORD DRAWING

No.	Date	Revisions	By
2	5-9-01	REV. TOP OF COL. EL.	SL
1	5-4-01	ADD NOTE 3	AP

HNTB CORPORATION

STATE OF WISCONSIN
DEPARTMENT OF TRANSPORTATION

STRUCTURE B-40-414C

Designed By	CE	Design Checked	AP	Drawn By	BM	Plans Checked	AP

NORTH CABLE STAY
PIER 1

SHEET NC15 OF

STATE PROJECT I.D.	SHEET NUMBER
2235-00-70	8.660

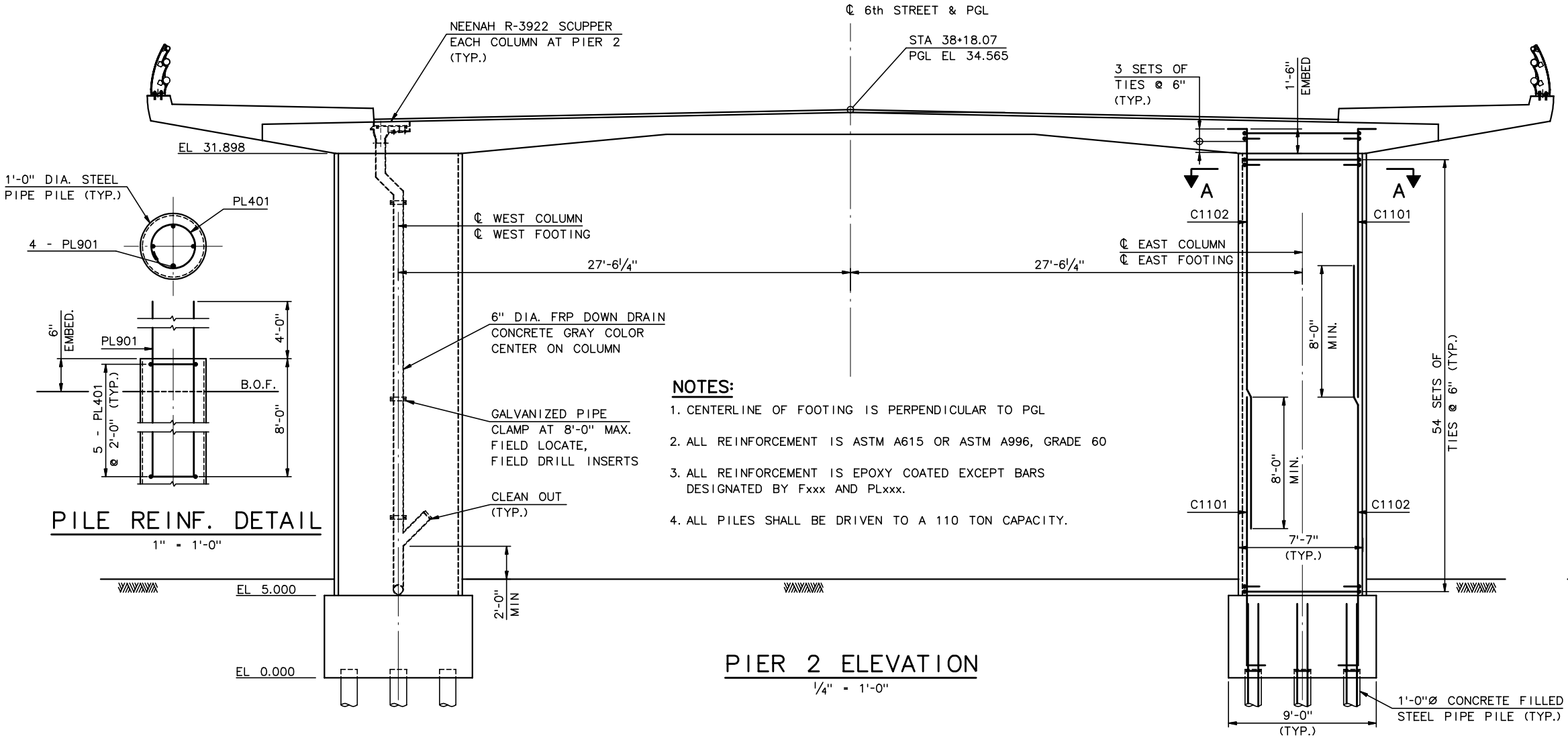

PIER 2 ELEVATION

¼" = 1'-0"

PILE REINF. DETAIL

1" = 1'-0"

NOTES:

1. CENTERLINE OF FOOTING IS PERPENDICULAR TO PGL
2. ALL REINFORCEMENT IS ASTM A615 OR ASTM A996, GRADE 60
3. ALL REINFORCEMENT IS EPOXY COATED EXCEPT BARS DESIGNATED BY Fxxx AND PLxxx.
4. ALL PILES SHALL BE DRIVEN TO A 110 TON CAPACITY.

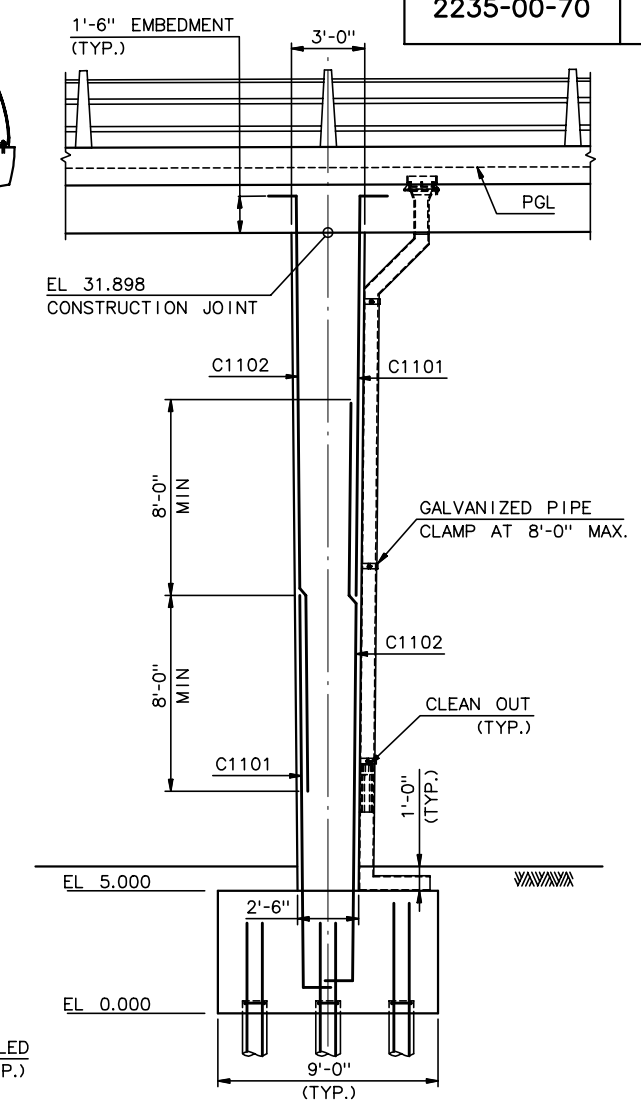

PIER 2 SIDE ELEVATION

¼" = 1'-0"

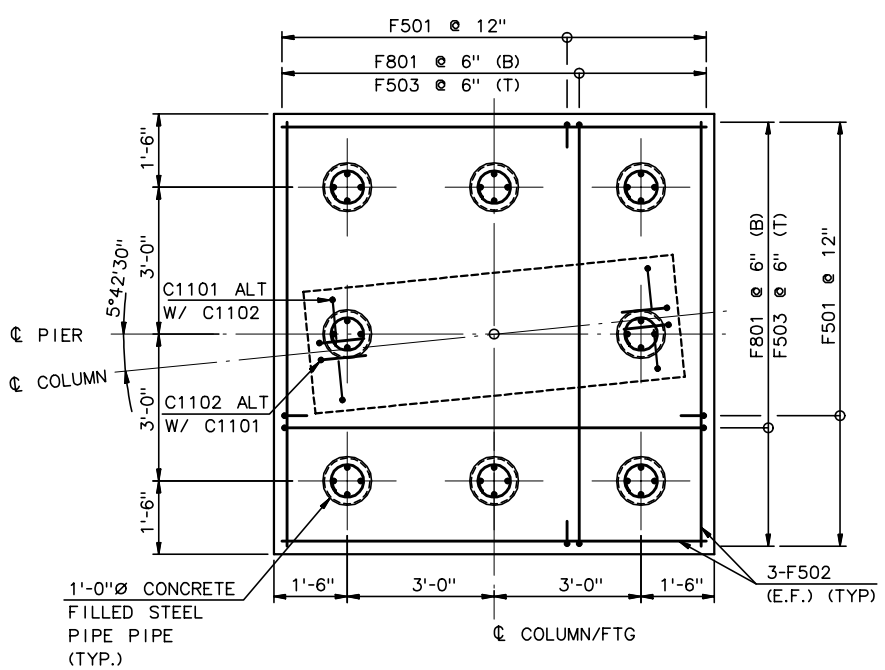

WEST FOOTING PLAN

½" = 1'-0"

(EAST FOOTING OPPOSITE HAND)

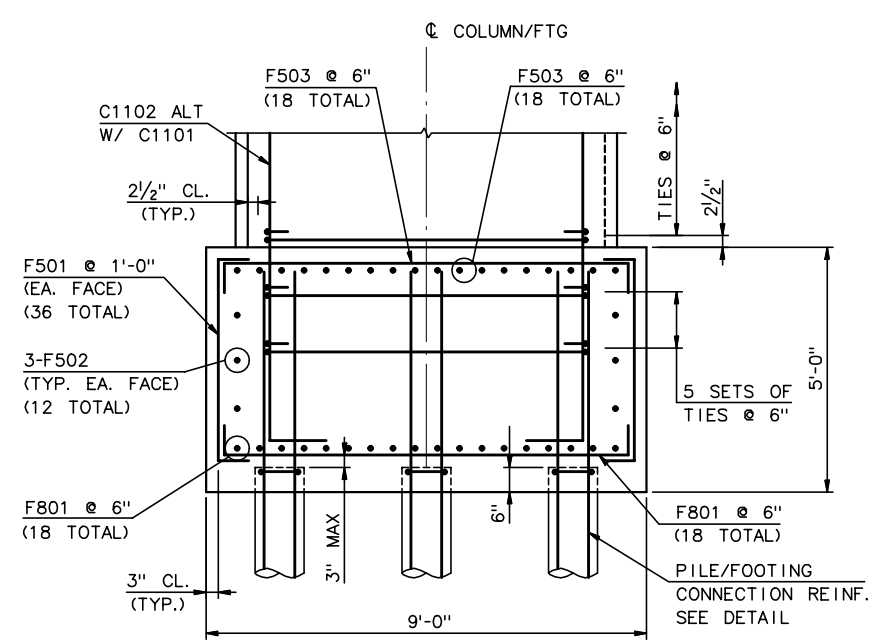

FOOTING ELEVATION

½" = 1'-0"

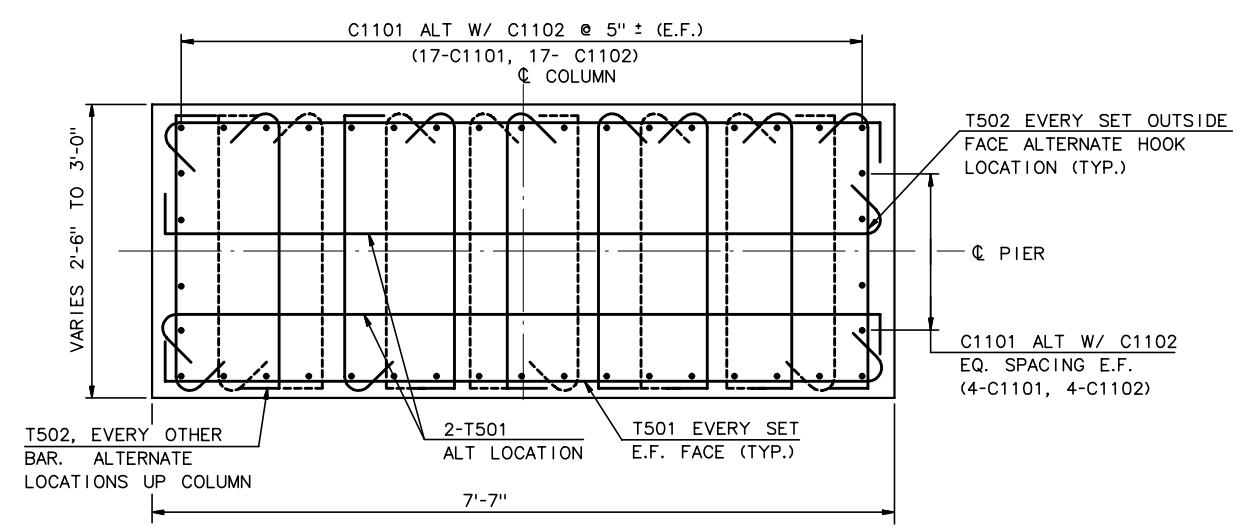

SECTION A-A

1" = 1'-0"

RECORD DRAWING

No.	Date	Revisions	By
1	5-4-01	ADD NOTE 4, REV CLEAN OUT	AP
		ADD PILE DETAIL	AP

HNTB CORPORATION

STATE OF WISCONSIN
DEPARTMENT OF TRANSPORTATION

STRUCTURE B-40-414C

Designed By	CE	Design Checked	AP	Drawn By	BM	Plans Checked	AJ

NORTH CABLE STAY
PIER 2

SHEET NC16 OF

STATE PROJECT I.D.	SHEET NUMBER
2235-00-70	8.661

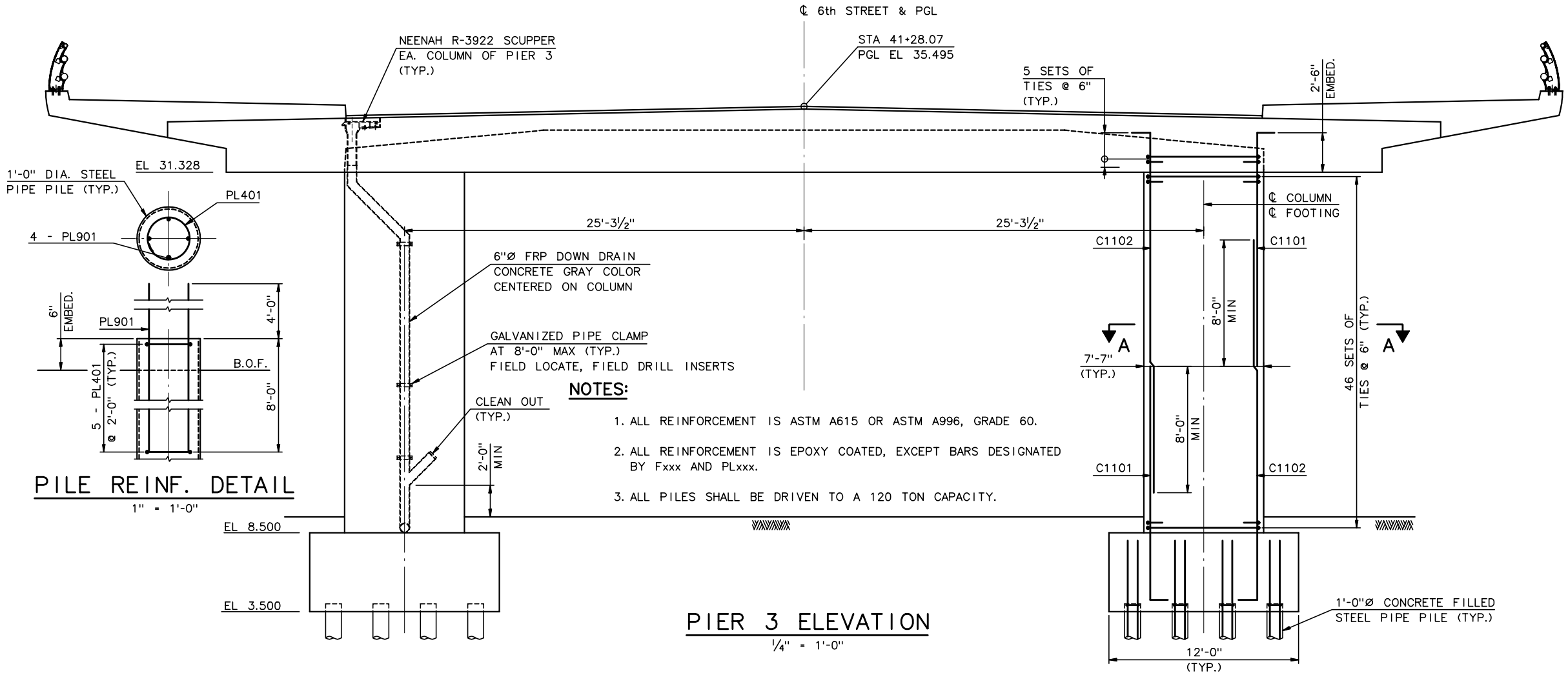

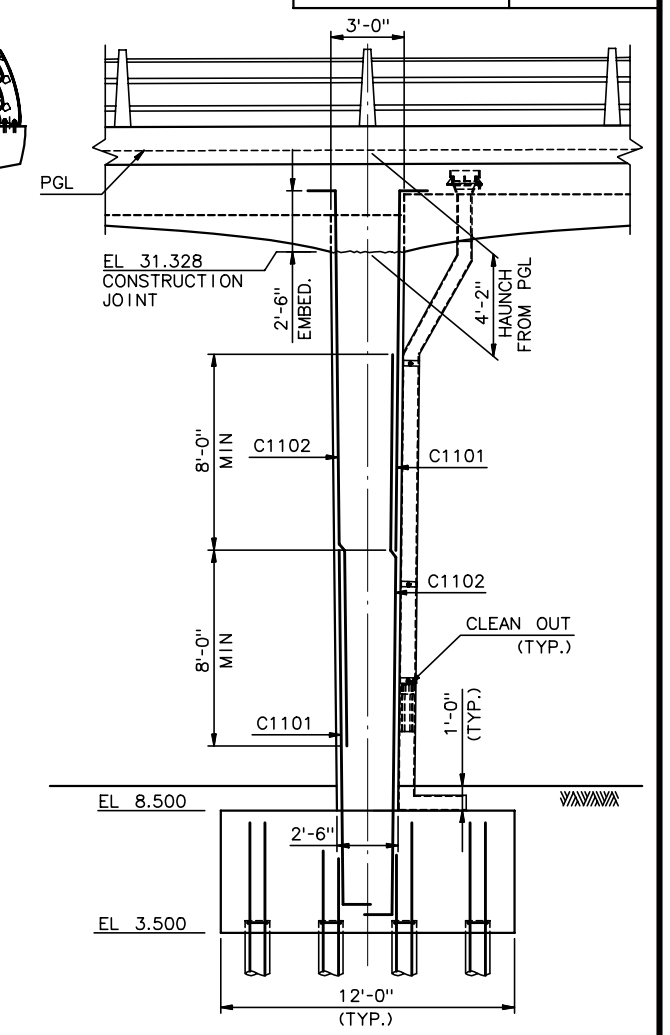

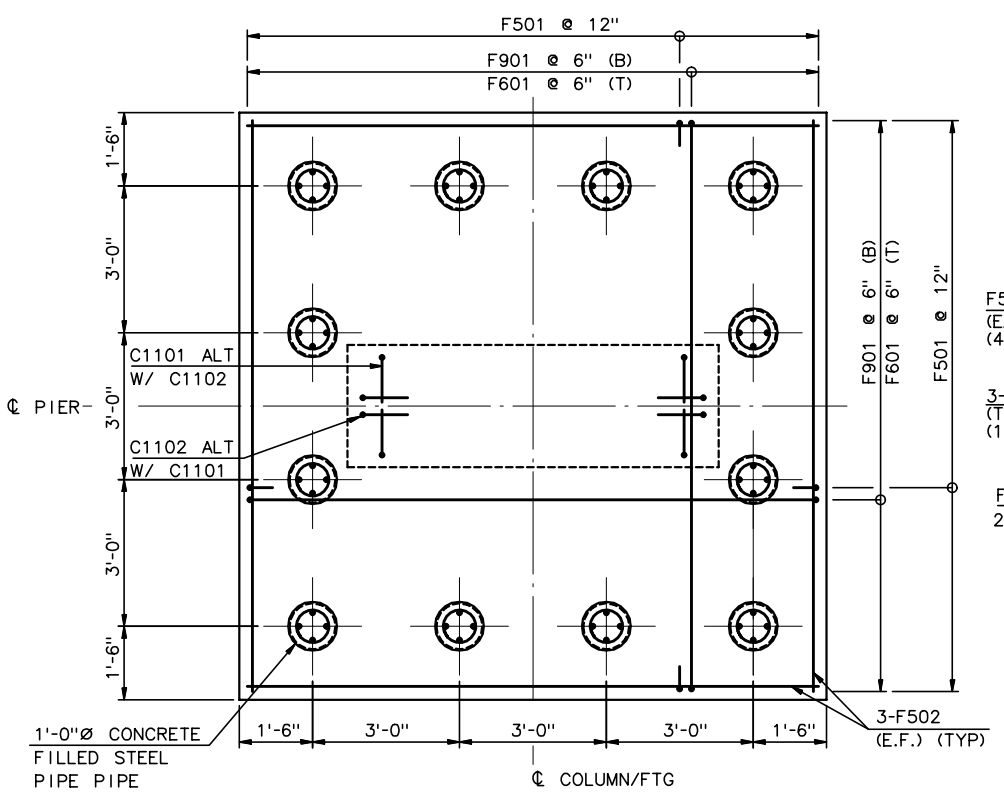

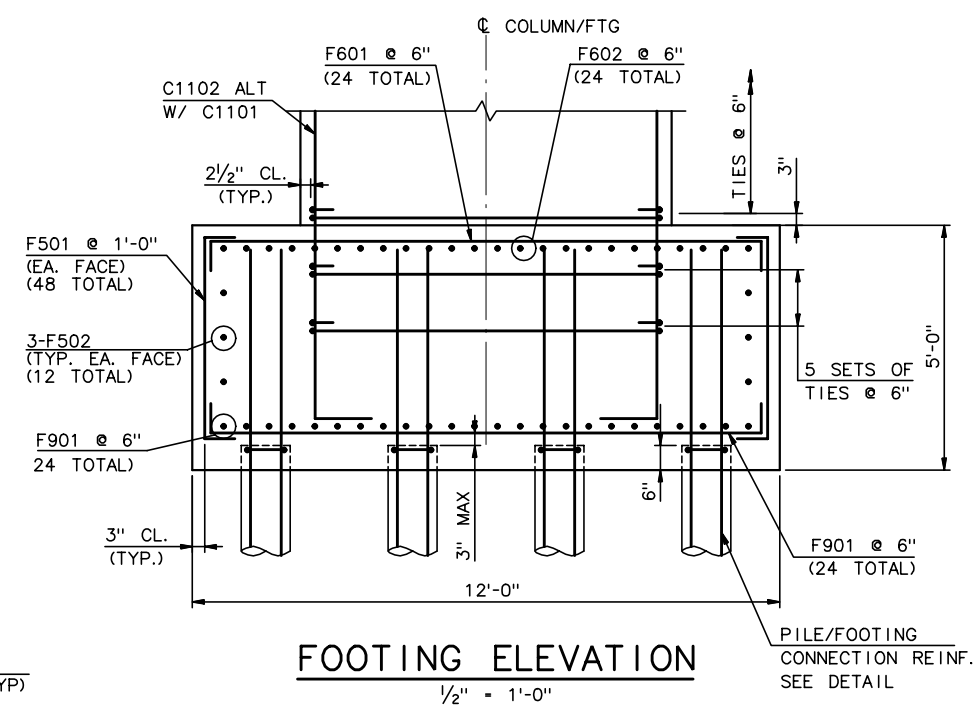

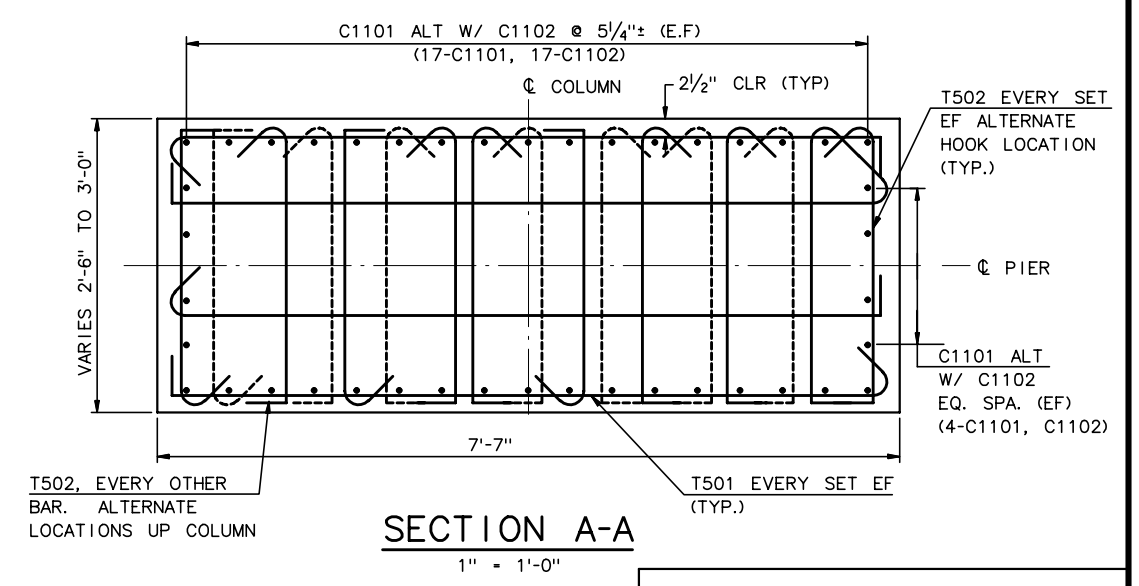

RECORD DRAWING

No.	Date	Revisions	By
1	5-4-01	ADD NOTE 3, REV CLEAN OUT	AP

HNTB CORPORATION

STATE OF WISCONSIN
DEPARTMENT OF TRANSPORTATION

STRUCTURE B-40-414C

Designed By	CE	Design Checked	AJ	Drawn By	BM	Plans Checked	AP

NORTH CABLE STAY
PIER 3

SHEET NC17 OF

j:\cadd\ff31185\dgn\as built\north cablestay\nc17-ncspr3.dgn 02/11/03 01:52:15 PM

STATE PROJECT I.D.	SHEET NUMBER
2235-00-70	8.662

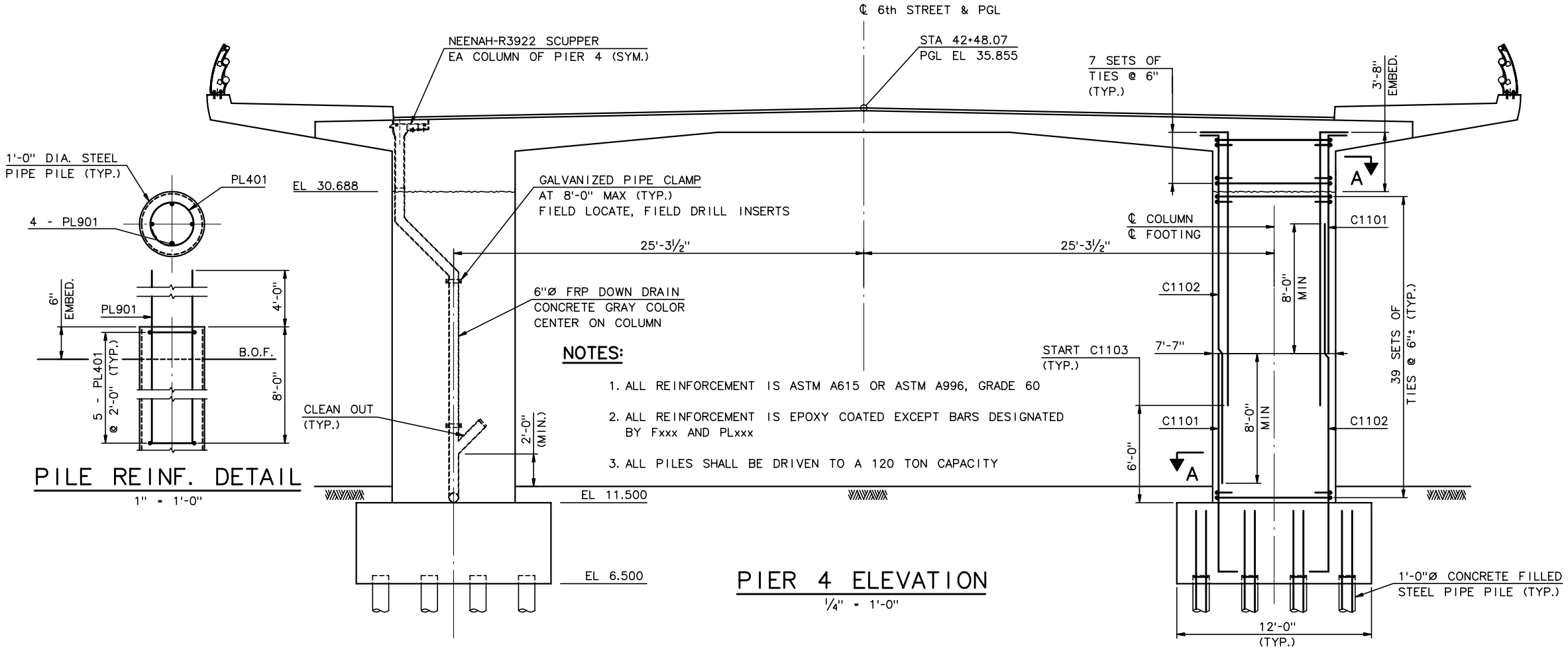

NOTES:

1. ALL REINFORCEMENT IS ASTM A615 OR ASTM A996, GRADE 60
2. ALL REINFORCEMENT IS EPOXY COATED EXCEPT BARS DESIGNATED BY Fxxx AND PLxxx
3. ALL PILES SHALL BE DRIVEN TO A 120 TON CAPACITY

PILE REINF. DETAIL

1" = 1'-0"

PIER 4 ELEVATION

¼" = 1'-0"

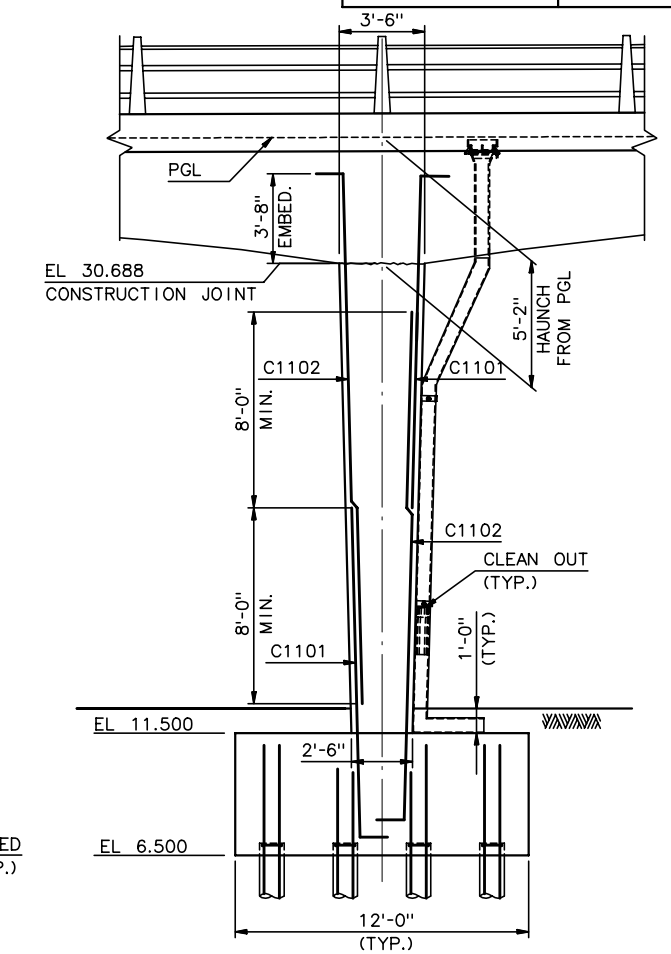

PIER 4 SIDE ELEVATION

¼" = 1'-0"

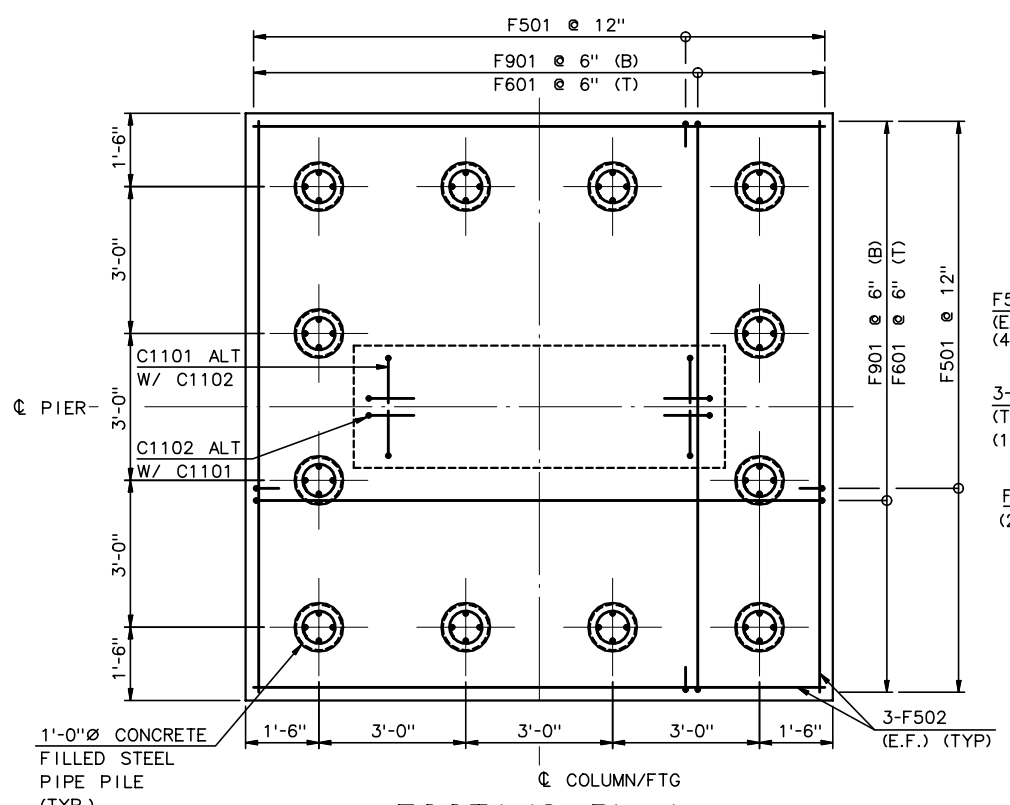

FOOTING PLAN

½" = 1'-0"

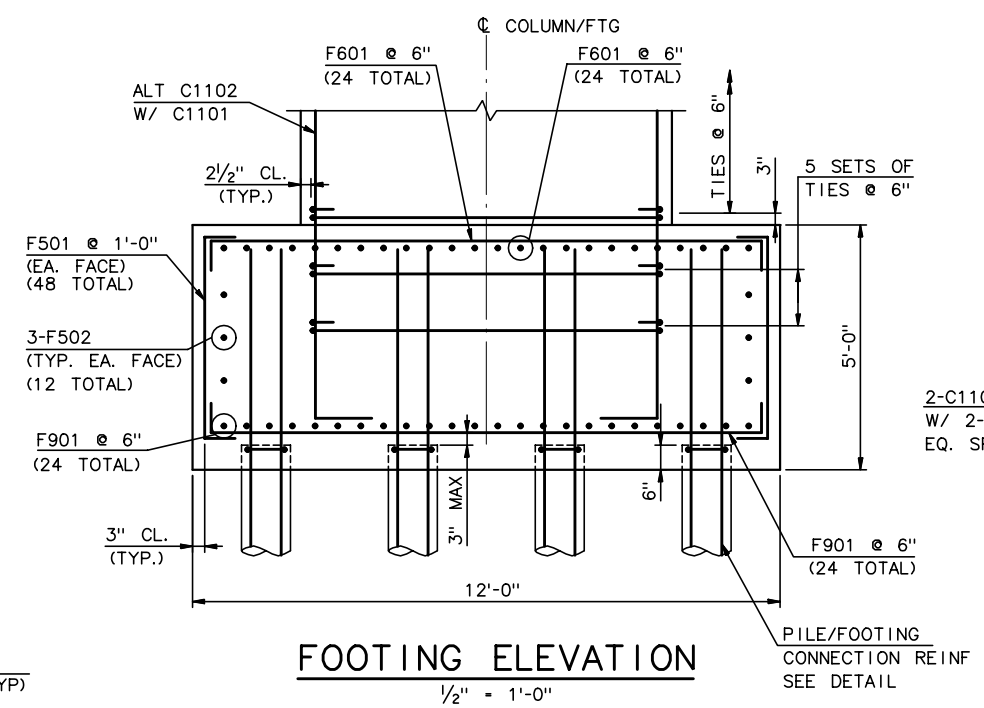

FOOTING ELEVATION

½" = 1'-0"

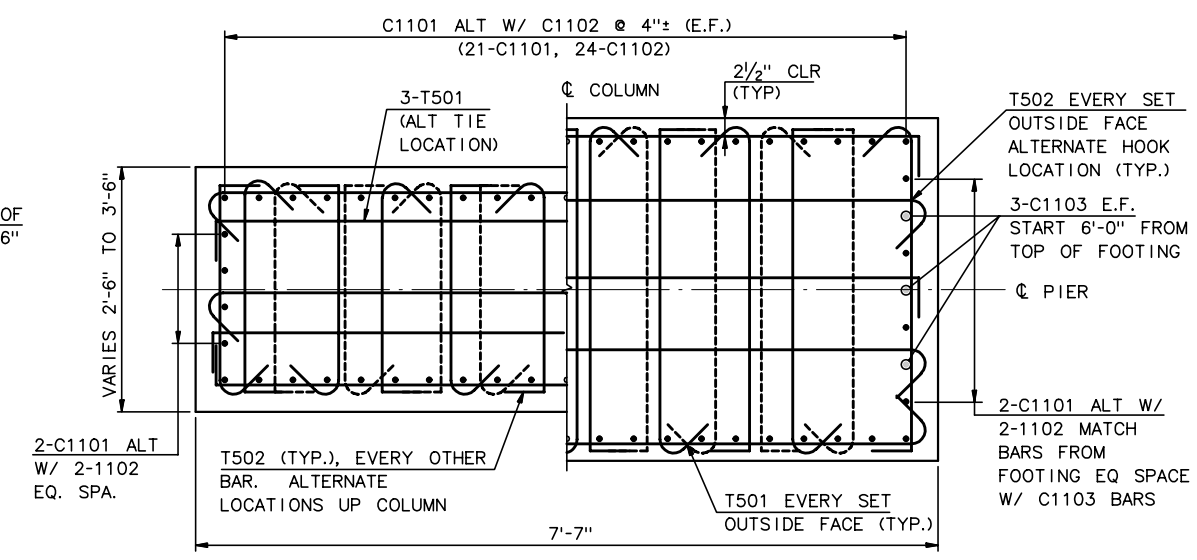

SECTION A-A

1" = 1'-0"

RECORD DRAWING

No.	Date	Revisions	By
1	5-4-01	ADD NOTE 3, REV CLEAN OUT	AP

HNTB CORPORATION

STATE OF WISCONSIN
DEPARTMENT OF TRANSPORTATION

STRUCTURE B-40-414C

Designed By	CE	Design Checked	AP	Drawn By	BM	Plans Checked	AP

NORTH CABLE STAY
PIER 4

SHEET NC18 OF

STATE PROJECT I.D.	SHEET NUMBER
2235-00-70	8.663

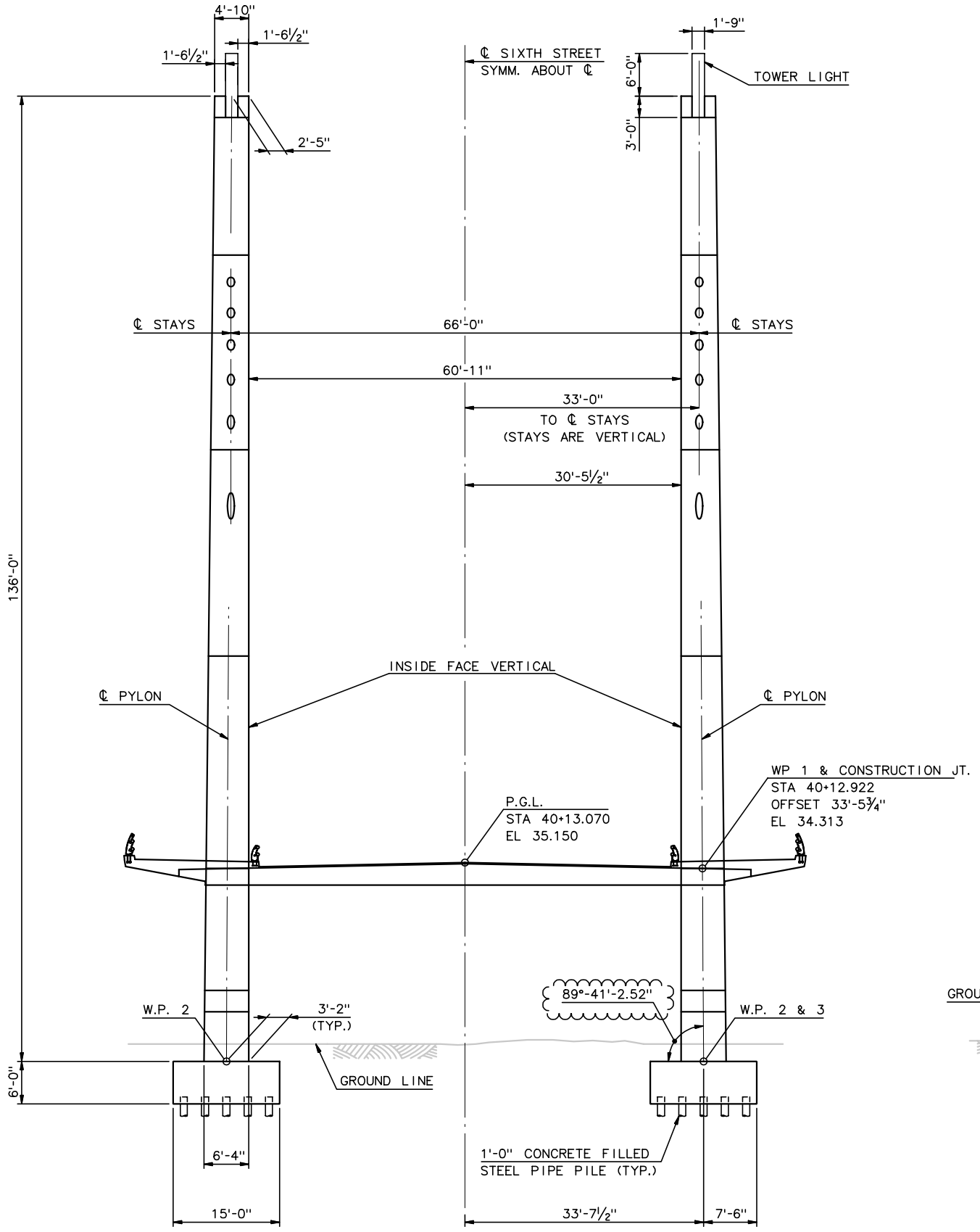

TRANSVERSE ELEVATION

1" = 10'-0"

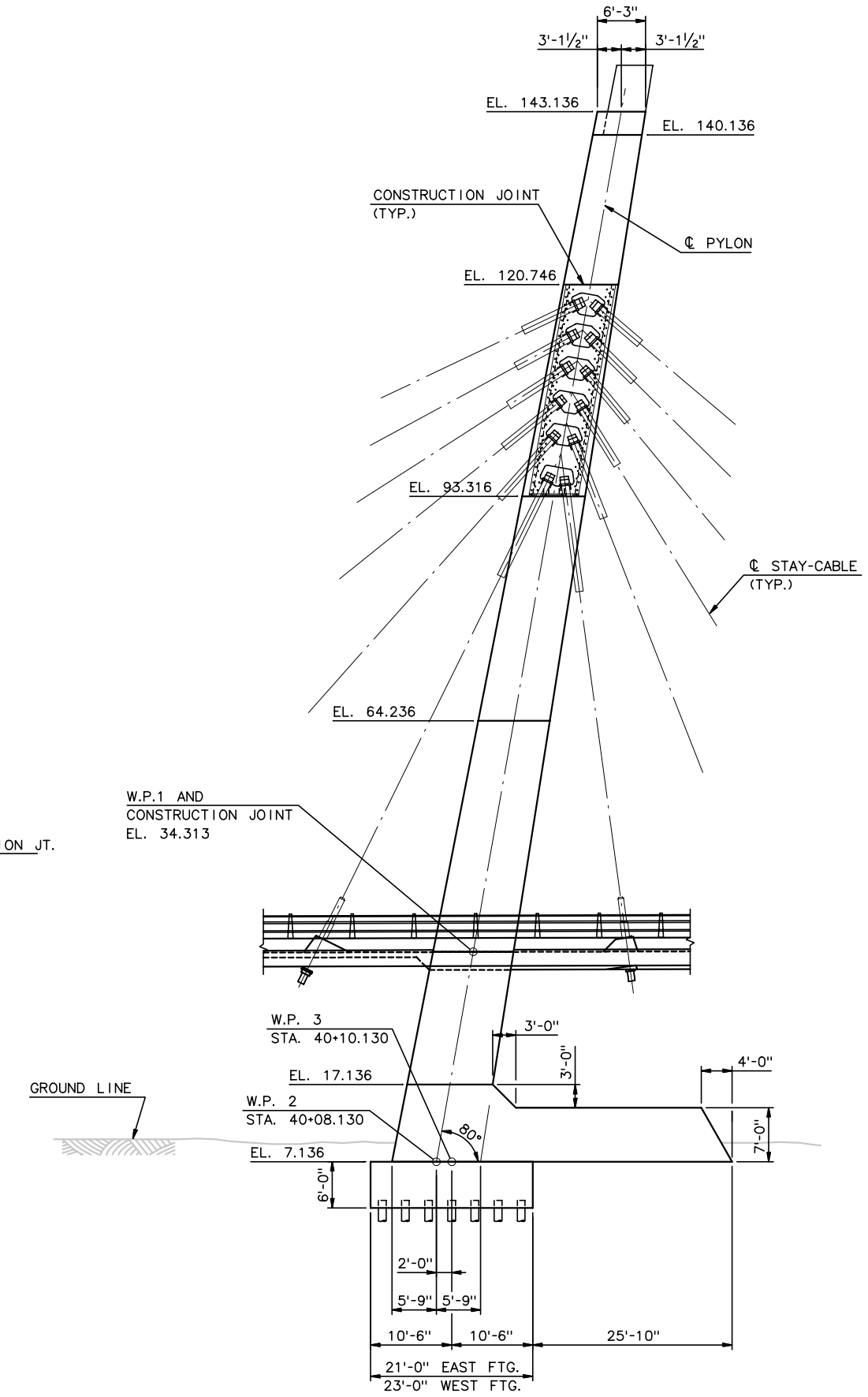

LONGITUDINAL ELEVATION

1" = 10'-0"

NOTES:

1. FOR PYLON REINFORCEMENT, SEE SHEETS NC20 THRU NC31.

RECORD DRAWING

No.	Date	Revisions	By
1	2-19-01	TRANS EL. TOWER ANGLE	SL

HNTB CORPORATION

STATE OF WISCONSIN
DEPARTMENT OF TRANSPORTATION

STRUCTURE B-40-414C

Designed By	SL	Design Checked	TZ	Drawn By	DS	Plans Checked	AP

PYLON ELEVATION

SHEET NC19 OF

STATE PROJECT I.D.	SHEET NUMBER
2235-00-70	8.664

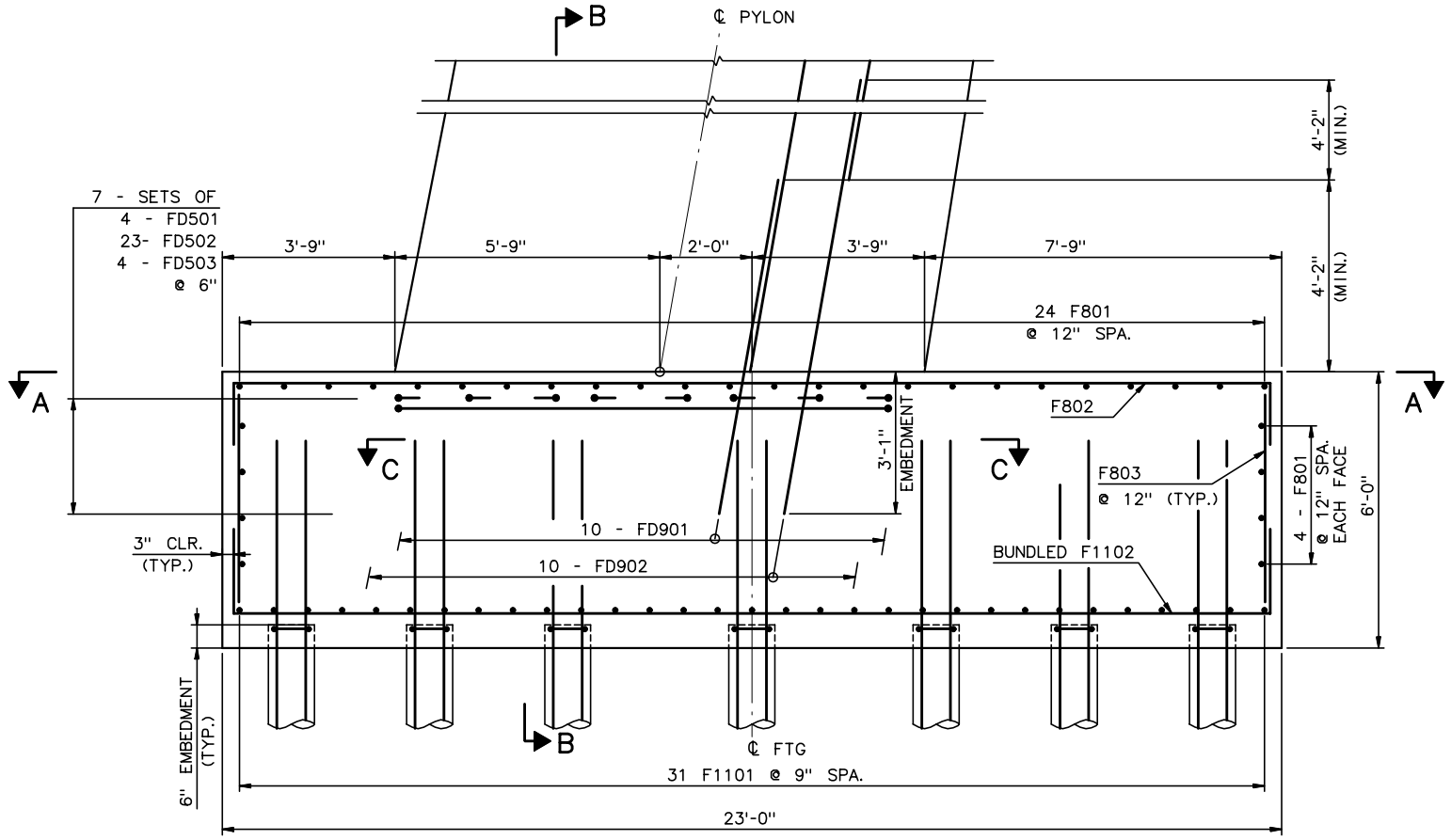

WEST FOOTING REINFORCING - ELEVATION

½" = 1'-0"

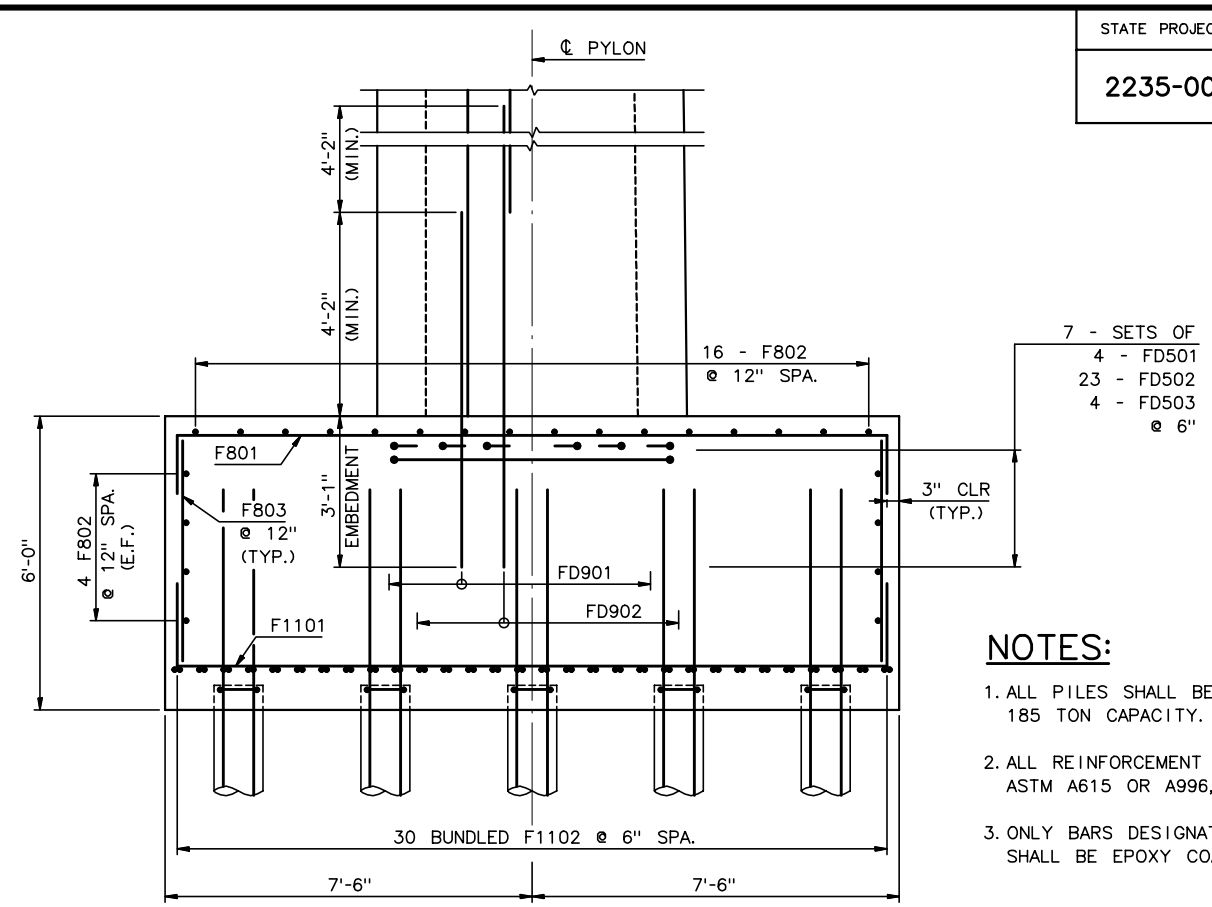

SECTION B-B

½" = 1'-0"

NOTES:

1. ALL PILES SHALL BE DRIVEN TO A 185 TON CAPACITY.
2. ALL REINFORCEMENT SHALL BE ASTM A615 OR A996, GRADE 60.
3. ONLY BARS DESIGNATED BY FDXXX SHALL BE EPOXY COATED.

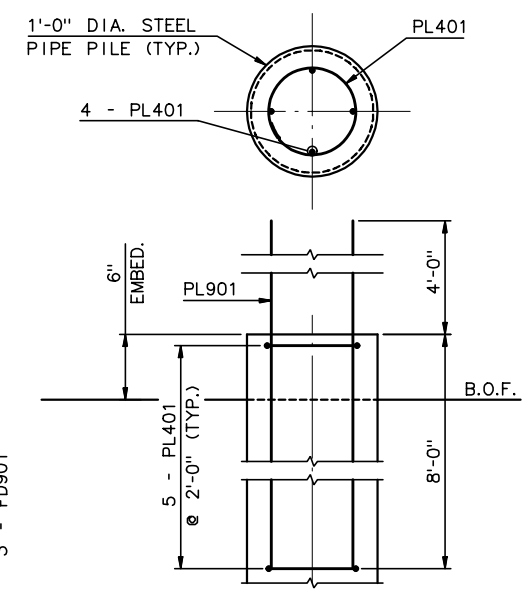

TYPICAL PILE REINF. DETAIL

⅜" = 1'-0"

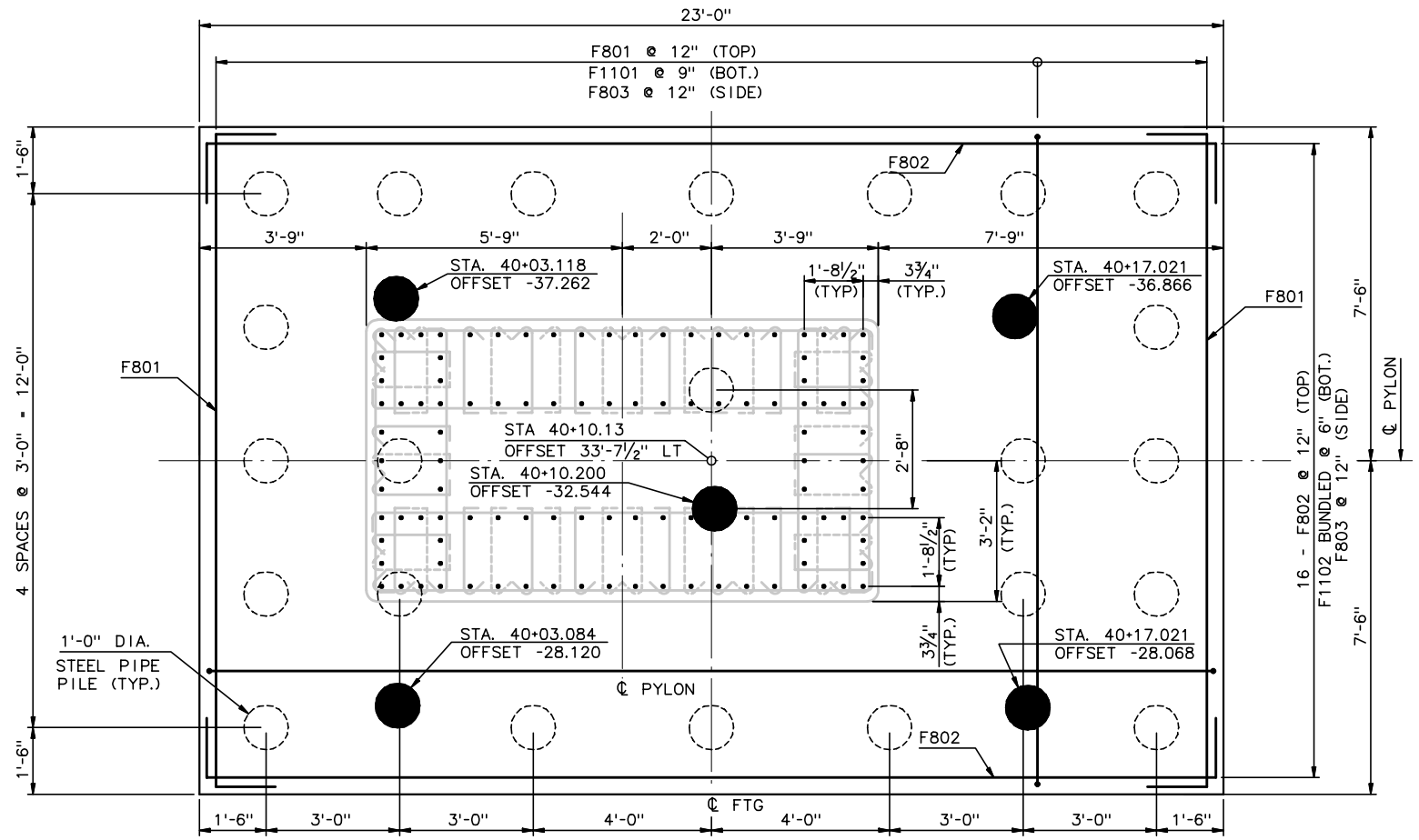

WEST FOOTING REINFORCING - SECTION A-A

½" = 1'-0"

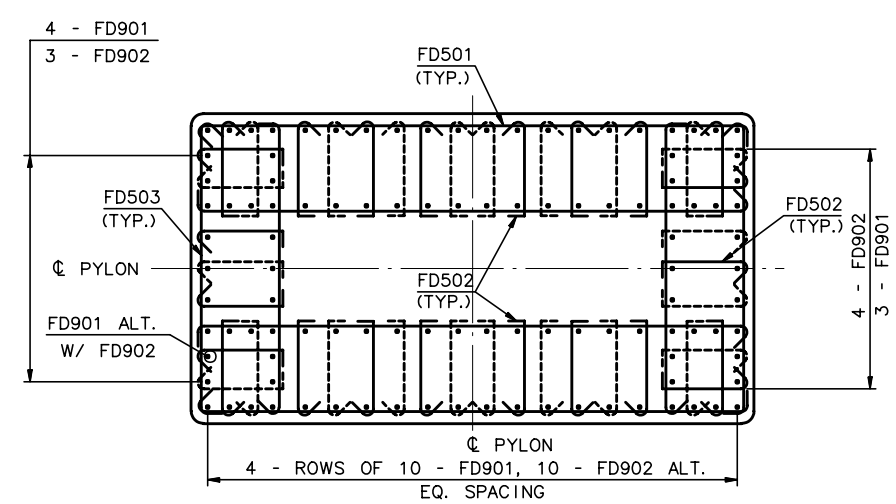

SECTION C-C

½" = 1'-0"

● - EXISTING TEST PILES INCLUDED IN PILE LAYOUT

RECORD DRAWING

No.	Date	Revisions	By
2	5-10-01	ADD NOTES	AP
1	2-9-01	FD901, FD902 EMBED., TIE SETS	AP

HNTB CORPORATION

STATE OF WISCONSIN
DEPARTMENT OF TRANSPORTATION

STRUCTURE B-40-414C

Designed By	SL	Design Checked	TZ	Drawn By	DS	Plans Checked	AP

NORTH PYLON
WEST FOUNDATION
DETAIL

SHEET NC20 OF

STATE PROJECT I.D.	SHEET NUMBER
2235-00-70	8.665

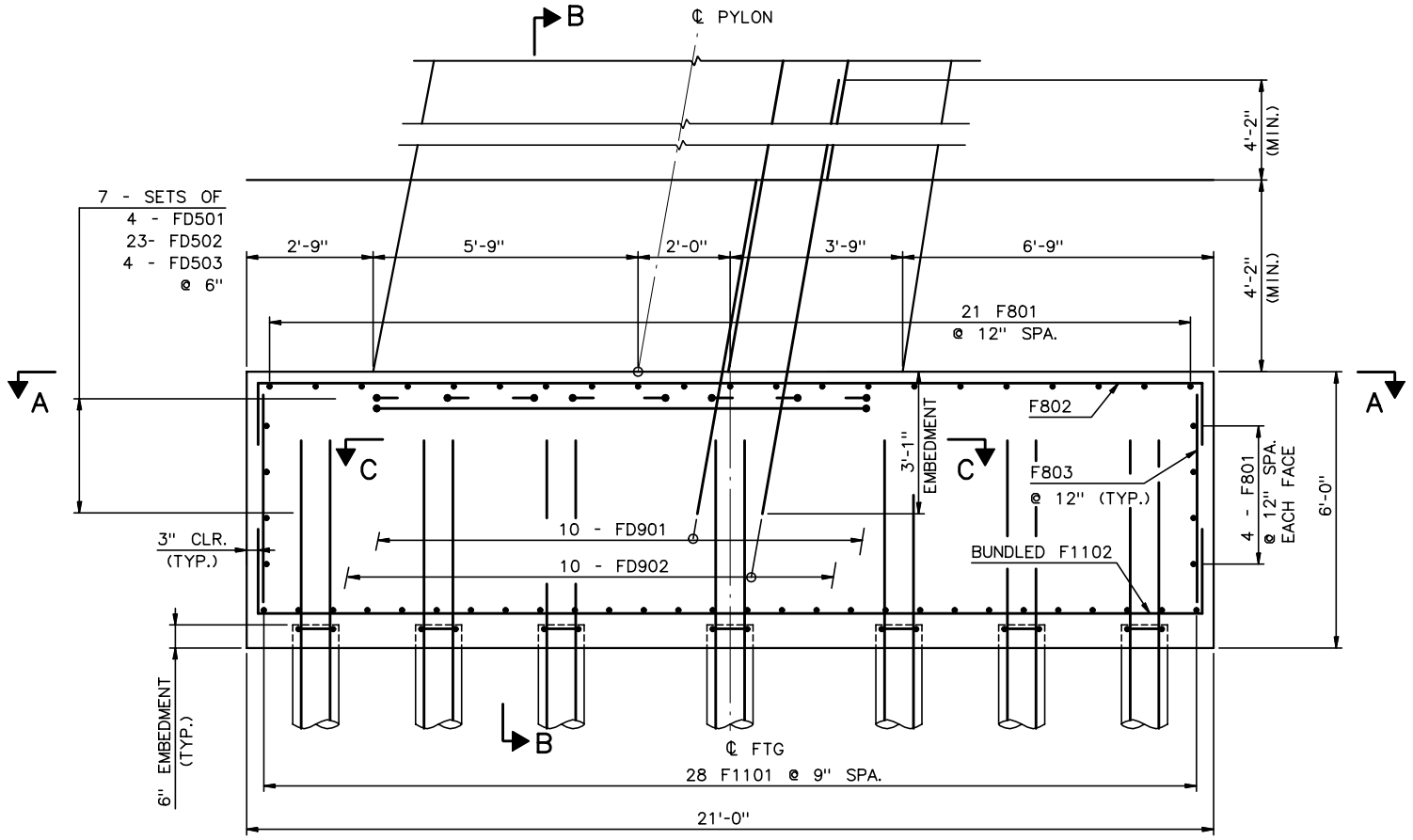

EAST FOOTING REINFORCING - ELEVATION

½" = 1'-0"

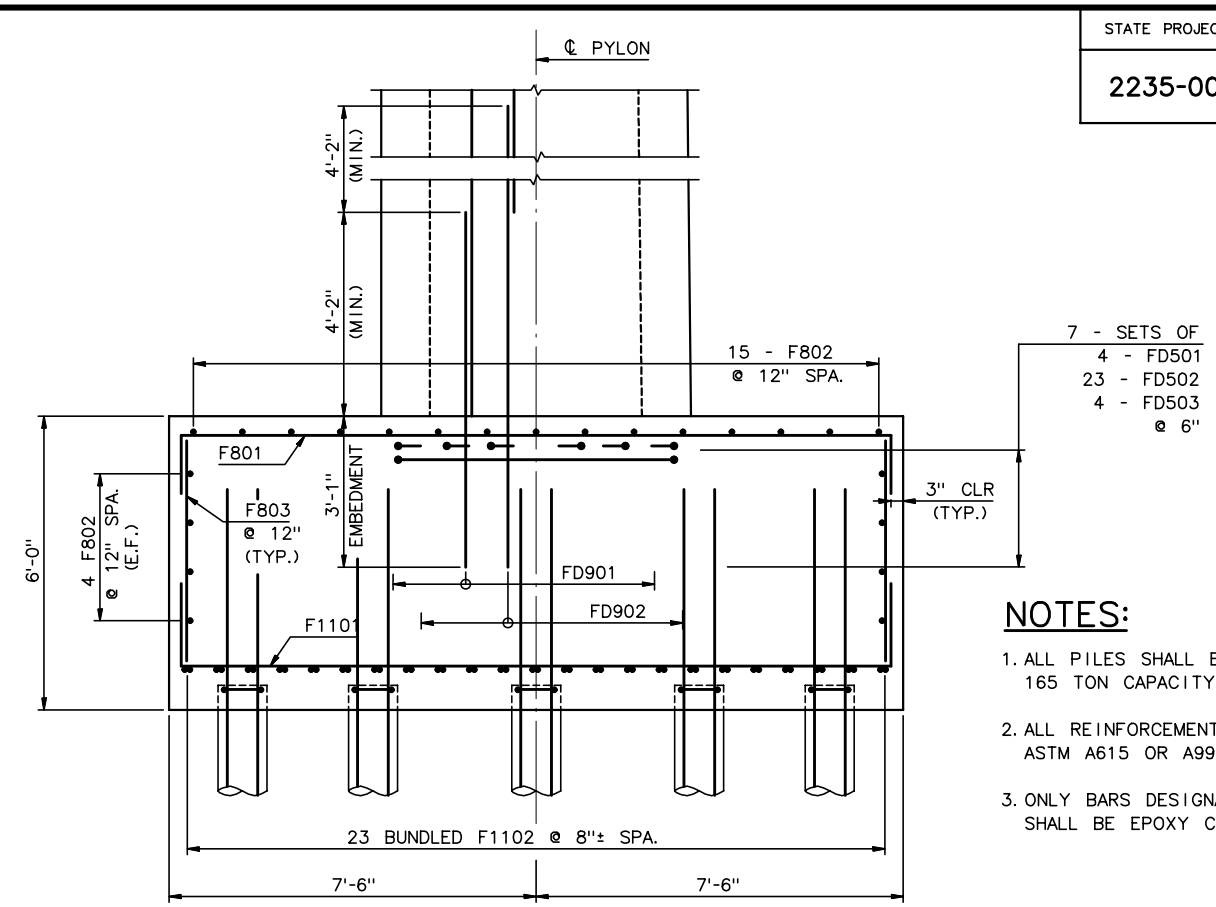

SECTION B-B

½" = 1'-0"

NOTES:

1. ALL PILES SHALL BE DRIVEN TO A 165 TON CAPACITY.
2. ALL REINFORCEMENT SHALL BE ASTM A615 OR A996, GRADE 60.
3. ONLY BARS DESIGNATED BY FDXXX SHALL BE EPOXY COATED.

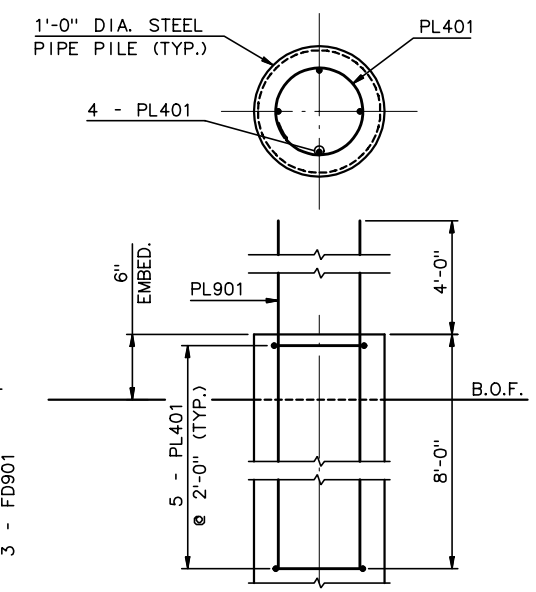

TYPICAL PILE REINF. DETAIL

⅜" = 1'-0"

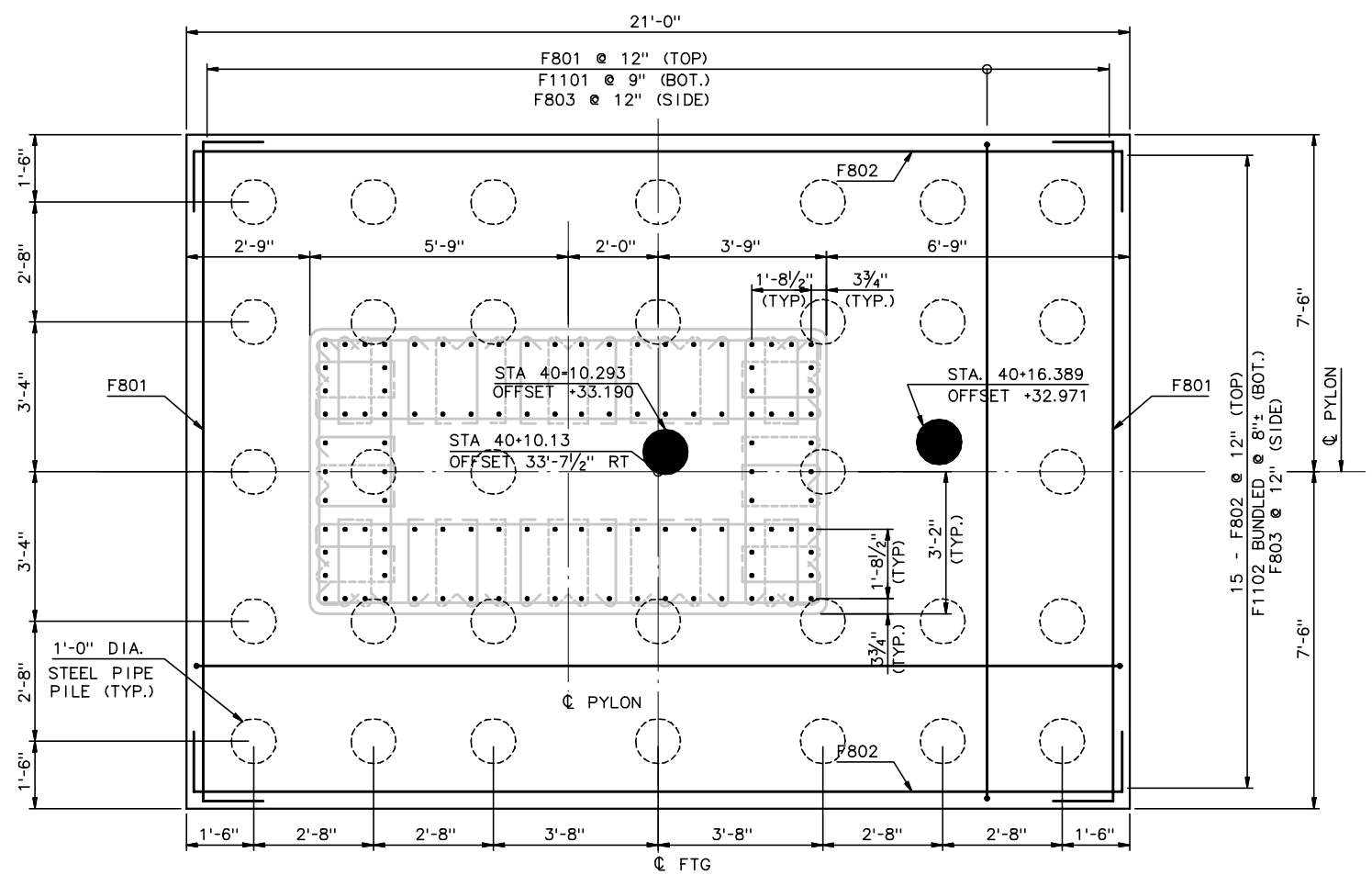

EAST FOOTING REINFORCING - SECTION A-A

½" = 1'-0"

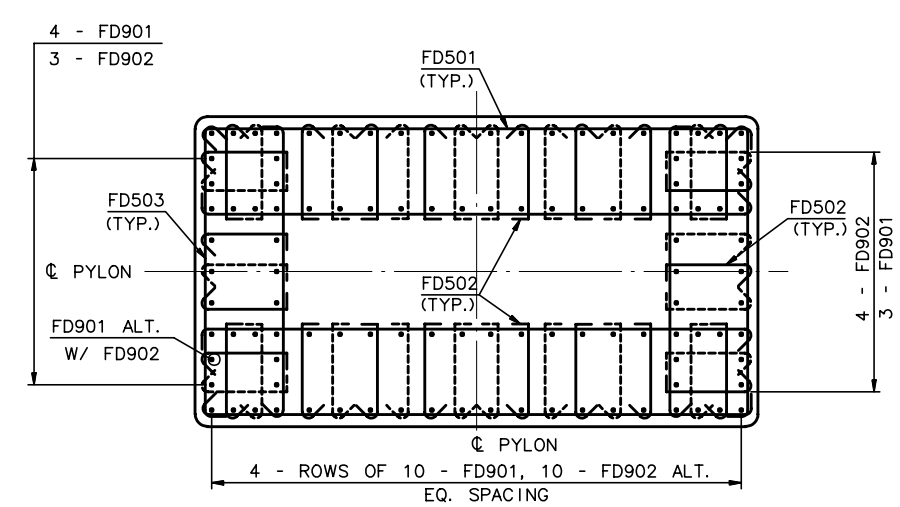

SECTION C-C

½" = 1'-0"

● - EXISTING TEST PILES INCLUDED IN PILE LAYOUT

RECORD DRAWING

No.	Date	Revisions	By
2	5-10-01	ADD NOTES	AP
1	2-9-01	FD901,FD902 EMBED., TIE SETS	AP

HNTB CORPORATION

STATE OF WISCONSIN
DEPARTMENT OF TRANSPORTATION

STRUCTURE B-40-414C

Designed By SL | Design Checked TZ | Drawn By DS | Plans Checked AP

NORTH PYLON
EAST FOUNDATION
DETAIL

SHEET NC21 OF

STATE PROJECT I.D.	SHEET NUMBER
2235-00-70	8.666

EMBEDDED ITEMS LIST	
ITEM	LIN. FEET
4/o XHHW LIGHTNING PROTECTION CABLE	REF. ELECTRICAL DWGS

NOTES:

1. FOR PYLON GEOMETRY, SEE SHEET NC19.
2. ALL REINFORCEMENT IS EPOXY COATED ASTM A615 OR A996, GRADE 60.

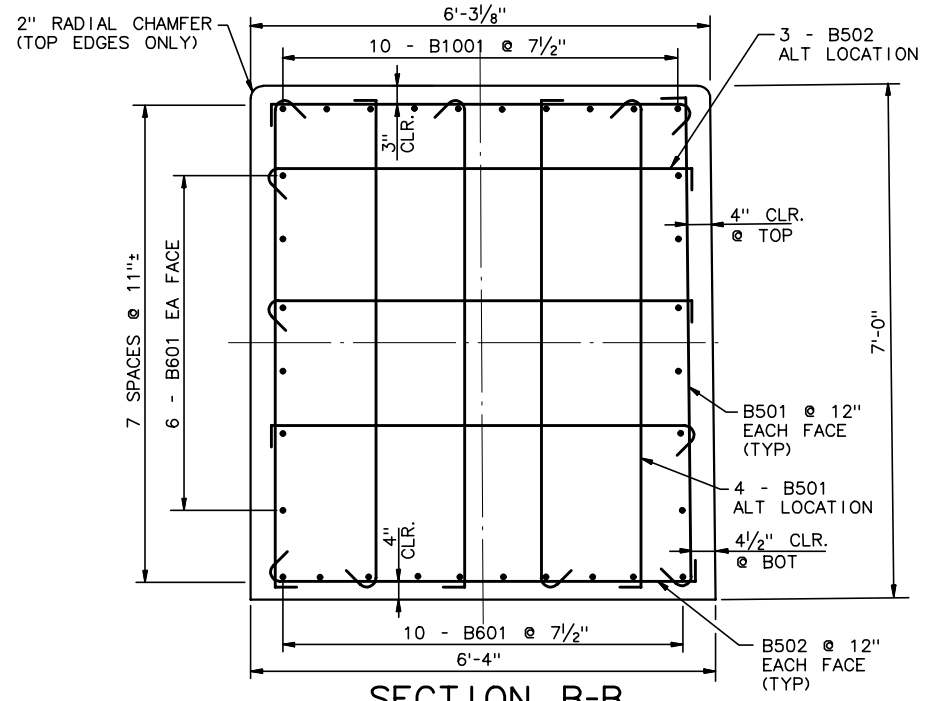

SECTION B-B

3/4" = 1'-0"

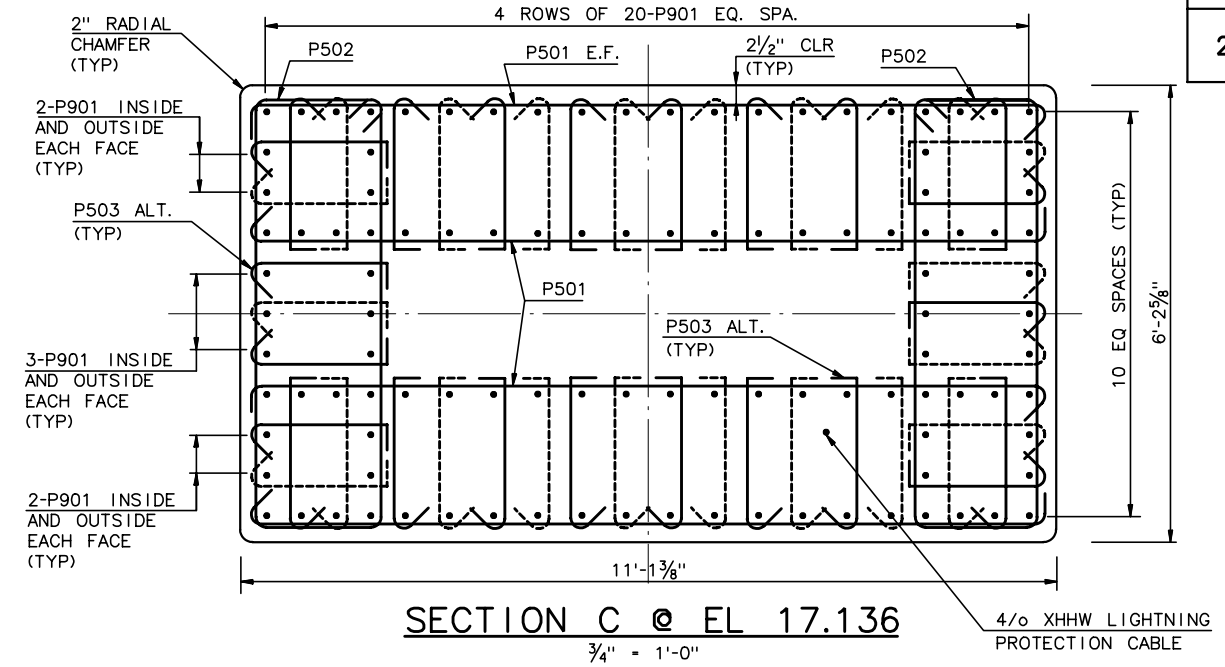

SECTION C @ EL 17.136

3/4" = 1'-0"

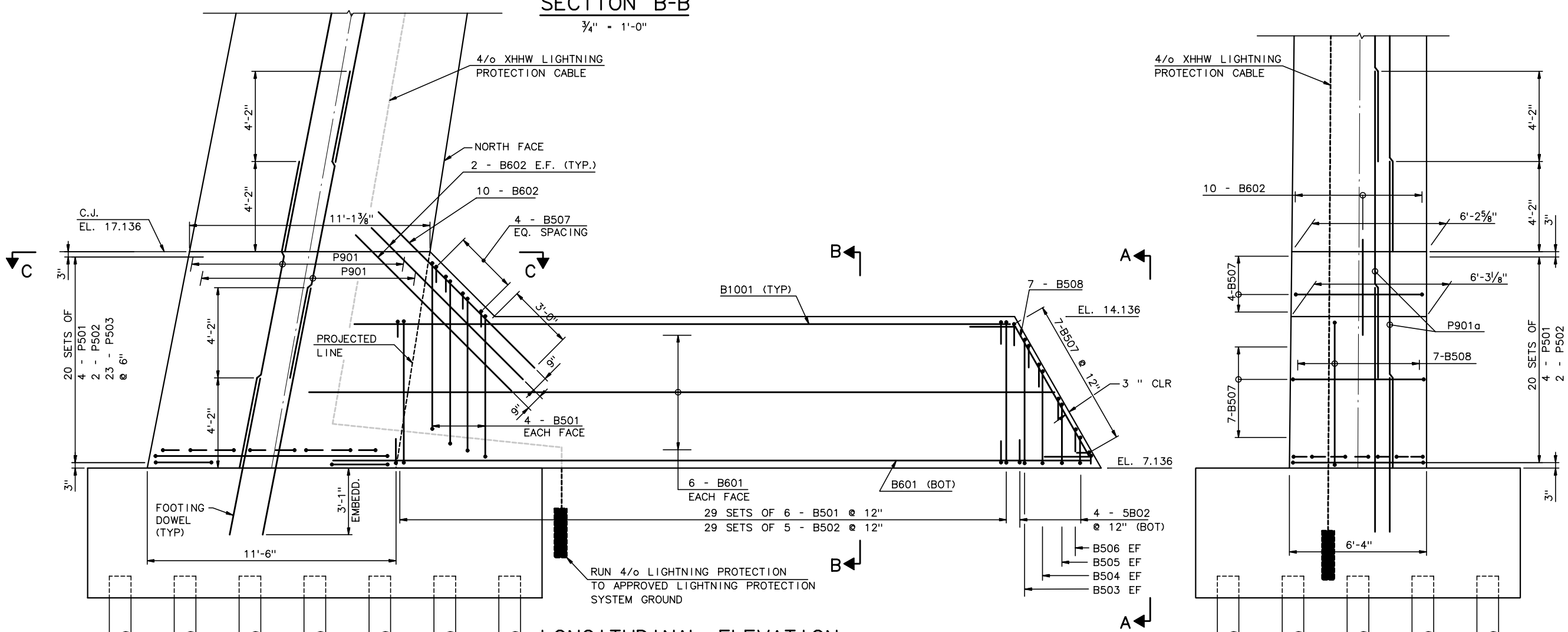

LONGITUDINAL ELEVATION

EAST PYLON SHOWN, WEST SIMILAR

3/8" = 1'-0"

ELEVATION A-A

NORTH FACE SHOWN, SOUTH FACE SIMILAR

3/8" = 1'-0"

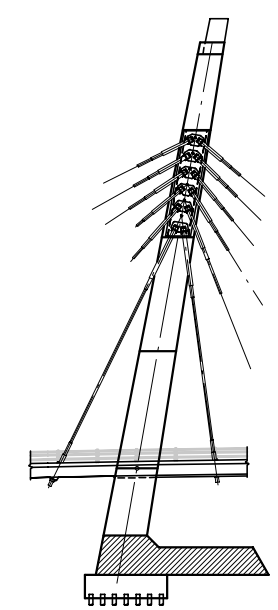

TOWER KEY

RECORD DRAWING

No.	Date	Revisions	By
2	2-26-01	ADD 4/o CABLE	AP
1	2-9-01	REV. FTG. EMBED.	AP

HNTB CORPORATION

STATE OF WISCONSIN
DEPARTMENT OF TRANSPORTATION

STRUCTURE B-40-414C

Designed By	SL	Design Checked	TZ	Drawn By	DS	Plans Checked	AP

PYLON REINFORCEMENT LIFT - 1

SHEET NC22 OF

STATE PROJECT I.D.	SHEET NUMBER
2235-00-70	8.667

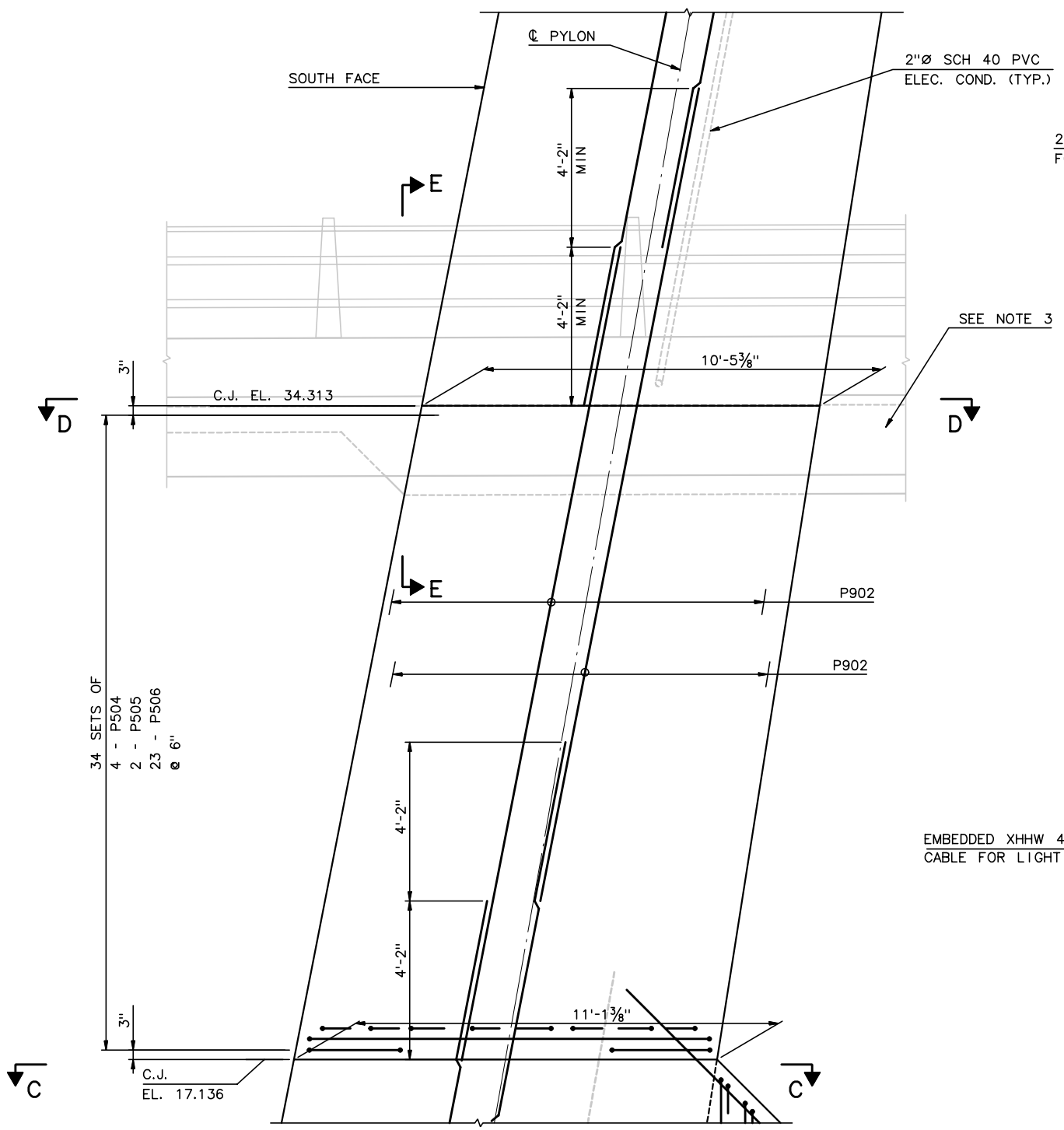

LONGITUDINAL ELEVATION

(EAST PYLON SHOWN, WEST SIMILAR)

½" = 1'-0"

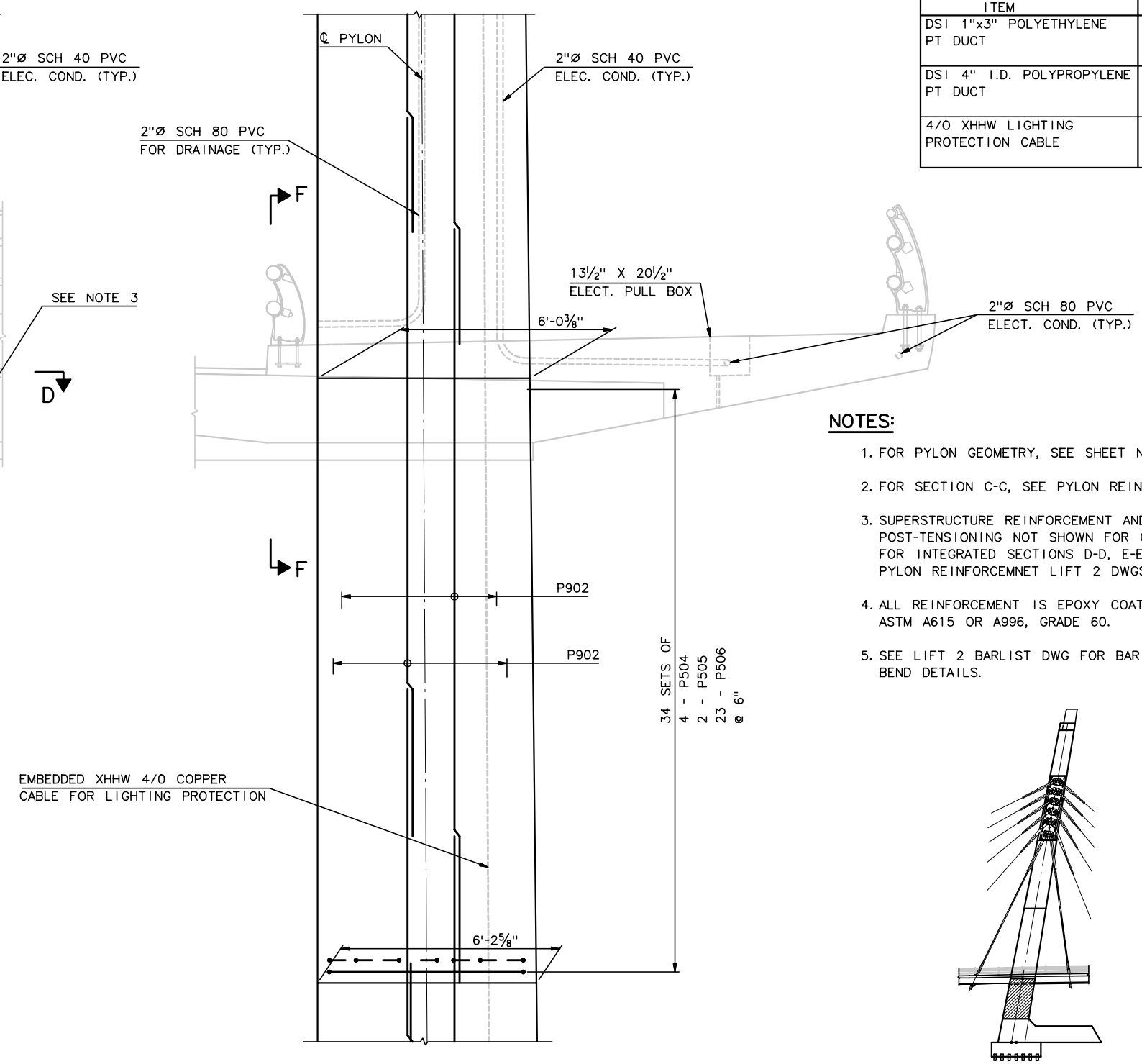

ELEVATION SOUTH FACE

(LOOKING UPSTATION)

(WEST PYLON OPPOSITE HAND)

½" = 1'-0"

EMBEDDED ITEMS LIST	
ITEM	LIN. FEET
DSI 1"x3" POLYETHYLENE PT DUCT	8x12' = 96'
DSI 4" I.D. POLYPROPYLENE PT DUCT	8x15' = 120'
4/O XHHW LIGHTING PROTECTION CABLE	18'-0" PLUS SPLICE LENGTH

NOTES:

1. FOR PYLON GEOMETRY, SEE SHEET NC19.
2. FOR SECTION C-C, SEE PYLON REINFORCEMENT LIFT 1.
3. SUPERSTRUCTURE REINFORCEMENT AND POST-TENSIONING NOT SHOWN FOR CLARITY. FOR INTEGRATED SECTIONS D-D, E-E, AND F-F, SEE PYLON REINFORCEMNET LIFT 2 DWGS 2 AND 3 OF 3.
4. ALL REINFORCEMENT IS EPOXY COATED ASTM A615 OR A996, GRADE 60.
5. SEE LIFT 2 BARLIST DWG FOR BAR BEND DETAILS.

TOWER KEY

RECORD DRAWING

No.	Date	Revisions	By
4	5-4-01	REV INTERIOR BRIDGE RAILING	AP
3	3-07-01	REV SCH 80 PVC TO SCH 40	AP
2	3-01-01	REV 4" DUCT TO POLYPROP	AP
1	2-26-01	ADD 2" DRAIN, 4/O CABLE	AP
		REV. PT DUCT TO PE TYPE	

HNTB CORPORATION

STATE OF WISCONSIN
DEPARTMENT OF TRANSPORTATION

STRUCTURE B-40-414C

Designed By	CE	Design Checked	TZ	Drawn By	BM	Plans Checked	AP

PYLON REINFORCEMENT LIFT-2 1 OF 3

SHEET NC23 OF .

STATE PROJECT I.D.	SHEET NUMBER
2235-00-70	8.668

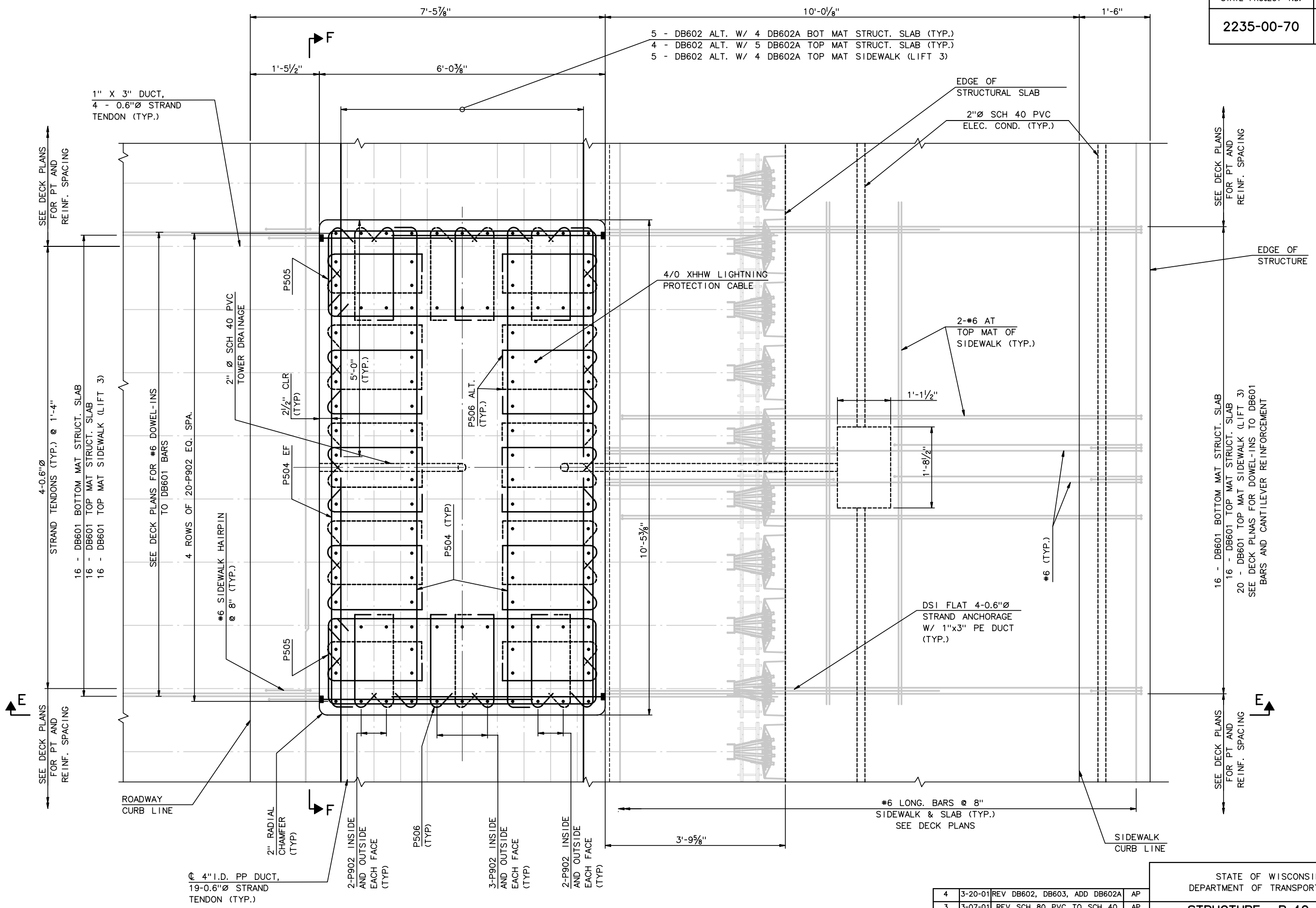

SECTION D @ EL 34.313

(EAST PYLON SHOWN, WEST OPPOSITE HAND)

1" = 1'-0"

RECORD DRAWING

No.	Date	Revisions	By
4	3-20-01	REV DB602, DB603, ADD DB602A	AP
3	3-07-01	REV SCH 80 PVC TO SCH 40	AP
2	3-01-01	REV 4" DUCT TO POLYPROP.	AP
1	2-26-01	ADD 2" DRAIN, 4/0 CABLE	AP

HNTB CORPORATION

STATE OF WISCONSIN
DEPARTMENT OF TRANSPORTATION

STRUCTURE B-40-414C

Designed By	CE	Design Checked	TZ	Drawn By	CE	Plans Checked	AP

PYLON REINFORCEMENT
LIFT 2
2 OF 3

SHEET NC24 OF

j:\cadd\ff31185\dgn\as built\north cablestay\nc24-pylonreinf02a.dgn 02/11/03 01:52:21 PM

STATE PROJECT I.D.	SHEET NUMBER
2235-00-70	8.669

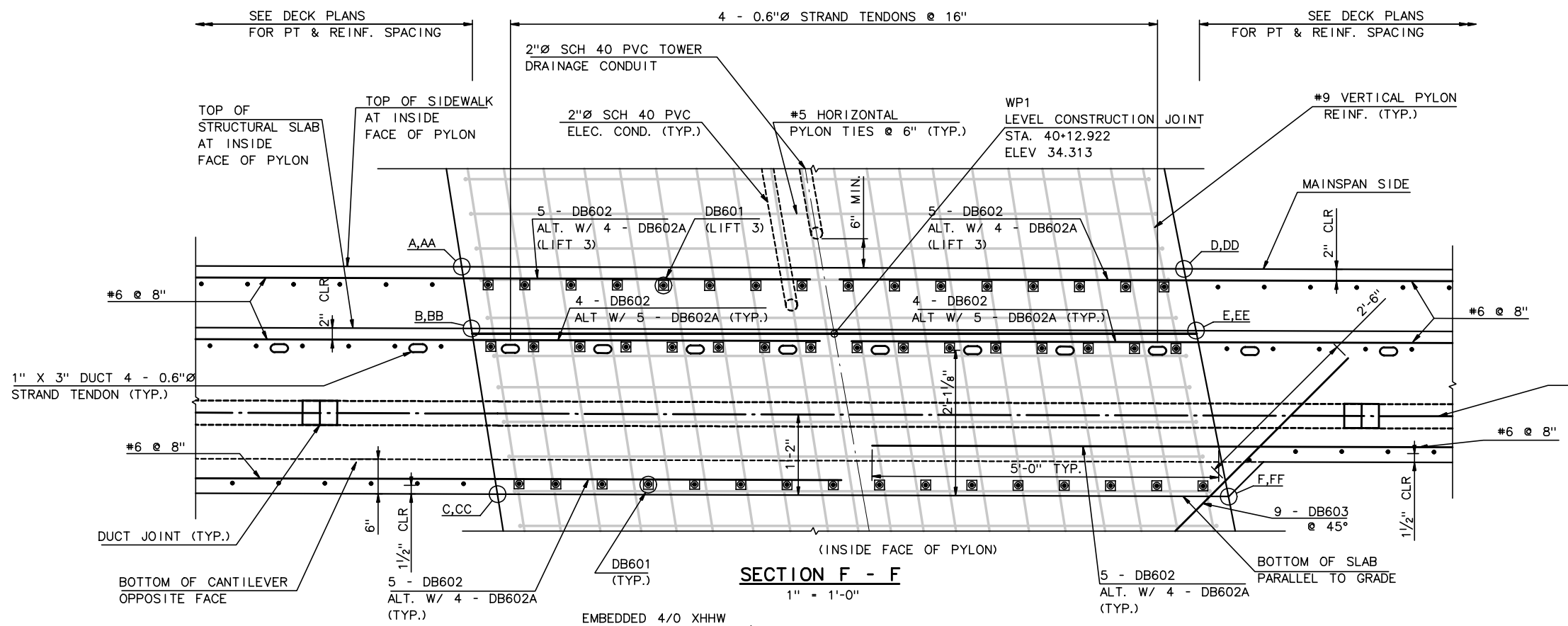

SECTION F - F

1" = 1'-0"

SLAB/TOWER INTERSECTION GEOM.			
WK. POINT	STA.	OFFSET	EL.
A	40+18.300	30.458'	35.281'
B	40+18.160	30.458'	34.390'
C	40+17.784	30.458'	31.998'
D	40+07.880	30.458'	35.250'
E	40+07.706	30.458'	34.358'
F	40+07.238	30.458'	31.966'
AA	40+18.319	36.480'	35.401'
BB	40+18.141	36.492'	34.269'
CC	40+17.784	36.517'	31.998'
DD	40+07.904	36.480'	35.370'
EE	40+07.682	36.493'	34.237'
FF	40+07.238	36.518'	31.966'

NOTES:

1. PT DIMENSIONS MEASURED TO THE CENTERLINE OF DUCT.
2. ALL REINFORCEMENT IS EPOXY COATED ASTM A615 OR A996, GRADE 60.
3. REFER TO ELECTRICAL DWGS FOR CONDUIT AND PULL BOX TYPE AND QUANTITY.

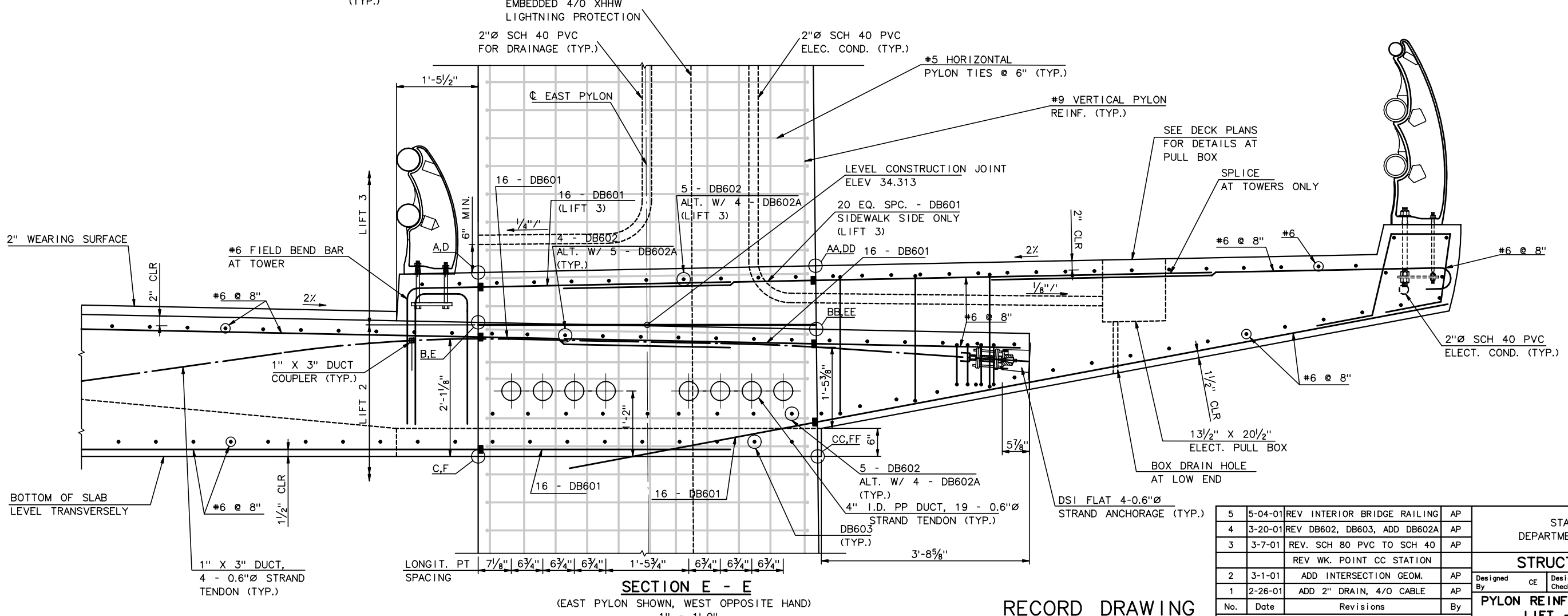

SECTION E - E

(EAST PYLON SHOWN, WEST OPPOSITE HAND)
1" = 1'-0"

RECORD DRAWING

No.	Date	Revisions	By
5	5-04-01	REV INTERIOR BRIDGE RAILING	AP
4	3-20-01	REV DB602, DB603, ADD DB602A	AP
3	3-7-01	REV. SCH 80 PVC TO SCH 40	AP
		REV WK. POINT CC STATION	
2	3-1-01	ADD INTERSECTION GEOM.	AP
1	2-26-01	ADD 2" DRAIN, 4/O CABLE	AP

HNTB CORPORATION

STATE OF WISCONSIN
DEPARTMENT OF TRANSPORTATION

STRUCTURE B-40-414C

Designed By	CE	Design Checked	TZ	Drawn By	CE	Plans Checked	AP

PYLON REINFORCEMENT
LIFT - 2
3 OF 3

SHEET NC25 OF

STATE PROJECT I.D.	SHEET NUMBER
2235-00-70	8.670

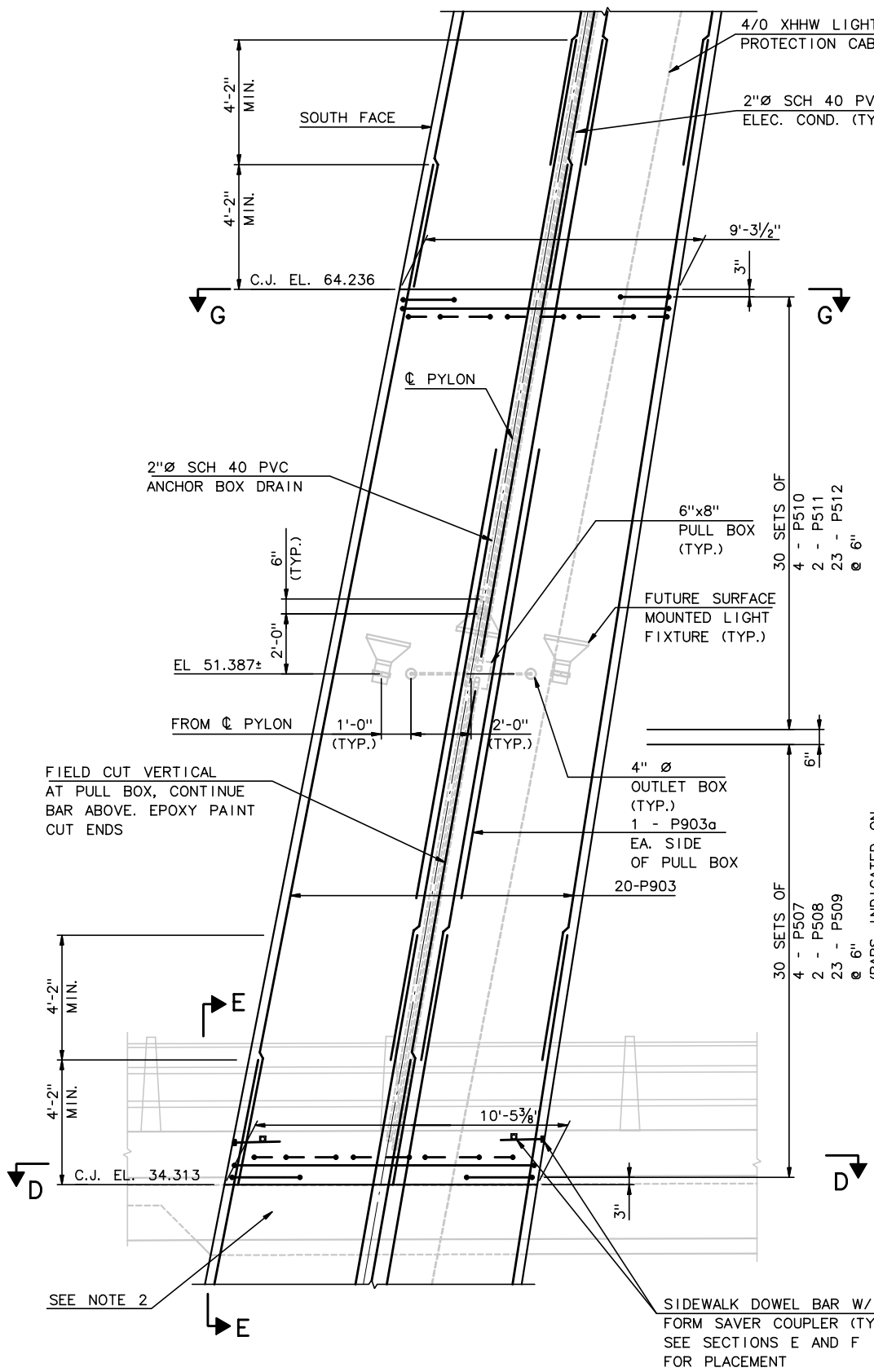

LONGITUDINAL ELEVATION

(EAST PYLON SHOWN, WEST SIMILAR)
⅜" = 1'-0"

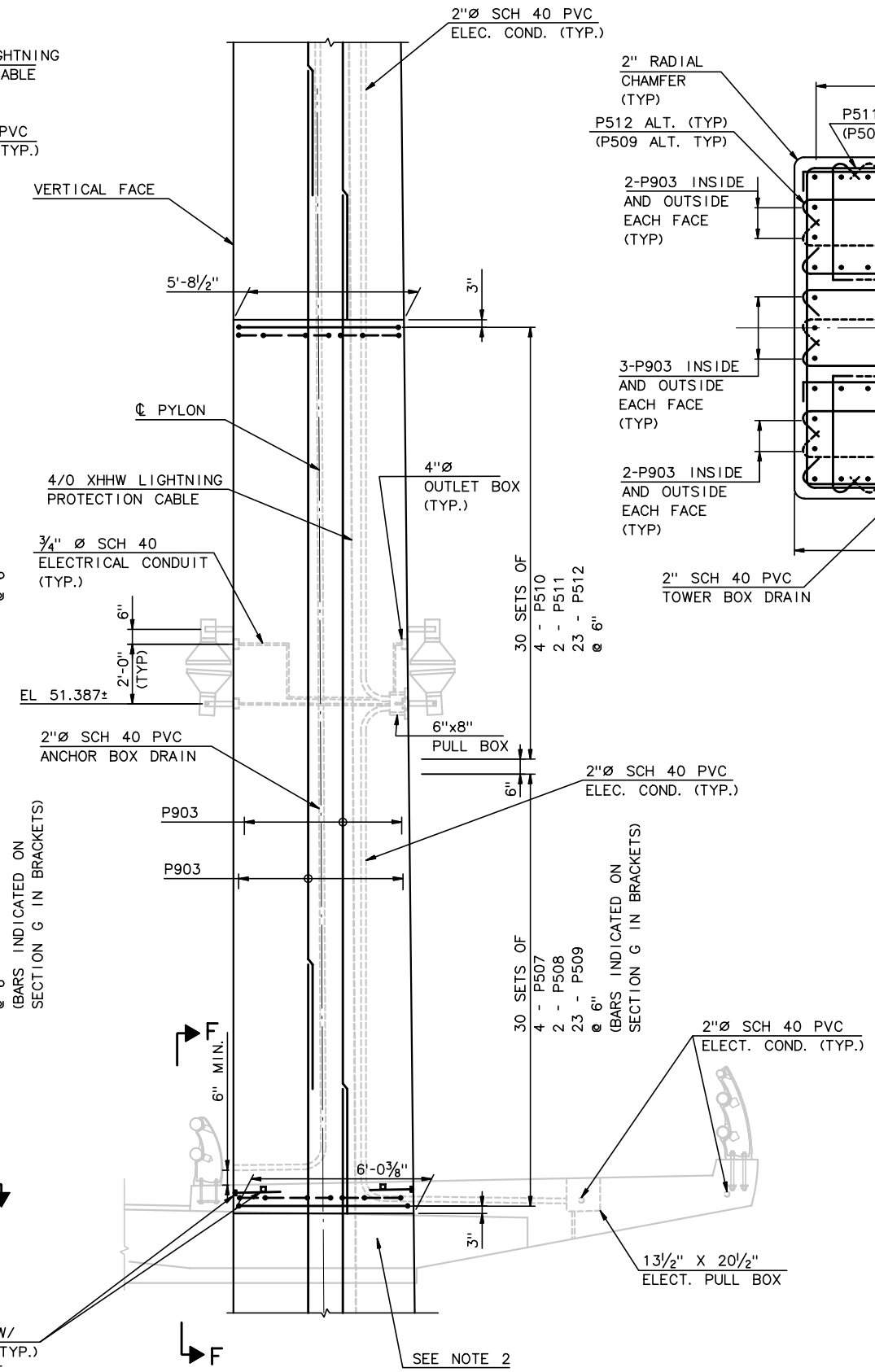

ELEVATION SOUTH FACE

(LOOKING UPSTATION)
(WEST PYLON OPPOSITE HAND)
⅜" = 1'-0"

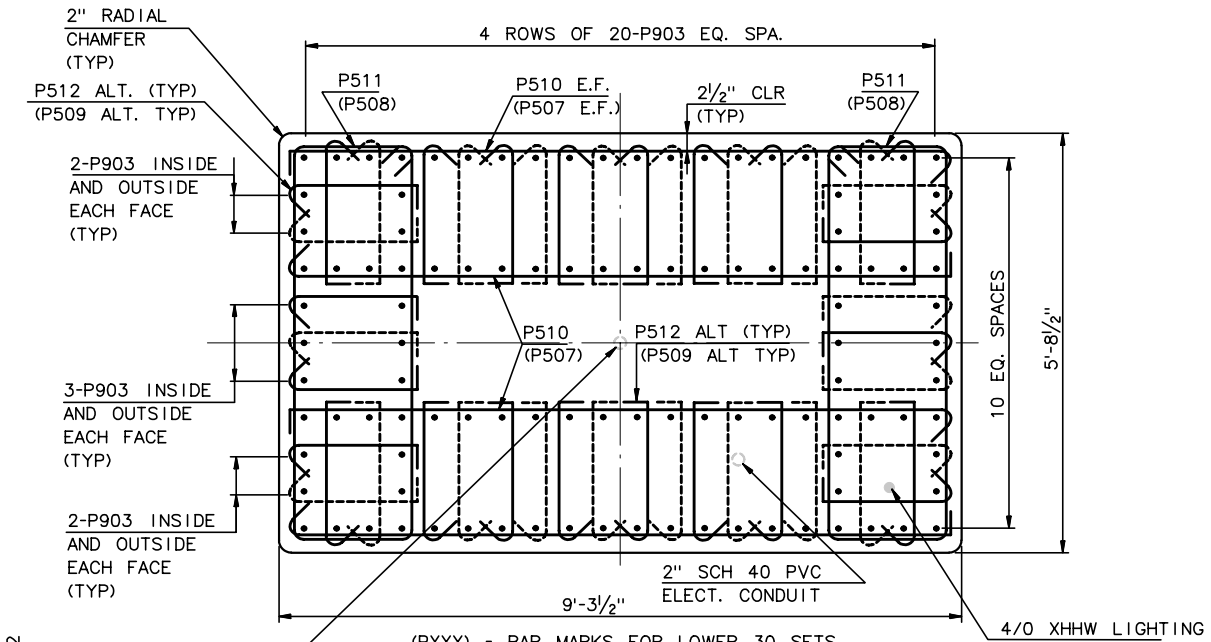

(PXXX) = BAR MARKS FOR LOWER 30 SETS

SECTION G @ EL 64.236

¾" = 1'-0"

NOTES:

1. FOR PYLON GEOMETRY, SEE SHEET NC19.
2. SUPERSTRUCTURE REINFORCEMENT AND POST-TENSIONING NOT SHOWN FOR CLARITY. FOR INTEGRATED SECTIONS D-D, E-E, AND F-F, SEE PYLON REINFORCEMNET LIFT 2 DWGS 2 AND 3 OF 3.
3. ALL REINFORCEMENT IS EPOXY COATED ASTM A615 OR A996, GRADE 60.
4. SEE LIFT 3 BARLIST DWG FOR BAR BEND DETAILS.

EMBEDDED ITEMS LIST	
ITEM	QTY.
2" SCH 40 PVC ELECTRICAL CONDUIT	31'-0"±
6"x8" PULL BOX STRONGWELL CAT. NO. PC0608DG06	1
4/0 XHHW LIGHTNING PROTECTION CABLE	31'-0"+SPLICE
2" SCH 40 PVC ANCHOR BOX DRAIN	33'-0"±
¾" SCH 40 PVC ELECTRICAL CONDUIT	REF. ELECTRICAL DWG
4" ROUND OUTLET BOX CARLON CAT. NO. E97OCE	6

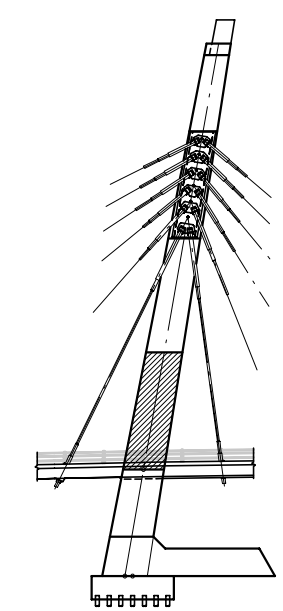

TOWER KEY

RECORD DRAWING

No.	Date	Revisions	By
1	5-15-01	REVISED INTERIOR RAIL	AP

HNTB CORPORATION

STATE OF WISCONSIN
DEPARTMENT OF TRANSPORTATION

STRUCTURE B-40-414C

Designed By	SL	Design Checked	TZ	Drawn By	BM	Plans Checked	AP

PYLON REINFORCEMENT LIFT - 3

SHEET NC26 OF .

STATE PROJECT I.D.	SHEET NUMBER
2235-00-70	8.671

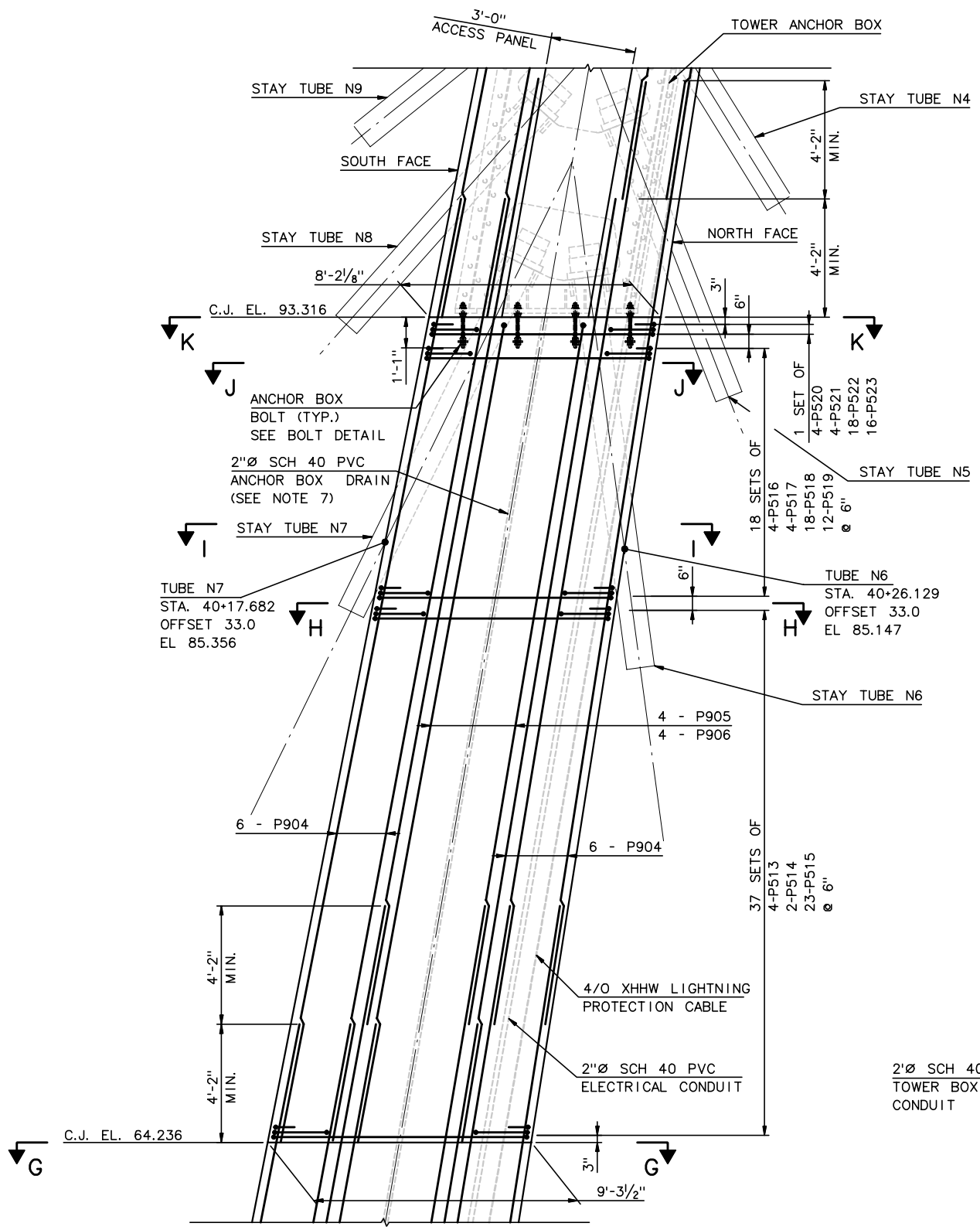

LONGITUDINAL ELEVATION

(EAST PYLON SHOWN, WEST SIMILAR)
3/8" = 1'-0"

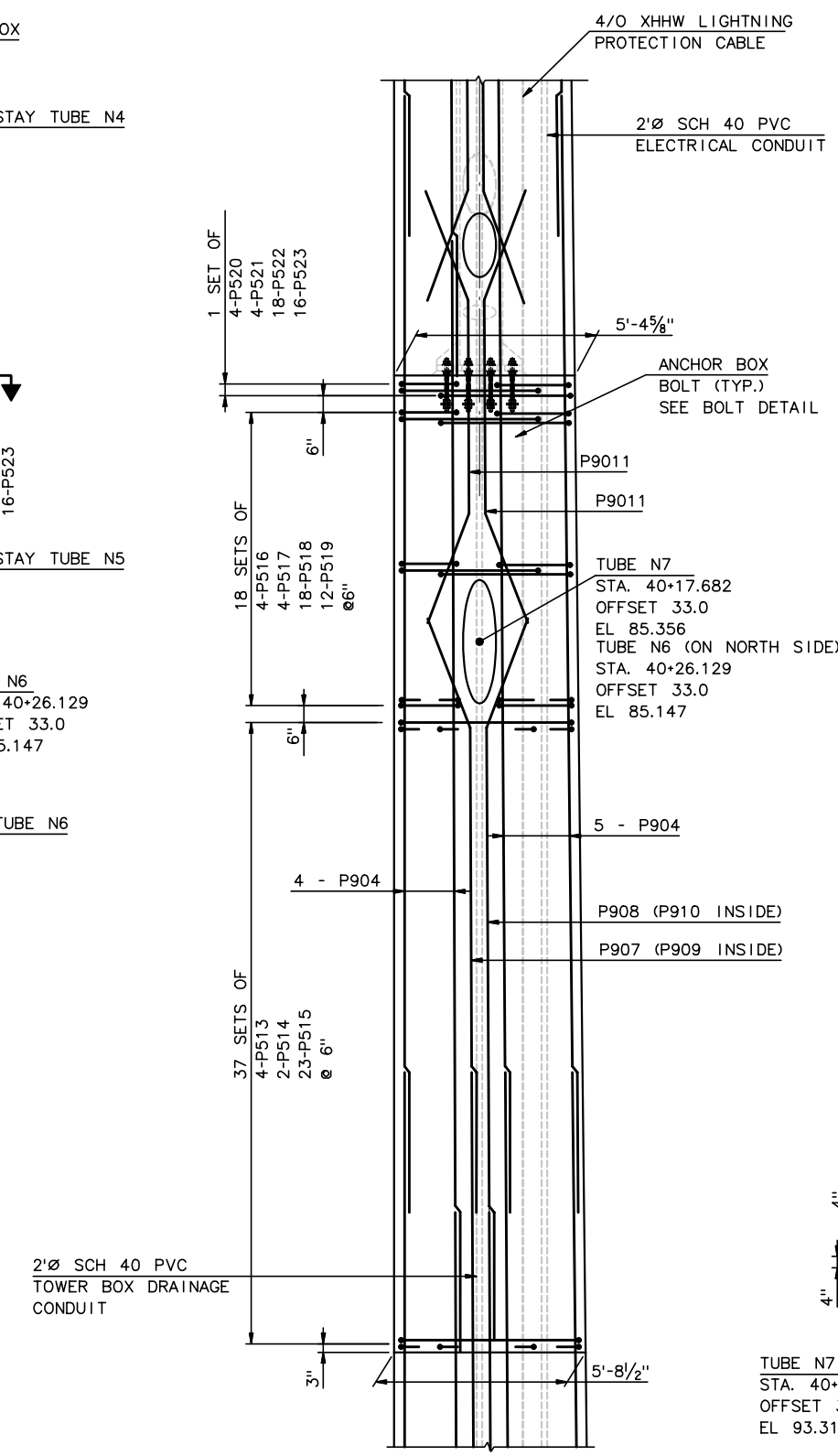

ELEVATION SOUTH FACE

(LOOKING UPSTATION)
(NORTH FACE SIMILAR)
(WEST PYLON OPPOSITE HAND)
3/8" = 1'-0"

NOTES:

1. FOR PYLON GEOMETRY, SEE SHEET NC19.
2. FOR SECTION G-G, SEE PYLON REINFORCEMENT LIFT 3 DWG.
3. FOR SECTIONS H-H THRU K-K SEE PYLON REINFORCEMENT LIFT - 4, DWG 2 OF 2.
4. ALL REINFORCEMENT IS EPOXY COATED ASTM A615 OR A996, GRADE 60.
5. SEE LIFT 4 BARLIST DWG FOR BAR BEND DETAILS.
6. FOR TOWER BOX DETAILS SEE PYLON ANCHOR BOX DWGS. FOR STAY TUBE DETAILS, SEE STAY TUBE DWGS
7. 2" ANCHOR BOX DRAIN SHALL BE CUT FLUSH WITH THE BOTTOM OF THE ANCHOR BOX IN LIFT 5.

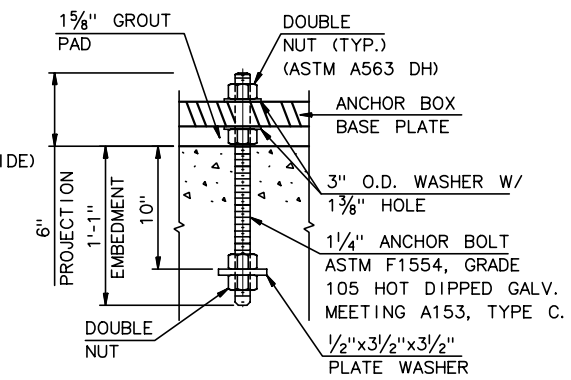

BOLT DETAIL

1 1/2" = 1'-0"

EMBEDDED ITEMS LIST	
ITEM	QTY.
STAY TUBE N6 SUPPLIED BY D.S.I.	1
STAY TUBE N7 SUPPLIED BY D.S.I.	1
4/O XHHW LIGHTNING PROTECTION CABLE	30'-0" + SPLICE
2" SCH 40 PVC ANCHOR BOX DRAIN	30'-0"±
2" SCH 40 PVC ELECTRICAL CONDUIT	31'-0"±
1 1/4" ANCHOR BOLTS ASTM F1554, GRADE 105 W/ HARDWARE	8

NOTES:

ANCHOR BOLTS TO BE EMBEDDED VERTICAL

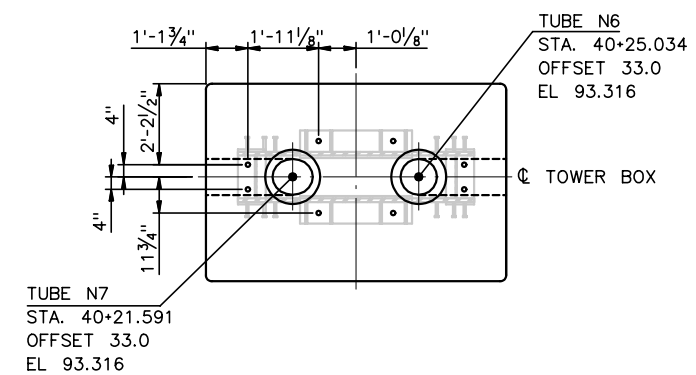

TOWER BOX ANCHOR BOLT PATTERN

@ EL. 93.316
3/8" = 1'-0"

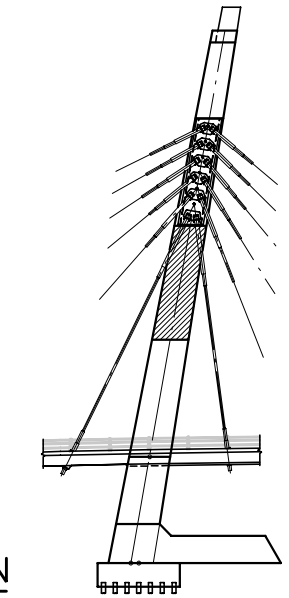

TOWER KEY

RECORD DRAWING

No.	Date	Revisions	By

HNTB CORPORATION

STATE OF WISCONSIN
DEPARTMENT OF TRANSPORTATION

STRUCTURE B-40-414C

Designed By	SL	Design Checked	TZ	Drawn By	BM	Plans Checked	AP

PYLON REINFORCEMENT
LIFT - 4
1 OF 2

SHEET NC27 OF

STATE PROJECT I.D.	SHEET NUMBER
2235-00-70	8.672

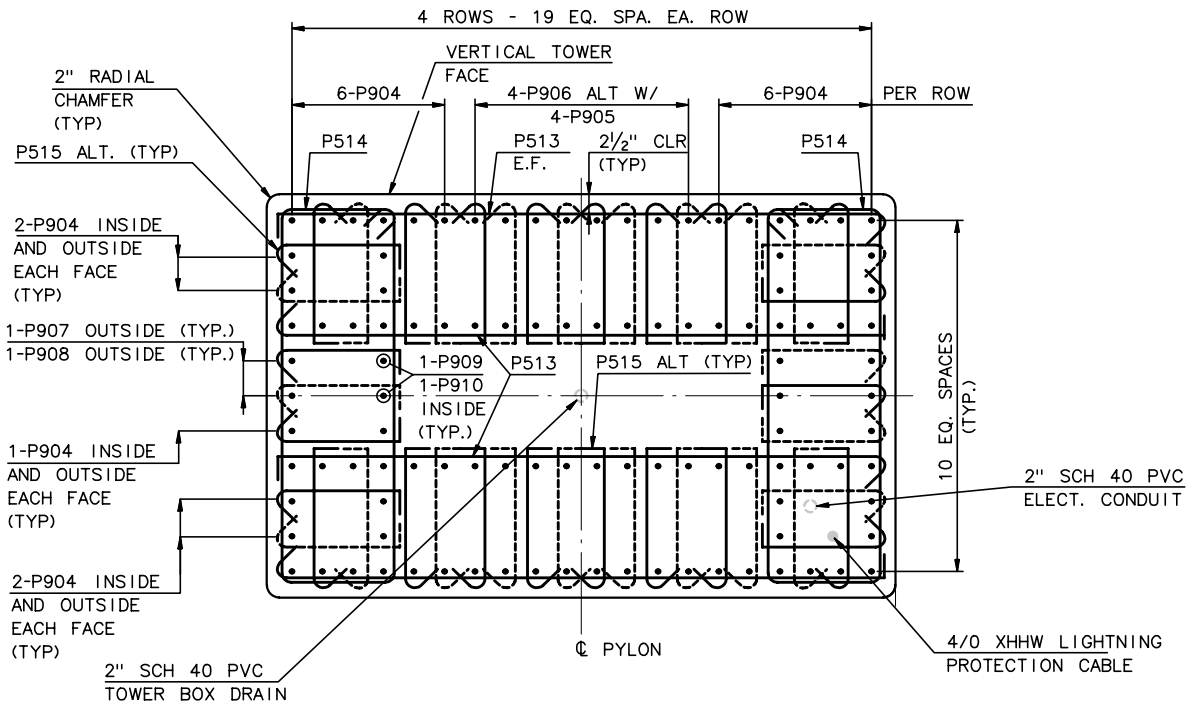

SECTION H

¾" = 1'-0"

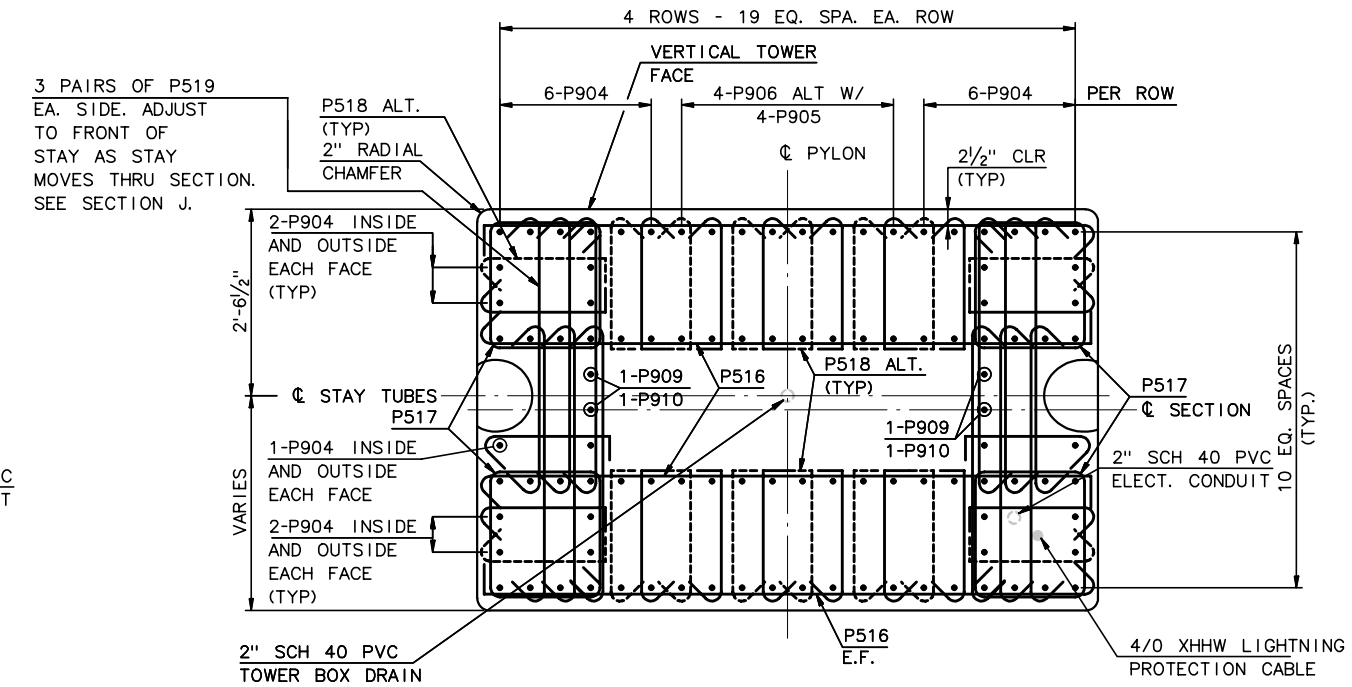

SECTION I

¾" = 1'-0"

NOTES:

1. FOR LOCATION OF SECTIONS H THRU J SEE PYLON REINFORCEMENT LIFT-4, DWG 1 OF 2.
2. ALL REINFORCEMENT IS EPOXY COATED ASTM A615 OR A996, GRADE 60.
3. FOR ANCHOR BOX DETAIL, SEE SHEET NC33.

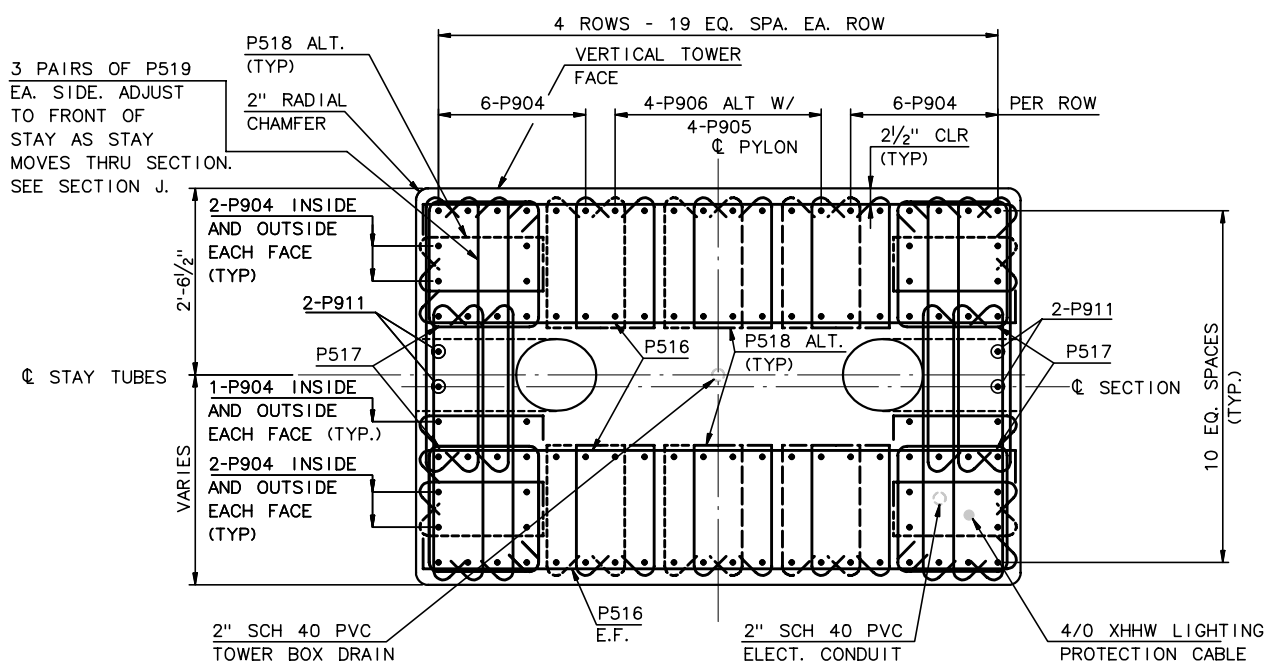

SECTION J

¾" = 1'-0"

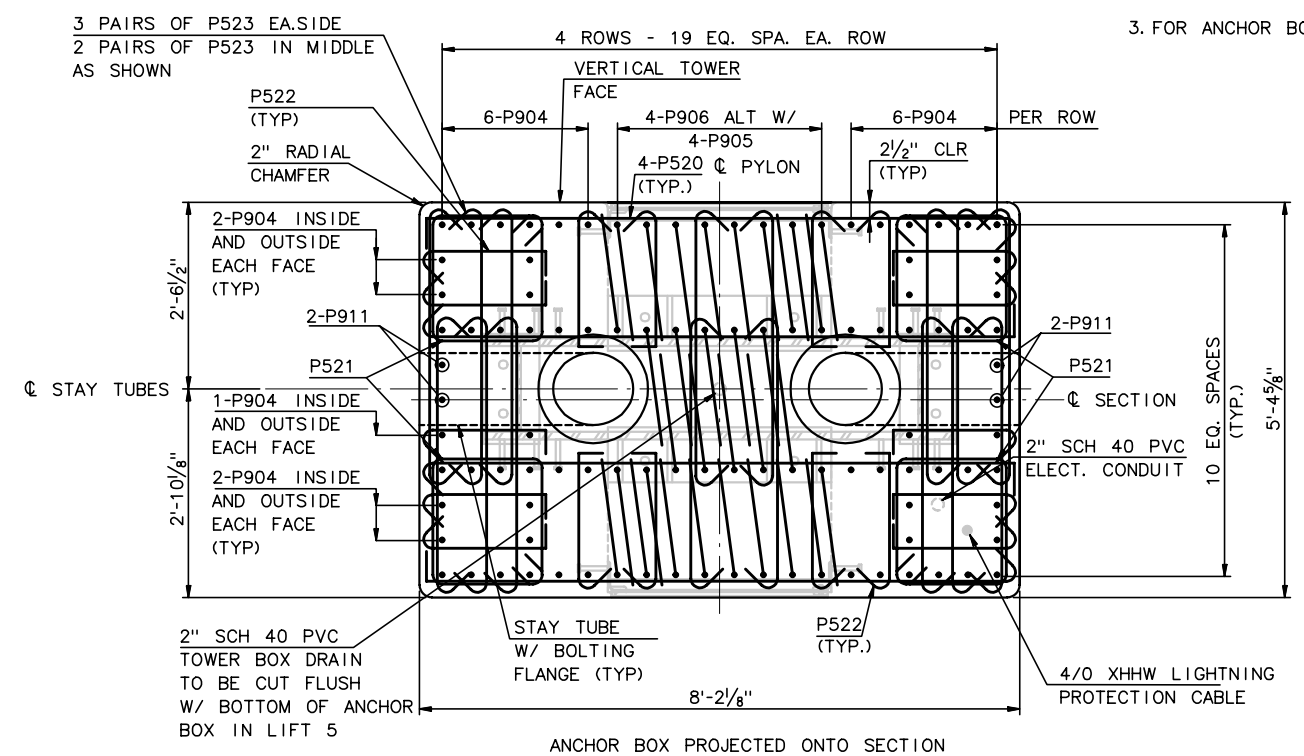

SECTION K @ EL 93.316

¾" = 1'-0"

RECORD DRAWING

No.	Date	Revisions	By

HNTB CORPORATION

STATE OF WISCONSIN
DEPARTMENT OF TRANSPORTATION

STRUCTURE B-40-414C

Designed By	SL	Design Checked	TZ	Drawn By	BM	Plans Checked	AP

PYLON REINFORCEMENT
LIFT - 4
2 OF 2

SHEET NC28 OF

STATE PROJECT I.D.	SHEET NUMBER
2235-00-70	8.673

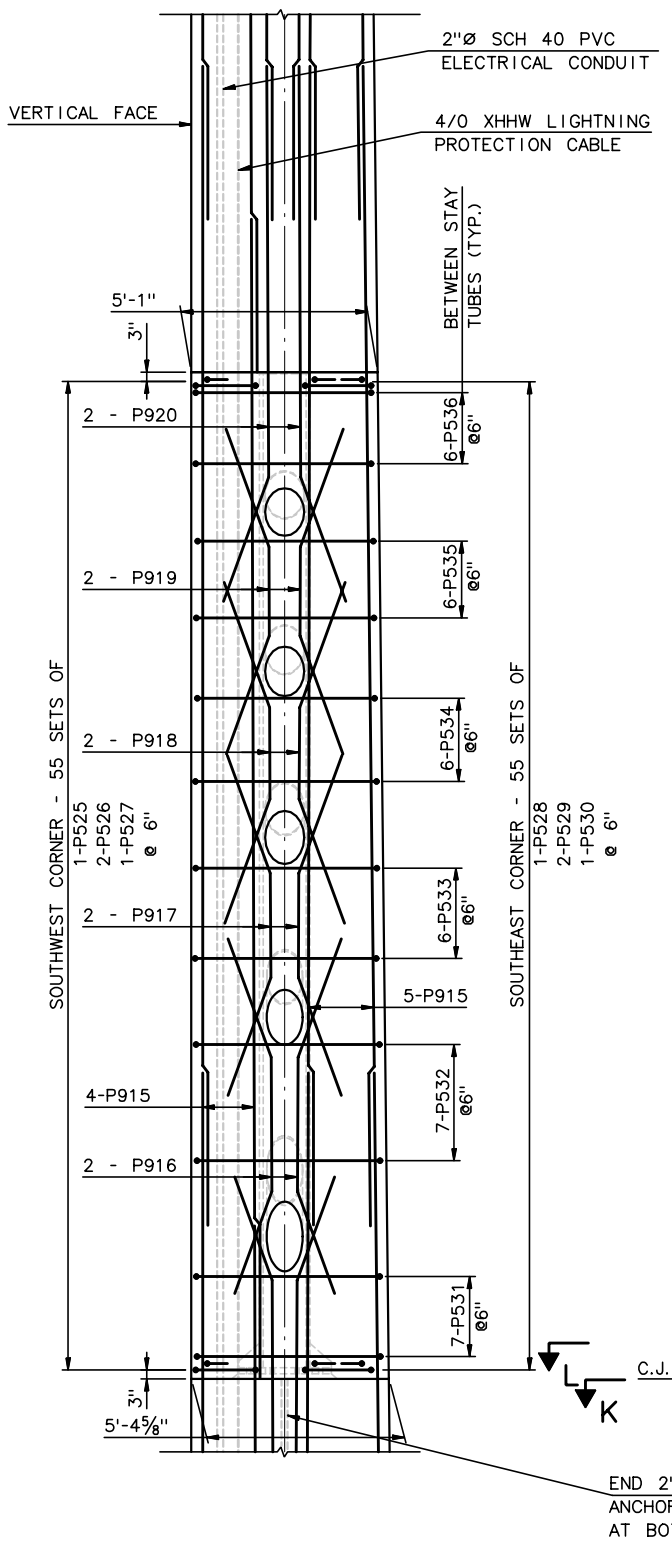

ELEVATION SOUTH FACE

(LOOKING UPSTATION)
(WEST PYLON OPPOSITE HAND)
⅜" = 1'-0"

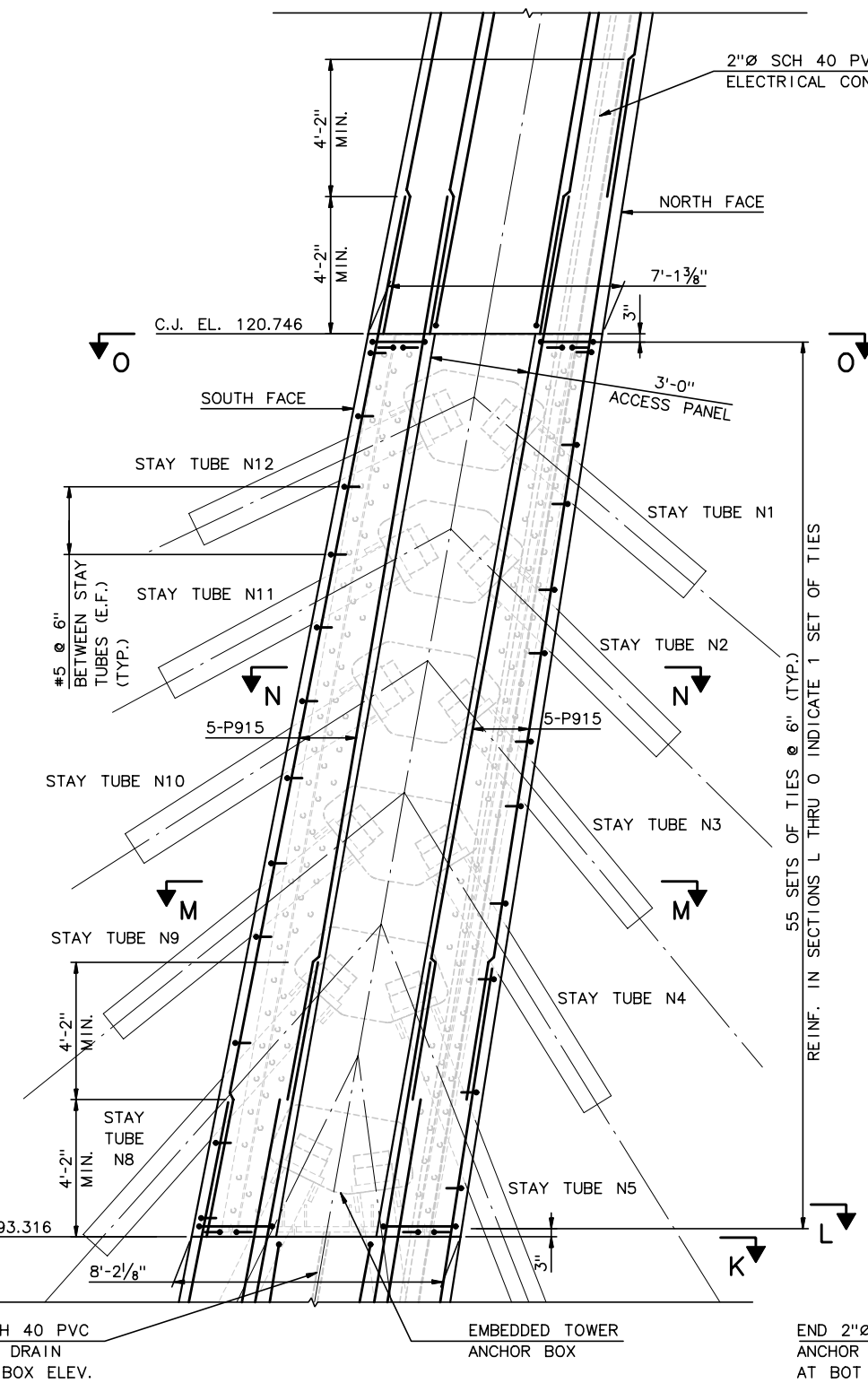

LONGITUDINAL ELEVATION

(EAST PYLON SHOWN, WEST SIMILAR)
⅜" = 1'-0"

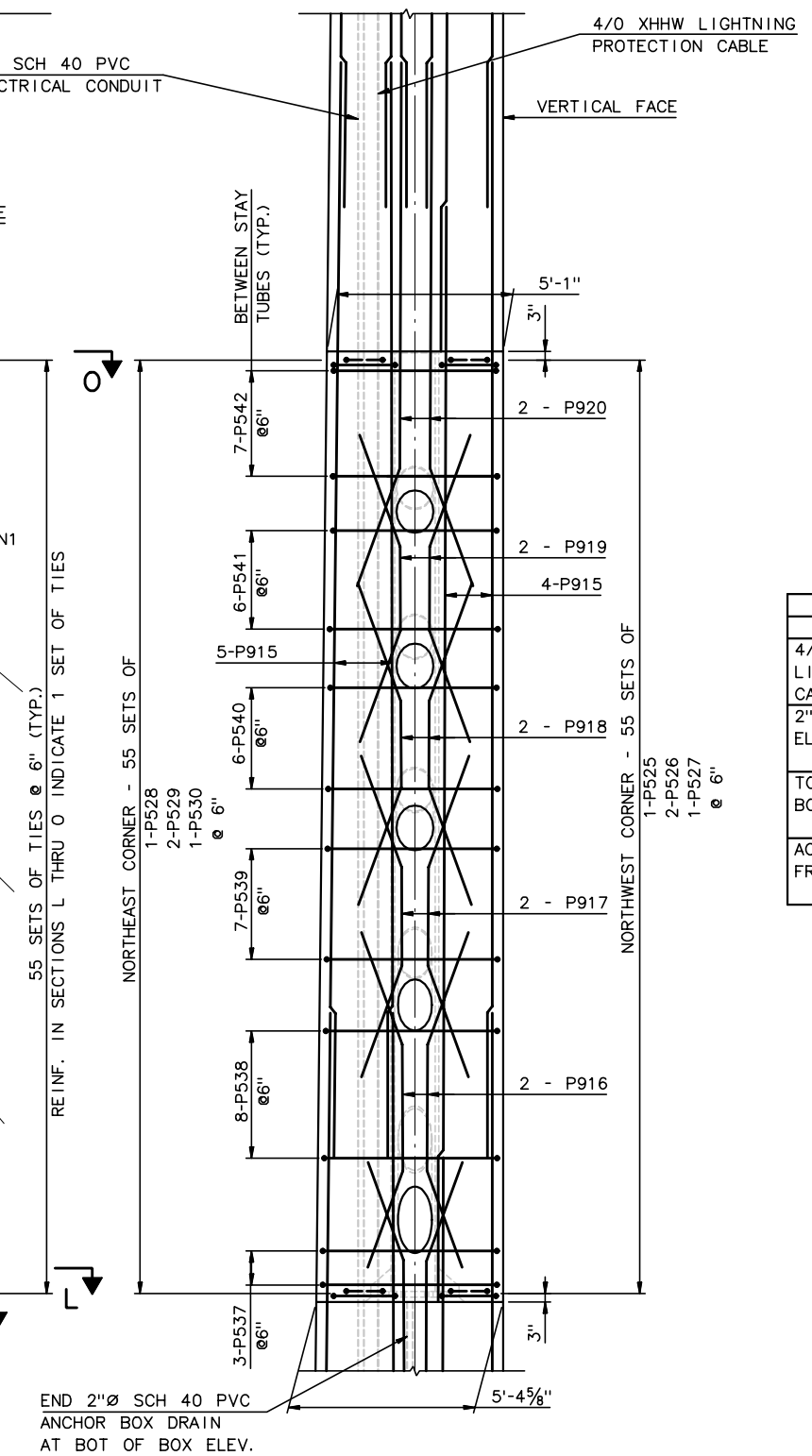

ELEVATION NORTH FACE

(LOOKING DOWNSTATION)
(WEST PYLON OPPOSITE HAND)
⅜" = 1'-0"

NOTES:

1. FOR PYLON GEOMETRY, SEE NC19.
2. FOR SECTION K, SEE PYLON REINFORCEMENT LIFT-4, DWG 2 OF 2.
3. FOR SECTIONS L THRU N, SEE PYLON REINFORCEMENT LIFT-5, DWG 2 OF 2.
4. ALL REINFORCEMENT IS EPOXY COATED ASTM A615 OR A996, GRADE 60.
5. SEE LIFT 5 BARLIST DWG FOR BAR BEND DETAILS.
6. FOR ANCHOR BOX DETAILS, SEE NC33.
7. FOR ACCESS PANEL DETAILS, SEE NC34.

EMBEDDED ITEMS LIST	
ITEM	QTY.
4/0 XHHW LIGHTNING PROTECTION CABLE	28'-0"+SPLICE LENGTH
2" SCH 40 PVC ELECTRICAL CONDUIT	28'-0"±
TOWER ANCHOR BOX	1
ACCESS DOOR FRAME	2

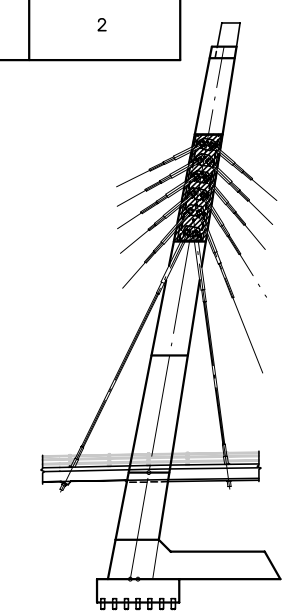

TOWER KEY

RECORD DRAWING

No.	Date	Revisions	By

HNTB CORPORATION

STATE OF WISCONSIN
DEPARTMENT OF TRANSPORTATION

STRUCTURE B-40-414C

Designed By	SL	Design Checked	TZ	Drawn By	BM	Plans Checked	AP

PYLON REINFORCEMENT
LIFT - 5
1 of 2

SHEET NC29 OF

STATE PROJECT I.D.	SHEET NUMBER
2235-00-70	8.674

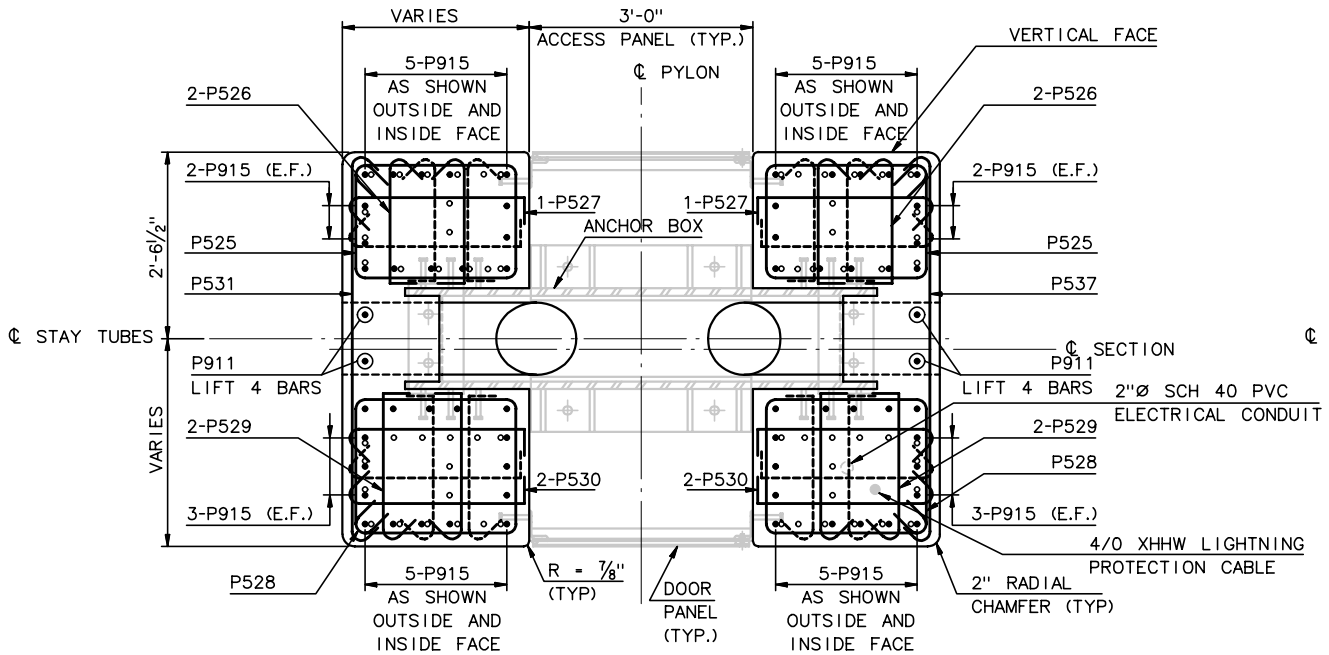

SECTION L

SCALE: ¾"=1'-0"

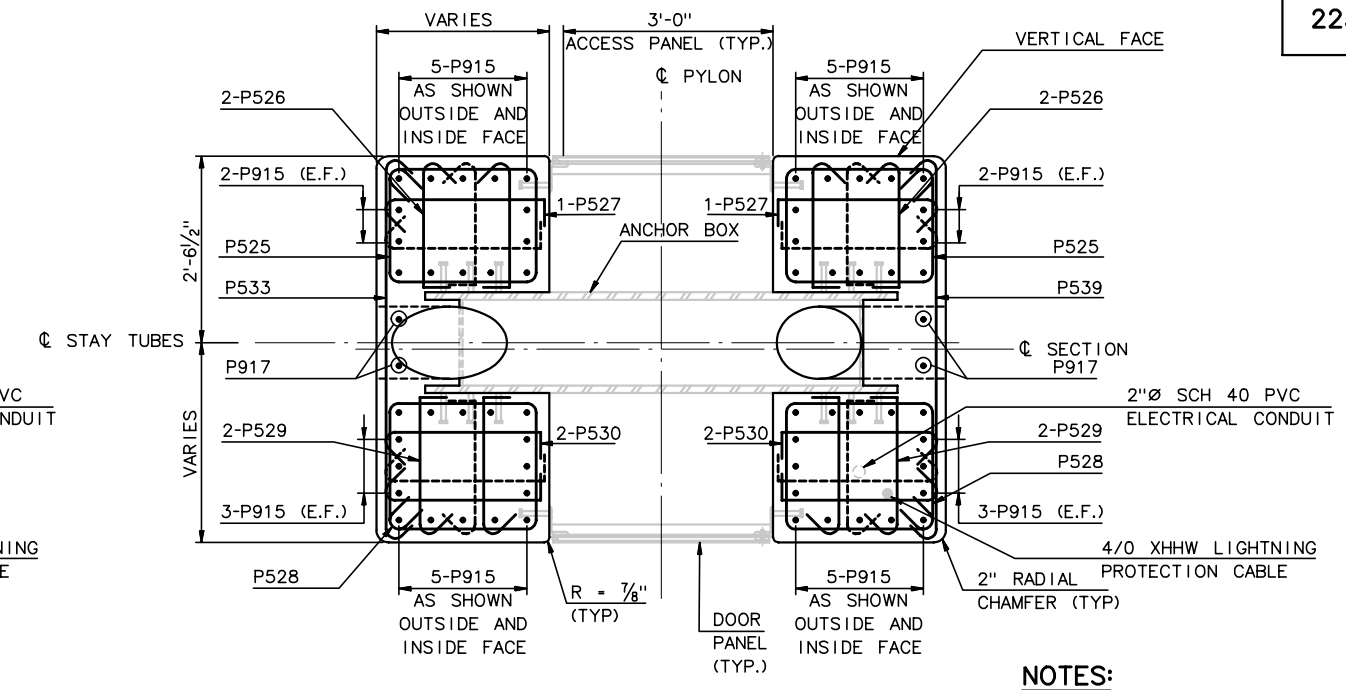

SECTION M

SCALE: ¾"=1'-0"

NOTES:

1. FOR LOCATION OF SECTIONS L THRU O, SEE PYLON REINFORCEMENT LIFT -5, SHEET 1 OF 2.
2. ALL REINFORCEMENT IS EPOXY COATED ASTM A615 OR A996, GRADE 60.
3. FOR ANCHOR BOX DETAILS, SEE SHEET NC33.
4. FOR ACCESS PANEL DETAILS, SEE SHEET NC34.
5. PROVIDE 2½" CLR. COVER TO REINFORCEMENT (TYP.)

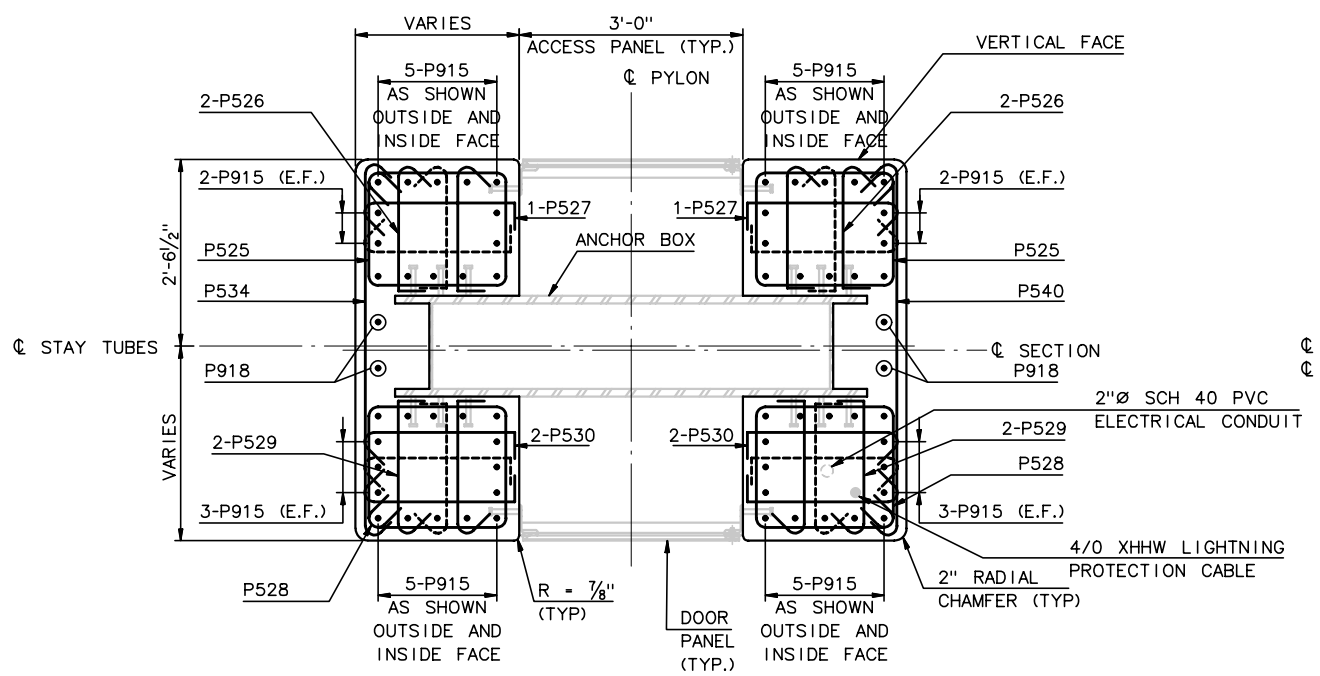

SECTION N

SCALE: ¾"=1'-0"

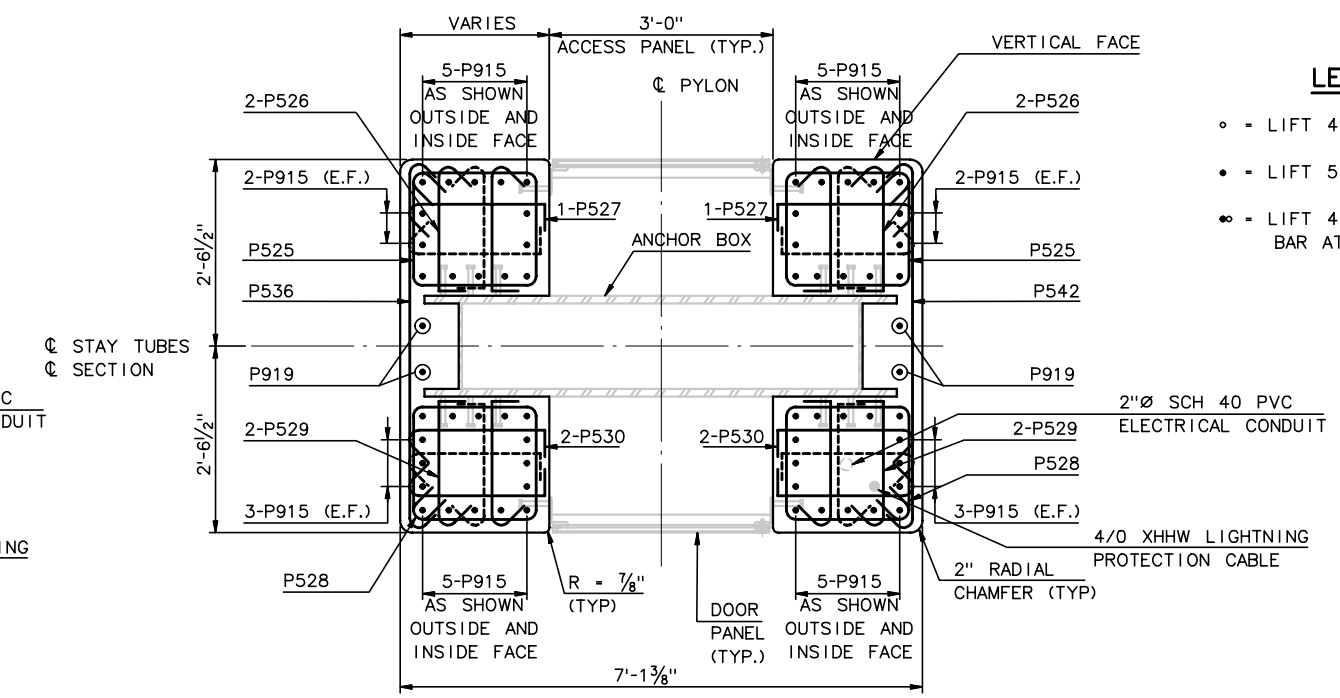

SECTION O @ EL 120.746

SCALE: ¾"=1'-0"

LEGEND:

- ∘ - LIFT 4 VERTICAL REBAR
- • - LIFT 5 VERTICAL REBAR
- ∘• - LIFT 4 BAR WITH LIFT 5 BAR AT LIFT 5 BAR LOCATION

RECORD DRAWING

No.	Date	Revisions	By

HNTB CORPORATION

STATE OF WISCONSIN
DEPARTMENT OF TRANSPORTATION

STRUCTURE B-40-414C

Designed By	SL	Design Checked	TZ	Drawn By	BM	Plans Checked	AP

PYLON REINFORCEMENT
LIFT - 5
2 OF 2

SHEET NC30 OF

STATE PROJECT I.D.	SHEET NUMBER
2235-00-70	8.675

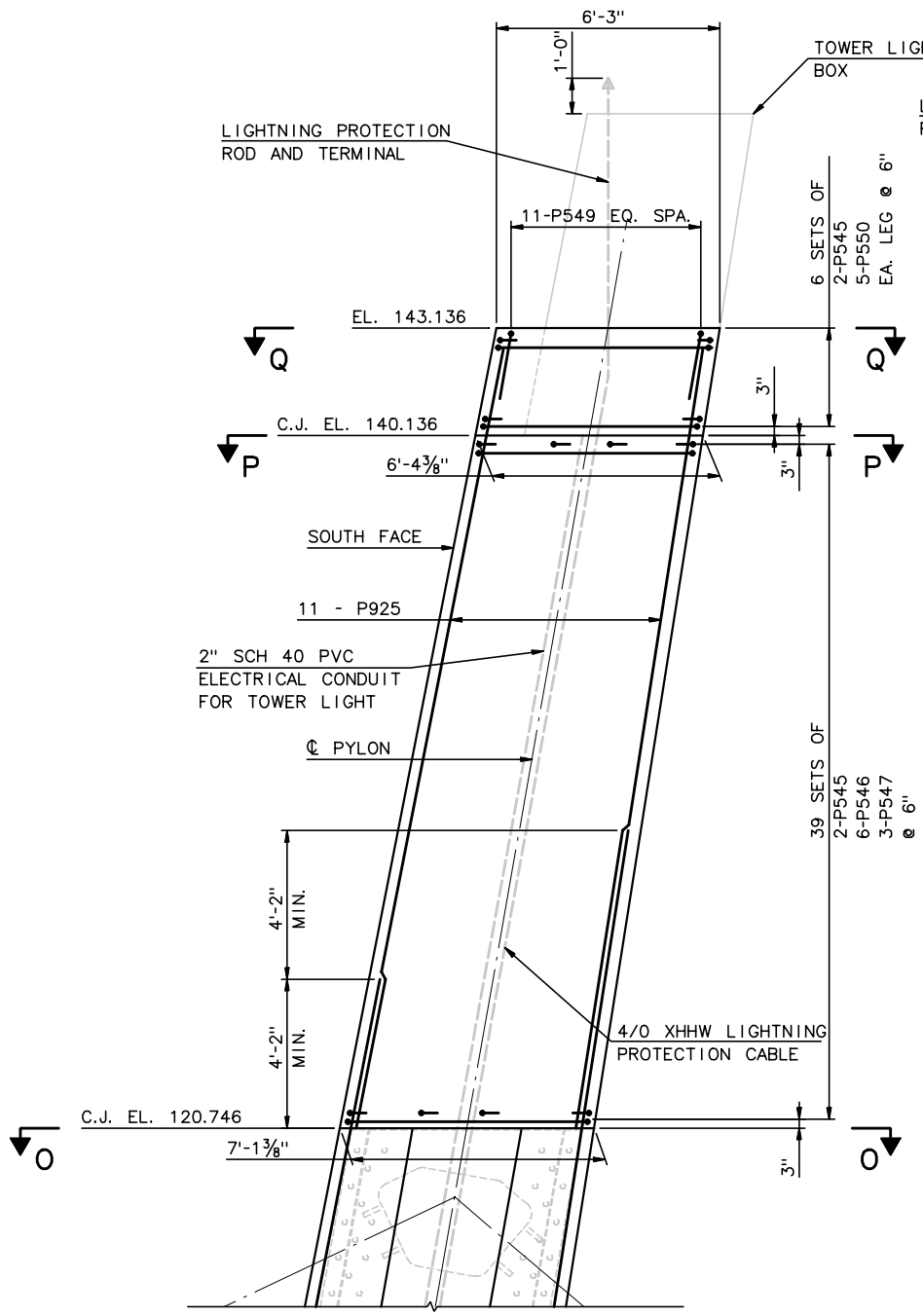

LONGITUDINAL ELEVATION

(EAST PYLON SHOWN, WEST SIMILAR)
⅜" = 1'-0"

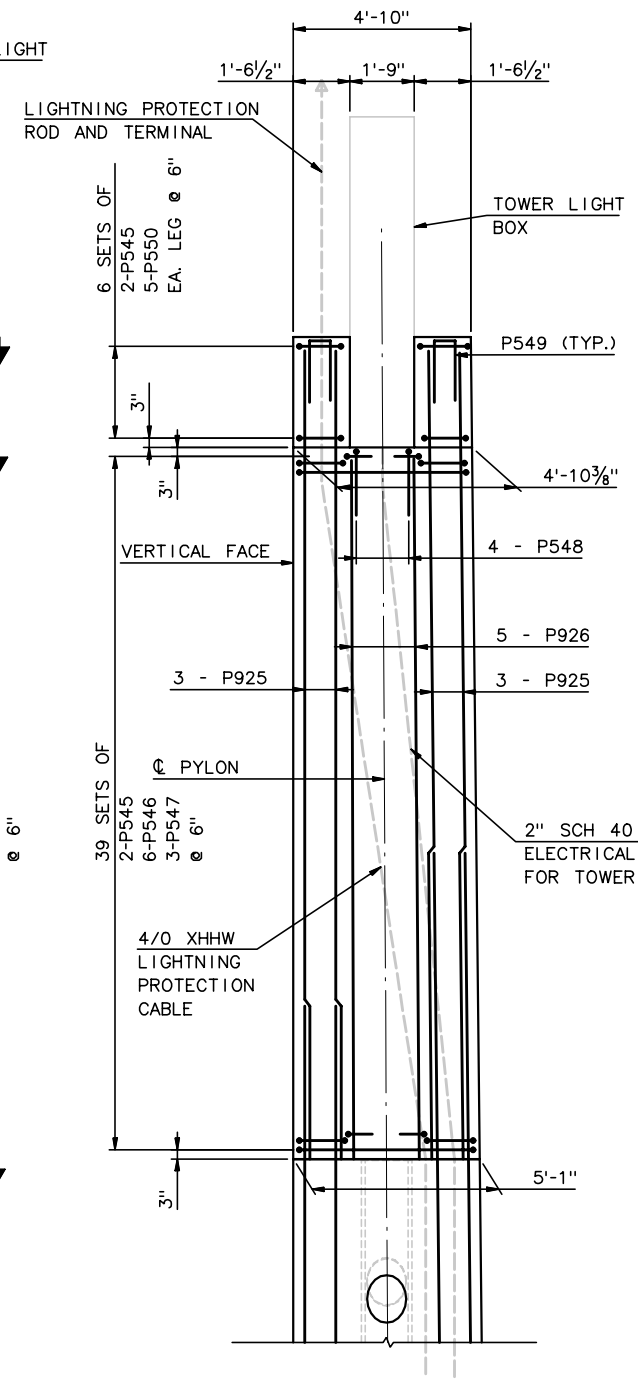

ELEVATION SOUTH FACE

(NORTH FACE SIMILAR)
⅜" = 1'-0"

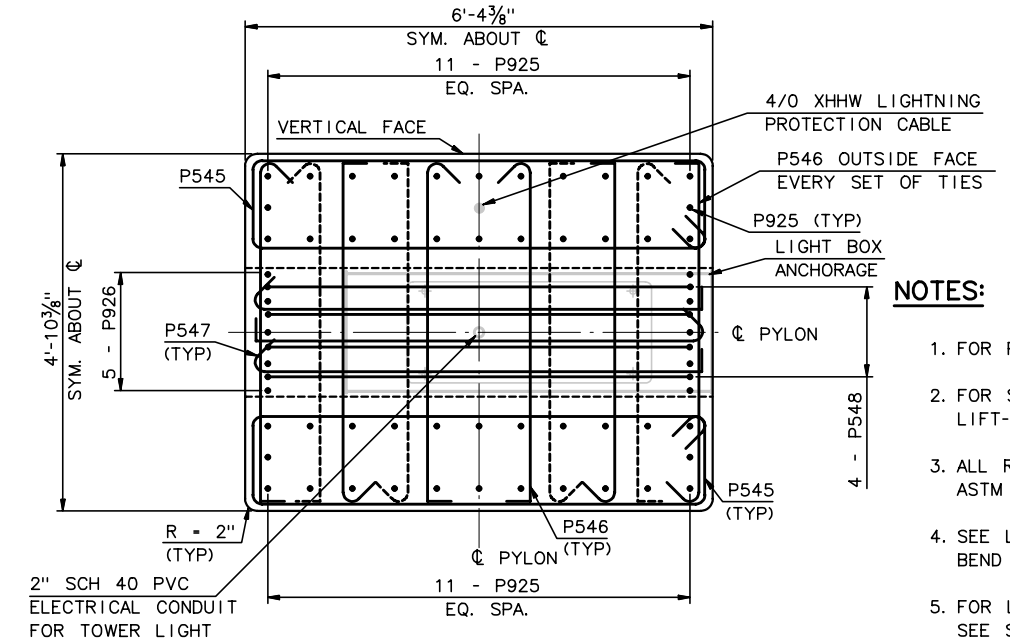

SECTION P @ EL 140.136

SCALE: ¾"=1'-0"

NOTES:

1. FOR PYLON GEOMETRY, SEE NC19.
2. FOR SECTION O-O, SEE PYLON REINFORCEMENT LIFT-5, SHEET 2 OF 2.
3. ALL REINFORCEMENT IS EPOXY COATED ASTM A615 OR A996, GRADE 60.
4. SEE LIFT 6 BARLIST DWG FOR BAR BEND DETAILS.
5. FOR LIGHTNING PROTECTION DETAILS, SEE SHEET NC36.
6. ALL COVER SHALL BE 2½"

EMBEDDED ITEMS LIST	
ITEM	QTY.
4/0 XHHW LIGHTNING PROTECTION CABLE	30'-0"±
2" SCH 80 PVC ELECTRICAL CONDUIT	25'-0"±

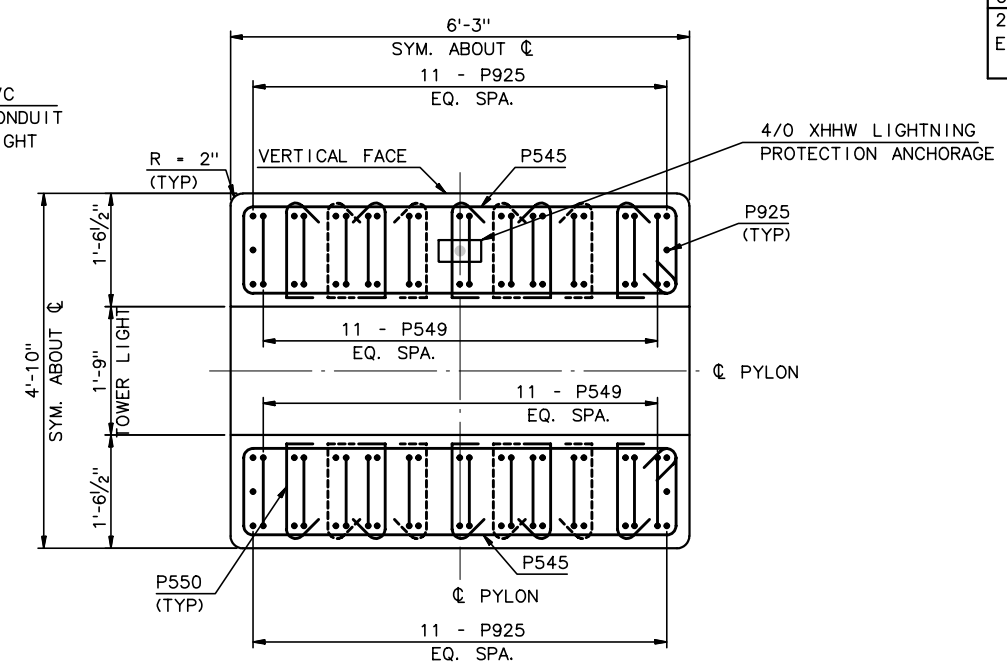

SECTION Q @ EL 143.136

SCALE: ¾"=1'-0"

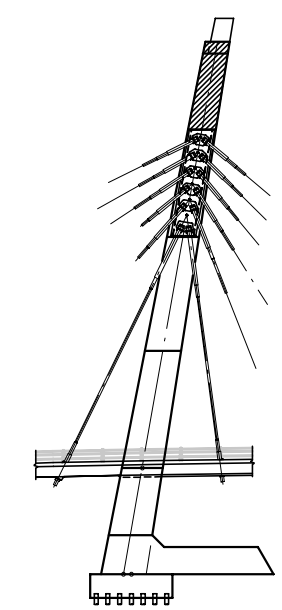

TOWER KEY

RECORD DRAWING

No.	Date	Revisions	By

HNTB CORPORATION

STATE OF WISCONSIN
DEPARTMENT OF TRANSPORTATION

STRUCTURE B-40-414C

Designed By	SL	Design Checked	TZ	Drawn By	BM	Plans Checked	AP

PYLON REINFORCEMENT LIFTS - 6 & 7

SHEET NC31 OF

STATE PROJECT I.D.	SHEET NUMBER
2235-00-70	8.676

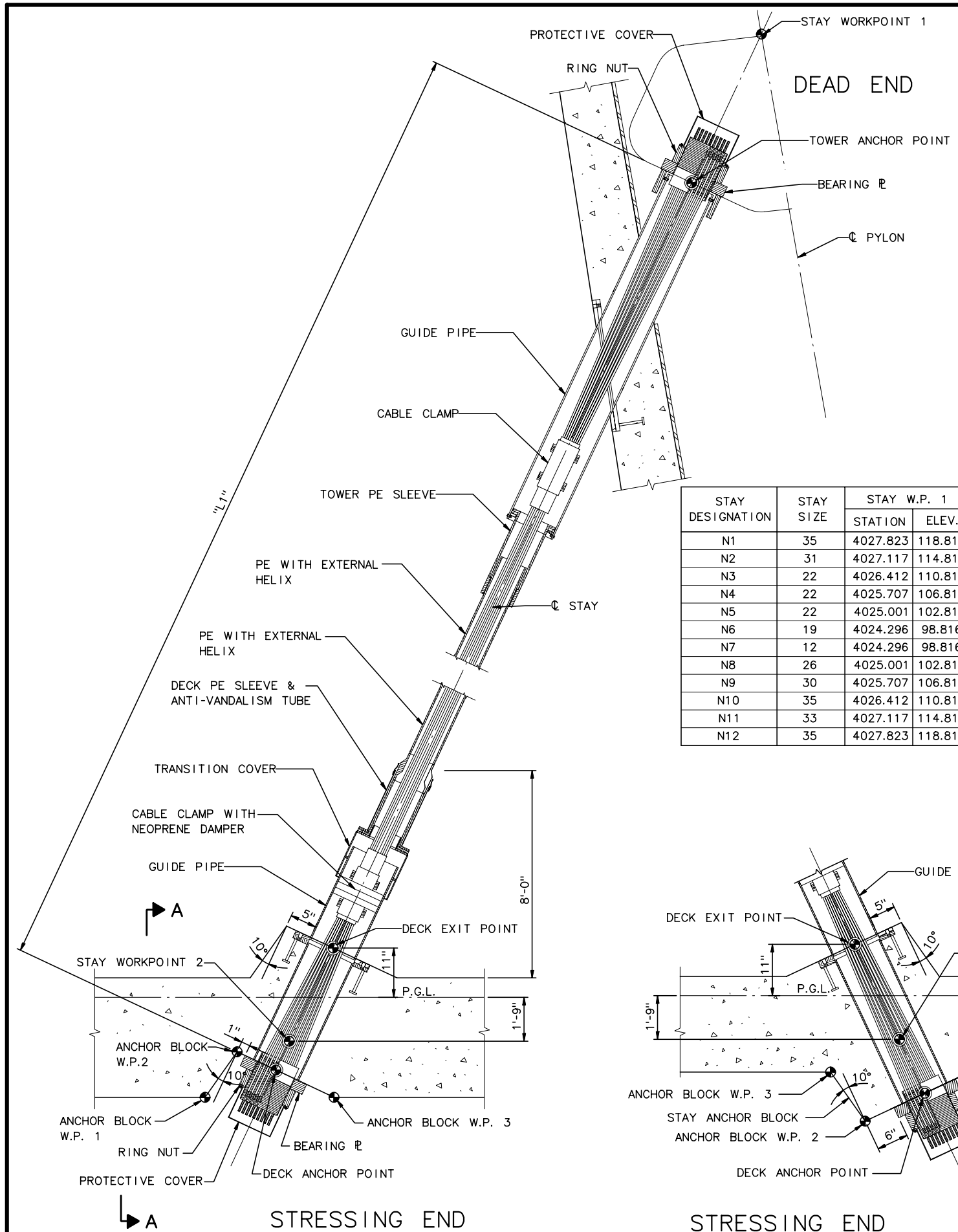

BACK SPAN STAY ELEVATION

N.T.S.

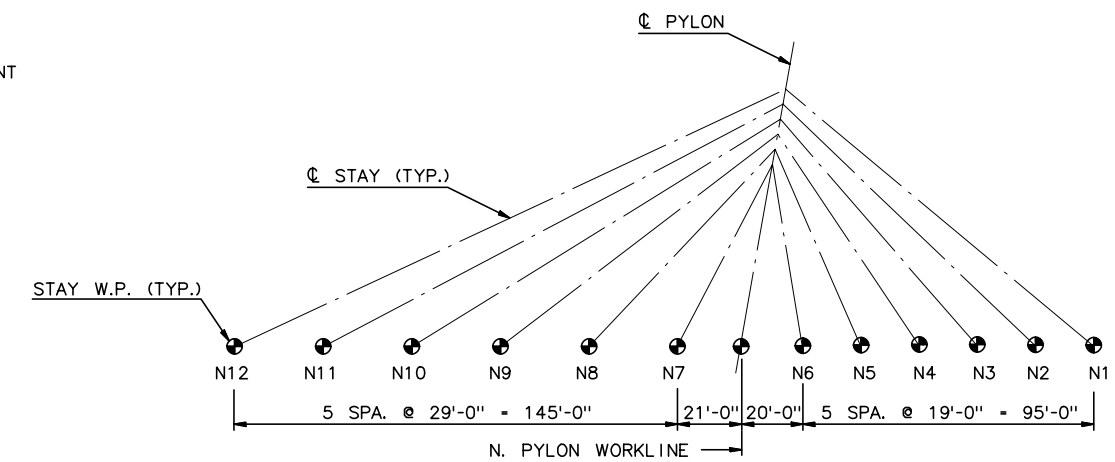

ELEVATION

N.T.S.

NOTES:

1. LENGTH "L1" SHOWN IS BASED ON THEORETICAL STRAIGHT LINE DIMENSIONS, ANCHOR POINT TO ANCHOR POINT, AND DOES NOT INCLUDE CABLE SAG.
2. DIMENSIONS AND LENGTHS SHOWN APPLY TO BOTH EAST AND WEST CABLES.
3. FOR CABLE ANCHORAGE REINFORCEMENT DETAILS SEE SHTS. NC69 AND NC70.
4. ALL CABLE WORKPOINTS ARE 33'-0" RIGHT AND LEFT OF SIXTH STREET PGL.

STAY DESIGNATION	STAY SIZE	STAY W.P. 1		STAY W.P. 2		TOWER A.P.		DECK A.P.		"L1"	ANCHOR BLOCK W.P. 1		ANCHOR BLOCK W.P. 2		ANCHOR BLOCK W.P. 3		"A"
		STATION	ELEV.	STATION	ELEV.	STATION	ELEV.	STATION	ELEV.		STATION	ELEV.	STATION	ELEV.	STATION	ELEV.	
N1	35	4027.823	118.816	4128.070	33.745	4029.368	117.504	4130.134	31.993	132.16	4132.469	31.608	4130.685	32.645	4129.573	31.329	1.105
N2	31	4027.117	114.816	4109.070	33.688	4028.630	113.318	4109.687	33.077	114.06	4112.444	32.196	4110.287	33.685	4108.880	32.258	0.844
N3	22	4026.412	110.816	4090.070	33.631	4027.876	109.041	4090.646	32.933	98.65	4092.699	32.222	4091.264	33.444	4089.776	32.214	0.997
N4	22	4025.707	106.816	4071.070	33.574	4027.090	104.583	4071.540	32.815	84.42	4073.183	32.164	4072.222	33.238	4070.478	32.156	1.145
N5	22	4025.001	102.816	4052.070	33.517	4026.051	100.129	4052.405	32.659	72.43	4053.668	32.105	4053.152	32.951	4050.969	32.097	1.308
N6	19	4024.296	98.816	4033.070	33.460	4024.845	94.729	4033.206	32.449	62.84	4034.163	32.047	4034.000	32.556	4030.123	32.035	1.451
N7	12	4024.296	98.816	3992.070	33.337	4022.516	95.199	3991.420	32.016	70.42	3990.609	32.416	3992.513	31.477	3993.207	32.424	2.244
N8	26	4025.001	102.816	3963.070	33.250	4023.102	100.683	3961.749	31.767	92.27	3961.122	32.328	3962.658	30.956	3964.411	32.337	2.242
N9	30	4025.707	106.816	3934.070	33.163	4023.833	105.310	3932.085	31.568	117.71	3931.548	32.239	3932.879	30.576	3935.944	32.252	2.247
N10	35	4026.412	110.816	3905.070	33.076	4024.599	109.655	3902.503	31.432	145.00	3902.046	32.150	3903.186	30.360	3907.548	32.167	2.164
N11	33	4027.117	114.816	3876.070	32.989	4025.340	113.853	3872.980	31.316	173.28	3872.579	32.062	3873.582	30.196	3879.294	32.082	2.093
N12	35	4027.823	118.816	3847.070	32.902	4026.068	117.982	3843.508	31.209	202.13	3843.148	31.974	3844.049	30.060	3851.170	31.998	2.036

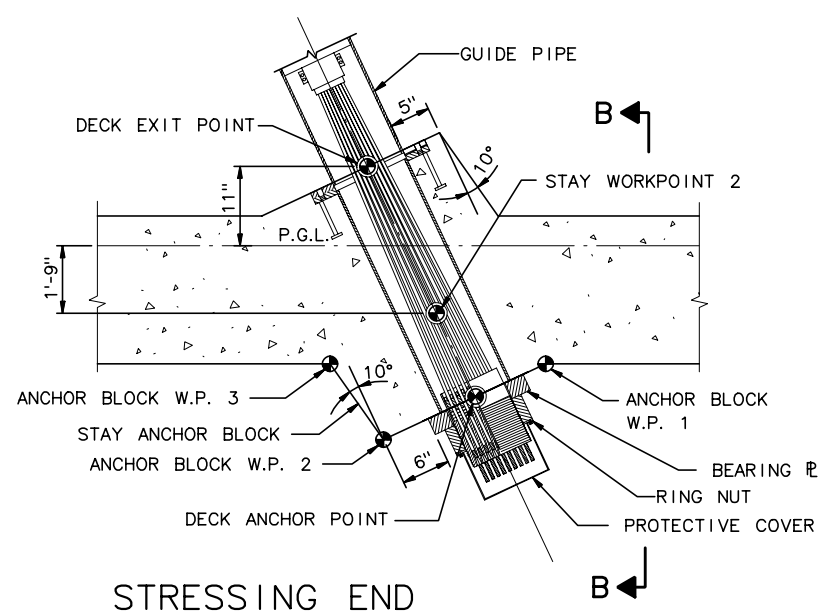

MAIN SPAN STAY ELEVATION

N.T.S.

RECORD DRAWING

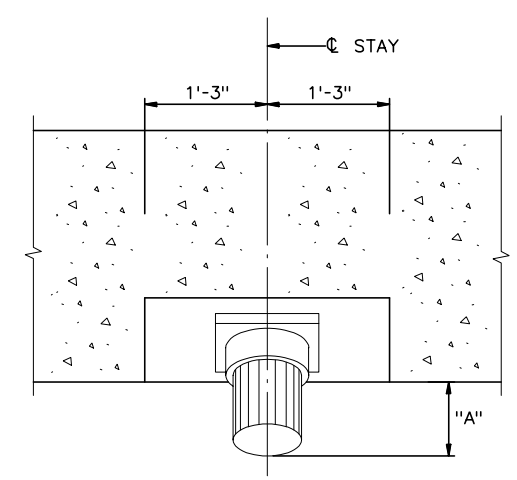

SECTION A-A

N.T.S.

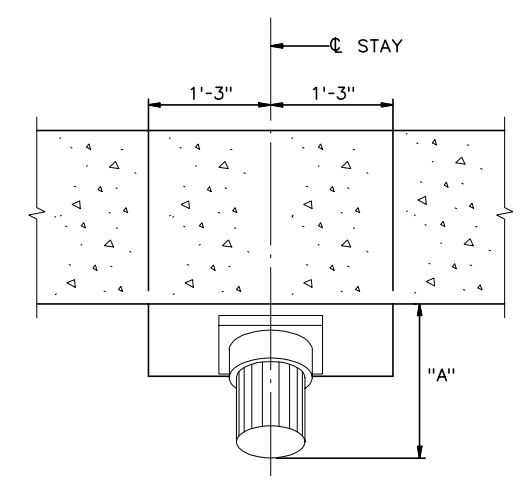

SECTION B-B

N.T.S.

No.	Date	Revisions	By

HNTB CORPORATION

STATE OF WISCONSIN
DEPARTMENT OF TRANSPORTATION

STRUCTURE B-40-414C

Designed By	SL	Design Checked	TZ	Drawn By	BM	Plans Checked	AP

NORTH CABLE STAY
STAY ANCHORAGE
DECK GEOMETRY

SHEET NC32 OF

STATE PROJECT I.D.	SHEET NUMBER
2235-00-70	8.677

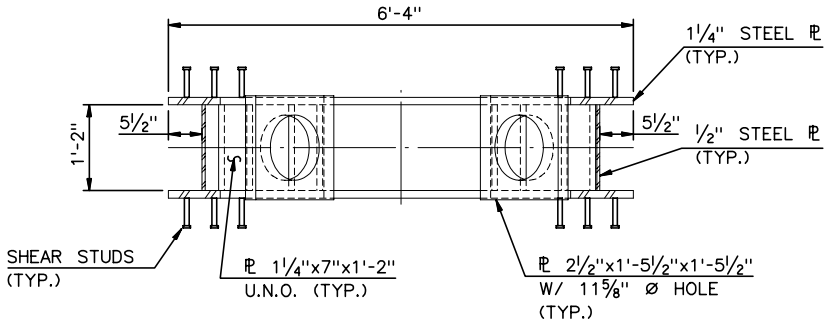

SECTION A-A

¾" = 1'-0"

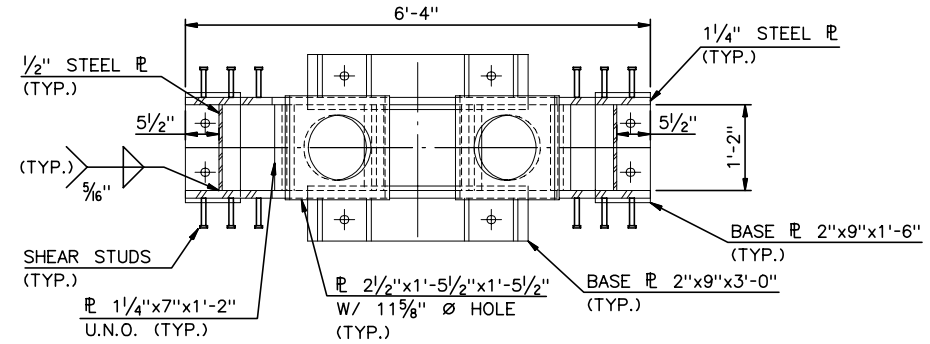

SECTION B-B

¾" = 1'-0"

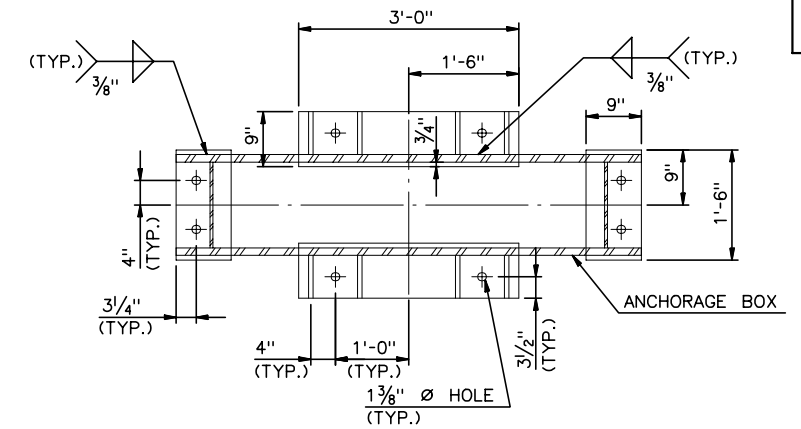

PLAN

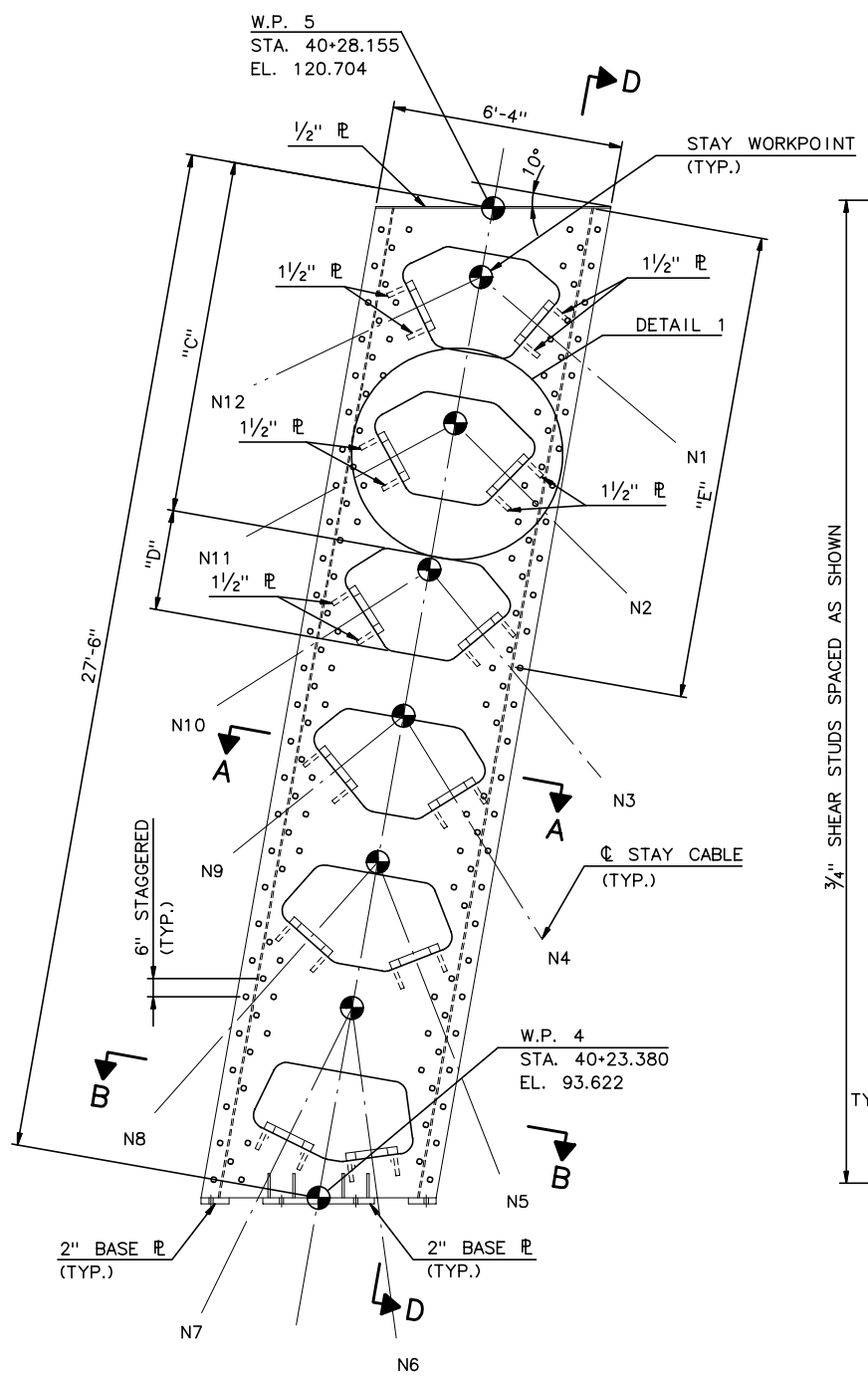

ELEVATION

⅜" = 1'-0"

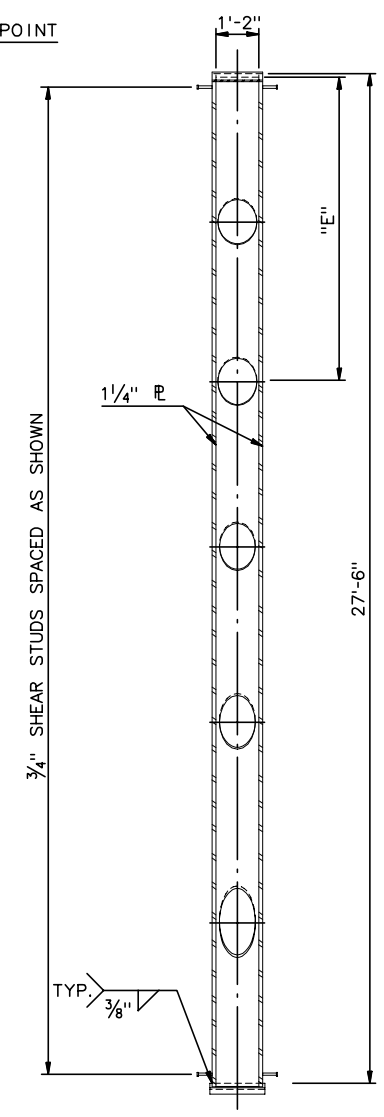

VIEW D-D

⅜" = 1'-0"

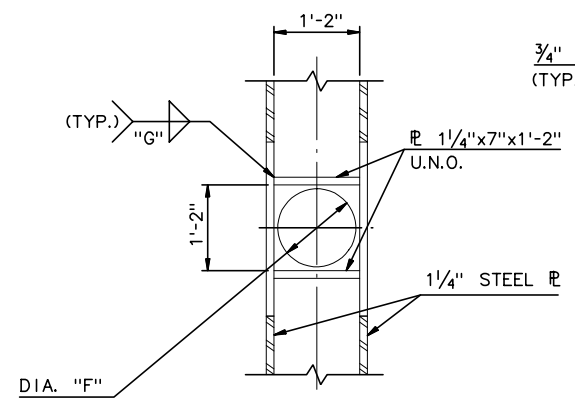

SECTION C-C

¾" = 1'-0"

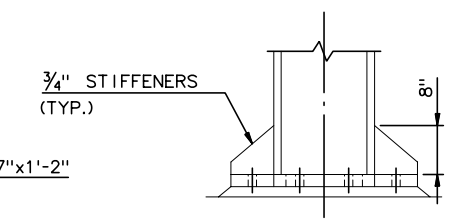

SIDE

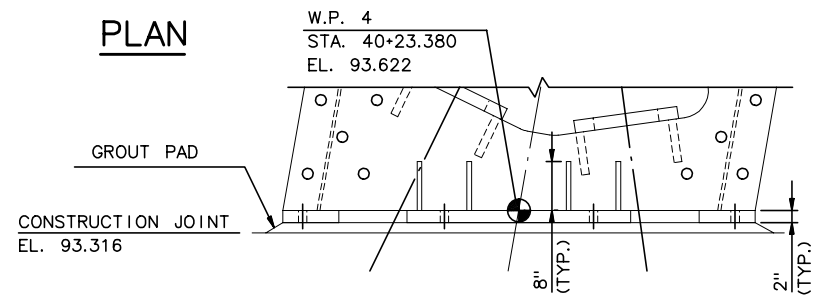

ELEVATION

BASE PLATES - 3 VIEWS

¾" = 1'-0"

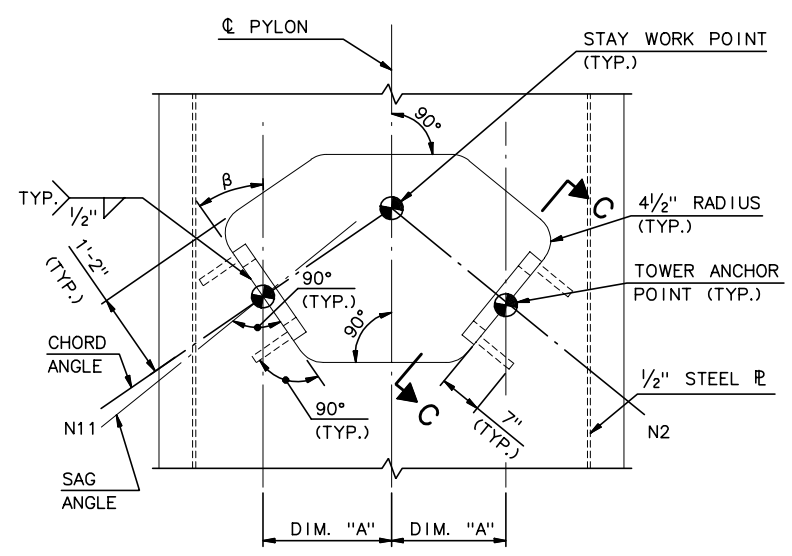

DETAIL 1

¾" = 1'-0"

STAY NO.	NO. OF STRANDS	DIM. "A"	β (DEG)	"C"	"D"	"E" (FT.)	DIA. "F" (FT)	WELD "G" (IN.)
N1	35	1'-9"	30.434	1'-3"	2'-9"	3.969	1.083	¾
N2	31	1'-9"	34.803	5'-3"	2'-10"	8.320	1.083	11/16
N3	22	1'-9"	40.565	9'-8"	2'-9"	12.815	1.083	½
N4	22	1'-9"	48.284	14'-2"	2'-9"	17.591	1.083	½
N5	22	1'-6"	58.697	18'-6"	2'-7"	23.058	1.083	½
N6	19	1'-3"	72.365	24'-0"	2'-5"	-	-	7/16
N7	12	1'-1½"	73.842	24'-0"	2'-5"	-	-	5/16
N8	26	1'-6"	58.402	18'-6"	2'-7"	22.048	1.083	⅝
N9	30	1'-7"	48.904	14'-2"	2'-9"	16.699	1.083	11/16
N10	35	1'-7"	42.792	9'-8"	2'-9"	12.043	1.083	¾
N11	33	1'-7"	38.619	5'-3"	2'-10"	7.640	1.083	¾
N12	35	1'-7"	35.615	1'-3"	2'-9"	3.357	1.083	¾

NOTES:

1. FOR STAY WORK POINT AND TOWER ANCHOR POINT COORDINATES SEE "STAY DETAILS."
2. ANGLES AND DIMENSION "E" ARE BASED ON THEORETICAL DIMENSIONS WHICH INCLUDE CABLE SAG.

RECORD DRAWING

No.	Date	Revisions	By

HNTB CORPORATION

STATE OF WISCONSIN
DEPARTMENT OF TRANSPORTATION

STRUCTURE B-40-414C

Designed By	Design Checked	Drawn By	Plans Checked

PYLON ANCHOR BOX

SHEET NC33 OF

STATE PROJECT I.D.	SHEET NUMBER
2235-00-70	8.678

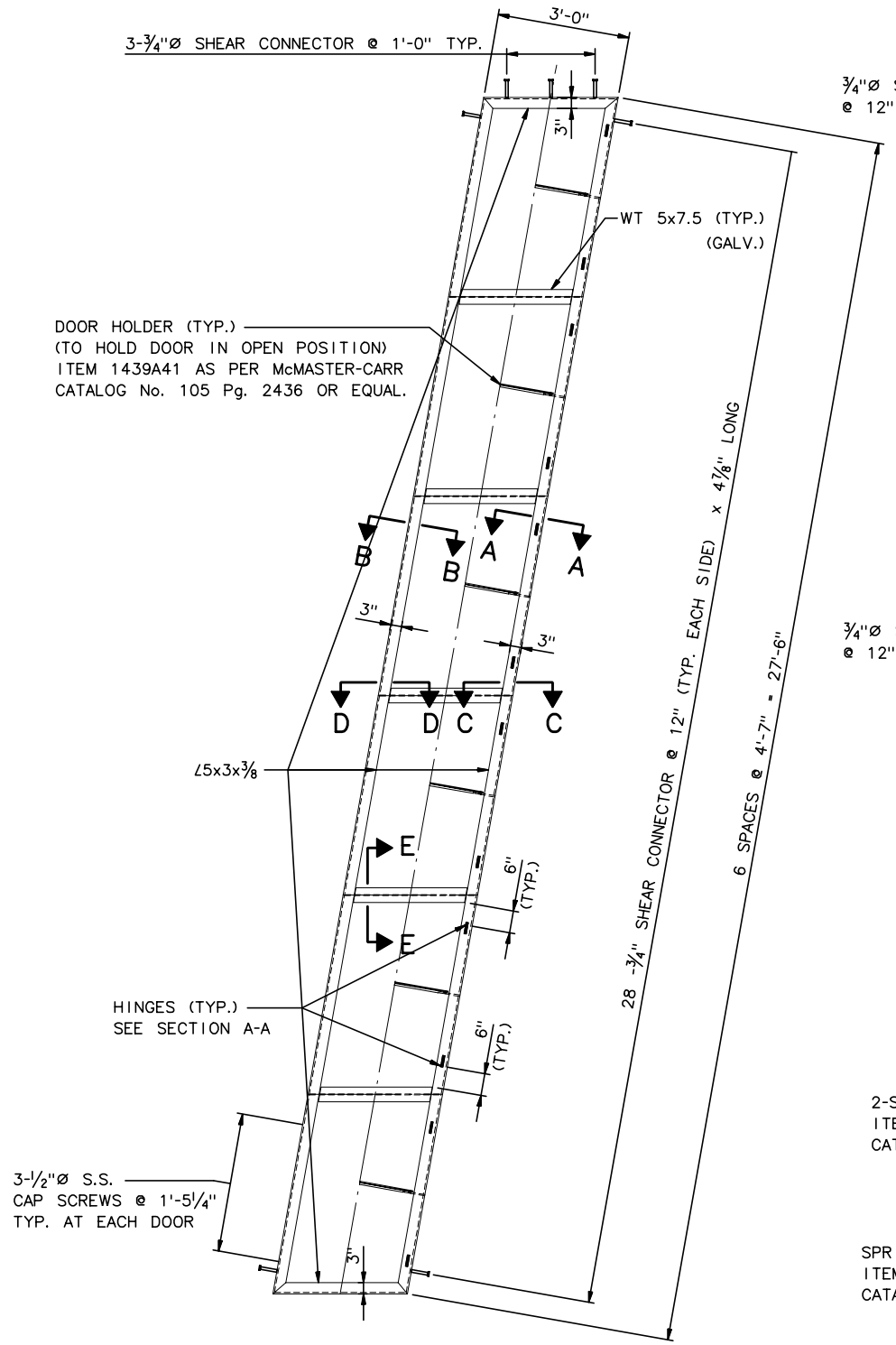

FRAME ELEVATION

½" = 1'-0"

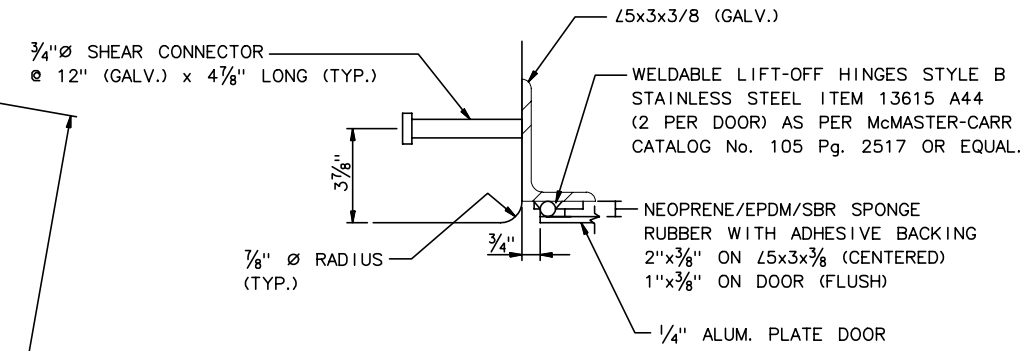

SECTION A-A

3" = 1'-0"

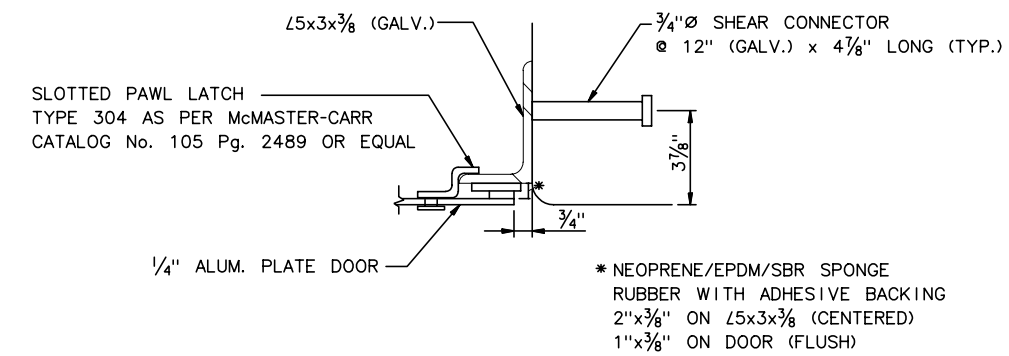

SECTION B-B

3" = 1'-0"

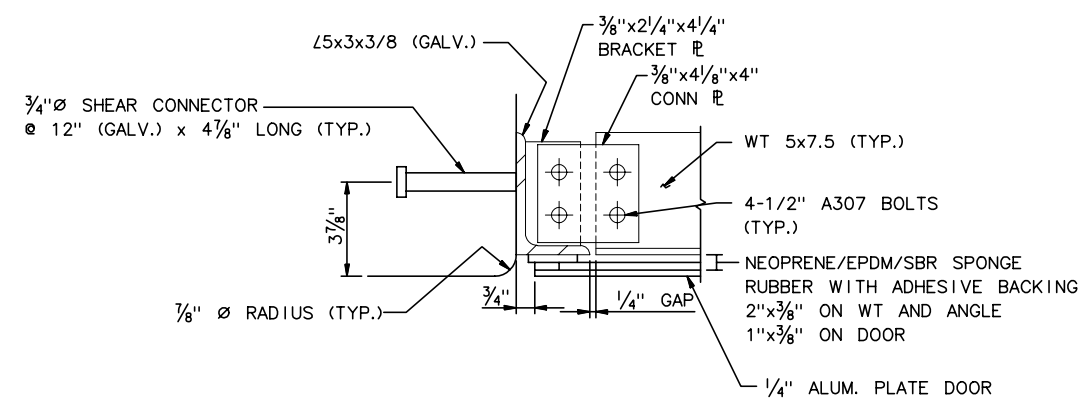

SECTION C-C

3" = 1'-0"

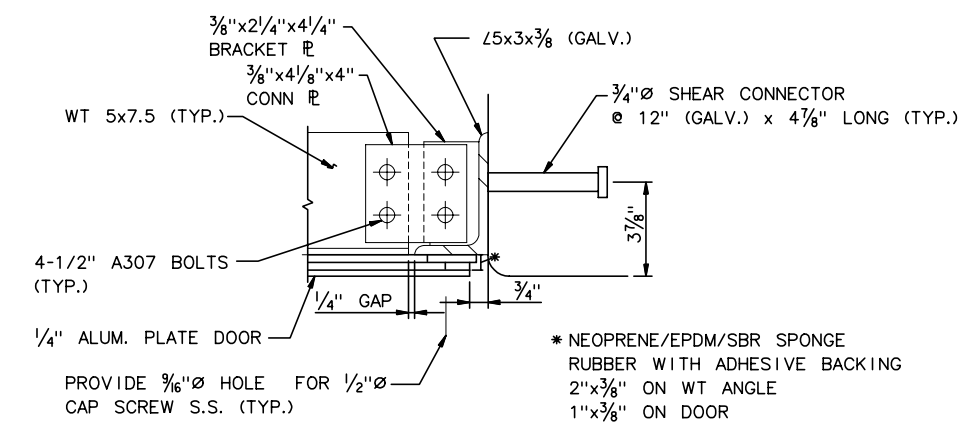

SECTION D-D

3" = 1'-0"

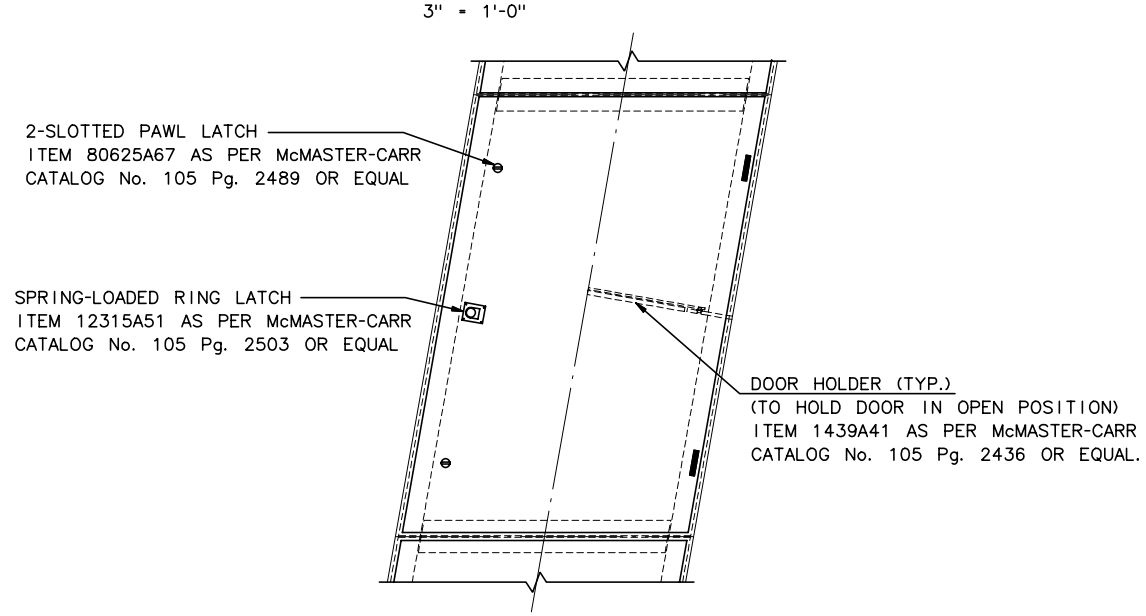

DOOR ELEVATION

1" = 1'-0"

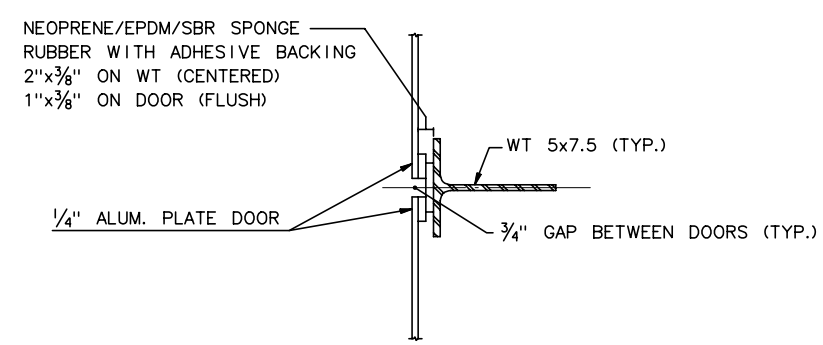

SECTION E-E

3" = 1'-0"

NOTES:

1. GALVANIZE AFTER ALL FABRICATION.

RECORD DRAWING

No.	Date	Revisions	By

HNTB CORPORATION

STATE OF WISCONSIN
DEPARTMENT OF TRANSPORTATION

STRUCTURE B-40-414C

Designed By	Design Checked	Drawn By	Plans Checked

ANCHOR BOX COVER FRAME

SHEET NC34 OF

STATE PROJECT I.D.	SHEET NUMBER
2235-00-70	8.679

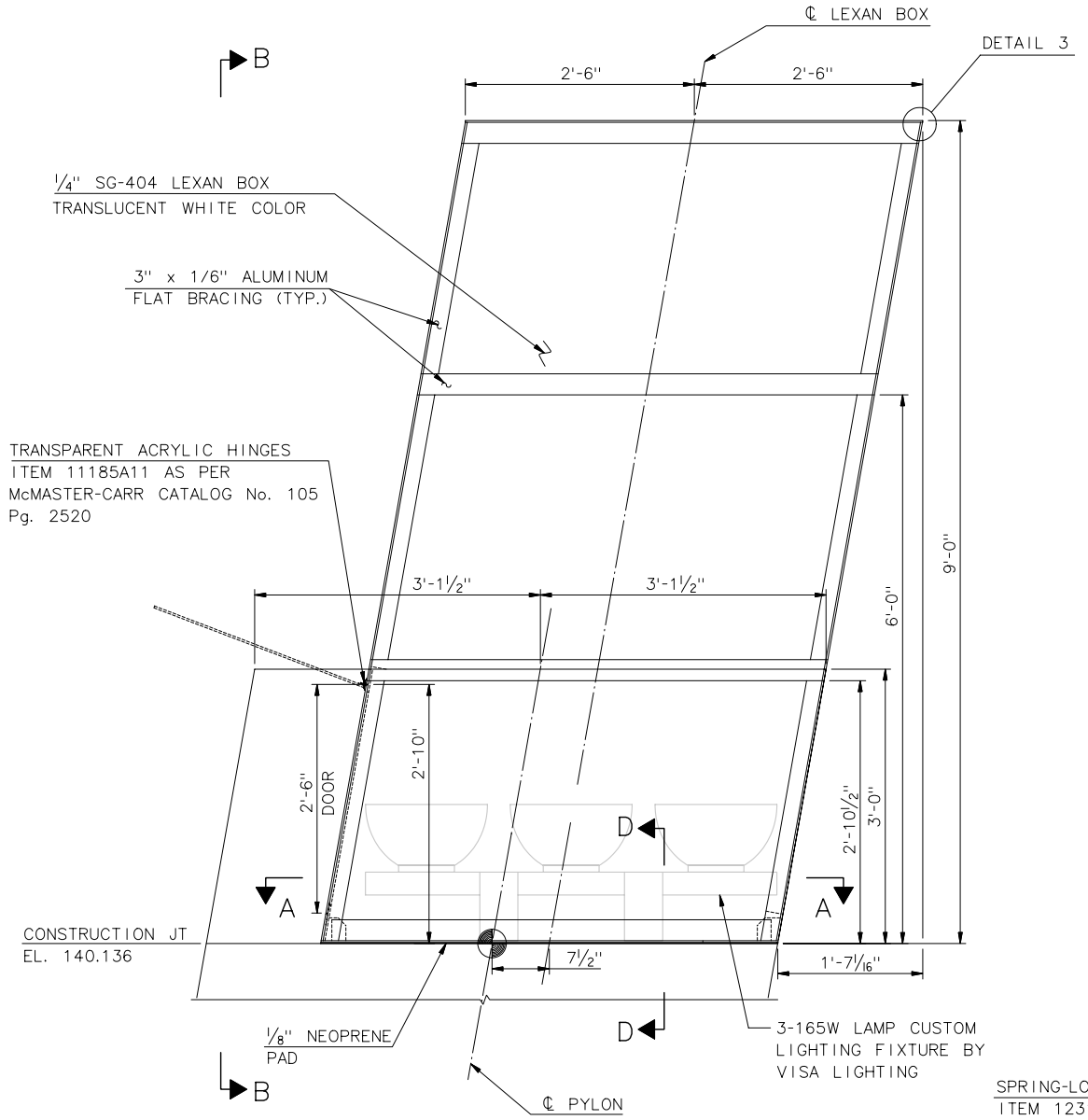

ELEVATION

1" = 1'-0"

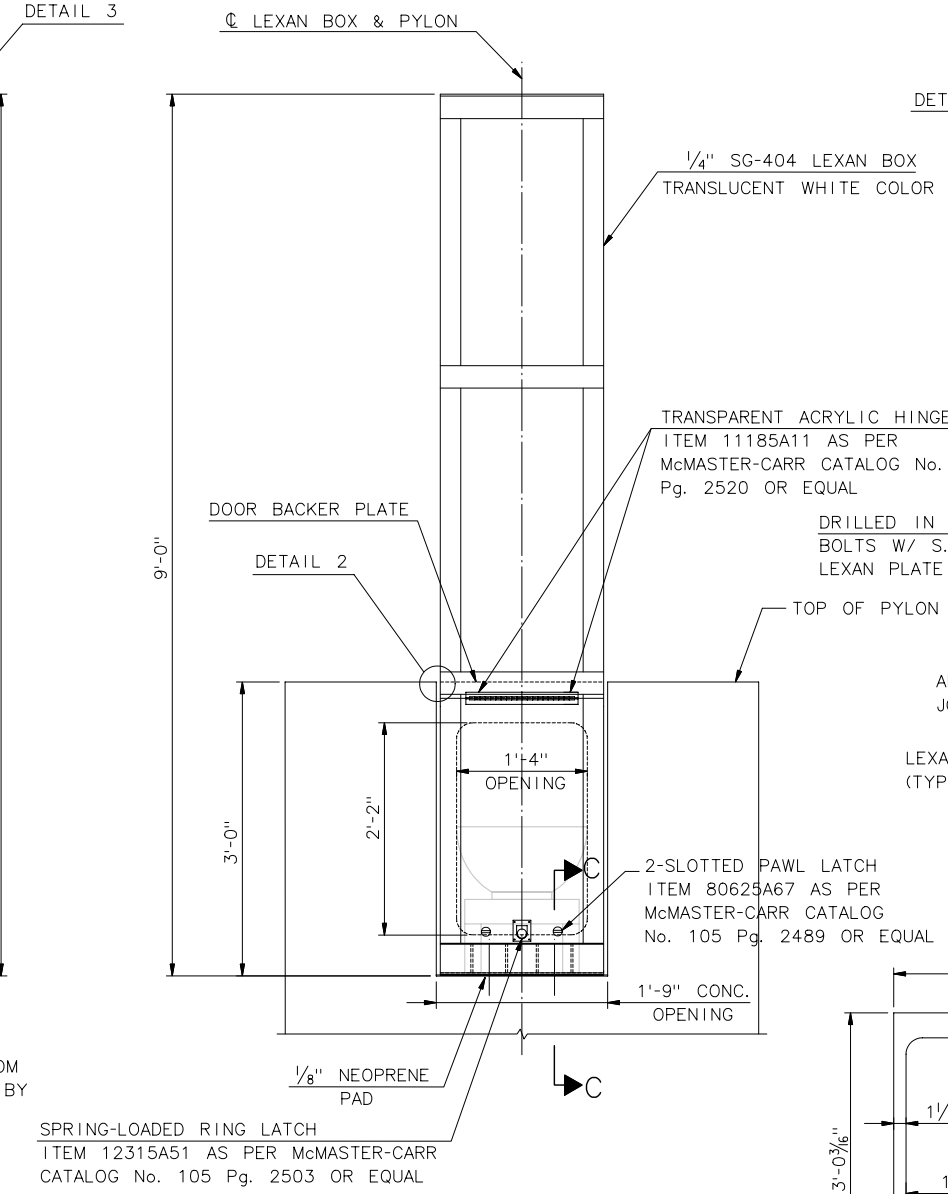

VIEW B-B

1" = 1'-0"

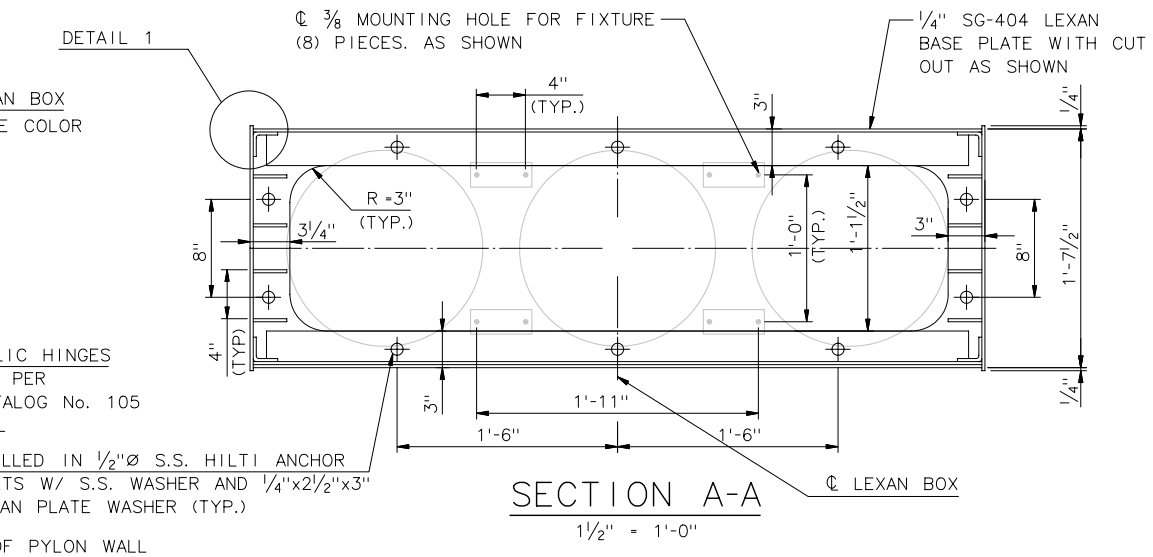

SECTION A-A

1 1/2" = 1'-0"

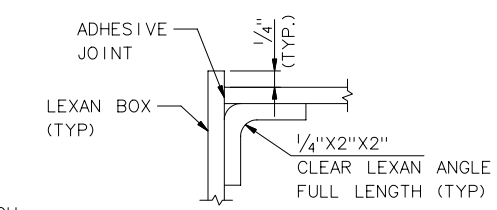

DETAIL 1

N.T.S.

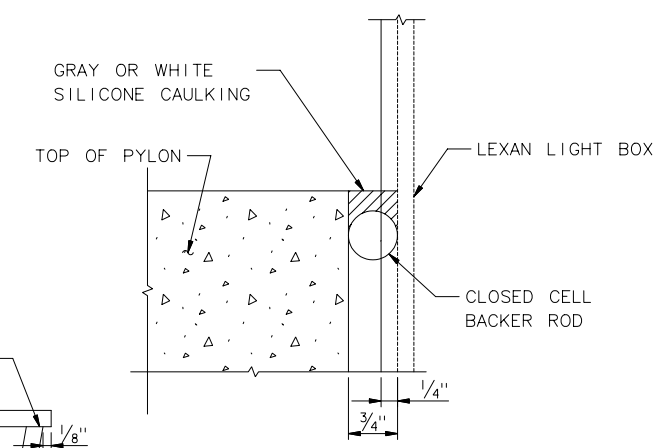

DETAIL 2

N.T.S.

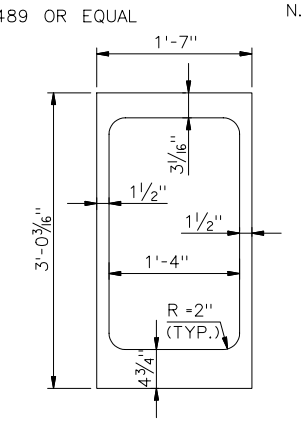

DOOR BACKER PLATE

1" = 1'-0"

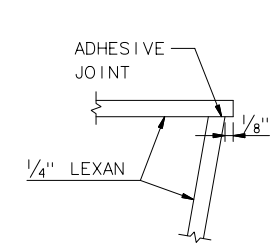

DETAIL 3

N.T.S.

NOTES:

1. THE LANTERN BOX SHALL BE FABRICATED FROM GE STRUCTURED PRODUCTS 1/4" SOLAR GRADE, TRANSLUCENT WHITE AND CLEAR LEXAN SG-404.
2. ALL LEXAN JOINTS SHALL BE BONDED USING THE FOLLOWING URETHANE ADHESIVE:
   URLANE #5774 AND #5776
   CIBA-GEIGY CORPORATION
   LOS ANGELES, CA
   (800) 759-7165
3. CUSTOM LIGHTING FIXTURE BY
   VISA LIGHTING
   1717 WEST CIVIC DRIVE
   GLENDALE, WI 53209

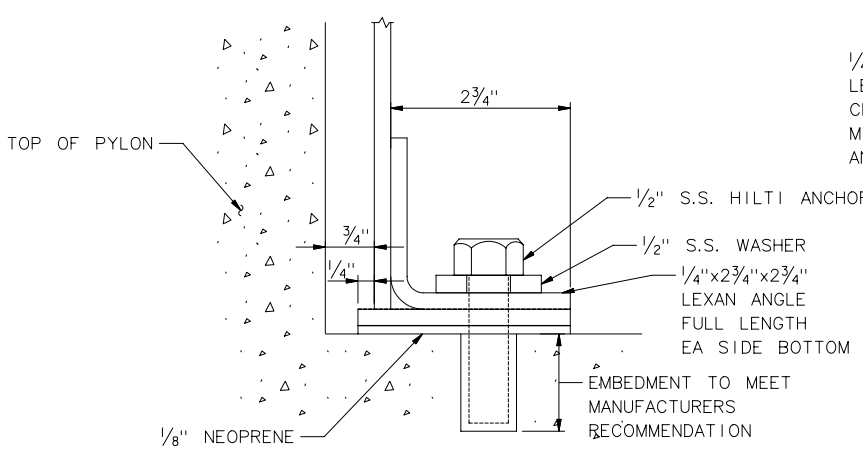

SECTION D-D

N.T.S.

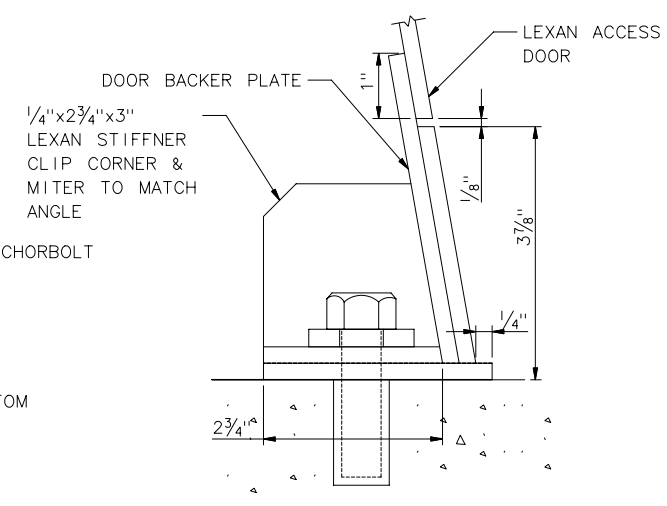

SECTION C-C

N.T.S.

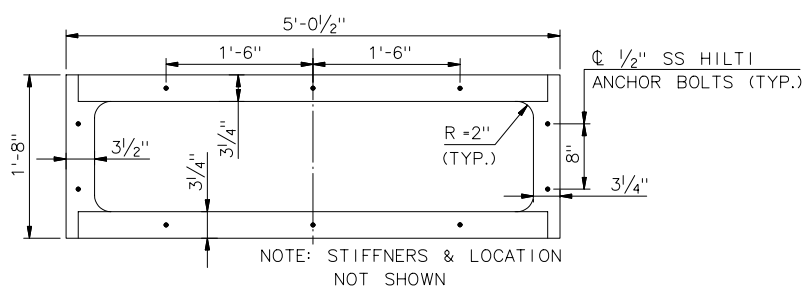

BASE PLATE

1" = 1'-0"

RECORD DRAWING

No.	Date	Revisions	By
2	1-23-02	ADD PAWL LATCHES	AP
1	1-02-02	REVISE JOINT DETAILS	AP

HNTB CORPORATION

STATE OF WISCONSIN
DEPARTMENT OF TRANSPORTATION

STRUCTURE B-40-414C

Designed By	TZ	Design Checked	AP	Drawn By	JE	Plans Checked	TZ

TOWER LANTERN BOX

SHEET NC35 OF .

STATE PROJECT I.D.	SHEET NUMBER
2235-00-70	8.680

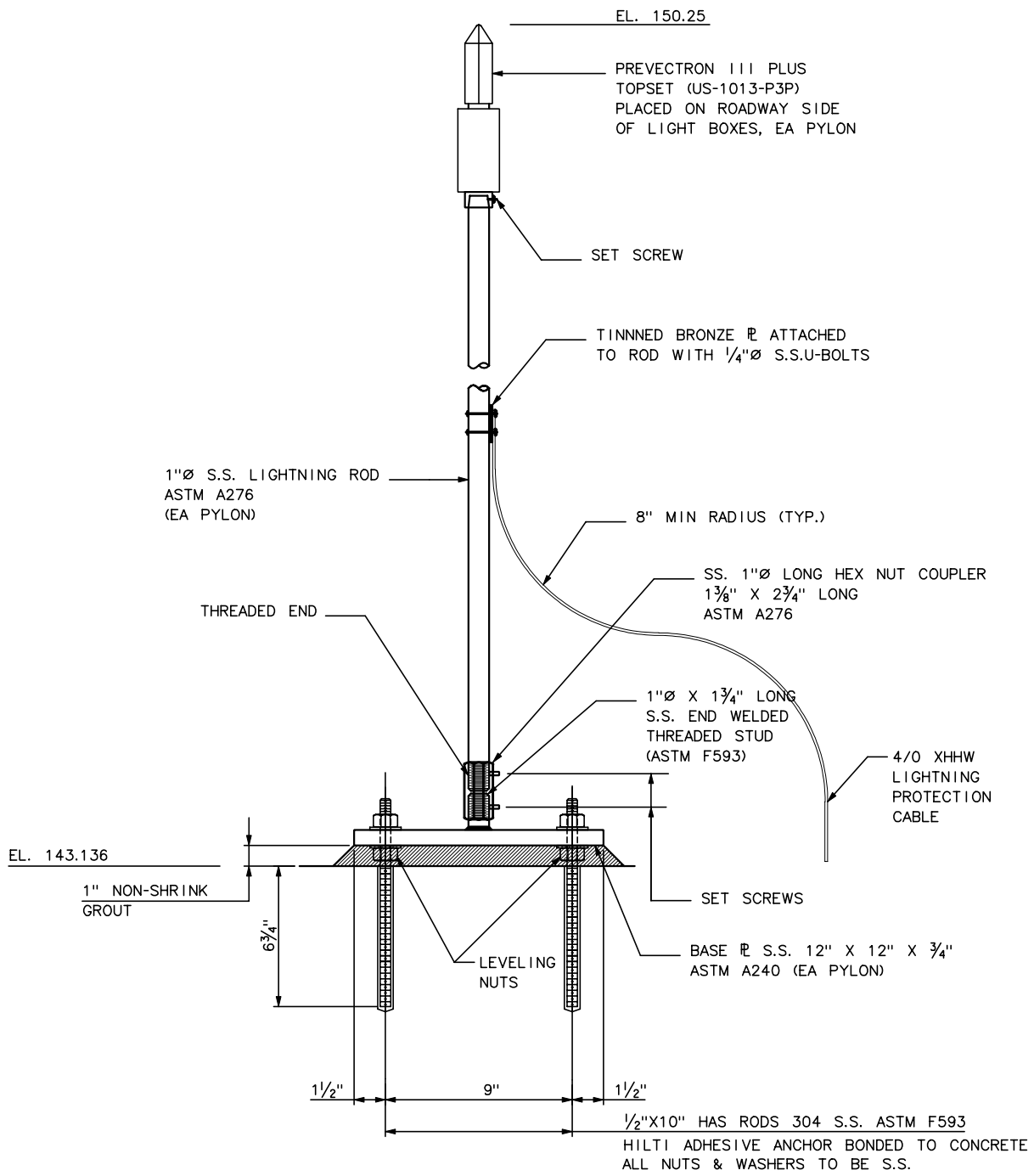

LIGHTNING PROTECTION DETAIL

3" = 1'-0"

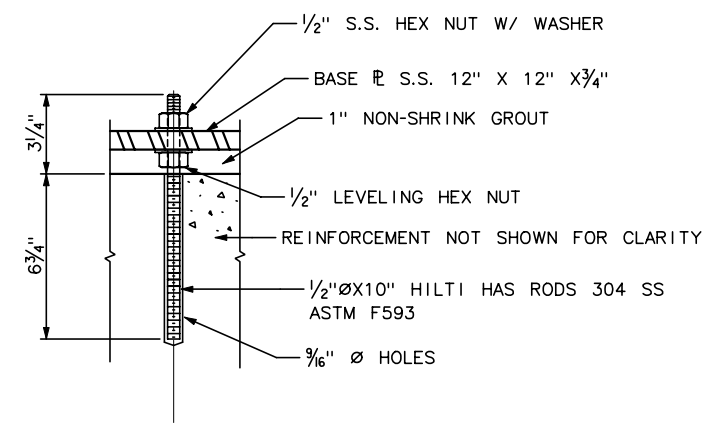

BOLT DETAIL

3" = 1'-0"

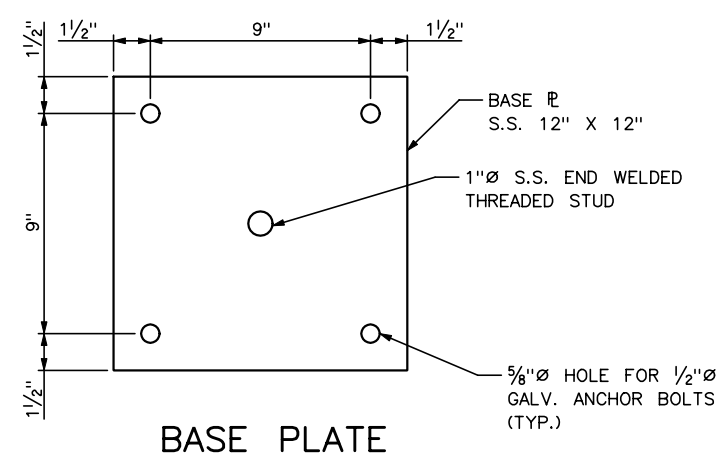

BASE PLATE

3" = 1'-0"

BILL OF MATERIALS

ITEM	QTY*
PREVECTRON III PLUS TOPSET (US-	2
1"Ø STAINLESS STEEL ROD ASTM A276	2
1"Ø S.S. LONG HEX NUT COUPLER 1 3/8" X 2 3/4" LONG ASTM A276	2
12" X 12" S.S. BASE PLATE W/ 1"Ø 1 3/4" LONG S.S. THREADED STUD ASTM F593	2
S.S. SET SCREW	6
1/2" S.S. HEX NUT	16
1/2" S.S. WASHER	16
1/2"X10" HILTI HAS RODS 304 SS ASTM F593	8
HVU ADHESIVE CAPSULES 1/2"X4-1/4"	8
TINNED BRONZE PLATE	2
1/4" S.S. U-BOLTS W/ WASHER & NUTS ASTM F593	4

*QUANTITIES ARE FOR 2 PYLONS.

NOTES:

1. MINIMUM YIELD STRENTGH OF ALL STAINLESS STEEL SHALL BE 30 ksi.

RECORD DRAWING

No.	Date	Revisions	By

HNTB CORPORATION

STATE OF WISCONSIN
DEPARTMENT OF TRANSPORTATION

STRUCTURE B-40-414C

Designed By	JE	Design Checked	AP	Drawn By	JE	Plans Checked	AP

NORTH CABLE STAY LIGHTNING PROTECTION SYSTEM

SHEET NC36 OF .

STATE PROJECT I.D.	SHEET NUMBER
2235-00-70	8.681

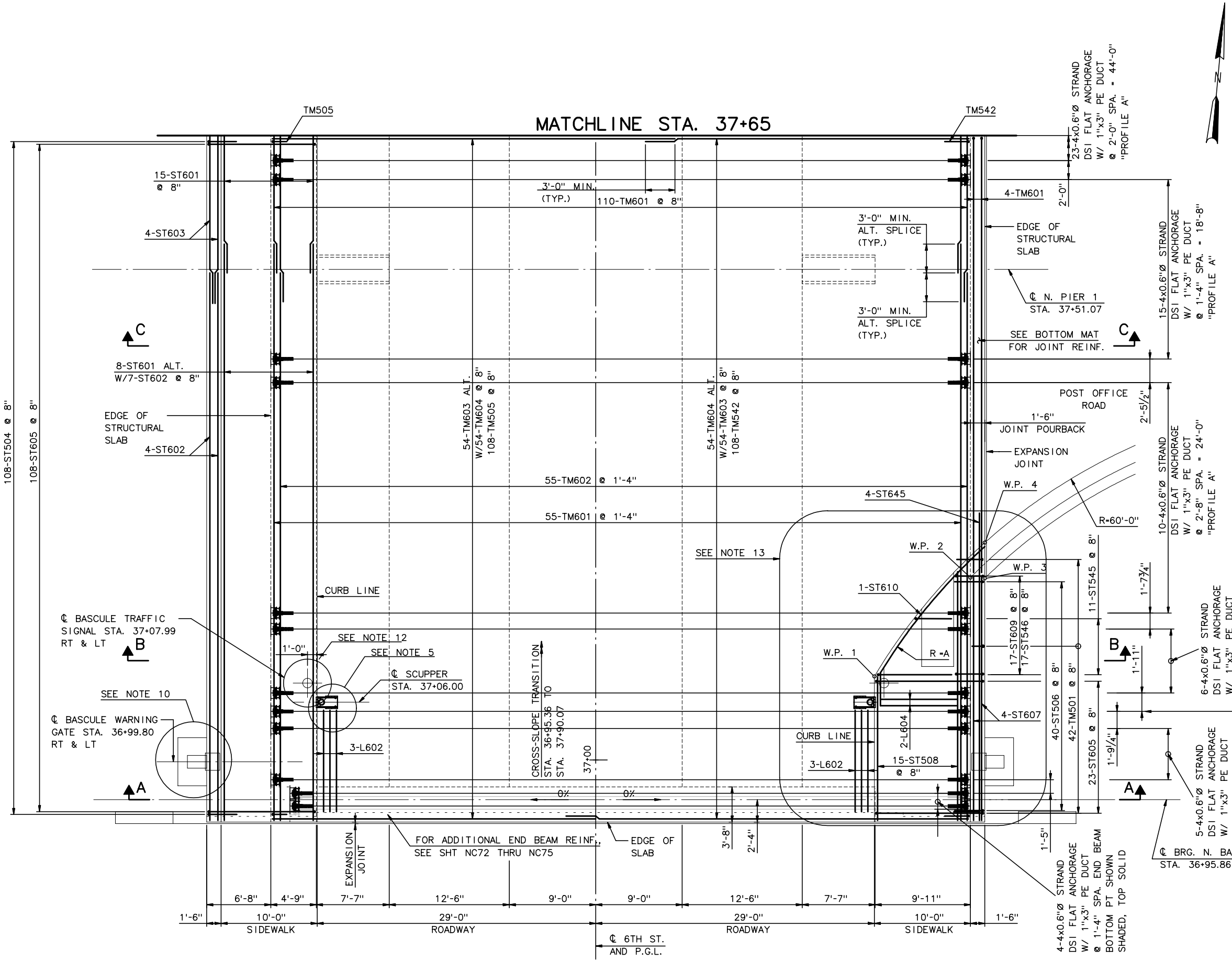

PLAN
3/16" = 1'-0"

W.P.	STATION	OFFSET	RADIUS	
1	37+08.69	29'-0" R	A	60'-0"
2	37+18.98	39'-0" R	-	-
3	37+18.91	40'-6" R	-	-
4	37+22.62	40'-6" R	-	-

NOTES:

1. FOR SECTION A, SEE SHEET NC55.
2. FOR SECTION B, SEE SHEET NC56
3. FOR SECTION C, SEE SHEET NC57.
4. FOR EXPANSION JOINT DETAILS, SEE SHEET NC94 THRU NC96
5. FOR SCUPPER DETAILS, SEE SHEET NC66.
6. RAILING NOT SHOWN FOR CLARITY,
7. ALL REINFORCEMENT SHALL BE EPOXY COATED ASTM A615 OR A996 GRADE 60.
8. FOR RAILING AND LIGHT POST LAYOUT, SEE SHEET NC99 THRU NC101.
9. FOR POST OFFICE ROAD DETAILS, SEE DWGS.
10. FOR WARNING GATE BLISTER DETAILS, SEE DECK DETAIL SHEET .
11. FOR BASCULE END BEAM TRANSVERSE PT LOCATION, SEE SHEET NC72.
12. FOR TRAFFIC SIGNAL ANCHORAGE DETAILS, SEE SHEET NC65.
13. FOR SIDEWALK AND RAMP DETAILS, SEE SHEETS NC54a THRU NC54c & NC68.

RECORD DRAWING

No.	Date	Revisions	By

HNTB CORPORATION

STATE OF WISCONSIN
DEPARTMENT OF TRANSPORTATION

STRUCTURE B-40-414C

Designed By	SL	Design Checked	TZ	Drawn By	DS	Plans Checked	AP

DECK SLAB PLAN
TOP MAT REINF.
1 OF 9

SHEET NC37 OF

j:\cadd\ff31185\dgn\as built\north cablestay\nc37-decktopreinf01.dgn 02/11/03 01:52:34 PM

STATE PROJECT I.D.	SHEET NUMBER
2235-00-70	8.682

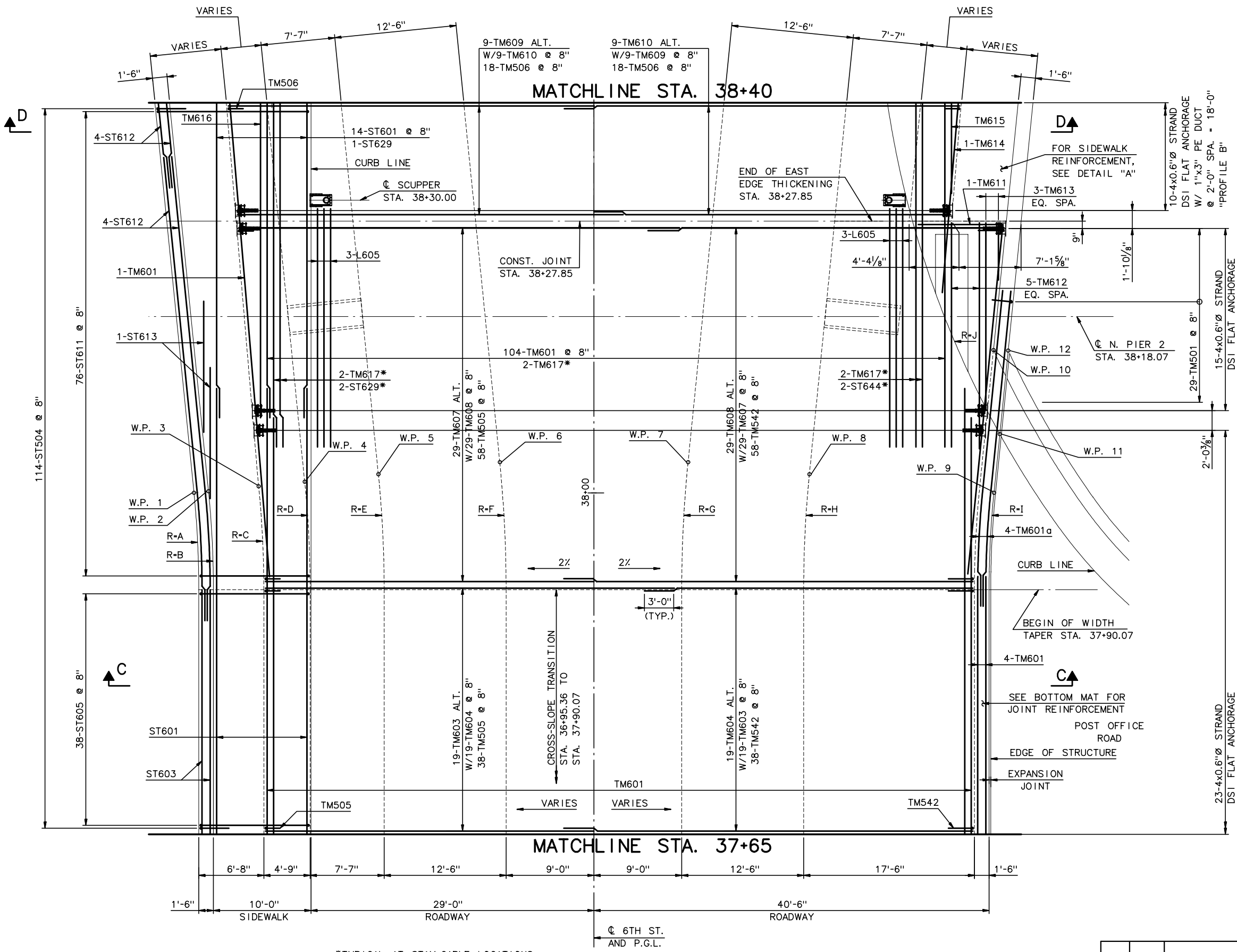

*TYPICAL AT STAY-CABLE LOCATIONS

PLAN

3/16" = 1'-0"

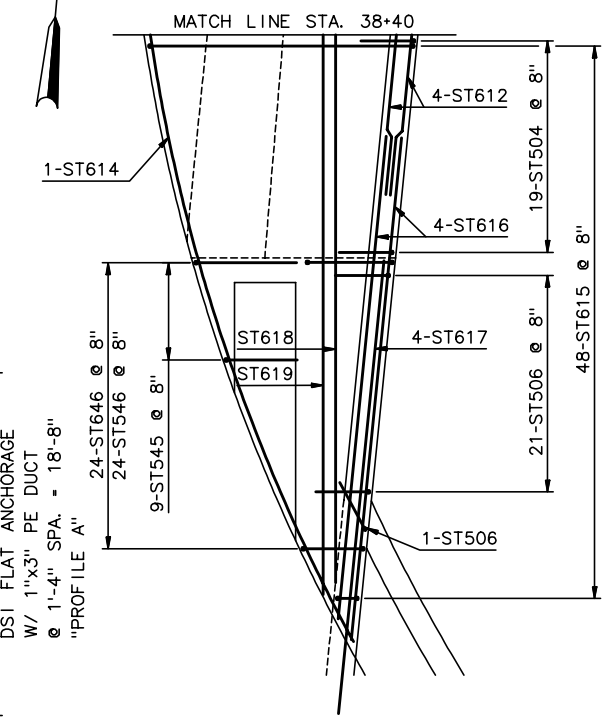

DETAIL "A"

3/16" = 1'-0"

W.P.	STATION	OFFSET	RADIUS	
1	38+00.02	41'-0" L	A	100'-0"
2	38+00.17	39'-6" L	B	101'-6"
3	38+00.68	34'-4⅜" L	C	106'-8"
4	38+01.15	29'-7⅝" L	D	111'-6"
5	38+01.91	22'-1⅛" L	E	119'-0"
6	38+03.15	9'-7⅞" L	F	131'-6"
7	38+03.15	9'-7⅞" R	G	131'-6"
8	38+01.91	22'-1⅛" R	H	119'-0"
9	38+00.02	41'-0" R	I	100'-0"
10	38+14.65	40'-11⅜" R	J	100'-0"
11	38+06.02	41'-7⅛" R		
12	38+14.59	42'-5⅜" R		

NOTES:

1. FOR SECTION C, SEE SHEET NC57.
2. FOR SECTION D, SEE SHT NC58.
3. ALL REINFORCEMENT SHALL BE EPOXY COATED ASTM A615 OR A996, GRADE 60.
4. FOR EXPANSION JOINT DETAILS, SEE NC94 THRU NC96.
5. FOR RAILING AND LIGHTPOST LAYOUT SEE SHEET NC99 THRU NC101.
6. FOR STAY ANCHORAGE DETAILS, SEE SHTS. NC69-NC71b.
7. FOR SLAB-SIDEWALK REINF., SEE SHEETS NC54a THRU NC54c.

RECORD DRAWING

No.	Date	Revisions	By

HNTB CORPORATION

STATE OF WISCONSIN
DEPARTMENT OF TRANSPORTATION

STRUCTURE B-40-414C

Designed By	SL	Design Checked	TZ	Drawn By	DS	Plans Checked	AP

DECK SLAB PLAN
TOP MAT REINF.
2 OF 9

SHEET NC38 OF

STATE PROJECT I.D.	SHEET NUMBER
2235-00-70	8.683

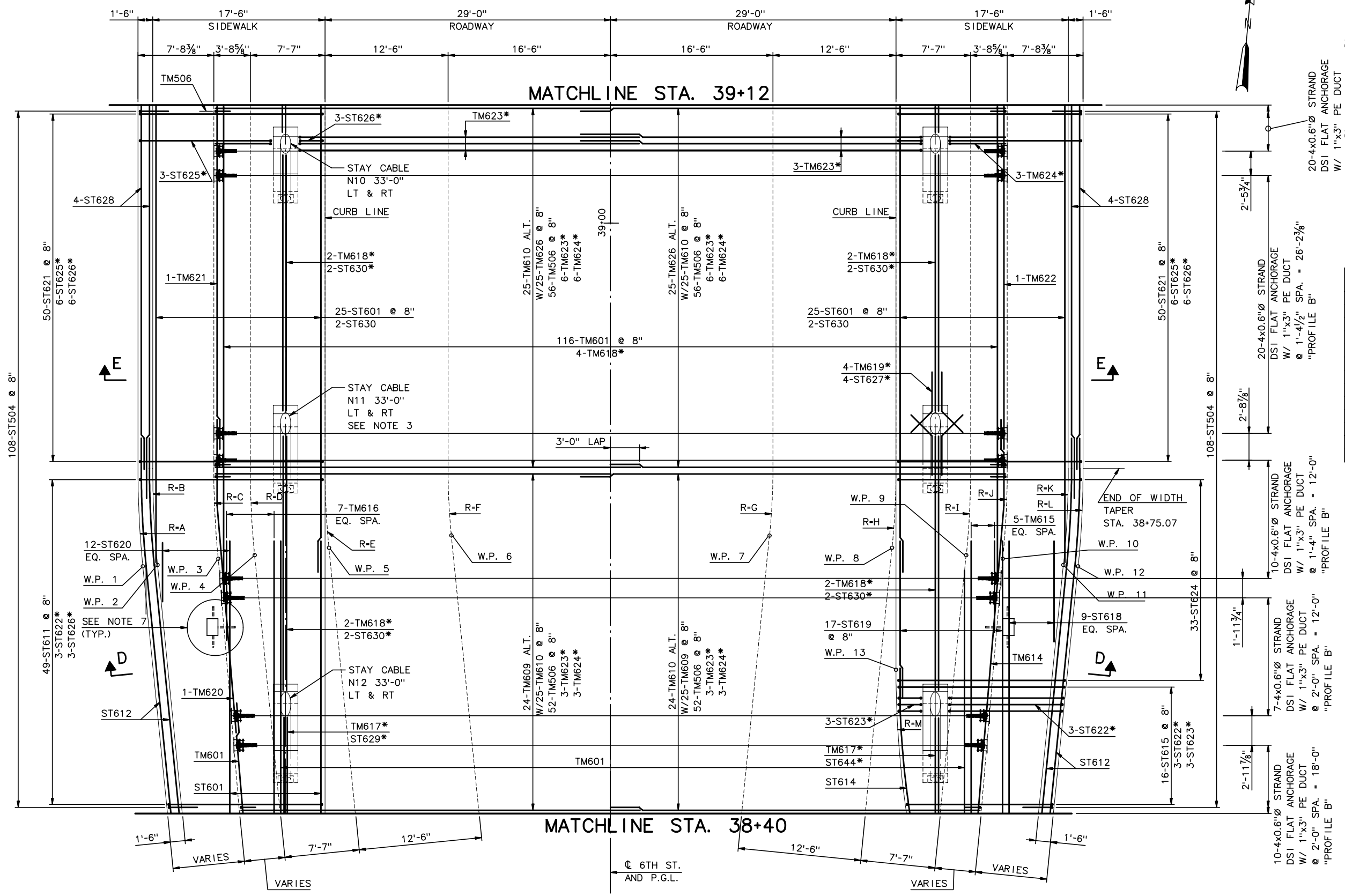

*TYPICAL AT STAY-CABLE OPENINGS

PLAN

3/16" = 1'-0"

LEGEND:

JUNCTION BOX

W.P.	STATION	OFFSET	RADIUS	
1	38+65.12	47'-6" L	A	100'-0"
2	38+65.27	46'-0⅛" L	B	98'-6"
3	38+65.89	39'-10⅛" L	C	92'-3⅝"
4	38+66.26	36'-1¾" L	D	88'-7"
5	38+67.01	28'-7⅛" L	E	81'-0"
6	38+68.26	16'-1⅞" L	F	68'-6"
7	38+68.26	16'-1⅞" R	G	68'-6"
8	38+67.01	28'-7⅛" R	H	81'-0"
9	38+66.26	36'-1¾" R	I	88'-7"
10	38+65.89	39'-10⅛" R	J	92'-3⅝"
11	38+65.27	46'-0⅛" R	K	98'-6"
12	38+65.12	47'-6" R	L	100'-0"
13	38+54.61	29'-0" R	M	100'-0"

NOTES:

1. FOR SECTION D, SEE SHEET NC58.
2. FOR SECTION E, SEE SHEET NC58.
3. FOR STAY CABLE DECK BLISTER AND BLOCKOUT GEOMETRY, SEE STAY DETAILS SHEET NC69 - NC71.
4. FOR CABLE ANCHORAGE REINFORCEMENT, SEE SHEETS NC69 THRU NC70.
5. ALL REINFORCEMENT SHALL BE EPOXY COATED ASTM A615 OR A996 GRADE 60.
6. FOR RAILING AND LIGHTPOST LAYOUT, SEE SHEET NC99 - NC101.
7. FOR REINFORCEMENT DETAIL AT JUNCTION BOX, SEE SHEET NC68.
8. FOR SLAB-SIDEWALK REINF., SEE SHEETS NC54a THRU NC54c.

RECORD DRAWING

No.	Date	Revisions	By

HNTB CORPORATION

STATE OF WISCONSIN
DEPARTMENT OF TRANSPORTATION

STRUCTURE B-40-414C

Designed By	SL	Design Checked	TZ	Drawn By	DS	Plans Checked	AP

DECK SLAB PLAN
TOP MAT REINF.
3 OF 9

SHEET NC39 OF

STATE PROJECT I.D.	SHEET NUMBER
2235-00-70	8.684

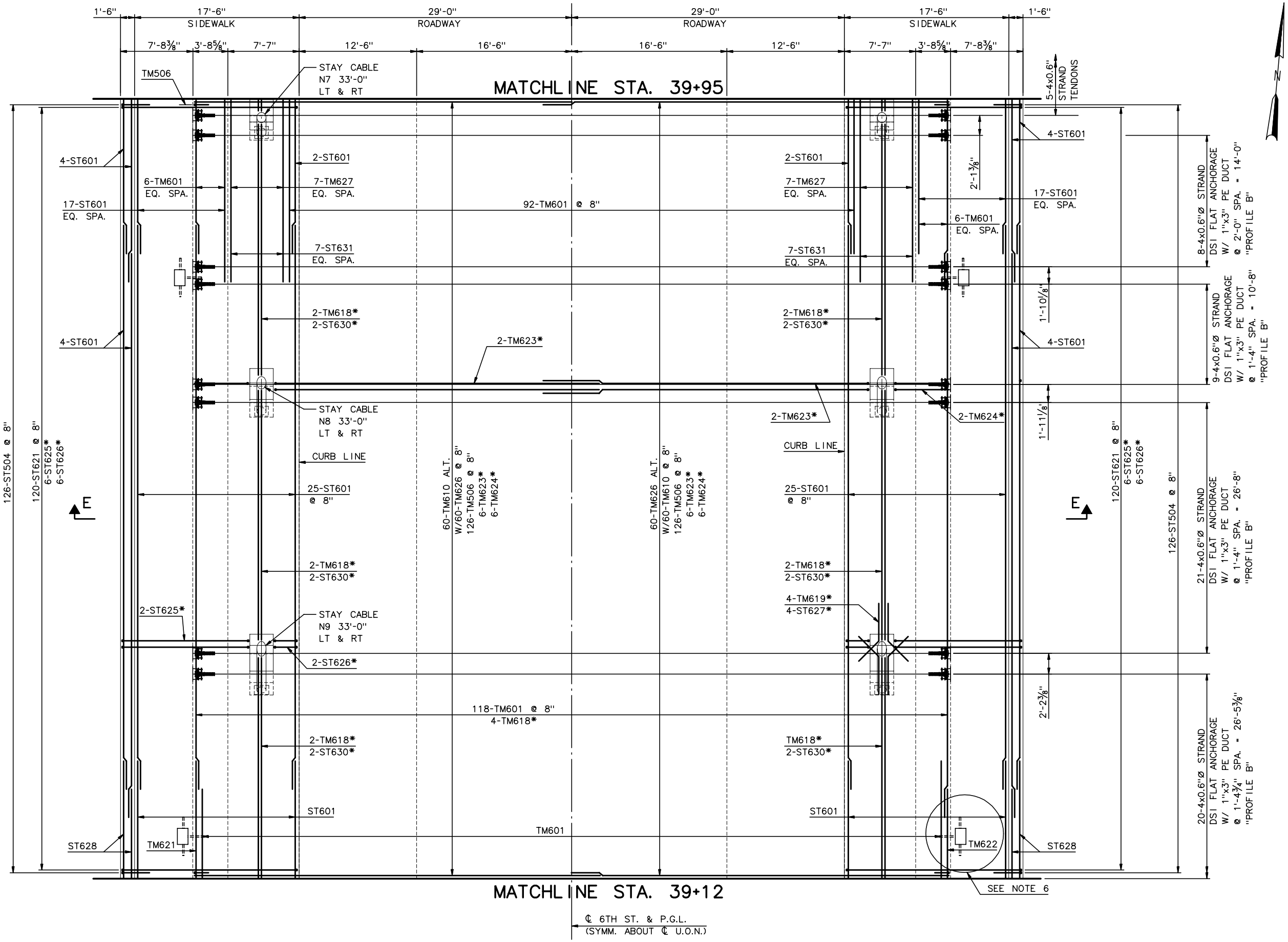

*TYPICAL AT STAY-CABLE OPENINGS

PLAN

3/16" = 1'-0"

NOTES:

1. FOR SECTION E, SEE SHEET NC58.
2. ALL REINFORCEMENT SHALL BE EPOSY COATED ASTM A615 OR A996 GRADE 60.
3. FOR STAY CABLE DECK BLISTER AND BLOCKOUT GEOMETRY, SEE STAY DETAILS SHEET NC32.
4. FOR CABLE ANCHORAGE REINFORCEMENT, SEE SHEET NC69 - NC70.
5. FOR RAILING AND LIGHTPOST LAYOUT, SEE SHEET NC99 - NC101.
6. FOR REINFORCEMENT DETAILS AT JUNCTION BOXES, SEE SHT NC68.
7. FOR SLAB-SIDEWALK REINF., SEE SHEETS NC54a THRU NC54c.

LEGEND:

JUNCTION BOX

RECORD DRAWING

No.	Date	Revisions	By

HNTB CORPORATION

STATE OF WISCONSIN
DEPARTMENT OF TRANSPORTATION

STRUCTURE B-40-414C

Designed By	SL	Design Checked	TZ	Drawn By	DS	Plans Checked	AP

DECK SLAB PLAN
TOP MAT REINF.
4 OF 9

SHEET NC40 OF

j:\cadd\ff31185\dgn\as built\north cablestay\nc40-decktopreinf04.dgn 02/11/03 01:52:37 PM

STATE PROJECT I.D.	SHEET NUMBER
2235-00-70	8.685

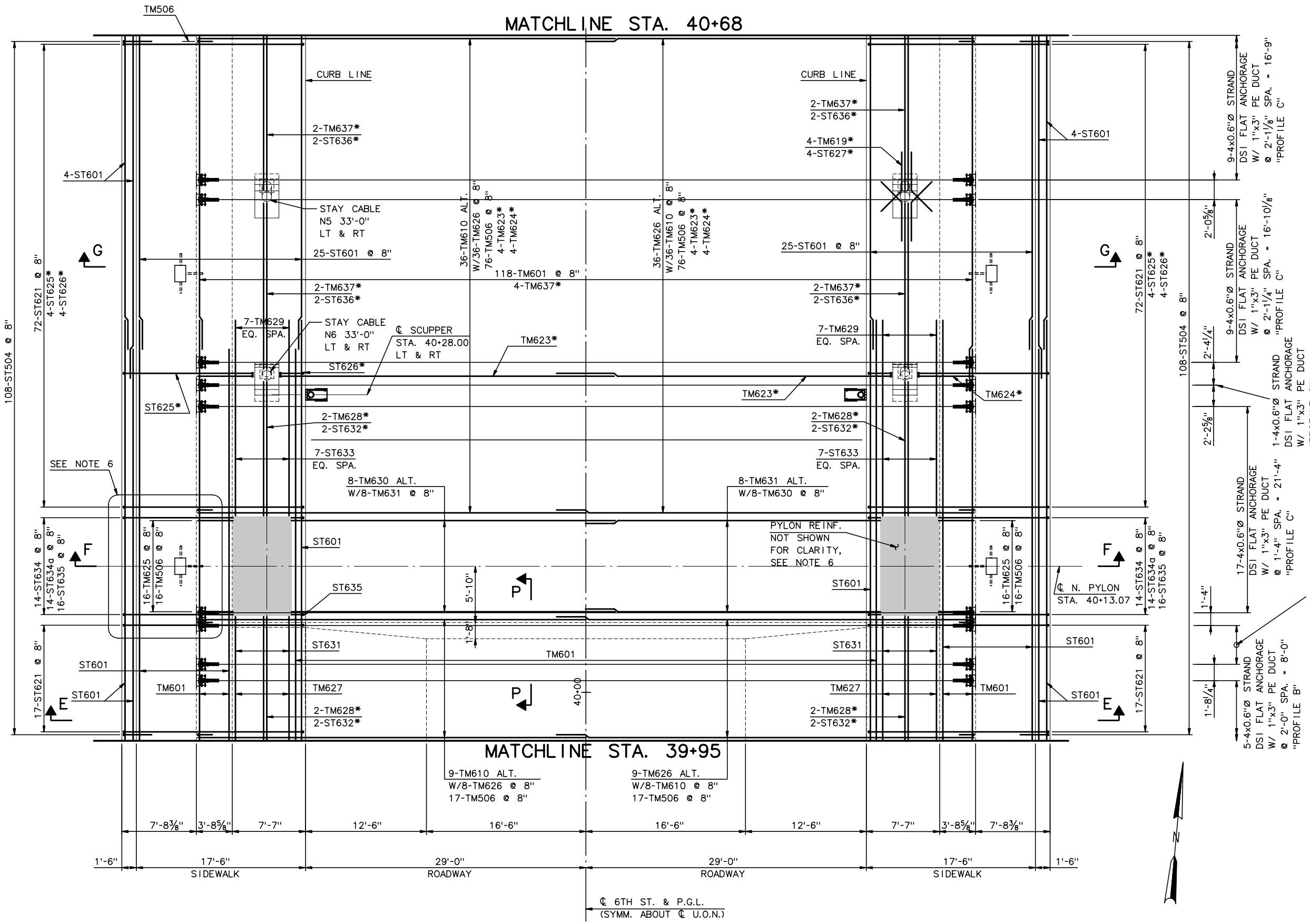

*TYPICAL AT STAY-CABLE OPENINGS

PLAN

3/16" = 1'-0"

NOTES:

1. FOR SECTIONS F AND G, SEE SHEET NC59.
2. FOR SECTION P, SEE SHEET NC64.
3. ALL REINFORCEMENT SHALL BE EPOXY COATED ASTM A615 OR A996, GRADE 60.
4. FOR STAY CABLE DECK BLISTER AND BLOCKOUT GEOMETRY, SEE STAY DETAILS NC32.
5. FOR CABLE ANCHORAGE REINF., SEE SHEETS NC69 THRU NC70.
6. FOR ADDITIONAL PYLON/ DECK CONNECTION DETAILS, SEE SHEET NC67.
7. FOR RAILING AND LIGHTPOST LAYOUT, SEE SHEET NC99 THRU NC101.
8. FOR DECK DETAIL AT SCUPPER, SEE NC66.
9. FOR SIDEWALK DETAIL AT JUNCTION BOX, SEE NC68.
10. FOR SLAB-SIDEWALK REINF., SEE SHEETS NC54a THRU NC54c.

LEGEND:

SCUPPER

JUNCTION BOX

RECORD DRAWING

No.	Date	Revisions	By

HNTB CORPORATION

STATE OF WISCONSIN
DEPARTMENT OF TRANSPORTATION

STRUCTURE B-40-414C

Designed By	SL	Design Checked	TZ	Drawn By	DS	Plans Checked	AP

DECK SLAB PLAN
TOP MAT REINF.
5 OF 9

SHEET NC41 OF

STATE PROJECT I.D.	SHEET NUMBER
2235-00-70	8.686

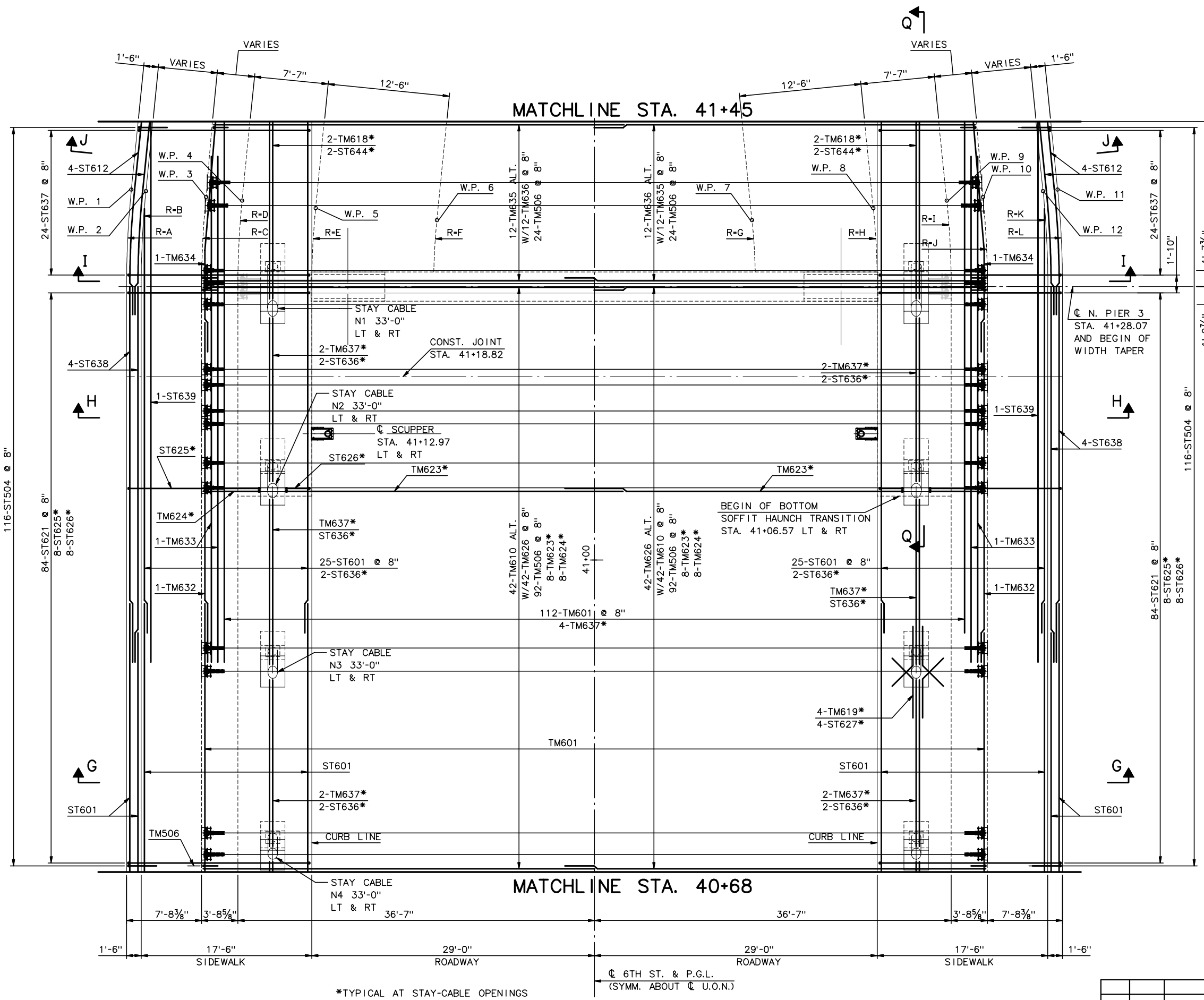

W.P.	STATION	OFFSET		RADIUS
1	41+38.02	47'-6" L	A	100'-0"
2	41+37.87	46'-0⅛" L	B	98'-6"
3	41+37.25	39'-10⅛" L	C	92'-3⅝"
4	41+36.88	36'-1¾" L	D	88'-7"
5	41+36.13	28'-7⅛" L	E	81'-0"
6	41+34.88	16'-1⅞" L	F	68'-6"
7	41+34.88	16'-1⅞" R	G	68'-6"
8	41+36.13	28'-7⅛" R	H	81'-0"
9	41+36.88	36'-1¾" R	I	88'-7"
10	41+37.25	39'-10⅛" R	J	92'-3⅝"
11	41+37.87	46'-0⅛" R	K	98'-6"
12	41+38.02	47'-6" R	L	100'-0"

NOTES:

1. FOR SECTION G, SEE SHEET NC59.
2. FOR SECTIONS H AND I, SEE SHEET NC60.
3. FOR SECTION J, SEE SHEET NC61.
4. FOR SECTION Q, SEE SHEET NC64.
5. FOR CABLE ANCHORAGE REINFORCEMENT, SEE SHEETS NC69 - NC70.
6. FOR STAY CABLE DECK BLISTER AND BLOCKOUT GEOMETRY, SEE STAY DETAILS SHEET NC32.
7. ALL REINFORCEMENT SHALL BE EPOXY COATED ASTM A615 OR A996 GRADE 60.
8. FOR RAILING AND LIGHTPOST LAYOUT, SEE SHEETS NC99 - NC101.
9. TOP PIER 3 CAP BEAM TENDON LOCATED @ 3¾" UPSTATION OF ℄ PIER 3. BOTTOM TWO CAP BEAM TENDONS SHALL BE SPACED 1'-4" APART CENTERED ABOUT ℄ PIER 3.
10. FOR SLAB-SIDEWALK REINF., SEE SHEETS NC54a THRU NC54c.

RECORD DRAWING

No.	Date	Revisions	By

HNTB CORPORATION

STATE OF WISCONSIN
DEPARTMENT OF TRANSPORTATION

STRUCTURE B-40-414C

Designed By	SL	Design Checked	TZ	Drawn By	DS	Plans Checked	AP

DECK SLAB PLAN
TOP MAT REINF.
6 OF 9

SHEET NC42 OF

STATE PROJECT I.D.	SHEET NUMBER
2235-00-70	8.689

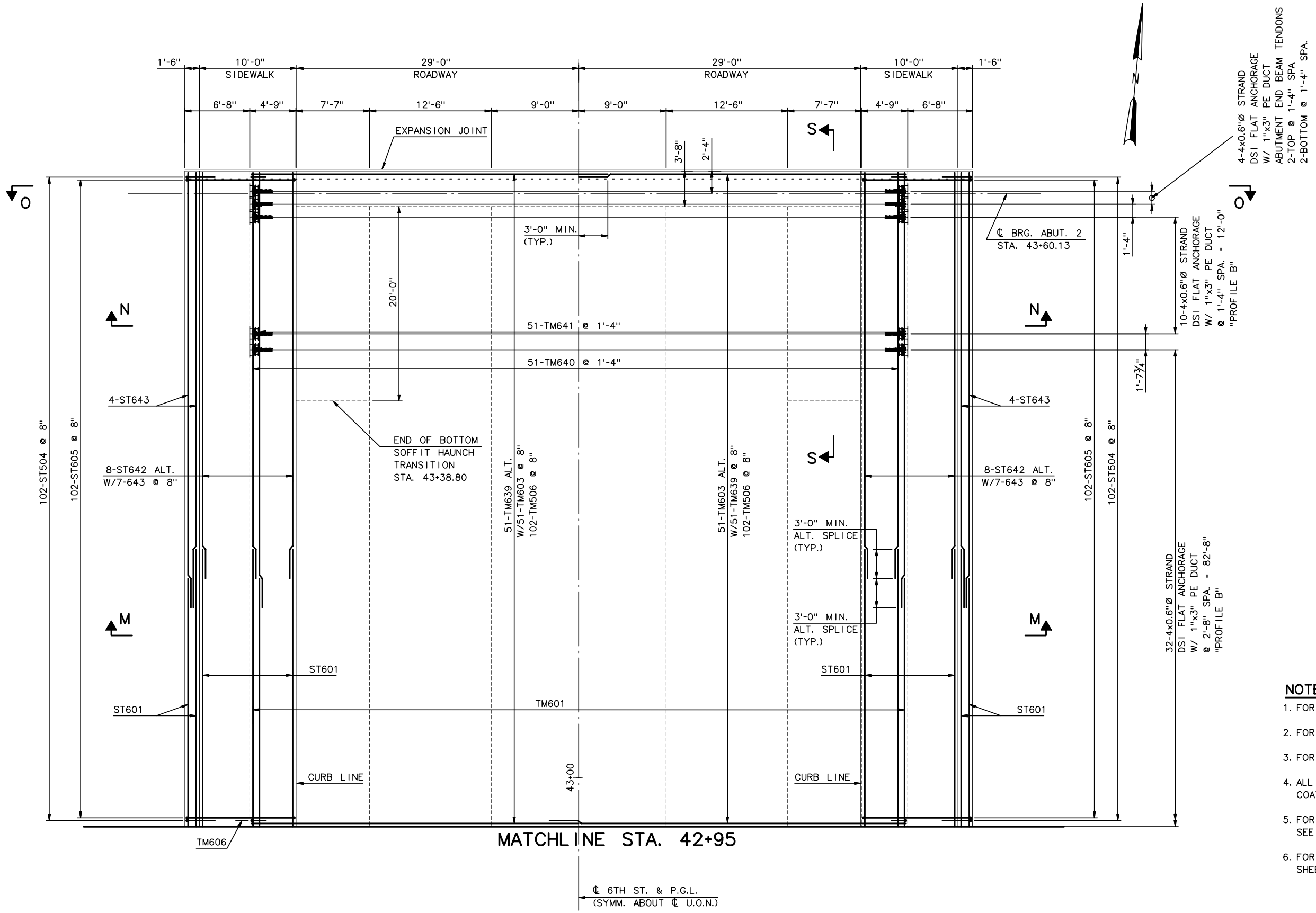

PLAN

3/16" = 1'-0"

NOTES:

1. FOR SECTION M, SEE SHEET NC62.
2. FOR SECTIONS N AND O, SEE SHEET NC63.
3. FOR SECT. S, SEE SHEET NC64.
4. ALL REINFORCEMENT SHALL BE EPOXY COATED ASTM A615 OR A996 GRADE 60.
5. FOR RAILING AND LIGHTPOST LAYOUT, SEE SHEETS NC99 - NC101.
6. FOR SLAB-SIDEWALK REINF., SEE SHEETS NC54a THRU NC54c.

RECORD DRAWING

No.	Date	Revisions	By

HNTB CORPORATION

STATE OF WISCONSIN
DEPARTMENT OF TRANSPORTATION

STRUCTURE B-40-414C

Designed By	SL	Design Checked	TZ	Drawn By	DS	Plans Checked	AP

DECK SLAB PLAN
TOP MAT REINF.
9 OF 9

SHEET NC45 OF

STATE PROJECT I.D.	SHEET NUMBER
2235-00-70	8.690

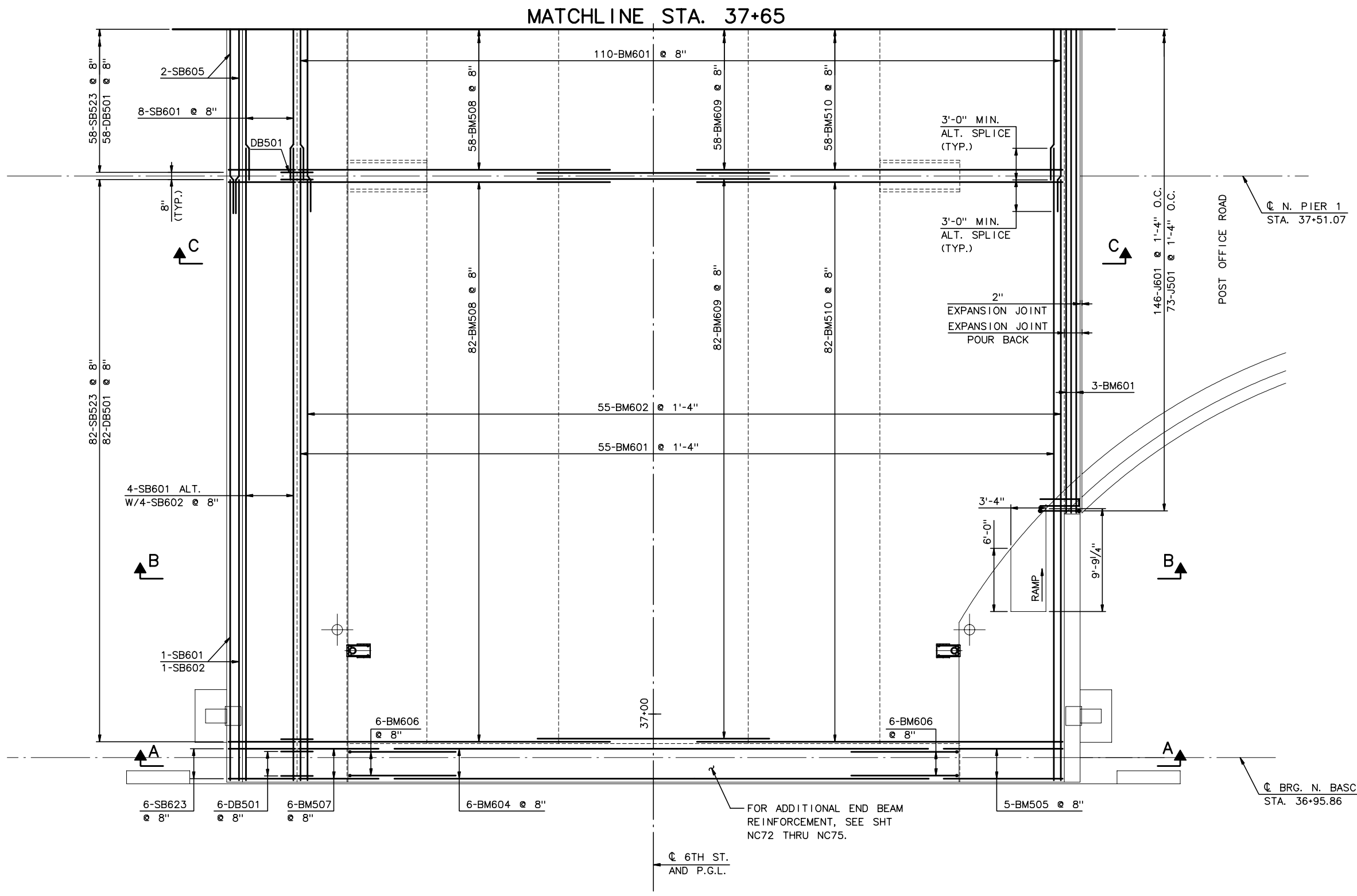

PLAN

3/16" = 1'-0"

LEGEND:

SCUPPER

NOTES:

1. FOR SECTION A, SEE SHEET NC55.
2. FOR SECTION B, SEE SHEET NC56.
3. FOR DECK GEOMETRY, SEE SHEETS NC37 THRU NC45.
4. ALL REINFORCEMENT TO BE PLACED NORMAL TO PGL.
5. ALL REINFORCEMENT SHALL BE EPOXY COATED ASTM A615 OR A996, GRADE 60.
6. FOR SLAB/ SIDEWALK CONNECTION REINFORCEMENT, SEE SHTS NC54a THRU NC54c.

RECORD DRAWING

No.	Date	Revisions	By

HNTB CORPORATION

STATE OF WISCONSIN
DEPARTMENT OF TRANSPORTATION

STRUCTURE B-40-414C

Designed By	SL	Design Checked	TZ	Drawn By	DS	Plans Checked	AP

DECK SLAB PLAN
BOTTOM MAT REINF.
1 OF 9

SHEET NC46 OF

STATE PROJECT I.D.	SHEET NUMBER
2235-00-70	8.691

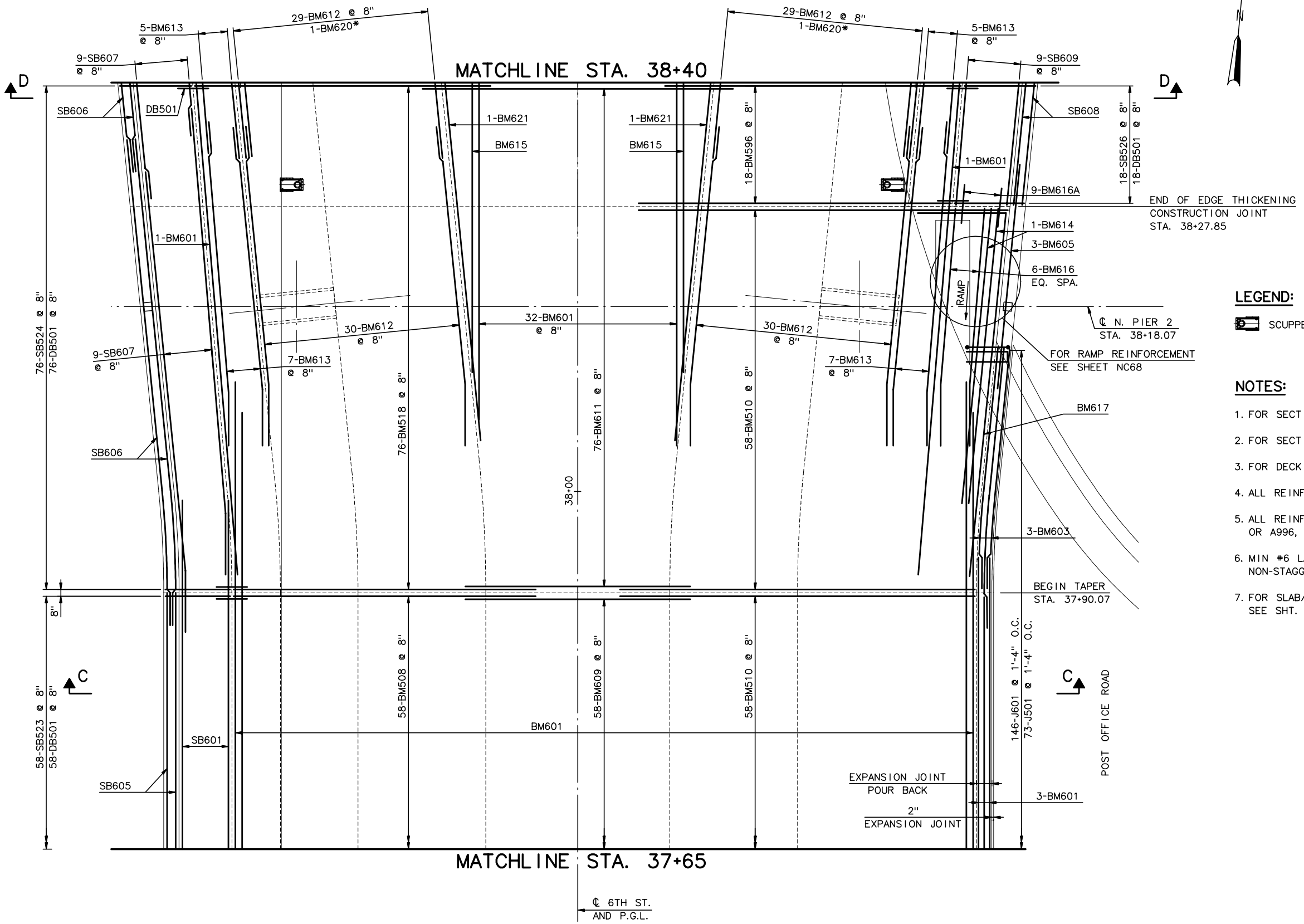

*TYPICAL AT STAY-CABLE OPENINGS

PLAN
3/16" = 1'-0"

LEGEND:

SCUPPER

NOTES:

1. FOR SECTION C, SEE SHEET NC57.
2. FOR SECTION D,SEE SHEET NC58.
3. FOR DECK GEOMETRY, SEE SHEETS NC37 THRU NC45.
4. ALL REINFORCEMENT TO BE PLACED NORMAL TO PGL.
5. ALL REINFORCEMENT SHALL BE EPOXY COATED ASTM A615 OR A996, GRADE 60.
6. MIN #6 LAP LENGTH STAGGERED LAPS 3'-0", NON-STAGGERED LAPS 4'-0"
7. FOR SLAB/ SIDEWALK CONNECTION REINFORCEMENT, SEE SHT. NC54a THRU NC54c.

RECORD DRAWING

No.	Date	Revisions	By

HNTB CORPORATION

STATE OF WISCONSIN
DEPARTMENT OF TRANSPORTATION

STRUCTURE B-40-414C

Designed By	SL	Design Checked	TZ	Drawn By	DS	Plans Checked	AP

DECK SLAB PLAN
BOTTOM MAT REINF.
2 OF 9

SHEET NC47 OF

STATE PROJECT I.D.	SHEET NUMBER
2235-00-70	8.692

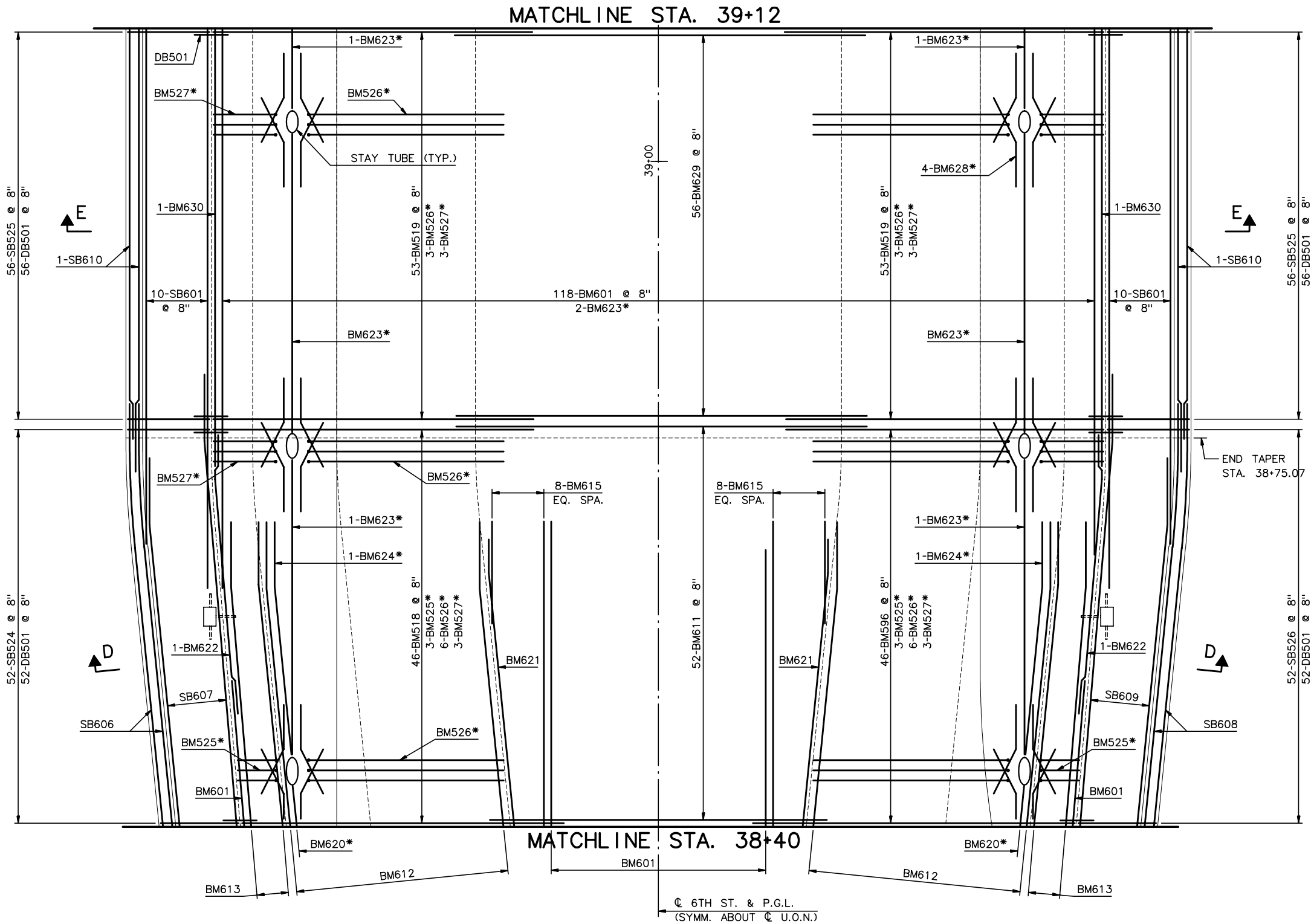

*TYPICAL AT STAY-CABLE OPENINGS

PLAN

3/16" = 1'-0"

LEGEND:

JUNCTION BOX

NOTES:

1. FOR SECTIONS D & E, SEE SHEET NC58.
2. FOR DECK GEOMETRY, SEE SHEETS NC37 THRU NC45.
3. ALL REINFORCEMENT IS TO BE PLACED NORMAL TO PGL.
4. ALL REINFORCEMENT SHALL BE EPOXY COATED ASTM A615 OR A996, GRADE 60.
5. FOR SLAB/ SIDEWALK CONNECTION REINFORCEMENT, SEE SHTS. NC54a THRU NC54c.

RECORD DRAWING

No.	Date	Revisions	By

HNTB CORPORATION

STATE OF WISCONSIN
DEPARTMENT OF TRANSPORTATION

STRUCTURE B-40-414C

Designed By	SL	Design Checked	TZ	Drawn By	DS	Plans Checked	AP

DECK SLAB PLAN
BOTTOM MAT REINF.
3 OF 9

SHEET NC48 OF

STATE PROJECT I.D.	SHEET NUMBER
2235-00-70	8.693

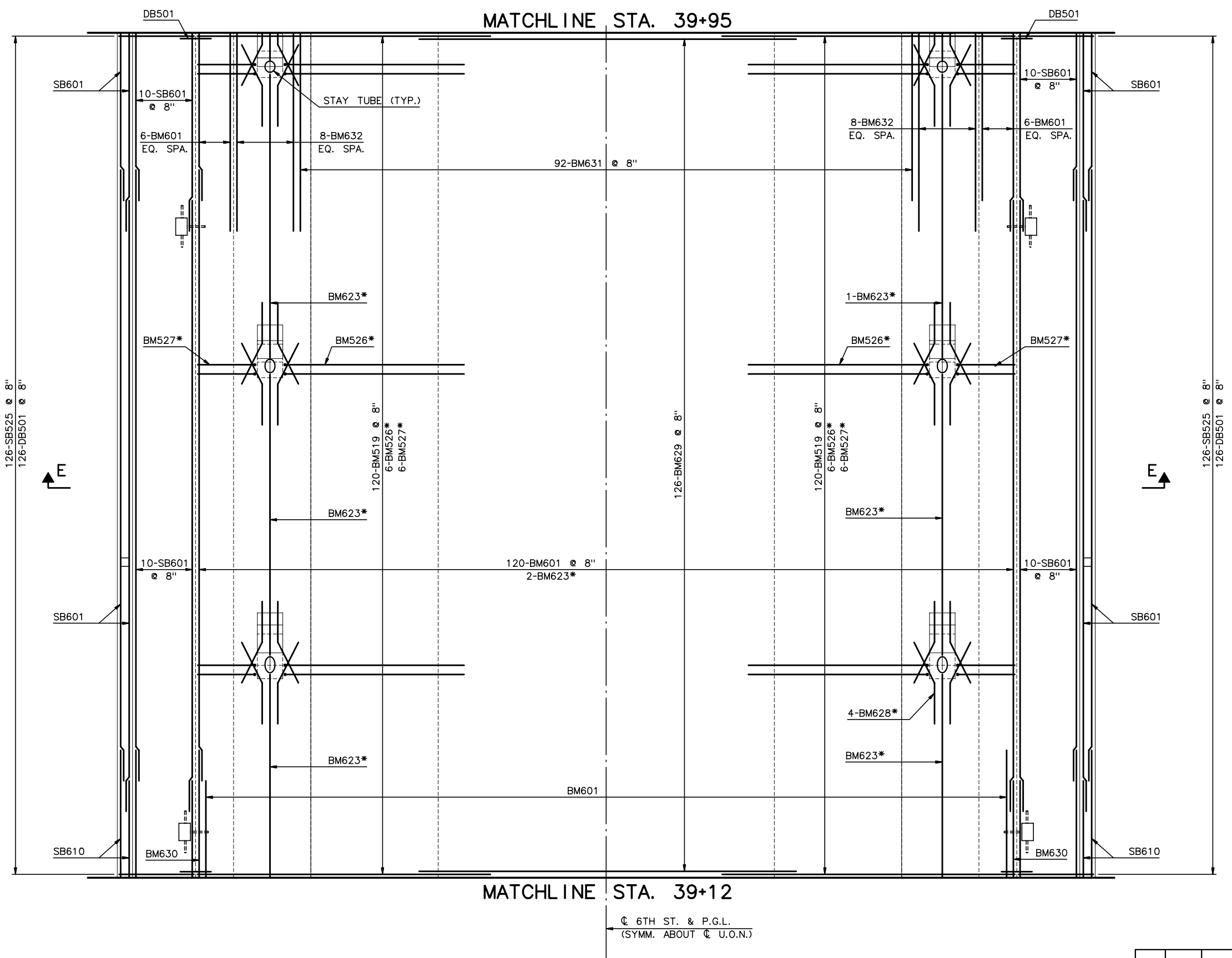

*TYPICAL AT STAY-CABLE OPENINGS

PLAN

3/16" = 1'-0"

LEGEND:

JUNCTION BOX

NOTES:

1. FOR SECTION E, SEE SHEET NC58.
2. FOR DECK GEOMETRY, SEE SHEETS NC37 THRU NC45.
3. ALL REINFORCEMENT IS EPOXY COATED ASTM A615 OR A996, GRADE 60.
4. FOR SLAB/ SIDEWALK CONNECTION REINFORMENT, SEE SHTS NC54a THRU NC54c.

RECORD DRAWING

No.	Date	Revisions	By

HNTB CORPORATION

STATE OF WISCONSIN
DEPARTMENT OF TRANSPORTATION

STRUCTURE B-40-414C

Designed By	SL	Design Checked	TZ	Drawn By	DS	Plans Checked	AP

DECK SLAB PLAN
BOTTOM MAT REINF.
4 OF 9

SHEET NC49 OF

STATE PROJECT I.D.	SHEET NUMBER
2235-00-70	8.694

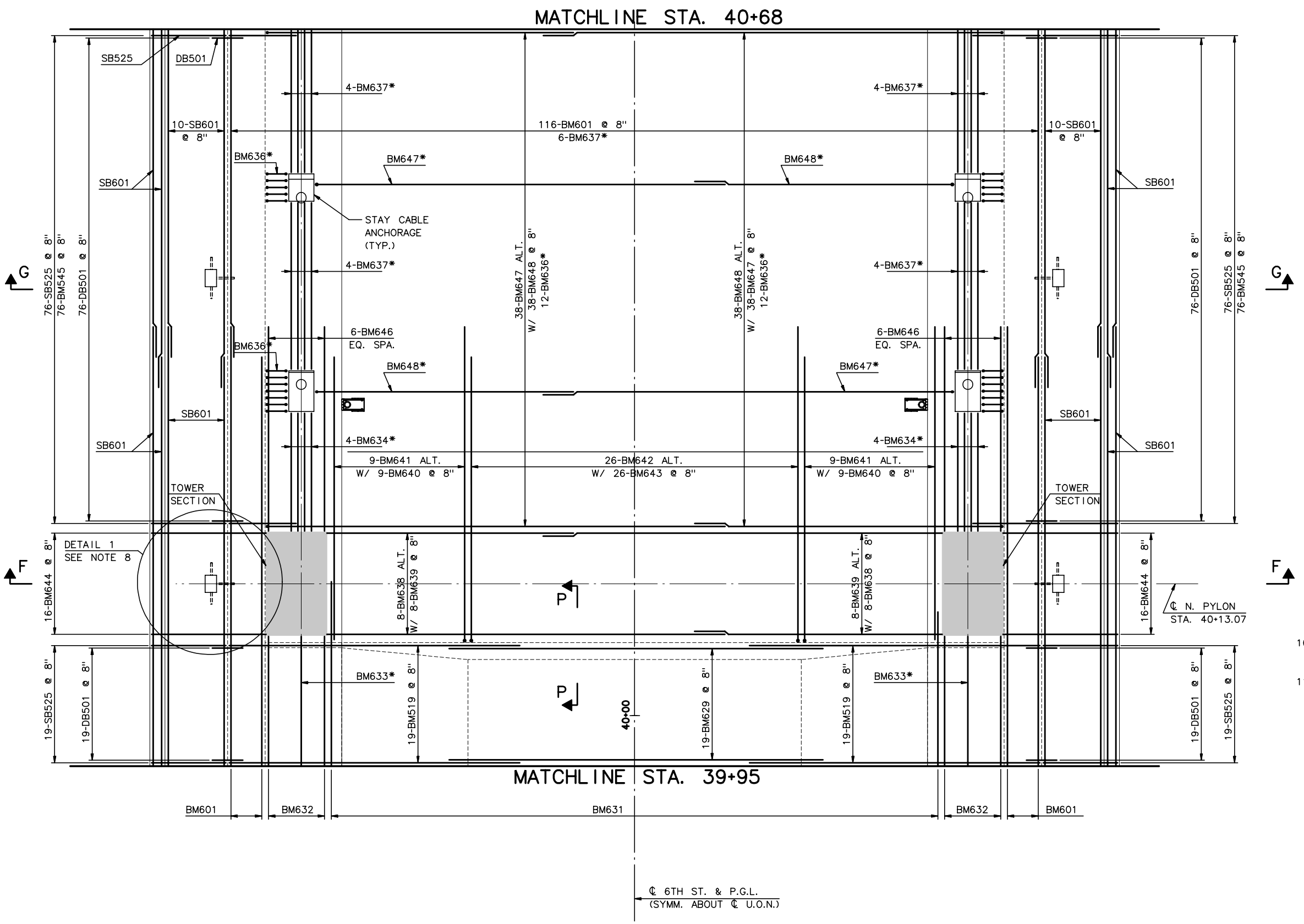

*TYPICAL AT STAY-CABLE OPENINGS

PLAN

3/16" = 1'-0"

N

LEGEND:

SCUPPER

JUNCTION BOX

NOTES:

1. FOR SECTION E, SEE SHEET NC58.
2. FOR SECTIONS F AND G, SEE SHEETS NC59.
3. FOR SECTIONS P, SEE SHEET NC64.
4. FOR CABLE ANCHORAGE REINFORCEMENT, SEE SHEETS NC69 & NC70.
5. ALL REINFORCEMENT IS EPOXY COATED ASTM A615 OR A996, GRADE 60.
6. MIN. #6 LAP SPLICE 3'-0"
7. SLIDE BM647 AND BM648 TOWARD ℄ AT ANCHOR BLISTER LOCATIONS.
8. FOR DETAIL 1, SEE SHEET NC67.
9. FOR PYLON REINFORCEMENT, SEE SHEETS NC23 THRU NC25.
10. FOR SIDEWALK STEEL SEE SHEETS NC54a THRU NC54c.
11. FOR SLAB/ SIDEWALK CONNECTION REINFORCEMENT, SEE SHTS NC54a THRU NC54c.

RECORD DRAWING

No.	Date	Revisions	By

HNTB CORPORATION

STATE OF WISCONSIN
DEPARTMENT OF TRANSPORTATION

STRUCTURE B-40-414C

Designed By	SL	Design Checked	TZ	Drawn By	DS	Plans Checked	AP

DECK SLAB PLAN
BOTTOM MAT REINF.
5 OF 9

SHEET NC50 OF

STATE PROJECT I.D.	SHEET NUMBER
2235-00-70	8.695

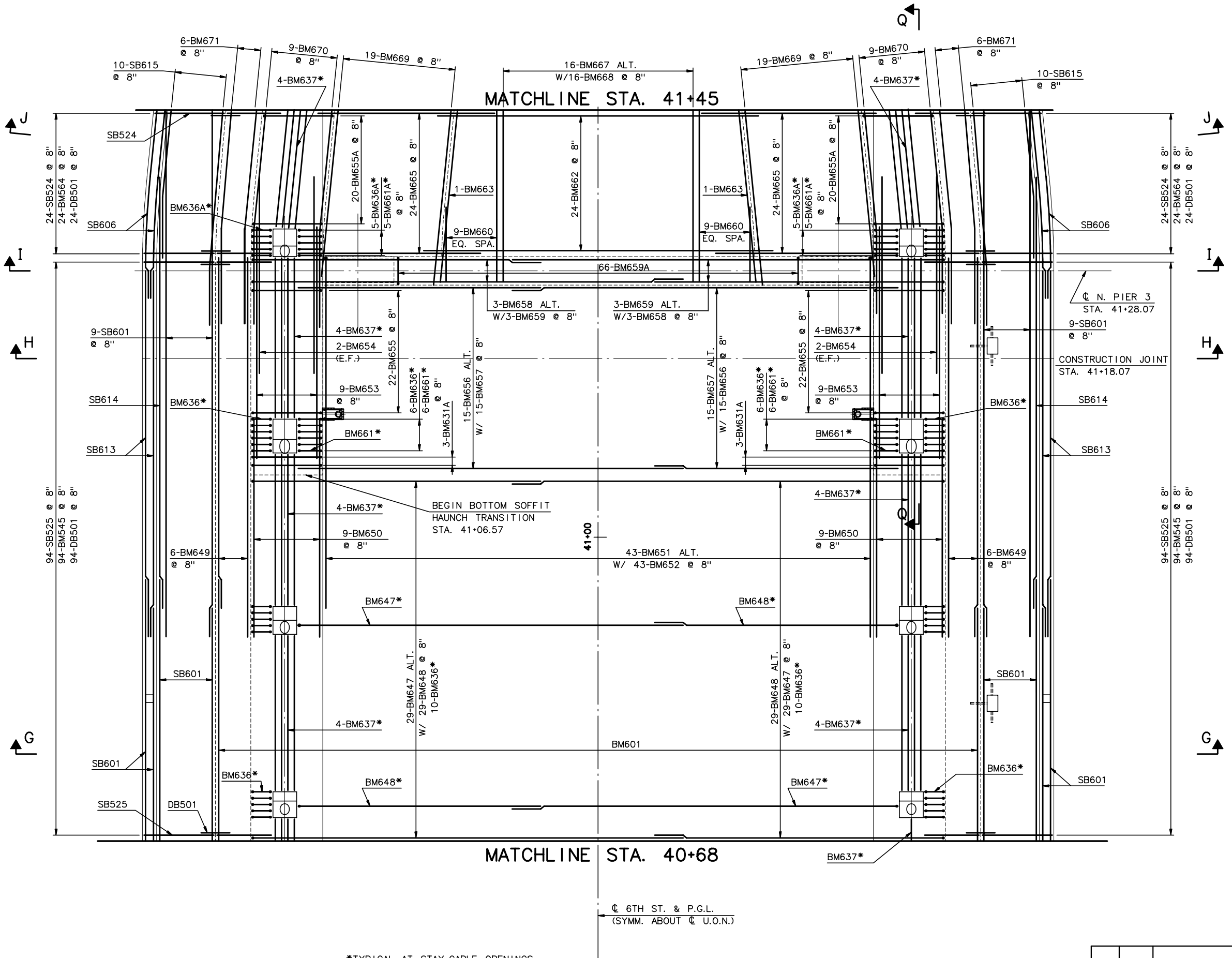

*TYPICAL AT STAY-CABLE OPENINGS

PLAN

3/16" = 1'-0"

LEGEND:

JUNCTION BOX

NOTES:

1. FOR SECTION G, SEE SHEET NC59.
2. FOR SECTIONS H AND I, SEE SHEET NC60.
3. FOR SECTION J, SEE SHEET NC61.
4. FOR SECTION Q, SEE SHEET NC64.
5. FOR CABLE ANCHORAGE REINFORCEMENT, SEE SHEET NC69 & NC70.
6. ALL REINFORCEMENT SHALL BE EPOXY COATED ASTM A615 OR A996, GRADE 60.
7. MIN. #6 LAP SPLICE 3'-0"
8. FOR ADDITIONAL PIER 3 REINFORCEMENT, SEE DWGS.
9. FOR SLAB / SIDEWALK CONNECTION REINFORCEMENT, SEE SHTS NC54a THRU NC54c.

RECORD DRAWING

No.	Date	Revisions	By

HNTB CORPORATION

STATE OF WISCONSIN
DEPARTMENT OF TRANSPORTATION

STRUCTURE B-40-414C

Designed By	SL	Design Checked	TZ	Drawn By	DS	Plans Checked	AP

DECK SLAB PLAN
BOTTOM MAT REINF.
6 OF 9

SHEET NC51 OF

STATE PROJECT I.D.	SHEET NUMBER
2235-00-70	8.696

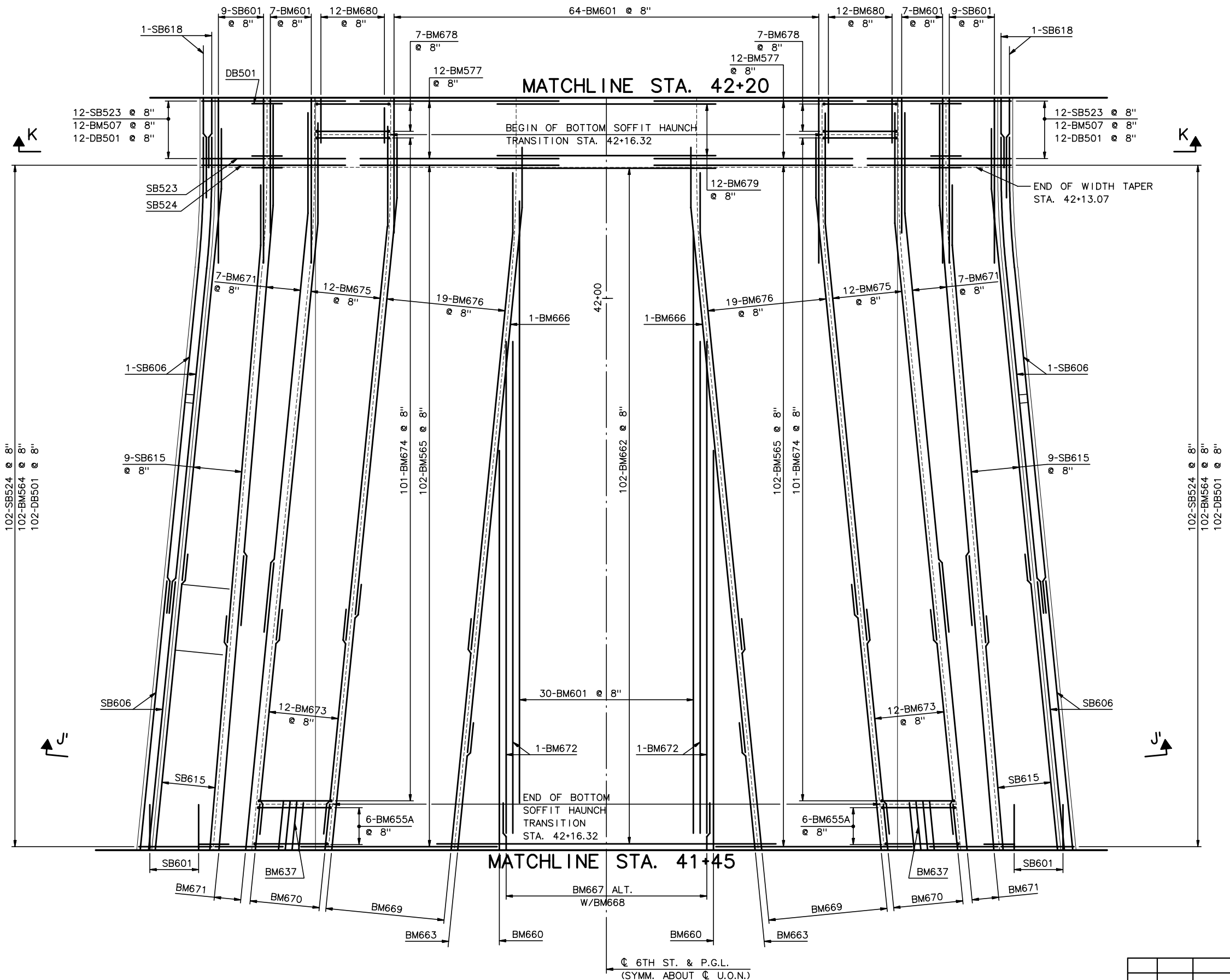

PLAN

3/16" = 1'-0"

RECORD DRAWING

NOTES:

1. FOR SECTIONS J' AND K, SEE SHEET NC61
2. FOR DECK GEOMETRY, SEE SHEETS NC37-NC45.
3. FOR SLAB/ SIDEWALK CONNECTION REINFORCEMENT, SEE SHTS NC54a THRU NC54c.

No.	Date	Revisions	By

HNTB CORPORATION

STATE OF WISCONSIN
DEPARTMENT OF TRANSPORTATION

STRUCTURE B-40-414C

Designed By	SL	Design Checked	TZ	Drawn By	DS	Plans Checked	AP

DECK SLAB PLAN
BOTTOM MAT REINF.
7 OF 9

SHEET NC52 OF

j:\cadd\ff31185\dgn\as built\north cablestay\nc52-deckbotreinf07.dgn 02/11/03 01:52:47 PM

STATE PROJECT I.D.	SHEET NUMBER
2235-00-70	8.697

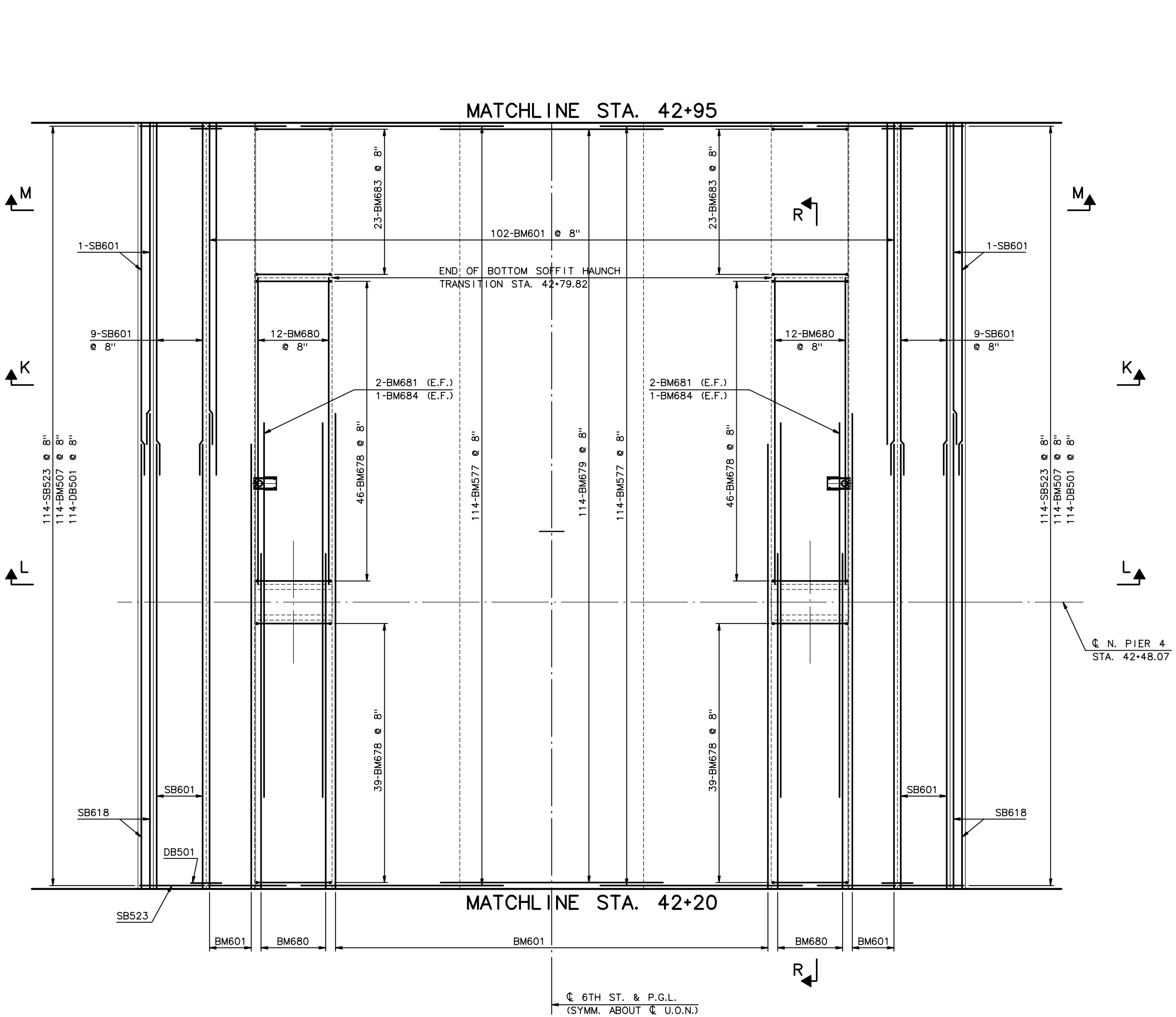

PLAN

3/16" = 1'-0"

NOTES:

1. FOR SECTIONS L AND M SEE SHEET NC62
2. FOR SECTION R, SEE SHEET NC64
3. FOR DECK GEOMETRY, SEE SHEETS NC37 THRU NC45.

RECORD DRAWING

No.	Date	Revisions	By

HNTB CORPORATION

STATE OF WISCONSIN
DEPARTMENT OF TRANSPORTATION

STRUCTURE B-40-414C

Designed By	SL	Design Checked	TZ	Drawn By	DS	Plans Checked	AP

DECK SLAB PLAN
BOTTOM MAT REINF.
8 OF 9

SHEET NC53 OF

STATE PROJECT I.D.	SHEET NUMBER
2235-00-70	8.698

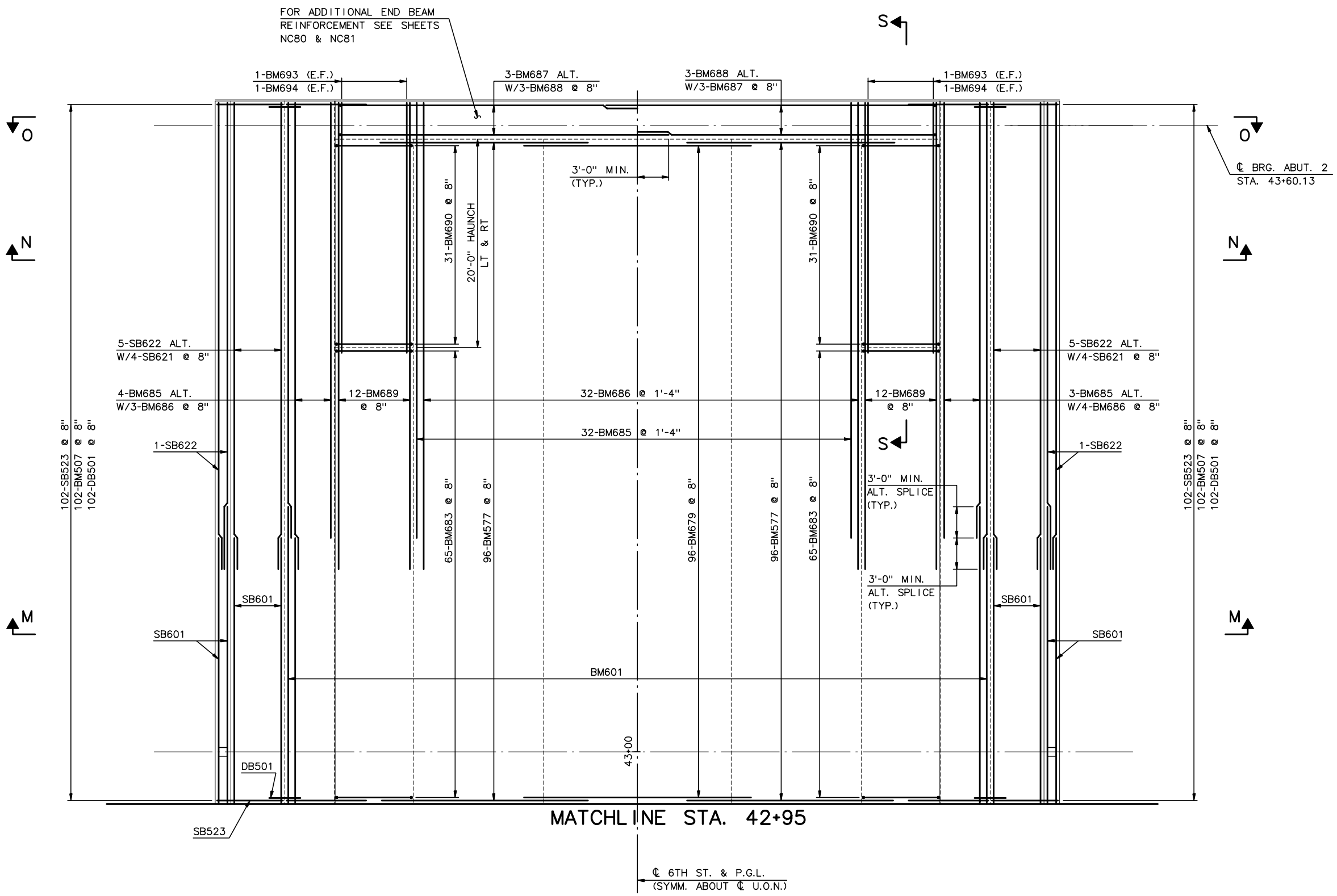

PLAN

3/16" = 1'-0"

NOTES:

1. FOR SECTION M, SEE SHEET NC62.
2. FOR SECTIONS N AND O, SEE SHEET NC63
3. FOR SECT S, SEE SHEET NC64
4. FOR DECK GEOMETRY, SEE SHEETS NC37 THRU NC45.
5. FOR SLAB/ SIDEWALK CONNECTION REINFORCEMENT, SEE SHTS NC54a THRU NC54c.

RECORD DRAWING

No.	Date	Revisions	By

HNTB CORPORATION

STATE OF WISCONSIN
DEPARTMENT OF TRANSPORTATION

STRUCTURE B-40-414C

Designed By	SL	Design Checked	TZ	Drawn By	DS	Plans Checked	AP

DECK SLAB PLAN
BOTTOM MAT REINF.
9 OF 9

SHEET NC54 OF

STATE PROJECT I.D.	SHEET NUMBER
2235-00-70	8.699

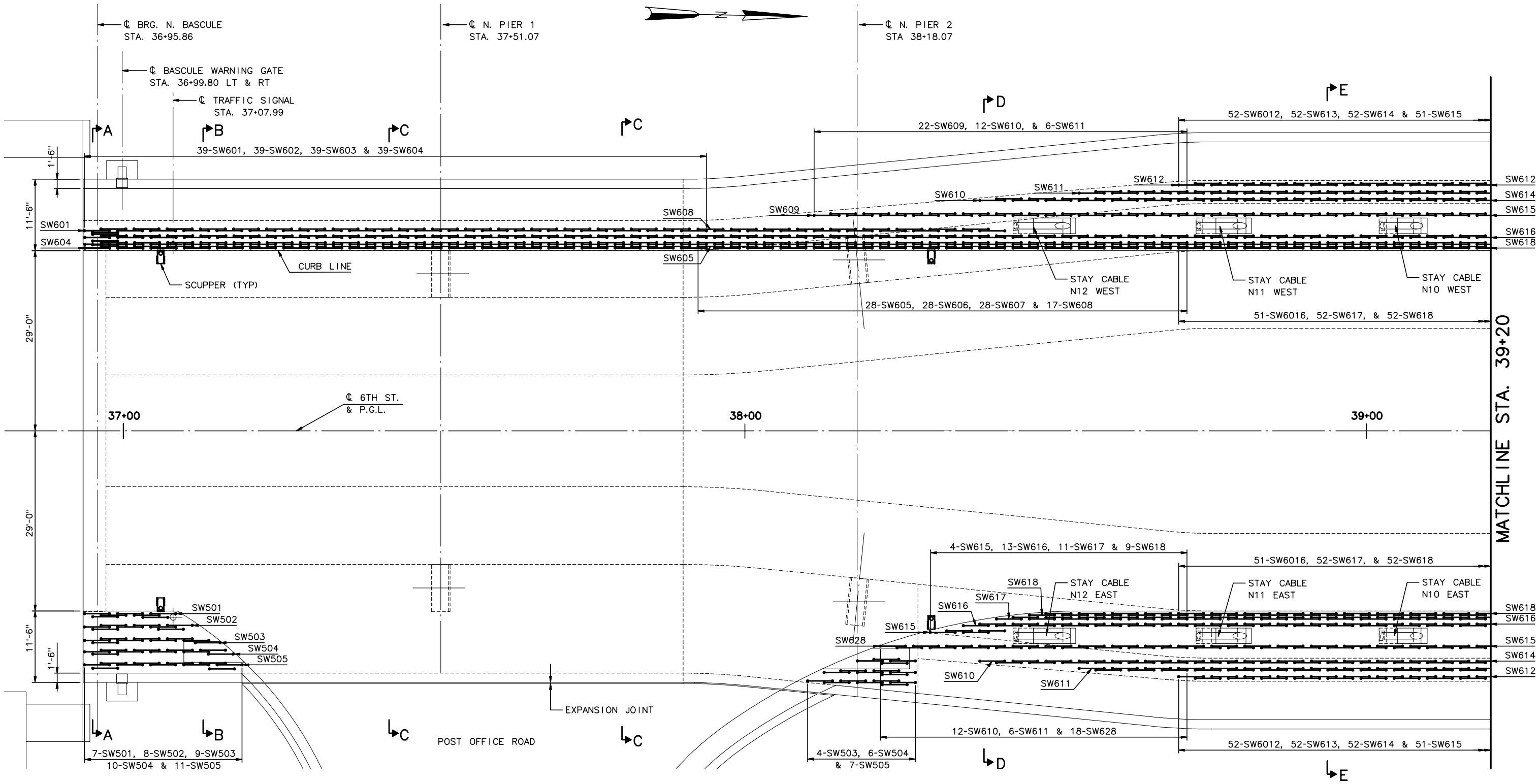

NOTES:

1. FOR SECTIONS A THRU E, SEE SHEETS NC55 THRU NC58.
2. FOR TYPICAL TOP MAT REINFORCEMENT, SEE SHEETS NC37 THRU NC45.
3. FOR TYPICAL BOTTOM MAT REINFORCEMENT, SEE SHEETS NC46 THRU NC54.
4. ALL REINFORCEMENT SHALL BE EPOXY COATED ASTM A615 OR A996 GRADE 60.

PLAN

1/8" = 1'-0"

RECORD DRAWING

No.	Date	Revisions	By

HNTB CORPORATION

STATE OF WISCONSIN
DEPARTMENT OF TRANSPORTATION

STRUCTURE B-40-414C

Designed By	SL	Design Checked	TZ	Drawn By	DS	Plans Checked	AP

SLAB-SIDEWALK REINFORCEMENT 1 OF 3

SHEET NC54a OF

j:\cadd\ff31185\dgn\as built\north cablestay\nc54a-slabsdwlkreinf01.dgn 02/11/03 01:52:49 PM

STATE PROJECT I.D.	SHEET NUMBER
2235-00-70	8.700

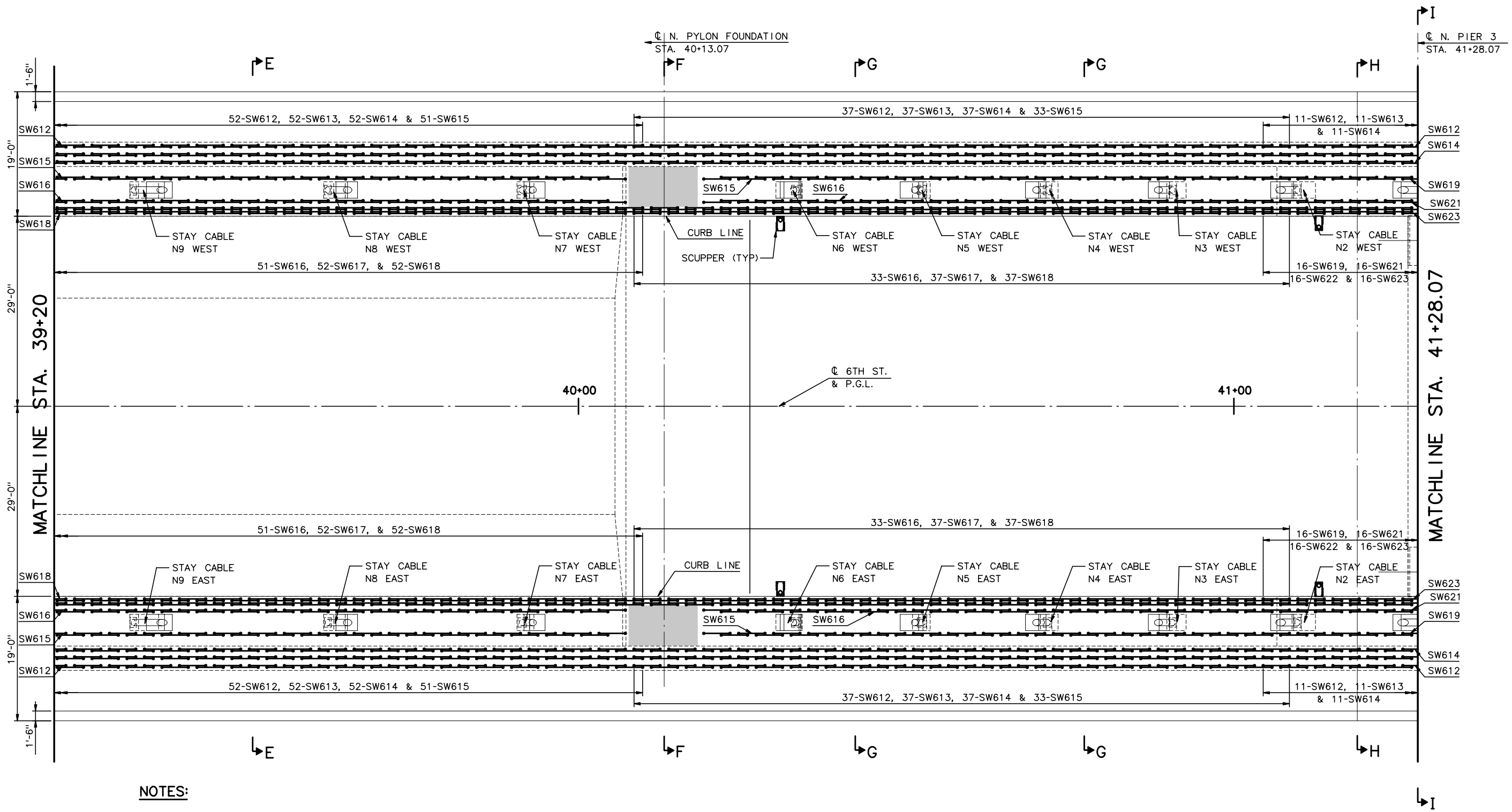

NOTES:

1. FOR SECTIONS E THRU I, SEE SHEETS NC58 THRU NC60.
2. FOR TYPICAL TOP MAT REINFORCEMENT, SEE SHEETS NC37 THRU NC45.
3. FOR TYPICAL BOTTOM MAT REINFORCEMENT, SEE SHEETS NC46 THRU NC54.
4. ALL REINFORCEMENT SHALL BE EPOXY COATED ASTM A615 OR A996 GRADE 60.

PLAN
1/8" = 1'-0"

RECORD DRAWING

No.	Date	Revisions	By

HNTB CORPORATION

STATE OF WISCONSIN
DEPARTMENT OF TRANSPORTATION

STRUCTURE B-40-414C

Designed By	SL	Design Checked	TZ	Drawn By	DS	Plans Checked	AP

SLAB-SIDEWALK REINFORCEMENT 2 OF 3

SHEET NC54b OF

STATE PROJECT I.D.	SHEET NUMBER
2235-00-70	8.701

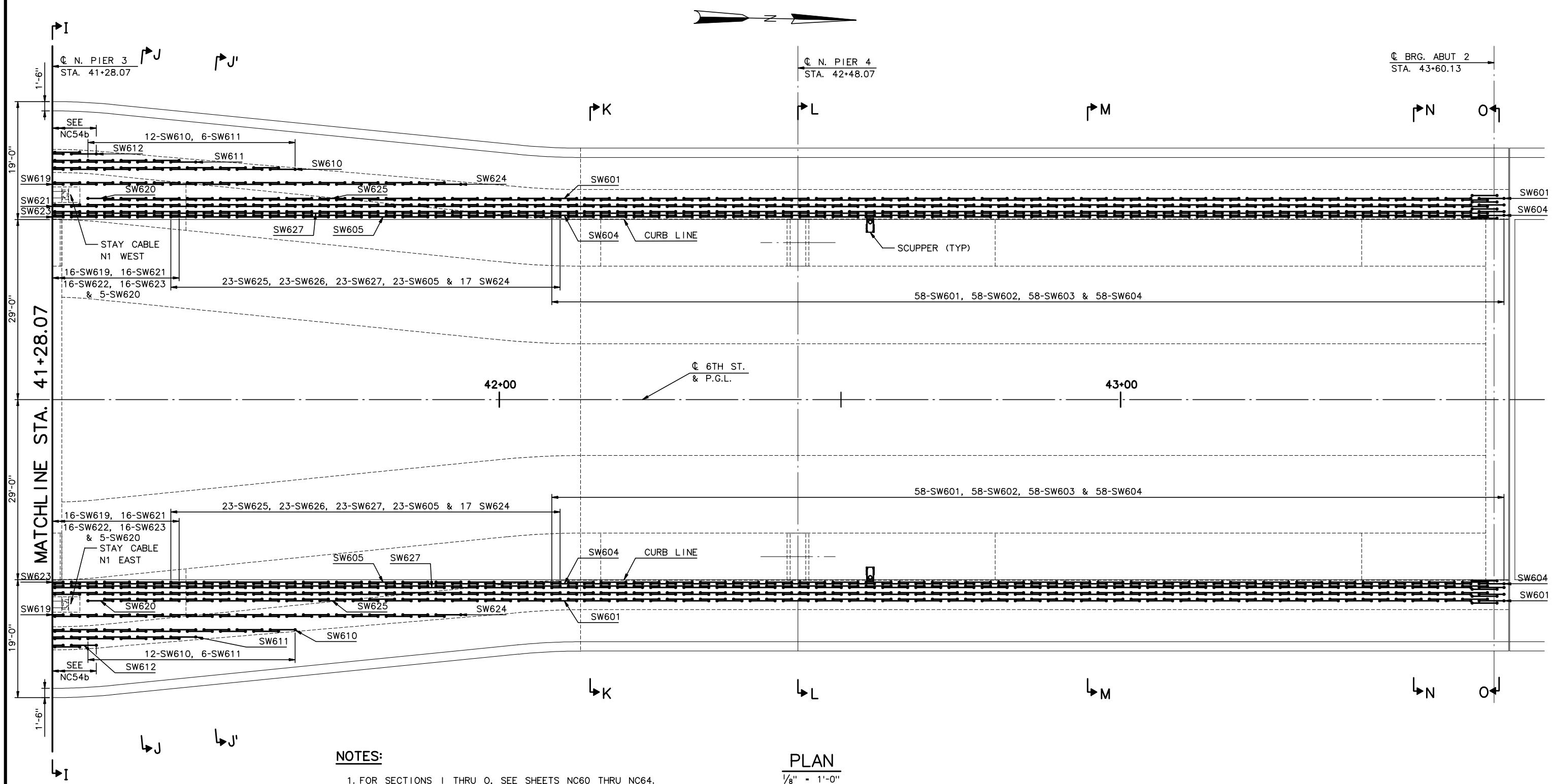

PLAN

1/8" = 1'-0"

NOTES:

1. FOR SECTIONS I THRU O, SEE SHEETS NC60 THRU NC64.
2. FOR TYPICAL TOP MAT REINFORCEMENT, SEE SHEETS NC37 THRU NC45.
3. FOR TYPICAL BOTTOM MAT REINFORCEMENT, SEE SHEETS NC46 THRU NC54.
4. ALL REINFORCEMENT SHALL BE EPOXY COATED ASTM A615 OR A996 GRADE 60.

RECORD DRAWING

No.	Date	Revisions	By

HNTB CORPORATION

STATE OF WISCONSIN
DEPARTMENT OF TRANSPORTATION

STRUCTURE B-40-414C

Designed By	SL	Design Checked	TZ	Drawn By	DS	Plans Checked	AP

SLAB SIDEWALK REINFORCEMENT 3 OF 3

SHEET NC54c OF

j:\cadd\ff31185\dgn\as built\north cablestay\nc54c-slabsdwlkreinf03.dgn 02/11/03 01:52:52 PM

STATE PROJECT I.D.	SHEET NUMBER
2235-00-70	8.702

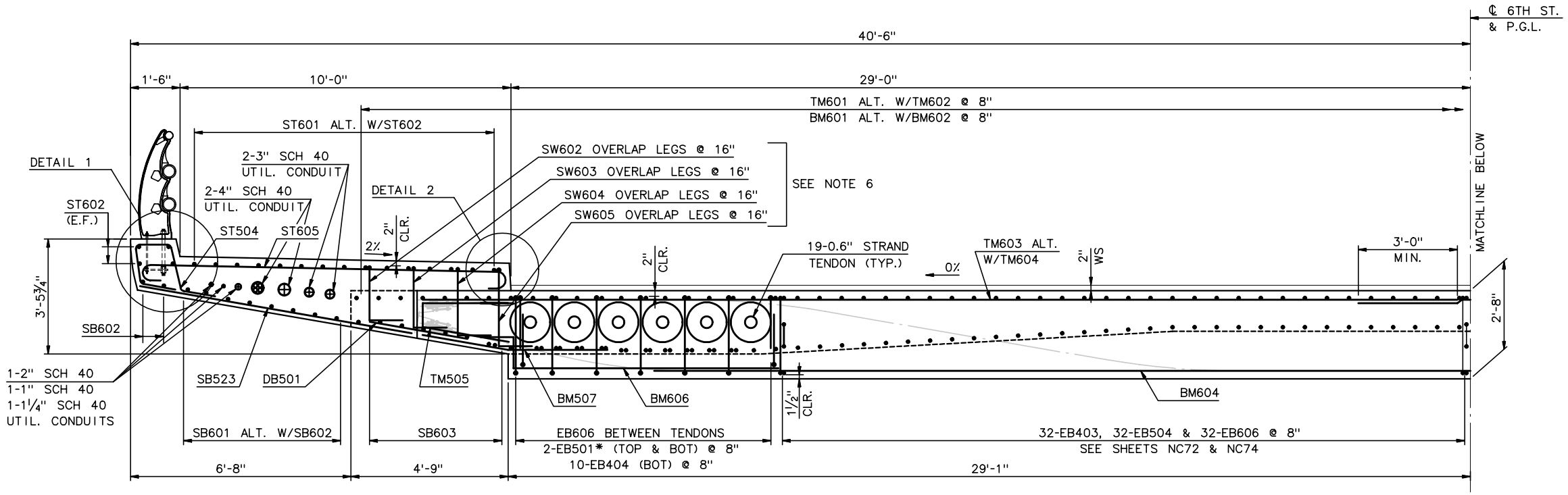

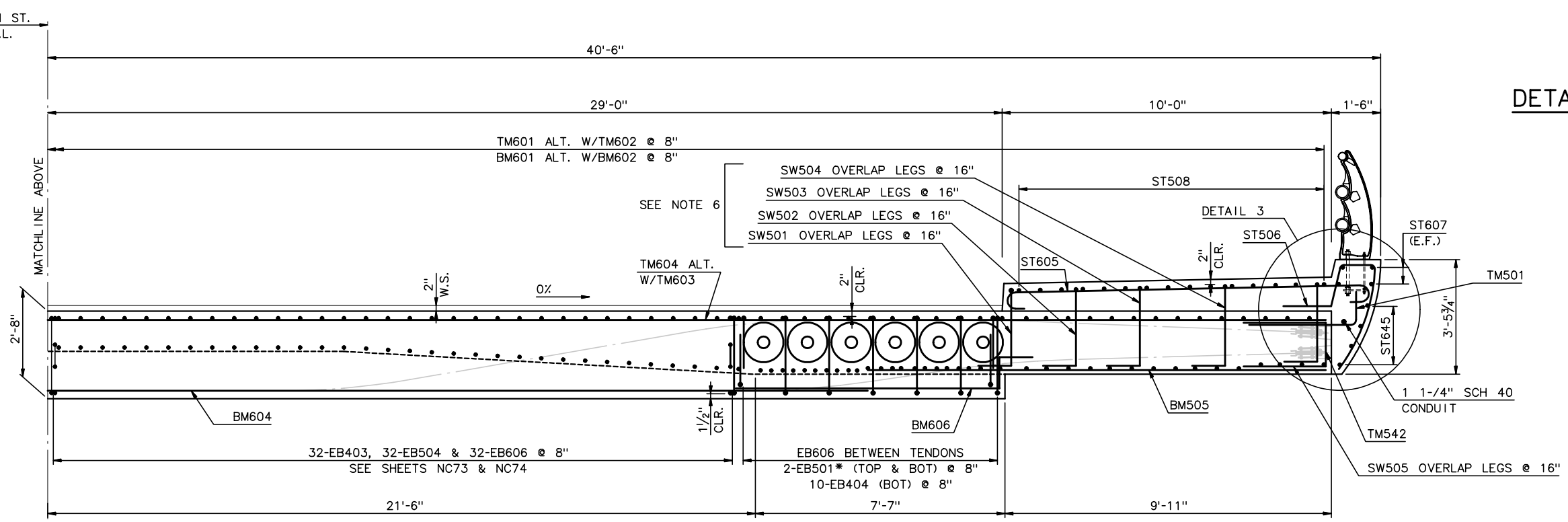

SECTION A

½" = 1'-0"

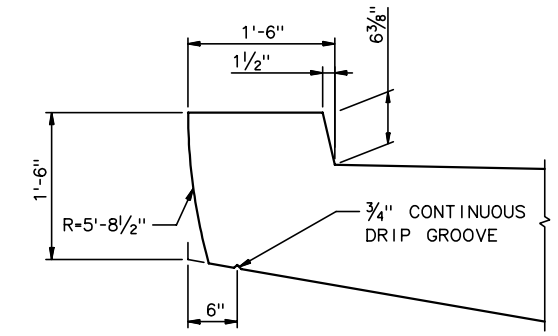

DETAIL 1 - PEDESTRIAN CURB

1" = 1'-0"

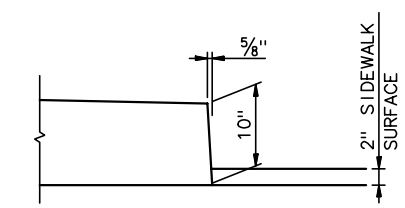

DETAIL 2 - ROADWAY CURB

1" = 1'-0"

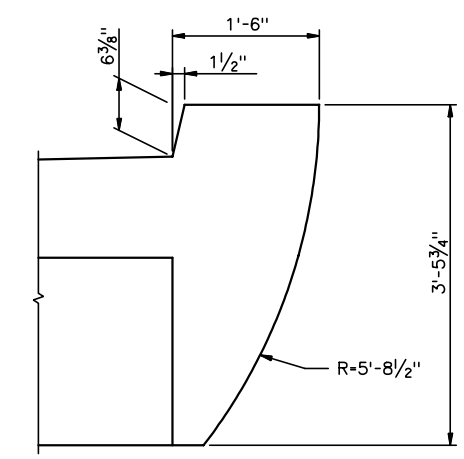

DETAIL 3 - PEDESTRIAN CURB

1" = 1'-0"

NOTES:

1. FOR SECTION A LOCATION, SEE SHEET NC37.
2. FOR RAILING DETAILS, SEE SHEET NC102 AND NC103.
3. ALL REINFORCEMENT SHALL BE EPOXY COATED ASTM A615 OR A996 GRADE 60.
4. FOR POST-TENSIONING PROFILES, SEE SHEET NC83 THRU NC91.
5. FOR END BEAM REINFORCEMENT, SEE SHEET NC72 THRU NC75.
6. FOR SLAB SIDEWALK REINF., SEE SHTS NC54a-NC54c.

* FIELD BEND TM501

RECORD DRAWING

No.	Date	Revisions	By
1	11/21/1	Rev. bar mark ST645	CE

HNTB CORPORATION

STATE OF WISCONSIN
DEPARTMENT OF TRANSPORTATION

STRUCTURE B-40-414C

Designed By	SL	Design Checked	TZ	Drawn By	DS	Plans Checked	AP

DECK SLAB SECTIONS
1 OF 10

SHEET NC55 OF

STATE PROJECT I.D.	SHEET NUMBER
2235-00-70	8.703

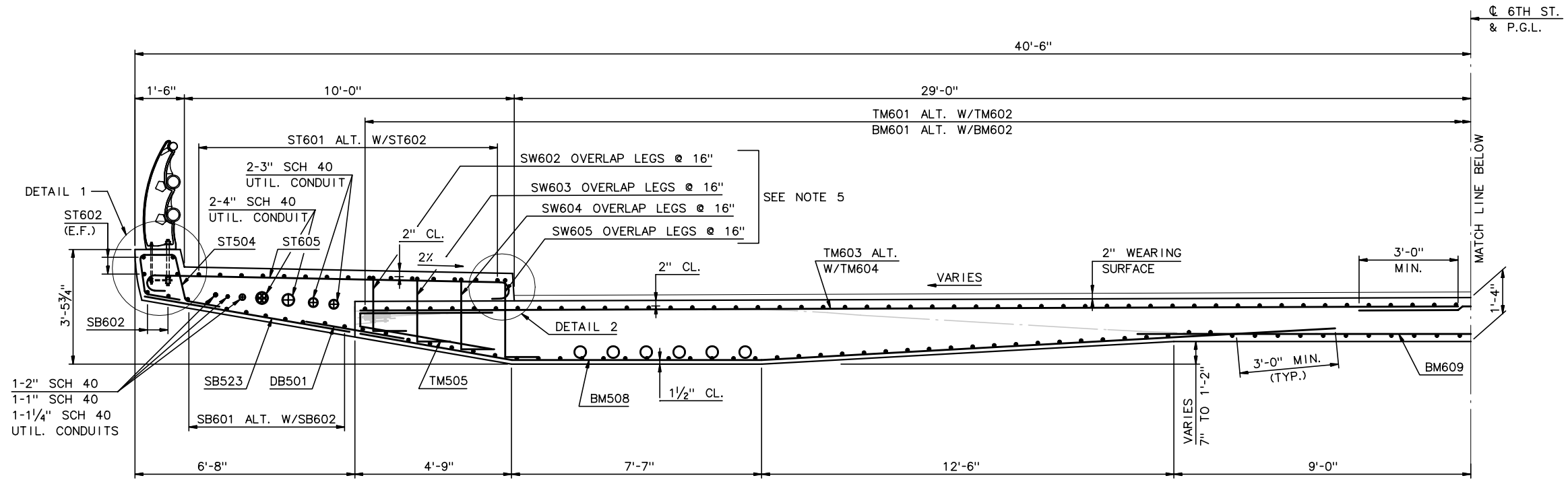

NOTES:

1. FOR SECTION B LOCATION, SEE SHEET NC37.
2. FOR RAILING DETAILS, SEE SHEETS NC102 AND NC103.
3. ALL REINFORCEMENT SHALL BE EPOXY COATED ASTM A615 OR A996 GRADE 60.
4. FOR POST-TENSIONING PROFILES, SEE SHEETS NC83 THRU NC91.
5. FOR SLAB-SIDEWALK REINF., SEE SHTS. NC54a THRU NC54c.

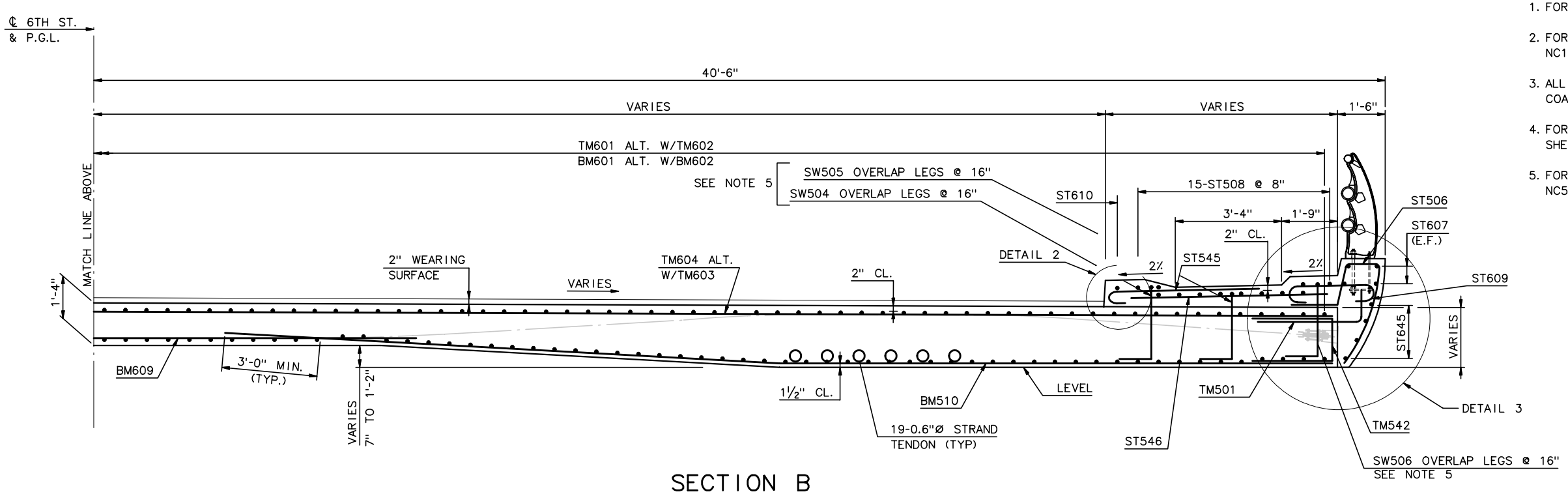

SECTION B

½" = 1'-0"

RECORD DRAWING

No.	Date	Revisions	By
1	11/21/1	Rev B.M. ST545, 609, 546, 645	CE

HNTB CORPORATION

STATE OF WISCONSIN
DEPARTMENT OF TRANSPORTATION

STRUCTURE B-40-414C

Designed By	SL	Design Checked	TZ	Drawn By	DS	Plans Checked	AP

DECK SLAB SECTIONS
2 OF 10

SHEET NC56 OF

STATE PROJECT I.D.	SHEET NUMBER
2235-00-70	8.704

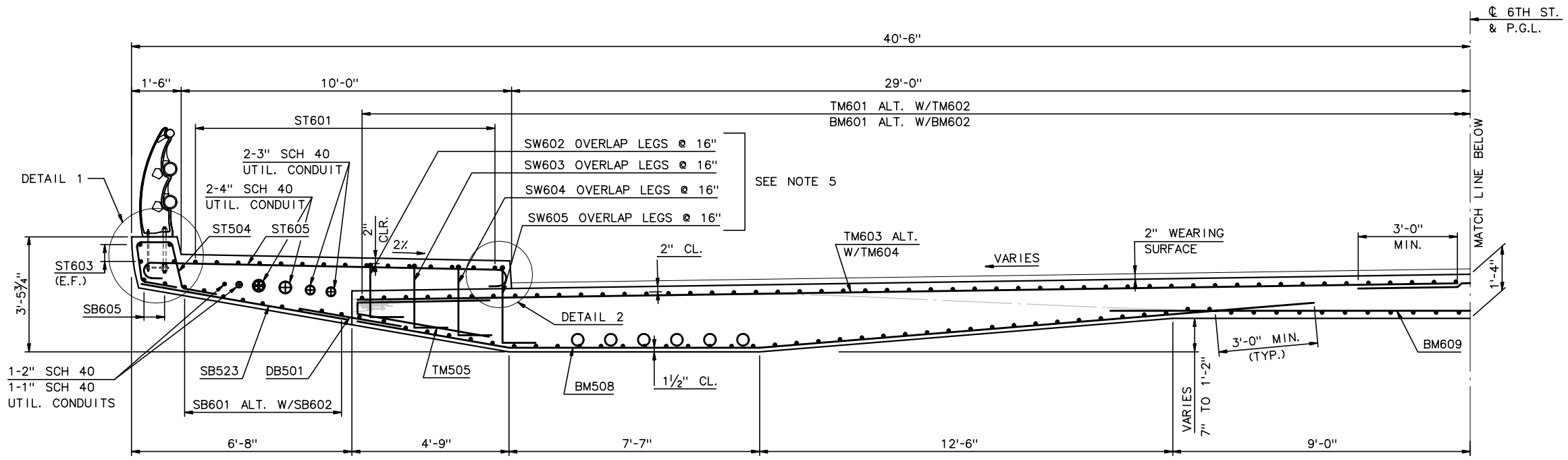

NOTES:

1. FOR SECTION C LOCATION, SEE SHEET NC37 AND NC38.
2. FOR RAILING DETAILS, SEE SHEETS NC102 AND NC103.
3. ALL REINFORCEMENT SHALL BE EPOXY COATED ASTM A615 OR A996 GRADE 60.
4. FOR POST-TENSINONING PROFILES, SEE SHEETS NC83 THRU NC91.
5. FOR SLAB-SIDEWALK REINF., SEE SHTS. NC54a THRU NC54c.

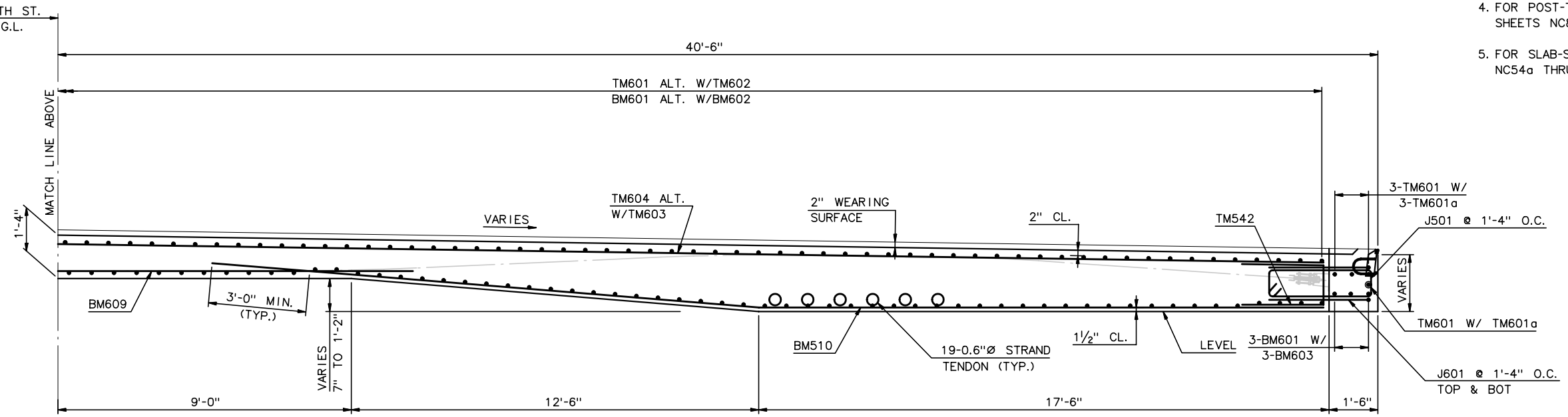

SECTION C

½" = 1'-0"

RECORD DRAWING

No.	Date	Revisions	By

HNTB CORPORATION

STATE OF WISCONSIN
DEPARTMENT OF TRANSPORTATION

STRUCTURE B-40-414C

Designed By	SL	Design Checked	TZ	Drawn By	DS	Plans Checked	AP

DECK SLAB SECTIONS
3 OF 10

SHEET NC57 OF

STATE PROJECT I.D.	SHEET NUMBER
2235-00-70	8.705

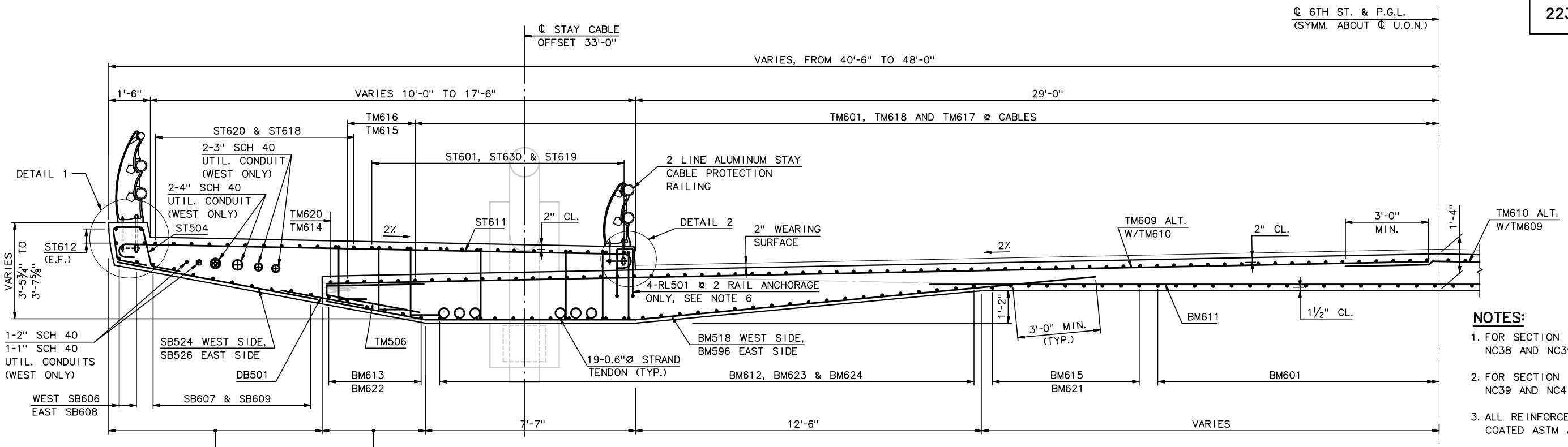

SECTION D

½" = 1'-0"

NOTES:

1. FOR SECTION D LOCATION, SEE SHEETS NC38 AND NC39.
2. FOR SECTION E LOCATIONS, SEE SHEETS NC39 AND NC41.
3. ALL REINFORCEMENT SHALL BE EPOXY COATED ASTM A615 OR A996 GRADE 60.
4. FOR POST-TENSIONING PROFILES, SEE SHEETS NC83 THRU NC88a.
5. FOR SLAB-SIDEWALK REINF., SEE SHTS. NC54a THRU NC54c.
6. FOR RL501 BAR PLACEMENT, SEE SHT NC67, 2 RAILING ANCHOR REINF. DETAIL.

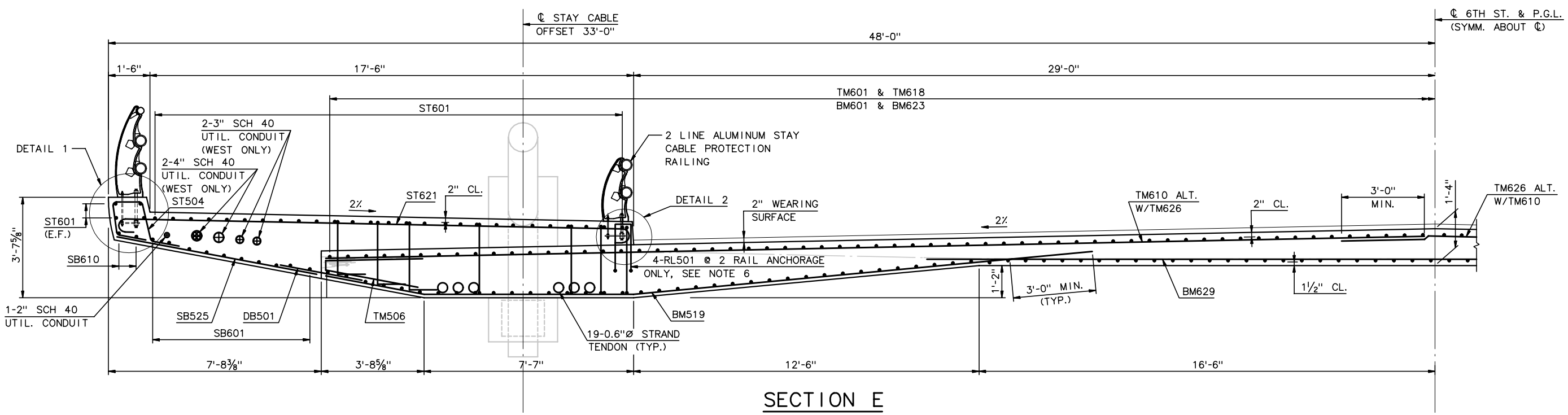

SECTION E

½" = 1'-0"

RECORD DRAWING

No.	Date	Revisions	By

HNTB CORPORATION

STATE OF WISCONSIN
DEPARTMENT OF TRANSPORTATION

STRUCTURE B-40-414C

Designed By	SL	Design Checked	TZ	Drawn By	DS	Plans Checked	AP

DECK SLAB SECTIONS
4 OF 10

SHEET NC58 OF

STATE PROJECT I.D.	SHEET NUMBER
2235-00-70	8.706

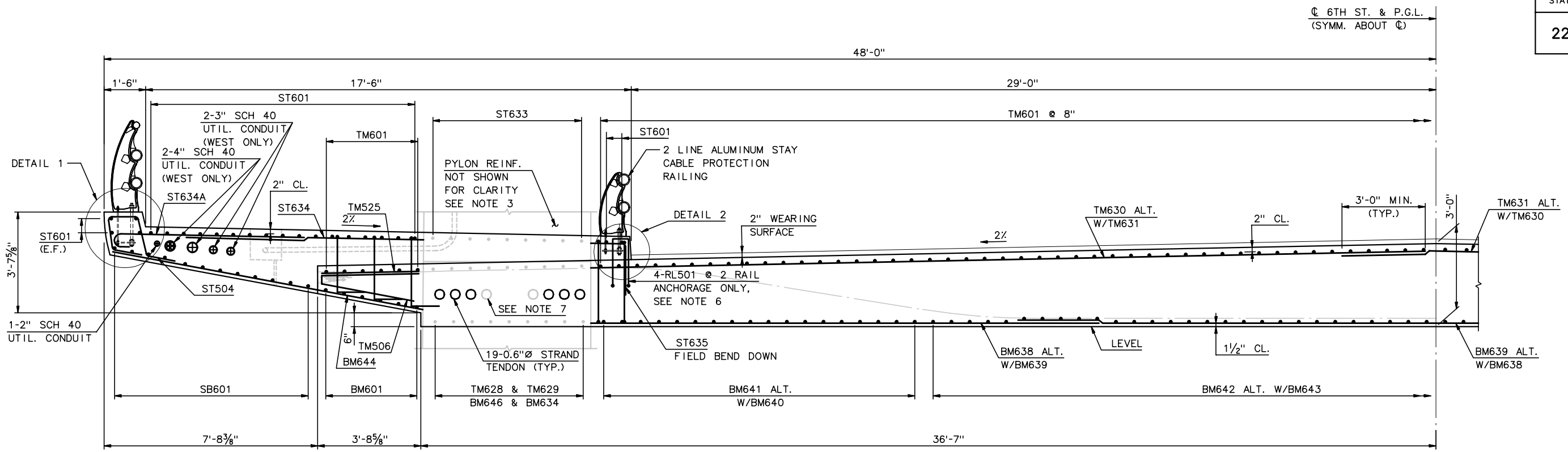

SECTION F

½" = 1'-0"

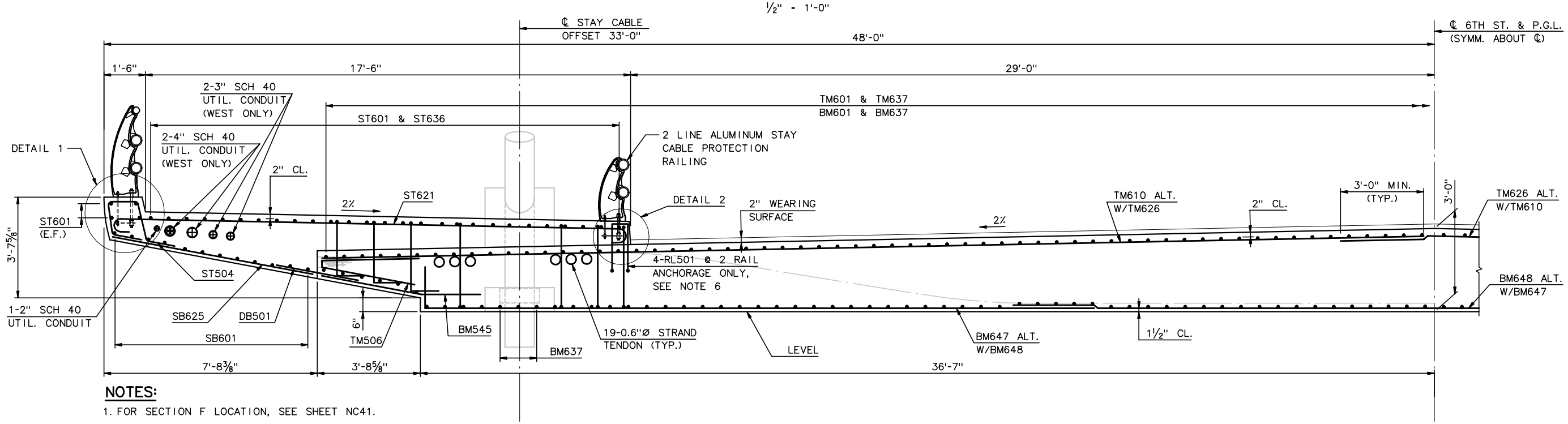

SECTION G

½" = 1'-0"

NOTES:

1. FOR SECTION F LOCATION, SEE SHEET NC41.
2. FOR SECTION G LOCATION, SEE SHEET NC41.
3. FOR PYLON REINFORCEMENT DETAILS, SEE PYLON LIFT 2 DWGS AND DECK DETAILS.
4. ALL REINFORCEMENT EPOXY COATED ASTM A615 OR A996 GRADE 60.
5. FOR SLAB-SIDEWALK REINF., SEE SHTS NC54a THRU NC54c.
6. FOR RL501 BAR PLACEMENT, SEE NC67, 2 RAILING ANCHOR DETAIL.
7. GROUT UNUSED DUCT SOLID.

RECORD DRAWING

No.	Date	Revisions	By

HNTB CORPORATION

STATE OF WISCONSIN
DEPARTMENT OF TRANSPORTATION

STRUCTURE B-40-414C

Designed By	SL	Design Checked	TZ	Drawn By	DS	Plans Checked	AP

DECK SLAB SECTIONS
5 OF 10

SHEET NC59 OF

STATE PROJECT I.D.	SHEET NUMBER
2235-00-70	8.707

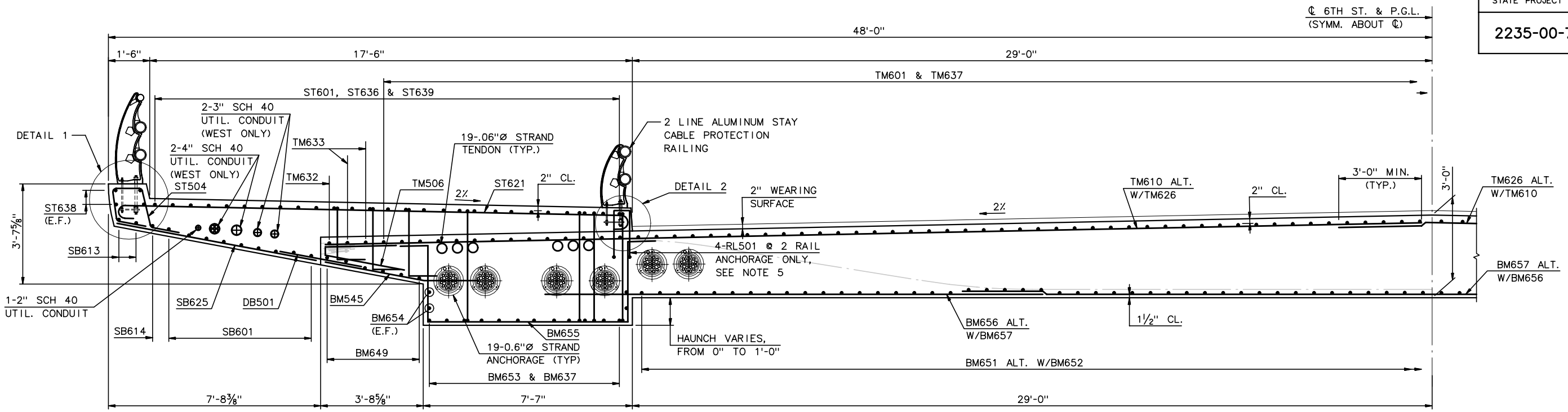

SECTION H

½" = 1'-0"

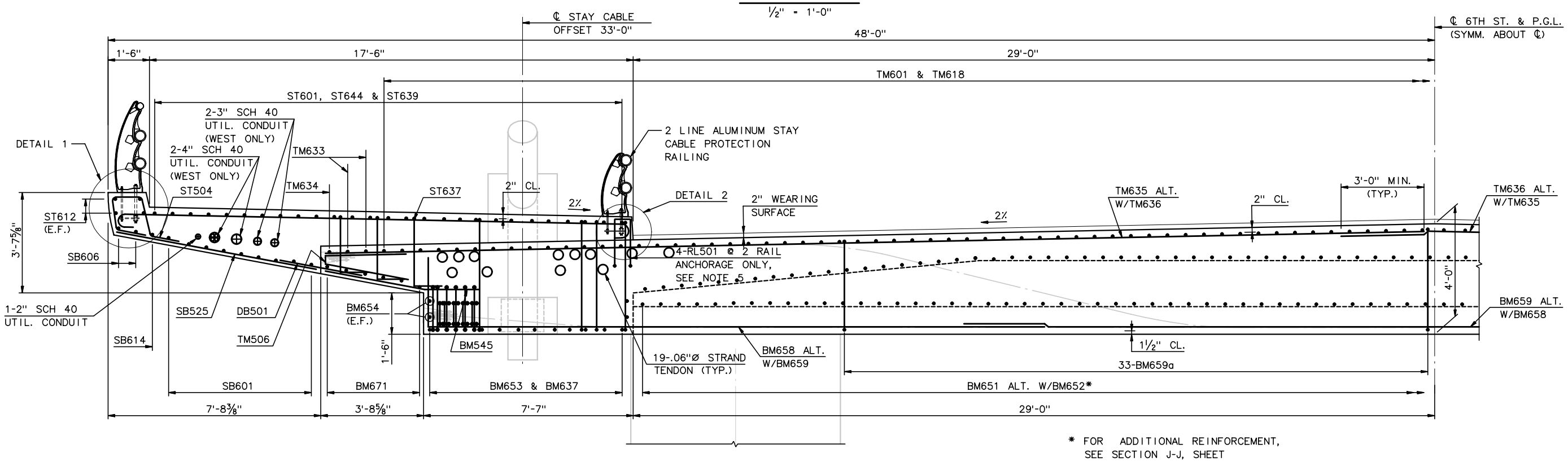

* FOR ADDITIONAL REINFORCEMENT, SEE SECTION J-J, SHEET

SECTION I

½" = 1'-0"

NOTES:

1. FOR SECTIONS H AND I LOCATIONS, SEE SHEET NC42.
2. ALL REINFORCEMENT SHALL BE EPOXY COATED ASTM A615 OR A996 GRADE 60.
3. FOR ADDITIONAL DETAILS AT PIER 3, SEE PIER CAP SHEETS.
4. FOR SLAB-SIDEWALK REINF., SEE SHTS NC54a - NC54c.
5. FOR RL501 BAR PLACEMENT, SEE NC67, 2 RAILING ANCHOR REINF.

RECORD DRAWING

No.	Date	Revisions	By

HNTB CORPORATION

STATE OF WISCONSIN
DEPARTMENT OF TRANSPORTATION

STRUCTURE B-40-414C

Designed By	SL	Design Checked	TZ	Drawn By	DS	Plans Checked	AP

DECK SLAB SECTIONS
6 OF 10

SHEET NC60 OF

STATE PROJECT I.D.	SHEET NUMBER
2235-00-70	8.708

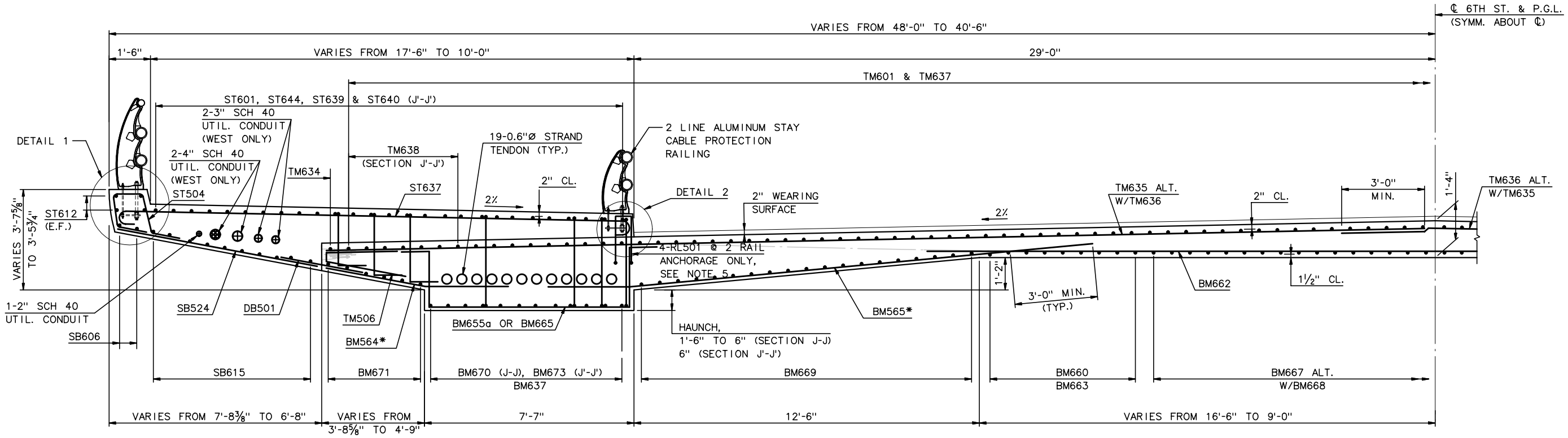

SECTION J
SECTION J'
½" = 1'-0"

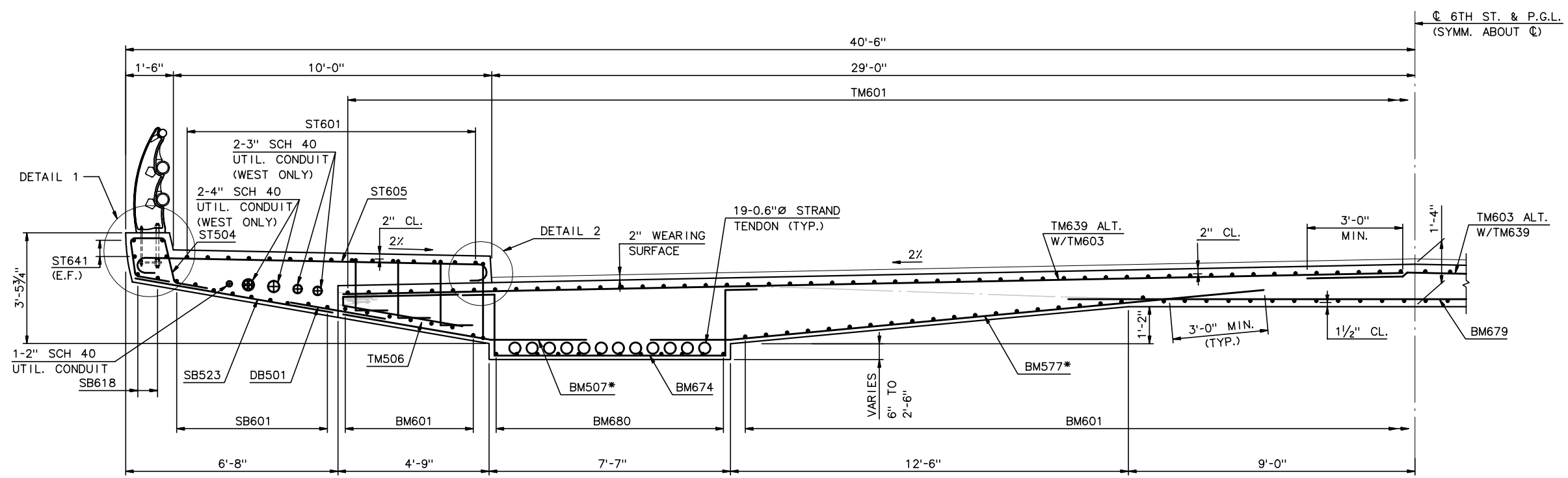

SECTION K
½" = 1'-0"

* FIELD BEND BAR VERTICALLY OR HORIZONTALLY AT LOCAL TENDON PROFILE CONFLICT REGIONS.

NOTES:

1. FOR SECTION J LOCATION, SEE SHEET NC51.
2. FOR SECTIONS J' & K LOCATIONS, SEE SHEET NC52.
3. ALL REINFORCEMENT SHALL BE EPOXY COATED ASTM A615 OR A996 GRADE 60.
4. FOR SLAB-SIDEWALK REINF., SEE SHTS NC54a THRU NC54c.
5. FOR RL501 BAR PLACEMENT, SEE SHT NC67, 2 RAILING ANCHOR REINF.

RECORD DRAWING

No.	Date	Revisions	By

HNTB CORPORATION

STATE OF WISCONSIN
DEPARTMENT OF TRANSPORTATION

STRUCTURE B-40-414C

Designed By	SL	Design Checked	TZ	Drawn By	DS	Plans Checked	AP

DECK SLAB SECTIONS
7 OF 10

SHEET NC61 OF

STATE PROJECT I.D.	SHEET NUMBER
2235-00-70	8.709

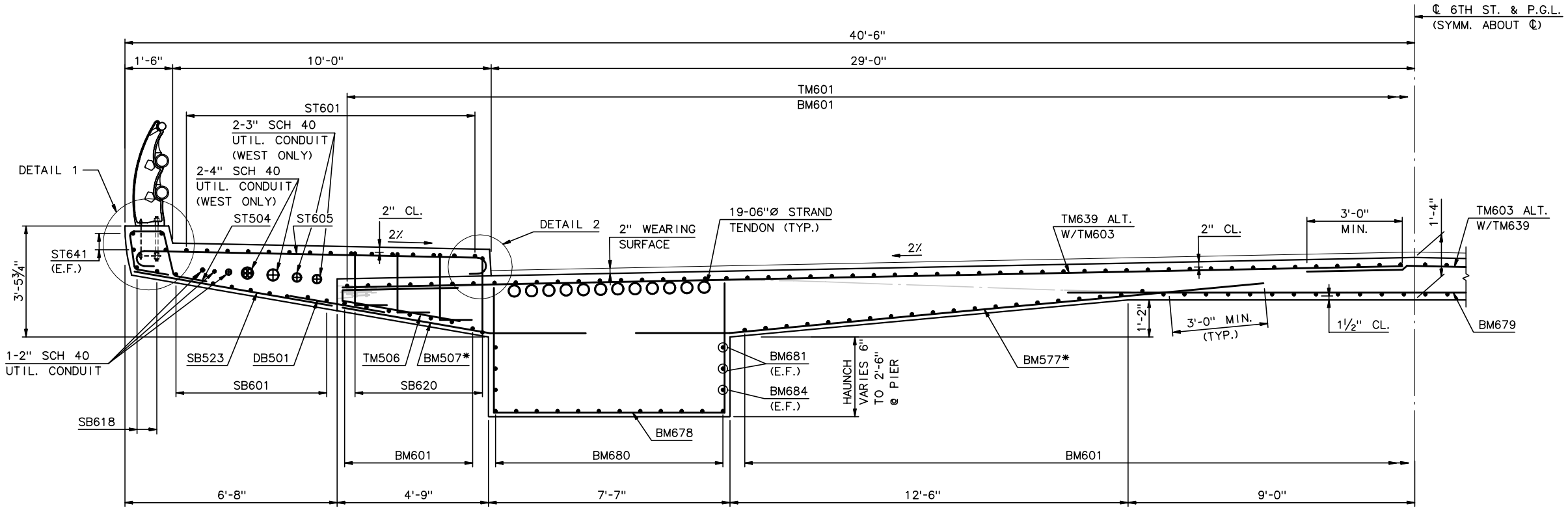

SECTION L

½" = 1'-0"

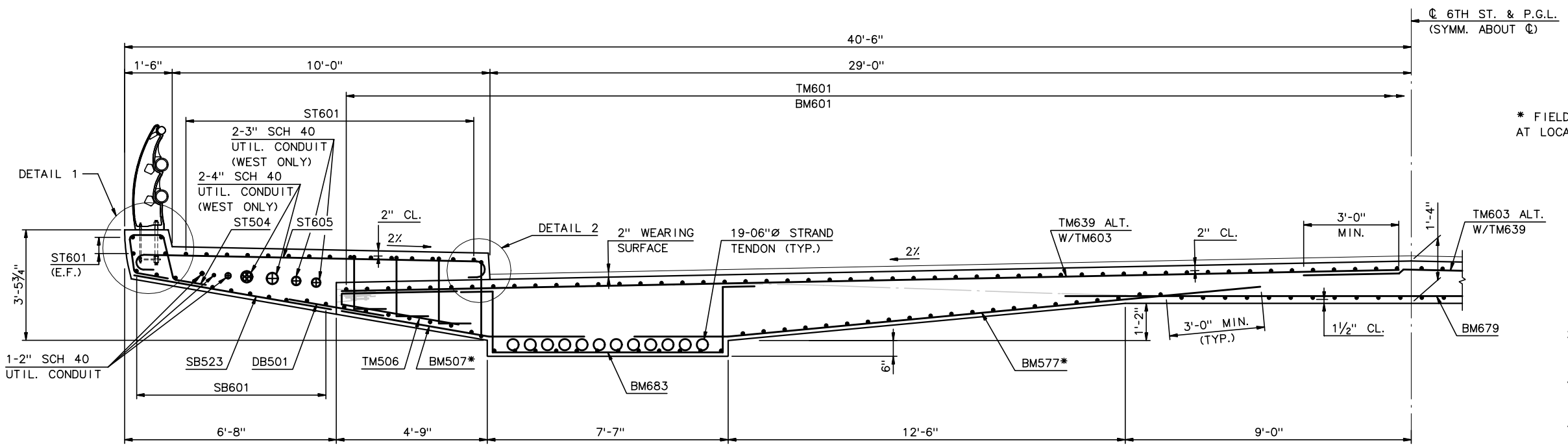

SECTION M

½" = 1'-0"

* FIELD BEND BAR VERTICALLY OR HORIZONTALLY AT LOCAL TENDON PROFILE CONFLICT REGIONS.

NOTES:

1. FOR SECTION L LOCATION, SEE SHEET NC44 AND NC53.
2. FOR SECTION M LOCATION, SEE SHEETS NC44, NC53 AND NC45.
3. ALL REINFORCEMENT SHALL BE EPOXY COATED ASTM A615 OR A996 GRADE 60.
4. FOR SLAB-SIDEWALK REINF., SEE SHTS. NC54a THRU NC54c.

RECORD DRAWING

No.	Date	Revisions	By

HNTB CORPORATION

STATE OF WISCONSIN
DEPARTMENT OF TRANSPORTATION

STRUCTURE B-40-414C

Designed By	SL	Design Checked	TZ	Drawn By	DS	Plans Checked	AP

DECK SLAB SECTIONS
8 OF 10

SHEET NC62 OF

STATE PROJECT I.D.	SHEET NUMBER
2235-00-70	8.710

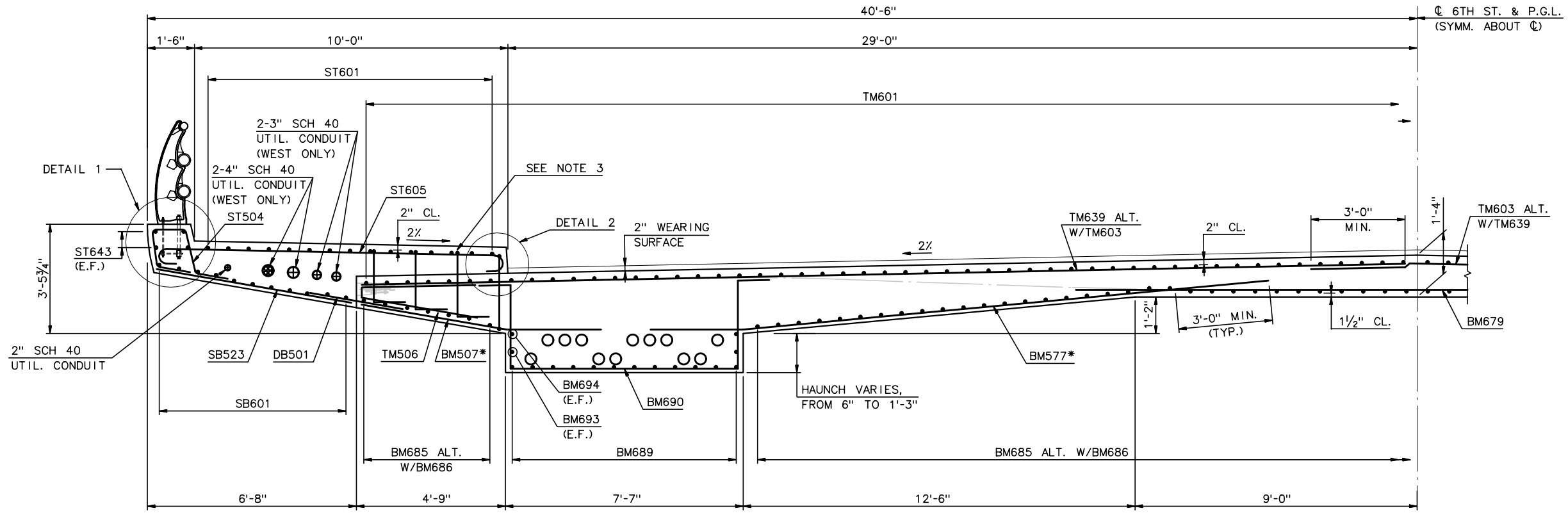

SECTION N

½" = 1'-0"

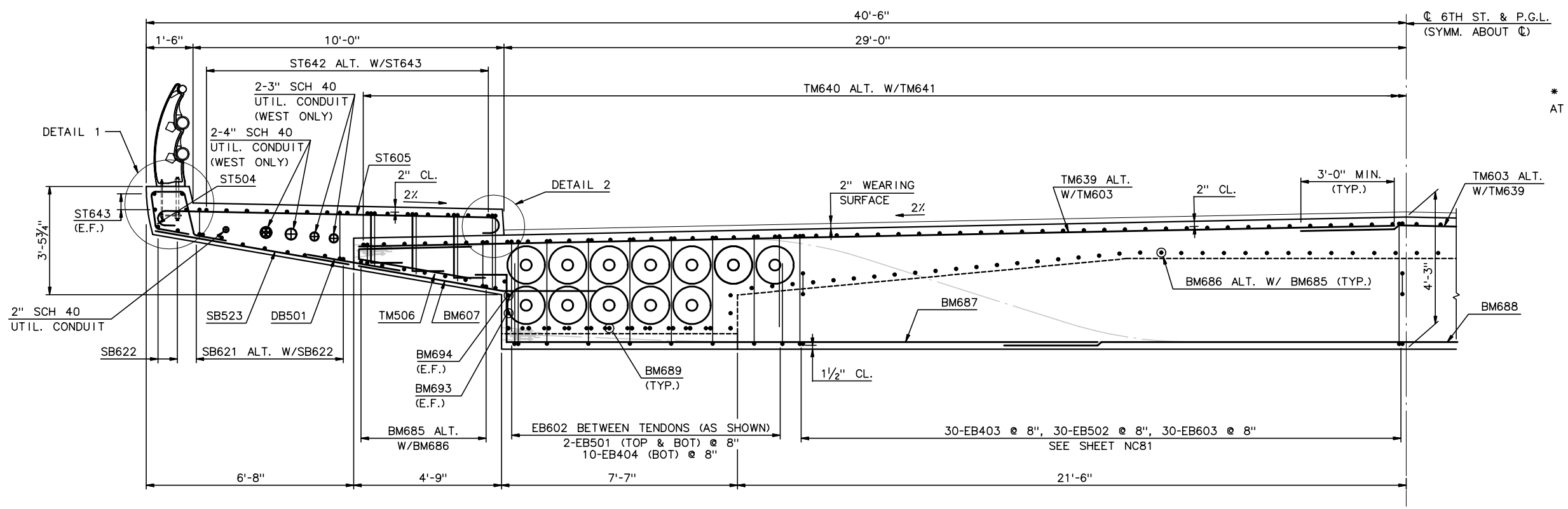

SECTION O

½" = 1'-0"

* FIELD BEND BAR VERTICALLY OR HORIZONTALLY AT LOCAL TENDON PROFILE CONFLICT REGION.

NOTES:

1. FOR SECTIONS N AND O LOCATIONS, SEE SHEET NC45 AND NC54.
2. ALL REINFORCEMENT SHALL BE EPOXY COATED ASTM A615 OR A996 GRADE 60.
3. FOR SLAB-SIDEWALK REINF., SEE SHTS. NC54a - NC54c.

RECORD DRAWING

No.	Date	Revisions	By

HNTB CORPORATION

STATE OF WISCONSIN
DEPARTMENT OF TRANSPORTATION

STRUCTURE B-40-414C

Designed By	SL	Design Checked	TZ	Drawn By	DS	Plans Checked	AP

DECK SLAB SECTIONS
9 OF 10

SHEET NC63 OF

STATE PROJECT I.D.	SHEET NUMBER
2235-00-70	8.711

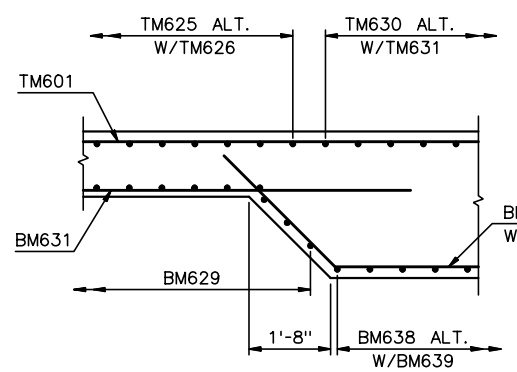

SECTION P
½" = 1'-0"

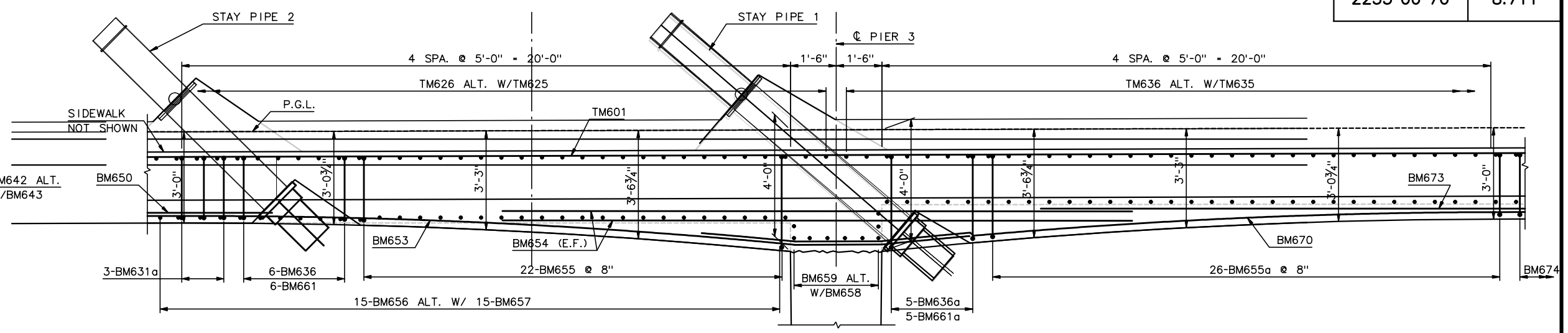

SECTION Q
½" = 1'-0"

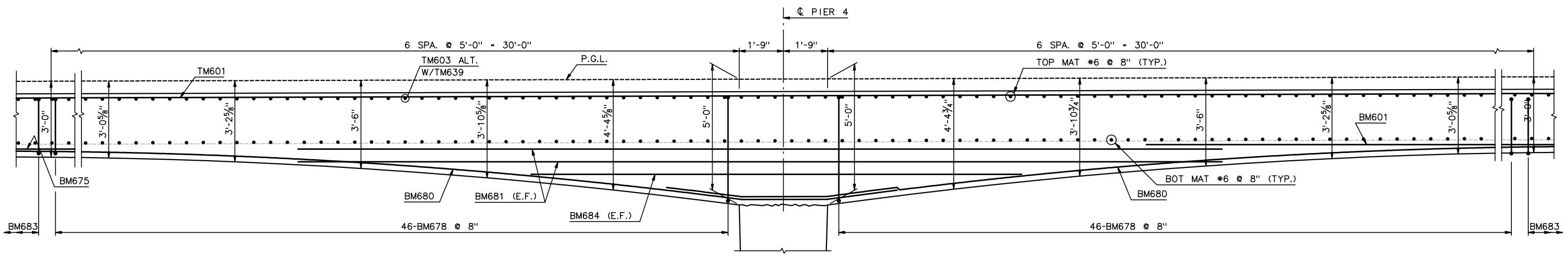

SECTION R
½" = 1'-0"

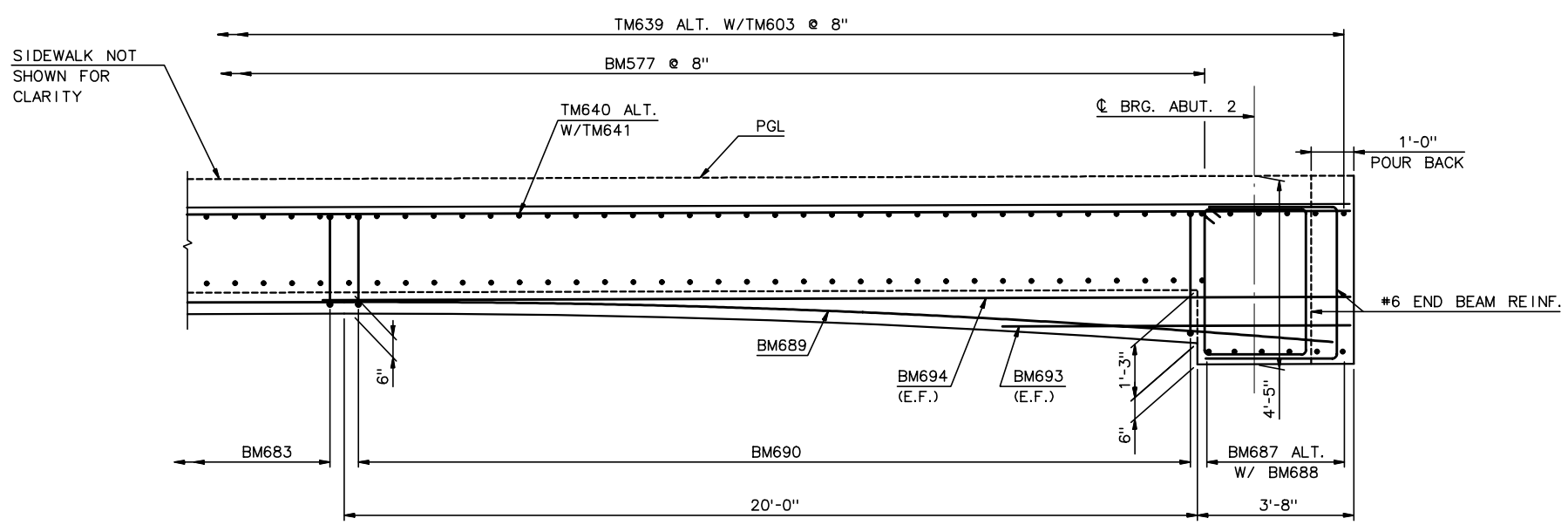

SECTION S
½" = 1'-0"

NOTES:

1. FOR SECTION P LOCATION, SEE SHEET NC50.
2. FOR SECTION Q LOCATION, SEE SHEET NC51.
3. FOR SECTION R LOCATION, SEE SHEET NC53.
4. FOR SECTION S LOCATION, SEE SHEET NC54.
5. FOR ADDITIONAL END BEAM REINFORCEMENT, SEE SHEETS NC81 & NC 81.

RECORD DRAWING

No.	Date	Revisions	By

HNTB CORPORATION

STATE OF WISCONSIN
DEPARTMENT OF TRANSPORTATION

STRUCTURE B-40-414C

Designed By	SL	Design Checked	TZ	Drawn By	DS	Plans Checked	AP

DECK SLAB SECTIONS
10 OF 10

SHEET NC64 OF

STATE PROJECT I.D.	SHEET NUMBER
2235-00-70	8.712

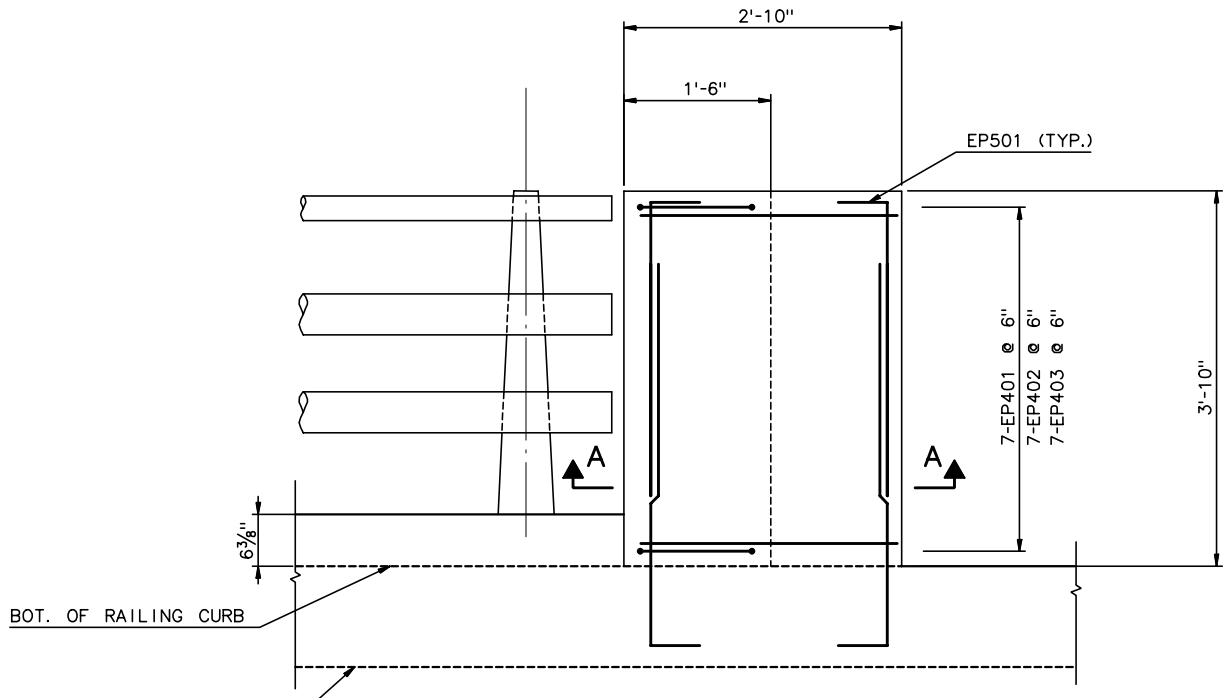

SOUTH RAILING END POST
1/2" = 1'-0"

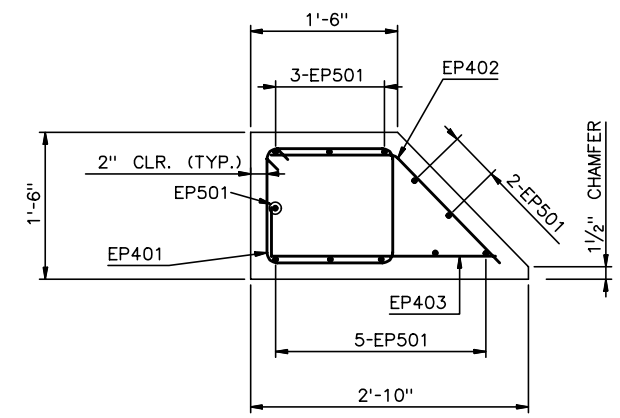

SECTION A-A
1/2" = 1'-0"

NOTES:

1. FOR LOCATION OF POST OFFICE RD. END POSTS, SEE SHEET NC99.
2. FOR BARLIST, SEE SHEET NC125A.

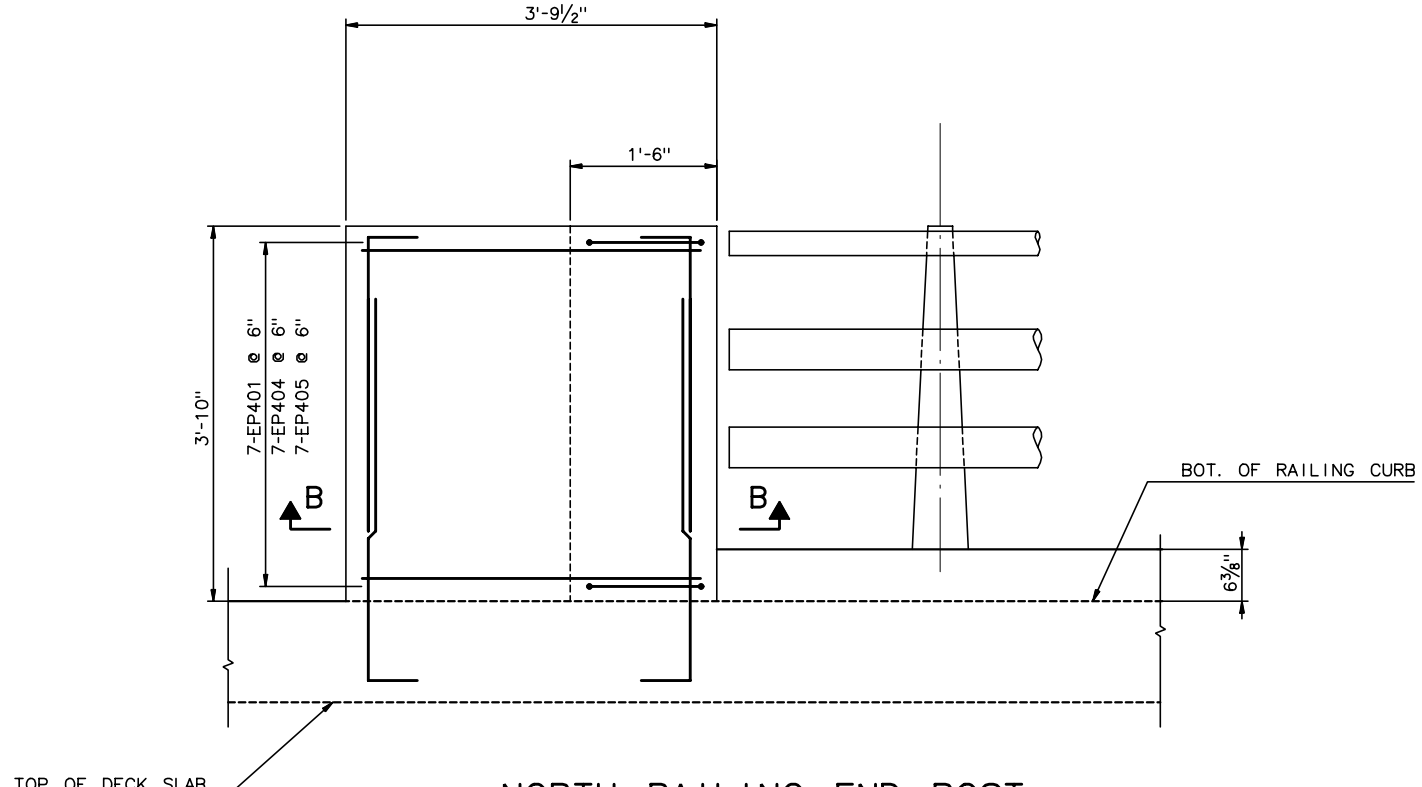

NORTH RAILING END POST
1/2" = 1'-0"

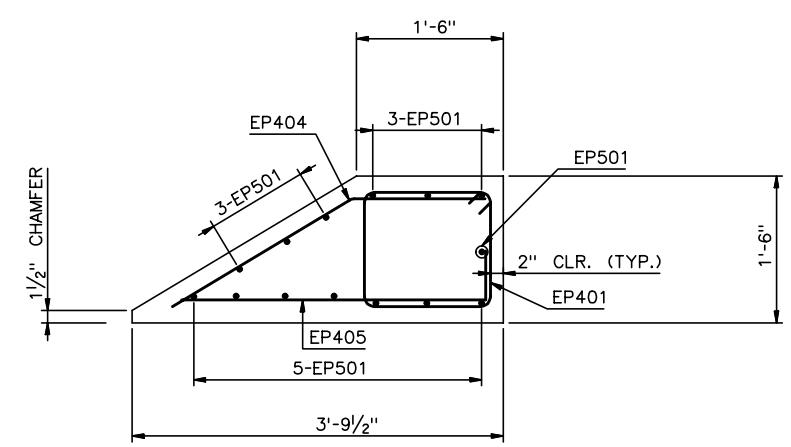

SECTION B-B
1/2" = 1'-0"

RECORD DRAWING

No.	Date	Revisions	By

HNTB CORPORATION

STATE OF WISCONSIN
DEPARTMENT OF TRANSPORTATION

STRUCTURE B-40-414C

Designed By	CE	Design Checked	AP	Drawn By	CE	Plans Checked	AP

NORTH CABLE STAY POST OFFICE RD. END POST DETAILS

SHEET NC64a OF

j:\cadd\ff31185\dgn\as built\north cablestay\nc64a-rail end post det.dgn 02/11/03 01:53:01 PM

STATE PROJECT I.D.	SHEET NUMBER
2235-00-70	8.713

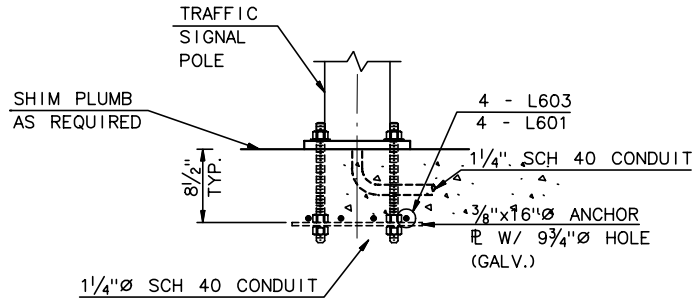

SIGNAL POST ELEVATION

1" = 1'-0"

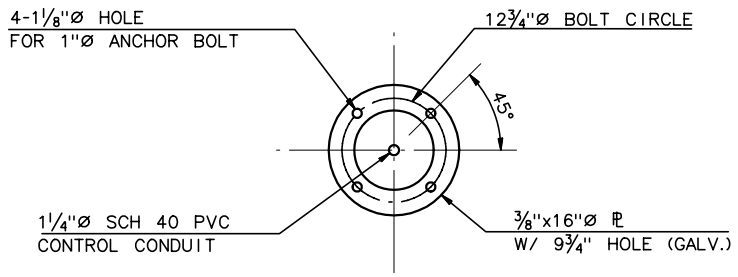

SIGNAL POST ANCHOR ℙ PLAN

1" = 1'-0"

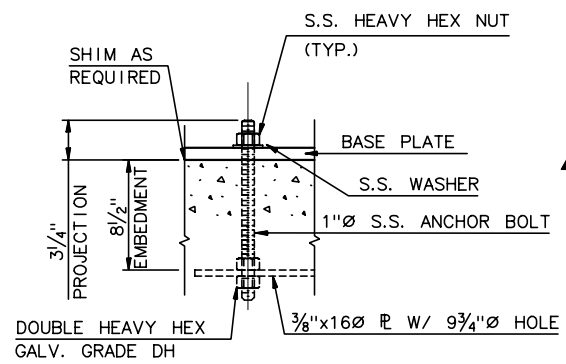

SIGNAL BOLT DETAIL

1½" = 1'-0"

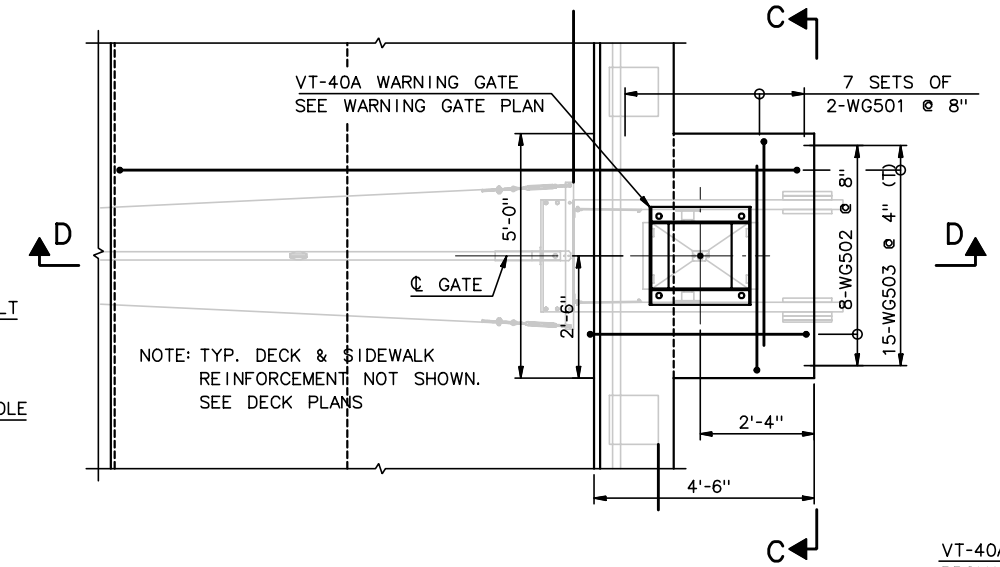

WARNING GATE - PLAN

½" = 1'-0"

NOTES:

1. ALL REINFORCEMENT IS EPOXY COATED ASTM A615 OR A996, GRADE 60.
2. TRAFFIC SIGNAL PROVIDED BY PK POLE.
3. VT-40A WARNING GATE AND ANCHOR BOLTS PROVIDED BY B&B ELECTROMATIC. B&B TO PROVIDE ANCHOR BOLT TEMPLATE.
4. CLEAR: 2", EXCEPT WHERE NOTED.
5. ALL SHIMS SHALL BE OF THE SAME MATERIAL AS THE POLE BASE PLATE.
6. S.S. ANCHOR BOLTS SHALL BE ASTM A276 TYPE 300 OR 400 SERIES WITH MIN TENSILE STRENGTH OF 70 KSI, MIN YIELD OF 30 KSI AND MIN ELONGATION 15% IN 2 INCHES.

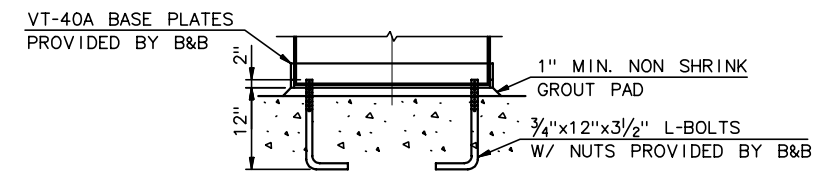

WARNING GATE ANCHORAGE ELEVATION

1" = 1'-0"

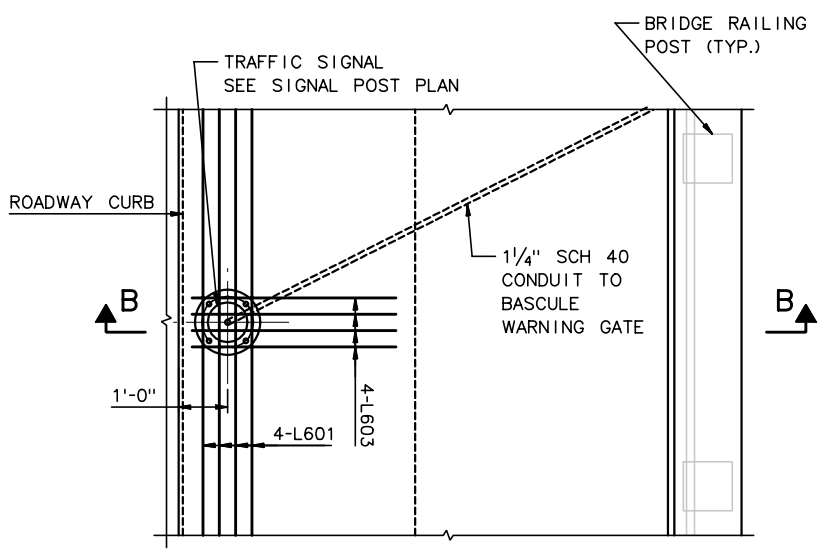

NOTE: ADDITIONAL TYP. DECK & SIDEWALK REINFORCEMENT NOT SHOWN. SEE DECK PLANS

TRAFFIC SIGNAL - PLAN

½" = 1'-0"

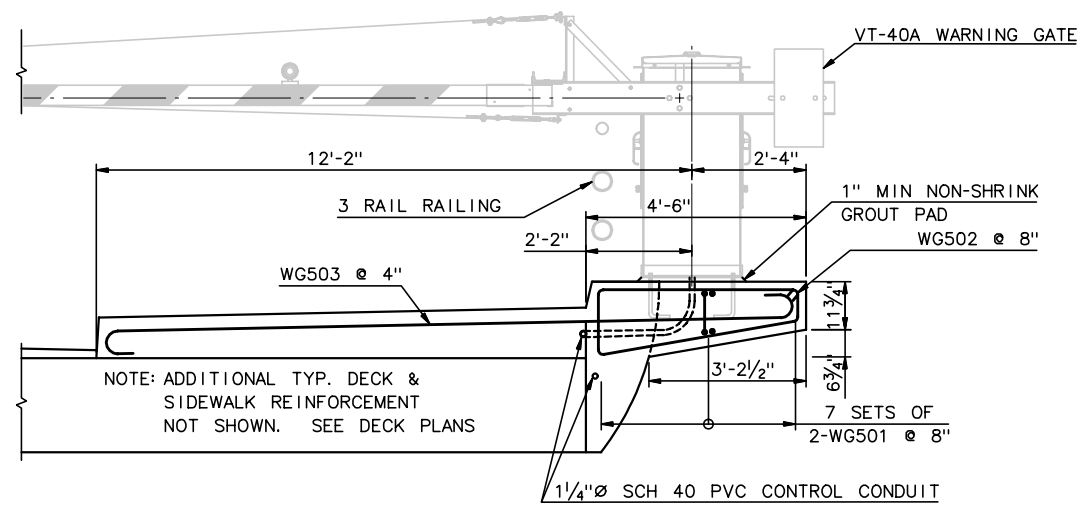

SECTION D (EAST)

½" = 1'-0"

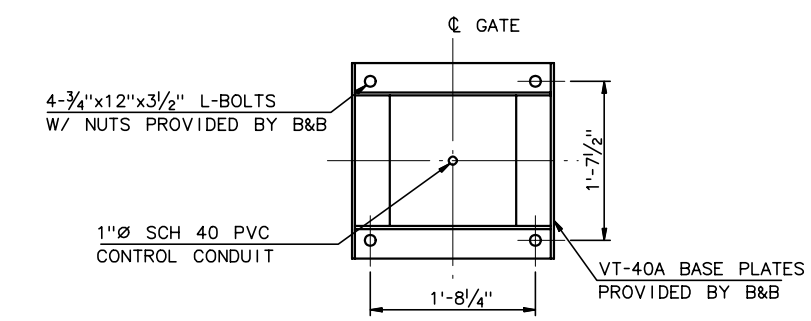

WARNING GATE ANCHORAGE PLAN

1" = 1'-0"

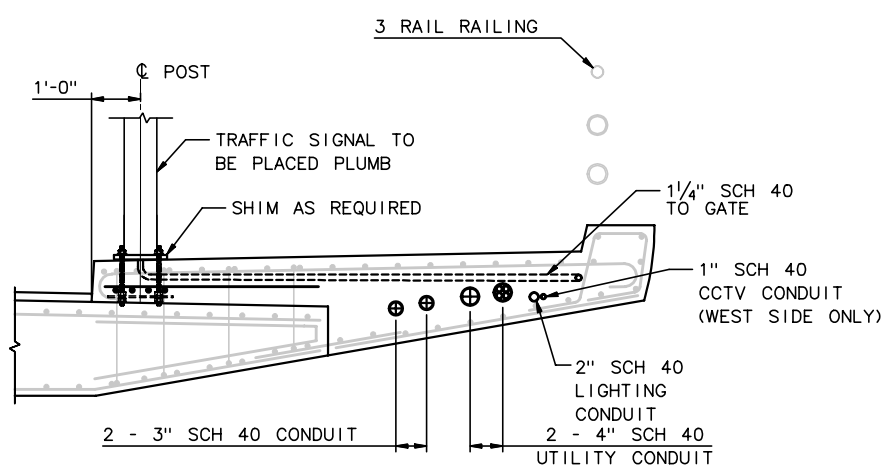

SECTION B

½" = 1'-0"

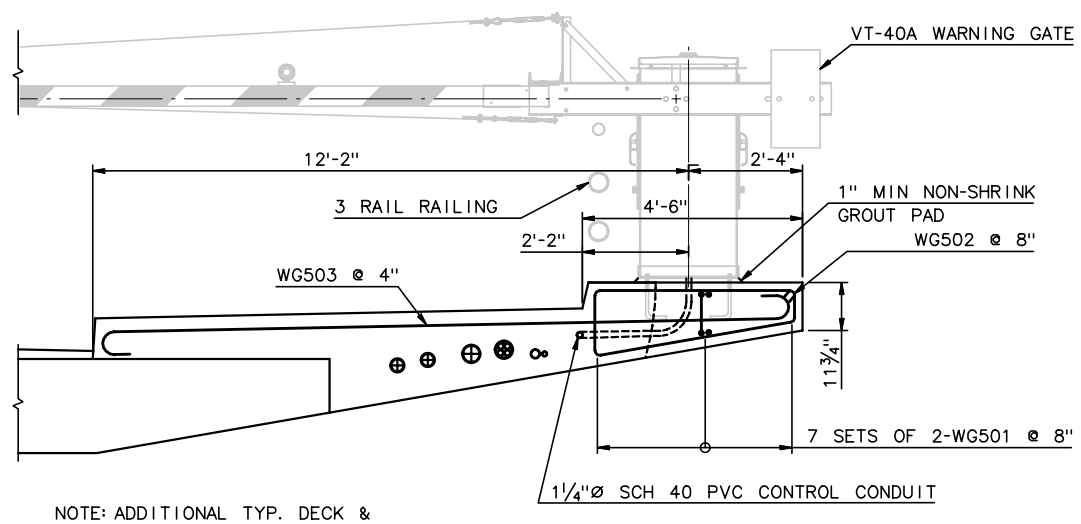

NOTE: ADDITIONAL TYP. DECK & SIDEWALK REINFORCEMENT NOT SHOWN. SEE DECK PLANS

SECTION D (WEST)

½" = 1'-0"

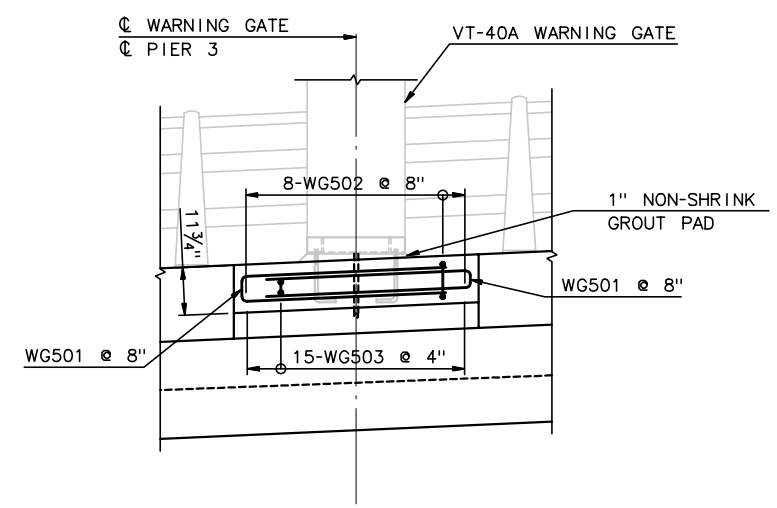

SECTION C

½" = 1'-0"

RECORD DRAWING

No.	Date	Revisions	By
1	10-18-01	REV. SIGNAL LOCATION	AP

HNTB CORPORATION

STATE OF WISCONSIN
DEPARTMENT OF TRANSPORTATION

STRUCTURE B-40-414C

Designed By	GD	Design Checked	AP	Drawn By	BM	Plans Checked	AP

NORTH CABLE STAY DECK DETAILS 1 OF 4

SHEET NC65 OF

STATE PROJECT I.D.	SHEET NUMBER
2235-00-70	8.714

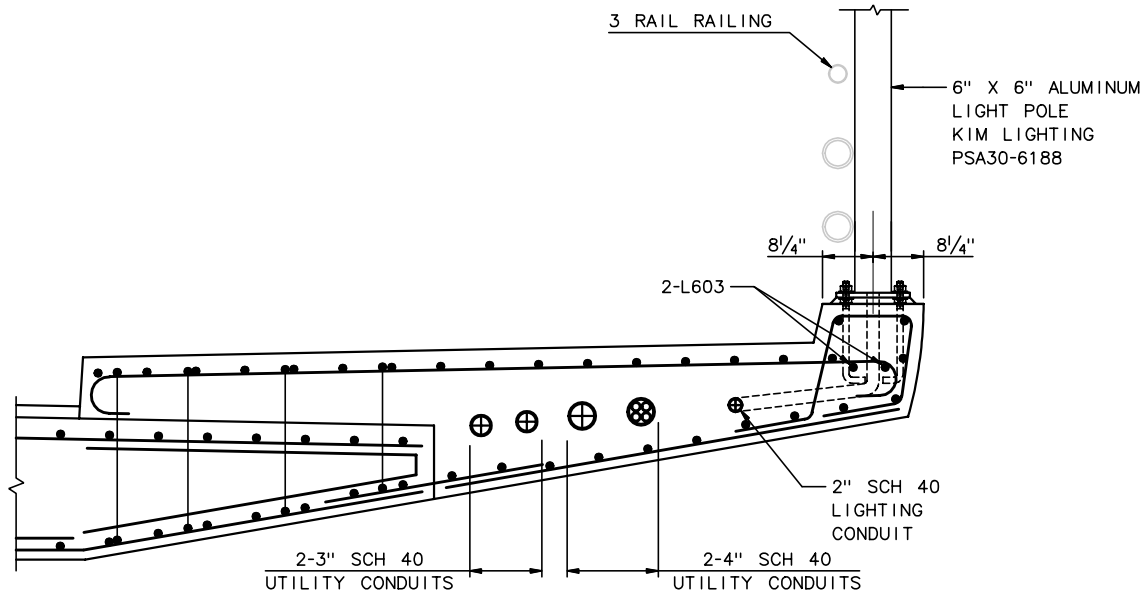

SECTION A-A
¾" = 1'-0"

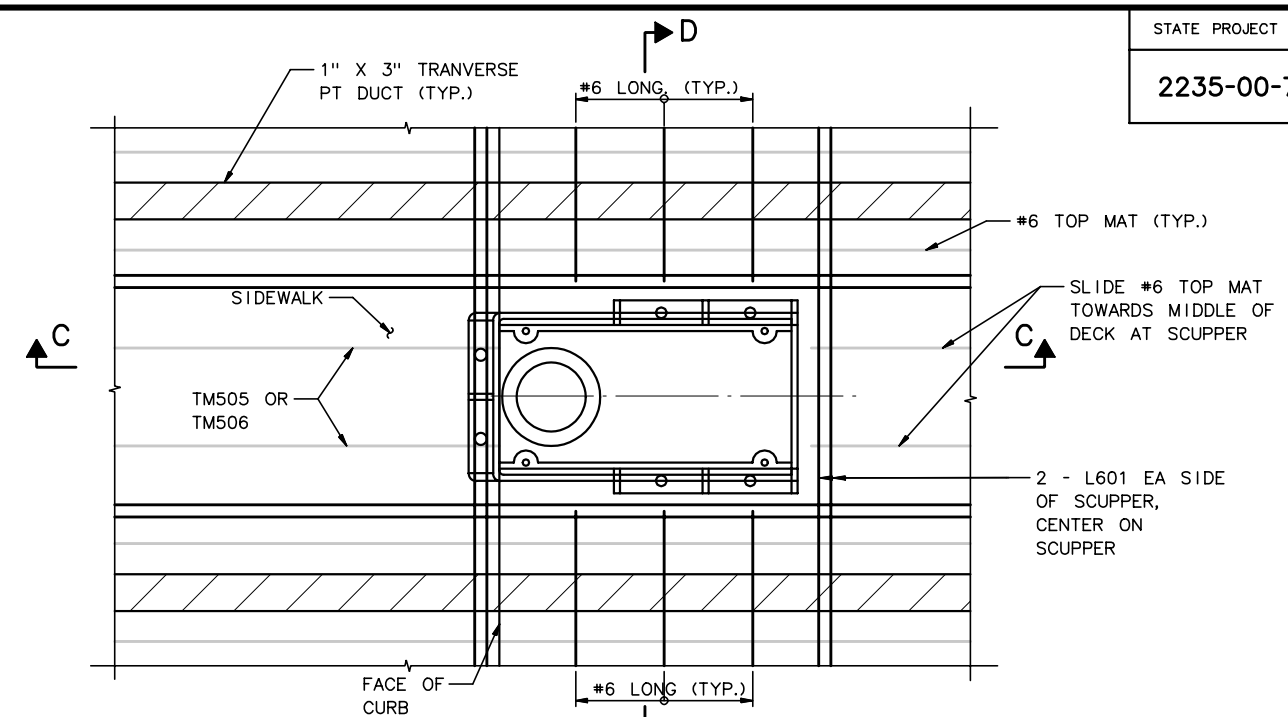

SCUPPER PLAN
1½"" = 1'-0"

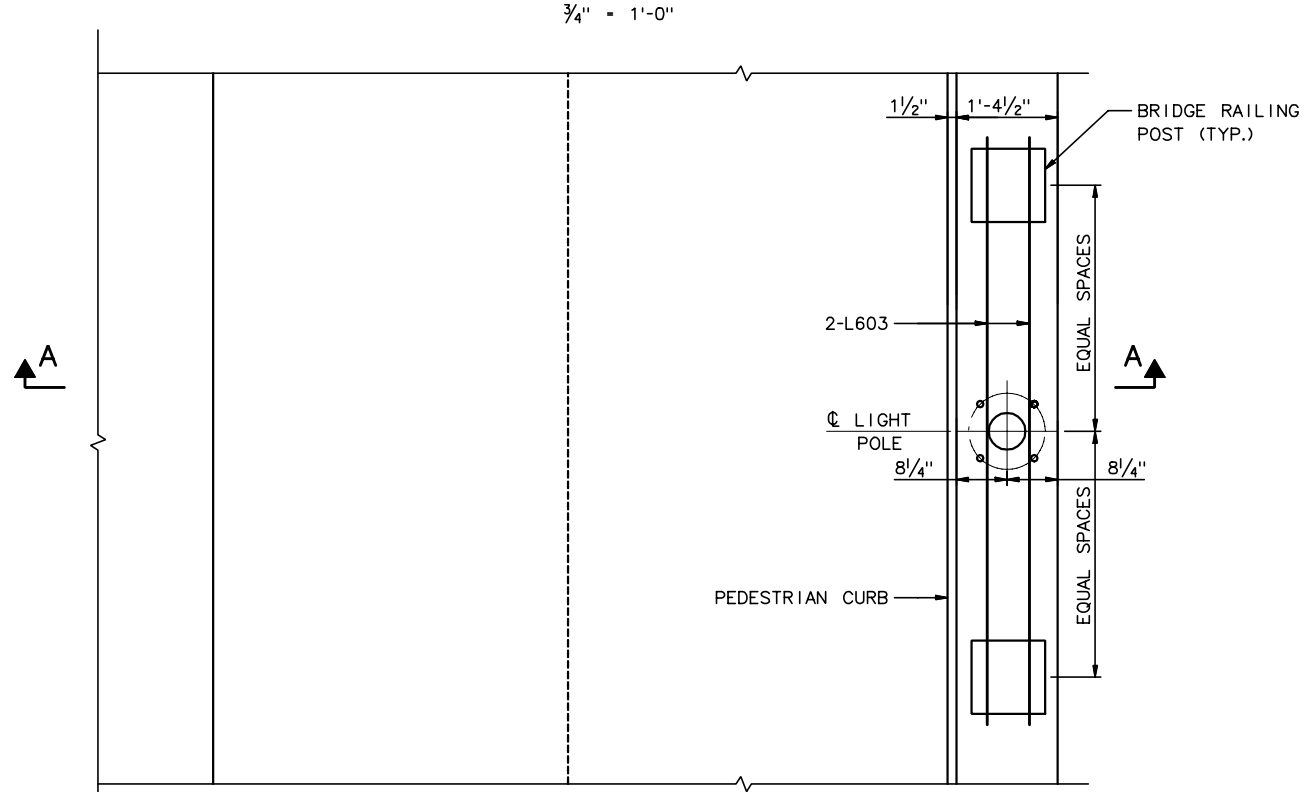

LIGHT POLE PLAN
¾" = 1'-0"

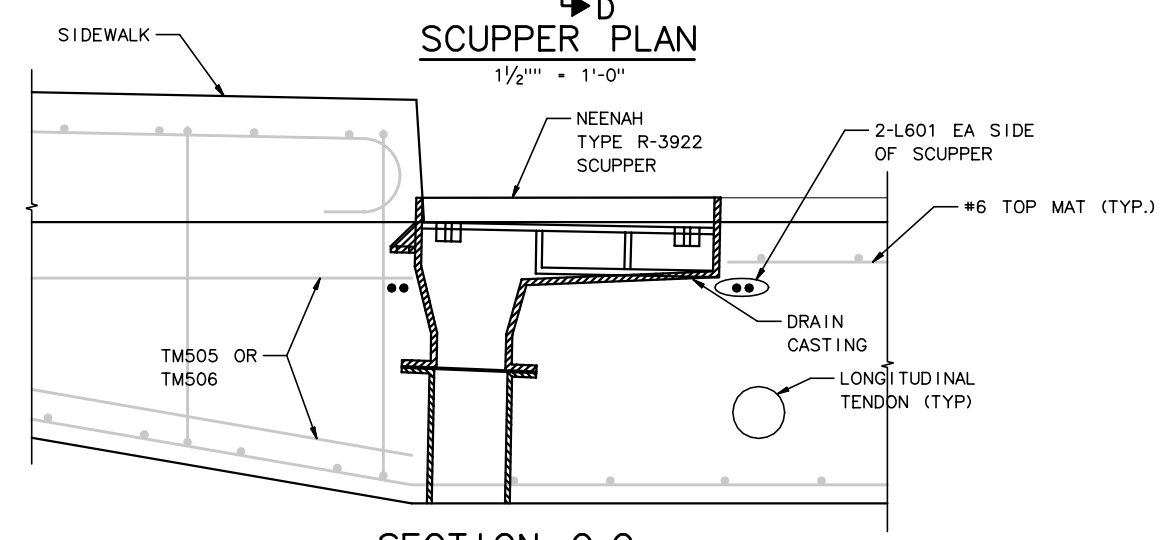

SECTION C-C
1½" = 1'-0"

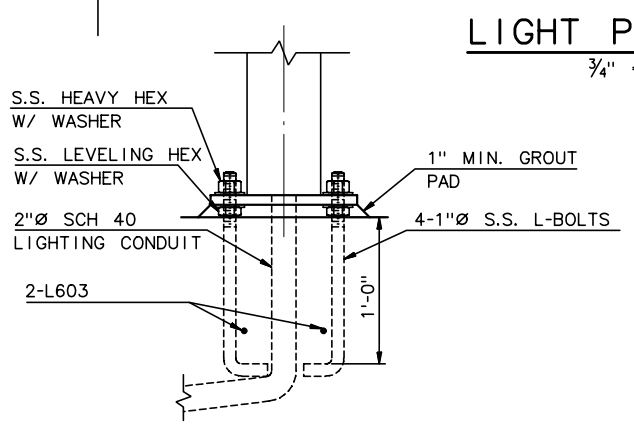

SECTION B-B
1½" = 1'-0"

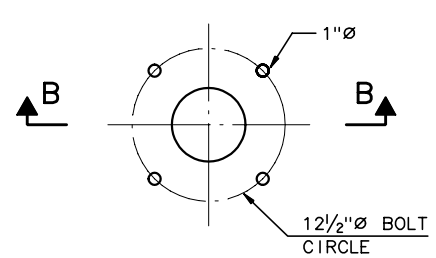

ANCHOR BOLT PLAN
1½" = 1'-0"

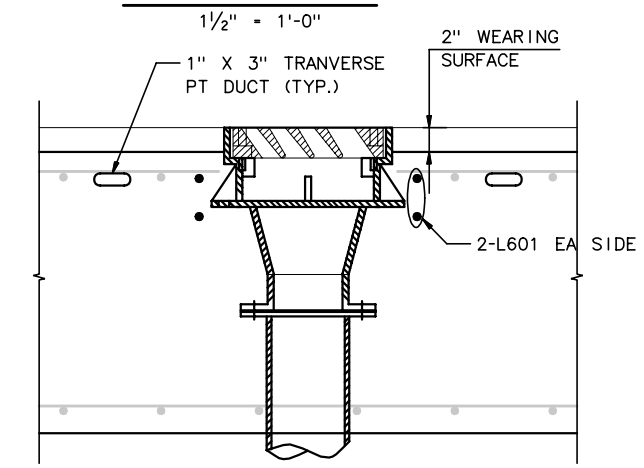

SECTION D-D
1½" = 1'-0"

NOTES:

1. S.S. ANCHOR BOLTS SHALL BE ASTM A276 TYPE 300 OR 400 SERIES WITH MIN TENSILE STRENGTH OF 70 KSI, MIN YIELD OF 30 KSI AND MIN ELONGATION 30% IN 2 INCHES

RECORD DRAWING

No.	Date	Revisions	By

HNTB CORPORATION

STATE OF WISCONSIN
DEPARTMENT OF TRANSPORTATION

STRUCTURE B-40-414C

Designed By	BM	Design Checked	AP	Drawn By	JE	Plans Checked	AP

NORTH CABLE STAY DECK DETAILS 2 OF 4

SHEET NC66 OF .

STATE PROJECT I.D.	SHEET NUMBER
2235-00-70	8.715

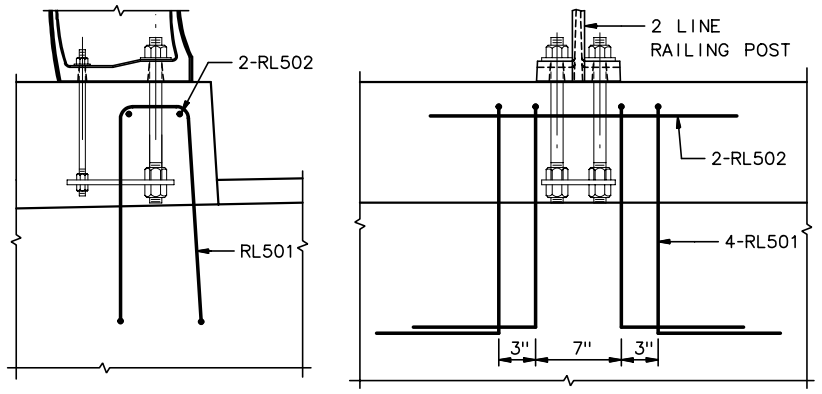

2 RAIL ANCHORAGE REINF. DETAIL

1½" = 1'-0"

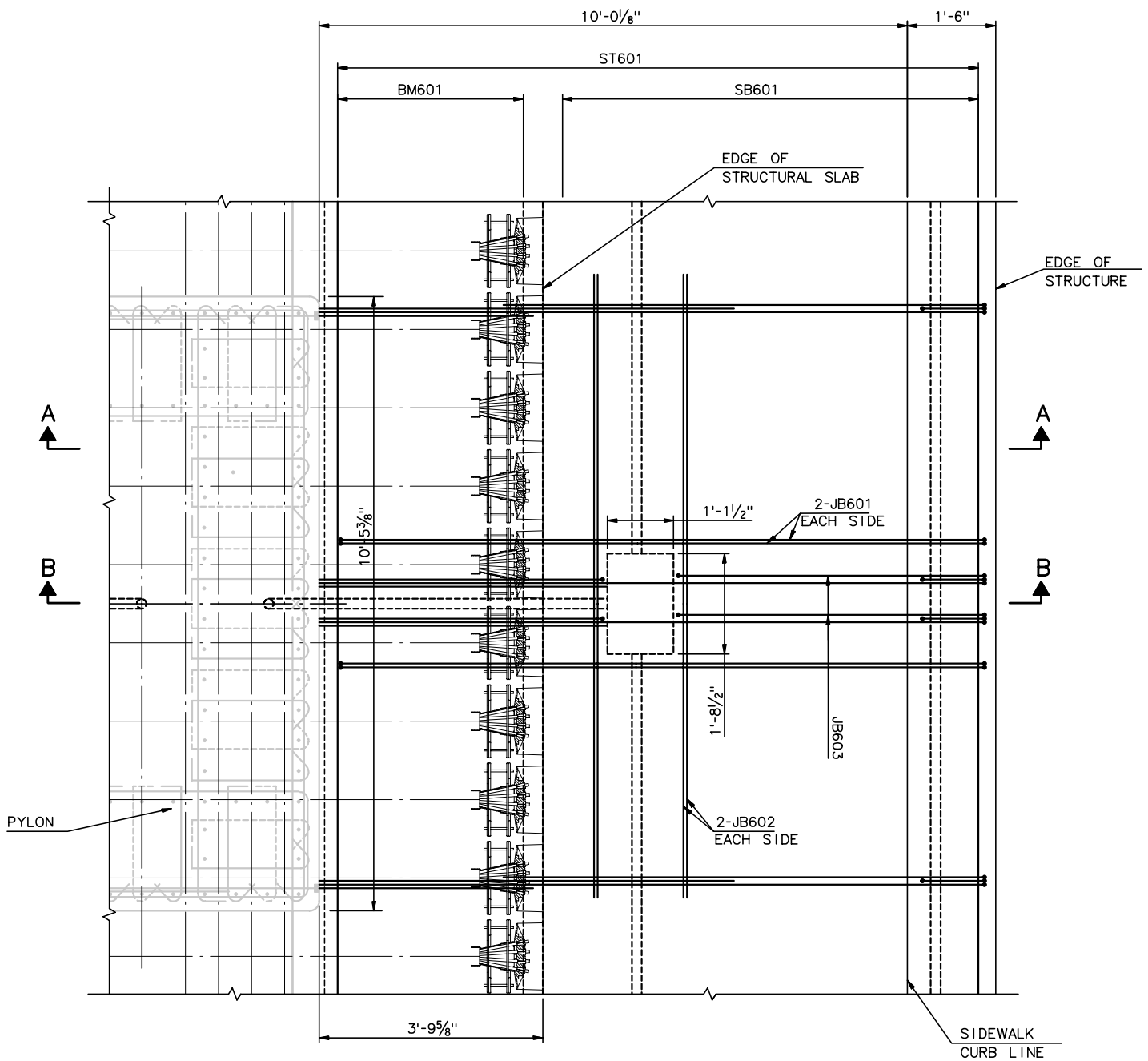

JUNCTION BOX @ PYLON

¾" = 1'-0"

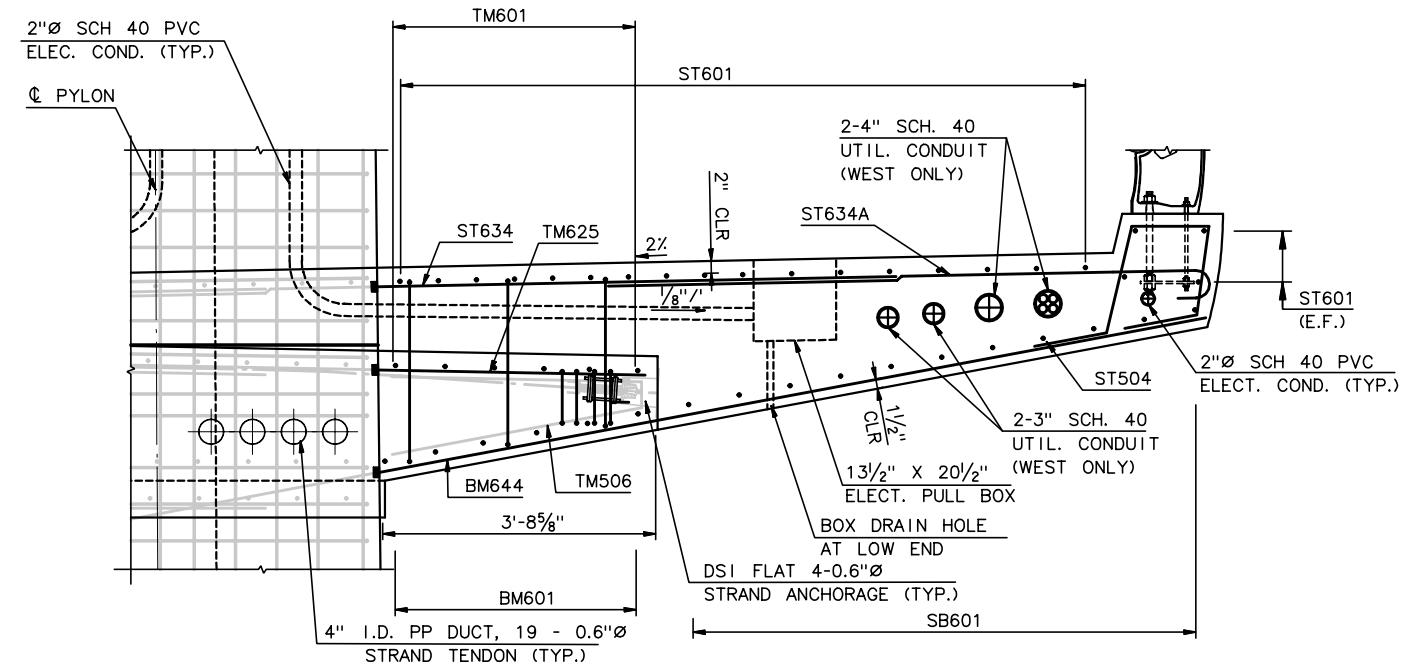

SECTION A - A

¾" = 1'-0"

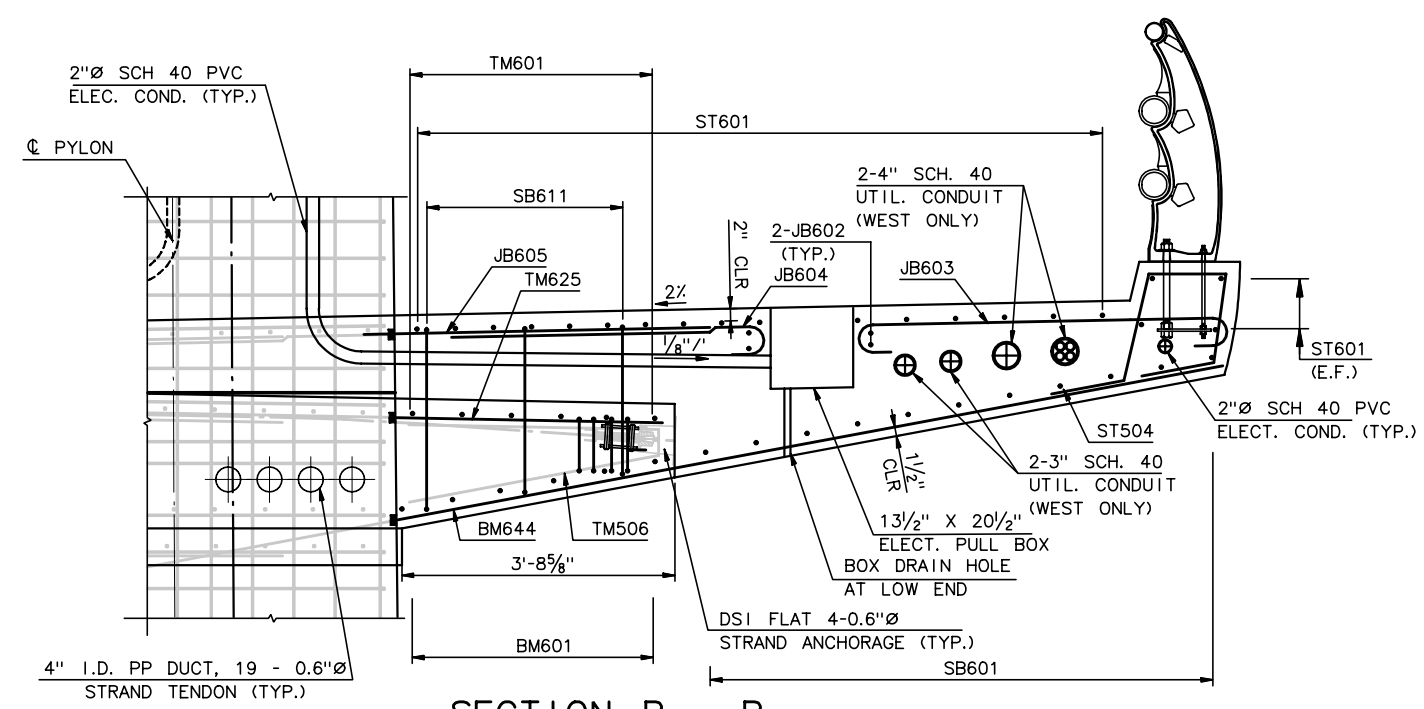

SECTION B - B

¾" = 1'-0"

RECORD DRAWING

No.	Date	Revisions	By

HNTB CORPORATION

STATE OF WISCONSIN
DEPARTMENT OF TRANSPORTATION

STRUCTURE B-40-414C

Designed By	Design Checked	Drawn By	GMZ	Plans Checked

NORTH CABLE STAY
DECK DETAILS
3 OF 4

SHEET NC67 OF

STATE PROJECT I.D.	SHEET NUMBER
2235-00-70	8.716

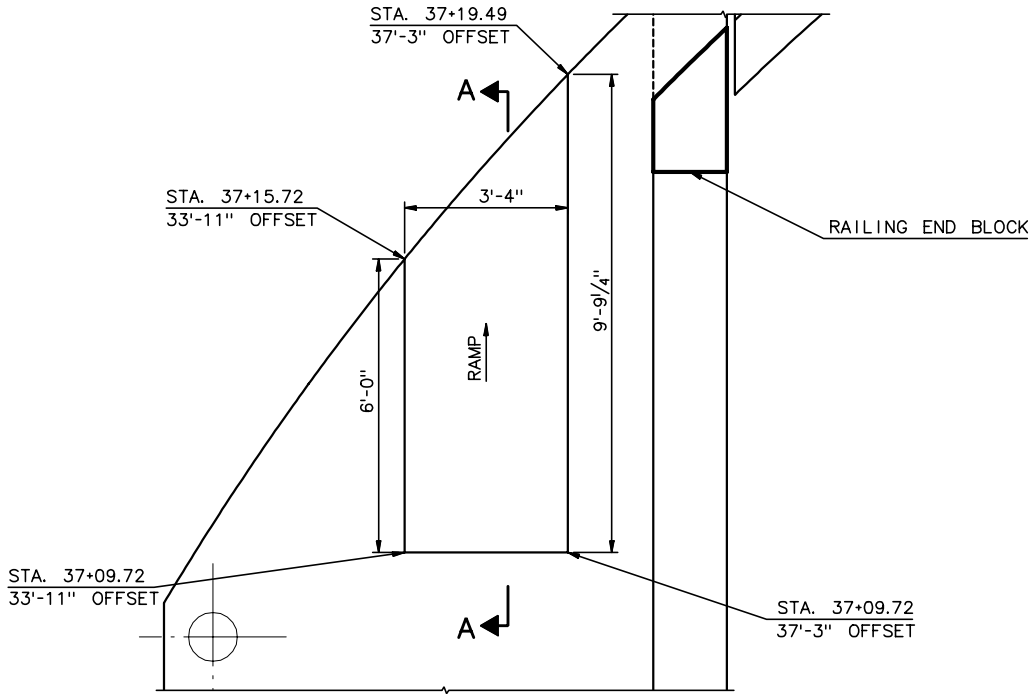

DETAIL 2

½" = 1'-0"

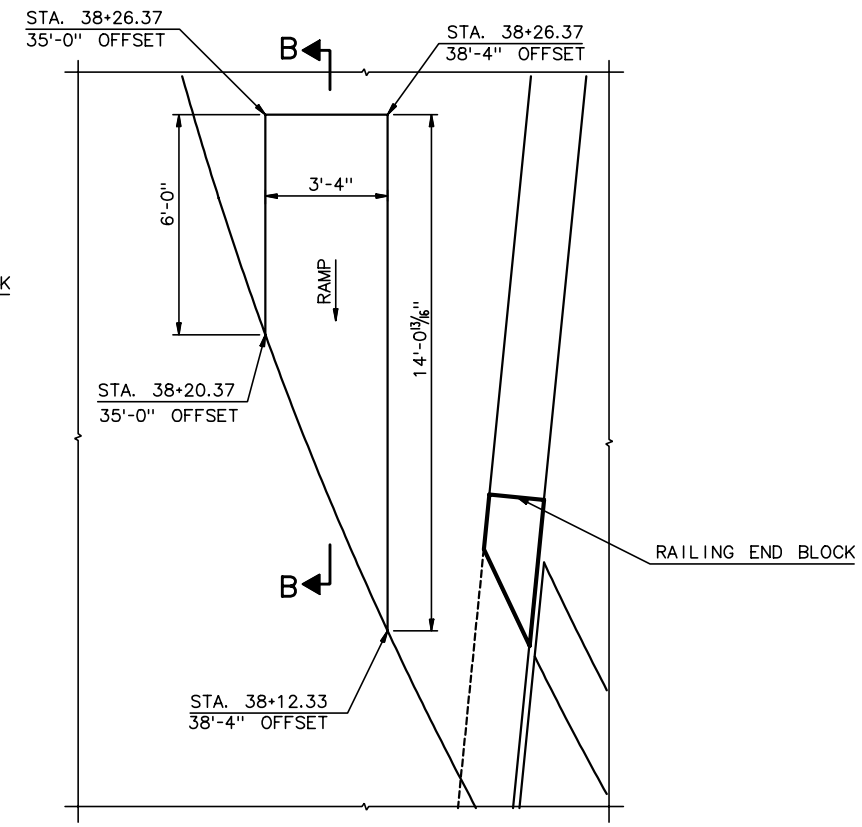

DETAIL 3

⅜" = 1'-0"

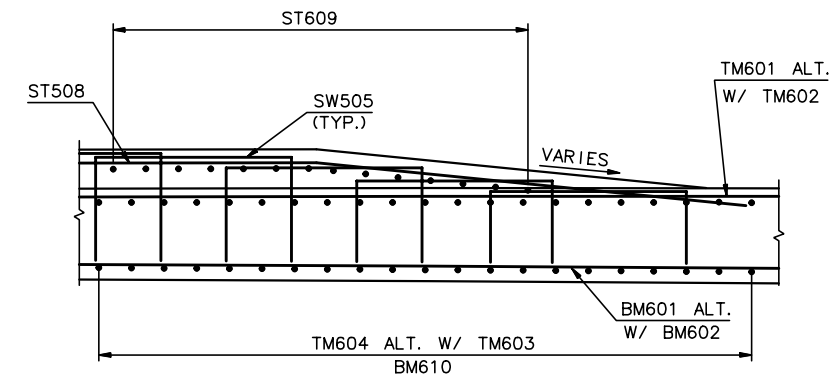

SECTION A-A

(SECTION B-B SIMILAR)
½" = 1'-0"

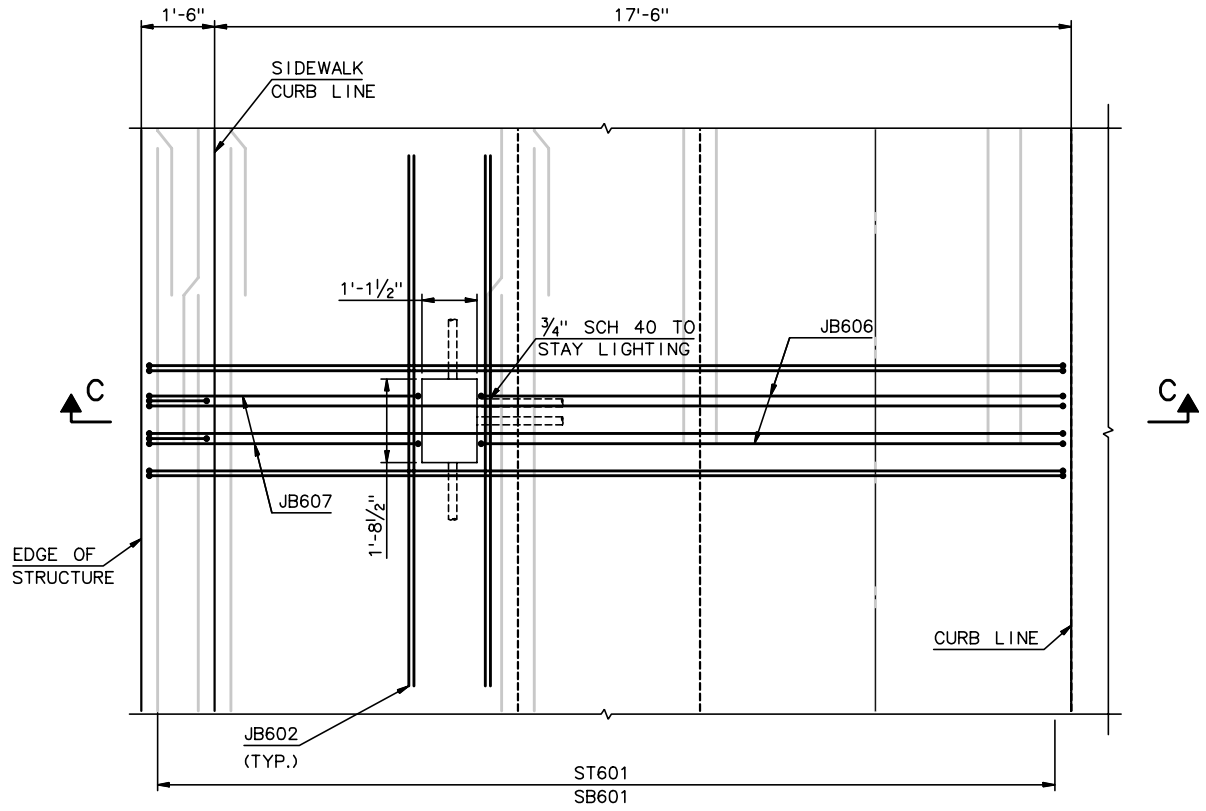

TYPICAL JUNCTION BOX DETAIL

½" = 1'-0"

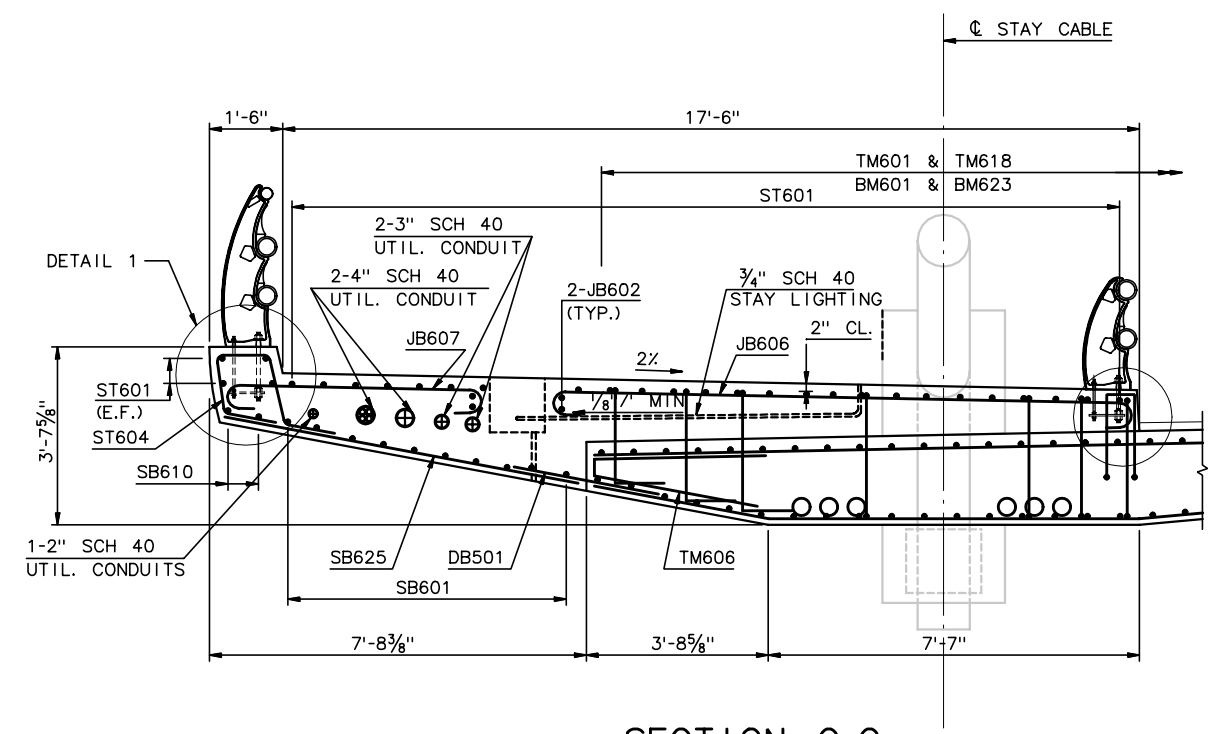

SECTION C-C

½" = 1'-0"

RECORD DRAWING

No.	Date	Revisions	By

HNTB CORPORATION

STATE OF WISCONSIN
DEPARTMENT OF TRANSPORTATION

STRUCTURE B-40-414C

Designed By	Design Checked	Drawn By	Plans Checked

NORTH CABLE STAY
DECK DETAILS
4 OF 4

SHEET NC68 OF

STATE PROJECT I.D.	SHEET NUMBER
2235-00-70	8.717

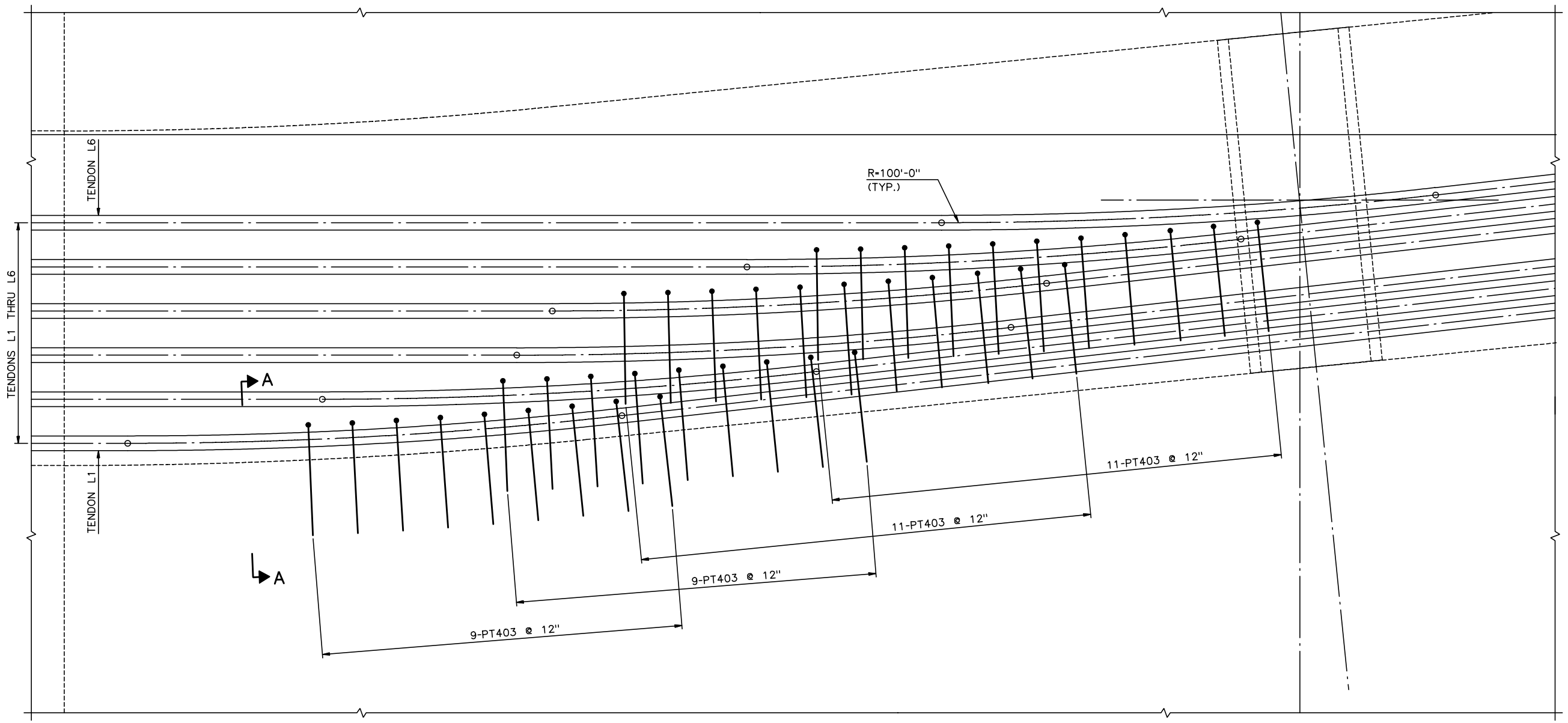

PLAN

3/4" = 1'-0"

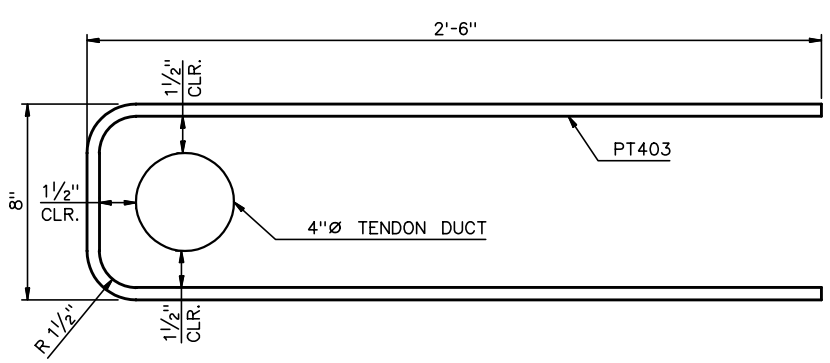

SECTION A-A

N.T.S.

NOTE: TIE TO BE PLACED TIGHT TO TENDON

NOTES:

1. LONGITUDINAL PT IS SYMMETRICAL ABOUT ℄ SIXTH STREET AND PGL.
2. FOR LONGITUDINAL TENDON PROFILES, SEE SHEET NC83.
3. ALL PT DIMENSIONS ARE TO CENTER OF DUCT.

RECORD DRAWING

No.	Date	Revisions	By

HNTB CORPORATION

STATE OF WISCONSIN
DEPARTMENT OF TRANSPORTATION

STRUCTURE B-40-414C

Designed By	BM	Design Checked	CE	Drawn By	BM	Plans Checked	AP

LONG. PT REINF DECK PLAN DETAIL 1 OF 5

SHEET NC68a OF

STATE PROJECT I.D.	SHEET NUMBER
2235-00-70	8.718

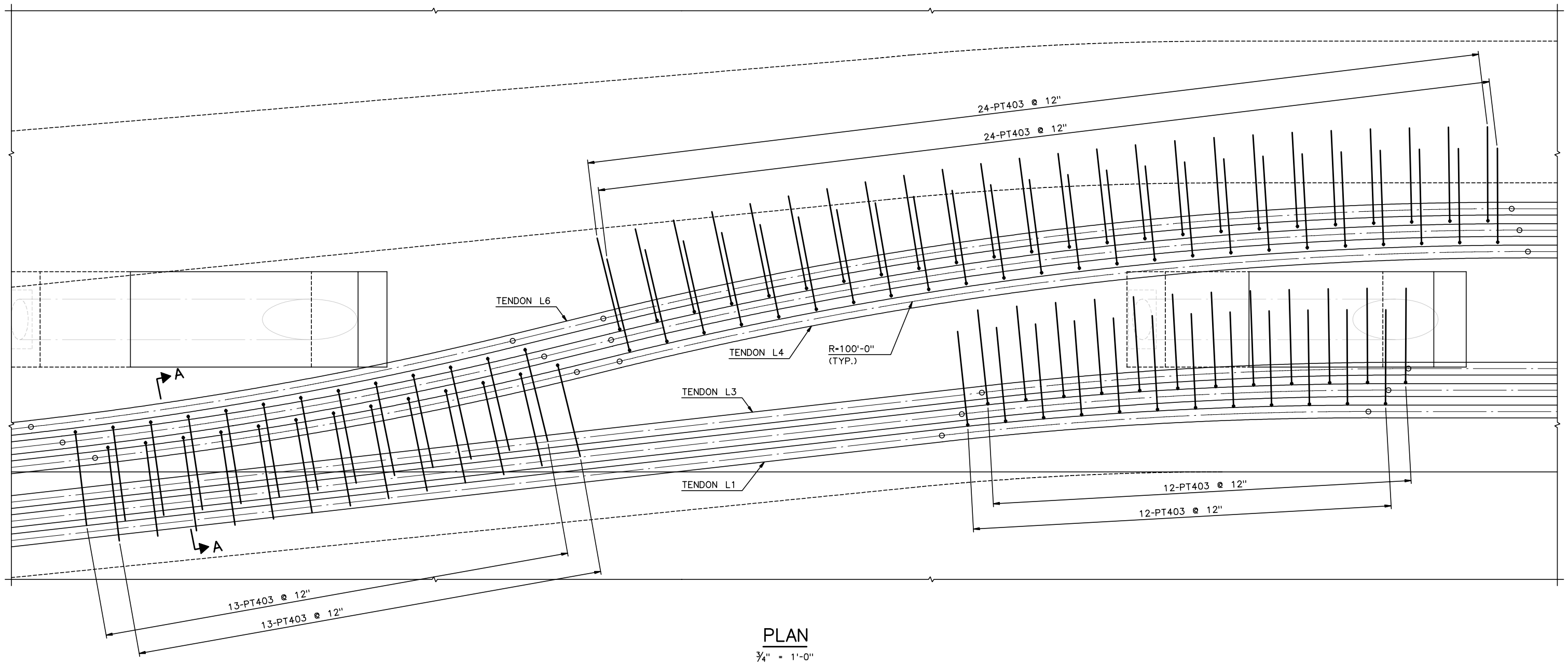

PLAN

3/4" = 1'-0"

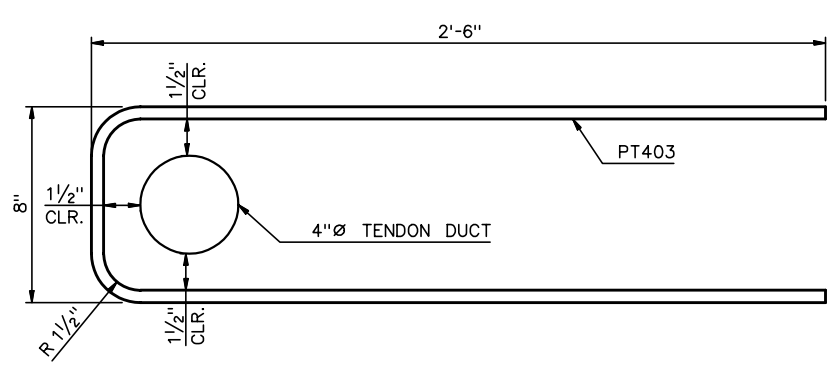

SECTION A-A

N.T.S.

NOTE: TIE TO BE PLACED TIGHT TO TENDON

NOTES:

1. LONGITUDINAL PT IS SYMMETRICAL ABOUT ℄ SIXTH STREET AND PGL.
2. FOR LONGITUDINAL TENDON PROFILES, SEE SHEET NC84.
3. ALL PT DIMENSIONS ARE TO CENTER OF DUCT.

RECORD DRAWING

No.	Date	Revisions	By

HNTB CORPORATION

STATE OF WISCONSIN
DEPARTMENT OF TRANSPORTATION

STRUCTURE B-40-414C

Designed By	BM	Design Checked	CE	Drawn By	BM	Plans Checked	AP

LONG. PT REINF.
DECK PLAN DETAIL
2 OF 5

SHEET NC68b OF

STATE PROJECT I.D.	SHEET NUMBER
2235-00-70	8.719

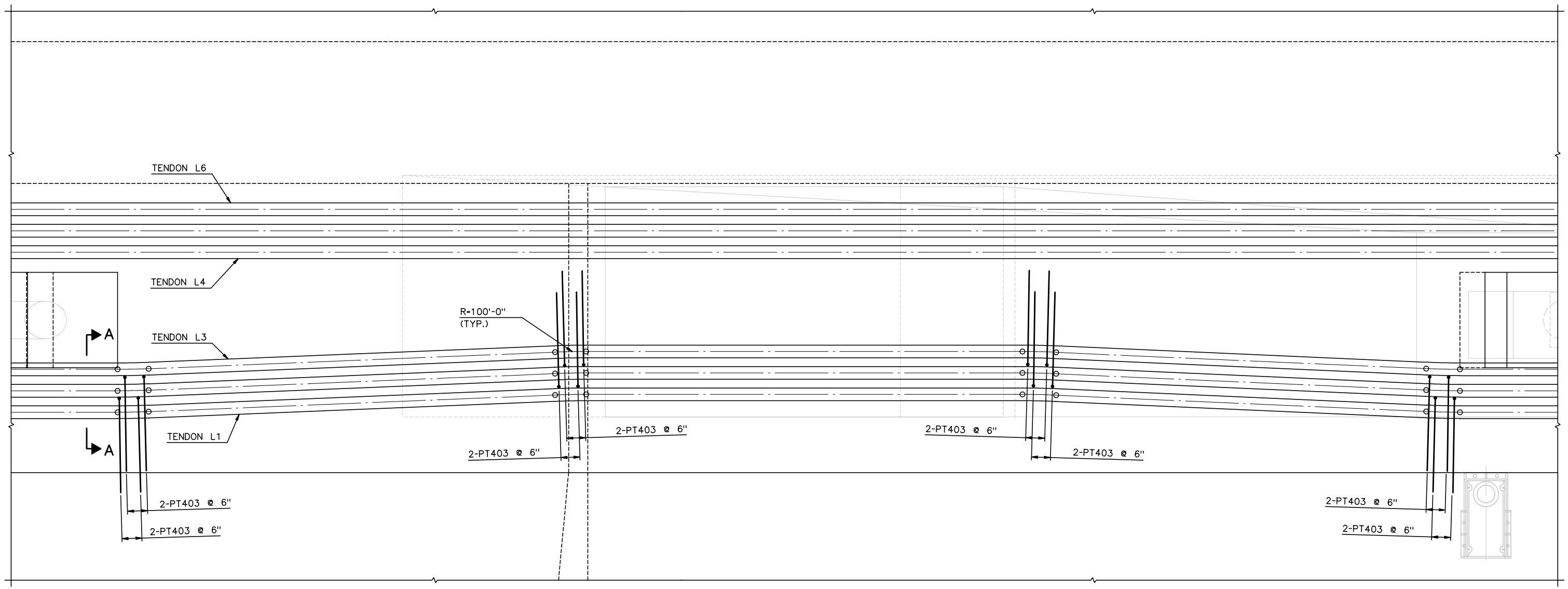

PLAN

3/4" = 1'-0"

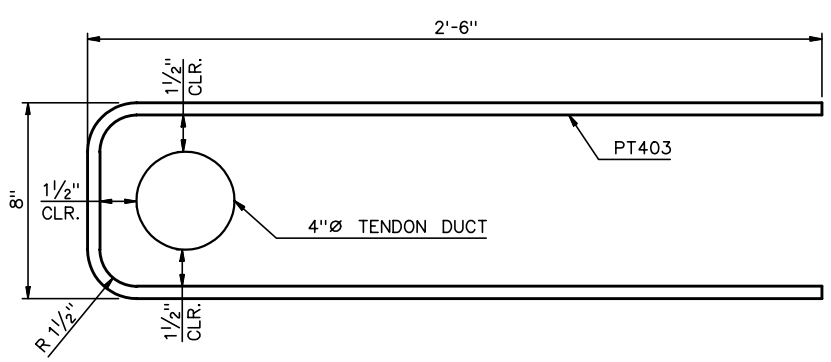

SECTION A-A

N.T.S.

NOTE: TIE TO BE PLACED TIGHT TO TENDON

NOTES:

1. LONGITUDINAL PT IS SYMMETRICAL ABOUT ℄ SIXTH STREET AND PGL.
2. FOR LONGITUDINAL TENDON PROFILES, SEE SHEET NC85.
3. ALL PT DIMENSIONS ARE TO CENTER OF DUCT.

RECORD DRAWING

No.	Date	Revisions	By

HNTB CORPORATION

STATE OF WISCONSIN
DEPARTMENT OF TRANSPORTATION

STRUCTURE B-40-414C

Designed By	BM	Design Checked	CE	Drawn By	BM	Plans Checked	AP

LONG. PT REINF.
DECK PLAN DETAIL
3 OF 5

SHEET NC68c OF

STATE PROJECT I.D.	SHEET NUMBER
2235-00-70	8.720

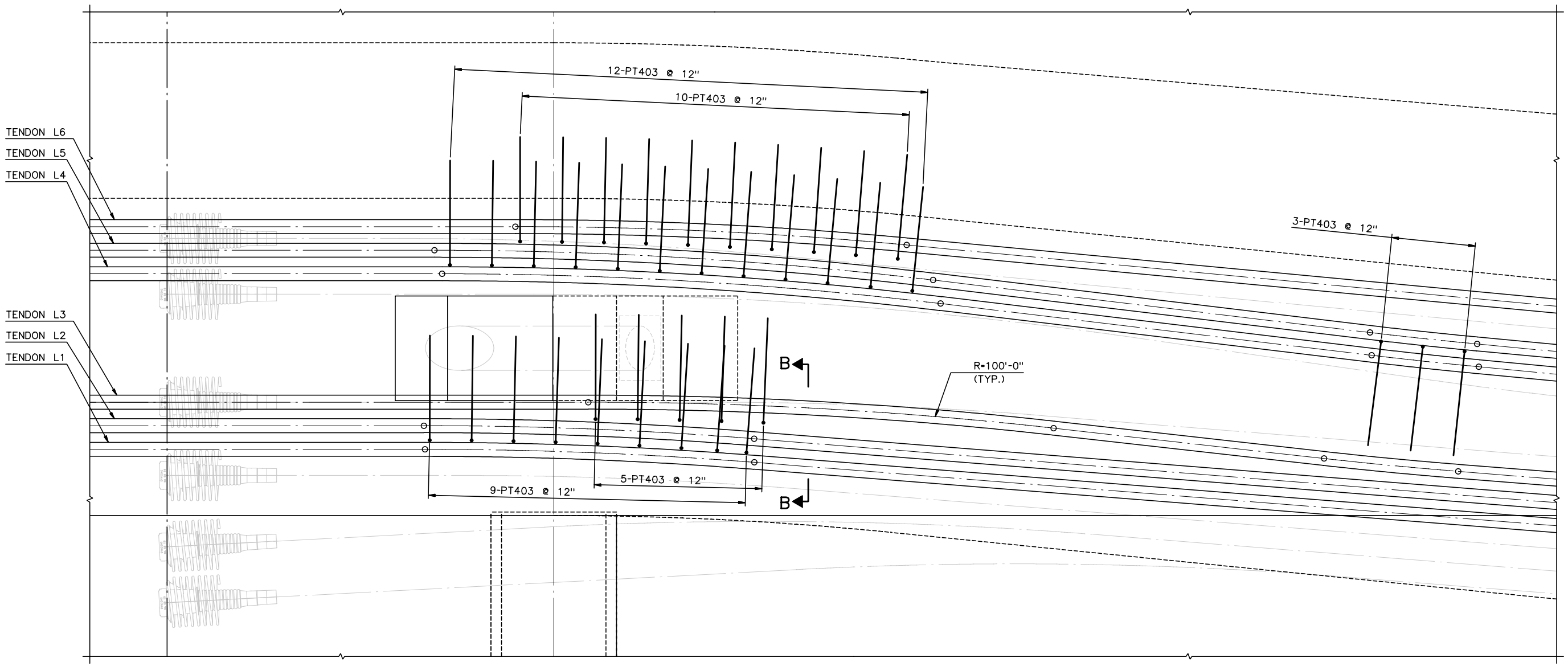

PLAN

3/4" = 1'-0"

(TENDON REINFORCEMENT SHOWN FOR L1 THRU L6.
NO REINFORCEMENT IS NECESSARY FOR TENDONS L7 THRU L12)

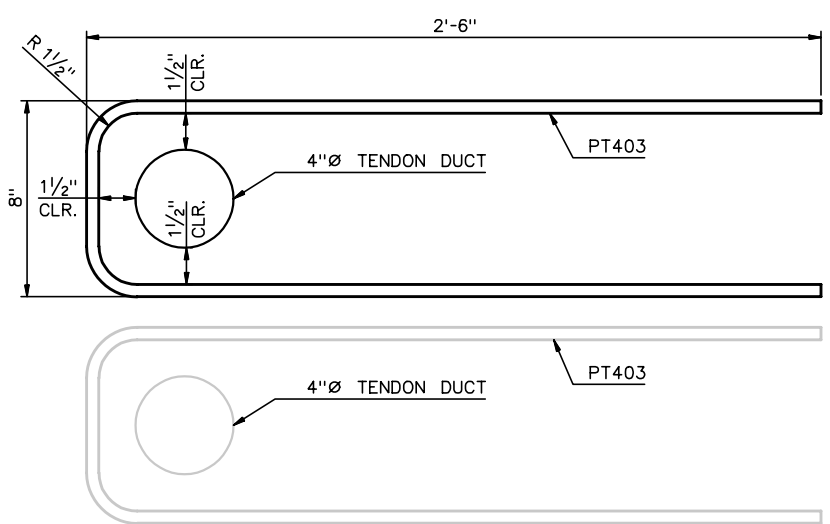

SECTION B-B

N.T.S.

NOTE: TIE TO BE PLACED TIGHT TO TENDON

NOTES:

1. LONGITUDINAL PT IS SYMMETRICAL ABOUT ℄ SIXTH STREET AND PGL.
2. FOR LONGITUDINAL TENDON PROFILES, SEE SHEET NC86.
3. ALL PT DIMENSIONS ARE TO CENTER OF DUCT.

RECORD DRAWING

No.	Date	Revisions	By

HNTB CORPORATION

STATE OF WISCONSIN
DEPARTMENT OF TRANSPORTATION

STRUCTURE B-40-414C

Designed By	BM	Design Checked	CE	Drawn By	BM	Plans Checked	AP

LONG. PT REINF.
DECK PLAN DETAIL
4 OF 5

SHEET NC68d OF

STATE PROJECT I.D.	SHEET NUMBER
2235-00-70	8.721

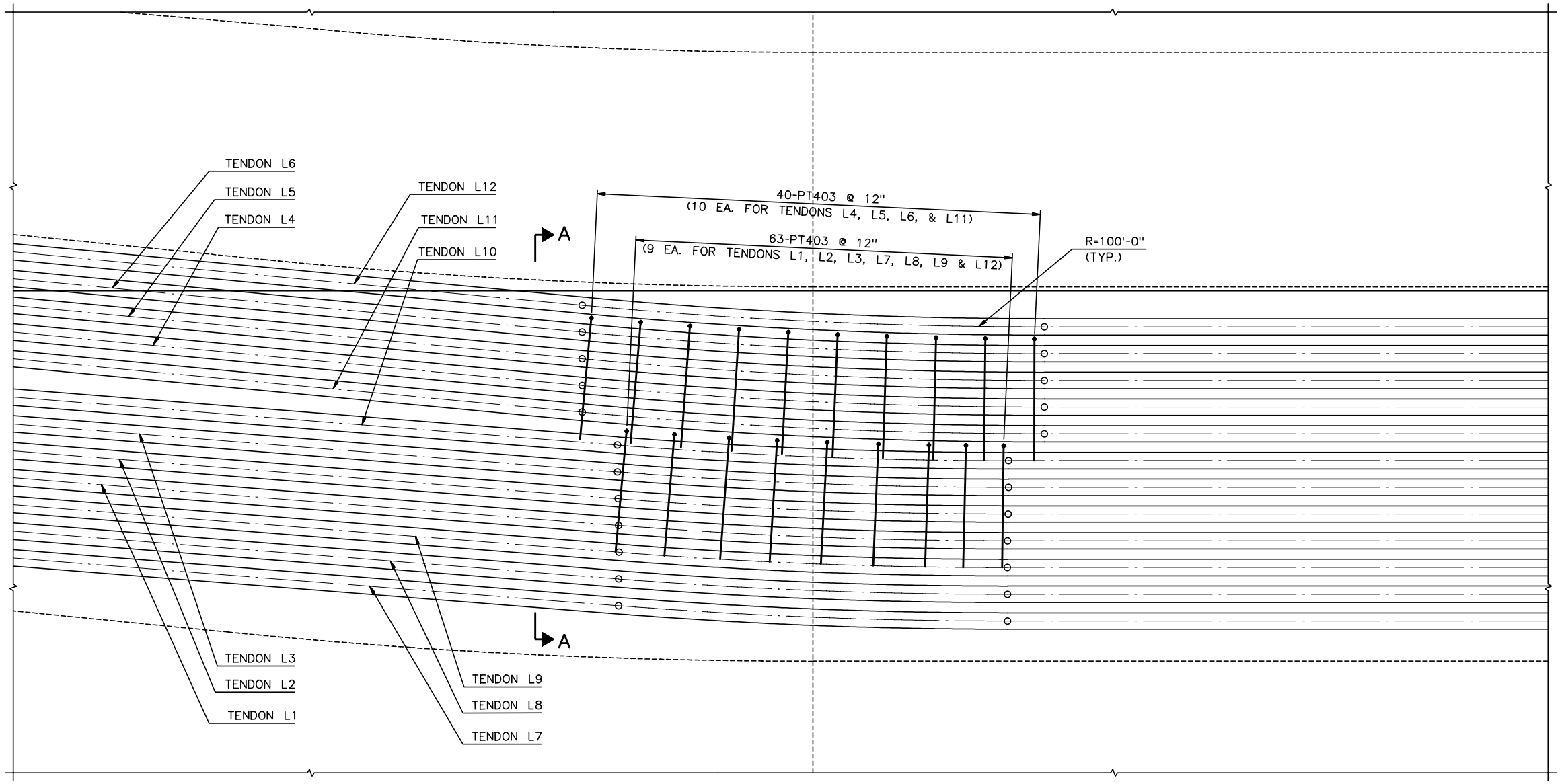

PLAN

¾" = 1'-0"

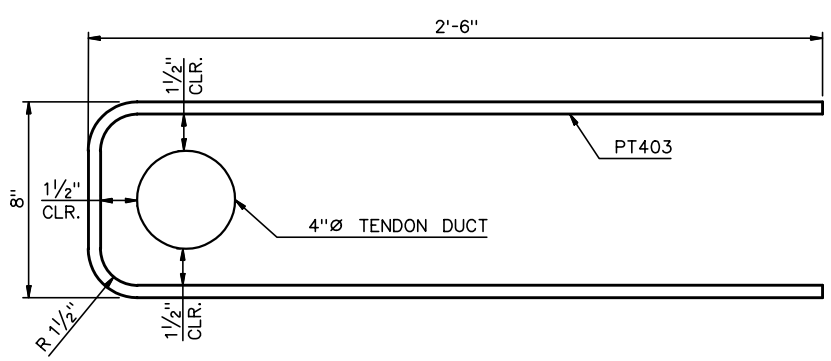

SECTION A-A

N.T.S.

NOTE: TIE TO BE PLACED TIGHT TO TENDON

NOTES:

1. LONGITUDINAL PT IS SYMMETRICAL ABOUT ℄ SIXTH STREET AND PGL.
2. FOR LONGITUDINAL TENDON PROFILES, SEE SHEET NC86.
3. ALL PT DIMENSIONS ARE TO CENTER OF DUCT.

RECORD DRAWING

No.	Date	Revisions	By

HNTB CORPORATION

STATE OF WISCONSIN
DEPARTMENT OF TRANSPORTATION

STRUCTURE B-40-414C

Designed By	BM	Design Checked	CE	Drawn By	BM	Plans Checked	AP

LONG. PT REINF.
DECK PLAN DETAIL
5 OF 5

SHEET NC68e OF

STATE PROJECT I.D.	SHEET NUMBER
2235-00-70	8.722

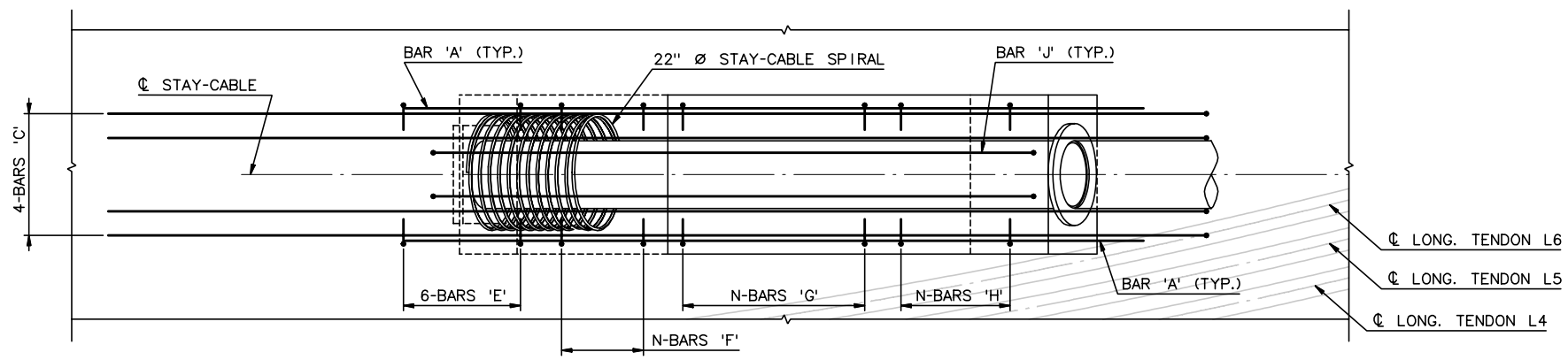

PLAN - TOP STEEL SHOWN, BOTTOM SIMILAR

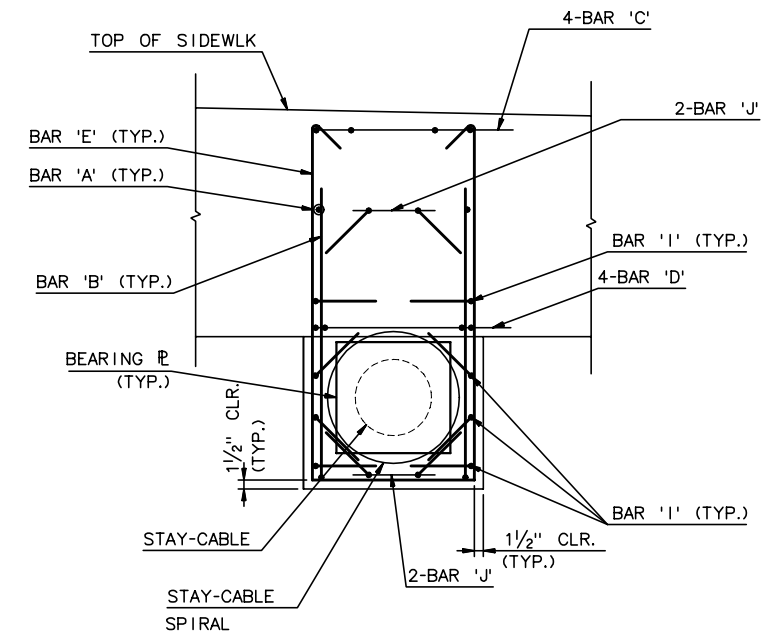

SECTION A-A

NOTES:

1. FOR STAY-CABLE GEOMETRY, SEE SHEET NC32
2. FOR BAR LIST, SEE SHEET NC127
3. TOP ANCHORAGE STEEL 2" CLEAR COVER (TYP.)
4. BOT ANCHORAGE STEEL 1½" CLEAR COVER (TYP.)
5. ½" Ø ANCHOR BOLTS SHALL BE IMBEDDED WITH 4" MIN. LONG STAINLESS STEEL FERRULE INSERT

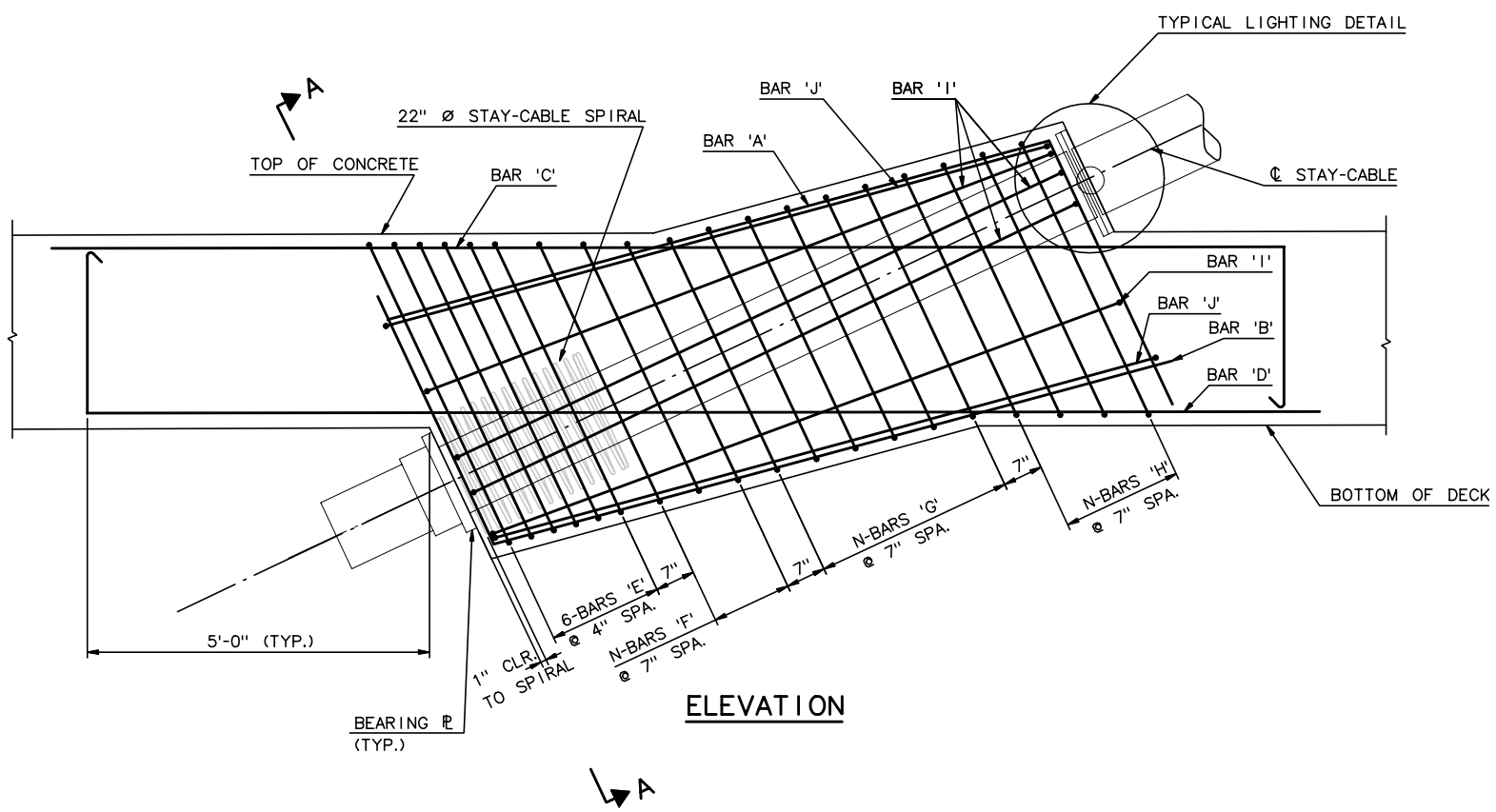

ELEVATION

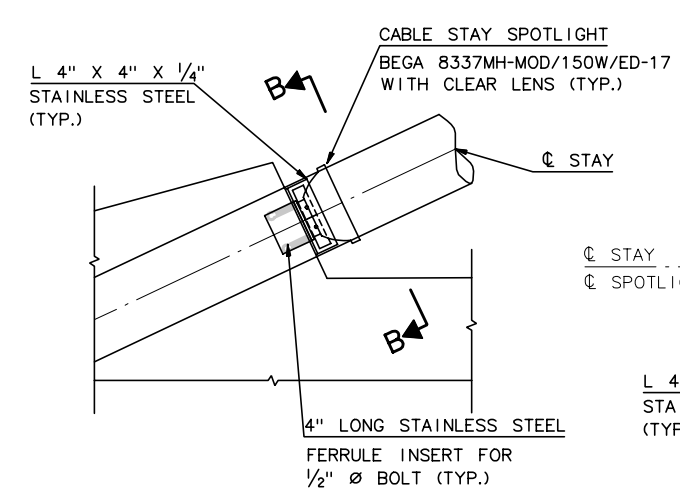

TYP. LIGHTING DETAIL

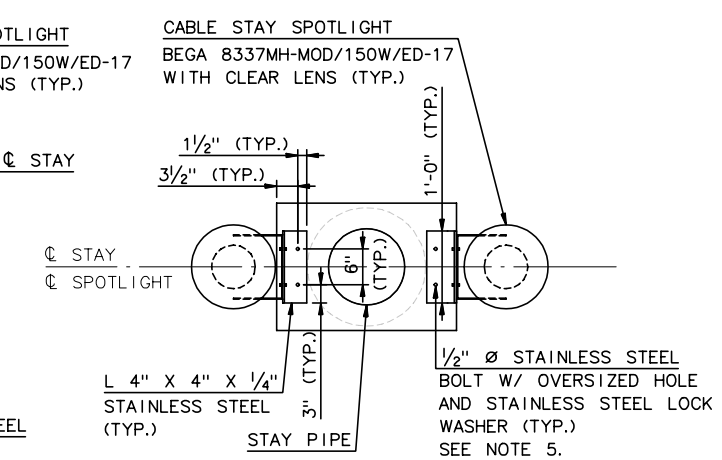

SECTION B-B

REINFORCING SCHEDULE FOR EACH STAY-CABLE ANCHORAGE

CABLE NO.	N-BAR 'A'	N-BAR 'B'	N-BAR 'C'	N-BAR 'D'	N-BAR 'E'	N-BAR 'F'	N-BAR 'G'	N-BAR 'H'	N-BAR 'I'	N-BAR 'J'
N12	2-CA601	2-CA601	4-CA603	4-CA603	6-CA501	3-CA505	6-CA509	4-CA512	8-CA516	4-CA520
N11	2-CA601	2-CA601	4-CA603	4-CA603	6-CA502	3-CA506	4-CA510	5-CA513	8-CA517	4-CA521
N10	2-CA601	2-CA601	4-CA603	4-CA603	6-CA503	3-CA507	1-CA511	6-CA514	8-CA518	4-CA522
N9	2-CA602	2-CA602	4-CA603	4-CA603	6-CA504	2-CA508	----	6-CA515	8-CA519	4-CA523

DECK ANCHORAGE DETAILS

(CABLE N12 SHOWN, CABLES N11-N9 SIMILAR)
¾" = 1'-0"

RECORD DRAWING

60% SUBMITTAL - NOT FOR CONSTRUCTION

No.	Date	Revisions	By
1	12/10/1	ADDED LIGHT DETAIL.	CE

HNTB CORPORATION

STATE OF WISCONSIN
DEPARTMENT OF TRANSPORTATION

STRUCTURE B-40-414C

Designed By	TZ	Design Checked	CE	Drawn By	CE	Plans Checked	TZ

DECK ANCHORAGE DETAILS - 1 OF 5

SHEET NC69 OF

STATE PROJECT I.D.	SHEET NUMBER
2235-00-70	8.723

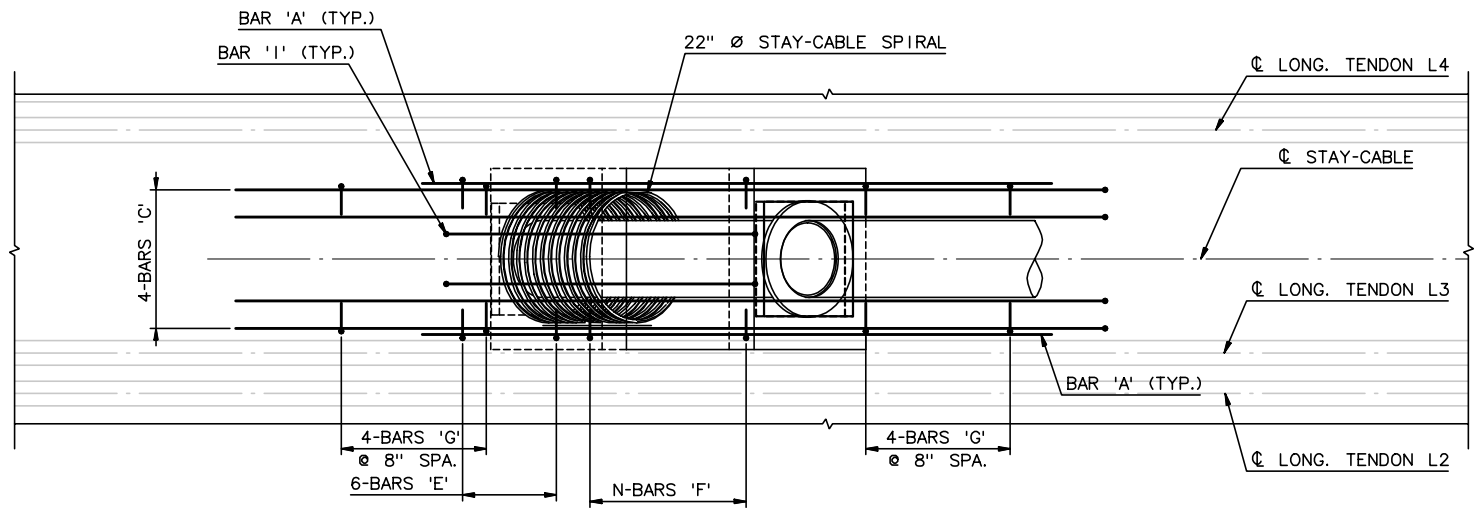

PLAN - TOP STEEL SHOWN, BOTTOM SIMILAR

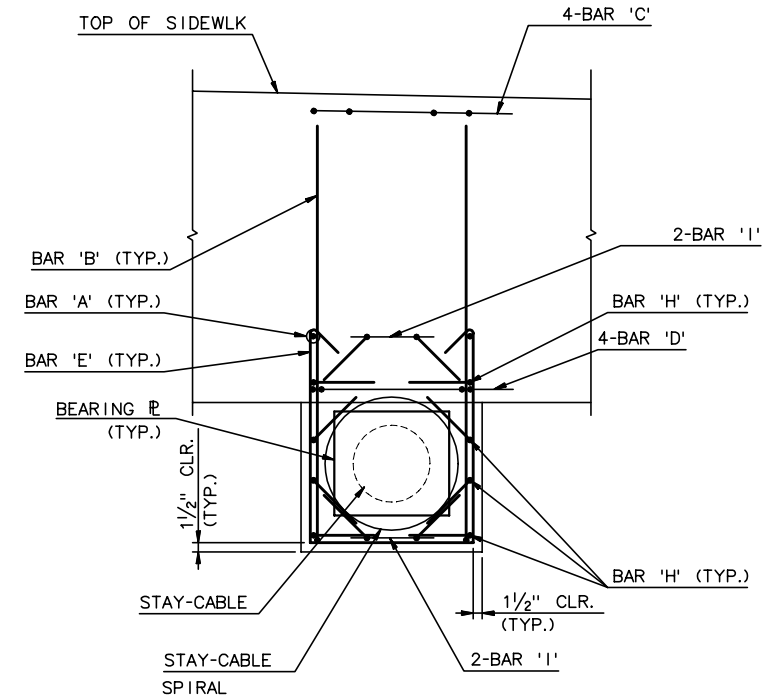

SECTION A-A

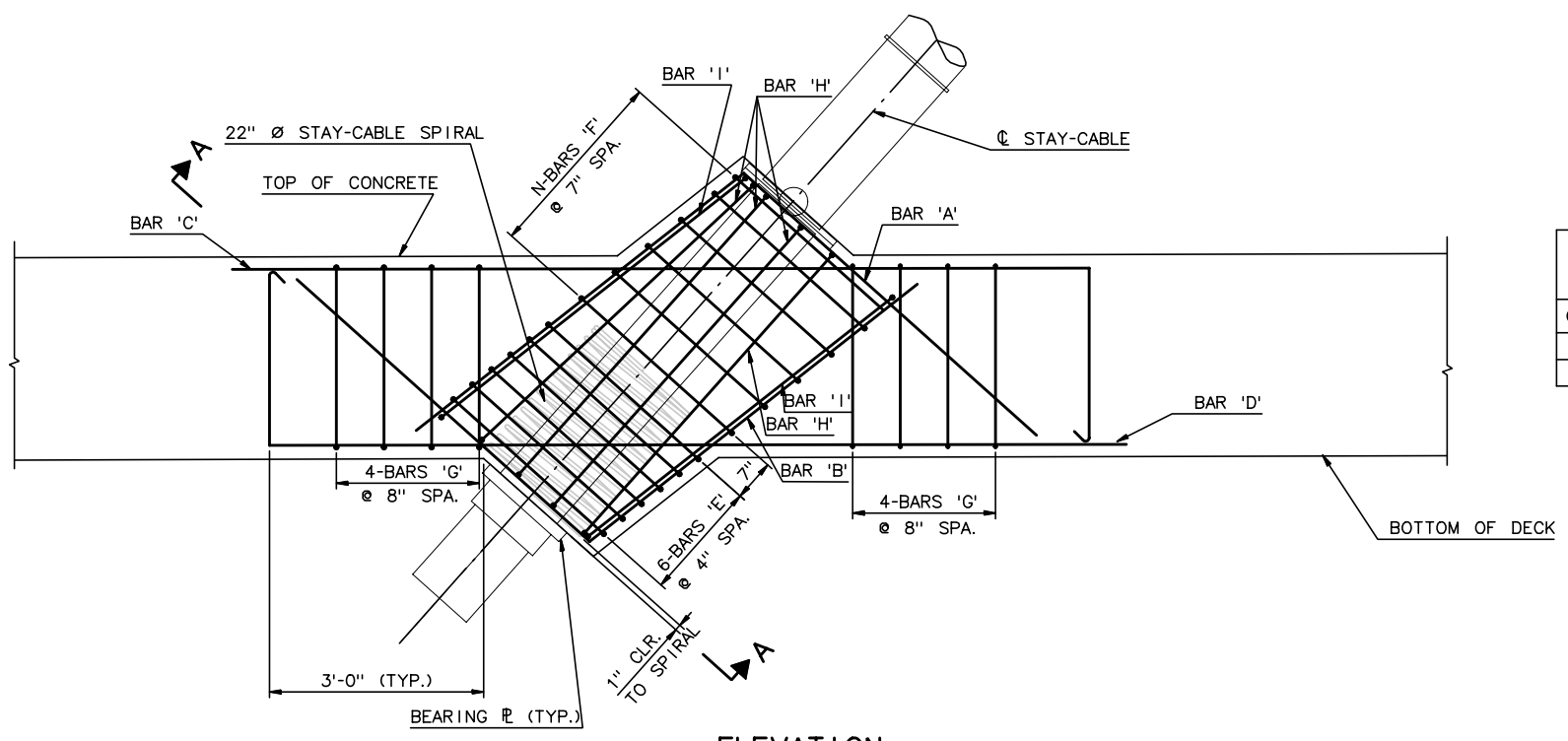

ELEVATION

NOTES:

1. FOR STAY-CABLE GEOMETRY, SEE SHEET NC32
2. FOR BAR LIST, SEE SHEET NC127
3. TOP ANCHORAGE STEEL 2" CLEAR COVER (TYP.)
4. BOT ANCHORAGE STEEL 1½" CLEAR COVER (TYP.)

REINFORCING SCHEDULE FOR EACH STAY-CABLE ANCHORAGE

CABLE NO.	N-BAR 'A'	N-BAR 'B'	N-BAR 'C'	N-BAR 'D'	N-BAR 'E'	N-BAR 'F'	N-BAR 'G'	N-BAR 'H'	N-BAR 'I'
N8	2-CA604	2-CA604	4-CA606	4-CA606	6-CA524	6-CA524	8-CA526	8-CA527	4-CA529
N7	2-CA605	2-CA605	4-CA606	4-CA606	6-CA525	4-CA525	8-CA526	8-CA528	4-CA530

RECORD DRAWING

DECK ANCHORAGE DETAILS

(CABLE N8 SHOWN, CABLE N7 SIMILAR)
¾" = 1'-0"

60% SUBMITTAL - NOT FOR CONSTRUCTION

No.	Date	Revisions	By

HNTB CORPORATION

STATE OF WISCONSIN
DEPARTMENT OF TRANSPORTATION

STRUCTURE B-40-414C

Designed By	TZ	Design Checked	CE	Drawn By	CE	Plans Checked	TZ

DECK ANCHORAGE DETAILS - 2 OF 5

SHEET NC70 OF

STATE PROJECT I.D.	SHEET NUMBER
2235-00-70	8.724

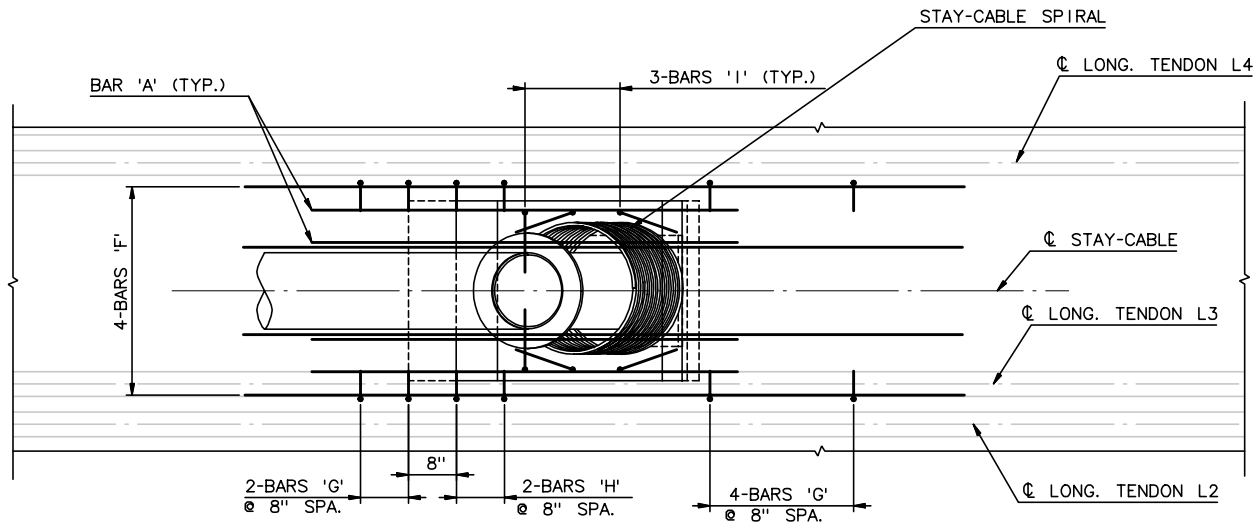

PLAN - TOP STEEL

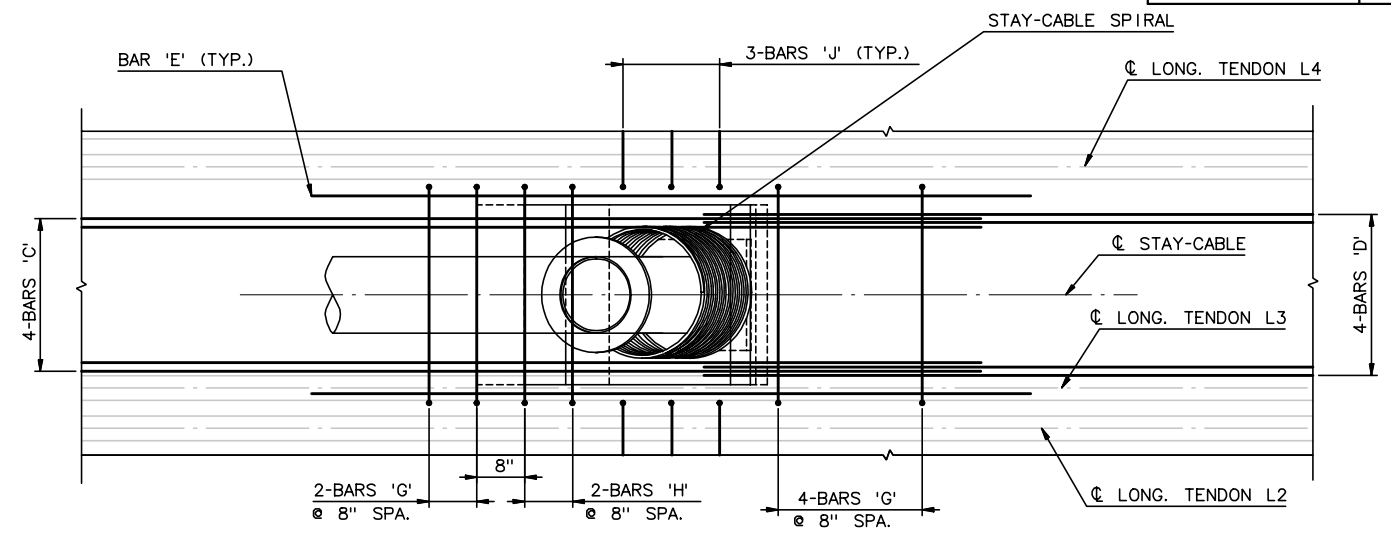

PLAN - BOTTOM STEEL

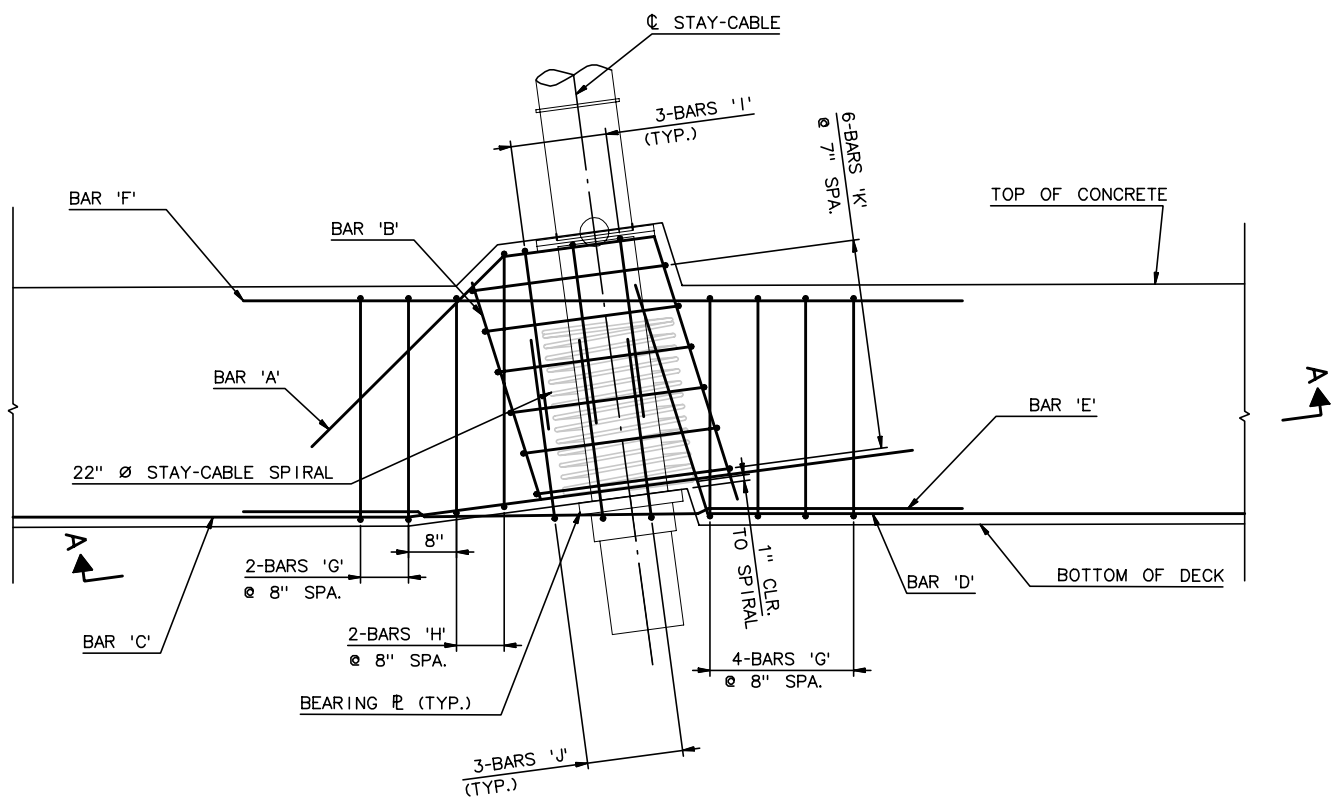

ELEVATION

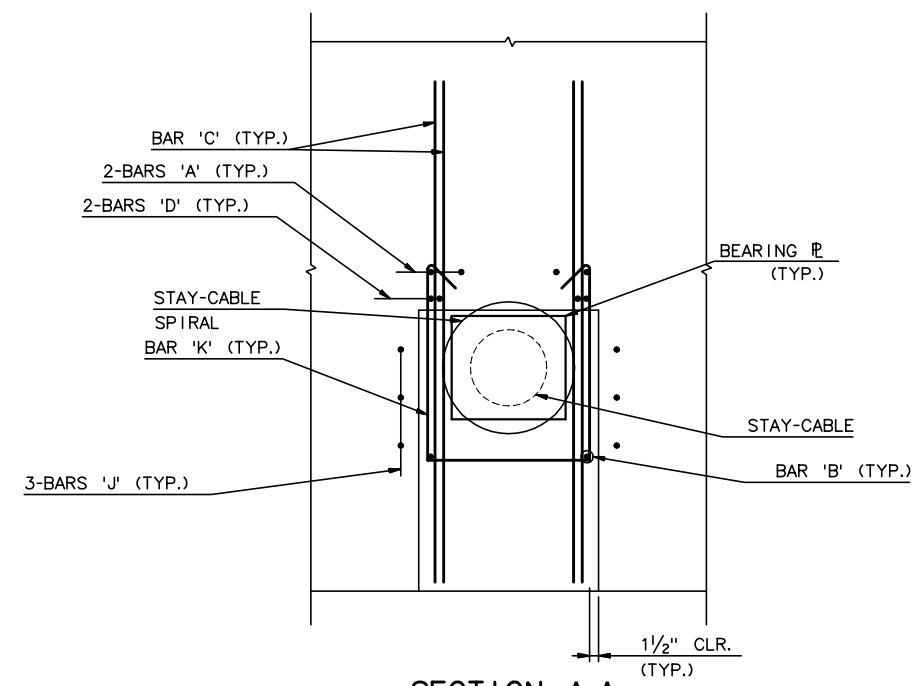

SECTION A-A

NOTES:

1. FOR STAY-CABLE GEOMETRY, SEE SHEET NC32
2. FOR BAR LIST, SEE SHEET
3. TOP ANCHORAGE STEEL 2" CLEAR COVER (TYP.)
4. BOT ANCHORAGE STEEL 1½" CLEAR COVER (TYP.)

REINFORCING SCHEDULE FOR EACH STAY-CABLE ANCHORAGE

CABLE NO.	N-BAR 'A'	N-BAR 'B'	N-BAR 'C'	N-BAR 'D'	N-BAR 'E'	N-BAR 'F'	N-BAR 'G'	N-BAR 'H'	N-BAR 'I'	N-BAR 'J'	N-BAR 'K'
N6	4-CA607	2-CA531	4-CA608	4-CA609	2-CA610	4-CA610	6-CA532	2-CA533	6-CA534	6-CA534	6-CA535

RECORD DRAWING

CABLE N6 - DECK ANCHORAGE DETAILS

¾" = 1'-0"

60% SUBMITTAL - NOT FOR CONSTRUCTION

No.	Date	Revisions	By

HNTB CORPORATION

STATE OF WISCONSIN
DEPARTMENT OF TRANSPORTATION

STRUCTURE B-40-414C

Designed By	TZ	Design Checked	CE	Drawn By	CE	Plans Checked	TZ

DECK ANCHORAGE DETAILS - 3 OF 5

SHEET NC71 OF

STATE PROJECT I.D.	SHEET NUMBER
2235-00-70	8.725

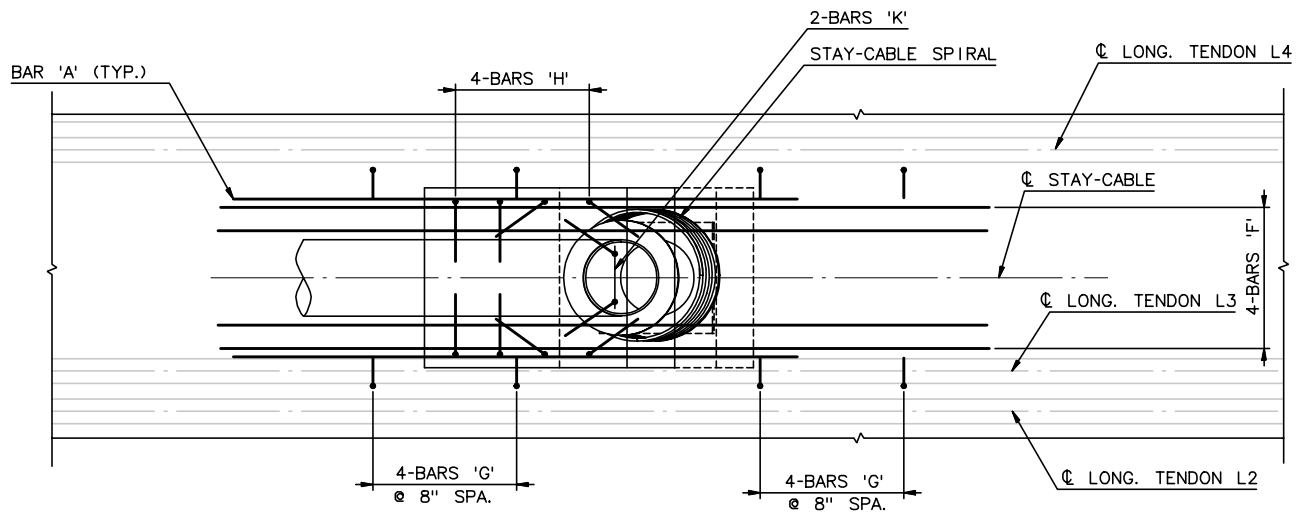

PLAN - TOP STEEL

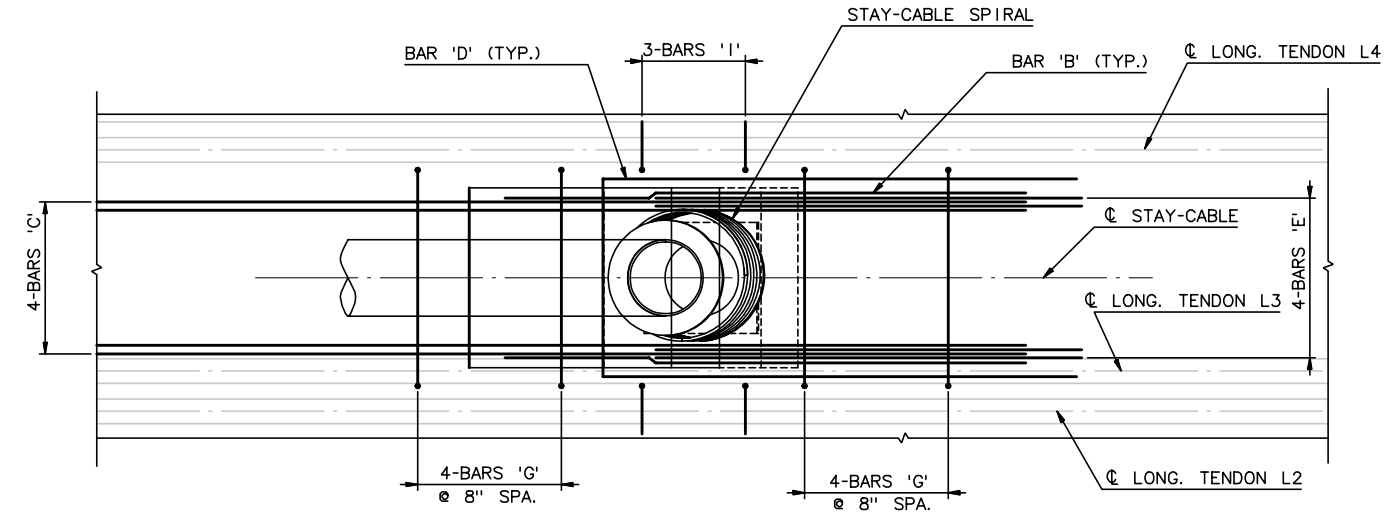

PLAN - BOTTOM STEEL

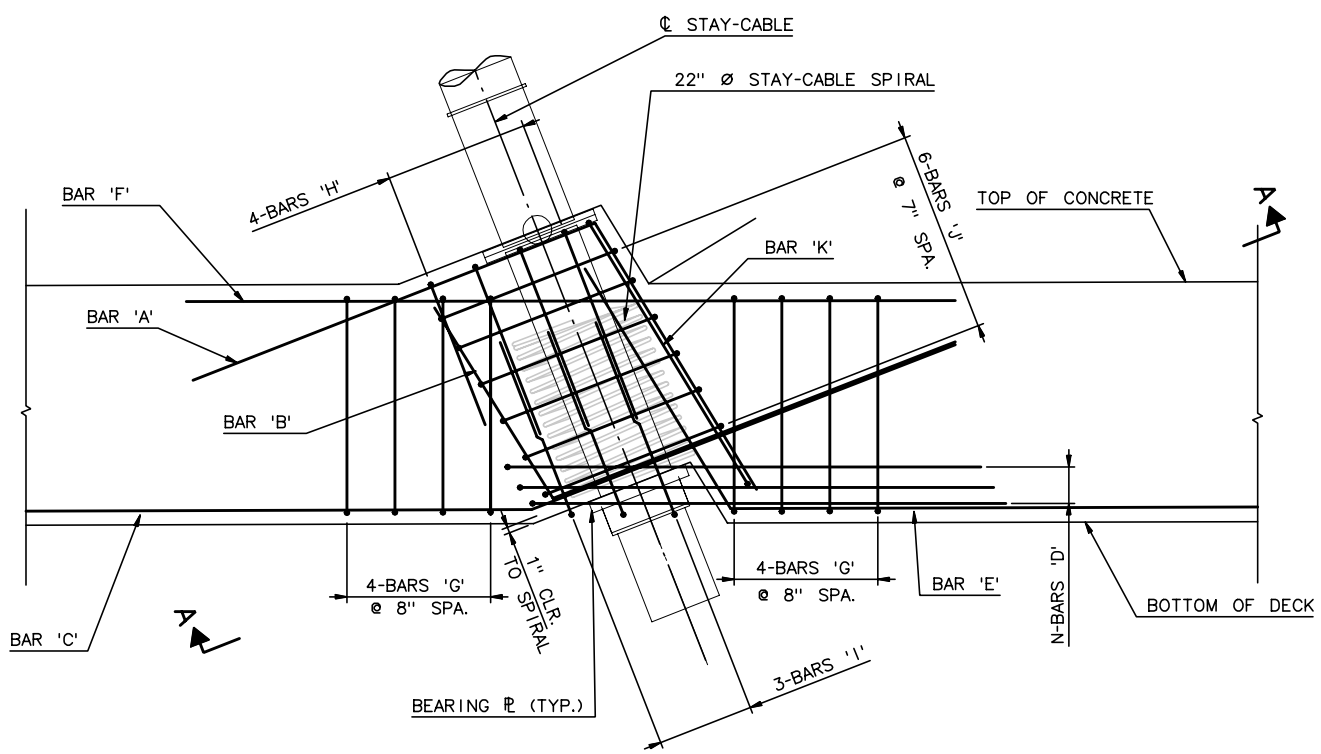

ELEVATION

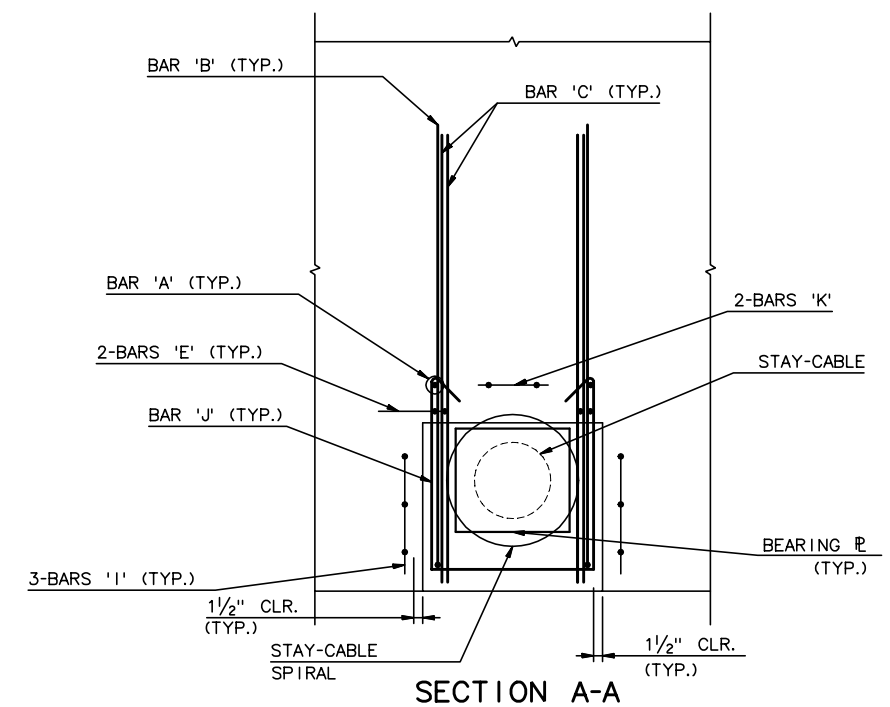

SECTION A-A

NOTES:

1. FOR STAY-CABLE GEOMETRY, SEE SHEET NC32
2. FOR BAR LIST, SEE SHEET NC127
3. TOP ANCHORAGE STEEL 2" CLEAR COVER (TYP.)
4. BOT ANCHORAGE STEEL 1½" CLEAR COVER (TYP.)

REINFORCING SCHEDULE FOR EACH STAY-CABLE ANCHORAGE

CABLE NO.	N-BAR 'A'	N-BAR 'B'	N-BAR 'C'	N-BAR 'D'	N-BAR 'E'	N-BAR 'F'	N-BAR 'G'	N-BAR 'H'	N-BAR 'I'	N-BAR 'J'	N-BAR 'K'
N5	2-CA611	2-CA536	4-CA614	3-CA618	4-CA619	4-CA610	8-CA532	8-CA534	6-CA534	6-CA538	2-CA539
N4	2-CA612	2-CA537	4-CA615	3-CA618	4-CA620	4-CA610	8-CA532	8-CA534	6-CA534	7-CA538	2-CA540
N3	2-CA612	2-CA537	4-CA616	3-CA618	4-CA621	4-CA610	8-CA532	8-CA534	6-CA534	7-CA538	2-CA541
N2	2-CA613	2-CA537	4-CA617	4-CA618	4-CA622	4-CA610	8-CA532	8-CA534	6-CA534	8-CA538	2-CA542

RECORD DRAWING

DECK ANCHORAGE DETAILS

(CABLE N5 SHOWN, CABLES N4 - N2 SIMILAR)
¾" = 1'-0"

60% SUBMITTAL - NOT FOR CONSTRUCTION

No.	Date	Revisions	By

HNTB CORPORATION

STATE OF WISCONSIN
DEPARTMENT OF TRANSPORTATION

STRUCTURE B-40-414C

Designed By	TZ	Design Checked	CE	Drawn By	CE	Plans Checked	TZ

DECK ANCHORAGE DETAILS - 4 OF 5

SHEET NC71a OF

STATE PROJECT I.D.	SHEET NUMBER
2235-00-70	8.726

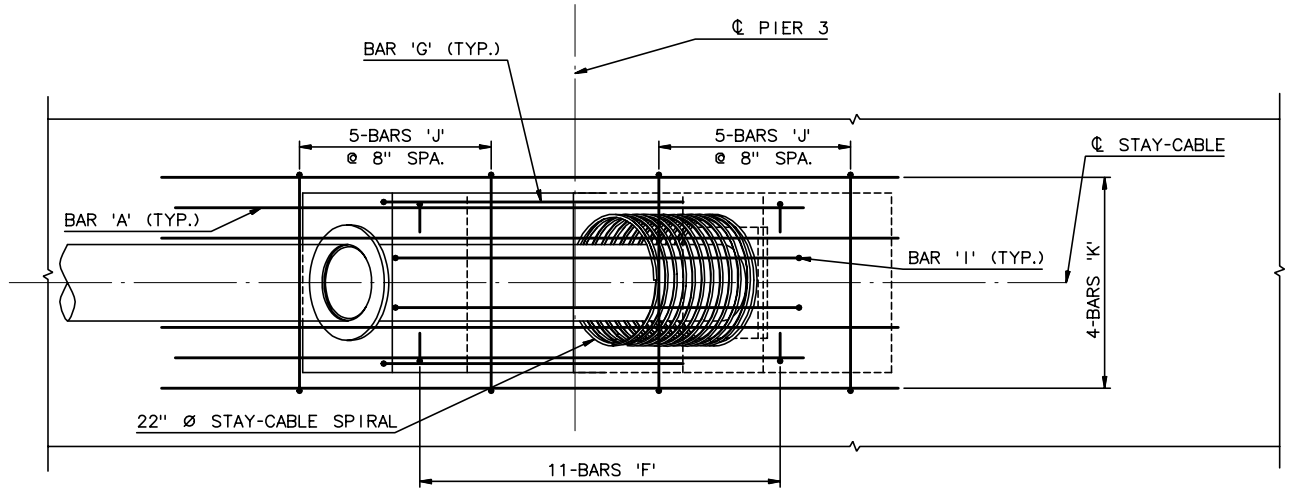

PLAN - TOP STEEL

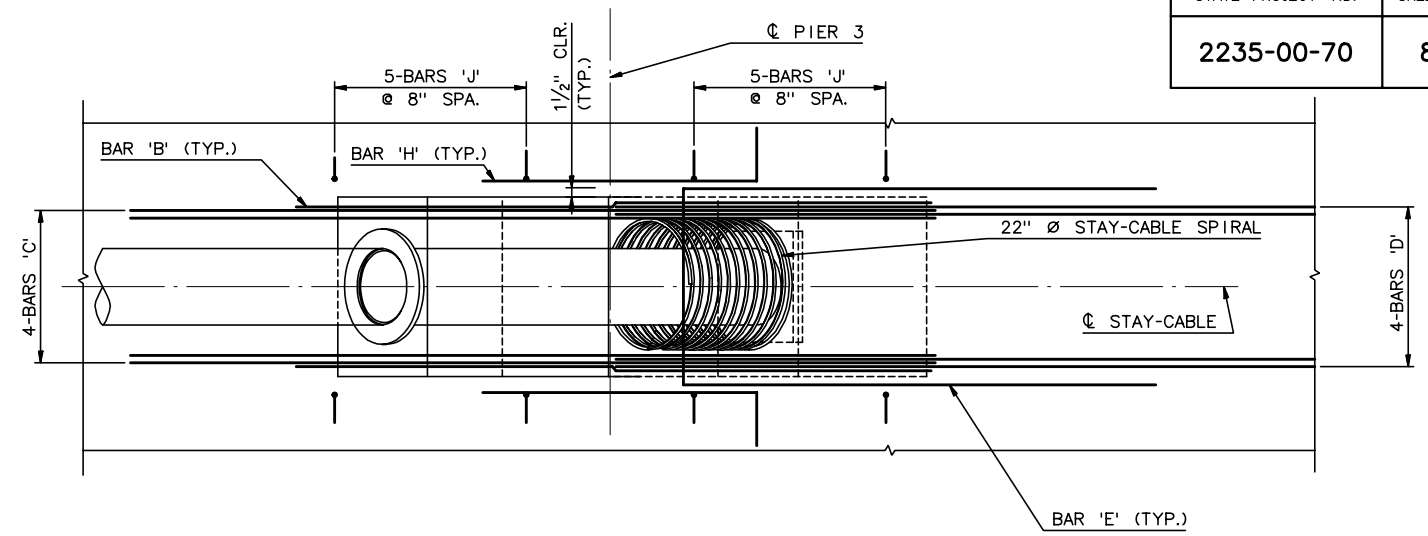

PLAN - BOTTOM STEEL

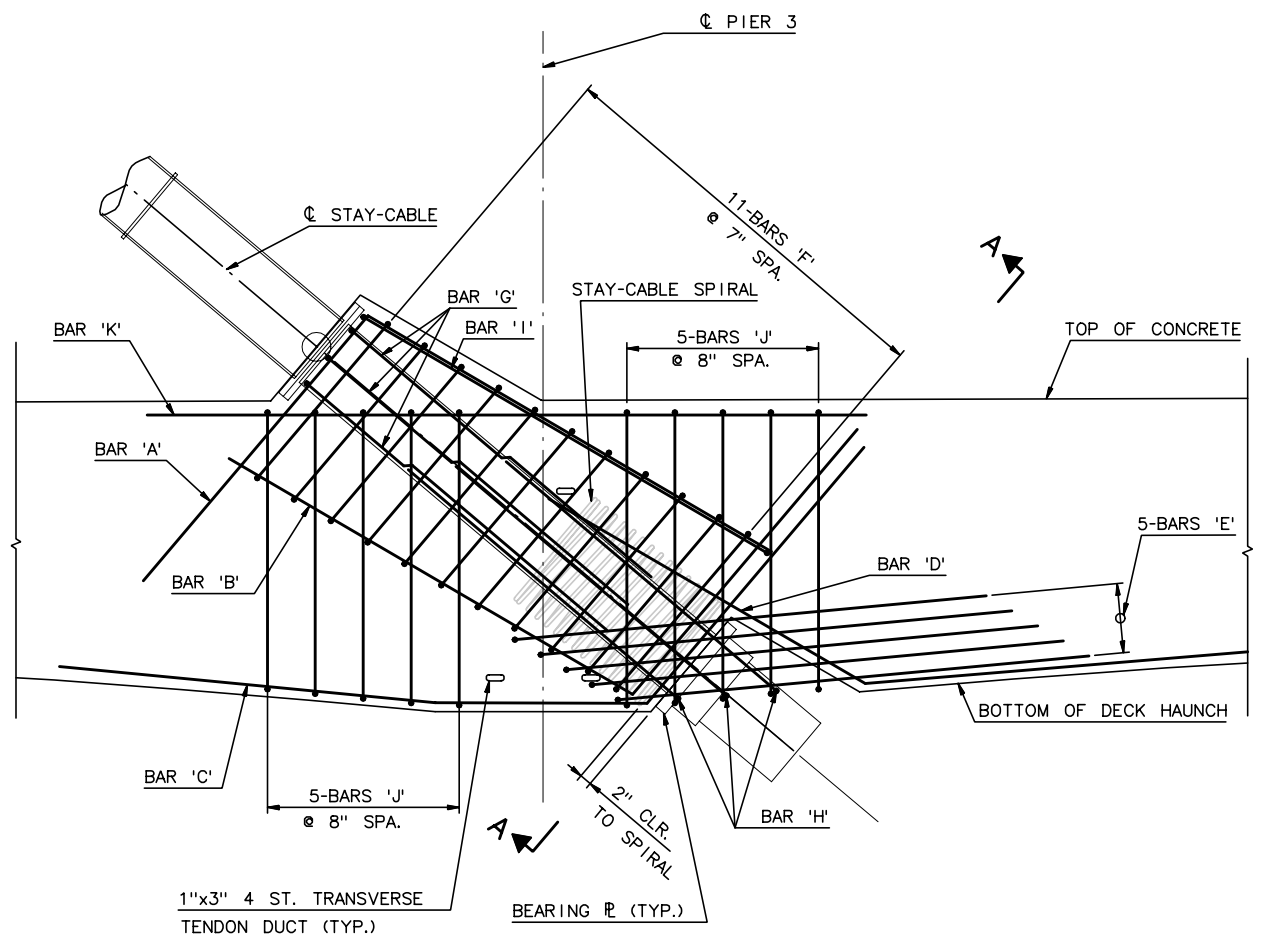

ELEVATION

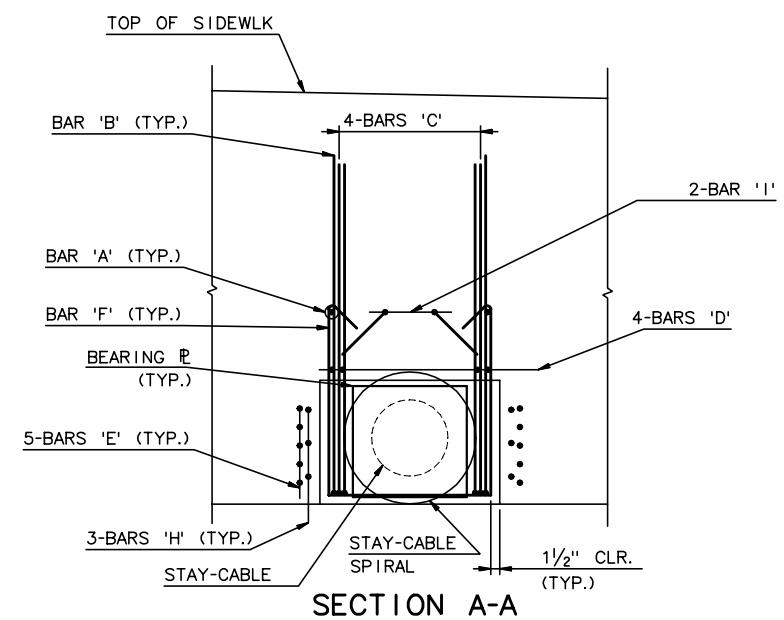

SECTION A-A

NOTES:

1. FOR STAY-CABLE GEOMETRY, SEE SHEET NC32
2. FOR BAR LIST, SEE SHEET NC127
3. TOP ANCHORAGE STEEL 2" CLEAR COVER (TYP.)
4. BOT ANCHORAGE STEEL 1½" CLEAR COVER (TYP.)
5. LONGITUDINAL TENDONS NOT SHOWN FOR CLARITY.

REINFORCING SCHEDULE FOR EACH STAY-CABLE ANCHORAGE

CABLE NO.	N-BAR 'A'	N-BAR 'B'	N-BAR 'C'	N-BAR 'D'	N-BAR 'E'	N-BAR 'F'	N-BAR 'G'	N-BAR 'H'	N-BAR 'I'	N-BAR 'J'	N-BAR 'K'
N1	2-CA613	2-CA613	4-CA623	4-CA624	5-CA618	11-CA546	6-CA543	6-CA543	2-CA544	10-CA545	4-CA610

RECORD DRAWING

CABLE N1 - DECK ANCHORAGE DETAILS

¾" = 1'-0"

60% SUBMITTAL - NOT FOR CONSTRUCTION

No.	Date	Revisions	By

HNTB CORPORATION

STATE OF WISCONSIN
DEPARTMENT OF TRANSPORTATION

STRUCTURE B-40-414C

Designed By	TZ	Design Checked	CE	Drawn By	CE	Plans Checked	TZ

DECK ANCHORAGE DETAILS - 5 OF 5

SHEET NC71b OF

STATE PROJECT I.D.	SHEET NUMBER
2235-00-70	

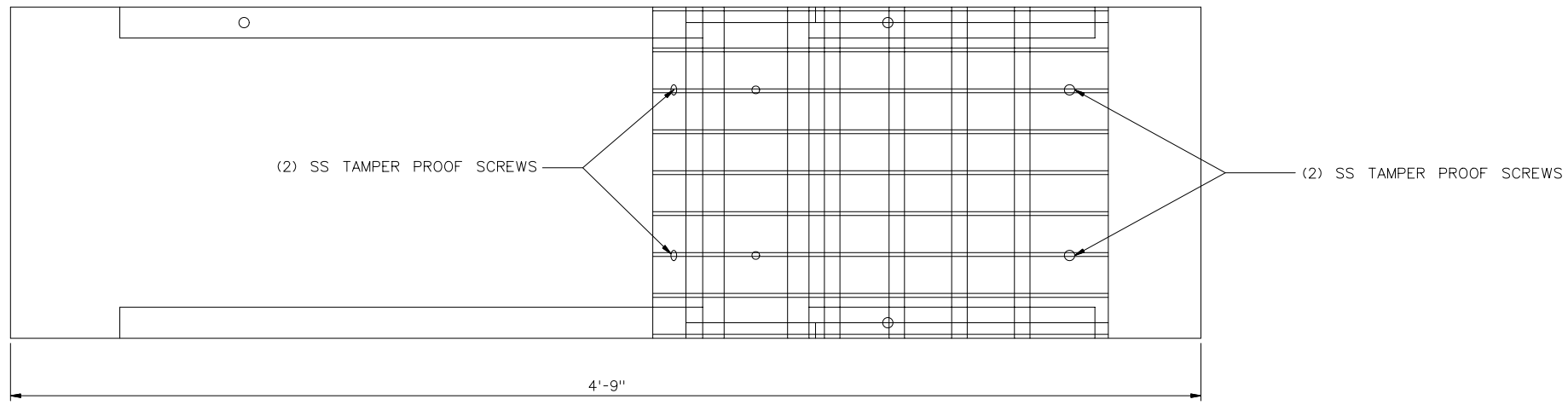

NOTES:

MATERIAL IS 3/16" 304 STAINLESS STEEL

THE BODY IS TO BE WHITE
THE GRILLE IS TO BE BLACK

PER UNIT:
(1) BODY SHELL
(9) "L" SHAPED GRATE BARS
(1) MOUNTING BRACKET

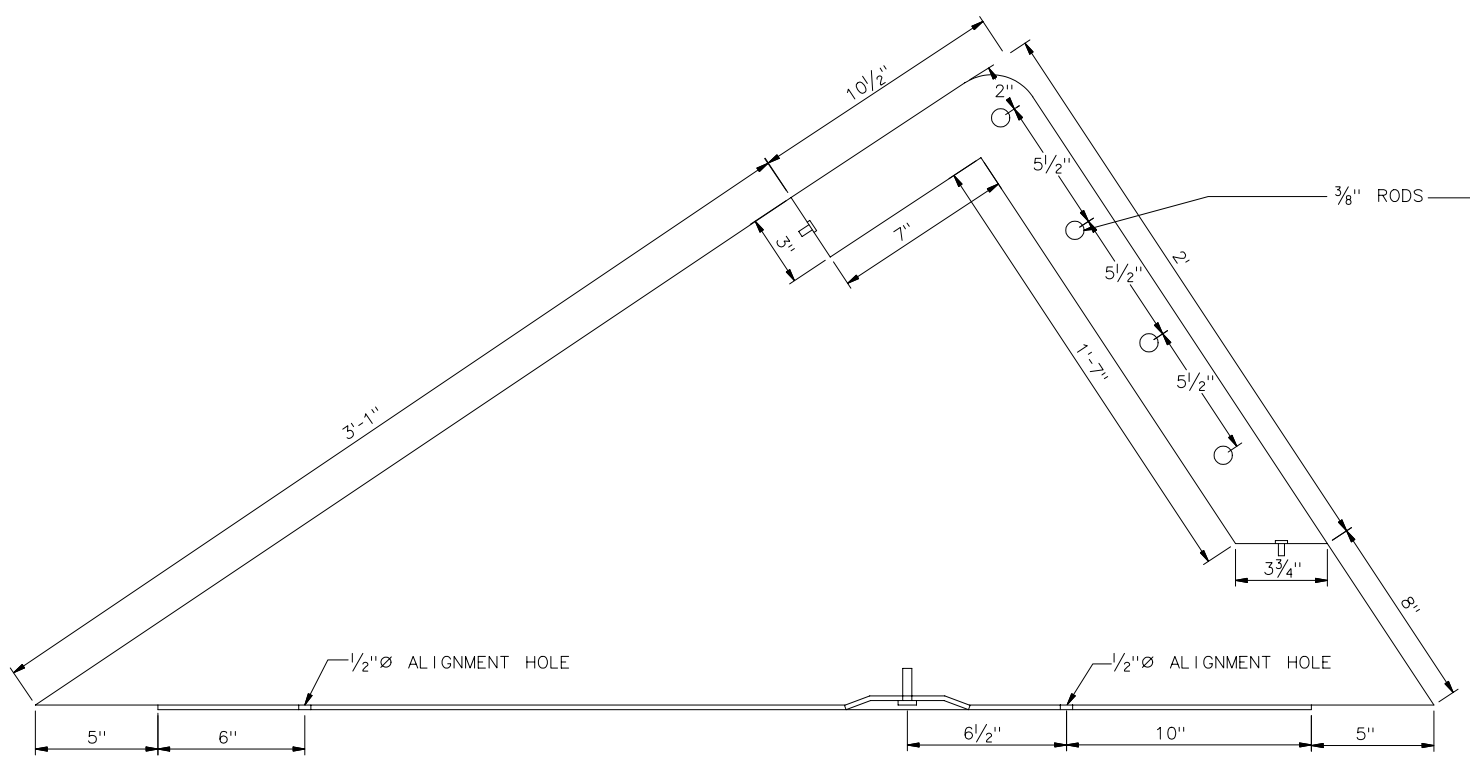

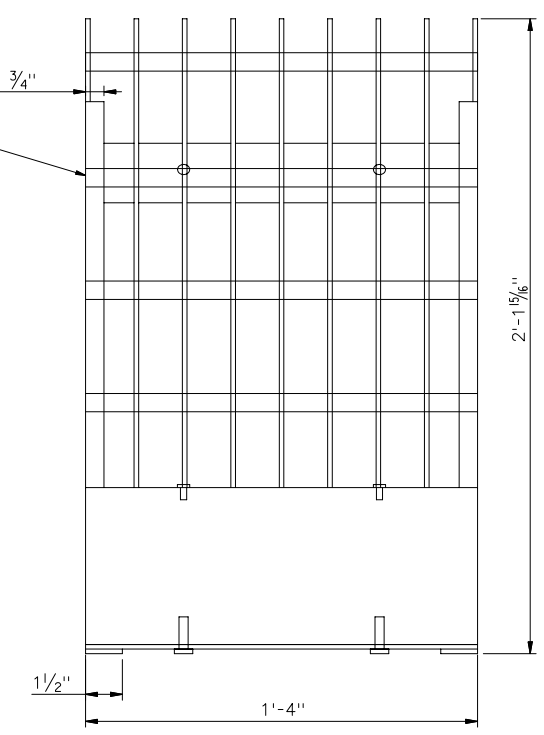

CABLE STAY LIGHTING HOUSING

3" = 1'-0"

RECORD DRAWING

No.	Date	Revisions	By

HNTB CORPORATION

STATE OF WISCONSIN
DEPARTMENT OF TRANSPORTATION

STRUCTURE B-40-414C

Designed By	JE	Design Checked	AP	Drawn By	SL	Plans Checked	AP

STAY CABLE LIGHTING DETAILS

SHEET NC71c OF .

STATE PROJECT I.D.	SHEET NUMBER
2235-00-70	8.728

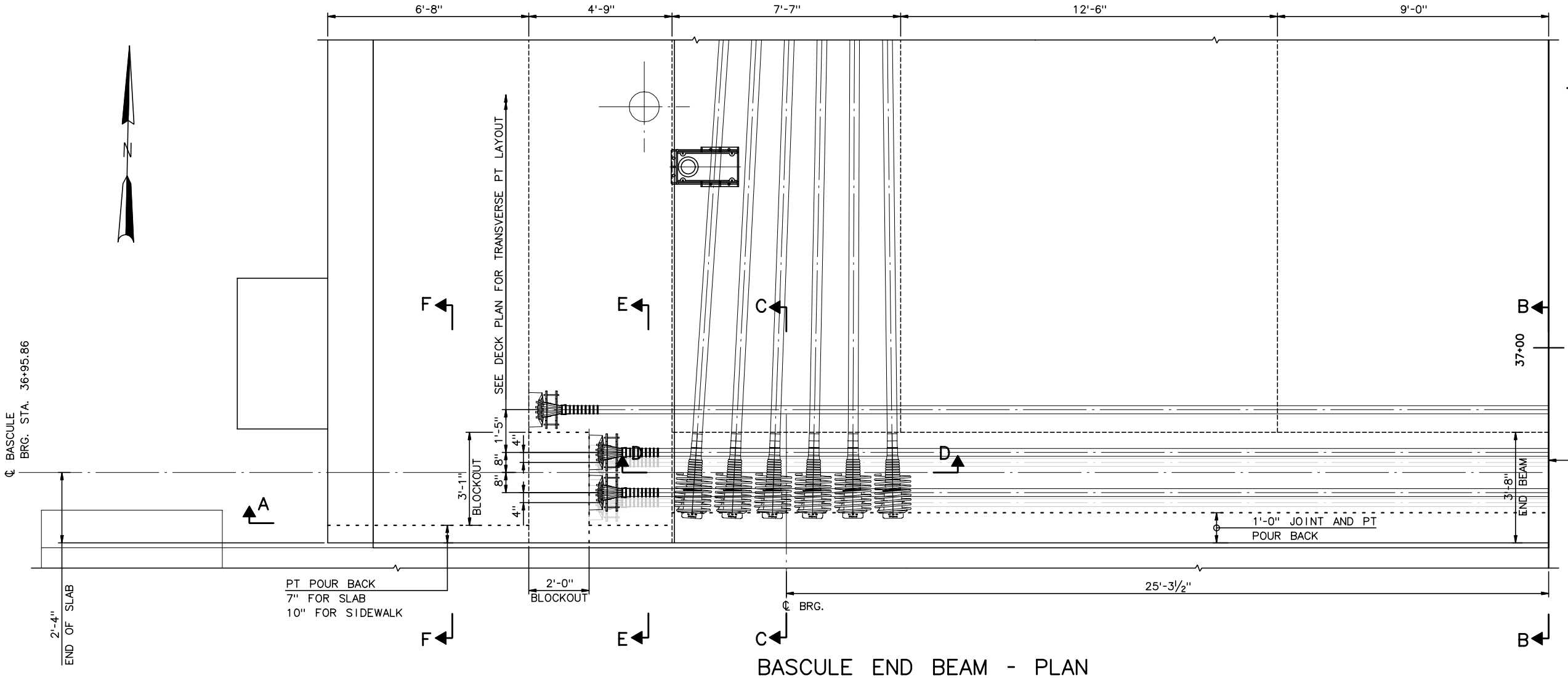

BASCULE END BEAM - PLAN

½" = 1'-0"

NOTES:

1. FOR SECTION B-B, C-C, D-D, AND F-F SEE SHEET NC74.
2. FOR SECTION E-E, SEE SHEET NC81, SIMILAR FOR EAST SIDE.
3. FOR TRANSVERSE TENDON PROFILE, SEE SHEET NC89.
4. FOR LONGITUDINAL TENDON PROFILE, SEE SHEETS NC83 THRU NC87.
5. FOR ADDITIONAL END BEAM REINFORCEMENT, SEE SHEET NC74.
6. FOR BURSTING REINFORCEMENT, SEE SHEET NC74.
7. BOTTOM TRANSVERSE PT SHOWN SCREENED IN PLAN VIEW.
8. SECTIONS C-C AND B-B TYPICAL FOR BOTH SIDES OF END BEAM.

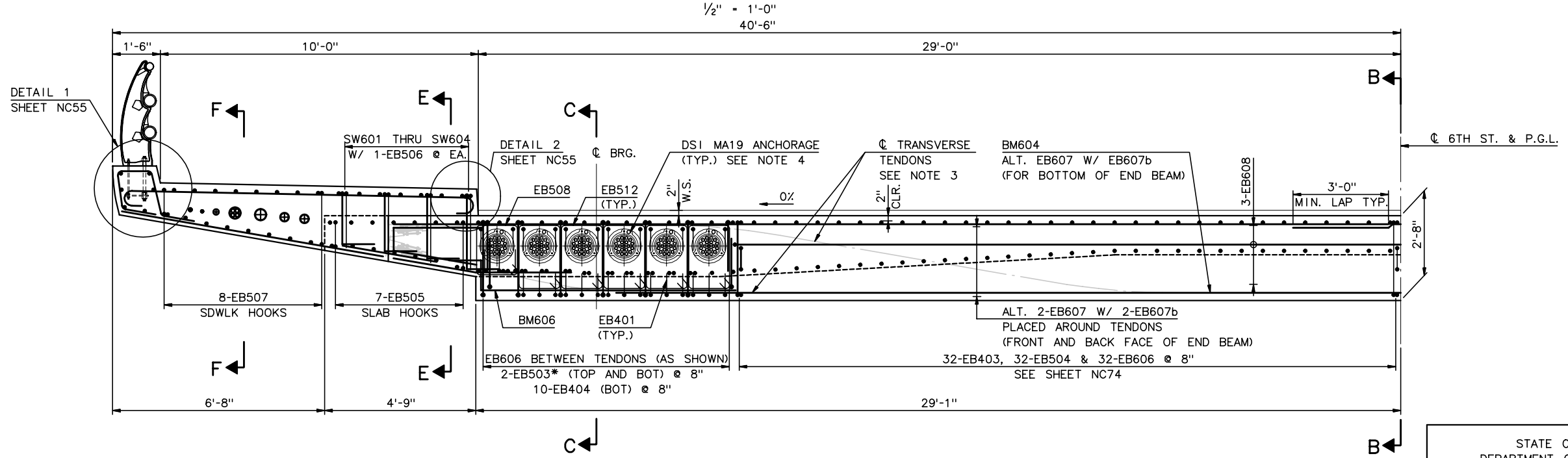

NOTE: TYPICAL REINFORCEMENT BARMARKS NOT SHOWN FOR CLARITY.

* FIELD BEND EB503

SECTION A-A END BEAM - ELEVATION

½" = 1'-0"

RECORD DRAWING

No.	Date	Revisions	By
2	9-21-01	REV QTY EB606, SHOW SCUPPER	BM
1	9-20-01	REV POUR BACK DIM	BM

HNTB CORPORATION

STATE OF WISCONSIN
DEPARTMENT OF TRANSPORTATION

STRUCTURE B-40-414C

Designed By	CE	Design Checked	TZ	Drawn By	BM	Plans Checked	AP

BASCULE END BEAM
1 OF 5

SHEET NC72 OF

STATE PROJECT I.D.	SHEET NUMBER
2235-00-70	8.729

NOTES:

1. FOR SECTION B-B, SEE SHEET NC74.
2. FOR TRANSVERSE TENDON PROFILE, SEE SHEET NC89.
3. FOR LONGITUDINAL TENDON PROFILE, SEE SHEETS NC83.
4. FOR ADDITIONAL END BEAM REINFORCEMENT, SEE SHEET NC74.
5. FOR BURSTING REINFORCEMENT, SEE SHEET NC74.
6. BOTTOM TRANSVERSE PT SHOWN SCREENED IN PLAN VIEW.
7. FOR TYP. SECTION THRU BEARING, SEE SECTION C-C ON SHEET NC72 & NC74.

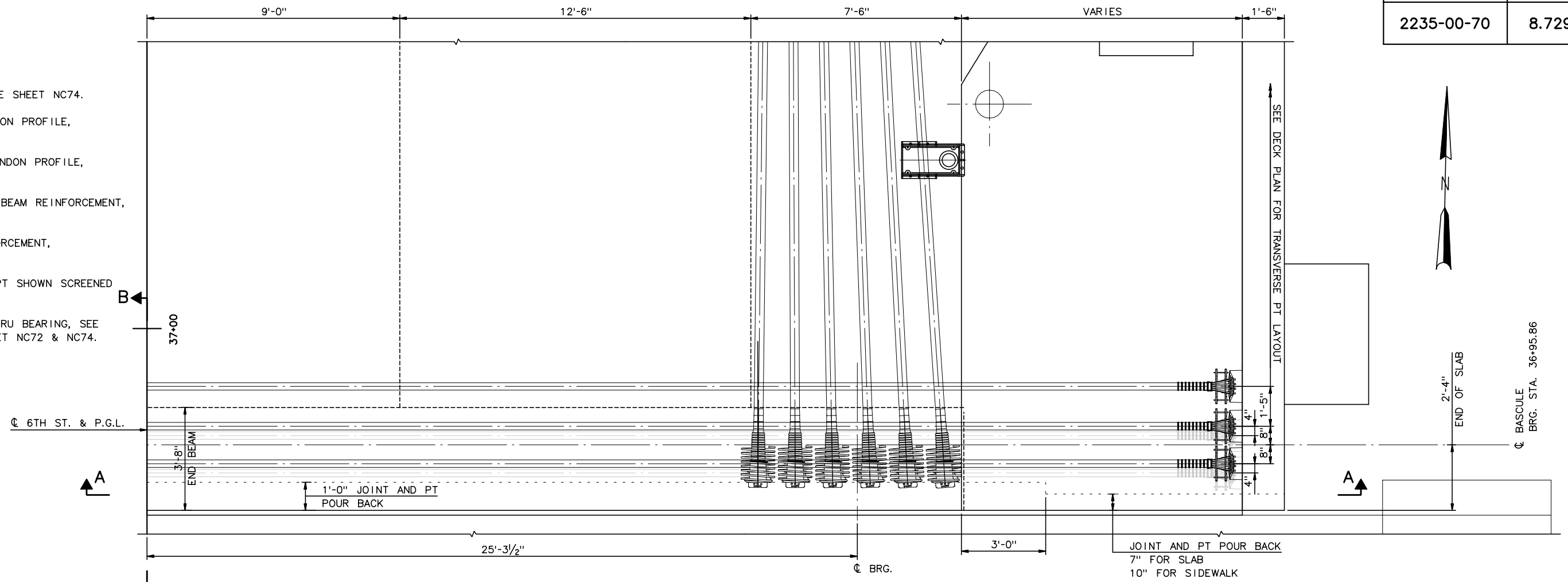

BASCULE END BEAM - PLAN

½" = 1'-0"

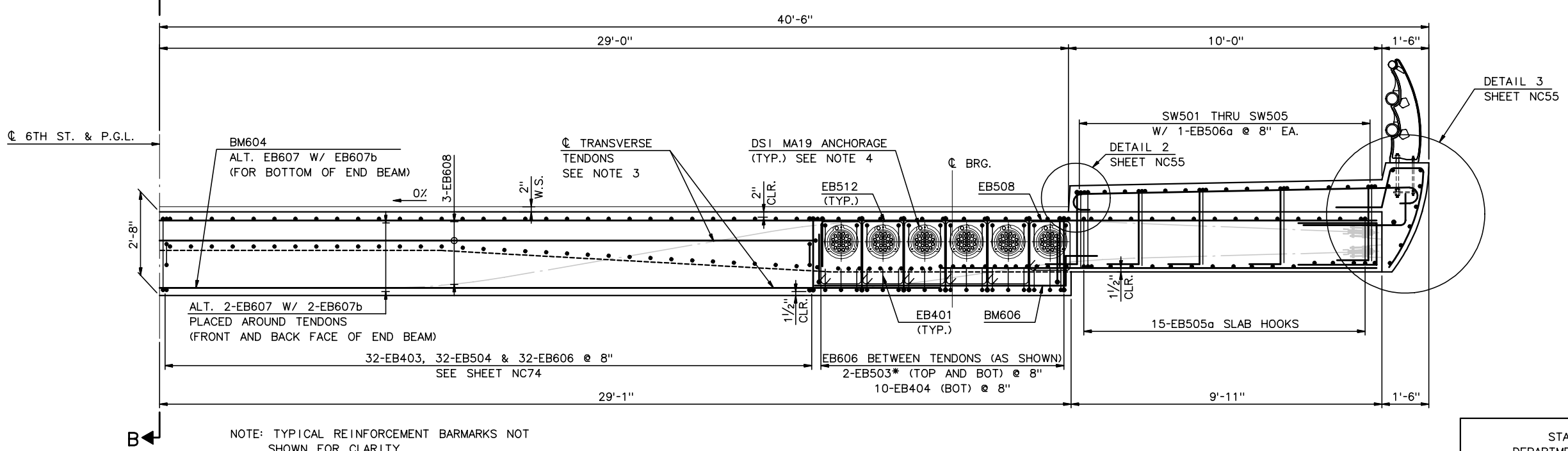

NOTE: TYPICAL REINFORCEMENT BARMARKS NOT SHOWN FOR CLARITY.

* FIELD BEND EB503

SECTION A-A END BEAM - ELEVATION

½" = 1'-0"

RECORD DRAWING

No.	Date	Revisions	By
2	9-21-01	REV QTY EB606, SHOW SCUPPER	BM
1	9-20-01	REV POUR BACK DIM	BM

HNTB CORPORATION

STATE OF WISCONSIN
DEPARTMENT OF TRANSPORTATION

STRUCTURE B-40-414C

Designed By	CE	Design Checked	TZ	Drawn By	BM	Plans Checked	AP

BASCULE END BEAM
2 OF 5

SHEET NC73 OF

STATE PROJECT I.D.	SHEET NUMBER
2235-00-70	8.730

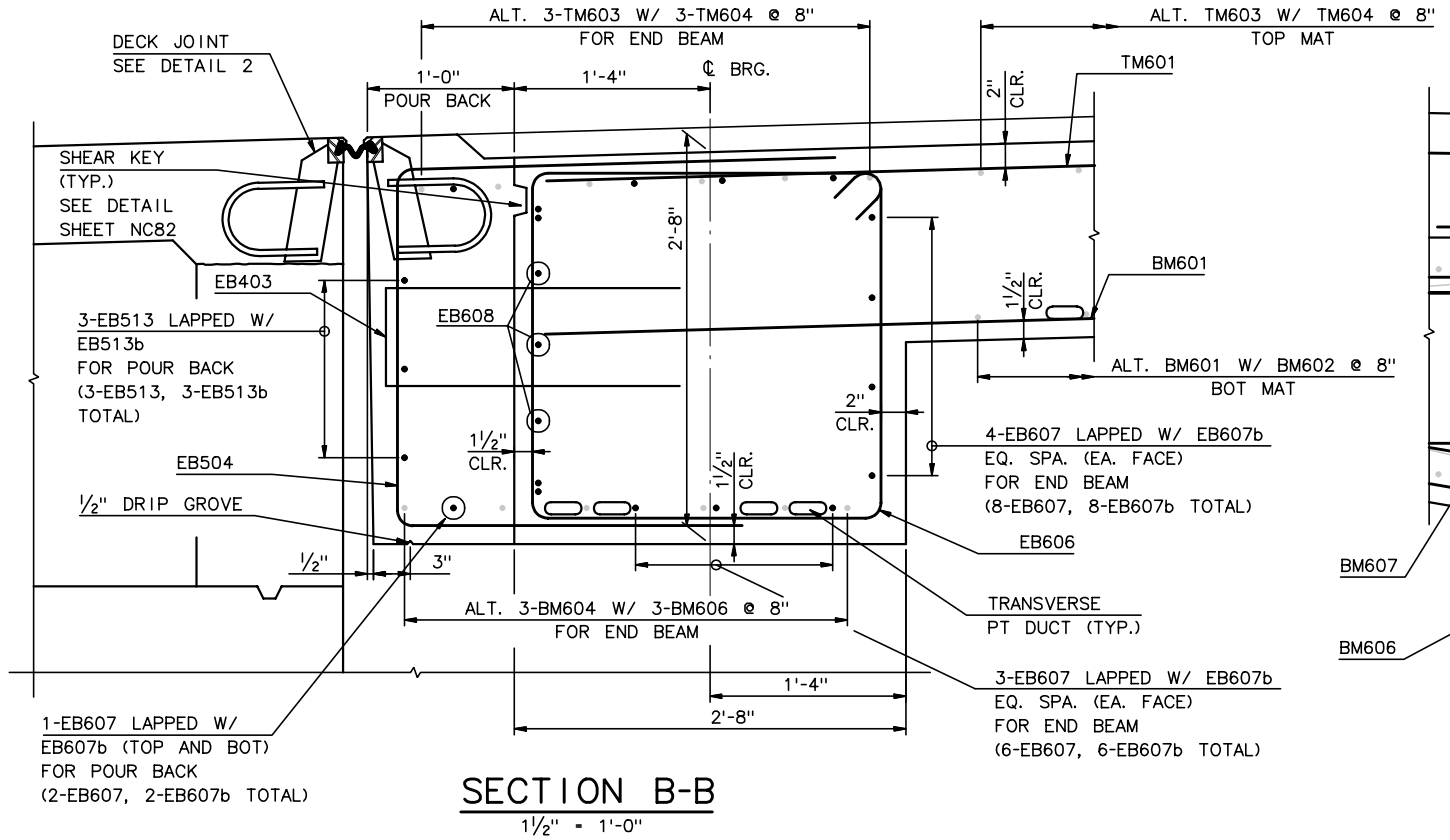

SECTION B-B

1½" = 1'-0"

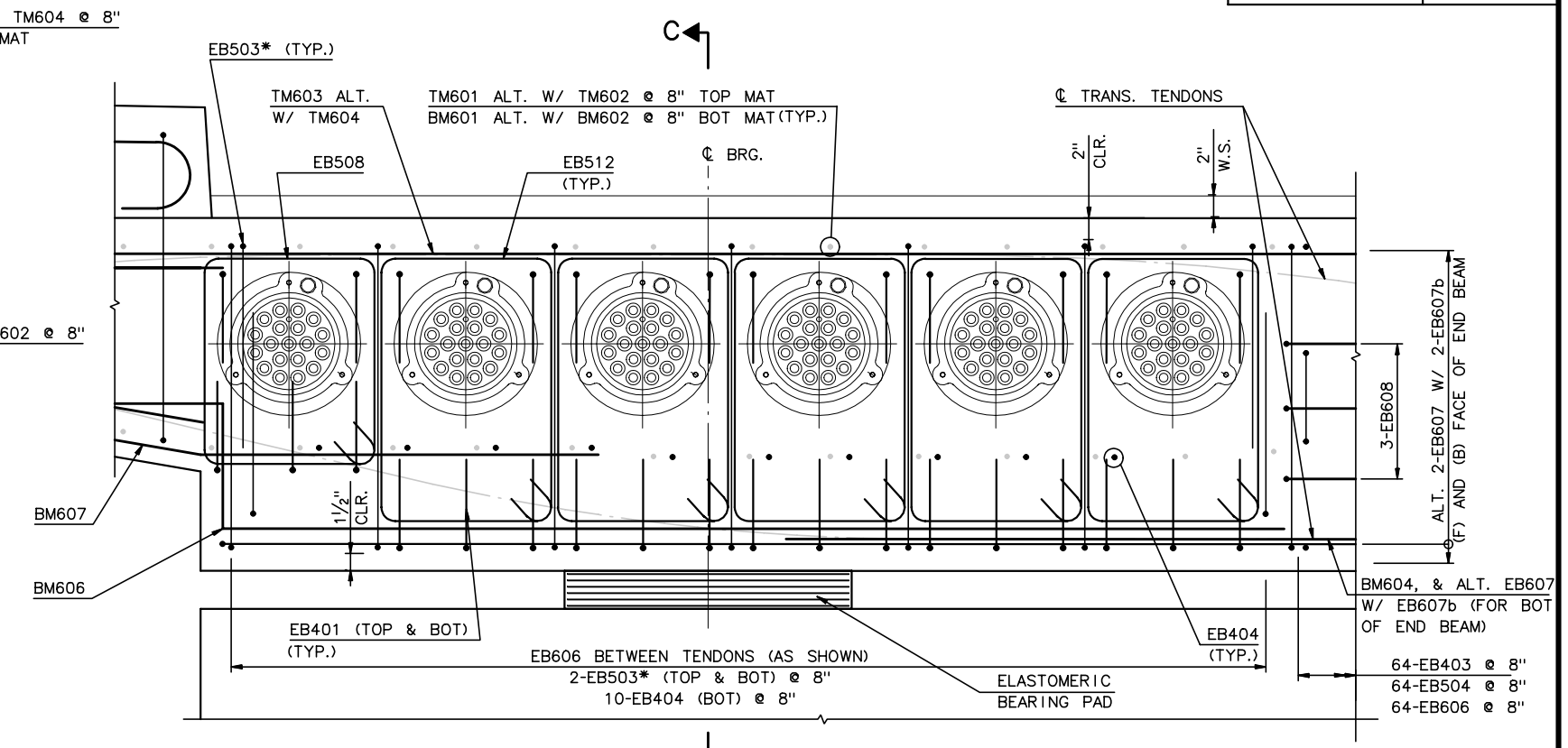

SECTION D-D

1½" = 1'-0"

* FIELD BEND EB503

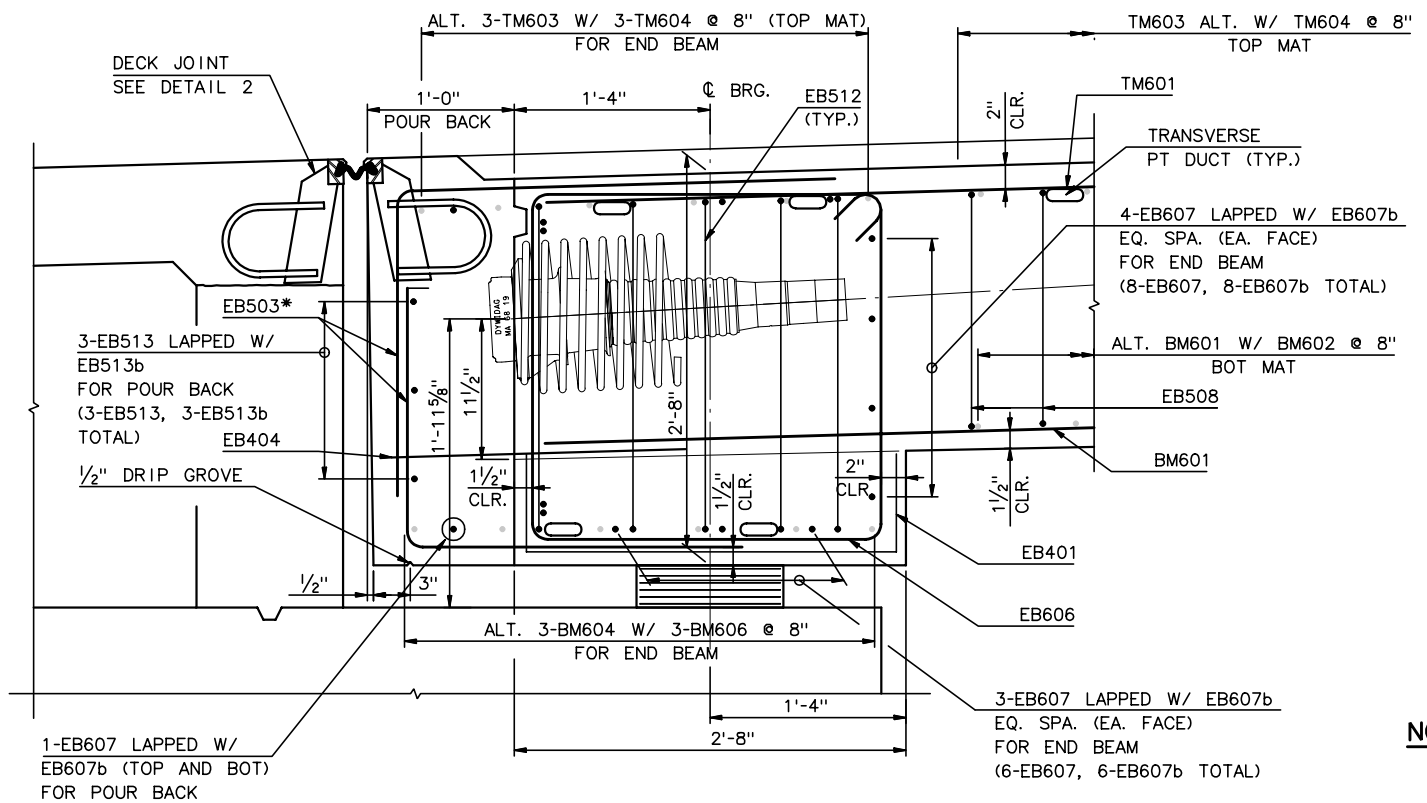

SECTION C-C

1½" = 1'-0"

* FIELD BEND EB503

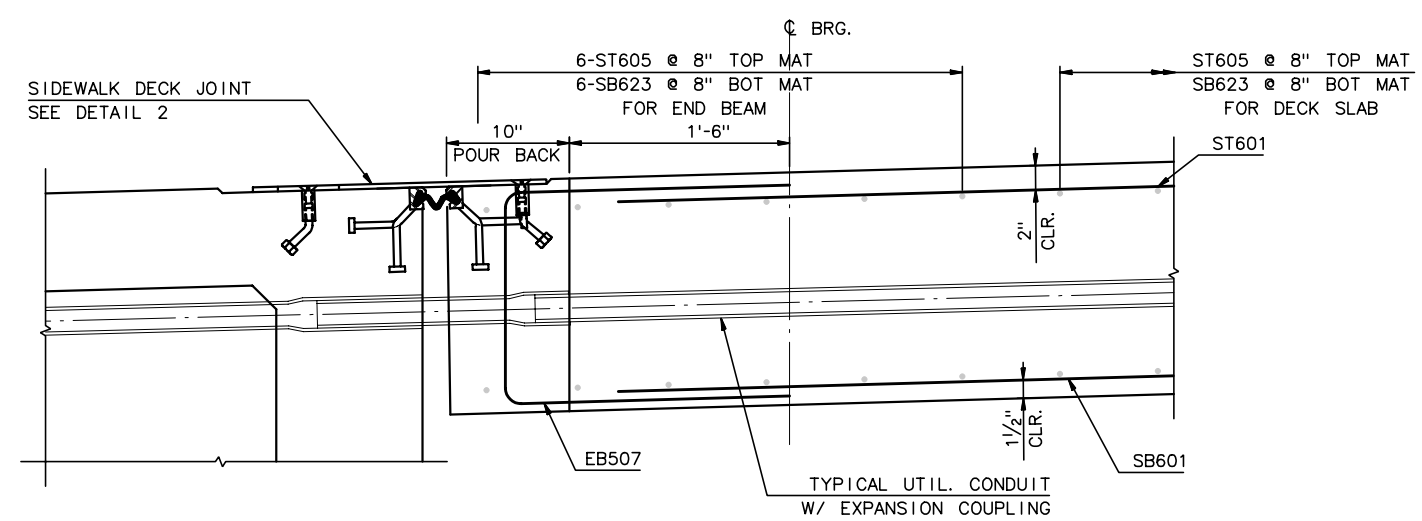

SECTION F-F

1½" = 1'-0"

(SIMILAR FOR ABUTMENT END BEAM)

NOTES:

1. FOR LOCATION OF SECTIONS B-B, C-C, D-D, AND F-F SEE SHEET NC72.
2. FOR DECK JOINT DETAILS, SEE SHEET NC94.

RECORD DRAWING

No.	Date	Revisions	By
3	10-17-01	REV BOT SECT C	AP
2	9-21-01	REV QTY EB606	BM
1	9-20-01	REV POUR BACK DIM	BM

HNTB CORPORATION

STATE OF WISCONSIN
DEPARTMENT OF TRANSPORTATION

STRUCTURE B-40-414C

Designed By	CE	Design Checked	TZ	Drawn By	BM	Plans Checked	AP

BASCULE END BEAM

3 OF 5

SHEET NC74 OF .

STATE PROJECT I.D.	SHEET NUMBER
2235-00-70	8.731

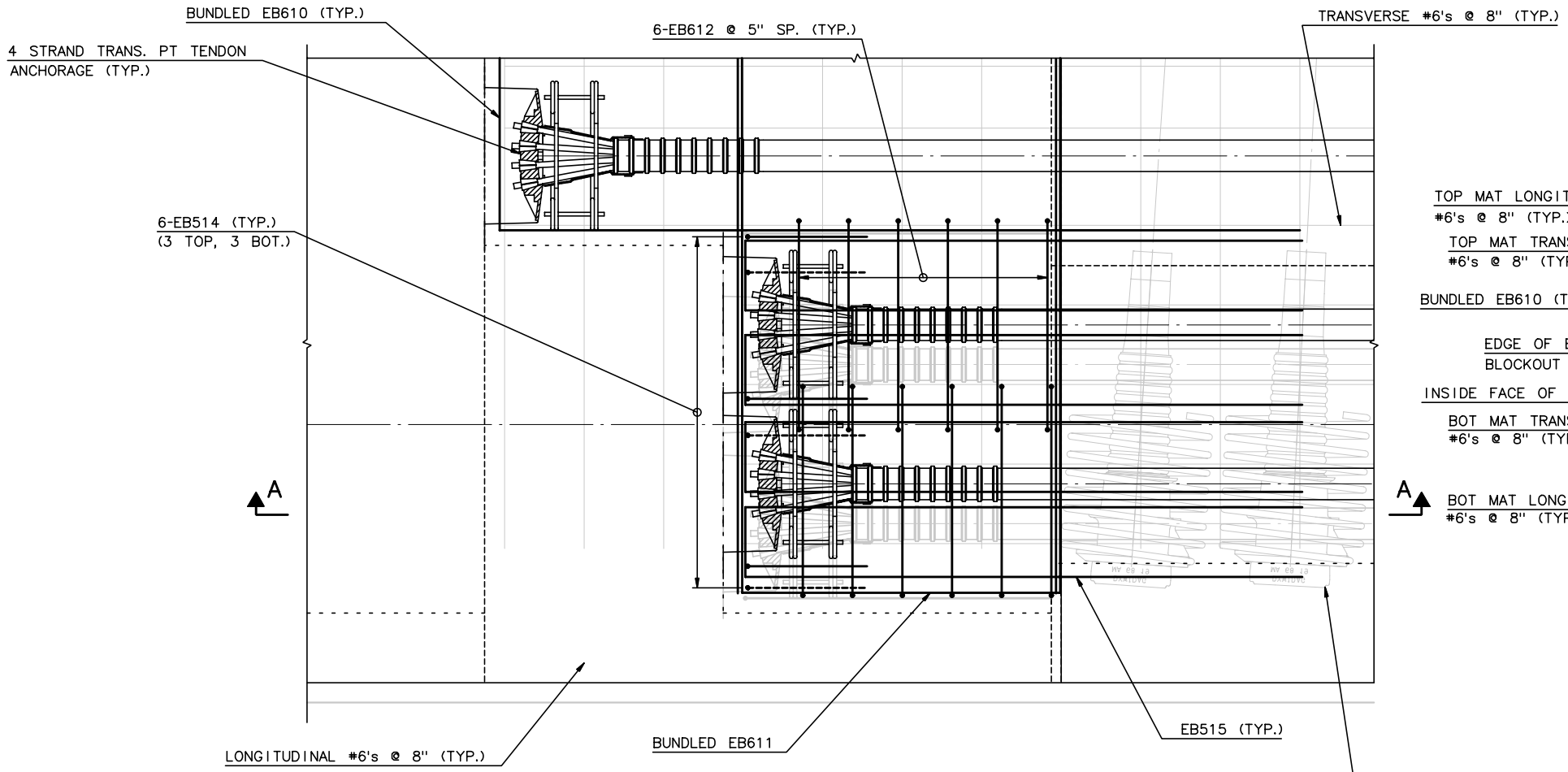

BLOCKOUT - PLAN

1½" = 1'-0"

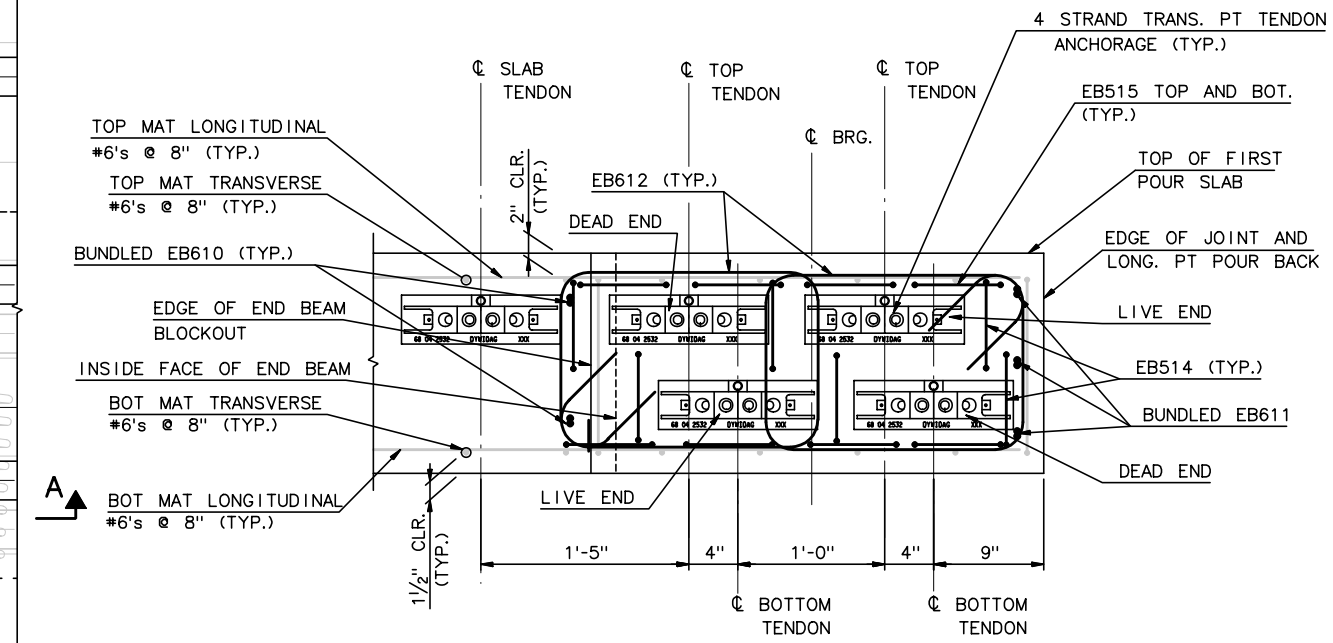

NOTE: SIDEWALK NOT SHOWN FOR CLARITY.

SECTION B-B
END BEAM LOCAL PT REINF.

1½" = 1'-0"

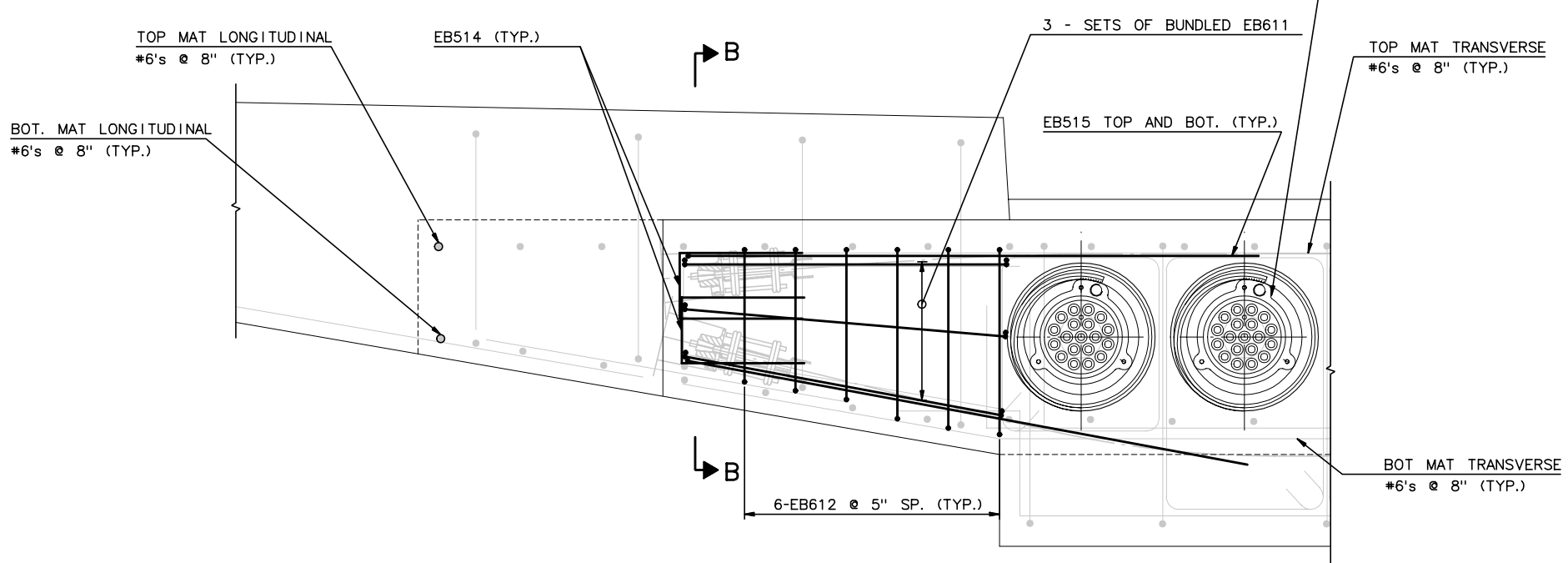

SECTION A-A
BLOCKOUT - ELEVATION

1½" = 1'-0"

NOTES:

1. SIDEWALK STEEL NOT SHOWN FOR CLARITY.

RECORD DRAWING

No.	Date	Revisions	By

HNTB CORPORATION

STATE OF WISCONSIN
DEPARTMENT OF TRANSPORTATION

STRUCTURE B-40-414C

Designed By	TZ	Design Checked	CE	Drawn By	CE	Plans Checked	BM

BASCULE END BEAM
4 OF 5

SHEET NC75 OF

STATE PROJECT I.D.	SHEET NUMBER
2235-00-70	8.732

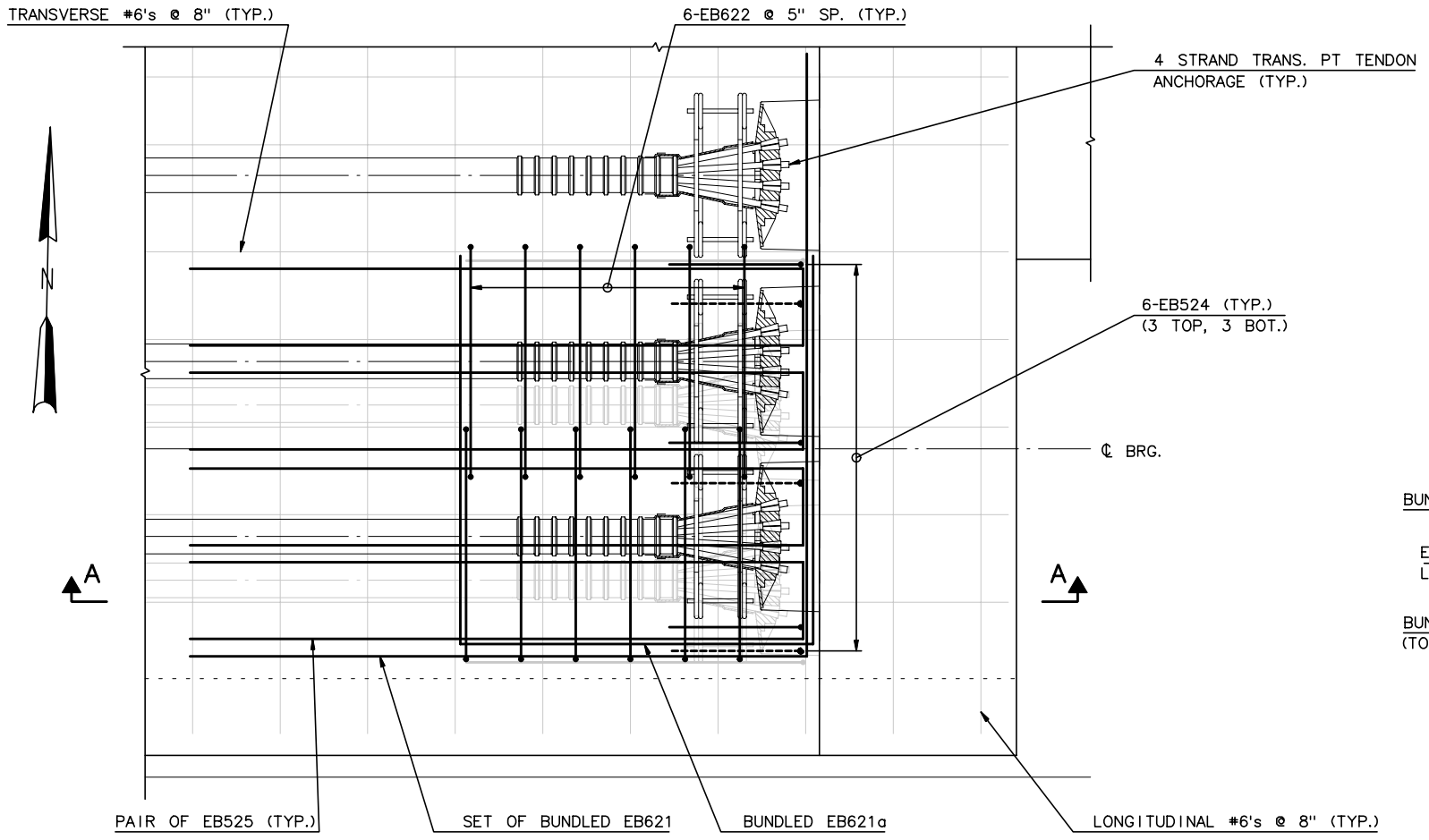

ANCHOR - PLAN

1½" = 1'-0"

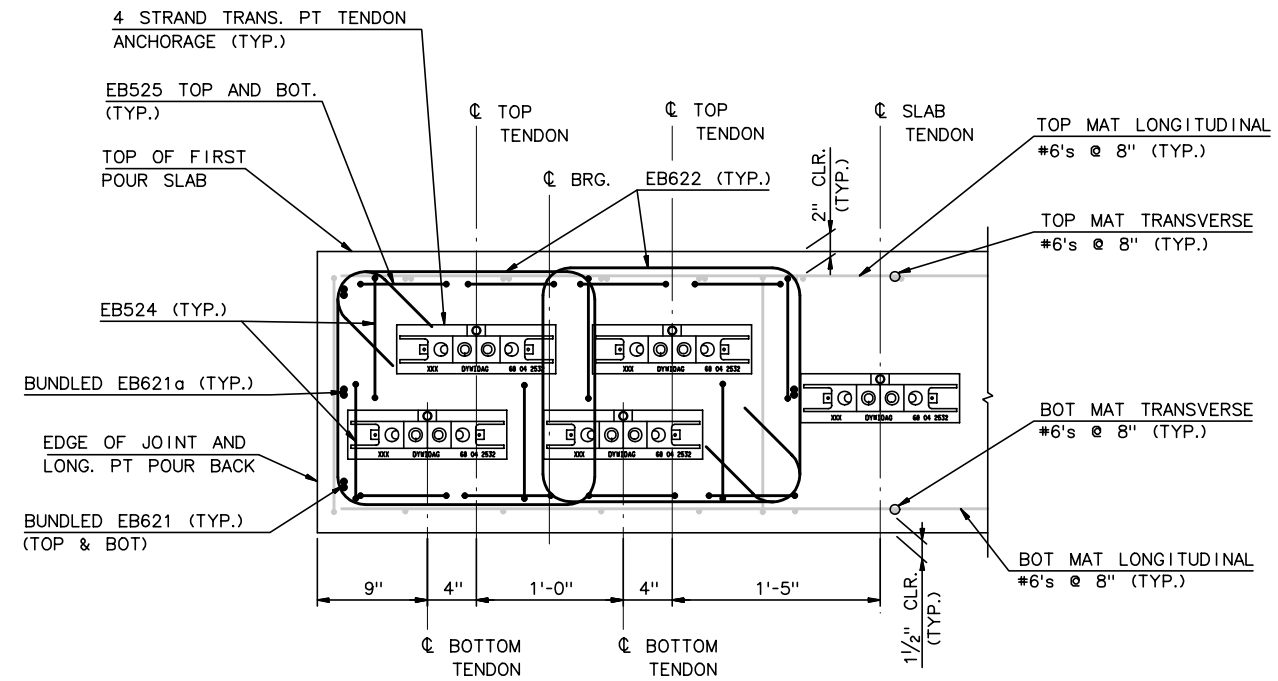

NOTE: SIDEWALK NOT SHOWN FOR CLARITY.

SECTION B-B
END BEAM LOCAL PT REINF.

1½" = 1'-0"

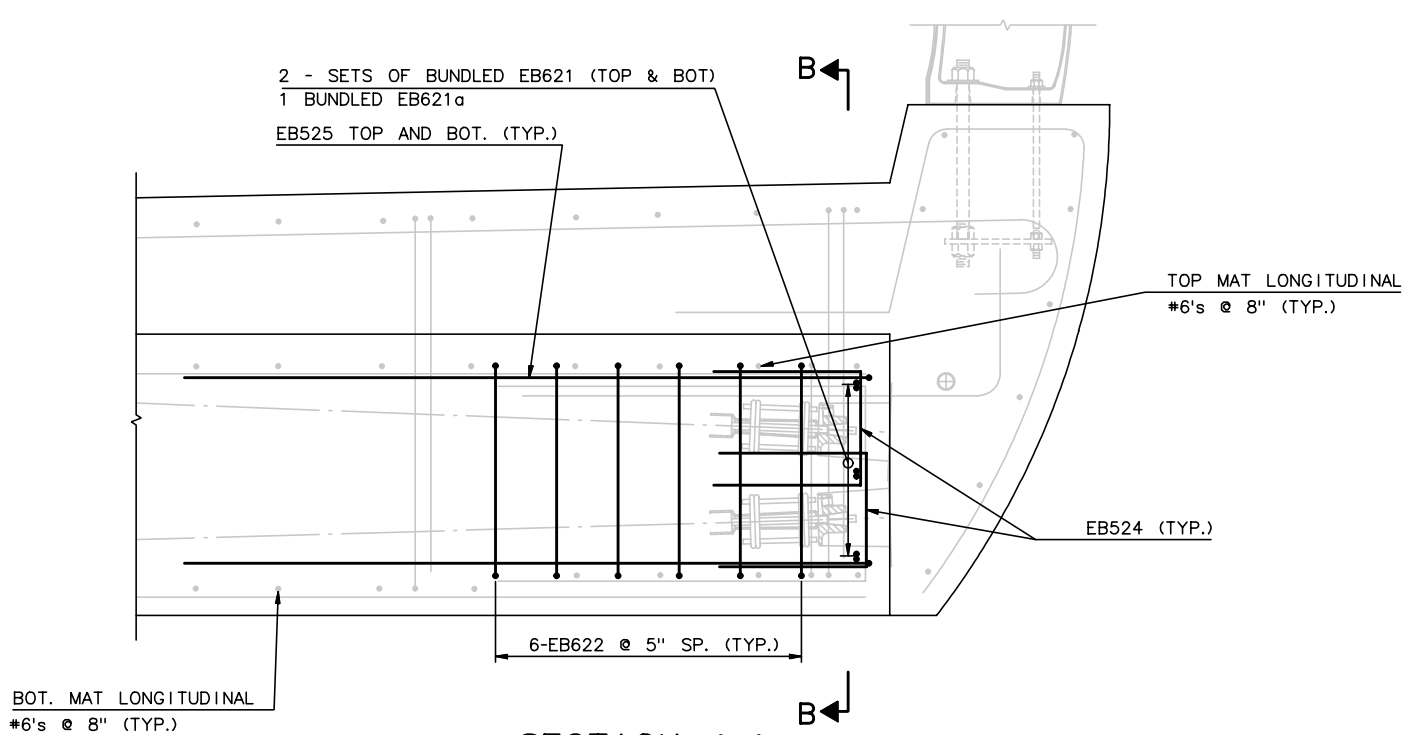

SECTION A-A
ANCHOR ELEVATION

1½" = 1'-0"

NOTES:

1. SIDEWALK STEEL NOT SHOWN FOR CLARITY.

RECORD DRAWING

No.	Date	Revisions	By

HNTB CORPORATION

STATE OF WISCONSIN
DEPARTMENT OF TRANSPORTATION

STRUCTURE B-40-414C

Designed By	TZ	Design Checked	CE	Drawn By	CE	Plans Checked	BM

BASCULE END BEAM
5 OF 5

SHEET NC75a OF

STATE PROJECT I.D.	SHEET NUMBER
2235-00-70	8.733

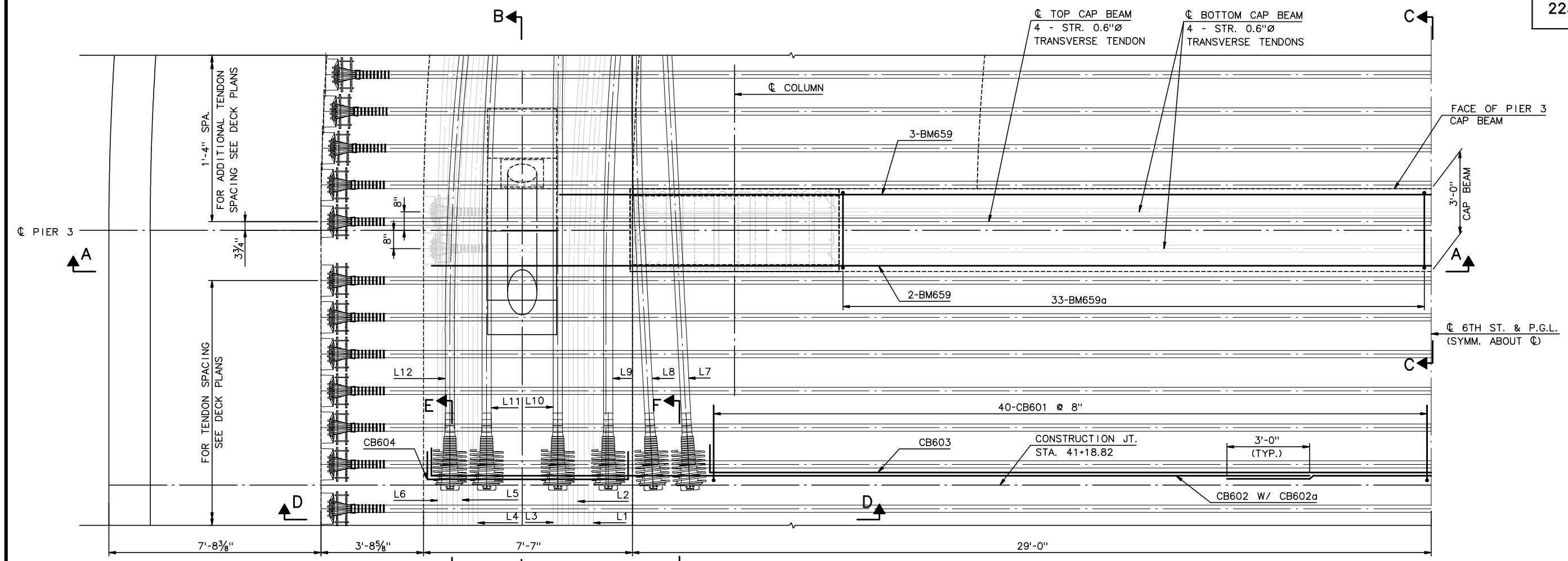

PIER 3 CAP BEAM - PLAN

½" = 1'-0"

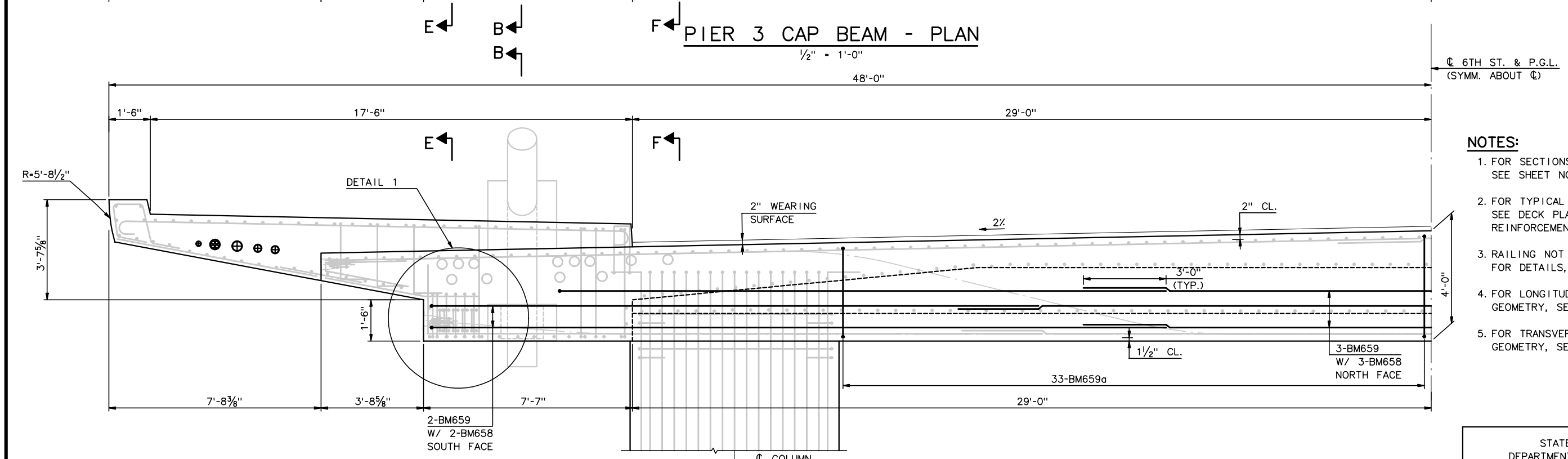

SECTION A-A

½" = 1'-0"

NOTES:

1. FOR SECTIONS B THRU F AND DETAIL 1, SEE SHEET NC77
2. FOR TYPICAL DECK REINFORCEMENT SEE DECK PLANS AND SLAB REINFORCEMENT CROSS SECTION SHEETS.
3. RAILING NOT SHOWN FOR CLARITY, FOR DETAILS, SEE SHTS NC99-103.
4. FOR LONGITUDINAL PT DETAILS AND GEOMETRY, SEE SHTS NC83-88.
5. FOR TRANSVERSE PT DETAILS AND GEOMETRY, SEE SHTS NC89-91.

RECORD DRAWING

No.	Date	Revisions	By
1	10/4/01	REV NOTES	AP

HNTB CORPORATION

STATE OF WISCONSIN
DEPARTMENT OF TRANSPORTATION

STRUCTURE B-40-414C

Designed By	SL	Design Checked	TZ	Drawn By	DS	Plans Checked	AP

PIER 3 CAP BEAM
1 OF 2

SHEET NC76 OF

STATE PROJECT I.D.	SHEET NUMBER
2235-00-70	8.734

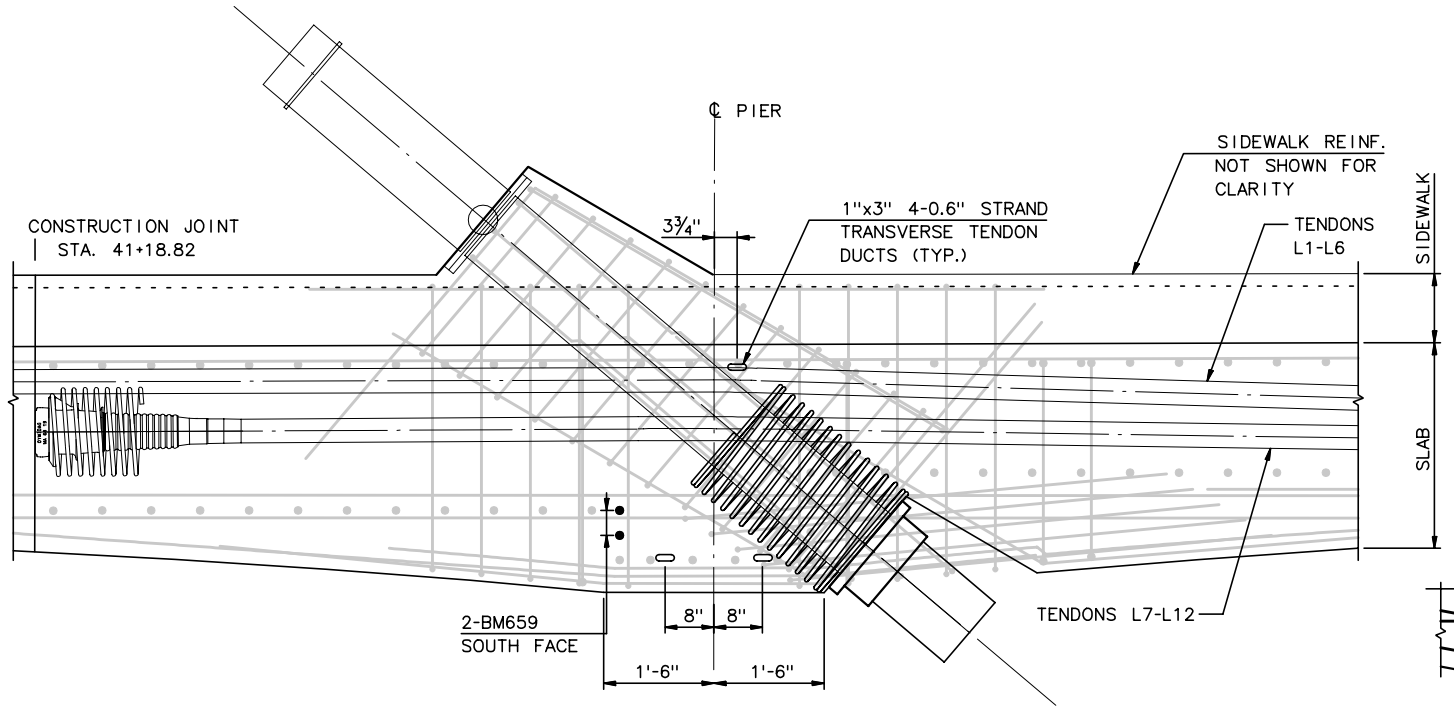

SECTION B-B

¾" = 1'-0"

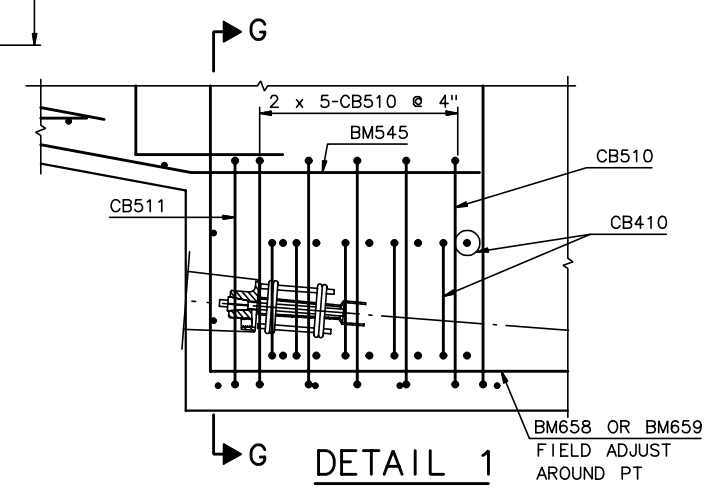

DETAIL 1

1½" = 1'-0"

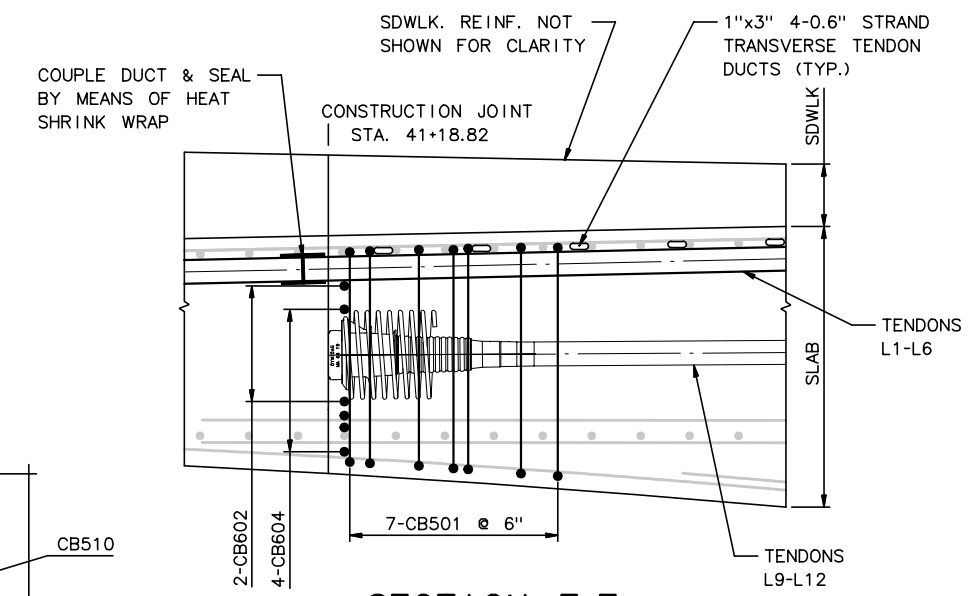

SECTION E-E

N.T.S.

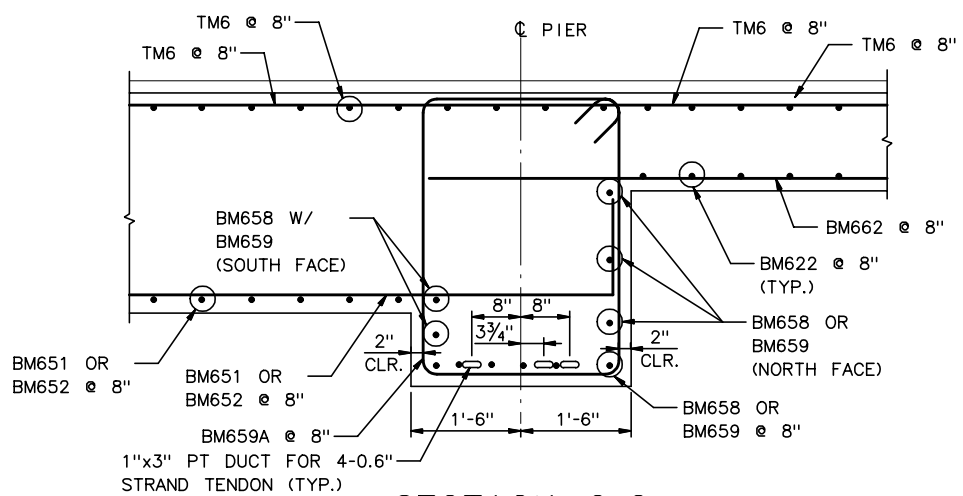

SECTION C-C

¾" = 1'-0"

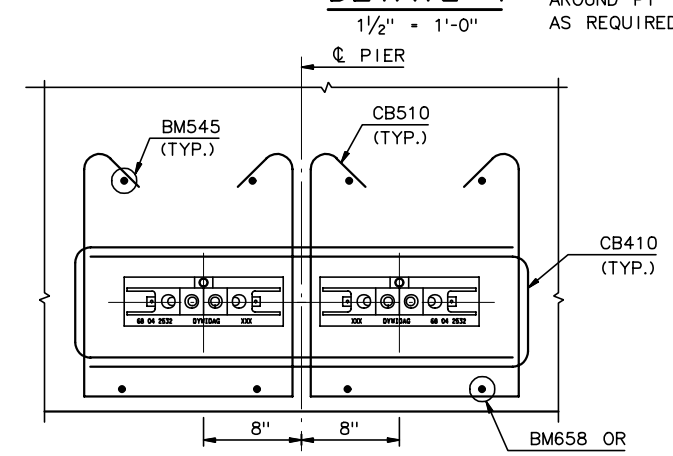

SECTION G-G

1½" = 1'-0"

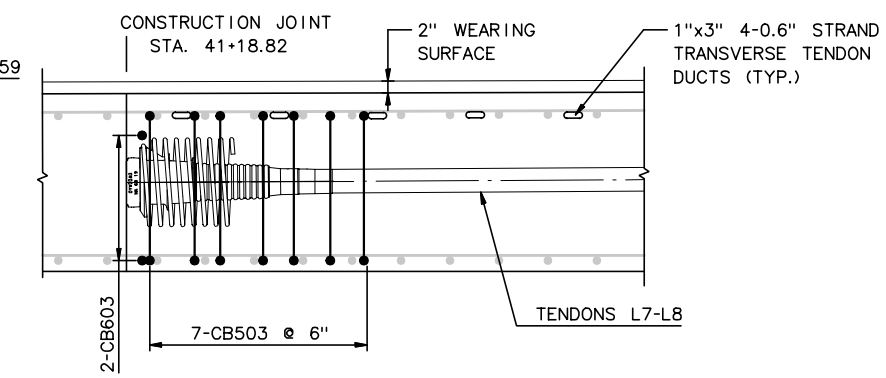

SECTION F-F

N.T.S.

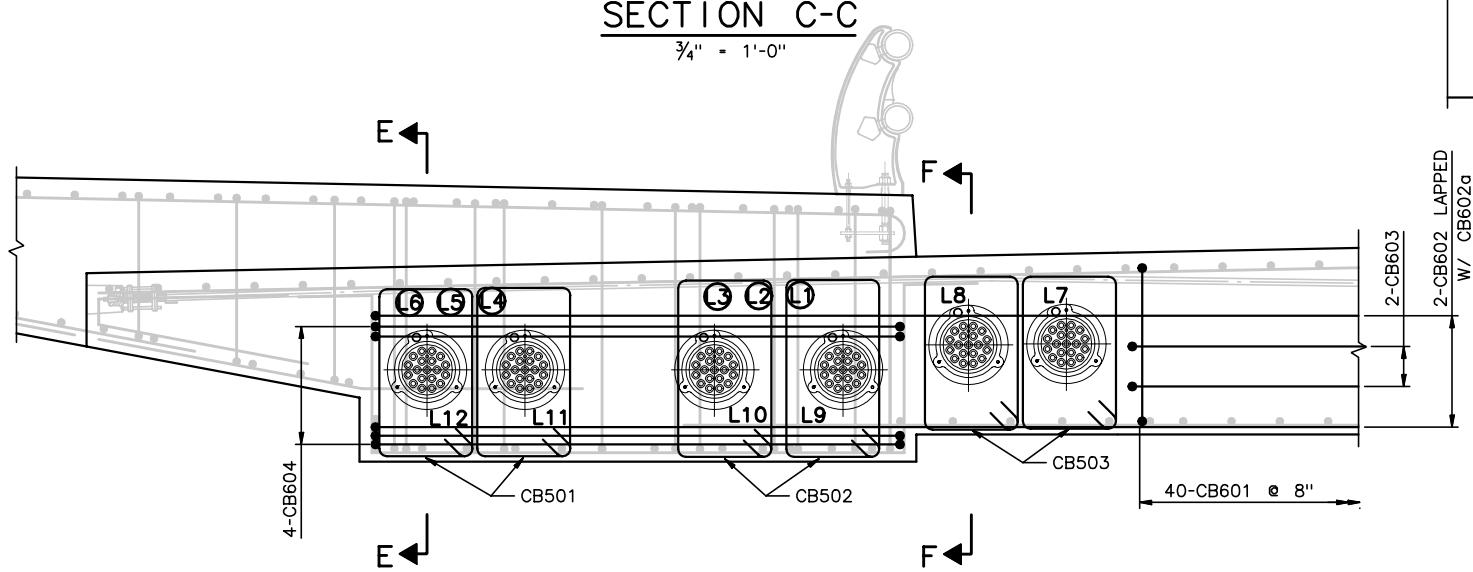

* ARRANGE SDWLK HOOKS AND
HOOPS AROUND LONG. TENDONS

SECTION D-D

¾" = 1'-0"

NOTES:

1. FOR LOCATION OF SECTIONS B-B & C-C, SEE SHEET NC76.
2. FOR TYPICAL DECK REINFORCEMENT, SEE SHEETS NC37 THRU NC64.
3. FOR LONGITUDINAL PT DETAILS AND GEOMETRY, SEE SHEETS NC83 THRU NC88.
4. FOR TRANSVERSE PT DETAILS AND GEOMETRY, SEE SHEETS NC89 THRU NC91.

RECORD DRAWING

No.	Date	Revisions	By
1	10-4-01	ADD DET. 1, SECT. G-G	AP

HNTB CORPORATION

STATE OF WISCONSIN
DEPARTMENT OF TRANSPORTATION

STRUCTURE B-40-414C

Designed By	SL	Design Checked	CE	Drawn By	JE	Plans Checked	AP

PIER 3 CAP BEAM
2 OF 2

SHEET NC77 OF .

STATE PROJECT I.D.	SHEET NUMBER
2235-00-70	8.735

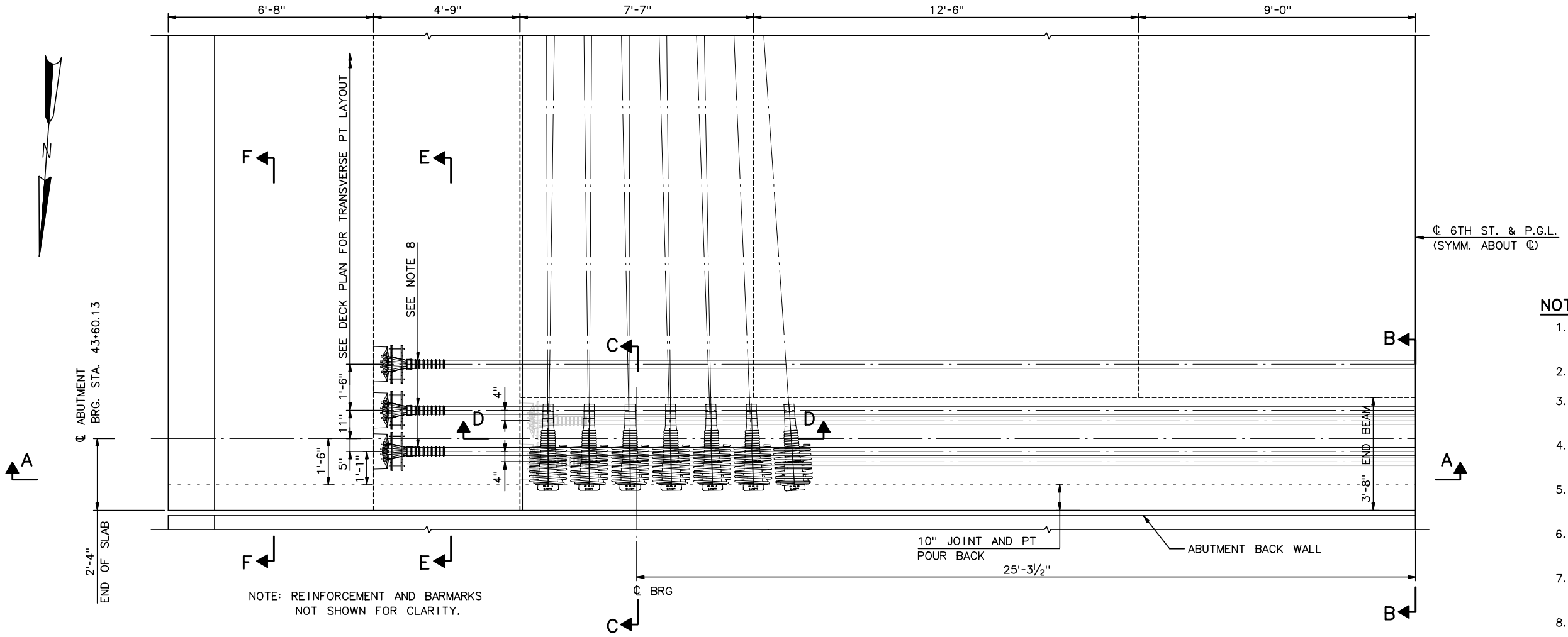

NOTE: REINFORCEMENT AND BARMARKS NOT SHOWN FOR CLARITY.

ABUTMENT END BEAM PLAN

½" = 1'-0"

NOTES:

1. FOR SECTION B-B, C-C, D-D, AND E-E SEE SHEET NC81.
2. FOR SECTION FF, SEE SHEET NC74.
3. FOR TRANSVERSE TENDON PROFILE, SEE SHEET NC90.
4. FOR LONGITUDINAL TENDON PROFILE, SEE SHEETS NC83 THRU NC87.
5. FOR ADDITIONAL END BEAM REINFORCEMENT, SEE SHEET NC81, NC82 & NC82a.
6. FOR BURSTING REINFORCEMENT, SEE SHEET NC81, NC82 & NC82a.
7. BOTTOM TRANSVERSE PT SHOWN SCREENED IN PLAN VIEW.
8. ALTERNATE LIVE END AND DEAD END PT ANCHORAGES.

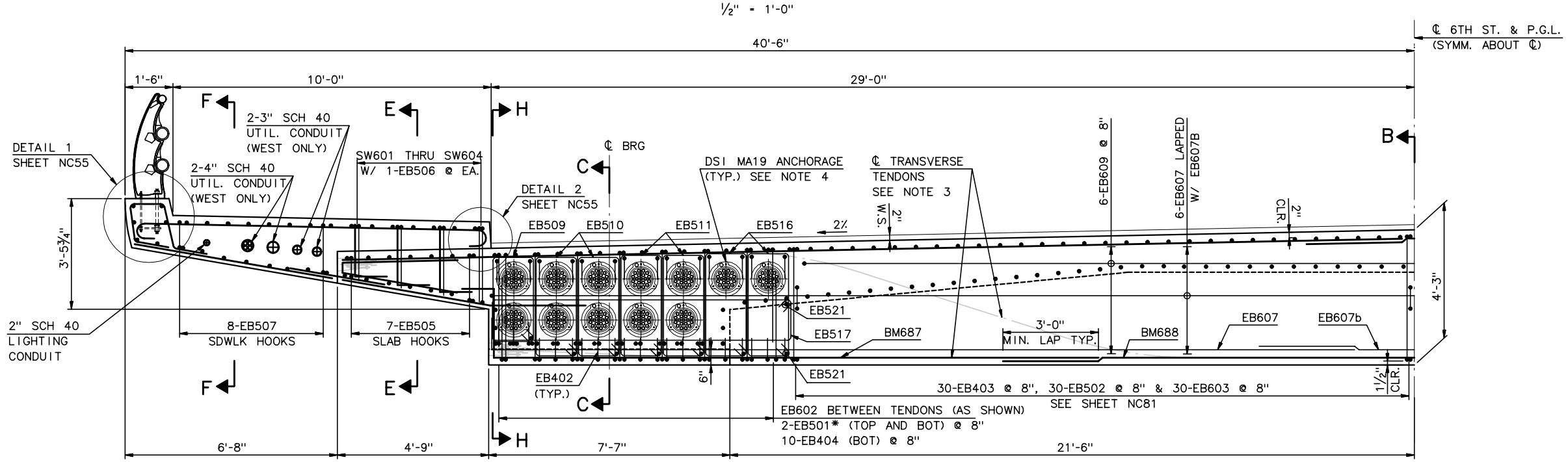

SECTION A-A END BEAM ELEVATION

½" = 1'-0"

* FIELD BEND AFTER STRESSING

RECORD DRAWING

No.	Date	Revisions	By

HNTB CORPORATION

STATE OF WISCONSIN
DEPARTMENT OF TRANSPORTATION

STRUCTURE B-40-414C

Designed By	TZ	Design Checked	CE	Drawn By	BM	Plans Checked	AP

ABUTMENT END BEAM
1 OF 4

SHEET NC80 OF .

STATE PROJECT I.D.	SHEET NUMBER
2235-00-70	8.736

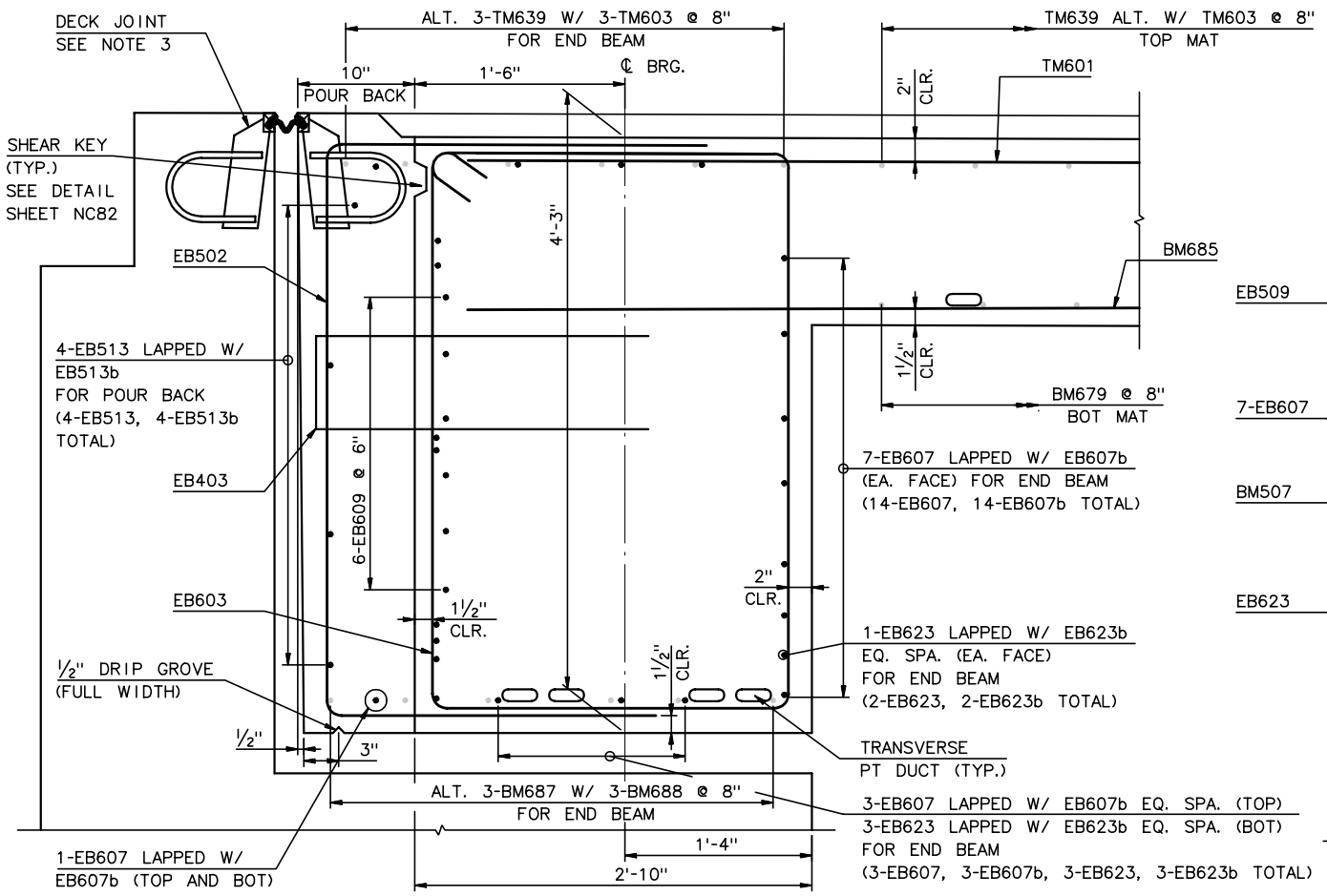

SECTION B-B

1½" = 1'-0"

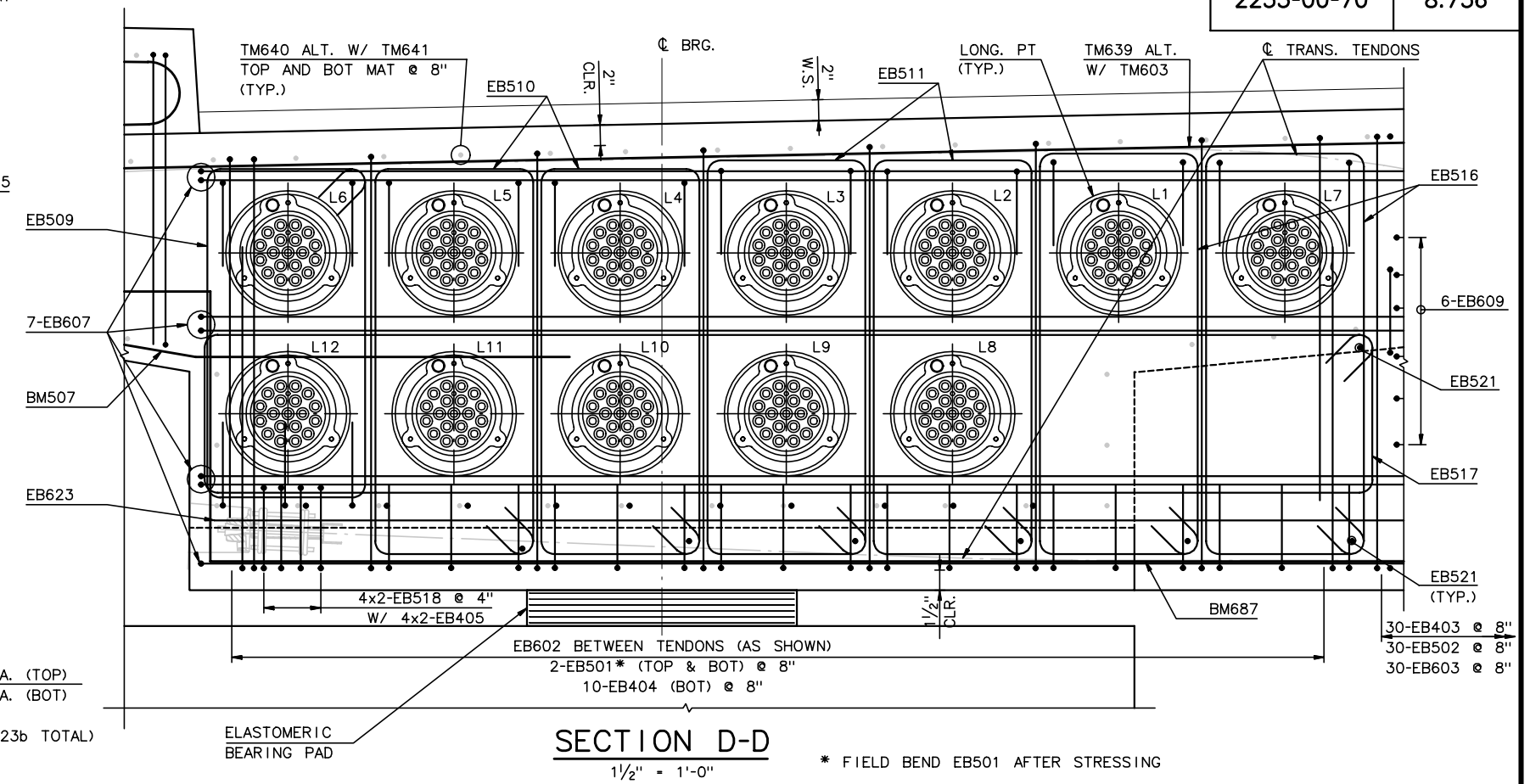

SECTION D-D

1½" = 1'-0"

* FIELD BEND EB501 AFTER STRESSING

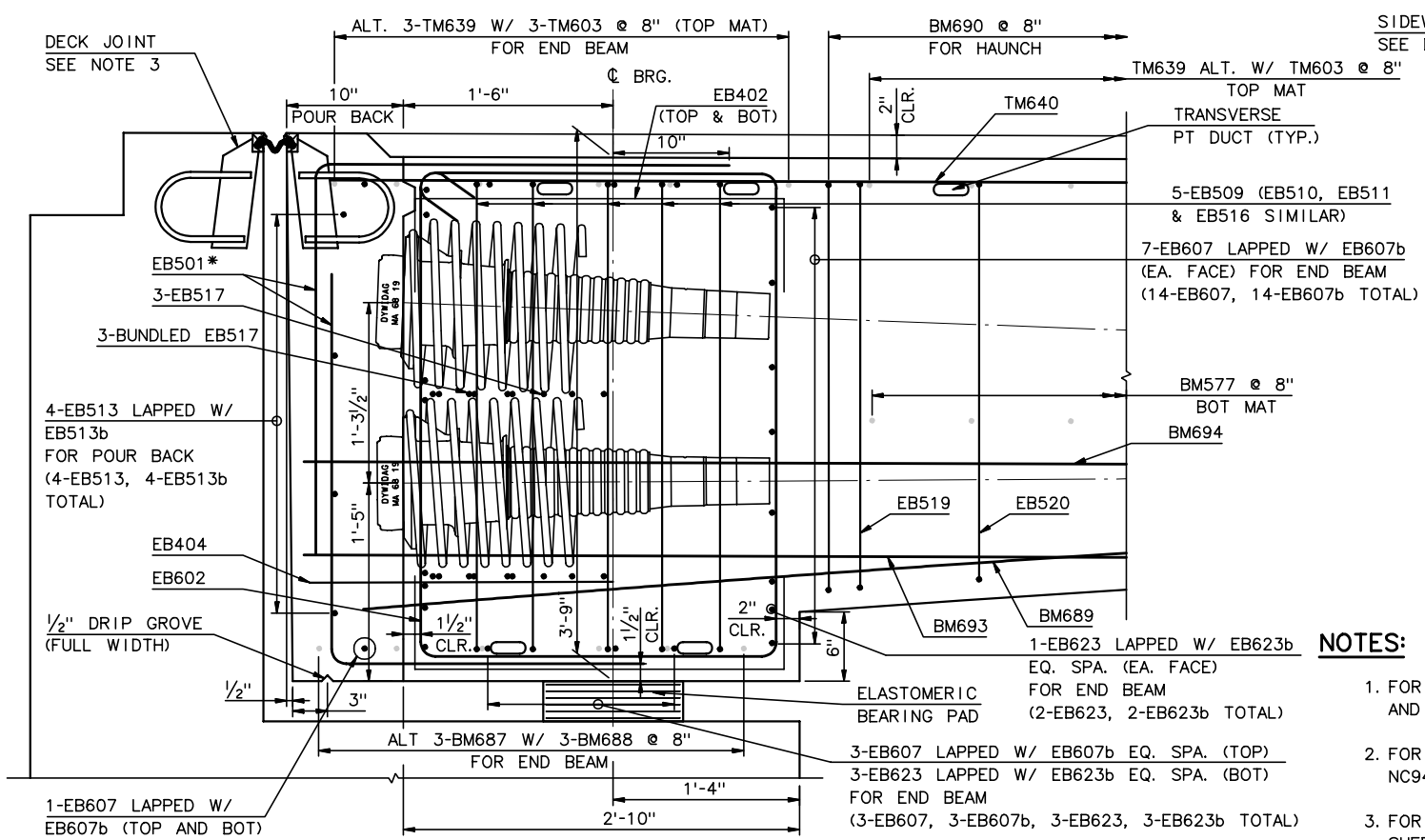

SECTION C-C

1½" = 1'-0"

* FIELD BEND EB501 AFTER STRESSING

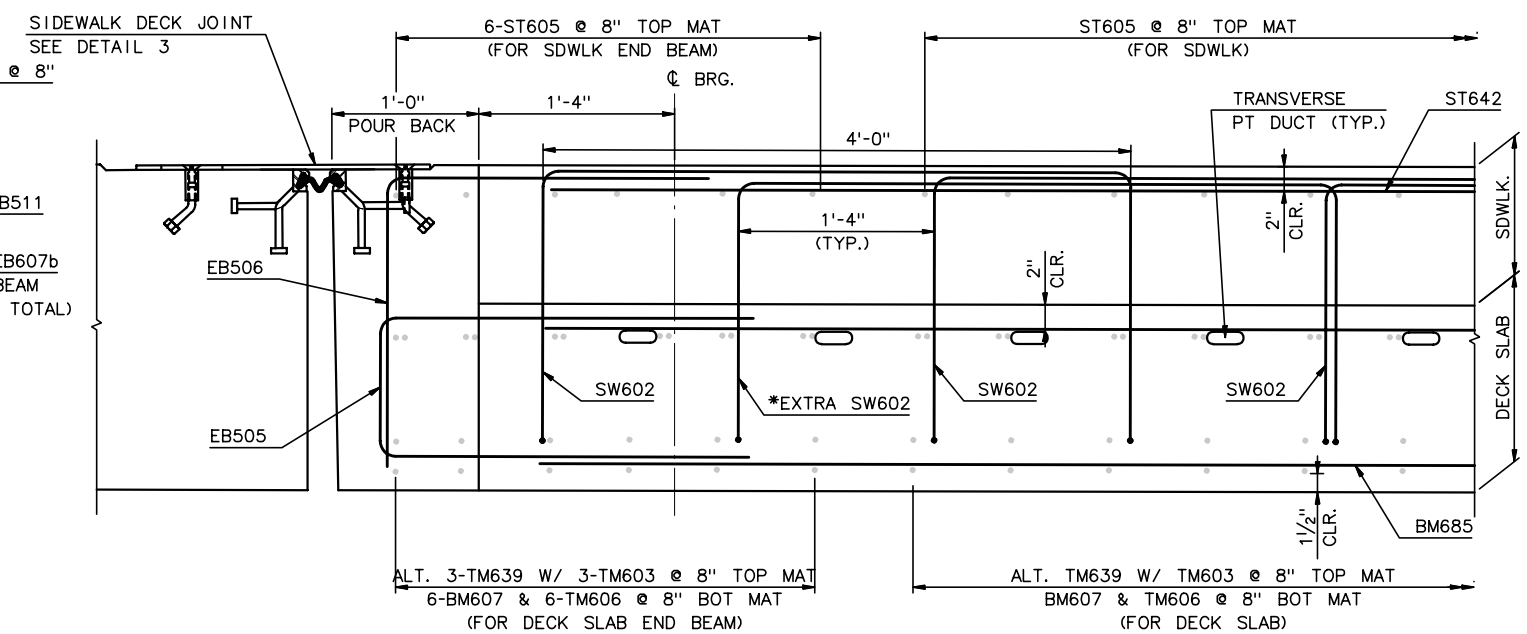

SECTION E-E

1½" = 1'-0"

*NOTE: SW601 THRU SW604 FOLLOW SIMILAR LAYOUT TO SW602, BARS SHALL BE SPACED TO PROVIDE A VERTICAL LEG AT 1'-4" ONE ADDITIONAL BAR REQUIRED AT EACH END.

NOTES:

1. FOR LOCATION OF SECTION B-B, C-C, AND D-D AND E-E SEE SHEET NC80.
2. FOR DECK JOINT DETAILS, SEE SHEETS NC94 & NC95.
3. FOR POST TENSIONING LAYOUT, SEE SHEETS NC83 THRU NC91.

RECORD DRAWING

No.	Date	Revisions	By

HNTB CORPORATION

STATE OF WISCONSIN
DEPARTMENT OF TRANSPORTATION

STRUCTURE B-40-414C

Designed By	TZ	Design Checked	CE	Drawn By	BM	Plans Checked	AP

ABUTMENT END BEAM

2 OF 4

SHEET NC81 OF .

STATE PROJECT I.D.	SHEET NUMBER
2235-00-70	8.737

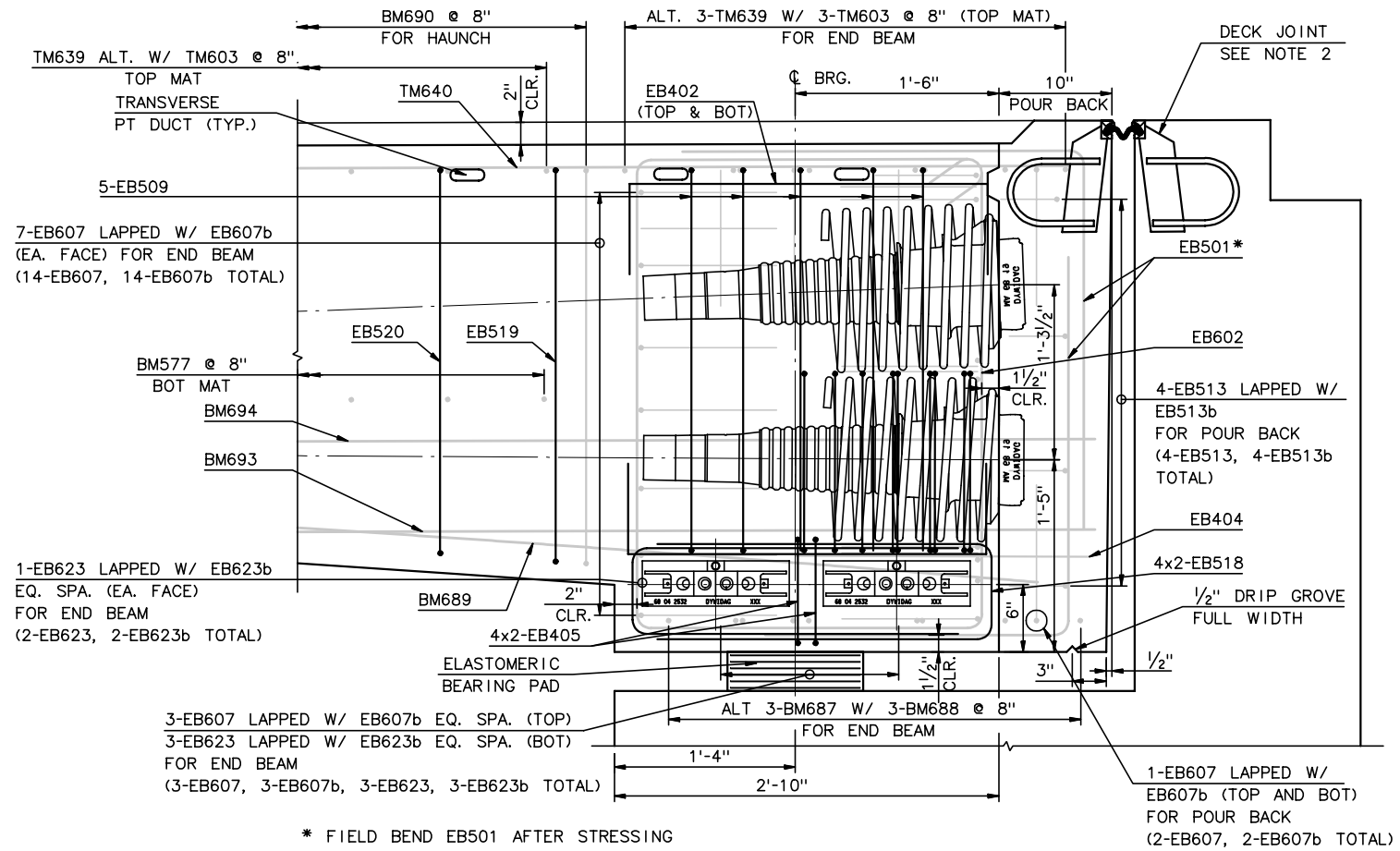

* FIELD BEND EB501 AFTER STRESSING

SECTION H-H

1½" = 1'-0"

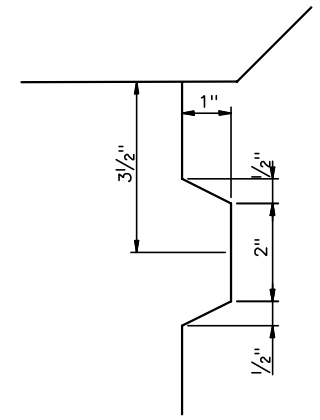

SHEAR KEY DETAIL

N.T.S

NOTES:

1. FOR PT PROFILES, SEE SHEETS NC83 THRU NC91.
2. FOR DECK JOINT DETAILS, SEE SHEETS NC94 & NC95.
3. FOR TYPICAL END BEAM REINFORCEMENT, SEE SHEETS NC80 & NC81.

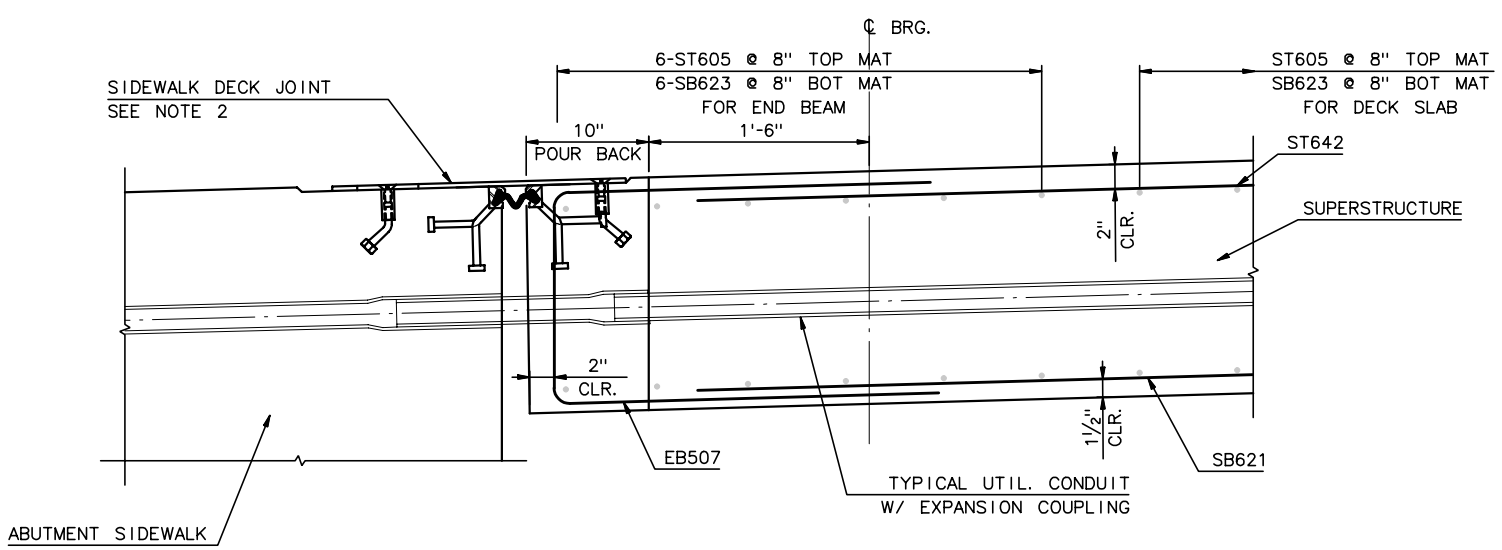

SECTION F-F

1½" = 1'-0"

RECORD DRAWING

No.	Date	Revisions	By

HNTB CORPORATION

STATE OF WISCONSIN
DEPARTMENT OF TRANSPORTATION

STRUCTURE B-40-414C

Designed By	TZ	Design Checked	CE	Drawn By	BM	Plans Checked	AP

ABUTMENT END BEAM

3 OF 4

SHEET NC82 OF .

STATE PROJECT I.D.	SHEET NUMBER
2235-00-70	8.738

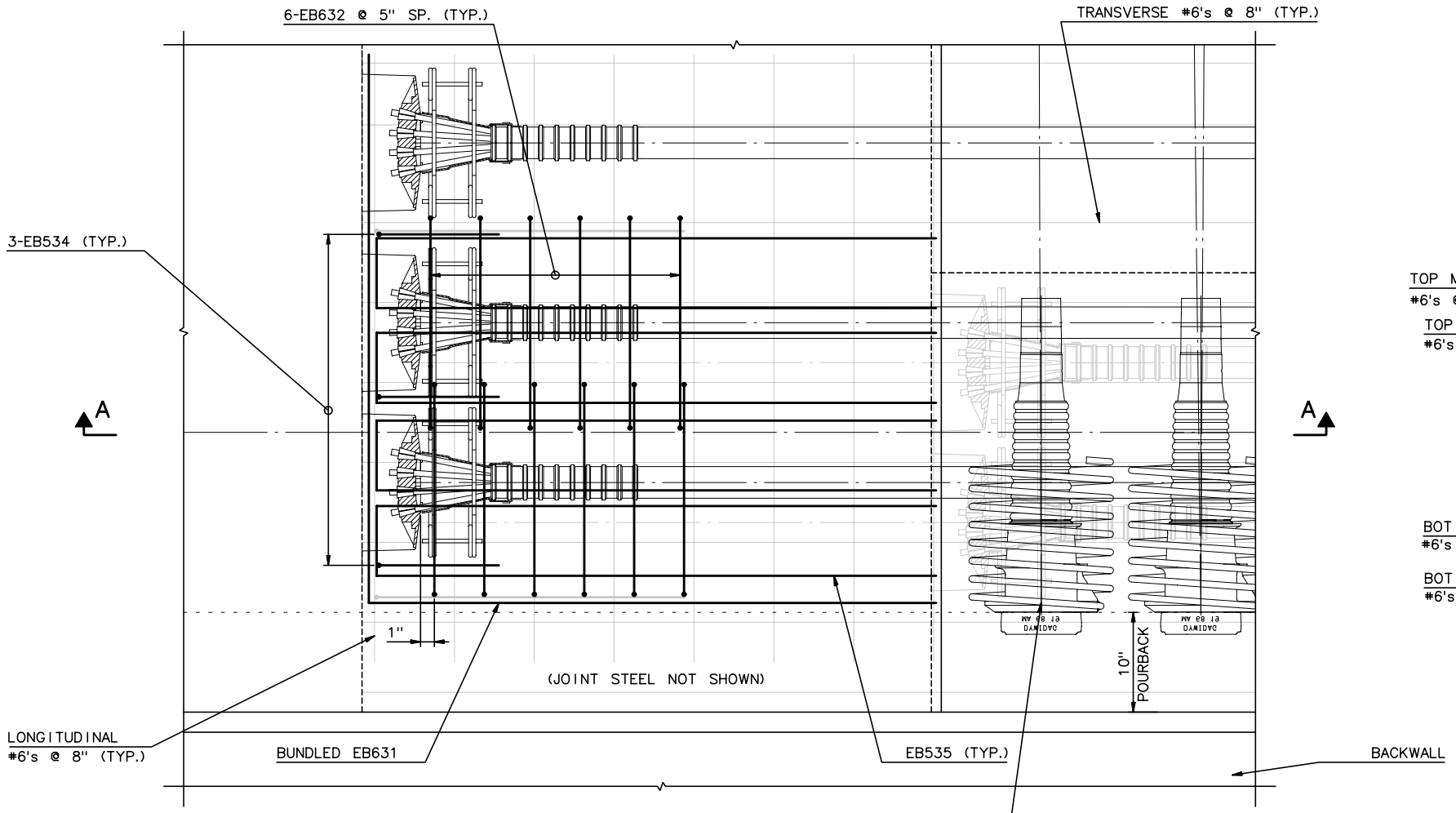

BLOCKOUT - PLAN

1½" = 1'-0"

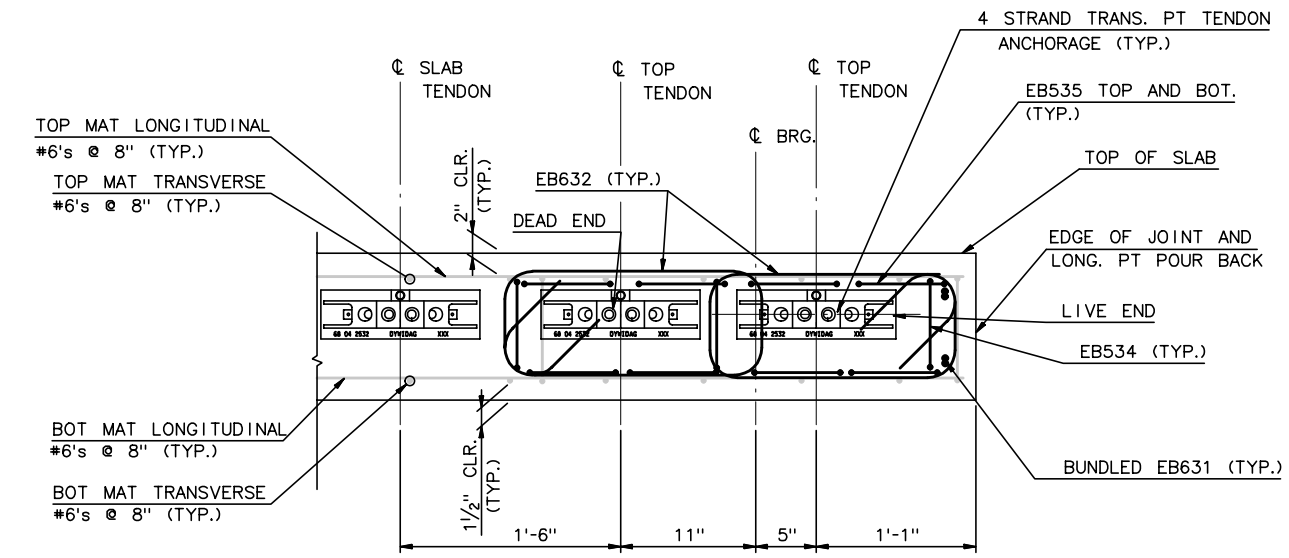

NOTE: SIDEWALK NOT SHOWN FOR CLARITY.

SECTION B-B
END BEAM LOCAL PT REINF.

1½" = 1'-0"

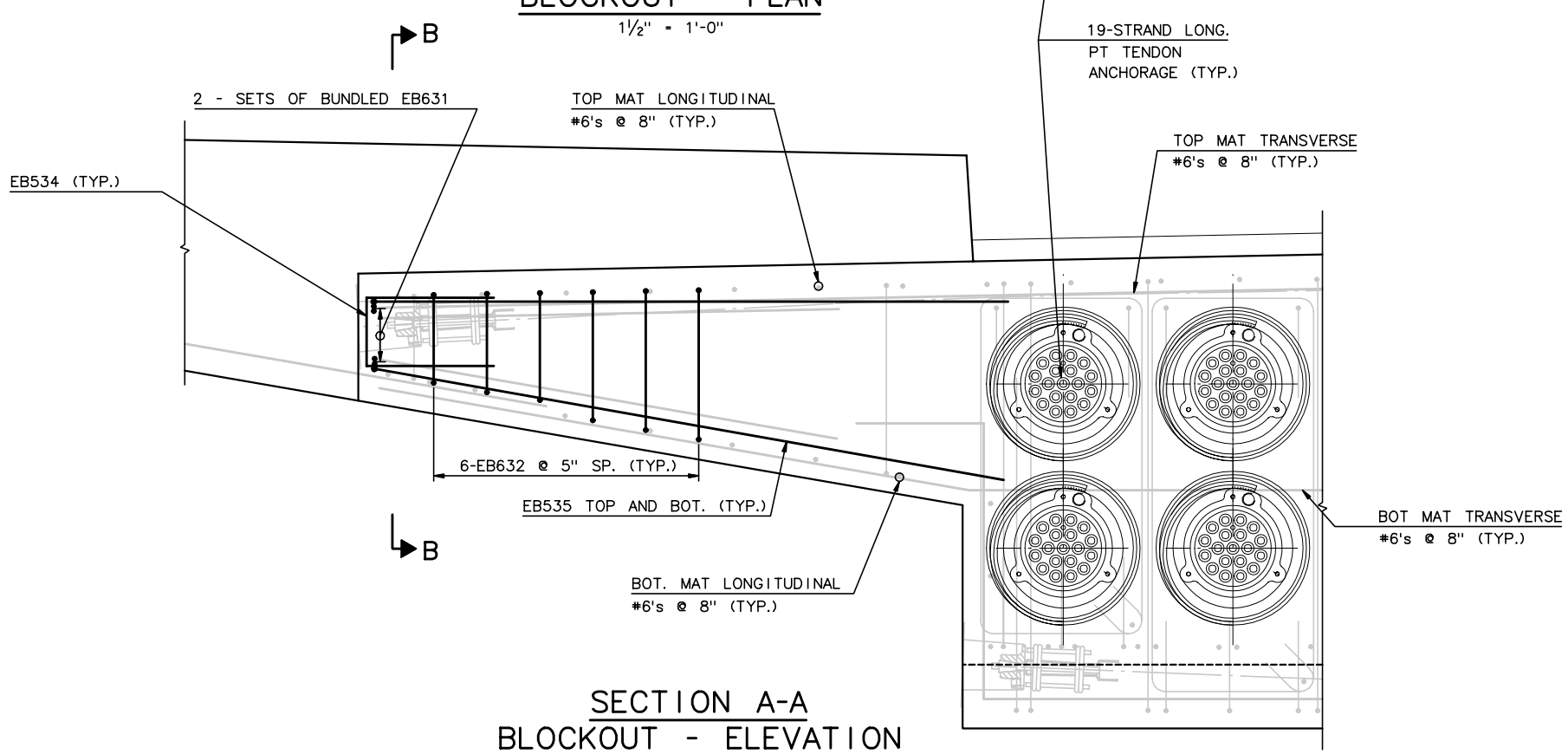

SECTION A-A
BLOCKOUT - ELEVATION

1½" = 1'-0"

NOTES:

1. SIDEWALK STEEL NOT SHOWN FOR CLARITY.
2. ABUTMENT END BEAM SHOWN, BASCULE END BEAM SIMILAR.

RECORD DRAWING

No.	Date	Revisions	By

HNTB CORPORATION

STATE OF WISCONSIN
DEPARTMENT OF TRANSPORTATION

STRUCTURE B-40-414C

Designed By	TZ	Design Checked	CE	Drawn By	BM	Plans Checked	AP

Abutment End Beam 4 of 4

SHEET NC82aOF

STATE PROJECT I.D.	SHEET NUMBER
2235-00-70	8.739

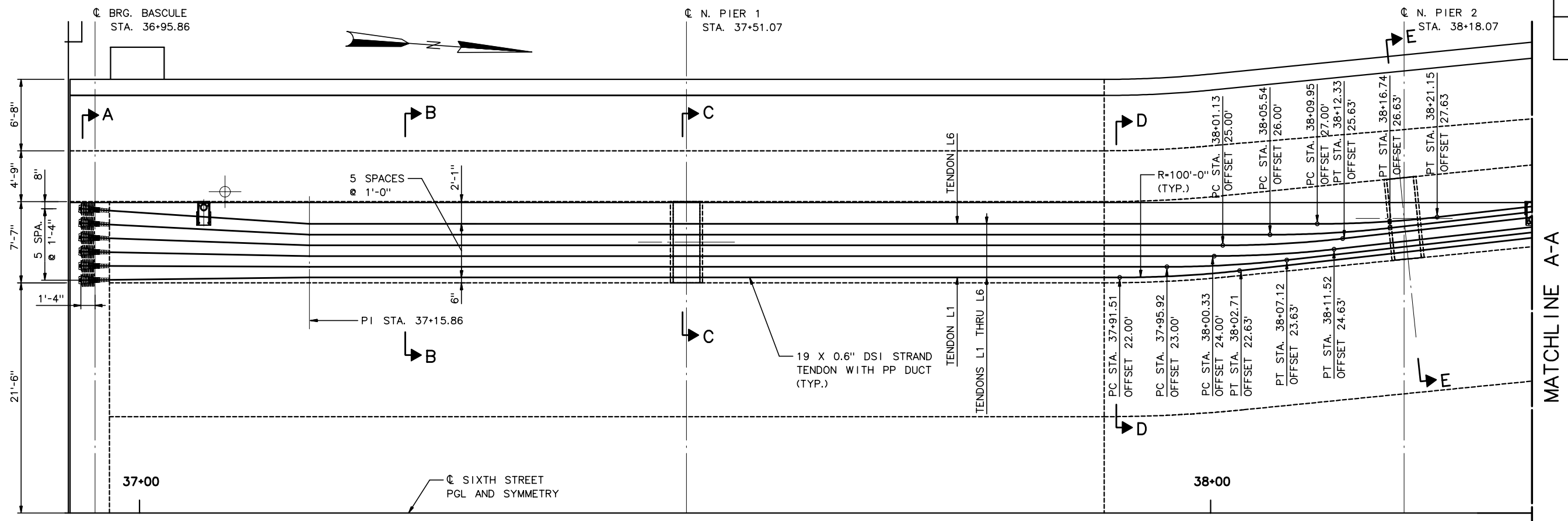

TENDON HORIZONTAL PROFILE
HALF PLAN

N.T.S.

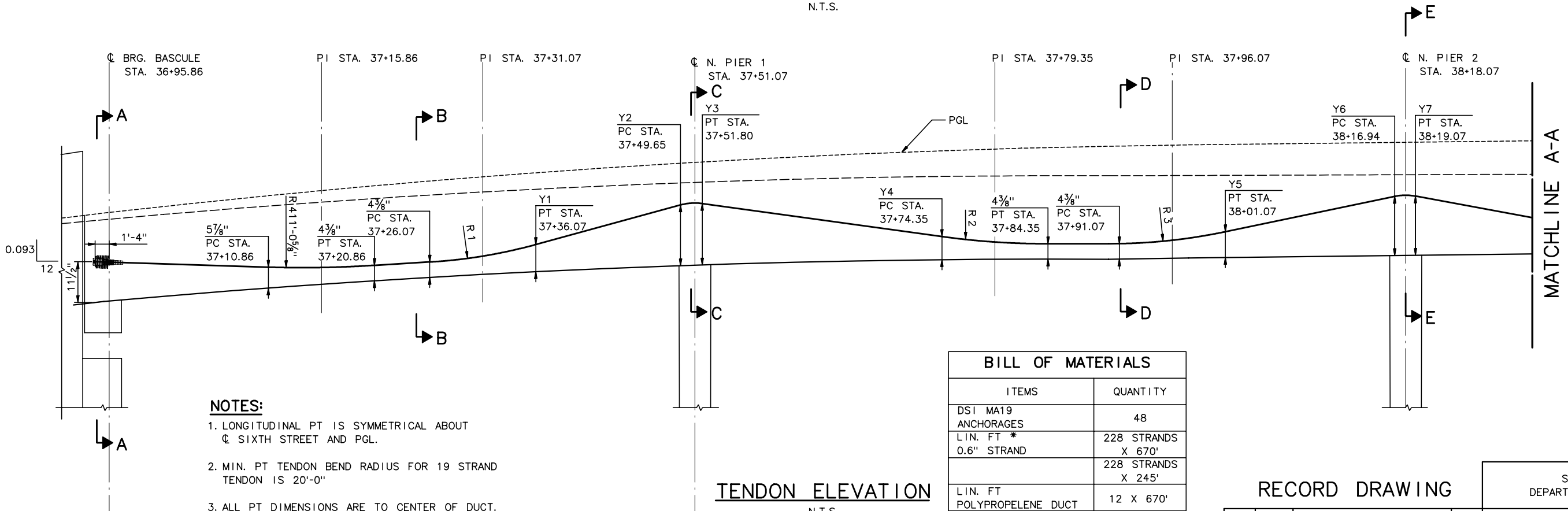

TENDON ELEVATION

N.T.S.

NOTES:

1. LONGITUDINAL PT IS SYMMETRICAL ABOUT ℄ SIXTH STREET AND PGL.
2. MIN. PT TENDON BEND RADIUS FOR 19 STRAND TENDON IS 20'-0"
3. ALL PT DIMENSIONS ARE TO CENTER OF DUCT.
4. TENDONS L1 THRU L6 SHALL BE DOUBLE END STRESSED TO 835 KIPS

BILL OF MATERIALS

ITEMS	QUANTITY
DSI MA19 ANCHORAGES	48
LIN. FT * 0.6" STRAND	228 STRANDS X 670'
	228 STRANDS X 245'
LIN. FT POLYPROPELENE DUCT	12 X 670'
	12 X 245'

* LENGTH DOES NOT INCLUDE ADDITIONAL STRESSING LENGTH

RECORD DRAWING

No.	Date	Revisions	By
1	9-26-01	ADD ANCHORAGE SLOPE	SL

HNTB CORPORATION

STATE OF WISCONSIN
DEPARTMENT OF TRANSPORTATION

STRUCTURE B-40-414C

Designed By	SL	Design Checked	TZ	Drawn By	JE	Plans Checked	SL

NORTH CABLE STAY
LONGITUDINAL PT
1 OF 7

SHEET NC83 OF .

STATE PROJECT I.D.	SHEET NUMBER
2235-00-70	8.740

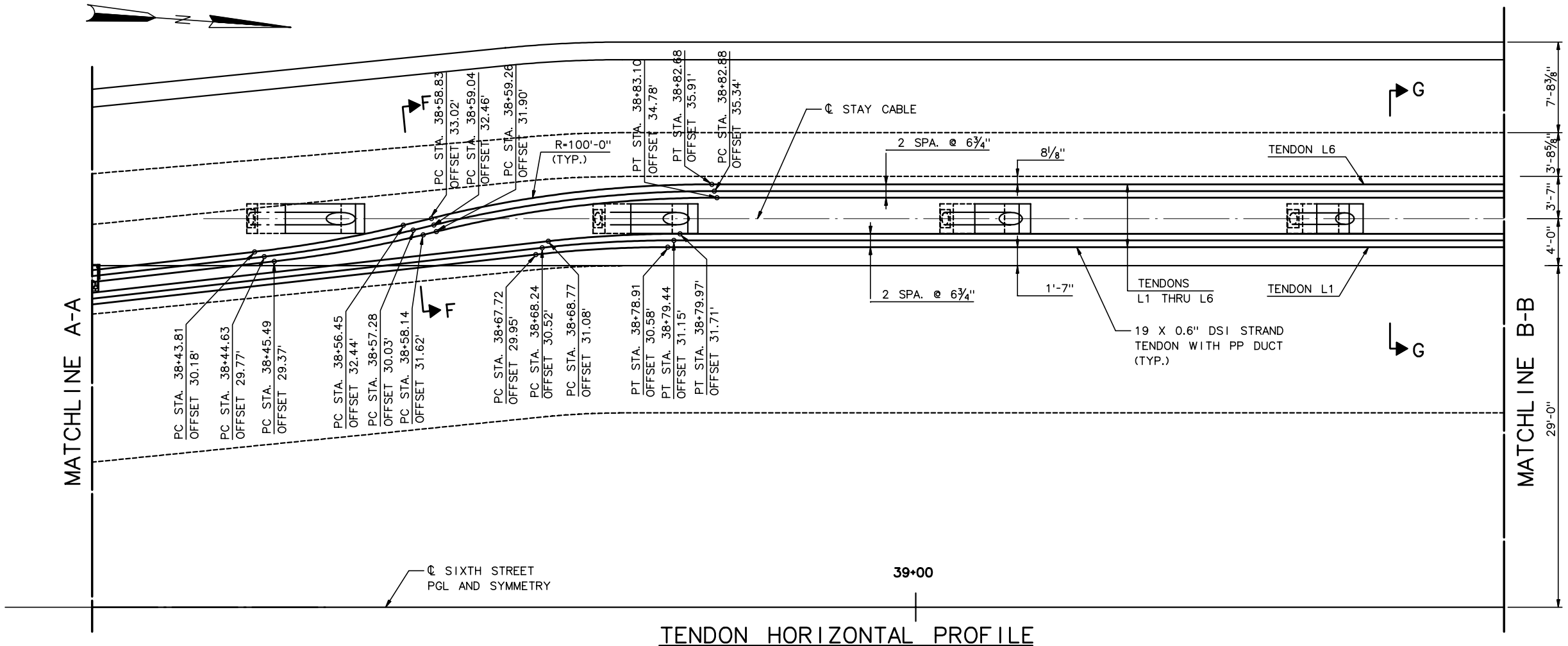

TENDON HORIZONTAL PROFILE
HALF PLAN

N.T.S.

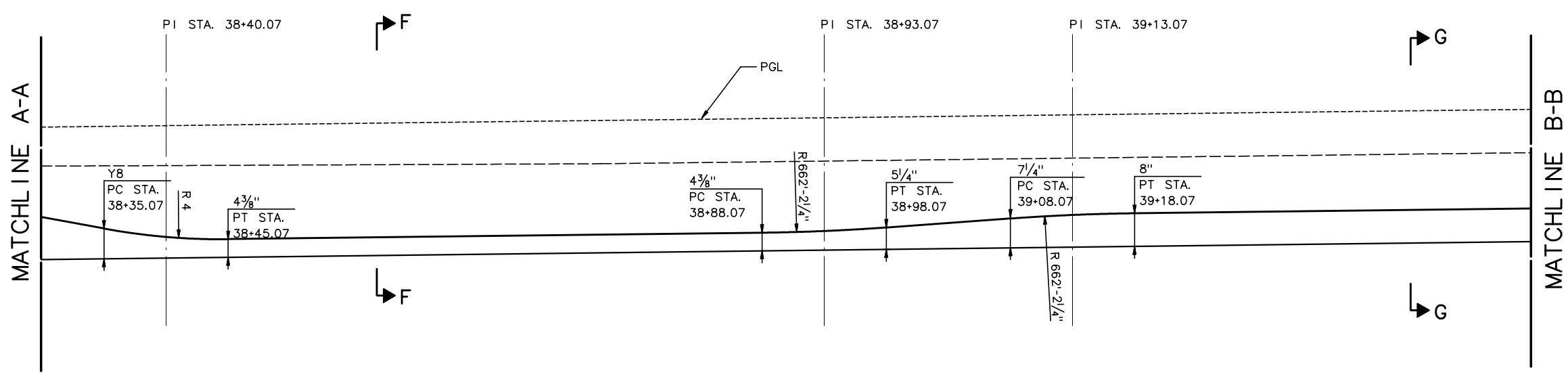

TENDON ELEVATION

N.T.S.

NOTES:

1. LONGITUDINAL PT IS SYMMETRICAL ABOUT ℄ SIXTH STREET AND PGL.
2. MIN. PT TENDON BEND RADIUS FOR 19 STRAND TENDON IS 20'-0"
3. ALL PT DIMENSIONS ARE TO CENTER OF DUCT.
4. TENDONS L1 THRU L6 SHALL BE DOUBLE END STRESSED TO 835 KIPS

RECORD DRAWING

No.	Date	Revisions	By
1	9-25-01	PLAN STATIONS & OFFSETS	SL

HNTB CORPORATION

STATE OF WISCONSIN
DEPARTMENT OF TRANSPORTATION

STRUCTURE B-40-414C

Designed By	SL	Design Checked	TZ	Drawn By	JE	Plans Checked	SL

NORTH CABLE STAY
LONGITUDINAL PT
2 OF 7

SHEET NC84 OF .

STATE PROJECT I.D.	SHEET NUMBER
2235-00-70	8.741

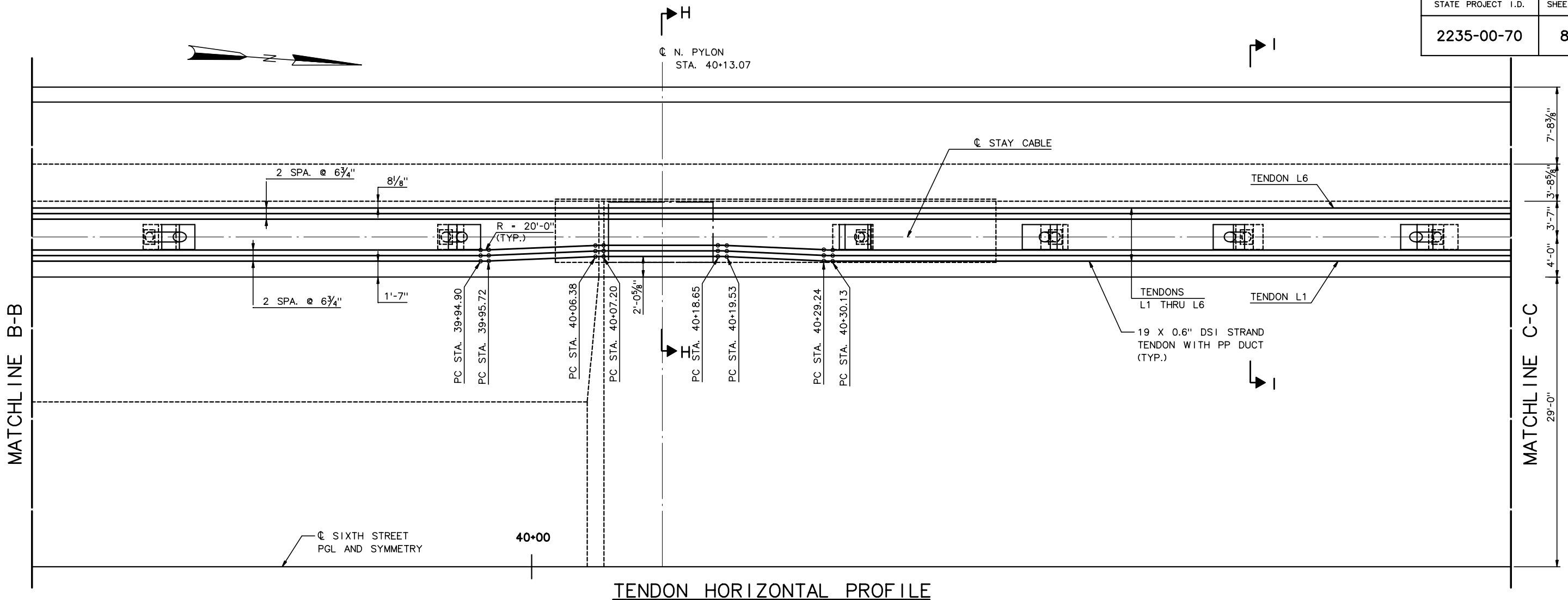

TENDON HORIZONTAL PROFILE
HALF PLAN

N.T.S.

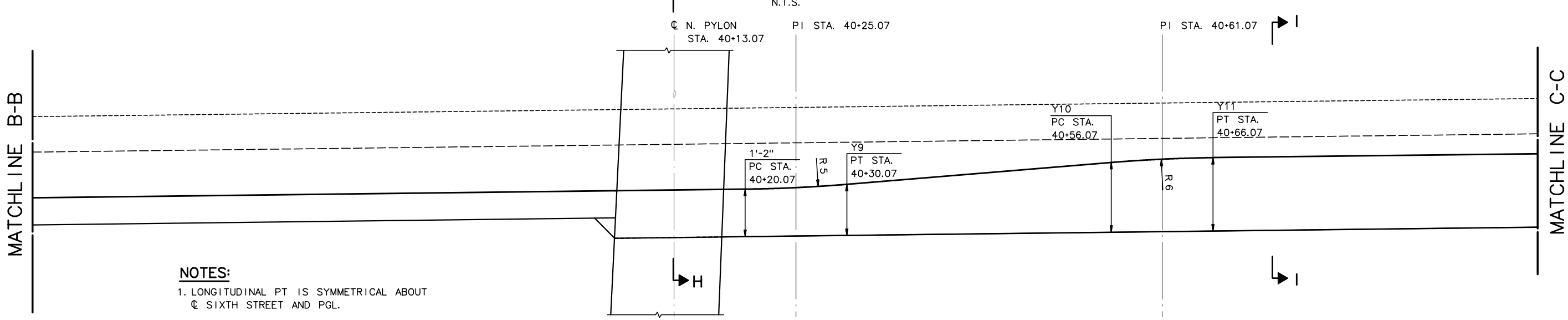

TENDON ELEVATION

N.T.S.

NOTES:

1. LONGITUDINAL PT IS SYMMETRICAL ABOUT ℄ SIXTH STREET AND PGL.
2. MIN. PT TENDON BEND RADIUS FOR 19 STRAND TENDON IS 20'-0"
3. ALL PT DIMENSIONS ARE TO CENTER OF DUCT.
4. TENDONS L1 THRU L6 SHALL BE DOUBLE END STRESSED TO 835 KIPS

RECORD DRAWING

No.	Date	Revisions	By

HNTB CORPORATION

STATE OF WISCONSIN
DEPARTMENT OF TRANSPORTATION

STRUCTURE B-40-414C

Designed By	SL	Design Checked	TZ	Drawn By	JE	Plans Checked	SL

NORTH CABLE STAY
LONGITUDINAL PT
3 OF 7

SHEET NC85 OF .

STATE PROJECT I.D.	SHEET NUMBER
2235-00-70	8.742

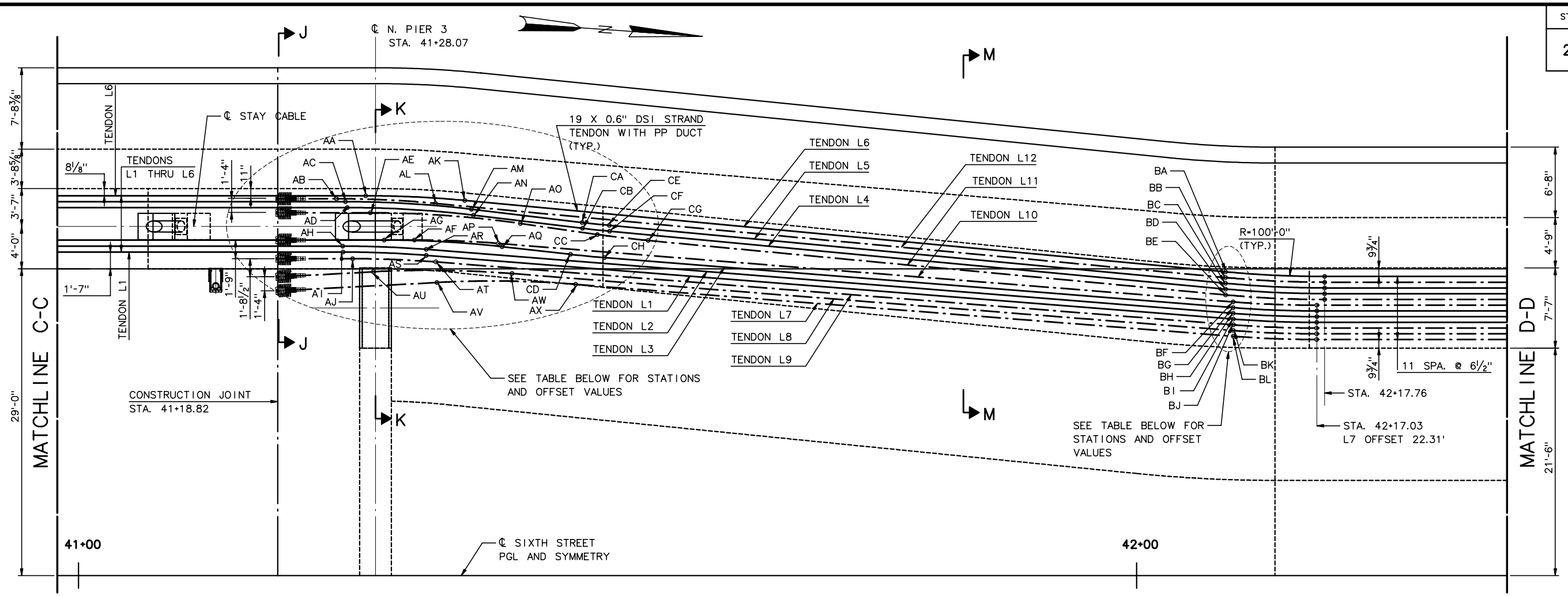

TENDON HORIZONTAL PROFILE
HALF PLAN

N.T.S.

ANCHORAGE SLOPE	
TENDON	"M"
L7	1.088
L8	1.055
L9	0.666
L10	0.635
L11	0.559
L12	0.529

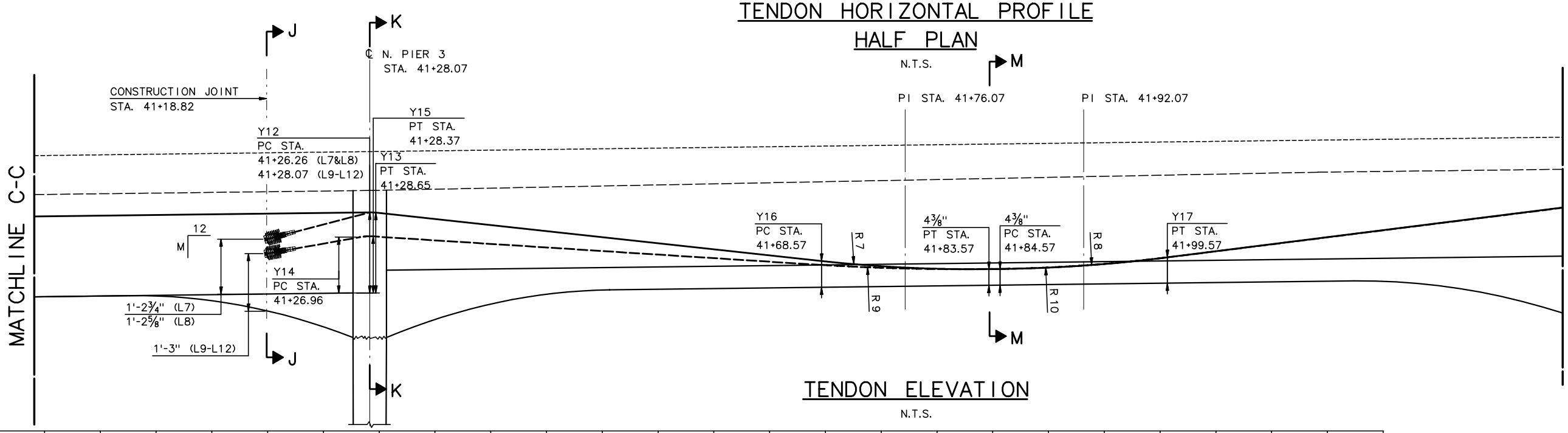

TENDON ELEVATION

N.T.S.

NOTES:

1. LONGITUDINAL PT IS SYMMETRICAL ABOUT ℄ SIXTH STREET AND PGL.
2. MIN. PT TENDON BEND RADIUS FOR 19 STRAND TENDON IS 20'-0"
3. ALL PT DIMENSIONS ARE TO CENTER OF DUCT.
4. TENDONS L1 THRU L6 SHALL BE DOUBLE END STRESSED TO 835 KIPS, L7 THRU L12 SHALL BE SINGLE END STRESSED AT ABUTMENT 2 TO 824 KIPS.

	AA	AB	AC	AD	AE	AF	AG	AH	AI	AJ	AK	AL	AM	AN	AO	AP	AQ	AR	AS	AT	AU	AV	AW	AX
STATION	41+27.15	41+24.38	41+25.22	41+25.40	41+27.58	41+31.75	41+28.89	41+24.96	41+24.99	41+25.91	41+36.51	41+33.74	41+37.14	41+37.32	41+41.74	41+39.67	41+40.02	41+32.86	41+32.87	41+33.77	41+27.86	41+33.88	41+40.97	41+46.99
OFFSET	35.91	35.62	35.34	34.78	34.29	31.71	31.71	31.15	30.58	29.96	35.47	35.19	34.63	34.07	33.28	31.39	31.09	30.83	30.27	29.65	28.72	27.71	28.55	27.53

	BA	BB	BC	BD	BE	BF	BG	BH	BI	BJ	BK	BL
STATION	42+08.40	42+08.40	42+08.40	42+08.40	42+08.40	42+09.11	42+09.11	42+09.13	42+09.14	42+09.14	42+09.14	42+09.14
OFFSET	28.71	28.17	27.63	27.08	26.54	25.88	25.33	24.79	24.25	23.71	23.16	22.62

	CA	CB	CC	CD	CE	CF	CG	CH
STATION	41+47.59	41+47.63	41+49.04	41+46.49	41+50.15	41+50.19	41+53.84	41+49.70
OFFSET	33.38	32.83	32.24	30.36	33.10	32.56	31.67	30.06

RECORD DRAWING

No.	Date	Revisions	By
4	10-04-01	REVISE NOTE 4	SL
3	9-30-01	TENDON GEOMETRY AT J-J	SL
2	9-26-01	ADD ANCHR SLOPE, REV NOTE 4	SL
1	9-25-01	AV, AW, BB & CE OFFSETS	SL

HNTB CORPORATION

STATE OF WISCONSIN
DEPARTMENT OF TRANSPORTATION

STRUCTURE B-40-414C

Designed By	SL	Design Checked	TZ	Drawn By	JE	Plans Checked	SL

NORTH CABLE STAY
LONGITUDINAL PT
4 OF 7

SHEET NC86 OF .

j:\cadd\ff31185\dgn\as built\north cablestay\nc86-longpt4.dgn 02/11/03 01:53:30 PM

STATE PROJECT I.D.	SHEET NUMBER
2235-00-70	8.743

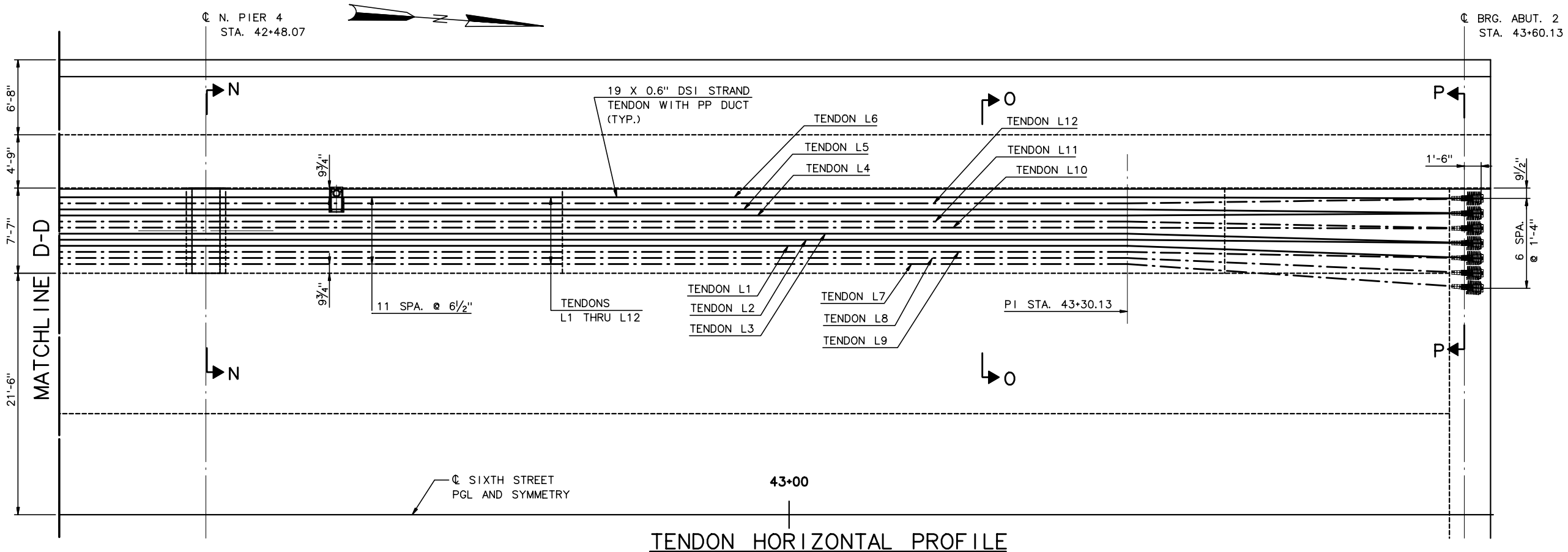

TENDON HORIZONTAL PROFILE
HALF PLAN

N.T.S.

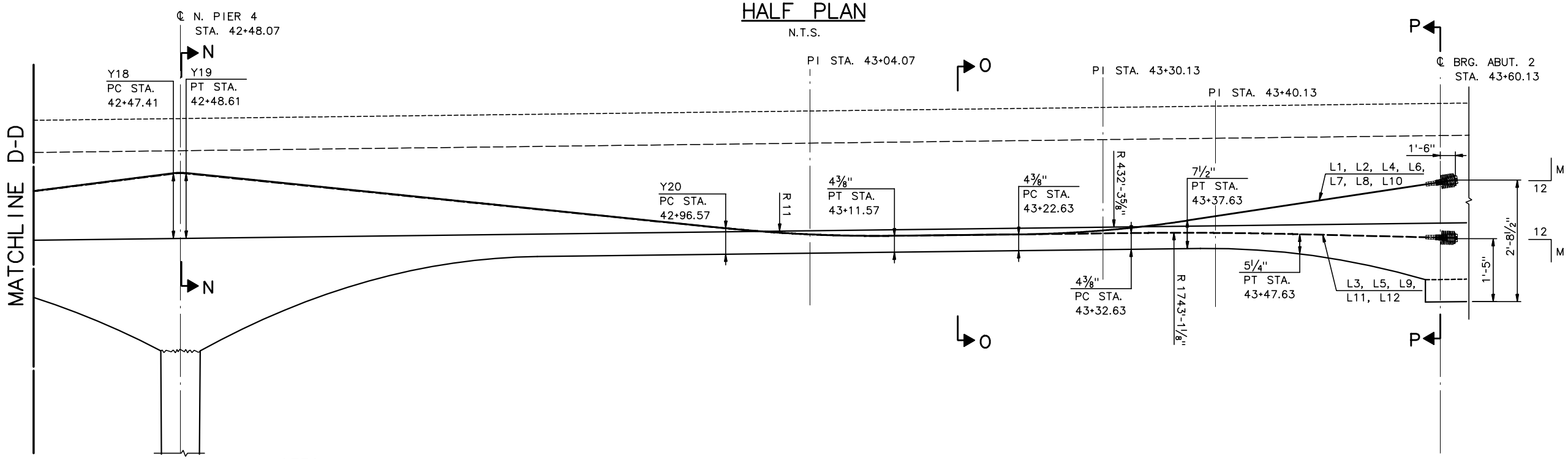

ANCHORAGE SLOPE	
TENDON	"M"
L1	0.453
L2	0.453
L3	0.073
L4	0.453
L5	0.073
L6	0.453
L7	0.453
L8	0.453
L9	0.073
L10	0.453
L11	0.073
L12	0.073

TENDON ELEVATION

N.T.S.

NOTES:

1. LONGITUDINAL PT IS SYMMETRICAL ABOUT ℄ SIXTH STREET AND PGL.
2. MIN. PT TENDON BEND RADIUS FOR 19 STRAND TENDON IS 20'-0"
3. ALL PT DIMENSIONS ARE TO CENTER OF DUCT.
4. TENDONS L1 THRU L6 SHALL BE DOUBLE END STRESSED TO 835 KIPS, L7 THRU L12 SHALL BE SINGLE END STRESSED AT ABUTMENT 2 TO 824 KIPS.

RECORD DRAWING

No.	Date	Revisions	By
2	10-04-01	REVISE NOTE 4	SL
1	9-26-01	ADD ANCHR SLOPE, REV NOTE 4	SL

HNTB CORPORATION

STATE OF WISCONSIN
DEPARTMENT OF TRANSPORTATION

STRUCTURE B-40-414C

Designed By	SL	Design Checked	TZ	Drawn By	JE	Plans Checked	SL

NORTH CABLE STAY
LONGITUDINAL PT
5 OF 7

SHEET NC87 OF .

STATE PROJECT I.D.	SHEET NUMBER
2235-00-70	8.744

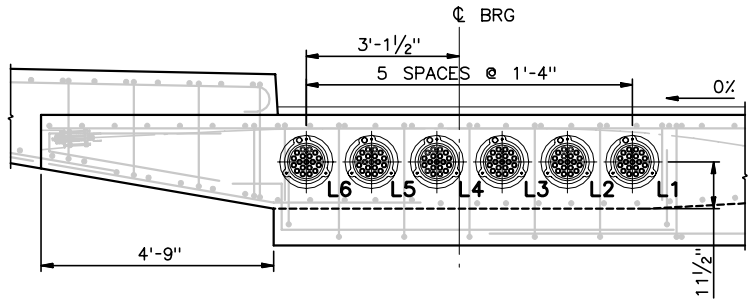

SECTION A-A (WEST)
½" = 1'-0"

TENDON	DIMENSION "A"
L1	1'-6⅛"
L2	1'-6"
L3	1'-5⅞"
L4	1'-5¾"
L5	1'-5½"
L6	1'-5⅜"

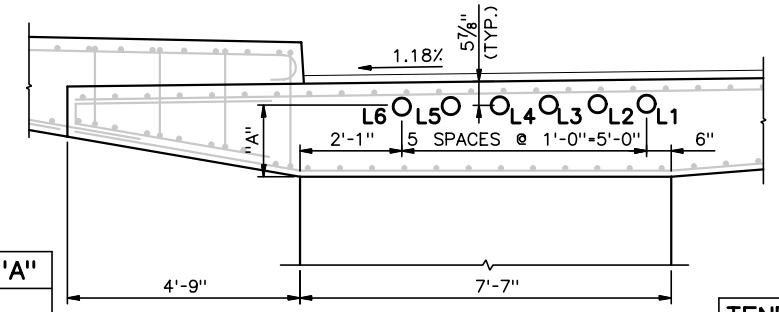

SECTION C-C (WEST)
½" = 1'-0"

TENDON	DIMENSION "C"
L1	1'-6¼"
L2	1'-6⅛"
L3	1'-6"
L4	1'-5⅞"
L5	1'-5¾"
L6	1'-5⅝"

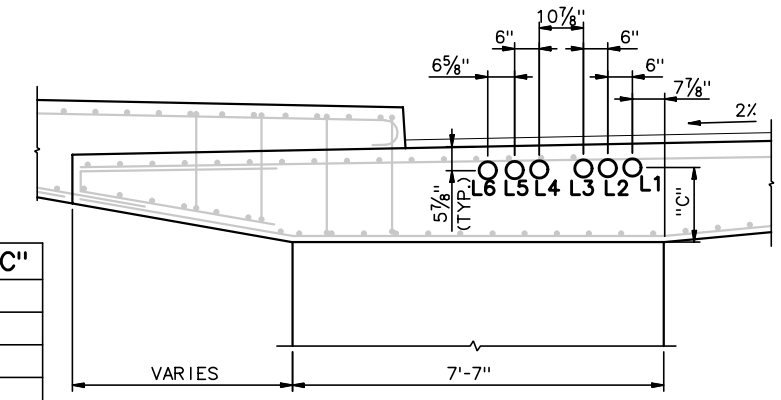

SECTION E-E
½" = 1'-0"

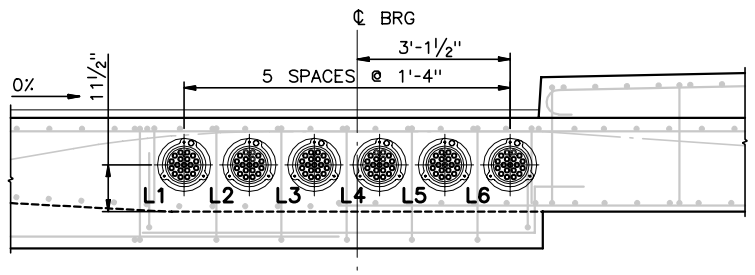

SECTION A-A (EAST)
½" = 1'-0"

TENDON	DIMENSION "B"
L1	1'-6⅛"
L2	1'-6"
L3	1'-5⅞"
L4	1'-5¾"
L5	1'-5½"
L6	1'-5⅜"

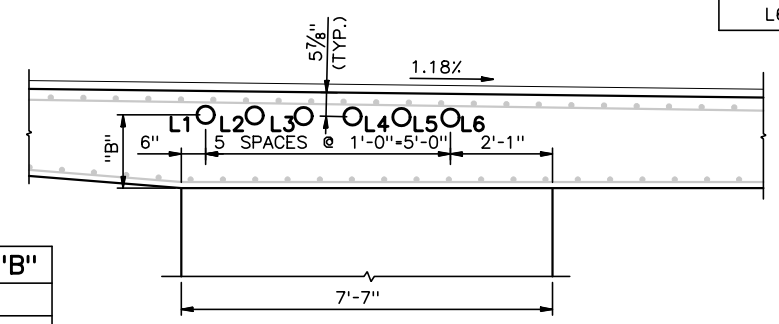

SECTION C-C (EAST)
½" = 1'-0"

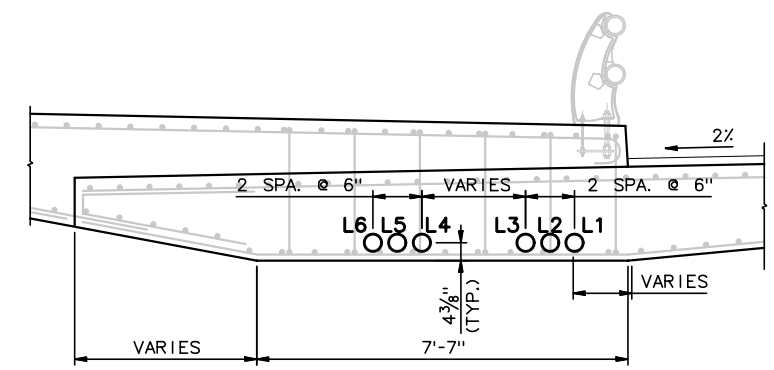

SECTION F-F
½" = 1'-0"

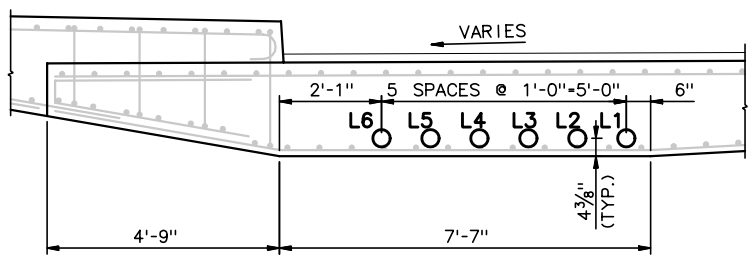

SECTION B-B (WEST)
½" = 1'-0"

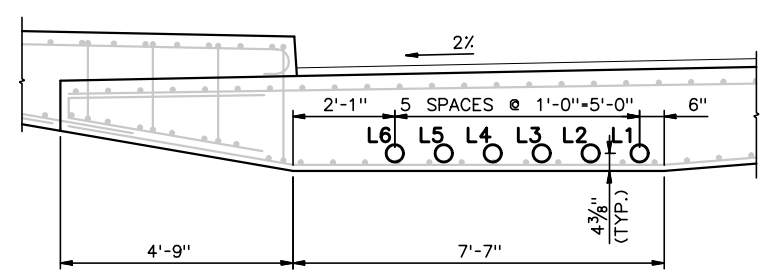

SECTION D-D (WEST)
½" = 1'-0"

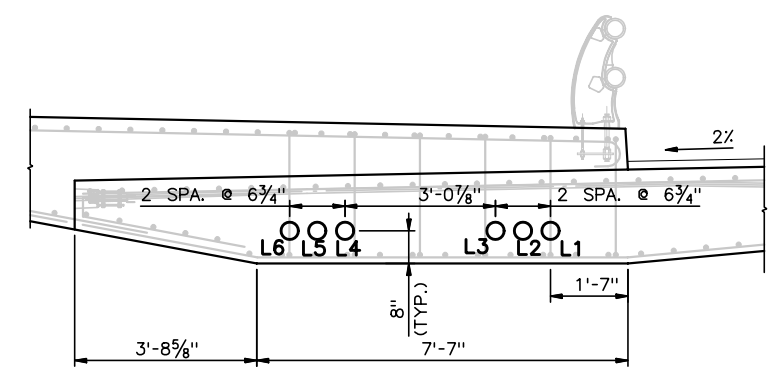

SECTION G-G
½" = 1'-0"

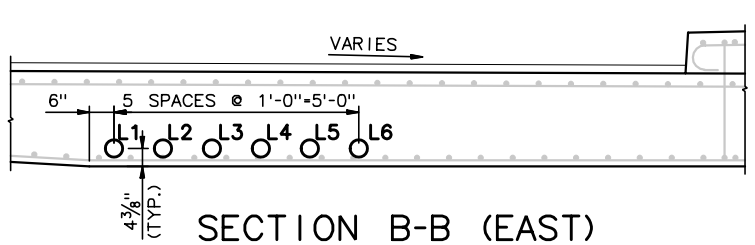

SECTION B-B (EAST)
½" = 1'-0"

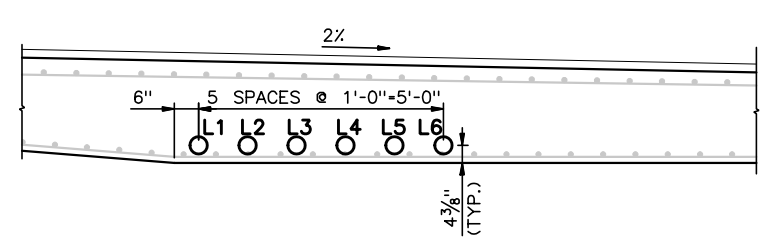

SECTION D-D (EAST)
½" = 1'-0"

NOTES:

1. ALL DIMENSION ARE TO CENTER OF DUCT.

RECORD DRAWING

No.	Date	Revisions	By

HNTB CORPORATION

STATE OF WISCONSIN
DEPARTMENT OF TRANSPORTATION

STRUCTURE B-40-414C

Designed By	SL	Design Checked	TZ	Drawn By	JE	Plans Checked	SL

NORTH CABLE STAY
LONGITTUDINAL PT
6 OF 7

SHEET NC88 OF .

STATE PROJECT I.D.	SHEET NUMBER
2235-00-70	8.745

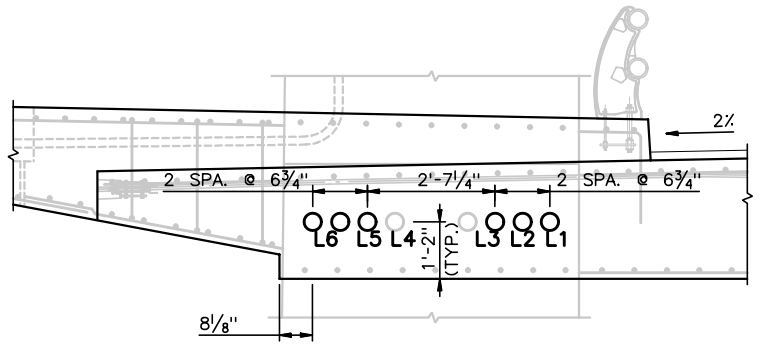

SECTION H-H

½" = 1'-0"

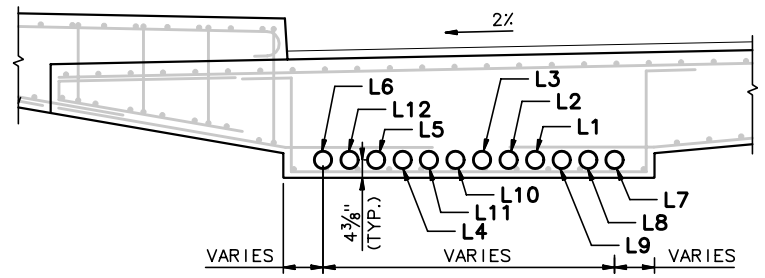

SECTION M-M

½" = 1'-0"

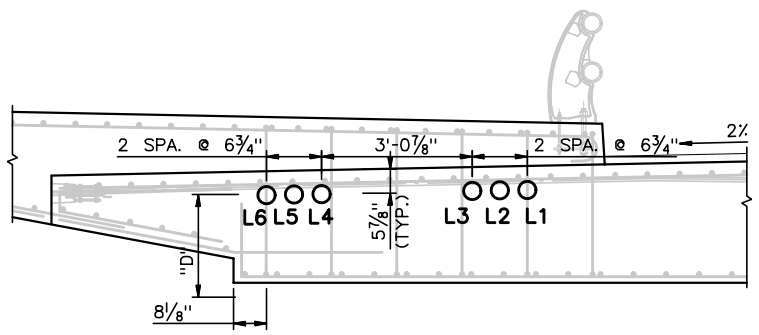

SECTION I-I

½" = 1'-0"

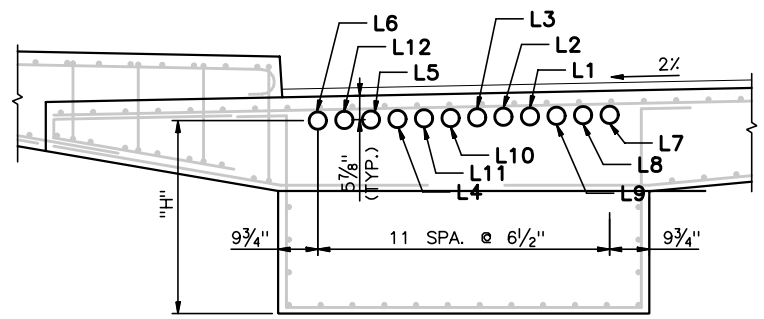

SECTION N-N

½" = 1'-0"

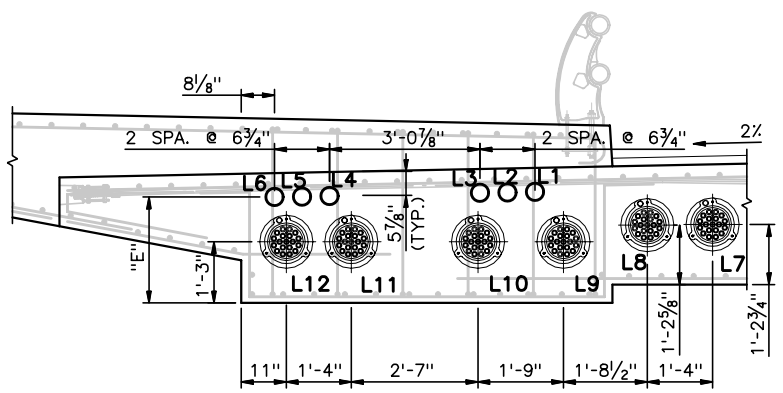

SECTION J-J

½" = 1'-0"

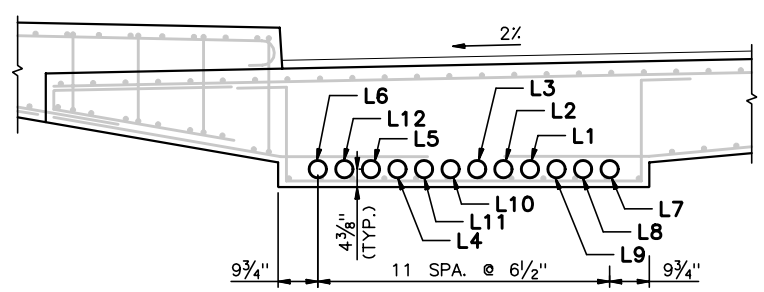

SECTION O-O

½" = 1'-0"

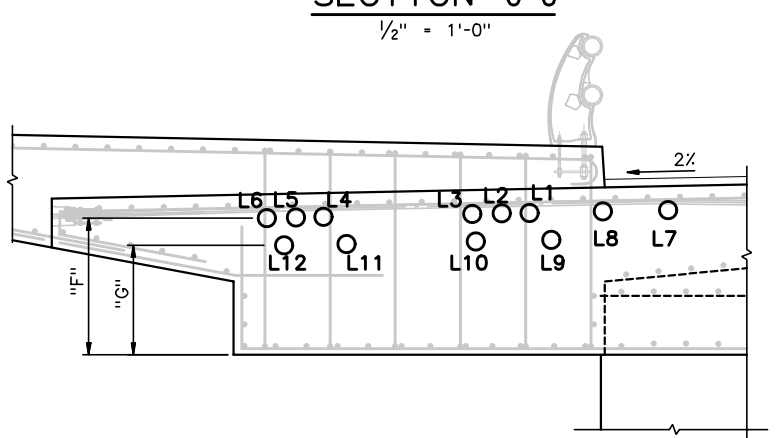

SECTION K-K

½" = 1'-0"

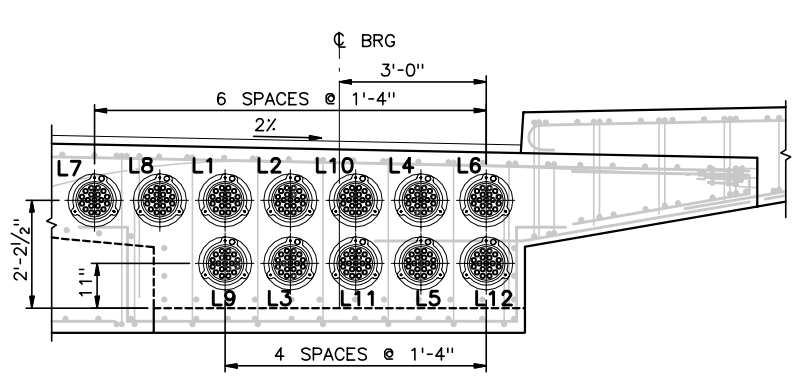

SECTION P-P

½" = 1'-0"

	TENDON											
	L1	L2	L3	L4	L5	L6	L7	L8	L9	L10	L11	L12
R1	180'-5⅞"	182'-4⅛"	184'-2½"	186'-1⅜"	188'-0¾"	190'-1"	-----	-----	-----	-----	-----	-----
Y1	7¾"	7¾"	7¾"	7⅝"	7⅝"	7⅝"	-----	-----	-----	-----	-----	-----
Y2	1'-5½"	1'-5⅜"	1'-5¼"	1'-5⅛"	1'-5"	1'-4⅞"	-----	-----	-----	-----	-----	-----
Y3	1'-5⅝"	1'-5½"	1'-5⅜"	1'-5¼"	1'-5⅛"	1'-5"	-----	-----	-----	-----	-----	-----
Y4	6⅝"	6⅝"	6⅝"	6½"	6½"	6½"	-----	-----	-----	-----	-----	-----
R2	277'-3½"	280'-2"	283'-1¾"	286'-2¾"	289'-4¼"	292'-5⅝"	-----	-----	-----	-----	-----	-----
R3	188'-9⅝"	190'-7⅛"	192'-5"	194'-3½"	196'-2"	198'-1⅛"	-----	-----	-----	-----	-----	-----
Y5	7⅝"	7⅝"	7½"	7½"	7½"	7½"	-----	-----	-----	-----	-----	-----
Y6	1'-5⅞"	1'-5¾"	1'-5⅝"	1'-5½"	1'-5⅜"	1'-5¼"	-----	-----	-----	-----	-----	-----
Y7	1'-5⅞"	1'-5¾"	1'-5⅝"	1'-5½"	1'-5⅜"	1'-5¼"	-----	-----	-----	-----	-----	-----
Y8	7⅝"	7⅝"	7½"	7½"	7½"	7½"	-----	-----	-----	-----	-----	-----
R4	186'-3⅞"	188'-0⅝"	189'-9¾"	191'-7⅜"	193'-5⅜"	195'-3¾"	-----	-----	-----	-----	-----	-----
R5	493'-10¼"	501'-0⅛"	508'-4½"	557'-6⅝"	566'-8¼"	576'-1½"	-----	-----	-----	-----	-----	-----
Y9	1'-3¼"	1'-3¼"	1'-3⅛"	1'-3⅛"	1'-3"	1'-3"	-----	-----	-----	-----	-----	-----
Y10	1'-9½"	1'-9⅜"	1'-9⅜"	1'-8⅝"	1'-8⅝"	1'-8½"	-----	-----	-----	-----	-----	-----
R6	493'-10¼"	501'-0⅛"	508'-4½"	557'-6⅝"	566'-8¼"	576'-1½"	-----	-----	-----	-----	-----	-----
Y11	1'-10¾"	1'-10⅝"	1'-10½"	1'-9¾"	1'-9⅝"	1'-9½"	-----	-----	-----	-----	-----	-----
Y12	1'-10¾"	1'-10⅝"	1'-10½"	1'-9¾"	1'-9⅝"	1'-9½"	1'-10½"	1'-10¼"	-----	-----	-----	-----
Y13	1'-10⅝"	1'-10½"	1'-10⅜"	1'-9⅝"	1'-9½"	1'-9⅜"	1'-11⅜"	1'-11"	-----	-----	-----	-----
Y14	-----	-----	-----	-----	-----	-----	-----	-----	1'-3⅝"	1'-3⅜"	1'-2⅞"	1'-2⅝"
Y15	-----	-----	-----	-----	-----	-----	-----	-----	1'-4"	1'-3¾"	1'-3⅛"	1'-2⅞"
Y16	7¼"	7¼"	7¼"	7⅛"	7⅛"	7⅛"	7⅜"	7⅜"	6¼"	6⅛"	6"	6"
R7	467'-9¼"	470'-11⅞"	474'-3⅛"	494'-10¼"	498'-5½"	502'-1⅜"	-----	-----	-----	-----	-----	-----
R8	501'-0⅛"	504'-2"	507'-4½"	520'-7⅜"	524'-0⅜"	531'-0"	-----	-----	-----	-----	-----	-----
Y17	7⅛"	7"	7"	7"	7"	6⅞"	7⅛"	7⅛"	7⅛"	7"	7"	6⅞"
R9	-----	-----	-----	-----	-----	-----	449'-3⅞"	458'-4⅜"	741'-0⅜"	757'-4½"	801'-7"	820'-8⅞"
R10	-----	-----	-----	-----	-----	-----	491'-8⅞"	494'-9½"	497'-10⅝"	510'-7½"	513'-10⅞"	527'-5⅞"
Y18	1'-6¼"	1'-6⅛"	1'-6"	1'-5½"	1'-5⅜"	1'-5⅛"	1'-6⅝"	1'-6½"	1'-6⅜"	1'- 5⅞"	1'-5¾"	1'-5¼"
Y19	1'-6¼"	1'-6⅛"	1'-6"	1'-5½"	1'-5⅜"	1'-5⅛"	1'-6⅝"	1'-6½"	1'-6⅜"	1'- 5⅞"	1'-5¾"	1'-5¼"
Y20	7⅛"	7"	7"	7"	7"	6⅞"	7⅛"	7⅛"	7⅛"	7"	7"	6⅞"
R11	501'-11½"	505'-1½"	508'-4⅛"	521'-7¼"	525'-0⅜"	532'-0⅛"	492'-8⅛"	495'-8¾"	498'-9⅞"	511'-7⅛"	514'-10⅝"	528'-6"

TENDON	DIMENSION "D"
L1	1'-10¾"
L2	1'-10⅝"
L3	1'-10½"
L4	1'-9¾"
L5	1'-9⅝"
L6	1'-9½"

TENDON	DIMENSION "E"
L1	2'-3¼"
L2	2'-3⅛"
L3	2'-3"
L4	2'-2¼"
L5	2'-2⅛"
L6	2'-2"

TENDON	DIMENSION "F"
L1	2'-10¾"
L2	2'-10⅝"
L3	2'-10½"
L4	2'-9¾"
L5	2'-9⅝"
L6	2'-9½"
L7	2'-11½"
L8	2'-11⅛"

TENDON	DIMENSION "G"
L9	2'-4⅛"
L10	2'-3¾"
L11	2'-3⅛"
L12	2'-2⅞"

TENDON	DIMENSION "H"
L1	4'-0⅜"
L2	4'-0¼"
L3	4'-0⅛"
L4	3'-11¾"
L5	3'-11⅝"
L6	3'-11½"
L7	4'-0¾"
L8	4'-0⅝"
L9	4'-0½"
L10	4'-0"
L11	3'-11⅞"
L12	3'-11¾"

RECORD DRAWING

NOTES:

1. ALL DIMENSIONS ARE TO THE CENTER OF DUCT.

No.	Date	Revisions	By
1	9-30-01	SECT J-J, DIM E, Y12-Y15	SL

HNTB CORPORATION

STATE OF WISCONSIN
DEPARTMENT OF TRANSPORTATION

STRUCTURE B-40-414C

Designed By	SL	Design Checked	TZ	Drawn By	JE	Plans Checked	SL

NORTH CABLE STAY
LONGITUDINAL PT
7 OF 7

SHEET NC88a OF .

STATE PROJECT I.D.	SHEET NUMBER
2235-00-70	8.746

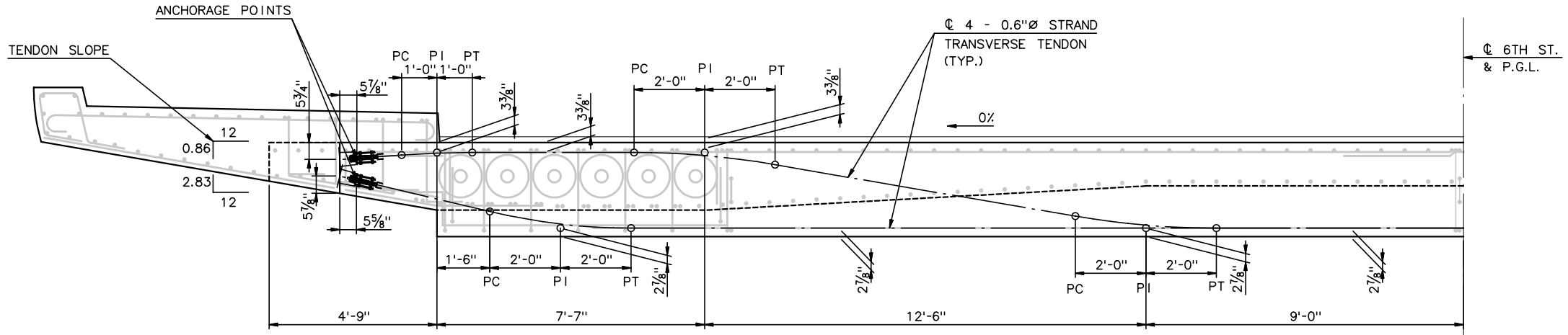

BASCULE END BEAM PROFILE (WEST)

½" = 1'-0"

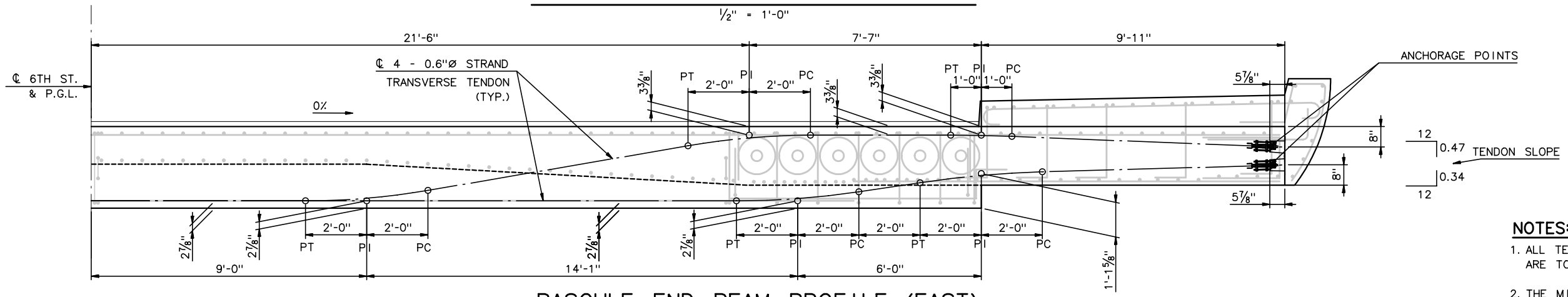

BASCULE END BEAM PROFILE (EAST)

½" = 1'-0"

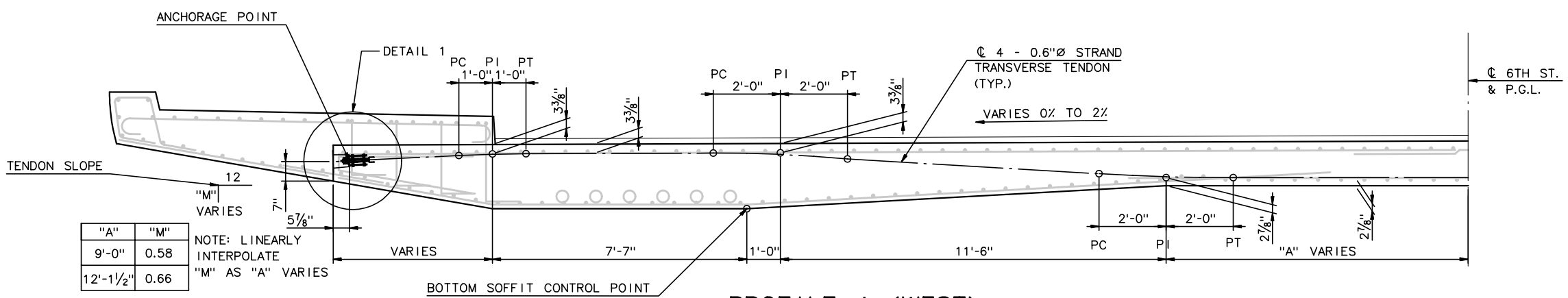

"A"	"M"
9'-0"	0.58
12'-1½"	0.66

NOTE: LINEARLY INTERPOLATE "M" AS "A" VARIES

PROFILE A (WEST)

½" = 1'-0"

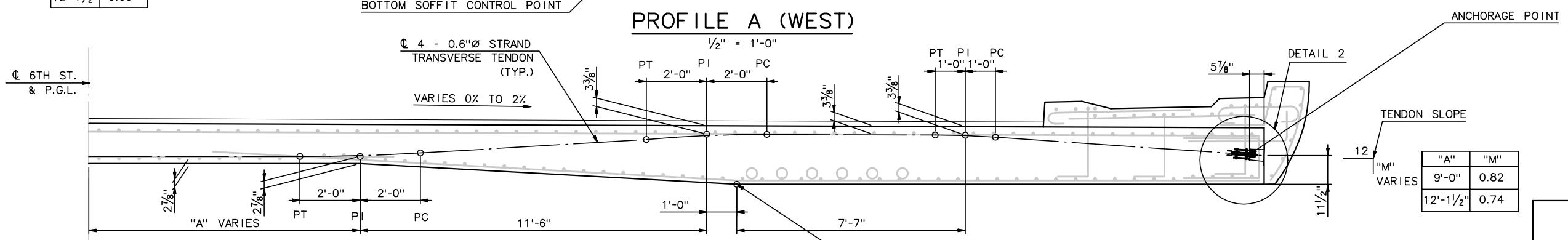

"A"	"M"
9'-0"	0.82
12'-1½"	0.74

PROFILE A (EAST)

½" = 1'-0"

NOTES:

1. ALL TENDON DIMENSIONS ARE TO THE CENTERLINE OF DUCT.
2. THE MINIMUM BEND RADIUS FOR A 4 STRAND TENDON SHALL BE 15'-0".
3. ALL BASCULE END BEAM 4 STRAND TENDONS SHALL BE SINGLE-END STRESSED TO 46.88 KIPS/STRAND. ALTERNATE STRESSING END OF TENDON.
4. ALL "PROFILE A" 4 STRAND TENDONS SHALL BE SINGLE-END STRESSED TO 44.0 KIPS/STRAND. ALTERNATE STRESSING END OF TENDON.
5. FILL POCKET FORMER BLOCKOUT WITH NON-SHRINK GROUT.
6. RAILING NOT SHOWN FOR CLARITY.
7. FOR DETAILS 1 AND 2 SEE SHEET NC91.

RECORD DRAWING

STATE OF WISCONSIN
DEPARTMENT OF TRANSPORTATION

STRUCTURE B-40-414C

Designed By	CE	Design Checked	TZ	Drawn By	CE	Plans Checked	TZ

No.	Date	Revisions	By

HNTB CORPORATION

NORTH CABLE STAYED TRANSVERSE PT 1 OF 3

SHEET NC89 OF

STATE PROJECT I.D.	SHEET NUMBER
2235-00-70	8.747

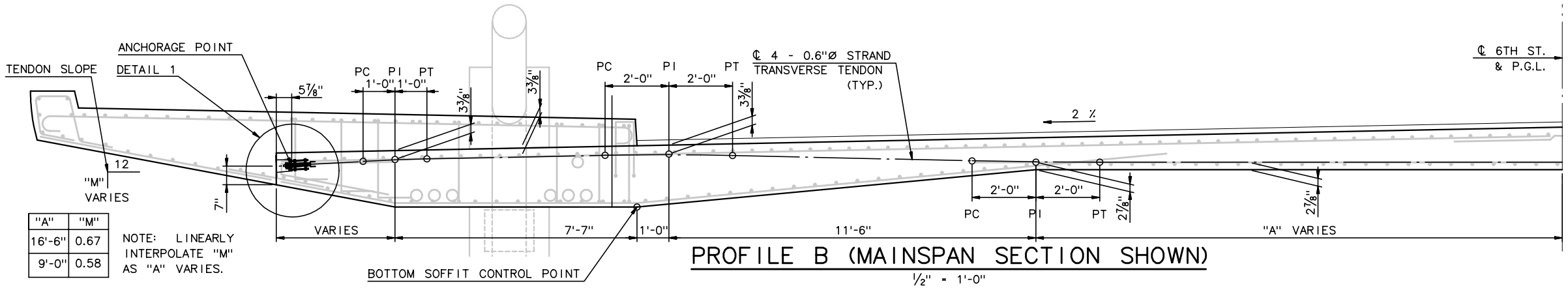

"A"	"M"
16'-6"	0.67
9'-0"	0.58

NOTE: LINEARLY INTERPOLATE "M" AS "A" VARIES.

PROFILE B (MAINSPAN SECTION SHOWN)

½" = 1'-0"

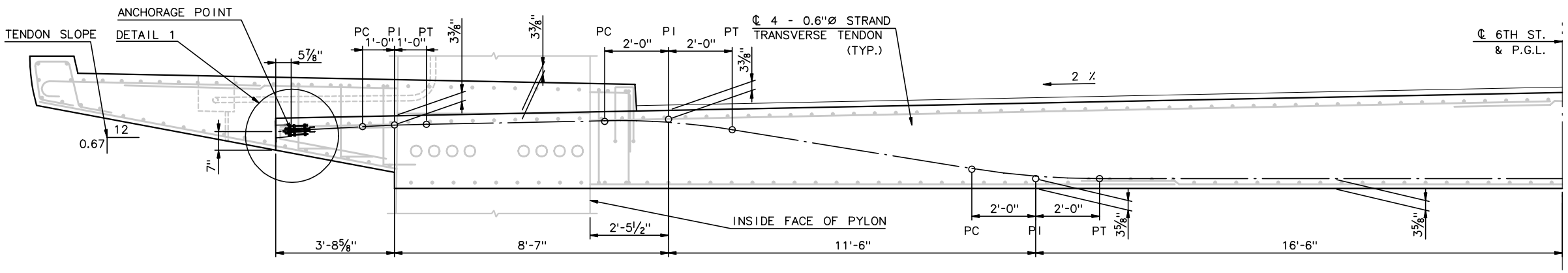

PROFILE C - BACKSPAN (PYLON SECTION SHOWN)

½" = 1'-0"

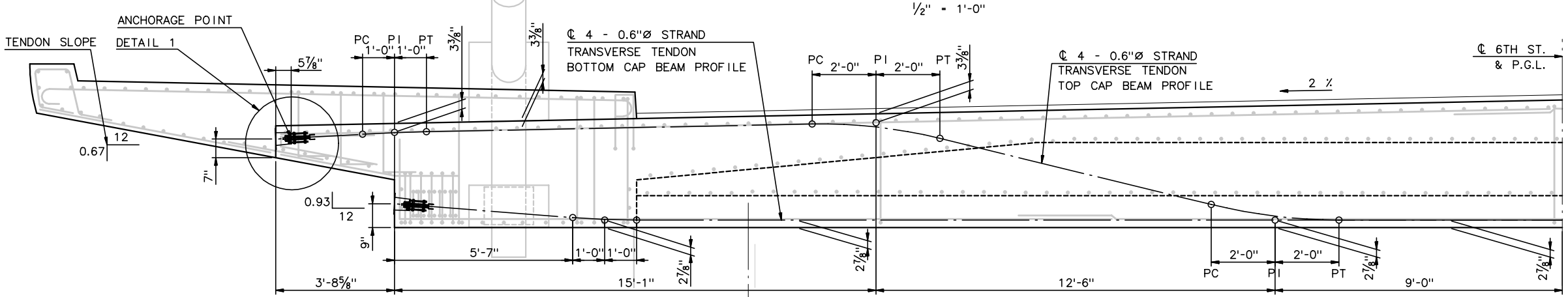

PIER 3 CAP BEAM PROFILE

½" = 1'-0"

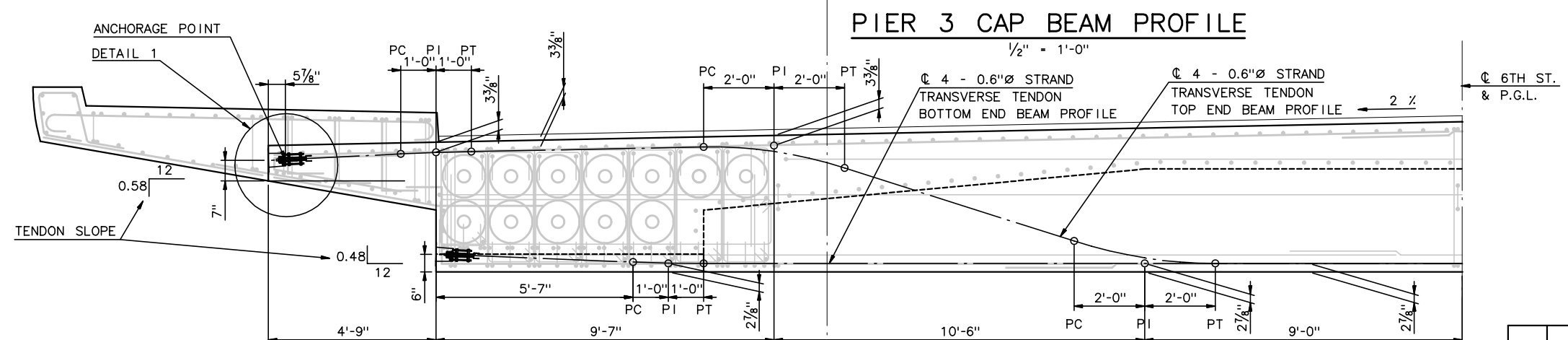

ABUTMENT END BEAM PROFILE

½" = 1'-0"

NOTES:

1. ALL TENDON DIMENSIONS ARE TO THE CENTERLINE OF DUCT.
2. THE MINIMUM BEND RADIUS FOR A 4 STRAND TENDON SHALL BE 15'-0".
3. ALL "PROFILE B" 4 STRAND TENDONS SHALL BE SINGLE-END STRESSED TO 44.0 KIPS/STRAND. ALTERNATE STRESSING END OF TENDON.
4. ALL "PROFILE C" 4 STRAND TENDONS SHALL BE SINGLE-END STRESSED TO 46.88 KIPS/STRAND. ALTERNATE STRESSING END OF TENDON.
5. TOP PIER 3 CAP BEAM 4 STRAND TENDON SHALL BE DOUBLE-END STRESSED TO 46.88 KIPS/STRAND.
6. BOTH BOTTOM PIER 3 CAP BEAM 4 STRAND TENDONS SHALL BE SINGLE-END STRESSED TO 44.0 KIPS/STRAND. ALTERNATE STRESSING END OF TENDON.
7. BOTH TOP ABUTMENT END BEAM 4 STRAND TENDONS SHALL BE SINGLE-END STRESSED TO 46.88 KIPS/STRAND. ALTERNATE STRESSING END OF TENDON.
8. BOTH BOTTOM ABUTMENT END BEAM 4 STRAND TENDONS SHALL BE SINGLE-END STRESSED TO 44.0 KIPS/STRAND. ALTERNATE STRESSING END OF TENDON.
9. FILL POCKET FORMER BLOCKOUT WITH NON-SHRINK GROUT.
10. RAILING NOT SHOWN FOR CLARITY.
11. FOR DETAIL 1 SEE SHEET NC91.

RECORD DRAWING

No.	Date	Revisions	By

HNTB CORPORATION

STATE OF WISCONSIN
DEPARTMENT OF TRANSPORTATION

STRUCTURE B-40-414C

Designed By	CE	Design Checked	TZ	Drawn By	CE	Plans Checked	TZ

NORTH CABLE STAYED TRANSVERSE PT 2 OF 3

SHEET NC90 OF

STATE PROJECT I.D.	SHEET NUMBER
2235-00-70	8.748

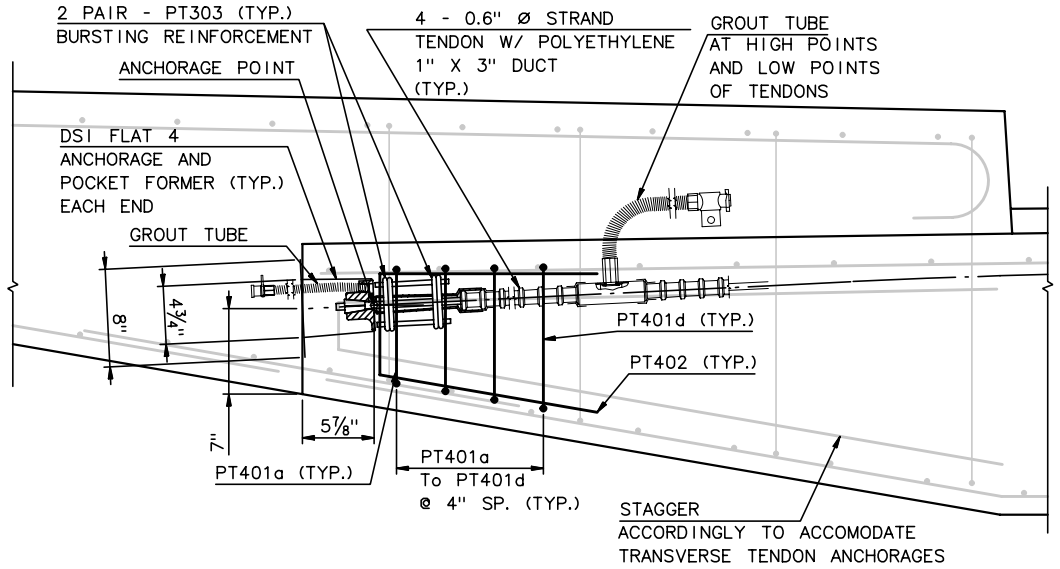

DETAIL 1

1½" = 1'-0"

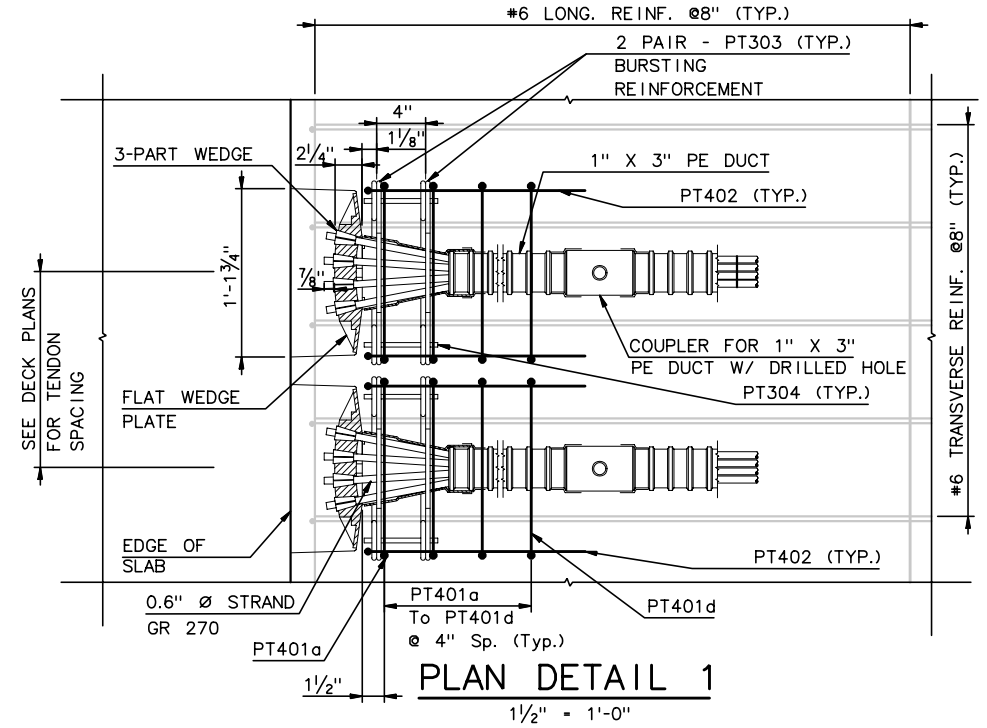

PLAN DETAIL 1

1½" = 1'-0"

NOTES:

1. FOR ADDITIONAL NOTES SEE SHEETS NC89 AND NC90.
2. PLAN DETAIL 1 SIMILAR FOR DETAIL 2.

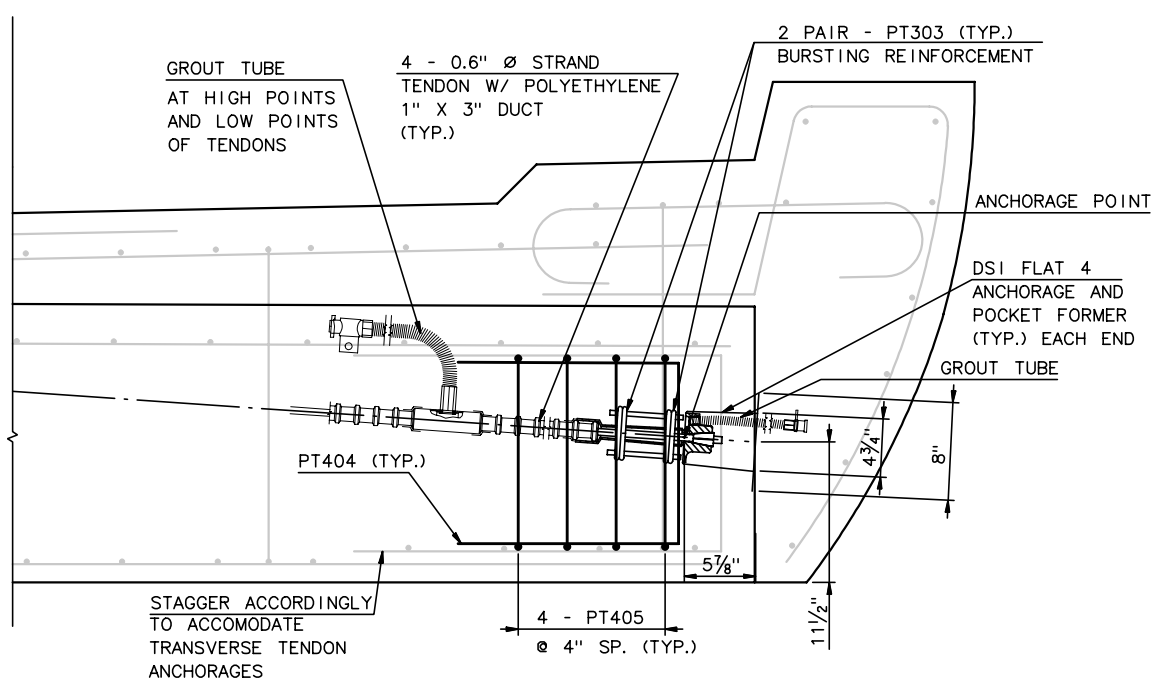

DETAIL 2

1½"= 1'-0"

QUANTITIES

ITEM			QUANTITY
DSI FLAT 4 ANCHORAGES			744
LIN. FT 1" X 3" POLYETHYLENE DUCT*			
BASCULE END BEAM	TOP	2 TENDONS	@ 70'-3"
	BOTTOM	2 TENDONS	@ 70'-1"
"PROFILE A"	STA. 36+97.94 TO 37+88.40	51 TENDONS	@ 72'-0"
	STA. 37+90.40 TO 38+08.43	1 SERIES OF 10 TENDONS	@ 72'-0" TO 75'-0"
	STA. 38+09.77 TO 38+27.10	1 SERIES OF 14 TENDONS	@ 75'-2" TO 77'-9"
"PROFILE B"	STA. 38+28.94 TO 38+61.92	1 SERIES OF 17 TENDONS	@ 72'-2" TO 77'-7"
	STA. 38+63.90 TO 38+74.56	1 SERIES OF 9 TENDONS	@ 77'-11" TO 79'-8"
	MAINSPAN	88 TENDONS	@ 79'-8"
"PROFILE C"	BACKSPAN	66 TENDONS	@ 79'-11"
PIER 3 CAP BEAM	TOP	1 TENDON	@ 80'-4"
	BOTTOM	2 TENDONS	@ 72'-3"
"PROFILE B"	STA. 41+29.71 TO 41+36.38	1 SERIES OF 6 TENDONS	@ 79'-8" TO 78'-8"
	STA. 41+38.74 TO 42+05.40	1 SERIES OF 26 TENDONS	@ 78'-4" TO 68'-0"
	STA. 42+08.07 TO 42+13.40	1 SERIES OF 5 TENDONS	@ 67'-7" TO 66'-9"
	STA. 42+14.74 TO 43+57.71	69 TENDONS	@ 66'-9"
ABUTMENT END BEAM	TOP	2 TENDONS	@ 67'-8"
	BOTTOM	2 TENDONS	@ 57'-3"
TOTAL 372 TENDONS			27820'-10"
LIN. FT * 0.6" STRAND			4 STR. X 27820'-10"= 111283'-4"

* LENGTH IS FROM ANCHOR POINT TO ANCHOR POINT. ADDITIONAL LENGTH FOR STRESSING IS NOT INCLUDED.

RECORD DRAWING

No.	Date	Revisions	By

HNTB CORPORATION

STATE OF WISCONSIN
DEPARTMENT OF TRANSPORTATION

STRUCTURE B-40-414C

Designed By	CE	Design Checked	TZ	Drawn By	JE	Plans Checked	CE

NORTH CABLE STAYED TRANSVERSE PT 3 OF 3

SHEET NC91 OF

STATE PROJECT I.D.	SHEET NUMBER
2235-00-70	8.749

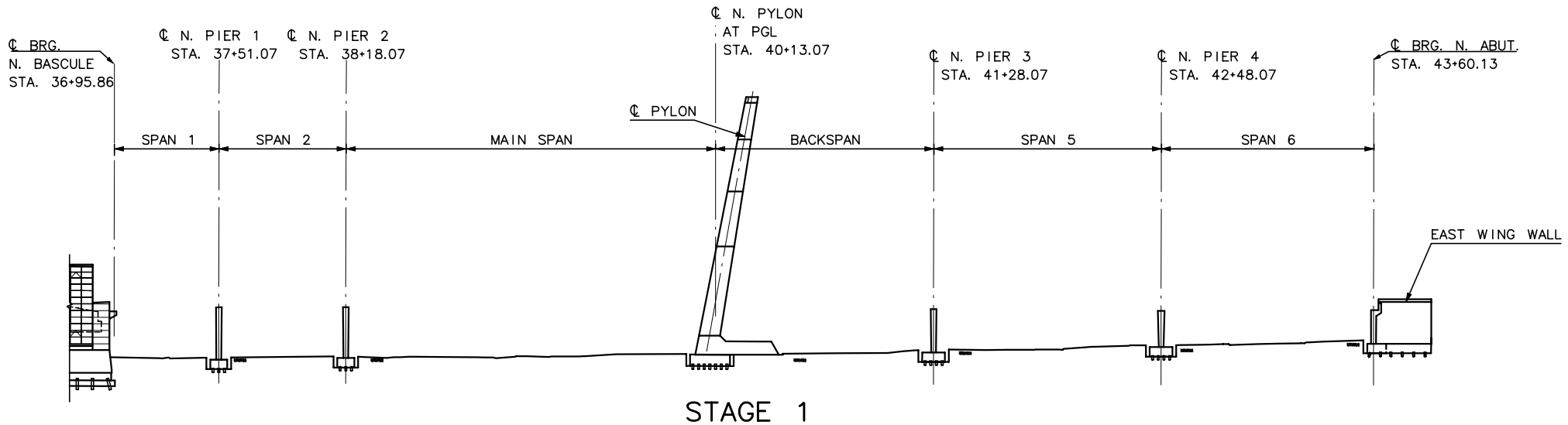

STAGE 1

1" = 40'-0"

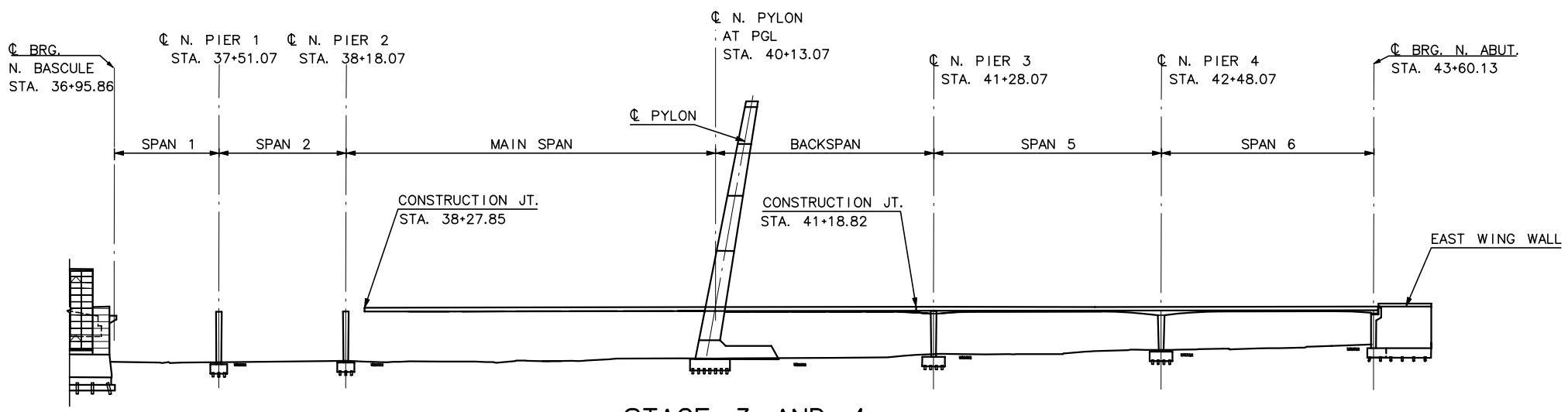

STAGE 3 AND 4

1" = 40'-0"

NOTE: FALSEWORK NOT SHOWN

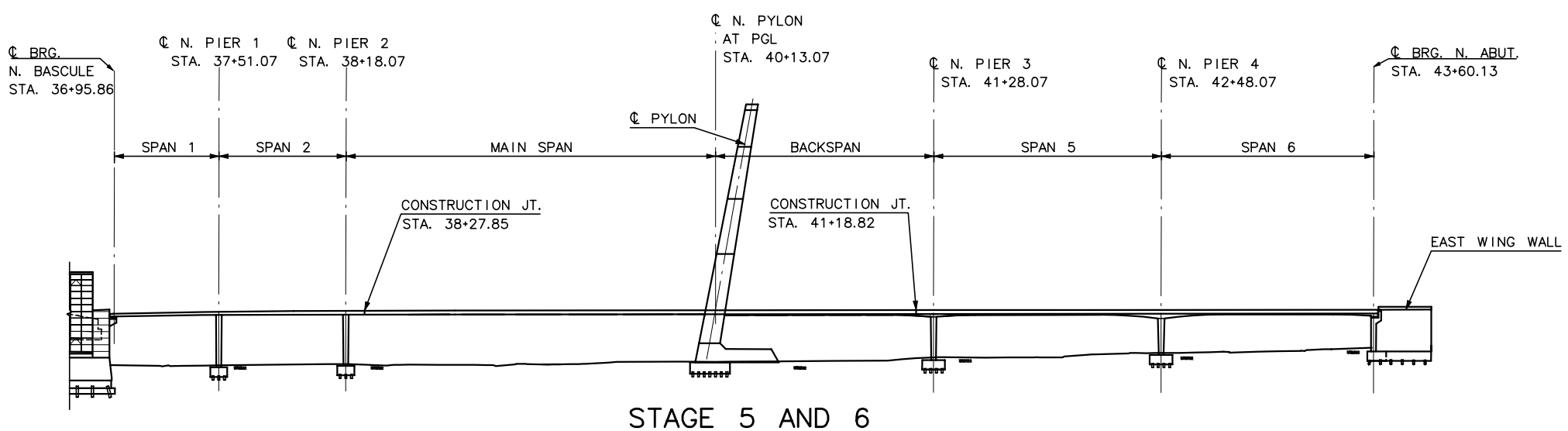

STAGE 5 AND 6

1" = 40'-0"

NOTE: FALSEWORK NOT SHOWN

STAGE 1:

1. EXCAVATE PIERS 1-4 AND NORTH PYLON PILE FOUNDATIONS.
2. DRIVE PILES FOR PIERS 1-4 AND NORTH PYLON.
3. CONSTRUCT PYLON FOOTINGS AND PIERS 1-4 FOOTINGS.
4. CONSTRUCT PIERS 1-4 AND NORTH PYLON.
5. EXCAVATE N. ABUTMENT WEST WING WALL AND STEM WALL FOOTINGS.
6. CONSTRUCT N. ABUTMENT WEST WING WALL AND STEM WALL FOOTINGS.
7. CONSTRUCT N. ABUTMENT WEST WING WALL AND STEM WALL.

STAGE 2:

1. PLACE SUPERSTRUCTURE FALSEWORK FROM N. ABUTMENT TO N. BASCULE.
2. CONSTRUCT SUPERSTRUCTURE SLAB FOR SPANS 5 AND 6. (STA. 41+18.82 TO N. ABUTMENT)

STAGE 3:

POST-TENSIONING SEQUENCE FOR SPANS 5 AND 6:

PRIOR TO POST-TENSIONING, CONCRETE MUST REACH A MINIMUM COMPRESSIVE STRENGTH OF 4500 PSI.

STEP 1 - STRESS ALL TRANSVERSE N. ABUTMENT END BEAM TENDONS (4 TENDONS) AND ALL PIER 3 CAP BEAM TENDONS (3 TENDONS).

STEP 2 - STRESS ALL TRANSVERSE TENDONS AT 1'-4" SPACING
- 12 TENDONS ADJACENT TO CONSTRUCTION JOINT
- 10 TENDONS ADJACENT TO N. ABUTMENT END BEAM
- 9 TENDONS AT LOCATION OF WIDTH FLARE DOWN
- 17 TENDONS AT PIER 4

STEP 3 - STRESS LONGITUNIDAL TENDONS L8 AND L10

STEP 4 - STRESS 50% OF REMAINING TRANSVERSE TENDONS
- 16 TENDONS SPAN 5
- 16 TENDONS SPAN 6

STEP 5 - STRESS LONGITUDINAL TENDONS L9 AND L11

STEP 6 - STRESS REMAINING TRANSVERSE TENDONS

STEP 7 - STRESS LONGITUDINAL TENDONS L7 AND L12

STEP 8 - GROUT ALL TENDONS PER THE PTI "GUIDE SPECIFICATIONS FOR GROUTING OF POST-TENSIONED STRUCTURE", FIRST EDITION, FEBRUARY 2001.

NOTES: SEE TRANSVERSE PT DRAWINGS AND DECK PLANS FOR TRANSVERSE PT JACKING FORCE REQUIREMENTS.
ALL LONGITUDINAL TENDONS ARE SINGLE-END STRESSED AT ABUTMENT TO A JACKING FORCE OF 824 KIPS.
STEPS 3 AND 4 MAY BE COMPLETED SIMULTANEOUSLY.
STEPS 5 AND 6 MAY ALSO BE COMPLETED SIMULTANEOUSLY.

STAGE 4:

1. CONSTRUCT SUPERSTRUCTURE SLAB FOR MAINSPAN AND BACKSPAN.
2. ALTERNATE END STRESS ALL TRANSVERSE PT IN MAINSPAN AND BACKSPAN. START AT PIER 3, STRESS ALL FROM WEST SIDE, THEN STRESS ALL FROM EAST SIDE.
3. GROUT ALL TRANSVERSE TENDONS.

RECORD DRAWING

No.	Date	Revisions	By

HNTB CORPORATION

STATE OF WISCONSIN
DEPARTMENT OF TRANSPORTATION

STRUCTURE B-40-414C

Designed By	AP	Design Checked	TZ	Drawn By	CE	Plans Checked	AP

CONSTRUCTION STAGING 1 OF 2

SHEET NC92 OF .

STATE PROJECT I.D.	SHEET NUMBER
2235-00-70	8.750

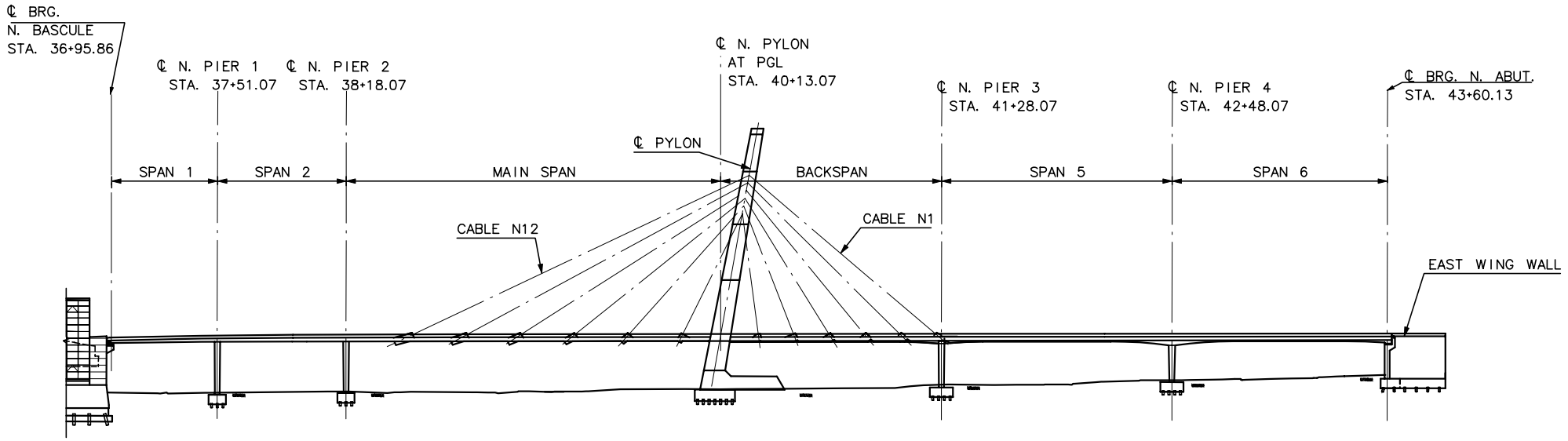

STAGE 7, 8, AND 9

1" = 40'-0"

NOTE: FALSEWORK NOT SHOWN

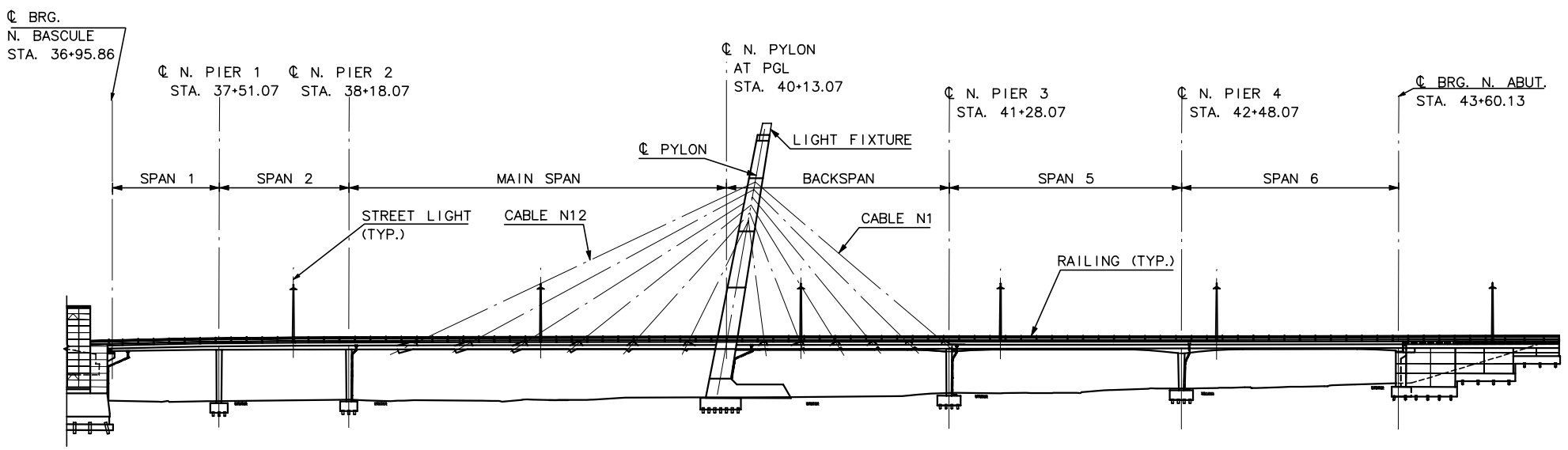

STAGE 10

1" = 40'-0"

STAGE 5:

CONSTRUCT SUPERSTRUCTURE SLAB FOR SPANS 1 AND 2.
(N. BASCULE TO STA. 38+27.85).

STAGE 6:

POST-TENSIONING SEQUENCE FOR REMAINING SPANS:

PRIOR TO POST-TENSIONING, CONCRETE MUST REACH A MINIMUM COMPRESSIVE STRENGTH OF 4500 PSI.

STEP 1 - ALTERNATE END STRESS ALL TRANSVERSE TENDONS.

- START AT BASCULE END BEAM, STRESS ALL FROM WEST SIDE, THEN STRESS ALL FROM EAST SIDE.
- GROUT ALL TRANSVERSE TENDONS.

STEP 2 - STRESS LONGITUNIDAL TENDONS L2 AND L4

STEP 3 - STRESS LONGITUDINAL TENDONS L3 AND L5

STEP 4 - STRESS LONGITUDINAL TENDONS L1 AND L6

STEP 5 - GROUT LONGITUDINAL TENDONS L1-L6.

ALL TENDONS SHALL BE GROUTED PER THE PTI "GUIDE SPECIFICATIONS FOR GROUTING OF POST-TENSIONED STRUCTURE", FIRST EDITION, FEBRUARY 2001.

NOTES: SEE TRANSVERSE PT DRAWINGS AND DECK PLANS FOR TRANSVERSE PT JACKING FORCE REQUIREMENTS.
ALL LONGITUDINAL TENDONS ARE DOUBLE-END STRESSED TO A JACKING FORCE OF 835 KIPS.

STAGE 7:

1. CONSTRUCT ALL SIDEWALKS AND CABLE BLISTERS.

2. INSTALL CABLES.

STAGE 8:

CABLE STAY STRESSING SEQUENCE:

STEP 1 - STRESS N7 TO 315 KIPS (26.25 KIPS/STR)
- STRESS N6 TO 340 KIPS (17.89 KIPS/STR)

STEP 2 - STRESS N8 TO 720 KIPS (27.69 KIPS/STR)
- STRESS N5 TO 390 KIPS (17.73 KIPS/STR)

STEP 3 - STRESS N9 TO 770 KIPS (25.67 KIPS/STR)
- STRESS N4 TO 500 KIPS (21.74 KIPS/STR)

STEP 4 - STRESS N10 TO 840 KIPS (23.33 KIPS/STR)
- STRESS N3 TO 560 KIPS (24.35 KIPS/STR)

STEP 5 - STRESS N11 TO 770 KIPS (22.00 KIPS/STR)
- STRESS N2 TO 785 KIPS (23.79 KIPS/STR)

STEP 6 - STRESS N12 TO 800 KIPS (21.62 KIPS/STR)
- STRESS N1 TO 790 KIPS (22.57 KIPS/STR)

NOTE:

ALTERNATE STRESS MAINSPAN CABLE PAIRS WITH BACKSPAN CABLE PAIRS, STARTING WITH MAINSPAN. THE CORRESPONDING EAST AND WEST CABLES SHALL BE STRESSED SIMULTANEOUSLY. (I.E. N7E AND N7W)

STAGE 9:

1. REMOVE SUPERSTRUCTURE FALSEWORK.

2. CONSTRUCT NORTH ABUTMENT EAST WINGWALL.

STAGE 10:

1. PLACE 3 LINE AND 2 LINE RAILING, EXPANSION JOINTS, STREET LIGHTS, PYLON LIGHT FIXTURE AND WEARING SURFACE.

RECORD DRAWING

No.	Date	Revisions	By
1	1-23-02	REVISE CABLE STRESSING	SL

HNTB CORPORATION

STATE OF WISCONSIN
DEPARTMENT OF TRANSPORTATION

STRUCTURE B-40-414C

Designed By	AP	Design Checked	TZ	Drawn By	CE	Plans Checked	AP

CONSTRUCTION STAGING 2 OF 2

SHEET NC92a OF .

STATE PROJECT I.D.	SHEET NUMBER
2235-00-70	8.751

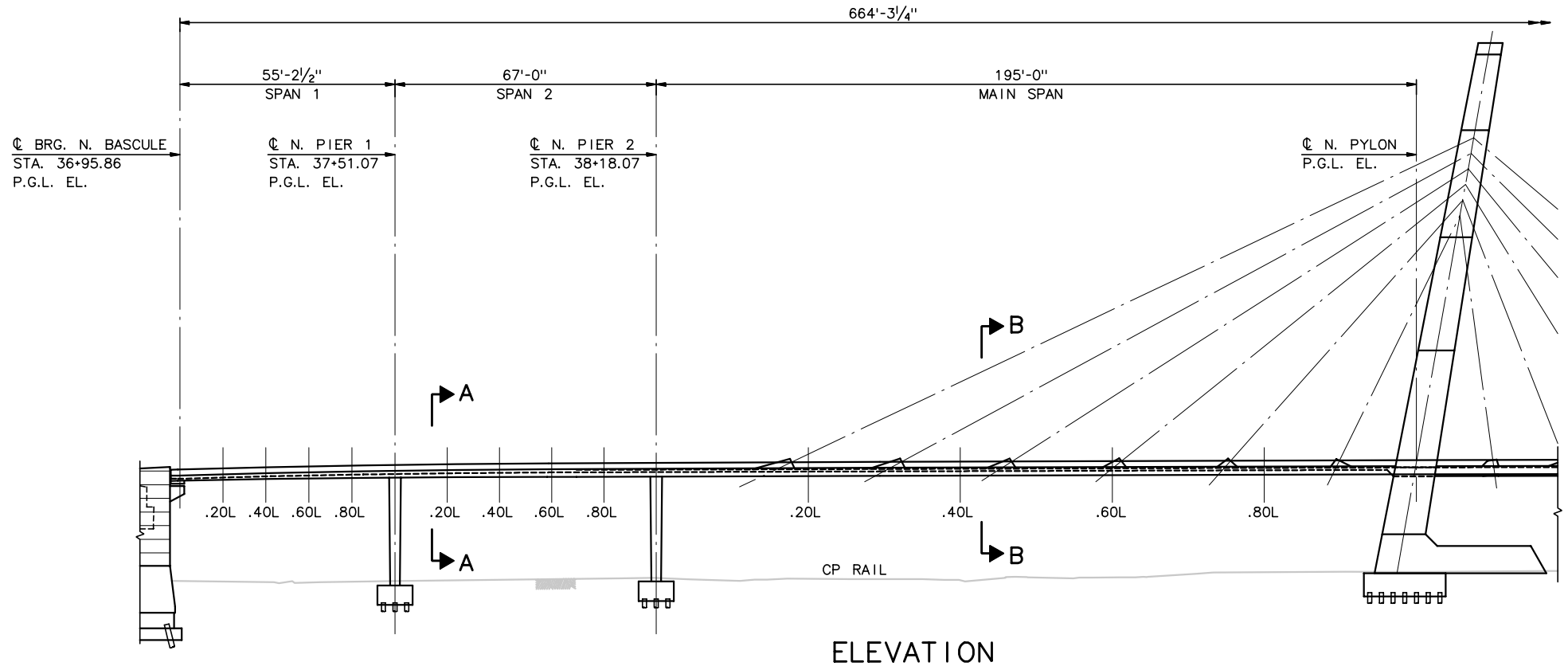

ELEVATION

1" = 20'-0"

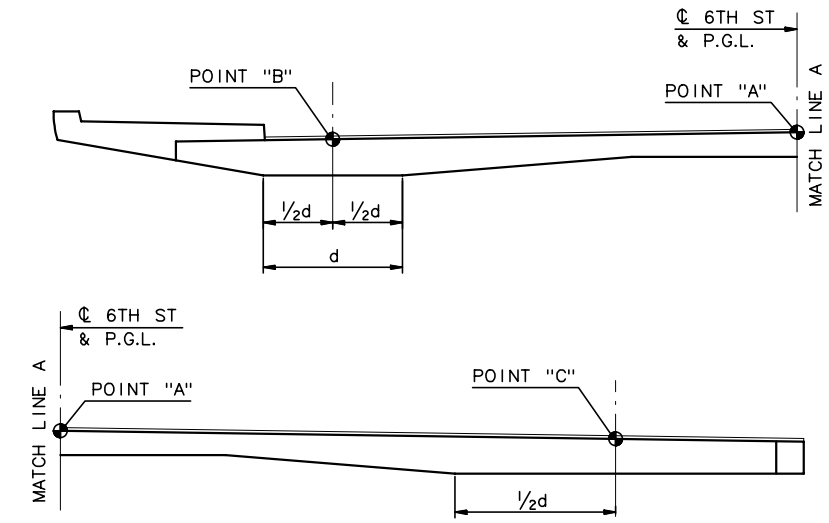

SECTION A-A

3/16" = 1'-0"

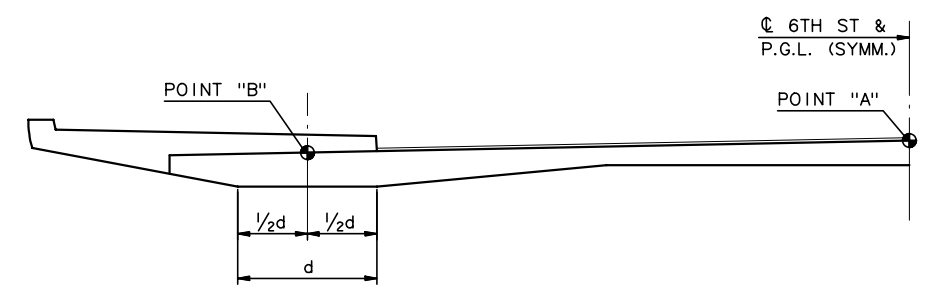

SECTION B-B

3/16" = 1'-0"

ESTIMATED DEFLECTIONS POINT "A" (INCHES)																
	SPAN 1						SPAN 2					MAIN SPAN				
	℄ BRG.	.20L	.40L	.60L	.80L	℄ PIER 1	.20L	.40L	.60L	.80L	℄ PIER 2	.20L	.40L	.60L	.80L	℄ N. PYLON
BEGIN SERVICE	-0.02	+0.17	+0.30	+0.23	+0.23	+0.10	-0.20	-0.44	-0.55	-0.50	-0.40	+0.34	+0.07	-0.55	-0.67	-0.58
END SERVICE	-0.11	+0.12	+0.26	+0.25	+0.24	0.00	-0.53	-0.92	-1.01	-0.86	-0.76	-1.20	-2.38	-2.47	-2.05	-1.16

ESTIMATED DEFLECTIONS POINT "B" (INCHES)																
	SPAN 1						SPAN 2					MAIN SPAN				
	℄ BRG.	.20L	.40L	.60L	.80L	℄ PIER 1	.20L	.40L	.60L	.80L	℄ PIER 2	.20L	.40L	.60L	.80L	℄ N. PYLON
BEGIN SERVICE	0.00	+0.13	+0.29	+0.22	+0.16	0.00	-0.16	-0.14	-0.11	-0.06	0.00	+0.74	+1.04	+0.46	+0.17	0.00
END SERVICE	0.00	+0.17	+0.35	+0.34	+0.24	0.00	-0.36	-0.38	-0.28	-0.12	0.00	-0.04	-0.24	-0.38	-0.26	0.00

ESTIMATED DEFLECTIONS POINT "C" (INCHES)																
	SPAN 1						SPAN 2					MAIN SPAN				
	℄ BRG.	.20L	.40L	.60L	.80L	℄ PIER 1	.20L	.40L	.60L	.80L	℄ PIER 2	.20L	.40L	.60L	.80L	℄ N. PYLON
BEGIN SERVICE	0.00	+0.13	+0.29	+0.22	+0.16	0.00	-0.16	-0.14	-0.11	-0.06	0.00	+0.74	+1.04	+0.46	+0.17	0.00
END SERVICE	0.00	+0.17	+0.35	+0.34	+0.24	0.00	-0.36	-0.38	-0.28	-0.12	0.00	-0.04	-0.24	-0.38	-0.26	0.00

NOTES:

1. BEGIN SERVICE REPRESENTS THE ESTIMATED DEFLECTIONS AT THE START OF SERVICE. ALL POST-TENSIONING, PLACEMENT OF SUPERIMPOSED DEAD LOADS AND CABLE STRESSING HAS OCCURED.
2. END OF SERVICE DEFLECTIONS INCLUDE TIME EFFECTS.

RECORD DRAWING

No.	Date	Revisions	By
1	10-02-01	SPANS 1 & 2 DEFLECTIONS	SL

HNTB CORPORATION

STATE OF WISCONSIN
DEPARTMENT OF TRANSPORTATION

STRUCTURE B-40-414C

Designed By	SL	Design Checked	TZ	Drawn By	DS	Plans Checked	AP

NORTH CABLE STAY DEFLECTIONS 1 OF 2

SHEET NC92b OF

STATE PROJECT I.D.	SHEET NUMBER
2235-00-70	8.752

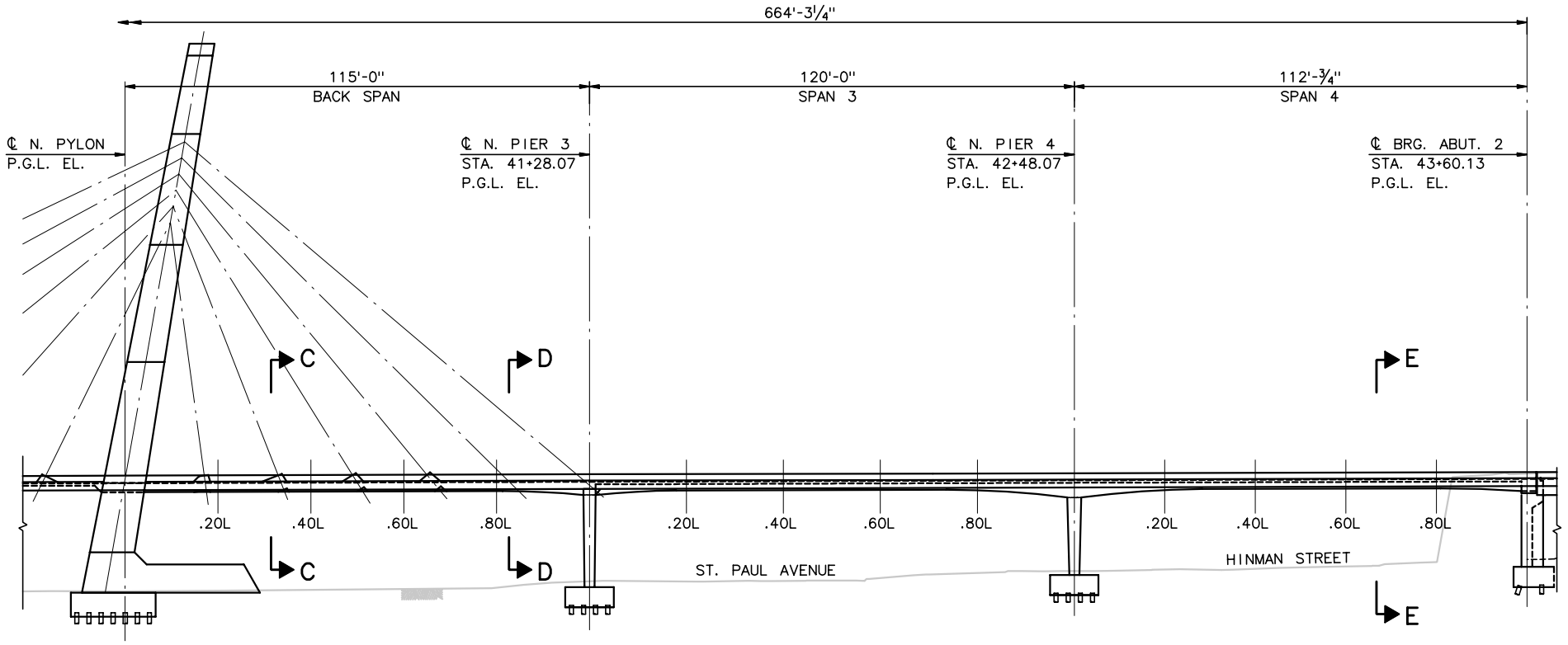

ELEVATION

1" = 20'-0"

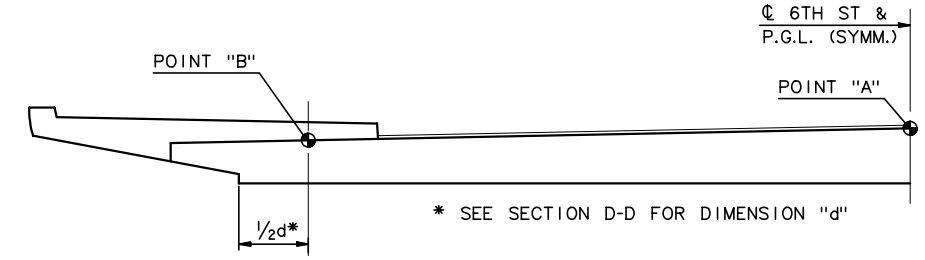

SECTION C-C

3/16" = 1'-0"

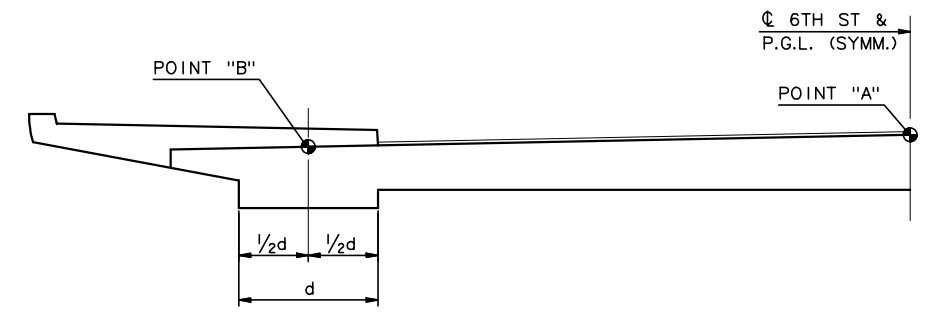

SECTION D-D

3/16" = 1'-0"

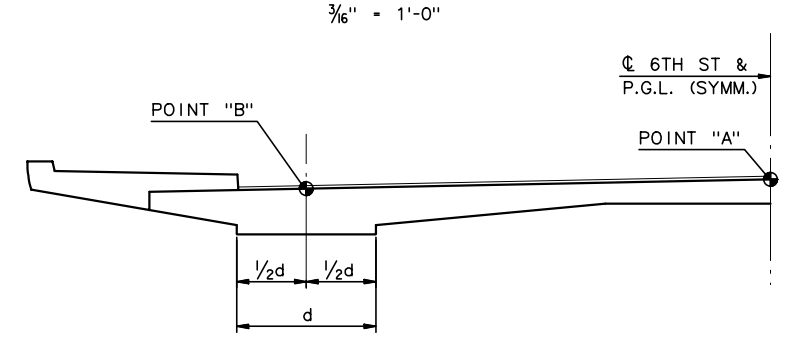

SECTION E-E

3/16" = 1'-0"

ESTIMATED DEFLECTIONS POINT "A" (INCHES)

	BACK SPAN						SPAN 3					SPAN 4				
	℄ N. PYLON	.20L	.40L	.60L	.80L	℄ PIER 3	.20L	.40L	.60L	.80L	℄ PIER 4	.20L	.40L	.60L	.80L	℄ BRG.
BEGIN SERVICE	-0.58	-0.36	-0.06	+0.10	+0.14	-0.10	-0.88	-1.16	-0.79	-0.09	0.00	-0.50	-1.27	-1.79	-1.40	-0.62
END SERVICE	-1.16	-0.97	-0.46	-0.14	-0.02	-0.34	-1.52	-2.30	-1.90	-0.63	-0.04	-0.64	-1.85	-2.62	-1.97	-0.85

ESTIMATED DEFLECTIONS POINT "B" (INCHES)

	BACK SPAN						SPAN 3					SPAN 4				
	℄ N. PYLON	.20L	.40L	.60L	.80L	℄ PIER 3	.20L	.40L	.60L	.80L	℄ PIER 4	.20L	.40L	.60L	.80L	℄ BRG.
BEGIN SERVICE	0.00	+0.04	+0.32	+0.43	+0.35	0.00	-0.86	-1.14	-0.78	-0.10	0.00	-0.54	-1.24	-1.72	-1.21	0.00
END SERVICE	0.00	-0.11	+0.36	+0.58	+0.47	0.00	-1.36	-2.14	-1.79	-0.60	0.00	-0.65	-1.70	-2.39	-1.57	0.00

NOTES:

1. BEGIN SERVICE REPRESENTS THE ESTIMATED DEFLECTIONS AT THE START OF SERVICE. ALL POST-TENSIONING, PLACEMENT OF SUPERIMPOSED DEAD LOADS AND CABLE STRESSING HAS OCCURED.
2. END OF SERVICE DEFLECTIONS INCLUDE TIME EFFECTS.

RECORD DRAWING

No.	Date	Revisions	By

HNTB CORPORATION

STATE OF WISCONSIN
DEPARTMENT OF TRANSPORTATION

STRUCTURE B-40-414C

Designed By	SL	Design Checked	TZ	Drawn By	DS	Plans Checked	AP

NORTH CABLE STAY DEFLECTIONS 2 OF 2

SHEET NC92c OF

STATE PROJECT I.D.	SHEET NUMBER
2235-00-70	8.753

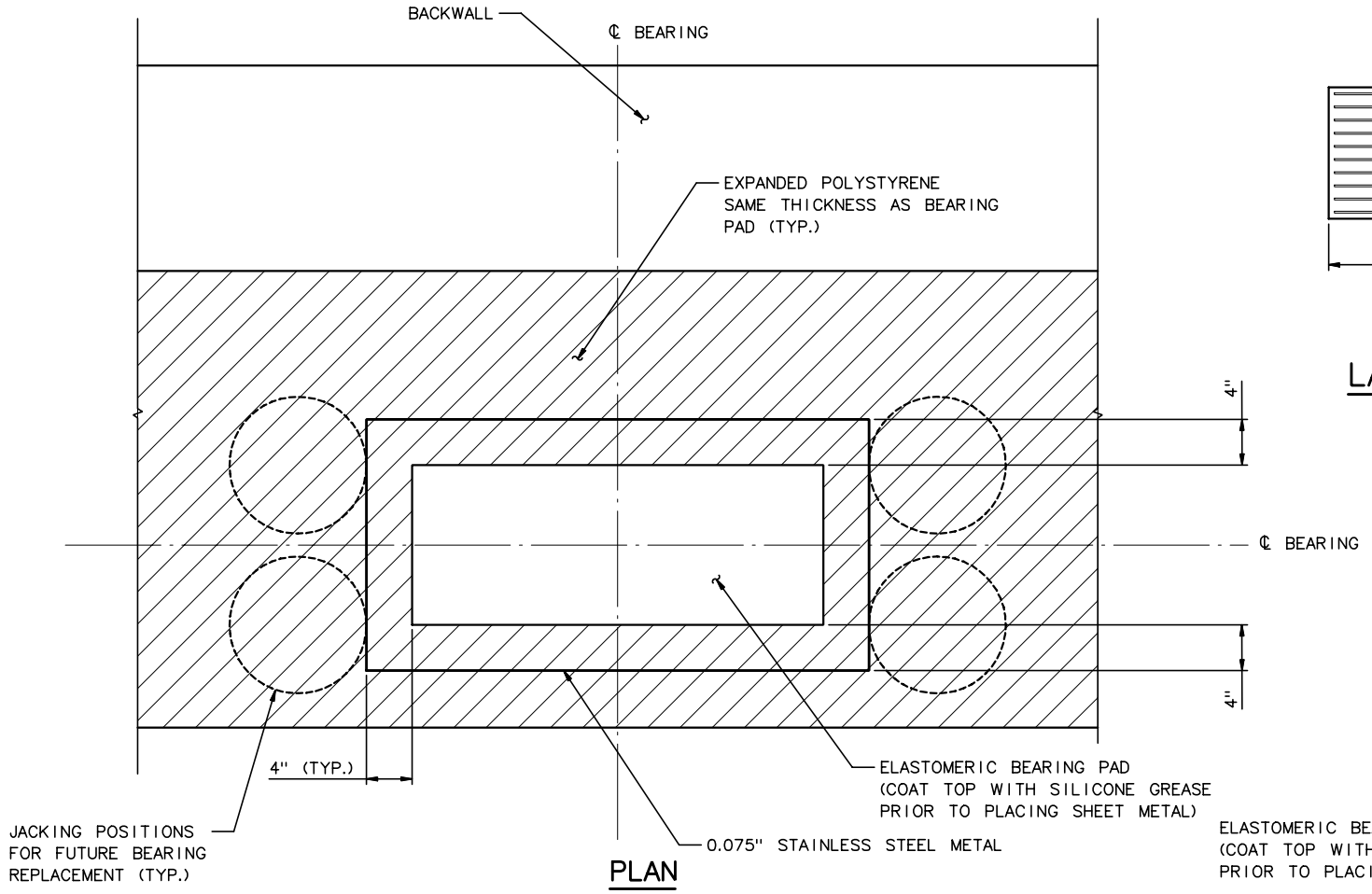

PLAN

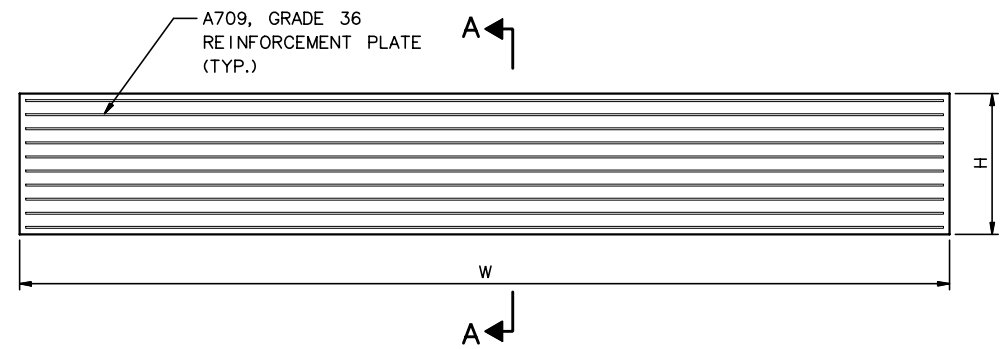

LAMINATED ELASTOMERIC BEARING ELEVATION

3" = 1'-0"

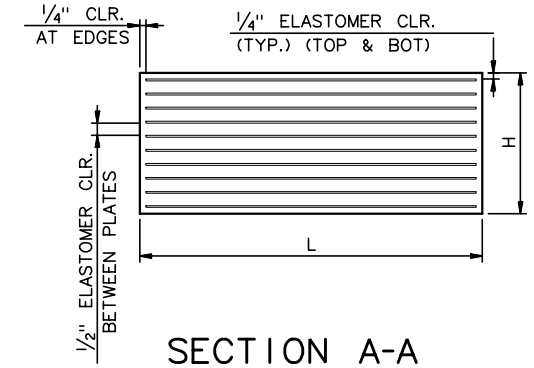

SECTION A-A

3" = 1'-0"

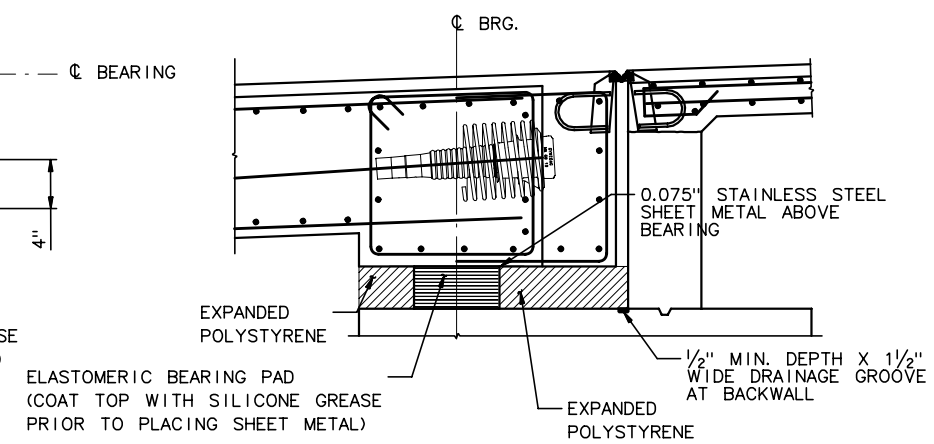

TYPICAL SECTION AT BASCULE

3/4" = 1'-0"

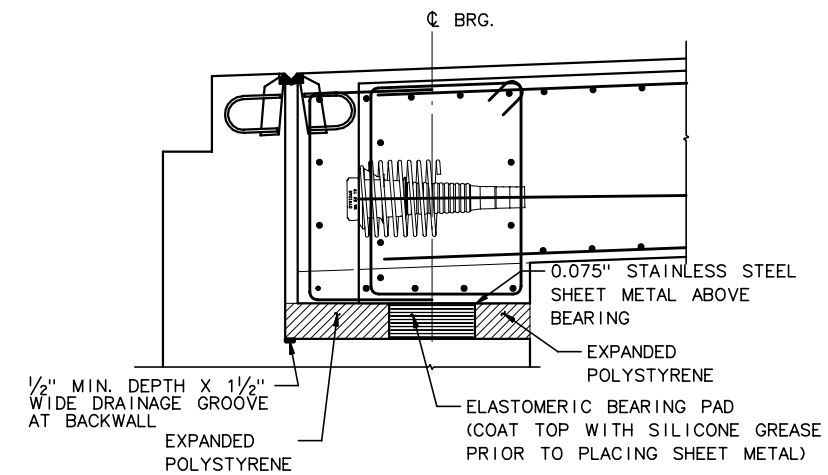

TYPICAL SECTION AT ABUTMENT

3/4" = 1'-0"

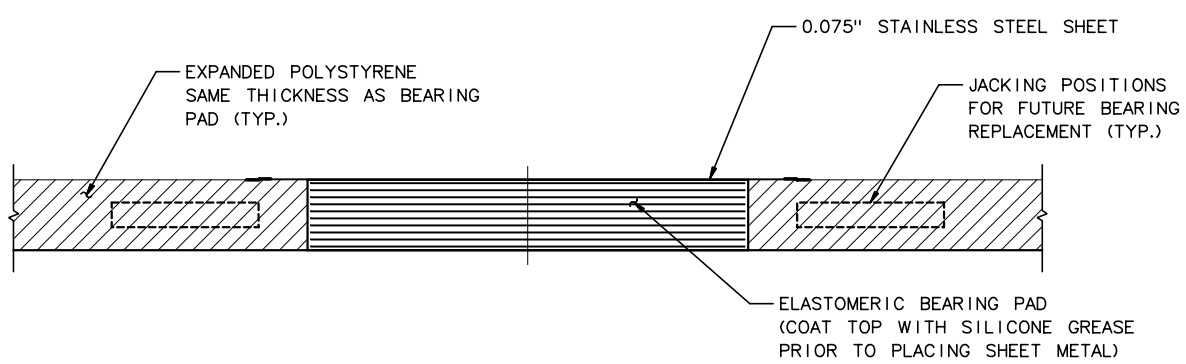

ELEVATION

BEARING SEAT DETAILS

(SUPERSTRUCTURE NOT SHOWN)

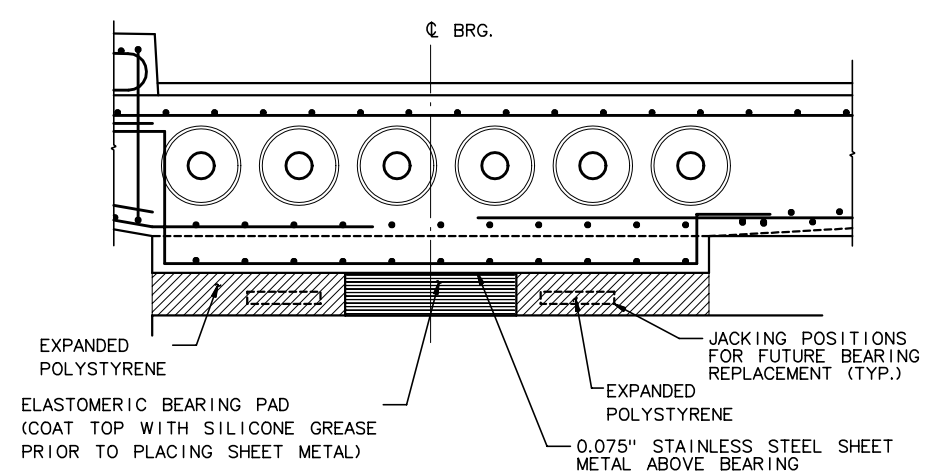

TYPICAL ELEVATION AT BASCULE

(ABUTMENT SIMILAR)

3/4" = 1'-0"

NOTES:

1. ROUGHEN BEARING SEAT REGION WITH STIFF BRUSH TO APPROX. 1/8" AMPLITUDE PRIOR TO CONCRETE SETTING
2. THOROUGHLY COAT TOP OF BEARING WITH SILICONE GREASE PRIOR TO PLACING STAINLESS STEEL SHEET METAL ON BEARING.
3. SEAL JOINTS BETWEEN STAINLESS STEEL SHEET METAL AND EXPANDED POLYSTYRENE TO PREVENT CEMENT LEAKAGE BETWEEN STAINLESS STEEL METAL SHEETS AND BEARING.
4. REMOVE EXPANDED POLYSTYRENE AND/OR OTHER FORM WORK AFTER CASTING OF SUPERSTRUCTURE
5. REINFORCEMENT STEEL PLATES SHALL CONFORM TO ASTM A709, GRADE 36.
6. STAINLESS STEEL PLATE SHALL CONFORM TO ASTM A240 TYPE 304 AND SHALL BE POLISHED TO A #8 MIRROR FINISH.
7. ELASTOMERIC DUROMETER SHALL BE 55±5.
8. MINIMUM BEARING DEAD LOAD WITHOUT FUTURE WEARING SURFACE PROVIDED FOR FUTURE JACKING REQUIREMENTS.
9. SLOPE ALL SURFACES AWAY FROM BEARING AREA.
10. PROVIDE 3/4" DRIP GROOVE TRANSVERSELY ON UNDERSIDE OF STRUCTURE, SEE DECK DETAILS.

LAMINATED ELASTOMERIC BEARING DETAILS

BEARING LOCATON	STATION	# OF BRGS	L (IN)	W (IN)	STEEL REINFORCEMENT PLATES		TOTAL BEARING HT	0.075" STAINLESS STEEL SHEET SIZE	MIN. SUPERSTRUCTURE DL PER BEARING *
					PLATE THICKNESS	QTY.			
N. ABUTMENT	43+60.13	2	14	38	.075"	10	5.75"	22" X 46"	580 kips
N. BASCULE N. CORBEL	36+95.86	2	14	28	.075"	12	6.90"	22" X 36"	330 kips

*SEE NOTE 8

RECORD DRAWING

No.	Date	Revisions	By

HNTB CORPORATION

STATE OF WISCONSIN
DEPARTMENT OF TRANSPORTATION

STRUCTURE B-40-414C

Designed By	AP	Design Checked	TZ	Drawn By	JE	Plans Checked	AP

NORTH CABLE STAY BEARING DETAILS

SHEET NC93 OF .

STATE PROJECT I.D.	SHEET NUMBER
2235-00-70	8.754

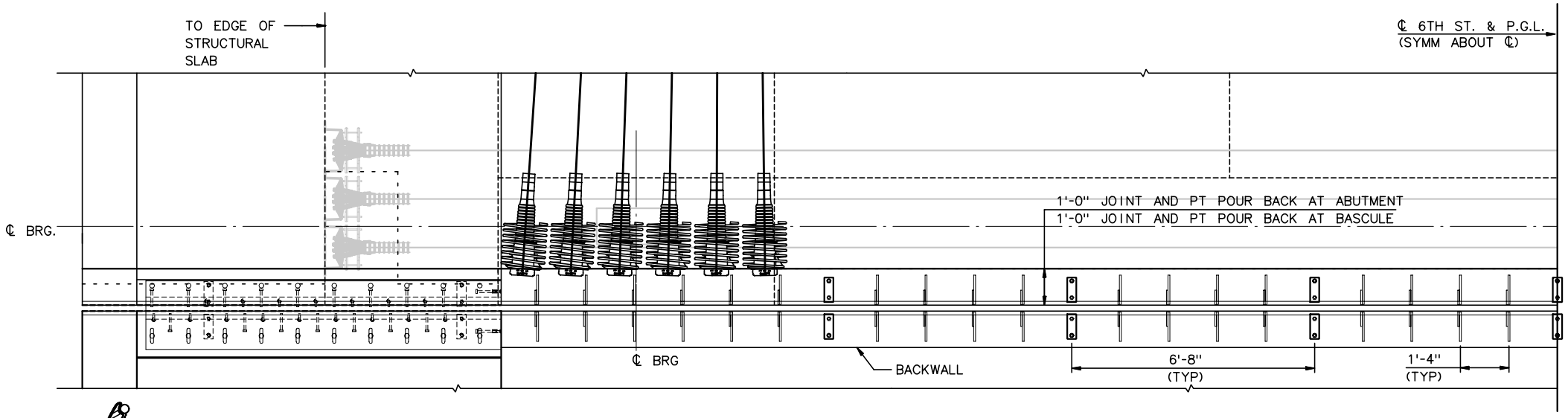

EXPANSION JOINT PLAN

½" = 1'-0"

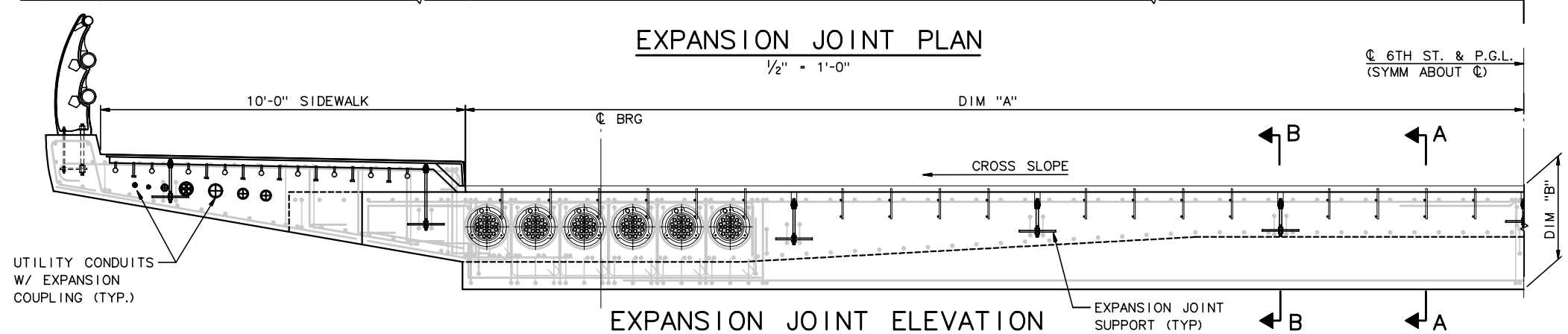

EXPANSION JOINT ELEVATION

½" = 1'-0"

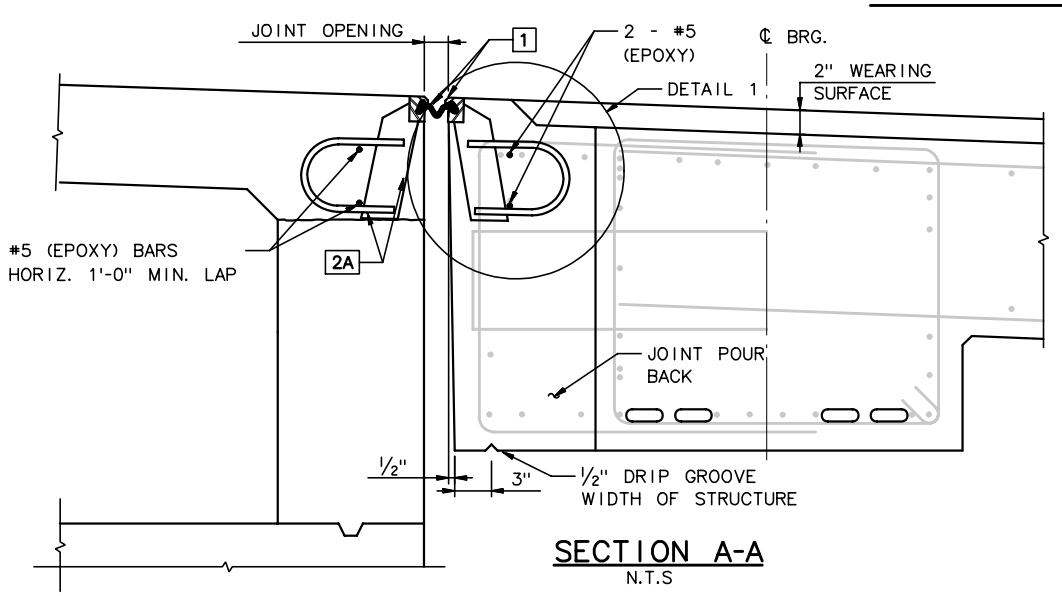

SECTION A-A

N.T.S

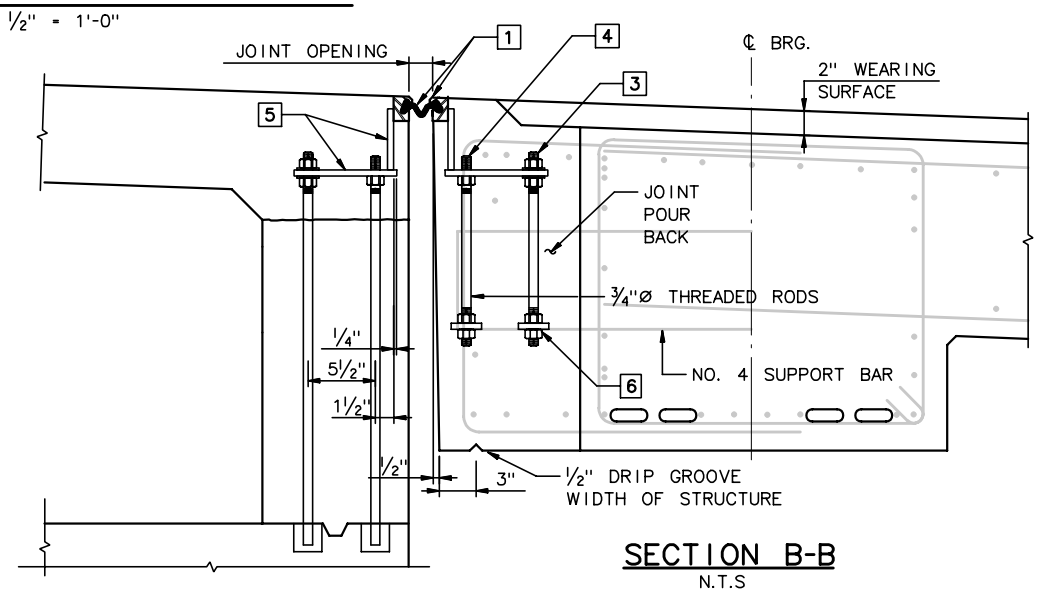

SECTION B-B

N.T.S

SECTIONS THRU JOINT AT BASCULE

LEGEND:

REF. SHEET 2, 4, 5 OF 5

1. NEOPRENE AND STEEL EXTRUSION SHALL BE SET BY THE TABLE BELOW. SEAL AND EXTRUSIONS BY OTHER MANUFACTURERS MEETING THE DETAILS OF THESE PLANS AND EQUIVALENT TO THE PRODUCTS BELOW SHALL BE ACCEPTABLE.
2. STUDS ⅝"Ø x 6⅜" LONG AT 6" ALTERNATE CENTERS. WELD TO EXTRUSIONS, BEND AS SHOWN AFTER WELDING.

2A. ½" THICK ANCHOR PLATE WITH ⅝"Ø ROD. WELD ROD TO ANCHOR PLATE, WELD ANCHOR PL. TO NO. 1 AT 1'-4" CTRS.

3. ¾"Ø GALVANIZED THREADED ROD WITH 2 NUTS AND WASHERS. ON BACKWALL SIDE GROUT THREADED ROD INTO FIELD DRILLED HOLES IN BACKWALL .
4. ¾"Ø THREADED ROD WITH NUT. TACK WELD NUT TO NO. 5. ON BACKWALL SIDE GROUT THREADED ROD INTO FIELD DRILLED HOLES IN BACKWALL .
5. FABRICATE SUPPORT FROM 3" x ½" BAR AS SHOWN OR EQUIVALENT. SHOP OR FIELD WELD TO NO. 1. IF FIELD WELDED, COVER WELDED AREAS WITH EPOXY-COATING MATERIAL. PROVIDE 1½"Ø HOLE FOR NO. 3 & 1"Ø HOLE FOR NO. 4.
6. GALV. ½" X 2½" X 12" SUPPORT BAR W/ SLOTTED HOLES FOR NO. 3 & 4.

REF. SHEET 2, 4, 5 OF 5

7. ¾"Ø x 1 ½" STAINLESS STEEL FLAT HEAD MACHINE SCREWS. RECESS 1/16" BELOW PLATE SURFACE.
8. ¾"Ø x 4" GALVANIZED HEX HEAD BOLT. BEND 45° AT SLIDING SIDEWALK PLATE ONLY.
9. ¾"Ø x 2¼" GALVANIZED THREADED COUPLING.
10. GALVANIZED SIDEWALK PLATE ⅜" x 2'-0" WIDE. BEND DOWN FACE OF SIDEWALK WITH CSK HOLES FOR NO. 7.
11. 1" x 5" SLOTTED CSK. HOLE FOR NO. 7. SLOT PARALLEL TO DIRECTION OF MOVEMENT.

NOTES:

1. ONE FIELD SPLICE PERMITTED IN STEEL EXTRUSIONS. GRIND SPLICE SMOOTH. NO SPLICING PERMITTED IN NEOPRENE STRIP SEAL.
2. AFTER FABRICATION, BUT BEFORE SHIPMENT, STRAIGHTEN STEEL EXTRUSIONS SUCH THAT THEY SHALL BE FREE FROM WARP, TWIST & SWEEP.
3. FABRICATOR SHALL PROVIDE MEANS OF KEEPING GALVANIZED EXTRUSIONS CLEAN & SMOOTH DURING SHIPMENT AND PRIOR TO APPLYING LUBRICANT ADHESIVE FOR NEOPRENE GLAND INSTALLATION.
4. SANDBLAST PLATES & EXTRUSIONS AFTER FABRICATION IN ACCORDANCE WITH SSPC SP. #6 "COMMERCIAL BLAST CLEANING". AFTER BLAST CLEANING, THE PLATES & EXTRUSIONS SHALL BE HOT DIPPED GALVANIZED.
5. ANCHOR SYSTEM NO. 8 & NO. 9 SHALL CONFORM TO ASTM A307 & SHALL BE GALVANIZED IN ACCORDANCE WITH ASTM A153 CLASS C & D.
6. THE STEEL EXTRUSION, SUPPORT BAR, AND PROTECTION ANGLE ARMOR SHALL CONFORM TO ASTM A709 GRADE 36, AND GALVANIZED CONFORMING TO THE REQUIREMENTS OF ASTM A123

EXPANSION JOINT LOCATION	DIM "A"	DIM "B"	CROSS SLOPE	JOINT OPENING AT			MOVEMENT RATING (INCHES)	STRIP SEAL SIZE	STEEL EXTRUSION	MANUFACTURER/ PRODUCT *
				85°F	45°F	5°F				
NORTH BASCULE NORTH PIER STA. 36+93.52	29.01'	2'-10"	0%	1.0"	2.05"	3.1"	4.5"	5"	1¼" x 2"	DS BROWN SSA2-A2R-XTRA
POST OFFICE TIE IN STA. 37+65±	NA	1'-9"±	VARIES	1.0"	1.75"	2.5"	2.0"	**	1¼" x 2"	DS BROWN SSA2-A2R-XTRA
NORTH ABUTMENT STA. 43+62.46	29.01'	4'-5"	2%	1.0"	1.86"	2.72"	3.5"	4"	1¼" x 2"	DS BROWN SSA2-A2R400

* SEE NOTE 1

** MIN. TRANSVERSE DIFFERENTIAL MOVEMENT REQUIREMENT ± 2"

RECORD DRAWING

No.	Date	Revisions	By

HNTB CORPORATION

STATE OF WISCONSIN
DEPARTMENT OF TRANSPORTATION

STRUCTURE B-40-414C

Designed By	AP	Design Checked	JE	Drawn By	JE	Plans Checked	AP

EXPANSION JOINT DETAILS 1 OF 5

SHEET NC94 OF .

STATE PROJECT I.D.	SHEET NUMBER
2235-00-70	8.755

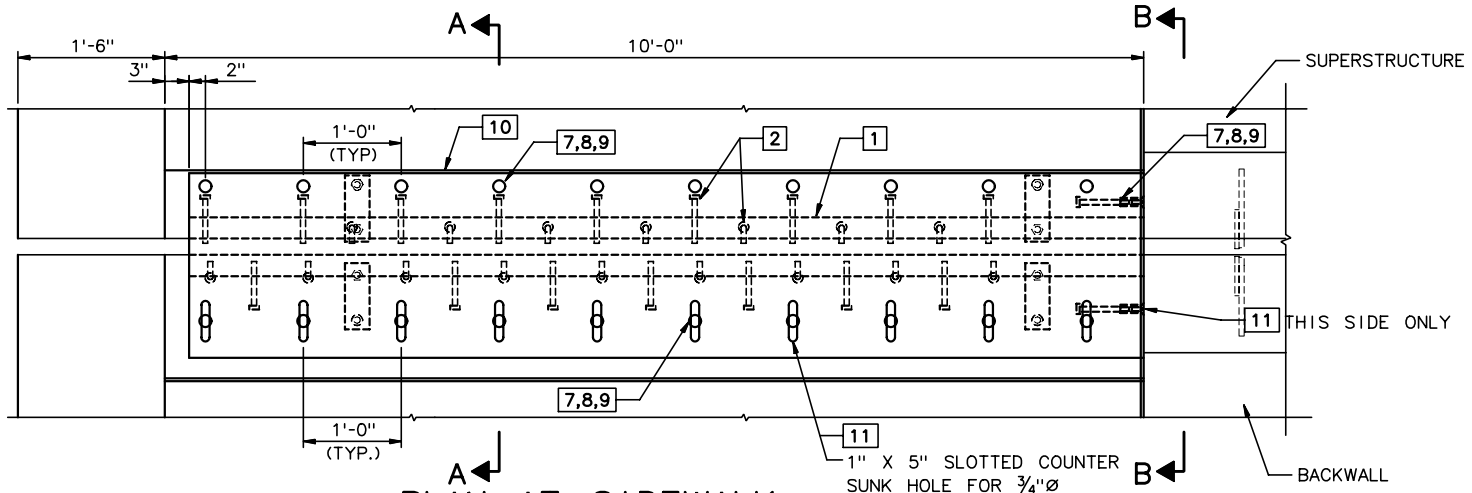

PLAN AT SIDEWALK

1" = 1'-0"

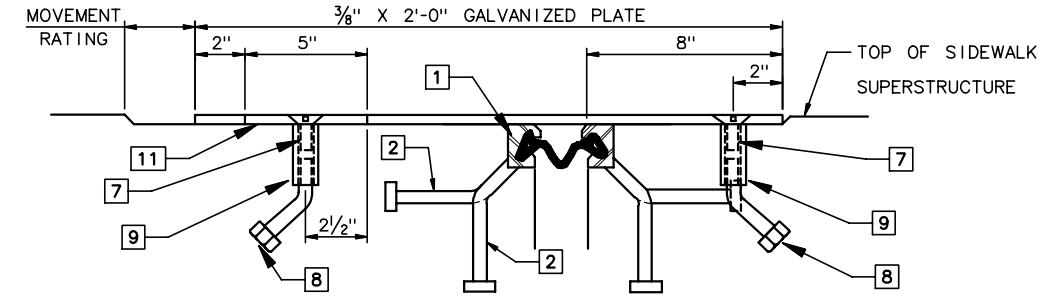

SECTION A-A (SIDEWALK SECT. ONLY)

3" = 1'-0"

NOTES:

1. WORK THIS DRAWING WITH EXPANSION JOINT DETAILS SHEET 1 OF 2 FOR SECTION LOCATIONS, LEGEND, AND NOTES.

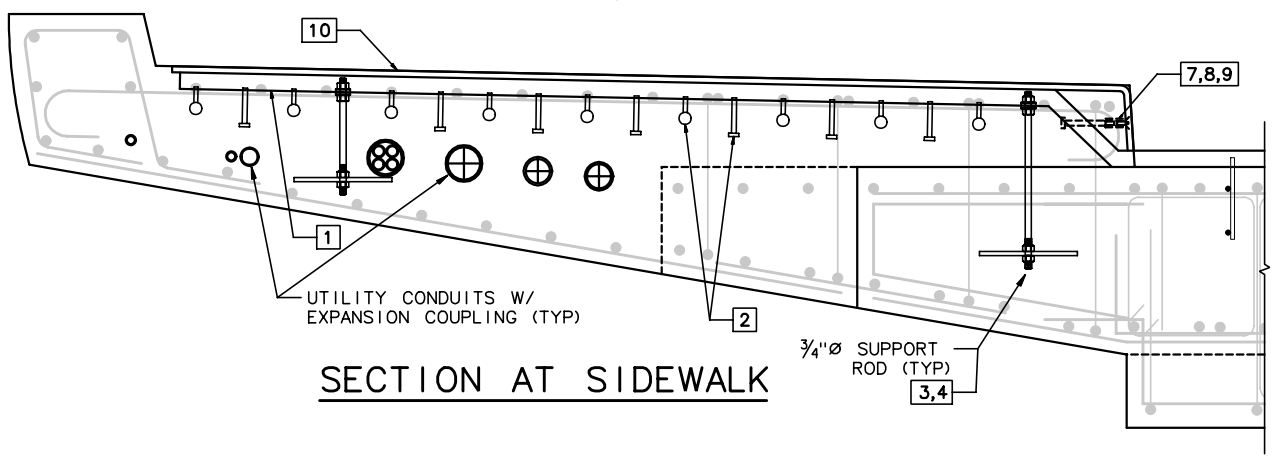

SECTION AT SIDEWALK

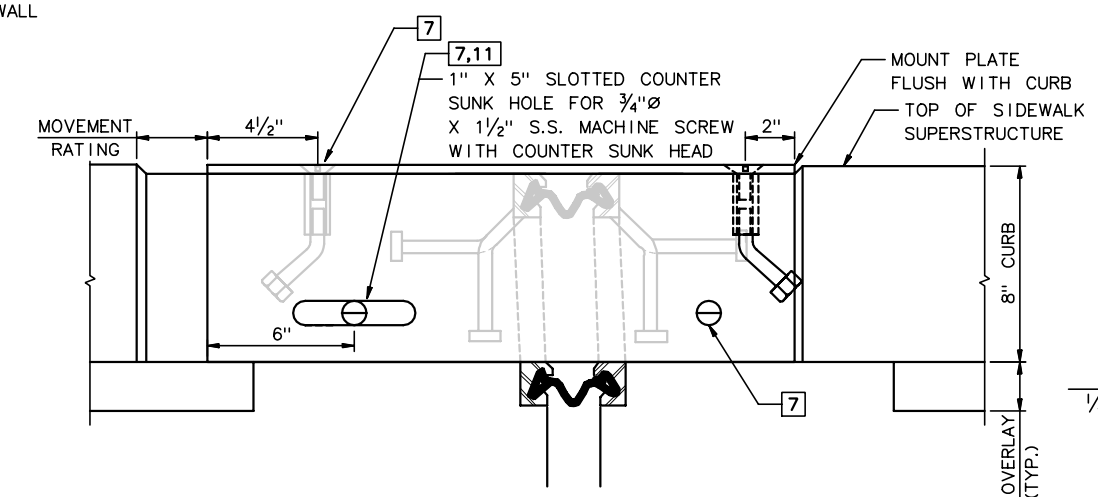

SECTION B-B (AT FACE OF 8" CURB)

3" = 1'-0"

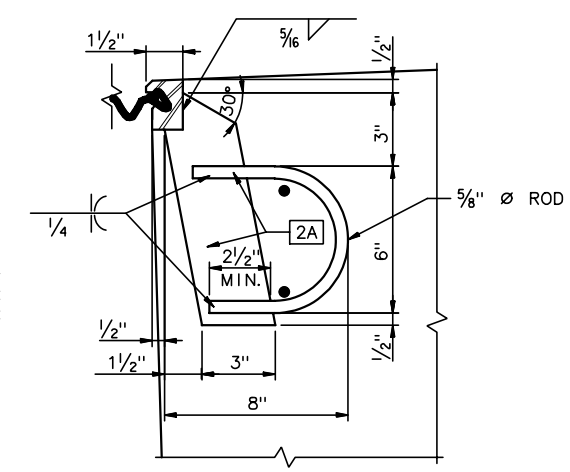

DETAIL 1

3" = 1'-0"

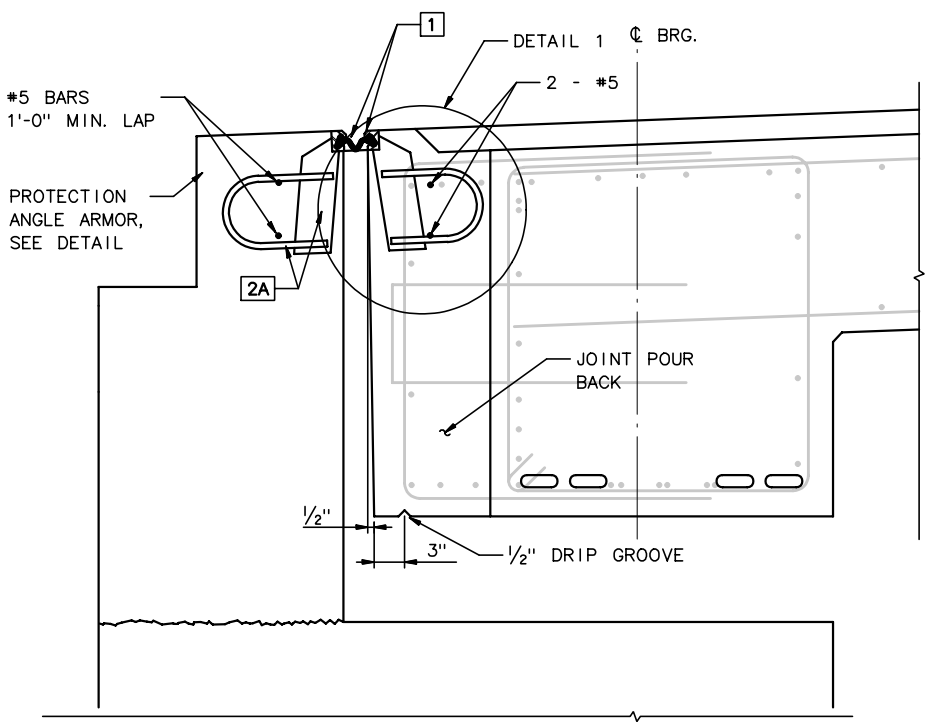

SECTION A-A

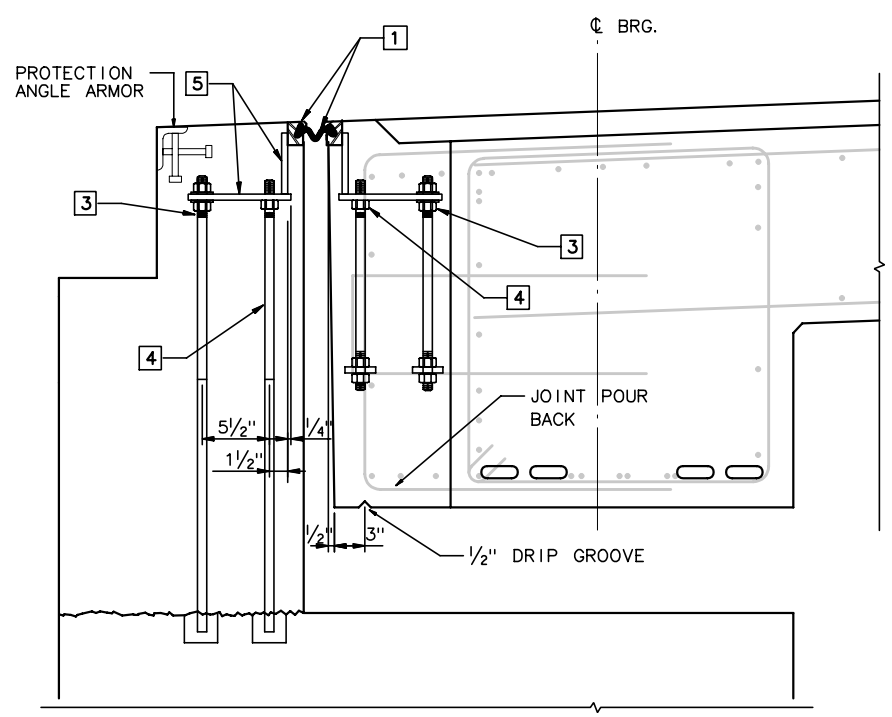

SECTION B-B

SECTION THRU JOINT AT ABUTMENT

1½" = 1'-0"

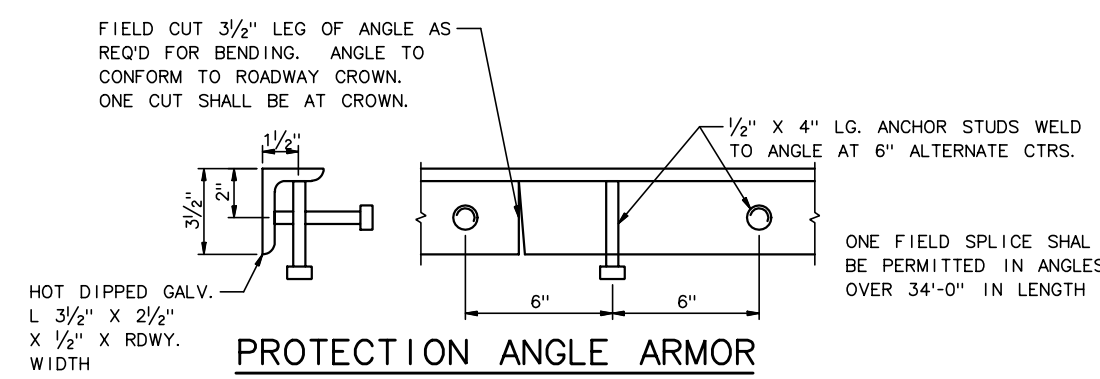

PROTECTION ANGLE ARMOR

3" = 1'-0"

RECORD DRAWING

No.	Date	Revisions	By

HNTB CORPORATION

STATE OF WISCONSIN
DEPARTMENT OF TRANSPORTATION

STRUCTURE B-40-414C

Designed By	AP	Design Checked	JE	Drawn By	JE	Plans Checked	AP

EXPANSION JOINT DETAILS 2 OF 5

SHEET NC95 OF .

STATE PROJECT I.D.	SHEET NUMBER
2235-00-70	8.756

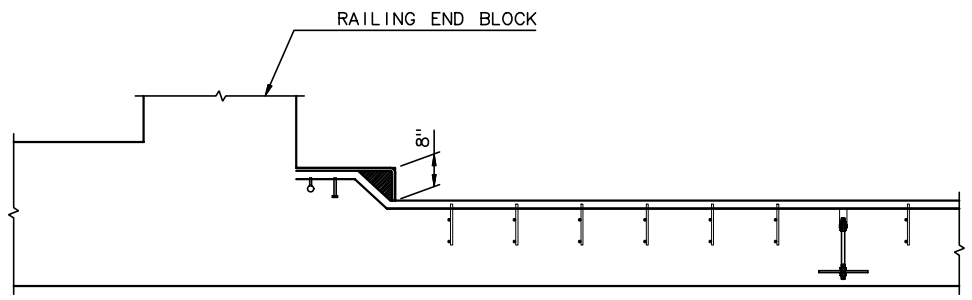

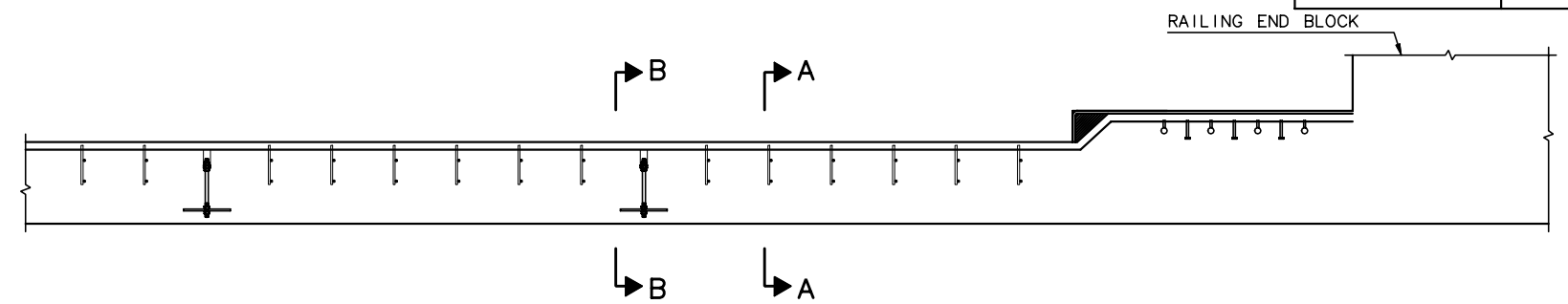

TIE IN JOINT - ELEVATION

½" = 1'-0"

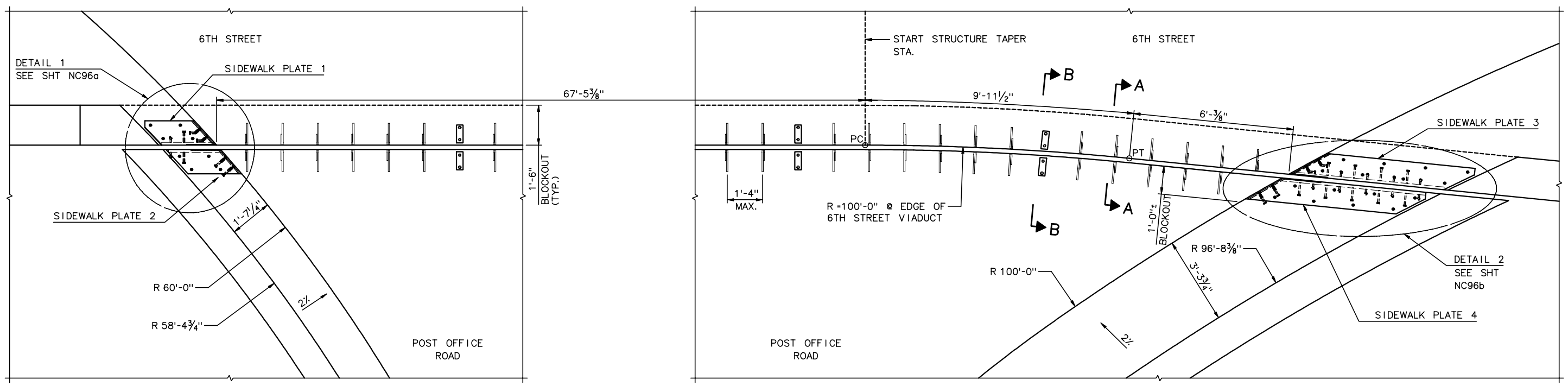

POST OFFICE TIE IN JOINT - PLAN

½" = 1'-0"

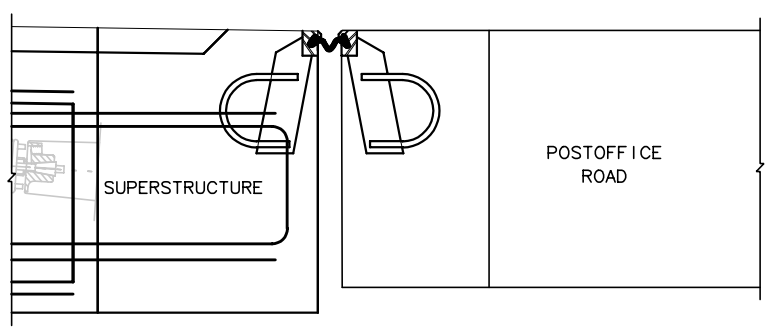

SECTION A

1½" = 1'-0"

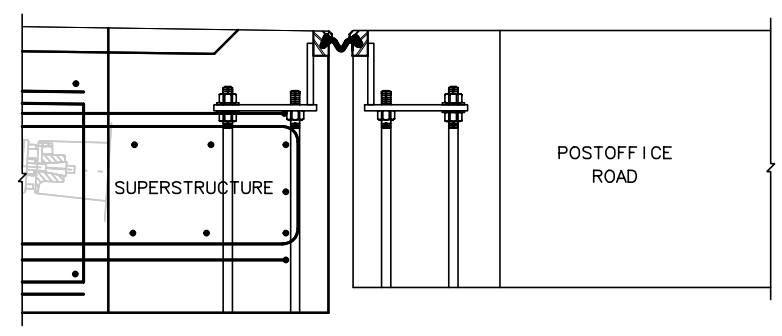

SECTION B

1½" = 1'-0"

NOTES:

1. ALL MATERIALS AND HARDWARE SHALL BE AS SPECIFIED ON NC75 AND NC76.

RECORD DRAWING

No.	Date	Revisions	By

HNTB CORPORATION

STATE OF WISCONSIN
DEPARTMENT OF TRANSPORTATION

STRUCTURE B-40-414C

Designed By	AP	Design Checked	JE	Drawn By	BM	Plans Checked	AP

EXPANSION JOINT DETAILS 3 OF 5

SHEET NC96 OF .

STATE PROJECT I.D.	SHEET NUMBER
2235-00-70	8.757

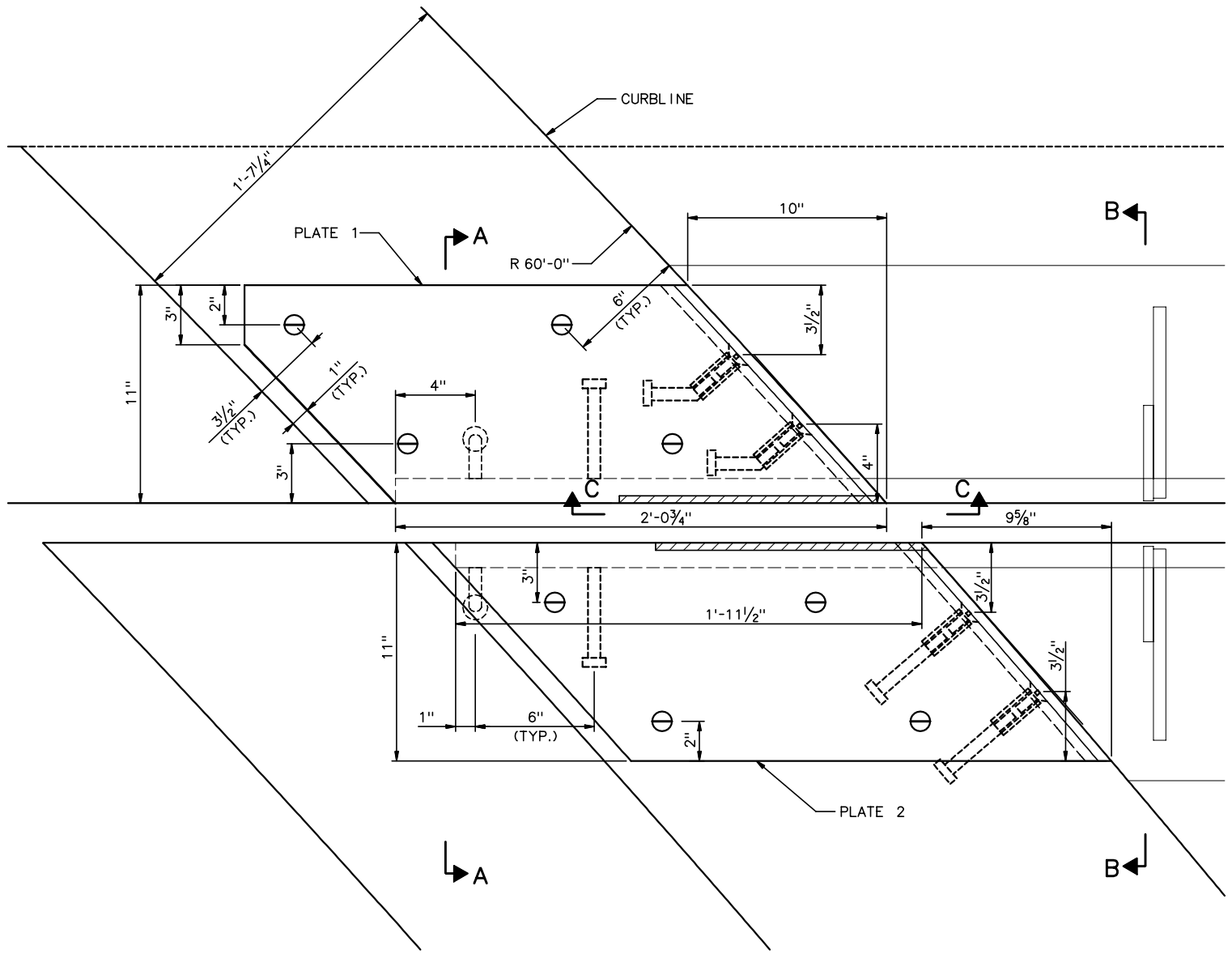

DETAIL 1

3" = 1'-0"

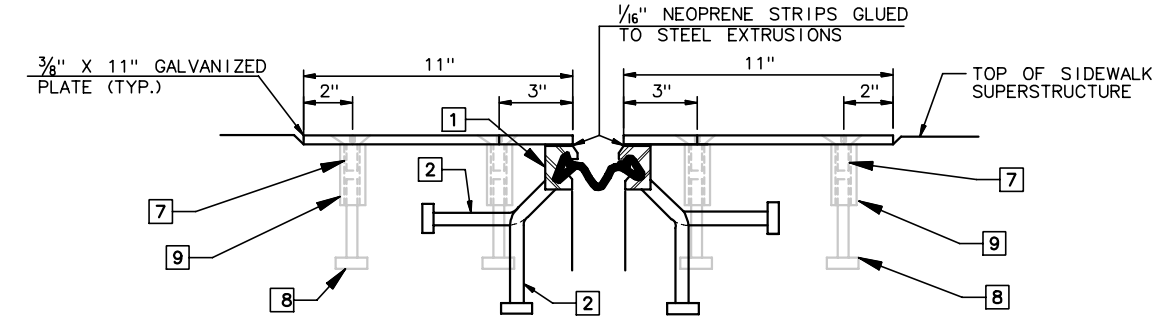

SECTION A-A (SIDEWALK SECT. ONLY)

3" = 1'-0"

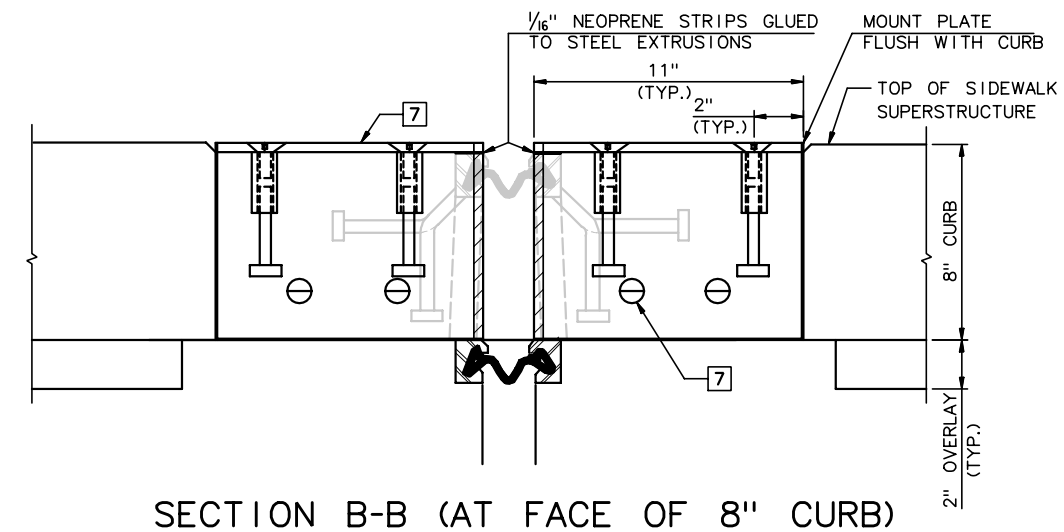

SECTION B-B (AT FACE OF 8" CURB)

3" = 1'-0"

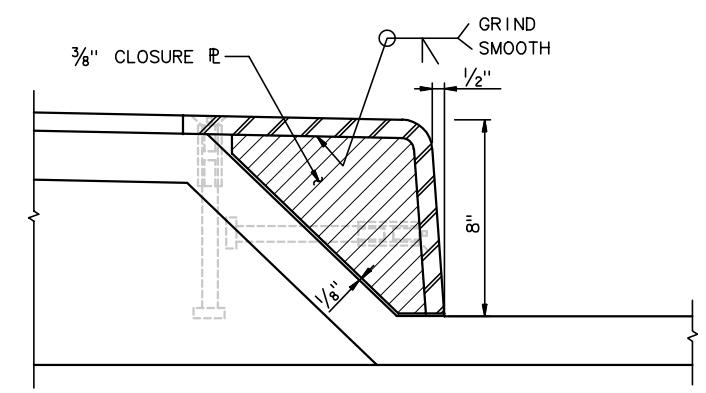

SECTION C-C

3" = 1'-0"

NOTES:

1. FOR LEGEND AND NOTES, SEE SHEET NC94.

RECORD DRAWING

No.	Date	Revisions	By

HNTB CORPORATION

STATE OF WISCONSIN
DEPARTMENT OF TRANSPORTATION

STRUCTURE B-40-414C

Designed By	AP	Design Checked	JE	Drawn By	JE	Plans Checked	AP

EXPANSION JOINT DETAILS 4 OF 5

SHEET NC96a OF .

STATE PROJECT I.D.	SHEET NUMBER
2235-00-70	8.758

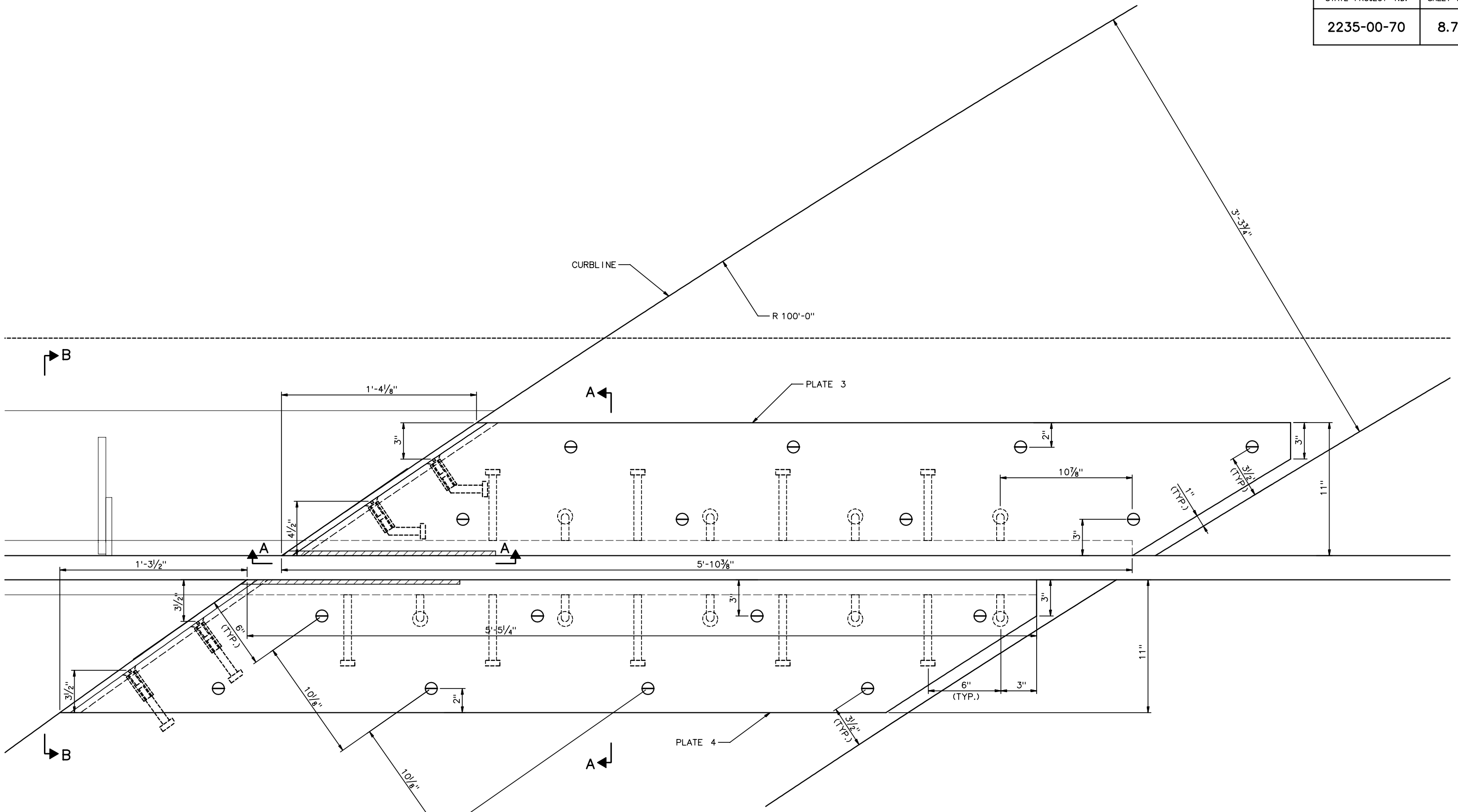

DETAIL 2

3" = 1'-0"

NOTES:

1. FOR LEGEND AND NOTES, SEE SHEET NC94.
2. FOR LOCATION OF SECTIONS A, B AND C, SEE SHT NC96a.

RECORD DRAWING

No.	Date	Revisions	By

HNTB CORPORATION

STATE OF WISCONSIN
DEPARTMENT OF TRANSPORTATION

STRUCTURE B-40-414C

Designed By	AP	Design Checked	JE	Drawn By	JE	Plans Checked	.

EXPANSION JOINT DETAILS 5 OF 5

SHEET NC96b OF .

STATE PROJECT I.D.	SHEET NUMBER
2235-00-70	8.759

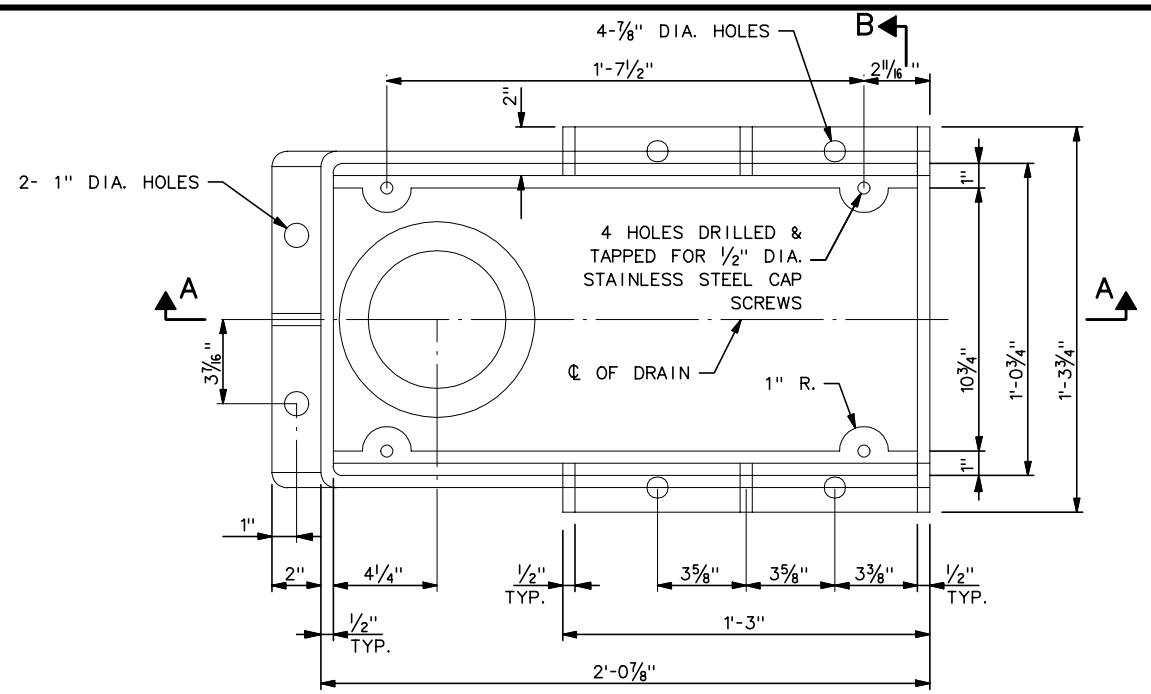

PLAN

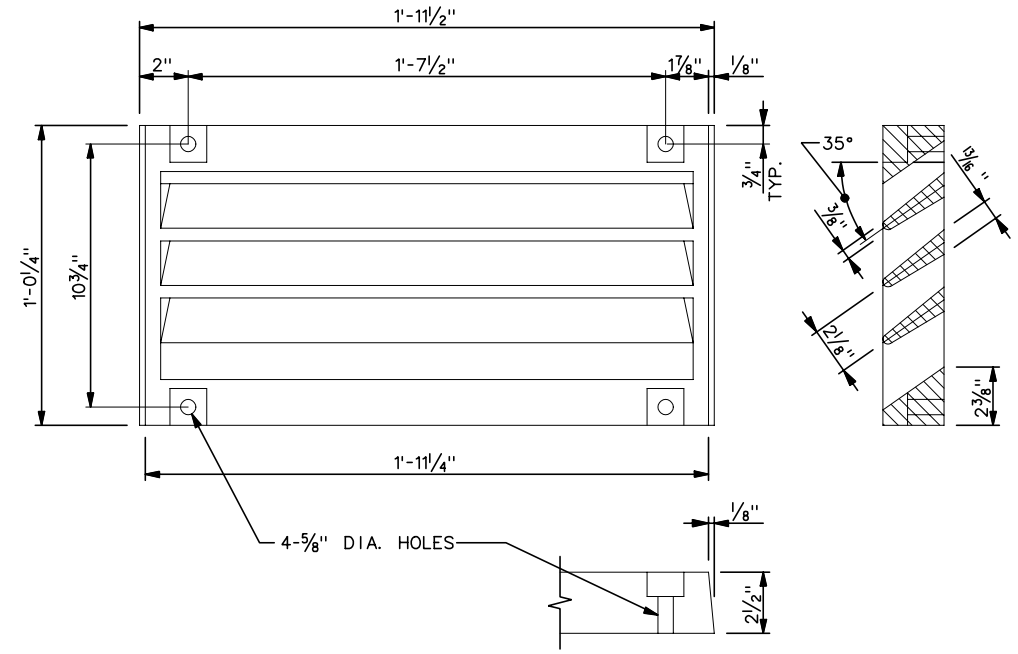

GRATE CASTING DETAIL

ATTACH GRATE TO FRAME FOR SHIPMENT

NOTES:

1. DRAIN TO CONFORM TO NEENAH TYPE R-3922.
2. ALL MATERIAL FOR CASTING, EXCLUDING GRATE HOLD DOWN SCREWS, SHALL BE GRAY IRON CONFORMING TO ASTM A48, CLASS 30. (APPROX. WEIGHT = 225 LBS)
3. ALL BRACKET STEEL SHOWN AND BOLTS, NUTS AND WASHERS SHALL BE HOT-DIPPED GALVANIZED IN ACCORDANCE WITH ASTM A153 CLASS C. GALVANIZED NUTS SHALL BE TAPPED OVERSIZE IN ACCORDANCE WITH THE REQUIREMENTS OF ASTM A563 AND SHALL MEET THE REQUIREMENTS OF SUPPLEMENTARY REQUIREMENTS OF S1 OF ASTM A563.
4. THREADED 6" DIA. DOWNSPOUTS SHALL BE GREY IRON CONFORMING TO ASTM A48, CLASS 30, SUPPLIED IN 4' SECTIONS. DOWNSPOUTS TO BE FLAME CUT IN THE FIELD TO MEET REQUIRED DIMENSIONS AND GROUND SMOOTH.
5. 6"Ø FIBERGLASS DOWNSPOUT PIPING SHALL CONFORM TO ASTM D2996 AND ASTM 2310. DOWNSPOUT PIPING SHALL BE THROUGH COLORED CONCRETE GRAY.
6. ALL DOWNSPOUTS SHALL TIE INTO THE STORM SEWER SYSTEM, SEE FOUNDATION PLAN FOR TIE-IN LOCATIONS.

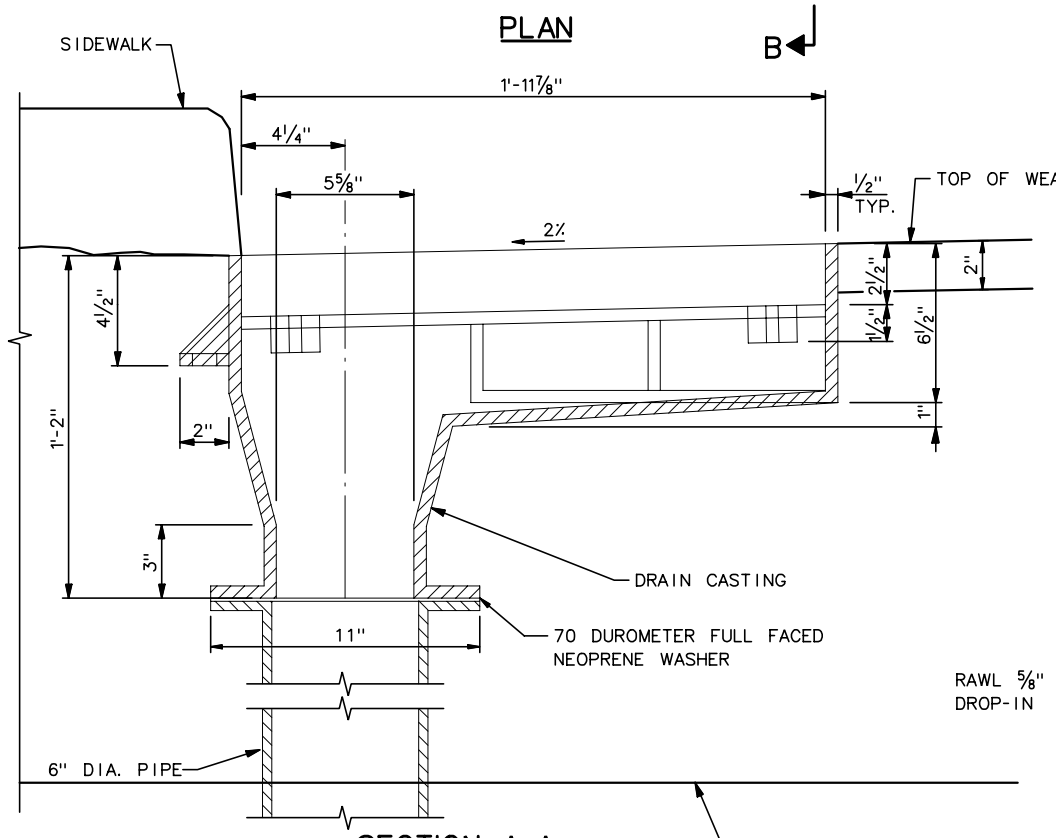

SECTION A-A
PROFILE 1

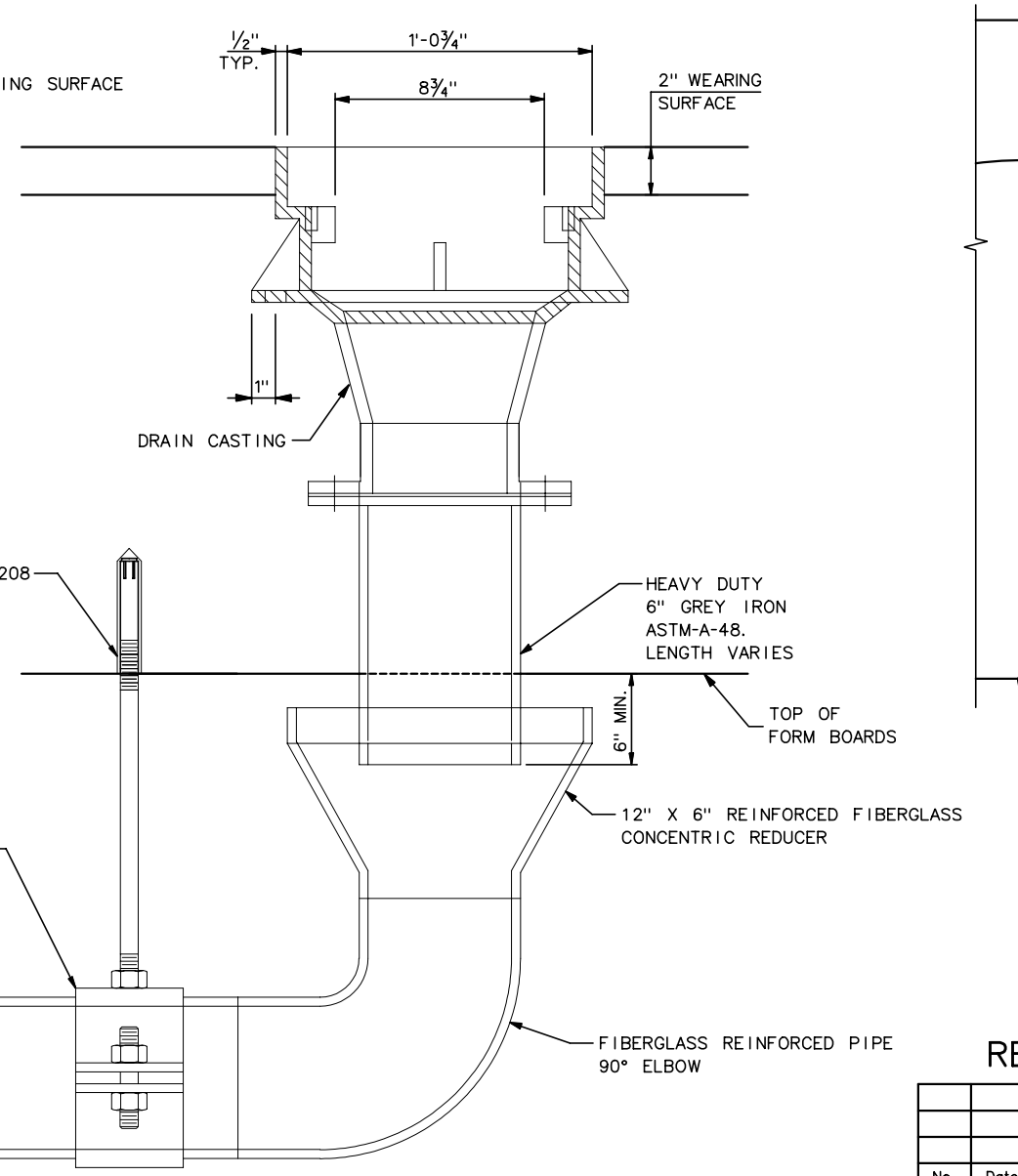

SECTION B-B

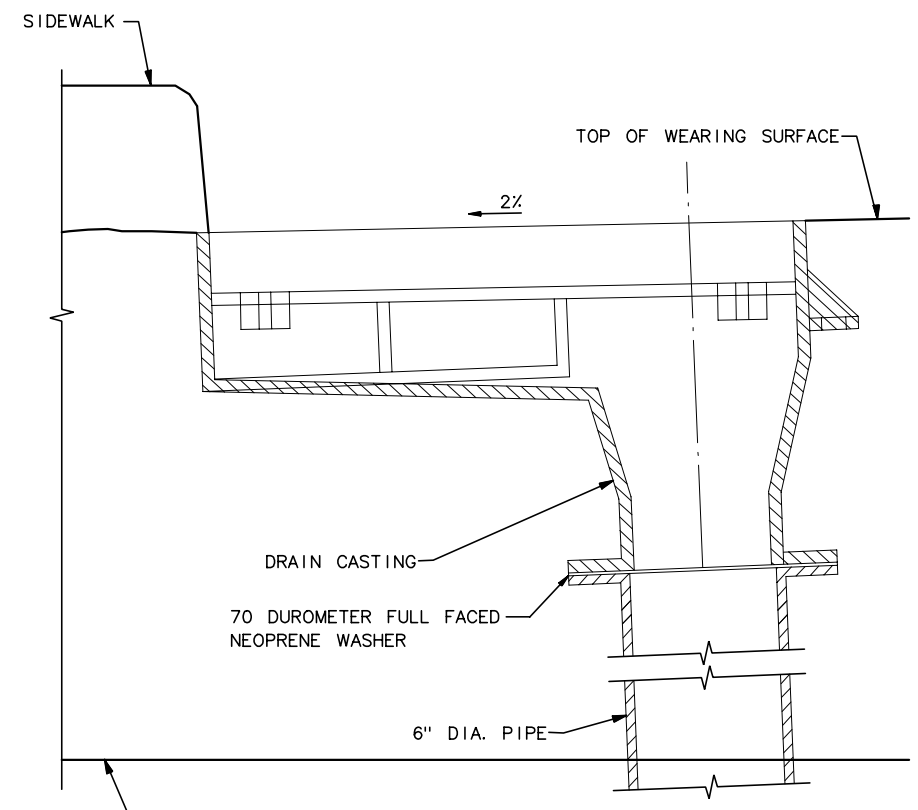

SECTION A-A
PROFILE 2

RECORD DRAWING

No.	Date	Revisions	By

HNTB CORPORATION

STATE OF WISCONSIN
DEPARTMENT OF TRANSPORTATION

STRUCTURE B-40-414C

Designed By	BW	Design Checked	JE	Drawn By	KO	Plans Checked	AP

NORTH CABLE STAY DRAINAGE DETAILS 1 OF 2

SHEET NC97 OF .

STATE PROJECT I.D.	SHEET NUMBER
2235-00-70	8.760

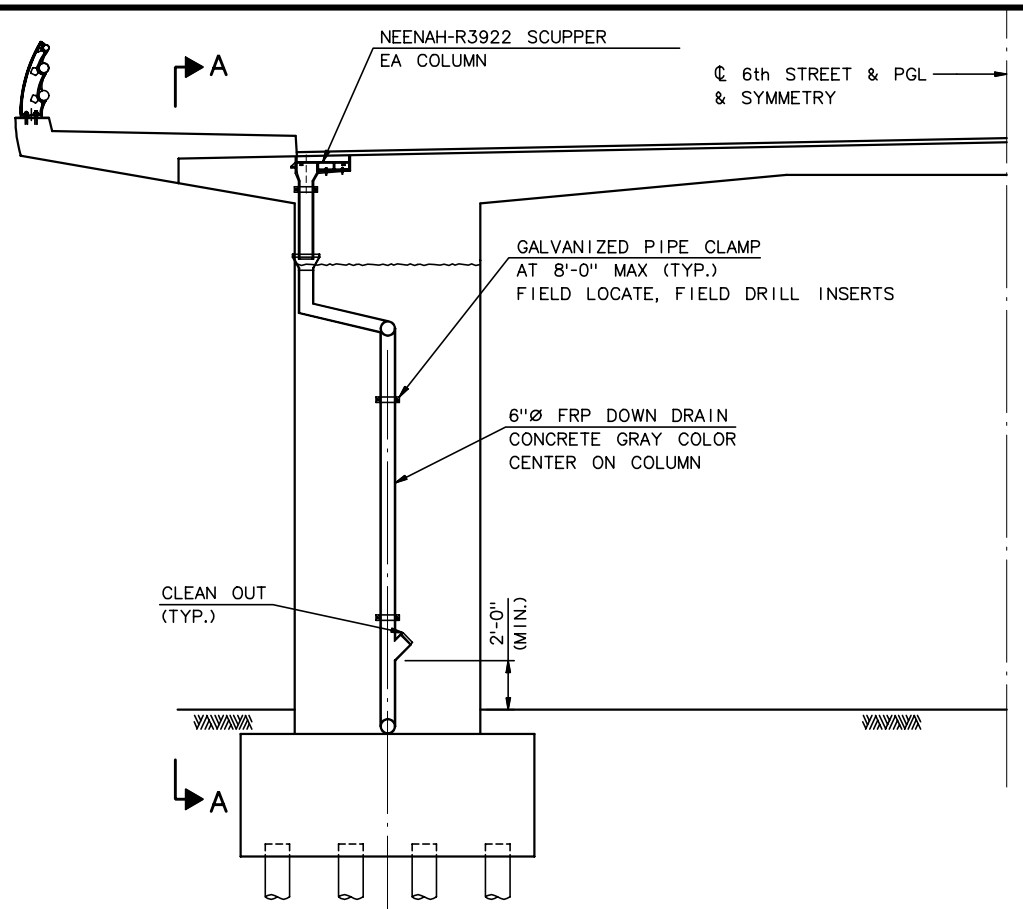

TYPICAL DRAINAGE DETAIL @ PIER

1/4" = 1'-0"

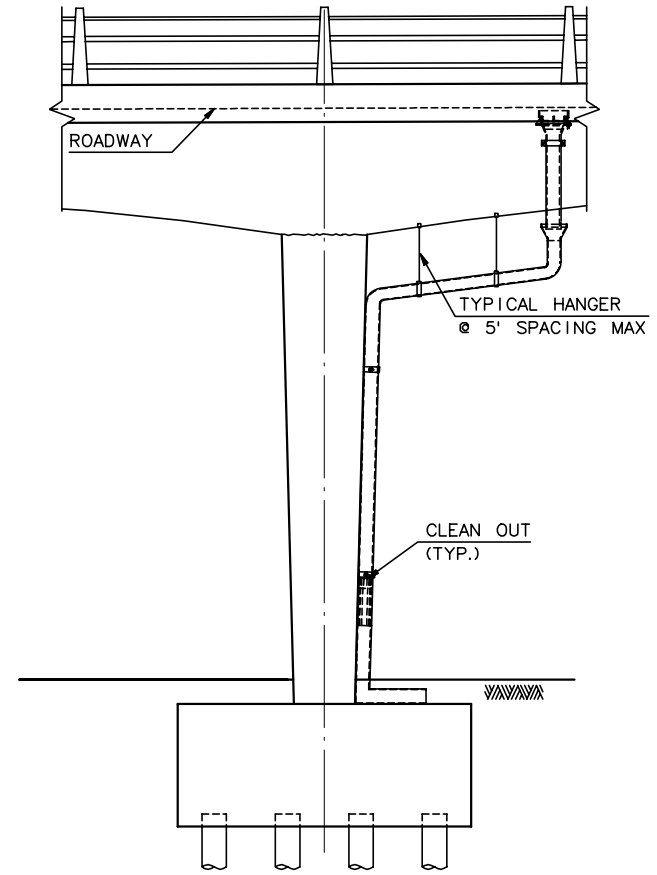

SECTION A-A

1/4" = 1'-0"

LEGEND:

1. NEW 6" DOWNSPOUT PIPEING SHALL BE REINFORCED THERMOSETTING RESIN PIPING (RTRP) CONFORMING TO ASTM D2996 & 2310 THROUGH COLORED CONCRETE GRAY
2. ASTM A307, HOT DIPPED GALVANIZED PER ASTM, A153 CLASS C.

NOTES:

1. TIGHTEN CLAMPS TO A TIGHT SLIP FIT (FOR TEMP. EXPANSION).
2. ALL ELBOWS TO BE LONG RADIUS TYPE.

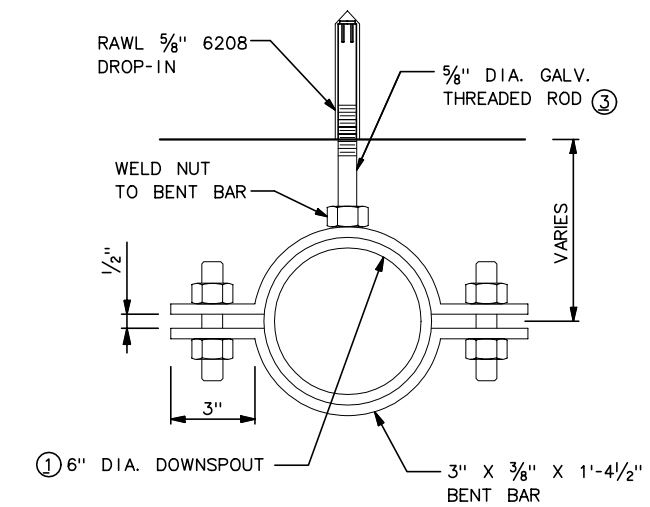

FIXED HANGER BRACKET DETAIL

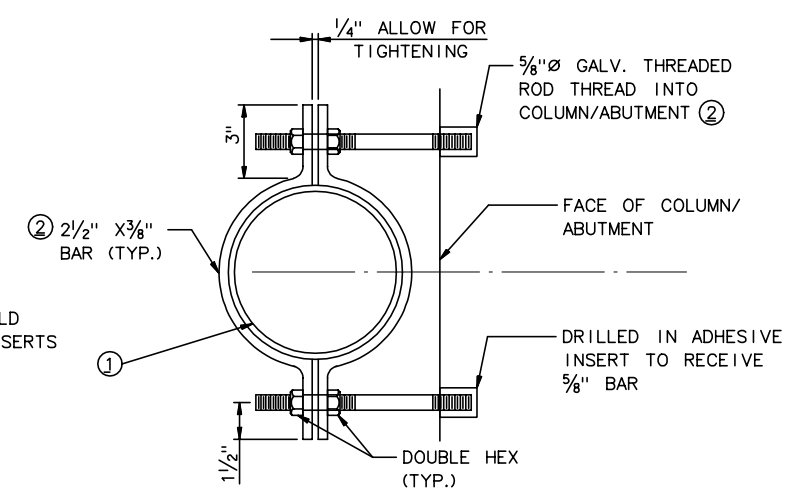

COLUMN/ ABUTMENT BRACKET DETAIL

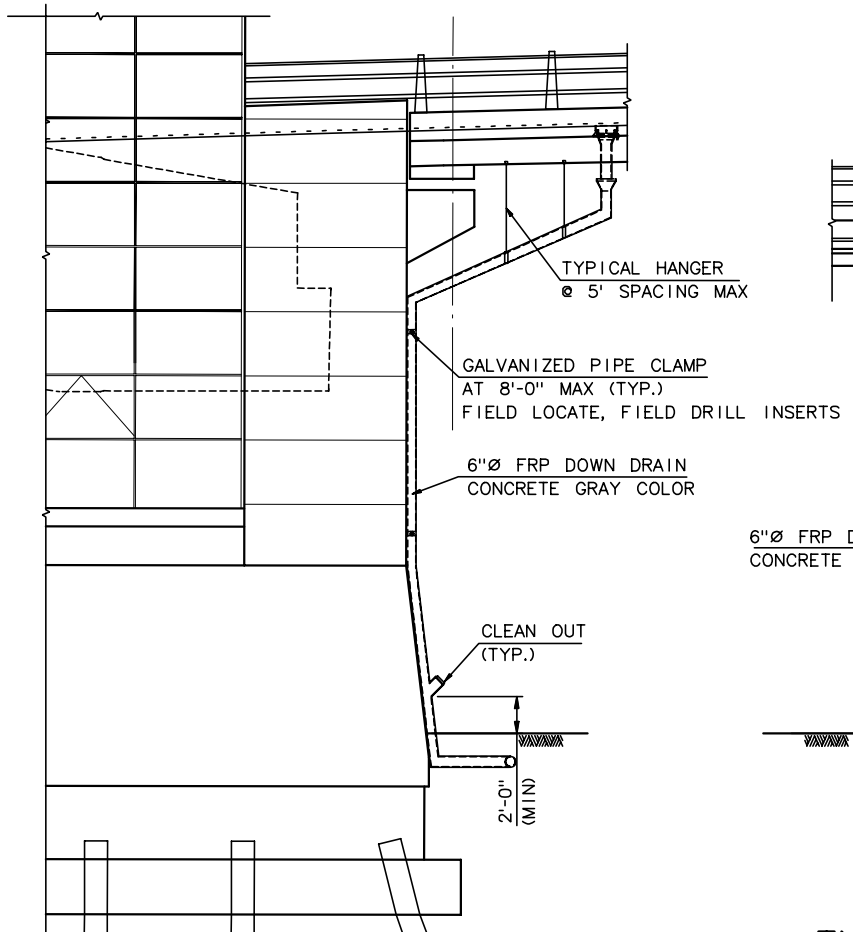

TYPICAL DRAINAGE DETAIL @ BASCULE

N.T.S.

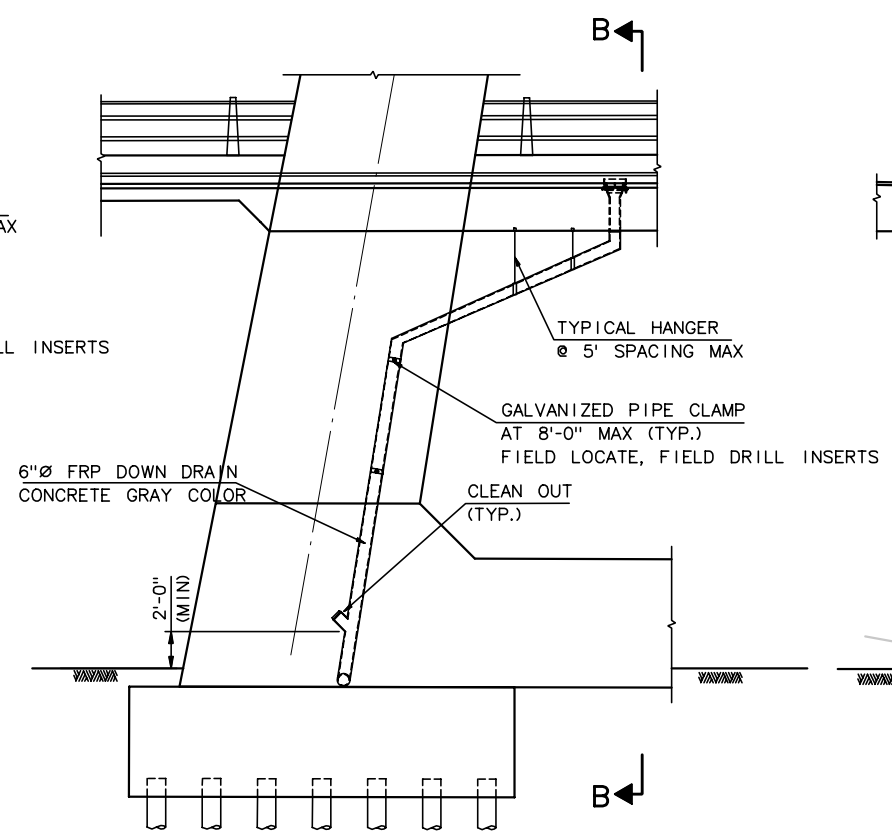

TYPICAL DRAINAGE DETAIL @ PYLON

N.T.S.

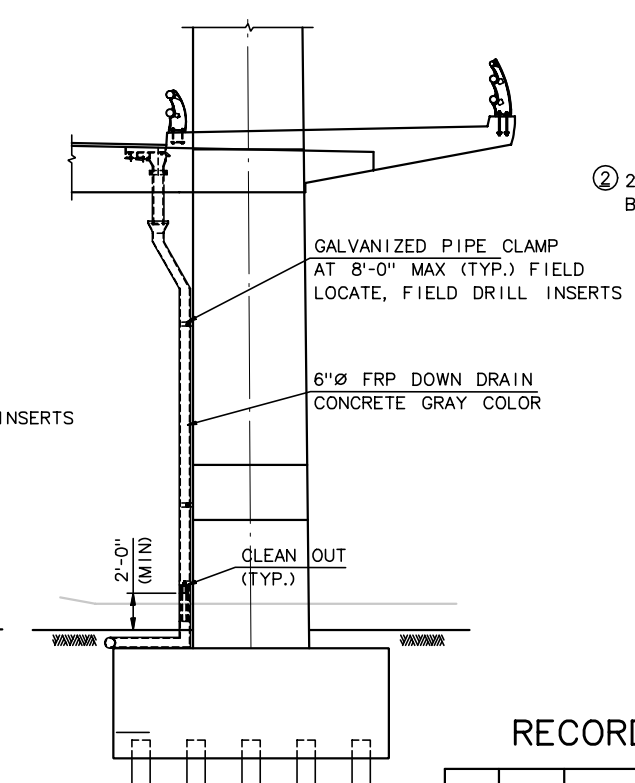

SECTION B-B

N.T.S.

RECORD DRAWING

No.	Date	Revisions	By

HNTB CORPORATION

STATE OF WISCONSIN
DEPARTMENT OF TRANSPORTATION

STRUCTURE B-40-414C

Designed By	AP	Design Checked	CD	Drawn By	JE	Plans Checked	AP

NORTH CABLE STAY
DRAINAGE DETAILS
2 OF 2

SHEET NC98 OF .

STATE PROJECT I.D.	SHEET NUMBER
2235-00-70	8.761

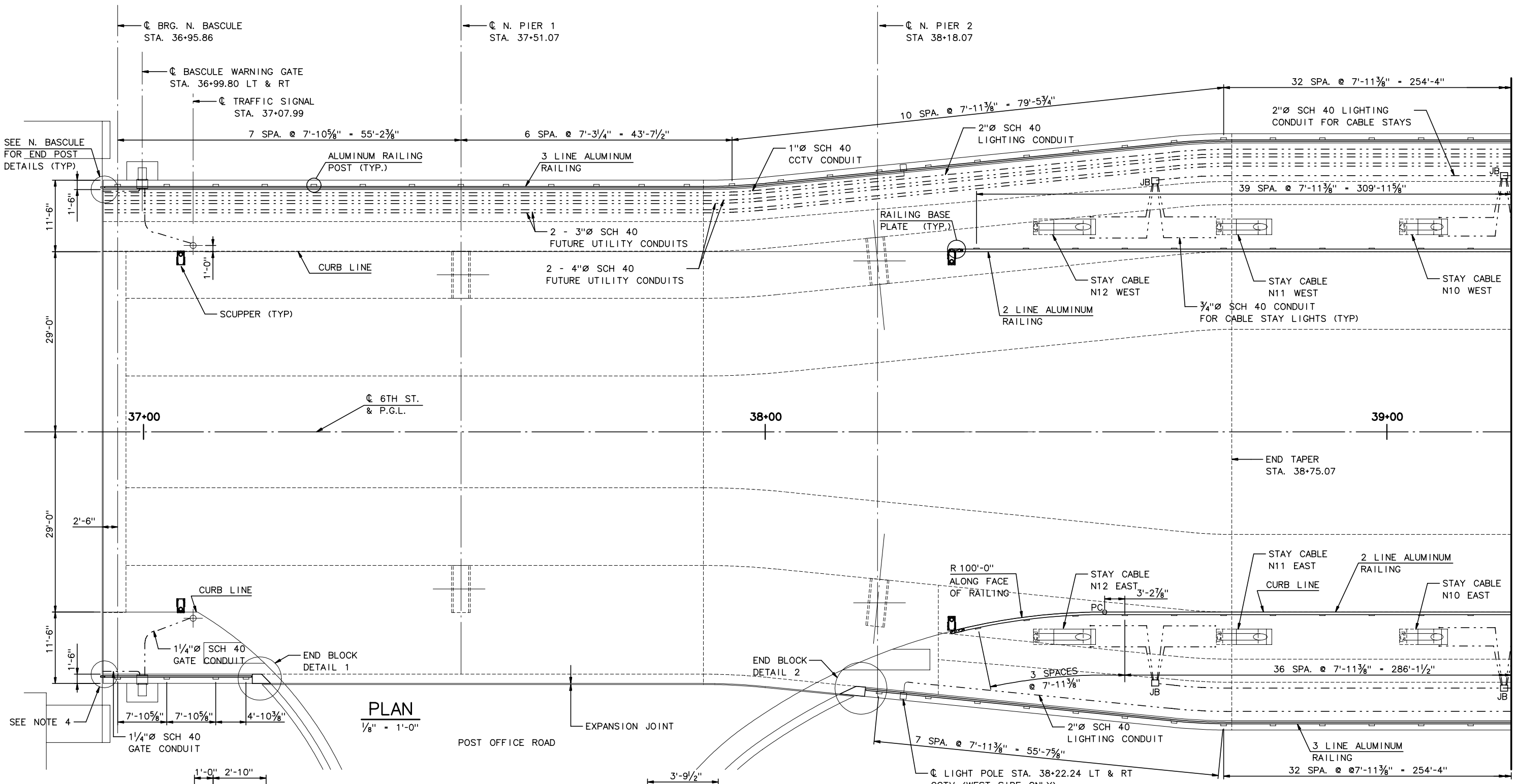

NOTES:

1. FOR DECK LAYOUT GEOMETRY, SEE DECK SLAB SHTS NC37 THRU NC45.
2. FOR RAILING DETAILS, SEE SHTS NC102 AND NC103.
3. FOR SCUPPER DETAILS, SEE SHTS NC37 THRU NC45.
4. SET GAP BETWEEN END OF RAIL AND END POST AT:
   1" @ 85°F LINEARLY INTERPOLATE BETWEEN
   3" @ 5°F

LEGEND:

1. JB: JUNCTION BOX

RECORD DRAWING

No.	Date	Revisions	By
1	0-21-01	REV SIGNAL DIM, 2 LINE DIM	AP

HNTB CORPORATION

STATE OF WISCONSIN
DEPARTMENT OF TRANSPORTATION

STRUCTURE B-40-414C

Designed By	SL	Design Checked	TZ	Drawn By	DS	Plans Checked	AP

RAILING AND UTILITY LAYOUT 1 OF 3

SHEET NC99 OF

STATE PROJECT I.D.	SHEET NUMBER
2235-00-70	8.762

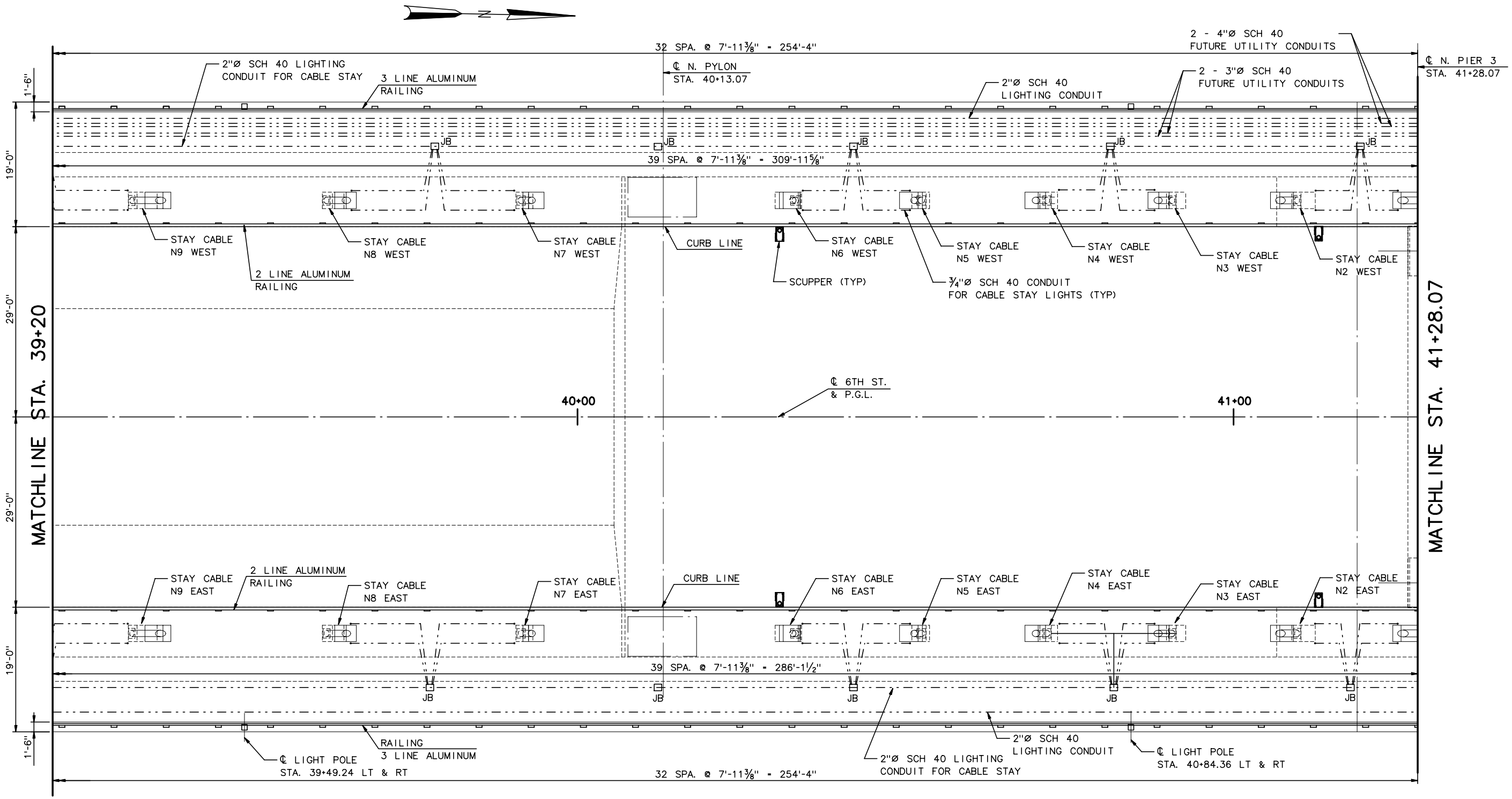

SUPERSTRUCTURE RAILING QUANTITIES

2 RAIL	LINEAR FEET	635.86
	NUMBER OF POSTS	80
3 RAIL	LINEAR FEET	1218.28
	NUMBER OF POSTS	158

PLAN

⅛" = 1'-0"

NOTES:

1. FOR NOTES SEE SHEET NC99

RECORD DRAWING

No.	Date	Revisions	By
1	0-21-01	REV RAILING DIMS	AP

HNTB CORPORATION

STATE OF WISCONSIN
DEPARTMENT OF TRANSPORTATION

STRUCTURE B-40-414C

Designed By	SL	Design Checked	TZ	Drawn By	DS	Plans Checked	AP

RAILING AND UTILITY LAYOUT
2 OF 3

SHEETNC100 OF

j:\cadd\ff31185\dgn\as built\north cablestay\nc100-rail&utilplan2.dgn 02/11/03 01:51:41 PM

STATE PROJECT I.D.	SHEET NUMBER
2235-00-70	8.763

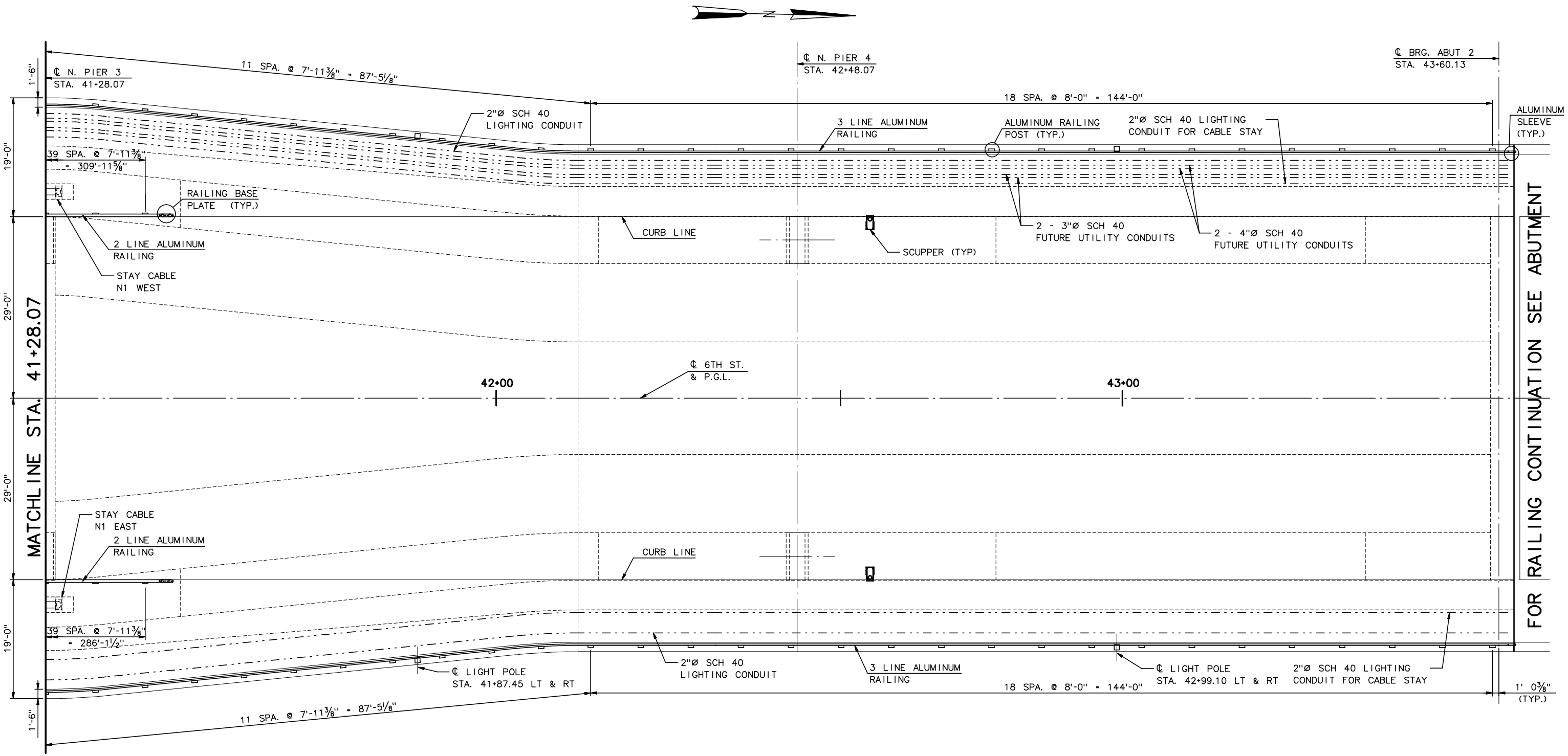

NOTES:

1. FOR NOTES SEE SHEET NC99

PLAN

⅛" = 1'-0"

RECORD DRAWING

No.	Date	Revisions	By
1	0-21-01	REV 2 LINE TOTAL DIM	AP

HNTB CORPORATION

STATE OF WISCONSIN
DEPARTMENT OF TRANSPORTATION

STRUCTURE B-40-414C

Designed By	SL	Design Checked	TZ	Drawn By	DS	Plans Checked	AP

RAILING AND UTILITY LAYOUT 3 OF 3

SHEET NC101 OF

j:\cadd\ff31185\dgn\as built\north cablestay\nc101-rail&utilplan3.dgn 02/11/03 01:51:42 PM

STATE PROJECT I.D.	SHEET NUMBER
2235-00-70	8.764

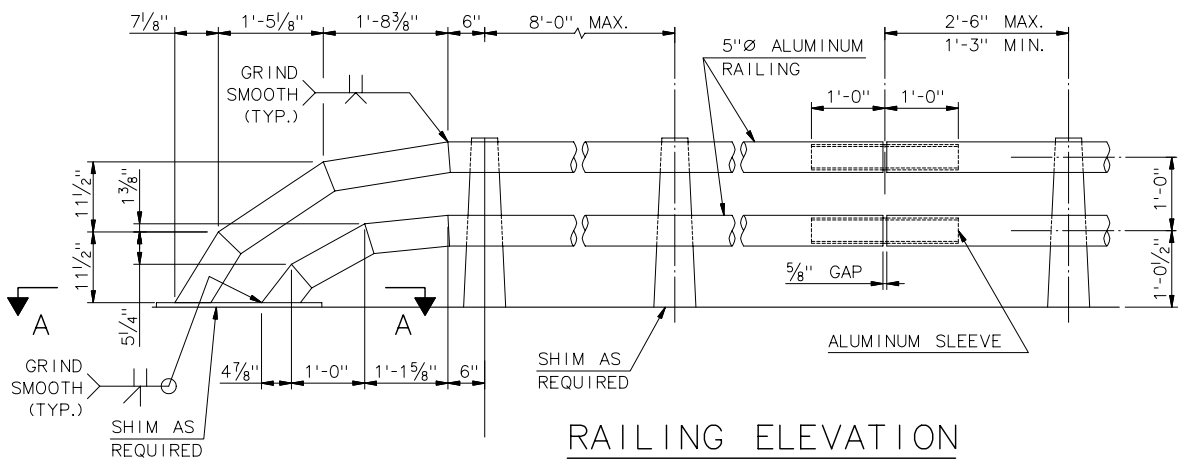

RAILING ELEVATION

3/4" = 1'-0"

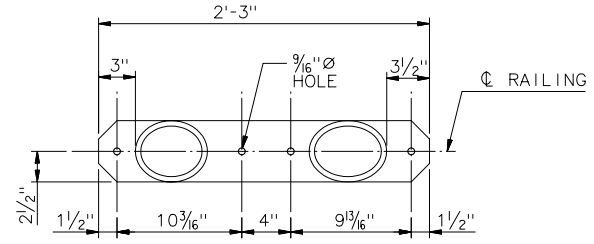

BASE PLATE DETAIL
SECTION A-A

1 1/2" = 1'-0"

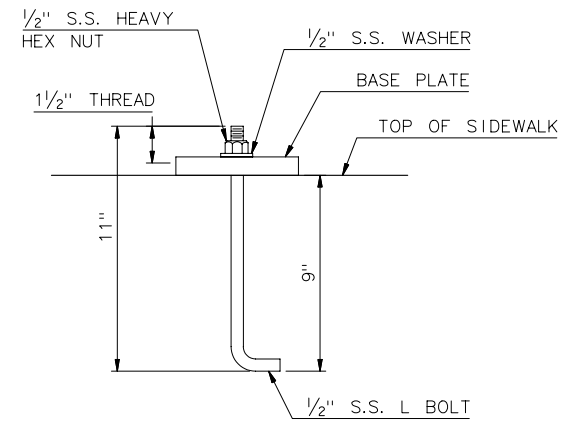

BASE PLATE
ANCHOR BOLT DETAIL

3" = 1'-0"

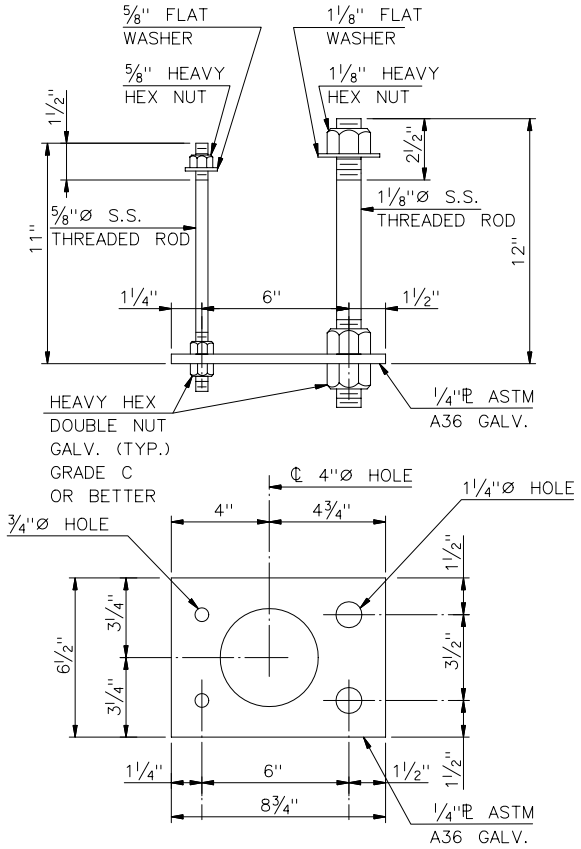

ANCHORAGE DETAIL

3" = 1'-0"

NOTES:

1. THIS RAILING IS BASED ON THE AASHTO CRASH TESTED BR2 TYPE A ALUMINUM RAILING.
2. ELECTRODES FOR WELDING SHALL CONFORM TO AWS A5.10, ALLOY ER.
3. ALL WELDS TO BE SMOOTH AND FREE FROM SHARP EDGES AND/OR BURRS.
4. POST TO BE ALUMINUM ALLOY PERMANENT CASTING CONFORMING TO AASHTO DESIGNATION M193 (ASTM B 108, ALLOY A444).
5. RAILS AND SPLICE SLEEVES SHALL BE ASTM B221, ALLOY 6061-T6.
6. ALL POSTS SHALL BE SET NORMAL TO THE PGL. RAILS SHALL BE ATTACHED TO A MINIMUM OF 4 POSTS.
7. ALL RAILS SHALL BE FREE FROM SHARP EDGES OR BURRS THAT COULD CAUSE INJURY.
8. HOLES FOR BOLTS IN RAILS ARE TO BE FIELD DRILLED TO INSURE PROPER FIT.

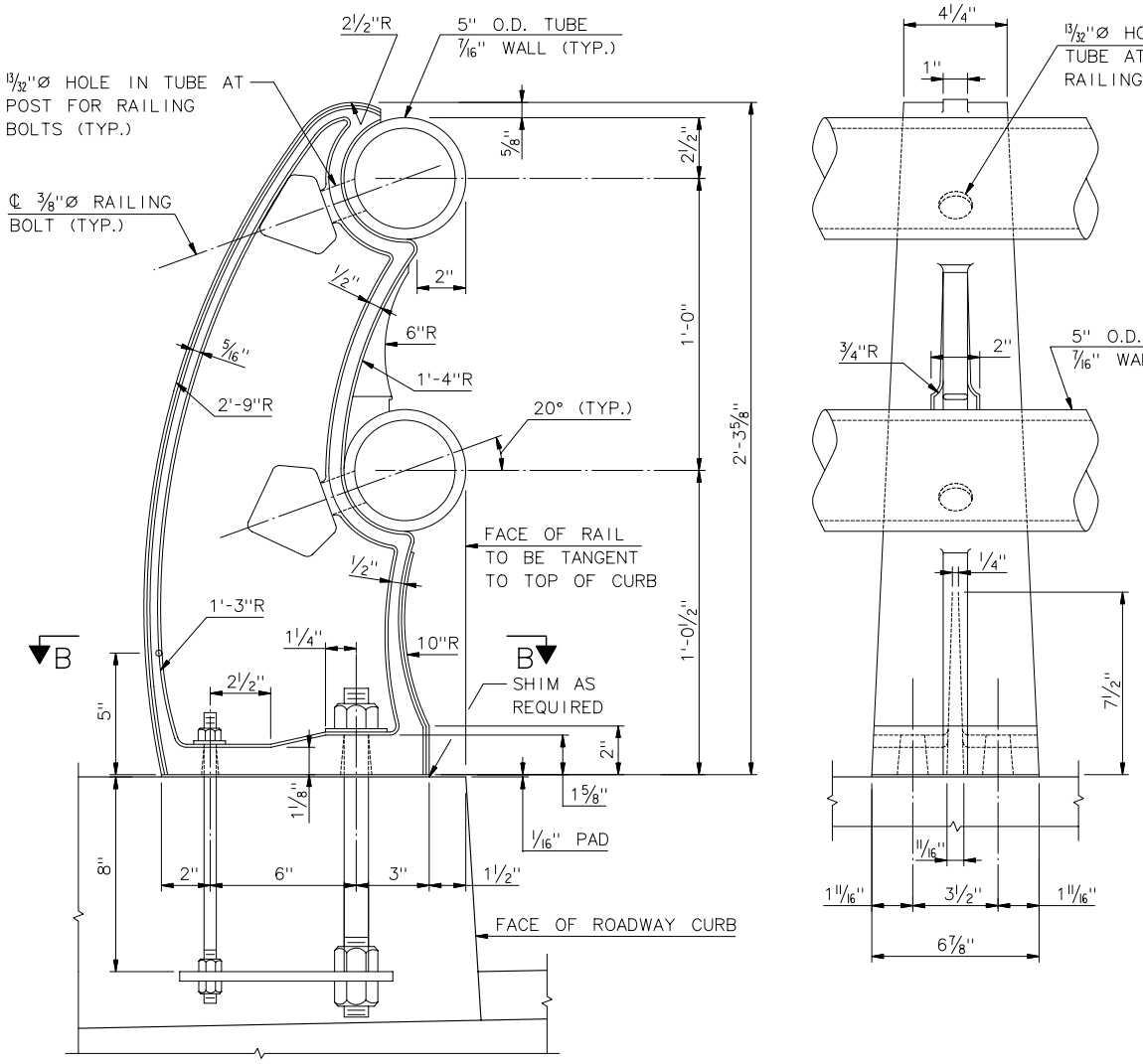

ALUMINUM RAILING POST

3" = 1'-0"

SECTION B-B

3" = 1'-0"

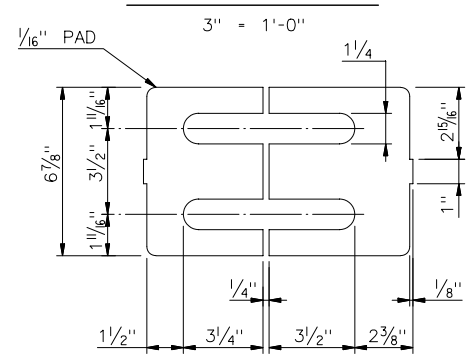

NOTE: PREFORMED PADS SHALL CONSIST OF COTTON FIBERS BONDED WITH NATURAL OR SYNTHETIC RUBBER. WEIGHT OF FIBER SHALL BE APPROX. 50% OF THE TOTAL WEIGHT OF THE PAD. ULTIMATE BREAKDOWN LIMIT OF THE PAD UNDER COMPRESSIVE LOADING SHALL BE AT LEAST 10,000 P.S.I.

RUBBER FIBER PAD

3" = 1'-0"

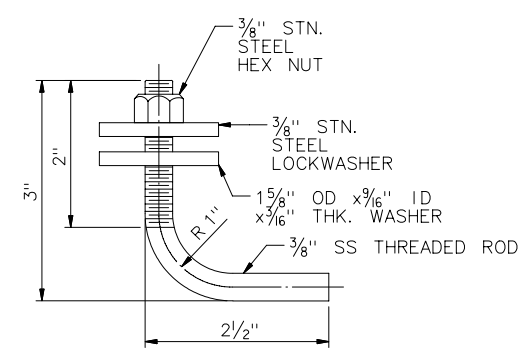

3/8"Ø RAILING BOLT

1" = 1'-0"

RAIL TO POST HARDWARE:

RAILING BOLT ASSEMBLY MATERIALS SHALL BE AS FOLLOWS:

STAINLESS STEEL THREADED RODS SHALL BE ASTM A276 TYPE 304, ANNEALED COLD FINISHED. MIN TENSILE STRENGTH SHALL BE 90 KSI.

STAINLESS STEEL HEX NUTS AND WASHERS SHALL BE ASTM A276 TYPE 300 SERIES

ANCHOR HARDWARE:

ALL THREADED RODS SHALL BE STAINLESS STEEL ASTM A276 TYPE 300 OR 400 SERIES WITH A MIN. TENSILE STRENGTH OF 90 KSI, MIN. YIELD STRENGTH OF 35 KSI AND MIN ELONGATION OF 15% IN 2 INCHES.

ALL HEAVY HEX NUTS AND WASHERS SHALL BE STAINLESS STEEL U.N.O.

NEOPRENE PADS SHALL HAVE A NOMINAL DUROMETER HARDNESS OF 60±5

SHIM MATERIAL SHALL BE ASTM B209, ALLOY 1100-0.

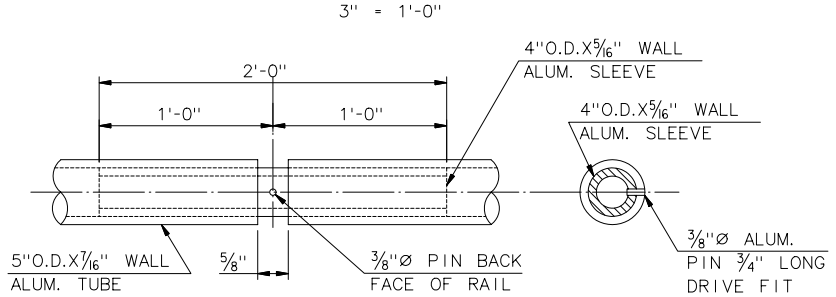

ALUMINUM SLEEVE

N.T.S.

RECORD DRAWING

No.	Date	Revisions	By
3	2-12-02	ANCH BOLT, DEL TOGGLES, ADD BOLTS	AP
2	9-14-01	BASE PLATE AND ANCHOR BOLTS	AP
1	8-14-01	ALUM. SLEEVE, ANCHORAGE	AP

HNTB CORPORATION

STATE OF WISCONSIN
DEPARTMENT OF TRANSPORTATION

STRUCTURE B-40-414C

Designed By	AP	Design Checked	TZ	Drawn By	DS	Plans Checked	AP

2 LINE ALUMINUM RAILING DETAILS

SHEET NC102 OF

J:\cadd\ff31185\dgn\AS BUILT\NORTH CABLESTAY\NC102-RAILING_2LINE.dgn 4/17/2003 9:49:58 AM

STATE PROJECT I.D.	SHEET NUMBER
2235-00-70	8.765

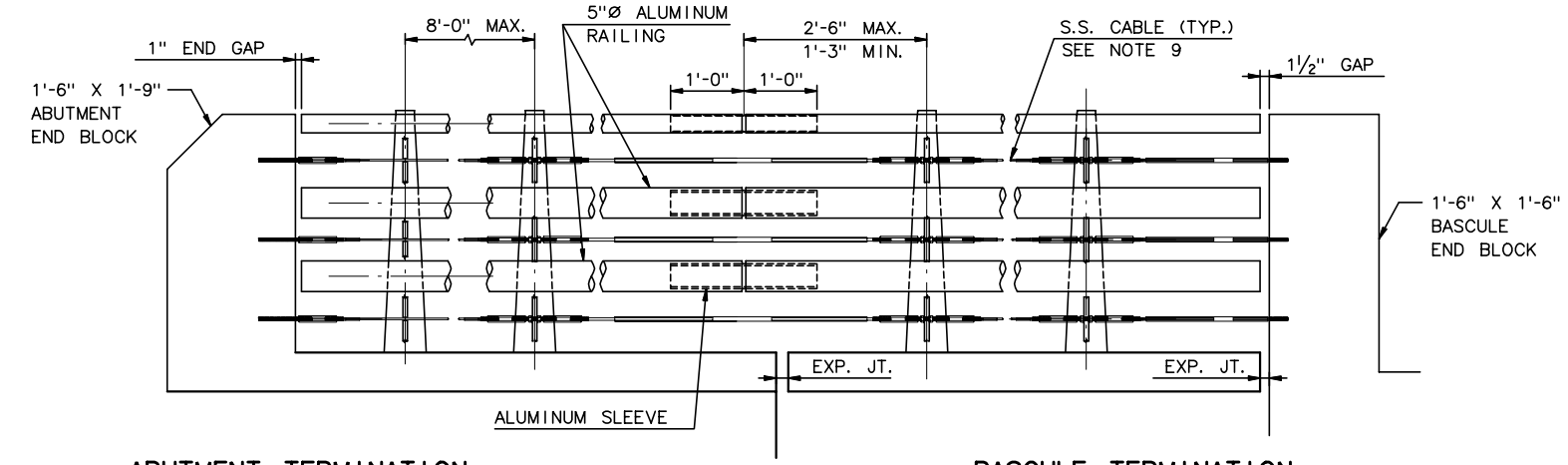

ABUTMENT TERMINATION

BASCULE TERMINATION

RAILING ELEVATION

¾" = 1'-0"

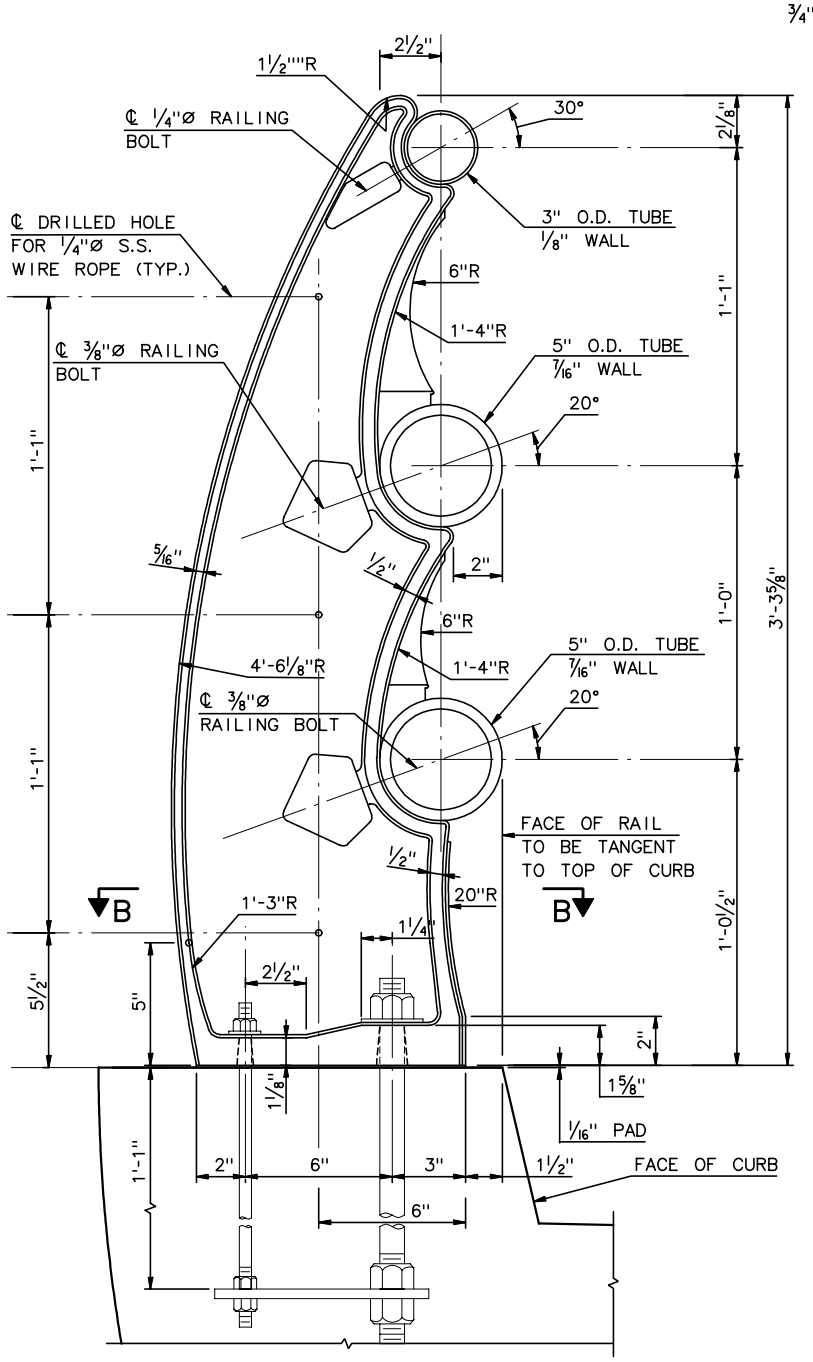

ALUMINUM RAILING POST

3" = 1'-0"

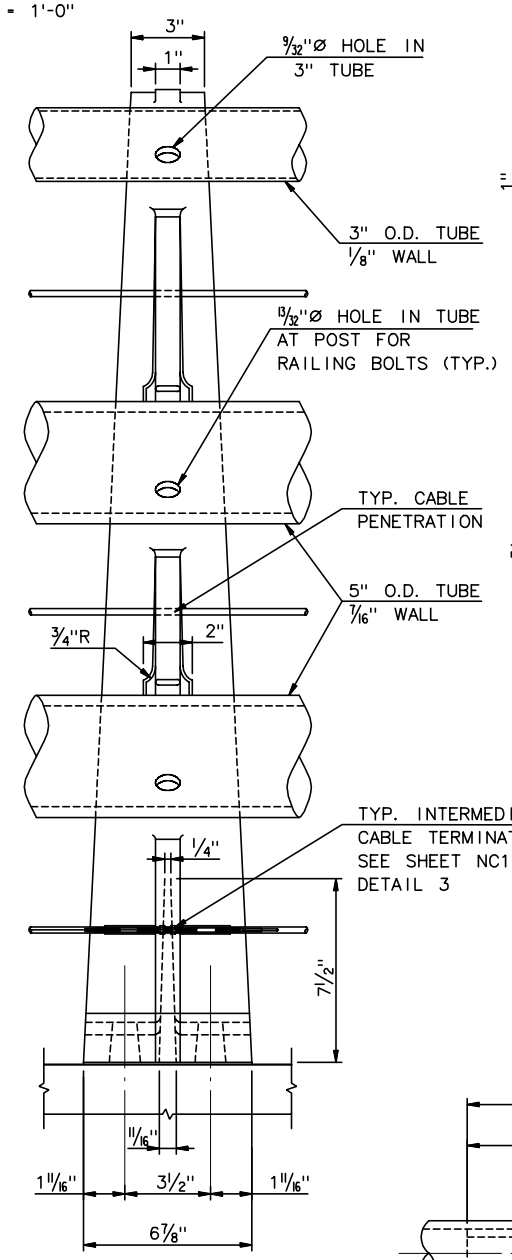

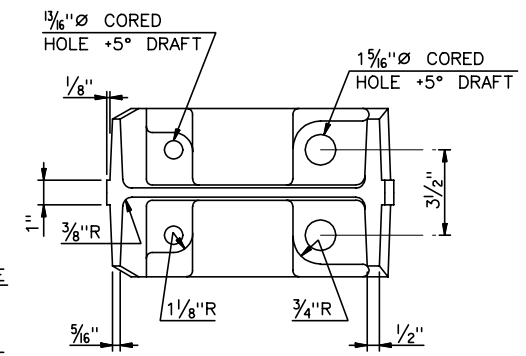

SECTION B-B

3" = 1'-0"

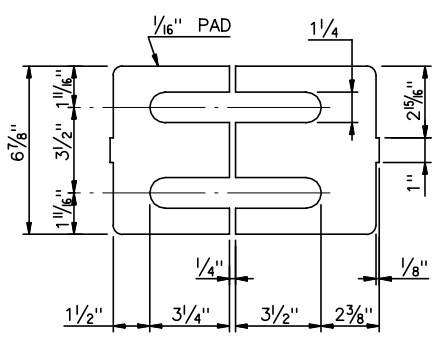

NOTE: PREFORMED PADS SHALL CONSIST OF COTTON FIBERS BONDED WITH NATURAL OR SYNTHETIC RUBBER. WEIGHT OF FIBER SHALL BE APPROX. 50% OF THE TOTAL WEIGHT OF THE PAD. ULTIMATE BREAKDOWN LIMIT OF THE PAD UNDER COMPRESSIVE LOADING SHALL BE AT LEAST 10,000 P.S.I.

RUBBER FIBER PAD

3" = 1'-0"

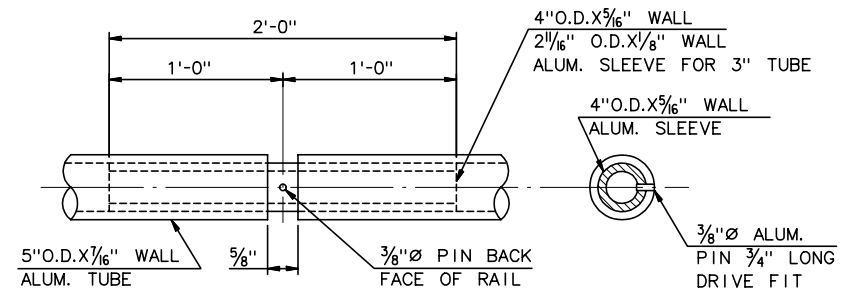

ALUMINUM SLEEVE

N.T.S.

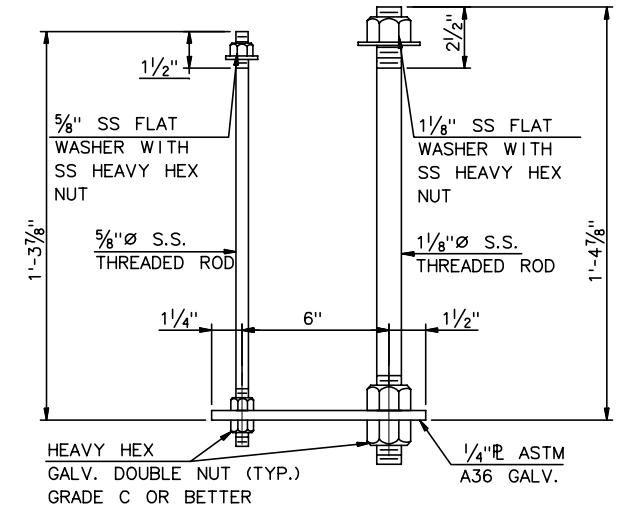

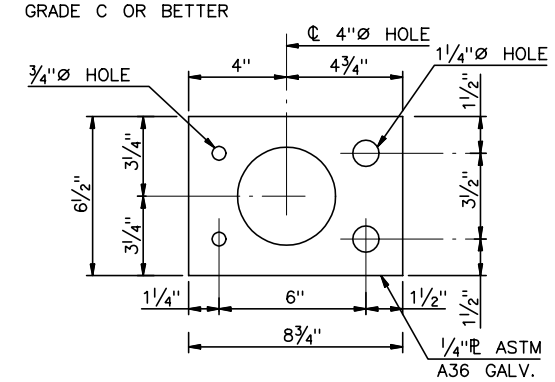

ANCHORAGE DETAIL

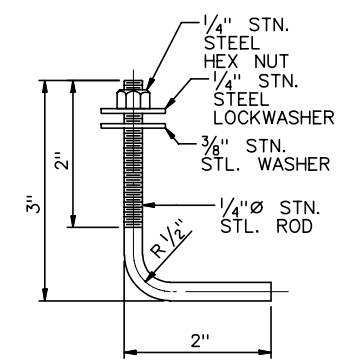

¼"Ø RAILING BOLT

1" = 1'-0"

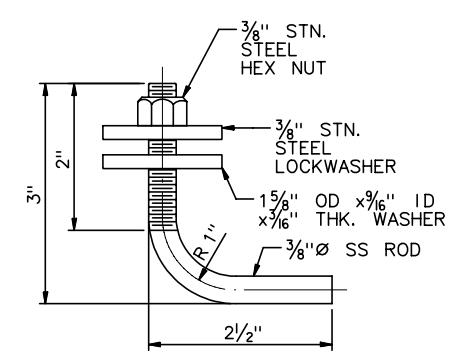

⅜"Ø RAILING BOLT

1" = 1'-0"

NOTES:

1. THIS RAILING IS BASED ON THE AASHTO CRASH TESTED BR2 TYPE A ALUMINUM RAILING
2. ELECTRODES FOR WELDING SHALL CONFORM TO AWS A5.10, ALLOY ER.
3. ALL WELDS TO BE SMOOTH AND FREE FROM SHARP EDGES AND/OR BURRS.
4. POST TO BE ALUMINUM ALLOY PERMANENT MOLD CASTING CONFORMING TO AASHTO DESIGNATION M193, ALLOY A444-T4.
5. RAILS AND SPLICE SLEEVES SHALL BE ALUMINUM ALLOY EXTRUDED TUBING 6061-T6 PER ASTM B221.
6. ALL POSTS SHALL BE SET NORMAL TO THE PGL. RAILS SHALL BE ATTACHED TO A MINIMUM OF 4 POSTS.
7. ALL RAILS SHALL BE FREE FROM SHARP EDGES OR BURRS THAT COULD CAUSE INJURY.
8. HOLES FOR BOLTS IN RAILS ARE TO BE FIELD DRILLED TO INSURE PROPER FIT.
9. FOR PEDESTRIAN CABLE DETAILS SEE NC103A.

RAIL TO POST HARDWARE:

RAILING BOLT ASSEMBLY MATERIALS SHALL BE AS FOLLOWS:

STAINLESS STEEL THREADED RODS SHALL BE ASTM A276 TYPE 304, ANNEALED COLD FINISHED. MIN TENSILE STRENGTH SHALL BE 90 KSI.

STAINLESS STEEL HEX NUTS AND WASHERS SHALL BE ASTM A276 TYPE 300 SERIES

ANCHOR HARDWARE:

ALL THREADED RODS SHALL BE STAINLESS STEEL ASTM A276 TYPE 300 OR 400 SERIES WITH A MIN. TENSILE STENGTH OF 90 KSI, MIN. YIELD STRENGTH OF 35 KSI AND MIN ELONGATION OF 15% IN 2 INCHES.

ALL HEAVY HEX NUTS AND WASHERS SHALL BE STAINLESS STEEL U.N.O.

NEOPRENE PADS SHALL HAVE A NOMINAL DUROMETER HARDNESS OF 60±5

SHIM MATERIAL SHALL BE ASTM B209, ALLOY 1100-0.

CABLE HARDWARE:

REFER TO NC103A.

No.	Date	Revisions	By
2	2-13-02	ANCH BOLT, DEL TOGGLES, ADD BOLTS	AP
1	8-14-01	ALUM. SLEEVE, ANCHORAGE	AP

HNTB CORPORATION

RECORD DRAWING

STATE OF WISCONSIN
DEPARTMENT OF TRANSPORTATION

STRUCTURE B-40-414C

Designed By	AP	Design Checked	TZ	Drawn By	DS	Plans Checked	AP

3 LINE ALUMINUM RAILING DETAILS

SHEET NC103 OF

STATE PROJECT I.D.	SHEET NUMBER
2235-00-70	8.766

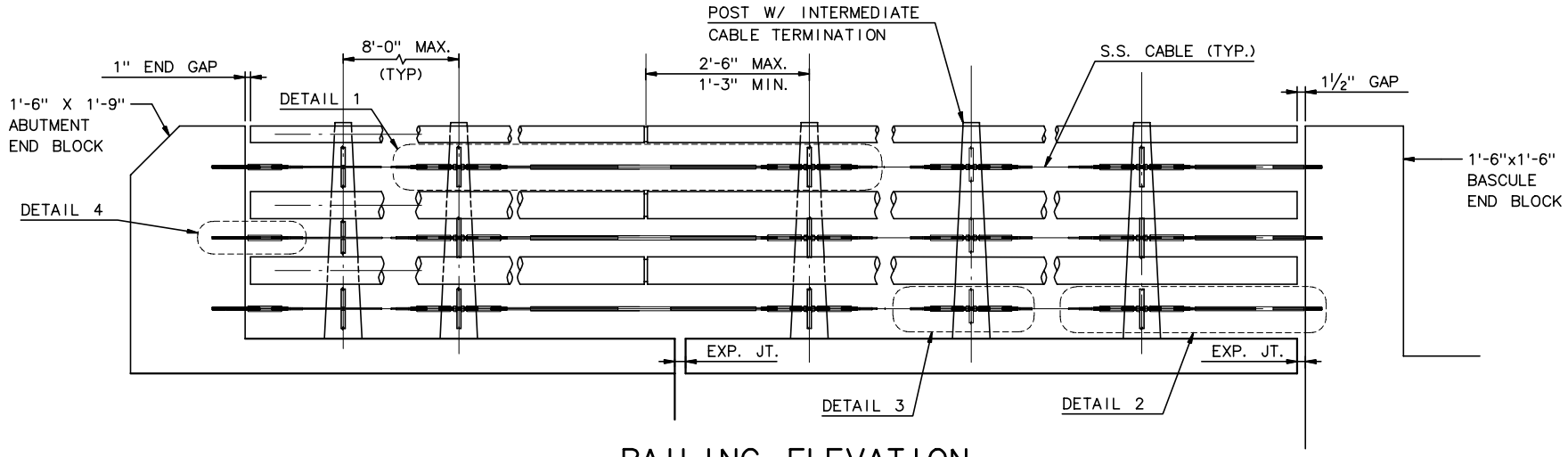

RAILING ELEVATION

¾" = 1'-0"

HARDWARE:

CABLE

- ¼" Ø S.S. 1x19 CLASS
- BREAKING STRENGTH OF 8,200 LBS.

THREADED ROD

- S.S. A276 TYPE 300 OR 400 SERIES
- MIN. TENSILE STRENGTH = 90 KSI

THREADED HEX SWAGED STUD

THREAD SIZE: ½- 20
LENGTH OF THREAD : 3" MIN
TOTAL LENGTH : AS MANUFACTURER REQUIRED FOR ¼- 1x19 SS CABLE
PART NO. H58-50FCC
THE CABLE CONNECTION
5224 HIGHWAY 50E
CARSON CITY, NY 89701
800-851-2961
OR EQUIVALENT

NOTES:

1. CABLES SHALL BE TIGHTENED AFTER ATTACHMENT OF RAILING.
2. INTERMEDIATE CABLE TERMINATORS SHALL BE LOCATED AT ±75'.

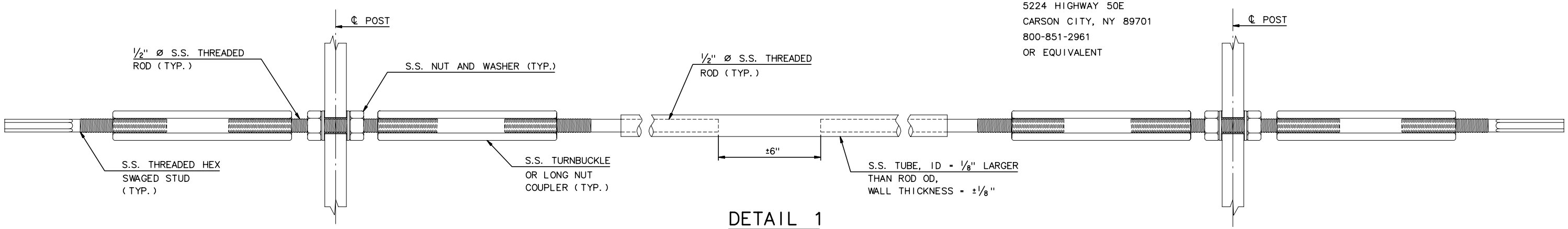

DETAIL 1

N.T.S.

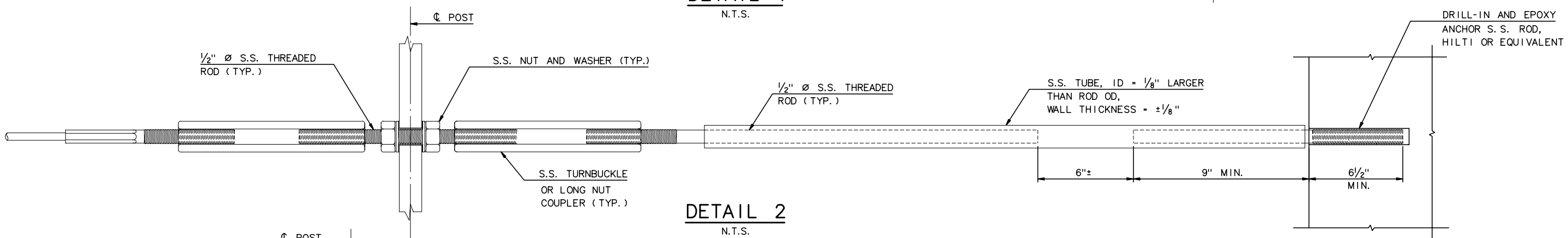

DETAIL 2

N.T.S.

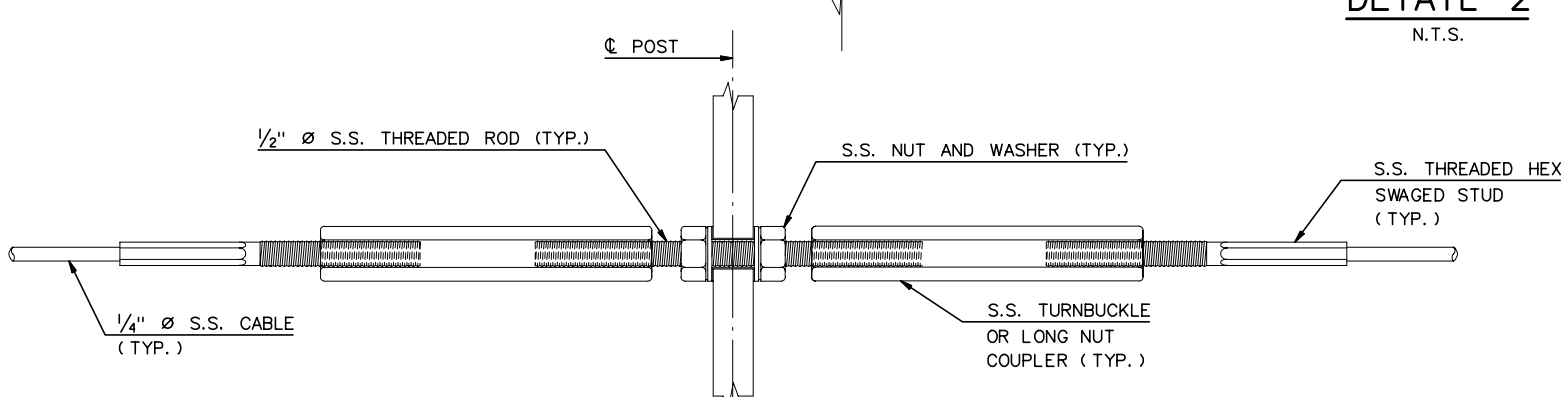

DETAIL 3

N.T.S.

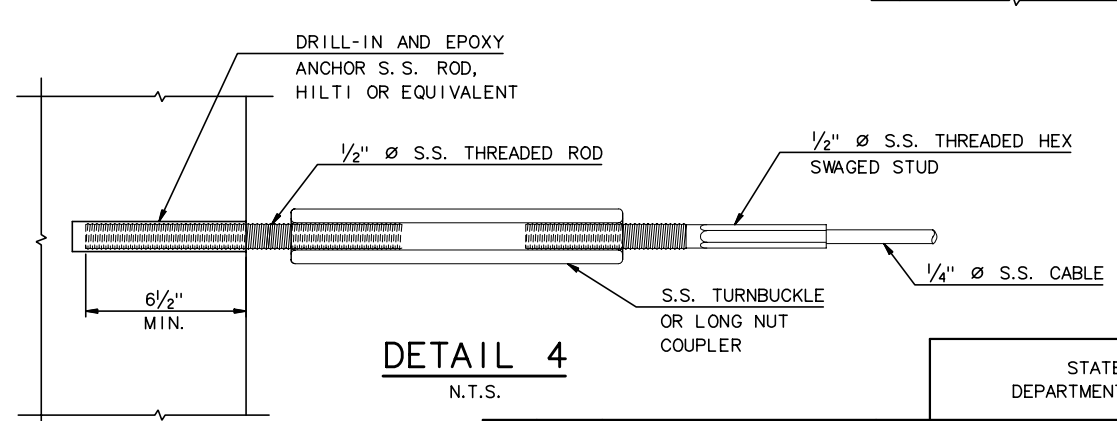

DETAIL 4

N.T.S.

RECORD DRAWING

No.	Date	Revisions	By

HNTB CORPORATION

STATE OF WISCONSIN
DEPARTMENT OF TRANSPORTATION

STRUCTURE B-40-414C

Designed By TZ	Design Checked AP	Drawn By JE	Plans Checked AP

PEDESTRIAN RAILING CABLE DETAILS

SHEET NC103a OF

j:\cadd\ff31185\dgn\as built\north cablestay\nc103a-cablerail.dgn 02/11/03 01:51:47 PM

STATE PROJECT I.D.	SHEET NUMBER
2235-00-70	8.767

N. CABLE STAY ABUTMENT - FOOTING REINFORCEMENT

BAR MARK	BAR SIZE	LOCATION COMMENT	NO.	LTH/BAR DECIMAL FT	TOTAL WT (LB)	BEND TYPE	A			B			C			D			E			F/R			G			H			I			J			K			O		
							FT	IN	1/4	FT	IN	1/4	FT	IN	1/4	FT	IN	1/4	FT	IN	1/4	FT	IN	1/4	FT	IN	1/4	FT	IN	1/4	FT	IN	1/4	FT	IN	1/4	FT	IN	1/4	FT	IN	1/4
PL401	4	Pile 1'/Footing Connection	190	3.094	392.7	T3																															1	0	0	0	8	0
PL901	9	Pile 1'/Footing Connection	152	12.000	6201.6	STR				12	0	0																														
PL302	3	Pile 10 3/4" Connection	70	2.333	61.4	T3																															0	6	0	0	7	0
PL801	8	Pile 10 3/4" Connection	56	11.250	1682.1	STR				11	3	0																														
F401	4		12	12.750	102.2	17				0	6	0	11	9	0	0	6	0																								
F402	4		20	10.750	143.6	17				0	6	0	9	9	0	0	6	0																								
F501	5		3	31.000	97.0	STR				31	0	0																														
F502	5		3	34.000	106.4	STR				34	0	0																														
F503	5		3	45.000	140.8	STR				45	0	0																														
F504	5		3	28.667	89.7	STR				28	8	0																														
F505	5		3	22.000	68.8	STR				22	0	0																														
F506	5		9	19.750	185.4	17				4	0	0	11	9	0	4	0	0																								
F507	5		6	17.750	111.1	STR				4	0	0	9	9	0	4	0	0																								
F508	5		4	30.000	125.2	STR				30	0	0																														
F509	5		4	23.000	96.0	STR				23	0	0																														
F512	5		6	9.500	59.5	H2				9	6	0	0	0	0																											
F513	5		6	22.417	140.3	H3				22	5	0																														
F601	6		50	36.000	2703.6	17				3	8	0	28	8	0	3	8	0																								
F602	6		40	34.667	2082.8	17				3	8	0	31	0	0	0	0	0																								
F603	6		40	37.667	2263.0	17				3	8	0	34	0	0	0	0	0																								
F604	6		50	17.667	1326.8	H2				14	0	0	3	8	0																											
F604a	6		50	4.000	300.4	H3				4	0	0																														
F605	6		50	25.833	1940.1	17				3	8	0	22	2	0	0	0	0																								
F610	6		50	35.333	2653.5	17				2	8	0	30	0	0	2	8	0																								
F611	6		40	28.333	1702.3	17				2	8	0	23	0	0	2	8	0																								
F612	6		50	12.500	938.7	8	1	0	0	10	6	0													1	0	0															
F613	6		40	13.000	781.0	8	1	0	0	11	0	0													1	0	0															
F801	8		148	16.833	6651.9	17				3	8	0	9	6	0	3	8	0																								
F802	8		174	19.083	8865.7	17				3	8	0	11	9	0	3	8	0																								
F803	8		124	17.083	5656.0	17				2	8	0	11	9	0	2	8	0																								
F804	8		92	15.083	3705.1	17				2	8	0	9	9	0	2	8	0																								
WD601	6	Epoxy	62	19.000	1769.4	2	1	0	0	18	0	0													0	0	0															
WD602	6	Epoxy	62	16.000	1490.0	2	1	0	0	15	0	0													0	0	0															
WD603	6	Epoxy	15	13.000	292.9	2	1	0	0	12	0	0													0	0	0															
WD604	6	Epoxy	15	10.000	225.3	2	1	0	0	9	0	0													0	0	0															
WD605	6	Epoxy	72	10.333	1117.5	2	1	0	0	9	4	0													0	0	0															
WD801	8	Epoxy	30	13.333	1068.0	2	1	4	0	12	0	0													0	0	0															
WD802	8	Epoxy	30	10.333	827.7	2	1	4	0	9	0	0													0	0	0															
WD901	9	Epoxy	110	19.583	7324.2	2	1	7	0	18	0	0													0	0	0															
WD902	9	Epoxy	110	16.583	6202.2	2	1	7	0	15	0	0													0	0	0															

TOTAL WT = 71691.6

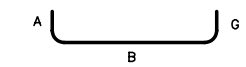

TYPE 2

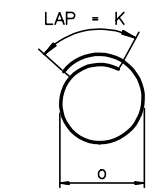

TYPE T3

TYPE 8

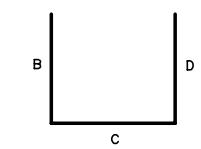

TYPE 17

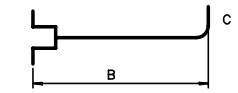

DOWEL BAR WITH FORMSAVER COUPLER

TYPE H2

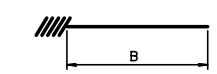

DOWEL-IN THREADED FOR FORMSAVER COUPLER

TYPE H3

NOTES:

1. ALL REINFORCING STEEL IS EPOXY COATED U.N.O.
2. ALL REINFORCING SHALL BE ASTM A615 OR A996, GRADE 60.

RECORD DRAWING

No.	Date	Revisions	By

HNTB CORPORATION

STATE OF WISCONSIN
DEPARTMENT OF TRANSPORTATION

STRUCTURE B-40-414C

Designed By	GD	Design Checked	AP	Drawn By	BM	Plans Checked	AP

NORTH CABLE STAY ABUTMENT FOOTING BARLIST

SHEET NC104 OF .

STATE PROJECT I.D.	SHEET NUMBER
2235-00-70	8.768

N. CABLE STAY ABUTMENT - WALL REINFORCEMENT

BAR MARK	BAR SIZE	LOCATION COMMENT	NO.	LTH/BAR DECIMAL FT	TOTAL WT (LB)	BEND TYPE	A			B			C			D			E			F/R			G			H			I			J			K			O		
							FT	IN	1/4	FT	IN	1/4	FT	IN	1/4	FT	IN	1/4	FT	IN	1/4	FT	IN	1/4	FT	IN	1/4	FT	IN	1/4	FT	IN	1/4	FT	IN	1/4	FT	IN	1/4	FT	IN	1/4
W503	5	Epoxy	18	60.000	1126.4	17				10	0	0	50	0	0	0	0	0																								
W504	5	Epoxy	18	19.667	369.2	14	0	0	0	0	0	0	12	0	0	1	5	0							6	3	0	0	0	0							1	0	0	13	0	0
W505	5	Epoxy	21	48.000	1051.3	STR				48	0	0																														
W506	5	Epoxy	76	6.917	548.3	17				1	0	0	4	11	0	1	0	0																								
W507	5	Epoxy	44	8.167	374.8	14				4	1	0	4	1	0													3	5	2							0	0	0	6	3	0
W508	5	Epoxy	34	10.083	357.6	17				4	6	0	1	1	0	4	6	0																								
W509	5	Epoxy	60	4.417	276.4	17				2	0	0	0	5	0	2	0	0																								
W510	5	Epoxy	7	31.000	226.3	17				2	0	0	29	0	0	0	0	0																								
W511	5	Epoxy	7	34.000	248.2	17				2	0	0	32	0	0	0	0	0																								
W512	5	Epoxy	26	5.083	137.8	17				2	0	0	1	1	0	2	0	0																								
W513	5	Epoxy	52	1.333	72.3	H2				1	4	0																														
W513a	5	Epoxy	52	2.500	135.6	H3				2	6	0																														
W514	5	Epoxy	17	60.000	1063.9	STR				60	0	0																														
W515	5	Epoxy	36	10.500	394.3	17				4	0	0	6	6	0	0	0	0																								
W516	5	Epoxy	44	23.833	1093.8	17				1	6	0	22	4	0	0	0	0																								
W517	5	Epoxy	50	43.000	2242.4	STR				43	0	0																														
W517a	5	Epoxy	25	22.333	582.3	STR				22	4	0																														
W518	5	Epoxy	205	5.854	1251.7	H10	1	0	0	1	3	1	1	0	3	1	6	1							1	0	0	1	2	2		2	1		4	3	1	0	3		7	0
W519	5	Epoxy	205	12.625	2699.4	14				1	0	0	11	7	2														2	0								11	3			
W520	5	Epoxy	205	12.750	2726.1	17				2	0	0	10	9	0																											
W521	5	Epoxy	8	27.500	229.5	17				1	6	0	26	0	0																											
W522	5	Epoxy	36	30.000	1126.4	STR				30	0	0																														
W523	5	Epoxy	12	31.500	394.3	17				1	6	0	30	0	0																											
W524	5	Epoxy	18	35.500	666.5	17				1	6	0	34	0	0																											
W525	5	Epoxy	18	6.667	125.2	STR				6	8	0																														
W526	5	Epoxy	14	24.500	357.7	17				1	6	0	23	0	0	0	0	0																								
W527	5	Epoxy	4	10.000	41.7	STR				10	0	0																														
W530	5	Epoxy	10	6.000	62.6	17				3	0	0	3	0	0	0	0	0																								
W603	6	Epoxy	205	10.000	3079.1	14				5	0	0	5	0	0													4	11	3								5	0			
W604	6	Epoxy	205	14.250	4387.7	1		8	0	12	11	0														8	0															
W606	6	Epoxy	188	11.000	3106.1	STR				11	0	0																														
W610	6	Epoxy	156	15.000	3514.7	STR				15	0	0																														
W611	6	Epoxy	30	14.917	672.1	STR				14	11	0																														
W801	8	Epoxy	60	14.917	2389.7	STR				14	11	0																														

TOTAL WT = 37131.5

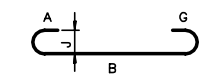

TYPE 1

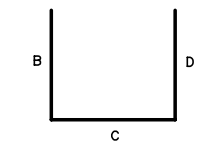

TYPE 17

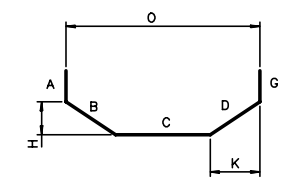

TYPE 14

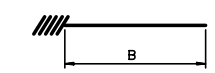

DOWEL-IN THREADED
FOR FORMSAVER COUPLER

TYPE H3

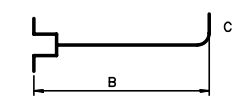

DOWEL BAR WITH
FORMSAVER COUPLER

TYPE H2

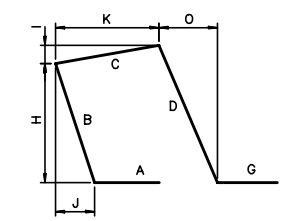

TYPE H10

NOTES:

1. ALL REINFORCING STEEL IS EPOXY COATED U.N.O.
2. ALL REINFORCING SHALL BE ASTM A615 OR A996, GRADE 60.

RECORD DRAWING

No.	Date	Revisions	By

HNTB CORPORATION

STATE OF WISCONSIN
DEPARTMENT OF TRANSPORTATION

STRUCTURE B-40-414C

Designed By	GD	Design Checked	AP	Drawn By	BM	Plans Checked	AP

NORTH CABLE STAY ABUTMENT WALL BARLIST

SHEET NC105OF .

STATE PROJECT I.D.	SHEET NUMBER
2235-00-70	8.769

N. PIER 1 - WEST FOOTING/COLUMN STA 37+51.07

BAR MARK	BAR SIZE	LOCATION COMMENT	NO.	LTH/BAR DECIMAL FT	TOTAL WT (LB)	BEND TYPE	A			B			C			D			E			F/R			G			H			I			J			K			O		
							FT	IN	¼	FT	IN	¼	FT	IN	¼	FT	IN	¼	FT	IN	¼	FT	IN	¼	FT	IN	¼	FT	IN	¼	FT	IN	¼	FT	IN	¼	FT	IN	¼	FT	IN	¼
F501	5		36	6.000	225.3	2		10	0	4	4	0														10	0															
F502	5		12	8.500	106.4	STR				8	6	0																														
F503	5		36	10.167	381.7	2		10	0	8	6	0														10	0															
F801	8		36	11.167	1073.3	2	1	4	0	8	6	0													1	4	0															
PL401	4	Pile/Footing Connection	40	3.094	82.7	T3																															1	0	0	0	8	0
PL901	9	Pile/Footing Connection	32	12.000	1305.6	STR				12	0	0																														
T501	5	Epoxy Coated	256	8.104	2163.9	T9		5	2	7	2	0														6	0															
T502	5	Epoxy Coated 9 series of 64	576	3.281	1971.3	T9		5	2	2	0 TO 7	2 1														6	0															
C901	9	Epoxy Coated	40	18.333	2493.3	2	1	7	0	16	9	0													0	0	0															
C902	9	Epoxy Coated	40	22.583	3071.3	2	1	7	0	21	0	0													0	0	0															

TOTAL WT = 12874.8

N. PIER 1 - EAST FOOTING/COLUMN STA 37+51.07

BAR MARK	BAR SIZE	LOCATION COMMENT	NO.	LTH/BAR DECIMAL FT	TOTAL WT (LB)	BEND TYPE	A			B			C			D			E			F/R			G			H			I			J			K			O		
							FT	IN	¼	FT	IN	¼	FT	IN	¼	FT	IN	¼	FT	IN	¼	FT	IN	¼	FT	IN	¼	FT	IN	¼	FT	IN	¼	FT	IN	¼	FT	IN	¼	FT	IN	¼
F501	5		36	6.000	225.3	2		10	0	4	4	0														10	0															
F502	5		12	8.500	106.4	STR				8	6	0																														
F503	5		36	10.167	381.7	2		10	0	8	6	0														10	0															
F801	8		36	11.167	1073.3	2	1	4	0	8	6	0													1	4	0															
PL401	4	Pile/Footing Connection	40	3.094	82.7	T3																															1	0	0	0	8	0
PL901	9	Pile/Footing Connection	32	12.000	1305.6	STR				12	0	0																														
T501	5	Epoxy Coated	256	8.104	2163.9	T9		5	2	7	2	0														6	0															
T502	5	Epoxy Coated 9 series of 64	576	3.281	1971.3	T9		5	2	2	0 TO 7	2 1														6	0															
C901	9	Epoxy Coated	40	18.333	2493.3	2	1	7	0	16	9	0													0	0	0															
C902	9	Epoxy Coated	40	22.583	3071.3	2	1	7	0	21	0	0													0	0	0															

TOTAL WT = 12874.8

NOTES:

1. ALL REINFORCING STEEL IS UNCOATED U.N.O.
2. ALL REINFORCING SHALL BE ASTM A615 OR A996, GRADE 60.

TYPE 2

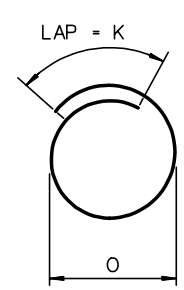

TYPE T3

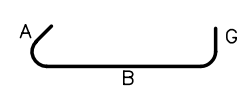

TYPE T9

RECORD DRAWING

No.	Date	Revisions	By
1	2-14-01	REV SERIES BAR NOTATION	AP

HNTB CORPORATION

STATE OF WISCONSIN
DEPARTMENT OF TRANSPORTATION

STRUCTURE B-40-414C

Designed By	CE	Design Checked	AP	Drawn By	BM	Plans Checked	AP

NORTH CABLE STAY
PIER 1 BARLIST

SHEET NC106 OF

STATE PROJECT I.D.	SHEET NUMBER
2235-00-70	8.770

N. PIER 2 - WEST FOOTING/COLUMN STA 38+18.07

BAR MARK	BAR SIZE	LOCATION COMMENT	NO.	LTH/BAR DECIMAL FT	TOTAL WT (LB)	BEND TYPE	A			B			C			D			E			F/R			G			H			I			J			K			O		
							FT	IN	1/4	FT	IN	1/4	FT	IN	1/4	FT	IN	1/4	FT	IN	1/4	FT	IN	1/4	FT	IN	1/4	FT	IN	1/4	FT	IN	1/4	FT	IN	1/4	FT	IN	1/4	FT	IN	1/4
F501	5		36	6.000	225.3	2		10	0	4	4	0														10	0																
F502	5		12	8.500	106.4	STR				8	6	0																														
F503	5		36	10.167	381.7	2		10	0	8	6	0														10	0																
F801	8		36	11.167	1073.3	2	1	4	0	8	6	0													1	4	0																
PL401	4	Pile/Footing Connection	40	3.094	82.7	T3																															1	0	0	0	8	0
PL901	9	Pile/Footing Connection	32	12.000	1305.6	STR				12	0	0																														
T501	5	Epoxy Coated	248	8.104	2096.3	T9		5	2	7	2	0														6	0																
T502	5	Epoxy Coated 10 series of 62	620	3.281	2121.9	T9		5	2	2	0 TO 2	2 7	1													6	0																
C1101	11	Epoxy Coated	42	18.500	4128.2	2	2	0	0	16	6	0													0	0	0																
C1102	11	Epoxy Coated	42	26.500	5913.4	2	2	0	0	24	6	0													0	0	0																

TOTAL WT = 17434.7

N. PIER 2 - EAST FOOTING/COLUMN STA 38+18.07

BAR MARK	BAR SIZE	LOCATION COMMENT	NO.	LTH/BAR DECIMAL FT	TOTAL WT (LB)	BEND TYPE	A			B			C			D			E			F/R			G			H			I			J			K			O		
							FT	IN	1/4	FT	IN	1/4	FT	IN	1/4	FT	IN	1/4	FT	IN	1/4	FT	IN	1/4	FT	IN	1/4	FT	IN	1/4	FT	IN	1/4	FT	IN	1/4	FT	IN	1/4	FT	IN	1/4
F501	5		36	6.000	225.3	2		10	0	4	4	0														10	0																
F502	5		12	8.500	106.4	STR				8	6	0																														
F503	5		36	10.167	381.7	2		10	0	8	6	0														10	0																
F801	8		36	11.167	1073.3	2	1	4	0	8	6	0													1	4	0																
PL401	4	Pile/Footing Connection	40	3.094	82.7	T3																															1	0	0	0	8	0
PL901	9	Pile/Footing Connection	32	12.000	1305.6	STR				12	0	0																														
T501	5	Epoxy Coated	248	8.104	2096.3	T9		5	2	7	2	0														6	0																
T502	5	Epoxy Coated 10 series of 62	620	3.281	2121.9	T9		5	2	2	0 TO 2	2 7	1													6	0																
C1101	11	Epoxy Coated	42	18.500	4128.2	2	2	0	0	16	6	0													0	0	0																
C1102	11	Epoxy Coated	42	26.500	5913.4	2	2	0	0	24	6	0													0	0	0																

TOTAL WT = 17434.7

NOTES:

1. ALL REINFORCING STEEL IS UNCOATED U.N.O.
2. ALL REINFORCING SHALL BE ASTM A615 OR A996, GRADE 60.

TYPE 2

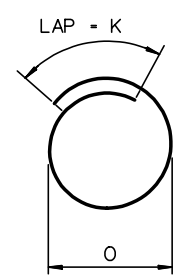

TYPE T3

TYPE T9

RECORD DRAWING

No.	Date	Revisions	By
1	2-14-01	REV SERIES BAR NOTATION	AP

HNTB CORPORATION

STATE OF WISCONSIN
DEPARTMENT OF TRANSPORTATION

STRUCTURE B-40-414C

Designed By	CE	Design Checked	AP	Drawn By	BM	Plans Checked	AP

NORTH CABLE STAY
PIER 2 BARLIST

SHEET NC107 OF

STATE PROJECT I.D.	SHEET NUMBER
2235-00-70	8.771

N. PIER 3 - WEST FOOTING/COLUMN STA 41+28.07

BAR MARK	BAR SIZE	LOCATION COMMENT	NO.	LTH/BAR DECIMAL FT	TOTAL WT (LB)	BEND TYPE	A			B			C			D			E			F/R			G			H			I			J			K			O		
							FT	IN	¼	FT	IN	¼	FT	IN	¼	FT	IN	¼	FT	IN	¼	FT	IN	¼	FT	IN	¼	FT	IN	¼	FT	IN	¼	FT	IN	¼	FT	IN	¼	FT	IN	¼
F501	5		48	6.000	300.4	2		10	0	4	4	0														10	0															
F502	5		12	11.500	143.9	STR				11	6	0																														
F601	6		48	13.500	973.3	2	1	0	0	11	6	0													1	0	0															
F901	9		48	14.667	2393.6	2	1	7	0	11	6	0													1	7	0															
PL401	4	Pile/Footing Connection	60	3.094	124.0	T3																															1	0	0	0	8	0
PL901	9	Pile/Footing Connection	48	12.000	1958.4	STR				12	0	0																														
T501	5	Epoxy Coated	224	8.104	1893.4	T9		5	2	7	2	0														6	0															
T502	5	Epoxy Coated 10 series of 56	560	3.281	1916.5	T9		5	2	2	0 TO 2	1 7 2														6	0															
C1101	11	Epoxy Coated	42	17.000	3793.5	2	2	0	0	15	0	0													0	0	0															
C1102	11	Epoxy Coated	42	25.000	5578.7	2	2	0	0	23	0	0													0	0	0															

TOTAL WT = 19075.7

N. PIER 3 - EAST FOOTING/COLUMN STA 41+28.07

BAR MARK	BAR SIZE	LOCATION COMMENT	NO.	LTH/BAR DECIMAL FT	TOTAL WT (LB)	BEND TYPE	A			B			C			D			E			F/R			G			H			I			J			K			O		
							FT	IN	¼	FT	IN	¼	FT	IN	¼	FT	IN	¼	FT	IN	¼	FT	IN	¼	FT	IN	¼	FT	IN	¼	FT	IN	¼	FT	IN	¼	FT	IN	¼	FT	IN	¼
F501	5		48	6.000	300.4	2		10	0	4	4	0														10	0															
F502	5		12	11.500	143.9	STR				11	6	0																														
F601	6		48	13.500	973.3	2	1	0	0	11	6	0													1	0	0															
F901	9		48	14.667	2393.6	2	1	7	0	11	6	0													1	7	0															
PL401	4	Pile/Footing Connection	60	3.094	124.0	T3																															1	0	0	0	8	0
PL901	9	Pile/Footing Connection	48	12.000	1958.4	STR				12	0	0																														
T501	5	Epoxy Coated	224	8.104	1893.4	T9		5	2	7	2	0														6	0															
T502	5	Epoxy Coated 10 series of 56	560	3.281	1916.5	T9		5	2	2	0 TO 2	1 7 2														6	0															
C1101	11	Epoxy Coated	42	17.000	3793.5	2	2	0	0	15	0	0													0	0	0															
C1102	11	Epoxy Coated	42	25.000	5578.7	2	2	0	0	23	0	0													0	0	0															

TOTAL WT = 19075.7

NOTES:

1. ALL REINFORCING STEEL IS UNCOATED U.N.O.
2. ALL REINFORCING SHALL BE ASTM A615 OR A996, GRADE 60.

TYPE 2

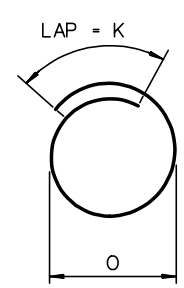

TYPE T3

TYPE T9

RECORD DRAWING

No.	Date	Revisions	By
1	2-14-01	REV SERIES BAR NOTATION	AP

HNTB CORPORATION

STATE OF WISCONSIN
DEPARTMENT OF TRANSPORTATION

STRUCTURE B-40-414C

Designed By	CE	Design Checked	AP	Drawn By	BM	Plans Checked	AP

NORTH CABLE STAY
PIER 3 BARLIST

SHEETNC108 OF

STATE PROJECT I.D.	SHEET NUMBER
2235-00-70	8.772

N. PIER 4 - WEST FOOTING/COLUMN STA 42+48.07

BAR MARK	BAR SIZE	LOCATION COMMENT	NO.	LTH/BAR DECIMAL FT	TOTAL WT (LB)	BEND TYPE	A			B			C			D			E			F/R			G			H			I			J			K			O		
							FT	IN	¼	FT	IN	¼	FT	IN	¼	FT	IN	¼	FT	IN	¼	FT	IN	¼	FT	IN	¼	FT	IN	¼	FT	IN	¼	FT	IN	¼	FT	IN	¼	FT	IN	¼
F501	5		48	6.000	300.4	2		10	0	4	4	0														10	0															
F502	5		12	11.500	143.9	STR				11	6	0																														
F601	6		48	13.500	973.3	2	1	0	0	11	6	0													1	0	0															
F901	9		48	14.667	2393.6	2	1	7	0	11	6	0													1	7	0															
PL401	4	Pile/Footing Connection	60	3.094	124.0	T3																															1	0	0	0	8	0
PL901	9	Pile/Footing Connection	48	12.000	1958.4	STR				12	0	0																														
T501	5	Epoxy Coated	255	8.104	2155.4	T9		5	2	7	2	0														6	0															
T502	5	Epoxy Coated 10 series of 51	510	3.573	1900.5	T9		5	2	1	11	2														6	0															
										3	TO 3	1																														
C1101	11	Epoxy Coated	50	15.750	4184.0	2	2	0	0	13	9	0													0	0	0															
C1102	11	Epoxy Coated	50	23.750	6309.2	2	2	0	0	21	9	0													0	0	0															
C1103	11	Epoxy Coated	6	19.000	605.7	2	2	0	0	17	0	0													0	0	0															

TOTAL WT = 21048.5

N. PIER 4 - EAST FOOTING/COLUMN STA 42+48.07

BAR MARK	BAR SIZE	LOCATION COMMENT	NO.	LTH/BAR DECIMAL FT	TOTAL WT (LB)	BEND TYPE	A			B			C			D			E			F/R			G			H			I			J			K			O		
							FT	IN	¼	FT	IN	¼	FT	IN	¼	FT	IN	¼	FT	IN	¼	FT	IN	¼	FT	IN	¼	FT	IN	¼	FT	IN	¼	FT	IN	¼	FT	IN	¼	FT	IN	¼
F501	5		48	6.000	300.4	2		10	0	4	4	0														10	0															
F502	5		12	11.500	143.9	STR				11	6	0																														
F601	6		48	13.500	973.3	2	1	0	0	11	6	0													1	0	0															
F901	9		48	14.667	2393.6	2	1	7	0	11	6	0													1	7	0															
PL401	4	Pile/Footing Connection	60	3.094	124.0	T3																															1	0	0	0	8	0
PL901	9	Pile/Footing Connection	48	12.000	1958.4	STR				12	0	0																														
T501	5	Epoxy Coated	255	8.104	2155.4	T9		5	2	7	2	0														6	0															
T502	5	Epoxy Coated 10 series of 51	510	3.573	1900.5	T9		5	2	1	11	2														6	0															
										3	TO 3	1																														
C1101	11	Epoxy Coated	50	15.750	4184.0	2	2	0	0	13	9	0													0	0	0															
C1102	11	Epoxy Coated	50	23.750	6309.2	2	2	0	0	21	9	0													0	0	0															
C1103	11	Epoxy Coated	6	19.000	605.7	2	2	0	0	17	0	0													0	0	0															

TOTAL WT = 21048.5

NOTES:

1. ALL REINFORCING STEEL IS UNCOATED U.N.O.
2. ALL REINFORCING SHALL BE ASTM A615 OR A996, GRADE 60.

TYPE 2

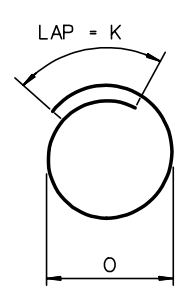

TYPE T3

TYPE T9

RECORD DRAWING

No.	Date	Revisions	By
1	2-14-01	REV SERIES BAR NOTATION	AP

HNTB CORPORATION

STATE OF WISCONSIN
DEPARTMENT OF TRANSPORTATION

STRUCTURE B-40-414C

Designed By	CE	Design Checked	AP	Drawn By	BM	Plans Checked	AP

NORTH CABLE STAY
PIER 4 BARLIST

SHEET NC109 OF

STATE PROJECT I.D.	SHEET NUMBER
2235-00-70	8.773

N. PYLON - WEST FOOTING

BAR MARK	BAR SIZE	LOCATION COMMENT	NO.	LTH/BAR DECIMAL FT	TOTAL WT (LB)	BEND TYPE	A			B			C			D			E			F/R			G			H			I			J			K			O		
							FT	IN	¼	FT	IN	¼	FT	IN	¼	FT	IN	¼	FT	IN	¼	FT	IN	¼	FT	IN	¼	FT	IN	¼	FT	IN	¼	FT	IN	¼	FT	IN	¼	FT	IN	¼
F801	8		32	17.167	1466.7	2	1	4	0	14	6	0													1	4	0															
F802	8		24	25.167	1612.7	2	1	4	0	22	6	0													1	4	0															
F803	8		80	5.250	1121.4	STR				5	3	0																														
F1101	11		31	18.500	3047.0	2	2	0	0	14	6	0													2	0	0															
F1102	11		60	26.500	8447.7	2	2	0	0	22	6	0													2	0	0															
FD501	5	Epoxy 8 sets of 4	32	12.031	401.6	T9		5	2	11	2	0														6	0															
											TO																															
										10	11	3																														
FD502	5	Epoxy 8 sets of 23	184	2.771	531.8	T9		5	2	1	9	3														6	0															
FD503	5	Epoxy 8 sets of 4	32	6.802	227.0	T9		5	2	5	10	2														6	0															
											TO																															
										5	9	3																														
FD901	9	Epoxy Dowel	54	8.500	1560.6	STR				8	6	0																														
FD902	9	Epoxy Dowel	54	11.750	2157.3	STR				11	9	0																														

TOTAL WT = 20573.7

N. PYLON - WEST FOOTING PILES

BAR MARK	BAR SIZE	LOCATION COMMENT	NO.	LTH/BAR DECIMAL FT	TOTAL WT (LB)	BEND TYPE	A			B			C			D			E			F/R			G			H			I			J			K			O		
							FT	IN	¼	FT	IN	¼	FT	IN	¼	FT	IN	¼	FT	IN	¼	FT	IN	¼	FT	IN	¼	FT	IN	¼	FT	IN	¼	FT	IN	¼	FT	IN	¼	FT	IN	¼
PL901	9	Pile/Footing Connection	112	12.000	4569.6	STR				12	0	0																														
PL401	4		140	2.761	258.2	T3																															1	0	0	0	8	0

TOTAL WT = 4827.8

N. PYLON - EAST FOOTING

BAR MARK	BAR SIZE	LOCATION COMMENT	NO.	LTH/BAR DECIMAL FT	TOTAL WT (LB)	BEND TYPE	A			B			C			D			E			F/R			G			H			I			J			K			O		
							FT	IN	¼	FT	IN	¼	FT	IN	¼	FT	IN	¼	FT	IN	¼	FT	IN	¼	FT	IN	¼	FT	IN	¼	FT	IN	¼	FT	IN	¼	FT	IN	¼	FT	IN	¼
F801	8		29	17.167	1329.2	2	1	4	0	14	6	0													1	4	0															
F802	8		23	23.167	1422.7	2	1	4	0	20	6	0													1	4	0															
F803	8		72	5.250	1009.3	STR				5	3	0																														
F1101	11		28	18.500	2752.1	2	2	0	0	14	6	0													2	0	0															
F1102	11		46	24.500	5987.8	2	2	0	0	20	6	0													2	0	0															
FD501	5	Epoxy 8 sets of 4	32	12.031	401.6	T9		5	2	11	2	0														6	0															
											TO																															
										10	11	3																														
FD502	5	Epoxy 8 sets of 23	184	2.771	531.8	T9		5	2	1	9	3														6	0															
FD503	5	Epoxy 8 sets of 4	32	6.802	227.0	T9		5	2	5	10	2														6	0															
											TO																															
										5	9	3																														
FD901	9	Epoxy Dowel	54	8.500	1560.6	STR				8	6	0																														
FD902	9	Epoxy Dowel	54	11.750	2157.3	STR				11	9	0																														

TOTAL WT = 17379.3

N. PYLON - EAST FOOTING PILES

BAR MARK	BAR SIZE	LOCATION COMMENT	NO.	LTH/BAR DECIMAL FT	TOTAL WT (LB)	BEND TYPE	A			B			C			D			E			F/R			G			H			I			J			K			O		
							FT	IN	¼	FT	IN	¼	FT	IN	¼	FT	IN	¼	FT	IN	¼	FT	IN	¼	FT	IN	¼	FT	IN	¼	FT	IN	¼	FT	IN	¼	FT	IN	¼	FT	IN	¼
PL901	9	Pile/Footing Connection	140	12.000	5712.0	STR				12	0	0																														
PL401	4		175	2.761	322.8	T3																															1	0	0	0	8	0

TOTAL WT = 6034.8

NOTES:

1. ALL REINFORCING STEEL IS BLACK STEEL U.N.O.
2. ALL REINFORCING SHALL BE ASTM A615, GRADE 60 OR ASTM A616, GRADE 60.

RECORD DRAWING

No.	Date	Revisions	By

HNTB CORPORATION

STATE OF WISCONSIN
DEPARTMENT OF TRANSPORTATION

STRUCTURE B-40-414C

Designed By	AJ	Design Checked	TZ	Drawn By	BM	Plans Checked	.

NORTH CABLE STAY PYLON BARLIST

SHEETNC110 OF

STATE PROJECT I.D.	SHEET NUMBER
2235-00-70	8.774

N. CABLE STAYED PYLON - WEST PYLON LIFT 1 (EL 7.136 TO 17.136)

BAR MARK	BAR SIZE	LOCATION COMMENT	NO.	LTH/BAR DECIMAL FT	TOTAL WT (LB)	BEND TYPE	A			B			C			D			E			F/R			G			H			I			J			K			O		
							FT	IN	1/4	FT	IN	1/4	FT	IN	1/4	FT	IN	1/4	FT	IN	1/4	FT	IN	1/4	FT	IN	1/4	FT	IN	1/4	FT	IN	1/4	FT	IN	1/4	FT	IN	1/4	FT	IN	1/4
P901	9		108	15.000	5508.0	STR				15	0	0																														
P501	5	4 series of 20	80	11.844	988.2	T9		5	2	11 to 10	1 to 8	0 to 1														6	0															
P502	5	2 series of 20	40	16.208	676.2	T1		5	2	1	9	2	5 to 5	11 to 9	0 to 2	1	9	2	5 to 5	11 to 9	0 to 2					5	2															
P503	5		460	2.750	1319.4	T9		5	2	1	9	2														6	0															
B501	5		182	7.375	1400.0	T9		5	2	6	5	0														6	0															
B502	5		149	6.542	1016.6	T9		5	2	5	7	0														6	0															
B503	5		2	6.542	13.6	T9		5	2	5	7	0														6	0															
B504	5		2	5.083	10.6	T9		5	2	4	1	2														6	0															
B505	5		2	3.521	7.3	T9		5	2	2	6	3														6	0															
B506	5		2	2.083	4.3	T9		5	2	1	1	2														6	0															
B507	5		11	6.542	75.1	T9		5	2	5	7	0														6	0															
B508	5		7	11.563	84.4	S13				2	0	0	7	6	3	2	0	0										6	5	0							4	0	0			
B601	6		22	35.000	1156.5	STR				35	0	0																														
B602	6		14	10.000	210.3	STR				10	0	0																														
B1001	10		10	36.833	1584.9	2	1	10	0	35	0	0													0	0	0															
				TOTAL WT =	14055.6																																					

N. CABLE STAYED PYLON - EAST PYLON LIFT 1 (EL 7.136 TO 17.136)

BAR MARK	BAR SIZE	LOCATION COMMENT	NO.	LTH/BAR DECIMAL FT	TOTAL WT (LB)	BEND TYPE	A			B			C			D			E			F/R			G			H			I			J			K			O		
							FT	IN	1/4	FT	IN	1/4	FT	IN	1/4	FT	IN	1/4	FT	IN	1/4	FT	IN	1/4	FT	IN	1/4	FT	IN	1/4	FT	IN	1/4	FT	IN	1/4	FT	IN	1/4	FT	IN	1/4
P901	9		108	15.000	5508.0	STR				15	0	0																														
P501	5	4 series of 20	80	11.844	988.2	T9		5	2	11 to 10	1 to 8	0 to 1														6	0															
P502	5	2 series of 20	40	16.208	676.2	T1		5	2	1	9	2	5 to 5	11 to 9	0 to 2	1	9	2	5 to 5	11 to 9	0 to 2					5	2															
P503	5		460	2.750	1319.4	T9		5	2	1	9	2														6	0															
B501	5		182	7.375	1400.0	T9		5	2	6	5	0														6	0															
B502	5		149	6.542	1016.6	T9		5	2	5	7	0														6	0															
B503	5		2	6.542	13.6	T9		5	2	5	7	0														6	0															
B504	5		2	5.083	10.6	T9		5	2	4	1	2														6	0															
B505	5		2	3.521	7.3	T9		5	2	2	6	3														6	0															
B506	5		2	2.083	4.3	T9		5	2	1	1	2														6	0															
B507	5		11	6.542	75.1	T9		5	2	5	7	0														6	0															
B508	5		7	11.563	84.4	S13				2	0	0	7	6	3	2	0	0										6	5	0							4	0	0			
B601	6		22	35.000	1156.5	STR				35	0	0																														
B602	6		14	10.000	210.3	STR				10	0	0																														
B1001	10		10	36.833	1584.9	2	1	10	0	35	0	0													0	0	0															
				TOTAL WT =	14055.6																																					

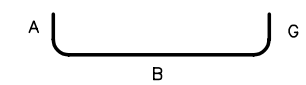

TYPE 2

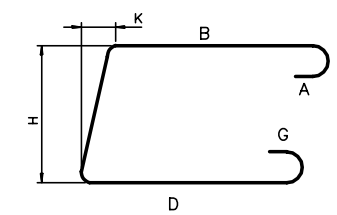

TYPE S13

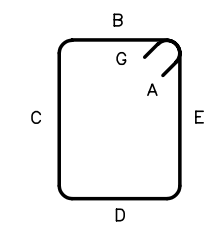

TYPE T1

TYPE T9

NOTES:

1. ALL REINFORCING STEEL IS EPOXY COATED U.N.O.
2. ALL REINFORCING SHALL BE ASTM A615 OR A996, GRADE 60.

RECORD DRAWING

No.	Date	Revisions	By
2	2-14-01	REV SERIES BAR NOTATION	AP
1	2-9-01	LENGTH OF P901	AP

HNTB CORPORATION

STATE OF WISCONSIN
DEPARTMENT OF TRANSPORTATION

STRUCTURE B-40-414C

Designed By SL | Design Checked TZ | Drawn By BM | Plans Checked AP

NORTH CABLE STAY PYLON LIFT 1 BARLIST

SHEET NC111 OF

STATE PROJECT I.D.	SHEET NUMBER
2235-00-70	8.775

N. CABLE STAYED PYLON - EAST PYLON LIFT 2 (EL 17.136 TO 34.313)

BAR MARK	BAR SIZE	LOCATION COMMENT	NO.	LTH/BAR DECIMAL FT	TOTAL WT (LB)	BEND TYPE	A			B			C			D			E			F/R			G			H			I			J			K			O		
							FT	IN	1/4	FT	IN	1/4	FT	IN	1/4	FT	IN	1/4	FT	IN	1/4	FT	IN	1/4	FT	IN	1/4	FT	IN	1/4	FT	IN	1/4	FT	IN	1/4	FT	IN	1/4	FT	IN	1/4
P902	9		108	22.250	8170.2	STR				22	3	0																														
P504	5	4 series of 34	136	11.313	1604.7	T9		5	2	10 to 10	8 to 0	1 to 1														6	0															
P505	5	2 series of 34	68	15.896	1127.4	T1		5	2	1	9	2	5 to 5	9 to 7	2 to 1	1	9	2	5 to 5	9 to 7	2 to 1					5	2															
P506	5		782	2.750	2243.0	T9		5	2	1	9	2														6	0															
DB601	6		64	4.500	432.6	H2				4	6	0																														
DB602	6		18	8.500	229.8	STR				8	6	0																														
DB602A	6		18	12.000	324.4	STR				12	0	0																														
DB603	6		9	5.000	67.6	STR				5	0	0																														
				TOTAL WT =	14199.6																																					

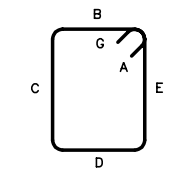

TYPE T1

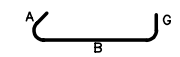

TYPE T9

N. CABLE STAYED PYLON - WEST PYLON LIFT 2 (EL 17.136 TO 34.313)

BAR MARK	BAR SIZE	LOCATION COMMENT	NO.	LTH/BAR DECIMAL FT	TOTAL WT (LB)	BEND TYPE	A			B			C			D			E			F/R			G			H			I			J			K			O		
							FT	IN	1/4	FT	IN	1/4	FT	IN	1/4	FT	IN	1/4	FT	IN	1/4	FT	IN	1/4	FT	IN	1/4	FT	IN	1/4	FT	IN	1/4	FT	IN	1/4	FT	IN	1/4	FT	IN	1/4
P902	9		108	22.250	8170.2	STR				22	3	0																														
P504	5	4 series of 34	136	11.313	1604.7	T9		5	2	10 to 10	8 to 0	1 to 1														6	0															
P505	5	2 series of 34	68	15.896	1127.4	T1		5	2	1	9	2	5 to 5	9 to 7	2 to 1	1	9	2	5 to 5	9 to 7	2 to 1					5	2															
P506	5		782	2.750	2243.0	T9		5	2	1	9	2														6	0															
DB601	6		64	4.500	432.6	H2				4	6	0																														
DB602	6		18	8.500	229.8	STR				8	6	0																														
DB602A	6		18	12.000	324.4	STR				12	0	0																														
DB603	6		9	5.000	67.6	STR				5	0	0																														
				TOTAL WT =	14199.6																																					

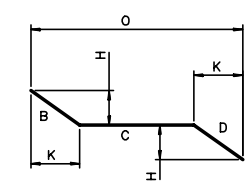

TYPE 19

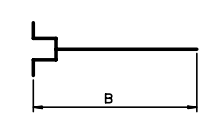

DOWEL BAR WITH
FORMSAVER COUPLER

TYPE H2

NOTES:

1. ALL REINFORCING STEEL IS EPOXY COATED U.N.O.
2. ALL REINFORCING SHALL BE ASTM A615 OR A996, GRADE 60.

RECORD DRAWING

No.	Date	Revisions	By
2	2-20-01	REV DB602, DB603, ADD DB602a	AP
1	2-14-01	REV SERIES BAR NOTATION	AP

HNTB CORPORATION

STATE OF WISCONSIN
DEPARTMENT OF TRANSPORTATION

STRUCTURE B-40-414C

Designed By	CE	Design Checked	TZ	Drawn By	BM	Plans Checked	AP

NORTH CABLE STAY
PYLON LIFT 2 BARLIST

SHEET NC112 OF

STATE PROJECT I.D.	SHEET NUMBER
2235-00-70	8.776

N. CABLE STAYED PYLON - EAST PYLON LIFT 3 (EL 34.313 TO 64.236)

BAR MARK	BAR SIZE	LOCATION COMMENT	NO.	LTH/BAR DECIMAL FT	TOTAL WT (LB)	BEND TYPE	A			B			C			D			E			F/R			G			H			I			J			K			O		
							FT	IN	1/4	FT	IN	1/4	FT	IN	1/4	FT	IN	1/4	FT	IN	1/4	FT	IN	1/4	FT	IN	1/4	FT	IN	1/4	FT	IN	1/4	FT	IN	1/4	FT	IN	1/4	FT	IN	1/4
P903	9		108	35.250	12943.8	STR				35	3	0																														
P903a	9		2	15.000	102.0	STR				15	0	0																														
P507	5	4 series of 30	120	10.698	1339.0	T9		5	2	10 to 9	0 to 5	1 to 2														6	0															
P508	5	2 series of 30	60	15.563	973.9	T1		5	2	1	9	2	5 to 5	7 to 5	1 to 2	1	9	2	5 to 5	7 to 5	1 to 2					5	2															
P509	5		690	2.750	1979.1	T9		5	2	1	9	2														6	0															
P510	5	4 series of 30	120	10.125	1267.2	T9		5	2	9 to 8	5 to 10	2 to 2														6	0															
P511	5	2 series of 30	60	15.250	954.3	T1		5	2	1	9	2	5 to 5	5 to 3	2 to 2	1	9	2	5 to 5	5 to 3	2 to 2					5	2															
P512	5		690	2.750	1979.1	T9		5	2	1	9	2														6	0															
DB601	6		36	4.500	243.3	H2				4	6	0																														
DB602	6		10	8.500	127.7	STR				8	6	0																														
DB602A	6		8	12.000	144.2	STR				12	0	0																														

TOTAL WT = 22053.6

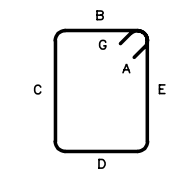

TYPE T1

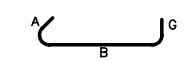

TYPE T9

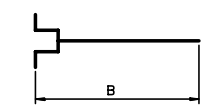

DOWEL BAR WITH FORMSAVER COUPLER

TYPE H2

N. CABLE STAYED PYLON - WEST PYLON LIFT 3 (EL 34.313 TO 64.236)

BAR MARK	BAR SIZE	LOCATION COMMENT	NO.	LTH/BAR DECIMAL FT	TOTAL WT (LB)	BEND TYPE	A			B			C			D			E			F/R			G			H			I			J			K			O		
							FT	IN	1/4	FT	IN	1/4	FT	IN	1/4	FT	IN	1/4	FT	IN	1/4	FT	IN	1/4	FT	IN	1/4	FT	IN	1/4	FT	IN	1/4	FT	IN	1/4	FT	IN	1/4	FT	IN	1/4
P903	9		108	35.250	12943.8	STR				35	3	0																														
P903a	9		2	15.000	102.0	STR				15	0	0																														
P507	5	4 series of 30	120	10.698	1339.0	T9		5	2	10 to 9	0 to 5	1 to 2														6	0															
P508	5	2 series of 30	60	15.563	973.9	T1		5	2	1	9	2	5 to 5	7 to 5	1 to 2	1	9	2	5 to 5	7 to 5	1 to 2					5	2															
P509	5		690	2.750	1979.1	T9		5	2	1	9	2														6	0															
P510	5	4 series of 30	120	10.125	1267.2	T9		5	2	9 to 8	5 to 10	2 to 2														6	0															
P511	5	2 series of 30	60	15.250	954.3	T1		5	2	1	9	2	5 to 5	5 to 3	2 to 2	1	9	2	5 to 5	5 to 3	2 to 2					5	2															
P512	5		690	2.750	1979.1	T9		5	2	1	9	2														6	0															
DB601	6		36	4.500	243.3	H2				4	6	0																														
DB602	6		10	8.500	127.7	STR				8	6	0																														
DB602A	6		8	12.000	144.2	STR				12	0	0																														

TOTAL WT = 22053.6

NOTES:

1. ALL REINFORCING STEEL IS EPOXY COATED U.N.O.
2. ALL REINFORCING SHALL BE ASTM A615 OR A996, GRADE 60.

RECORD DRAWING

No.	Date	Revisions	By
2	3-26-01	REV DB602, ADD DB602A	AP
1	2-14-01	REV SERIES BAR NOTATION	AP

HNTB CORPORATION

STATE OF WISCONSIN
DEPARTMENT OF TRANSPORTATION

STRUCTURE B-40-414C

Designed By SL | Design Checked TZ | Drawn By BM | Plans Checked AP

NORTH CABLE STAY PYLON LIFT 3 BARLIST

SHEETNC113OF

STATE PROJECT I.D.	SHEET NUMBER
2235-00-70	8.777

N. CABLE STAYED PYLON - EAST PYLON LIFT 4 (EL 64.236 TO 93.316)

BAR MARK	BAR SIZE	LOCATION COMMENT	NO.	LTH/BAR DECIMAL FT	TOTAL WT (LB)	BEND TYPE	A			B			C			D			E			F/R			G			H			I			J			K			O		
							FT	IN	1/4	FT	IN	1/4	FT	IN	1/4	FT	IN	1/4	FT	IN	1/4	FT	IN	1/4	FT	IN	1/4	FT	IN	1/4	FT	IN	1/4	FT	IN	1/4	FT	IN	1/4	FT	IN	1/4
P904	9		68	34.000	7860.8	STR				34	0	0																														
P905	9		16	30.917	1681.9	2	1	7	0	29	4	0													0	0	0																
P906	9		16	26.833	1459.7	2	1	7	0	25	3	0													0	0	0																
P907	9		2	18.313	124.5	14	0	0	0	3	5	3	14	10	0	0	0	0							0	0	0	1	3	0							3	3	0			
P908	9		2	22.396	152.3	14	0	0	0	3	5	3	18	11	0	0	0	0							0	0	0	1	3	0							3	3	0			
P909	9		2	23.396	159.1	14	0	0	0	3	5	3	19	11	0	0	0	0							0	0	0	1	3	0							3	3	0			
P910	9		2	27.396	186.3	14	0	0	0	3	5	3	23	11	0	0	0	0							0	0	0	1	3	0							3	3	0			
P911	9		2	14.208	96.6	14	0	0	0	3	5	3	7	3	0	3	5	3							0	0	0	1	3	0							3	3	0			
P513	5	4 Series of 37	148	9.469	1461.6	T9	0	5	2	8 to 8	10 to 1	2 to 3													0	6	0															
P514	5	2 Series of 37	74	14.750	1138.4	T1	0	5	2	1	8	3	5 to 5	3 to 1	2 to 0	1	8	3	5 to 5	3 to 1	2 to 0				0	5	2															
P515	5		851	2.688	2385.4	T9	0	5	2	1	8	3													0	6	0															
P516	5	4 Series of 18	72	8.906	668.8	T9	0	5	2	8 to 7	1 to 9	3 to 0													0	6	0															
P517	5		72	7.167	538.2	T1	0	5	2	1	5	2	1	7	3	1	5	2	1	7	3				0	6	0															
P518	5		324	2.604	880.0	T9	0	5	2	1	7	3													0	6	0															
P519	5		216	4.500	1013.8	T12	0	5	2	3	7	0													0	5	2															
P520	5		4	8.708	36.3	T9	0	5	2	7	9	0													0	6	0															
P521	5		4	7.000	29.2	T1	0	5	2	1	5	0	1	7	2	1	5	0	1	7	2				0	5	2															
P522	5		18	2.583	48.5	T9	0	5	2	1	7	2													0	6	0															
P523	5		16	4.500	75.1	T12	0	5	2	3	7	0													0	5	2															

TOTAL WT = 19996.7

N. CABLE STAYED PYLON - WEST PYLON LIFT 4 (EL 64.236 TO 93.316)

BAR MARK	BAR SIZE	LOCATION COMMENT	NO.	LTH/BAR DECIMAL FT	TOTAL WT (LB)	BEND TYPE	A			B			C			D			E			F/R			G			H			I			J			K			O		
							FT	IN	1/4	FT	IN	1/4	FT	IN	1/4	FT	IN	1/4	FT	IN	1/4	FT	IN	1/4	FT	IN	1/4	FT	IN	1/4	FT	IN	1/4	FT	IN	1/4	FT	IN	1/4	FT	IN	1/4
P904	9		68	34.000	7860.8	STR				34	0	0																														
P905	9		16	30.917	1681.9	2	1	7	0	29	4	0													0	0	0																
P906	9		16	26.833	1459.7	2	1	7	0	25	3	0													0	0	0																
P907	9		2	18.313	124.5	14	0	0	0	3	5	3	14	10	0	0	0	0							0	0	0	1	3	0							3	3	0			
P908	9		2	22.396	152.3	14	0	0	0	3	5	3	18	11	0	0	0	0							0	0	0	1	3	0							3	3	0			
P909	9		2	23.396	159.1	14	0	0	0	3	5	3	19	11	0	0	0	0							0	0	0	1	3	0							3	3	0			
P910	9		2	27.396	186.3	14	0	0	0	3	5	3	23	11	0	0	0	0							0	0	0	1	3	0							3	3	0			
P911	9		2	14.208	96.6	14	0	0	0	3	5	3	7	3	0	3	5	3							0	0	0	1	3	0							3	3	0			
P513	5	4 Series of 37	148	9.469	1461.6	T9	0	5	2	8 to 8	10 to 1	2 to 3													0	6	0															
P514	5	2 Series of 37	74	14.750	1138.4	T1	0	5	2	1	8	3	5 to 5	3 to 1	2 to 0	1	8	3	5 to 5	3 to 1	2 to 0				0	5	2															
P515	5		851	2.688	2385.4	T9	0	5	2	1	8	3													0	6	0															
P516	5	4 Series of 18	72	8.906	668.8	T9	0	5	2	8 to 7	1 to 9	3 to 0													0	6	0															
P517	5		72	7.167	538.2	T1	0	5	2	1	5	2	1	7	3	1	5	2	1	7	3				0	6	0															
P518	5		324	2.604	880.0	T9	0	5	2	1	7	3													0	6	0															
P519	5		216	4.500	1013.8	T12	0	5	2	3	7	0													0	5	2															
P520	5		4	8.708	36.3	T9	0	5	2	7	9	0													0	6	0															
P521	5		4	7.000	29.2	T1	0	5	2	1	5	0	1	7	2	1	5	0	1	7	2				0	5	2															
P522	5		18	2.583	48.5	T9	0	5	2	1	7	2													0	6	0															
P523	5		16	4.500	75.1	T12	0	5	2	3	7	0													0	5	2															

TOTAL WT = 19996.7

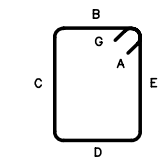

TYPE T1

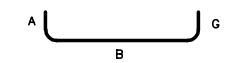

TYPE 2

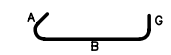

TYPE T9

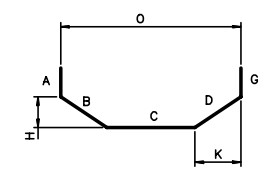

TYPE 14

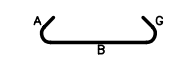

TYPE T12

NOTES:

1. ALL REINFORCING STEEL IS EPOXY COATED U.N.O.
2. ALL REINFORCING SHALL BE ASTM A615 OR A996, GRADE 60.

RECORD DRAWING

No.	Date	Revisions	By

HNTB CORPORATION

STATE OF WISCONSIN
DEPARTMENT OF TRANSPORTATION

STRUCTURE B-40-414C

Designed By	SL	Design Checked	TZ	Drawn By	BM	Plans Checked	AP

NORTH CABLE STAY PYLON LIFT 4 BARLIST

SHEET NC114 OF .

STATE PROJECT I.D.	SHEET NUMBER
2235-00-70	8.778

N. CABLE STAYED PYLON - WEST PYLON LIFT 5 (EL 93.316 TO 120.746)

BAR MARK	BAR SIZE	LOCATION COMMENT	NO.	LTH/BAR DECIMAL FT	TOTAL WT (LB)	BEND TYPE	A			B			C			D			E			F/R			G			H			I			J			K			O		
							FT	IN	1/4	FT	IN	1/4	FT	IN	1/4	FT	IN	1/4	FT	IN	1/4	FT	IN	1/4	FT	IN	1/4	FT	IN	1/4	FT	IN	1/4	FT	IN	1/4	FT	IN	1/4	FT	IN	1/4
P915	9		60	32.750	6681.0	STR				32	9	0																														
P916	9		4	10.333	140.5	14	0	0	0	3	5	0	3	6	0	3	5	0							0	0	0	1	1	3							3	2	2			
P917	9		4	9.750	132.6	14	0	0	0	3	5	0	2	11	0	3	5	0							0	0	0	1	1	3							3	2	2			
P918	9		4	9.583	130.3	14	0	0	0	3	5	0	2	9	0	3	5	0							0	0	0	1	1	3							3	2	2			
P919	9		4	9.333	126.9	14	0	0	0	3	5	0	2	6	0	3	5	0							0	0	0	1	1	3							3	2	2			
P920	9		4	15.417	209.7	14	0	0	0	3	5	0	12	0	0	0	0	0							0	0	0	1	1	3							3	2	2			
P525	5	2 Series of 55	110	7.604	872.4	T1		5	2	1	5	2	2 to 1	1 to 7	3 to 2	1	5	2	2 to 1	1 to 7	3 to 2					5	2															
P526	5		220	2.417	554.5	T9		5	2	1	5	2														6	0															
P527	5	2 Series of 55	110	2.844	326.3	T9		5	2	2 to 1	1 to 7	3 to 2														6	0															
P528	5	2 Series of 55	110	7.875	903.5	T1		5	2	1 to 1	9 to 5	0 to 1	2 to 1	1 to 7	3 to 2	1 to 1	9 to 5	0 to 1	2 to 1	1 to 7	3 to 2					5	2															
P529	5	4 Series of 55	220	2.646	607.1	T9		5	2	1 to 1	9 to 7	0 to 2														6	0															
P530	5	2 Series of 55	110	2.844	326.3	T9		5	2	2 to 1	1 to 7	3 to 2														6	0															
P531	5		7	5.875	42.9	T12		5	2	4	11	2														5	2															
P532	5		7	5.792	42.3	T12		5	2	4	10	2														5	2															
P533	5		6	5.750	36.0	T12		5	2	4	10	0														5	2															
P534	5		6	5.688	35.6	T12		5	2	4	9	1														5	2															
P535	5		6	5.646	35.3	T12		5	2	4	8	3														5	2															
P536	5		6	5.604	35.1	T12		5	2	4	8	1														5	2															
P537	5		3	5.875	18.4	T12		5	2	4	11	2														5	2															
P538	5		8	5.813	48.5	T12		5	2	4	10	3														5	2															
P539	5		7	5.750	42.0	T12		5	2	4	10	0														5	2															
P540	5		6	5.708	35.7	T12		5	2	4	9	2														5	2															
P541	5		6	5.646	35.3	T12		5	2	4	8	3														5	2															
P542	5		7	5.604	40.9	T12		5	2	4	8	1														5	2															

TOTAL WT = 11459.1

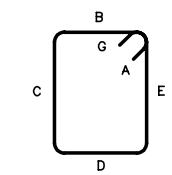

TYPE T1

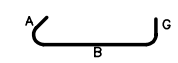

TYPE T9

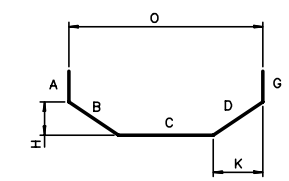

TYPE 14

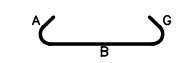

TYPE T12

NOTES:

1. ALL REINFORCING STEEL IS EPOXY COATED U.N.O.
2. ALL REINFORCING SHALL BE ASTM A615 OR A996, GRADE 60.

RECORD DRAWING

No.	Date	Revisions	By

HNTB CORPORATION

STATE OF WISCONSIN
DEPARTMENT OF TRANSPORTATION

STRUCTURE B-40-414C

Designed By	SL	Design Checked	TZ	Drawn By	BM	Plans Checked	AP

NORTH CABLE STAY
WEST PYLON
LIFT 5 BARLIST

SHEET NC115 OF .

STATE PROJECT I.D.	SHEET NUMBER
2235-00-70	8.779

N. CABLE STAYED PYLON - EAST PYLON LIFT 5 (EL 93.316 TO 120.746)

BAR MARK	BAR SIZE	LOCATION COMMENT	NO.	LTH/BAR DECIMAL FT	TOTAL WT (LB)	BEND TYPE	A			B			C			D			E			F/R			G			H			I			J			K			O		
							FT	IN	1/4	FT	IN	1/4	FT	IN	1/4	FT	IN	1/4	FT	IN	1/4	FT	IN	1/4	FT	IN	1/4	FT	IN	1/4	FT	IN	1/4	FT	IN	1/4	FT	IN	1/4	FT	IN	1/4
P915	9		60	32.750	6681.0	STR				32	9	0																														
P916	9		4	10.333	140.5	14	0	0	0	3	5	0	3	6	0	3	5	0							0	0	0	1	1	3							3	2	2			
P917	9		4	9.750	132.6	14	0	0	0	3	5	0	2	11	0	3	5	0							0	0	0	1	1	3							3	2	2			
P918	9		4	9.583	130.3	14	0	0	0	3	5	0	2	9	0	3	5	0							0	0	0	1	1	3							3	2	2			
P919	9		4	9.333	126.9	14	0	0	0	3	5	0	2	6	0	3	5	0							0	0	0	1	1	3							3	2	2			
P920	9		4	15.417	209.7	14	0	0	0	3	5	0	12	0	0	0	0	0							0	0	0	1	1	3							3	2	2			
P525	5	2 Series of 55	110	7.604	872.4	T1		5	2	1	5	2	2	1 to 7	3 2	1	5	2	2	1 to 7	3 2					5	2															
P526	5		220	2.417	554.5	T9		5	2	1	5	2														6	0															
P527	5	2 Series of 55	110	2.844	326.3	T9		5	2	2	1 to 7	3 2														6	0															
P528	5	2 Series of 55	110	7.875	903.5	T1		5	2	1	9 to 5	0 1	2	1 to 7	3 2	1	9 to 5	0 1	2	1 to 7	3 2					5	2															
P529	5	4 Series of 55	220	2.646	607.1	T9		5	2	1	9 to 7	0 2														6	0															
P530	5	2 Series of 55	110	2.844	326.3	T9		5	2	2	1 to 7	3 2														6	0															
P531	5		7	5.875	42.9	T12		5	2	4	11	2														5	2															
P532	5		7	5.792	42.3	T12		5	2	4	10	2														5	2															
P533	5		6	5.750	36.0	T12		5	2	4	10	0														5	2															
P534	5		6	5.688	35.6	T12		5	2	4	9	1														5	2															
P535	5		6	5.646	35.3	T12		5	2	4	8	3														5	2															
P536	5		6	5.604	35.1	T12		5	2	4	8	1														5	2															
P537	5		3	5.875	18.4	T12		5	2	4	11	2														5	2															
P538	5		8	5.813	48.5	T12		5	2	4	10	3														5	2															
P539	5		7	5.750	42.0	T12		5	2	4	10	0														5	2															
P540	5		6	5.708	35.7	T12		5	2	4	9	2														5	2															
P541	5		6	5.646	35.3	T12		5	2	4	8	3														5	2															
P542	5		7	5.604	40.9	T12		5	2	4	8	1														5	2															

TOTAL WT = 11459.1

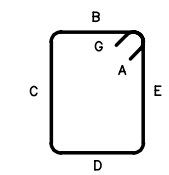

TYPE T1

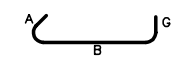

TYPE T9

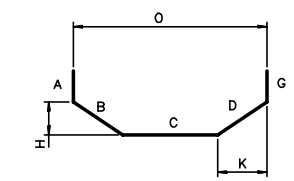

TYPE 14

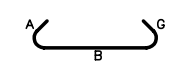

TYPE T12

NOTES:

1. ALL REINFORCING STEEL IS EPOXY COATED U.N.O.
2. ALL REINFORCING SHALL BE ASTM A615 OR A996, GRADE 60.

RECORD DRAWING

No.	Date	Revisions	By

HNTB CORPORATION

STATE OF WISCONSIN
DEPARTMENT OF TRANSPORTATION

STRUCTURE B-40-414C

Designed By	SL	Design Checked	TZ	Drawn By	BM	Plans Checked	AP

NORTH CABLE STAY
EAST PYLON
LIFT 5 BARLIST

SHEET NC116 OF .

STATE PROJECT I.D.	SHEET NUMBER
2235-00-70	8.780

N. CABLE STAYED PYLON - WEST PYLON LIFT 6 & 7 (EL 120.746 TO 143.136)

BAR MARK	BAR SIZE	LOCATION COMMENT	NO.	LTH/BAR DECIMAL FT	TOTAL WT (LB)	BEND TYPE	A			B			C			D			E			F/R			G			H			I			J			K			O		
							FT	IN	1/4	FT	IN	1/4	FT	IN	1/4	FT	IN	1/4	FT	IN	1/4	FT	IN	1/4	FT	IN	1/4	FT	IN	1/4	FT	IN	1/4	FT	IN	1/4	FT	IN	1/4	FT	IN	1/4
P925	9		48	22.250	3631.2	STR				22	3	0																														
P926	9		10	19.250	654.5	STR				19	3	0																														
P545	5	2 Series of 45	90	15.646	1468.7	T1		5	2	1	1	1	6	8	1	1	1	1	6	8	1					5	2															
														to						to																						
													5	10	0				5	10	0																					
P546	5	6 Series of 39	234	5.510	1344.9	T9		5	2	4	5	1														6	0															
											to																															
										4	8	0																														
P547	5	3 Series of 39	117	7.271	887.3	T9		5	2	6	8	1														6	0															
											to																															
										5	11	1																														
P548	5		4	12.833	53.5	17				3	6	0	5	10	0	3	6	0																								
P549	5		22	6.000	137.7	17				2	6	0	1	0	0	2	6	0																								
P550	5		60	2.063	129.1	T9		5	2	1	1	1														6	0															
				TOTAL WT =	8306.8																																					

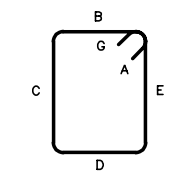

TYPE T1

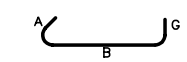

TYPE T9

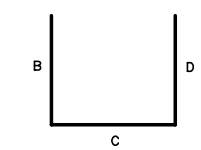

TYPE 17

N. CABLE STAYED PYLON - EAST PYLON LIFT 6 & 7 (EL 120.746 TO 143.136)

BAR MARK	BAR SIZE	LOCATION COMMENT	NO.	LTH/BAR DECIMAL FT	TOTAL WT (LB)	BEND TYPE	A			B			C			D			E			F/R			G			H			I			J			K			O		
							FT	IN	1/4	FT	IN	1/4	FT	IN	1/4	FT	IN	1/4	FT	IN	1/4	FT	IN	1/4	FT	IN	1/4	FT	IN	1/4	FT	IN	1/4	FT	IN	1/4	FT	IN	1/4	FT	IN	1/4
P925	9		48	22.250	3631.2	STR				22	3	0																														
P926	9		10	19.250	654.5	STR				19	3	0																														
P545	5	2 Series of 45	90	15.646	1468.7	T1		5	2	1	1	1	6	8	1	1	1	1	6	8	1					5	2															
														to						to																						
													5	10	0				5	10	0																					
P546	5	6 Series of 39	234	5.510	1344.9	T9		5	2	4	5	1														6	0															
											to																															
										4	8	0																														
P547	5	3 Series of 39	117	7.271	887.3	T9		5	2	6	8	1														6	0															
											to																															
										5	11	1																														
P548	5		4	12.833	53.5	17				3	6	0	5	10	0	3	6	0																								
P549	5		22	6.000	137.7	17				2	6	0	1	0	0	2	6	0																								
P550	5		60	2.063	129.1	T9		5	2	1	1	1														6	0															
				TOTAL WT =	8306.8																																					

NOTES:

1. ALL REINFORCING STEEL IS EPOXY COATED U.N.O.
2. ALL REINFORCING SHALL BE ASTM A615 OR A996, GRADE 60.

RECORD DRAWING

No.	Date	Revisions	By

HNTB CORPORATION

STATE OF WISCONSIN
DEPARTMENT OF TRANSPORTATION

STRUCTURE B-40-414C

Designed By	SL	Design Checked	TZ	Drawn By	BM	Plans Checked	AP

NORTH CABLE STAY PYLON LIFTS 6 & 7 BARLIST

SHEETNC117OF .

STATE PROJECT I.D.	SHEET NUMBER
2235-00-70	8.781

NORTH CABLE STAY TOP MAT BARLIST

BAR MARK	BAR SIZE	LOCATION COMMENT	NO.	LTH/BAR DECIMAL FT	TOTAL WT (LB)	BEND TYPE	A			B			C			D			E			F/R			G			H			I			J			K			O		
							FT	IN	1/4	FT	IN	1/4	FT	IN	1/4	FT	IN	1/4	FT	IN	1/4	FT	IN	1/4	FT	IN	1/4	FT	IN	1/4	FT	IN	1/4	FT	IN	1/4	FT	IN	1/4	FT	IN	1/4
TM601	6	Epoxy Coated	1154	60.000	103998.5	STR				60	0	0																														
TM602	6	Epoxy Coated	55	57.000	4708.8	STR				57	0	0																														
TM603	6	Epoxy Coated	372	32.000	17879.8	STR				32	0	0																														
TM604	6	Epoxy Coated	146	45.000	9868.1	STR				45	0	0																														
TM505	5	Epoxy Coated	204	8.792	1870.6	12	0	0	0	4	0	0		9	2	4	0	0										4	0	0				0	0			8	0			
TM506	5	Epoxy Coated	1614	7.708	12976.2	12	0	0	0	3	6	0		8	2	3	6	0										3	6	0				0	0			7	2			
TM607	6	Epoxy Coated	58	50.000	4355.8	STR				50	0	0																														
TM608	6	Epoxy Coated	58	33.000	2874.8	STR				33	0	0																														
TM609	6	Epoxy Coated	67	48.000	4830.4	STR				48	0	0																														
TM610	6	Epoxy Coated	410	36.000	22169.5	STR				36	0	0																														
TM611	6	Epoxy Coated	1	44.667	67.1	30				36	0	0	8	8	0													35	10	0							3	7	0			
TM612	6	Epoxy Coated	5	23.500	176.5	STR				23	6	0																														
TM613	6	Epoxy Coated 1 series of 3	3	12.625	56.9	STR				6 TO 19	0 3	0 0																														
TM614	6	Epoxy Coated	1	57.000	85.6	29				51	0	0	6	0	0	0	0	0										4	3	0							0	0	0			
TM615	6	Epoxy Coated 1 series of 5	5	19.750	148.3	STR				35 TO 4	6 0	0 0																														
TM616	6	Epoxy Coated 1 series of 7	7	28.375	298.335	STR				52 TO 4	3 6	0 0																														
TM617	6	Epoxy Coated	4	45.500	273.4	STR				45	6	0																														
TM618	6	Epoxy Coated	20	26.000	781.0	STR				26	0	0																														
TM619	6	Epoxy Coated	96	7.000	1009.3	29				3	0	0	4	0	0	0	0	0										2	1	0							0	0	0			
TM620	6	Epoxy Coated	1	27.750	41.7	29				21	3	0	6	6	0	0	0	0										1	9	0							0	0	0			
TM621	6	Epoxy Coated	1	52.000	78.1	STR				52	0	0																														
TM622	6	Epoxy Coated	1	47.000	70.6	STR				47	0	0																														
TM623	6	Epoxy Coated	54	37.000	3001.0	2	1	0	0	36	0	0													0	0	0															
TM624	6	Epoxy Coated	54	6.500	527.2	2	1	0	0	5	6	0													0	0	0															
TM625	6	Epoxy Coated	32	3.667	176.2	H3				3	8	0																														
TM626	6	Epoxy Coated	343	48.000	24728.9	STR				48	0	0																														
TM627	6	Epoxy Coated	14	32.500	683.4	STR				32	6	0																														
TM628	6	Epoxy Coated	8	13.667	164.2	STR				13	8	0																														
TM629	6	Epoxy Coated	14	20.250	425.8	STR				20	3	0																														
TM630	6	Epoxy Coated	16	36.000	865.2	H3				36	0	0																														
TM631	6	Epoxy Coated	16	28.000	672.9	H3				28	0	0																														
TM632	6	Epoxy Coated	2	35.000	105.1	STR				35	0	0																														
TM633	6	Epoxy Coated	4	53.000	318.424	STR				53	0	0																														
TM634	6	Epoxy Coated	2	33.417	100.4	29				24	5	0	9	0	0	0	0	0										1	11	0							0	0	0			
TM635	6	Epoxy Coated	128	33.000	6344.4	STR				33	0	0																														
TM636	6	Epoxy Coated 2 series of 64	128	46.000	8843.8	STR				41 TO 51	0 0	0 0																														
TM637	6	Epoxy Coated	20	16.750	503.2	STR				16	9	0																														

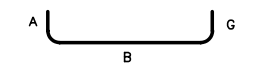

TYPE 2

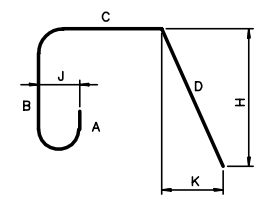

TYPE 12

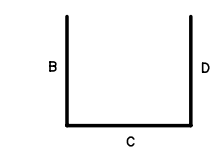

TYPE 17

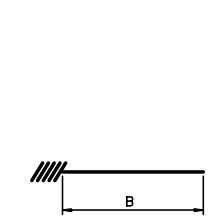

DOWEL-IN THREADED
FOR FORMSAVER COUPLER

TYPE H3

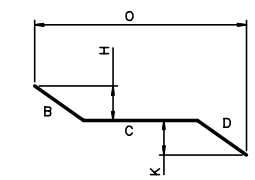

TYPE 29

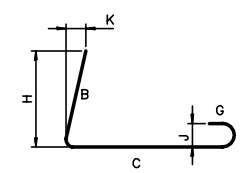

TYPE 30

NOTES:

1. ALL REINFORCING STEEL IS EPOXY COATED U.N.O.
2. ALL REINFORCING SHALL BE ASTM A615 OR A996, GRADE 60.

RECORD DRAWING

No.	Date	Revisions	By
2	10/22/01	QTY TM506	AP
1	10/2/01	QTY TM618	AP

HNTB CORPORATION

STATE OF WISCONSIN
DEPARTMENT OF TRANSPORTATION

STRUCTURE B-40-414C

Designed By	SL	Design Checked	CE	Drawn By	BM	Plans Checked	AP

NORTH CABLE STAY TOP MAT BARLIST 1 OF 2

SHEET NC118 OF

STATE PROJECT I.D.	SHEET NUMBER
2235-00-70	8.782

NORTH CABLE STAY TOP MAT BARLIST

BAR MARK	BAR SIZE	LOCATION COMMENT	NO.	LTH/BAR DECIMAL FT	TOTAL WT (LB)	BEND TYPE	A			B			C			D			E			F/R			G			H			I			J			K			O		
							FT	IN	1/4	FT	IN	1/4	FT	IN	1/4	FT	IN	1/4	FT	IN	1/4	FT	IN	1/4	FT	IN	1/4	FT	IN	1/4	FT	IN	1/4	FT	IN	1/4	FT	IN	1/4	FT	IN	1/4
TM638	6	Epoxy Coated 2 series of 7	14	30.750	646.6	STR				54 TO 7	6 TO 0	0 TO 0																														
TM639	6	Epoxy Coated	226	40.000	13578.1	STR				40	0	0																														
TM640	6	Epoxy Coated	51	43.000	3293.9	STR				43	0	0																														
TM641	6	Epoxy Coated	51	46.000	3523.7	STR				46	0	0																														
TM542	5	Epoxy Coated	204	7.500	1595.8	17				3	0	0	1	6	0	3	0	0																								
TM501	5	Epoxy Coated	71	4.500	333.2	17				1	6	0	3	0	0	0	0	0																								
TM601a	6	Epoxy Coated	4	46.000	276.4	STR				46	0	0																														
RL501	5	Epoxy Coated	352	6.167	2264.0	H14		10	0	2	0	0	0	6	0	2	0	0								10	0															
L601	6	Epoxy Coated	48	15.000	1081.4	STR				15	0	0																														
L602	6	Epoxy Coated	6	11.000	99.1	STR				11	0	0																														
L603	6	Epoxy Coated	32	8.000	384.5	STR				8	0	0																														
L605	6	Epoxy Coated	6	25.000	225.3	STR				25	0	0																														
RL502	5	Epoxy Coated	160	2.000	333.8	STR				2	0	0																														
L604	6	Epoxy Coated	2	9.500	28.5	STR				9	6	0																														

TOTAL WT = 263744.0

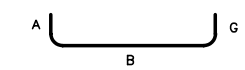

TYPE 2

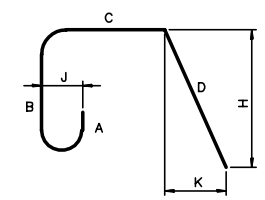

TYPE 12

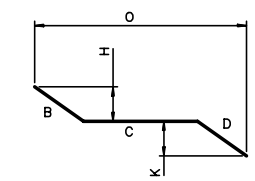

TYPE 29

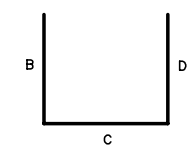

TYPE 17

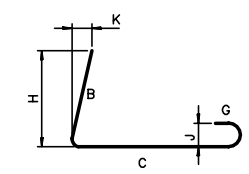

TYPE 30

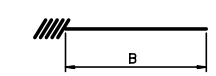

DOWEL-IN THREADED
FOR FORMSAVER COUPLER

TYPE H3

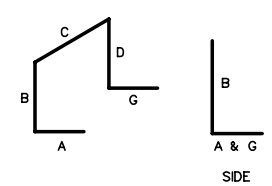

TYPE H14

NOTES:

1. ALL REINFORCING STEEL IS EPOXY COATED U.N.O.
2. ALL REINFORCING SHALL BE ASTM A615 OR A996, GRADE 60.

RECORD DRAWING

No.	Date	Revisions	By
3	11/20/1	QTY TM501	CE
2	10/2/01	QTY L602 ADD L604, RL502	AP
1	9/26/01	ADD L601, L602, L603, L605	AP

HNTB CORPORATION

STATE OF WISCONSIN
DEPARTMENT OF TRANSPORTATION

STRUCTURE B-40-414C

Designed By	SL	Design Checked	CE	Drawn By	BM	Plans Checked	AP

NORTH CABLE STAY TOP MAT BARLIST 2 OF 2

SHEET NC119 OF

N. CABLESTAY BARLIST BOTTOM MAT-1

STATE PROJECT I.D.	SHEET NUMBER
2235-00-70	8.783

BAR MARK	BAR SIZE	LOCATION COMMENT	NO.	LTH/BAR DECIMAL FT	TOTAL WT (LB)	BEND TYPE	A			B			C			D			E			F/R			G			H			I			J			K			O		
							FT	IN	¼	FT	IN	¼	FT	IN	¼	FT	IN	¼	FT	IN	¼	FT	IN	¼	FT	IN	¼	FT	IN	¼	FT	IN	¼	FT	IN	¼	FT	IN	¼	FT	IN	¼
BM601	6	Epoxy Coated	783	60.000	70564.0	STR				60	0	0																														
BM602	6	Epoxy Coated	55	57.000	4708.8	STR				57	0	0																														
BM603	6	Epoxy Coated	3	30.167	135.9	H7				9	8	0	6	0	0	14	6	0				100	0	0				0	6	0				14	4	2	9	7	3			
BM604	6	Epoxy Coated	6	55.000	495.7	STR				55	0	0																														
BM505	5	Epoxy Coated	6	22.000	137.7	STR				22	0	0																														
BM606	6	Epoxy Coated	12	14.750	265.9	S4	1	0	0	1	9	0	12	0	0	0	0	0							0	0	0															
BM507	5	Epoxy Coated	468	7.667	3742.3	29				4	8	0	3	0	0	0	0	0											9	2							0	0	0			
BM508	5	Epoxy Coated 1 series of 140	140	29.750	4344.1	34				4	8	0	7	7	0	17	6	0											9	2							1	4 TO 11	2			
BM609	6	Epoxy Coated	140	26.000	5467.3	STR				26	0	0																														
BM510	5	Epoxy Coated 1 series of 198	198	34.750	7176.4	29				17	5	0	17	4	0	0	0	0										1 TO 1	0 5	0 0							0	0	0			
BM611	6	Epoxy Coated 1 series of 128	128	33.500	6440.6	STR				26 TO 41	0 0	0 0																														
BM612	6	Epoxy Coated	118	35.000	6203.260	29				29	0	0	6	0	0	0	0	0										2	11	0							0	0	0			
BM613	6	Epoxy Coated	24	36.000	1297.728	29				30	0	0	6	0	0	0	0	0										2	8	0							0	0	0			
BM614	6	Epoxy Coated	2	29.000	87.116	STR				29	0	0																														
BM615	6	Epoxy Coated 2 Series of 8	16	33.000	793.056	STR				56 TO 10	0 0	0 0																														
BM616	6	Epoxy Coated	6	23.333	210.3	29				17	4	0	6	0	0	0	0	0										1	6	0							0	0	0			
BM617	6	Epoxy Coated	1	44.667	67.1	30				36	0	0	8	8	0										0	0	0	35	10	0				0	0	0	3	7	0			
BM518	5	Epoxy Coated 1 series of 122	122	29.208	3716.6	34				4 TO 3	8 0 7 0	0 0	7	7	0	17	6	0											8	3							1	6	0			
BM519	5	Epoxy Coated	384	28.667	11481.3	34				3	7	0	7	7	0	17	6	0											8	0							1	7	2			
BM620	6	Epoxy Coated	2	15.000	45.1	STR				15	0	0																														
BM621	6	Epoxy Coated	2	58.000	174.2	29				55	0	0	3	0	0	0	0	0										0	3	2							0	0	0			
BM622	6	Epoxy Coated	2	27.750	83.4	29				21	3	0	6	6	0	0	0	0										1	9	0							0	0	0			
BM623	6	Epoxy Coated	10	26.000	390.5	STR				26	0	0																														
BM624	6	Epoxy Coated	2	21.250	63.8	29				15	3	0	6	0	0	0	0	0										1	6	0							0	0	0			
BM525	5	Epoxy Coated	6	4.604	28.8	30				1	0	0	3	7	1										0	0	0	0	11	3				0	0	0	11	2				
BM526	5	Epoxy Coated	30	20.833	651.9	12	0	0	0	1	6	0	2	6	0	16	10	0										1	6	0				0	0	0	16	9				
BM527	5	Epoxy Coated	24	7.333	183.6	12	0	0	0	1	6	0	2	3	0	3	7	0											8	0				0	0	0	3	6	1			
BM628	6	Epoxy Coated	48	12.000	865.2	29				3	0	0	9	0	0													2	1	0												
BM629	6	Epoxy Coated	201	42	12679.9	STR				42	0	0																														
BM630	6	Epoxy Coated	2	54.0000	162.2	STR				54	0	0																														
BM631	6	Epoxy Coated	92	36.000	4974.6	STR				36	0	0																														
BM631a	6	Epoxy Coated	6	13.167	118.7	S4	1	0	0	1	11	0	7	4	0	1	11	0							1	0	0															
BM632	6	Epoxy Coated	16	35.000	841.1	STR				35	0	0																														
BM633	6	Epoxy Coated	2	15.500	46.6	STR				15	6	0																														
BM634	6	Epoxy Coated	8	11.667	140.2	STR				11	8	0																														
BM636	6	Epoxy Coated	56	7.833	658.9	S4	1	0	0	1	11	0	2	0	0	1	11	0							1	0	0															
BM636a	6	Epoxy Coated 2 series of 5	10	15.000	225.3	S4	1	0	0	2 TO 2	8 11	2 2	7	4	0	2 TO 2	8 11	2 2							1	0	0															
BM637	6	Epoxy Coated	48	15.833	1141.5	STR				15	10	0																														

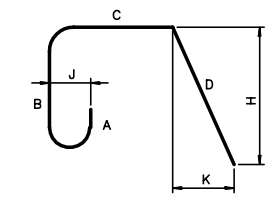

TYPE 12

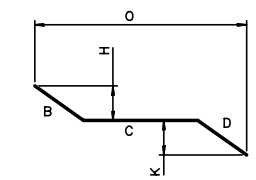

TYPE 29

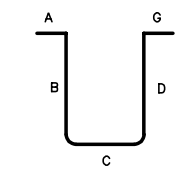

TYPE S4

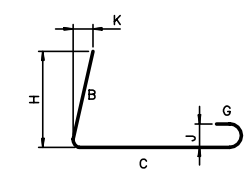

TYPE 30

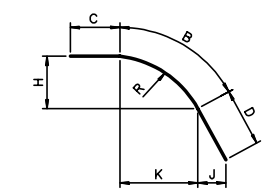

TYPE H7

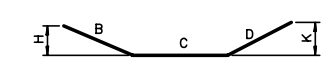

TYPE 34

NOTES:

1. ALL REINFORCING STEEL IS EPOXY COATED U.N.O.
2. ALL REINFORCING SHALL BE ASTM A615 OR A996, GRADE 60.

RECORD DRAWING

No.	Date	Revisions	By
1	9-04-01	REV BM621	AP

HNTB CORPORATION

STATE OF WISCONSIN
DEPARTMENT OF TRANSPORTATION

STRUCTURE B-40-414C

Designed By	SL	Design Checked	CE	Drawn By	BM	Plans Checked	AP

N. CABLE STAY BARLIST SUPERSTRUC. BOT MAT 1 OF 3

SHEET NC121 OF

N. CABLESTAY BARLIST BOTTOM MAT-2

STATE PROJECT I.D.	SHEET NUMBER
2235-00-70	8.784

BAR MARK	BAR SIZE	LOCATION COMMENT	NO.	LTH/BAR DECIMAL FT	TOTAL WT (LB)	BEND TYPE	A			B			C			D			E			F/R			G			H			I			J			K			O		
							FT	IN	¼	FT	IN	¼	FT	IN	¼	FT	IN	¼	FT	IN	¼	FT	IN	¼	FT	IN	¼	FT	IN	¼	FT	IN	¼	FT	IN	¼	FT	IN	¼	FT	IN	¼
BM638	6	Epoxy Coated	16	42.000	1009.3	STR				42	0	0																														
BM639	6	Epoxy Coated	16	24.000	576.8	STR				24	0	0																														
BM640	6	Epoxy Coated 2 Series of 9	18	33.208	897.8	29				3	2	2	30	0	0	0	0	0										2 TO 0	3 TO 1	1 TO 0							0	0	0			
BM641	6	Epoxy Coated 2 Series of 9	18	36.208	978.9	29				3	2	2	33	0	0	0	0	0										2 TO 0	3 TO 1	1 TO 0							0	0	0			
BM642	6	Epoxy Coated	26	33.208	1296.9	29				3	2	2	30	0	0	0	0	0										2	3	1							0	0	0			
BM643	6	Epoxy Coated	26	36.208	1414.0	29				3	2	2	33	0	0	0	0	0										2	3	1							0	0	0			
BM644	6	Epoxy Coated	32	11.333	544.7	H3				11	4	0																														
BM545	5	Epoxy Coated	340	6.083	2157.3	29				3	7	0	2	6	0	0	0	0											8	0												
BM646	6	Epoxy Coated	12	22.000	396.5	STR				22	0	0																														
BM647	6	Epoxy Coated	134	28.000	5635.5	17				0	0	0	26	6	0	1	6	0																								
BM648	6	Epoxy Coated	134	51.500	10365.3	17				0	0	0	50	0	0	1	6	0																								
BM649	6	Epoxy Coated	12	41.000	738.984	STR				41	0	0																														
BM650	6	Epoxy Coated	18	23.000	621.828	STR				23	0	0																														
BM651	6	Epoxy Coated	43	40.000	2583.440	17				0	0	0	38	0	0	2	0	0																								
BM652	6	Epoxy Coated	43	43.000	2777.198	17				0	0	0	41	0	0	2	0	0																								
BM653	6	Epoxy Coated	22	26.000	859.144	H8				20	0	0	3	0	0	3	0	0				200	0	0				1	0	0				0	0	0		4	0			
BM654	6	Epoxy Coated	8	24.000	288.384	STR				24	0	0																														
BM655	6	Epoxy Coated 2 Series of 22	44	14.333	947.3	S4	1	0	0	2 TO 2	11 TO 1	0 TO 0	7	4	0	2 TO 2	11 TO 1	0 TO 0							1	0	0															
BM655A	6	Epoxy Coated 2 Series of 27	54	13.792	1118.6	S4	1	0	0	2 TO 1	7 TO 9	3 TO 3	7	4	0	2 TO 1	7 TO 9	3 TO 3							1	0	0															
BM656	6	Epoxy Coated	30	26.000	1171.6	STR				26	0	0																														
BM657	6	Epoxy Coated	30	43.000	1937.6	STR				43	0	0																														
BM658	6	Epoxy Coated	12	29.500	531.7	17				2	6	0	27	0	0	0	0	0																								
BM659	6	Epoxy Coated	12	52.500	946.3	17				2	6	0	50	0	0	0	0	0																								
BM659A	6	Epoxy Coated 2 Series of 33	66	14.708	1458.1	T1	1	0	0	3 TO 3	6 TO 8	0 TO 2	2	9	0	3 TO 3	6 TO 8	0 TO 2	2	9	0				1	0	0															
BM660	6	Epoxy Coated 2 Series of 9	18	32.000	865.2	STR				6 TO 58	0 TO 0	0 TO 0																														
BM661	6	Epoxy Coated	12	8.167	147.2	S4	1	0	0	1	11	0	2	4	0	1	11	0							1	0	0															
BM661a	6	Epoxy Coated 2 series of 5	10	15	225.3	S4	1	0	0	2 TO 2	8 TO 11	2 TO 2	7	4	0	2 TO 2	8 TO 11	2 TO 2							1	0	0															
BM662	6	Epoxy Coated 1 Series of 126	126	31.000	5866.8	STR				38 TO 24	0 TO 0	0 TO 0																														
BM663	6	Epoxy Coated	2	31.000	93.1	STR				31	0	0																														
BM564	5	Epoxy Coated 2 Series of 126	252	6.625	1741.3	29				3 TO 4	7 TO 8	0 TO 0	2	6	0	0	0	0										0 TO 0	8 TO 9	0 TO 2							0	0	0			
BM565	5	Epoxy Coated	252	19.333	5081.5	29				16	10	0	2	6	0	0	0	0										1	7	0							0	0	0			
BM666	6	Epoxy Coated	2	58.000	174.2	29				52	0	0	6	0	0	0	0	0										5	2	0							0	0	0			

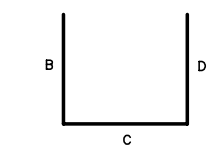

TYPE 17

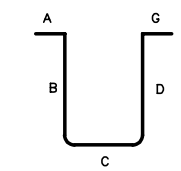

TYPE S4

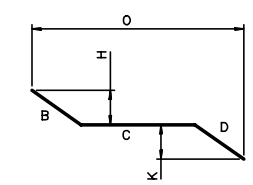

TYPE 29

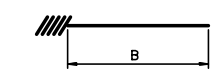

DOWEL-IN THREADED
FOR FORMSAVER COUPLER

TYPE H3

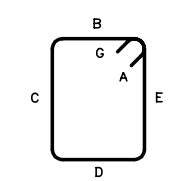

TYPE T1

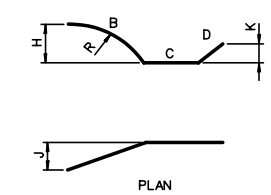

TYPE H8

NOTES:

1. ALL REINFORCING STEEL IS EPOXY COATED U.N.O.
2. ALL REINFORCING SHALL BE ASTM A615 OR A996, GRADE 60.

RECORD DRAWING

No.	Date	Revisions	By
1	9-04-01	REV BM640, 41, 58, 59	AP

HNTB CORPORATION

STATE OF WISCONSIN
DEPARTMENT OF TRANSPORTATION

STRUCTURE B-40-414C

Designed By	SL	Design Checked	CE	Drawn By	BM	Plans Checked	AP

N. CABLE STAY BARLIST SUPERSTRUC. BOT MAT 2 OF 3

SHEET NC122 OF

N. CABLESTAY BARLIST BOTTOM MAT-3

STATE PROJECT I.D.	SHEET NUMBER
2235-00-70	8.785

BAR MARK	BAR SIZE	LOCATION COMMENT	NO.	LTH/BAR DECIMAL FT	TOTAL WT (LB)	BEND TYPE	A			B			C			D			E			F/R			G			H			I			J			K			O		
							FT	IN	¼	FT	IN	¼	FT	IN	¼	FT	IN	¼	FT	IN	¼	FT	IN	¼	FT	IN	¼	FT	IN	¼	FT	IN	¼	FT	IN	¼	FT	IN	¼	FT	IN	¼
BM667	6	Epoxy Coated	16	24.000	576.8	STR				24	0	0																														
BM668	6	Epoxy Coated	16	27.000	648.9	STR				27	0	0																														
BM669	6	Epoxy Coated	38	46.000	2625.5	STR				46	0	0																														
BM670	6	Epoxy Coated	22	26.000	859.1	H8				20	0	0	3	0	0	3	0	0				200	0	0				1	0	0				1	8	0		4	0			
BM671	6	Epoxy Coated	26	52.000	2030.7	29				10	0	0	42	0	0	0	0	0										0	10	0							0	0	0			
BM672	6	Epoxy Coated	4	50.000	300.4	STR				50	0	0																														
BM673	6	Epoxy Coated	24	40.000	1441.9	STR				40	0	0																														
BM674	6	Epoxy Coated	202	13.167	3994.8	S4	1	0	0	1	11	0	7	4	0	1	11	0							1	0	0															
BM675	6	Epoxy Coated	24	52.750	1901.5	29				41	9	0	11	0	0	0	0	0										4	2	0							0	0	0			
BM676	6	Epoxy Coated	38	47.750	2725.4	29				41	9	0	6	0	0	0	0	0										4	2	0							0	0	0			
BM577	5	Epoxy Coated	444	19.333	8953.1	29				16	10	0	2	6	0	0	0	0										1	7	0							0	0	0			
BM678	6	Epoxy Coated 4 Series of 46	184	15.250	4214.6	S4	1	0	0	1 TO 4	11 0	0	7	4	0	1 TO 4	11 0	0							1	0	0															
BM679	6	Epoxy Coated	222	24.000	8002.7	STR				24	0	0																														
BM680	6	Epoxy Coated	48	37.000	2667.552	H8				30	6	0	3	6	0	3	0	0				230	0	0				2	1	0				0	0	0		4	0			
BM681	6	Epoxy Coated	8	50.000	600.800	STR				50	0	0																														
BM683	6	Epoxy Coated	176	13.167	3480.635	S4	1	0	0	1	11	0	7	4	0	1	11	0							1	0	0															
BM684	6	Epoxy Coated	4	19.500	117.156	STR				19	6	0																														
BM685	6	Epoxy Coated	39	43.000	2518.854	STR				43	0	0																														
BM686	6	Epoxy Coated	39	46.000	2694.6	STR				46	0	0																														
BM687	6	Epoxy Coated	6	24.000	216.3	S4	1	0	0	3	0	0	20	0	0	0	0	0							0	0	0															
BM688	6	Epoxy Coated	6	46.000	414.6	S4	1	0	0	3	0	0	42	0	0	0	0	0							0	0	0															
BM689	6	Epoxy Coated	24	44.438	1601.9	H7				23	2	1	21	3	0	0	0	0				267	5	1				1	0	0				0	0	0	23	2	0			
BM690	6	Epoxy Coated 2 Series of 31	62	15.000	1396.9	S4	1	0	0	2 TO 1	10 11	0 0	7	4	0	2 TO 1	10 11	0 0							1	0	0															
BM693	6	Epoxy Coated	4	8.000	48.1	STR				8	0	0																														
BM694	6	Epoxy Coated	4	24.000	144.2	STR				24	0	0																														
BM596	5	Epoxy Coated 1 Series of 64	64	28.667	1913.6	34				3 TO 4	7 5	0 0	7	7	0	17	6	0										0	9	0							1	3	0			
DB501	5	Epoxy Coated	1794	3.000	5613.4	STR				3	0	0																														
J501	5	Epoxy Coated	73	9.667	736.0	17				4	6	0	0	8	0	4	6	0																								
J601	6	Epoxy Coated	146	10.583	2320.8	T1	0	5	2	3	6	0	1	4	0	3	6	0	1	4	0				0	5	2															

TOTAL WT = 270192.9

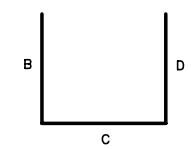

TYPE 17

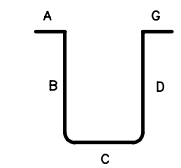

TYPE S4

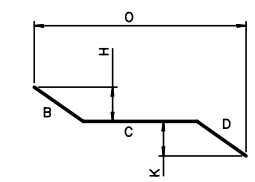

TYPE 29

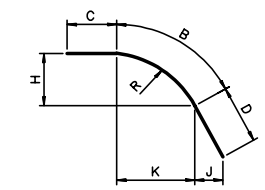

TYPE H7

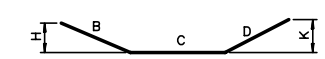

TYPE 34

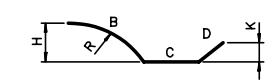

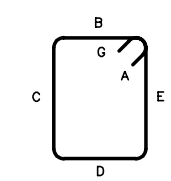

TYPE T1

TYPE H8

NOTES:

1. ALL REINFORCING STEEL IS EPOXY COATED U.N.O.
2. ALL REINFORCING SHALL BE ASTM A615 OR A996, GRADE 60.

RECORD DRAWING

No.	Date	Revisions	By

HNTB CORPORATION

STATE OF WISCONSIN
DEPARTMENT OF TRANSPORTATION

STRUCTURE B-40-414C

Designed By	SL	Design Checked	CE	Drawn By	BM	Plans Checked	AP

N. CABLE STAY BARLIST SUPERSTRUC. BOT MAT 3 OF 3

SHEET NC123 OF

STATE PROJECT I.D.	SHEET NUMBER
2235-00-70	8.786

NCS BOTTOM MAT SIDEWALK AND UTILITY HAUNCH BARLIST

BAR MARK	BAR SIZE	LOCATION COMMENT	NO.	LTH/BAR DECIMAL FT	TOTAL WT (LB)	BEND TYPE	A			B			C			D			E			F/R			G			H			I			J			K			O		
							FT	IN	1/4	FT	IN	1/4	FT	IN	1/4	FT	IN	1/4	FT	IN	1/4	FT	IN	1/4	FT	IN	1/4	FT	IN	1/4	FT	IN	1/4	FT	IN	1/4	FT	IN	1/4	FT	IN	1/4
SB601	6	Expoy Coated	169	60.000	15230.3	STR				60	0	0																														
SB602	6	Expoy Coated	6	57.000	513.7	STR				57	0	0																														
SB605	6	Expoy Coated	2	42.583	127.9	STR				42	7	0																														
SB606	6	Expoy Coated	12	50.000	901.2	H7				12	0	0	3	6	0	34	6	0				100	2	0					6	0				3	5		9	11	2			
SB607	6	Expoy Coated	18	35.000	946.3	29				29	0	0	6	0	0	0	0	0										2	11	0							0	0	0			
SB608	6	Expoy Coated	2	52.917	159.0	H7				12	0	0	3	6	0	37	5	0				100	2	0					6	0				3	8		9	11	2			
SB609	6	Expoy Coated	9	39.667	536.2	29				33	8	0	6	0	0													3	4	0												
SB610	6	Expoy Coated	4	50.000	300.4	STR				50	0	0																														
SB613	6	Expoy Coated	4	40.000	240.3	STR				40	0	0																														
SB614	6	Expoy Coated	2	48.000	144.2	STR				48	0	0																														
SB615	6	Expoy Coated	38	37.000	2111.8	29				31	0	0	6	0	0	0	0	0										3	0	2							0	0	0			
SB618	6	Expoy Coated	4	54.000	324.4	STR				54	0																															
SB621	6	Expoy Coated	8	42.000	504.7	STR				42	0	0																														
SB622	6	Expoy Coated	14	45.000	946.3	STR				45	0	0																														
SB523	5	Expoy Coated	602	6.250	3924.3	STR				6	3	0																														
SB524	6	Expoy Coated 3 series of 128	384	6.250	3604.8	STR				6 TO 7	3 TO 4	0 0																														
SB525	5	Expoy Coated	742	7.333	5675.311	STR				7	4	0																														
SB526	5	Expoy Coated 1 series of 70	70	6.917	504.986	STR				6 TO 7	11 TO 4	0 0																														
WG501	5	Epoxy Coated 4 Series of 7	28	9.198	268.6	S13	0	0	0	4	2	0	0 TO 1	6 TO 2	1 2	4	2	0							0	0	0	0 TO 1	6 TO 2	1 2							0	0	2			
WG502	5	Epoxy Coated	16	11.000	183.6	T7	0	6	0	0	7	2	3	11	0	1	4	0	4	1	2				0	6	0										0	9	1			
WG503	5	Epoxy Coated	30	14.875	465.4	24	0	8	0	13	6	2													0	8	0							0	6							
				TOTAL WT =	37613.6																																					

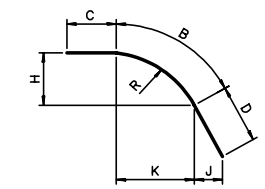

TYPE H7

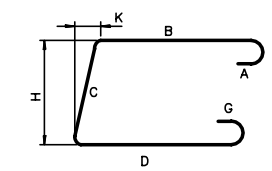

TYPE S13

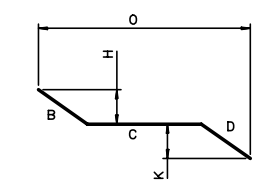

TYPE 29

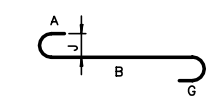

TYPE 24

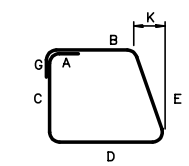

TYPE T7

NOTES:

1. ALL REINFORCING STEEL IS EPOXY COATED U.N.O.
2. ALL REINFORCING SHALL BE ASTM A615 OR A996, GRADE 60.

RECORD DRAWING

No.	Date	Revisions	By
1	11-26-01	MK SB606, SB608	CE

HNTB CORPORATION

STATE OF WISCONSIN
DEPARTMENT OF TRANSPORTATION

STRUCTURE

Designed By	SL	Design Checked	TZ	Drawn By	BM	Plans Checked	TZ

NORTH CABLE STAY SIDEWALK BARLIST 1 OF 3

SHEET NC124 OF

STATE PROJECT I.D.	SHEET NUMBER
2235-00-70	8.787

NCS TOP MAT SIDEWALK BARLIST

BAR MARK	BAR SIZE	LOCATION COMMENT	NO.	LTH/BAR DECIMAL FT	TOTAL WT (LB)	BEND TYPE	A			B			C			D			E			F/R			G			H			I			J			K			O		
							FT	IN	1/4	FT	IN	1/4	FT	IN	1/4	FT	IN	1/4	FT	IN	1/4	FT	IN	1/4	FT	IN	1/4	FT	IN	1/4	FT	IN	1/4	FT	IN	1/4	FT	IN	1/4	FT	IN	1/4
ST601	6	Epoxy Coated	397	60.000	35777.6	STR				60	0	0																														
ST602	6	Epoxy Coated	11	57.000	941.8	STR				57	0	0																														
ST603	6	Epoxy Coated	4	43.000	258.3	STR				43	0	0																														
ST504	5	Epoxy Coated	1798	5.813	10900.3	H10	1	0	0	1	3	0	1	1	0	1	5	3							1	0	0	1	2	1		2	1		4	2	1	0	3		7	0
ST605	6	Epoxy Coated	625	12.417	11656.1	1	0	8	0	11	1	0														8	0								6	0						
ST506	5	Epoxy Coated	62	6.792	439.2	H6				3	5	2	1	0	3	1	3	1				5	6	2	1	0	0	3	2	2								3	2			
ST607	6	Epoxy Coated	4	25.667	154.2	STR				25	8	0																														
ST508	5	Epoxy Coated 1 Series of 15 Bars	15	21.125	330.5	STR				15 TO 27	2 1	0 0																														
ST609	6	Epoxy Coated	17	4.000	102.1	1	0	8	0	2	8	0														8	0								6	0						
ST610	6	Epoxy Coated	1	20.667	31.0	H7				17	8	0	3	0	0	0	0	0				59	10	0				11	2	0				0	0	0	13	7	1			
ST611	6	Epoxy Coated 1 Series of 125 Bars	125	16.250	3050.9	1	0	8	0	11 TO 18	2 8	0 0														8	0								6	0						
ST612	6	Epoxy Coated	28	47.396	1993.3	H7				9	11	3	3	2	0	34	3	0				100	2	0				0	6	0				33	10	3	9	11	2			
ST613	6	Epoxy Coated	2	14.000	42.1	STR				14	0	0																														
ST614	6	Epoxy Coated	1	50.958	76.5	H7				47	11	2	3	0	0							99	10	0				12	3	1							45	0	2			
ST615	6	Epoxy Coated 1 Series of 64 Bars	64	10.542	1013.349	1	0	8	0	1 TO 16	6 11	0 0														8	0								6	0						
ST616	6	Epoxy Coated	4	26.917	161.7	STR				26	11	0																														
ST617	6	Epoxy Coated	4	25.000	150.2	STR				25	0	0																														
ST618	6	Epoxy Coated 1 Series of 9 Bars	9	30.917	417.9	STR				5 TO 56	2 8	0 0																														
ST619	6	Epoxy Coated 1 Series of 17 Bars	17	37.083	946.9	STR				58 TO 16	2 0	0 0																														
ST620	6	Epoxy Coated 1 Series of 12 Bars	12	33.000	594.8	STR				6 TO 60	0 0	0 0																														
ST621	6	Epoxy Coated	686	19.875	20478.6	1	0	8	0	18	6	2														8	0								6	0						
ST622	6	Epoxy Coated	6	13.583	122.4	1	0	8	0	12	3	0														8	0								6	0						
ST623	6	Epoxy Coated	3	4.417	19.9	1	0	8	0	3	1	0														8	0								6	0						
ST624	6	Epoxy Coated 1 Series of 33 Bars	33	19.021	942.8	1	0	8	0	16 TO 18	10 6	0 2														8	0								6	0						
ST625	6	Epoxy Coated	48	15.417	1111.480	1	0	8	0	14	1	0														8	0								6	0						
ST626	6	Epoxy Coated	51	4.417	338.3	1	0	8	0	3	1	0														8	0								6	0						
ST627	6	Epoxy Coated	96	7.000	1009.3	29				3	0	0	4	0	0	0	0	0										2	1	0							0	0	0	6	1	0
ST628	6	Epoxy Coated	8	49.500	594.8	STR				49	6	0																														
ST629	6	Epoxy Coated	2	45.250	135.9	STR				45	3	0																														
ST630	6	Epoxy Coated	20	25.750	773.5	STR				25	9	0																														
ST631	6	Epoxy Coated	14	32.500	683.4	STR				32	6	0																														
ST632	6	Epoxy Coated	8	13.667	164.2	STR				13	8	0																														
ST633	6	Epoxy Coated	14	20.250	425.8	STR				20	3	0																														
ST634	6	Epoxy Coated	28	10.000	420.6	H3				10	0	0																														
ST634a	6	Epoxy Coated	28	10.667	448.6	1	0	8	0	10	0	0													0	0	0							0	6	0						

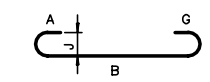

TYPE 1

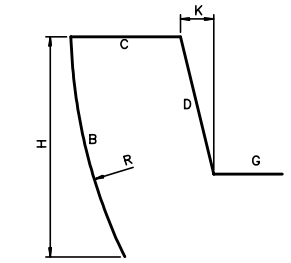

TYPE H6

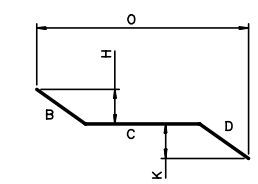

TYPE 29

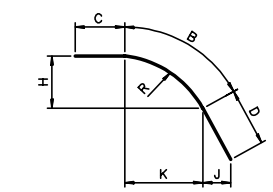

TYPE H7

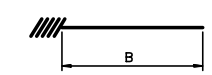

DOWEL-IN THREADED
FOR FORMSAVER COUPLER

TYPE H3

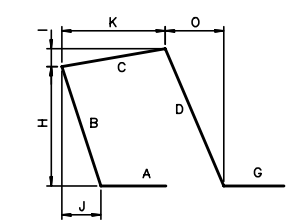

TYPE H10

NOTES:

1. ALL REINFORCING STEEL IS EPOXY COATED U.N.O.
2. ALL REINFORCING SHALL BE ASTM A615 OR A996, GRADE 60.

RECORD DRAWING

No.	Date	Revisions	By

HNTB CORPORATION

STATE OF WISCONSIN
DEPARTMENT OF TRANSPORTATION

STRUCTURE B-40-414C

Designed By	SL	Design Checked	TZ	Drawn By	GMZ	Plans Checked	AJP

SIDEWALK BARLIST
2 OF 3

SHEET NC125 OF

STATE PROJECT I.D.	SHEET NUMBER
2235-00-70	8.788

NCS TOP MAT SIDEWALK BARLIST

BAR MARK	BAR SIZE	LOCATION COMMENT	NO.	LTH/BAR DECIMAL FT	TOTAL WT (LB)	BEND TYPE	A			B			C			D			E			F/R			G			H			I			J			K			O		
							FT	IN	¼	FT	IN	¼	FT	IN	¼	FT	IN	¼	FT	IN	¼	FT	IN	¼	FT	IN	¼	FT	IN	¼	FT	IN	¼	FT	IN	¼	FT	IN	¼	FT	IN	¼
ST635	6	Epoxy Coated	32	4.000	192.3	H3				4	0	0																														
ST636	6	Epoxy Coated	20	16.833	505.7	STR				16	10	0																														
ST637	6	Epoxy Coated 2 Series of 126 Bars	252	16.104	6095.5	1		8		18 TO 11	6 0	2 0														8	0								6	0						
ST638	6	Epoxy Coated	8	39.000	468.6	STR				39	0	0																														
ST639	6	Epoxy Coated	2	60.000	180.2	STR				60	0	0																														
ST640	6	Epoxy Coated 2 Series of 7 Bars	14	32.750	688.7	STR				53 TO 12	0 6	0 0																														
ST641	6	Epoxy Coated	8	53.500	642.9	STR				53	6	0																														
ST642	6	Epoxy Coated	16	42.000	1009.3	STR				42	0	0																														
ST643	6	Epoxy Coated	22	45.000	1487.0	STR				45	0	0																														
ST644	6	Epoxy Coated	6	45.000	405.5	STR				45	0	0																														
ST545	5	Epoxy Coated	20	8.167	170.4	18	0	8	0	7	6	0													0	0	0							0	6	0						
ST546	5	Epoxy Coated	41	8.000	342.1	STR				8	0	0																														
ST645	6	Epoxy Coated	4	32.000	192.3	STR				32	0	0																														
ST646	6	Epoxy Coated 1 Series of 24 Bars	24	5.208	187.7	1		8	0	3 TO 4	3 6	0 0														8	0								6	0						

TOTAL WT = 109276.8

NCS POST OFFICE RD. END POST BARLIST

EP401	4	Epoxy Coated	14	5.417	50.7	T1	0	4	2	1	2	0	1	2	0	1	2	0	1	2	0				0	4	2															
EP402	4	Epoxy Coated	7	2.667	12.5	29				1	6	0	1	2	0	0	0	0										1	1	0							0	0	0	2	2	2
EP403	4	Epoxy Coated	7	2.917	13.6	2	0	6	0	2	5	0													0	0	0															
EP404	4	Epoxy Coated	7	3.250	15.2	29				2	1	0	1	2	0	0	0	0										1	0	3							0	0	0	2	11	2
EP405	4	Epoxy Coated	7	3.750	17.5	2	0	6	0	3	3	0													0	0	0															
EP501	5	Epoxy Coated	46	4.500	215.9	2	0	6	0	4	0	0													0	0	0															

TOTAL WT = 325.4

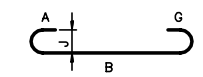

TYPE 1

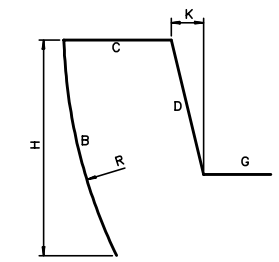

TYPE H6

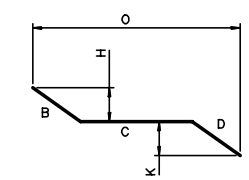

TYPE 29

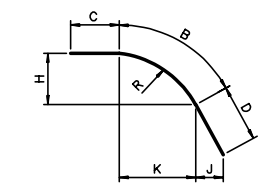

TYPE H7

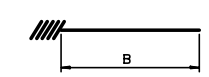

DOWEL-IN THREADED
FOR FORMSAVER COUPLER

TYPE H3

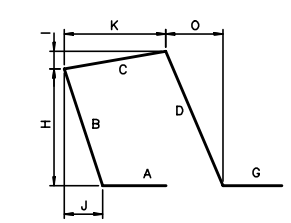

TYPE H10

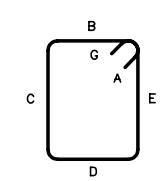

TYPE T1

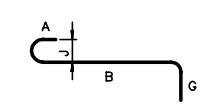

TYPE 18

TYPE 2

NOTES:

1. ALL REINFORCING STEEL IS EPOXY COATED U.N.O.
2. ALL REINFORCING SHALL BE ASTM A615 OR A996, GRADE 60.

RECORD DRAWING

No.	Date	Revisions	By
1	11/26/1	Added End Post Barlist	CE

HNTB CORPORATION

STATE OF WISCONSIN
DEPARTMENT OF TRANSPORTATION

STRUCTURE B-40-414C

Designed By	SL	Design Checked	TZ	Drawn By	GMZ	Plans Checked	AJP

SIDEWALK BARLIST
3 OF 3

SHEETNC125aOF

STATE PROJECT I.D.	SHEET NUMBER
2235-00-70	8.789

NORTH CABLESTAY TRANSVERSE PT BARLIST

BAR MARK	BAR SIZE	LOCATION COMMENT	NO.	LTH/BAR DECIMAL FT	TOTAL WT (LB)	BEND TYPE	A			B			C			D			E			F/R			G			H			I			J			K			O		
							FT	IN	¼	FT	IN	¼	FT	IN	¼	FT	IN	¼	FT	IN	¼	FT	IN	¼	FT	IN	¼	FT	IN	¼	FT	IN	¼	FT	IN	¼	FT	IN	¼	FT	IN	¼
PT303	3	Epoxy Coated	2976	2.417	2704.2	3	0	4	1	0	3	1	0	4	1	0	5	2	0	4	1	0	3	1	0	4	1	0	4	0				0	4	4				1	3	0
PT304	3	Epoxy Coated	2976	0.500	559.5	STR				0	6	0																														
PT401a	4	Epoxy Coated	649	6.625	2872.1	H13	0	6	0	2	8	0	0	9	3	1	4	0	0	9	3				0	6	0															
PT401b	4	Epoxy Coated	649	6.750	2926.3	H13	0	6	0	2	8	0	0	10	2	1	4	0	0	10	2				0	6	0															
PT401c	4	Epoxy Coated	649	6.875	2980.5	H13	0	6	0	2	8	0	0	11	1	1	4	0	0	11	1				0	6	0															
PT401d	4	Epoxy Coated	649	7.000	3034.7	H13	0	6	0	2	8	0	1	0	0	1	4	0	1	0	0				0	6	0															
PT402	4	Epoxy Coated	1298	3.646	3161.2	T15	0	0	0	1	6	0	0	7	3	1	6	0	0	0	0				0	0	0	0	0	0				0	3	3	1	5	3			
PT403	4	Epoxy Coated	586	5.667	2218.2	17				2	6	0	0	8	0	2	6	0																								
PT404	4	Epoxy Coated	150	4.250	425.8	17				1	6	0	1	3	0	1	6	0																								
PT405	4	Epoxy Coated	300	6.083	1219.1	T1	0	4	2	1	4	0	1	4	0	1	4	0	1	4	0				0	4	2															

TOTAL WT = 22101.8

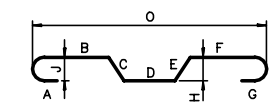

TYPE 3

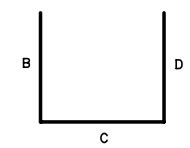

TYPE 17

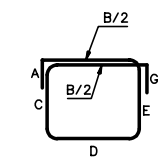

TYPE H13

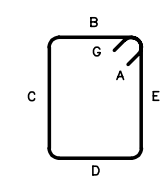

TYPE T1

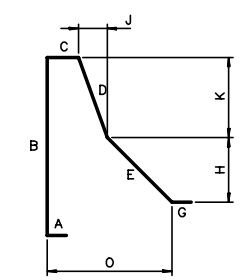

TYPE T15

NOTES:

1. ALL REINFORCING STEEL IS EPOXY COATED U.N.O.
2. ALL REINFORCING SHALL BE ASTM A615 OR A996, GRADE 60.

RECORD DRAWING

No.	Date	Revisions	By
2	9/18/01	Rev. PT401a-d	AP
1	9/17/01	Rev. Qty. PT403	BM

HNTB CORPORATION

STATE OF WISCONSIN
DEPARTMENT OF TRANSPORTATION

STRUCTURE B-40-414C

Designed By	TZ	Design Checked	CE	Drawn By	CE	Plans Checked	TZ

NORTH CABLE STAY TRANSVERSE PT BARLIST

SHEET NC126 OF

N. CABLESTAY BARLIST CABLE ANCHORAGES-1

STATE PROJECT I.D.	SHEET NUMBER
2235-00-70	8.790

BAR MARK	BAR SIZE	LOCATION COMMENT	NO.	LTH/BAR DECIMAL FT	TOTAL WT (LB)	BEND TYPE	A			B			C			D			E			F/R			G			H			I			J			K			O		
							FT	IN	¼	FT	IN	¼	FT	IN	¼	FT	IN	¼	FT	IN	¼	FT	IN	¼	FT	IN	¼	FT	IN	¼	FT	IN	¼	FT	IN	¼	FT	IN	¼	FT	IN	¼
SPIRAL	5	Epoxy Coated	24	86.394	2162.6	H1				0	2	0	2	0	0																									1	10	0
CA501	5	Epoxy Coated 2 SERIES OF 6 BARS	12	12.771	159.8	S3	0	8	0	4	4 TO 10	1 0	2	3	0	4	4 TO 10	1 0							0	8	0	0	4	2												
CA502	5	Epoxy Coated 2 SERIES OF 6 BARS	12	12.792	160.1	S3	0	8	0	4	3 TO 10	3 3	2	3	0	4	3 TO 10	3 3							0	8	0	0	4	2												
CA503	5	Epoxy Coated 2 SERIES OF 6 BARS	12	12.854	160.9	S3	0	8	0	4	3 TO 5	0 0 1	2	3	0	4	3 TO 5	0 0 1							0	8	0	0	4	2												
CA504	5	Epoxy Coated 2 SERIES OF 6 BARS	12	12.979	162.4	S3	0	8	0	4	2 TO 5	1 2 2	2	3	0	4	2 TO 5	1 2 2							0	8	0	0	4	2												
CA505	5	Epoxy Coated 2 SERIES OF 3 BARS	6	11.625	72.7	S3	0	8	0	3	10 TO 4	1 2 1	2	3	0	3	10 TO 4	1 2 1							0	8	0	0	4	2												
CA506	5	Epoxy Coated 2 SERIES OF 3 BARS	6	11.375	71.185	S3	0	8	0	3	8 TO 4	1 1 1	2	3	0	3	8 TO 4	1 1 1							0	8	0	0	4	2												
CA507	5	Epoxy Coated 2 SERIES OF 3 BARS	6	11.021	68.968	S3	0	8	0	3	5 TO 3	2 11 3	2	3	0	3	5 TO 3	2 11 3							0	8	0	0	4	2												
CA508	5	Epoxy Coated 2 SERIES OF 2 BARS	4	10.854	45.3	S3	0	8	0	3	5 TO 3	2 9 3	2	3	0	3	5 TO 3	2 9 3							0	8	0	0	4	2												
CA509	5	Epoxy Coated	12	11.083	138.7	S3	0	8	0	3	9	0	2	3	0	3	9	0							0	8	0	0	4	2												
CA510	5	Epoxy Coated	8	10.708	89.4	S3	0	8	0	3	6	3	2	3	0	3	6	3							0	8	0	0	4	2												
CA511	5	Epoxy Coated	2	10.292	21.5	S3	0	8	0	3	4	1	2	3	0	3	4	1							0	8	0	0	4	2												
CA512	5	Epoxy Coated 2 SERIES OF 4 BARS	8	11.875	99.1	S3	0	8	0	3	10 TO 4	3 4 3	2	3	0	3	10 TO 4	3 4 3							0	8	0	0	4	2												
CA513	5	Epoxy Coated 2 SERIES OF 5 BARS	10	11.958	124.7	S3	0	8	0	3	9 TO 4	2 7 0	2	3	0	3	9 TO 4	2 7 0							0	8	0	0	4	2												
CA514	5	Epoxy Coated 2 SERIES OF 6 BARS	12	11.750	147.1	S3	0	8	0	3	5 TO 4	1 8 3	2	3	0	3	5 TO 4	1 8 3							0	8	0	0	4	2												
CA515	5	Epoxy Coated 2 SERIES OF 6 BARS	12	11.917	149.1	S3	0	8	0	3	3 TO 5	2 0 2	2	3	0	3	3 TO 5	2 0 2							0	8	0	0	4	2												
CA516	5	Epoxy Coated	16	10.750	179.4	2	0	6	0	9	9	0													0	6	0															
CA517	5	Epoxy Coated	16	9.750	162.7	2	0	6	0	8	9	0													0	6	0															
CA518	5	Epoxy Coated	16	8.667	144.6	2	0	6	0	7	8	0													0	6	0															
CA519	5	Epoxy Coated	16	7.417	123.8	2	0	6	0	6	5	0													0	6	0															
CA520	5	Epoxy Coated	8	11.083	92.5	2	0	6	0	10	1	0													0	6	0															
CA521	5	Epoxy Coated	8	10.083	84.1	2	0	6	0	9	1	0													0	6	0															
CA522	5	Epoxy Coated	8	9.000	75.1	2	0	6	0	8	0	0													0	6	0															
CA523	5	Epoxy Coated	8	7.750	64.7	2	0	6	0	6	9	0													0	6	0															
CA524	5	Epoxy Coated	24	9.292	232.6	S3	0	8	0	2	10	1	2	3	0	2	10	1							0	8	0	0	4	2												
CA525	5	Epoxy Coated	20	8.917	186.0	S3	0	8	0	2	8	0	2	3	0	2	8	0							0	8	0	0	4	2												

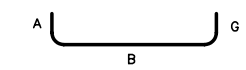

TYPE 2

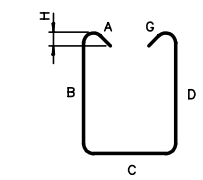

TYPE S3

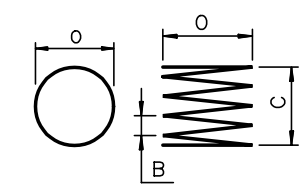

1½TURNS AT ENDS

TYPE H1

NOTES:

1. ALL REINFORCING STEEL IS EPOXY COATED U.N.O.
2. ALL REINFORCING SHALL BE ASTM A615 OR A996, GRADE 60.

RECORD DRAWING

No.	Date	Revisions	By

HNTB CORPORATION

STATE OF WISCONSIN
DEPARTMENT OF TRANSPORTATION

STRUCTURE B-40-414C

Designed By	TZ	Design Checked	CE	Drawn By	CE	Plans Checked	TZ

N. CABLESTAY BARLIST CABLE ANCHORAGES 1 OF 2

SHEET NC127 OF

STATE PROJECT I.D.	SHEET NUMBER
2235-00-70	8.791

N. CABLESTAY BARLIST CABLE ANCHORAGES-2

BAR MARK	BAR SIZE	LOCATION COMMENT	NO.	LTH/BAR DECIMAL FT	TOTAL WT (LB)	BEND TYPE	A			B			C			D			E			F/R			G			H			I			J			K			O		
							FT	IN	1/4	FT	IN	1/4	FT	IN	1/4	FT	IN	1/4	FT	IN	1/4	FT	IN	1/4	FT	IN	1/4	FT	IN	1/4	FT	IN	1/4	FT	IN	1/4	FT	IN	1/4	FT	IN	1/4
CA526	5	Epoxy Coated	32	8.375	279.5	S3	0	8	0	2	6	1	2	0	0	2	6	1							0	8	0	0	4	2												
CA527	5	Epoxy Coated	16	6.000	100.1	2	0	6	0	5	0	0													0	6	0															
CA528	5	Epoxy Coated	16	5.000	83.4	2	0	6	0	4	0	0													0	6	0															
CA529	5	Epoxy Coated	8	6.417	53.5	2	0	6	0	5	5	0													0	6	0															
CA530	5	Epoxy Coated	8	5.250	43.8	2	0	6	0	4	3	0													0	6	0															
CA531	5	Epoxy Coated	4	3.167	13.2	STR				3	2	0																														
CA532	5	Epoxy Coated	76	10.500	832.3	S3	0	8	0	3	0	2	3	1	0	3	0	2							0	8	0	0	4	2												
CA533	5	Epoxy Coated 2 SERIES OF 2 BARS	4	10.833	45.2	S3	0	8	0	2	11 TO 3	2 5	3	1	0	2	11 TO 3	2 5							0	8	0	0	4	2												
CA534	5	Epoxy Coated	136	3.500	496.5	2	0	6	0	3	0	0													0	0	0															
CA535	5	Epoxy Coated	12	8.583	107.4	S3	0	8	0	2	6	0	2	3	0	2	6	0							0	8	0	0	4	2												
CA536	5	Epoxy Coated	4	9.167	38.2	34				3	2	0	6	0	0	0	0	0										3	1	2							0	0	0			
CA537	5	Epoxy Coated	12	8.083	101.2	34				3	10	0	4	3	0	0	0	0										3	9	1							0	0	0			
CA538	5	Epoxy Coated	56	8.583	501.3	S3	0	8	0	2	6	0	2	3	0	2	6	0							0	8	0	0	4	2												
CA539	5	Epoxy Coated	4	5.167	21.555	2	0	6	0	4	2	0													0	6	0															
CA540	5	Epoxy Coated	4	5.500	22.946	2	0	6	0	4	6	0													0	6	0															
CA541	5	Epoxy Coated	4	6.000	25.032	2	0	6	0	5	0	0													0	6	0															
CA542	5	Epoxy Coated	4	6.500	27.118	2	0	6	0	5	6	0													0	6	0															
CA543	5	Epoxy Coated	24	5.000	125.160	2	0	6	0	4	6	0													0	0	0															
CA544	5	Epoxy Coated	4	7.500	31.290	2	0	6	0	6	6	0													0	6	0															
CA545	5	Epoxy Coated 4 SERIES OF 5 BARS	20	12.271	256.0	S4	0	8	0	3	9 TO 4	3 0	3	1	0	3	9 TO 4	3 0							0	8	0															
CA546	5	Epoxy Coated	22	9.333	214.2	S3	0	8	0	2	10	2	2	3	0	2	10	2							0	8	0	0	4	2												
CA601	6	Epoxy Coated	24	14.250	513.7	34				4	3	0	10	0	0	0	0	0										4	2	1							0	0	0			
CA602	6	Epoxy Coated	8	11.750	141.2	34				4	9	0	7	0	0	0	0	0										4	8	1							0	0	0			
CA603	6	Epoxy Coated	64	21.083	2026.7	S3	0	8	0	2	5	0	18	0	0	0	0	0							0	0	0	0	4	2												
CA604	6	Epoxy Coated	8	11.333	136.2	34				5	6	0	5	10	0	0	0	0										5	5	0							0	0	0			
CA605	6	Epoxy Coated	8	9.667	116.2	34				5	6	0	4	2	0	0	0	0										5	5	0							0	0	0			
CA606	6	Epoxy Coated	32	15.083	725.0	S3	0	8	0	2	5	0	12	0	0	0	0	0							0	0	0	0	4	2												
CA607	6	Epoxy Coated	8	9.604	115.4	34				3	10	0	2	1	1	3	8	0										3	9	1							2	2	3			
CA608	6	Epoxy Coated	8	15.000	180.2	34				7	0	0	8	0	0	0	0	0										0	11	0							0	0	0			
CA609	6	Epoxy Coated	8	11.083	133.2	34				3	3	0	7	10	0	0	0	0										3	1	1							0	0	0			
CA610	6	Epoxy Coated	52	12.000	937.2	STR				12	0	0																														
CA611	6	Epoxy Coated	4	10.333	62.1	34				4	4	0	6	0	0	0	0	0										4	3	1							0	0	0			
CA612	6	Epoxy Coated	8	10.000	120.2	34				5	0	0	5	0	0	0	0	0										4	11	0							0	0	0			
CA613	6	Epoxy Coated	12	11.333	204.3	34				6	6	0	4	10	0	0	0	0										6	4	3							0	0	0			
CA614	6	Epoxy Coated	8	14.333	172.2	34				6	4	0	8	0	0	0	0	0										2	3	2							0	0	0			
CA615	6	Epoxy Coated	8	13.000	156.2	34				5	0	0	8	0	0	0	0	0										2	7	2							0	0	0			
CA616	6	Epoxy Coated	8	12.000	144.2	34				4	0	0	8	0	0	0	0	0										2	6	2							0	0	0			
CA617	6	Epoxy Coated	8	11.833	142.2	34				3	10	0	8	0	0	0	0	0										2	8	3							0	0	0			
CA618	6	Epoxy Coated	36	16.250	878.7	S10				6	8	0	2	11	0	6	8	0																								
CA619	6	Epoxy Coated	8	11.833	142.2	34				3	10	0	8	0	0	0	0	0										3	3	1							0	0	0			
CA620	6	Epoxy Coated	8	12.417	149.2	34				4	5	0	8	0	0	0	0	0										3	3	2							0	0	0			
CA621	6	Epoxy Coated	8	12.667	152.2	34				4	8	0	8	0	0	0	0	0										3	0	2							0	0	0			
CA622	6	Epoxy Coated	8	13.000	156.2	34				5	0	0	8	0	0	0	0	0										2	8	3							0	0	0			
CA623	6	Epoxy Coated	8	12.854	154.5	34				5	3	0	2	11	1	4	8	0										0	6	0							3	6	3			
CA624	6	Epoxy Coated	8	13.000	156.2	34				5	0	0	8	0	0	0	0	0										2	11	0							0	0	0			

TOTAL WT = 16413.5

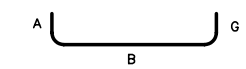

TYPE 2

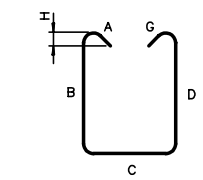

TYPE S3

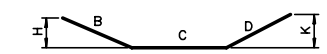

TYPE 34

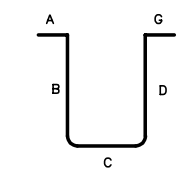

TYPE S4

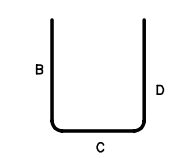

TYPE S10

NOTES:

1. ALL REINFORCING STEEL IS EPOXY COATED U.N.O.
2. ALL REINFORCING SHALL BE ASTM A615 OR A996, GRADE 60.

RECORD DRAWING

No.	Date	Revisions	By

HNTB CORPORATION

STATE OF WISCONSIN
DEPARTMENT OF TRANSPORTATION

STRUCTURE B-40-414C

Designed By	TZ	Design Checked	CE	Drawn By	CE	Plans Checked	TZ

N. CABLESTAY BARLIST CABLE ANCHORAGES 2 OF 2

SHEET NC127a OF

STATE PROJECT I.D.	SHEET NUMBER
2235-00-70	8.792

NCS BASCULE END BEAM BARLIST

BAR MARK	BAR SIZE	LOCATION COMMENT	NO.	LTH/BAR DECIMAL FT	TOTAL WT (LB)	BEND TYPE	A			B			C			D			E			F/R			G			H			I			J			K			O		
							FT	IN	1/4	FT	IN	1/4	FT	IN	1/4	FT	IN	1/4	FT	IN	1/4	FT	IN	1/4	FT	IN	1/4	FT	IN	1/4	FT	IN	1/4	FT	IN	1/4	FT	IN	1/4	FT	IN	1/4
EB401	4	Epoxy Coated	60	3.708	148.6	2	0	8	0	2	4	2													0	8	0															
EB403	4	Epoxy Coated	64	5.333	228.0	17				2	4	0	0	8	0	2	4	0																								
EB404	4	Epoxy Coated	20	2.333	31.2	STR				2	4	0																														
EB503	5	Epoxy Coated	52	4.833	262.1	STR				4	10	0																														
EB504	5	Epoxy Coated	64	7.958	531.2	17				2	10	0	2	3	2	2	10	0																								
EB505	5	Epoxy Coated 1 Series of 7	7	6.813	49.7	17				2	10	0	0 TO 1	9 TO 6	2 TO 0	2	10	0																								
EB505a	5	Epoxy Coated	15	7.229	113.1	17				2	10	0	1	6	3	2	10	0																								
EB506	5	Epoxy Coated 1 Series of 4	4	4.896	20.4	17				2	10	0	1 TO 2	9 TO 4	1 TO 1	0	0	0																								
EB506a	5	Epoxy Coated 1 Series of 5	5	5.323	27.8	17				2	10	0	2 TO 2	4 TO 7	3 TO 0	0	0	0																								
EB507	5	Epoxy Coated 1 Series of 8	8	6.938	57.886	17				2	10	0	0 TO 1	10 TO 7	3 TO 3	2	10	0																								
EB508	5	Epoxy Coated	34	6.417	227.548	T1	0	5	2	1	4	0	1	5	0	1	4	0	1	5	0				0	5	2															
EB512	5	Epoxy Coated	50	7.917	412.854	T1	0	5	2	1	4	0	2	2	0	1	4	0	2	2	0				0	5	2															
EB513	5	Epoxy Coated	3	28.000	87.612	17				1	0	0	27	0	0	0	0	0																								
EB513b	5	Epoxy Coated	3	35.167	110.0	17				1	0	0	34	2	0	0	0	0																								
EB514	5	Epoxy Coated	6	2.583	16.2	17				1	0	0	0	7	0	1	0	0																								
EB515	5	Epoxy Coated	8	9.917	82.7	17				4	8	0	0	7	0	4	8	0																								
EB524	5	Epoxy Coated	6	2.729	17.1	17				1	0	0	0	8	3	1	0	0																								
EB525	5	Epoxy Coated	8	9.917	82.7	17				4	8	0	0	7	0	4	8	0																								
EB606	6	Epoxy Coated	76	10.750	1227.1	T1	0	8	0	2	4	2	2	4	0	2	4	2	2	4	0				0	8	0															
EB607	6	Epoxy Coated	16	28.000	672.9	17				1	0	0	27	0	0	0	0	0																								
EB607b	6	Epoxy Coated	16	35.167	845.1	17				1	0	0	34	2	0	0	0	0																								
EB608	6	Epoxy Coated	3	44.000	198.3	17				1	0	0	42	0	0	1	0	0																								
EB610	6	Epoxy Coated	4	13.333	80.1	17				6	8	0	6	8	0	0	0	0																								
EB611	6	Epoxy Coated	6	13.750	123.9	17				5	6	2	2	8	0	5	6	2																								
EB612	6	Epoxy Coated 2 Series of 6	12	7.583	136.7	T1	0	8	0	1	9	0	1 TO 1	6 TO 3	0 TO 0	1	9	0	1 TO 1	6 TO 3	0 TO 0				0	8	0															
EB621	6	Epoxy Coated	4	9.000	54.1	17				0	0	0	4	6	0	4	6	0																								
EB621a	6	Epoxy Coated	2	8.667	26.0	17				3	0	0	2	8	0	3	0	0																								
EB622	6	Epoxy Coated	12	7.958	143.4	T1	0	8	0	1	9	0	1	6	3	1	9	0	1	6	3				0	8	0															

TOTAL WT = 6014.6

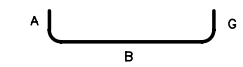

TYPE 2

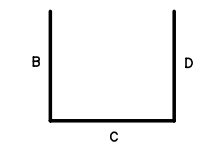

TYPE 17

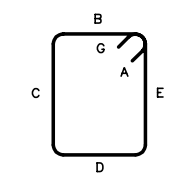

TYPE T1

NOTES:

1. ALL REINFORCING STEEL IS EPOXY COATED U.N.O.
2. ALL REINFORCING SHALL BE ASTM A615 OR A996, GRADE 60.

RECORD DRAWING

No.	Date	Revisions	By
1	9-21-01	REV QTY EB503 & EB606	BM

HNTB CORPORATION

STATE OF WISCONSIN
DEPARTMENT OF TRANSPORTATION

STRUCTURE B-40-414C

Designed By	TZ	Design Checked	CE	Drawn By	BM	Plans Checked	AP

NORTH CABLE STAY BASCULE END BEAM BARLIST

SHEET NC128 OF

STATE PROJECT I.D.	SHEET NUMBER
2235-00-70	8.793

NCT ABUTMENT END BEAM BARLIST

BAR MARK	BAR SIZE	LOCATION COMMENT	NO.	LTH/BAR DECIMAL FT	TOTAL WT (LB)	BEND TYPE	A			B			C			D			E			F/R			G			H			I			J			K			O		
							FT	IN	1/4	FT	IN	1/4	FT	IN	1/4	FT	IN	1/4	FT	IN	1/4	FT	IN	1/4	FT	IN	1/4	FT	IN	1/4	FT	IN	1/4	FT	IN	1/4	FT	IN	1/4	FT	IN	1/4
EB402	4	Epoxy Coated	70	3.875	181.2	2	0	8	0	2	6	2													0	8	0															
EB403	4	Epoxy Coated	60	5.667	227.1	17				2	6	0	0	8	0	2	6	0																								
EB404	4	Epoxy Coated	20	2.333	31.2	STR				2	4	0																														
EB405	4	Epoxy Coated	16	1.542	16.5	T9	0	4	0	0	10	0													0	4	2															
EB501	5	Epoxy Coated	60	6.000	375.5	STR				6	0	0																														
EB502	5	Epoxy Coated 2 Series of 30	60	9.406	588.6	17				2	10	0	3 TO 3	6 TO 11	2 TO 1	2	10	0																								
EB505	5	Epoxy Coated 2 Series of 7	14	6.813	99.5	17				2	10	0	0 TO 1	9 TO 6	2 TO 0	2	10	0																								
EB506	5	Epoxy Coated 2 Series of 4	8	4.896	40.9	17				2	10	0	1 TO 2	9 TO 4	1 TO 1	0	0	0																								
EB507	5	Epoxy Coated 2 Series of 8	16	6.938	115.8	17				2	10	0	0 TO 1	10 TO 7	3 TO 3	2	10	0																								
EB509	5	Epoxy Coated	10	9.042	94.305	T1	0	5	2	1	4	0	2	8	3	1	4	0	2	8	3				0	5	2															
EB510	5	Epoxy Coated	20	10.125	211.207	T1	0	5	2	1	4	0	3	3	1	1	4	0	3	3	1				0	5	2															
EB511	5	Epoxy Coated	20	10.250	213.815	T1	0	5	2	1	4	0	3	4	0	1	4	0	3	4	0				0	5	2															
EB513	5	Epoxy Coated	4	28.000	116.816	17				1	0	0	27	0	0	0	0	0																								
EB513b	5	Epoxy Coated	4	36.000	150.2	17				1	0	0	35	0	0	0	0	0																								
EB516	5	Epoxy Coated	20	10.333	215.6	T1	0	5	2	1	4	0	3	4	2	1	4	0	3	4	2				0	5	2															
EB517	5	Epoxy Coated	18	22.583	424.0	T1	0	5	2	1	4	0	9	6	0	1	4	0	9	6	0				0	5	2															
EB518	5	Epoxy Coated	16	4.729	78.9	17				2	0	0	0	8	3	2	0	0																								
EB519	5	Epoxy Coated	10	9.208	96.0	T1	0	5	2	1	4	0	2	9	3	1	4	0	2	9	3				0	5	2															
EB520	5	Epoxy Coated	10	9.042	94.3	T1	0	5	2	1	4	0	2	8	2	1	4	0	2	9	0				0	5	2															
EB521	5	Epoxy Coated	16	2.000	33.4	STR				2	0	0																														
EB534	5	Epoxy Coated	12	2.646	33.1	17				1	0	0	0	7	3	1	0	0																								
EB535	5	Epoxy Coated	16	10.000	166.9	17				5	0	0	5	0	0	0	0	0																								
EB602	6	Epoxy Coated 2 Series of 7	14	13.333	280.4	T1	0	8	0	2	6	2	3 TO 3	4 TO 6	2 TO 2	2	6	2	3 TO 3	4 TO 6	2 TO 2				0	8	0															
EB603	6	Epoxy Coated 2 Series of 30	60	13.896	1252.3	T1	0	8	0	2	6	2	3 TO 3	6 TO 11	2 TO 1	2	6	2	3 TO 3	6 TO 11	2 TO 1				0	8	0															
EB607	6	Epoxy Coated	19	28.000	799.1	17				1	0	0	27	0	0	0	0	0																								
EB607b	6	Epoxy Coated	19	36.000	1027.4	17				1	0	0	35	0	0	0	0	0																								
EB609	6	Epoxy Coated	6	41.000	369.5	17				1	0	0	39	0	0	1	0	0																								
EB623	6	Epoxy Coated	5	27.000	202.8	STR				27	0	0																														
EB623b	6	Epoxy Coated	5	35.000	262.8	STR				35	0	0																														
EB631	6	Epoxy Coated	8	10.000	120.2	17				5	0	0	5	0	0	0	0	0																								
EB632	6	Epoxy Coated 4 Series of 6	24	6.708	241.8	H13	0	8	0	1	9	0	0 TO 1	8 TO 1	3 TO 3	1	9	0	0 TO 1	8 TO 1	3 TO 3				0	8	0															
				TOTAL WT =	8160.9																																					

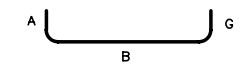

TYPE 2

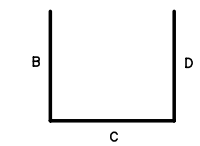

TYPE 17

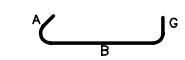

TYPE T9

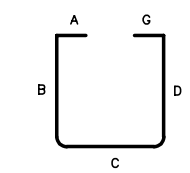

TYPE S6

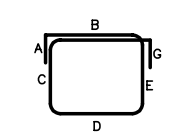

TYPE H13

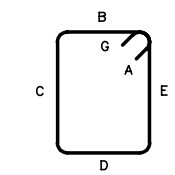

TYPE T1

NOTES:

1. ALL REINFORCING STEEL IS EPOXY COATED U.N.O.
2. ALL REINFORCING SHALL BE ASTM A615 OR A996, GRADE 60.

RECORD DRAWING

No.	Date	Revisions	By

HNTB CORPORATION

STATE OF WISCONSIN
DEPARTMENT OF TRANSPORTATION

STRUCTURE B-40-414C

Designed By	TZ	Design Checked	CE	Drawn By	BM	Plans Checked	AP

NORTH CABLE STAY ABUTMENT END BEAM BARLIST

SHEET NC129 OF

STATE PROJECT I.D.	SHEET NUMBER
2235-00-70	8.794

PIER 3 CAP BEAM BARLIST

BAR MARK	BAR SIZE	LOCATION COMMENT	NO.	LTH/BAR DECIMAL FT	TOTAL WT (LB)	BEND TYPE	A			B			C			D			E			F/R			G			H			I			J			K			O		
							FT	IN	1/4	FT	IN	1/4	FT	IN	1/4	FT	IN	1/4	FT	IN	1/4	FT	IN	1/4	FT	IN	1/4	FT	IN	1/4	FT	IN	1/4	FT	IN	1/4	FT	IN	1/4	FT	IN	1/4
CB501	5	Epoxy Coated 4 Series of 7	28	8.438	246.4	T1	0	5	2	1	4	0	2	3 TO 6	3 2	1	4	0	2	3 TO 6	3 2				0	5	2															
CB502	5	Epoxy Coated 4 Series of 7	28	8.604	251.3	T1	0	5	2	1	4	0	2	4 TO 7	3 2	1	4	0	2	4 TO 7	3 2				0	5	2															
CB503	5	Epoxy Coated	28	7.750	226.3	T1	0	5	2	1	4	0	2	1	0	1	4	0	2	1	0				0	5	2															
CB601	6	Epoxy Coated 2 Series of 40	80	6.385	767.3	17				2	0	0	2	1 TO 7	2 3	2	0	0																								
CB602	6	Epoxy Coated	2	33.417	100.4	17				1	0	0	32	5	0	0	0	0																								
CB602a	6	Epoxy Coated	2	44.417	133.4	17				1	0	0	43	5	0	0	0	0																								
CB603	6	Epoxy Coated	2	54.000	162.2	17				1	0	0	52	0	0	1	0	0																								
CB604	6	Epoxy Coated	8	9.125	109.6	17				1	0	0	7	1	2	1	0	0																								
CB410	4	Epoxy Coated	20	5.750	76.8	17				2	6	0	0	9	0	2	6	0																								
CB510	5	Epoxy Coated	20	5.792	120.8	S3	0	5	2	1	9	0	1	4	2	1	9	0							0	5	2															
CB511	5	Epoxy Coated	1	7.250	7.6	S3	0	5	2	1	9	0	2	10	0	1	9	0							0	5	2															

TOTAL WT =	2202.2

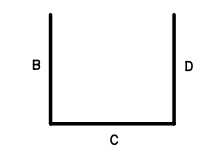

TYPE 17

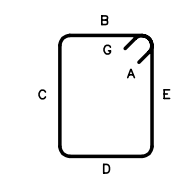

TYPE T1

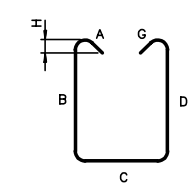

TYPE S3

NOTES:

1. ALL REINFORCING STEEL IS EPOXY COATED U.N.O.
2. ALL REINFORCING SHALL BE ASTM A615 OR A996, GRADE 60.

RECORD DRAWING

No.	Date	Revisions	By
2	10-4-01	ADD CB510, CB511, CB410	AP
1	10-3-01	DIM OF CB501 & CB502	BM

HNTB CORPORATION

STATE OF WISCONSIN
DEPARTMENT OF TRANSPORTATION

STRUCTURE

Designed By	SL	Design Checked	TZ	Drawn By	BM	Plans Checked	TZ

PIER 3 CAP BEAM BARLIST

SHEET NC130 OF

STATE PROJECT I.D.	SHEET NUMBER
2235-00-70	8.795

NORTH CABLE STAY SIDEWALK BARLIST

BAR MARK	BAR SIZE	LOCATION COMMENT	NO.	LTH/BAR DECIMAL FT	TOTAL WT (LB)	BEND TYPE	A			B			C			D			E			F/R			G			H			I			J			K			O		
							FT	IN	¼	FT	IN	¼	FT	IN	¼	FT	IN	¼	FT	IN	¼	FT	IN	¼	FT	IN	¼	FT	IN	¼	FT	IN	¼	FT	IN	¼	FT	IN	¼	FT	IN	¼
SW501	5	Epoxy Coated	7	10.458	76.4	H14	0	10	0	2	4	3	4	0	0	2	4	3							0	10	0															
SW502	5	Epoxy Coated	8	10.542	88.0	H14	0	10	0	2	5	1	4	0	0	2	5	1							0	10	0															
SW503	5	Epoxy Coated	13	10.625	144.1	H14	0	10	0	2	5	3	4	0	0	2	5	3							0	10	0															
SW504	5	Epoxy Coated	16	10.708	178.7	H14	0	10	0	2	6	1	4	0	0	2	6	1							0	10	0															
SW505	5	Epoxy Coated	18	10.792	202.6	H14	0	10	0	2	6	3	4	0	0	2	6	3							0	10	0															
SW601	6	Epoxy Coated	155	9.542	2221.4	H14	1	0	0	1	9	1	4	0	0	1	9	1							1	0	0															
SW602	6	Epoxy Coated	155	9.917	2308.7	H14	1	0	0	1	11	2	4	0	0	1	11	2							1	0	0															
SW603	6	Epoxy Coated	155	10.333	2405.7	H14	1	0	0	2	2	0	4	0	0	2	2	0							1	0	0															
SW604	6	Epoxy Coated	155	10.708	2493.0	H14	1	0	0	2	4	1	4	0	0	2	4	1							1	0	0															
SW605	6	Epoxy Coated	74	10.750	1194.8	H14	1	0	0	2	4	2	4	0	0	2	4	2							1	0	0															
SW606	6	Epoxy Coated 1 SERIES OF 28	28	8.302	349.2	H14	1	0	0	2	2	0	4	0	0	2	2	0							1	0	0															
											TO						TO																									
										2	5	1				2	5	1																									
SW607	6	Epoxy Coated 1 SERIES OF 28	28	8.208	345.2	H14	1	0	0	1	11	2	4	0	0	1	11	2							1	0	0															
											TO						TO																									
										2	5	2				2	5	2																									
SW608	6	Epoxy Coated 1 SERIES OF 17	17	8.135	207.730	H14	1	0	0	1	9	1	4	0	0	1	9	1							1	0	0															
											TO						TO																									
										2	6	0				2	6	0																									
SW609	6	Epoxy Coated 1 SERIES OF 22	22	8.260	272.957	H14	1	0	0	2	0	1	4	0	0	2	0	1							1	0	0															
											TO						TO																									
										2	6	0				2	6	0																									
SW610	6	Epoxy Coated 4 SERIES OF 12	48	8.219	592.5	H14	1	0	0	2	0	1	4	0	0	2	0	1							1	0	0															
											TO						TO																									
										2	5	0				2	5	0																									
SW611	6	Epoxy Coated 4 SERIES OF 6	24	8.146	293.6	H14	1	0	0	2	0	1	4	0	0	2	0	1							1	0	0															
											TO						TO																									
										2	3	1				2	3	1																									
SW612	6	Epoxy Coated	200	10.042	3016.5	H14	1	0	0	2	0	1	4	0	0	2	0	1							1	0	0															
SW613	6	Epoxy Coated	200	10.542	3166.7	H14	1	0	0	2	3	1	4	0	0	2	3	1							1	0	0															
SW614	6	Epoxy Coated	200	10.833	3254.3	H14	1	0	0	2	5	0	4	0	0	2	5	0							1	0	0															
SW615	6	Epoxy Coated	172	11.000	2841.8	H14	1	0	0	2	6	0	4	0	0	2	6	0							1	0	0															
SW616	6	Epoxy Coated	181	10.917	2967.8	H14	1	0	0	2	5	2	4	0	0	2	5	2							1	0	0															
SW617	6	Epoxy Coated	189	10.875	3087.2	H14	1	0	0	2	5	1	4	0	0	2	5	1							1	0	0															
SW618	6	Epoxy Coated	187	10.792	3031.1	H14	1	0	0	2	4	3	4	0	0	2	4	3							1	0	0															
SW619	6	Epoxy Coated 4 SERIES OF 8	32	9.250	444.6	H14	1	0	0	2	6	0	4	0	0	2	6	0							1	0	0															
											TO						TO																									
										4	0	0				4	0	0																									
SW620	6	Epoxy Coated 2 SERIES OF 5	10	9.052	136.0	H14	1	0	0	3	7	1	4	0	0	3	7	1							1	0	0															
											TO						TO																									
										2	6	0				2	6	0																									
SW621	6	Epoxy Coated 4 SERIES OF 8	32	9.198	442.1	H14	1	0	0	2	5	2	4	0	0	2	5	2							1	0	0															
											TO						TO																									
										3	11	1				3	11	1																									
SW622	6	Epoxy Coated 4 SERIES OF 8	32	9.177	441.1	H14	1	0	0	2	5	1	4	0	0	2	5	1							1	0	0															
											TO						TO																									
										3	11	0				3	11	0																									
SW623	6	Epoxy Coated 4 SERIES OF 8	32	9.146	439.6	H14	1	0	0	2	4	3	4	0	0	2	4	3							1	0	0															
											TO						TO																									
										3	10	3				3	10	3																									

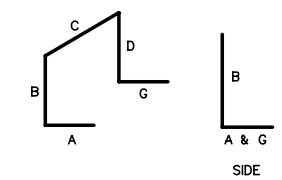

TYPE H14

NOTES:

1. ALL REINFORCING STEEL IS EPOXY COATED U.N.O.
2. ALL REINFORCING SHALL BE ASTM A615 OR A996, GRADE 60.

RECORD DRAWING

No.	Date	Revisions	By

HNTB CORPORATION

STATE OF WISCONSIN
DEPARTMENT OF TRANSPORTATION

STRUCTURE

Designed By	SL	Design Checked	TZ	Drawn By	BM	Plans Checked	AP

NORTH CABLE STAY SLAB-SIDEWALK BARLIST 1 OF 2

SHEET NC131 OF

STATE PROJECT I.D.	SHEET NUMBER
2235-00-70	8.796

NORTH CABLE STAY SIDEWALK BARLIST

BAR MARK	BAR SIZE	LOCATION COMMENT	NO.	LTH/BAR DECIMAL FT	TOTAL WT (LB)	BEND TYPE	A			B			C			D			E			F/R			G			H			I			J			K			O		
							FT	IN	1/4	FT	IN	1/4	FT	IN	1/4	FT	IN	1/4	FT	IN	1/4	FT	IN	1/4	FT	IN	1/4	FT	IN	1/4	FT	IN	1/4	FT	IN	1/4	FT	IN	1/4	FT	IN	1/4
SW624	6	Epoxy Coated 2 SERIES OF 17	34	8.260	421.8	H14	1	0	0	2 TO 2	6 TO 0	0 TO 1	4	0	0	2 TO 2	6 TO 0	0 TO 1							1	0	0															
SW625	6	Epoxy Coated 2 SERIES OF 23	46	8.135	562.1	H14	1	0	0	2 TO 1	6 TO 9	0 TO 1	4	0	0	2 TO 1	6 TO 9	0 TO 1							1	0	0															
SW626	6	Epoxy Coated 2 SERIES OF 23	46	8.208	567.1	H14	1	0	0	2 TO 1	5 TO 11	2 TO 2	4	0	0	2 TO 1	5 TO 11	2 TO 2							1	0	0															
SW627	6	Epoxy Coated 2 SERIES OF 23	46	8.302	573.6	H14	1	0	0	2 TO 2	5 TO 2	1 TO 0	4	0	0	2 TO 2	5 TO 2	1 TO 0							1	0	0															
SW628	6	Epoxy Coated 1 SERIES OF 18	18	8.250	223.0	H14	1	0	0	2 TO 2	6 TO 0	0 TO 0	4	0	0	2 TO 2	6 TO 0	0 TO 0							1	0	0															

TOTAL WT - 38991.043

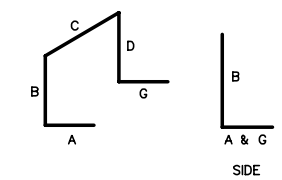

TYPE H14

NOTES:

1. ALL REINFORCING STEEL IS EPOXY COATED U.N.O.
2. ALL REINFORCING SHALL BE ASTM A615 OR A996, GRADE 60.

RECORD DRAWING

No.	Date	Revisions	By

HNTB CORPORATION

STATE OF WISCONSIN
DEPARTMENT OF TRANSPORTATION

STRUCTURE

Designed By	SL	Design Checked	TZ	Drawn By	BM	Plans Checked	AP

NORTH CABLE STAY SLAB-SIDEWALK BARLIST 2 OF 2

SHEET NC132 OF