APPENDIX H

B-40-413A Record Drawings

STATE PROJECT I.D.	SHEET NUMBER
2235-00-70	8.1

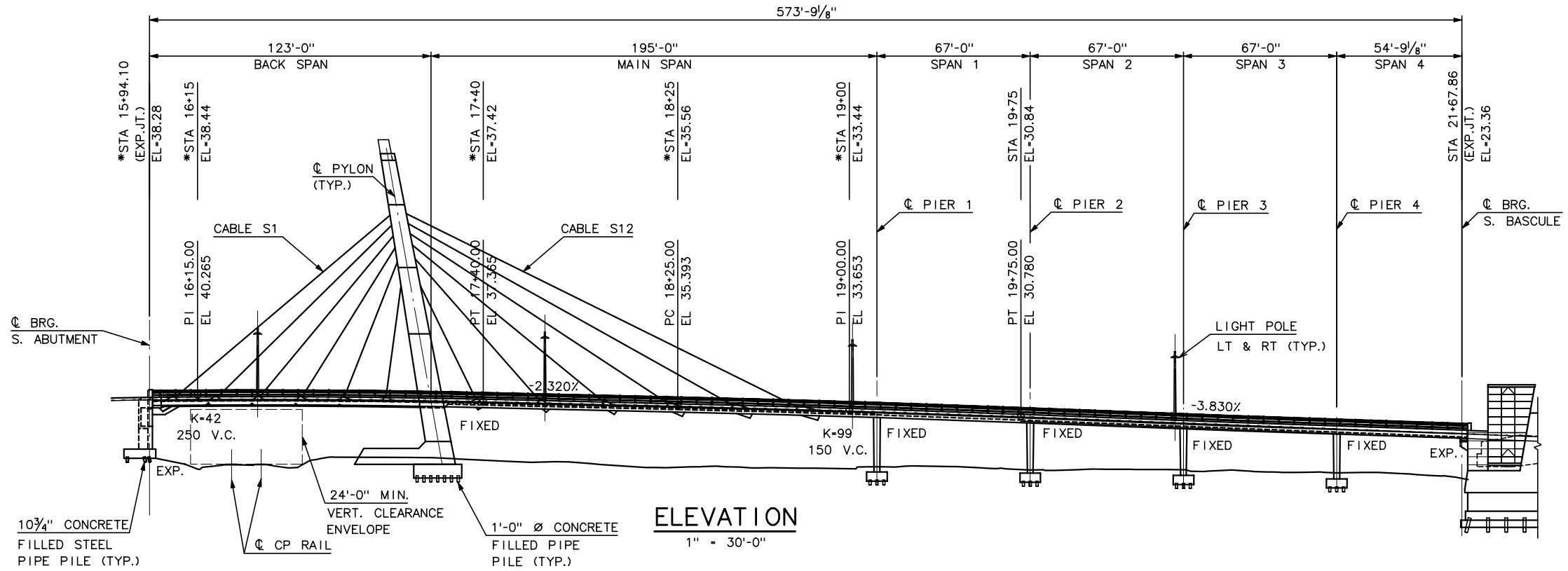

ELEVATION

1" = 30'-0"

*FINAL SURVEY
"AS-BUILT ELEVATIONS"
(ALONG C/L, @ TOP OF OVERLAY @ 40° F)
DONE 11/12/02, BY: EMCS

NOTES:

1. FOR BRIDGE RAILING AND UTILITES, SEE SHEETS SC79 - SC81.
2. FOR DECK PLAN GEOMETRY, SEE SHEETS SC31 - SC46.
3. FOR FOUNDATION GEOMETRY, SEE SHEET SC02.

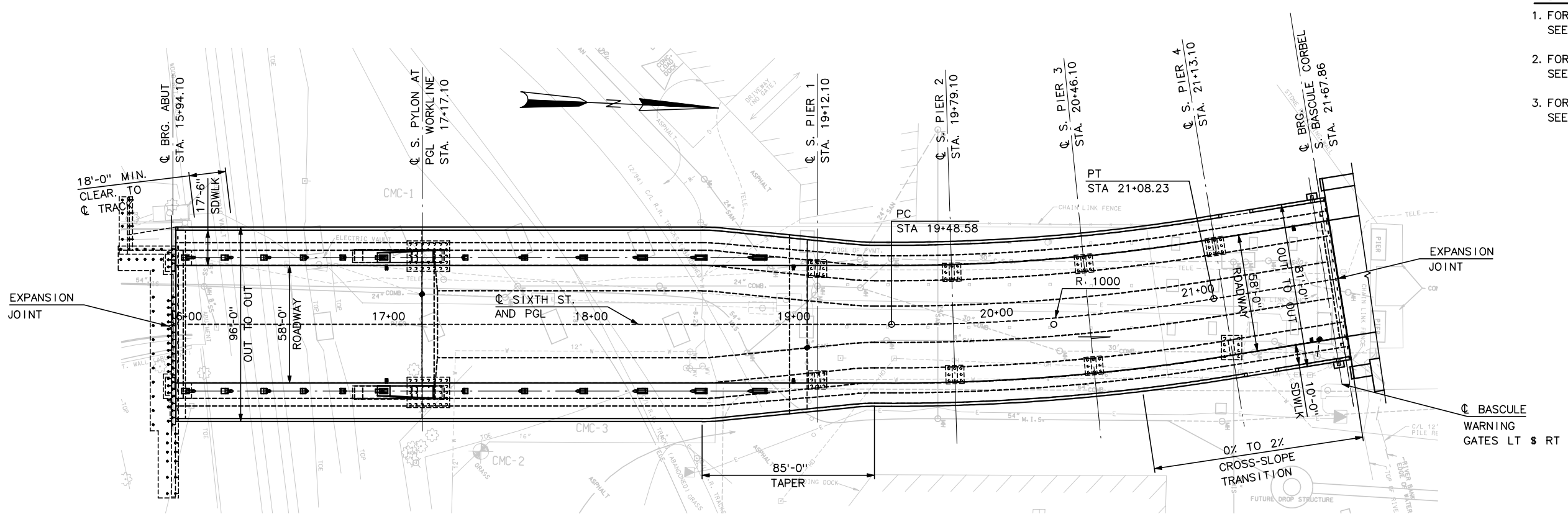

PLAN

1" = 30'-0"

RECORD DRAWING

No.	Date	Revisions	By

HNTB

HNTB CORPORATION
ARCHITECTS ENGINEERS PLANNERS
ONE PARK PLAZA SUITE 500
11270 WEST PARK PLACE
MILWAUKEE WISCONSIN 53224
(414) 359-2300

STATE OF WISCONSIN
DEPARTMENT OF TRANSPORTATION

STRUCTURE B-40-413A

6TH ST. OVER CP RAILROAD & OREGON ST.

County MILWAUKEE		City MILWAUKEE	
Design Spec. AASHTO 1996		Load HS20	Const. Spec. 1996
Designed By AP	Design Checked TZ	Drawn By BM	Plans Checked AP

Approved _____ State Bridge Engineer _____ Date

SOUTH CABLE STAY GENERAL PLAN AND ELEVATION

SHEET SC01

Plotted by: SLam
Date: 10:27:10 AM

FILE NAME: j:\cadd\ff31185\dgn\as built\south cablestay\sc01-gp&e.dgn

DESIGN SPECIFICATIONS

1. AASHTO "STANDARD SPECIFICATIONS FOR HIGHWAY BRIDGES," 16TH EDITION INCLUDING INTERIMS THROUGH 2000.
2. WISCONSIN BRIDGE MANUAL, VOLUMES 1 AND 2, JANUARY 1997 BY STATE OF WISCONSIN D.O.T., DIVISION OF TRANSPORTATION INFRASTRUCTURE DEVELOPMENT, BUREAU OF STRUCTURES.
3. WISCONSIN D.O.T. FACILITIES DEVELOPMENT MANUAL.
4. AASHTO "A POLICY ON GEOMETRIC DESIGN OF HIGHWAYS AND STREETS," 1990.
5. CITY OF MILWAUKEE ROADWAY DESIGN CRITERIA.
6. AWS BRIDGE WELDING CODE D1.5-1996.
7. AWS STRUCTURAL WELDING CODE D1.1.-1996.
8. AASHTO "GUIDE SPECIFICATIONS FOR FRACTURE CRITICAL NON-REDUNDANT STEEL BRIDGE MEMBERS," 1978, INCLUDING 1991 INTERIMS.
9. WIND DESIGN SPECIFICATIONS FOR CABLE-STAYED SPANS: ASCE MINIMUM DESIGN LOADS FOR BUILDINGS AND OTHER STRUCTURES, ANSI/ASCE 7-95 APPROVED JUNE 6, 1996.
10. RECOMMENDATIONS FOR STAY CABLE DESIGN, TESTING AND INSTALLATION, POST-TENSIONING INSTITUTE (PTI RECOMMENDATIONS), COMMITTEE ON CABLE-STAYED BRIDGES, AUGUST 1993.
11. CEB/FIP MODEL CODE 1990, COMITE EURO-INTERNATIONAL DU BETON, 1991.
12. CEB/FIP "MODEL CODE FOR CONCRETE STRUCTURES," 3RD EDITION, 1978, APPENDIX E, TIME-DEPENDENT BEHAVIOR OF CONCRETE, CREEP AND SHRINKAGE.
13. "SIXTH STREET VIADUCT PROJECT REQUEST FOR PROPOSAL", APPENDIX B WITH ADDENDUMS 1-4 WITH MODIFICATIONS AND ADDITIONS SPECIFIED HEREWITH. WISDOT PROJECT ID 2235-00-00.
14. P.T.I. "SPECIFICATION FOR GROUTING OF POST-TENSIONED STRUCTURES," 1ST EDITION, FEBRUARY 2001.

DATUM

ALL ELEVATIONS ARE IN FEET AND ARE BASED UPON THE MILWAUKEE CITY DATUM.

DESIGN LOADS

DEAD LOADS

WEIGHT OF REINFORCED CONCRETE:	150 PCF
WEIGHT OF PRESTRESSED CONCRETE:	155 PCF
WEIGHT OF STEEL:	490 PCF
WEIGHT OF STAY-CABLES:	490 PCF
INITIAL CONCRETE WEARING SURFACE:	25 PSF
FUTURE WEARING SURFACE:	20 PSF
RAILING	50 PLF
BRIDGE SUPPORTED UTILITIES (ALLOWANCE):	400 PLF

LIVE LOADS

HIGHWAY DESIGN LIVE LOAD: AASHTO HS-20.

MAXIMUM NUMBER OF DESIGN LANES IS 4 WITH REDUCTION FOR MULTIPLE LANE LOADING.

IMPACT IS IN ACCORDANCE WITH AASHTO ARTICLE 3.8 IN REFERENCE 1.

SIDEWALK LIVE LOAD: 85 PSF, BRIDGE INSPECTION TRUCK "REACH ALL UB 50." W/ WHEEL SP. = 6'-4", AXLE LOADS = 17K, 21K, 21K, AND AXLE SP. = 16', 4'

LIVE LOAD RATING

INVENTORY	HS-27
OPERATING	HS-45
STANDARD PERMIT VEHICLE	780 KIPS

SEISMIC LOAD

THE STRUCTURE IS DESIGNED FOR AN ACCELERATION COEFFICIENT OF 0.04g IN ROCK WITH 90% PROBABILITY OF NON-EXCEEDANCE IN 50 YEARS.

BRIDGE SHALL BE DESIGNED FOR SEISMIC PERFORMANCE CATEGORY A.

DAMPING COEFFICIENT FOR THE BRIDGE SHALL BE 5%.

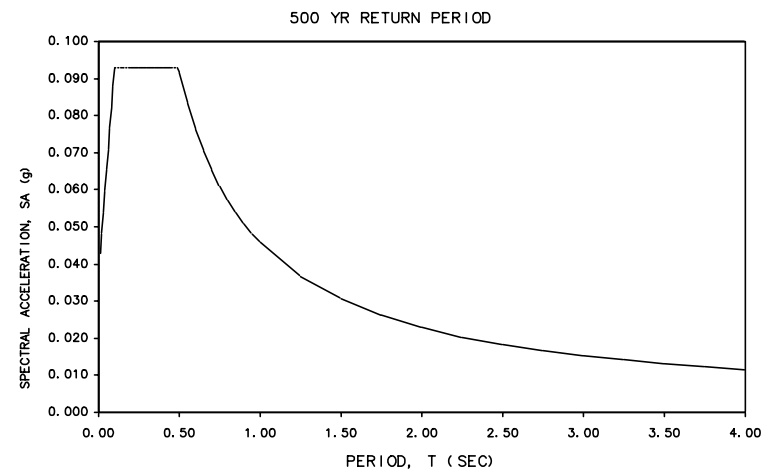

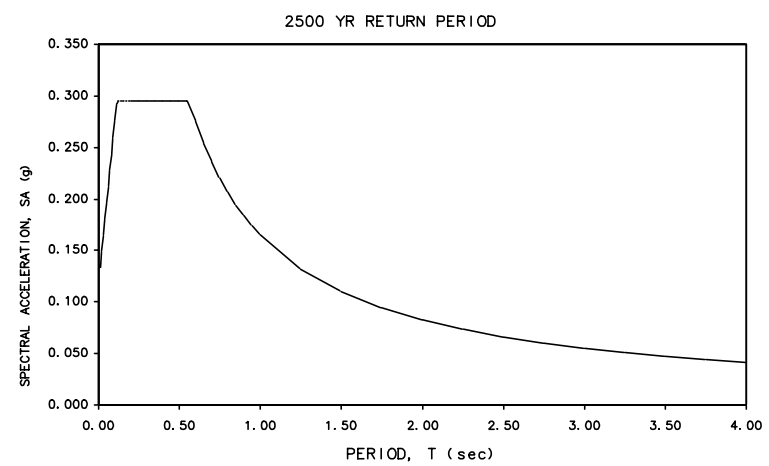

WIND LOADS

FOR THE CABLE STAYED BRIDGES, WIND LOADS SHALL BE IN ACCORDANCE WITH ASCE MINIMUM DESIGN LOADS FOR BUILDINGS AND OTHER STRUCTURES, ANSI/ASCE 7-95 WITH A RETURN PERIOD OF 100 YEARS.

THE EFFECT OF WIND ON THE STAY CABLES AND THE PYLON SHALL BE EVALUATED BY A WIND ENGINEERING CONSULTANT.

TEMPERATURE LOAD

THE DESIGN MEAN TEMPERATURE SHALL BE:	45 DEG F
THERMAL COEFFICIENT FOR CONCRETE:	0.000006 PER DEG F

UNIFORM SEASONAL TEMPERATURE RISE AND FALL FOR CONCRETE STRUCTURAL DESIGN:

TEMPERATURE RISE =	35 DEG F
TEMPERATURE FALL =	45 DEG F

FOR STEEL STRUCTURAL DESIGN:

TEMPERATURE RISE =	75 DEG F
TEMPERATURE FALL =	75 DEG F

FOR DECK MOVEMENTS FOR DESIGN OF BEARINGS AND EXPANSION JOINTS:

TEMPERATURE RISE =	35 DEG F
TEMPERATURE FALL =	1.2 X THE COMBINED EFFECT OF CREEP, SHRINKAGE, ELASTIC SHORTENING AND TEMPERATURE FALL.

UNIFORM TEMPERATURE CHANGE FOR THE CABLE FROM THE TEMPERATURE OF THE GIRDERS, TOWER AND PIER:

TEMPERATURE RISE =	18 DEG F
TEMPERATURE FALL =	18 DEG F

THERMAL GRADIENT BETWEEN TOP & BOTTOM OF SUPERSTRUCTURE:	18 DEG F
THERMAL GRADIENT BETWEEN NORTH & SOUTH FACES OF TOWER:	10 DEG F

CREEP AND SHRINKAGE

STRAINS CALCULATED IN ACCORDANCE WITH REFERENCE 11.

AVERAGE RELATIVE HUMIDITY IS TAKEN AS 70%.

STAY CABLE REPLACEMENT AND LOSS

TWO LANES OF TRAFFIC SHALL BE MAINTAINED IN THE AREA OF CABLE REPLACEMENT.

THE CABLE-STAYED STRUCTURES SHALL BE DESIGNED TO WITHSTAND THE LOSS OF ANY ONE STAY CABLE.

DESIGN METHOD

ALL PRESTRESSED CONCRETE:	DESIGNED ASD, CHECKED LFD
ALL REINFORCED CONCRETE:	LFD
STAY CABLES:	ASD
PILES:	ASD

RECORD DRAWING

No.	Date	Revisions	By

HNTB CORPORATION

STATE OF WISCONSIN
DEPARTMENT OF TRANSPORTATION

STRUCTURE B-40-413A

Designed By	SL	Design Checked	TZ	Drawn By	SL	Plans Checked	AP

SOUTH CABLE STAY GENERAL NOTES 1 OF 2

SHEET SC01a OF

MATERIALS

CONCRETE

ALL CONCRETE PROPERTIES SHALL BE IN ACCORDANCE WITH 28-DAY SPECIFIED COMPRESSIVE STRENGTH (f'c) AND CONCRETE CLASS AS FOLLOWS:

A) ABUTMENTS, MASONRY SEALS AND PIERS SHALL PROVIDE A COMPRESSIVE STRENGTH OF 4000 PSI (CLASS D).

B) PYLON AND SUPERSTRUCTURE SLAB SHALL PROVIDE A COMPRESSIVE STRENGTH OF 6000 PSI.

C) ALL OTHER CONCRETE SHALL PROVIDE A COMPRESSIVE STRENGTH OF 3500 PSI (CLASS A).

REINFORCING STEEL

REINFORCING SHALL CONFORM TO THE REQUIREMENTS OF AASHTO M31, (ASTM A996) GRADE 60. ALL REINFORCING BARS USED IN STRUCTURAL MEMBERS PARTIALLY OR ENTIRELY ABOVE FINISHED GROUND LEVEL SHALL BE EPOXY COATED IN ACCORDANCE WITH AASHTO M284 (ASTM A775).

CONCRETE COVER

CONCRETE COVER SHOWN ON PLANS DOES NOT INCLUDE PLACEMENT AND FABRICATION TOLERANCES UNLESS SHOWN AS "MINIMUM COVER."

A) SUPERSTRUCTURE

TOP OF CONCRETE DECK SLAB:	2 IN
BOTTOM OF CONCRETE DECK SLAB:	1½ IN
TOP AND SIDE OF SIDEWALK AND CURB:	2 IN
BOTTOM OF SIDEWALK AND CURB:	1½ IN

B) SUBSTRUCTURE

ABUTMENT AND RETAINING WALL:	2 IN
PIER:	2½ IN
CONCRETE CAST AGAINST EARTH:	3 IN

STRUCTURAL STEEL

A) ALL STRUCTURAL STEEL SHALL BE HOT-DIPPED GALVANIZED IN ACCORDANCE WITH ASTM A 153. ALL EMBEDDED ANCHOR PLATES OTHER THAN STAINLESS STEEL SHALL BE HOT-DIPPED GALVANIZED.

B) STRUCTURAL CARBON STEEL SHALL CONFORM TO THE REQUIREMENTS OF ASTM A 709, GRADE 36 OR GRADE 50 (AASHTO M 270, GRADE 36 OR GRADE 50).

C) HIGH-STRENGTH LOW-ALLOY STRUCTURAL STEEL SHALL CONFORM TO THE REQUIREMENTS OF ASTM A 709, GRADE 50 (AASHTO M 270, GRADE 50).

D) WELDED CONNECTIONS WILL BE MADE USING ELECTRODES WITH A MINIMUM TENSILE STRENGTH OF 70 KSI. ALL WELDS WILL BE AWS PREQUALIFIED WELDS UNLESS NOTED OR SHOWN OTHERWISE.

E) BOLTED CONNECTIONS ARE MADE WITH 7/8 IN DIAMETER ASTM A325 TYPE 1 BOLTS IN 15/16 IN DIAMETER HOLES, UNLESS NOTED OTHERWISE. ALL BOLTS NOT ENCASED IN CONCRETE SHALL BE GALVANIZED. ALLOWABLE SHEAR FOR SLIP CRITICAL CONNECTIONS PER AASHTO - CLASS A SURFACE ARE AS PER AASHTO TABLE 10.57A.

F) ANCHOR BOLTS: RAILING ANCHOR BOLTS SHALL BE STAINLESS STEEL TYPE 304 WITH A MINIMUM TENSILE STRENGTH OF 90 KSI. ALL OTHER ANCHOR BOLTS SHALL BE STAINLESS STEEL TYPE 304 WITH A MINIMUM TENSILE STRENGTH OF 70 KSI.

STAY CABLES

STRANDS SHALL BE 0.6 IN DIAMETER LOW RELAXATION SEVEN WIRE WELDLESS STRANDS CONFORMING TO ASTM A 416, GRADE 270.

STAYS SHALL BE PLACED INSIDE A WHITE, HIGH-DENSITY POLYETHYLENE (HDPE) PIPE MEETING THE REQUIREMENTS OF P.T.I. RECOMMENDATIONS (REFERENCE 10, SECTION 3.4.3.2.)

POST-TENSIONING - STRAND

ALL STRANDS SHALL CONFORM TO THE REQUIREMENTS OF ASTM A416 GRADE 270 FOR LOW RELAXATION, WELDLESS STRANDS.

STRANDS SHALL BE PLACED INSIDE A POLYETHYLENE (PE) PIPE.

POST-TENSIONING PARAMETERS:

MODULUS OF ELASTICITY:	28,500 KSI
FRICTION COEFFICIENT:	0.23
WOBBLE COEFFICIENT:	0.0002/FT
MAXIMUM STRESS DURING JACKING:	0.80 f's
MAXIMUM STRESS AT ANCHOR AFTER SEATING:	0.70 f's
MAXIMUM STRESS AT END OF SEATING LOSS ZONE:	0.75 f's
MAXIMUM STRESS AFTER LOSSES:	0.72 f's
ASSUMED ANCHOR SET:	1/4 IN

ALLOWABLE STRESSES/LOADS

REINFORCED CONCRETE

IN ACCORDANCE WITH AASHTO STANDARD SPECIFICATIONS FOR HIGHWAY BRIDGES.

STRUCTURAL STEEL

IN ACCORDANCE WITH AASHTO STANDARD SPECIFICATIONS FOR HIGHWAY BRIDGES.

POST-TENSIONED CONCRETE

A) TEMPORARY STRESSES BEFORE LOSSES DUE TO CREEP AND SHRINKAGE AT TIME OF TRANSFER:

COMPRESSION:	0.55 f'ci
TENSION AT TOP OF DECK:	$3\sqrt{f'c}$
TENSION AT BOTTOM OF DECK:	$6\sqrt{f'c}$

B) STRESSES AT SERVICE LEVEL AFTER ALL LOSSES HAVE OCCURRED:

COMPRESSION:	
PERMANENT SERVICE LOADS:	$0.45\sqrt{f'c}$
PERMANENT AND LIVE SERVICE LOADS:	$0.60\sqrt{f'c}$
TENSION AT TOP OF DECK:	3 f'c
TENSION AT BOTTOM OF DECK:	6 f'c

C) REPLACEMENT OF ANY ONE STAY CABLE WITH THE REDUCTION OF LIVE LOAD TO TWO LANES IN THE AREA OF THE CABLE UNDER EXCHANGE - ALLOWABLE STRESSES ARE 125% OF THE DESIGN VALUES.

D) LOSS OF ANY ONE STAY CABLE - ALLOWABLE STRESSES ARE 133% OF THE DESIGN VALUES UNDER FULL LIVE LOAD.

STAY CABLES

A) AASHTO GROUP I (INCLUDING "LOCKED IN" ERECTION STRESSES, AND CREEP AND SHRINKAGE):	0.45 f's
B) OTHER AASHTO GROUPS (WITH NO OVERSTRESS FACTORS):	0.50 f's
C) DURING CONSTRUCTION OF CABLE-REPLACEMENT:	0.56 f's

FOUNDATION DATA

ABUTMENT SHALL BE SUPPORTED ON 10 3/4" DIA. CONCRETE FILLED STEEL PIPE PILES DRIVEN TO ALLOWABLE BEARING CAPACITIES VARYING FROM 50 TONS TO 85 TONS AS SPECIFIED ON ABUTMENT DRAWINGS.

PIERS SHALL BE SUPPORTED ON 12" DIA. CONCRETE FILLED STEEL PIPE PILES DRIVEN TO AN ALLOWABLE BEARING CAPACITY OF 125 TONS.

PYLONS SHALL BE SUPPORTED ON 12" DIA. CONCRETE FILLED STEEL PIPE PILES DRIVEN TO AN ALLOWABLE BEARING CAPACITY OF 190 TONS.

RECORD DRAWING

No.	Date	Revisions	By

HNTB CORPORATION

STATE OF WISCONSIN
DEPARTMENT OF TRANSPORTATION

STRUCTURE B-40-413A

Designed By	SL	Design Checked	TZ	Drawn By	SL	Plans Checked	AP

SOUTH CABLE STAY
GENERAL NOTES
2 OF 2

SHEET SC01b OF

STATE PROJECT I.D.	SHEET NUMBER
2235-00-70	8.4

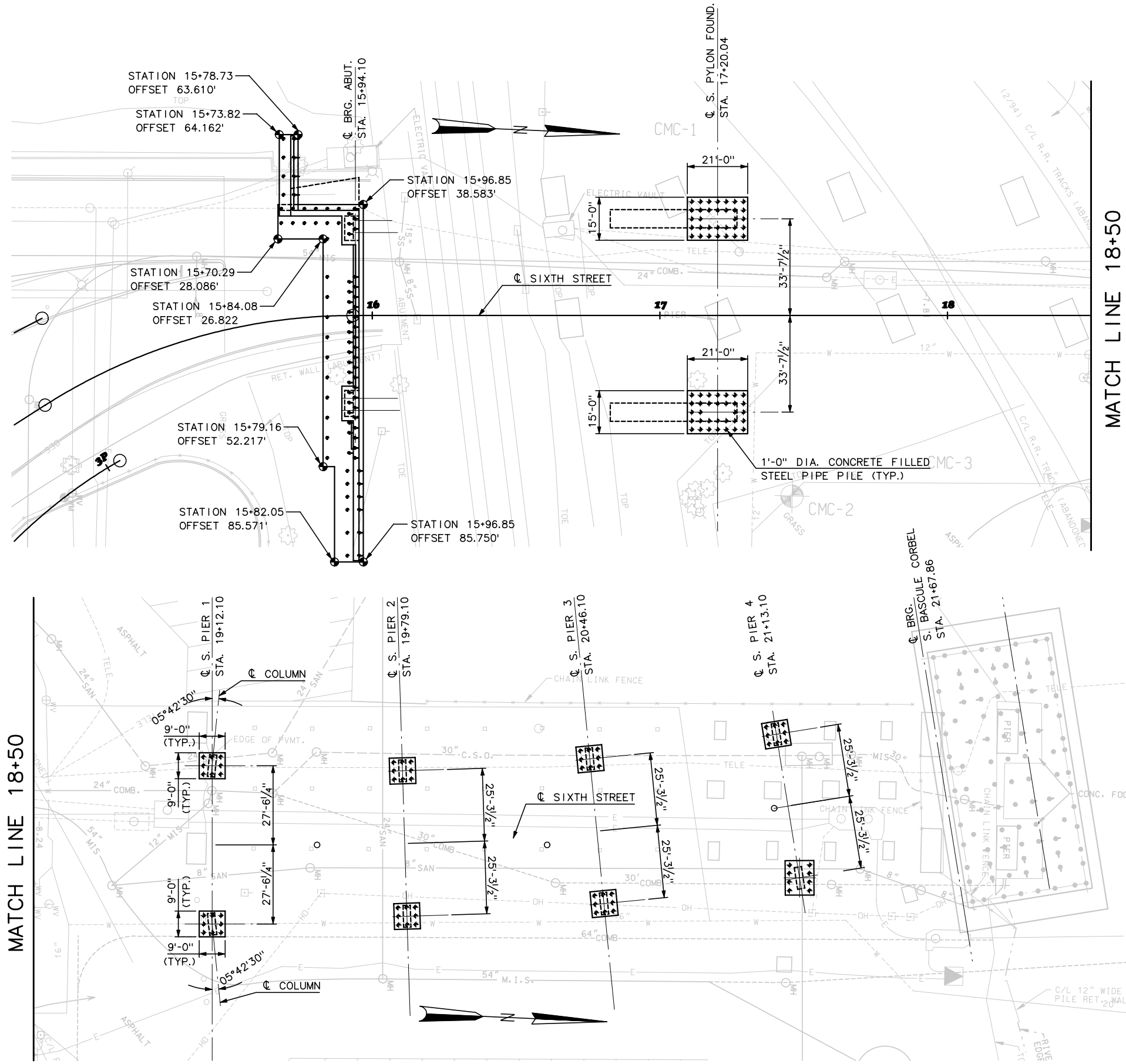

NOTES:

1. ALL FOUNDATIONS ARE PERPENDICULAR, PARALLEL AND/OR RADIAL TO ℄ SIXTH STREET AND PGL.
2. FOR ADDITIONAL ABUTMENT GEOMETRY, SEE SHEET SC04.
3. FOR ℄ SIXTH STREET AND PGL CURVE GEOMETRY, SEE CIVIL DWGS.
4. FOR UTILITY RELOCATIONS, SEE CIVIL DWGS.

PLAN

1" = 20'-0"

RECORD DRAWING

No.	Date	Revisions	By

HNTB CORPORATION

STATE OF WISCONSIN
DEPARTMENT OF TRANSPORTATION

STRUCTURE B-40-413A

Designed By	AP	Design Checked	SL	Drawn By	BM	Plans Checked	AP

SOUTH CABLE STAY FOUNDATION LAYOUT

SHEET SC02 OF .

j:\cadd\ff31185\dgn\as built\south cablestay\sc02-fndpl.dgn 02/11/03 02:56:49 PM

STATE PROJECT I.D.	SHEET NUMBER
2235-00-70	8.5

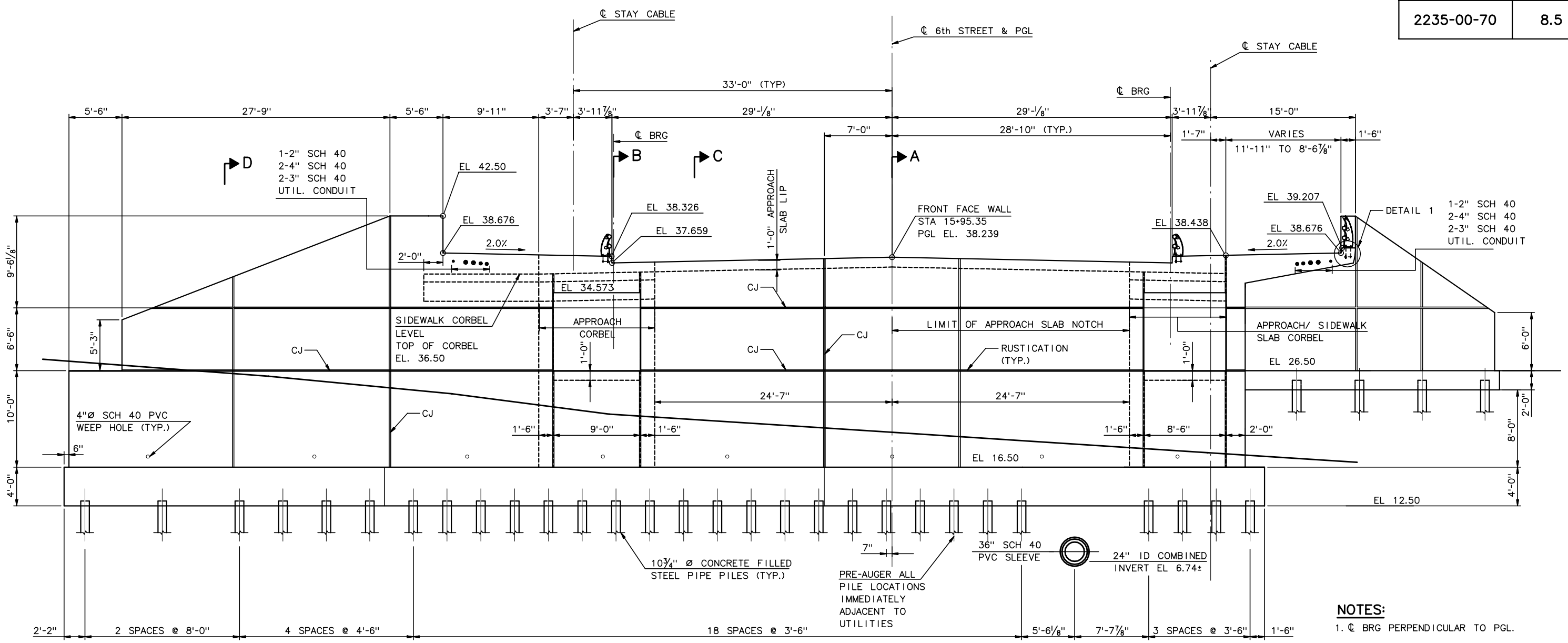

SOUTH ABUTMENT ELEVATION

(LOOKING DOWNSTATION)
3/16" = 1'-0"

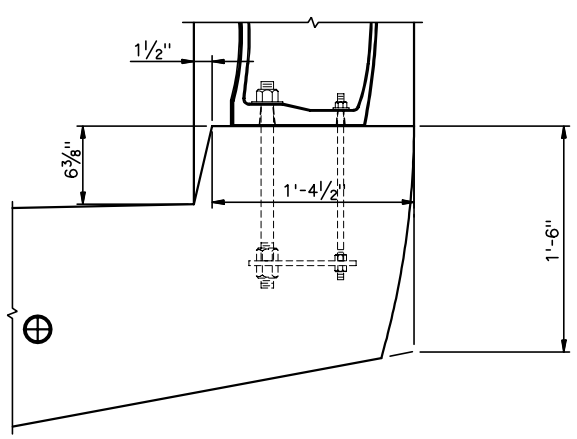

DETAIL 1

1½" = 1'-0"

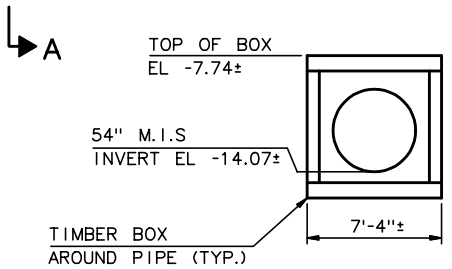

NOTES:

1. ℄ BRG PERPENDICULAR TO PGL.
2. STEEL PIPE PILES HAVE A 6" EMBEDMENT INTO FOOTING.
3. FOR BRG MASONRY PLATE, SEE BRG. DETAILS.
4. ALL PILES ARE STEEL PIPE PILES, SEE TABLE FOR SIZE.
5. WINGWALL CANTILEVERED SIDEWALK NOT SHOWN.
6. ALL ELEVATIONS SHOWN AT FRONT FACE OF ABUTMENT WALL.
7. ALL CONSTRUCTION JOINTS SHALL BE KEYED WITH A KEY DIM. OF 2"x6". SEAL ALL HORIZ. AND VERT. CONSTRUCTION JOINTS WITH 18" RUBBERIZED WATER-PROOFING MEMBRANE.

RECORD DRAWING

No.	Date	Revisions	By
4	12-17-01	REVISE EAST, WEST WINGWALL	AP
3	11-29-01	ADD 2 RAILING BARRIER	AP
2	11-27-01	Rev E Swalk notch to corbel	AP
1	11-14-01	Add Utilities	BM

HNTB CORPORATION

STATE OF WISCONSIN
DEPARTMENT OF TRANSPORTATION

STRUCTURE B-40-413A

Designed By	GD	Design Checked	AP	Drawn By	JE	Plans Checked	AP

SOUTH CABLE STAY ABUTMENT GEOMETRY 1 OF 3

SHEET SC03 OF .

STATE PROJECT I.D.	SHEET NUMBER
2235-00-70	8.6

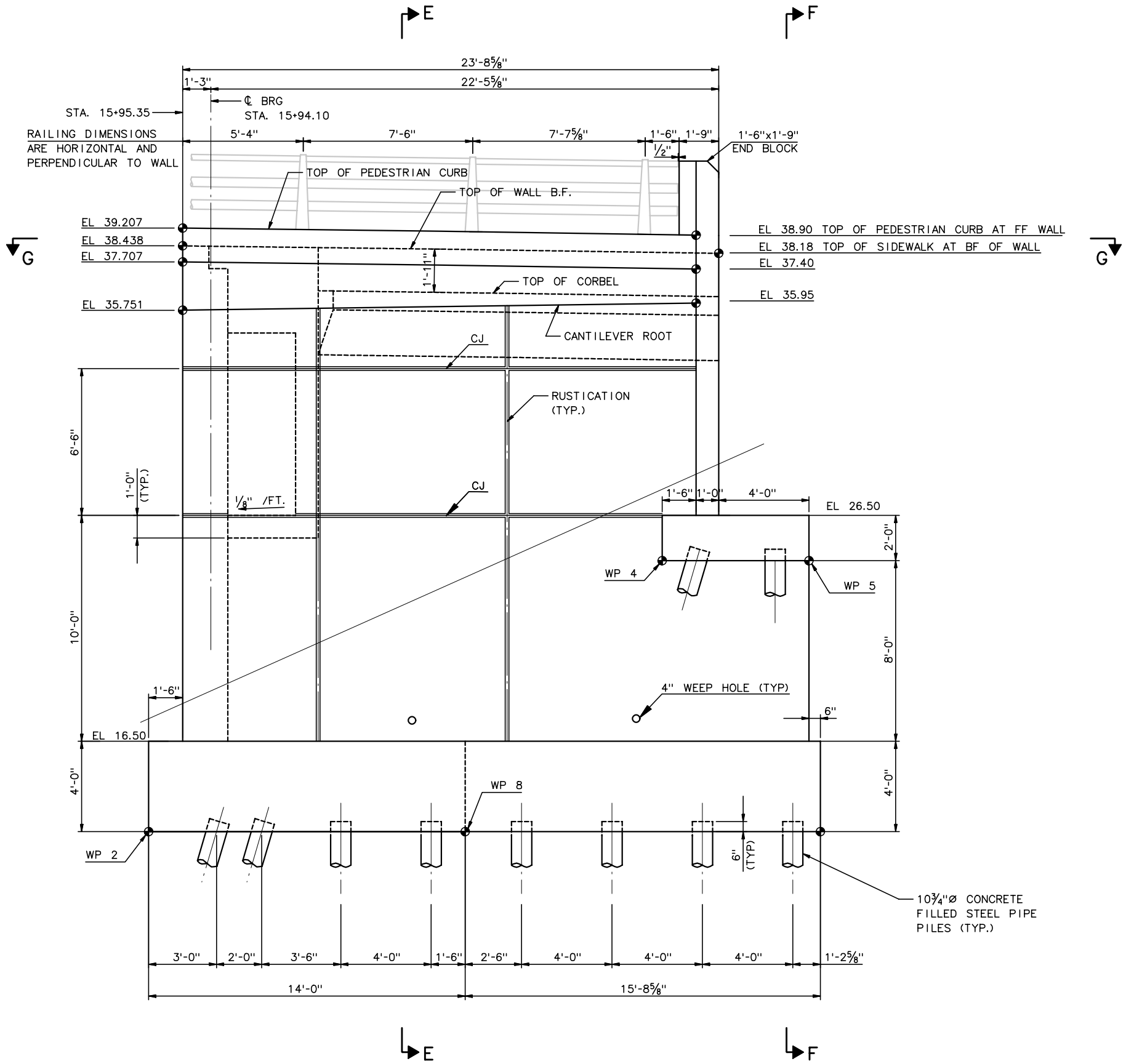

ELEVATION WEST WINGWALL

⅜" = 1'-0"

NOTES:

1. FOR WORK POINT GEOMETRY, SEE SHEET SC04
2. FOR RAILING DETAIL, SEE SHT SC83.

RECORD DRAWING

No.	Date	Revisions	By
3	12-27-01	REV END BLOCK	AP
2	11-26-01	Add Corbel	AP
1	11-14-01	Rev. Wall Geom.	AP

HNTB CORPORATION

STATE OF WISCONSIN
DEPARTMENT OF TRANSPORTATION

STRUCTURE B-40-413A

Designed By	GD	Design Checked	AP	Drawn By	JE	Plans Checked	AP

SOUTH CABLE STAY ABUTMENT GEOMETRY 2 OF 3

SHEET SC03a OF .

STATE PROJECT I.D.	SHEET NUMBER
2235-00-70	8.7

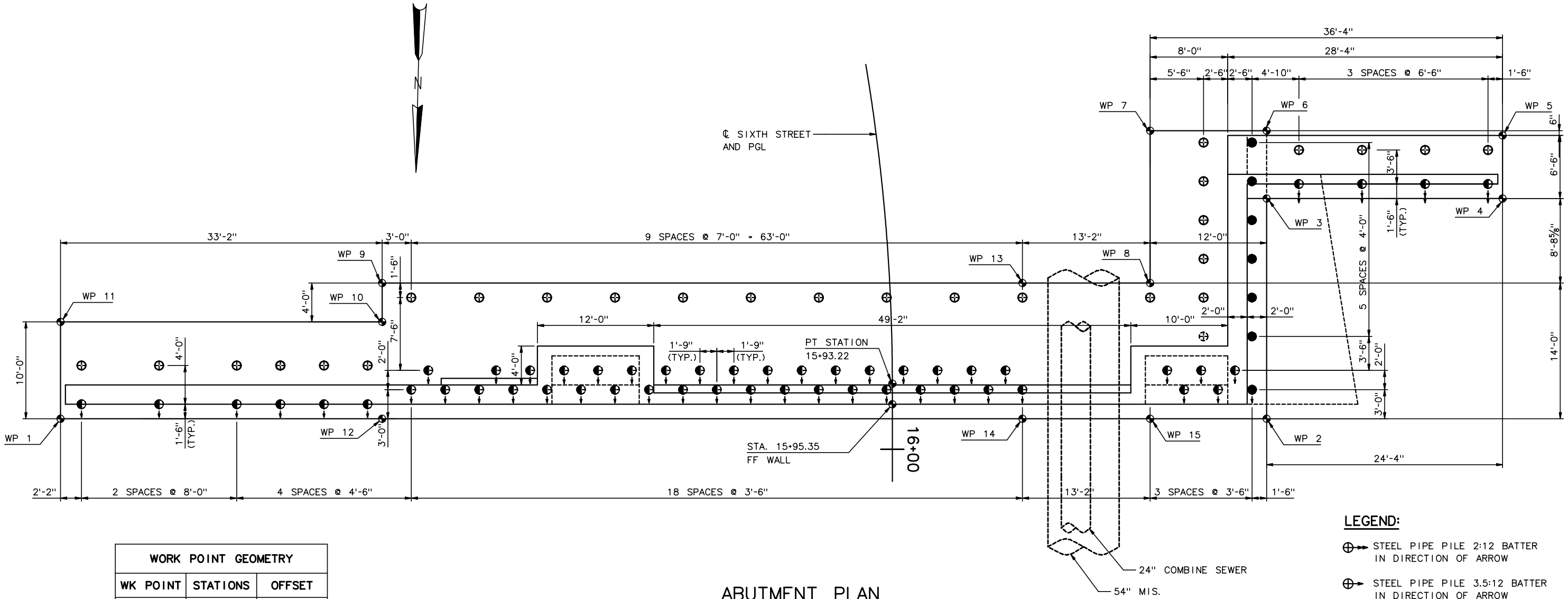

ABUTMENT PLAN

3/16" = 1'-0"

WORK POINT GEOMETRY		
WK POINT	STATIONS	OFFSET
1	15+96.85	85.750'
2	15+96.85	38.583'
3	15+77.15	39.349'
4	15+78.73	63.610'
5	15+73.82	64.162'
6	15+71.44	40.010'
7	15+70.29	28.086'
8	15+84.08	26.822'
9	15+79.16	52.217'
10	15+84.57	52.445'
11	15+82.05	85.571'
12	15+96.85	52.583'
13	15+83.51	13.669'
14	15+96.85	13.417'
15	15+96.85	26.583'

PILE CAPACITY IN TONS:

PIPE DIAM 10 3/4

- ⊕ 50
- ◐ 70
- ● 85

LEGEND:

- ⊕→ STEEL PIPE PILE 2:12 BATTER IN DIRECTION OF ARROW
- ⊕→ STEEL PIPE PILE 3.5:12 BATTER IN DIRECTION OF ARROW
- ⊕ STEEL PIPE PILE (VERTICLE)

NOTES:

1. ℄ BRG PERPENDICULAR TO PGL.
2. STEEL PIPE PILES HAVE A 6" EMBEDMENT INTO FOOTING.
3. WINGWALL CANTILEVER SIDEWALK SHOWN DASHED.

RECORD DRAWING

No.	Date	Revisions	By
1	11-14-01	REV WEST WW GEOM, DEL NOTE 4 ADD CAPACITY TABLE	AP

HNTB CORPORATION

STATE OF WISCONSIN
DEPARTMENT OF TRANSPORTATION

STRUCTURE B-40-413A

Designed By GD | Design Checked AP | Drawn By JE | Plans Checked AP

SOUTH CABLE STAY
ABUTMENT GEOMETRY
3 OF 3

SHEET SC04 OF .

j:\cadd\ff31185\dgn\as built\south cablestay\sc04-abutpl.dgn 02/11/03 02:56:51 PM

STATE PROJECT I.D.	SHEET NUMBER
2235-00-70	8.8

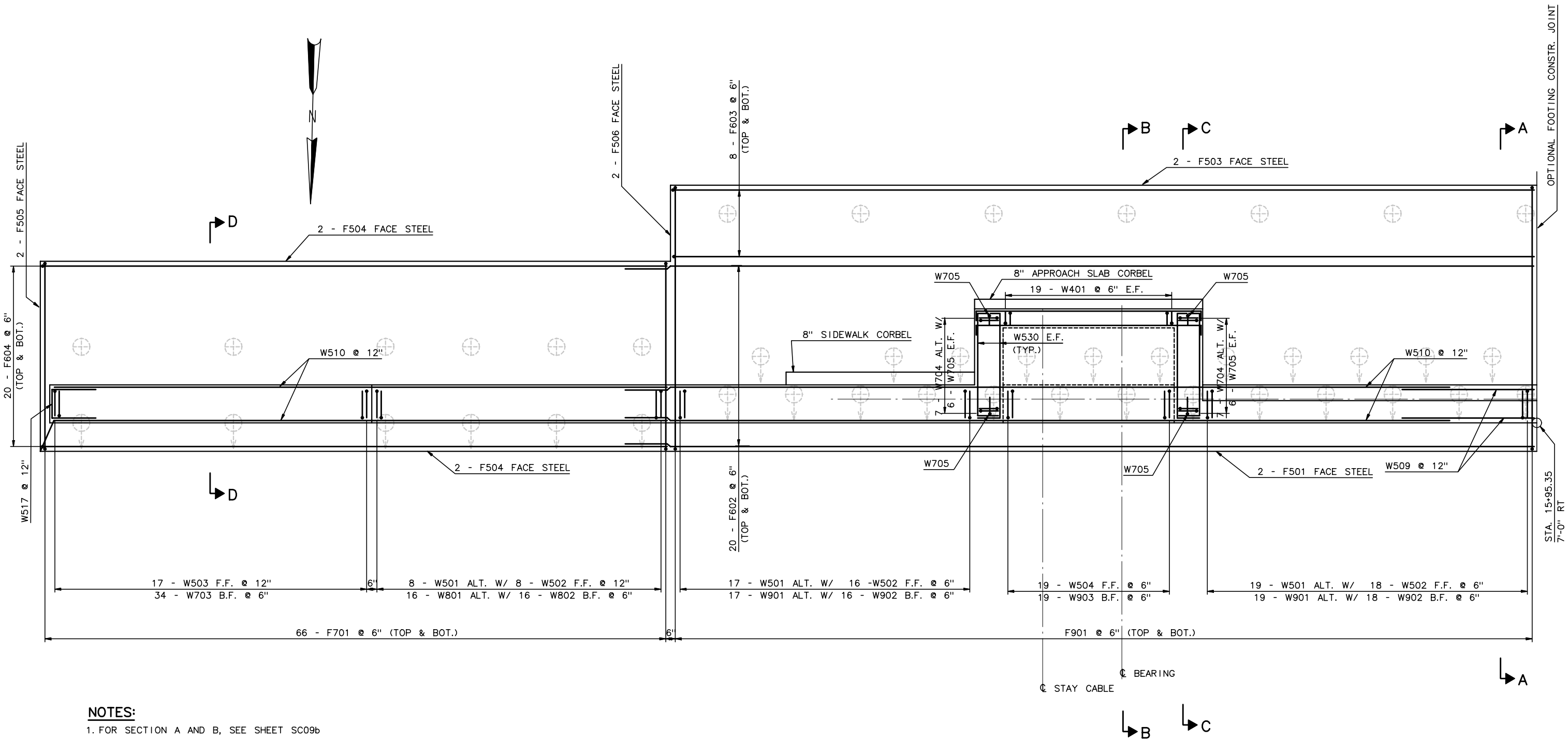

ABUTMENT PLAN EASTERN PART

3/8" = 1'-0"

NOTES:

1. FOR SECTION A AND B, SEE SHEET SC09b
2. FOR SECTION C, SEE SHEET SC09c
3. FOR SECTION D, SEE SHEET SC09d
4. COVER:
   - 3" TOP & SIDES OF FOOTING
   - 2½" TOP & SIDES OF STEMWALL
   - 2" TOP OF SIDEWALK
5. ALL REINFORCEMENT IS EPOXY COATED, EXCEPT BARS DESIGNED BY PLXXX & FXXX.
6. ALL REFORCEMENT IS ASTM A615 OR A996, GRADE 60.

RECORD DRAWING

No.	Date	Revisions	By

HNTB CORPORATION

STATE OF WISCONSIN
DEPARTMENT OF TRANSPORTATION

STRUCTURE B-40-413A

Designed By	GD	Design Checked	AP	Drawn By	JE	Plans Checked	AP

SOUTH CABLE STAY ABUTMENT DETAILS 1 OF 10

SHEET SC05 OF .

STATE PROJECT I.D.	SHEET NUMBER
2235-00-70	8.9

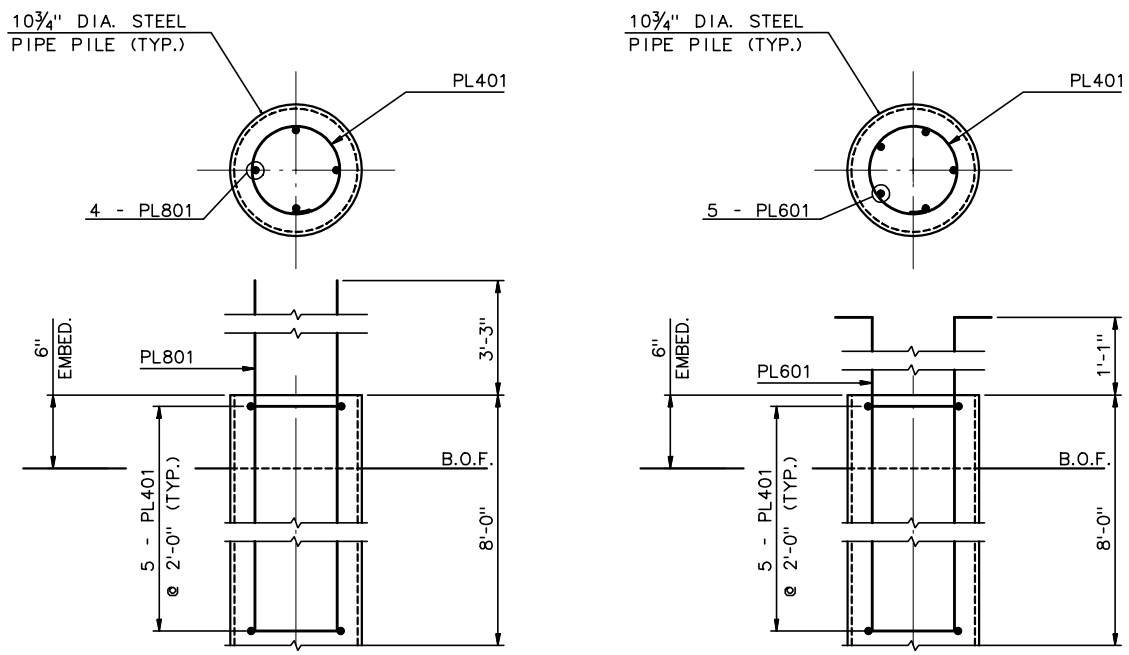

4' FOOTING

2' FOOTING

10¾"Ø PILE REINF. DETAIL

1½" = 1'-0"

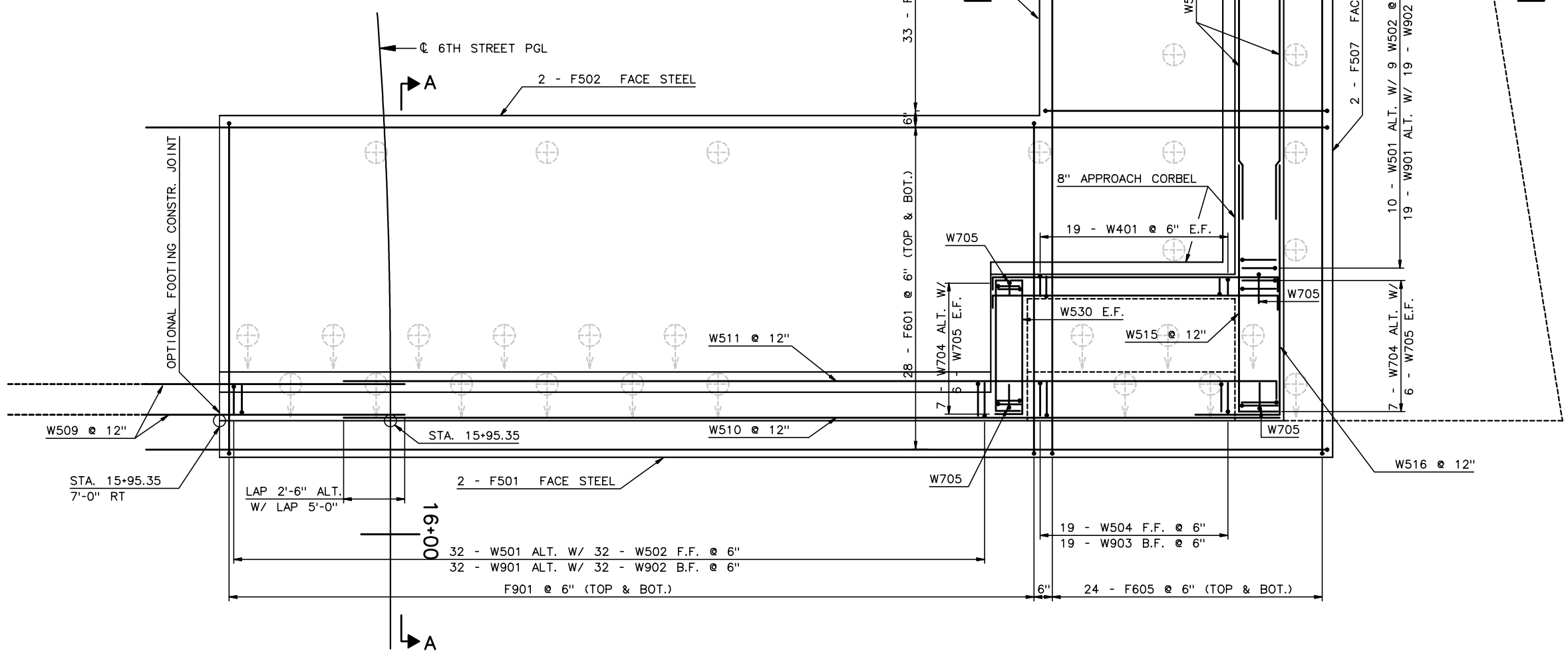

ABUTMENT PLAN WESTERN PART

⅜" = 1'-0"

NOTES:

1. FOR SECTION A, SEE SHEET SC09b.
2. FOR SECTION E, SEE SHEET SC09c.

RECORD DRAWING

No.	Date	Revisions	By

HNTB CORPORATION

STATE OF WISCONSIN
DEPARTMENT OF TRANSPORTATION

STRUCTURE B-40-413A

Designed By	GD	Design Checked	AP	Drawn By	JE	Plans Checked	AP

SOUTH CABLE STAY ABUTMENT DETAILS 2 OF 10

SHEET SC06 OF .

STATE PROJECT I.D.	SHEET NUMBER
2235-00-70	8.10

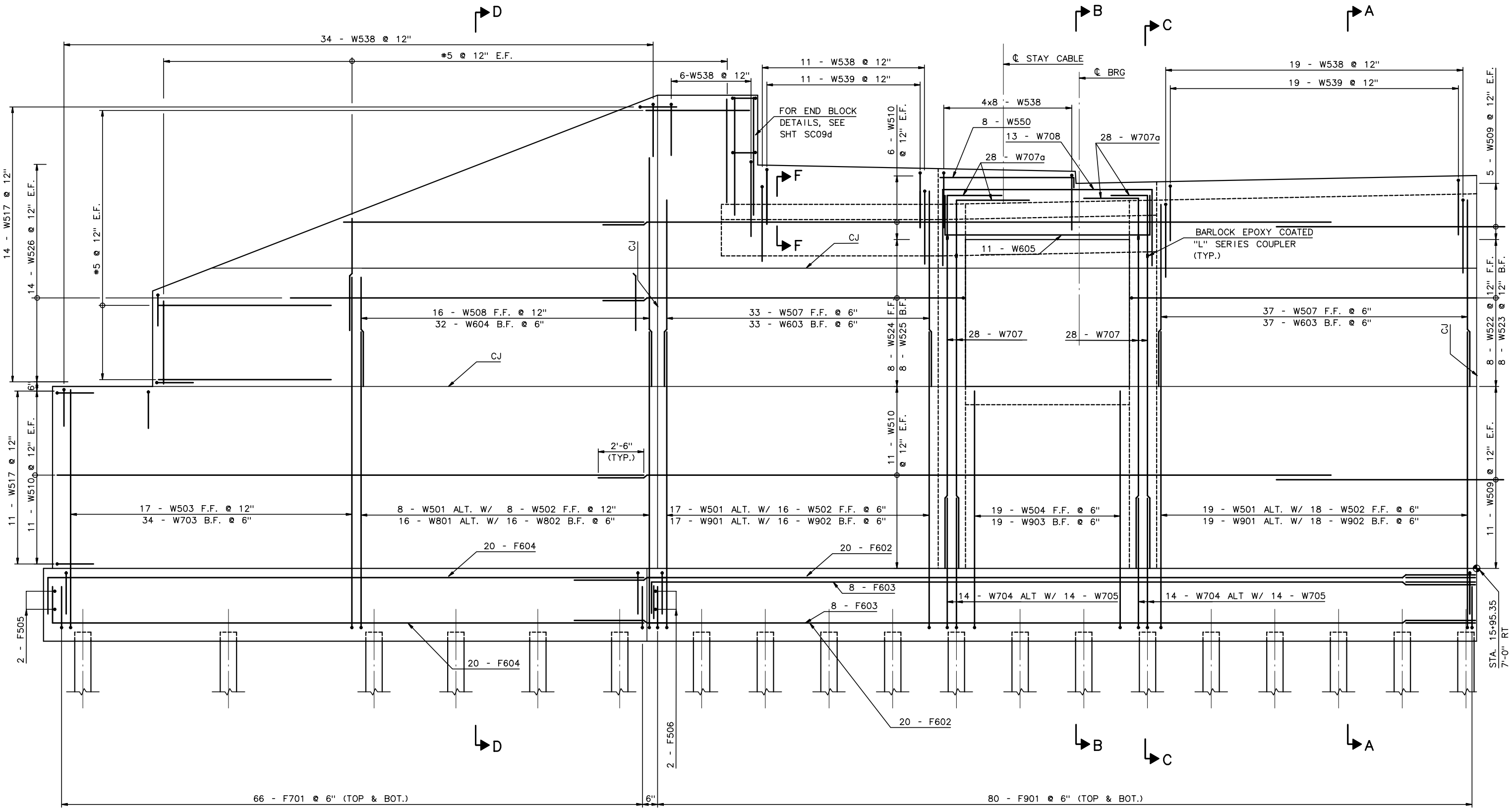

NOTES:

1. FOR SECTIONS A & B, SEE SHEET SC09b
2. FOR SECTION C, SEE SHEET SC09c.
3. FOR SECTION D, SEE SHEET SC09d.
4. FOR SECTION F, SEE SHEET SC09e.

ABUTMENT ELEVATION

3/8" = 1'-0"

RECORD DRAWING

No.	Date	Revisions	By
1	12-27-01	REV WINGWALL REINF	AP

HNTB CORPORATION

STATE OF WISCONSIN
DEPARTMENT OF TRANSPORTATION

STRUCTURE B-40-413A

Designed By	GD	Design Checked	AP	Drawn By	JE	Plans Checked	AP

SOUTH CABLE STAY ABUTMENT DETAILS 3 OF 10

SHEET SC07 OF .

j:\cadd\ff31185\dgn\as built\south cablestay\sc07-abutdet3.dgn 02/11/03 02:56:53 PM

STATE PROJECT I.D.	SHEET NUMBER
2235-00-70	8.11

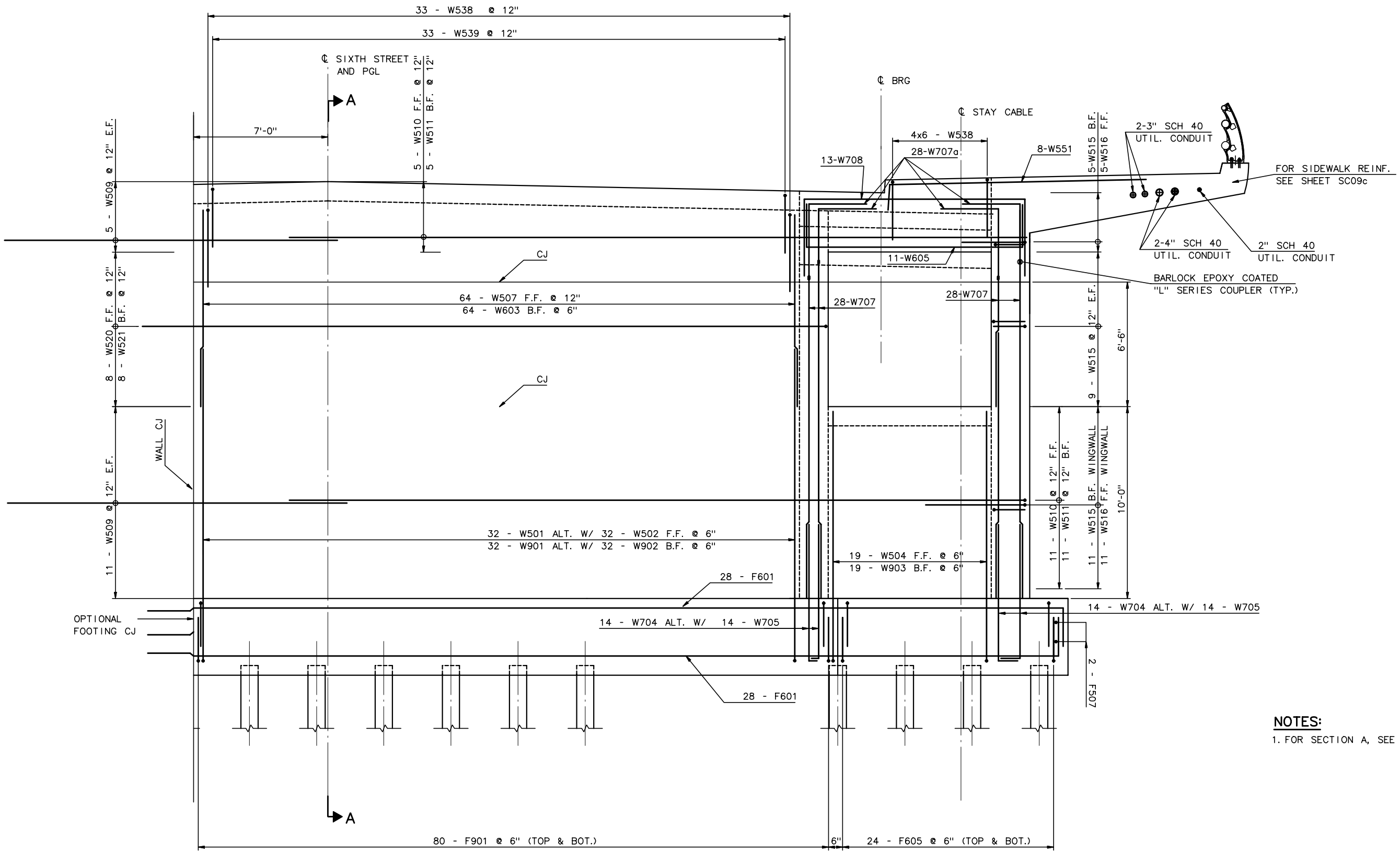

ABUTMENT ELEVATION

3/8" = 1'-0"

NOTES:

1. FOR SECTION A, SEE SHEET SC09b.

RECORD DRAWING

No.	Date	Revisions	By

HNTB CORPORATION

STATE OF WISCONSIN
DEPARTMENT OF TRANSPORTATION

STRUCTURE B-40-413A

Designed By	GD	Design Checked	AP	Drawn By	JE	Plans Checked	AP

SOUTH CABLE STAY ABUTMENT DETAIL 4 OF 10

SHEET SC08 OF .

j:\cadd\ff31185\dgn\as built\south cablestay\sc08-abutdet4.dgn 02/11/03 02:56:53 PM

STATE PROJECT I.D.	SHEET NUMBER
2235-00-70	8.12

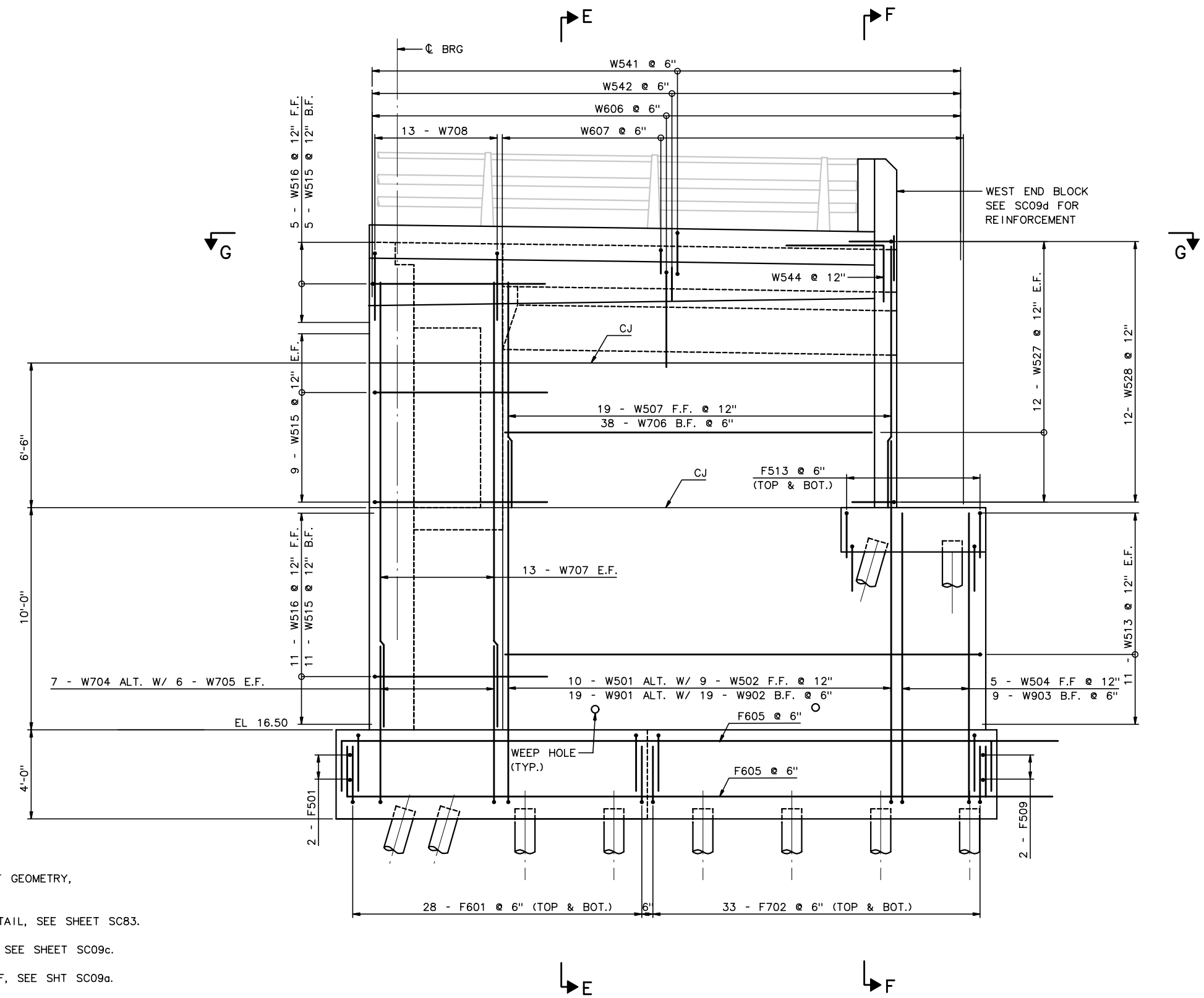

NOTES:

1. FOR WORK POINT GEOMETRY, SEE SHEET SC04.
2. FOR RAILING DETAIL, SEE SHEET SC83.
3. FOR SECTION E, SEE SHEET SC09c.
4. FOR ELEVATION F, SEE SHT SC09a.

ELEVATION WEST WINGWALL

3/8" = 1'-0"

RECORD DRAWING

No.	Date	Revisions	By
1	2-27-01	REV END BLOCK	AP

HNTB CORPORATION

STATE OF WISCONSIN
DEPARTMENT OF TRANSPORTATION

STRUCTURE B-40-413A

Designed By	GD	Design Checked	AP	Drawn By	JE	Plans Checked	AP

SOUTH CABLE STAY
ABUTMENT DETAIL
5 OF 10

SHEET SC09 OF .

STATE PROJECT I.D.	SHEET NUMBER
2235-00-70	8.13

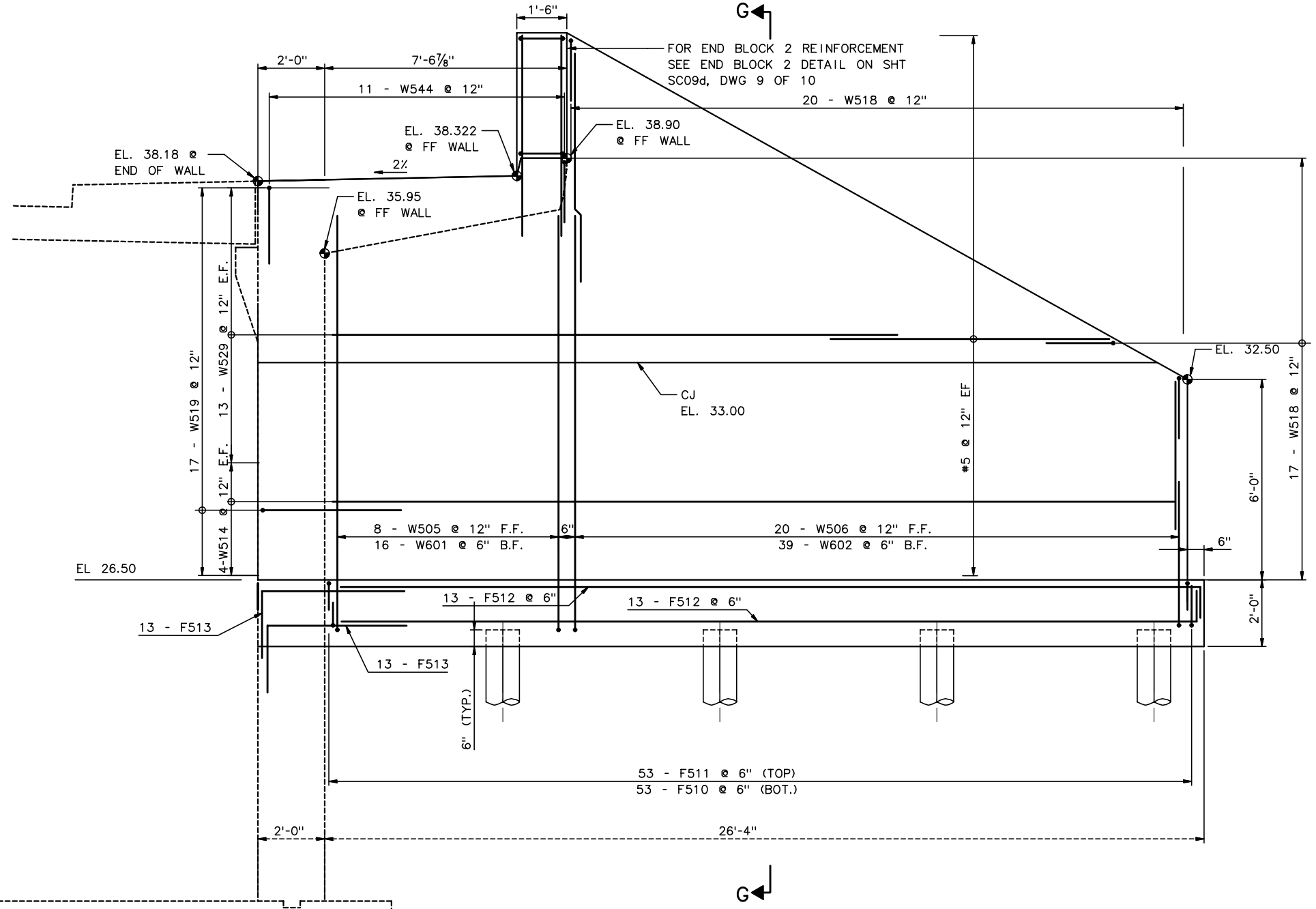

ELEVATION F-F WEST BACKWALL

½" = 1'-0"

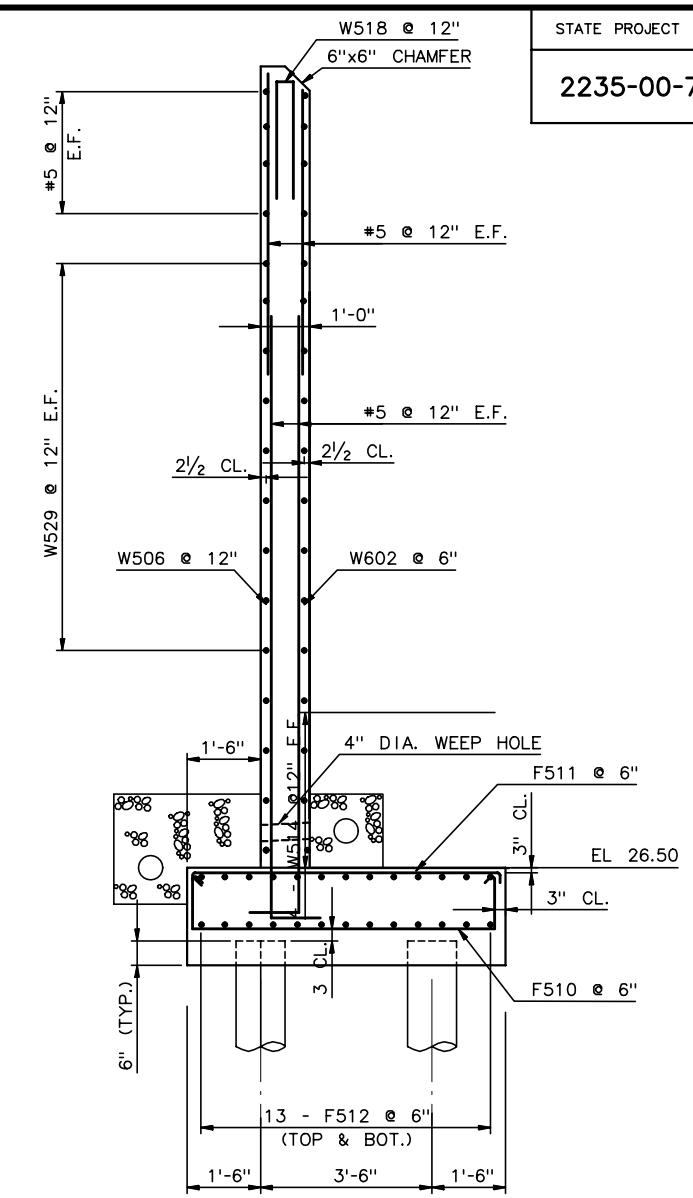

SECTION G

½" = 1'-0"

NOTE:

1. ALL REINFORCEMENT IS ASTM A615 OR A996, GRADE 60.
2. ALL REINFORCEMENT IS EPOXY COATED, EXCEPT BARS DESIGNATED FXXX AND PLXXX.
3. FOR PILE LAYOUT, SEE ABUTMENT GEOMETRY SHEET 3 OF 3.
4. FOR RAILING DETAILS SEE 3 RAIL BRIDGE RAILING DWG.
5. FOOTING CLEAR COVER = 3".
   WALL CLEAR COVER = 2½".

RECORD DRAWING

No.	Date	Revisions	By
1	2-27-01	REV WINGWALL	AP

HNTB CORPORATION

STATE OF WISCONSIN
DEPARTMENT OF TRANSPORTATION

STRUCTURE B-40-413A

Designed By	GD	Design Checked	AP	Drawn By	JE	Plans Checked	AP

SOUTH CABLE STAY ABUTMENT DETAILS 6 OF 10

SHEET SC09a OF .

STATE PROJECT I.D.	SHEET NUMBER
2235-00-70	8.14

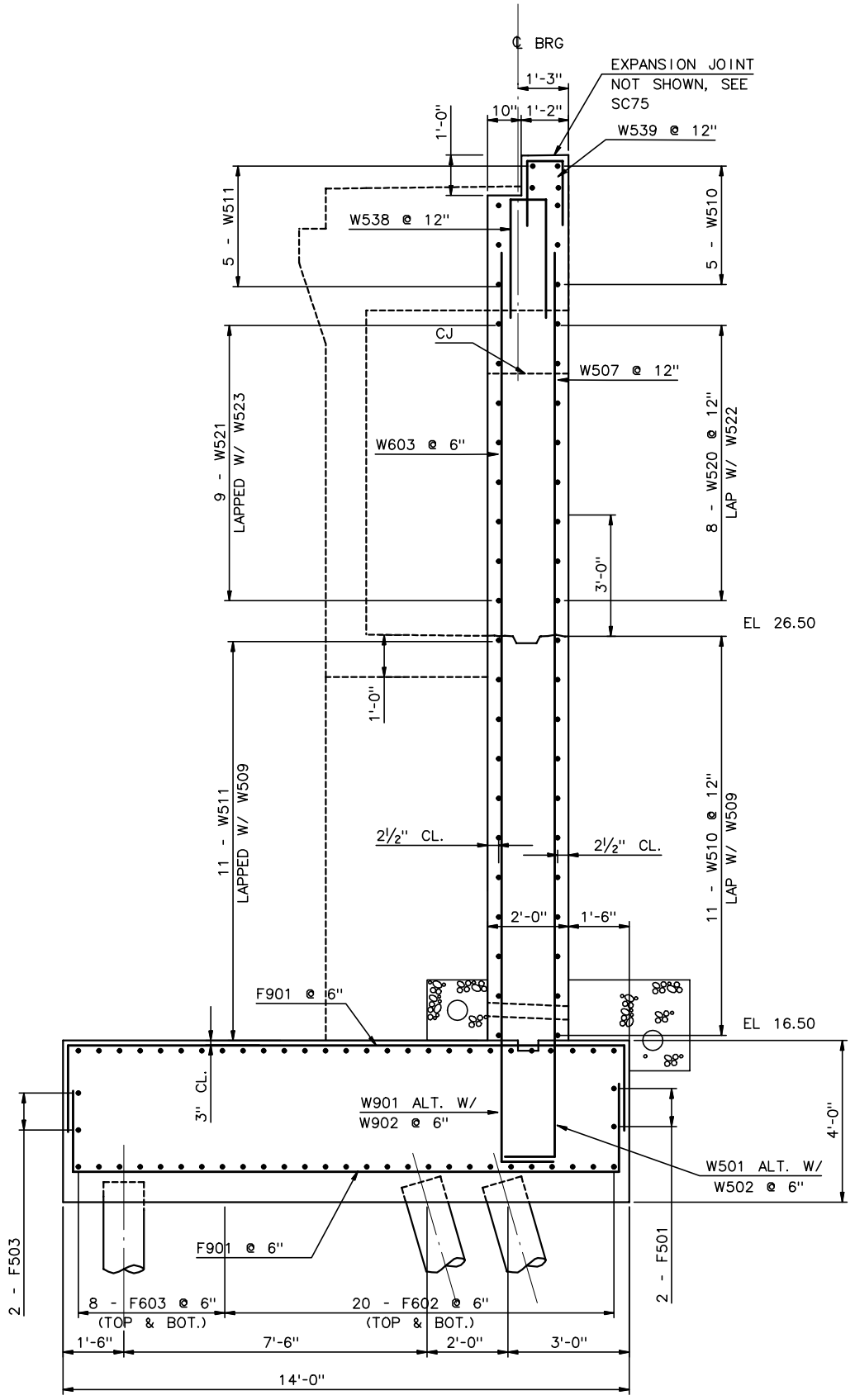

SECTION A

½" = 1'-0"

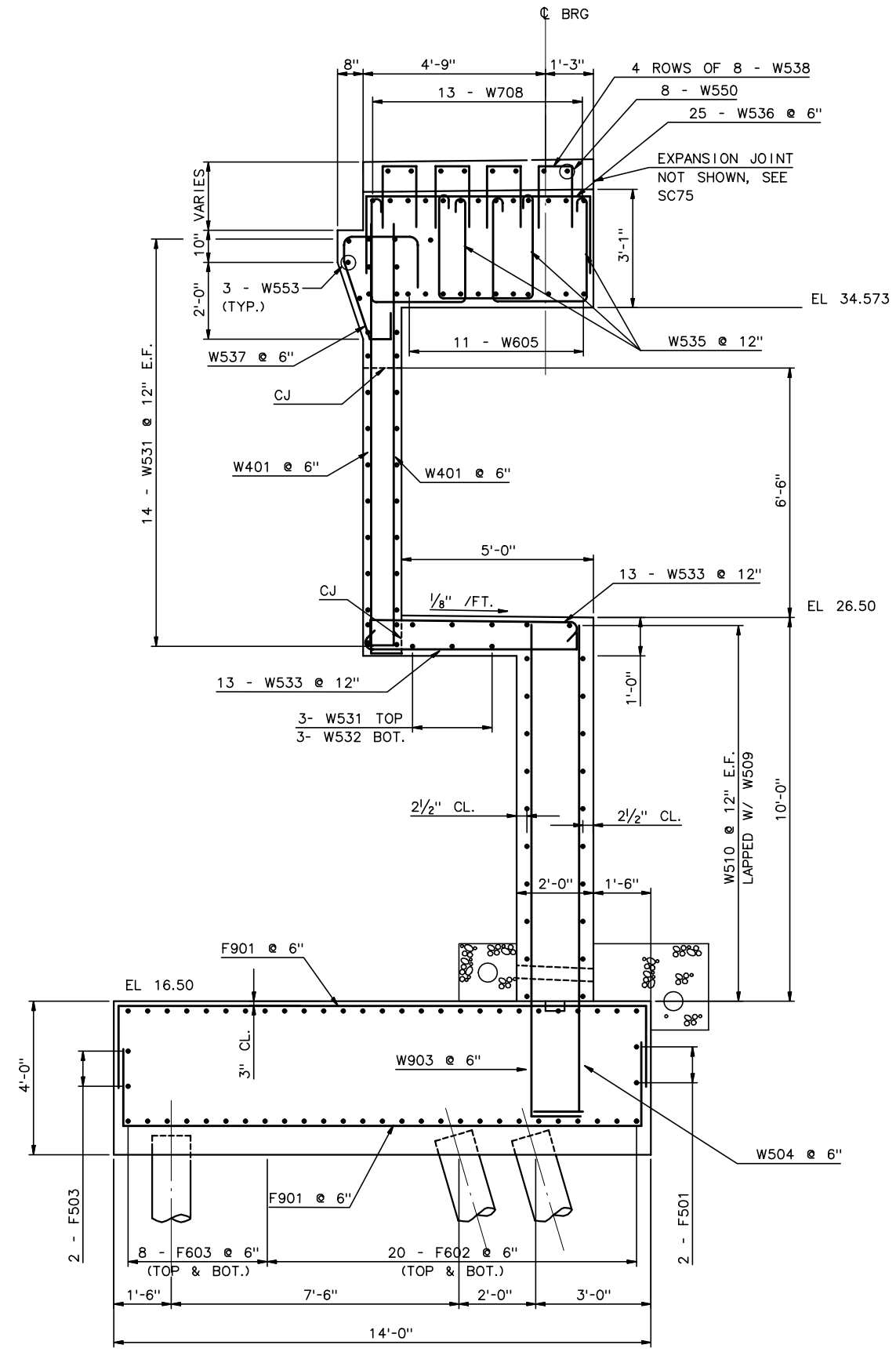

SECTION B

½" = 1'-0"

RECORD DRAWING

No.	Date	Revisions	By

HNTB CORPORATION

STATE OF WISCONSIN
DEPARTMENT OF TRANSPORTATION

STRUCTURE B-40-413A

Designed By	GD	Design Checked	AP	Drawn By	JE	Plans Checked	AP

SOUTH CABLE STAY
ABUTMENT DETAILS
7 OF 10

SHEET SC09b OF .

j:\cadd\ff31185\dgn\as built\south cablestay\sc09b-abutdet7.dgn 02/11/03 02:56:55 PM

STATE PROJECT I.D.	SHEET NUMBER
2235-00-70	8.15

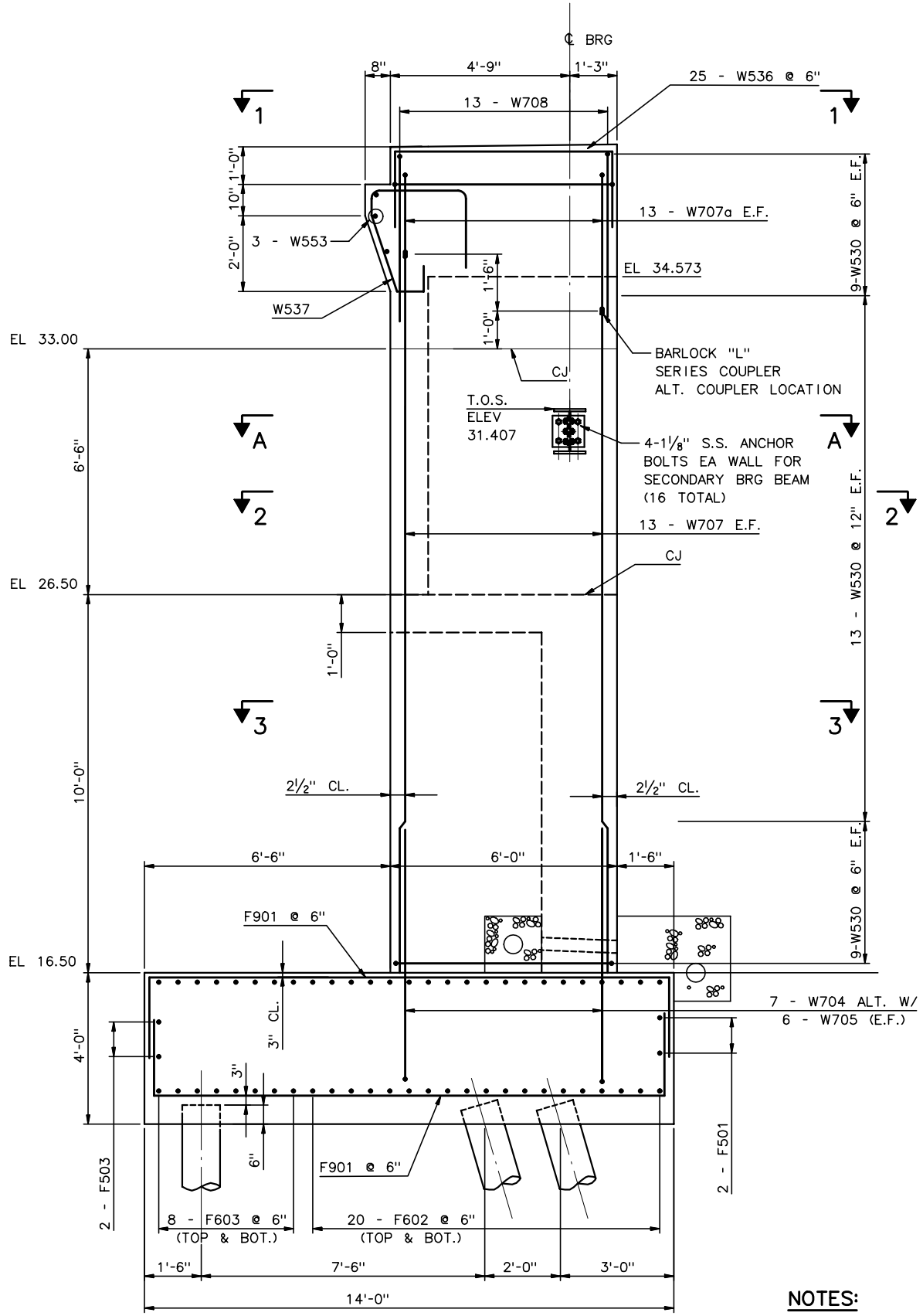

SECTION C

½" = 1'-0"

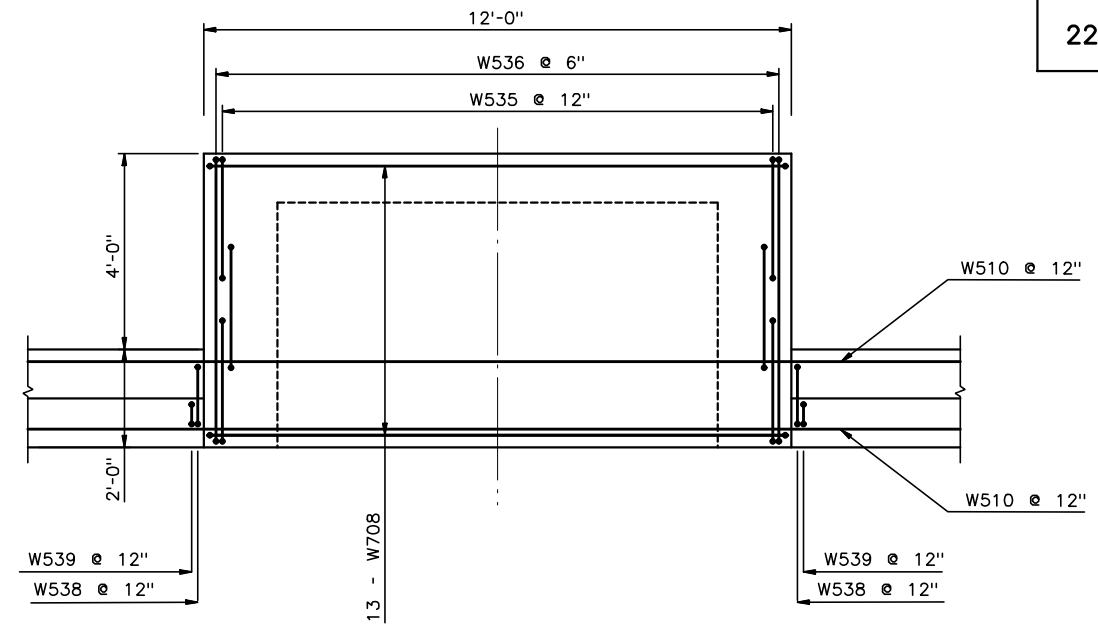

SECTION 1-1

½" = 1'-0"

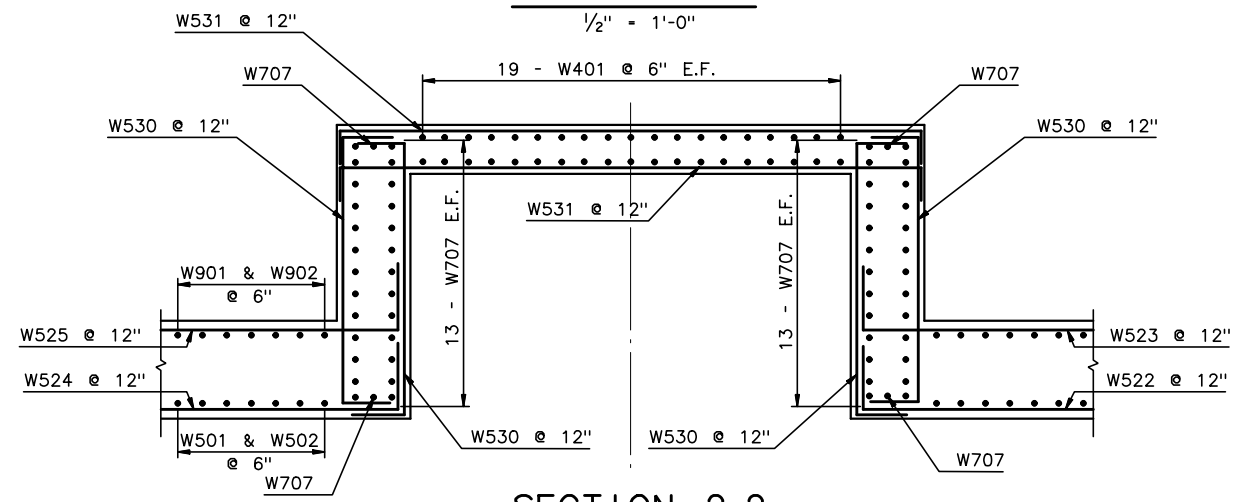

SECTION 2-2

½" = 1'-0"

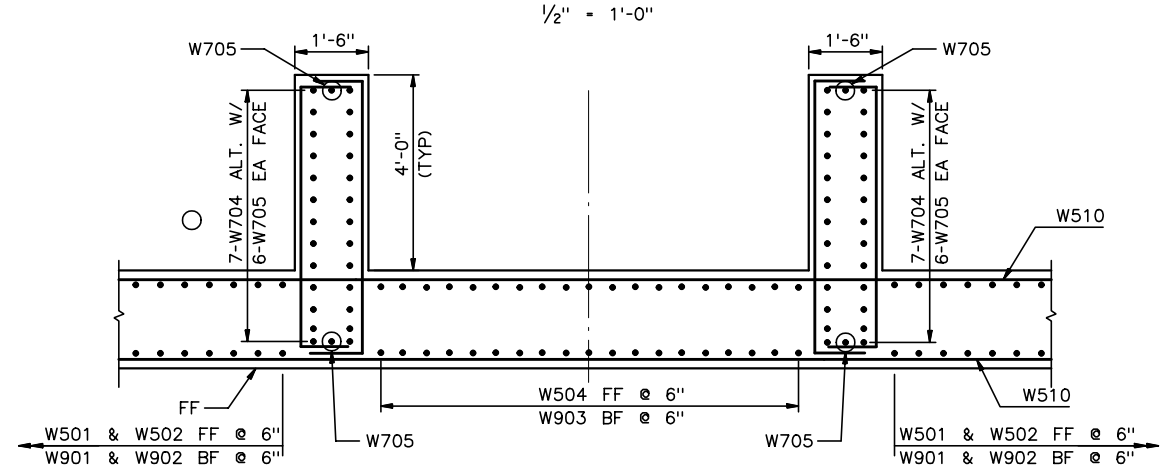

SECTION 3-3

½" = 1'-0"

NOTES:

1. S.S. ANCHOR BOLTS SHALL BE ASTM A276 TYPE 304 WITH A MIN TENSILE STRENGTH OF 70 KSI.
2. FOR SECTION A AND SECONDARY BRG. BEAM DETAILS, SEE SHEET SC09F.

RECORD DRAWING

No.	Date	Revisions	By
1	2-20-01	REV ANCH BOLT, ADD NOTE 2	AP

HNTB CORPORATION

STATE OF WISCONSIN
DEPARTMENT OF TRANSPORTATION

STRUCTURE B-40-413A

Designed By	GD	Design Checked	AP	Drawn By	JE	Plans Checked	AP

SOUTH CABLE STAY ABUTMENT DETAILS 8 OF 10

SHEET SC09c OF .

STATE PROJECT I.D.	SHEET NUMBER
2235-00-70	8.16

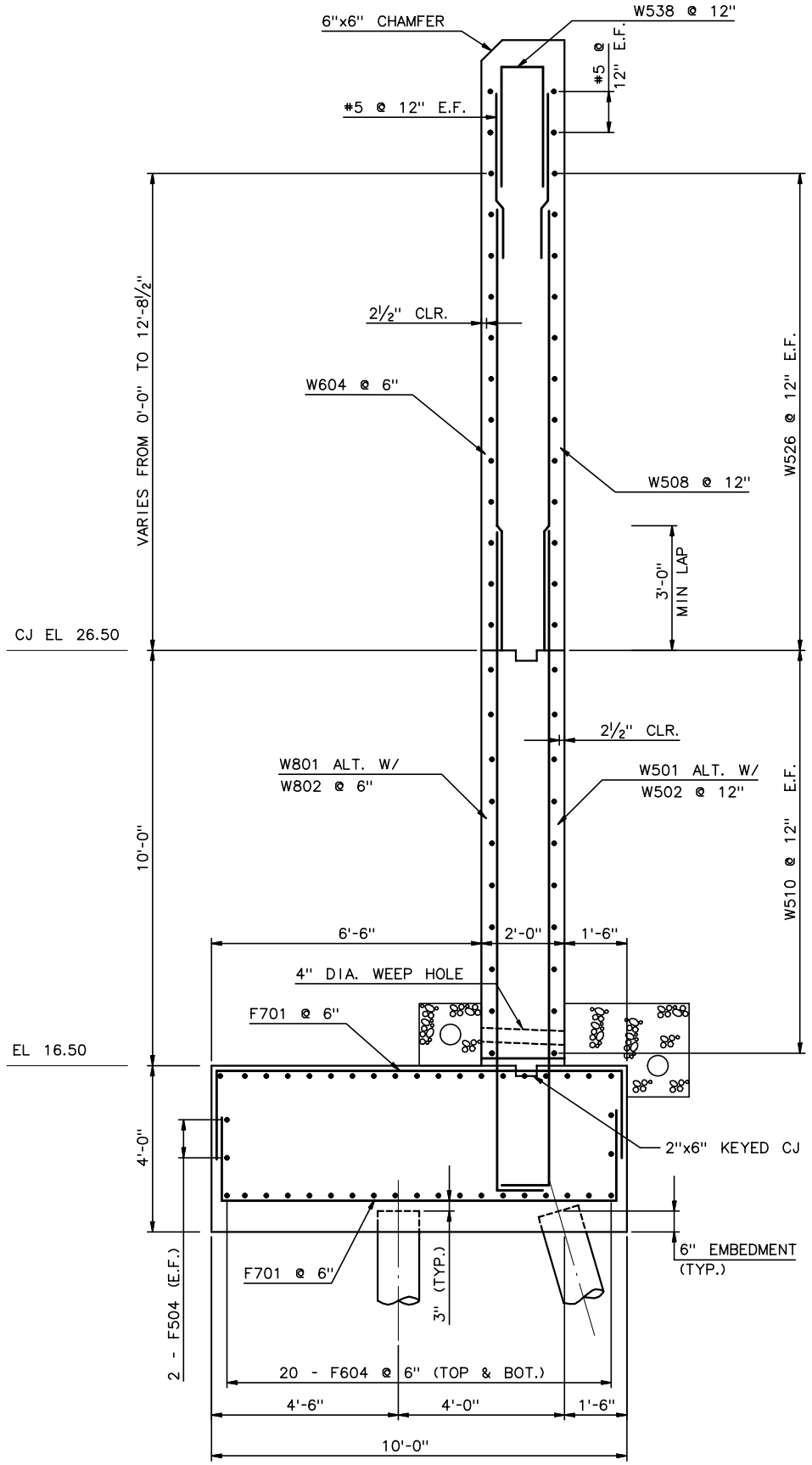

SECTION D
½" = 1'-0"

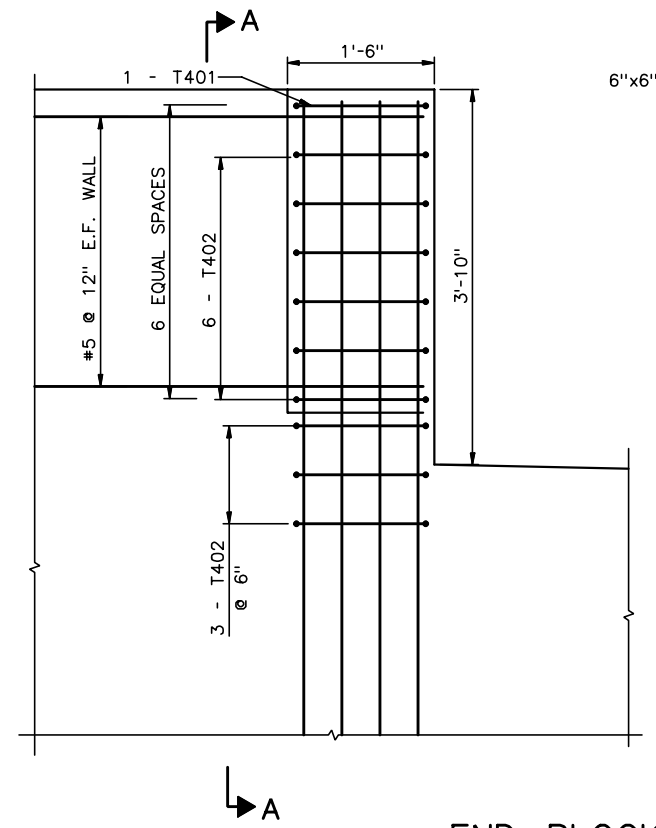

END BLOCK EAST DETAIL
1" = 1'-0"

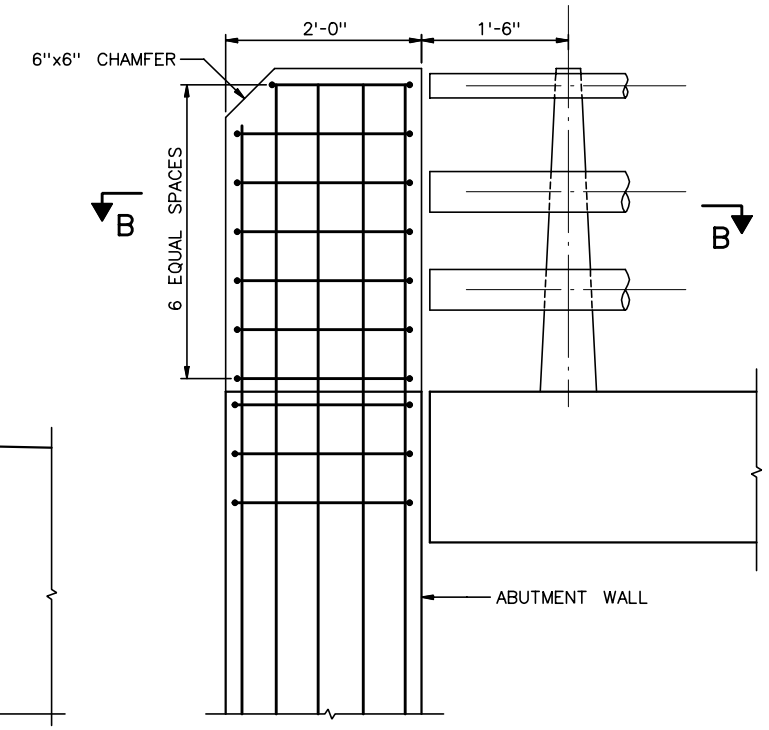

SECTION A-A

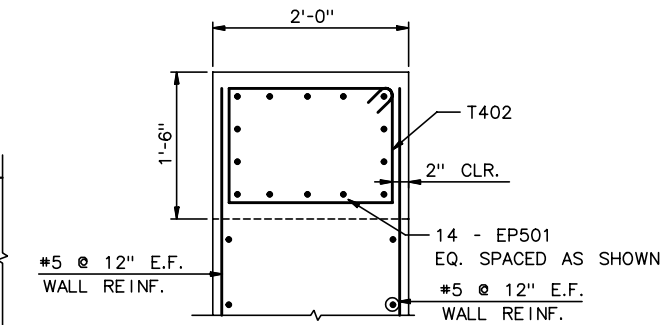

SECTION B-B

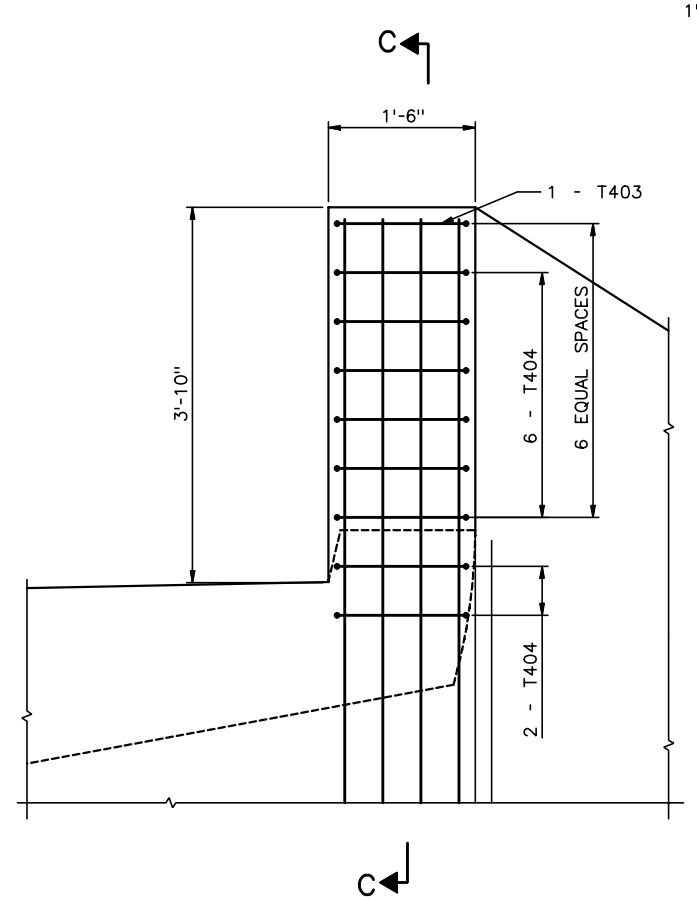

END BLOCK WEST DETAIL
1" = 1'-0"

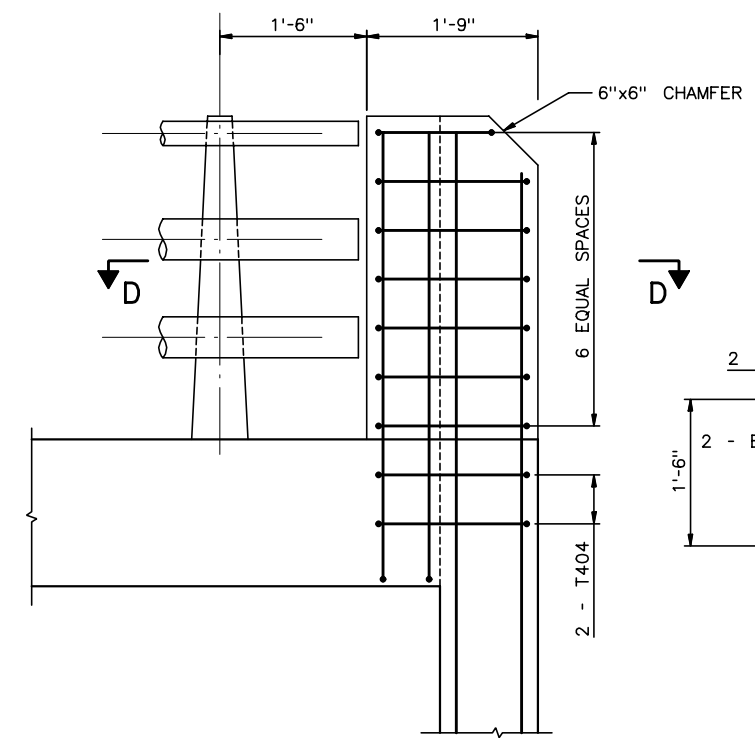

SECTION C-C

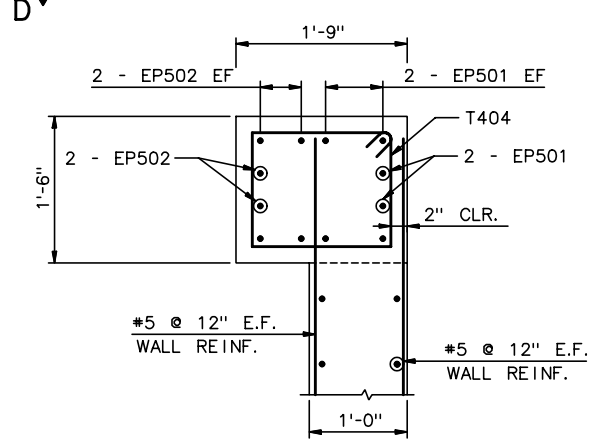

SECTION D-D

RECORD DRAWING

No.	Date	Revisions	By
1	12-27-01	REV SECT D, END BLOCK	AP

HNTB CORPORATION

STATE OF WISCONSIN
DEPARTMENT OF TRANSPORTATION

STRUCTURE B-40-413A

Designed By	GD	Design Checked	AP	Drawn By	JE	Plans Checked	AP

SOUTH CABLE STAY ABUTMENT DETAILS 9 OF 10

SHEET SC09d OF .

STATE PROJECT I.D.	SHEET NUMBER
2235-00-70	8.17

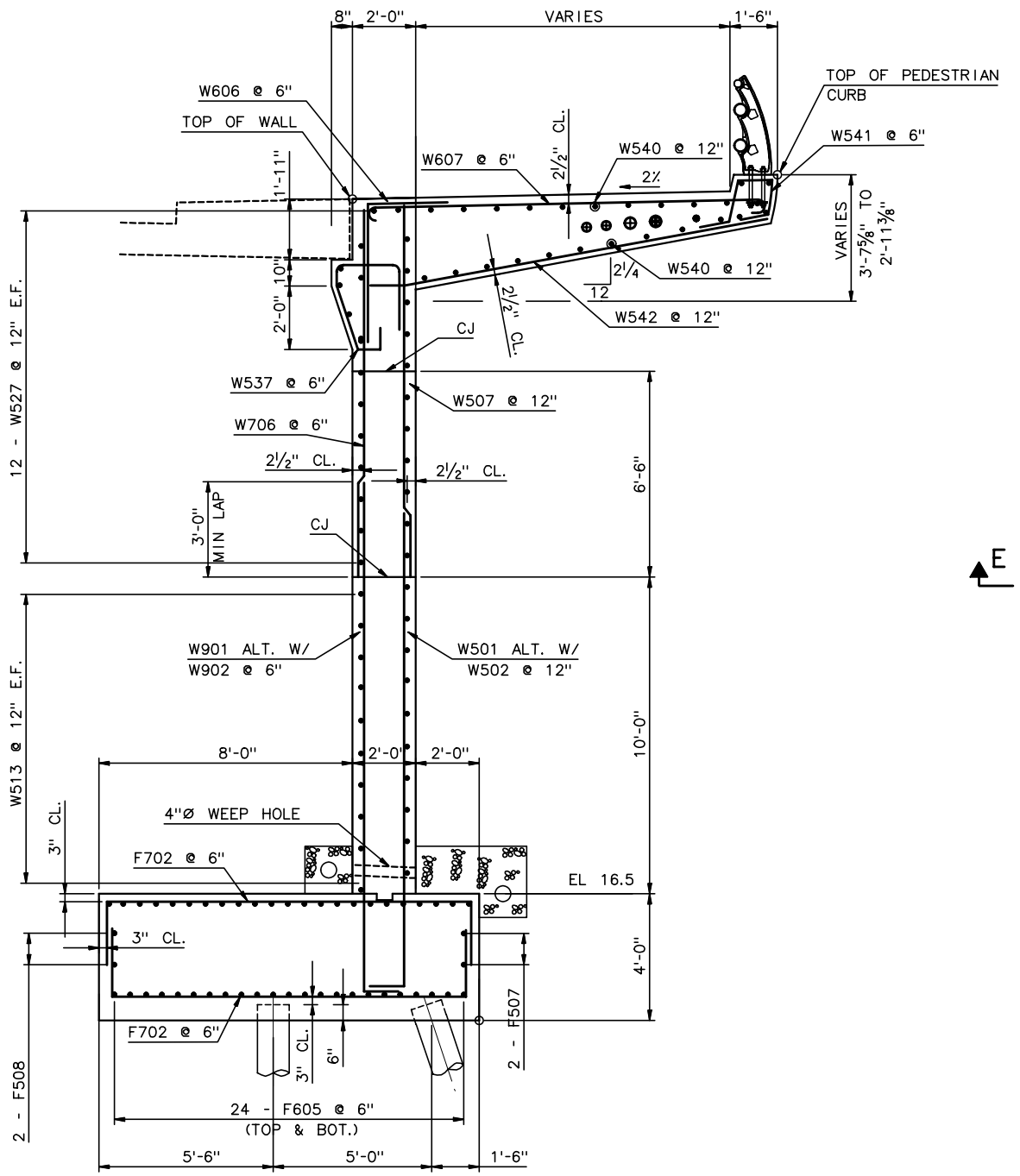

SECTION E

⅜" = 1'-0"

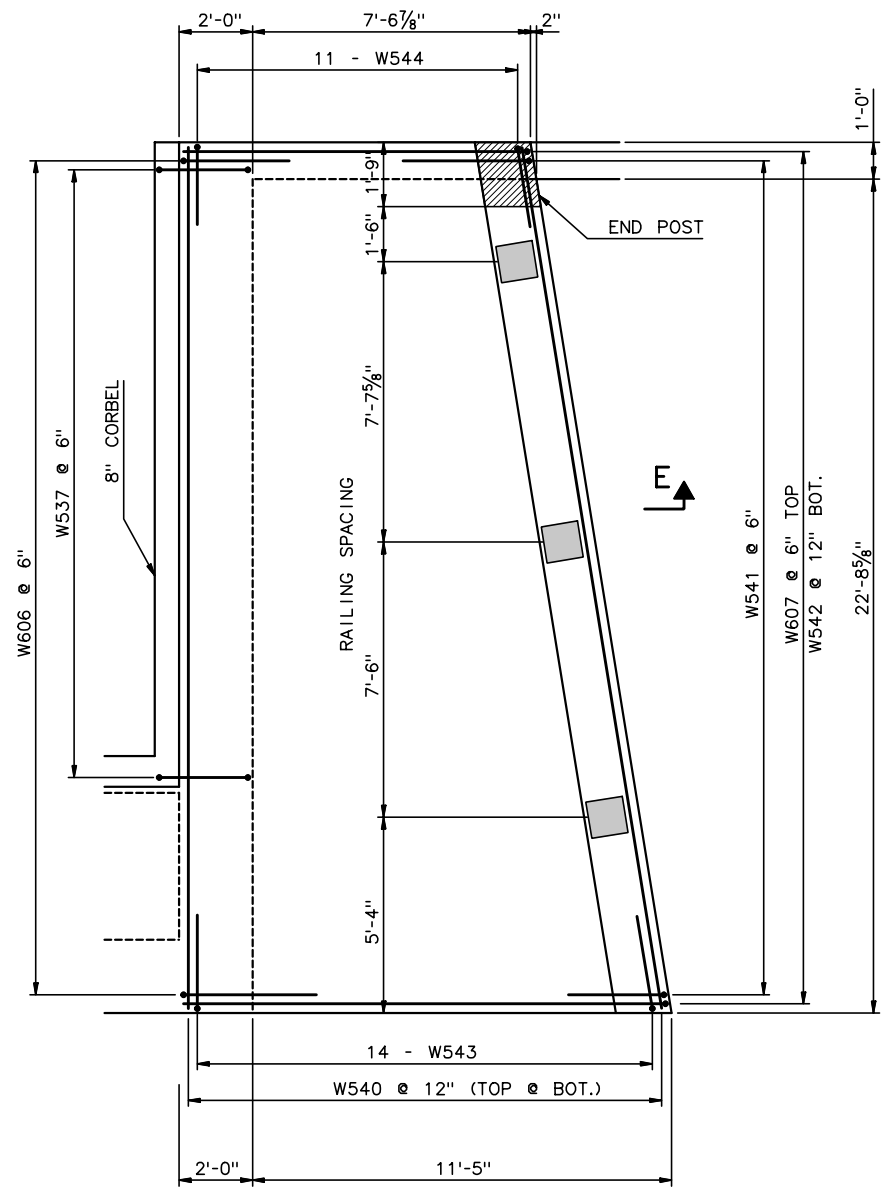

SECTION G
SIDEWALK PLAN VIEW

⅜" = 1'-0"

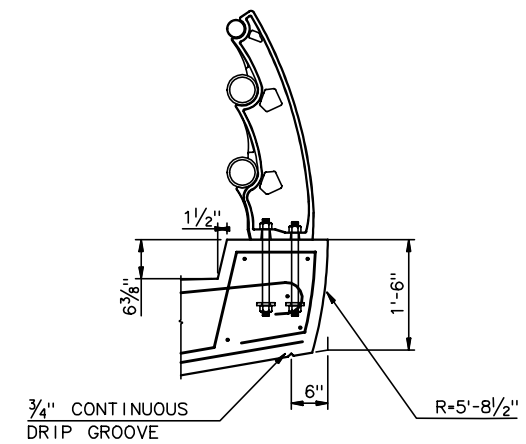

DETAIL 1

¾" = 1'-0"

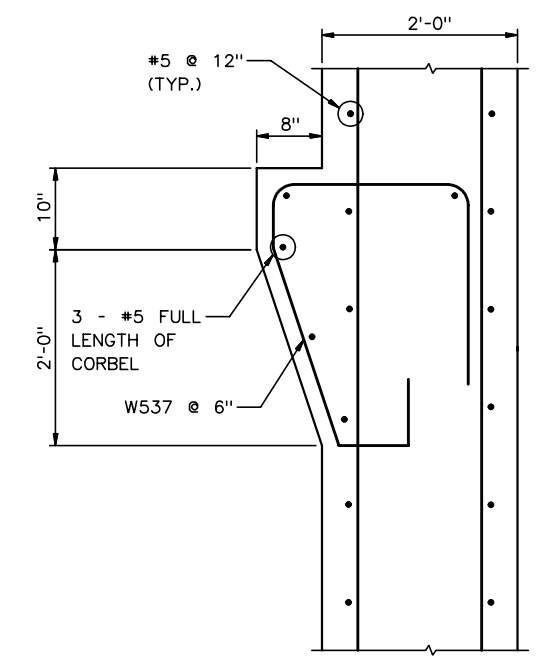

SECTION F

1" = 1'-0"

RECORD DRAWING

No.	Date	Revisions	By

HNTB CORPORATION

STATE OF WISCONSIN
DEPARTMENT OF TRANSPORTATION

STRUCTURE B-40-413A

Designed By	GD	Design Checked	AP	Drawn By	JE	Plans Checked	AP

SOUTH CABLE STAY ABUTMENT DETAILS 10 OF 10

SHEET SC09e OF .

j:\cadd\ff31185\dgn\as built\south cablestay\sc09e-abutdet10.dgn 02/11/03 02:56:56 PM

STATE PROJECT I.D.	SHEET NUMBER
2235-00-70	8.18

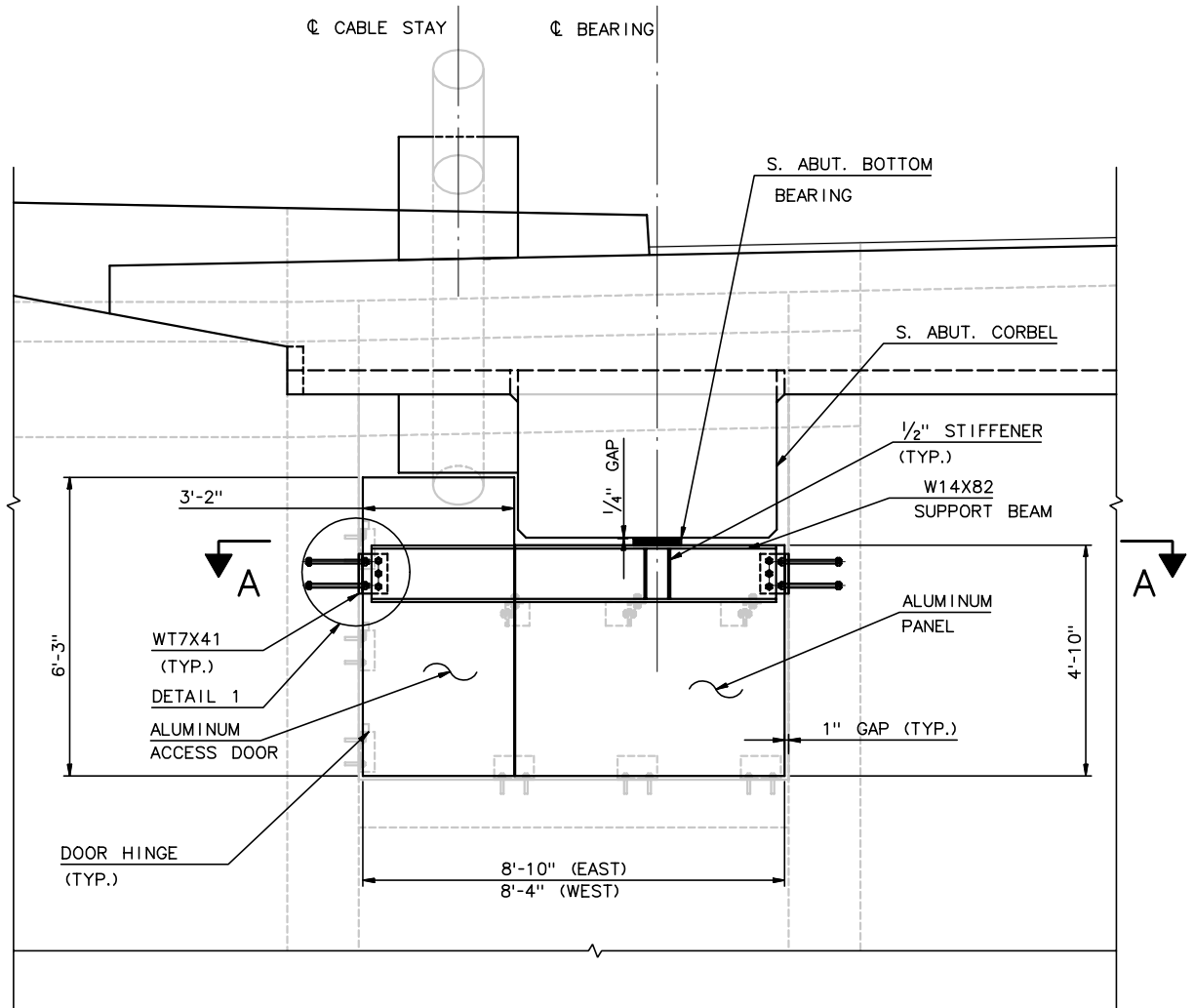

ABUTMENT ELEVATION AT EAST BEARING

(WEST SIDE SIMILAR, OPPOSITE HAND)

1/2" = 1'-0"

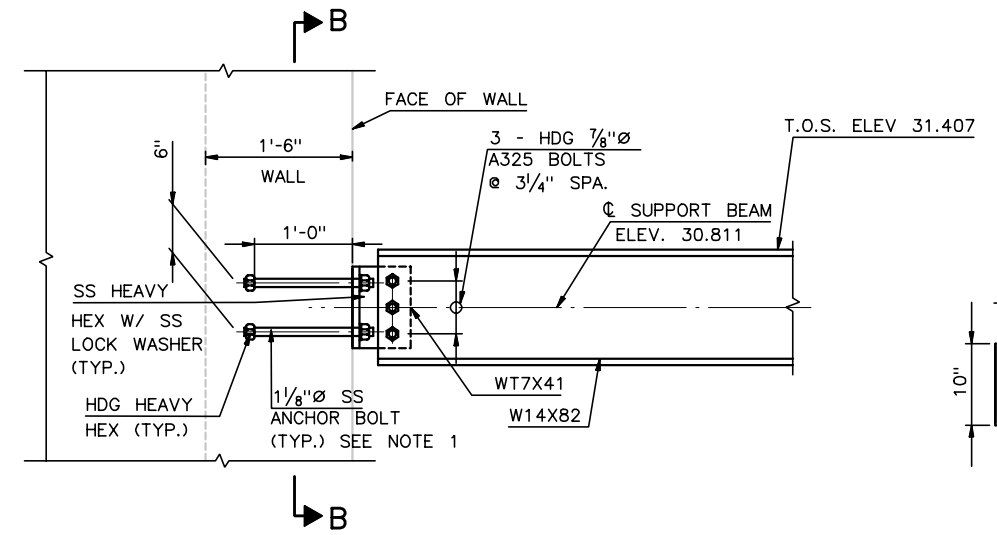

DETAIL 1

1" = 1'-0"

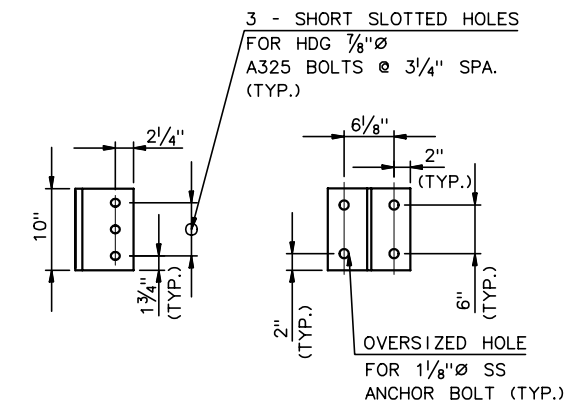

WT7X41

1" = 1'-0"

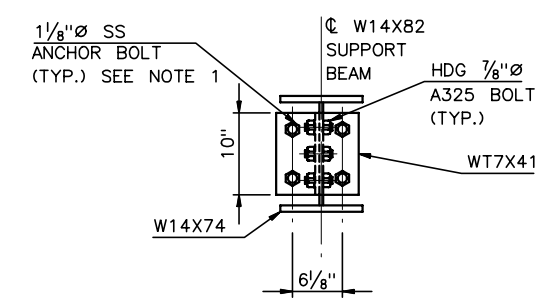

SECTION B-B

1" = 1'-0"

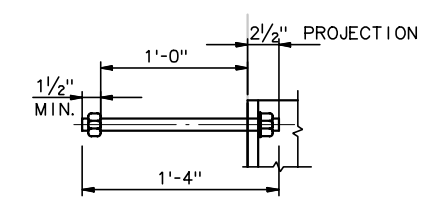

1 1/8" Ø ANCHOR BOLT DETAIL

1 1/2" = 1'-0"

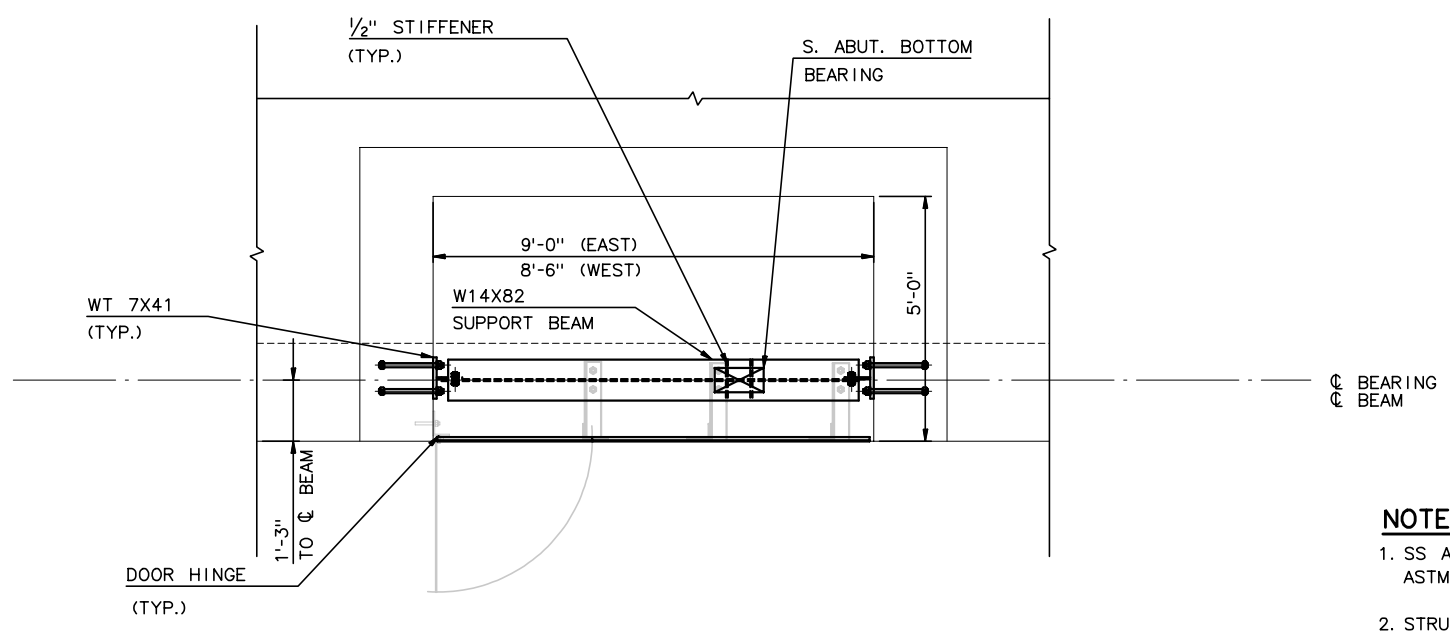

SECTION A-A

1/2" = 1'-0"

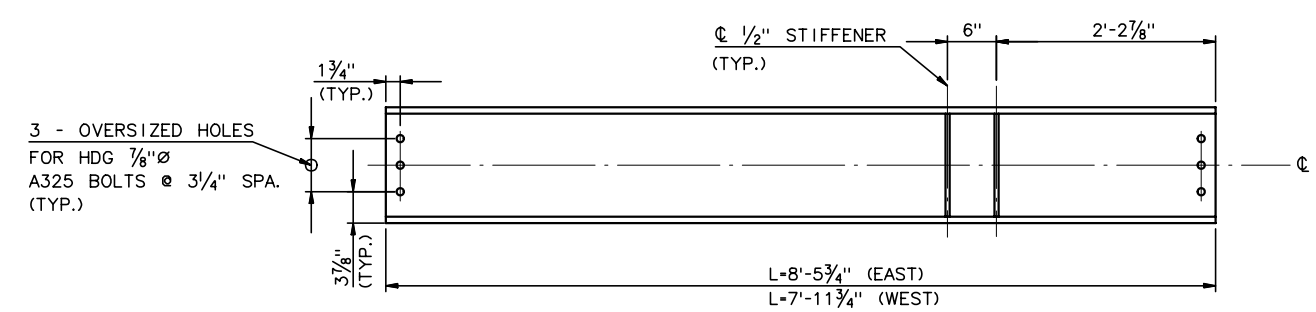

W14X82

1" = 1'-0"

NOTES:

1. SS ANCHOR BOLT SHALL BE STAINLESS STEEL ASTM A276, TYPE 304 MIN. TENSILE STRENGTH = 75 KSI.
2. STRUCTURAL STEEL SHALL BE HOT-DIPPED GALVANIZED ASTM A709 GRADE 36.
3. SECONDARY BEAM SHALL HAVE ZERO CAMBER.
4. FOR ACCESS DOOR DETAILS, SEE SHEET SC09g.

RECORD DRAWING

No.	Date	Revisions	By

HNTB CORPORATION

STATE OF WISCONSIN
DEPARTMENT OF TRANSPORTATION

STRUCTURE B-40-413A

Designed By	GD	Design Checked	AP	Drawn By	CE	Plans Checked	AP

SOUTH CABLE STAY MISC. ABUTMENT DETAILS

SHEET SC09f OF

STATE PROJECT I.D.	SHEET NUMBER
2235-00-70	8.19

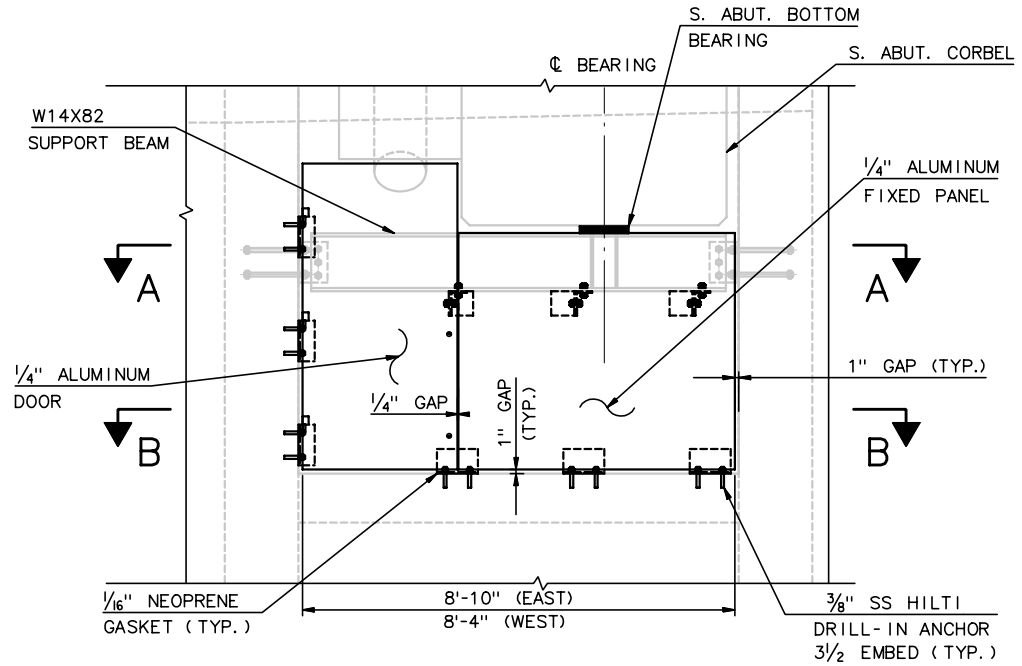

ABUT. DOOR ELEVATION AT EAST BEARING

(WEST SIDE SIMILAR, OPPOSITE HAND)
1/2" = 1'-0"

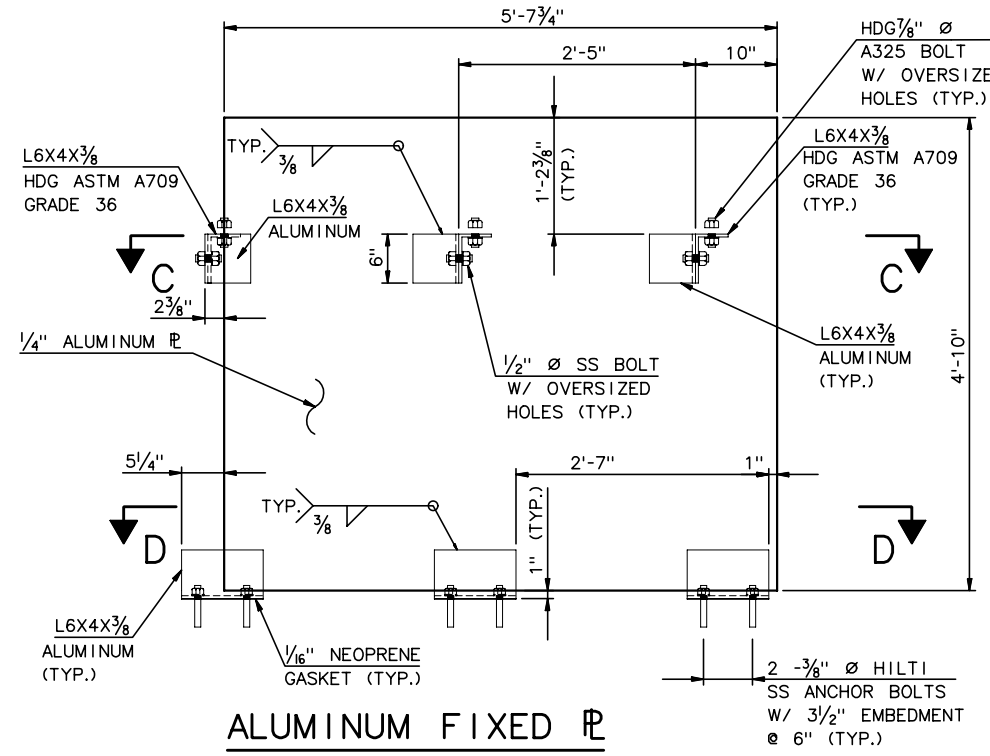

ALUMINUM FIXED PL

(EAST SIDE SHOWN WEST SIDE SIMILAR, OPPOSITE HAND)
1" = 1'-0"

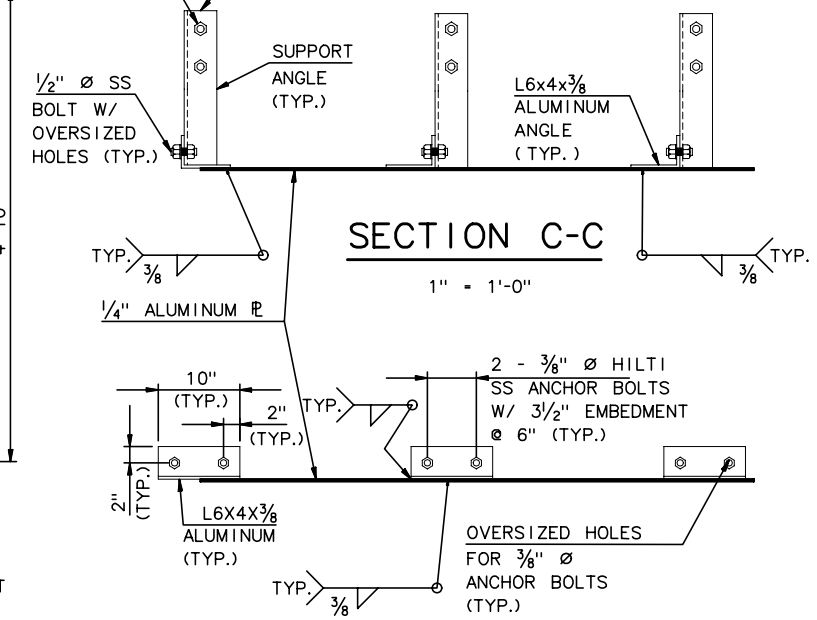

SECTION C-C

1" = 1'-0"

SECTION D-D

1" = 1'-0"

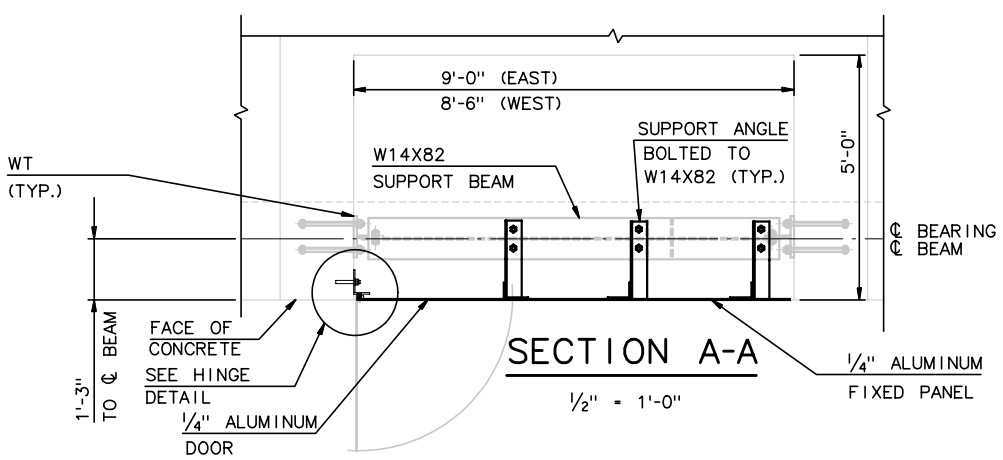

SECTION A-A

1/2" = 1'-0"

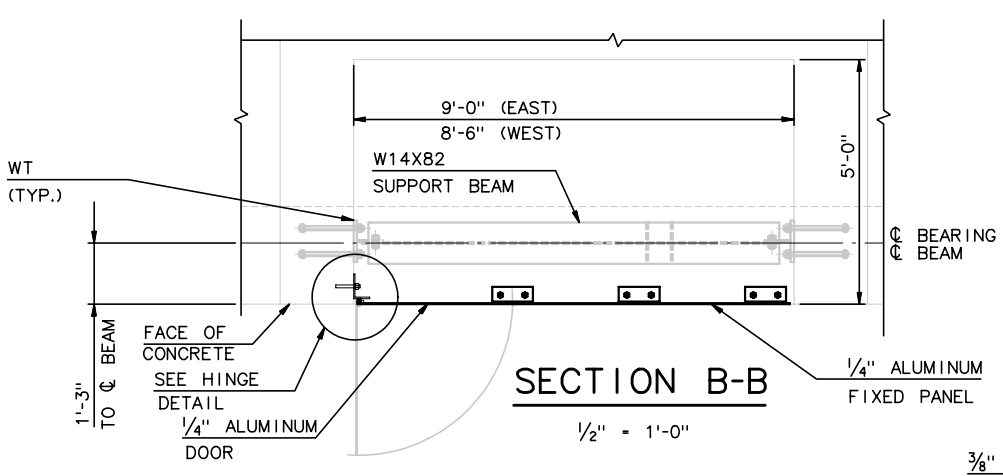

SECTION B-B

1/2" = 1'-0"

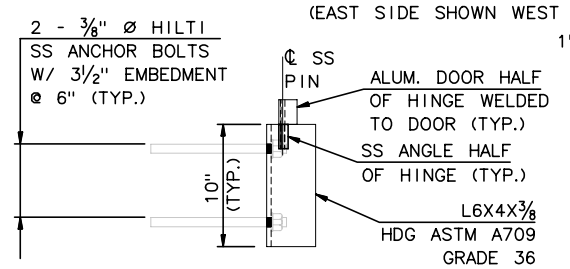

HINGE DETAIL ELEV.

1 1/2" = 1'-0"

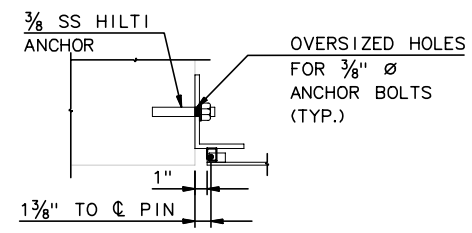

HINGE DETAIL PLAN

1 1/2" = 1'-0"

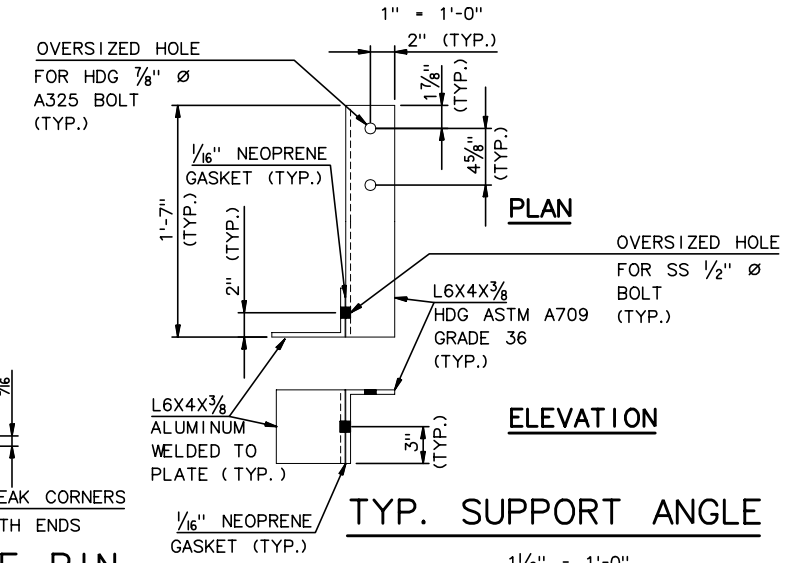

TYP. SUPPORT ANGLE

1 1/2" = 1'-0"

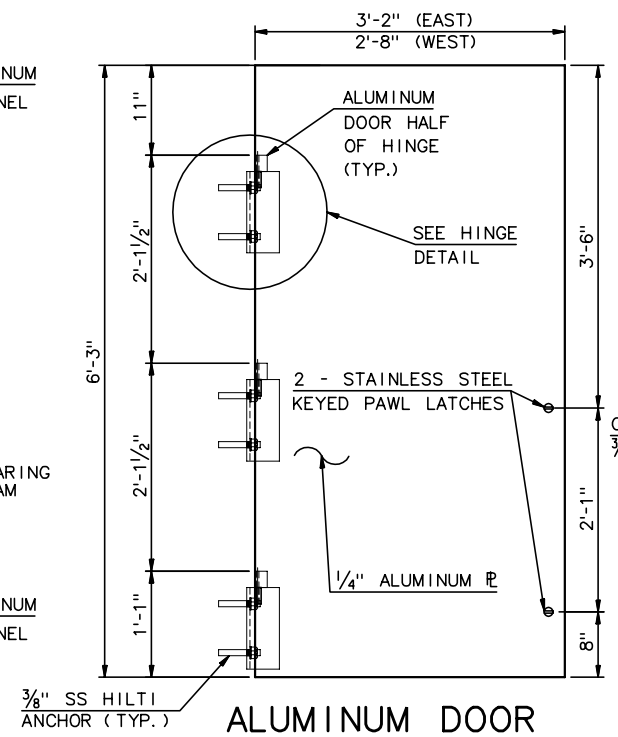

ALUMINUM DOOR

(EAST SIDE SHOWN WEST SIDE SIMILAR, OPPOSITE HAND)
1" = 1'-0"

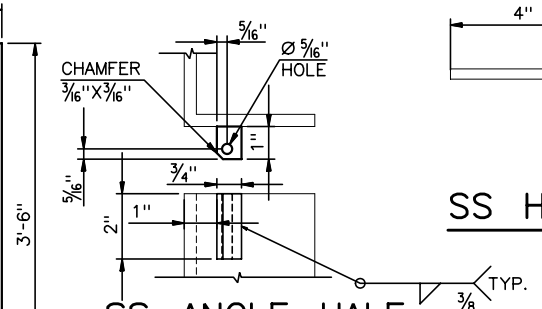

SS ANGLE HALF OF HINGE

N. T. S.

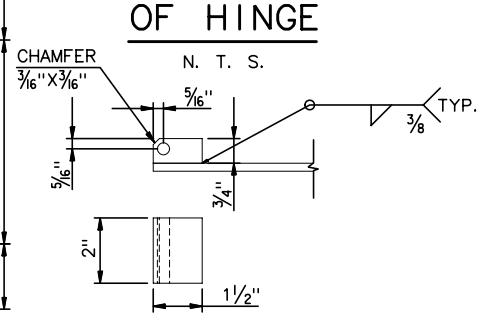

AL. DOOR HALF OF HINGE

N. T. S.

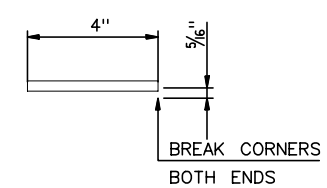

SS HINGE PIN

N. T. S.

NOTES:

1. SS ANCHOR BOLT SHALL BE STAINLESS STEEL ASTM A276, TYPE 304 MIN. TENSILE STRENGTH = 75 KSI.
2. STRUCTURAL STEEL ANGLES SHALL BE HOT-DIPPED GALVANIZED ASTM A709 GRADE 36.
3. PAINT OUTSIDE SURFACE OF DOORS WITH ONE COAT OF SHERWIN-WILLIAMS RECOATBLE PRIMER B67.
4. ALUMINUM ANGLES AND PLATES SHALL BE AL 3003.
5. HOLES IN W14X82 SUPPORT BEAM SHALL BE FIELD-DRILLED.
6. NEOPRENE GASKETS SHALL BE PLACED BETWEEN CONCRETE/ALUMINUM AND ALUMINUM/GALVANIZED INTERFACE.

RECORD DRAWING

No.	Date	Revisions	By

HNTB CORPORATION

STATE OF WISCONSIN
DEPARTMENT OF TRANSPORTATION

STRUCTURE B-40-413A

Designed By	GD	Design Checked	AP	Drawn By	CE	Plans Checked	AP

SOUTH CABLE STAY ABUTMENT DOOR DETAILS

SHEET SC09g OF

STATE PROJECT I.D.	SHEET NUMBER
2235-00-70	8.20

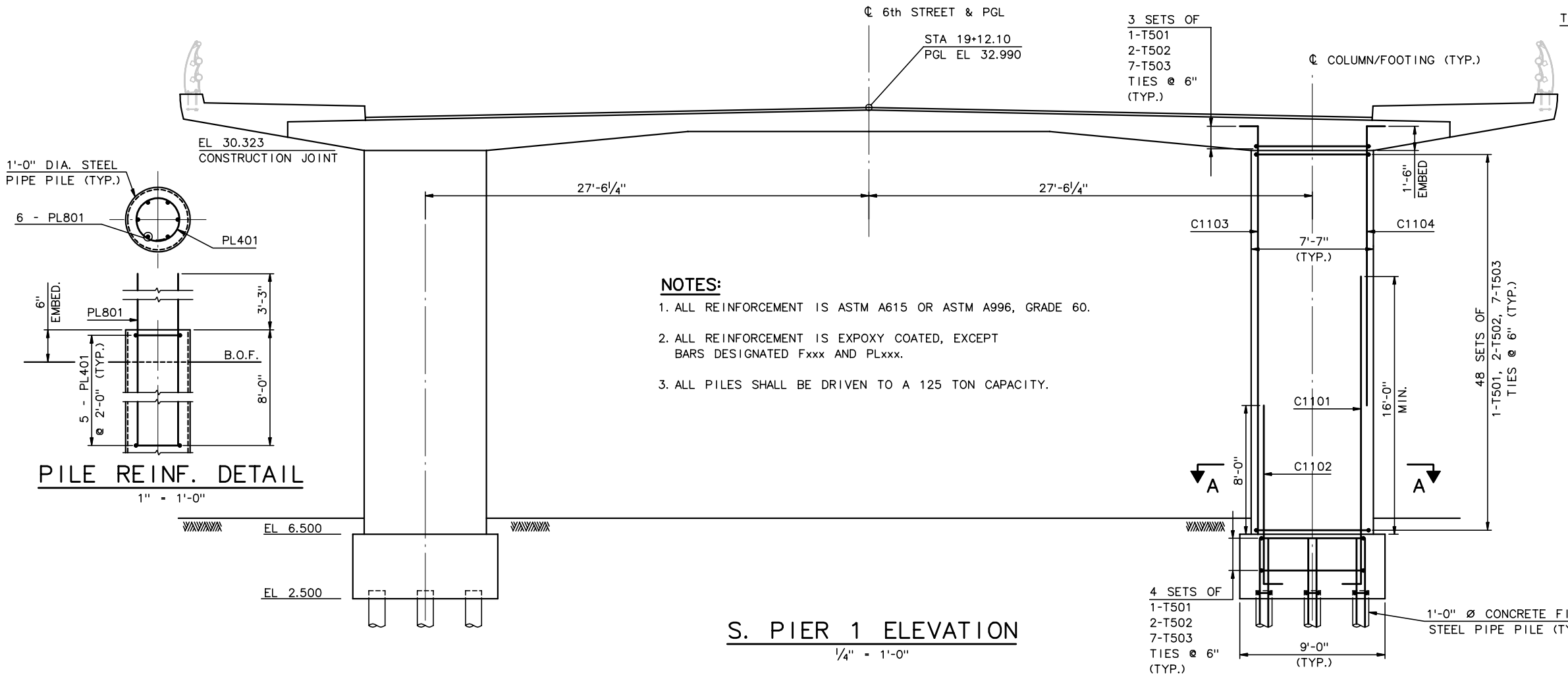

S. PIER 1 ELEVATION

¼" = 1'-0"

PILE REINF. DETAIL

1" = 1'-0"

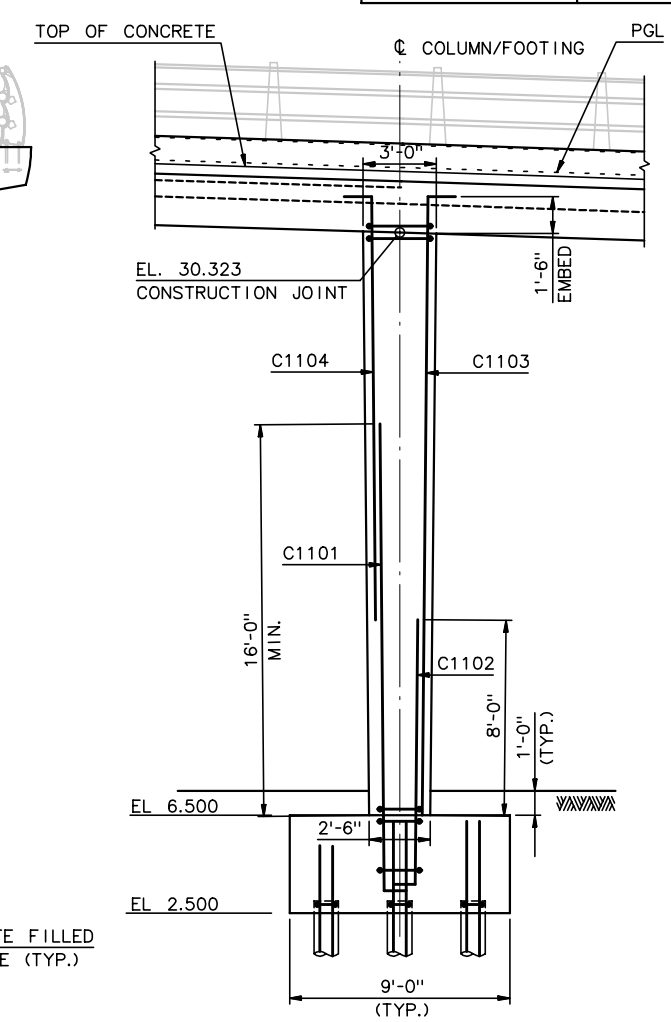

S. PIER 1 SIDE ELEVATION

¼" = 1'-0"

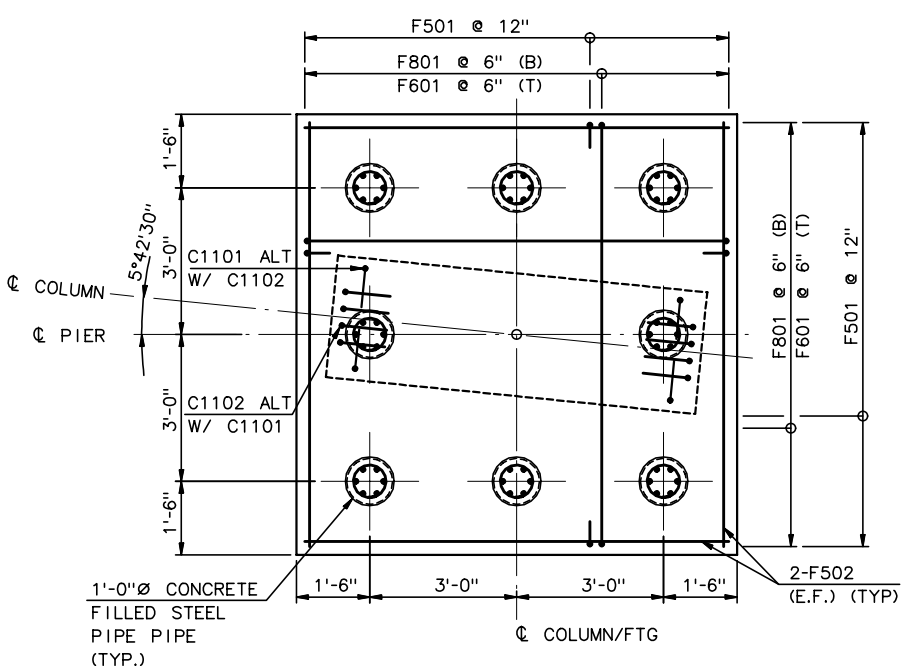

WEST FOOTING PLAN

½" = 1'-0"

(EAST FOOTING OPPOSITE HAND)

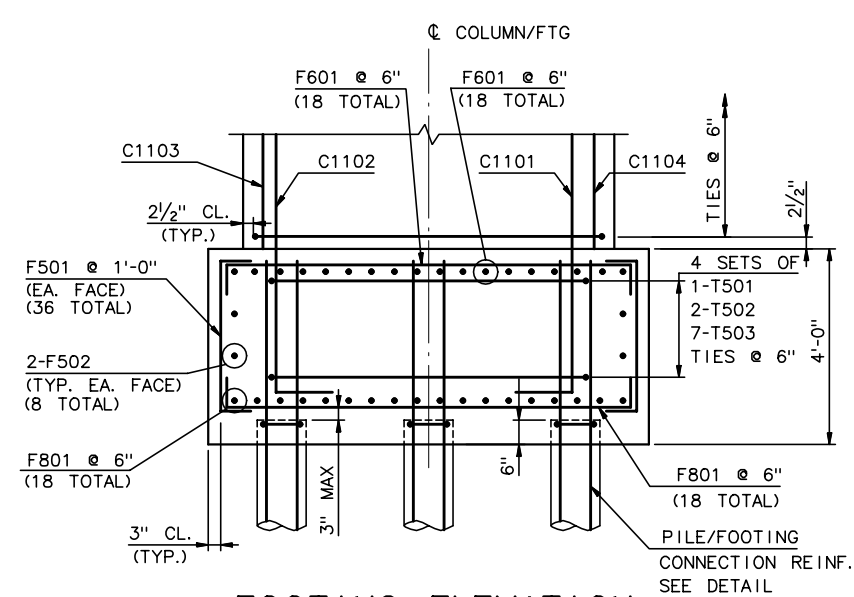

FOOTING ELEVATION

½" = 1'-0"

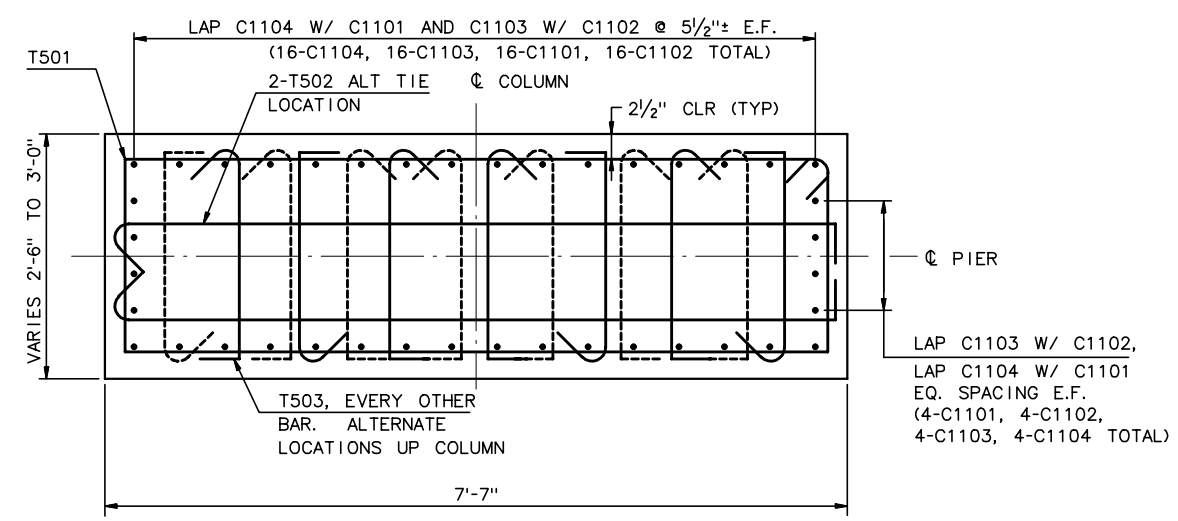

SECTION A-A

1" = 1'-0"

RECORD DRAWING

No.	Date	Revisions	By

HNTB CORPORATION

STATE OF WISCONSIN
DEPARTMENT OF TRANSPORTATION

STRUCTURE B-40-413A

Designed By	SL	Design Checked	AP	Drawn By	BM	Plans Checked	AP

SOUTH CABLE STAY
PIER 1

SHEET SC10 OF

STATE PROJECT I.D.	SHEET NUMBER
2235-00-70	8.21

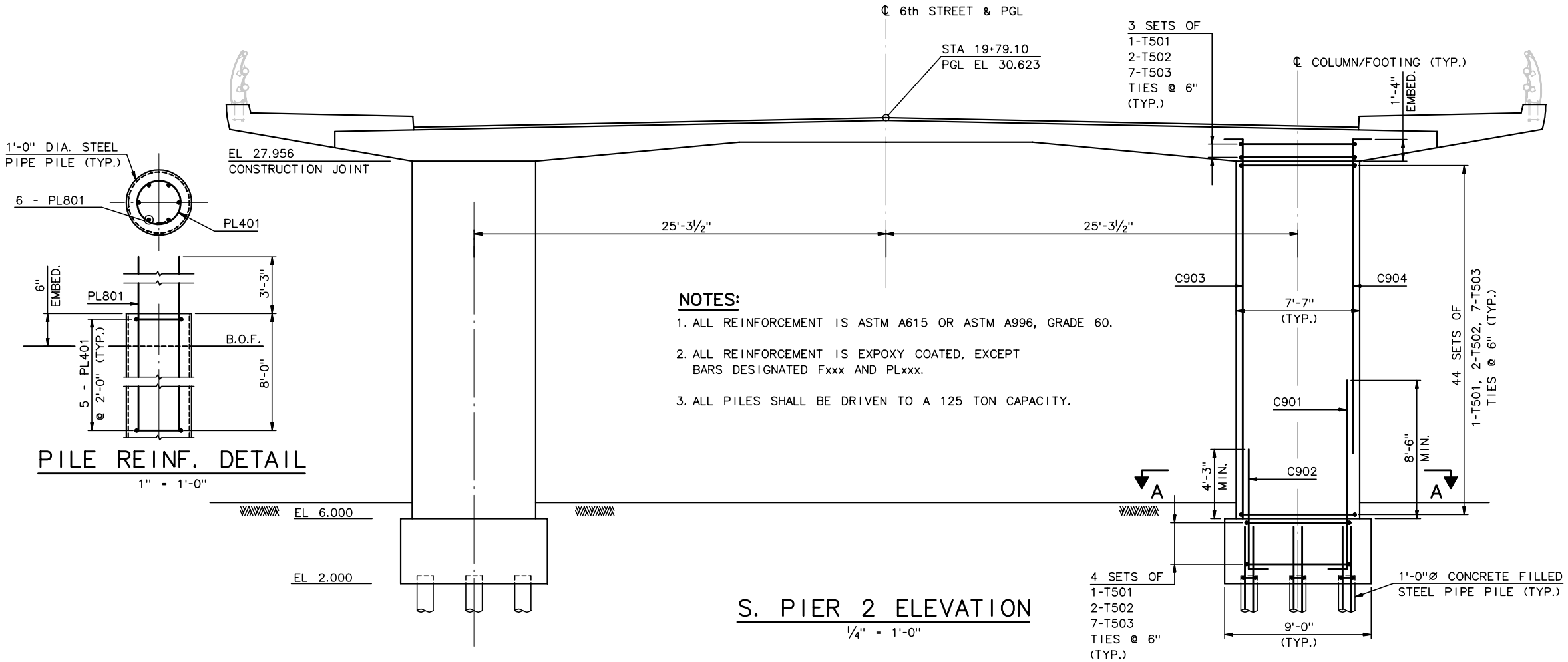

S. PIER 2 ELEVATION

¼" = 1'-0"

PILE REINF. DETAIL

1" = 1'-0"

NOTES:

1. ALL REINFORCEMENT IS ASTM A615 OR ASTM A996, GRADE 60.
2. ALL REINFORCEMENT IS EXPOXY COATED, EXCEPT BARS DESIGNATED Fxxx AND PLxxx.
3. ALL PILES SHALL BE DRIVEN TO A 125 TON CAPACITY.

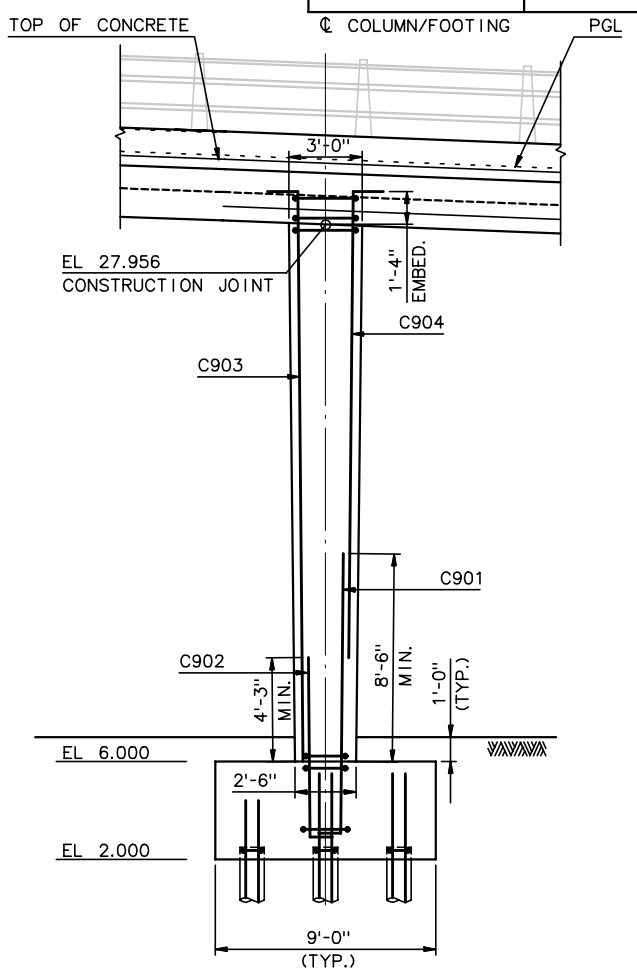

S. PIER 2 SIDE ELEVATION

¼" = 1'-0"

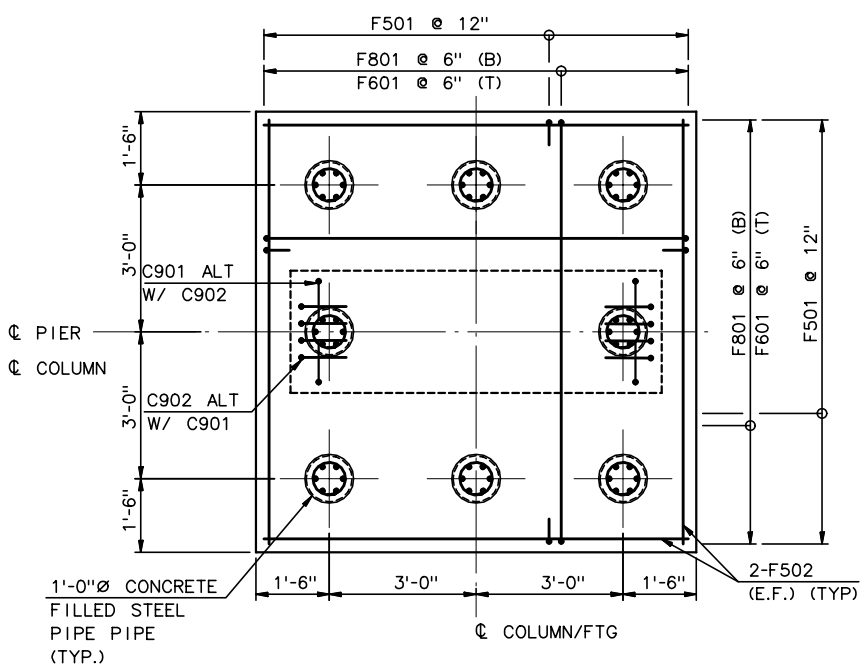

WEST FOOTING PLAN

½" = 1'-0"

(EAST FOOTING OPPOSITE HAND)

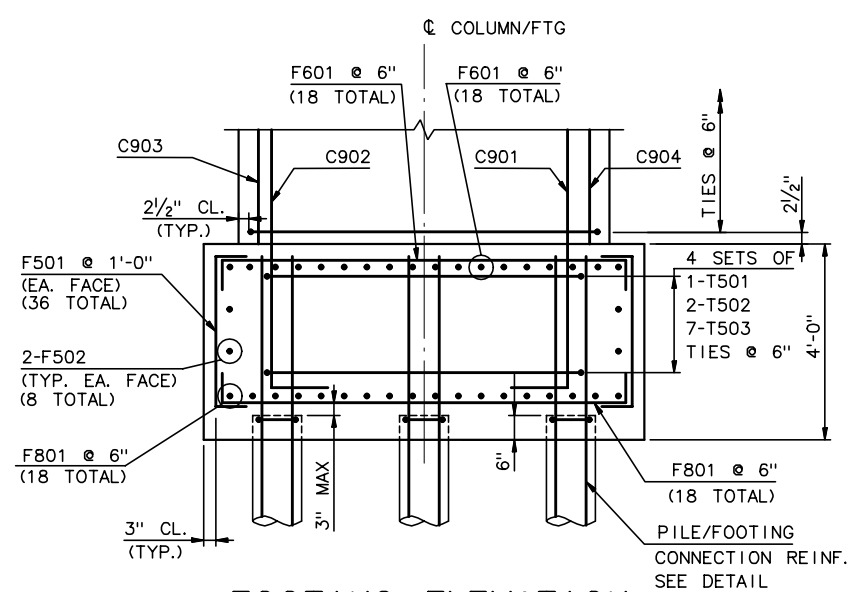

FOOTING ELEVATION

½" = 1'-0"

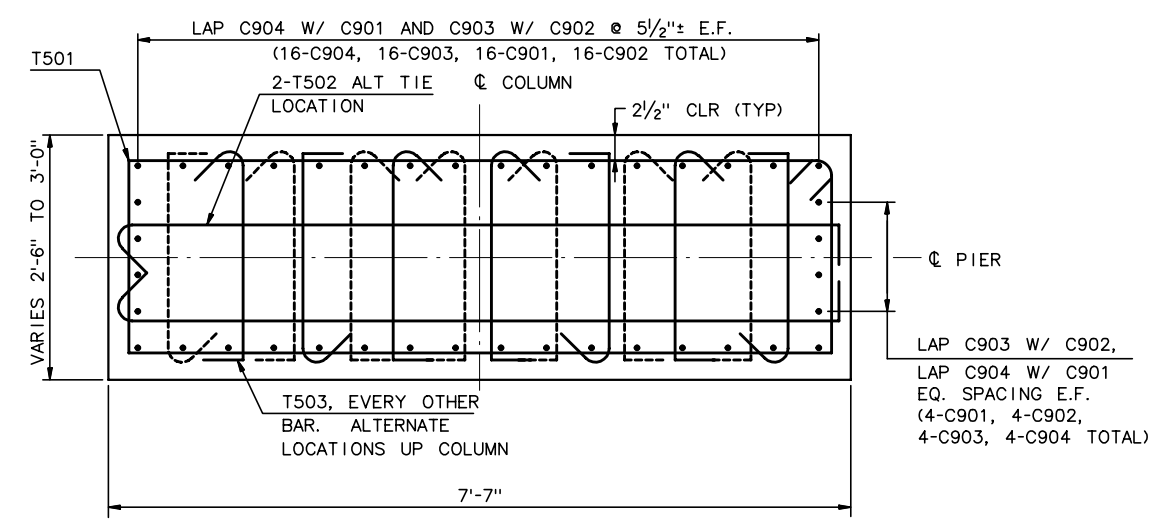

SECTION A-A

1" = 1'-0"

RECORD DRAWING

No.	Date	Revisions	By

HNTB CORPORATION

STATE OF WISCONSIN
DEPARTMENT OF TRANSPORTATION

STRUCTURE B-40-413A

Designed By	SL	Design Checked	AP	Drawn By	BM	Plans Checked	AP

SOUTH CABLE STAY
PIER 2

SHEET SC11 OF

j:\cadd\ff31185\dgn\as built\south cablestay\sc11-scspr2.dgn 02/11/03 02:57:07 PM

STATE PROJECT I.D.	SHEET NUMBER
2235-00-70	8.22

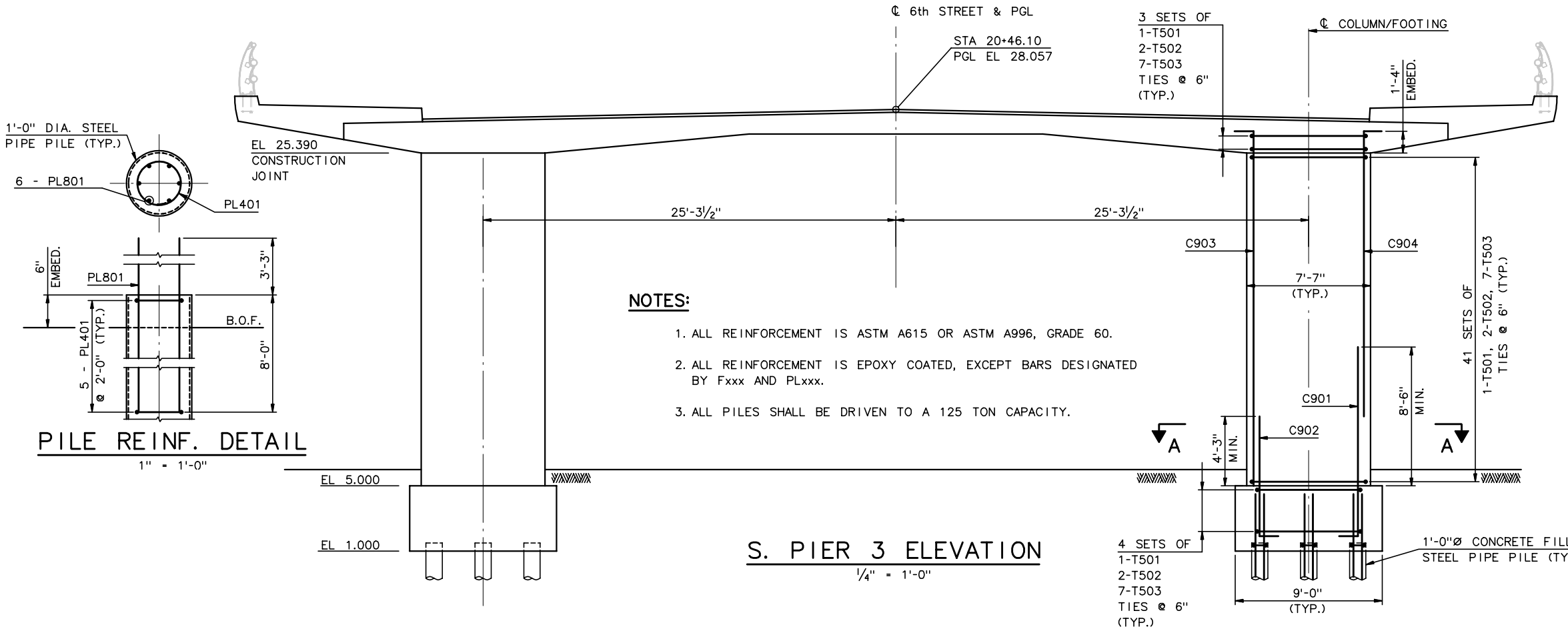

PILE REINF. DETAIL

1" = 1'-0"

NOTES:

1. ALL REINFORCEMENT IS ASTM A615 OR ASTM A996, GRADE 60.
2. ALL REINFORCEMENT IS EPOXY COATED, EXCEPT BARS DESIGNATED BY Fxxx AND PLxxx.
3. ALL PILES SHALL BE DRIVEN TO A 125 TON CAPACITY.

S. PIER 3 ELEVATION

¼" = 1'-0"

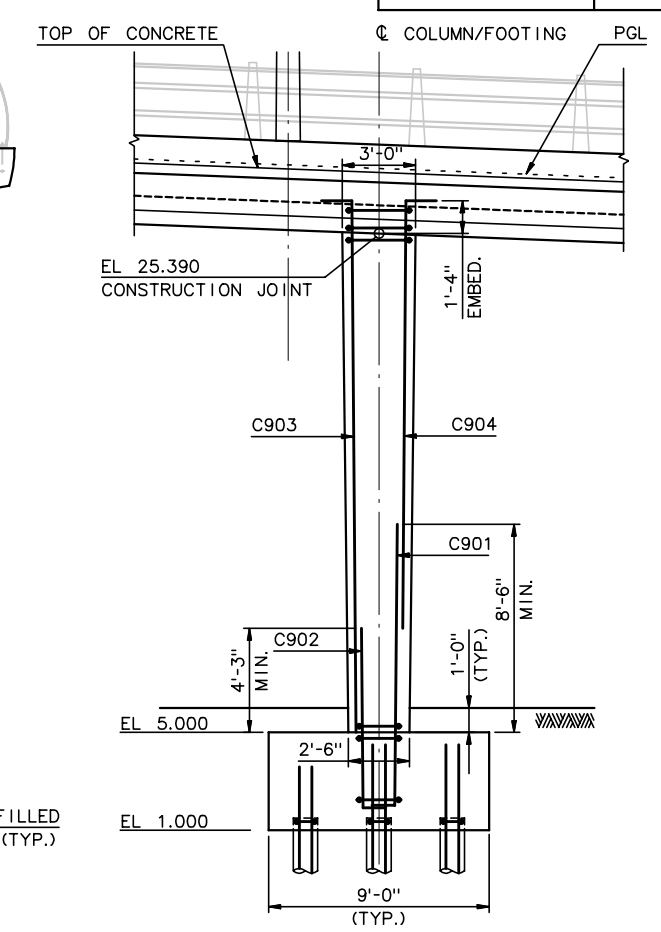

S. PIER 3 SIDE ELEVATION

¼" = 1'-0"

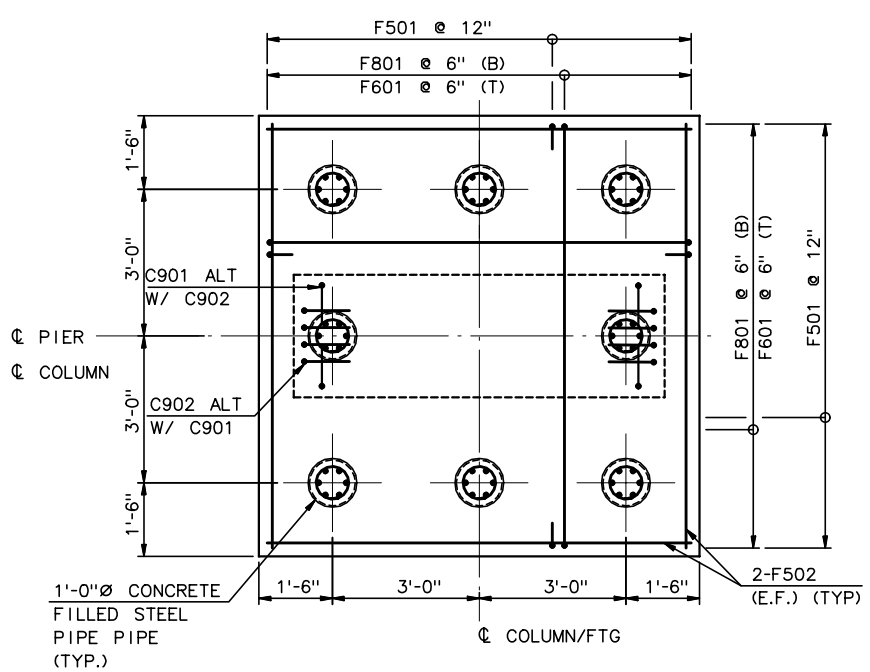

WEST FOOTING PLAN

½" = 1'-0"
(EAST FOOTING OPPOSITE HAND)

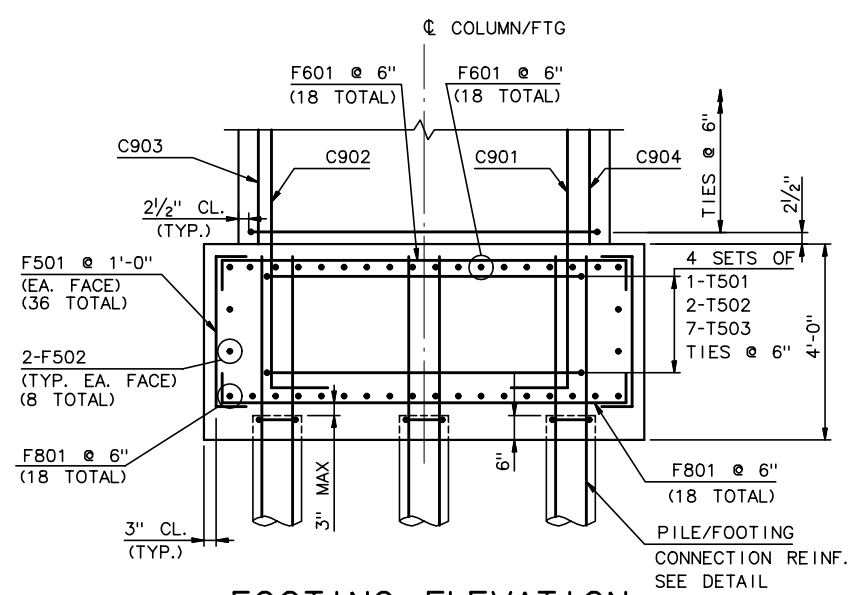

FOOTING ELEVATION

½" = 1'-0"

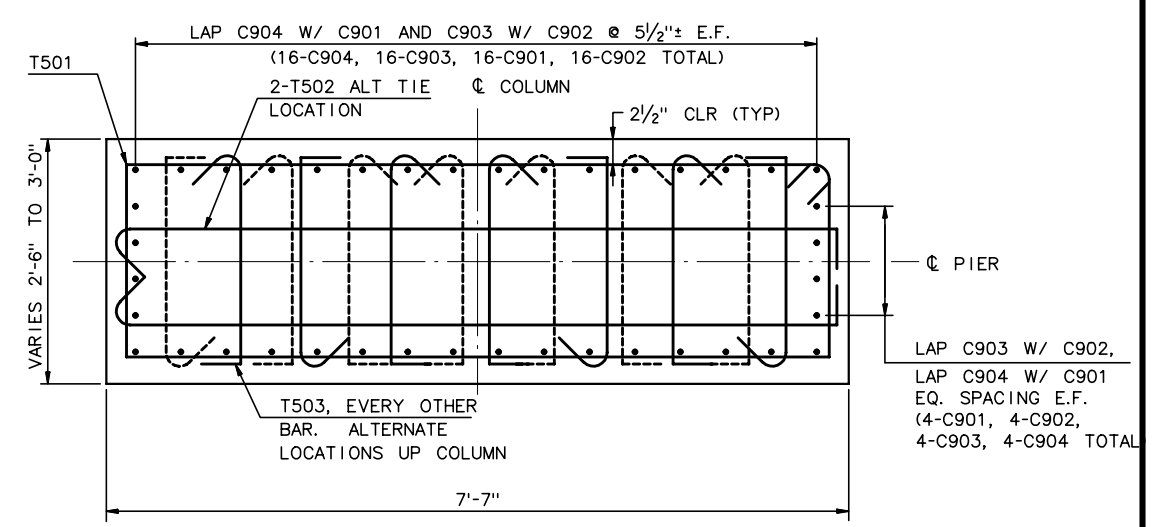

SECTION A-A

1" = 1'-0"

No.	Date	Revisions	By

HNTB CORPORATION

RECORD DRAWING

STATE OF WISCONSIN
DEPARTMENT OF TRANSPORTATION

STRUCTURE B-40-413A

Designed By	SL	Design Checked	AP	Drawn By	BM	Plans Checked	AP

SOUTH CABLE STAY
PIER 3

SHEET SC12 OF

STATE PROJECT I.D.	SHEET NUMBER
2235-00-70	8.23

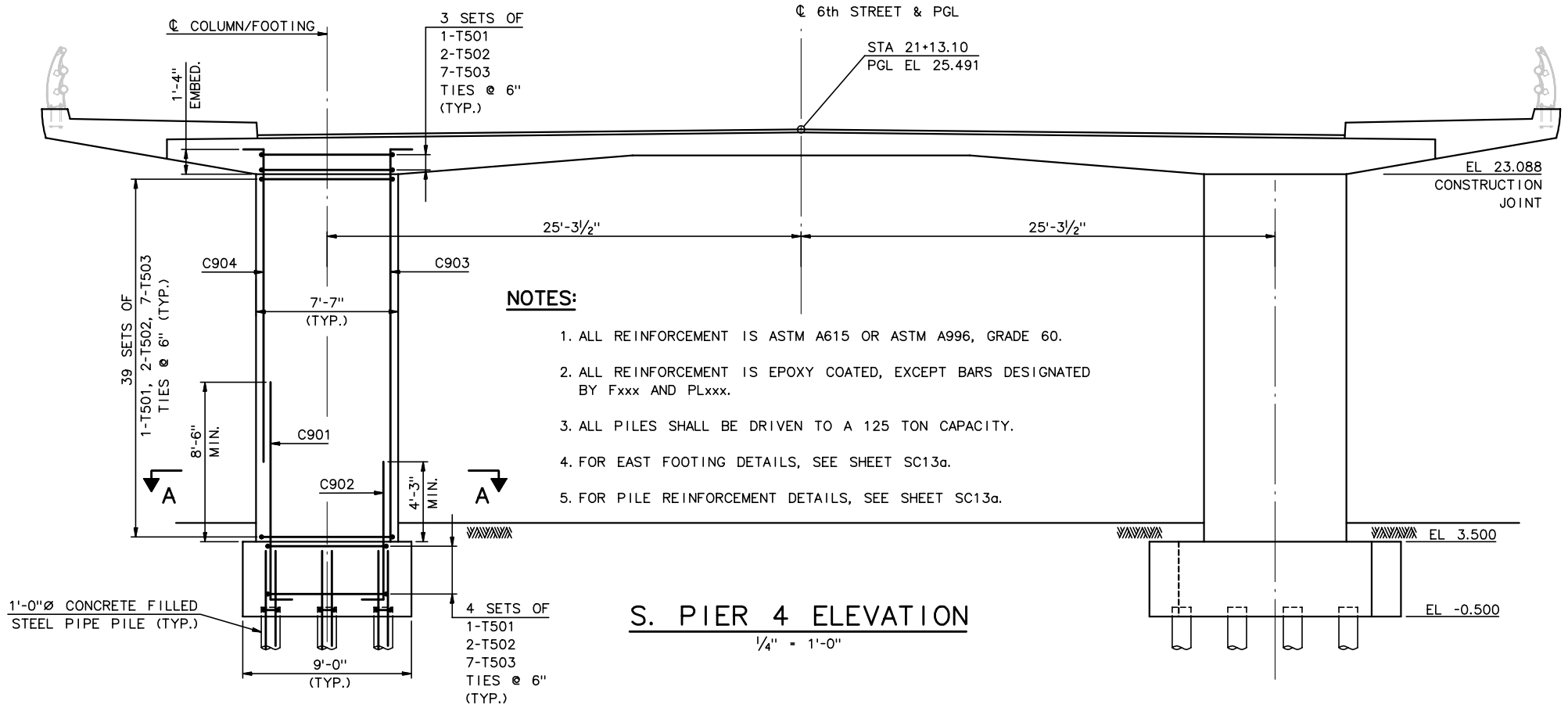

S. PIER 4 ELEVATION

¼" = 1'-0"

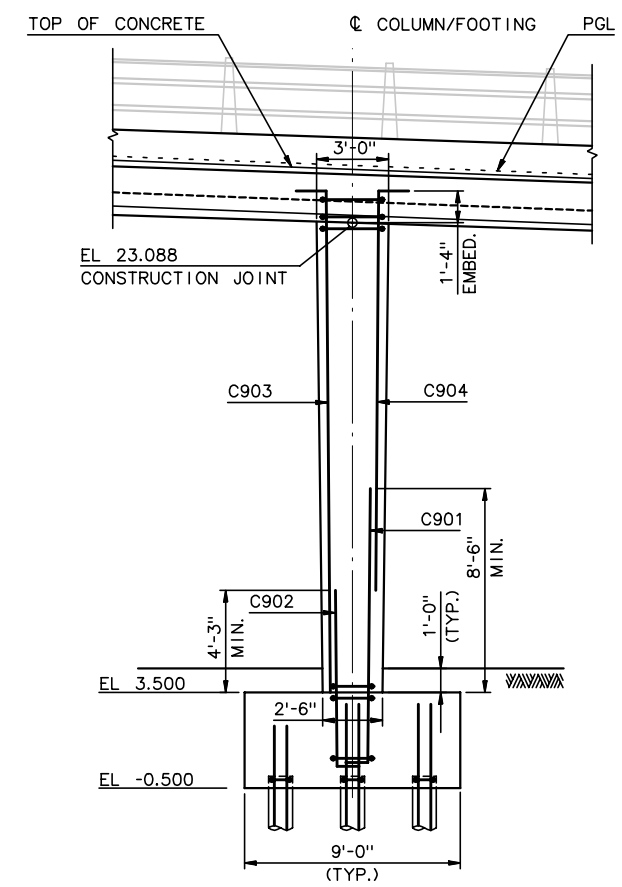

S. PIER 4 SIDE ELEVATION

¼" = 1'-0"

NOTES:

1. ALL REINFORCEMENT IS ASTM A615 OR ASTM A996, GRADE 60.
2. ALL REINFORCEMENT IS EPOXY COATED, EXCEPT BARS DESIGNATED BY Fxxx AND PLxxx.
3. ALL PILES SHALL BE DRIVEN TO A 125 TON CAPACITY.
4. FOR EAST FOOTING DETAILS, SEE SHEET SC13a.
5. FOR PILE REINFORCEMENT DETAILS, SEE SHEET SC13a.

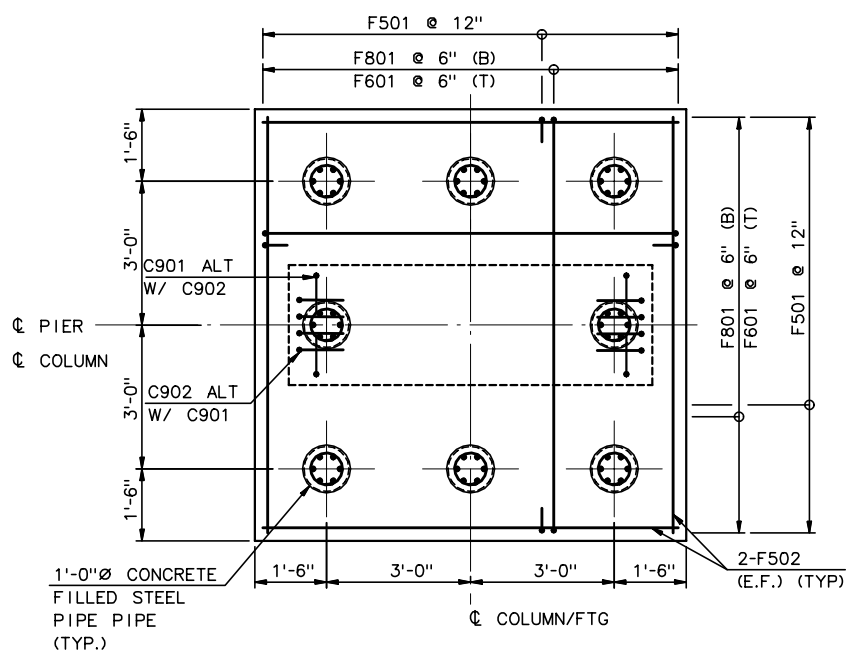

WEST FOOTING PLAN

½" = 1'-0"

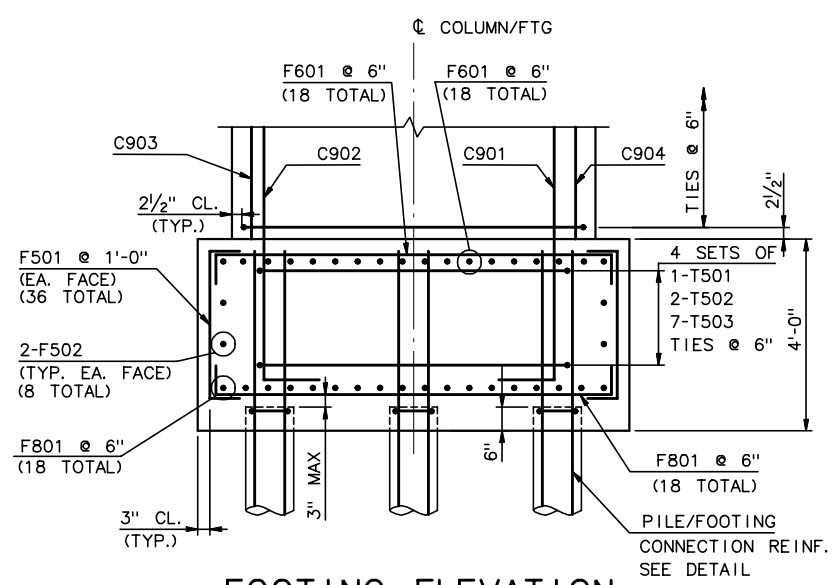

FOOTING ELEVATION

½" = 1'-0"

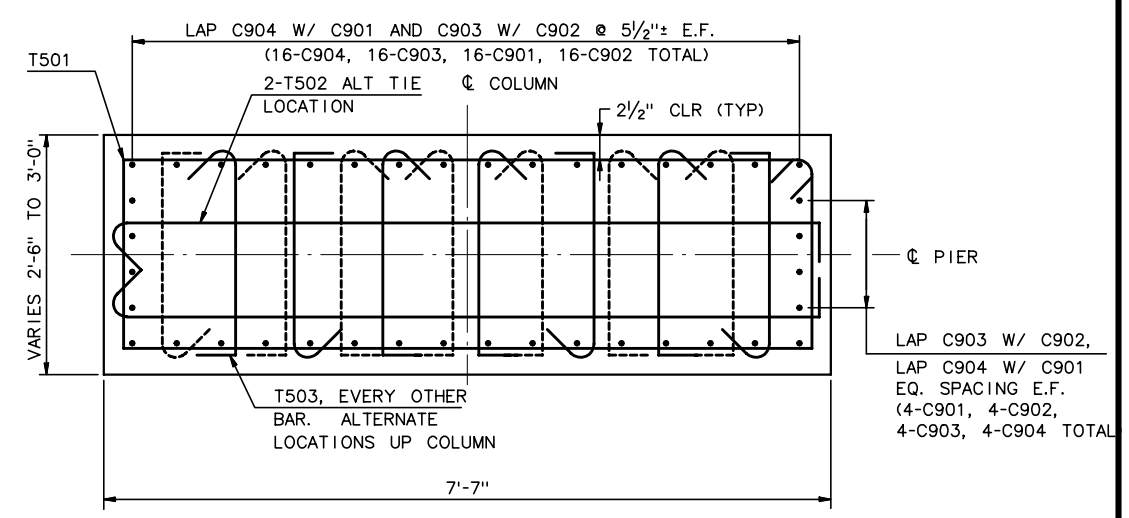

SECTION A-A

1" = 1'-0"

RECORD DRAWING

No.	Date	Revisions	By

HNTB CORPORATION

STATE OF WISCONSIN
DEPARTMENT OF TRANSPORTATION

STRUCTURE B-40-413A

Designed By	SL	Design Checked	AP	Drawn By	BM	Plans Checked	AP

SOUTH CABLE STAY
PIER 4 - 1 OF 2

SHEET SC13 OF

STATE PROJECT I.D.	SHEET NUMBER
2235-00-70	8.23a

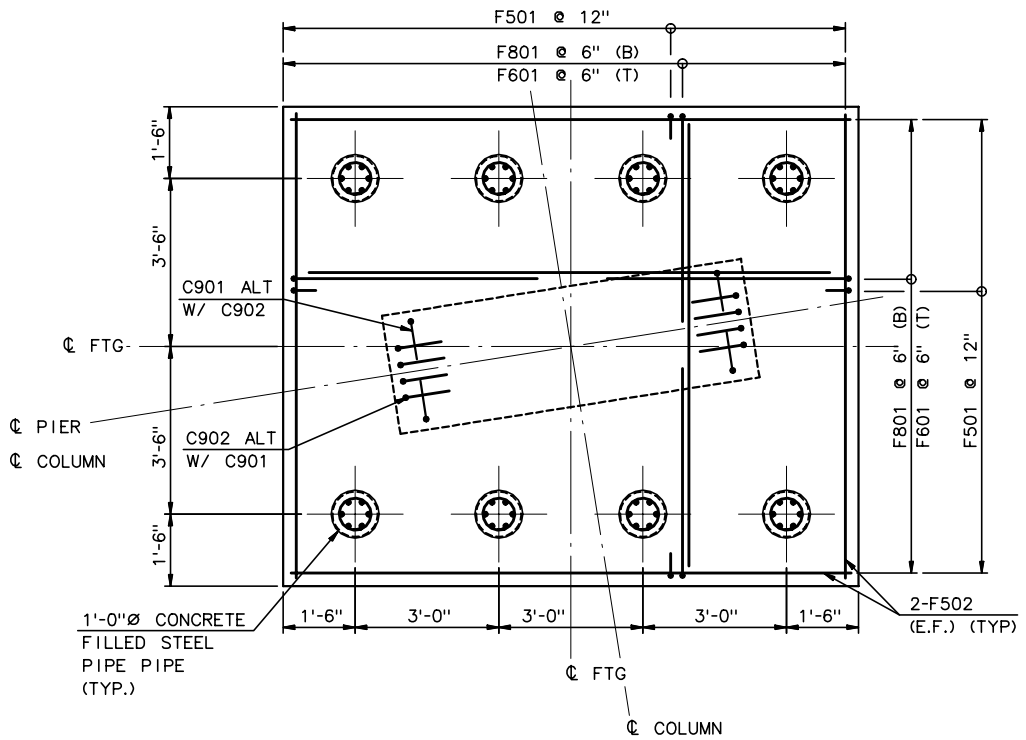

SOUTH CABLE STAY
PIER 4 - EAST FOOTING PLAN

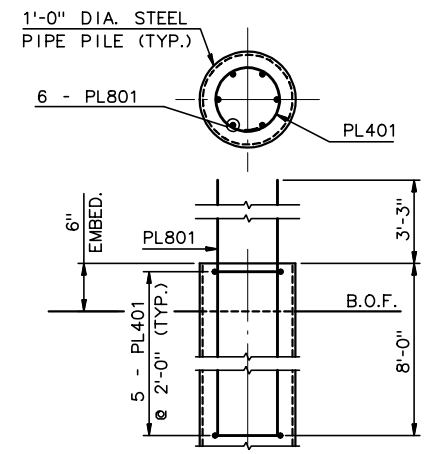

PILE REINF. DETAIL
1" = 1'-0"

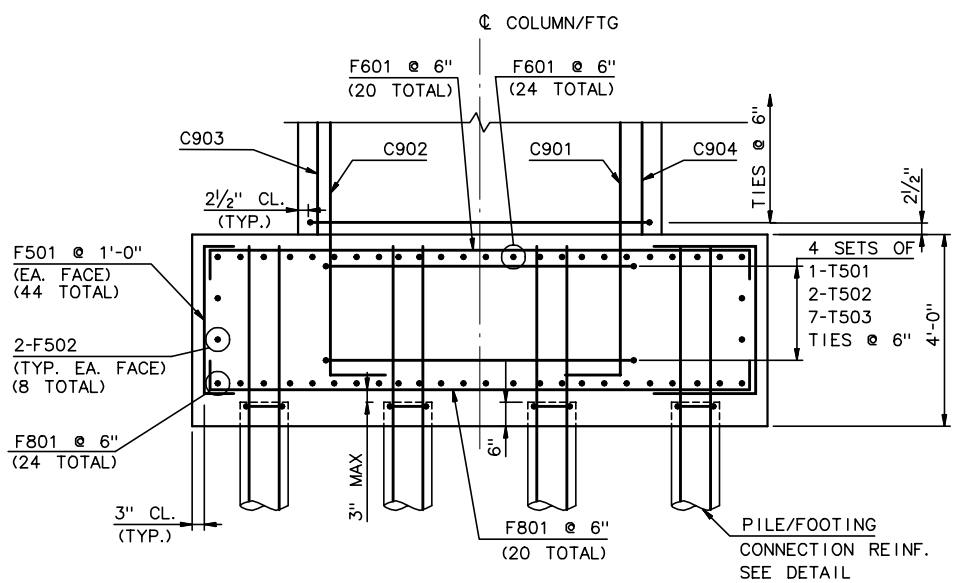

SOUTH CABLESTAY
PIER 4 - EAST FOOTING ELEVATION

NOTES:

1. ALL REINFORCEMENT IS ASTM A615 OR ASTM A996, GRADE 60.
2. ALL REINFORCEMENT IS EPOXY COATED, EXCEPT BARS DESIGNATED BY Fxxx AND PLxxx.
3. ALL PILES SHALL BE DRIVEN TO A 125 TON CAPACITY.
4. FOR COLUMN REINFORCEMENT DETAILS, SEE SHEET SC13.

RECORD DRAWING

No.	Date	Revisions	By

HNTB CORPORATION

STATE OF WISCONSIN
DEPARTMENT OF TRANSPORTATION

STRUCTURE B-40-413A

Designed By	SL	Design Checked	AP	Drawn By	BM	Plans Checked	AP

SOUTH CABLE STAY
PIER 4 - 2 OF 2

SHEETSC13a OF

STATE PROJECT I.D.	SHEET NUMBER
2235-00-70	8.24

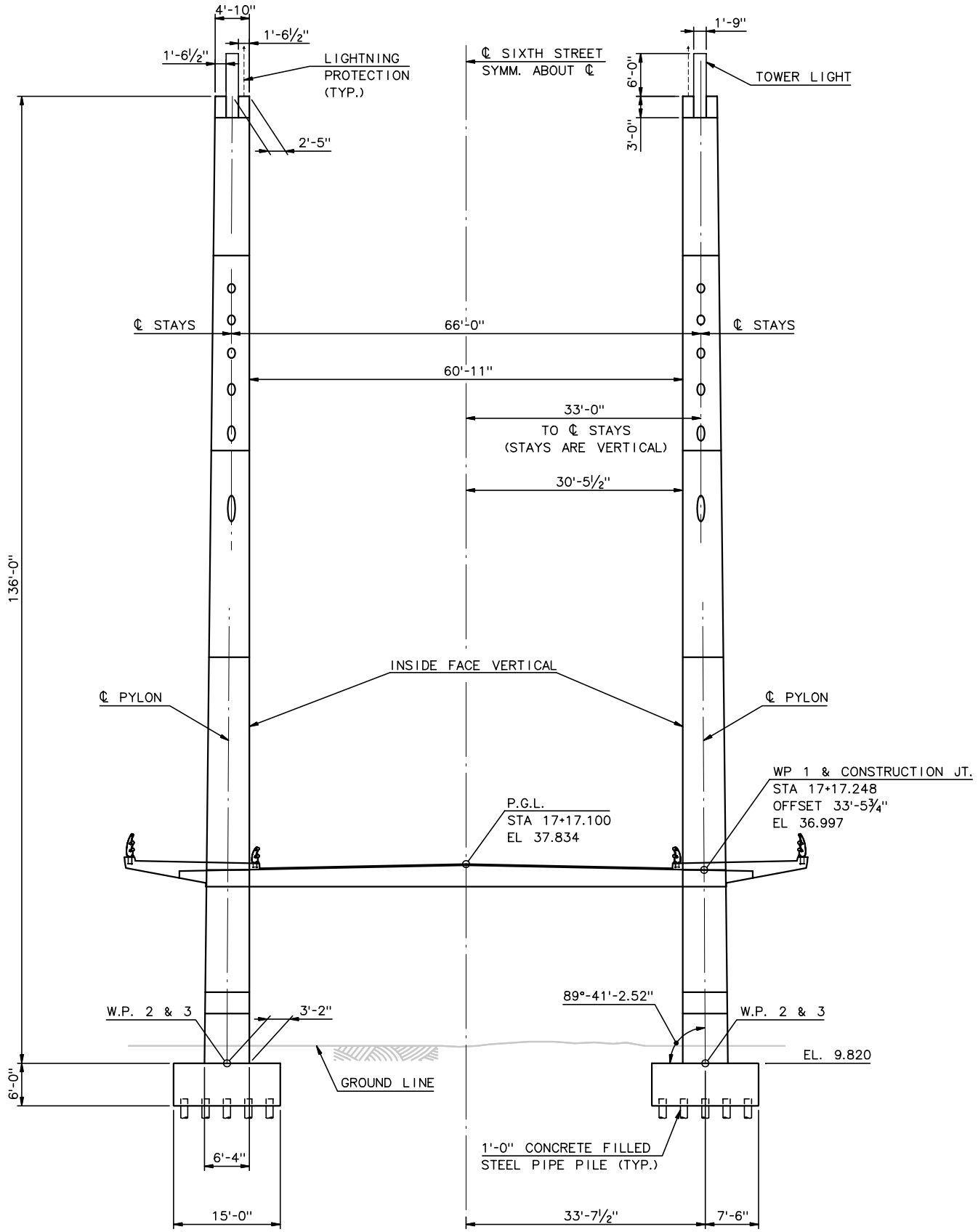

TRANSVERSE ELEVATION

1" = 10'-0"

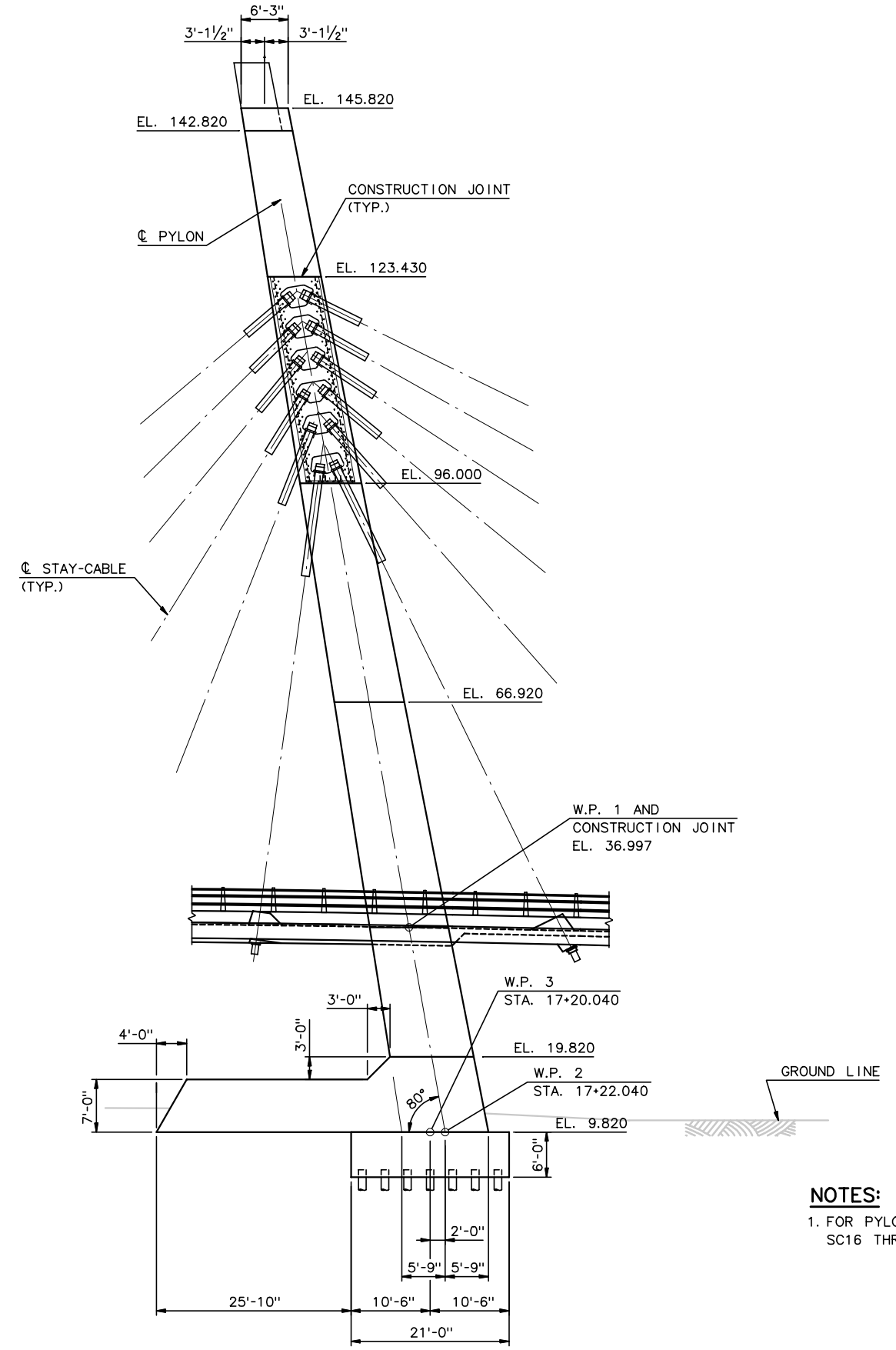

LONGITUDINAL ELEVATION

1" = 10'-0"

NOTES:

1. FOR PYLON REINFORCEMENT, SEE SHEETS SC16 THRU SC25.

RECORD DRAWING

No.	Date	Revisions	By

HNTB CORPORATION

STATE OF WISCONSIN
DEPARTMENT OF TRANSPORTATION

STRUCTURE B-40-413A

Designed By	SL	Design Checked	TPZ	Drawn By	BM	Plans Checked	AP

SOUTH CABLE STAY PYLON GEOMETRY

SHEET SC14 OF

STATE PROJECT I.D.	SHEET NUMBER
2235-00-70	8.25

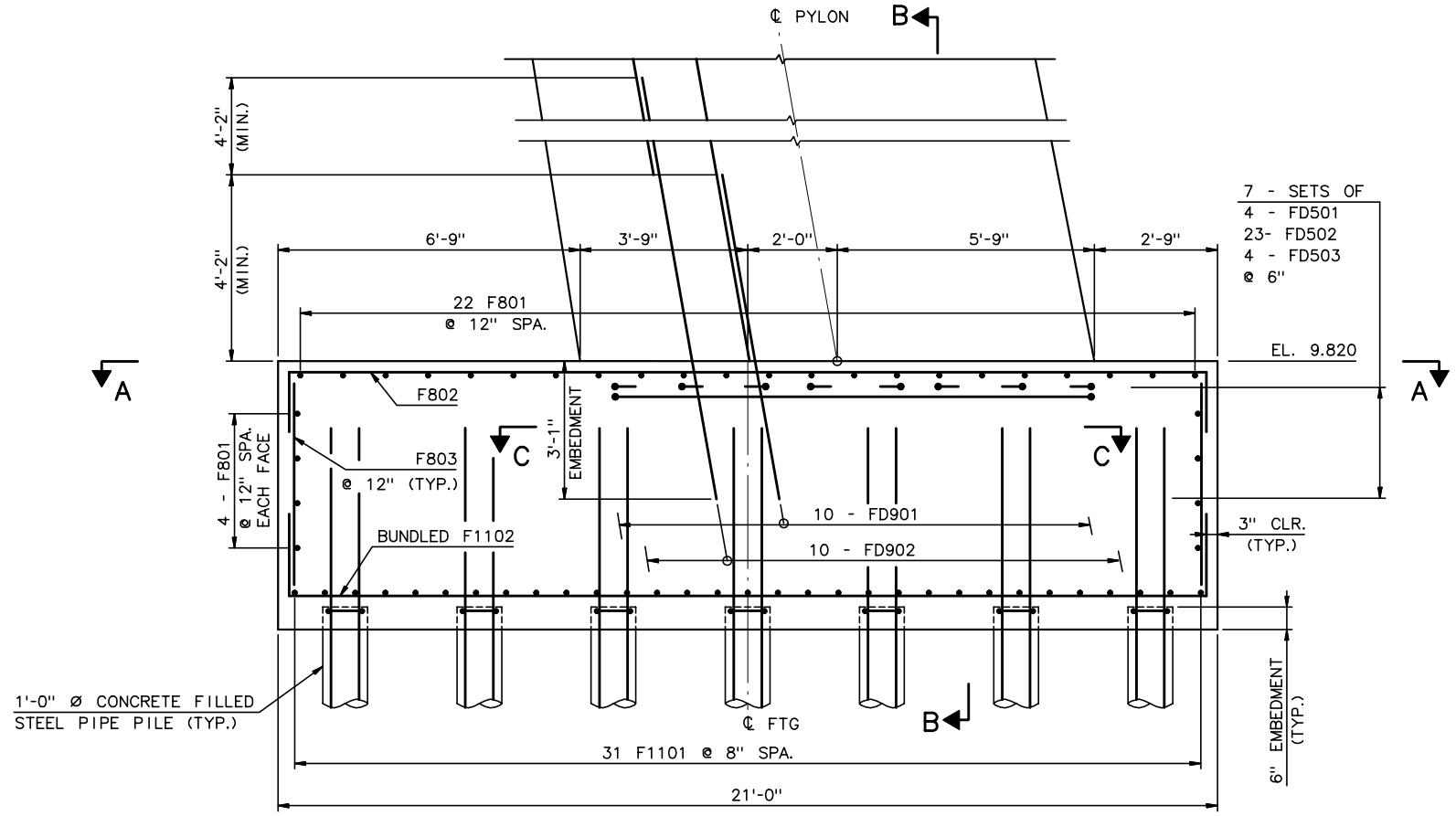

FOOTING REINFORCING - ELEVATION

½" = 1'-0"

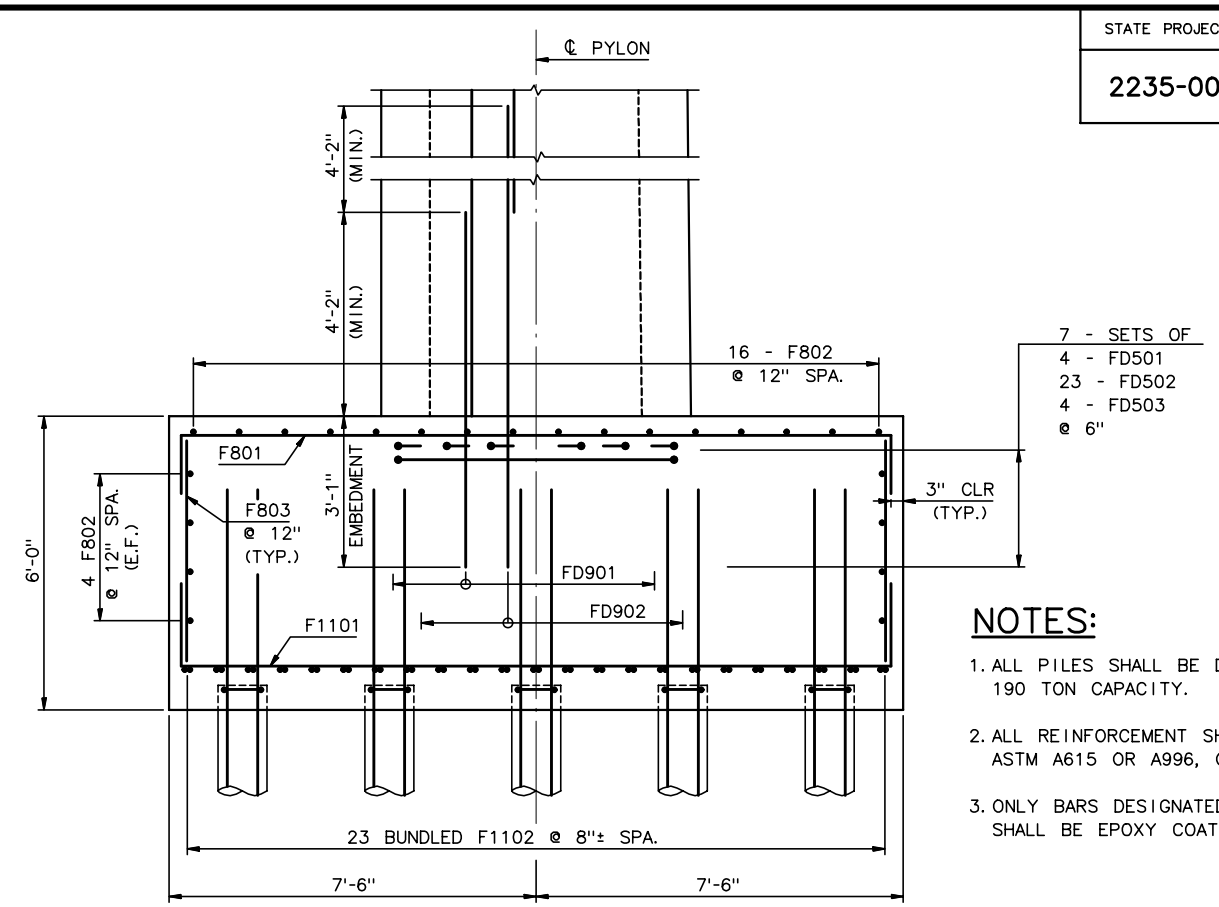

SECTION B-B

½" = 1'-0"

NOTES:

1. ALL PILES SHALL BE DRIVEN TO A 190 TON CAPACITY.
2. ALL REINFORCEMENT SHALL BE ASTM A615 OR A996, GRADE 60.
3. ONLY BARS DESIGNATED BY FDXXX SHALL BE EPOXY COATED.

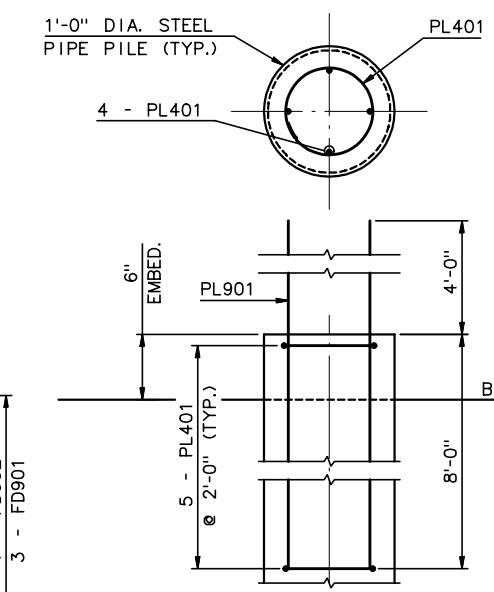

TYPICAL PILE REINF. DETAIL

⅜" = 1'-0"

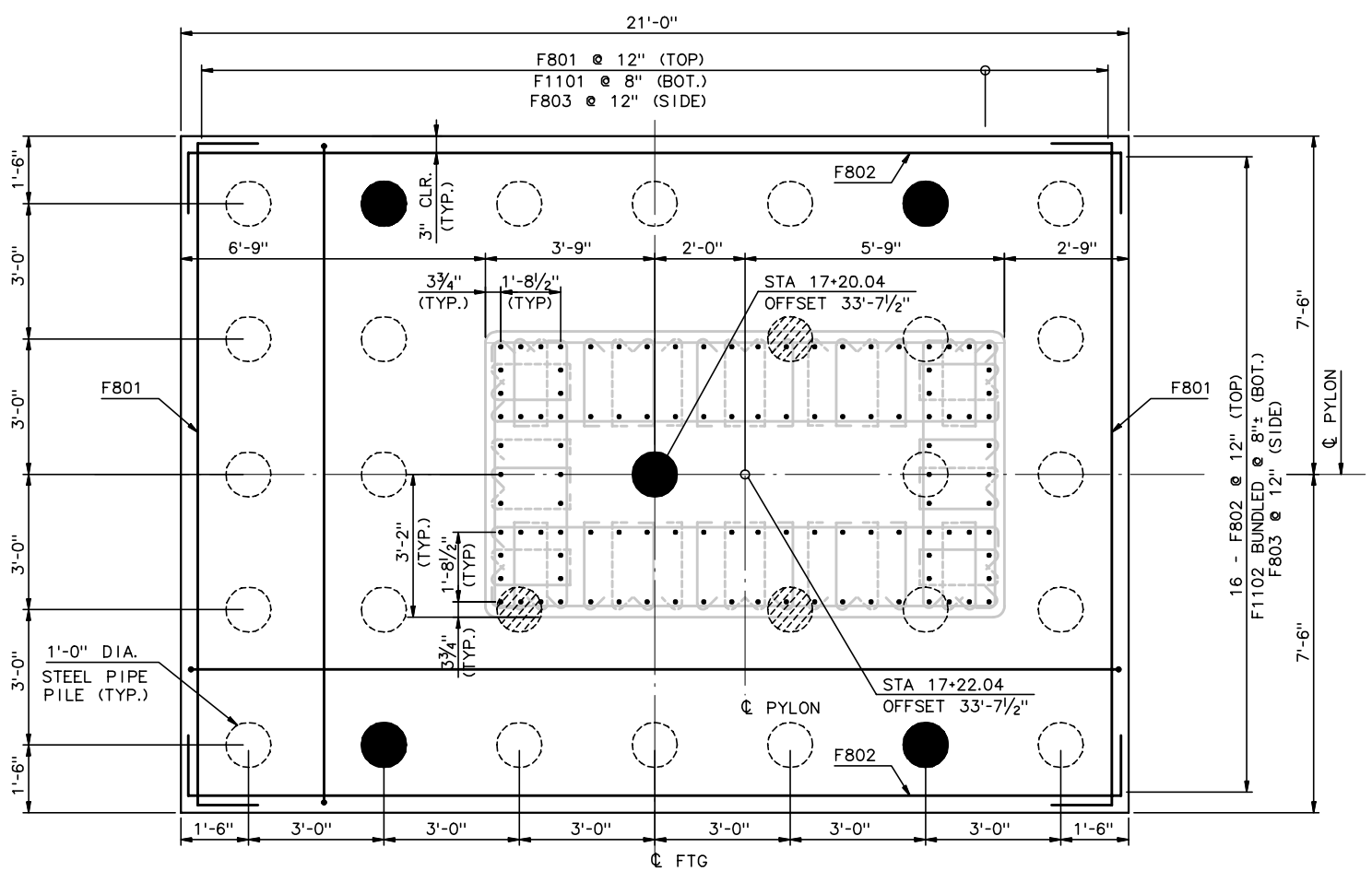

FOOTING REINFORCING - SECTION A-A

(EAST FOOTING SHOWN, WEST SIMILAR)

½" = 1'-0"

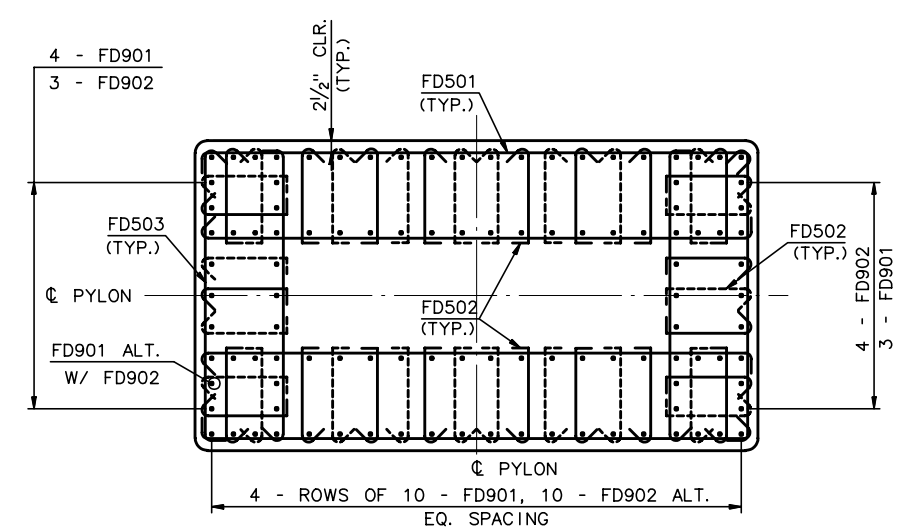

SECTION C-C

½" = 1'-0"

● - TEST PILES

RECORD DRAWING

No.	Date	Revisions	By

HNTB CORPORATION

STATE OF WISCONSIN
DEPARTMENT OF TRANSPORTATION

STRUCTURE B-40-413A

Designed By	SL	Design Checked	AP	Drawn By	DS	Plans Checked	AP

SOUTH CABLE STAY PYLON FOUNDATION DETAILS

SHEET SC15 OF

STATE PROJECT I.D.	SHEET NUMBER
2235-00-70	8.26

EMBEDDED ITEMS LIST	
ITEM	LIN. FEET
4/O XHHW LIGHTNING PROTECTION CABLE	REF. ELECTRICAL DWGS

NOTES:

1. FOR PYLON GEOMETRY, SEE SHEET SC14.
2. ALL REINFORCEMENT IS EPOXY COATED ASTM A615 OR A996, GRADE 60.
3. ALTERNATE POSITION OF 135° HOOKED END ON BAR MARK P501 UP THE TOWER.

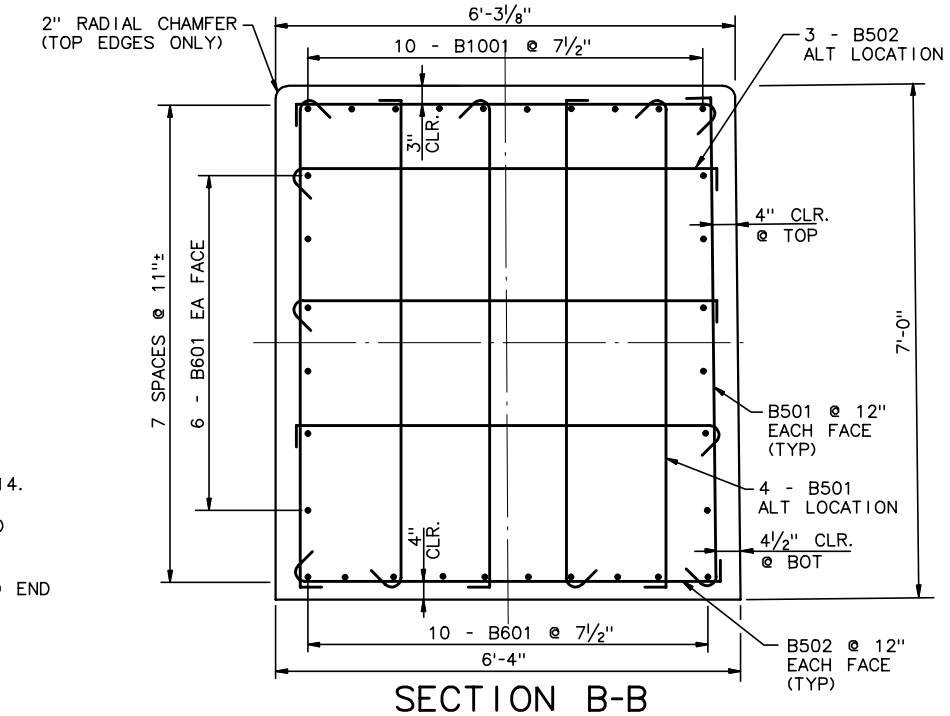

SECTION B-B

¾" = 1'-0"

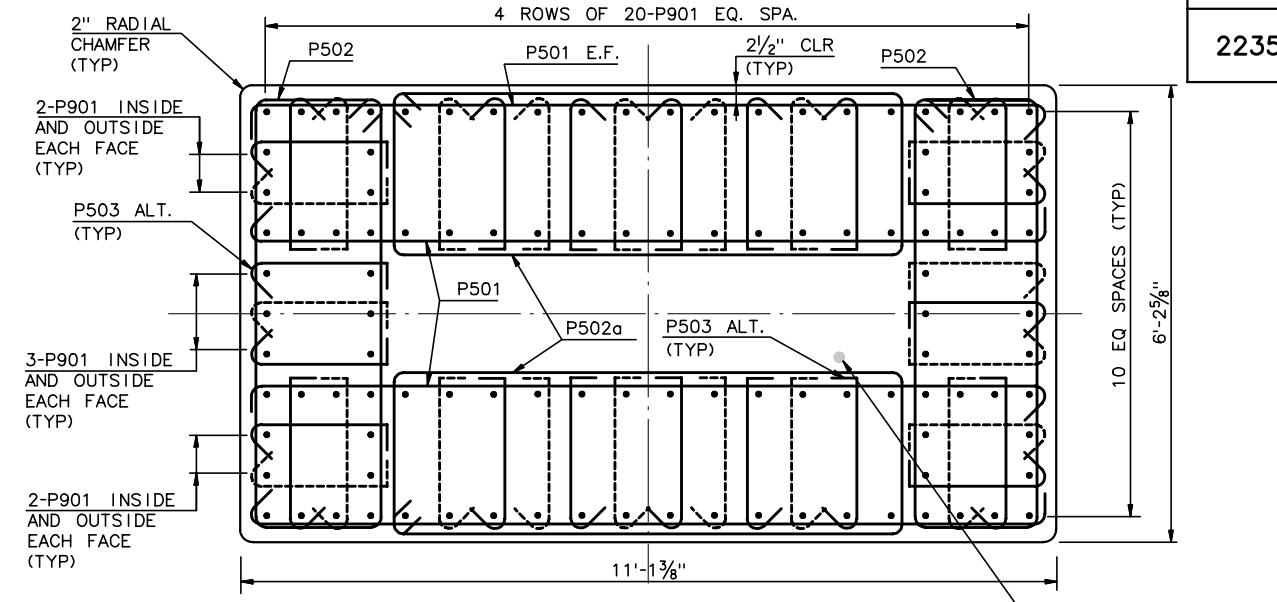

SECTION C @ EL 19.820

¾" = 1'-0"

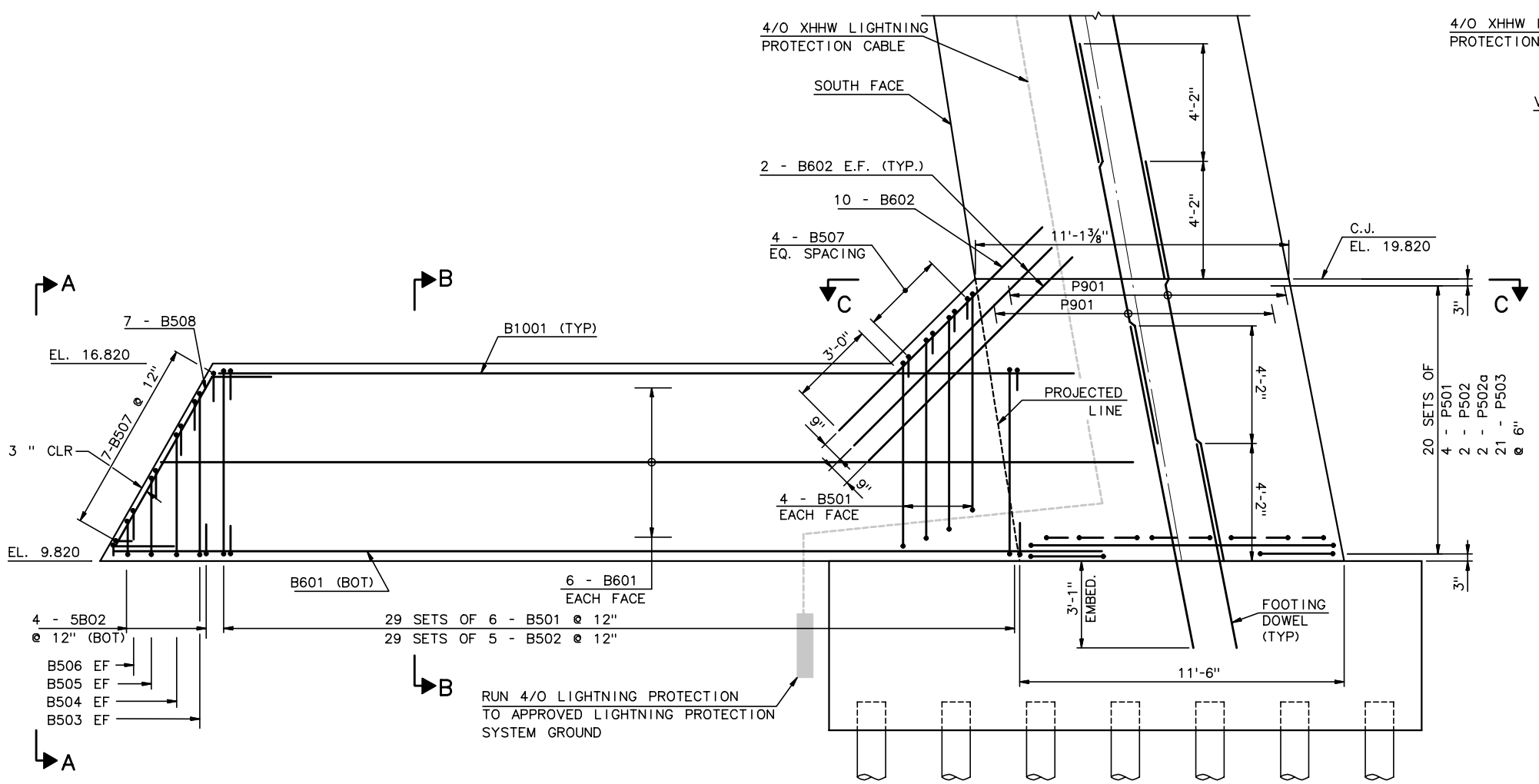

LONGITUDINAL ELEVATION

EAST PYLON SHOWN, WEST SIMILAR

⅜" = 1'-0"

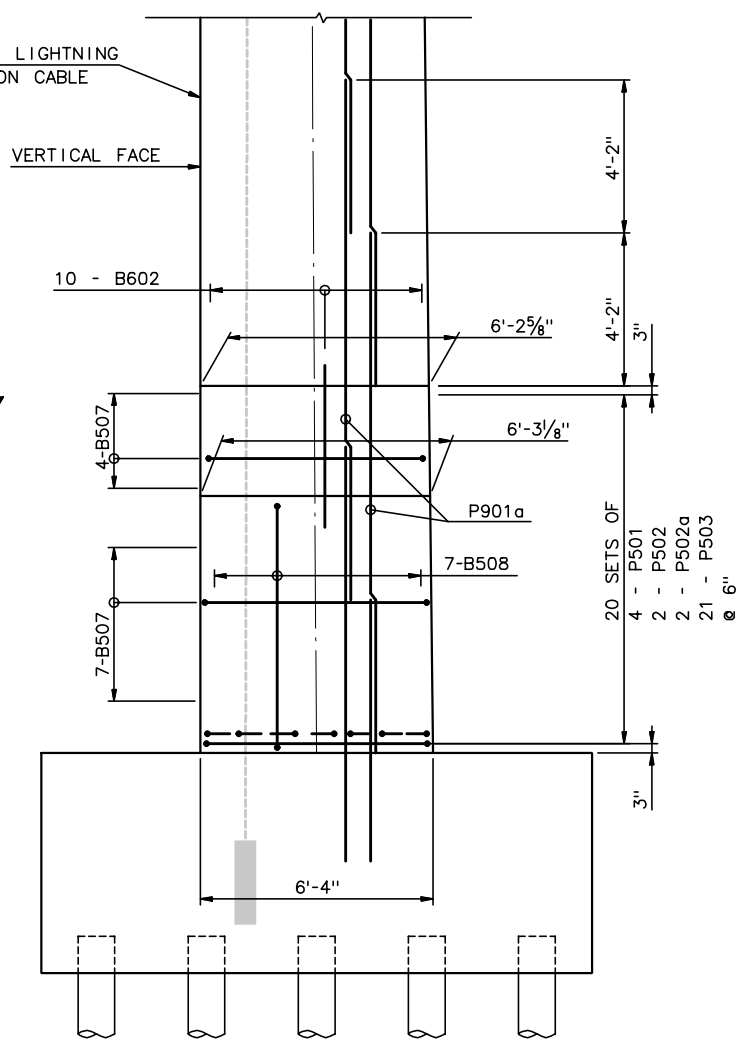

ELEVATION A-A

SOUTH FACE SHOWN, NORTH FACE SIMILAR

⅜" = 1'-0"

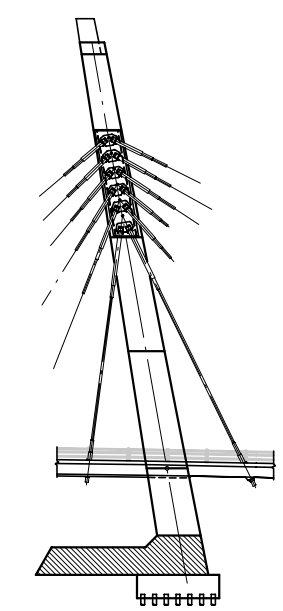

TOWER KEY

RECORD DRAWING

No.	Date	Revisions	By

HNTB CORPORATION

STATE OF WISCONSIN
DEPARTMENT OF TRANSPORTATION

STRUCTURE B-40-413A

Designed By	SL	Design Checked	TZ	Drawn By	DS	Plans Checked	AP

PYLON REINFORCEMENT LIFT - 1

SHEET SC16 OF

STATE PROJECT I.D.	SHEET NUMBER
2235-00-70	8.27

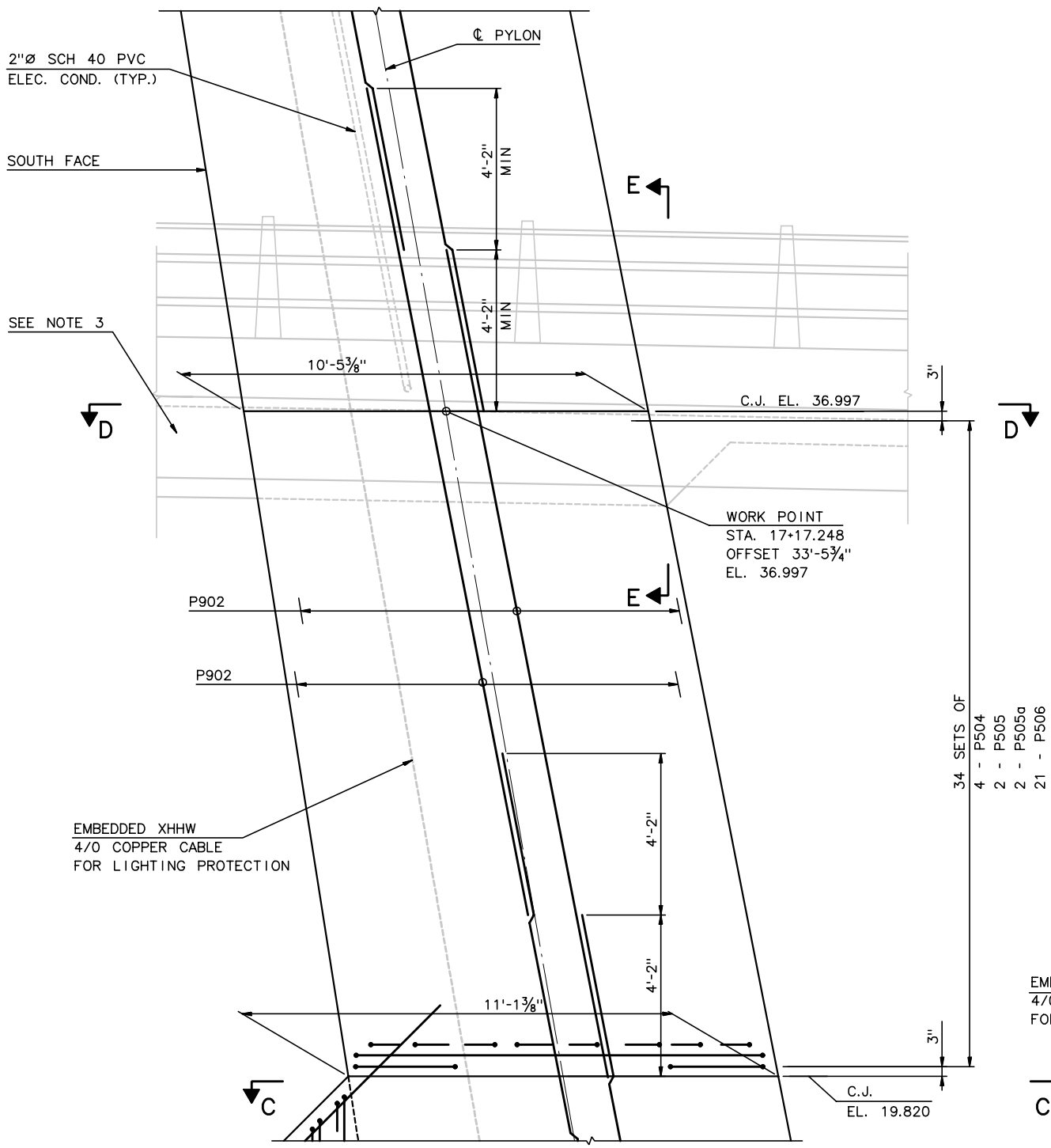

LONGITUDINAL ELEVATION

(EAST PYLON SHOWN, WEST SIMILAR)

½" = 1'-0"

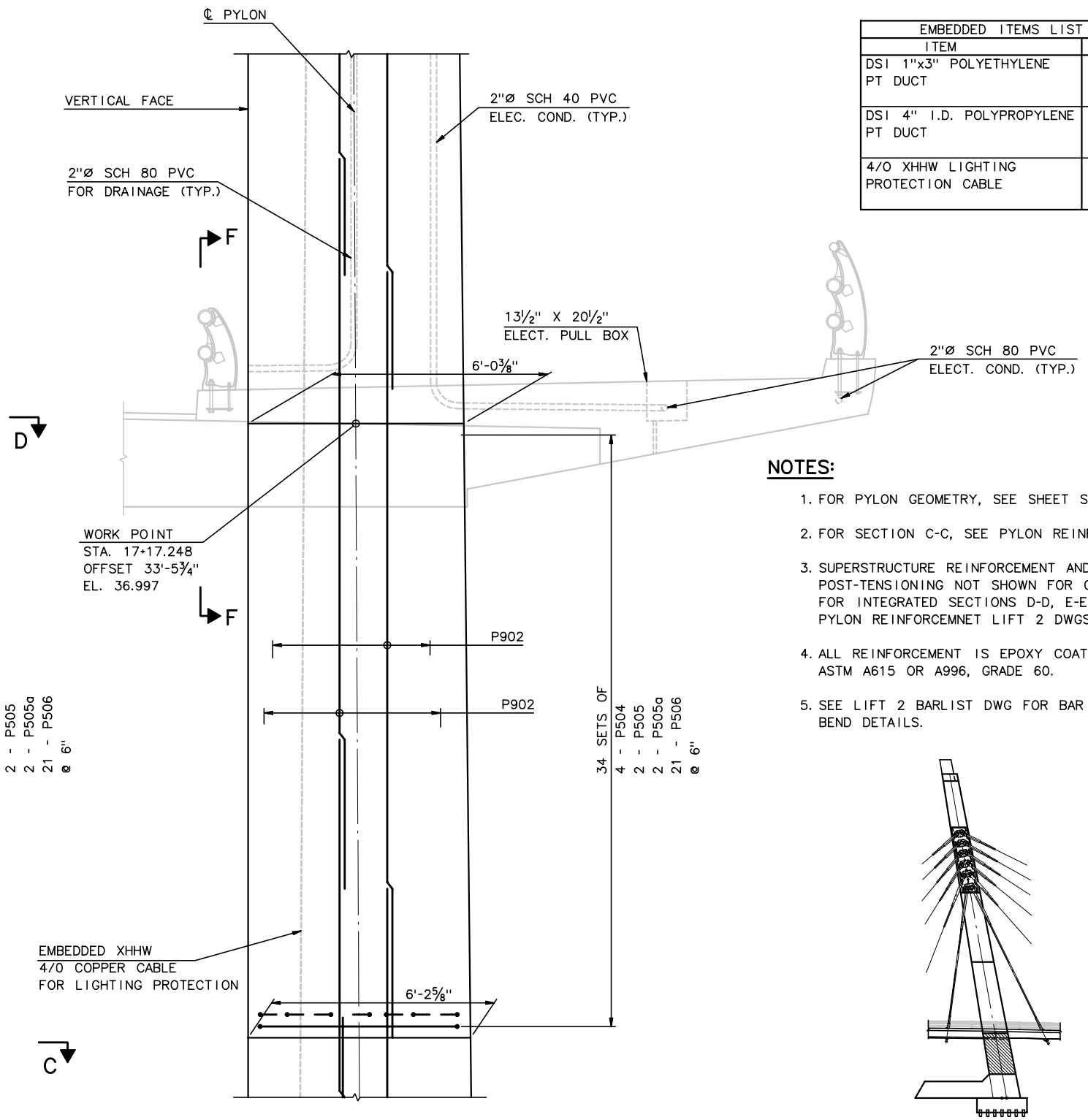

ELEVATION SOUTH FACE

(LOOKING UPSTATION)

(WEST PYLON OPPOSITE HAND)

½" = 1'-0"

EMBEDDED ITEMS LIST	
ITEM	LIN. FEET
DSI 1"x3" POLYETHYLENE PT DUCT	8x12' = 96'
DSI 4" I.D. POLYPROPYLENE PT DUCT	8x15' = 120'
4/0 XHHW LIGHTING PROTECTION CABLE	18'-0" PLUS SPLICE LENGTH

NOTES:

1. FOR PYLON GEOMETRY, SEE SHEET SC14.
2. FOR SECTION C-C, SEE PYLON REINFORCEMENT LIFT 1.
3. SUPERSTRUCTURE REINFORCEMENT AND POST-TENSIONING NOT SHOWN FOR CLARITY. FOR INTEGRATED SECTIONS D-D, E-E, AND F-F, SEE PYLON REINFORCEMNET LIFT 2 DWGS 2 AND 3 OF 3.
4. ALL REINFORCEMENT IS EPOXY COATED ASTM A615 OR A996, GRADE 60.
5. SEE LIFT 2 BARLIST DWG FOR BAR BEND DETAILS.

TOWER KEY

RECORD DRAWING

No.	Date	Revisions	By

HNTB CORPORATION

STATE OF WISCONSIN
DEPARTMENT OF TRANSPORTATION

STRUCTURE B-40-413A

Designed By	CE	Design Checked	TZ	Drawn By	BM	Plans Checked	AP

PYLON REINFORCEMENT
LIFT-2
1 OF 3

SHEET SC17 OF .

STATE PROJECT I.D.	SHEET NUMBER
2235-00-70	8.28

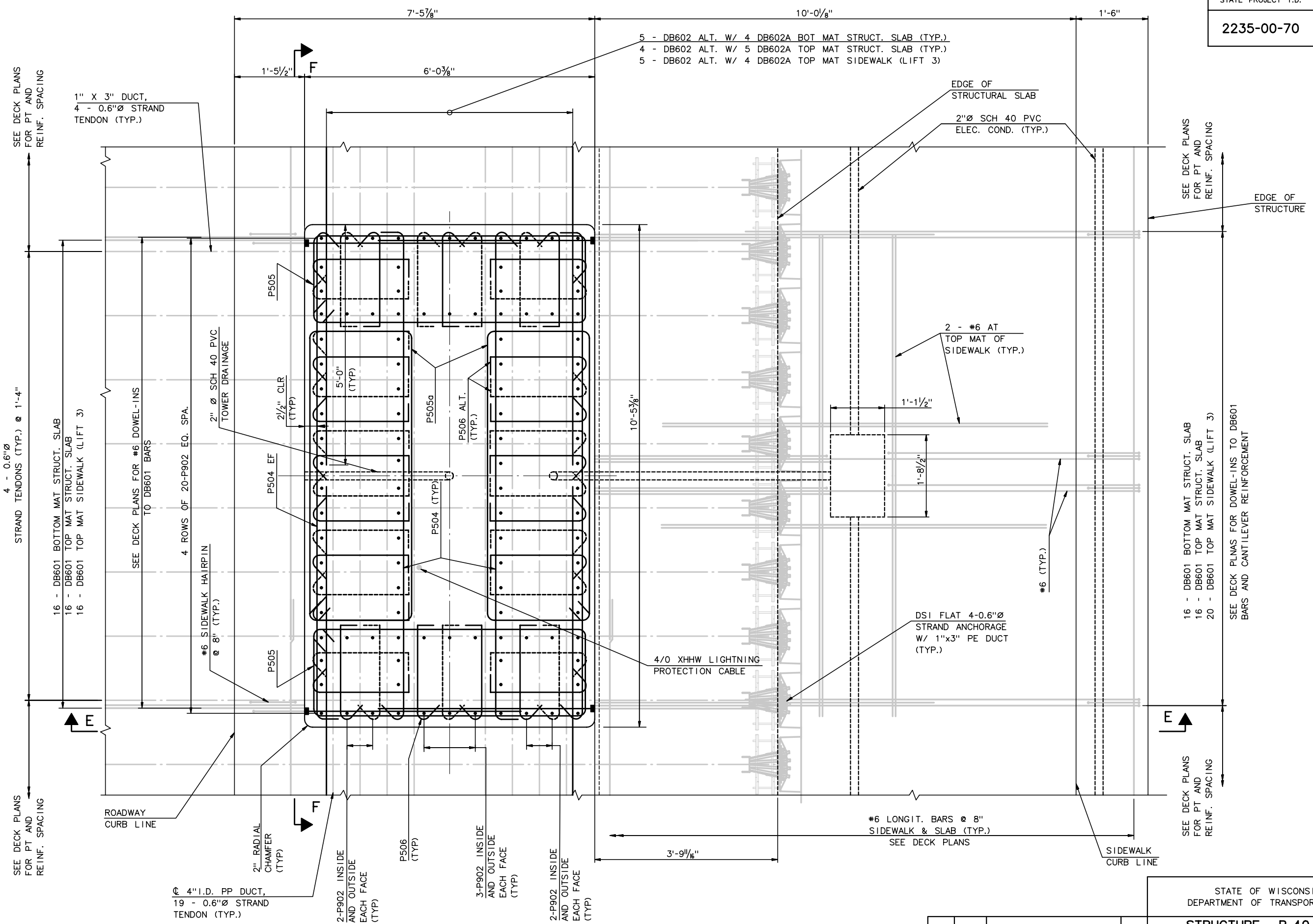

SECTION D @ EL 36.997

(EAST PYLON SHOWN, WEST OPPOSITE HAND)
1" = 1'-0"

RECORD DRAWING

No.	Date	Revisions	By

HNTB CORPORATION

STATE OF WISCONSIN
DEPARTMENT OF TRANSPORTATION

STRUCTURE B-40-413A

Designed By	CE	Design Checked	TZ	Drawn By	CE	Plans Checked	AP

PYLON REINFORCEMENT
LIFT 2
2 OF 3

SHEET SC18 OF

j:\cadd\ff31185\dgn\as built\south cablestay\sc18-pylonreinf2a.dgn 02/11/03 02:57:14 PM

STATE PROJECT I.D.	SHEET NUMBER
2235-00-70	8.29

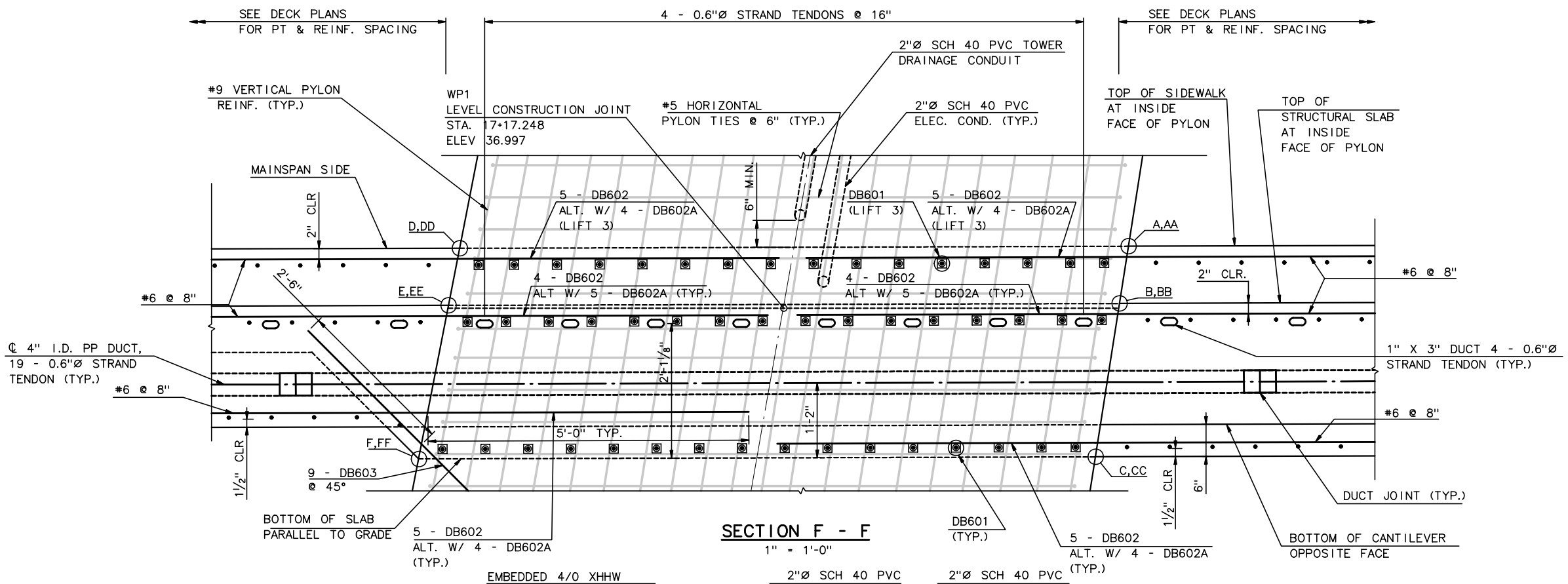

SECTION F - F

1" = 1'-0"

SLAB/TOWER INTERSECTION GEOM.			
WK. POINT	STA.	OFFSET	EL.
A	17+11.859	30.458'	38.039'
B	17+11.999	30.458'	37.145'
C	17+12.375	30.458'	34.747'
D	17+22.306	30.458'	37.853'
E	17+22.481	30.458'	36.959'
F	17+22.950	30.458'	34.558'
AA	17+11.840	36.479'	38.159'
BB	17+12.018	36.492'	37.024'
CC	17+12.375	36.517'	34.747'
DD	17+22.282	36.481'	37.973'
EE	17+22.504	36.494'	36.837'
FF	17+22.950	36.519'	34.558'

NOTES:

1. PT DIMENSIONS MEASURED TO THE CENTERLINE OF DUCT.
2. ALL REINFORCEMENT IS EPOXY COATED ASTM A615 OR A996, GRADE 60.
3. REFER TO ELECTRICAL DWGS FOR CONDUIT AND PULL BOX TYPE AND QUANTITY.

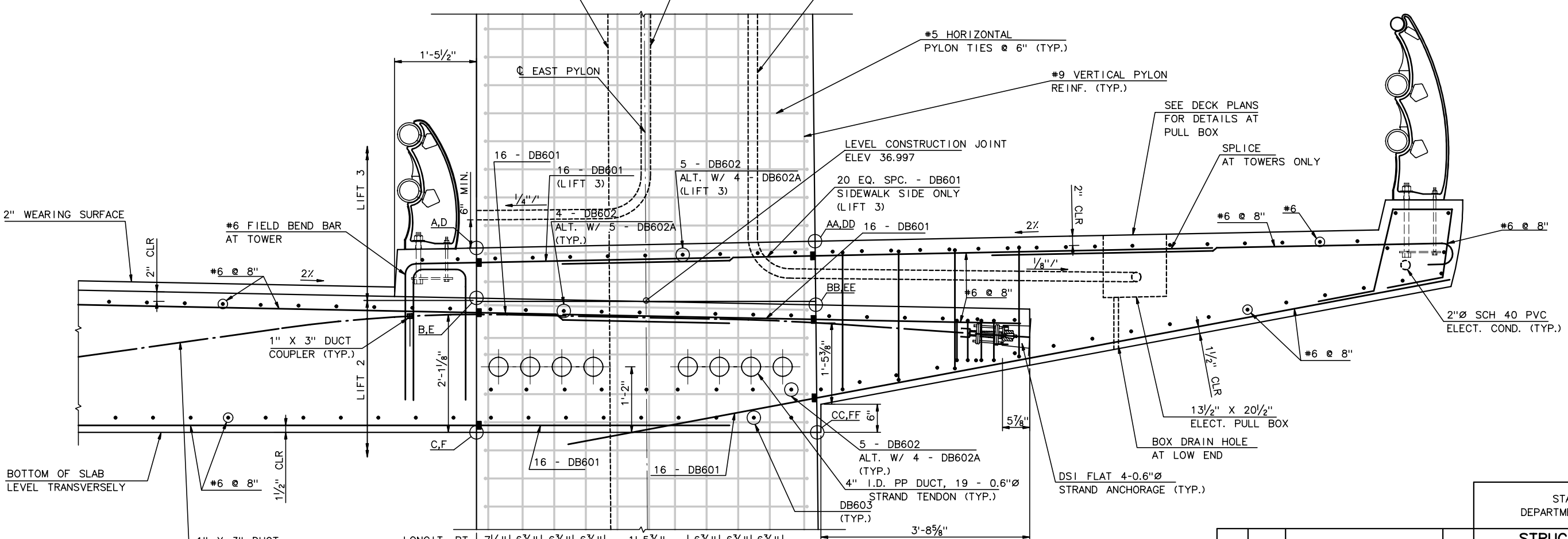

SECTION E - E

(EAST PYLON SHOWN, WEST OPPOSITE HAND)
1" = 1'-0"

RECORD DRAWING

No.	Date	Revisions	By

HNTB CORPORATION

STATE OF WISCONSIN
DEPARTMENT OF TRANSPORTATION

STRUCTURE B-40-413A

Designed By	CE	Design Checked	TZ	Drawn By	CE	Plans Checked	AP

PYLON REINFORCEMENT
LIFT - 2
3 OF 3

SHEET SC19 OF

STATE PROJECT I.D.	SHEET NUMBER
2235-00-70	8.30

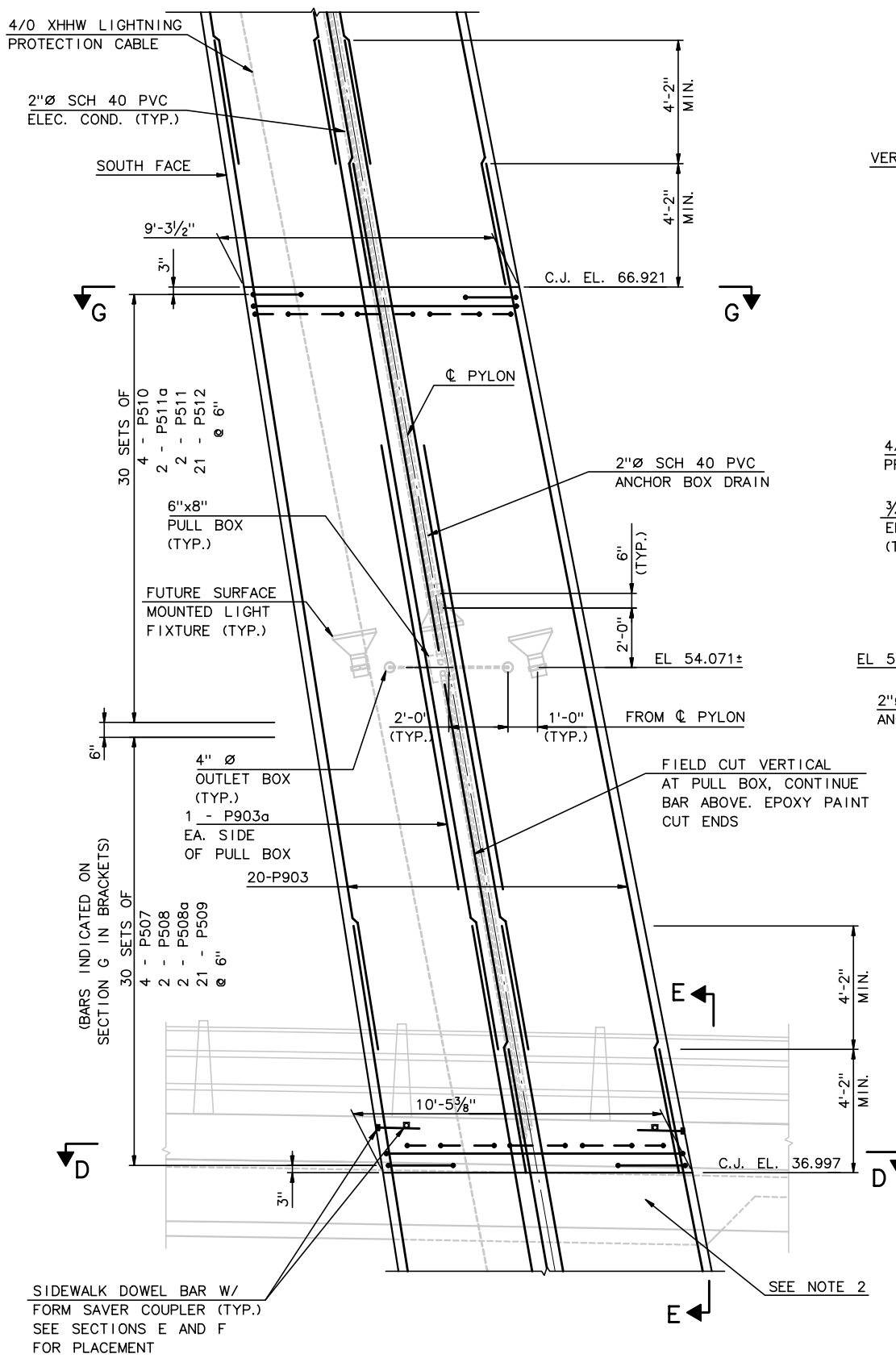

LONGITUDINAL ELEVATION

(EAST PYLON SHOWN, WEST SIMILAR)
⅜" = 1'-0"

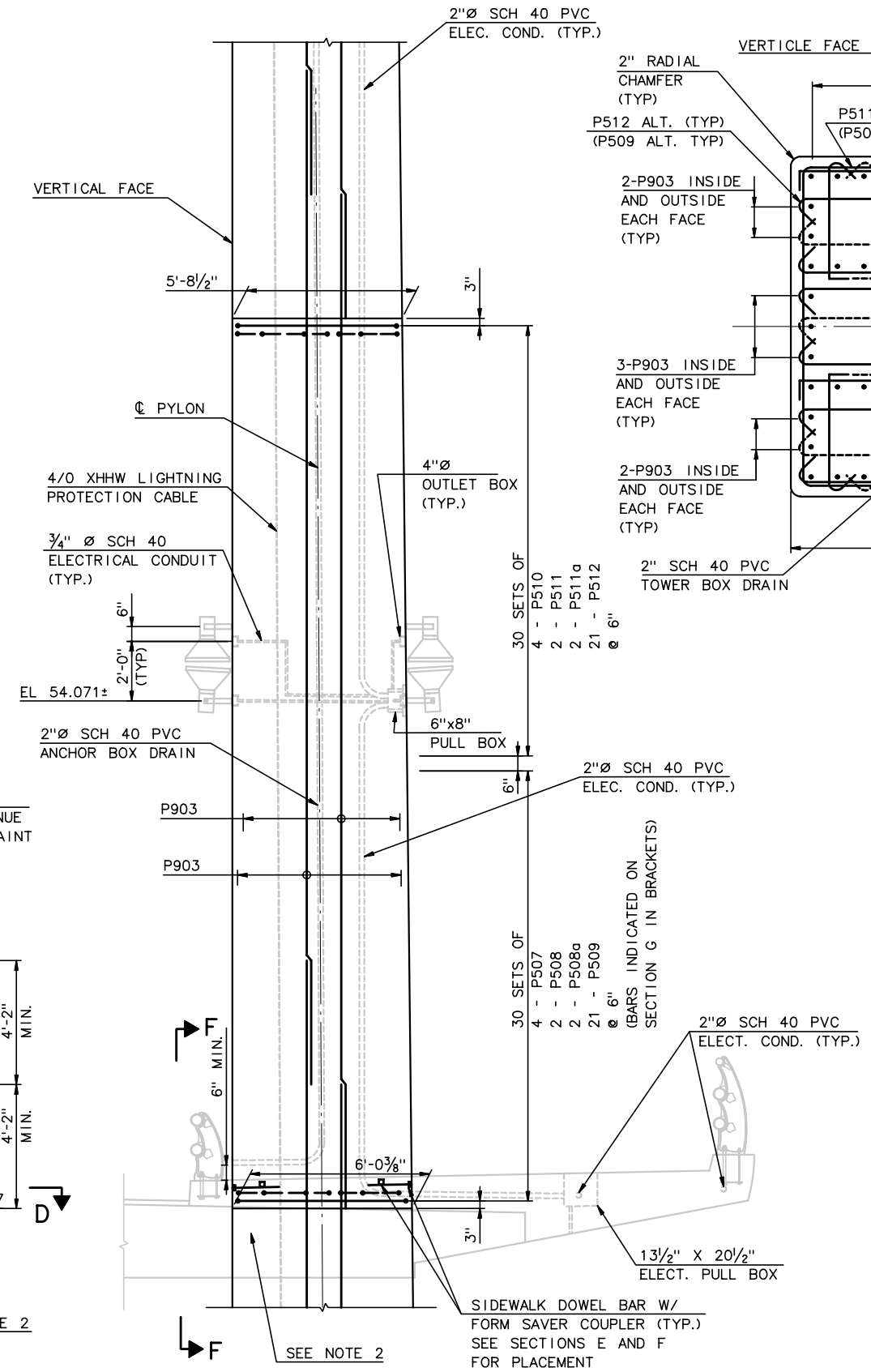

ELEVATION SOUTH FACE

(LOOKING UPSTATION)
(WEST PYLON OPPOSITE HAND)
⅜" = 1'-0"

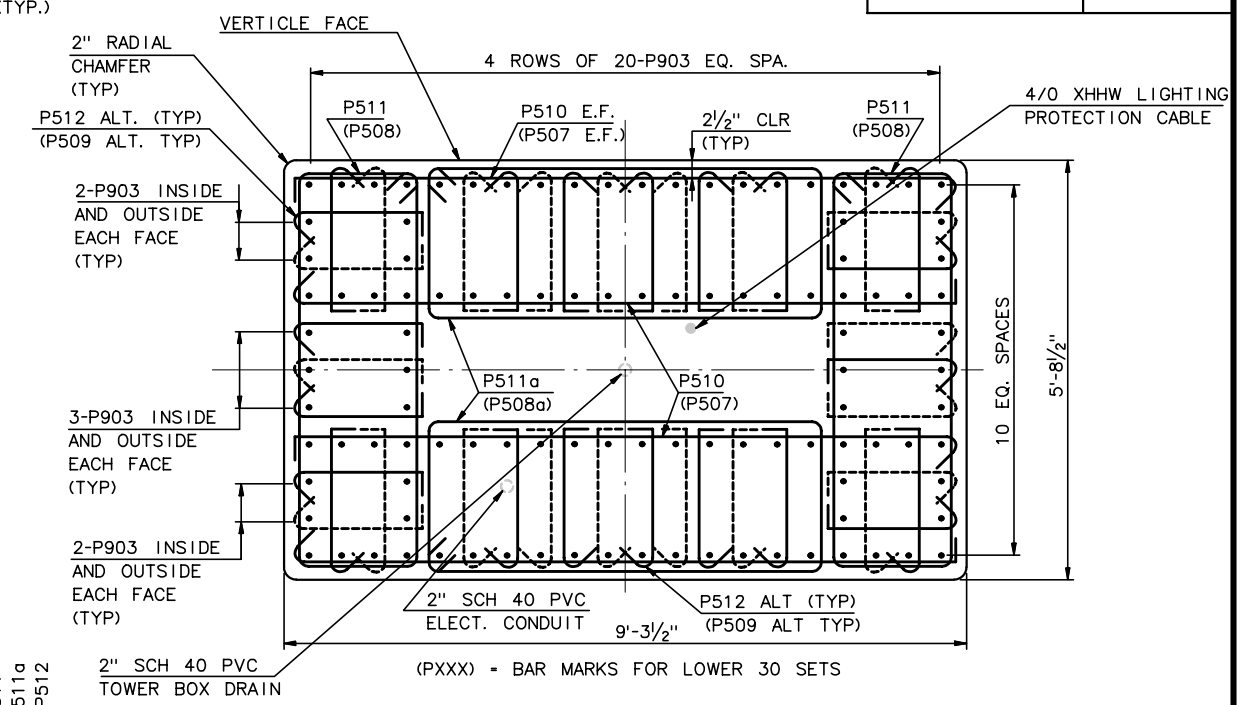

SECTION G @ EL 66.920

¾" = 1'-0"

NOTES:

1. FOR PYLON GEOMETRY, SEE SHEET SC14.
2. SUPERSTRUCTURE REINFORCEMENT AND POST-TENSIONING NOT SHOWN FOR CLARITY. FOR INTEGRATED SECTIONS D-D, E-E, AND F-F, SEE PYLON REINFORCEMNET LIFT 2 DWGS 2 AND 3 OF 3.
3. ALL REINFORCEMENT IS EPOXY COATED ASTM A615 OR A996, GRADE 60.
4. SEE LIFT 3 BARLIST DWG FOR BAR BEND DETAILS.

EMBEDDED ITEMS LIST	
ITEM	QTY.
2" SCH 40 PVC ELECTRICAL CONDUIT	31'-0"±
6"x8" PULL BOX STRONGWELL CAT. NO. PC0608DG06	1
4/0 XHHW LIGHTNING PROTECTION CABLE	31'-0"+SPLICE
2" SCH 40 PVC ANCHOR BOX DRAIN	33'-0"±
¾" SCH 40 PVC ELECTRICAL CONDUIT	REF. ELECTRICAL DWG
4" ROUND OUTLET BOX CARLON CAT. NO. E97OCE	6

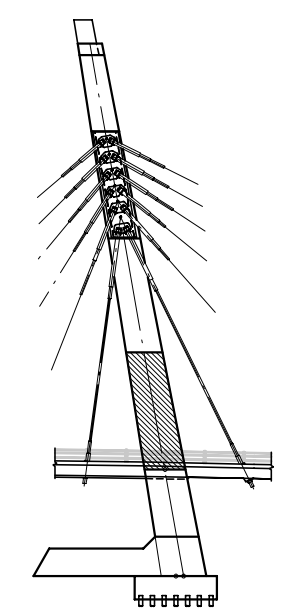

TOWER KEY

RECORD DRAWING

No.	Date	Revisions	By
1	7-06-01	Rev. Railing	BM

HNTB CORPORATION

STATE OF WISCONSIN
DEPARTMENT OF TRANSPORTATION

STRUCTURE B-40-413A

Designed By	SL	Design Checked	TZ	Drawn By	BM	Plans Checked	AP

PYLON REINFORCEMENT LIFT - 3

SHEET SC20 OF .

j:\cadd\ff31185\dgn\as built\south cablestay\sc20-pylonreinf3.dgn 04/09/03 02:20:17 PM

STATE PROJECT I.D.	SHEET NUMBER
2235-00-70	8.31

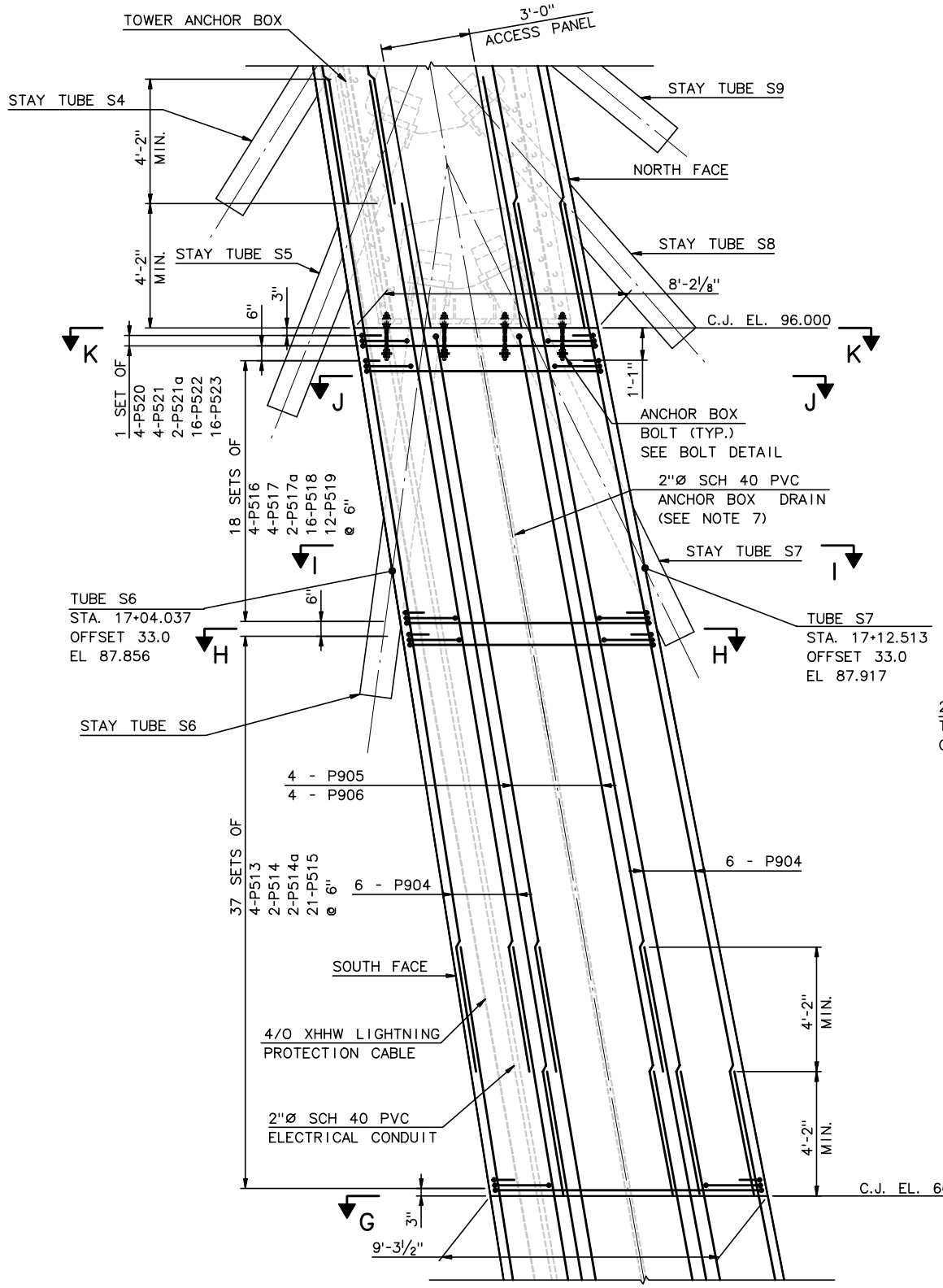

LONGITUDINAL ELEVATION

(EAST PYLON SHOWN, WEST SIMILAR)
⅜" = 1'-0"

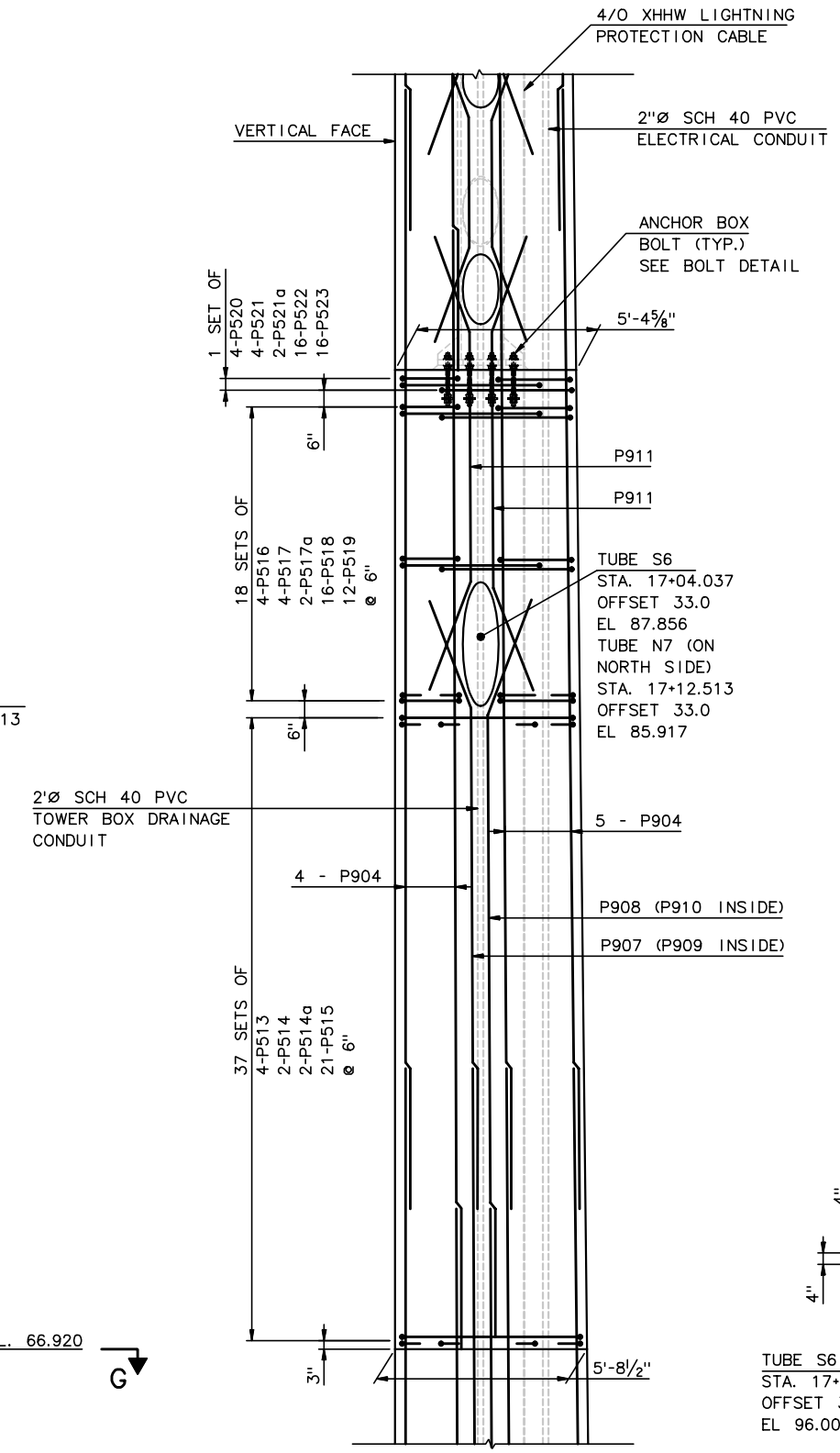

ELEVATION SOUTH FACE

(LOOKING UPSTATION)
(NORTH FACE SIMILAR)
(WEST PYLON OPPOSITE HAND)
⅜" = 1'-0"

NOTES:

1. FOR PYLON GEOMETRY, SEE SHEET SC14.
2. FOR SECTION G-G, SEE PYLON REINFORCEMENT LIFT 3 DWG.
3. FOR SECTIONS H-H THRU K-K SEE PYLON REINFORCEMENT LIFT - 4, DWG 2 OF 2.
4. ALL REINFORCEMENT IS EPOXY COATED ASTM A615 OR A996, GRADE 60.
5. SEE LIFT 4 BARLIST DWG FOR BAR BEND DETAILS.
6. FOR TOWER BOX DETAILS SEE PYLON ANCHOR BOX DWGS. FOR STAY TUBE DETAILS, SEE STAY TUBE DWGS.
7. 2" ANCHOR BOX DRAIN SHALL BE CUT FLUSH WITH THE BOTTOM OF THE ANCHOR BOX IN LIFT 5.

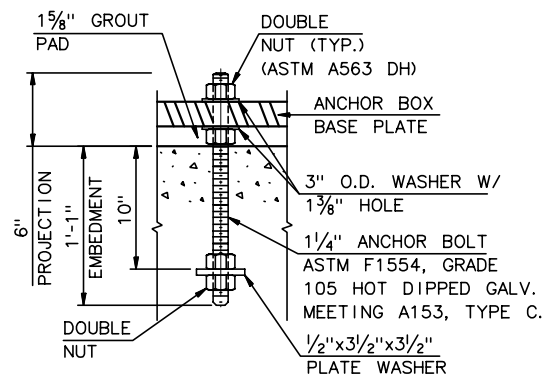

BOLT DETAIL

1½" = 1'-0"

EMBEDDED ITEMS LIST	
ITEM	QTY.
STAY TUBE S6 SUPPLIED BY D.S.I.	1
STAY TUBE S7 SUPPLIED BY D.S.I.	1
4/O XHHW LIGHTNING PROTECTION CABLE	30'-0" + SPLICE
2" SCH 40 PVC ANCHOR BOX DRAIN	30'-0"±
2" SCH 40 PVC ELECTRICAL CONDUIT	31'-0"±
1¼" ANCHOR BOLTS ASTM F1554, GRADE 105 W/ HARDWARE	8

* QUANTITY SHOWN IS FOR A SINGLE PYLON. MULTIPLY BY TWO FOR TOTAL QUANTITY

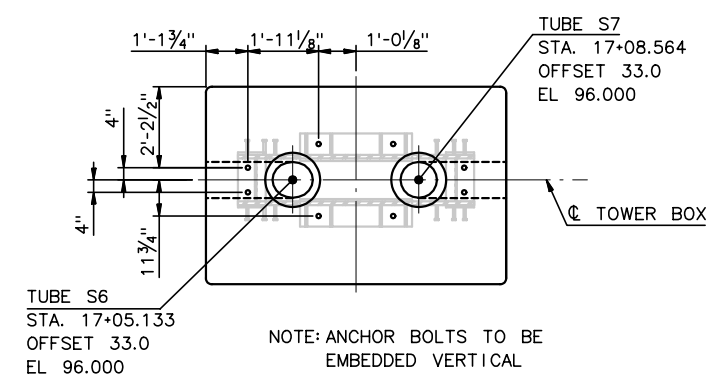

NOTE: ANCHOR BOLTS TO BE EMBEDDED VERTICAL

TOWER BOX ANCHOR BOLT PATTERN

@ EL. 96.000
⅜" = 1'-0"

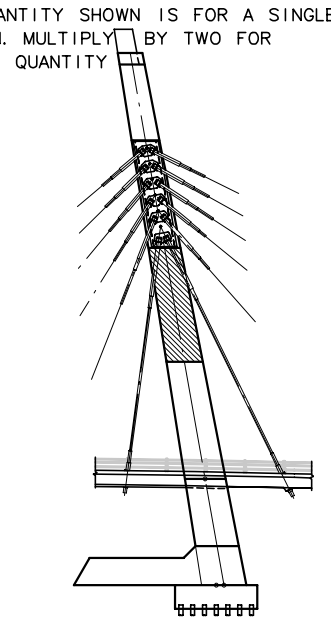

TOWER KEY

RECORD DRAWING

No.	Date	Revisions	By

HNTB CORPORATION

STATE OF WISCONSIN
DEPARTMENT OF TRANSPORTATION

STRUCTURE B-40-413A

Designed By	SL	Design Checked	TZ	Drawn By	BM	Plans Checked	AP

PYLON REINFORCEMENT LIFT - 4 1 OF 2

SHEET SC21 OF

STATE PROJECT I.D.	SHEET NUMBER
2235-00-70	8.32

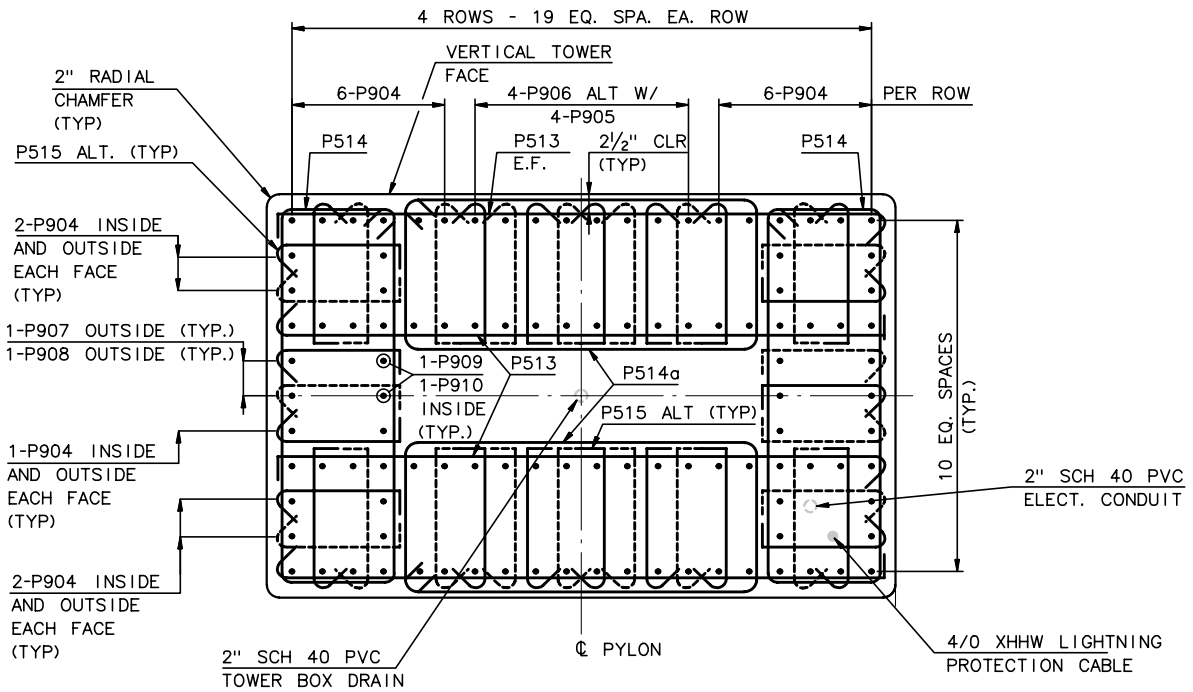

SECTION H

¾" = 1'-0"

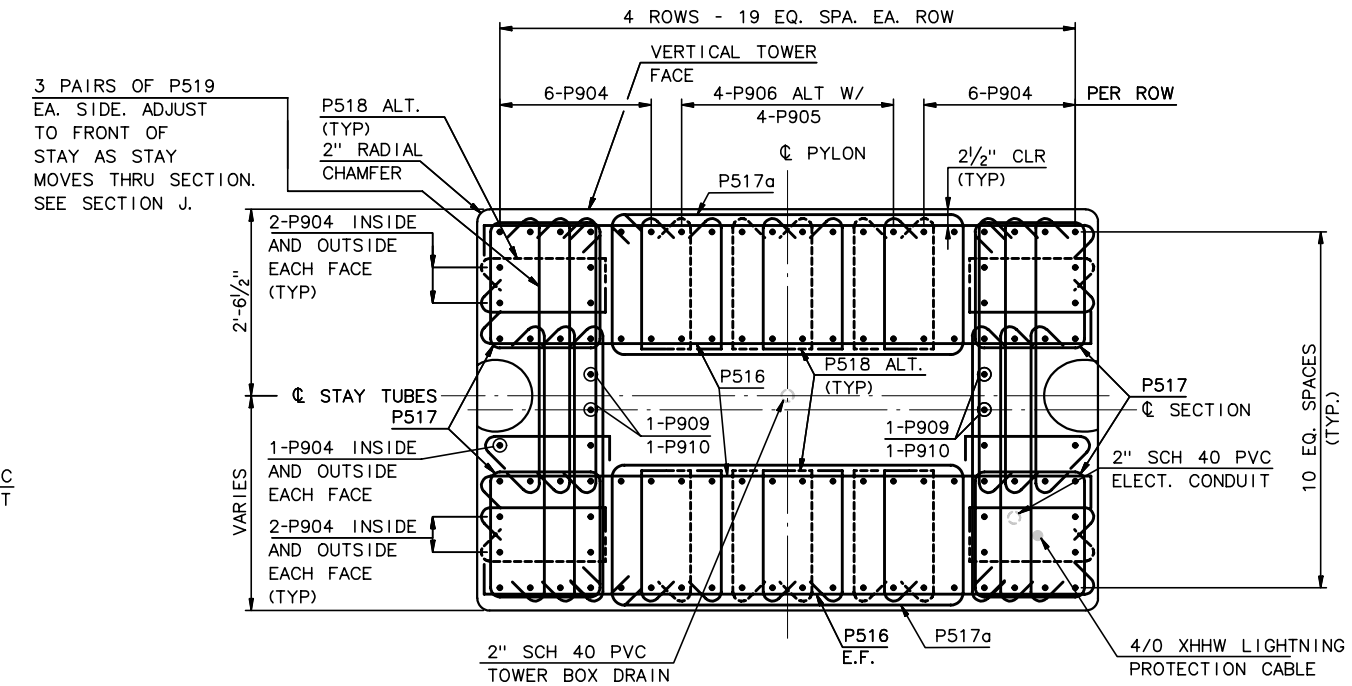

SECTION I

¾" = 1'-0"

NOTES:

1. FOR LOCATION OF SECTIONS H THRU J SEE PYLON REINFORCEMENT LIFT-4, DWG 1 OF 2.
2. ALL REINFORCEMENT IS EPOXY COATED ASTM A615 OR A996, GRADE 60.
3. FOR ANCHOR BOX DETAIL, SEE SHEET SC27.

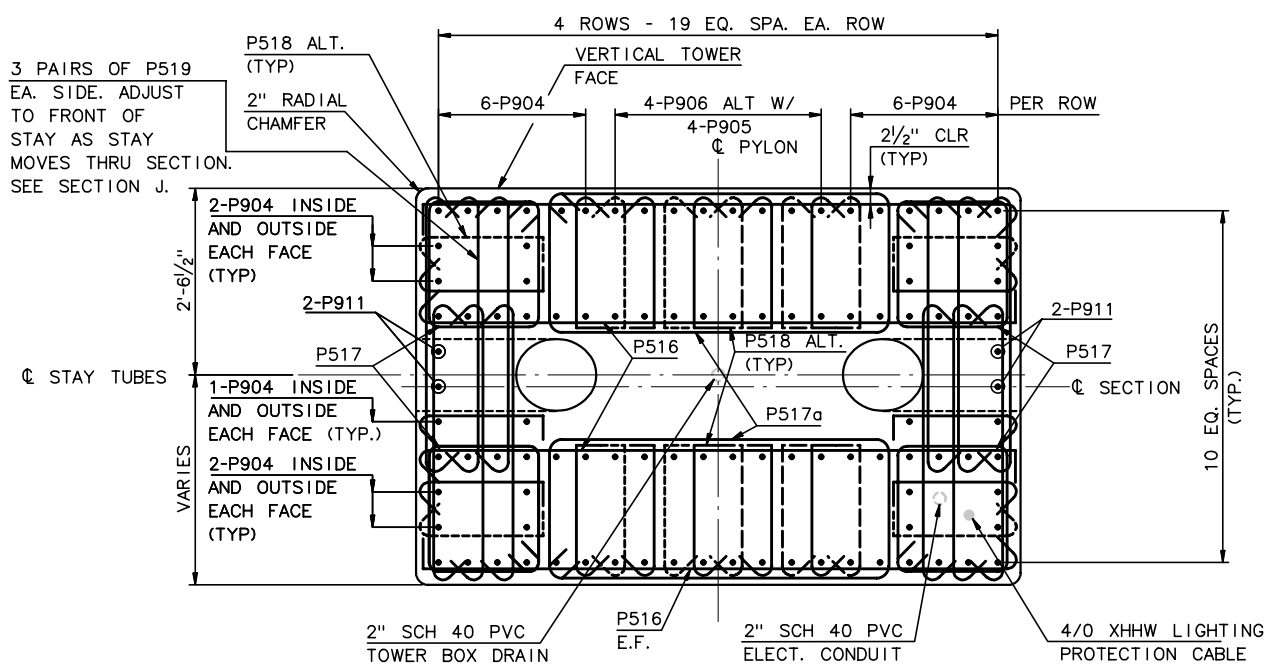

SECTION J

¾" = 1'-0"

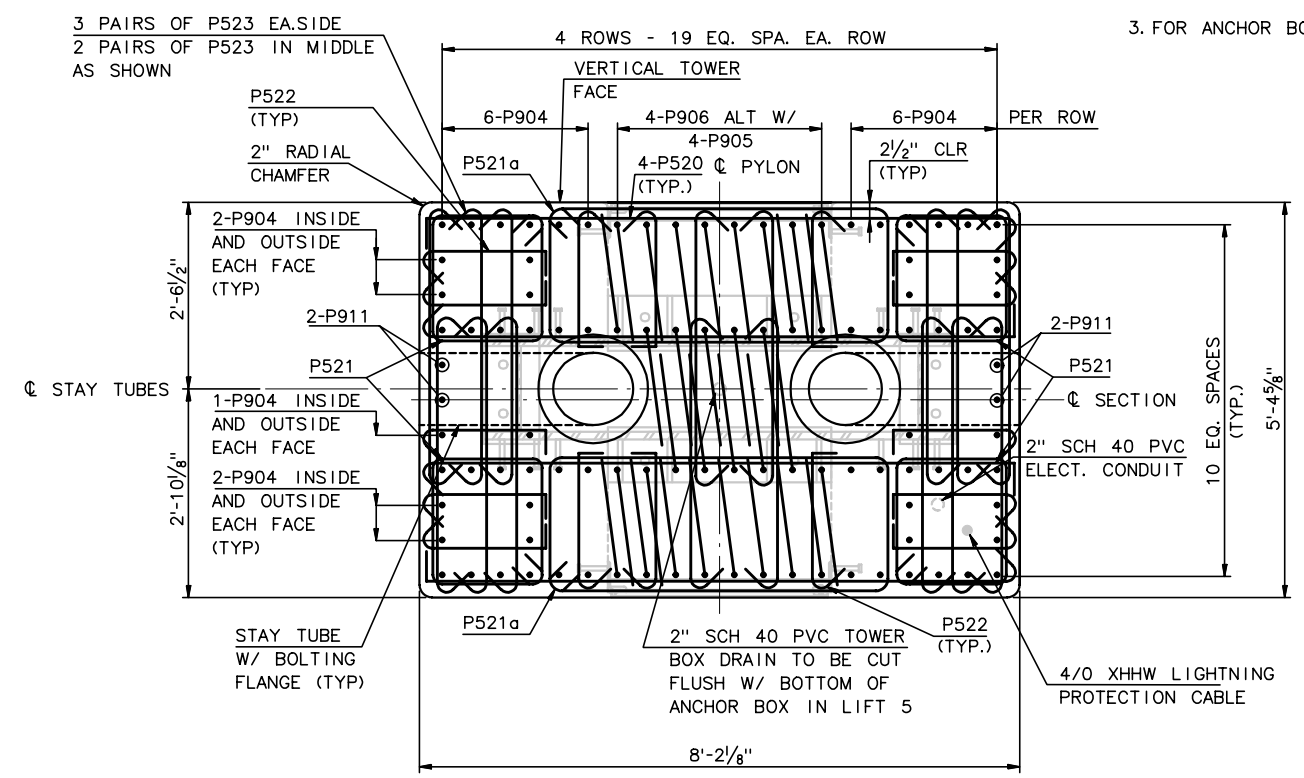

SECTION K @ EL 96.000

¾" = 1'-0"

RECORD DRAWING

No.	Date	Revisions	By

HNTB CORPORATION

STATE OF WISCONSIN
DEPARTMENT OF TRANSPORTATION

STRUCTURE B-40-413A

Designed By	SL	Design Checked	TZ	Drawn By	BM	Plans Checked	AP

PYLON REINFORCEMENT LIFT - 4 2 OF 2

SHEET SC22 OF

STATE PROJECT I.D.	SHEET NUMBER
2235-00-70	8.33

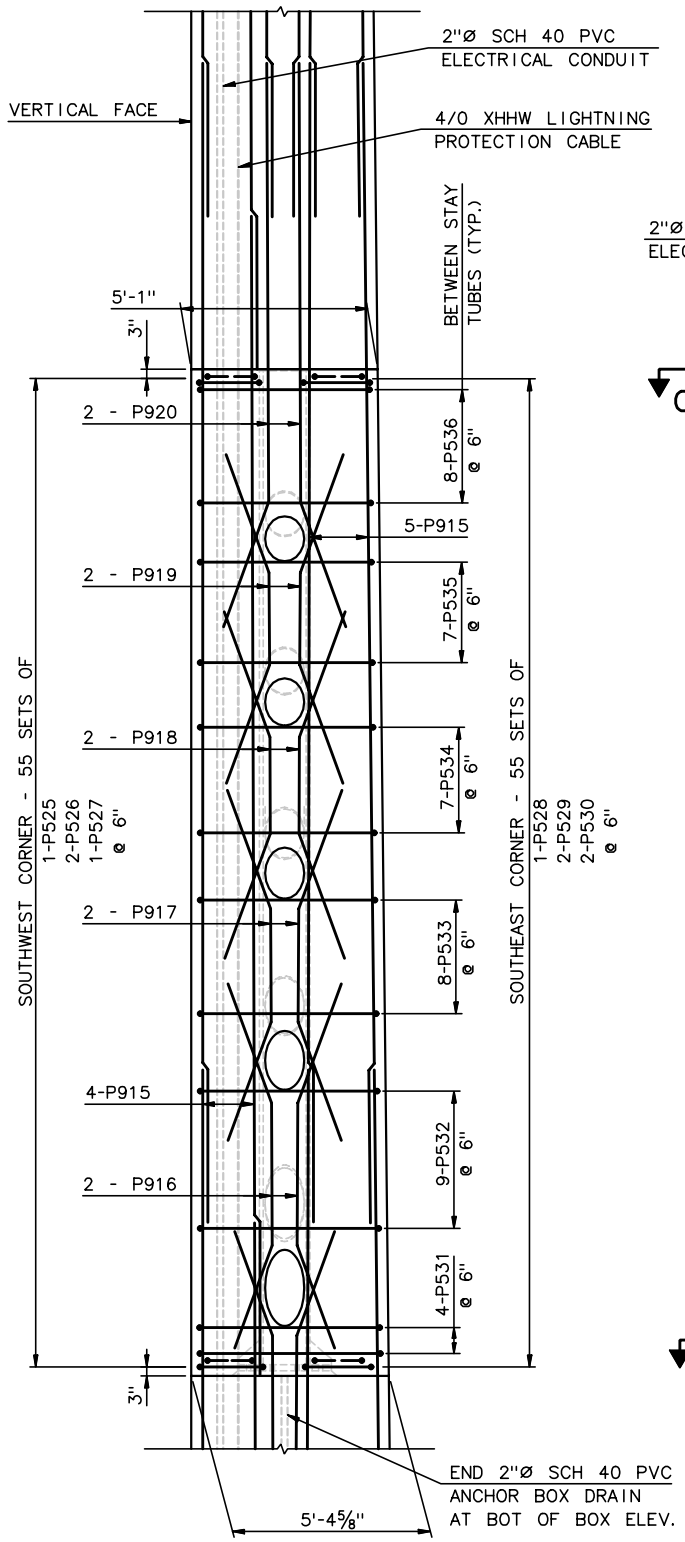

ELEVATION SOUTH FACE

(LOOKING UPSTATION)
(WEST PYLON OPPOSITE HAND)
⅜" = 1'-0"

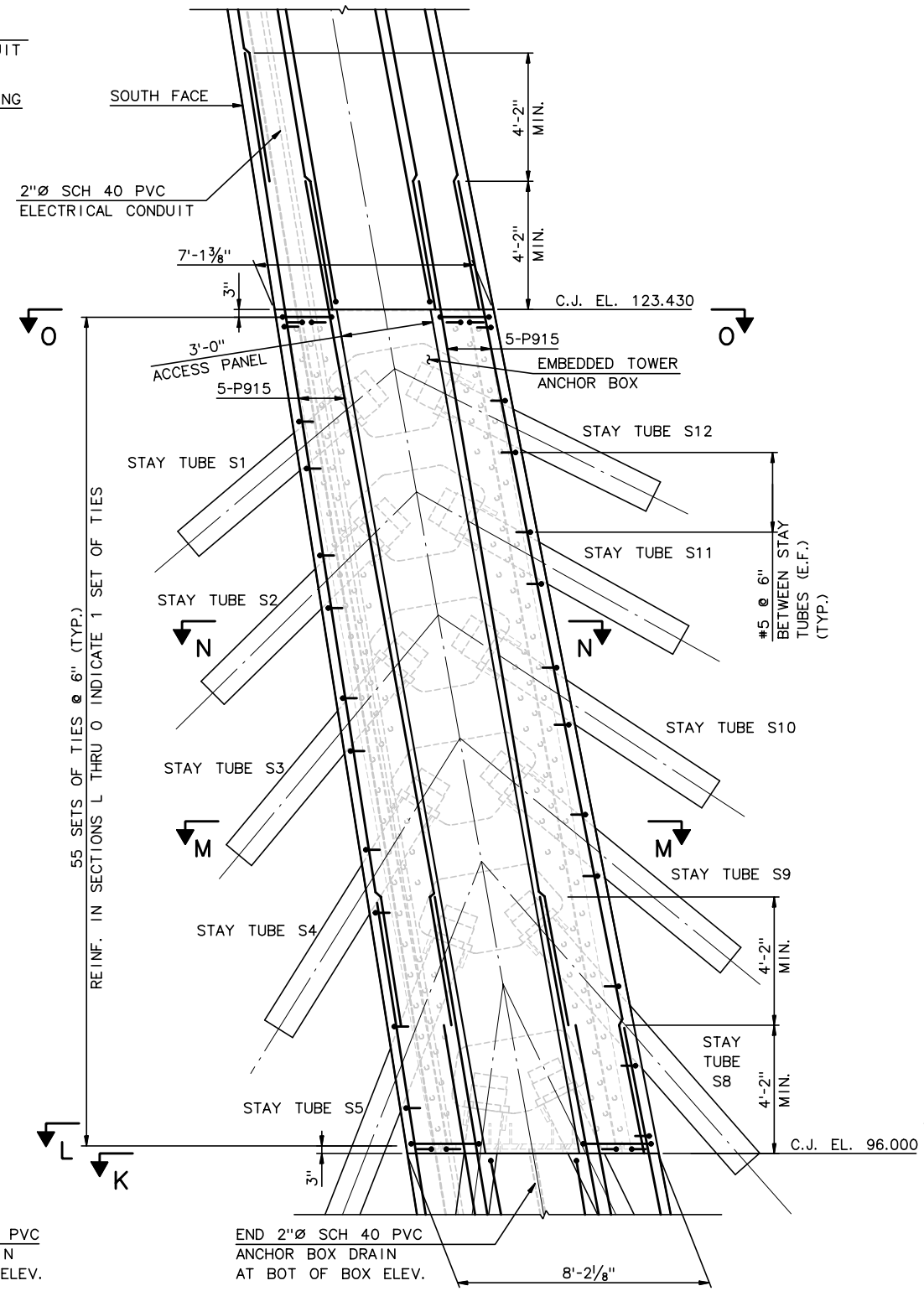

LONGITUDINAL ELEVATION

(EAST PYLON SHOWN, WEST SIMILAR)
⅜" = 1'-0"

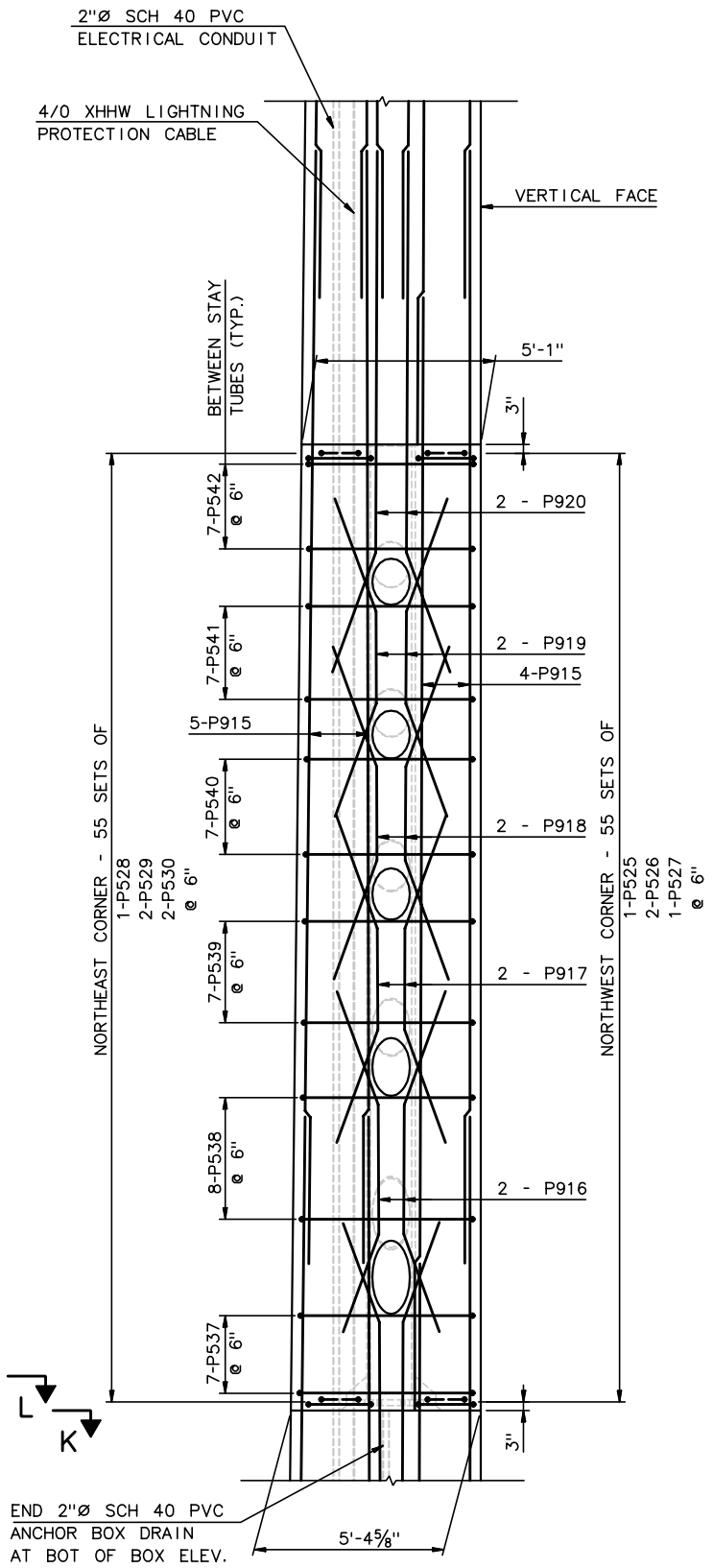

ELEVATION NORTH FACE

(LOOKING DOWNSTATION)
(WEST PYLON OPPOSITE HAND)
⅜" = 1'-0"

NOTES:

1. FOR PYLON GEOMETRY, SEE SC14.
2. FOR SECTION K, SEE PYLON REINFORCEMENT LIFT-4, DWG 2 OF 2.
3. FOR SECTIONS L THRU N, SEE PYLON REINFORCEMENT LIFT-5, DWG 2 OF 2.
4. ALL REINFORCEMENT IS EPOXY COATED ASTM A615 OR A996, GRADE 60.
5. SEE LIFT 5 BARLIST DWG FOR BAR BEND DETAILS.
6. FOR ANCHOR BOX DETAILS, SEE SC27.
7. FOR ACCESS PANEL DETAILS, SEE SC28.

EMBEDDED ITEMS LIST *	
ITEM	QTY.*
4/0 XHHW LIGHTNING PROTECTION CABLE	28'-0"+SPLICE LENGTH
2" SCH 40 PVC ELECTRICAL CONDUIT	28'-0"±
TOWER ANCHOR BOX	1
ACCESS DOOR FRAME	2

* QUANTITY SHOWN IS FOR A SINGLE PYLON. MULTIPLY BY TWO FOR TOTAL QUANTITY

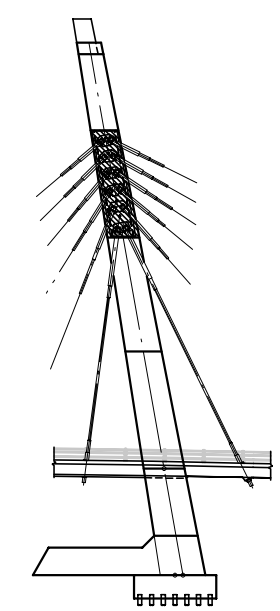

TOWER KEY

RECORD DRAWING

No.	Date	Revisions	By

HNTB CORPORATION

STATE OF WISCONSIN
DEPARTMENT OF TRANSPORTATION

STRUCTURE B-40-413A

Designed By	SL	Design Checked	TZ	Drawn By	BM	Plans Checked	AP

PYLON REINFORCEMENT
LIFT - 5
1 of 2

SHEET SC23 OF

STATE PROJECT I.D.	SHEET NUMBER
2235-00-70	8.34

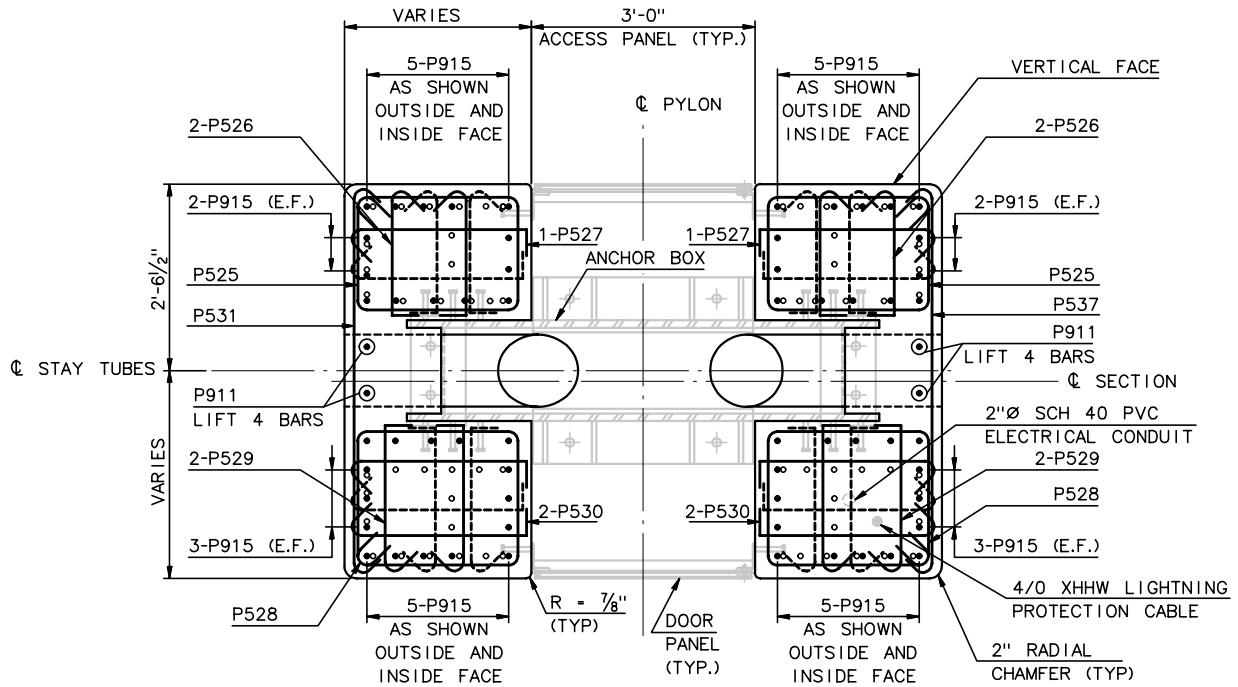

SECTION L

SCALE: ¾"=1'-0"

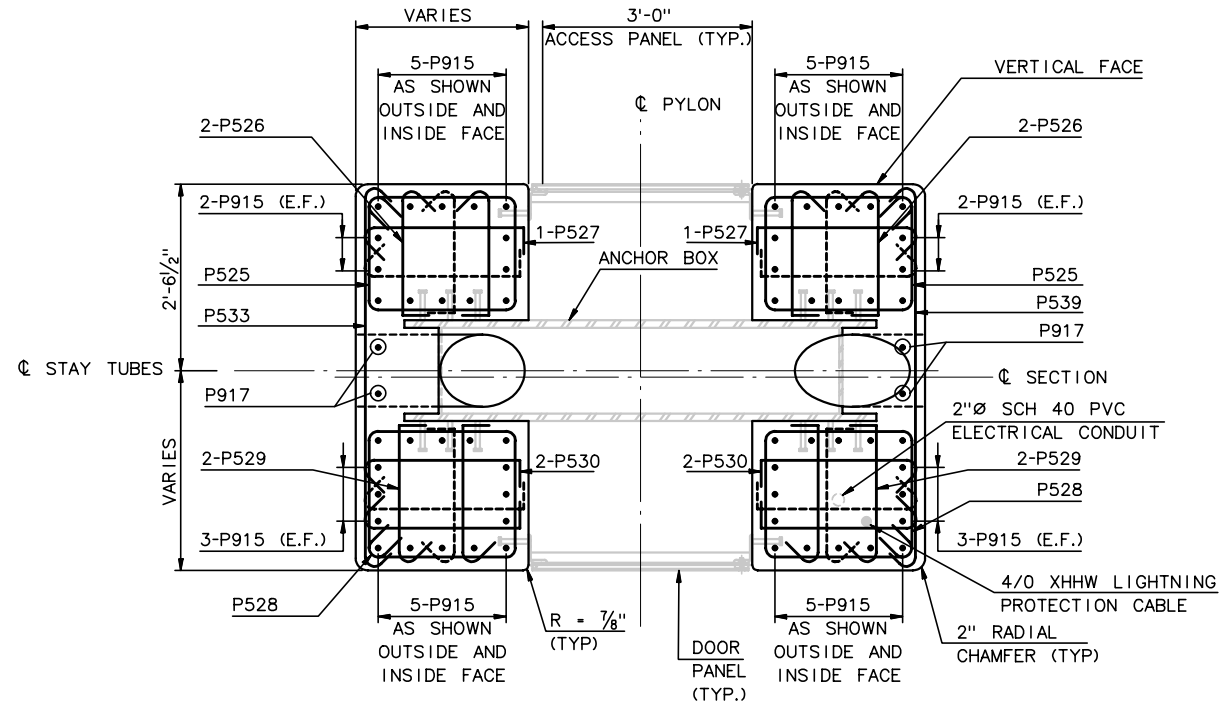

SECTION M

SCALE: ¾"=1'-0"

NOTES:

1. FOR LOCATION OF SECTIONS L THRU O, SEE PYLON REINFORCEMENT LIFT - 5, SHEET 1 OF 2.
2. ALL REINFORCEMENT IS EPOXY COATED ASTM A615 OR A996, GRADE 60.
3. FOR ANCHOR BOX DETAILS, SEE SHEET SC27.
4. FOR ACCESS PANEL DETAILS, SEE SHEET SC28.
5. PROVIDE 2½" CLR. COVER TO REINFORCEMENT (TYP.)

LEGEND:

- ∘ = LIFT 4 VERTICAL REBAR
- • = LIFT 5 VERTICAL REBAR
- ∘• = LIFT 4 BAR WITH LIFT 5 BAR AT LIFT 5 BAR LOCATION

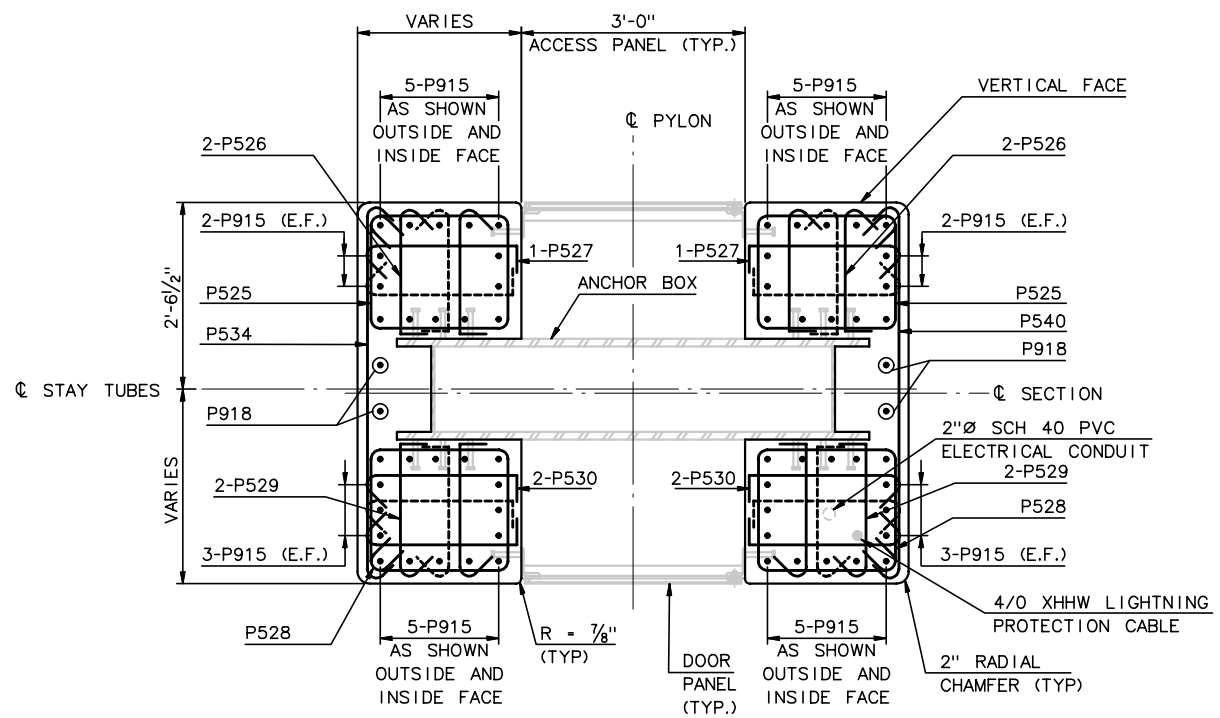

SECTION N

SCALE: ¾"=1'-0"

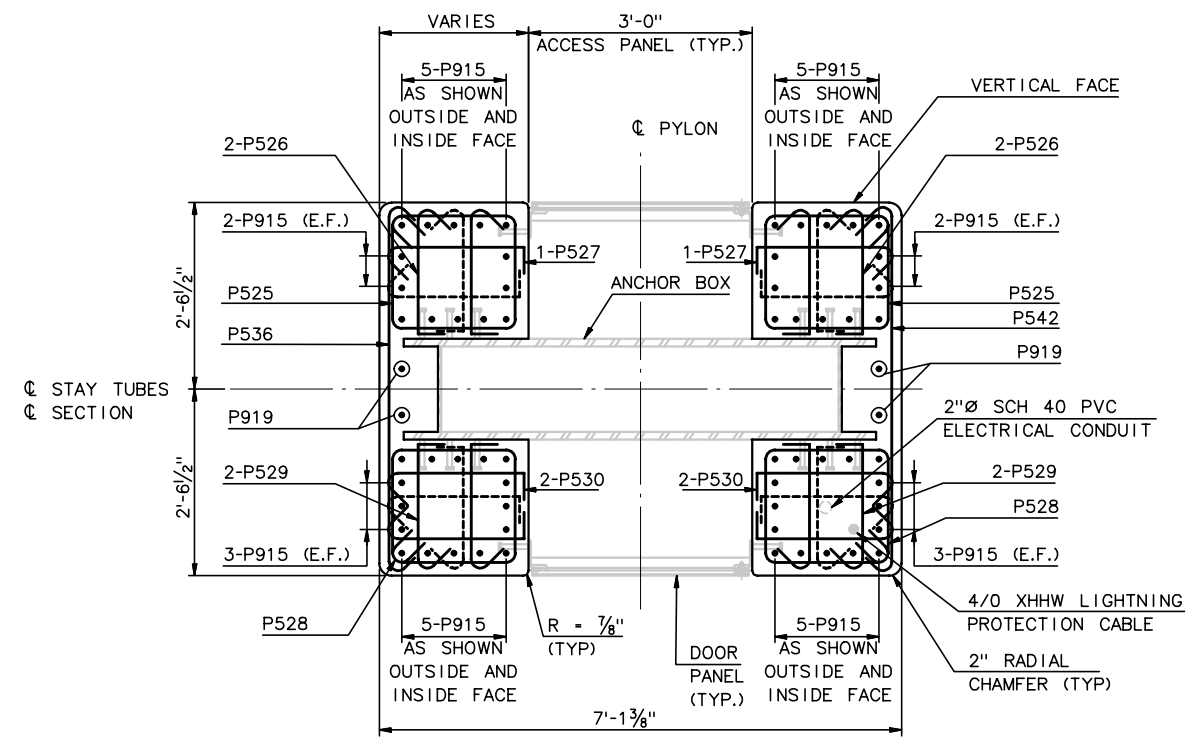

SECTION O @ EL 123.430

SCALE: ¾"=1'-0"

RECORD DRAWING

No.	Date	Revisions	By

HNTB CORPORATION

STATE OF WISCONSIN
DEPARTMENT OF TRANSPORTATION

STRUCTURE B-40-413A

Designed By	SL	Design Checked	TZ	Drawn By	BM	Plans Checked	AP

PYLON REINFORCEMENT
LIFT - 5
2 OF 2

SHEET SC24 OF

STATE PROJECT I.D.	SHEET NUMBER
2235-00-70	8.35

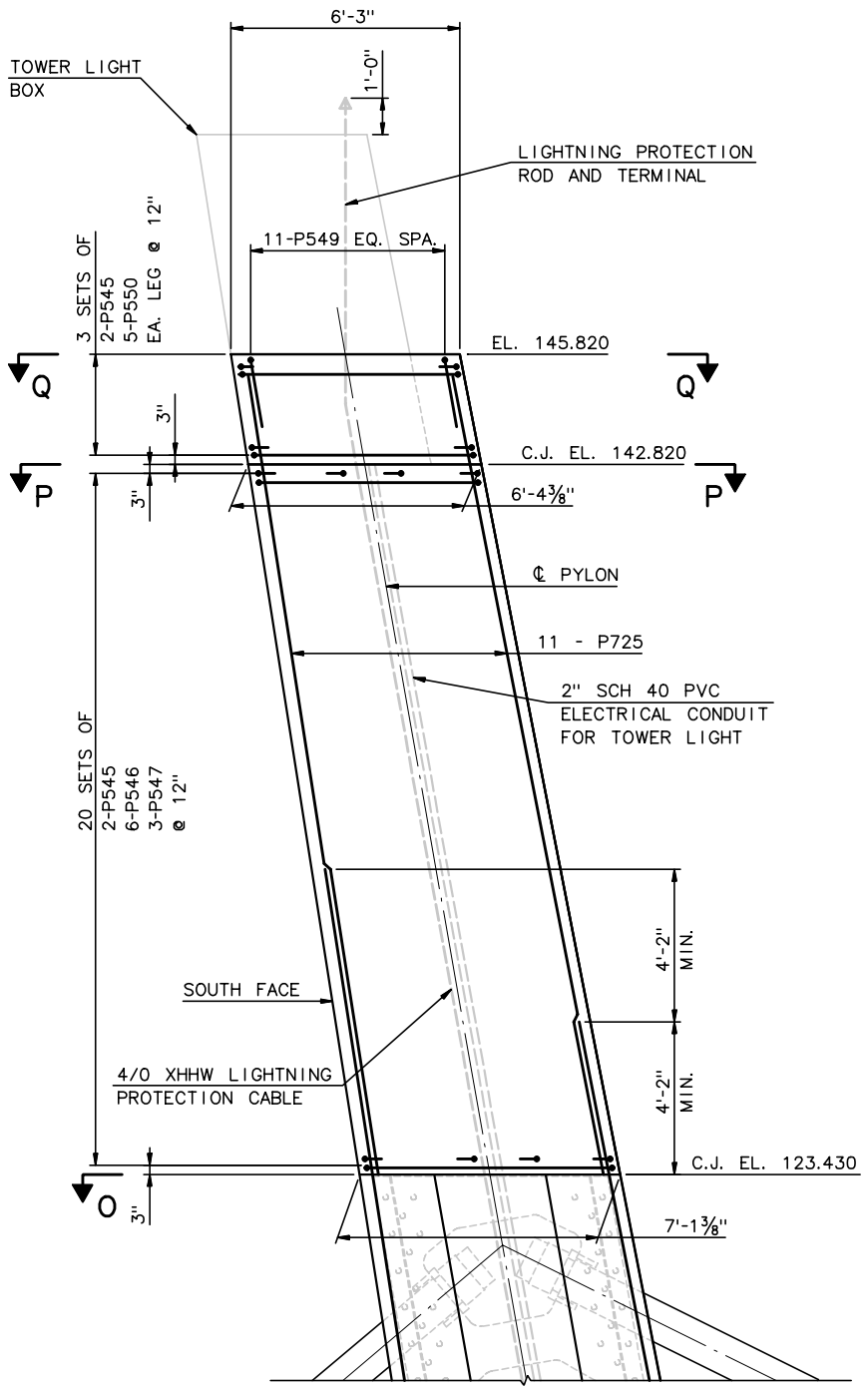

LONGITUDINAL ELEVATION

(EAST PYLON SHOWN, WEST SIMILAR)
⅜" = 1'-0"

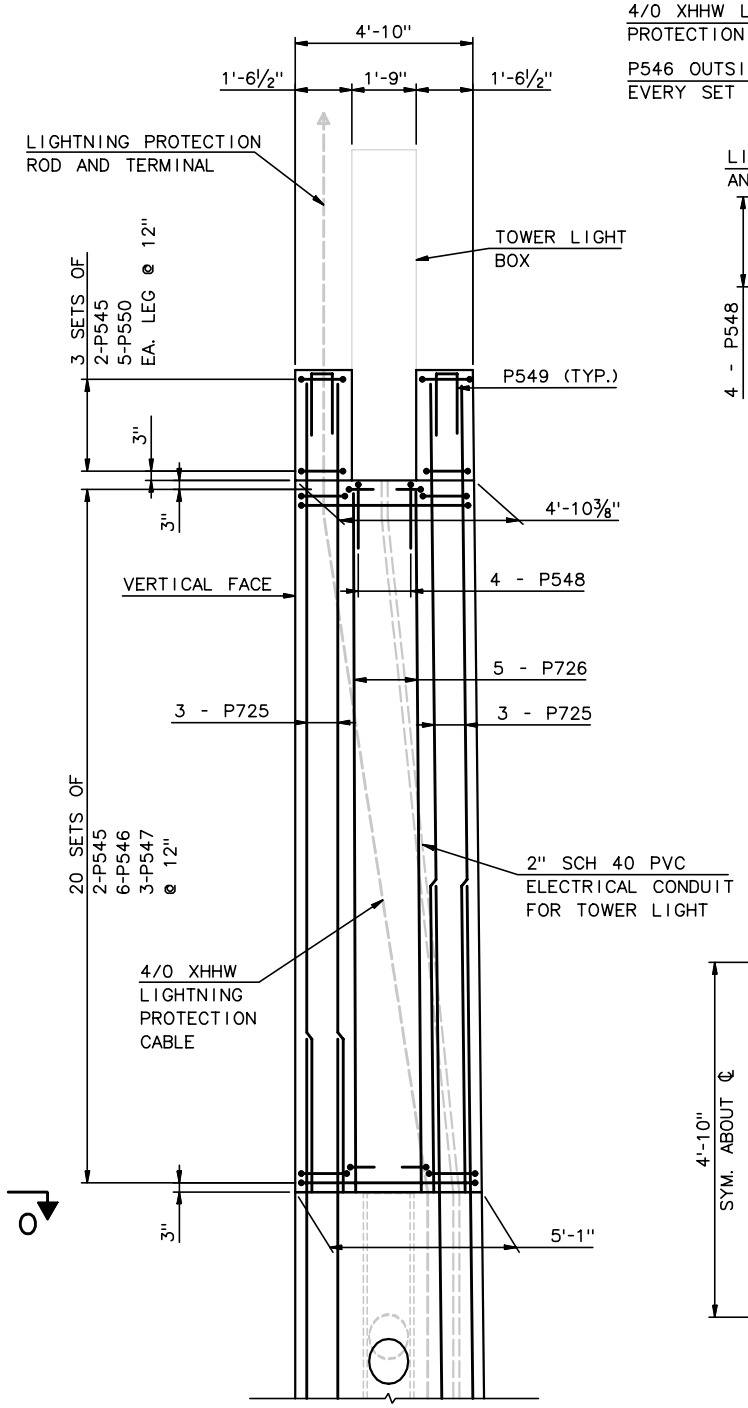

ELEVATION SOUTH FACE

(NORTH FACE SIMILAR)
⅜" = 1'-0"

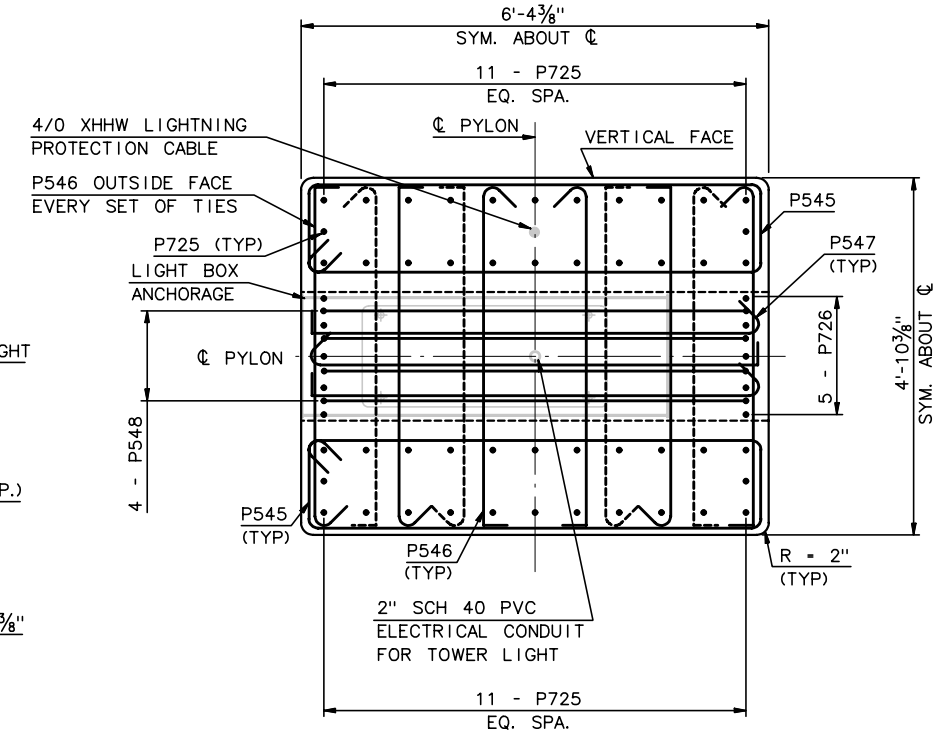

SECTION P @ EL 142.820

SCALE: ¾"=1'-0"

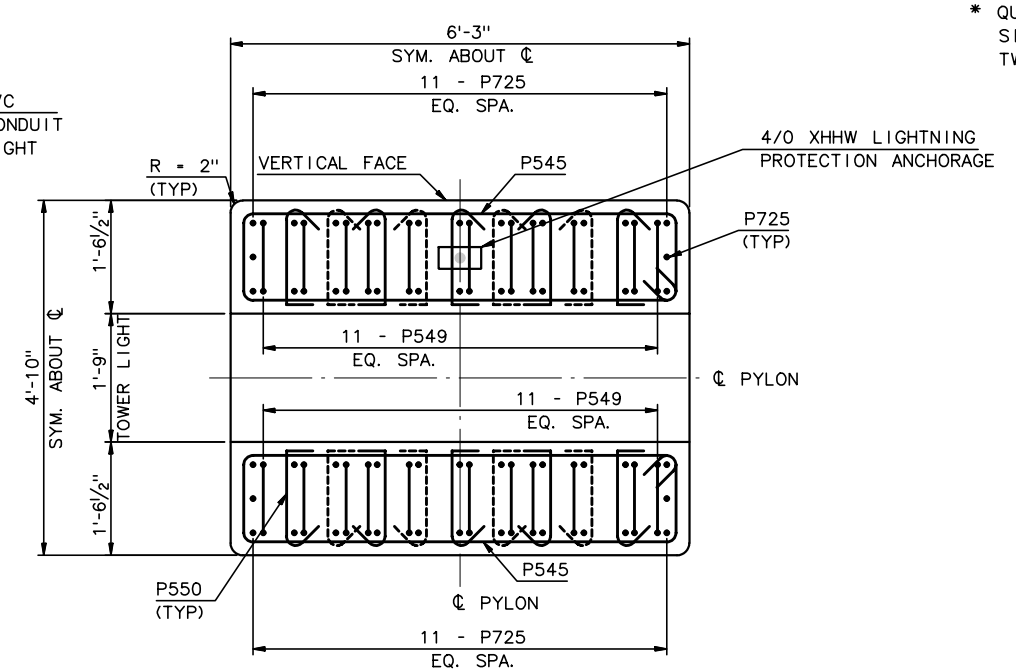

SECTION Q @ EL 145.820

SCALE: ¾"=1'-0"

NOTES:

1. FOR PYLON GEOMETRY, SEE SC14.
2. FOR SECTION O-O, SEE PYLON REINFORCEMENT LIFT-5, DWG 2 OF 2.
3. ALL REINFORCEMENT IS EPOXY COATED ASTM A615 OR A996, GRADE 60.
4. SEE LIFT 6 BARLIST DWG FOR BAR BEND DETAILS.
5. FOR LIGHTNING PROTECTION DETAILS, SEE SHEET SC30.
6. ALL COVER SHALL BE 2½"

EMBEDDED ITEMS LIST *	
ITEM	QTY.*
4/0 XHHW LIGHTNING PROTECTION CABLE	30'-0"±
2" SCH 80 PVC ELECTRICAL CONDUIT	25'-0"±

* QUANTITY SHOWN IS FOR A SINGLE PYLON. MULTIPLY BY TWO FOR TOTAL QUANTITY

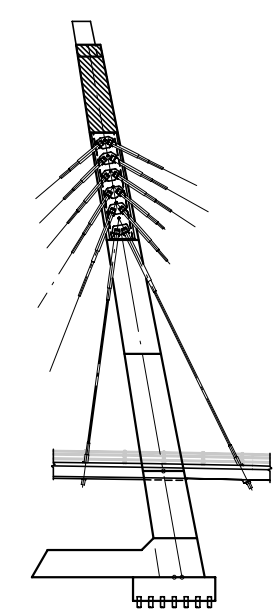

TOWER KEY

RECORD DRAWING

No.	Date	Revisions	By

HNTB CORPORATION

STATE OF WISCONSIN
DEPARTMENT OF TRANSPORTATION

STRUCTURE B-40-413A

Designed By	SL	Design Checked	TZ	Drawn By	BM	Plans Checked	AP

PYLON REINFORCEMENT
LIFTS - 6 & 7

SHEET SC25 OF

STATE PROJECT I.D.	SHEET NUMBER
2235-00-70	8.36

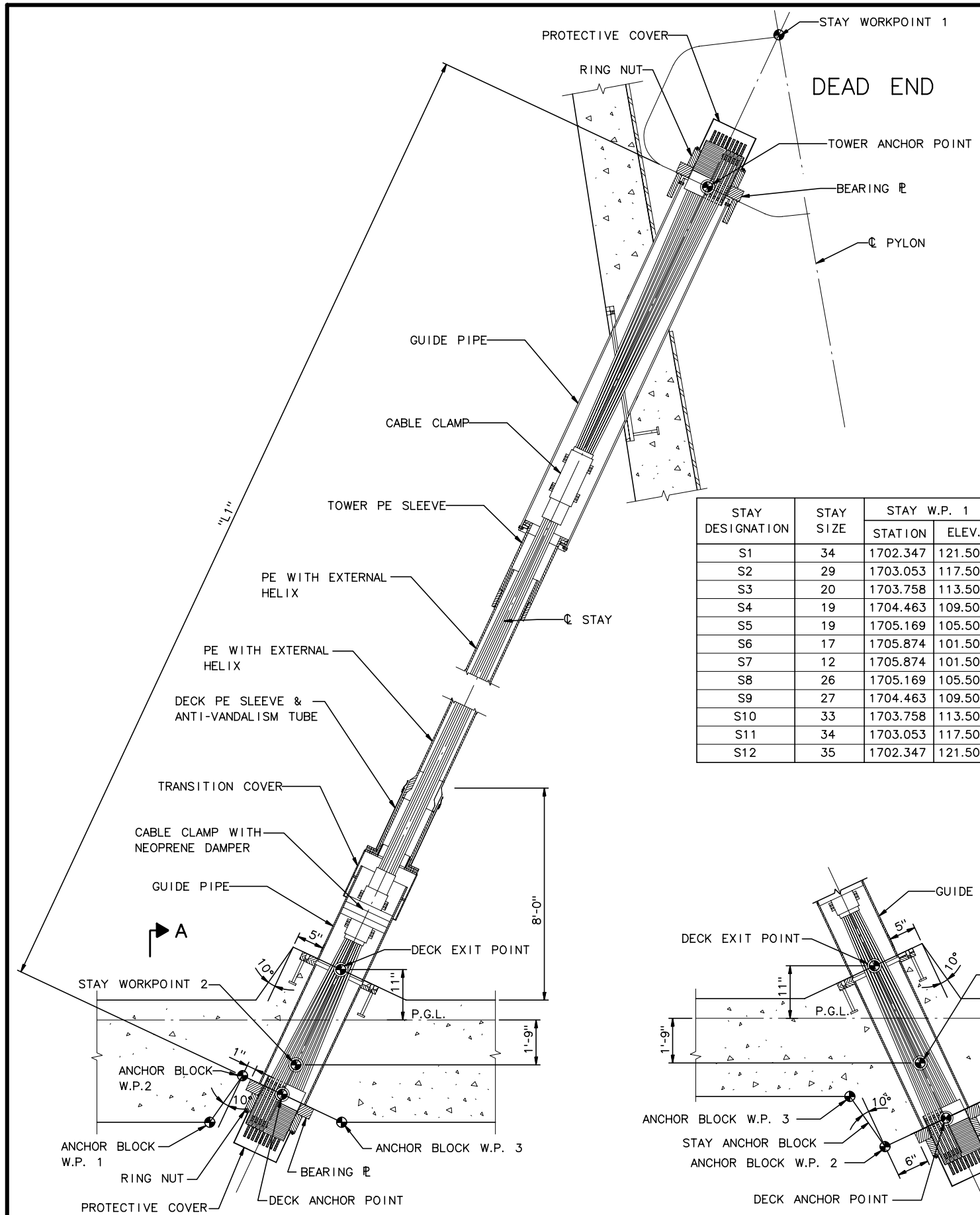

BACK SPAN STAY ELEVATION

N.T.S.

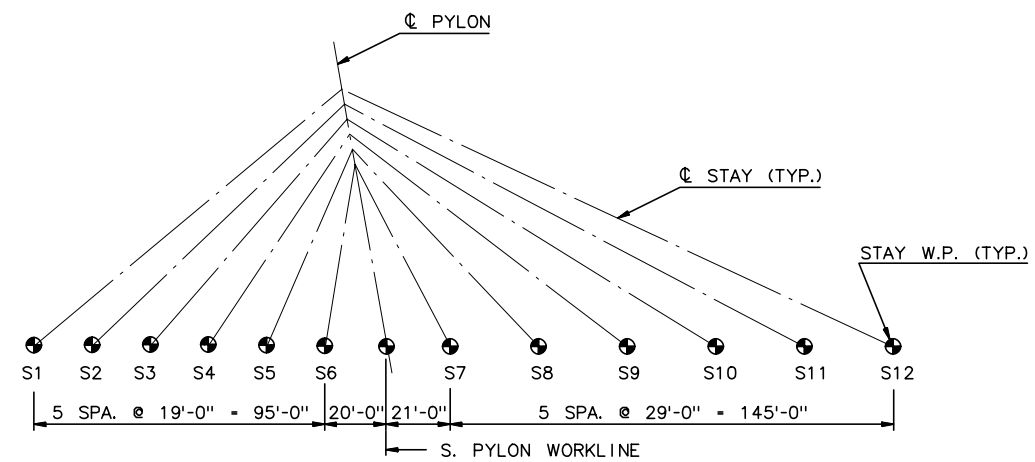

ELEVATION

N.T.S.

NOTES:

1. LENGTH "L1" SHOWN IS BASED ON THEORETICAL STRAIGHT LINE DIMENSIONS, ANCHOR POINT TO ANCHOR POINT, AND DOES NOT INCLUDE CABLE SAG.
2. DIMENSIONS AND LENGTHS SHOWN APPLY TO BOTH EAST AND WEST CABLES.
3. FOR CABLE ANCHORAGE REINFORCEMENT DETAILS SEE SHTS. SC56 THRU SC58b.
4. ALL CABLE WORKPOINTS ARE 33'-0" RIGHT AND LEFT OF SIXTH STREET PGL.

STAY DESIGNATION	STAY SIZE	STAY W.P. 1		STAY W.P. 2		TOWER A.P.		DECK A.P.		"L1"	ANCHOR BLOCK W.P. 1		ANCHOR BLOCK W.P. 2		ANCHOR BLOCK W.P. 3		"A"
		STATION	ELEV.	STATION	ELEV.	STATION	ELEV.	STATION	ELEV.		STATION	ELEV.	STATION	ELEV.	STATION	ELEV.	
S1	34	1702.347	121.500	1602.100	36.558	1700.801	120.190	1598.977	33.914	133.46	1598.421	34.572	1599.797	32.942	1603.605	35.156	2.295
S2	29	1703.053	117.500	1621.100	36.696	1701.539	116.007	1620.478	36.083	113.84	1617.798	35.261	1619.879	36.693	1621.268	35.280	0.904
S3	20	1703.758	113.500	1640.100	36.749	1702.293	111.733	1639.521	36.051	98.33	1637.447	35.329	1638.905	36.564	1640.387	35.332	1.041
S4	19	1704.463	109.500	1659.100	36.715	1703.078	107.278	1658.627	35.957	84.04	1656.979	35.306	1657.947	36.382	1659.687	35.296	1.200
S5	19	1705.169	105.500	1678.100	36.596	1704.117	102.824	1677.762	35.737	72.08	1676.502	35.192	1677.016	36.031	1679.208	35.168	1.374
S6	17	1705.874	101.500	1697.100	36.392	1705.324	97.420	1696.963	35.377	62.60	1696.010	34.989	1696.168	35.484	1700.260	34.932	1.520
S7	12	1705.874	101.500	1738.100	35.658	1707.660	97.852	1738.759	34.312	70.74	1739.565	34.708	1737.665	33.776	1736.941	34.767	2.308
S8	26	1705.169	105.500	1767.100	34.986	1707.074	103.330	1768.433	33.468	92.98	1769.064	34.023	1767.519	32.663	1765.719	34.101	2.288
S9	27	1704.463	109.500	1796.100	34.313	1706.343	107.958	1798.100	32.672	118.69	1798.643	33.337	1797.296	31.688	1794.167	33.441	2.270
S10	33	1703.758	113.500	1825.100	33.640	1705.577	112.303	1827.684	31.940	146.18	1828.150	32.652	1826.988	30.877	1822.544	32.782	2.182
S11	34	1703.053	117.500	1854.100	32.925	1704.837	116.501	1857.226	31.174	174.65	1857.638	31.915	1856.608	30.064	1850.734	32.095	2.106
S12	35	1702.347	121.500	1883.100	32.125	1704.109	120.629	1886.725	30.332	203.72	1887.096	31.091	1886.165	29.191	1878.755	31.333	2.043

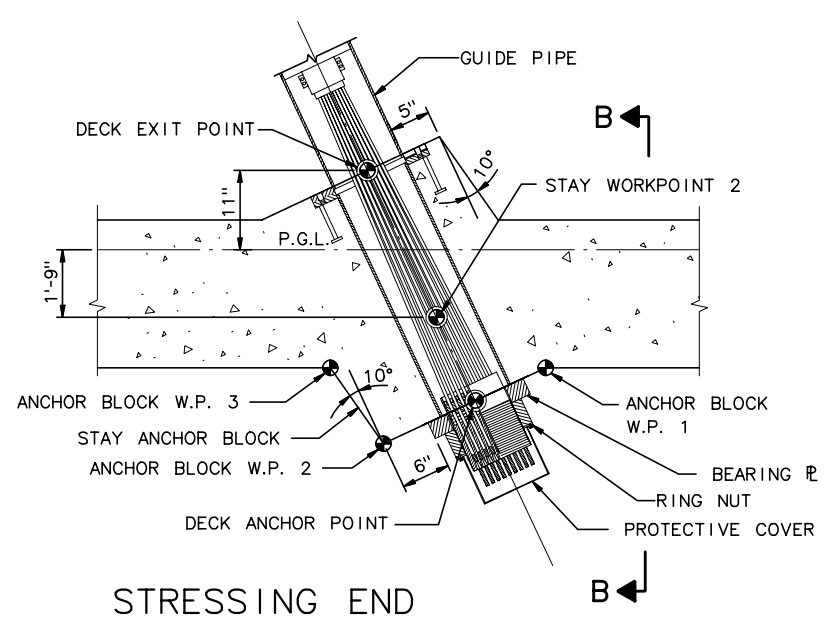

MAIN SPAN & S1 STAY ELEVATION

N.T.S.

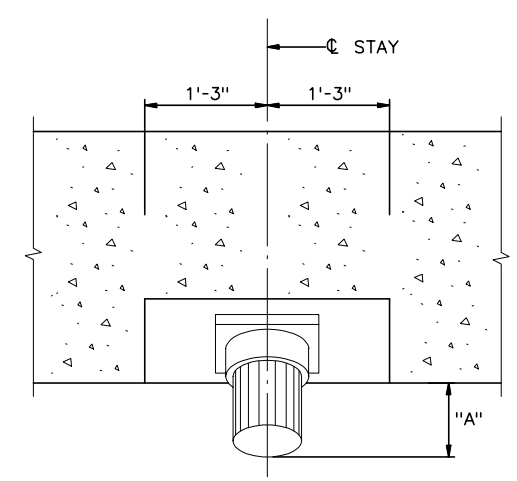

SECTION A-A

N.T.S.

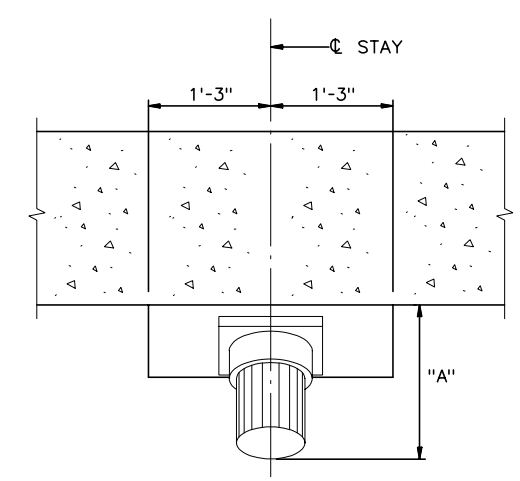

SECTION B-B

N.T.S.

RECORD DRAWING

No.	Date	Revisions	By

HNTB CORPORATION

STATE OF WISCONSIN
DEPARTMENT OF TRANSPORTATION

STRUCTURE B-40-413A

Designed By	SL	Design Checked	TZ	Drawn By	SL	Plans Checked	AP

SOUTH CABLE STAY
STAY ANCHORAGE
DECK GEOMETRY

SHEET SC26 OF

STATE PROJECT I.D.	SHEET NUMBER
2235-00-70	8.37

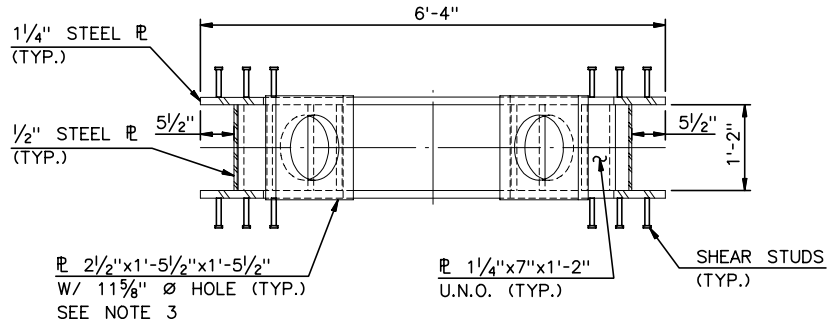

SECTION A-A

¾" = 1'-0"

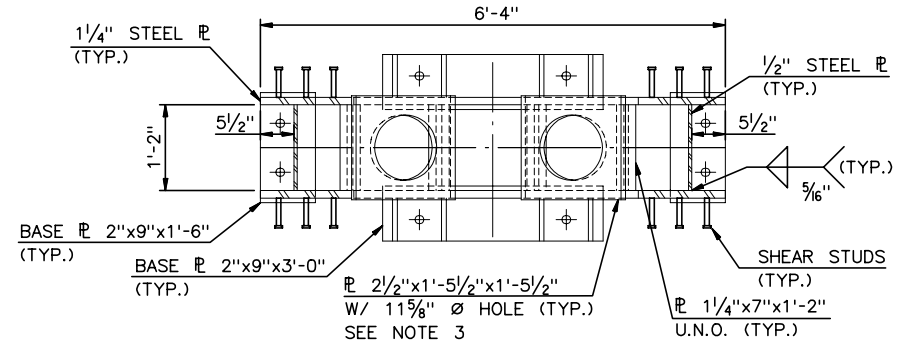

SECTION B-B

¾" = 1'-0"

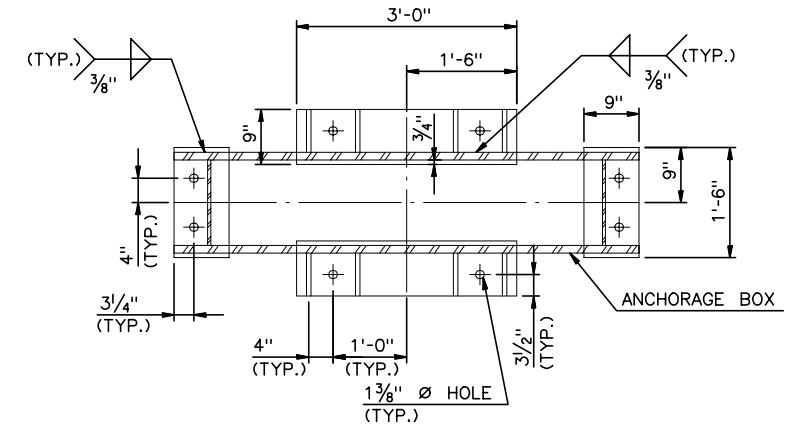

PLAN

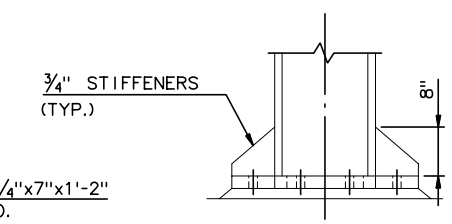

SIDE

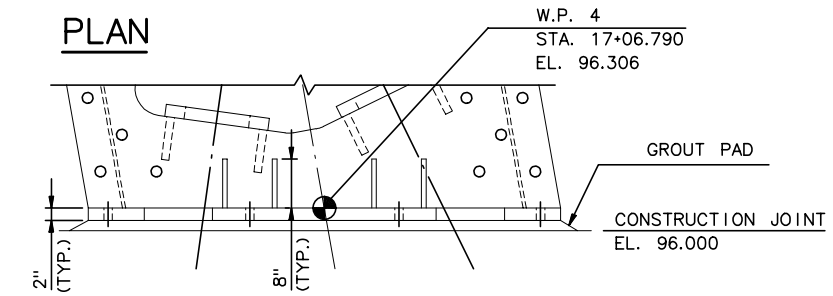

ELEVATION

BASE PLATES - 3 VIEWS

¾" = 1'-0"

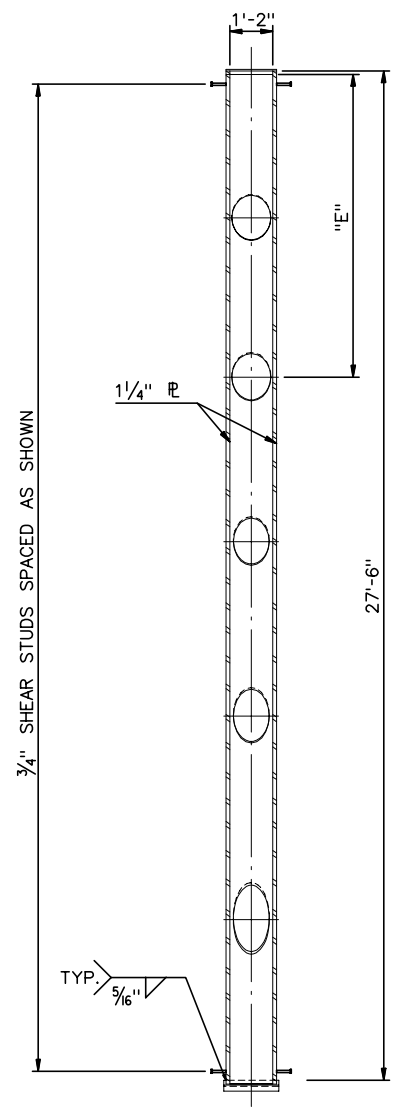

VIEW D-D

⅜" = 1'-0"

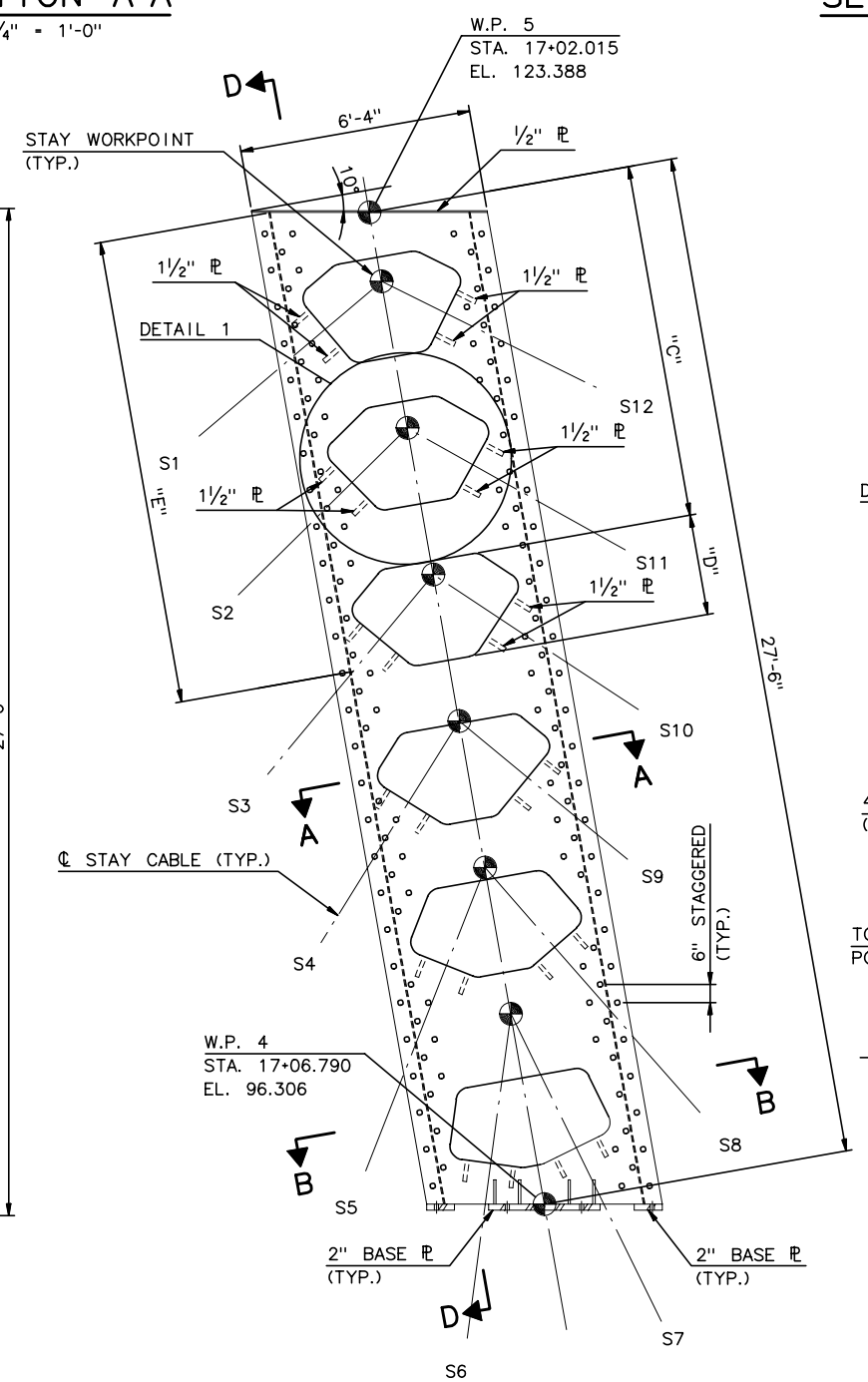

ELEVATION

⅜" = 1'-0"

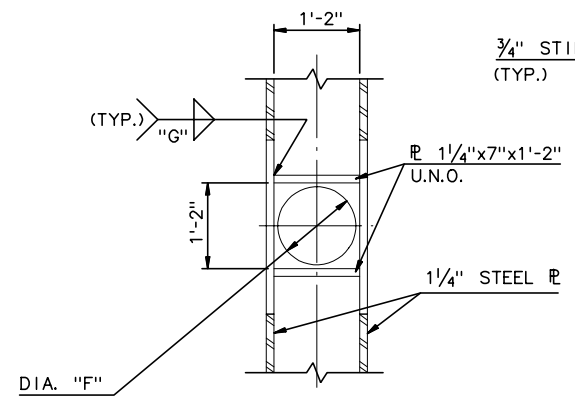

SECTION C-C

¾" = 1'-0"

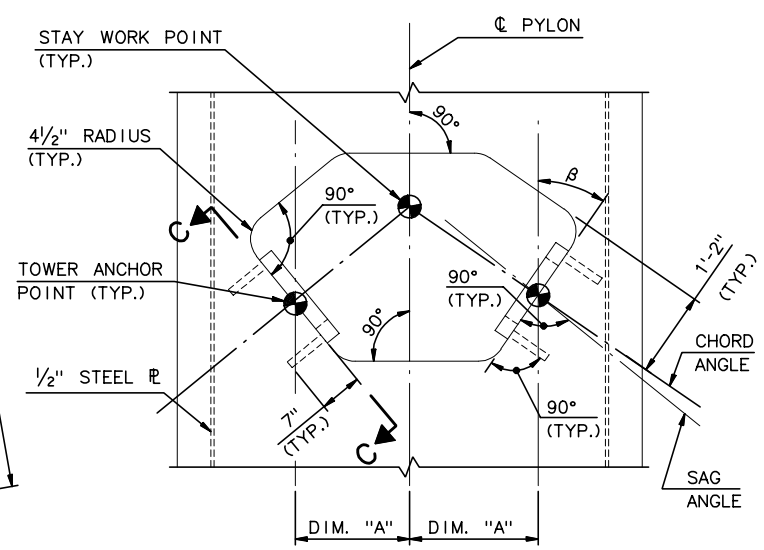

DETAIL 1

¾" = 1'-0"

STAY NO.	NO. OF STRANDS	DIM. "A"	β (DEG)	"C"	"D"	"E" (FT.)	DIA. "F" (FT)	WELD "G" (IN.)
S1	34	1'-9"	30.386	1'-3"	2'-9"	3.966	1.083	¾
S2	29	1'-9"	34.687	5'-3"	2'-10"	8.312	1.083	⅝
S3	20	1'-9"	40.401	9'-8"	2'-9"	12.802	1.083	½
S4	19	1'-9"	48.120	14'-2"	2'-8"	17.573	1.083	7/16
S5	19	1'-6"	58.584	18'-6"	2'-7"	23.039	1.083	7/16
S6	17	1'-3"	72.335	24'-0"	2'-5"	-	-	⅜
S7	12	1'-1½"	73.965	24'-0"	2'-5"	-	-	⅜
S8	26	1'-6"	58.780	18'-6"	2'-7"	22.114	1.083	⅝
S9	27	1'-7"	49.476	14'-2"	2'-8"	16.762	1.083	⅝
S10	33	1'-7"	43.490	9'-8"	2'-9"	12.105	1.083	¾
S11	34	1'-7"	39.415	5'-3"	2'-10"	7.702	1.083	¾
S12	35	1'-7"	36.502	1'-3"	2'-9"	3.420	1.083	¾

NOTES:

1. FOR STAY WORK POINT AND TOWER ANCHOR POINT COORDINATES SEE "STAY DETAILS."
2. ANGLES AND DIMENSION "E" ARE BASED ON THEORETICAL DIMENSIONS WHICH INCLUDE CABLE SAG.
3. BEARING PLATE FOR STAY NOS. S1, S2, & S10 TO S12 HAVE 11⅝" ø HOLE. ALL OTHER STAYS HAVE BEARING PLATE WITH 10⅝" ø HOLE.

RECORD DRAWING

No.	Date	Revisions	By

HNTB CORPORATION

STATE OF WISCONSIN
DEPARTMENT OF TRANSPORTATION

STRUCTURE B-40-413A

Designed By	Design Checked	Drawn By	Plans Checked

SOUTH CABLE STAY PYLON ANCHOR BOX

SHEET SC27 OF

j:\cadd\ff31185\dgn\as built\south cablestay\sc27-anchorbox.dgn 02/11/03 02:57:26 PM

STATE PROJECT I.D.	SHEET NUMBER
2235-00-70	8.38

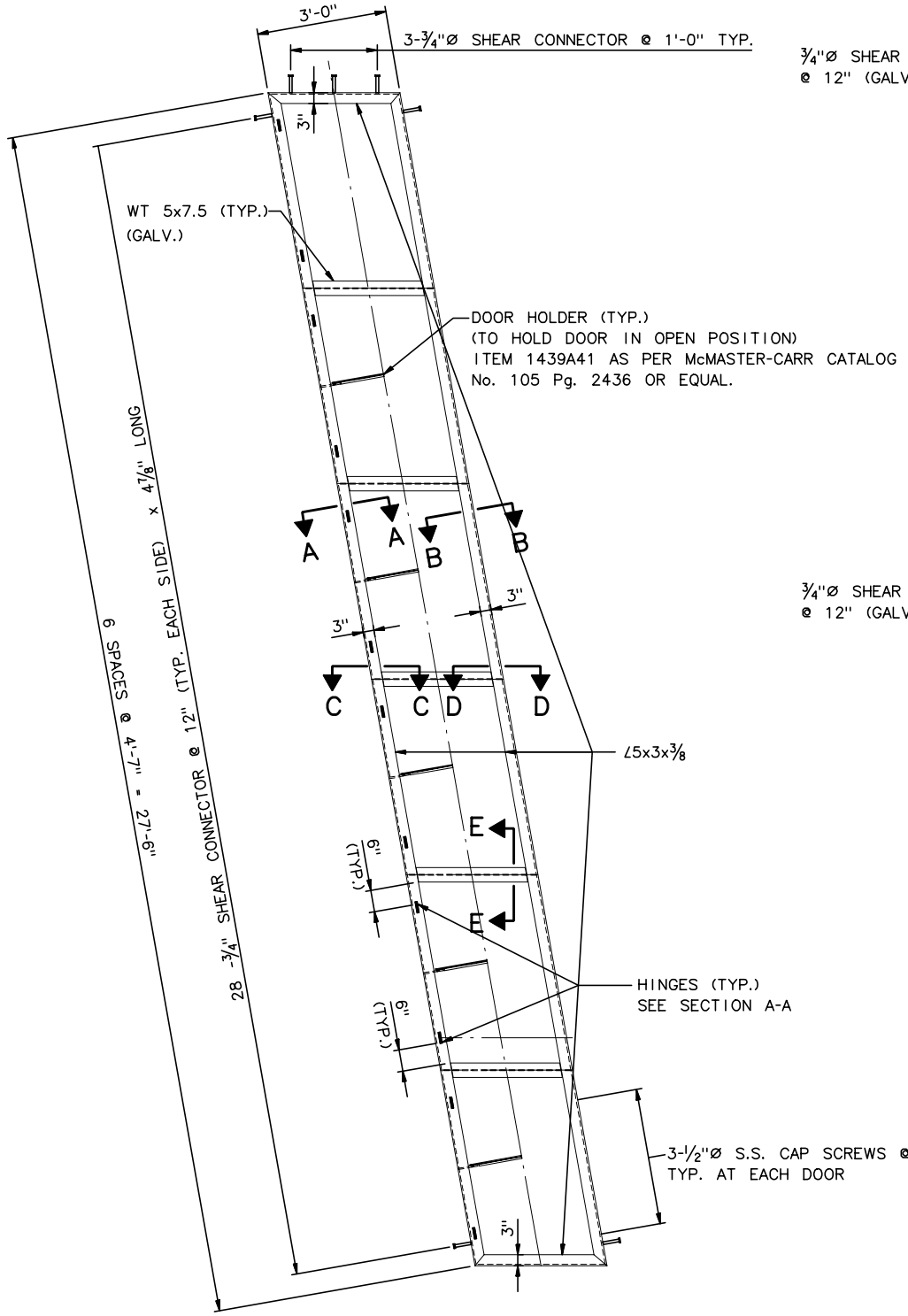

FRAME ELEVATION

½" = 1'-0"

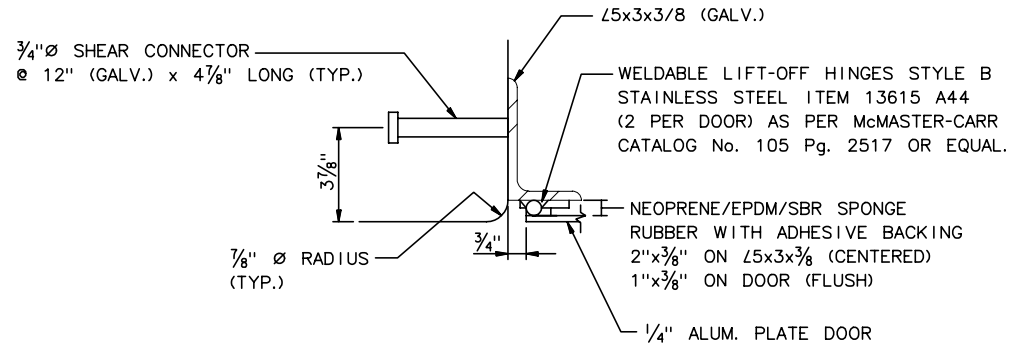

SECTION A-A

3" = 1'-0"

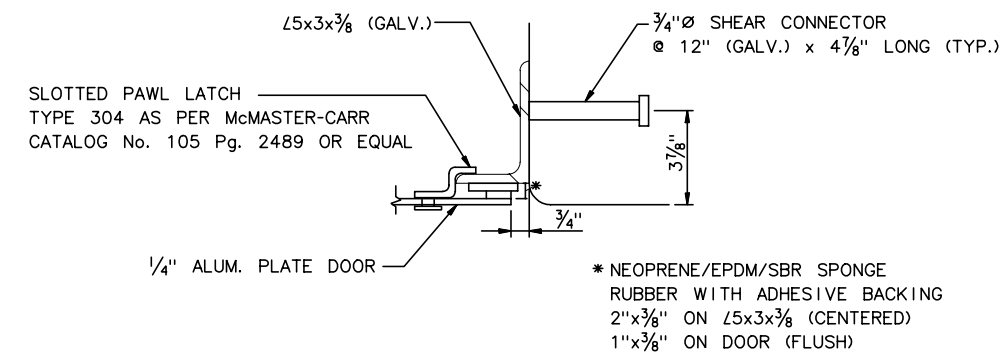

SECTION B-B

3" = 1'-0"

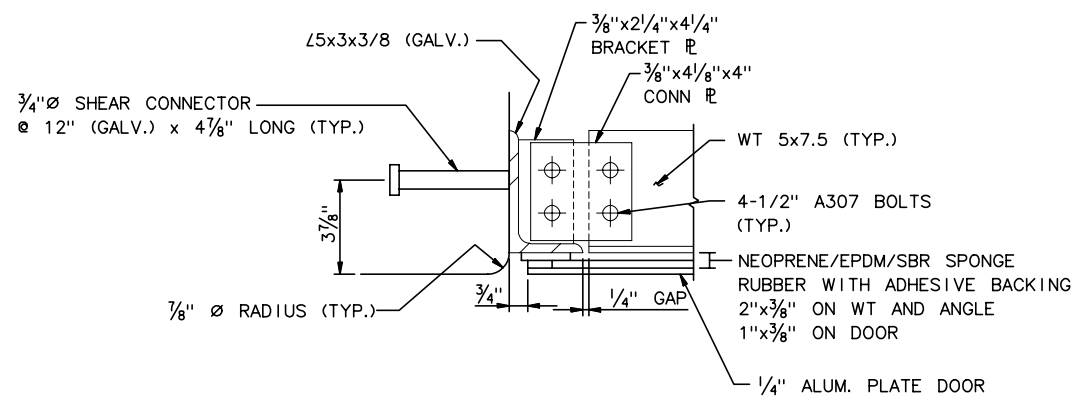

SECTION C-C

3" = 1'-0"

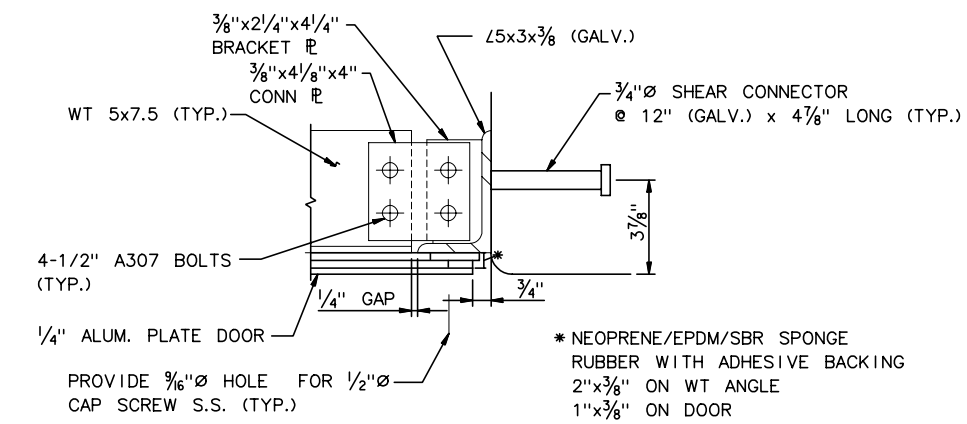

SECTION D-D

3" = 1'-0"

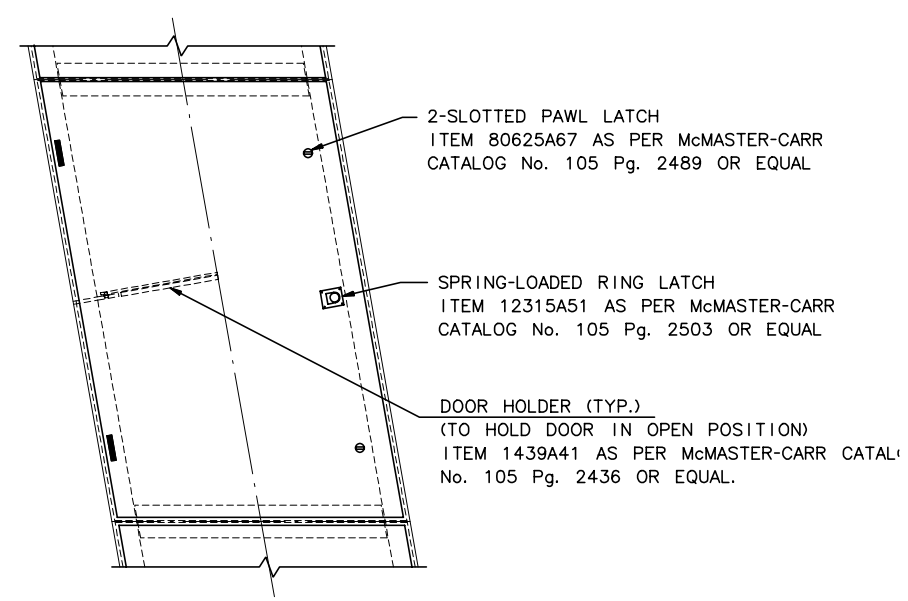

DOOR ELEVATION

1" = 1'-0"

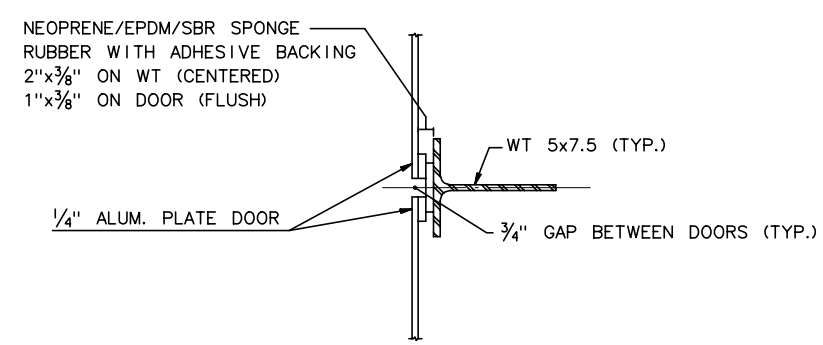

SECTION E-E

3" = 1'-0"

NOTES:

1. GALVANIZE AFTER ALL FABRICATION.

RECORD DRAWING

No.	Date	Revisions	By

HNTB CORPORATION

STATE OF WISCONSIN
DEPARTMENT OF TRANSPORTATION

STRUCTURE B-40-413A

Designed By	Design Checked	Drawn By	Plans Checked

SOUTH CABLE STAY ANCHOR BOX COVER FRAME

SHEET SC28 OF

STATE PROJECT I.D.	SHEET NUMBER
2235-00-70	8.39

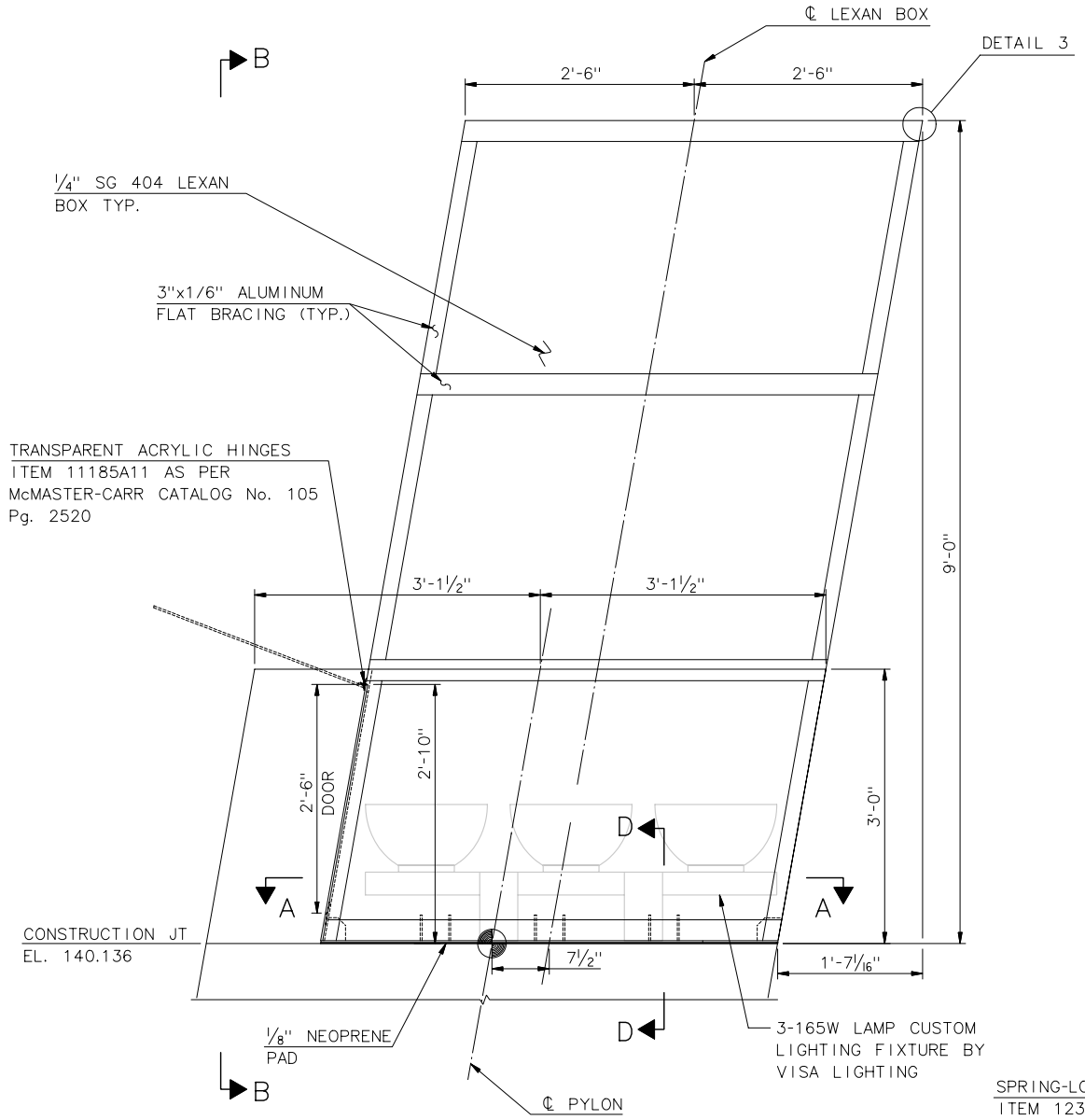

ELEVATION

1" = 1'-0"

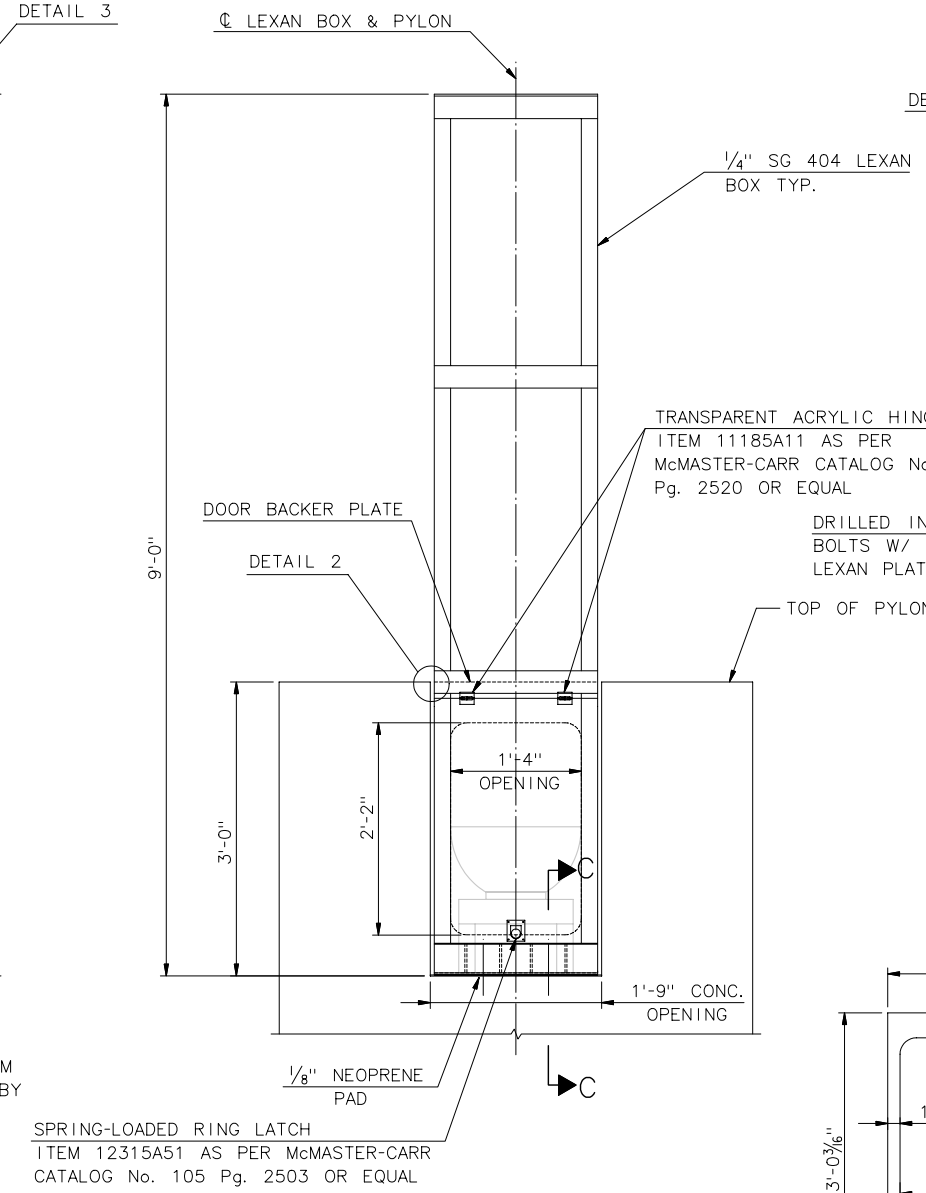

VIEW B-B

1" = 1'-0"

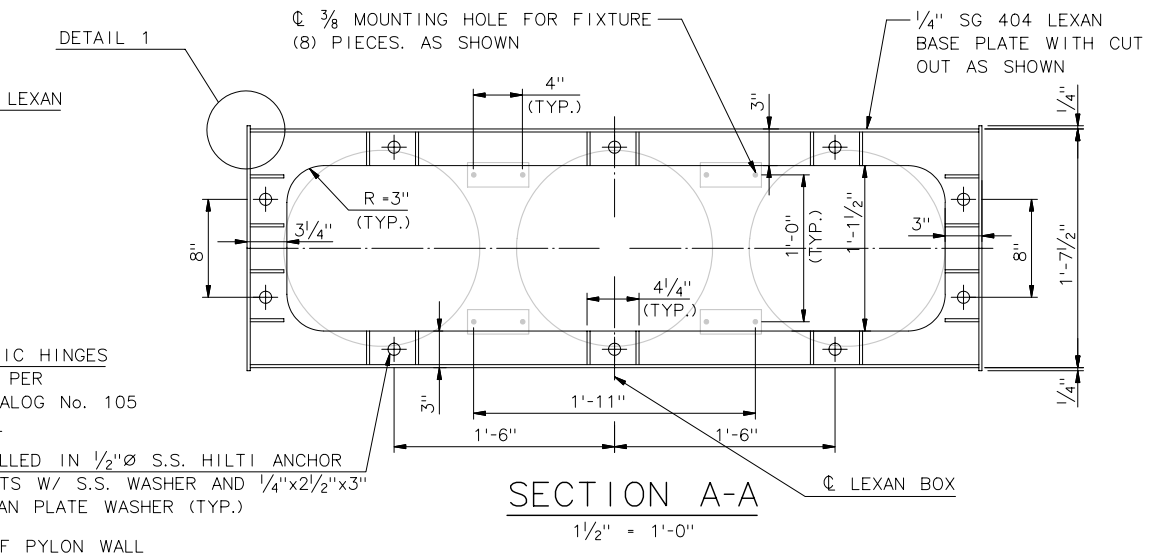

SECTION A-A

1 1/2" = 1'-0"

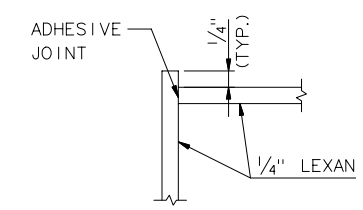

DETAIL 1

N.T.S.

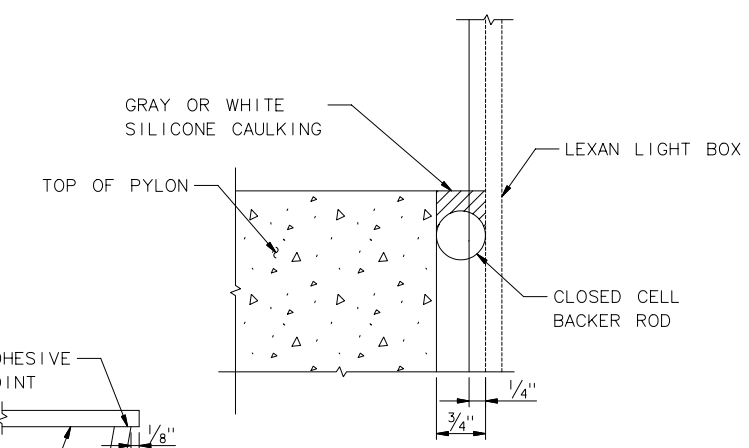

DETAIL 2

N.T.S.

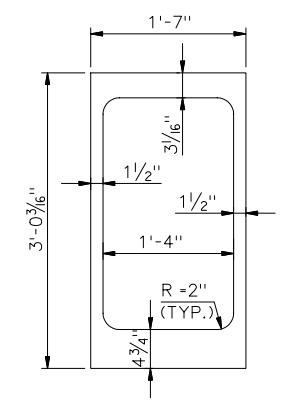

DOOR BACKER PLATE

1" = 1'-0"

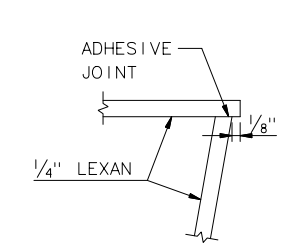

DETAIL 3

N.T.S.

NOTES:

1. ALL LEXAN SHALL BE 1/4" STOCK.
2. ALL LEXAN JOINTS SHALL BE BONDED USING THE MANUFACTURER'S RECOMMENDED ADHESIVE.
3. CUSTOM LIGHTING FIXTURE BY VISA LIGHTING 1717 WEST CIVIC DRIVE GLENDALE, WI 53209

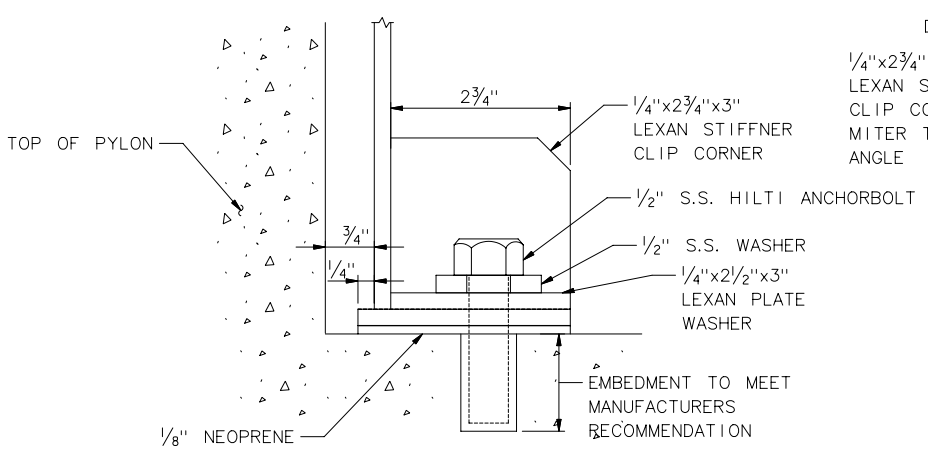

SECTION D-D

N.T.S.

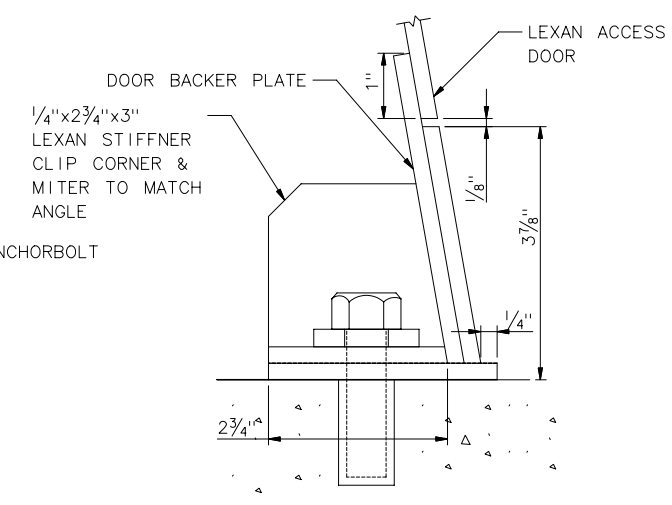

SECTION C-C

N.T.S.

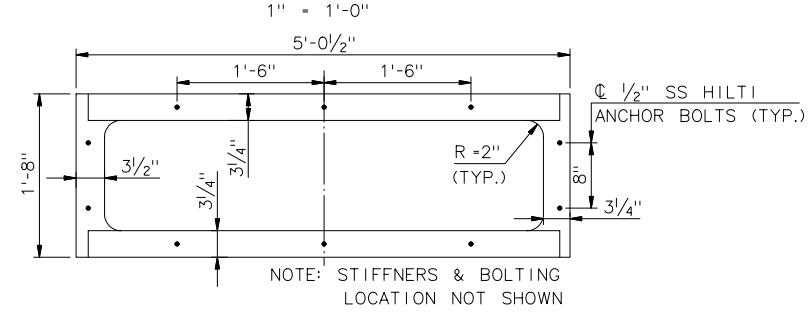

BASE PLATE

1" = 1'-0"

RECORD DRAWINGS

No.	Date	Revisions	By

HNTB CORPORATION

STATE OF WISCONSIN
DEPARTMENT OF TRANSPORTATION

STRUCTURE B-40-413A

Designed By	TZ	Design Checked	AP	Drawn By	JE	Plans Checked	TZ

TOWER LANTERN BOX

SHEET SC29 OF .

J:\cadd\ff31185\dgn\AS BUILT\SOUTH CABLESTAY\SC29-TowerLight.dgn 4/14/2003 3:18:21 PM

STATE PROJECT I.D.	SHEET NUMBER
2235-00-70	8.40

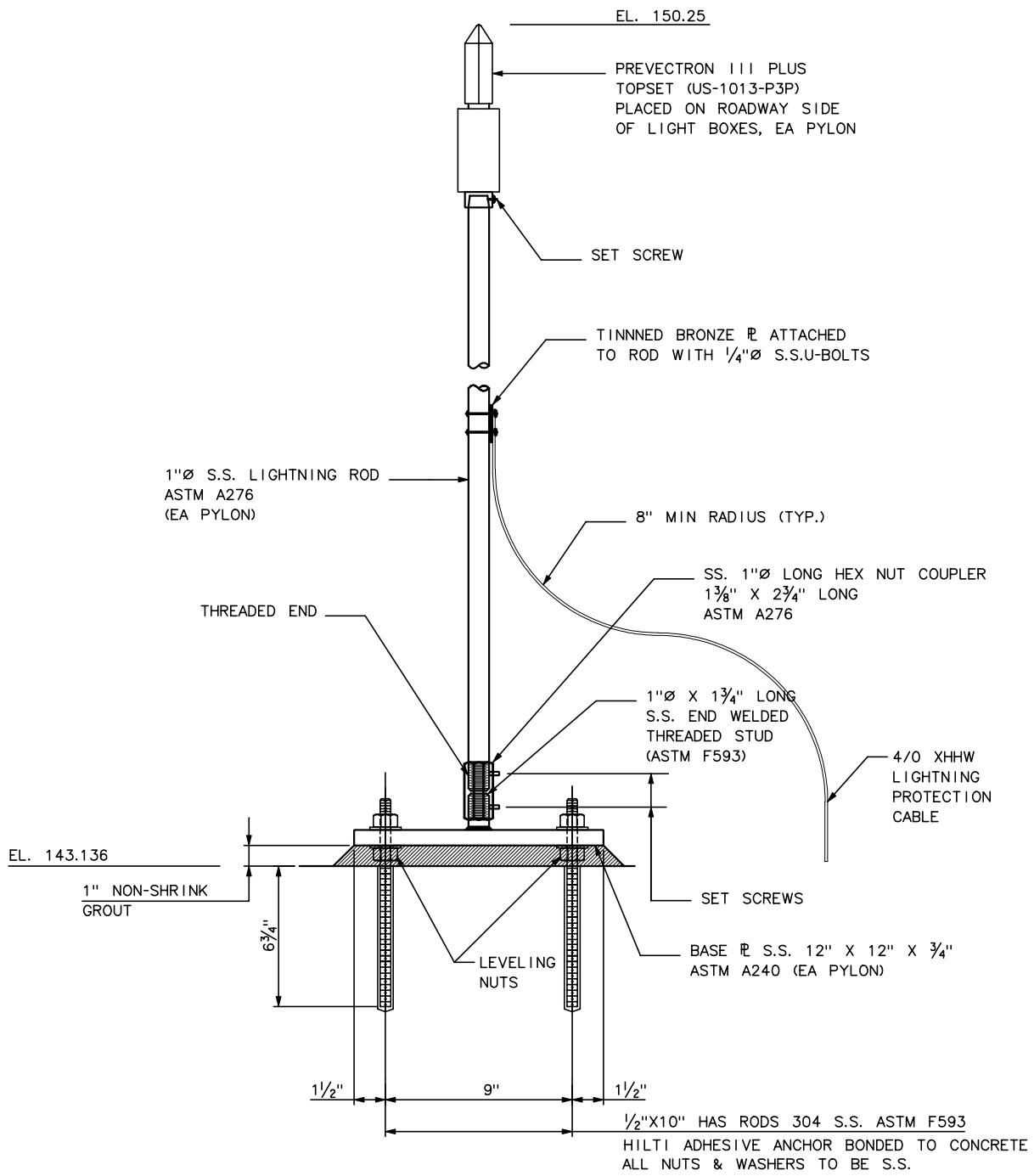

LIGHTNING PROTECTION DETAIL

3" = 1'-0"

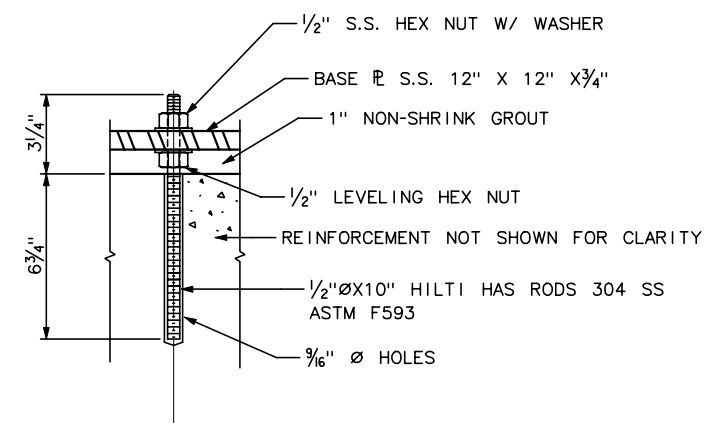

BOLT DETAIL

3" = 1'-0"

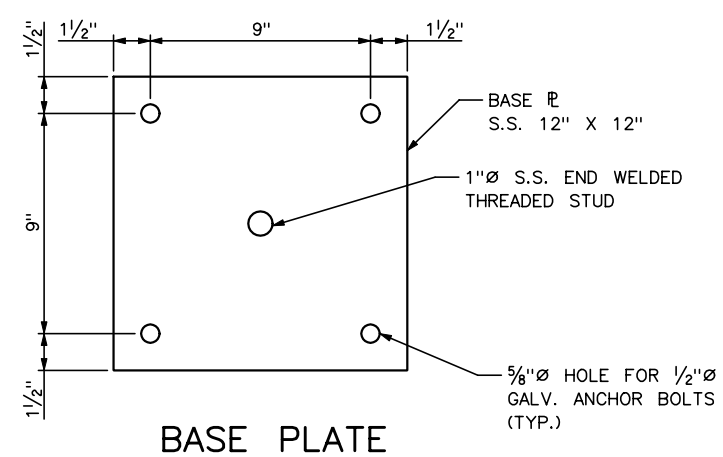

BASE PLATE

3" = 1'-0"

BILL OF MATERIALS

ITEM	QTY*
PREVECTRON III PLUS TOPSET (US-	2
1"Ø STAINLESS STEEL ROD ASTM A276	2
1"Ø S.S. LONG HEX NUT COUPLER 1 3/8" X 2 3/4" LONG ASTM A276	2
12" X 12" S.S. BASE PLATE W/ 1"Ø 1 3/4" LONG S.S. THREADED STUD ASTM F593	2
S.S. SET SCREW	6
1/2" S.S. HEX NUT	16
1/2" S.S. WASHER	16
1/2"X10" HILTI HAS RODS 304 SS ASTM F593	8
HVU ADHESIVE CAPSULES 1/2"X4-1/4"	8
TINNED BRONZE PLATE	2
1/4" S.S. U-BOLTS W/ WASHER & NUTS ASTM F593	4

*QUANTITIES ARE FOR 2 PYLONS.

NOTES:

1. MINIMUM YIELD STRENTGH OF ALL STAINLESS STEEL SHALL BE 30 ksi.

RECORD DRAWINGS

No.	Date	Revisions	By

HNTB CORPORATION

STATE OF WISCONSIN
DEPARTMENT OF TRANSPORTATION

STRUCTURE B-40-413A

Designed By	JE	Design Checked	AP	Drawn By	JE	Plans Checked	AP

SOUTH CABLE STAY
LIGHTNING PROTECTION
SYSTEM

SHEET SC30 OF .

STATE PROJECT I.D.	SHEET NUMBER
2235-00-70	8.41

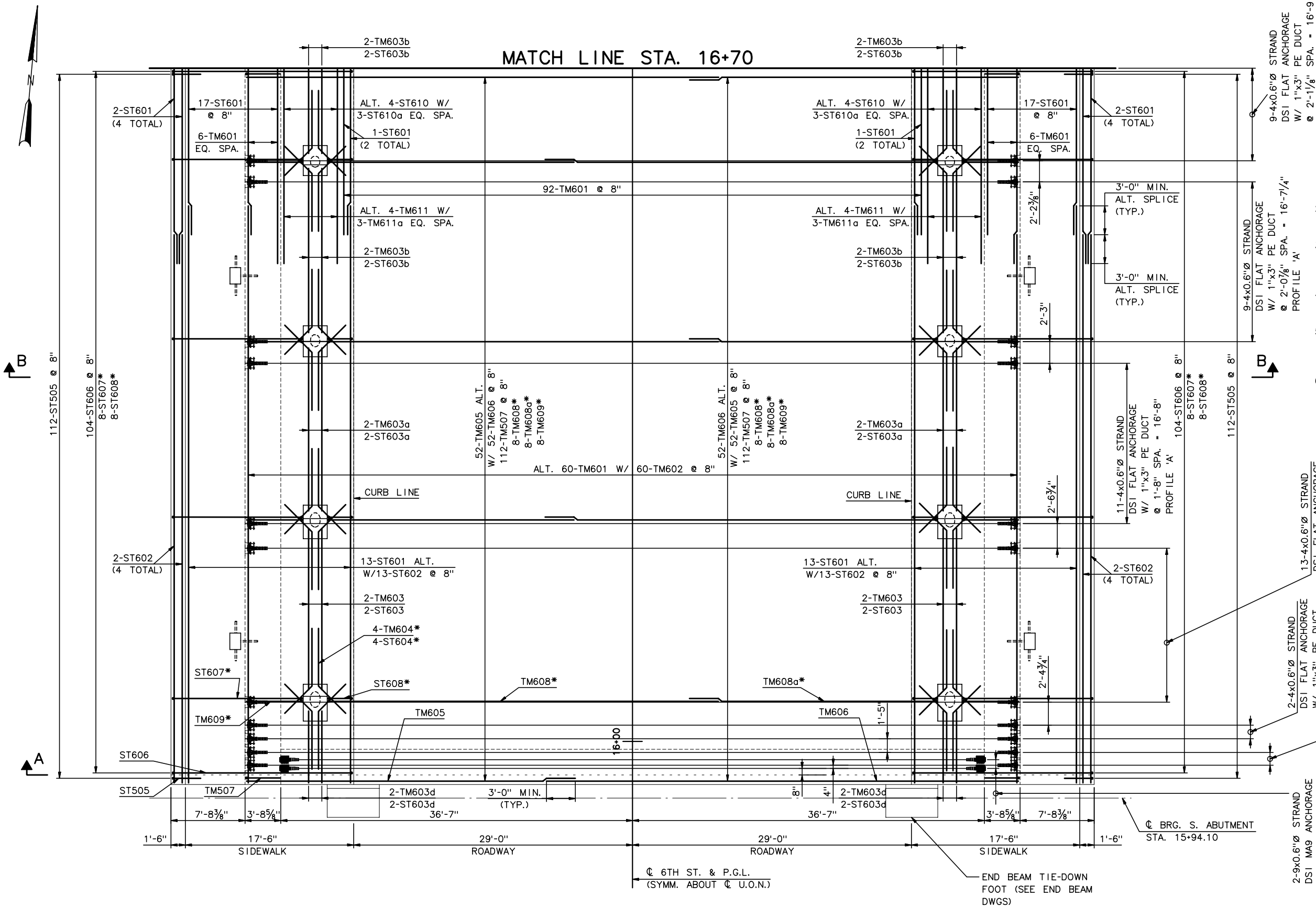

*TYPICAL AT STAY-CABLE OPENINGS

PLAN

3/16" = 1'-0"

NOTES:

1. FOR SECTIONS A-A AND B-B, SEE SHEET SC47.
2. FOR DECK JOINT DETAILS, SEE SHEET SC75 AND SC76.
3. FOR CABLE ANCHORAGE REINFORCEMENT, SEE SHEET SC56 THRU SC58b.
4. RAILING NOT SHOWN FOR CLARITY, FOR DETAILS, SEE SHEET SC79 THRU SC83a.
5. FOR ADDITIONAL ABUTMENT END BEAM REINFORCEMENT, SEE SHEETS SC61 THRU SC64b.
6. FOR SLAB/SIDEWALK CONNECTION REINFORCEMENT, SEE SHEETS SC51 THRU SC52a.

LEGEND:

JUNCTION BOX

RECORD DRAWINGS

No.	Date	Revisions	By

HNTB CORPORATION

STATE OF WISCONSIN
DEPARTMENT OF TRANSPORTATION

STRUCTURE B-40-413A

Designed By	SL	Design Checked	TZ	Drawn By	DS	Plans Checked	AP

DECK SLAB PLAN
TOP MAT REINF.
1 OF 8

SHEET SC31 OF

STATE PROJECT I.D.	SHEET NUMBER
2235-00-70	8.42

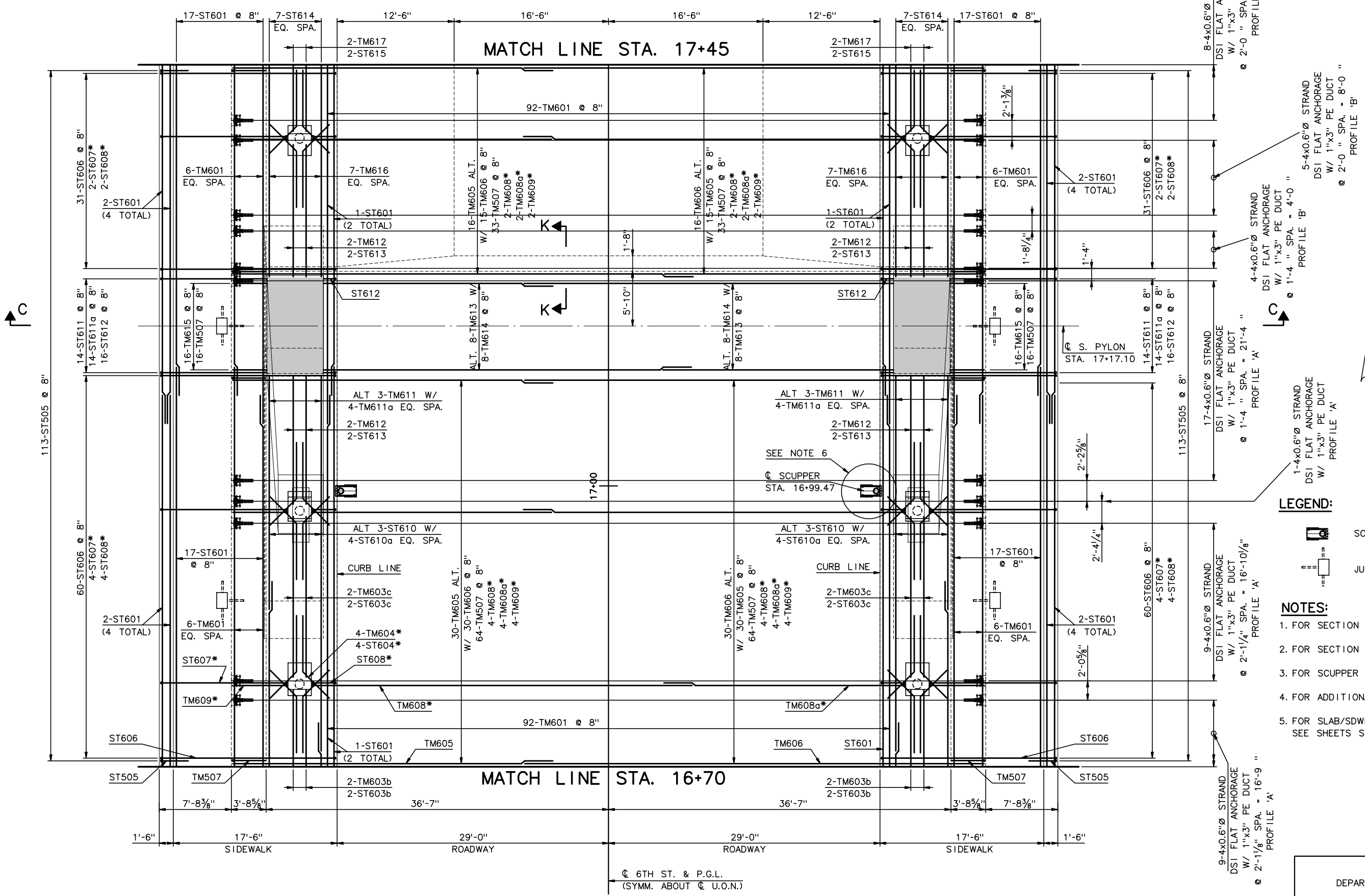

*TYPICAL AT STAY-CABLE OPENINGS

PLAN

3/16" = 1'-0"

LEGEND:

SCUPPER

JUNCTION BOX

NOTES:

1. FOR SECTION C-C, SEE SHEET SC48.
2. FOR SECTION K-K, SEE SHEET SC55a.
3. FOR SCUPPER DETAILS, SEE SHEET SC54.
4. FOR ADDITIONAL NOTES, SEE SHEET SC31.
5. FOR SLAB/SDWLK CONNECTION REINFORCEMENT, SEE SHEETS SC51THRU SC52a.

RECORD DRAWINGS

No.	Date	Revisions	By

HNTB CORPORATION

STATE OF WISCONSIN
DEPARTMENT OF TRANSPORTATION

STRUCTURE B-40-413A

Designed By	SL	Design Checked	TZ	Drawn By	DS	Plans Checked	AP

DECK SLAB PLAN
TOP MAT REINF.
2 OF 8

SHEET SC32 OF

STATE PROJECT I.D.	SHEET NUMBER
2235-00-70	8.43

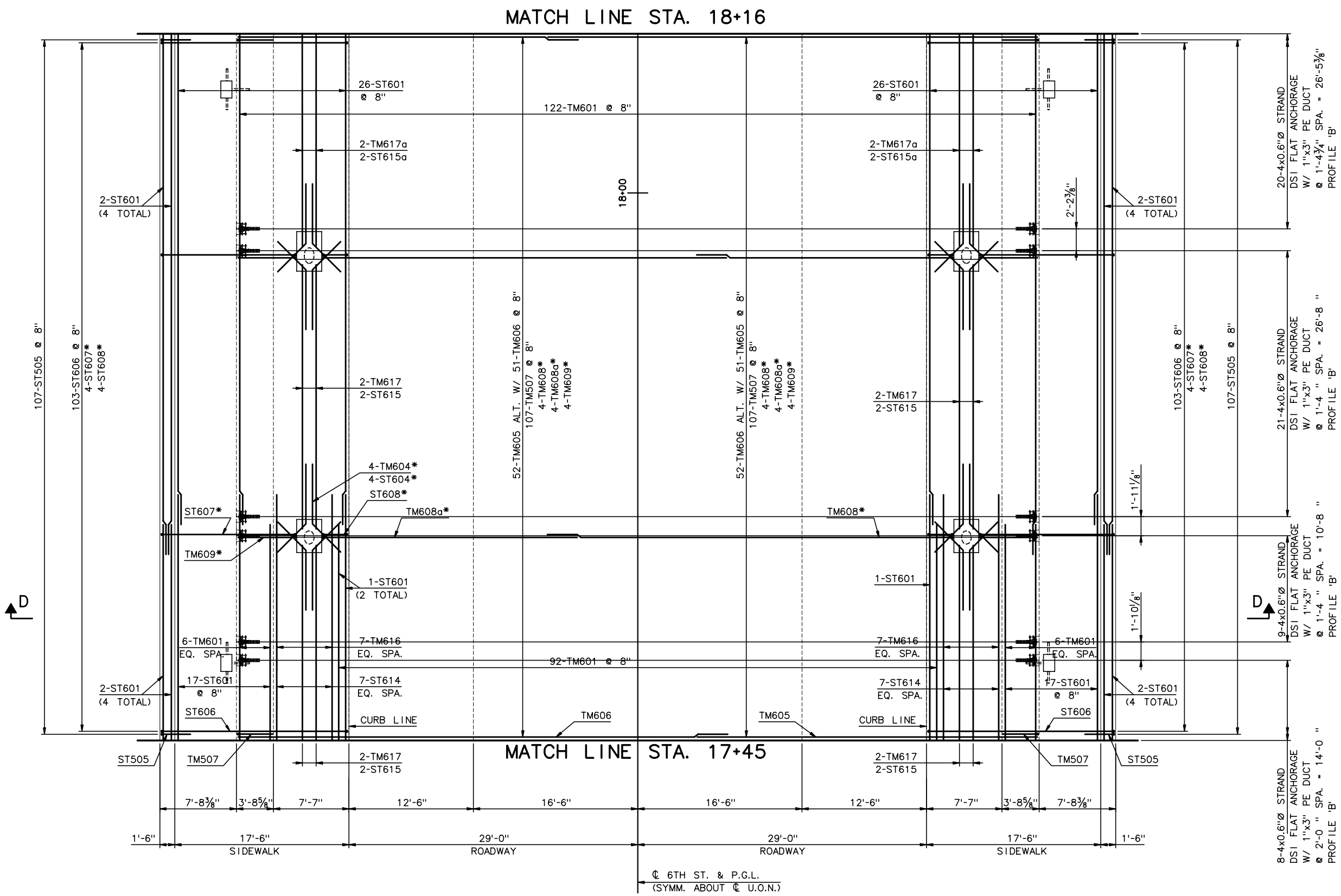

*TYPICAL AT STAY-CABLE OPENINGS

PLAN
3/16" = 1'-0"

LEGEND:

JUNCTION BOX

NOTES:

1. FOR SECTION D-D, SEE SHEET SC48.
2. FOR ADDITIONAL NOTES, SEE SHEET SC31.
3. FOR SLAB/SDWLK CONNECTION REINFORCEMENT, SEE SHEETS SC51 THRU SC52a.

RECORD DRAWINGS

No.	Date	Revisions	By

HNTB CORPORATION

STATE OF WISCONSIN
DEPARTMENT OF TRANSPORTATION

STRUCTURE B-40-413A

Designed By	SL	Design Checked	TZ	Drawn By	DS	Plans Checked	AP

DECK SLAB PLAN
TOP MAT REINF.
3 OF 8

SHEET SC33 OF

j:\cadd\ff31185\dgn\as built\south cablestay\sc33-decktopreinf03.dgn 02/11/03 02:57:32 PM

STATE PROJECT I.D.	SHEET NUMBER
2235-00-70	8.44

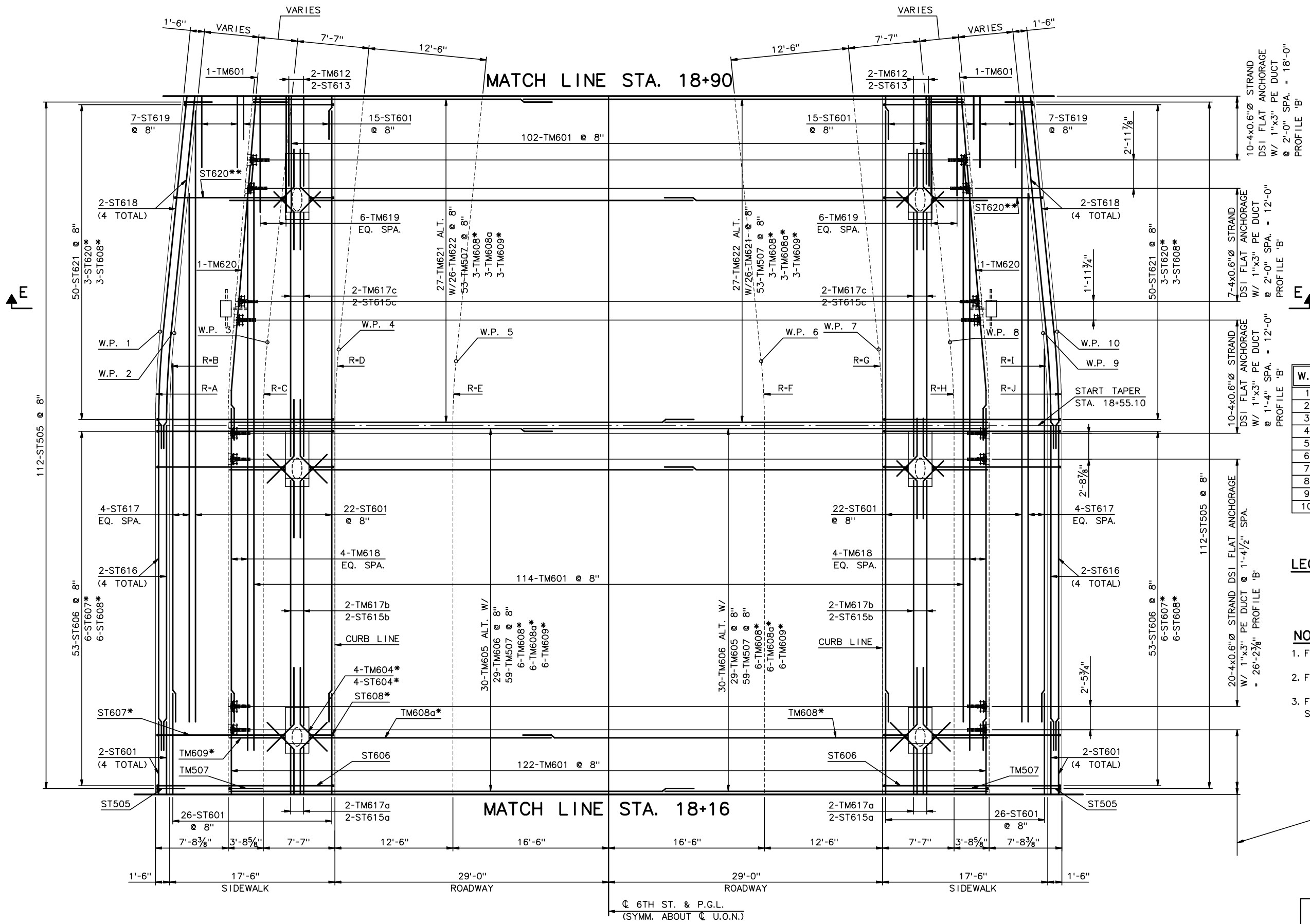

W.P.	STATION	OFFSET	RADIUS	
1	18+65.05	47'-6" L	A	100'-0"
2	18+64.90	46'-0 1/8" L	B	98'-6"
3	18+63.91	36'-1 3/4" L	C	88'-7"
4	18+63.16	28'-7 1/8" L	D	81'-0"
5	18+61.91	16'-1 7/8" L	E	68'-6"
6	18+61.91	16'-1 7/8" R	F	68'-6"
7	18+63.16	28'-7 1/8" R	G	81'-0"
8	18+63.91	36'-1 3/4" R	H	88'-7"
9	18+64.90	46'-0 1/8" R	I	98'-6"
10	18+65.05	47'-6" R	J	100'-0"

LEGEND:

JUNCTION BOX

NOTES:

1. FOR SECTION E-E, SEE SHEET SC49.
2. FOR ADDITIONAL NOTES, SEE SHEET SC31.
3. FOR SLAB/SDWLK CONNECTION REINFORCEMENT, SEE SHEETS SC51 THRU SC52a.

*TYPICAL AT STAY-CABLE OPENINGS
**BARS FOR SPECIFIC BLISTER ONLY

PLAN
3/16" = 1'-0"

RECORD DRAWINGS

No.	Date	Revisions	By

HNTB CORPORATION

STATE OF WISCONSIN
DEPARTMENT OF TRANSPORTATION

STRUCTURE B-40-413A

Designed By	SL	Design Checked	TZ	Drawn By	DS	Plans Checked	AP

DECK SLAB PLAN
TOP MAT REINF.
4 OF 8

SHEET SC34 OF

j:\cadd\ff31185\dgn\as built\south cablestay\sc34-decktopreinf04.dgn 02/11/03 02:57:33 PM

STATE PROJECT I.D.	SHEET NUMBER
2235-00-70	8.45

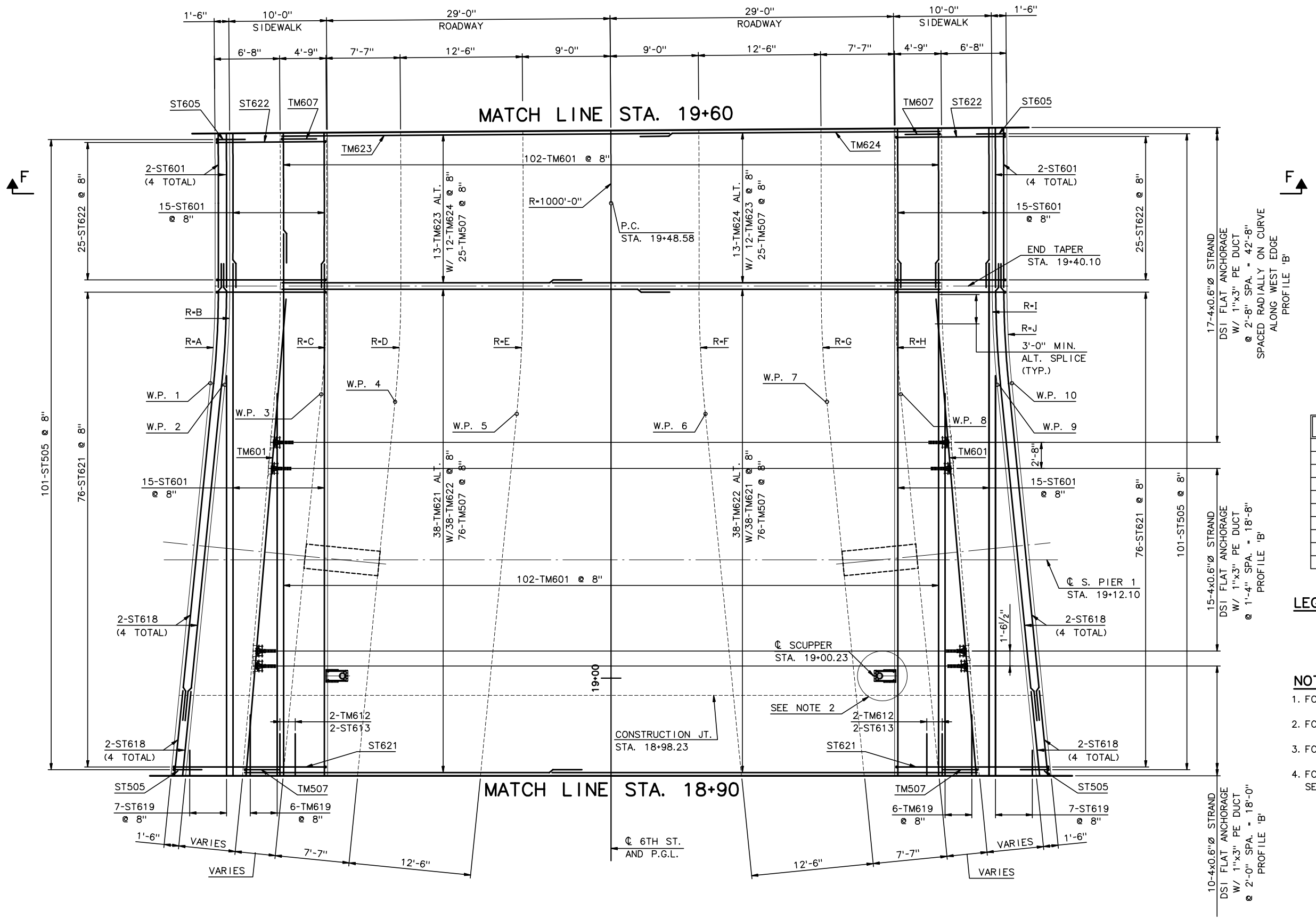

W.P.	STATION	OFFSET	RADIUS	
1	19+30.15	41'-0" L	A	100'-0"
2	19+30.00	39'-6" L	B	101'-6"
3	19+29.02	29'-7⅝" L	C	111'-5"
4	19+28.26	22'-1⅛" L	D	119'-0"
5	19+27.02	9'-7⅞" L	E	131'-6"
6	19+27.02	9'-7⅞" R	F	131'-6"
7	19+28.26	22'-1⅛" R	G	119'-0"
8	19+29.02	29'-7⅝" R	H	111'-5"
9	19+30.00	39'-6" R	I	101'-6"
10	19+30.15	41'-0" R	J	100'-0"

LEGEND:

SCUPPER

NOTES:

1. FOR SECTION F-F, SEE SHEET SC49.
2. FOR SCUPPER DETAILS, SEE SHEET SC54.
3. FOR ADDITIONAL NOTES, SEE SHEET SC31.
4. FOR SLAB/SIDEWALK CONNECTION REINFORCEMENT, SEE SHEETS SC51THRU SC52a.

NOTE: PLACE BARS RADIALLY ALONG ℄ @ 8" MAX. SPA.

PLAN
3/16" = 1'-0"

RECORD DRAWINGS

No.	Date	Revisions	By

HNTB CORPORATION

STATE OF WISCONSIN
DEPARTMENT OF TRANSPORTATION

STRUCTURE B-40-413A

Designed By	SL	Design Checked	TZ	Drawn By	DS	Plans Checked	AP

DECK SLAB PLAN
TOP MAT REINF.
5 OF 8

SHEET SC35 OF

j:\cadd\ff31185\dgn\as built\south cablestay\sc35-decktopreinf05.dgn 02/11/03 02:57:34 PM

STATE PROJECT I.D.	SHEET NUMBER
2235-00-70	8.46

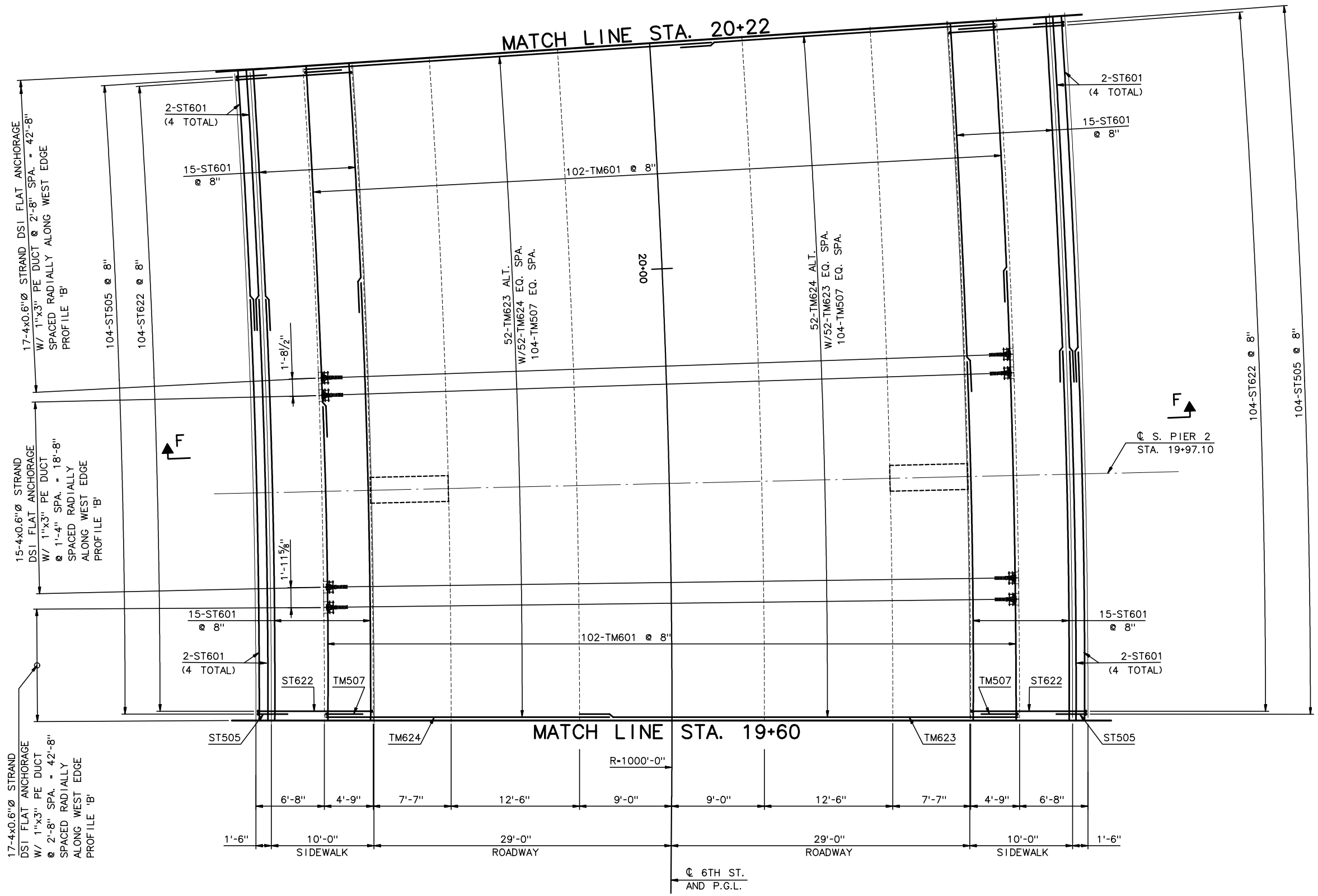

NOTE: PLACE BARS RADIALLY ALONG ℄ @ 8" MAX. SPA.

PLAN
3/16" = 1'-0"

NOTES:

1. FOR SECTION F-F, SEE SHEET SC49.
2. FOR ADDITIONAL NOTES, SEE SHEET SC31.
3. FOR SLAB/SIDEWALK CONNECTION REINFORCEMENT, SEE SHEETS SC51 THRU SC52a.

RECORD DRAWINGS

No.	Date	Revisions	By

HNTB CORPORATION

STATE OF WISCONSIN
DEPARTMENT OF TRANSPORTATION

STRUCTURE B-40-413A

Designed By	SL	Design Checked	TZ	Drawn By	DS	Plans Checked	AP

DECK SLAB PLAN
TOP MAT REINF.
6 OF 8

SHEET SC36 OF

STATE PROJECT I.D.	SHEET NUMBER
2235-00-70	8.47

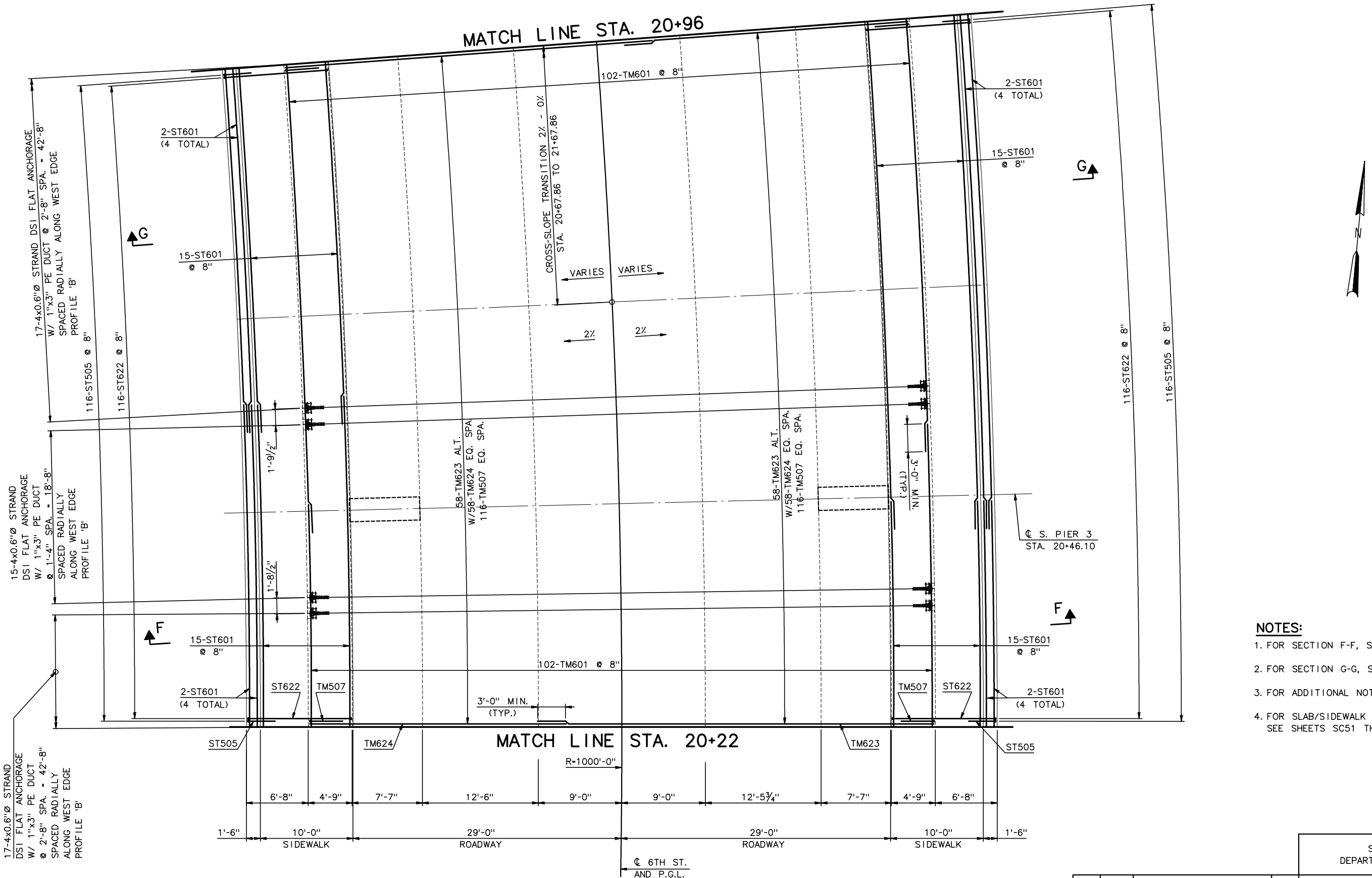

NOTE: PLACE BARS RADIALLY ALONG ℄ @ 8" MAX. SPA.

PLAN
3/16" = 1'-0"

NOTES:

1. FOR SECTION F-F, SEE SHEET SC49.
2. FOR SECTION G-G, SEE SHEET SC50.
3. FOR ADDITIONAL NOTES, SEE SHEET SC31.
4. FOR SLAB/SIDEWALK CONNECTION REINFORCEMENT, SEE SHEETS SC51 THRU SC52a.

RECORD DRAWINGS

No.	Date	Revisions	By

HNTB CORPORATION

STATE OF WISCONSIN
DEPARTMENT OF TRANSPORTATION

STRUCTURE B-40-413A

Designed By	SL	Design Checked	TZ	Drawn By	DS	Plans Checked	AP

DECK SLAB PLAN
TOP MAT REINF.
7 OF 8

SHEET SC37 OF

j:\cadd\ff31185\dgn\as built\south cablestay\sc37-decktopreinf07.dgn 02/11/03 02:57:35 PM

STATE PROJECT I.D.	SHEET NUMBER
2235-00-70	8.48

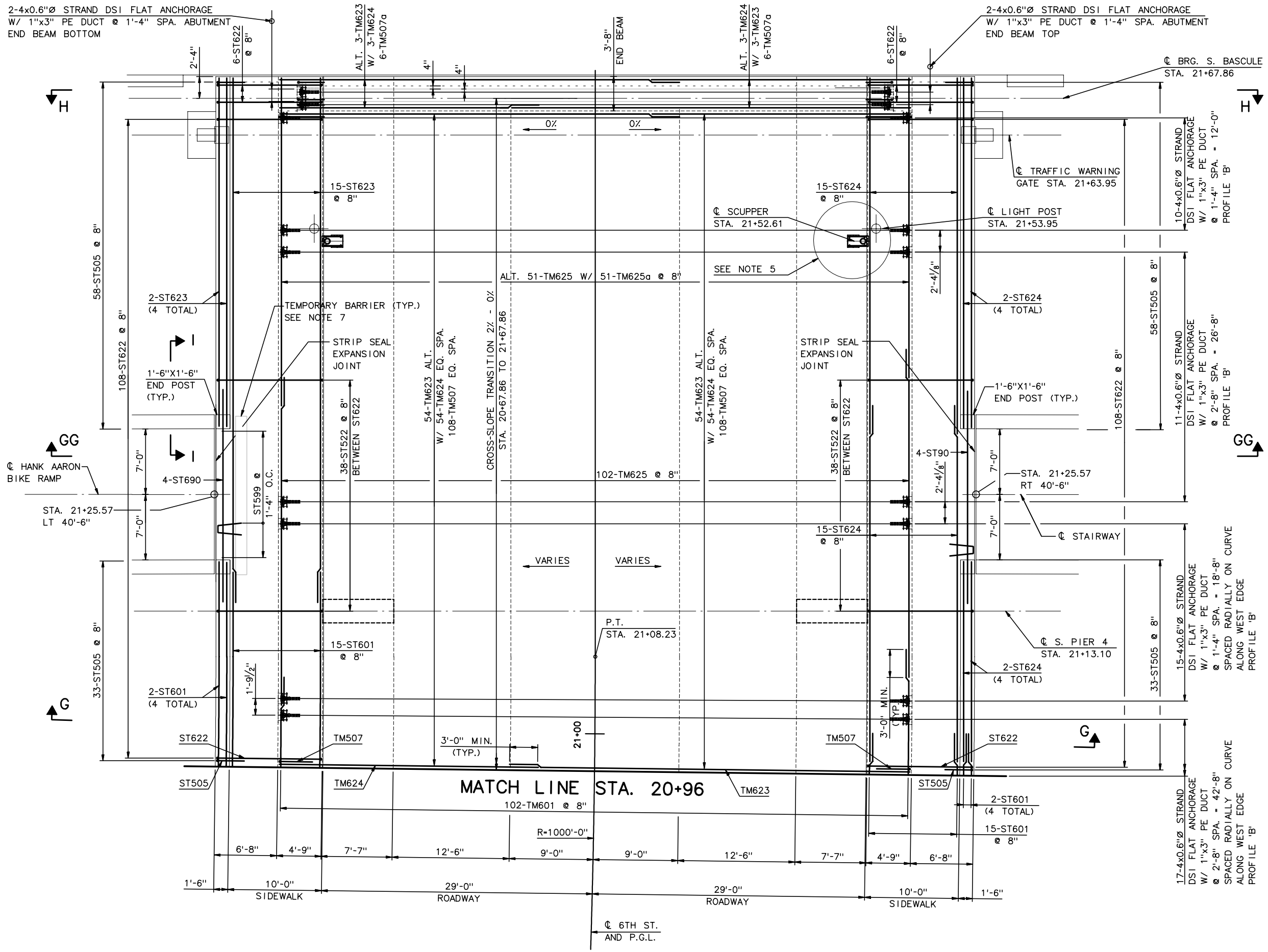

LEGEND:

SCUPPER

NOTES:

1. FOR SECTIONS H-H AND G-G, SEE SHEET SC50.
2. FOR ADDITIONAL NOTES, SEE SHEET SC31.
3. FOR ADDITIONAL BASCULE END BEAM REINFORCEMENT, SEE SHEET SC59 THRU SC60a.
4. FOR SLAB/SDWLK CONNECTION REINFORCEMENT, SEE SHEETS SC51 THRU SC52a.
5. FOR SCUPPER DETAILS, SEE SHEET SC54.
6. FOR SECTION GG-GG, I-I AND END POST DETAILS, SEE SC50a.
7. PLACE 42" HIGH X 17'-0" TEMPORARY BARRIER FULL LENGTH OF BIKE RAMP AND STAIRWAY OPENING. REMOVE UPON COMPLETION OF BIKE RAMP AND STAIRWAY.

NOTE: PLACE BARS RADIALLY ALONG ℄ @ 8" MAX. SPA.

PLAN

3/16" = 1'-0"

RECORD DRAWINGS

No.	Date	Revisions	By
1	4-12-02	ADD BIKE/STAIRS, REV REBAR	AP

HNTB CORPORATION

STATE OF WISCONSIN
DEPARTMENT OF TRANSPORTATION

STRUCTURE B-40-413A

Designed By	SL	Design Checked	TZ	Drawn By	DS	Plans Checked	AP

DECK SLAB PLAN
TOP MAT REINF.
8 OF 8

SHEET SC38 OF

STATE PROJECT I.D.	SHEET NUMBER
2235-00-70	8.49

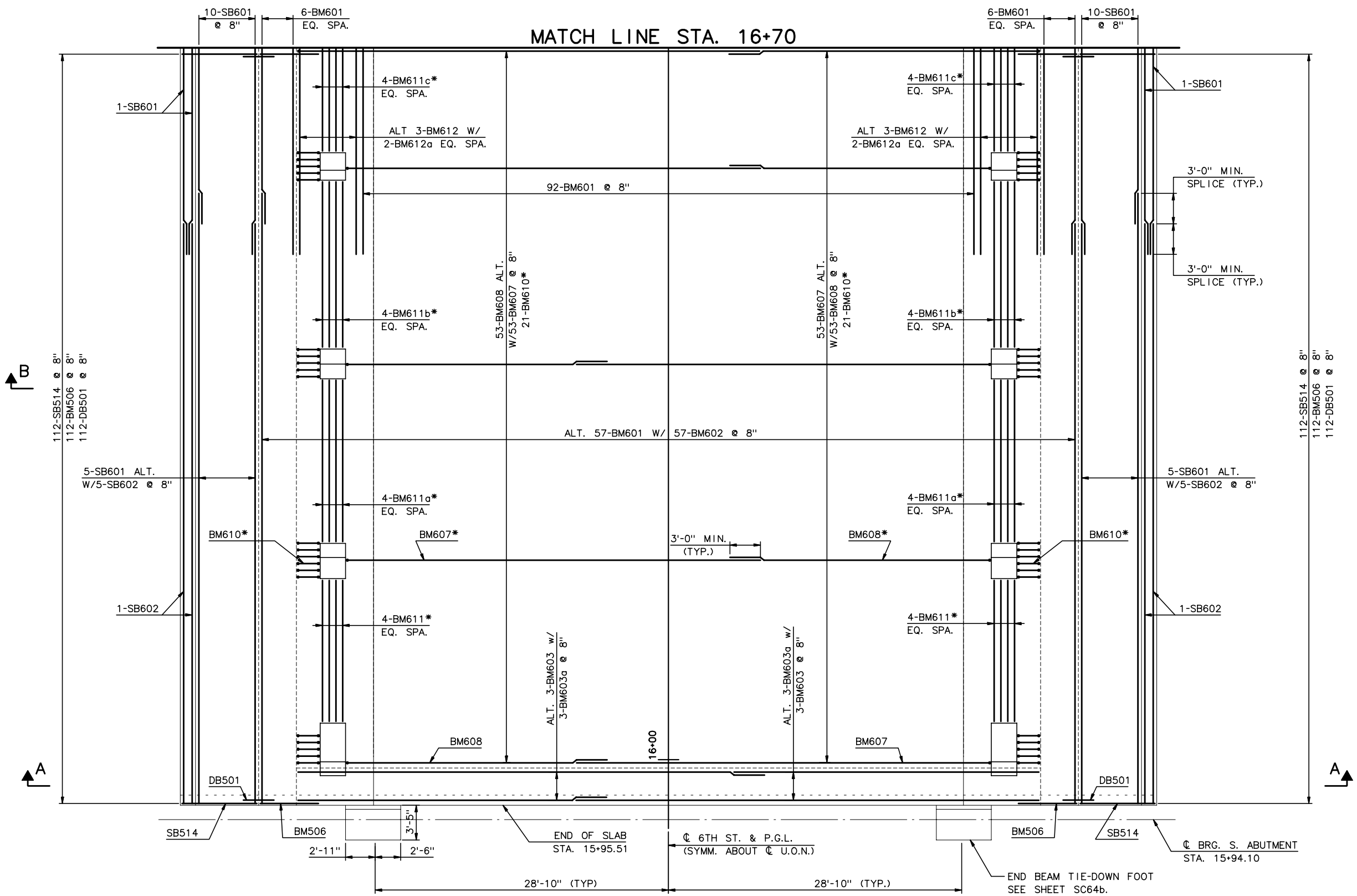

*TYPICAL AT STAY-CABLE OPENINGS

PLAN
3/16" = 1'-0"

NOTES:

1. FOR SECTIONS A-A AND B-B, SEE SHEET SC47.
2. FOR DECK JOINT DETAILS, SEE SHEET SC75 & SC76.
3. FOR CABLE ANCHORAGE REINFORCEMENT, SEE SHEET SC52 - SC58.
4. SLIDE BM607 AND BM608 BARS TOWARDS ℄ AT ANCHOR BLISTER LOCATIONS.
5. FOR ADDITIONAL ABUTMENT END BEAM REINFORCEMENT, SEE SHEETS SC61 - SC64.
6. FOR SLAB/SIDEWALK REINFORCEMENT, SEE SHEET SC51 - SC52.
7. FOR RAILING LAYOUT AND DETAILS, SEE SHEETS SC79 - SC83.

RECORD DRAWINGS

No.	Date	Revisions	By

HNTB CORPORATION

STATE OF WISCONSIN
DEPARTMENT OF TRANSPORTATION

STRUCTURE B-40-413A

Designed By	SL	Design Checked	TZ	Drawn By	DS	Plans Checked	AP

DECK SLAB PLAN
BOTTOM MAT REINF.
1 OF 8

SHEET SC39 OF

STATE PROJECT I.D.	SHEET NUMBER
2235-00-70	8.50

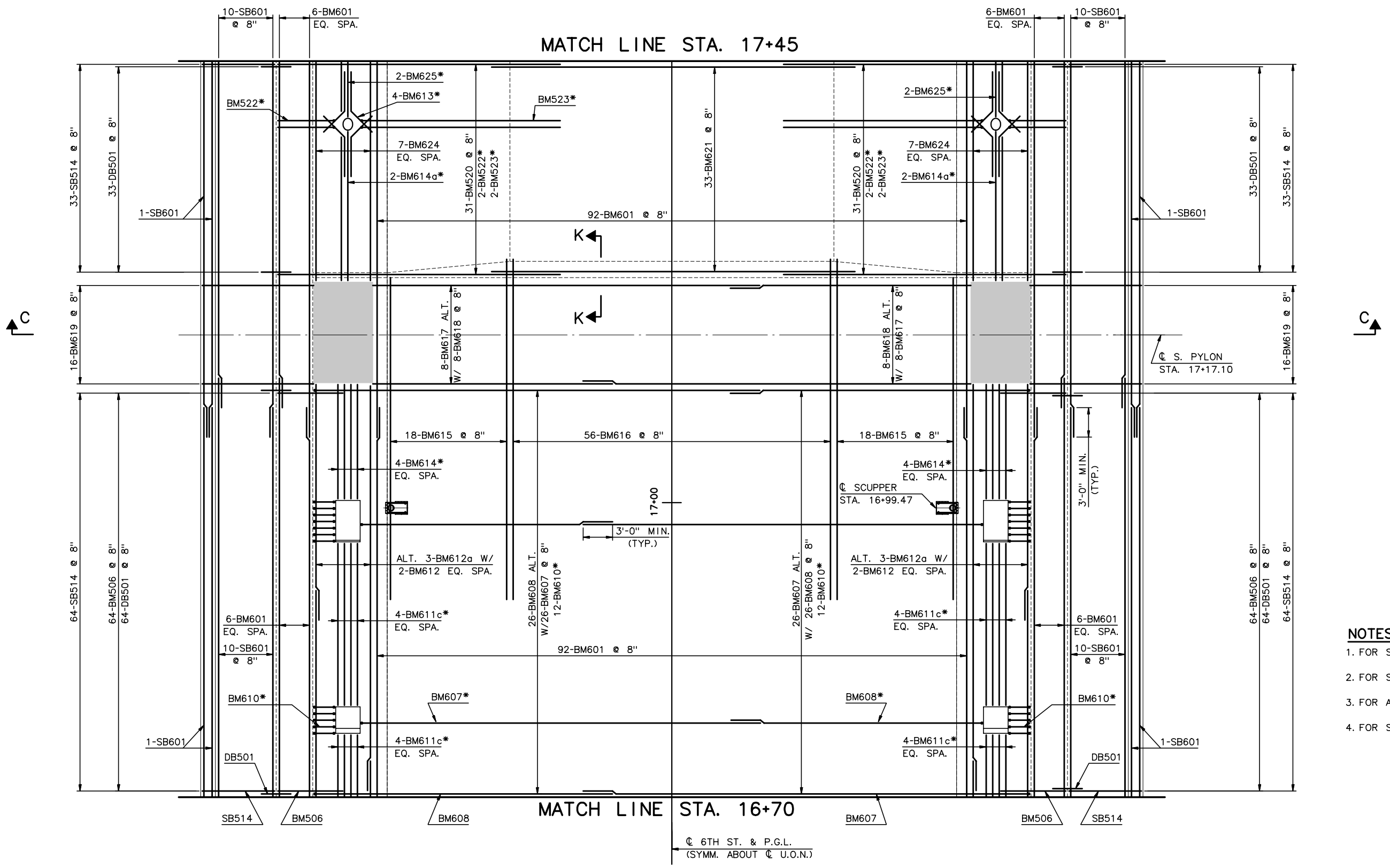

*TYPICAL AT STAY-CABLE OPENINGS

PLAN

3/16" = 1'-0"

NOTES:

1. FOR SECTION C-C, SEE SHEET SC48.
2. FOR SECTION K-K, SEE SHEET SC52.
3. FOR ADDITIONAL NOTES, SEE SHET SC39.
4. FOR SCUPPER DETAILS, SEE SHEET SC54.

RECORD DRAWINGS

No.	Date	Revisions	By

HNTB CORPORATION

STATE OF WISCONSIN
DEPARTMENT OF TRANSPORTATION

STRUCTURE B-40-413A

Designed By	SL	Design Checked	TZ	Drawn By	DS	Plans Checked	AP

DECK SLAB PLAN
BOTTOM MAT REINF.
2 OF 8

SHEET SC40 OF

STATE PROJECT I.D.	SHEET NUMBER
2235-00-70	8.51

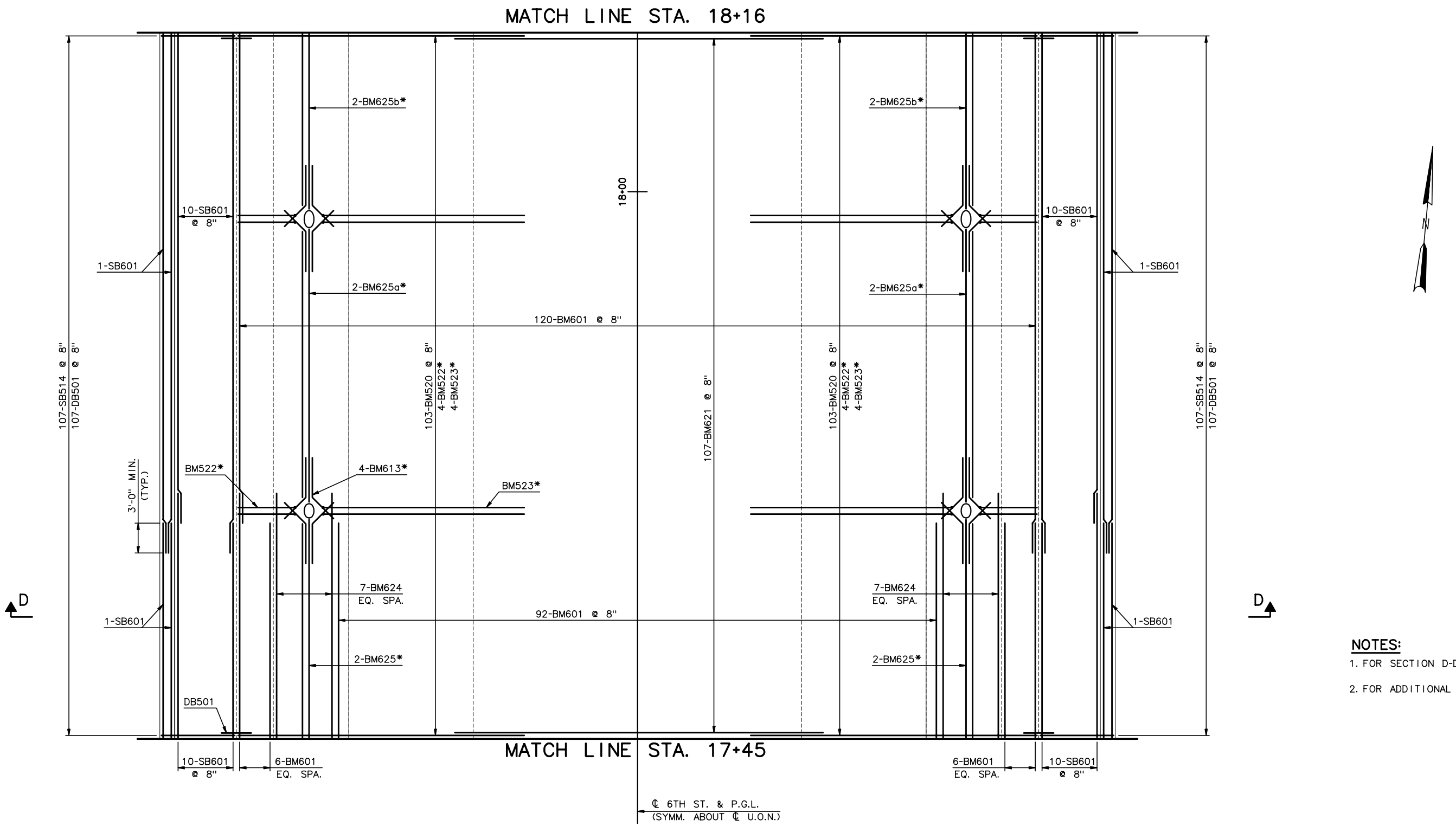

*TYPICAL AT STAY-CABLE OPENINGS

PLAN

3/16" = 1'-0"

NOTES:

1. FOR SECTION D-D, SEE SHEET SC48.
2. FOR ADDITIONAL NOTES, SEE SHEET SC39.

RECORD DRAWINGS

No.	Date	Revisions	By

HNTB CORPORATION

STATE OF WISCONSIN
DEPARTMENT OF TRANSPORTATION

STRUCTURE B-40-413A

Designed By	SL	Design Checked	TZ	Drawn By	DS	Plans Checked	AP

DECK SLAB PLAN
BOTTOM MAT REINF.
3 OF 8

SHEET SC41 OF

STATE PROJECT I.D.	SHEET NUMBER
2235-00-70	8.52

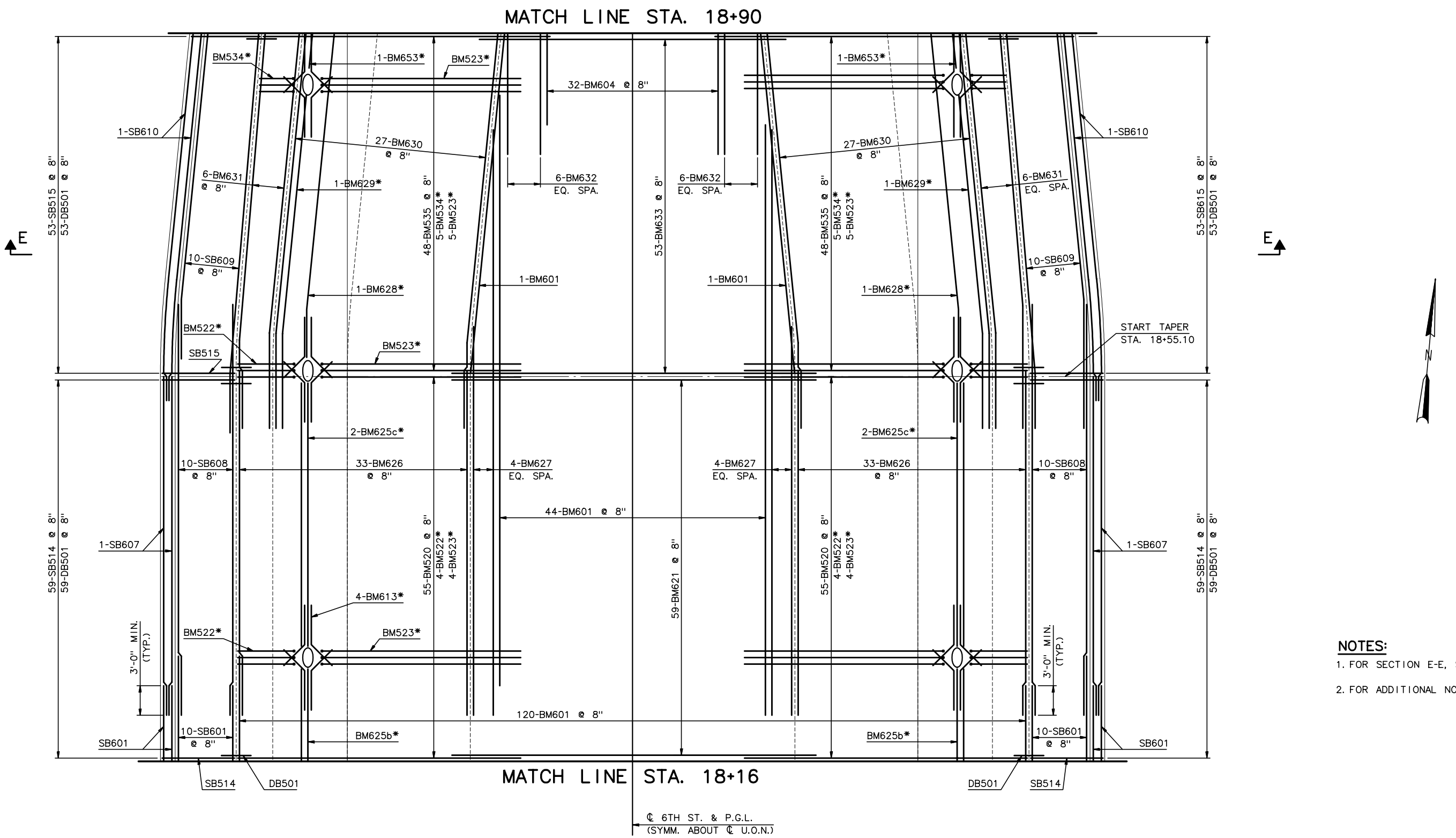

*TYPICAL AT STAY-CABLE OPENINGS

PLAN

3/16" = 1'-0"

NOTES:

1. FOR SECTION E-E, SEE SHEET SC49.
2. FOR ADDITIONAL NOTES, SEE SHEET SC39.

RECORD DRAWINGS

No.	Date	Revisions	By

HNTB CORPORATION

STATE OF WISCONSIN
DEPARTMENT OF TRANSPORTATION

STRUCTURE B-40-413A

Designed By	SL	Design Checked	TZ	Drawn By	DS	Plans Checked	AP

DECK SLAB PLAN
BOTTOM MAT REINF.
4 OF 8

SHEET SC42 OF

STATE PROJECT I.D.	SHEET NUMBER
2235-00-70	8.53

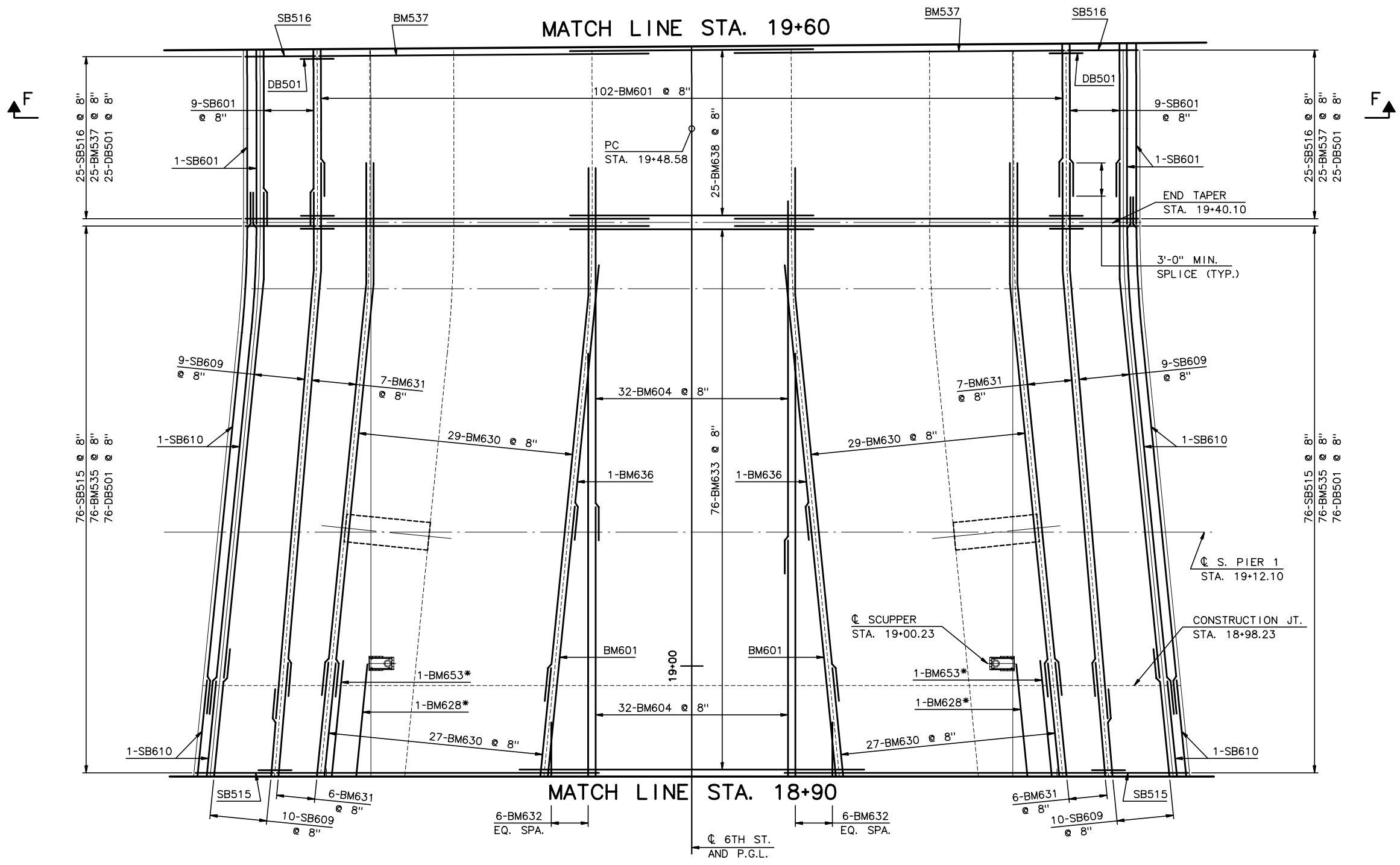

NOTE: PLACE BARS RADIALLY ALONG ℄ @ 8" MAX. SPA.

PLAN

3/16" = 1'-0"

*TYPICAL AT STAY-CABLE OPENINGS

NOTES:

1. FOR SECTION F-F, SEE SHEET SC49.
2. FOR ADDITIONAL NOTES, SEE SHEET SC39.
3. FOR SCUPPER DETAILS, SEE SHEET SC54.

RECORD DRAWINGS

No.	Date	Revisions	By

HNTB CORPORATION

STATE OF WISCONSIN
DEPARTMENT OF TRANSPORTATION

STRUCTURE B-40-413A

Designed By	SL	Design Checked	TZ	Drawn By	DS	Plans Checked	AP

DECK SLAB PLAN
BOTTOM MAT REINF.
5 OF 8

SHEET SC43 OF

STATE PROJECT I.D.	SHEET NUMBER
2235-00-70	8.54

PLAN

3/16" = 1'-0"

NOTE: PLACE BARS RADIALLY ALONG ℄ @ 8" MAX. SPA.

NOTES:

1. FOR SECTION F-F, SEE SHEET SC49.
2. FOR ADDITIONAL NOTES, SEE SHEET SC39.

RECORD DRAWINGS

No.	Date	Revisions	By

HNTB CORPORATION

STATE OF WISCONSIN
DEPARTMENT OF TRANSPORTATION

STRUCTURE B-40-413A

Designed By	SL	Design Checked	TZ	Drawn By	DS	Plans Checked	AP

DECK SLAB PLAN
BOTTOM MAT REINF.
6 OF 8

SHEET SC44 OF

STATE PROJECT I.D.	SHEET NUMBER
2235-00-70	8.55

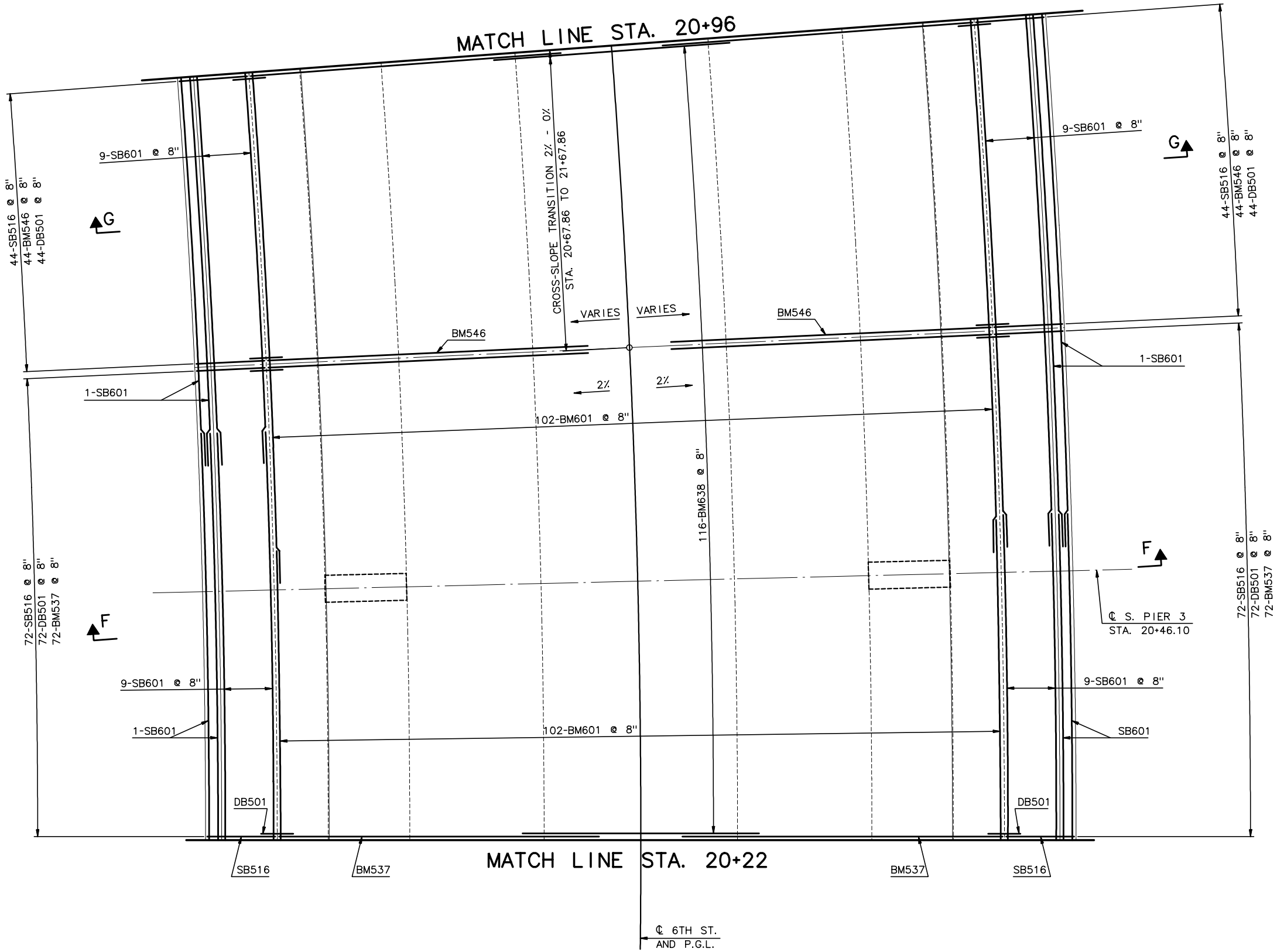

NOTE: PLACE BARS RADIALLY ALONG ℄ @ 8" MAX. SPA.

PLAN
3/16" = 1'-0"

NOTES:

1. FOR SECTION F-F, SEE SHEET SC49.
2. FOR SECTION G-G, SEE SHEET SC50.
3. FOR ADDITIONAL NOTES, SEE SHEET SC39.

RECORD DRAWINGS

No.	Date	Revisions	By

HNTB CORPORATION

STATE OF WISCONSIN
DEPARTMENT OF TRANSPORTATION

STRUCTURE B-40-413A

Designed By	SL	Design Checked	TZ	Drawn By	DS	Plans Checked	AP

DECK SLAB PLAN
BOTTOM MAT REINF.
7 OF 8

SHEET SC45 OF

STATE PROJECT I.D.	SHEET NUMBER
2235-00-70	8.56

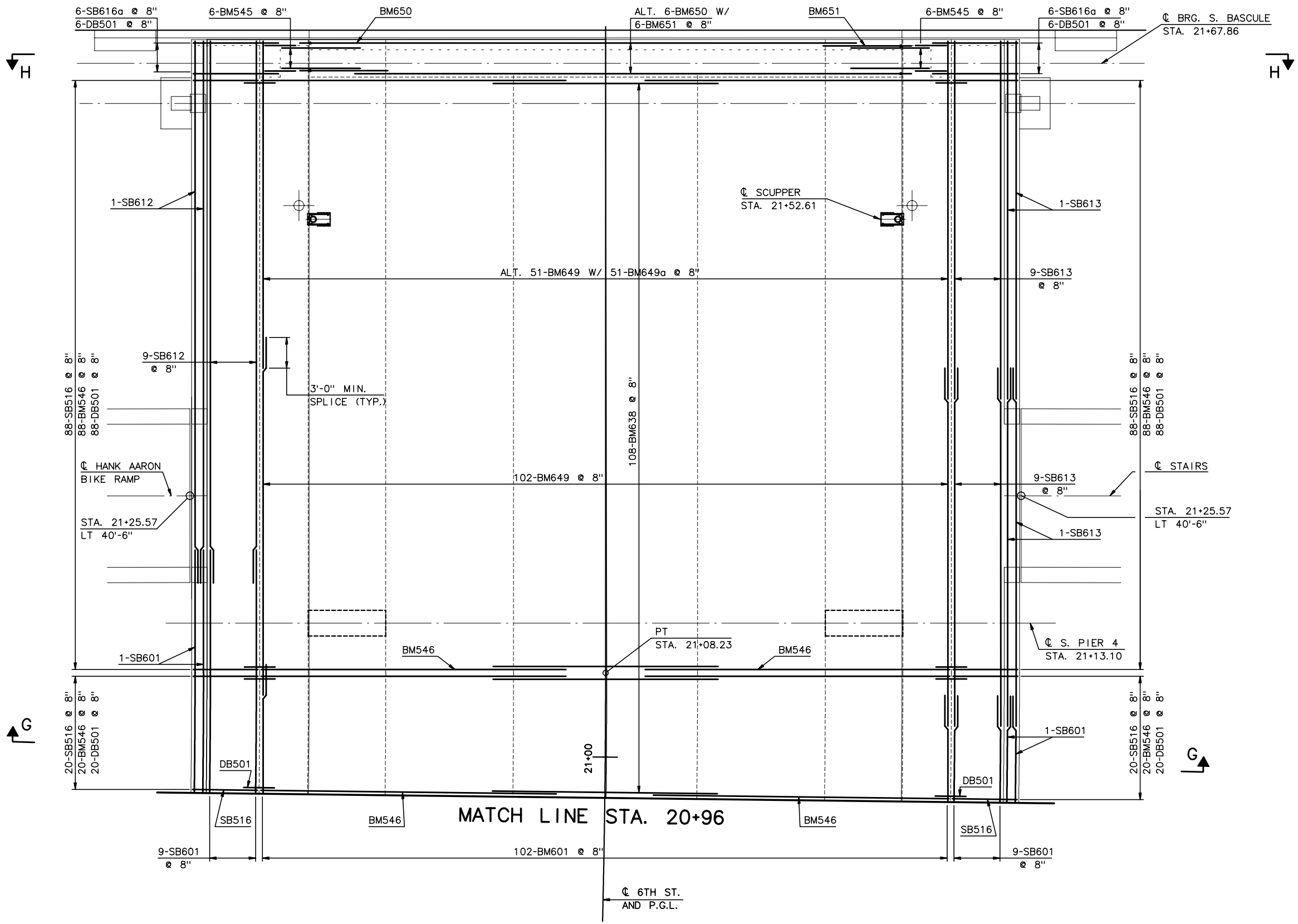

NOTE: PLACE BARS RADIALLY ALONG ℄ @ 8" MAX. SPA.

PLAN

3/16" = 1'-0"

NOTES:

1. FOR SECTION H-H, SEE SHEET SC50.
2. FOR SECTIONS G-G, SEE SHEET SC50.
3. FOR ADDITIONAL NOTES, SEE SHEET SC39.
4. FOR ADDITIONAL END BEAM REINFORCEMENT, SEE SHEET SC59 & SC60.
5. FOR SCUPPER DETAILS, SEE SHEET SC54.

RECORD DRAWINGS

No.	Date	Revisions	By
1	xxxx	ADD BIKE RAMP/STAIRS	AP

HNTB CORPORATION

STATE OF WISCONSIN
DEPARTMENT OF TRANSPORTATION

STRUCTURE B-40-413A

Designed By	SL	Design Checked	TZ	Drawn By	DS	Plans Checked	AP

DECK SLAB PLAN
BOTTOM MAT REINF.
8 OF 8

SHEET SC46 OF

j:\cadd\ff31185\dgn\as built\south cablestay\sc46-deckbotreinf08.dgn 02/11/03 02:57:41 PM

STATE PROJECT I.D.	SHEET NUMBER
2235-00-70	8.57

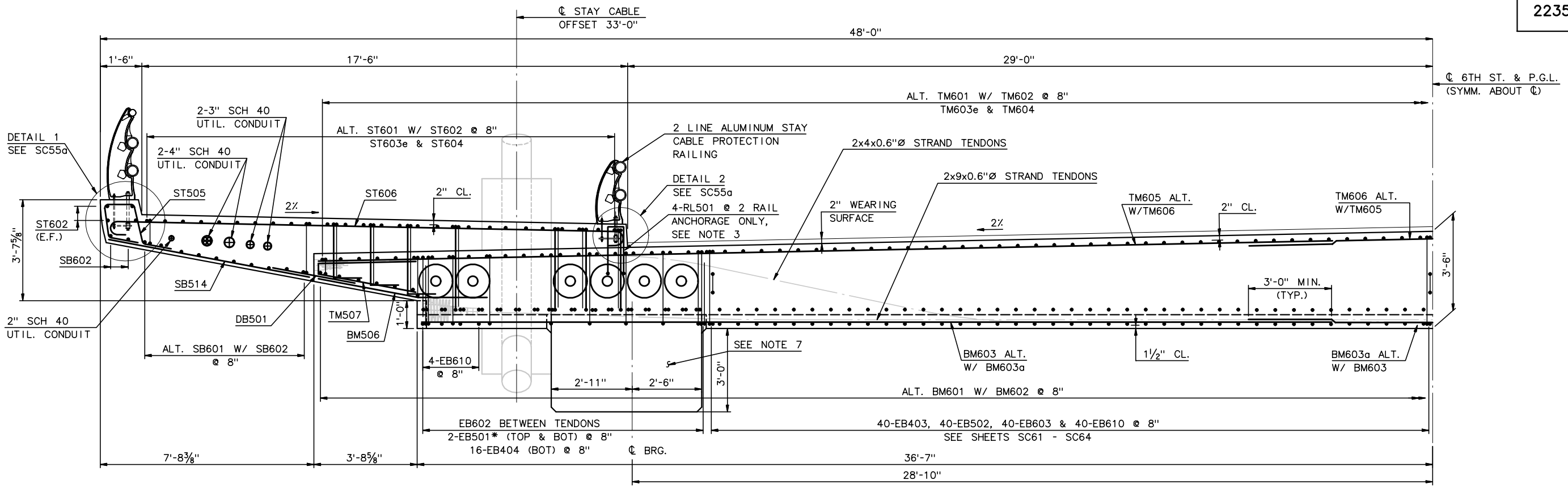

SECTION A-A

½" = 1'-0"

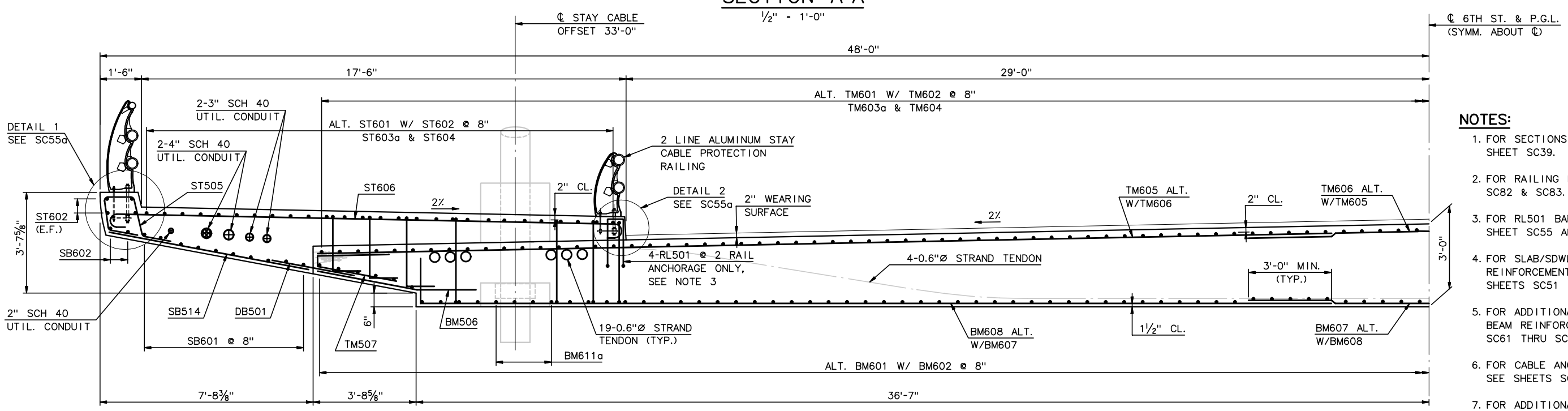

SECTION B-B

½" = 1'-0"

NOTES:

1. FOR SECTIONS A-A AND B-B, SEE SHEET SC39.
2. FOR RAILING DETAILS, SEE SHEETS SC82 & SC83.
3. FOR RL501 BAR PLACEMENT, SEE SHEET SC55 ANCHOR RAIL DETAIL.
4. FOR SLAB/SDWLK CONNECTION REINFORCEMENT, SEE SHEETS SC51 & SC52.
5. FOR ADDITIONAL ABUTMENT END BEAM REINFORCEMENT, SEE SHEETS SC61 THRU SC64.
6. FOR CABLE ANCHORAGE DETAILS, SEE SHEETS SC26, & SC56 THRU SC58.
7. FOR ADDITIONAL CORBEL DETAILS & REINFORCEMENT, SEE SHEETS SC61 - SC64.

RECORD DRAWINGS

No.	Date	Revisions	By

HNTB CORPORATION

STATE OF WISCONSIN
DEPARTMENT OF TRANSPORTATION

STRUCTURE B-40-413A

Designed By	SL	Design Checked	TZ	Drawn By	DS	Plans Checked	AP

SOUTH CABLE STAY
DECK SLAB SECTIONS
1 OF 4

SHEET SC47 OF

STATE PROJECT I.D.	SHEET NUMBER
2235-00-70	8.58

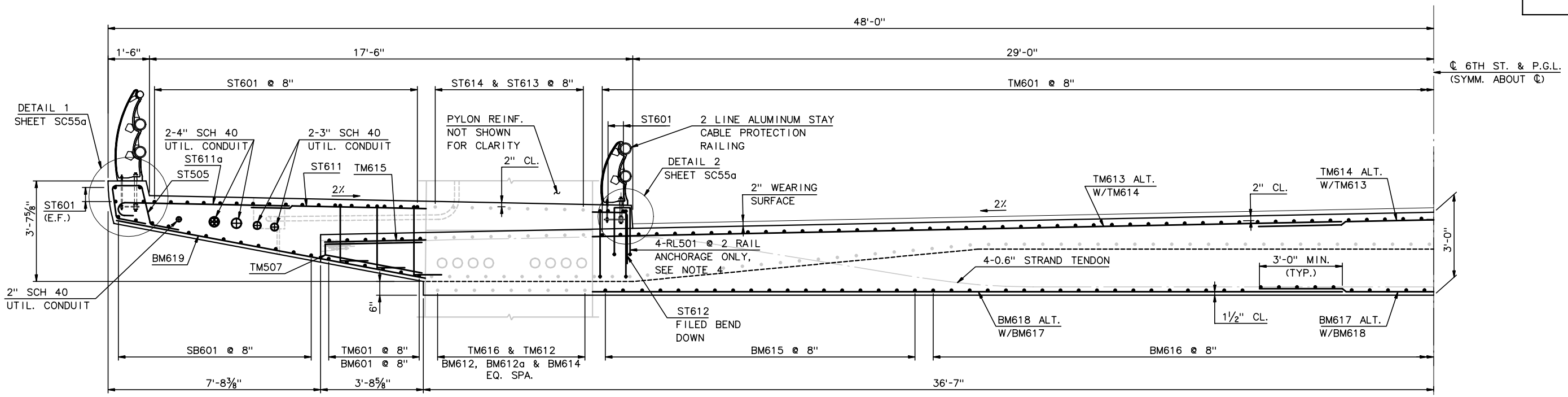

*BM601 BARS SHOWN SHADED FOR CLARITY.

SECTION C-C

½" = 1'-0"

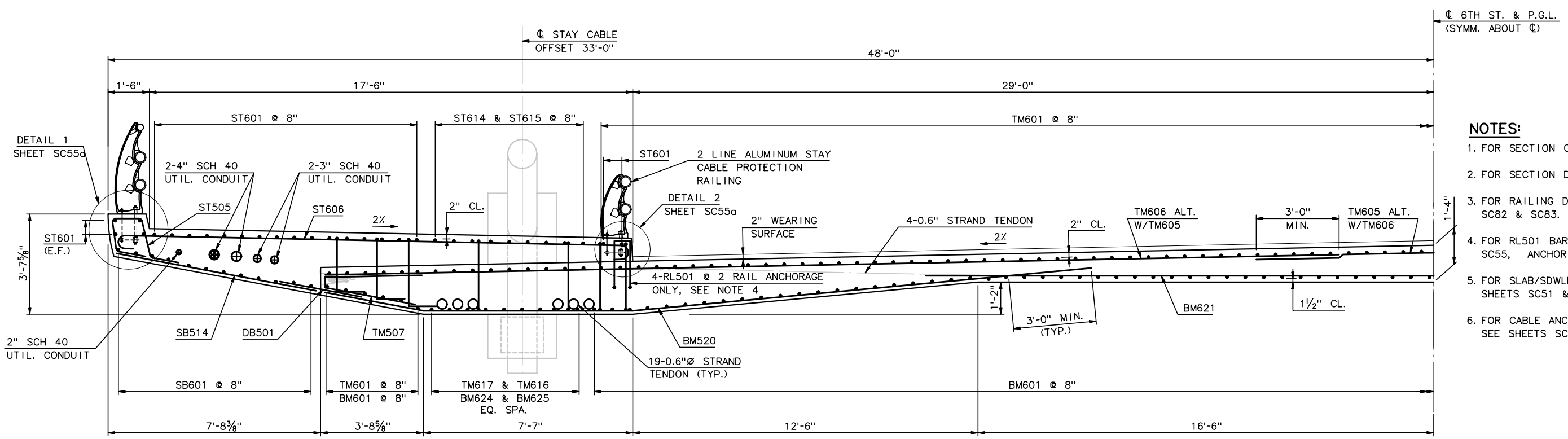

SECTION D-D

½" = 1'-0"

NOTES:

1. FOR SECTION C-C, SEE SHEET SC40.
2. FOR SECTION D-D, SEE SHEET SC41.
3. FOR RAILING DETAILS, SEE SHEET SC82 & SC83.
4. FOR RL501 BAR PLACEMENT, SEE SHEET SC55, ANCHOR RAIL DETAIL.
5. FOR SLAB/SDWLK REINFORCEMENT, SEE SHEETS SC51 & SC52.
6. FOR CABLE ANCHORAGE DETAILS, SEE SHEETS SC26, SC56 THRU SC58.

RECORD DRAWINGS

No.	Date	Revisions	By

HNTB CORPORATION

STATE OF WISCONSIN
DEPARTMENT OF TRANSPORTATION

STRUCTURE B-40-413A

Designed By	SL	Design Checked	TZ	Drawn By	DS	Plans Checked	AP

SOUTH CABLE STAY
DECK SLAB SECTIONS
2 OF 4

SHEET SC48 OF

STATE PROJECT I.D.	SHEET NUMBER
2235-00-70	8.59

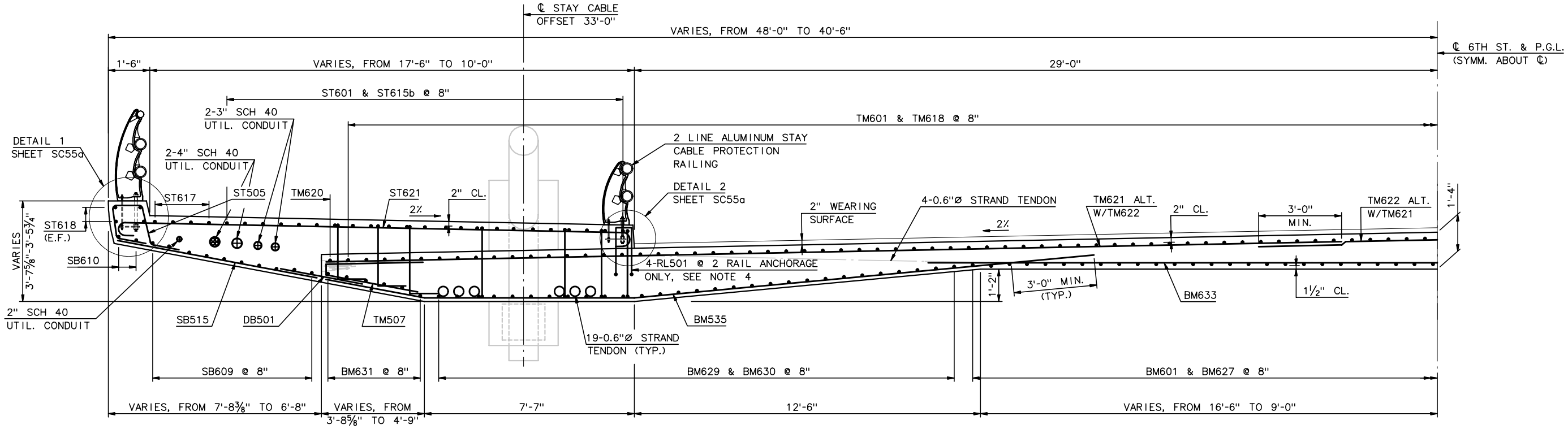

SECTION E-E

½" = 1'-0"

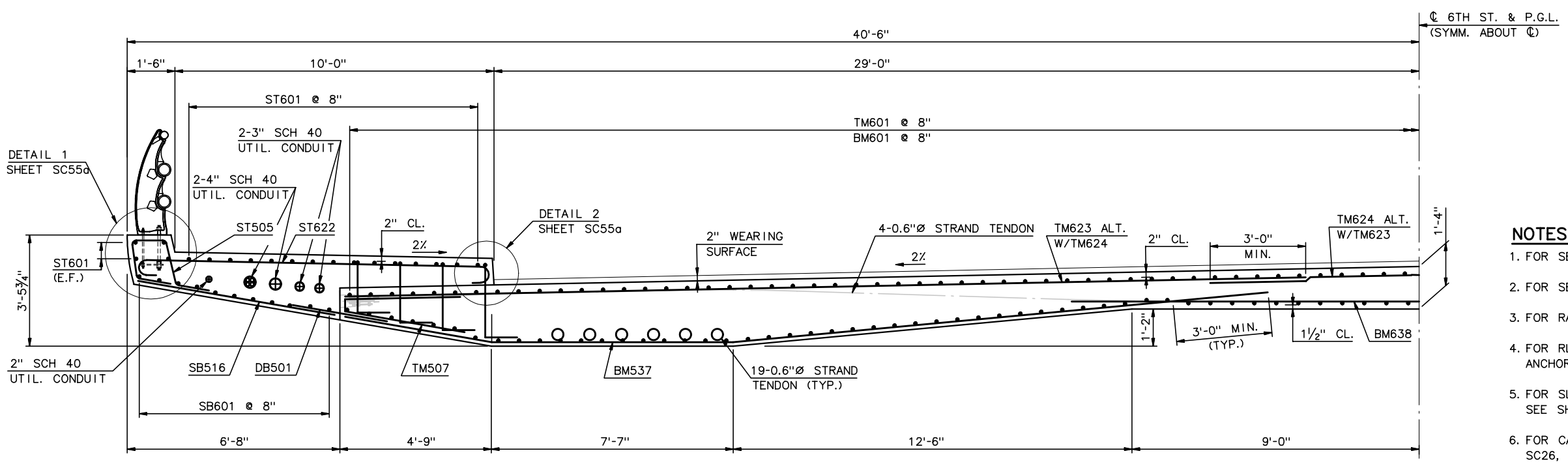

SECTION F-F

½" = 1'-0"

NOTES:

1. FOR SECTION E-E, SEE SHEET SC42.
2. FOR SECTION F-F, SEE SHEET SC43.
3. FOR RAILING DETAILS, SEE SHEET SC82 & SC83.
4. FOR RL501 BAR PLACEMENT, SEE SHEET SC55, ANCHOR RAIL DETAIL.
5. FOR SLAB/SDWLK CONNECTION REINFORCEMENT, SEE SHEETS SC51 THRU SC52.
6. FOR CABLE ANCHORAGE DETAILS, SEE SHEETS SC26, SC56 THRU SC58.

RECORD DRAWINGS

No.	Date	Revisions	By

HNTB CORPORATION

STATE OF WISCONSIN
DEPARTMENT OF TRANSPORTATION

STRUCTURE B-40-413A

Designed By	SL	Design Checked	TZ	Drawn By	DS	Plans Checked	AP

SOUTH CABLE STAY
DECK SLAB SECTIONS
3 OF 4

SHEET SC49 OF

STATE PROJECT I.D.	SHEET NUMBER
2235-00-70	8.60

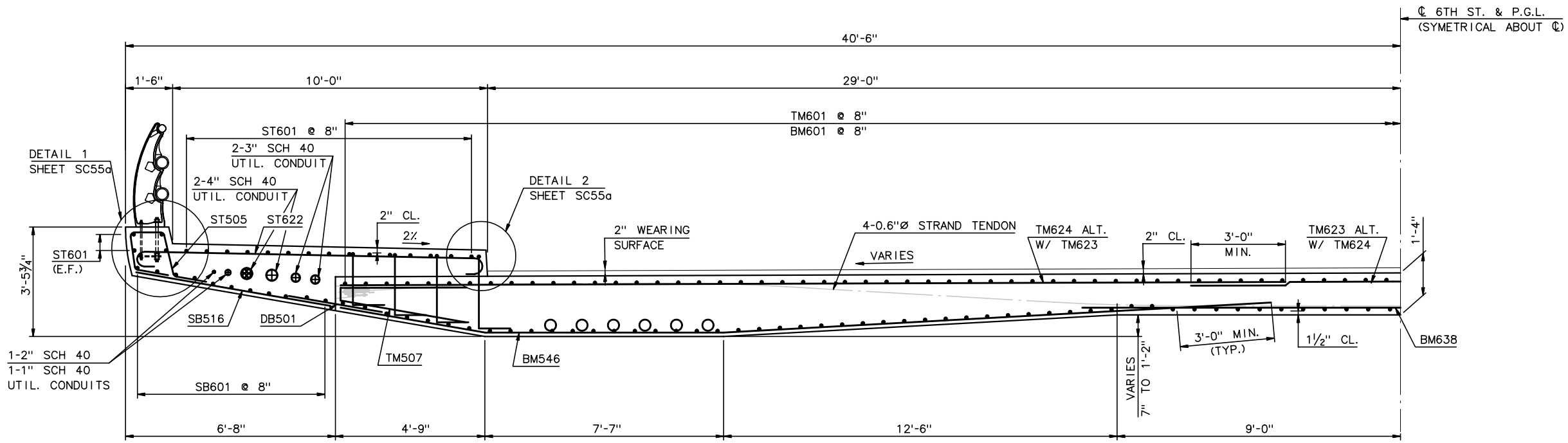

SECTION G-G

½" = 1'-0"

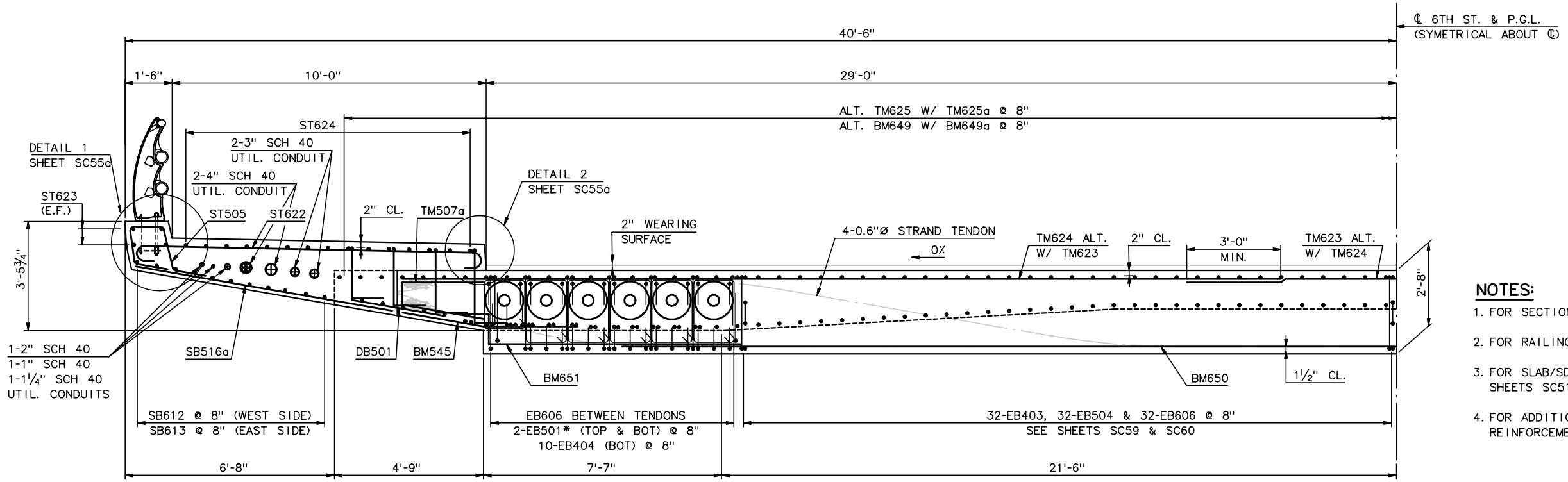

SECTION H-H

½" = 1'-0"

NOTES:

1. FOR SECTIONS G-G & H-H, SEE SHEET SC46.
2. FOR RAILING DETAILS, SEE SHEETS SC82 & SC83.
3. FOR SLAB/SDWLK REINFORCEMENT, SEE SHEETS SC51 & SC52.
4. FOR ADDITIONAL BASCULE END BEAM REINFORCEMENT, SEE SHEETS SC59 & SC60.

RECORD DRAWINGS

No.	Date	Revisions	By

HNTB CORPORATION

STATE OF WISCONSIN
DEPARTMENT OF TRANSPORTATION

STRUCTURE B-40-413A

Designed By	SL	Design Checked	TZ	Drawn By	DS	Plans Checked	AP

SOUTH CABLE STAY
DECK SLAB SECTIONS
4 OF 4

SHEET SC50 OF

STATE PROJECT I.D.	SHEET NUMBER
2235-00-70	8.61

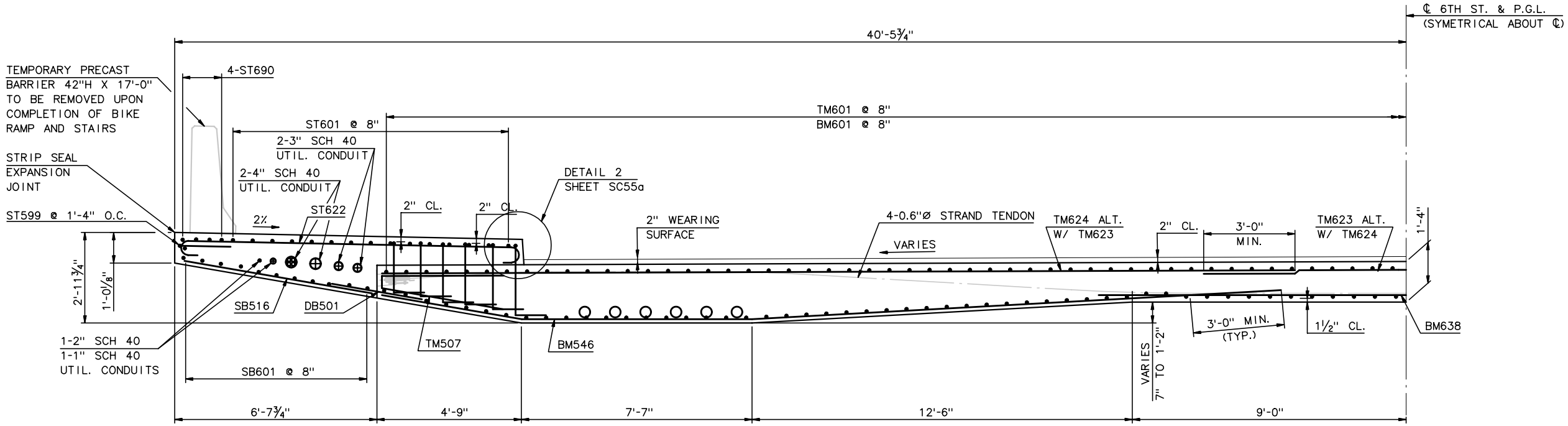

SECTION GG-GG

½" = 1'-0"

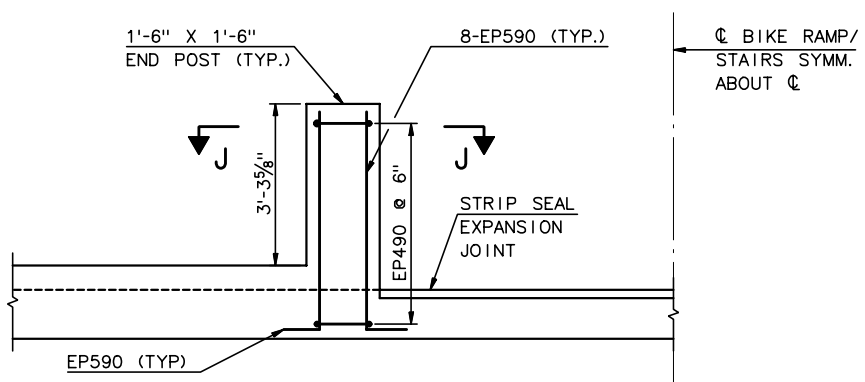

SECTION I-I

½" = 1'-0"

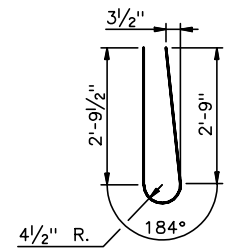

TB501

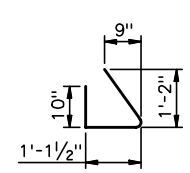

TB502

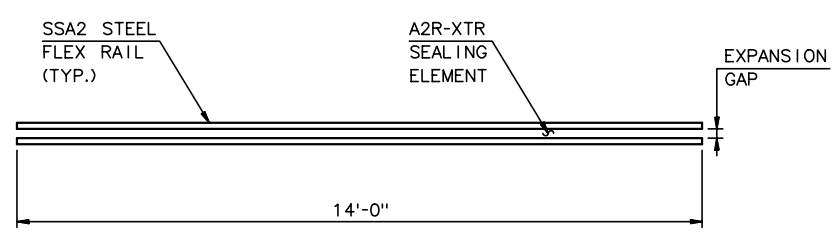

EXPANSION JOINT PLAN

½" = 1'-0"

EXPANSION JOINT GAP	
TEMP (°F)	GAP (INCHES)
85	1"
45	1⅝"
5	2¼"

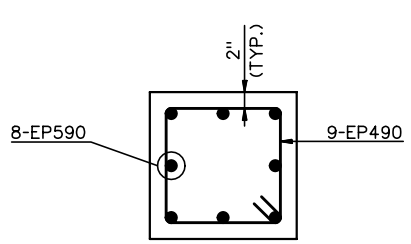

SECTION J-J

1" = 1'-0"

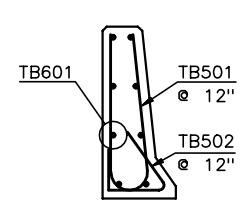

TEMPORARY BARRIER DETAIL

½" = 1'-0"

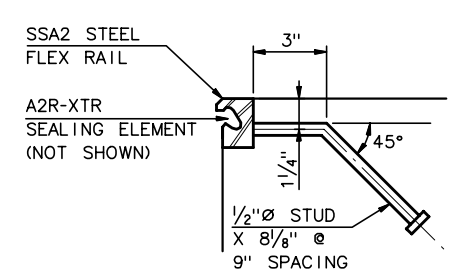

STRIP SEAL DETAIL

3" = 1'-0"

NOTES:

1. FOR SECTIONS GG-GG, SEE SHEET SC46.
2. FOR RAILING DETAILS, SEE SHEETS SC82 & SC83.
3. FOR SLAB/SDWLK REINFORCEMENT, SEE SHEETS SC51 & SC52.
4. EXPANSION JOINT ARCHORAGE DEVICE SHALL BE HOT DIPPED GALVANIZED.
5. PLACE 42" HIGH X 17'-0" TEMPORARY BARRIER FULL LENGTH OF BIKE RAMP AND STAIRWAY OPENING. REMOVE UPON COMPLETION OF BIKE RAMP AND STAIRWAY.

RECORD DRAWINGS

No.	Date	Revisions	By

HNTB CORPORATION

STATE OF WISCONSIN
DEPARTMENT OF TRANSPORTATION

STRUCTURE B-40-413A

Designed By	SL	Design Checked	TZ	Drawn By	DS	Plans Checked	AP

SOUTH CABLE STAY BIKE RAMP/STAIRWAY DETAILS

SHEET SC50a OF

STATE PROJECT I.D.	SHEET NUMBER
2235-00-70	8.62

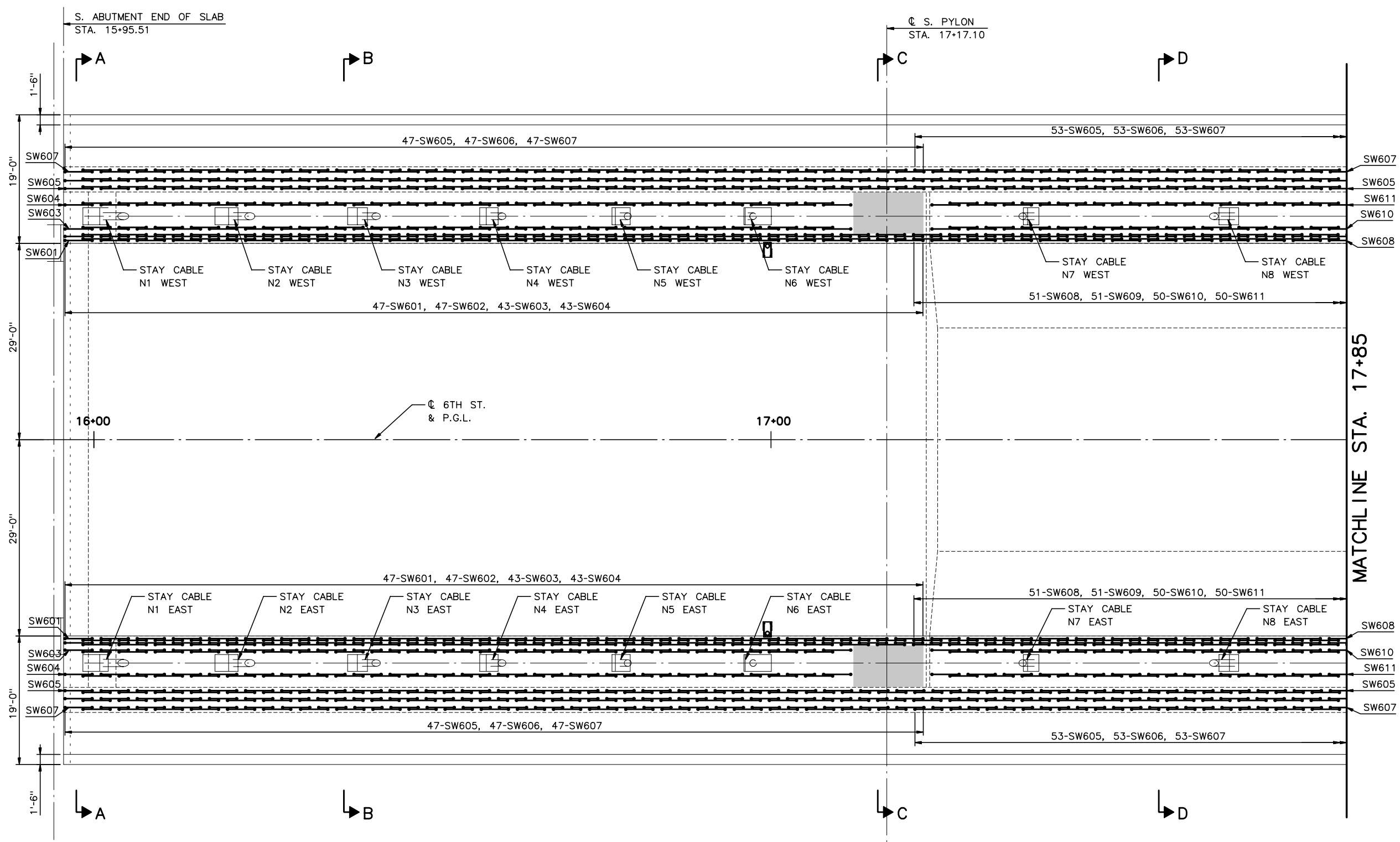

NOTES:

1. FOR SECTIONS A-A THRU D-D, SEE SHEETS SC47 AND SC48.
2. FOR TYPICAL TOP MAT REINFORCEMENT, SEE SHEETS SC31 THRU SC38.
3. FOR TYPICALL BOTTOM MAT REINFORCEMENT, SEE SHEETS SC39 THRU SC46.
4. ALL REINFORCEMENT SHALL BE EPOXY COATED ASTM A615 OR A996 GRADE 60.

PLAN

1/8" = 1'-0"

RECORD DRAWINGS

No.	Date	Revisions	By

HNTB CORPORATION

STATE OF WISCONSIN
DEPARTMENT OF TRANSPORTATION

STRUCTURE B-40-413A

Designed By	AP	Design Checked	TZ	Drawn By	GMZ	Plans Checked	AP

SLAB - SIDEWALK REINFORCEMENT 1 OF 3

SHEET SC51 OF .

STATE PROJECT I.D.	SHEET NUMBER
2235-00-70	8.63

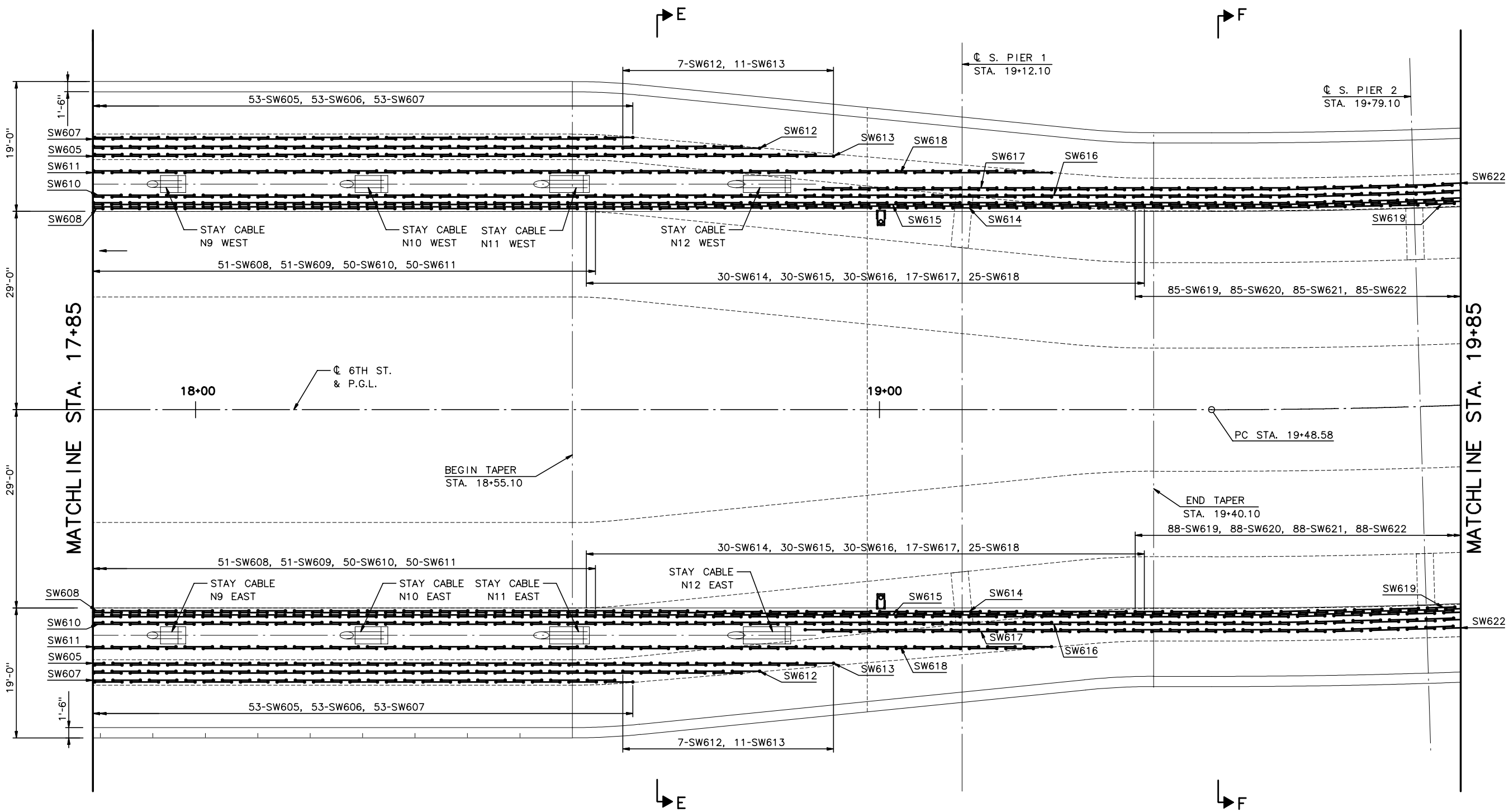

NOTES:

1. FOR SECTIONS E-E AND F-F, SEE SHEET SC49.
2. FOR TYPICAL TOP MAT REINFORCEMENT, SEE SHEETS SC31 THRU SC38.
3. FOR TYPICAL BOTTOM MAT REINFORCEMENT, SEE SHEETS SC39 THRU SC46.
4. ALL REINFORCEMENT SHALL BE EPOXY COATED ASTM A615 OR A996 GRADE 60.

PLAN

1/8" = 1'-0"

RECORD DRAWINGS

No.	Date	Revisions	By

HNTB CORPORATION

STATE OF WISCONSIN
DEPARTMENT OF TRANSPORTATION

STRUCTURE B-40-413A

Designed By	AP	Design Checked	TZ	Drawn By	GMZ	Plans Checked	AP

SLAB - SIDEWALK REINFORCEMENT 2 OF 3

SHEET SC52 OF .

STATE PROJECT I.D.	SHEET NUMBER
2235-00-70	8.64

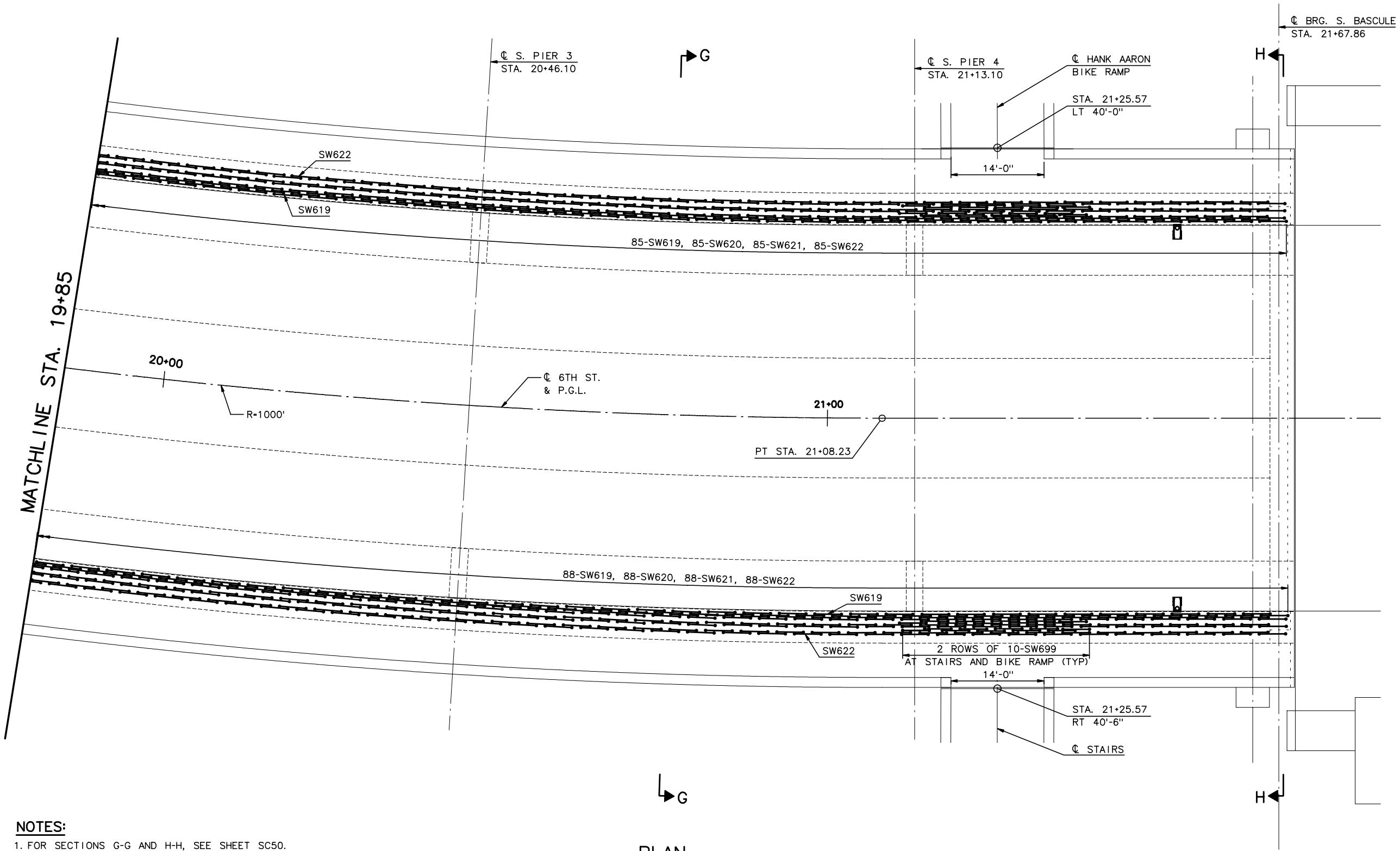

PLAN
1/8" = 1'-0"

NOTES:

1. FOR SECTIONS G-G AND H-H, SEE SHEET SC50.
2. FOR TYPICAL TOP MAT REINFORCEMENT, SEE SHEETS SC31 THRU SC38.
3. FOR TYPICAL BOTTOM MAT REINFORCEMENT, SEE SHEETS SC39 THRU SC46.
4. ALL REINFORCEMENT SHALL BE EPOXY COATED ASTM A615 OR A996 GRADE 60.

RECORD DRAWINGS

No.	Date	Revisions	By
1	4-11-02	ADD BIKE/STAIRS, REV REINF	AP

HNTB CORPORATION

STATE OF WISCONSIN
DEPARTMENT OF TRANSPORTATION

STRUCTURE B-40-413A

Designed By	AP	Design Checked	TZ	Drawn By	GMZ	Plans Checked	AP

SLAB - SIDEWALK REINFORCEMENT 3 OF 3

SHEET SC52aOF .

STATE PROJECT I.D.	SHEET NUMBER
2235-00-70	8.65

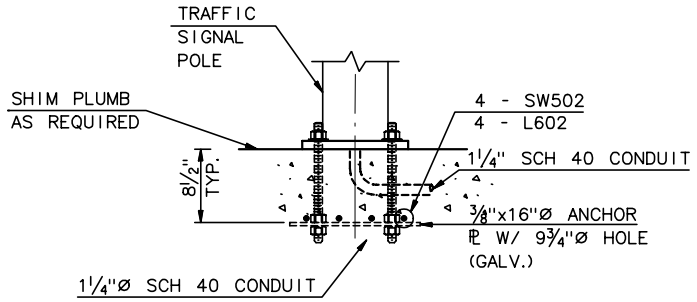

SIGNAL POST ELEVATION

1" = 1'-0"

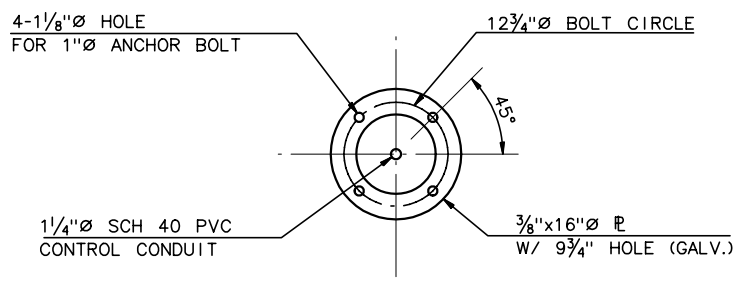

SIGNAL POST ANCHOR ℙ PLAN

1" = 1'-0"

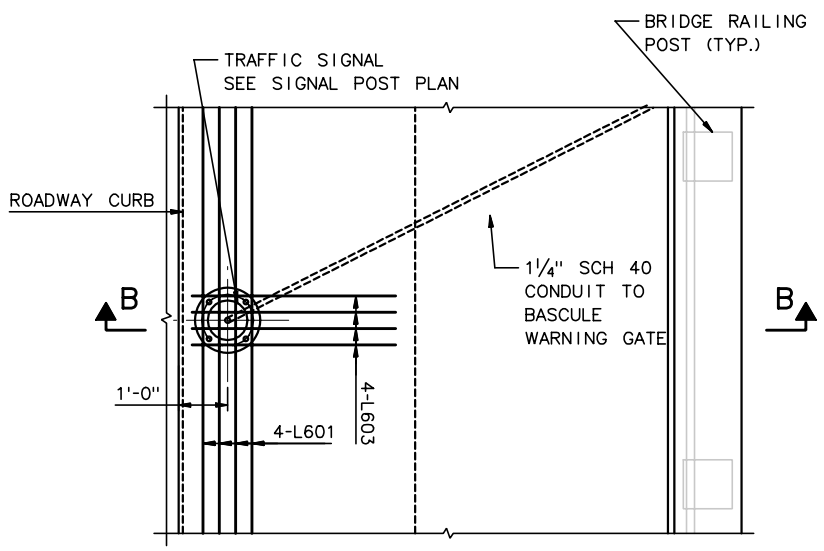

NOTE: ADDITIONAL TYP. DECK & SIDEWALK REINFORCEMENT NOT SHOWN. SEE DECK PLANS

TRAFFIC SIGNAL - PLAN

½" = 1'-0"

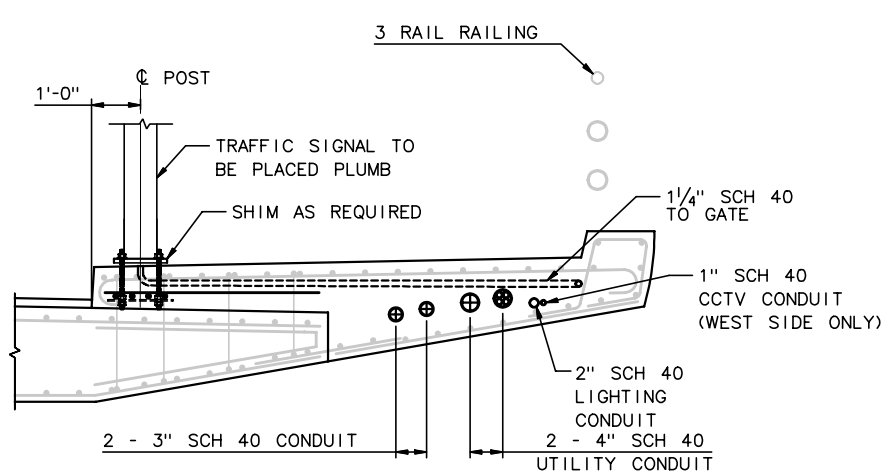

SECTION B

½" = 1'-0"

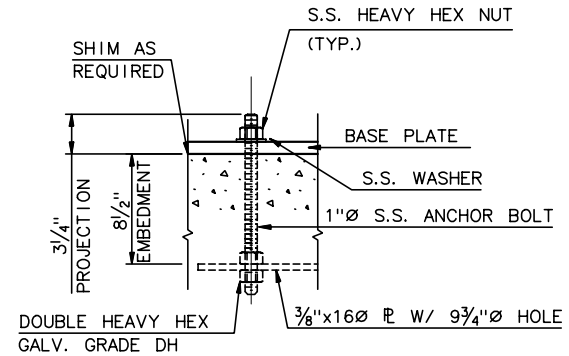

SIGNAL BOLT DETAIL

1½" = 1'-0"

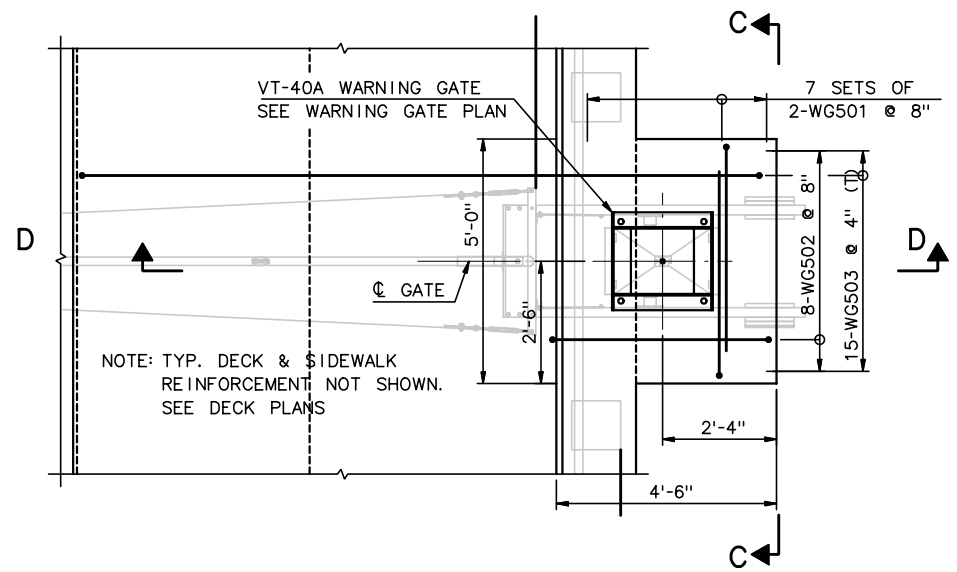

WARNING GATE - PLAN

½" = 1'-0"

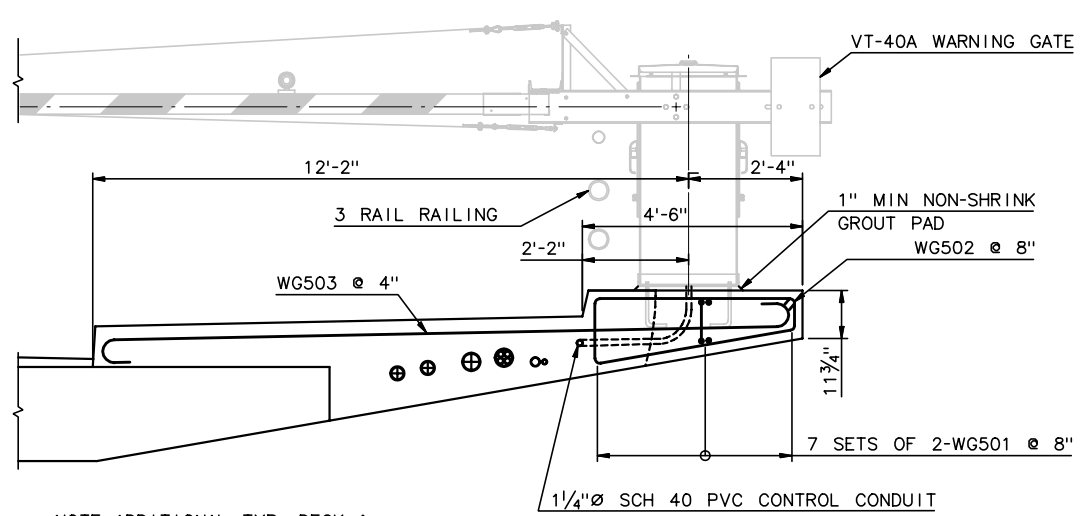

NOTE: ADDITIONAL TYP. DECK & SIDEWALK REINFORCEMENT NOT SHOWN. SEE DECK PLANS

SECTION D (WEST)

½" = 1'-0"

NOTES:

1. ALL REINFORCEMENT IS EPOXY COATED ASTM A615 OR A996, GRADE 60.
2. TRAFFIC SIGNAL PROVIDED BY PK POLE.
3. VT-40A WARNING GATE AND ANCHOR BOLTS PROVIDED BY B&B ELECTROMATIC. B&B TO PROVIDE ANCHOR BOLT TEMPLATE.
4. CLEAR: 2", EXCEPT WHERE NOTED.
5. ALL SHIMS SHALL BE OF THE SAME MATERIAL AS THE POLE BASE PLATE.
6. S.S. ANCHOR BOLTS SHALL BE ASTM A276 TYPE 300 OR 400 SERIES WITH MIN TENSILE STRENGTH OF 70 KSI, MIN YIELD OF 30 KSI AND MIN ELONGATION 30% IN 2 INCHES.

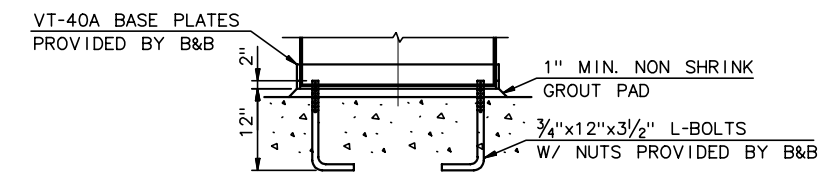

WARNING GATE ANCHORAGE ELEVATION

1" = 1'-0"

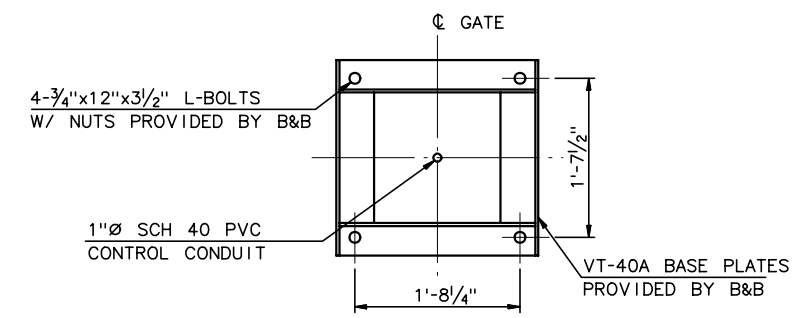

WARNING GATE ANCHORAGE PLAN

1" = 1'-0"

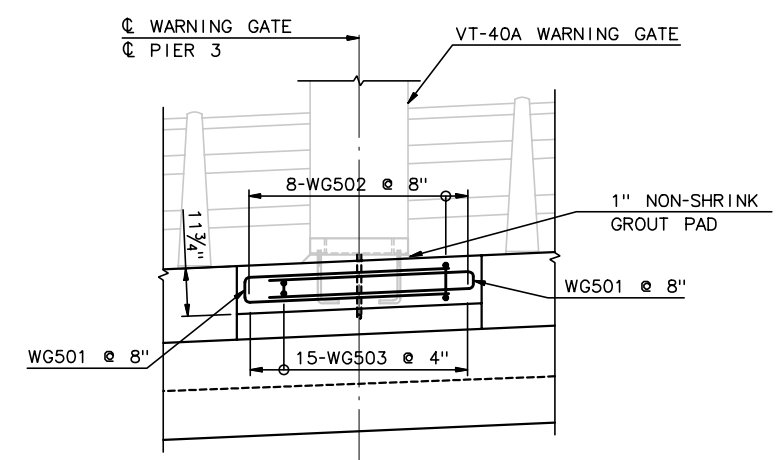

SECTION C

½" = 1'-0"

No.	Date	Revisions	By

HNTB CORPORATION

RECORD DRAWINGS

STATE OF WISCONSIN
DEPARTMENT OF TRANSPORTATION

STRUCTURE B-40-413A

Designed By	GD	Design Checked	AP	Drawn By	BM	Plans Checked	AP

SOUTH CABLE STAY DECK DETAILS 1 OF 4

SHEET SC53 OF

STATE PROJECT I.D.	SHEET NUMBER
2235-00-70	8.66

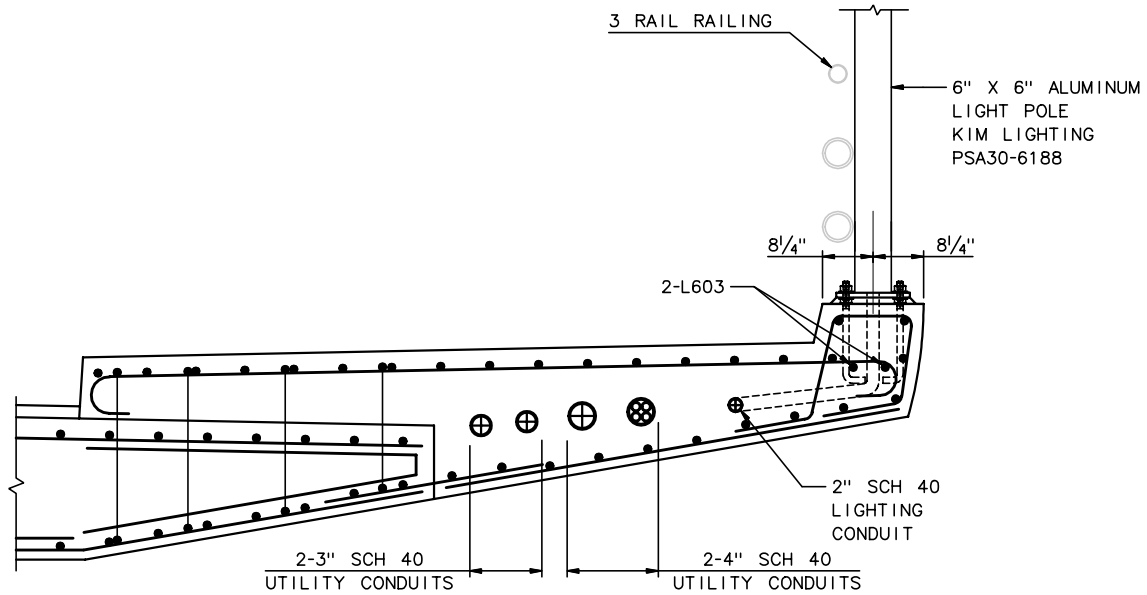

SECTION A-A
¾" = 1'-0"

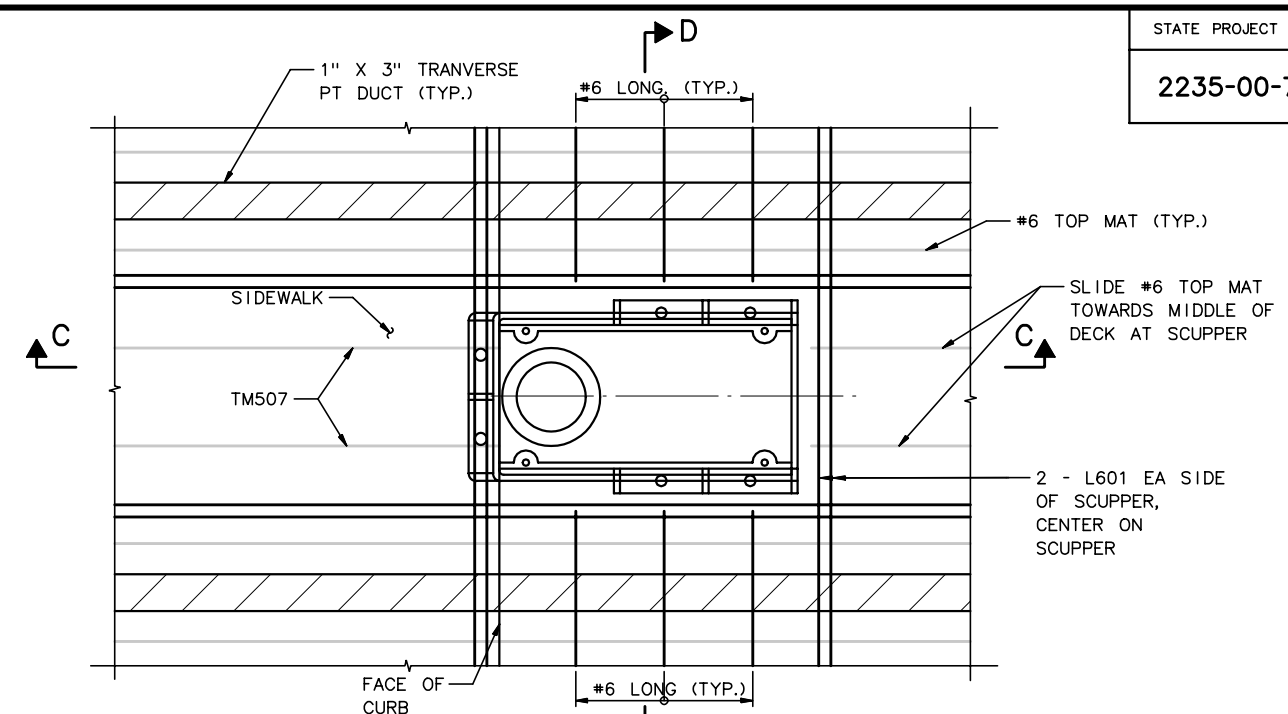

SCUPPER PLAN
1½"" = 1'-0"

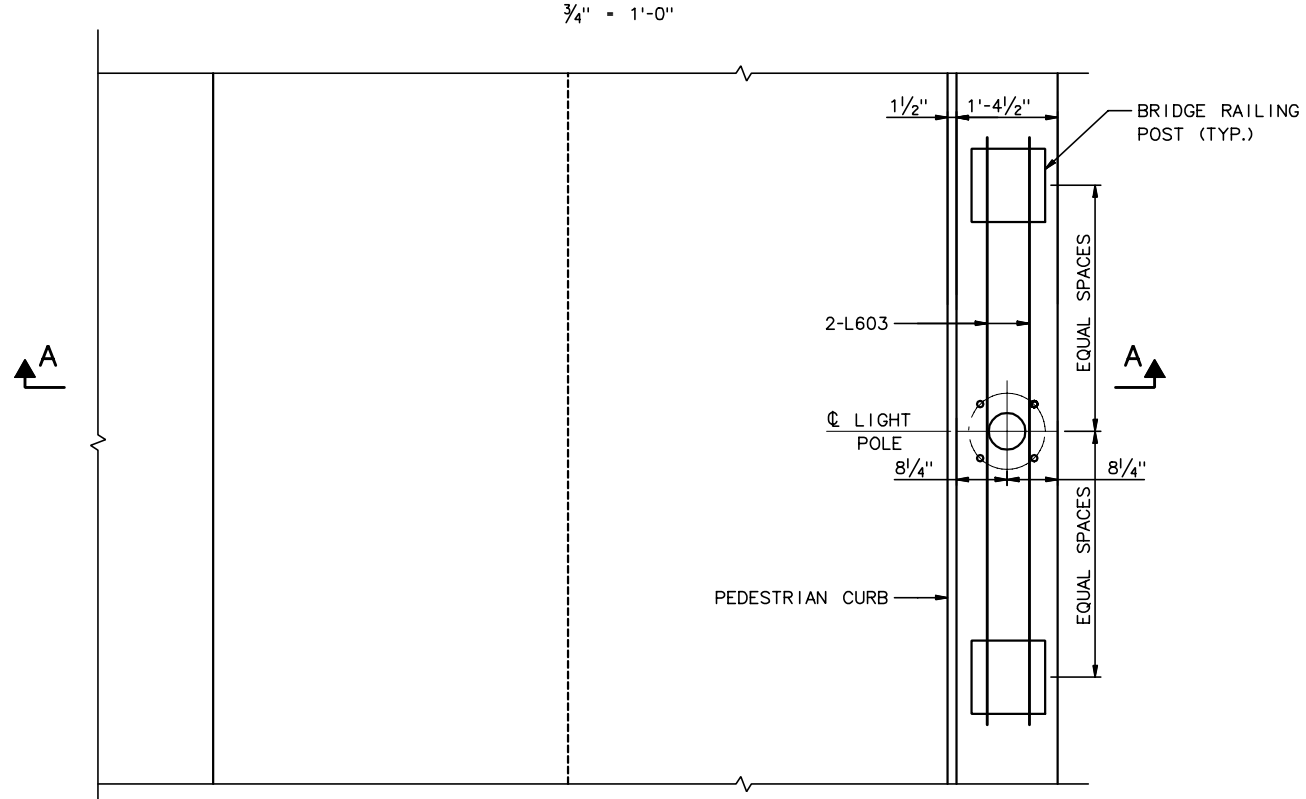

LIGHT POLE PLAN
¾" = 1'-0"

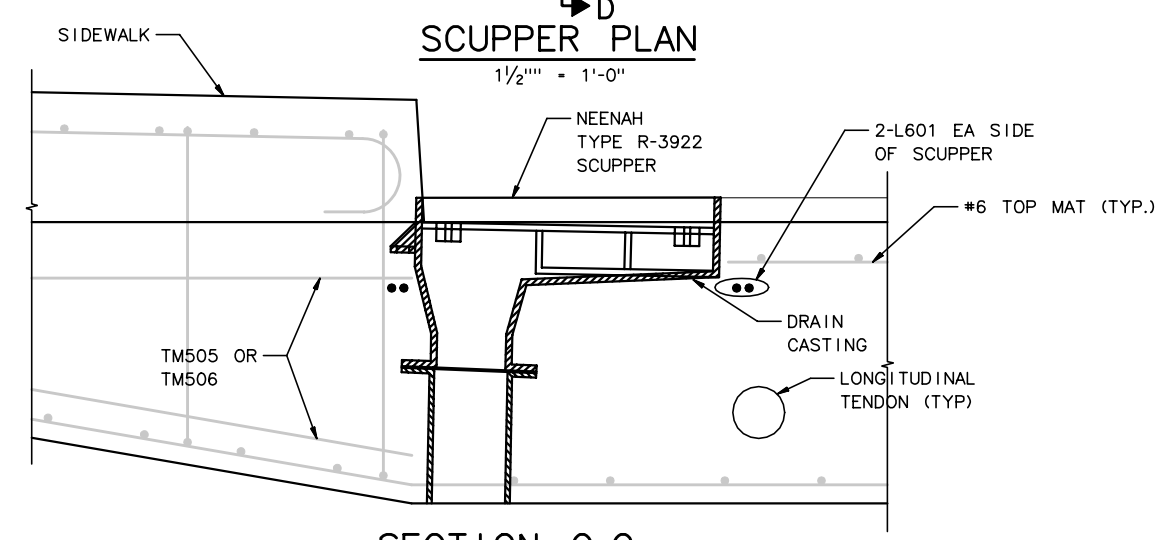

SECTION C-C
1½" = 1'-0"

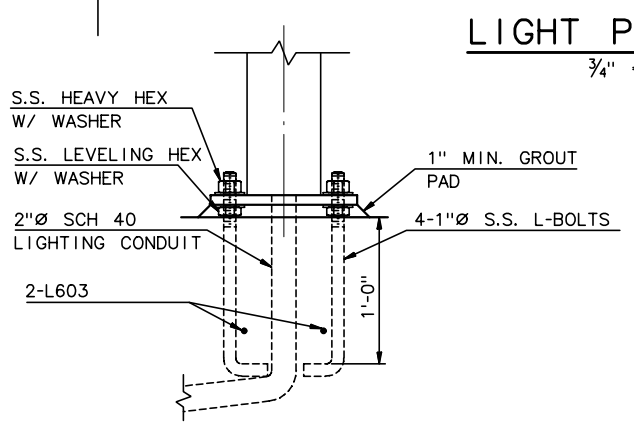

SECTION B-B
1½" = 1'-0"

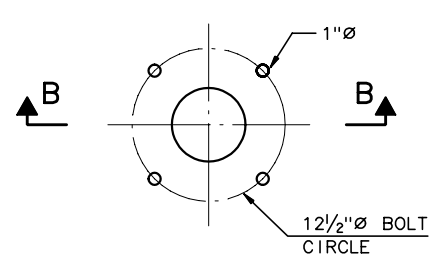

ANCHOR BOLT PLAN
1½" = 1'-0"

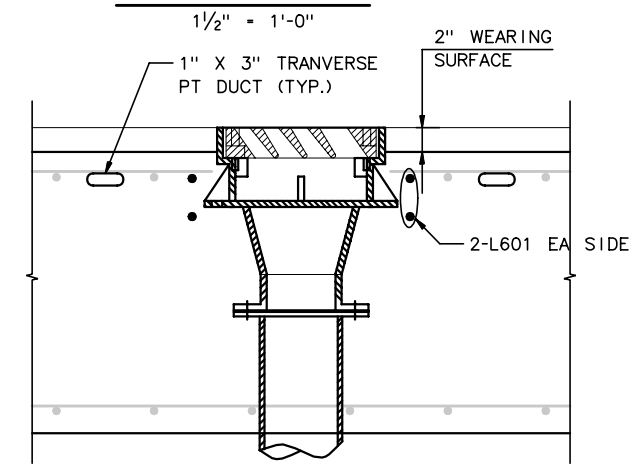

SECTION D-D
1½" = 1'-0"

NOTES:

1. S.S. ANCHOR BOLTS SHALL BE ASTM A276 TYPE 300 OR 400 SERIES WITH MIN TENSILE STRENGTH OF 70 KSI, MIN YIELD OF 30 KSI AND MIN ELONGATION 30% IN 2 INCHES

RECORD DRAWINGS

No.	Date	Revisions	By

HNTB CORPORATION

STATE OF WISCONSIN
DEPARTMENT OF TRANSPORTATION

STRUCTURE B-40-413A

Designed By	BM	Design Checked	AP	Drawn By	JE	Plans Checked	AP

SOUTH CABLE STAY DECK DETAILS 2 OF 4

SHEET SC54 OF .

STATE PROJECT I.D.	SHEET NUMBER
2235-00-70	8.67

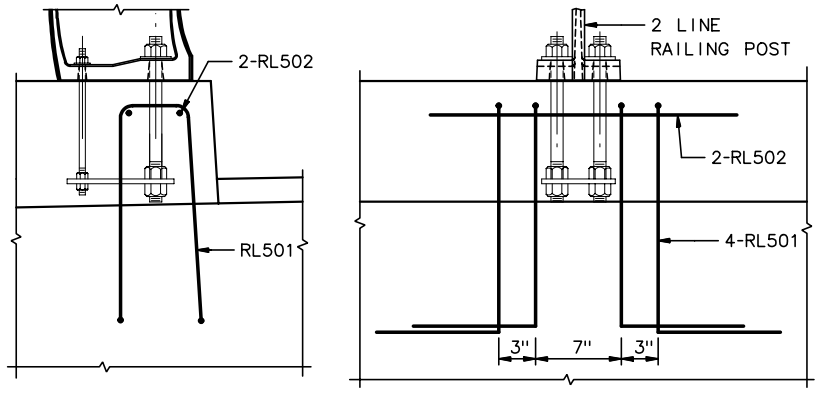

2 RAIL ANCHORAGE REINF. DETAIL

1½" = 1'-0"

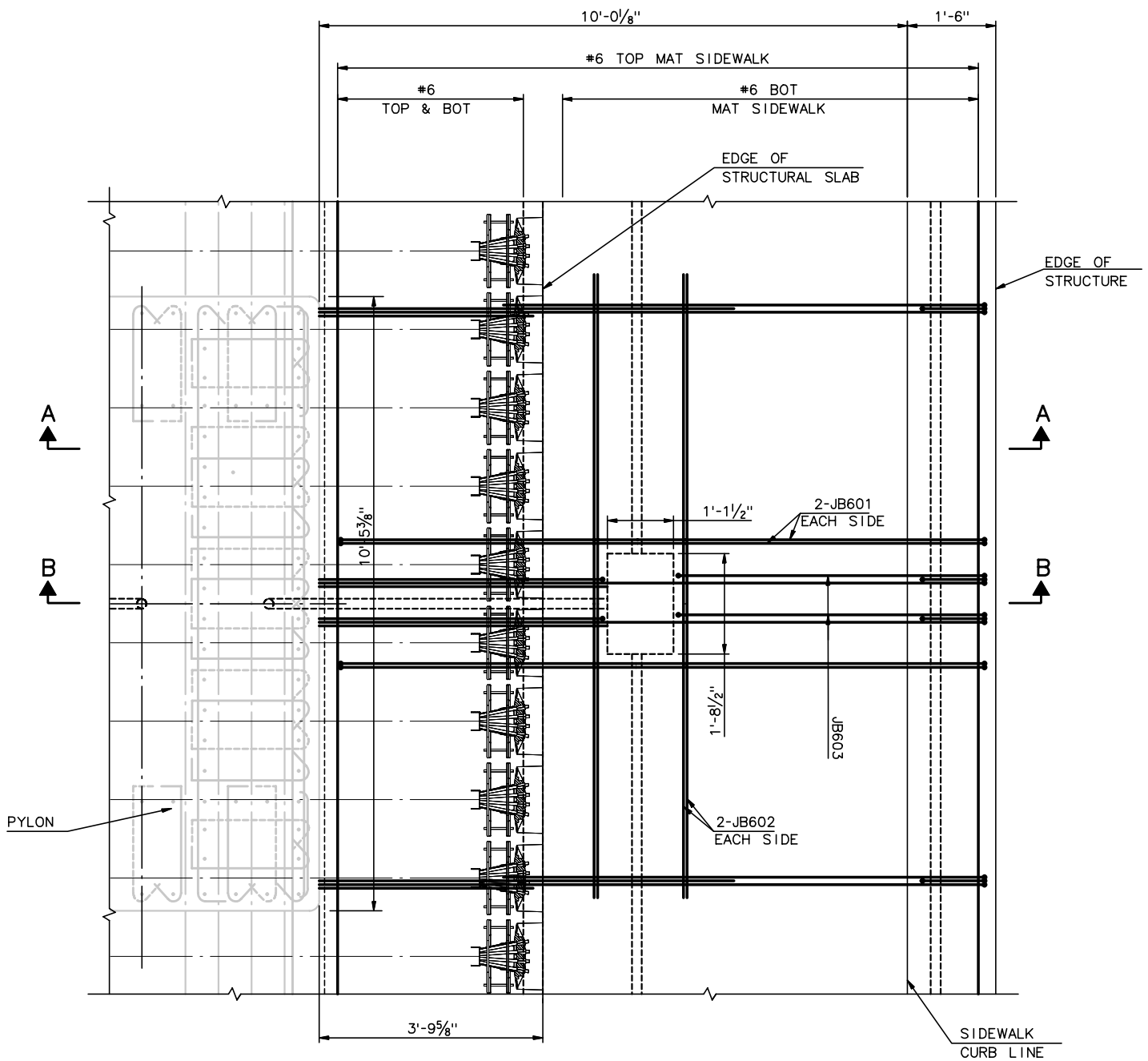

JUNCTION BOX @ PYLON

¾" = 1'-0"

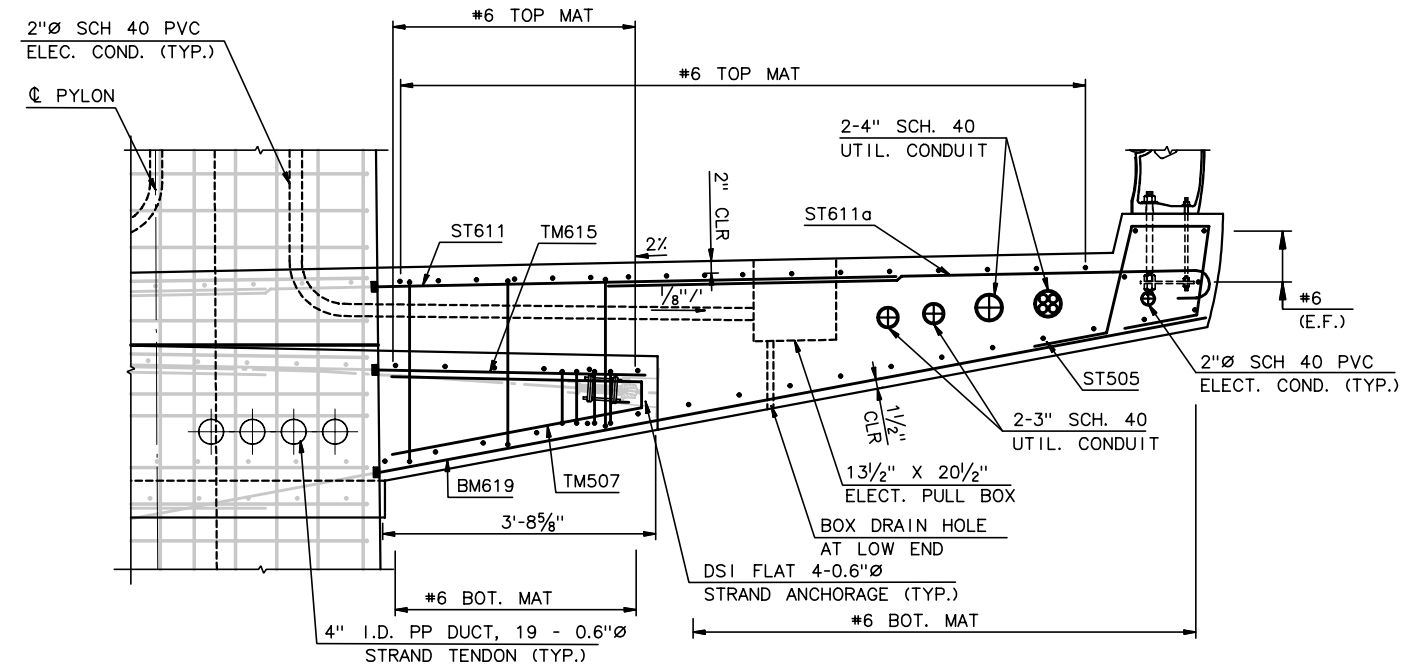

SECTION A - A

¾" = 1'-0"

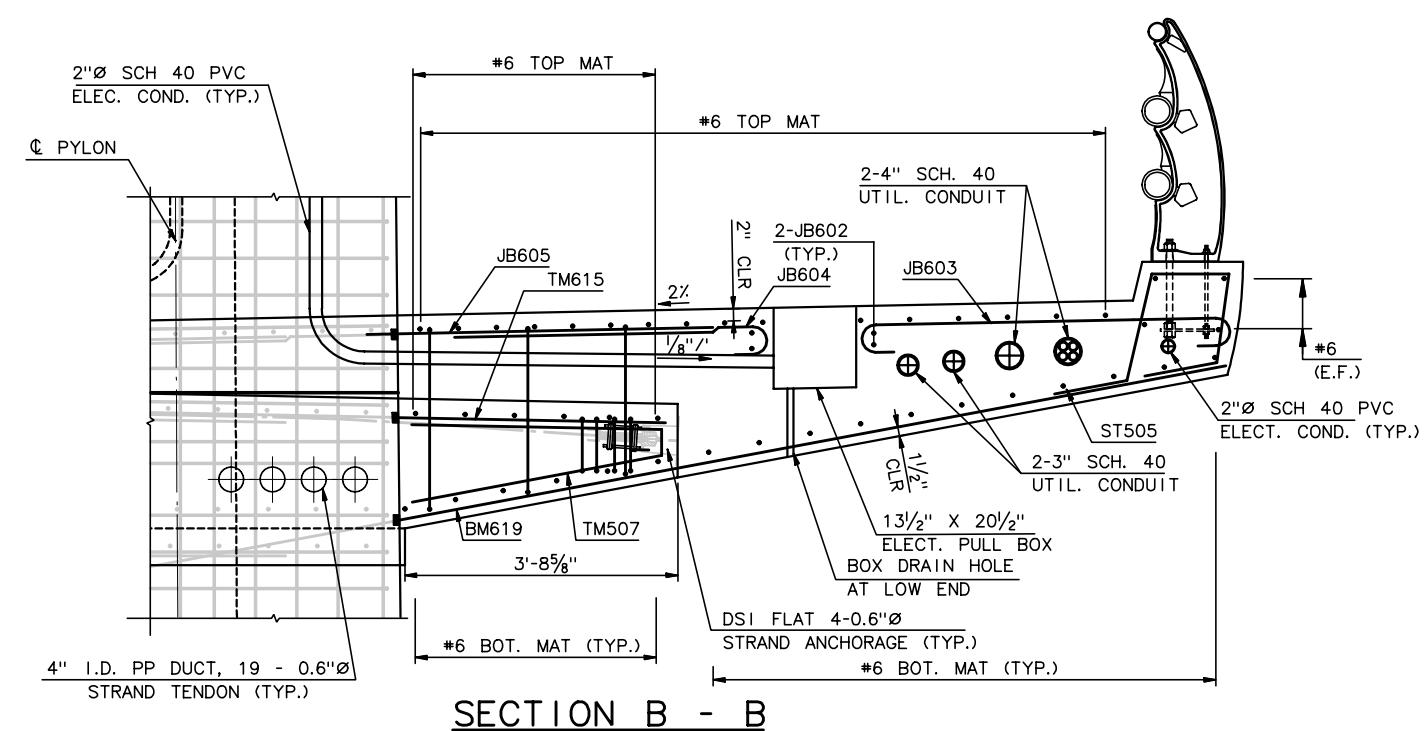

SECTION B - B

¾" = 1'-0"

RECORD DRAWINGS

No.	Date	Revisions	By

HNTB CORPORATION

STATE OF WISCONSIN
DEPARTMENT OF TRANSPORTATION

STRUCTURE B-40-413A

Designed By	AP	Design Checked	TZ	Drawn By	GMZ	Plans Checked	AP

SOUTH CABLE STAY
DECK DETAILS
3 OF 4

SHEET SC55 OF

STATE PROJECT I.D.	SHEET NUMBER
2235-00-70	8.68

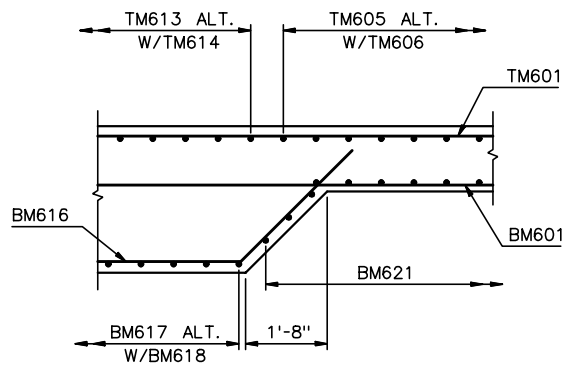

SECTION K-K

½" = 1'-0"

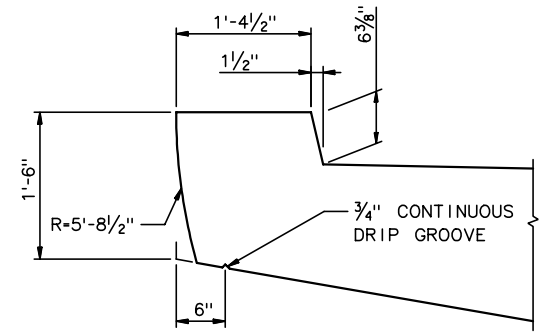

DETAIL 1 - PEDESTRIAN CURB

1" = 1'-0"

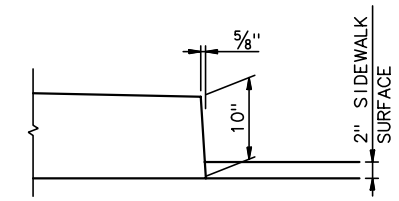

DETAIL 2 - ROADWAY CURB

1" = 1'-0"

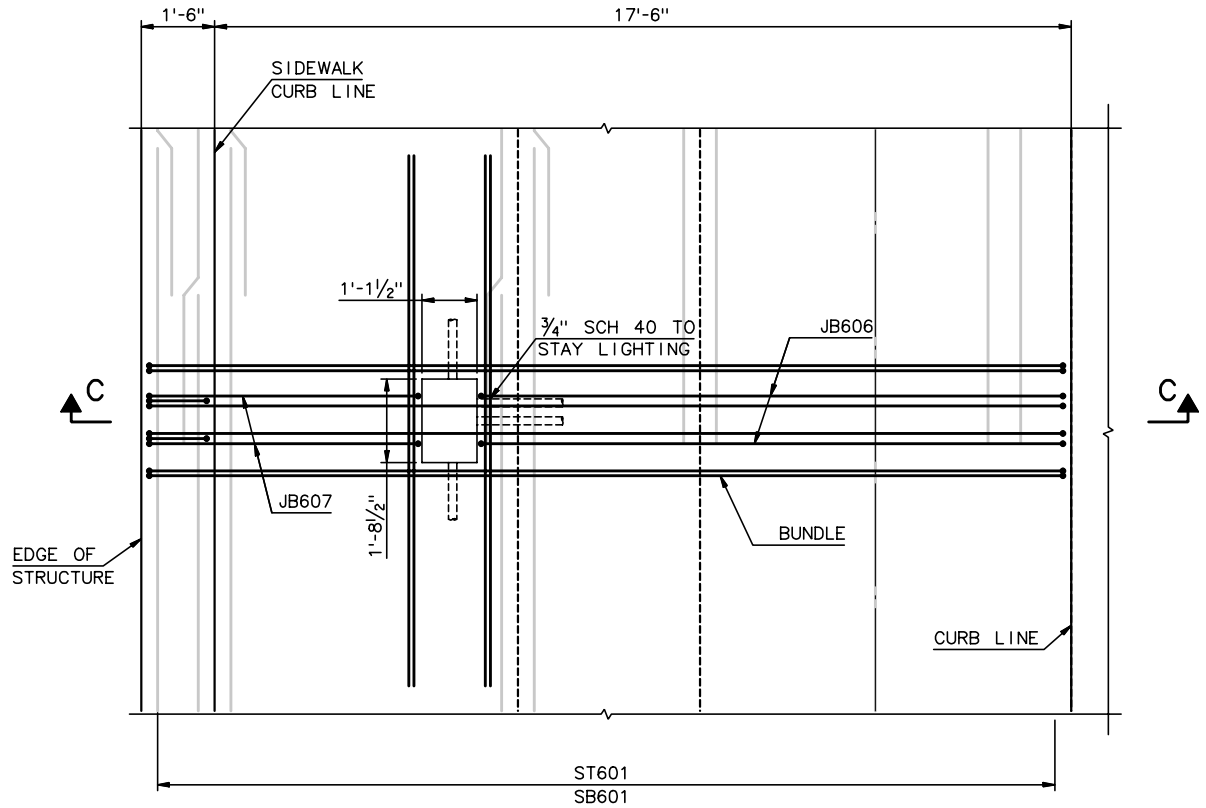

DETAIL 4

½" = 1'-0"

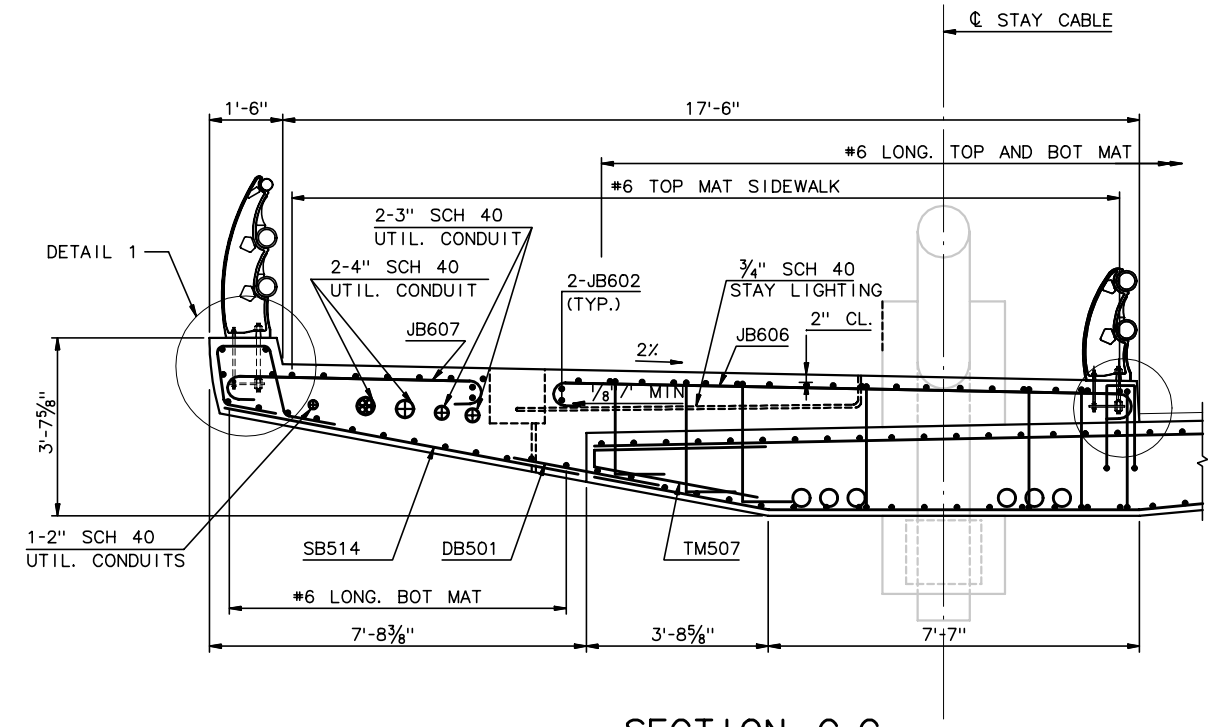

SECTION C-C

½" = 1'-0"

RECORD DRAWINGS

No.	Date	Revisions	By

HNTB CORPORATION

STATE OF WISCONSIN
DEPARTMENT OF TRANSPORTATION

STRUCTURE B-40-413A

Designed By	AP	Design Checked	TZ	Drawn By	GMZ	Plans Checked	AP

SOUTH CABLE STAY
DECK DETAILS
4 OF 4

SHEET SC55A OF

j:\cadd\ff31185\dgn\as built\south cablestay\sc55a-dckdet4.dgn 02/11/03 02:57:54 PM

STATE PROJECT I.D.	SHEET NUMBER
2235-00-70	8.69

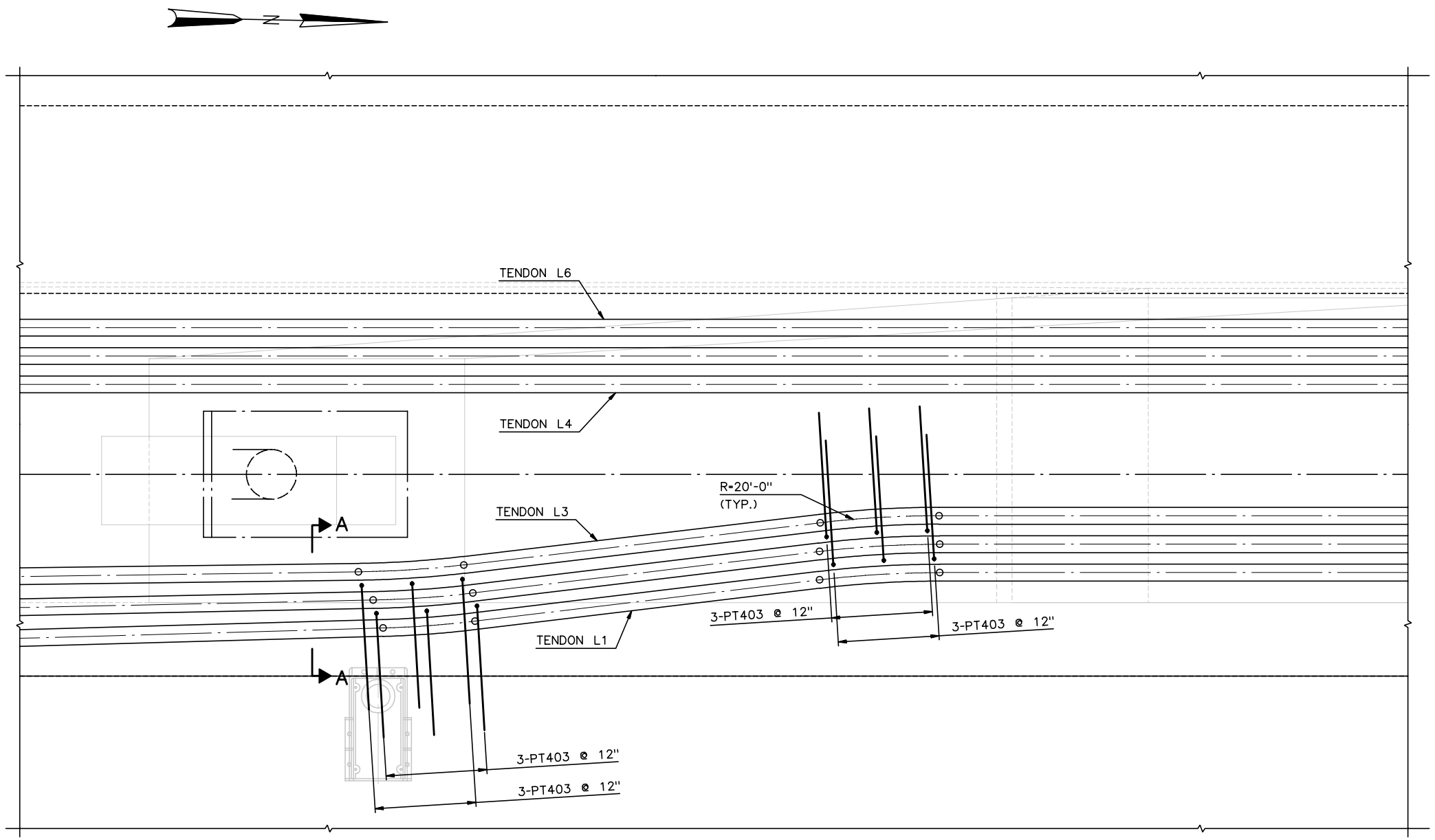

PLAN

¾" = 1'-0"

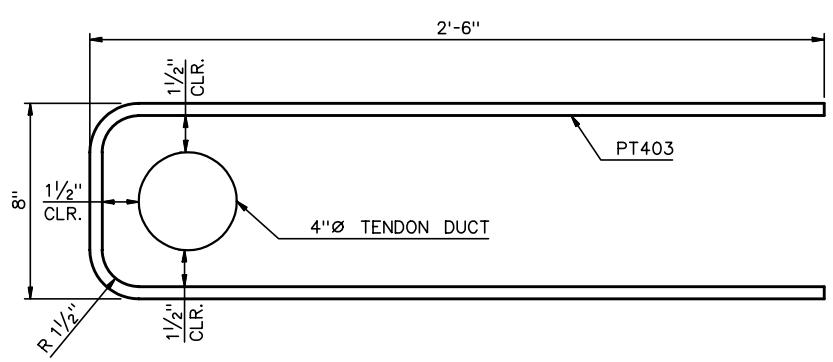

SECTION A-A

N.T.S.

NOTE: TIE TO BE PLACED TIGHT TO TENDON

NOTES:

1. LONGITUDINAL PT IS SYMMETRICAL ABOUT ℄ SIXTH STREET AND PGL.
2. FOR LONGITUDINAL TENDON PROFILES, SEE SHEET SC65.
3. ALL PT DIMENSIONS ARE TO CENTER OF DUCT.

RECORD DRAWINGS

No.	Date	Revisions	By

HNTB CORPORATION

STATE OF WISCONSIN
DEPARTMENT OF TRANSPORTATION

STRUCTURE B-40-413A

Designed By	BM	Design Checked	CE	Drawn By	JE	Plans Checked	AP

LONG. PT REINF.
DECK PLAN DETAIL
1 OF 4

SHEET SC55b OF

STATE PROJECT I.D.	SHEET NUMBER
2235-00-70	8.70

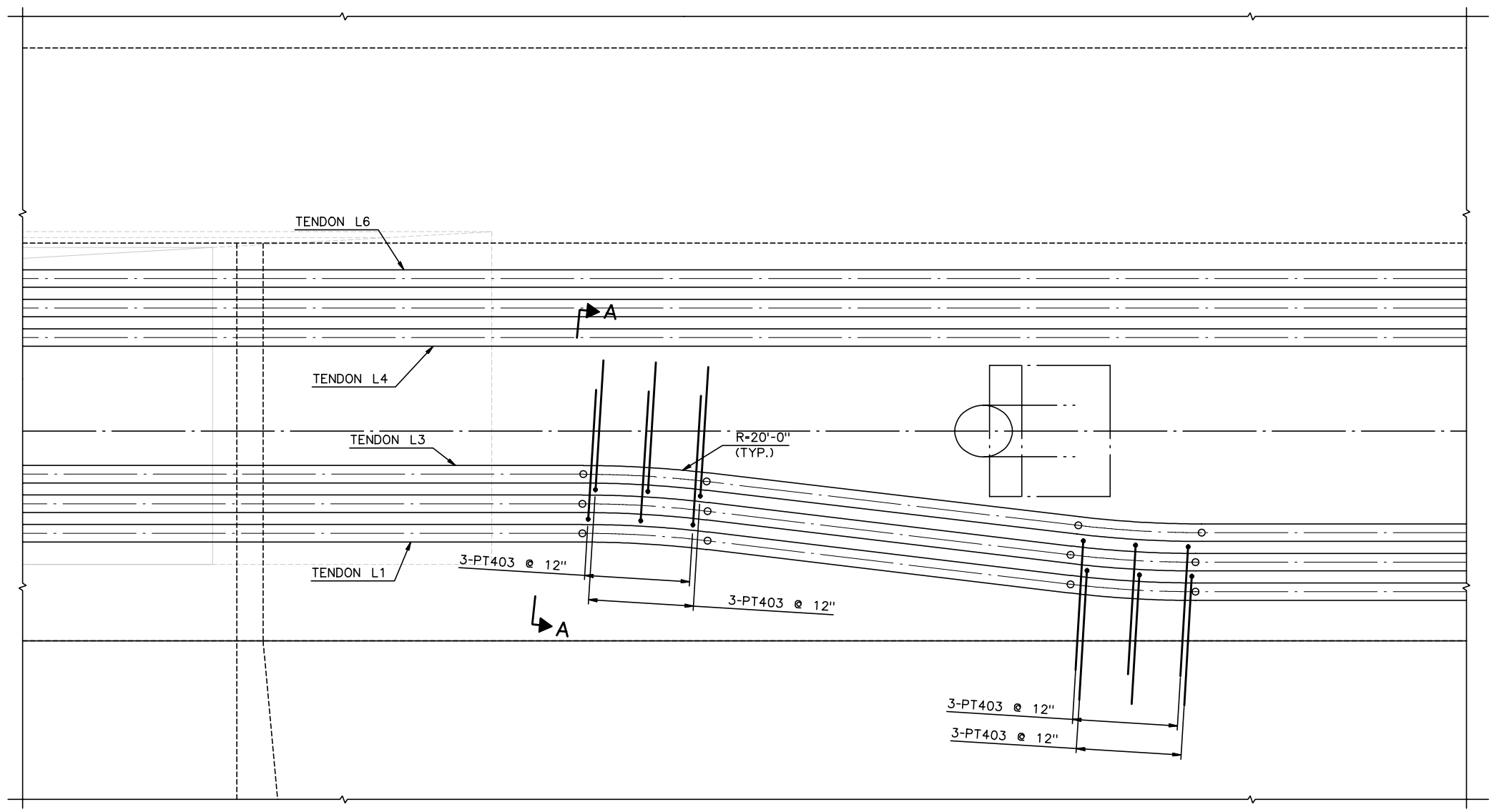

PLAN

¾" = 1'-0"

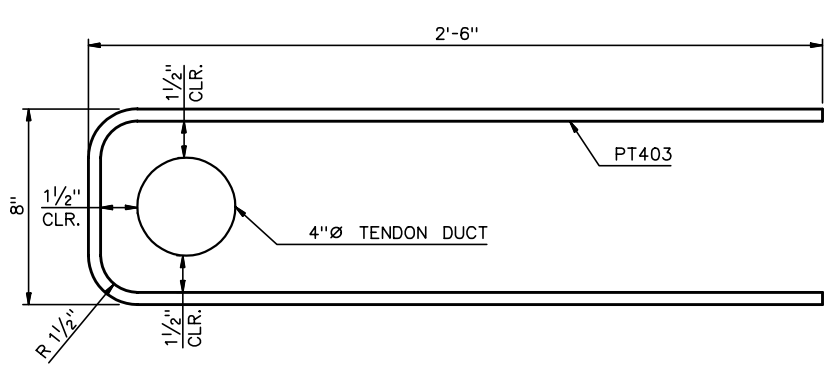

SECTION A-A

N.T.S.

NOTE: TIE TO BE PLACED TIGHT TO TENDON

NOTES:

1. LONGITUDINAL PT IS SYMMETRICAL ABOUT ℄ SIXTH STREET AND PGL.
2. FOR LONGITUDINAL TENDON PROFILES, SEE SHEET SC65.
3. ALL PT DIMENSIONS ARE TO CENTER OF DUCT.

RECORD DRAWINGS

No.	Date	Revisions	By

HNTB CORPORATION

STATE OF WISCONSIN
DEPARTMENT OF TRANSPORTATION

STRUCTURE B-40-413A

Designed By	BM	Design Checked	CE	Drawn By	JE	Plans Checked	AP

LONG. PT REINF.
DECK PLAN DETAIL
2 OF 4

SHEET SC55cOF

STATE PROJECT I.D.	SHEET NUMBER
2235-00-70	8.71

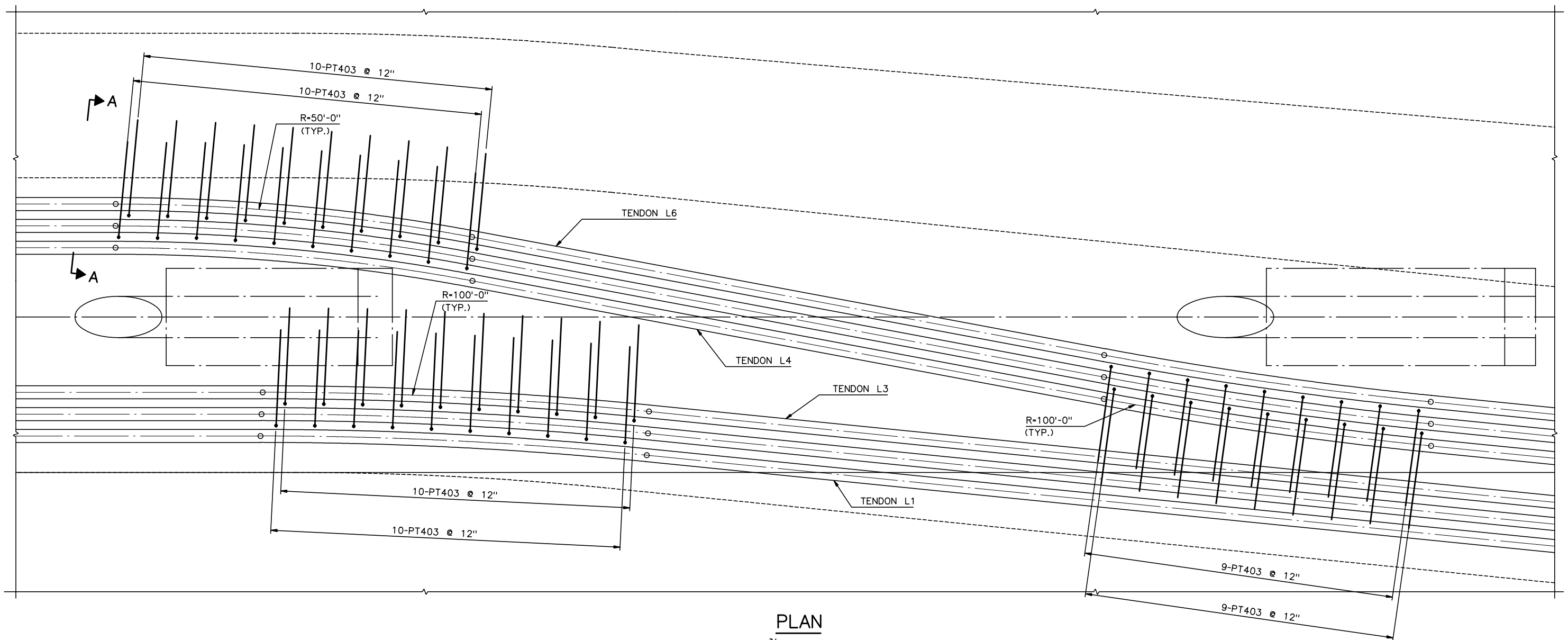

PLAN

3/4" = 1'-0"

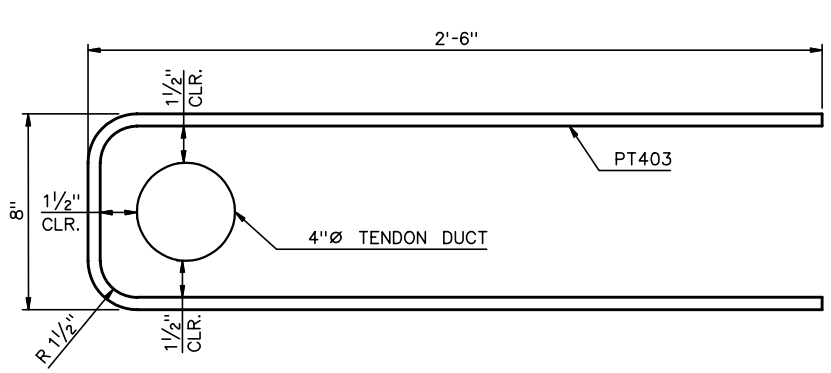

SECTION A-A

N.T.S.

NOTE: TIE TO BE PLACED TIGHT TO TENDON

NOTES:

1. LONGITUDINAL PT IS SYMMETRICAL ABOUT ℄ SIXTH STREET AND PGL.
2. FOR LONGITUDINAL TENDON PROFILES, SEE SHEET SC66.
3. ALL PT DIMENSIONS ARE TO CENTER OF DUCT.

RECORD DRAWINGS

No.	Date	Revisions	By

HNTB CORPORATION

STATE OF WISCONSIN
DEPARTMENT OF TRANSPORTATION

STRUCTURE B-40-413A

Designed By	BM	Design Checked	CE	Drawn By	JE	Plans Checked	AP

LONG. PT REINF.
DECK PLAN DETAIL
3 OF 4

SHEET SC55dOF

STATE PROJECT I.D.	SHEET NUMBER
2235-00-70	8.72

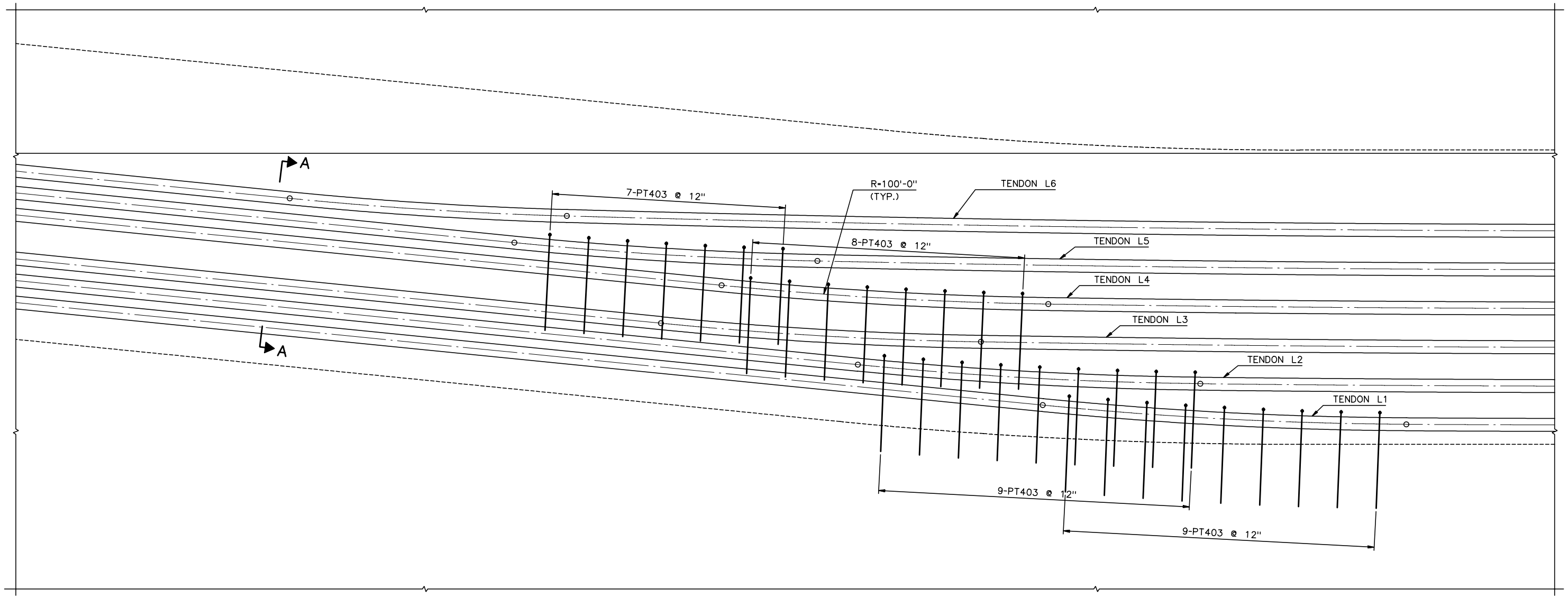

PLAN

3/4" = 1'-0"

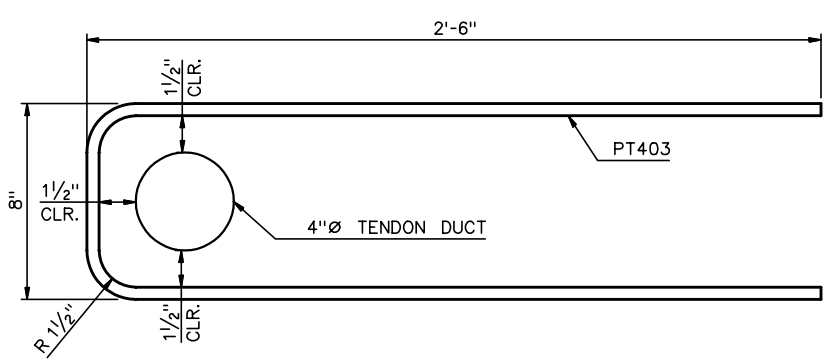

SECTION A-A

N.T.S.

NOTE: TIE TO BE PLACED TIGHT TO TENDON

NOTES:

1. LONGITUDINAL PT IS SYMMETRICAL ABOUT ℄ SIXTH STREET AND PGL.
2. FOR LONGITUDINAL TENDON PROFILES, SEE SHEET SC66.
3. ALL PT DIMENSIONS ARE TO CENTER OF DUCT.

RECORD DRAWINGS

No.	Date	Revisions	By

HNTB CORPORATION

STATE OF WISCONSIN
DEPARTMENT OF TRANSPORTATION

STRUCTURE B-40-413A

Designed By	BM	Design Checked	CE	Drawn By	JE	Plans Checked	AP

LONG. PT REINF.
DECK PLAN DETAIL
4 OF 4

SHEET SC55eOF

STATE PROJECT I.D.	SHEET NUMBER
2235-00-70	8.73

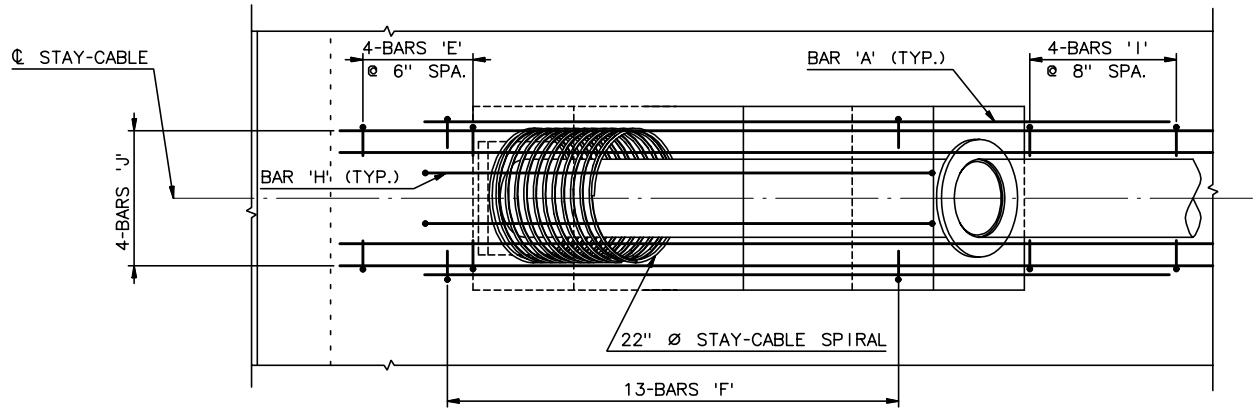

PLAN - TOP STEEL

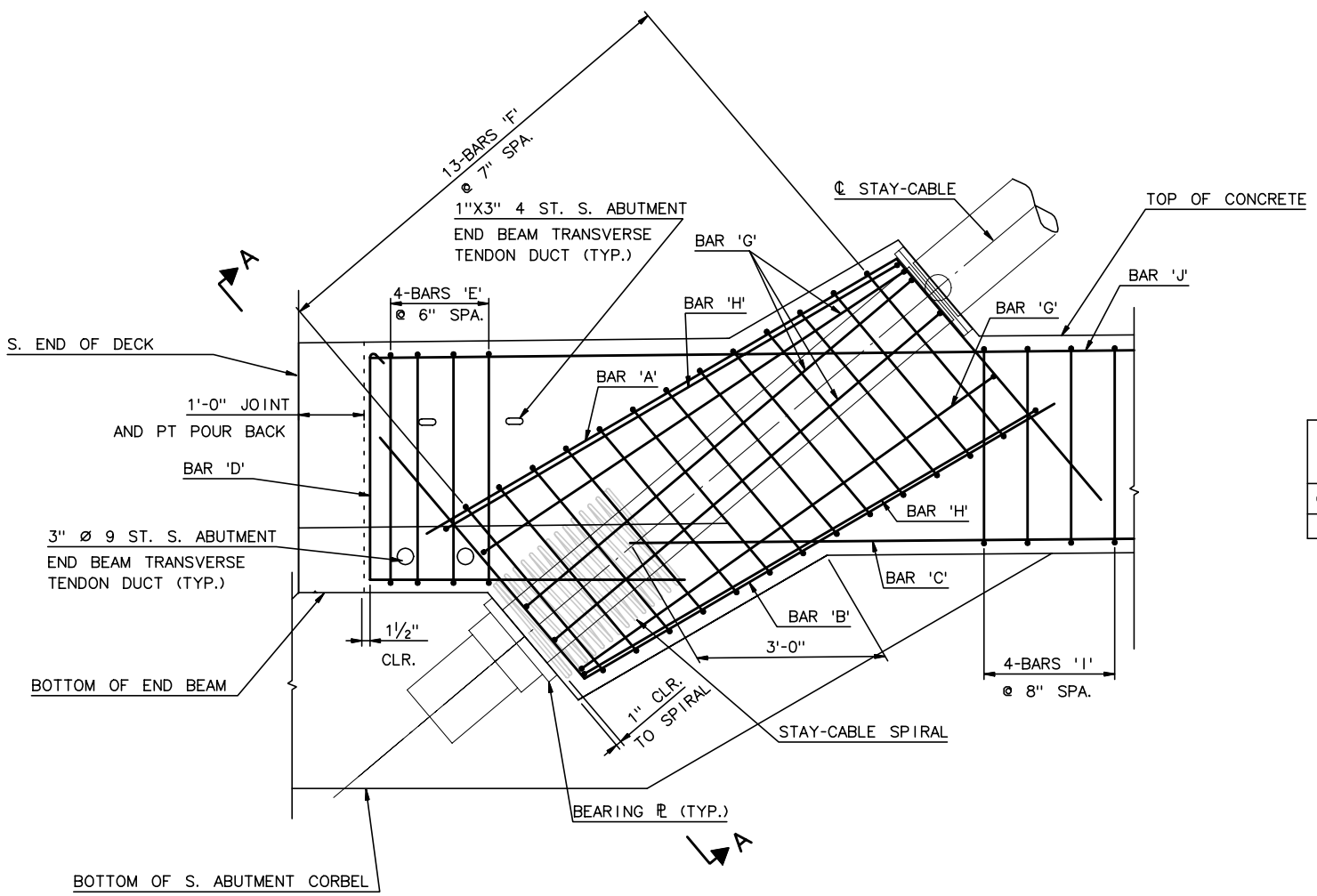

ELEVATION

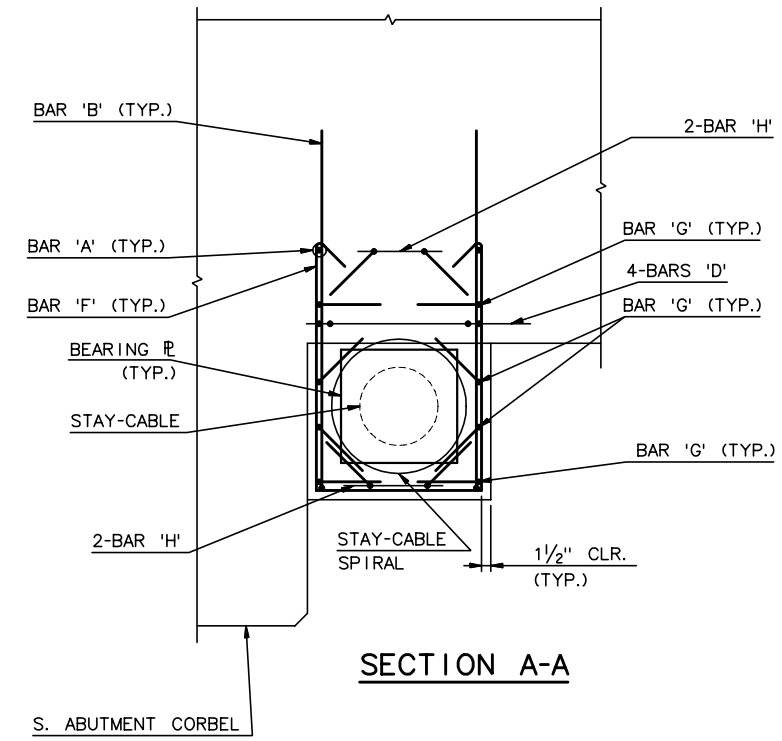

SECTION A-A

NOTES:

1. FOR STAY-CABLE GEOMETRY, SEE SHEET SC26
2. FOR BAR LIST, SEE SHEET SC98
3. TOP ANCHORAGE STEEL 2" CLEAR COVER (TYP.)
4. BOT ANCHORAGE STEEL 1½" CLEAR COVER (TYP.)

REINFORCING SCHEDULE FOR EACH STAY-CABLE ANCHORAGE

CABLE NO.	N-BAR 'A'	N-BAR 'B'	N-BAR 'C'	N-BAR 'D'	N-BAR 'E'	N-BAR 'F'	N-BAR 'G'	N-BAR 'H'	N-BAR 'I'	N-BAR 'J'
S1	2-CA624	2-CA624	4-CA610	4-CA623	4-CA543	13-CA544	8-CA545	4-CA546	4-CA547	4-CA606

RECORD DRAWINGS

CABLE S1 - DECK ANCHORAGE DETAILS

(EAST CABLE SHOWN, WEST SIMILAR)
¾" = 1'-0"

No.	Date	Revisions	By

HNTB CORPORATION

STATE OF WISCONSIN
DEPARTMENT OF TRANSPORTATION

STRUCTURE B-40-413A

Designed By	TZ	Design Checked	CE	Drawn By	CE	Plans Checked	TZ

SOUTH CABLE STAY DECK ANCHORAGE DETAILS - 1 OF 5

SHEET SC56 OF

STATE PROJECT I.D.	SHEET NUMBER
2235-00-70	8.74

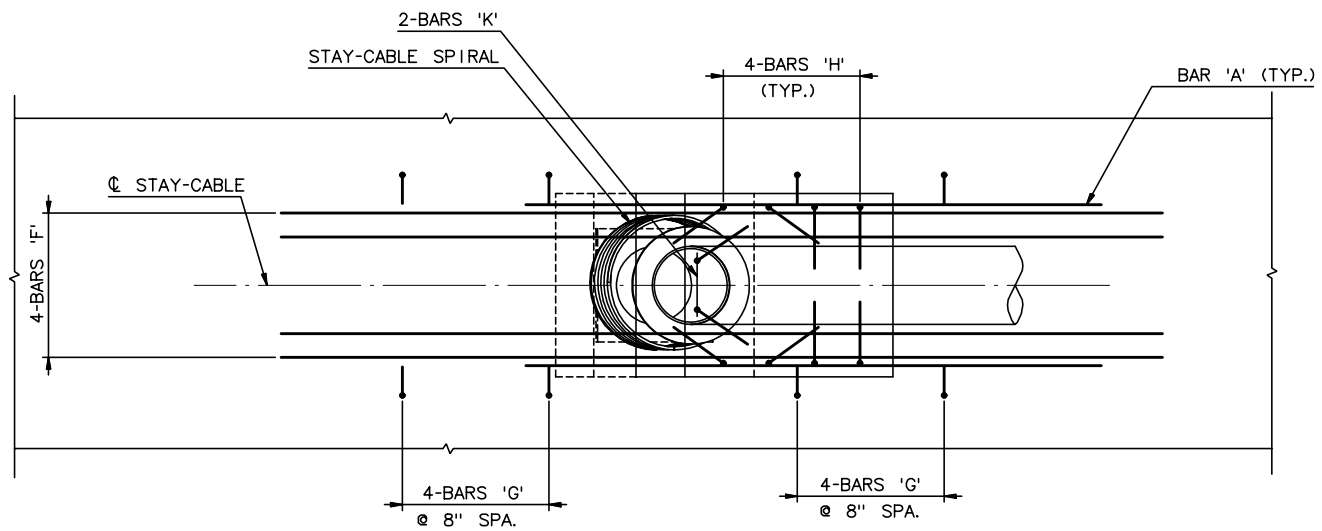

PLAN - TOP STEEL

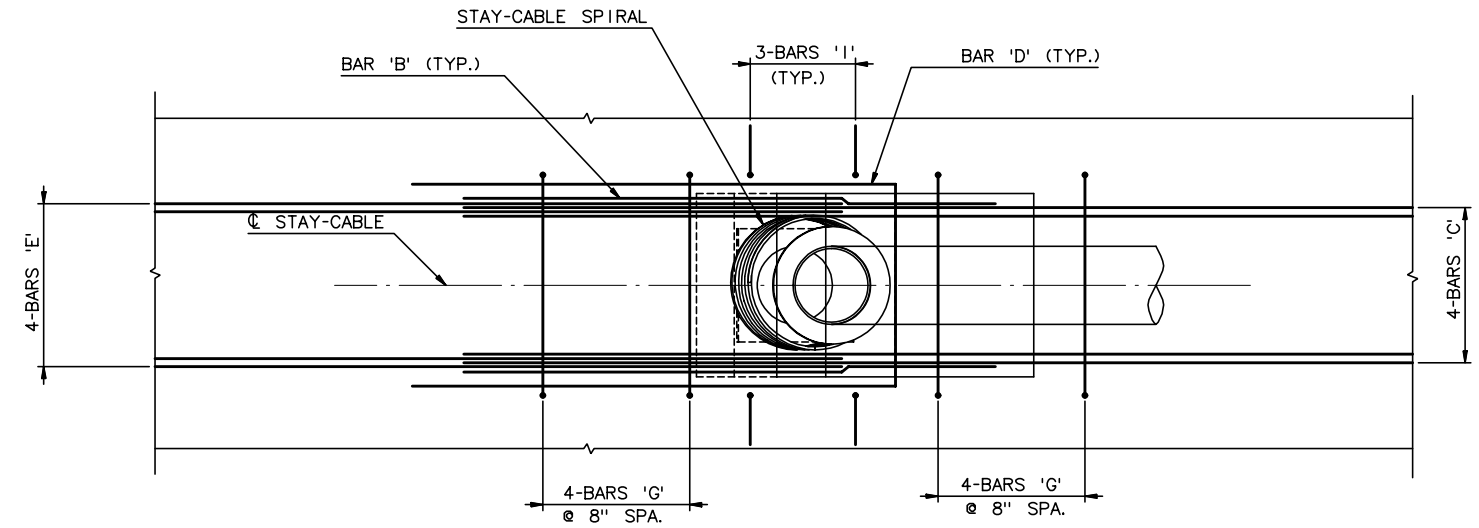

PLAN - BOTTOM STEEL

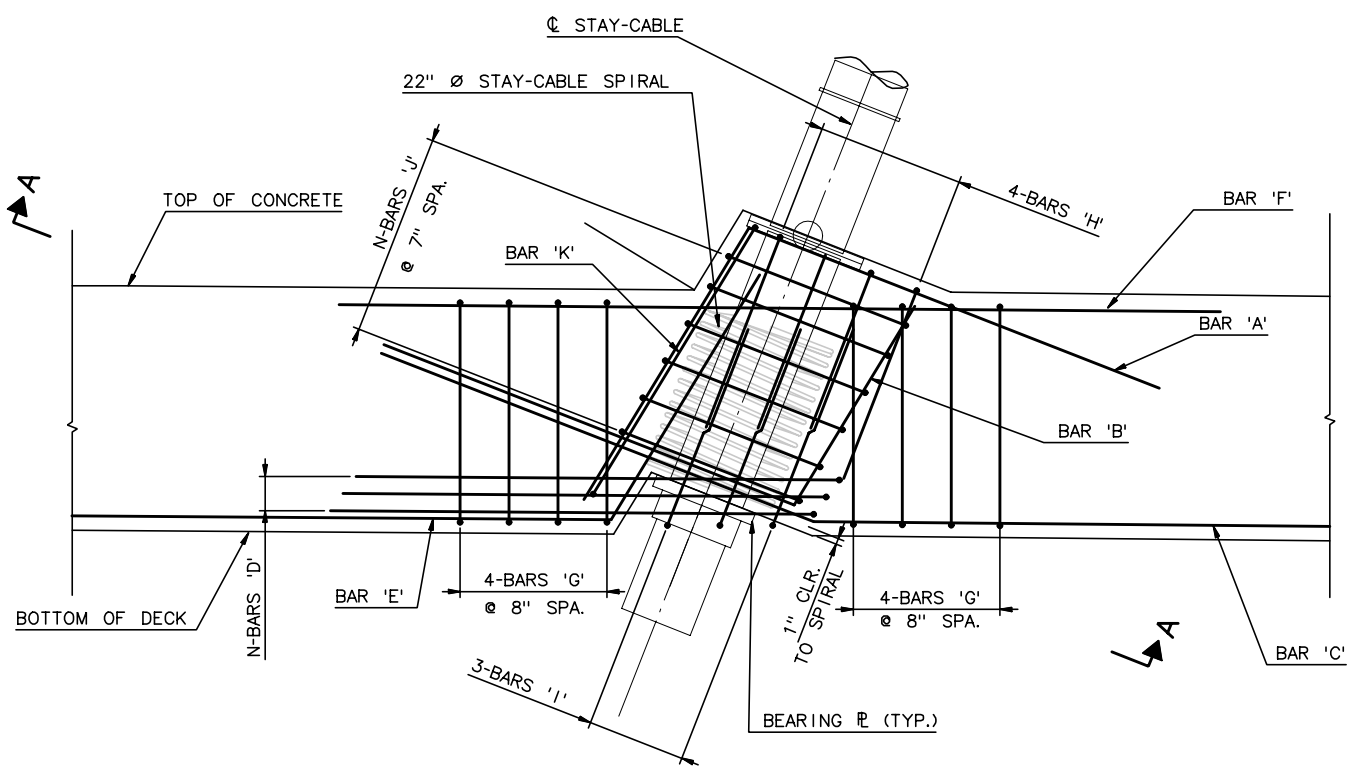

ELEVATION

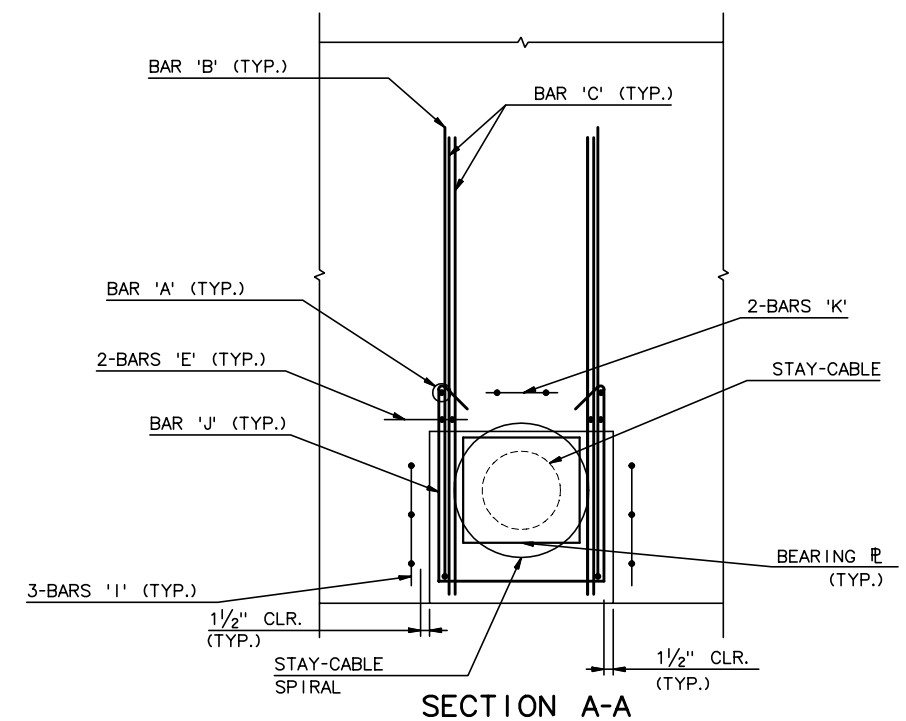

SECTION A-A

NOTES:

1. FOR STAY-CABLE GEOMETRY, SEE SHEET SC26
2. FOR BAR LIST, SEE SHEET SC98
3. TOP ANCHORAGE STEEL 2" CLEAR COVER (TYP.)
4. BOT ANCHORAGE STEEL 1½" CLEAR COVER (TYP.)

REINFORCING SCHEDULE FOR EACH STAY-CABLE ANCHORAGE

CABLE NO.	N-BAR 'A'	N-BAR 'B'	N-BAR 'C'	N-BAR 'D'	N-BAR 'E'	N-BAR 'F'	N-BAR 'G'	N-BAR 'H'	N-BAR 'I'	N-BAR 'J'	N-BAR 'K'
S5	2-CA611	2-CA536	4-CA614	3-CA618	4-CA619	4-CA610	8-CA532	8-CA534	6-CA534	6-CA538	2-CA539
S4	2-CA612	2-CA537	4-CA615	3-CA618	4-CA620	4-CA610	8-CA532	8-CA534	6-CA534	7-CA538	2-CA540
S3	2-CA612	2-CA537	4-CA616	3-CA618	4-CA621	4-CA610	8-CA532	8-CA534	6-CA534	7-CA538	2-CA541
S2	2-CA613	2-CA537	4-CA617	4-CA618	4-CA622	4-CA610	8-CA532	8-CA534	6-CA534	8-CA538	2-CA542

DECK ANCHORAGE DETAILS

(CABLE S5 SHOWN, CABLES S4 - S2 SIMILAR)
¾" = 1'-0"

RECORD DRAWINGS

No.	Date	Revisions	By

HNTB CORPORATION

STATE OF WISCONSIN
DEPARTMENT OF TRANSPORTATION

STRUCTURE B-40-413A

Designed By	TZ	Design Checked	CE	Drawn By	CE	Plans Checked	TZ

SOUTH CABLE STAY DECK ANCHORAGE DETAILS - 2 OF 5

SHEET SC57 OF

STATE PROJECT I.D.	SHEET NUMBER
2235-00-70	8.75

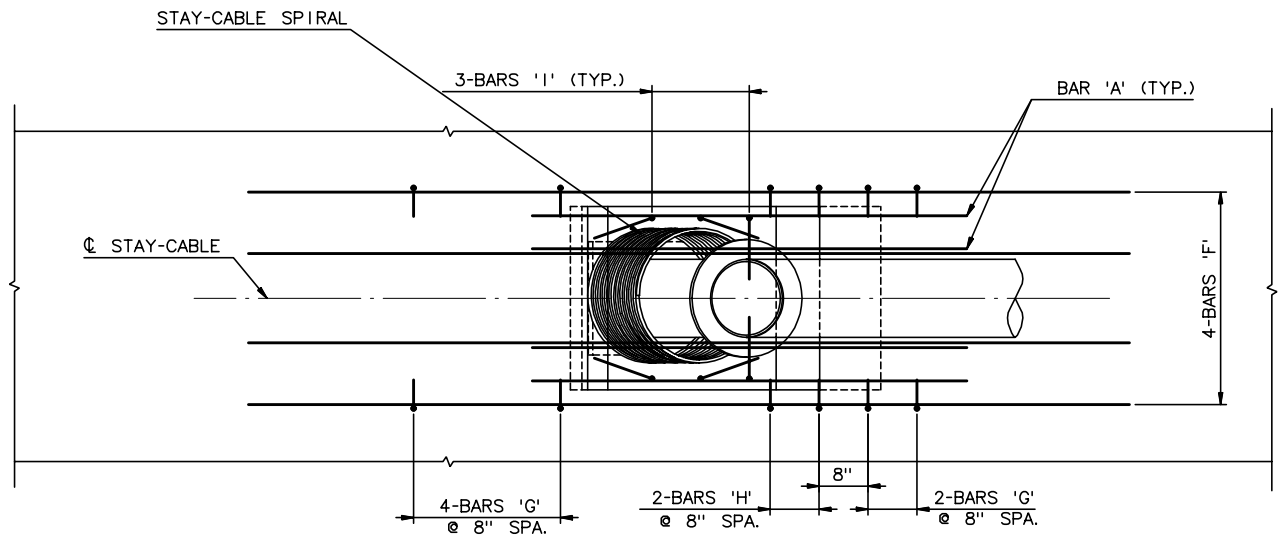

PLAN - TOP STEEL

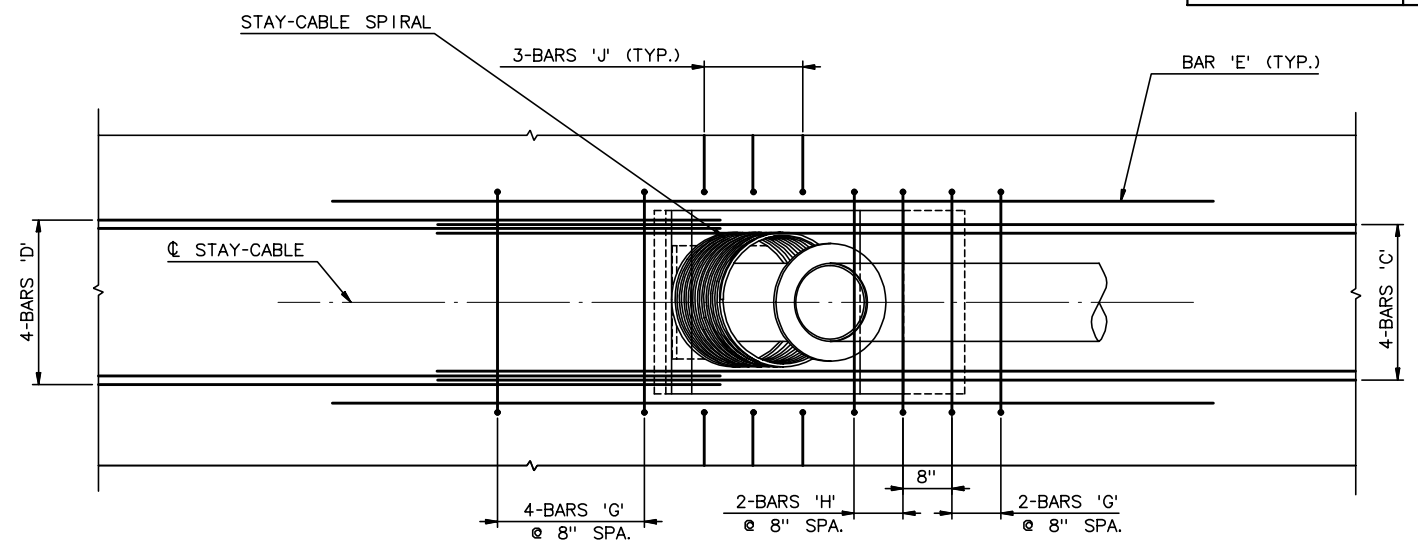

PLAN - BOTTOM STEEL

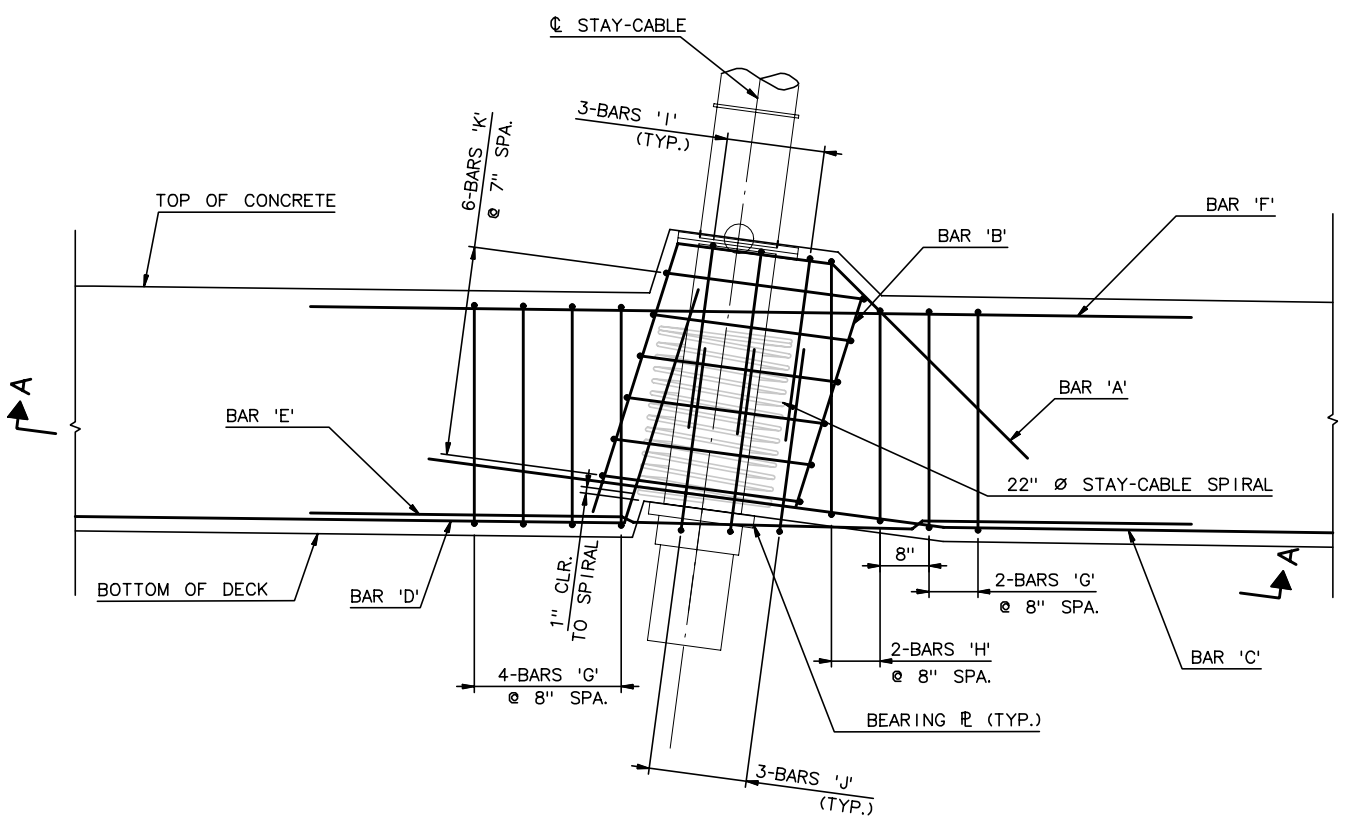

ELEVATION

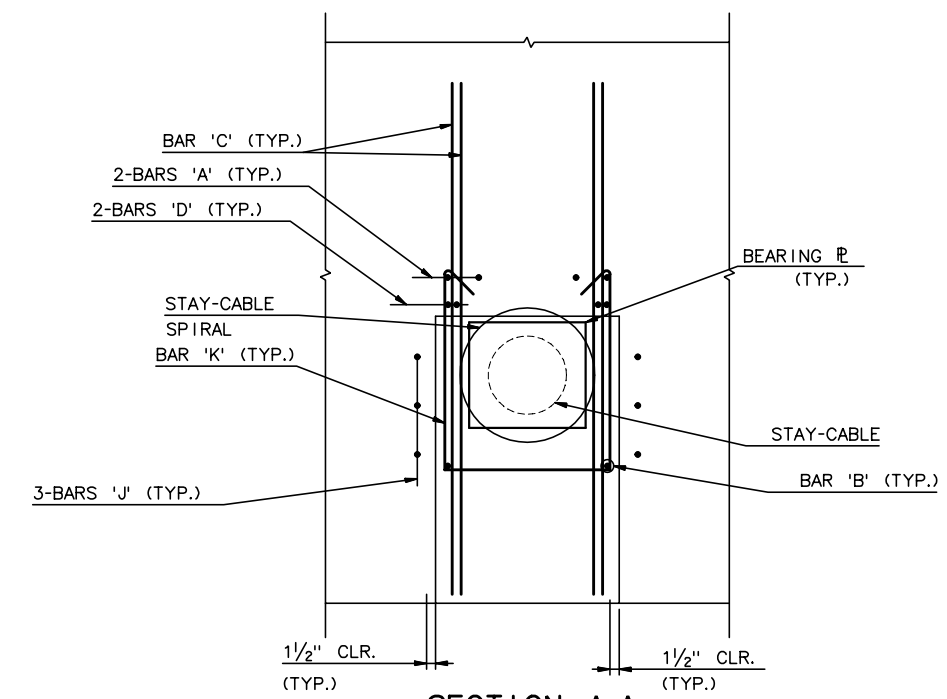

SECTION A-A

NOTES:

1. FOR STAY-CABLE GEOMETRY, SEE SHEET SC26
2. FOR BAR LIST, SEE SHEET SC98
3. TOP ANCHORAGE STEEL 2" CLEAR COVER (TYP.)
4. BOT ANCHORAGE STEEL 1½" CLEAR COVER (TYP.)

REINFORCING SCHEDULE FOR EACH STAY-CABLE ANCHORAGE

CABLE NO.	N-BAR 'A'	N-BAR 'B'	N-BAR 'C'	N-BAR 'D'	N-BAR 'E'	N-BAR 'F'	N-BAR 'G'	N-BAR 'H'	N-BAR 'I'	N-BAR 'J'	N-BAR 'K'
S6	4-CA607	2-CA531	4-CA608	4-CA609	2-CA610	4-CA610	6-CA532	2-CA533	6-CA534	6-CA534	6-CA535

CABLE S6 - DECK ANCHORAGE DETAILS

¾" = 1'-0"

RECORD DRAWINGS

No.	Date	Revisions	By

HNTB CORPORATION

STATE OF WISCONSIN
DEPARTMENT OF TRANSPORTATION

STRUCTURE B-40-413A

Designed By	TZ	Design Checked	CE	Drawn By	CE	Plans Checked	TZ

SOUTH CABLE STAY DECK ANCHORAGE DETAILS - 3 OF 5

SHEET SC58 OF

STATE PROJECT I.D.	SHEET NUMBER
2235-00-70	8.76

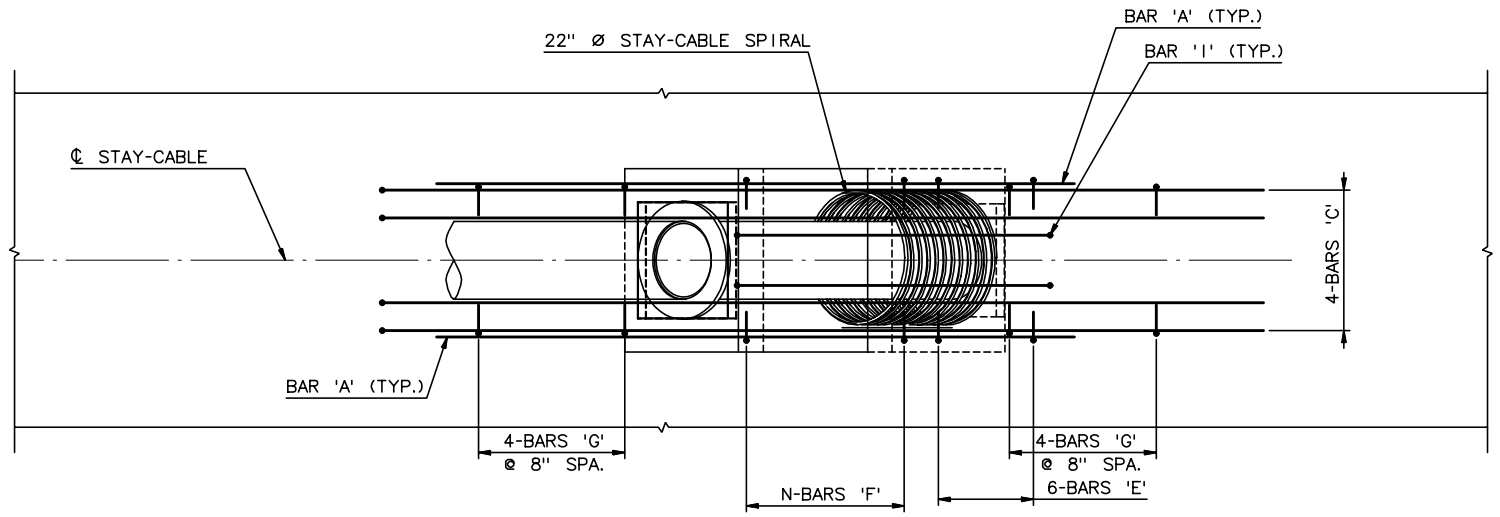

PLAN - TOP STEEL SHOWN, BOTTOM SIMILAR

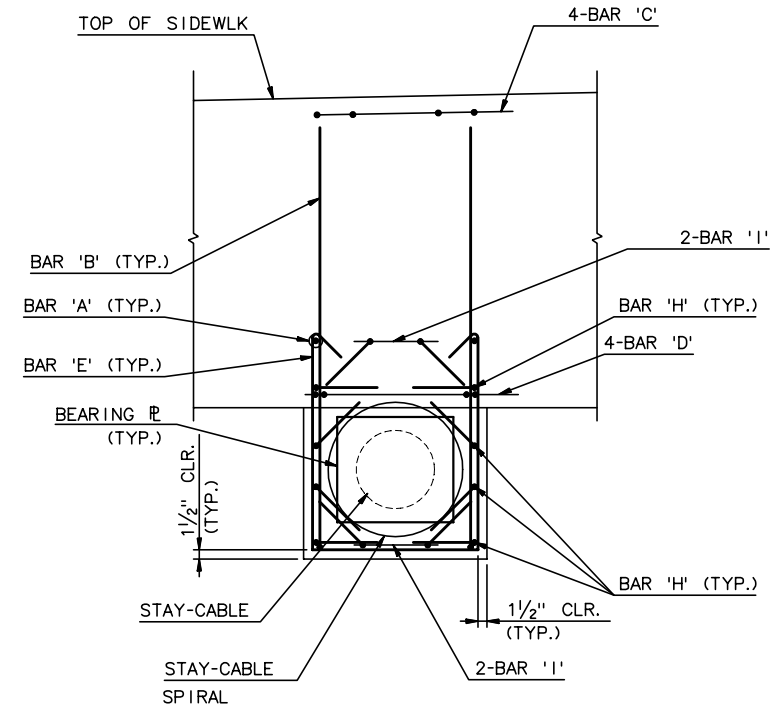

SECTION A-A

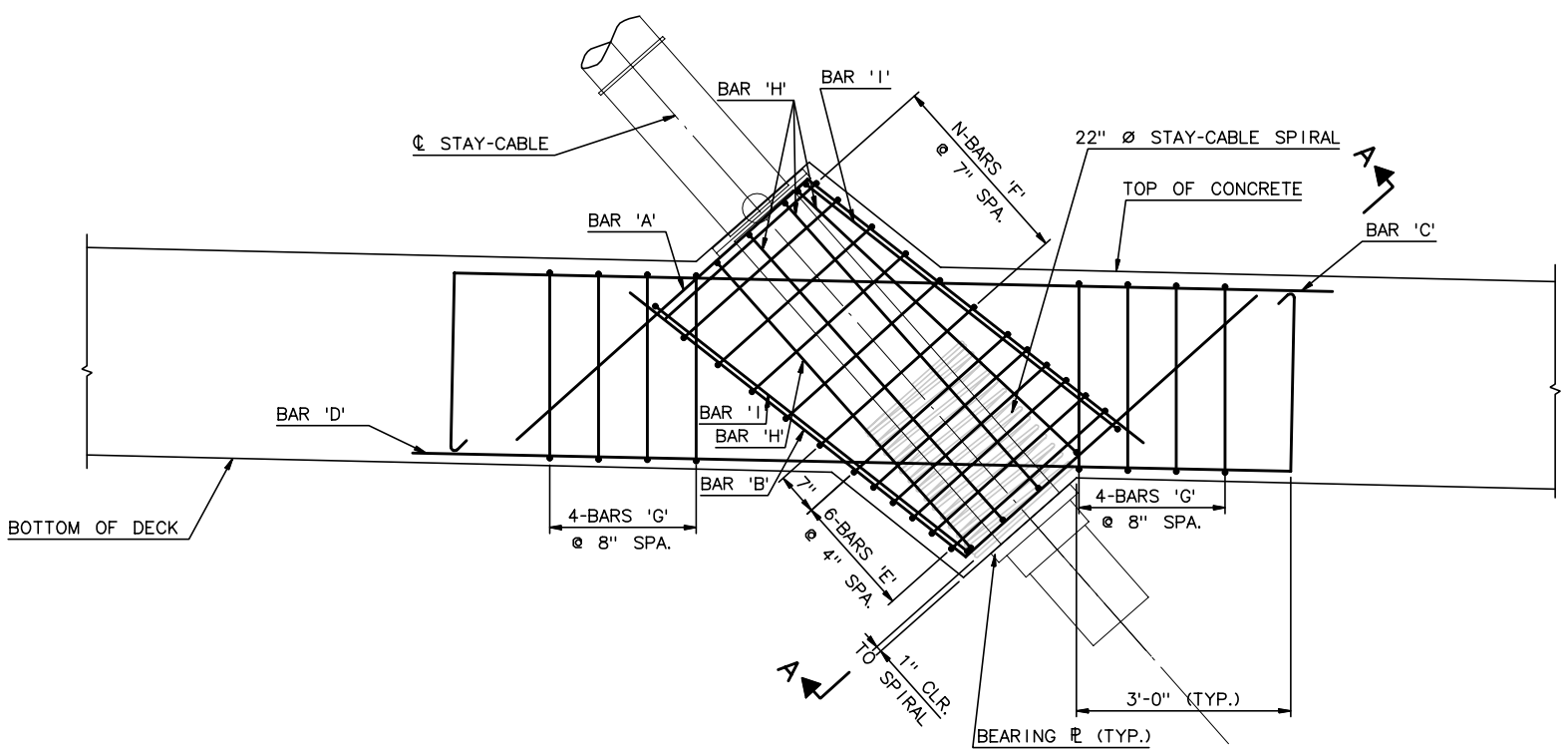

ELEVATION

NOTES:

1. FOR STAY-CABLE GEOMETRY, SEE SHEET SC26
2. FOR BAR LIST, SEE SHEET SC98
3. TOP ANCHORAGE STEEL 2" CLEAR COVER (TYP.)
4. BOT ANCHORAGE STEEL 1½" CLEAR COVER (TYP.)

REINFORCING SCHEDULE FOR EACH STAY-CABLE ANCHORAGE

CABLE NO.	N-BAR 'A'	N-BAR 'B'	N-BAR 'C'	N-BAR 'D'	N-BAR 'E'	N-BAR 'F'	N-BAR 'G'	N-BAR 'H'	N-BAR 'I'
S8	2-CA604	2-CA604	4-CA606	4-CA606	6-CA524	6-CA524	8-CA526	8-CA527	4-CA529
S7	2-CA605	2-CA605	4-CA606	4-CA606	6-CA525	4-CA525	8-CA526	8-CA528	4-CA530

DECK ANCHORAGE DETAILS

(CABLE S8 SHOWN, CABLE S7 SIMILAR)
¾" = 1'-0"

RECORD DRAWINGS

No.	Date	Revisions	By

HNTB CORPORATION

STATE OF WISCONSIN
DEPARTMENT OF TRANSPORTATION

STRUCTURE B-40-413A

Designed By	TZ	Design Checked	CE	Drawn By	CE	Plans Checked	TZ

SOUTH CABLE STAY DECK ANCHORAGE DETAILS - 4 OF 5

SHEET SC58a OF

STATE PROJECT I.D.	SHEET NUMBER
2235-00-70	8.77

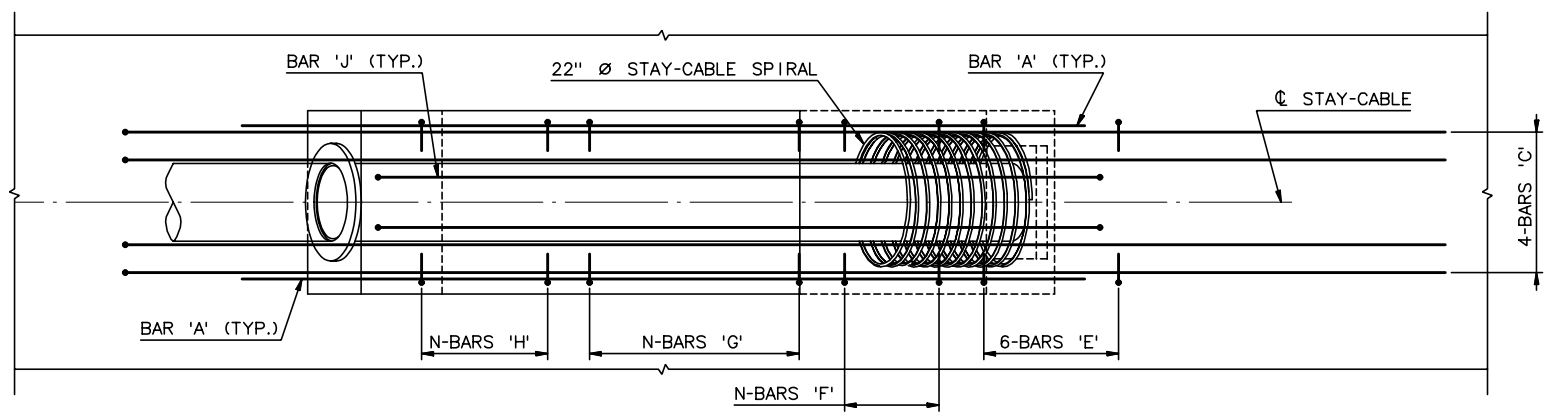

PLAN - TOP STEEL SHOWN, BOTTOM SIMILAR

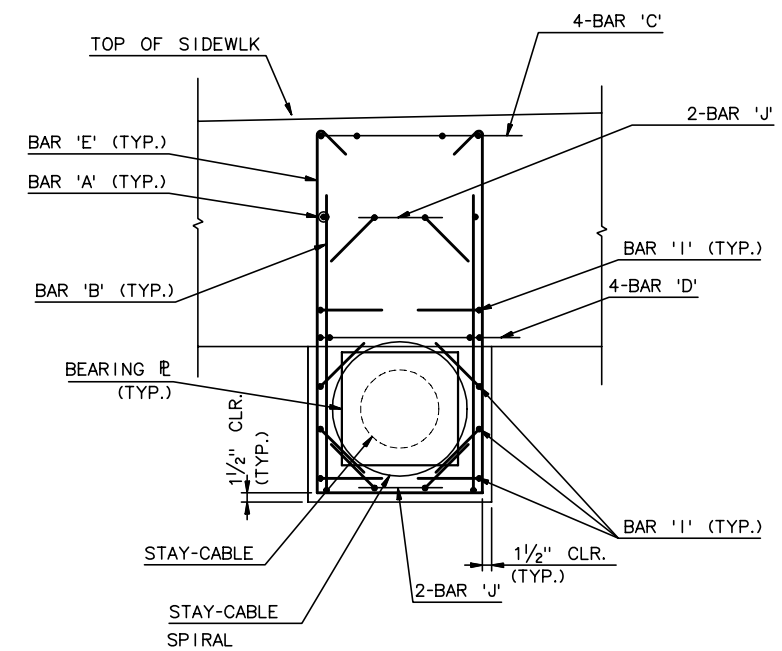

SECTION A-A

NOTES:

1. FOR STAY-CABLE GEOMETRY, SEE SHEET SC26
2. FOR BAR LIST, SEE SHEET SC98
3. TOP ANCHORAGE STEEL 2" CLEAR COVER (TYP.)
4. BOT ANCHORAGE STEEL 1½" CLEAR COVER (TYP.)

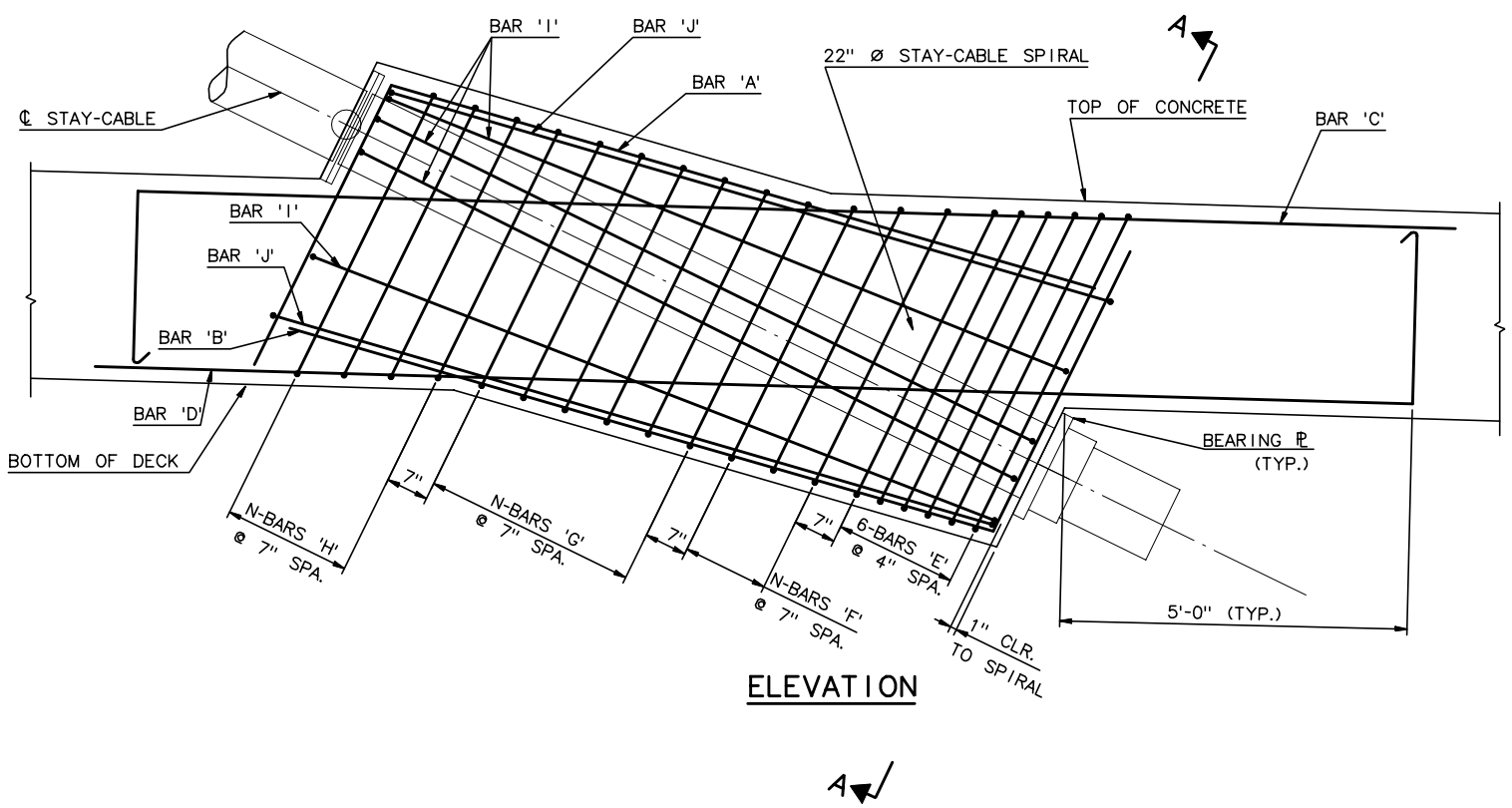

ELEVATION

REINFORCING SCHEDULE FOR EACH STAY-CABLE ANCHORAGE										
CABLE NO.	N-BAR 'A'	N-BAR 'B'	N-BAR 'C'	N-BAR 'D'	N-BAR 'E'	N-BAR 'F'	N-BAR 'G'	N-BAR 'H'	N-BAR 'I'	N-BAR 'J'
S12	2-CA601	2-CA601	4-CA603	4-CA603	6-CA501	3-CA505	6-CA509	4-CA512	8-CA516	4-CA520
S11	2-CA601	2-CA601	4-CA603	4-CA603	6-CA502	3-CA506	4-CA510	5-CA513	8-CA517	4-CA521
S10	2-CA601	2-CA601	4-CA603	4-CA603	6-CA503	3-CA507	1-CA511	6-CA514	8-CA518	4-CA522
S9	2-CA602	2-CA602	4-CA603	4-CA603	6-CA504	2-CA508	----	6-CA515	8-CA519	4-CA523

DECK ANCHORAGE DETAILS

(CABLE S12 SHOWN, CABLES S11-S9 SIMILAR)
¾" = 1'-0"

RECORD DRAWINGS

No.	Date	Revisions	By

HNTB CORPORATION

STATE OF WISCONSIN
DEPARTMENT OF TRANSPORTATION

STRUCTURE B-40-413A

Designed By	TZ	Design Checked	CE	Drawn By	CE	Plans Checked	TZ

SOUTH CABLE STAY DECK ANCHORAGE DETAILS - 5 OF 5

SHEET SC58b OF

STATE PROJECT I.D.	SHEET NUMBER
2235-00-70	

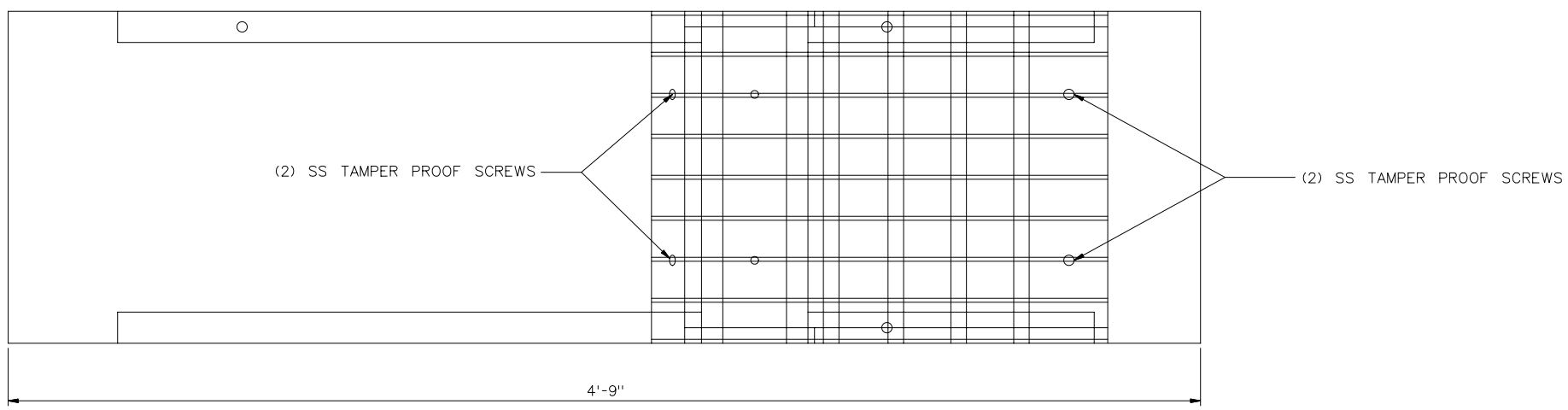

NOTES:

MATERIAL IS 3/16" 304 STAINLESS STEEL

THE BODY IS TO BE WHITE
THE GRILLE IS TO BE BLACK

PER UNIT:
(1) BODY SHELL
(9) "L" SHAPED GRATE BARS
(1) MOUNTING BRACKET

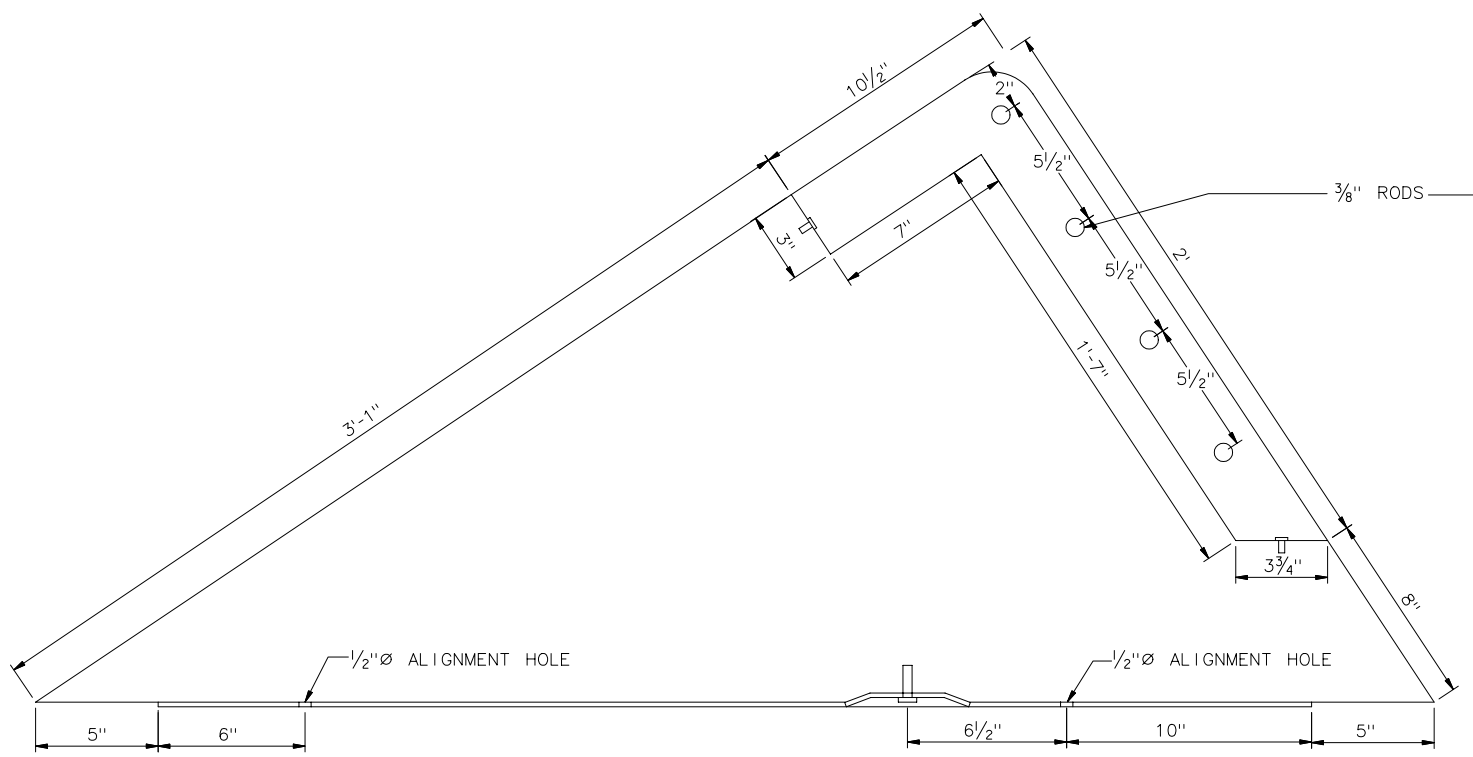

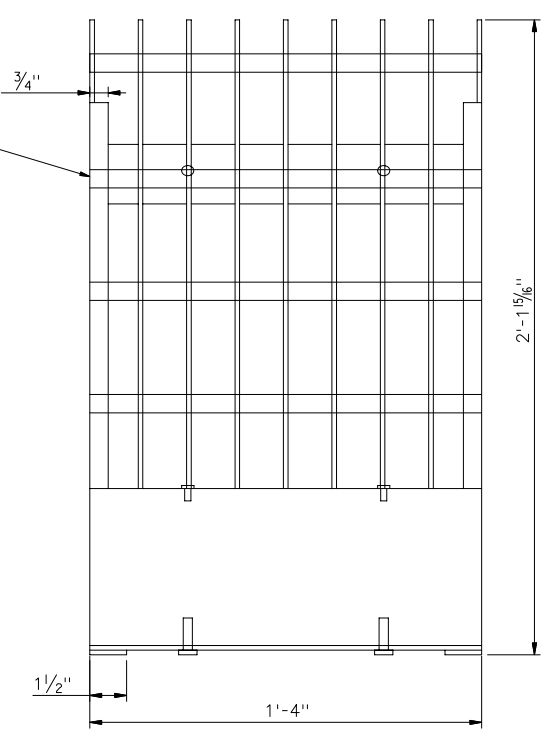

CABLE STAY LIGHTING HOUSING

3" = 1'-0"

RECORD DRAWINGS

No.	Date	Revisions	By

HNTB CORPORATION

STATE OF WISCONSIN
DEPARTMENT OF TRANSPORTATION

STRUCTURE B-40-413A

Designed By	JE	Design Checked	AP	Drawn By	SL	Plans Checked	AP

STAY CABLE LIGHTING DETAILS

SHEET SC58c OF .

J:\cadd\ff31185\dgn\AS BUILT\SOUTH CABLESTAY\SC58c-CableLighting.dgn 4/14/2003 3:17:37 PM

STATE PROJECT I.D.	SHEET NUMBER
2235-00-70	8.79

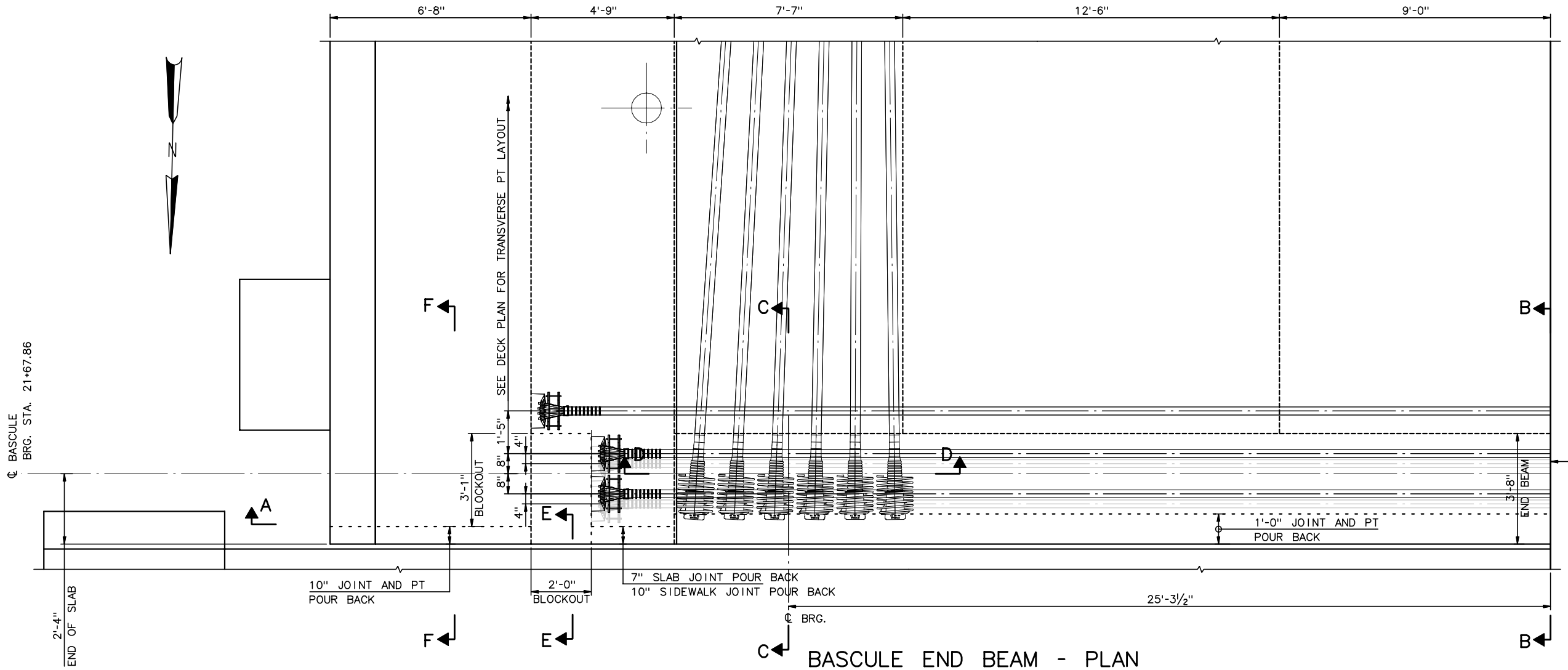

BASCULE END BEAM - PLAN

½" = 1'-0"

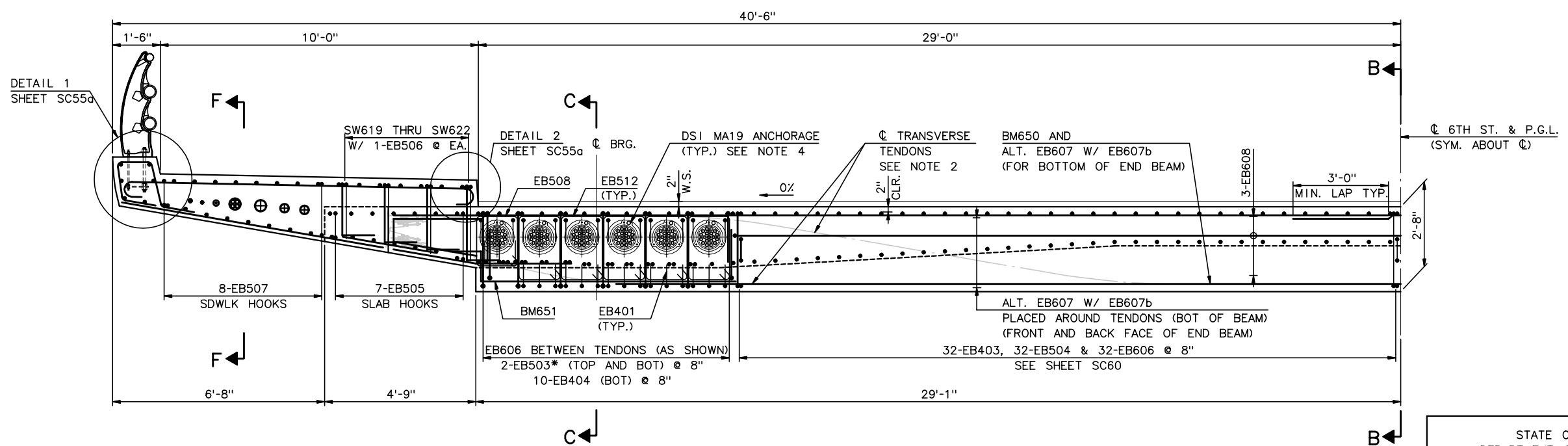

SECTION A-A END BEAM - ELEVATION

½" = 1'-0"

NOTE: TYPICAL REINFORCEMENT BARMARKS NOT SHOWN FOR CLARITY.

* FIELD BEND EB503

NOTES:

1. FOR SECTION B-B, C-C, D-D, AND F-F SEE SHEET SC60.
2. FOR SECTION E-E, SEE SHEET SC60a.
3. FOR TRANSVERSE TENDON PROFILE, SEE SHEET SC70.
4. FOR LONGITUDINAL TENDON PROFILE, SEE SHEETS SC65 THRU SC70.
5. FOR ADDITIONAL END BEAM REINFORCEMENT, SEE SHEET SC60.
6. FOR BURSTING REINFORCEMENT, SEE SHEET SC60.
7. BOTTOM TRANSVERSE PT SHOWN SCREENED IN PLAN VIEW.
8. SECTIONS C-C AND B-B TYPICAL FOR BOTH SIDES OF END BEAM.

RECORD DRAWINGS

No.	Date	Revisions	By

HNTB CORPORATION

STATE OF WISCONSIN
DEPARTMENT OF TRANSPORTATION

STRUCTURE B-40-413A

Designed By	SL	Design Checked	CE	Drawn By	BM	Plans Checked	AP

BASCULE END BEAM
1 OF 3

SHEET SC59 OF

STATE PROJECT I.D.	SHEET NUMBER
2235-00-70	8.80

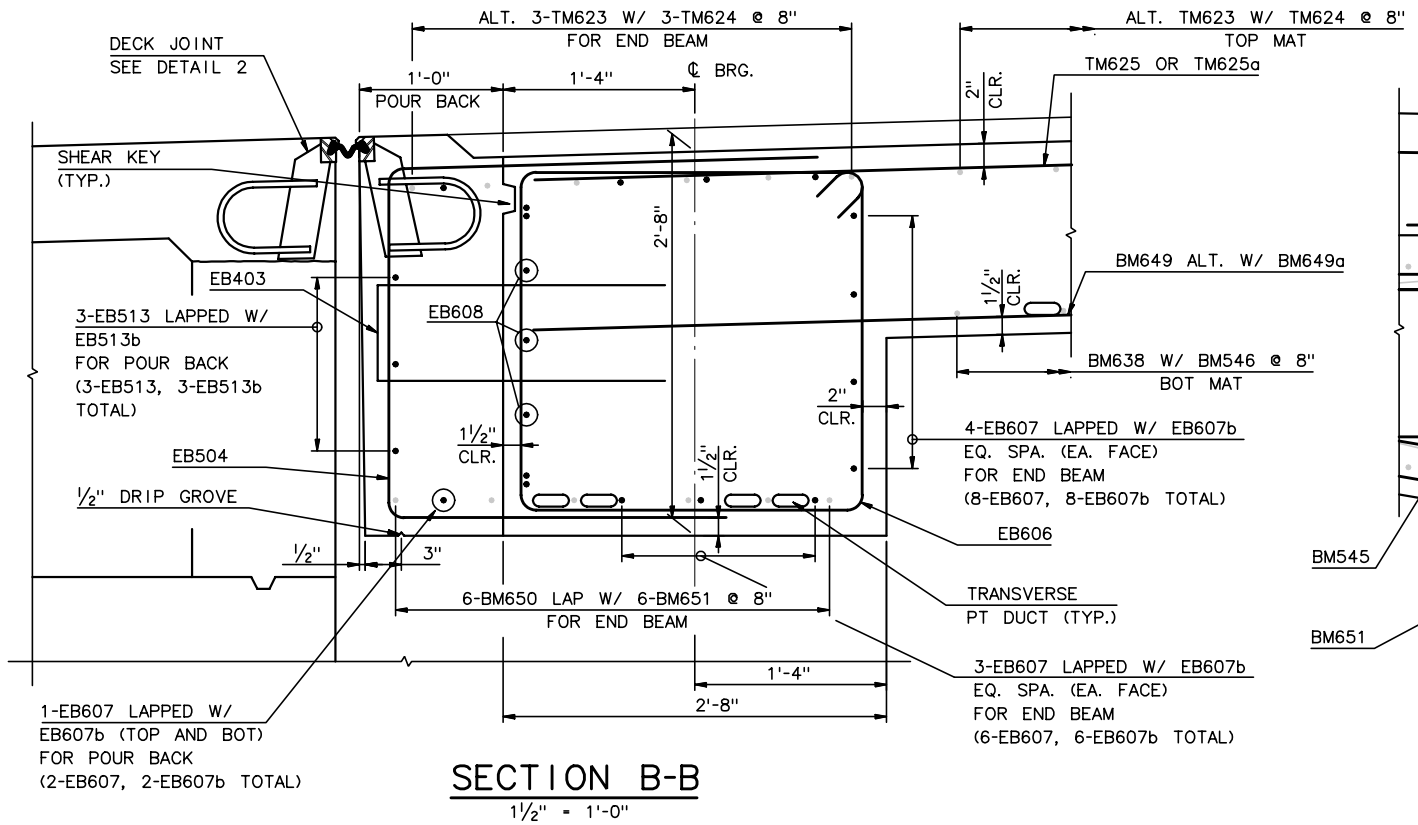

SECTION B-B

1½" = 1'-0"

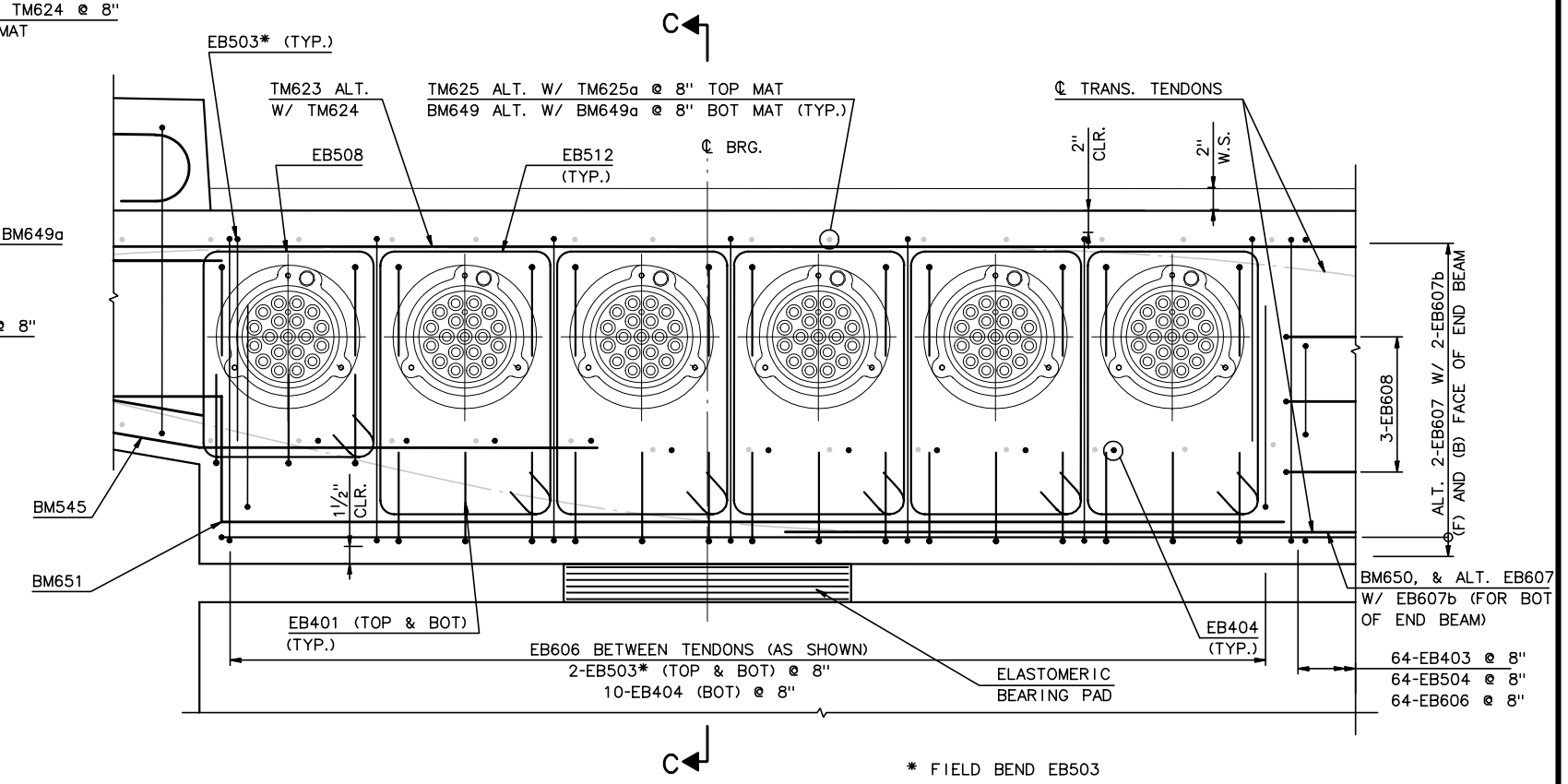

SECTION D-D

1½" = 1'-0"

* FIELD BEND EB503

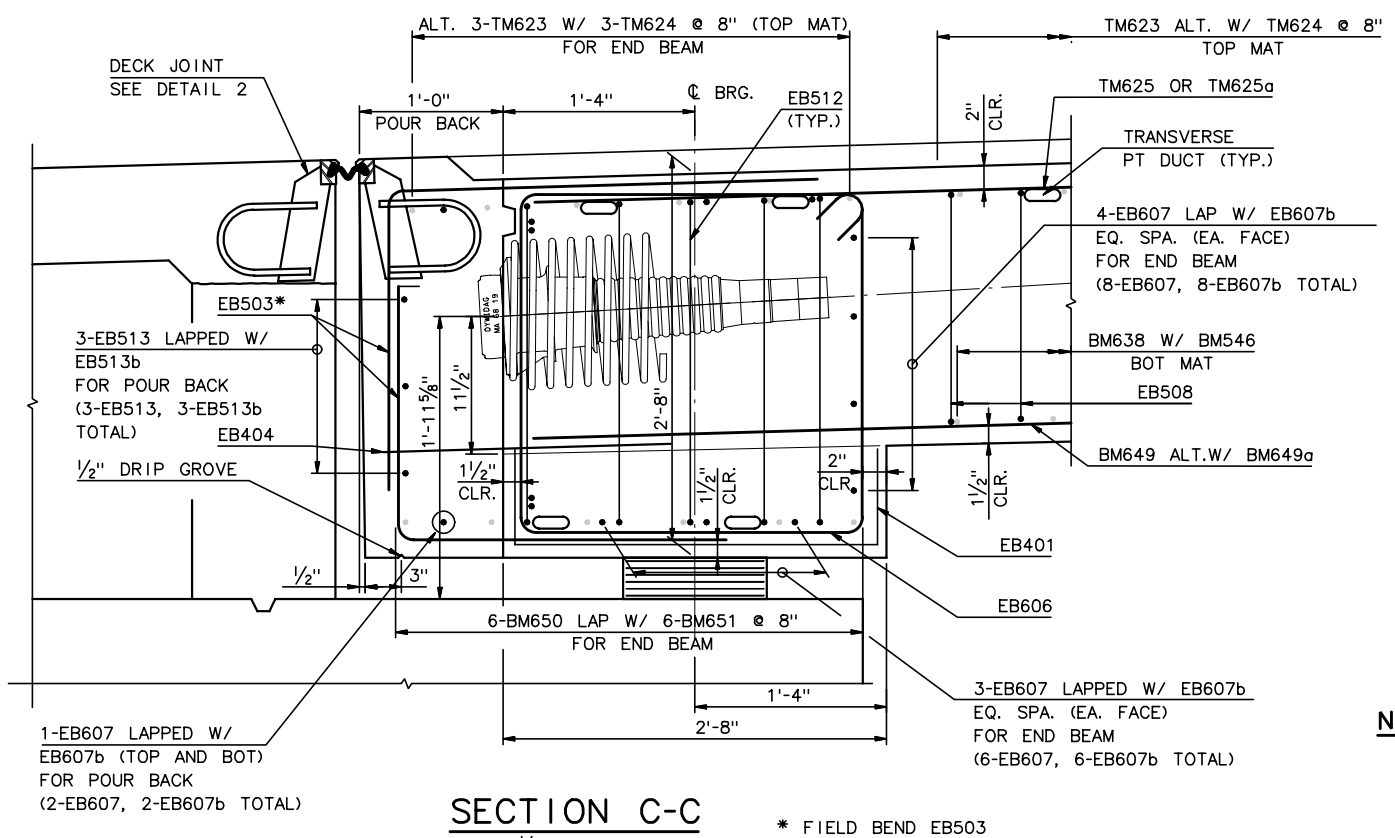

SECTION C-C

1½" = 1'-0"

* FIELD BEND EB503

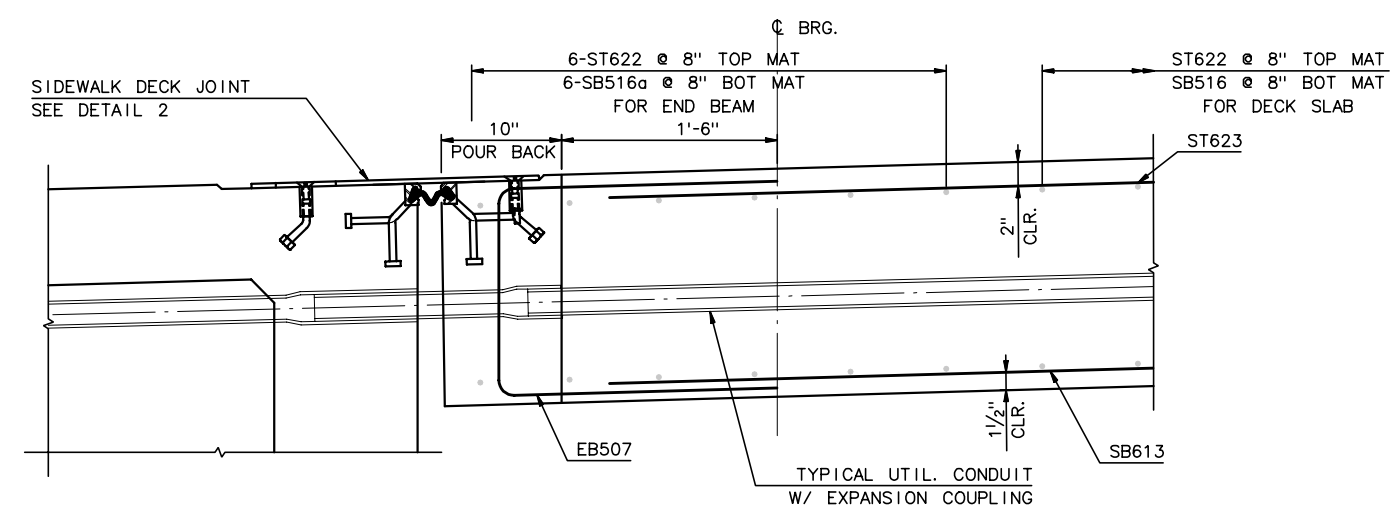

SECTION F-F

1½" = 1'-0"

NOTES:

1. FOR LOCATION OF SECTIONS B-B, C-C, D-D, AND F-F SEE SHEET SC59.
2. FOR DECK JOINT DETAILS, SEE SHEET SC75.

RECORD DRAWINGS

No.	Date	Revisions	By

HNTB CORPORATION

STATE OF WISCONSIN
DEPARTMENT OF TRANSPORTATION

STRUCTURE B-40-413A

Designed By	SL	Design Checked	TZ	Drawn By	BM	Plans Checked	AP

BASCULE END BEAM
2 OF 3

SHEET SC60 OF .

STATE PROJECT I.D.	SHEET NUMBER
2235-00-70	8.81

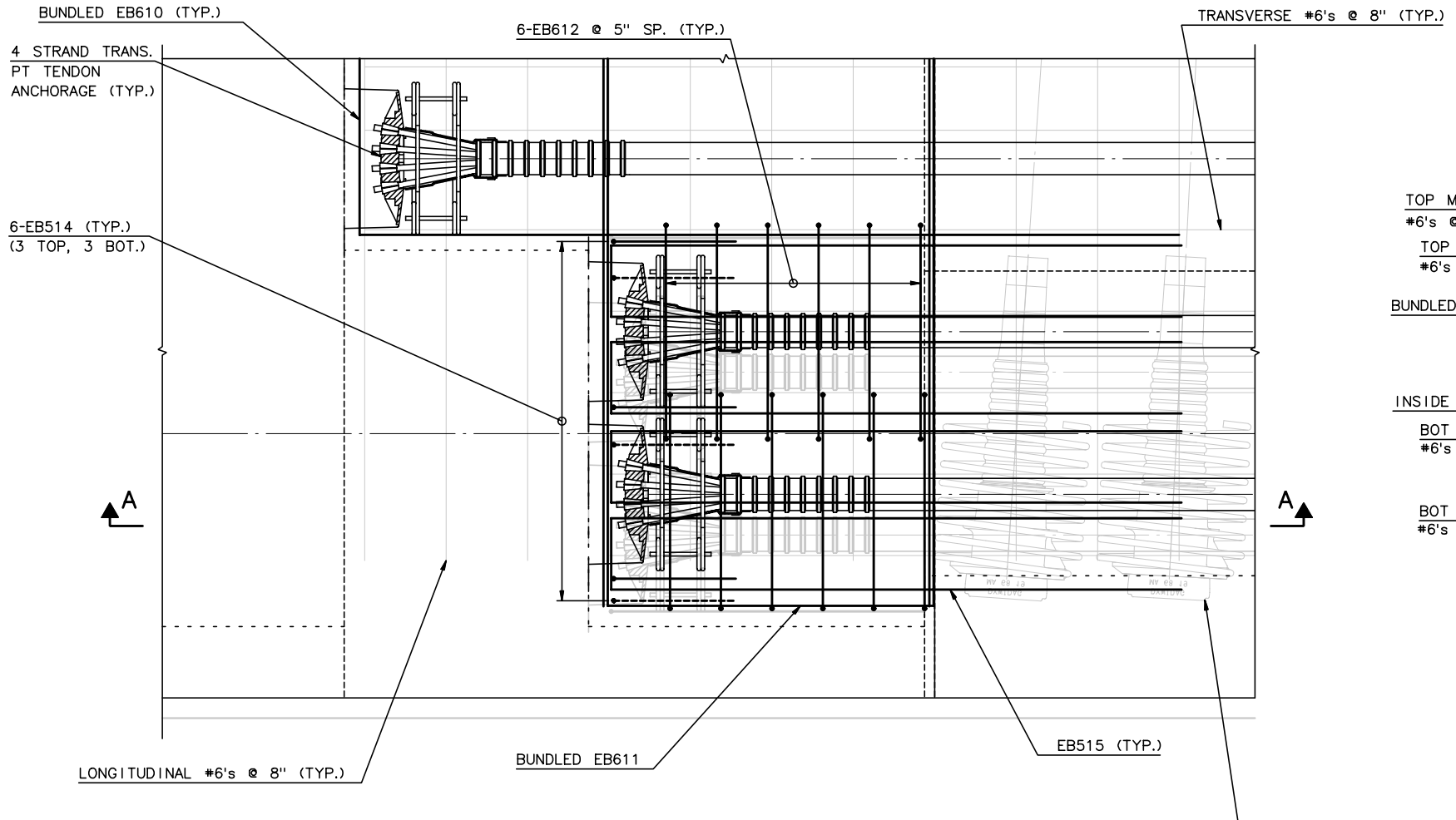

BLOCKOUT - PLAN

1½" = 1'-0"

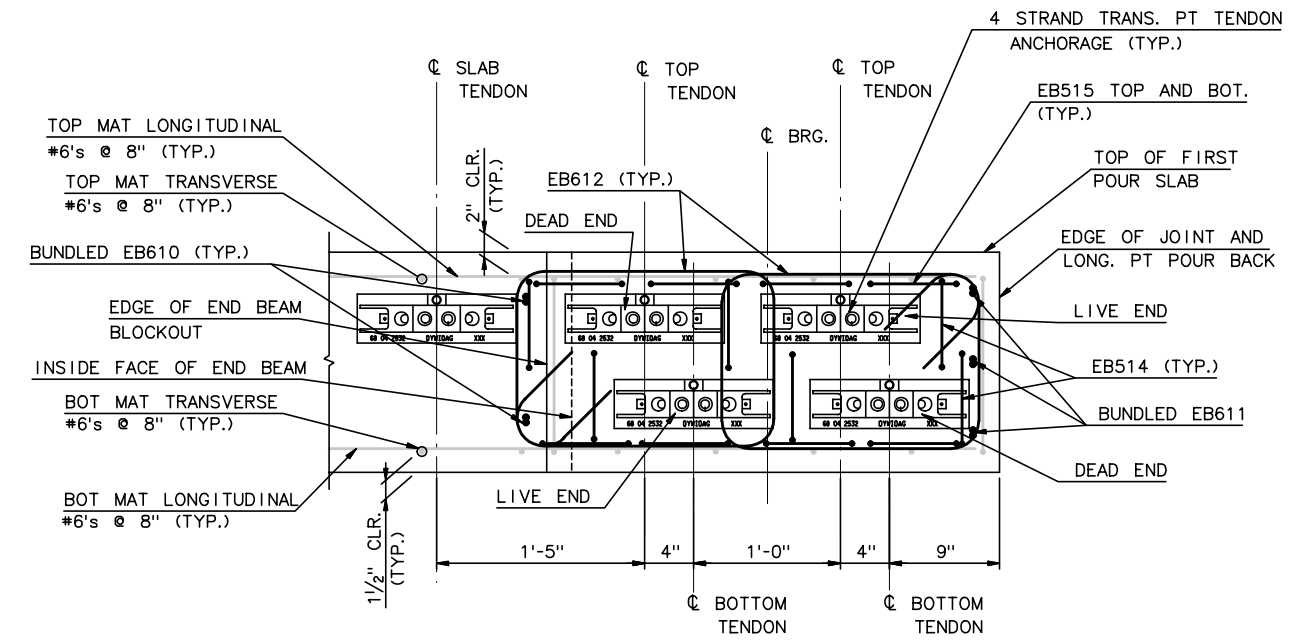

NOTE: SIDEWALK NOT SHOWN FOR CLARITY.

SECTION B-B
END BEAM LOCAL PT REINF.

1½" = 1'-0"

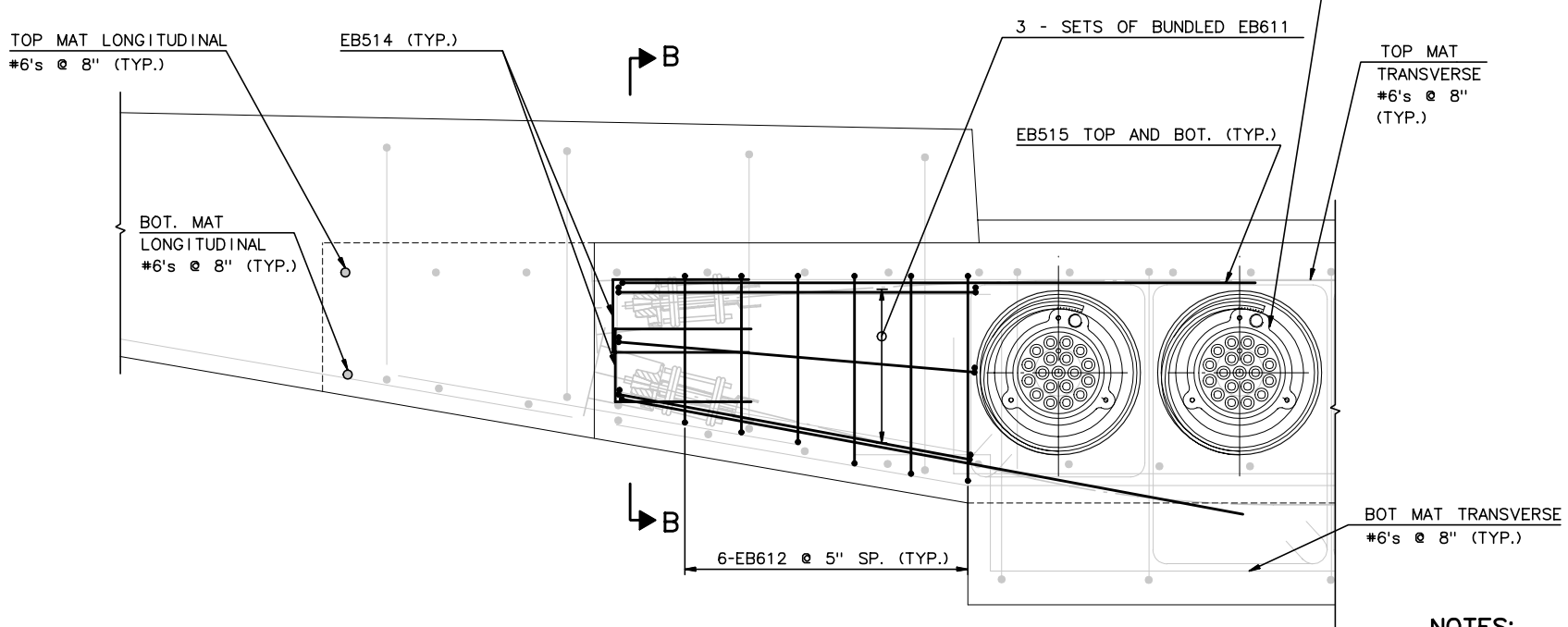

SECTION A-A
BLOCKOUT - ELEVATION

1½" = 1'-0"

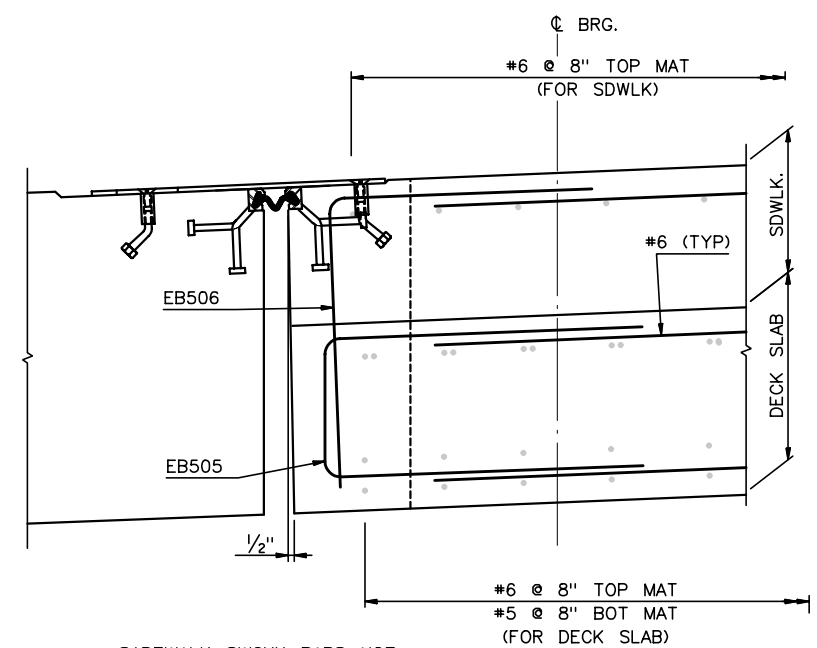

SIDEWALK SW6XX BARS NOT SHOWN FOR CLARITY

SECTION E-E

1½" = 1'-0"

NOTES:

1. SIDEWALK STEEL NOT SHOWN FOR CLARITY.

RECORD DRAWINGS

No.	Date	Revisions	By

HNTB CORPORATION

STATE OF WISCONSIN
DEPARTMENT OF TRANSPORTATION

STRUCTURE B-40-413A

Designed By	TZ	Design Checked	CE	Drawn By	CE	Plans Checked	BM

BASCULE END BEAM
3 OF 3

SHEET SC60a OF

STATE PROJECT I.D.	SHEET NUMBER
2235-00-70	8.82

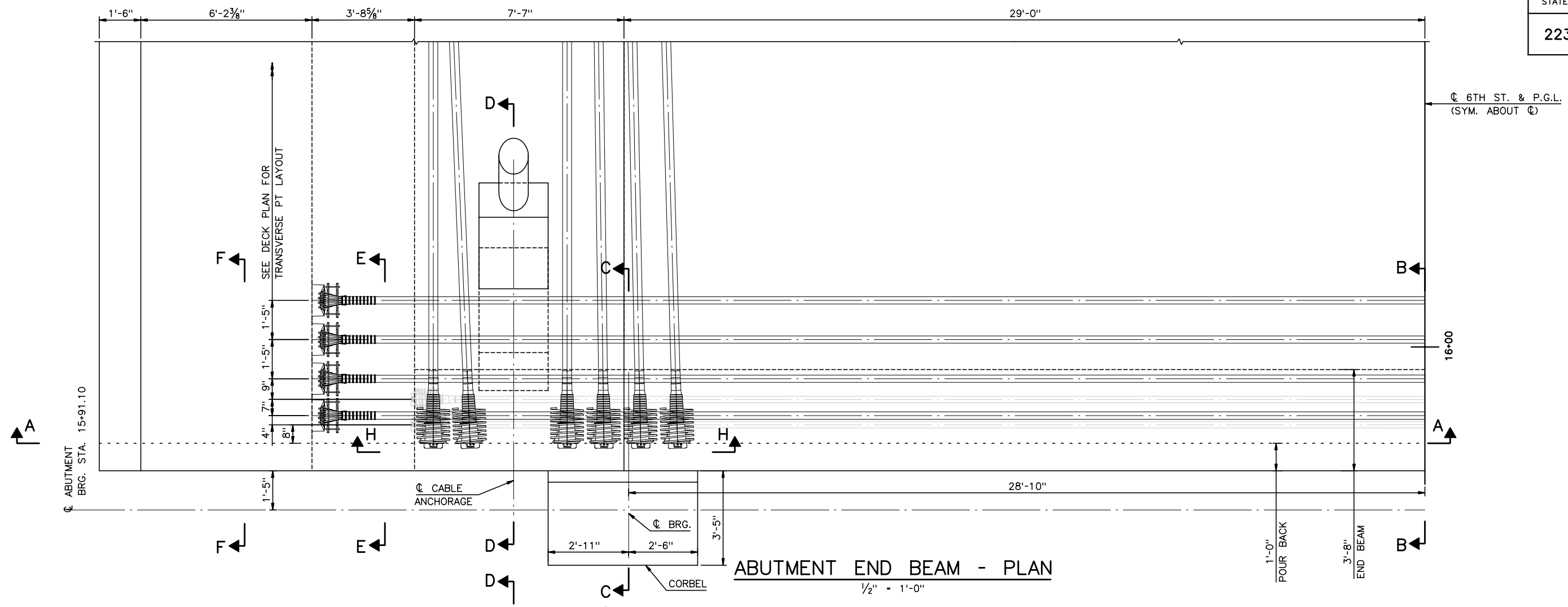

ABUTMENT END BEAM - PLAN

½" = 1'-0"

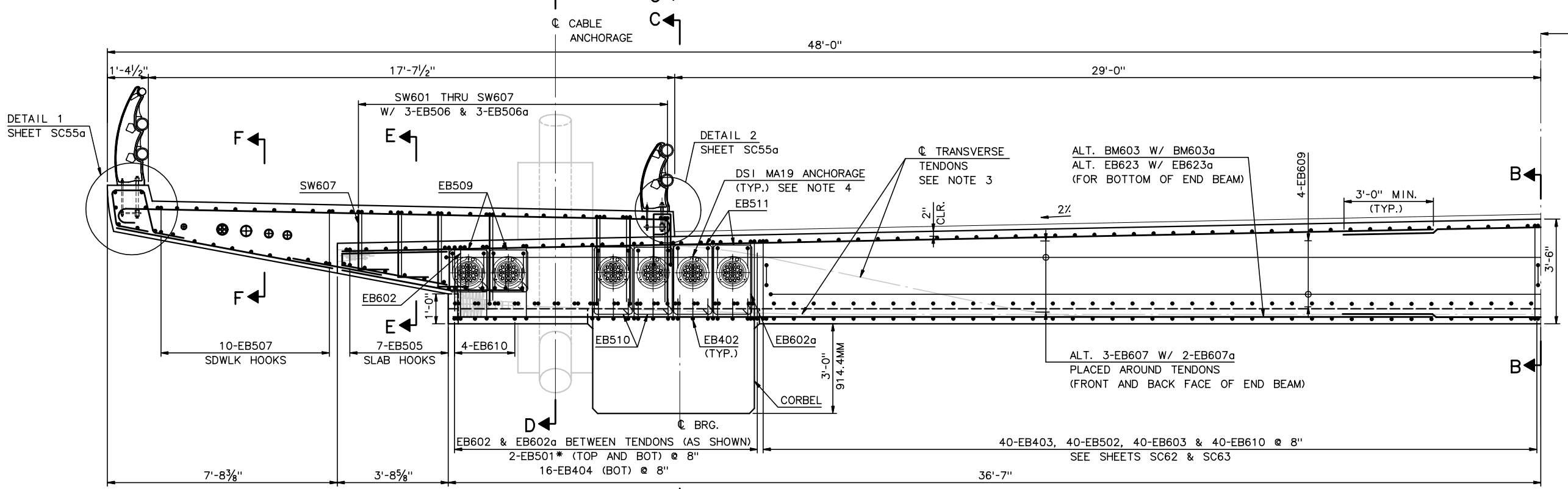

SECTION A-A END BEAM - ELEVATION

½" = 1'-0"

NOTES:

1. FOR SECTION B-B, C-C, & F-F, SEE SHEET SC62.
2. FOR SECTION E-E & H-H, SEE SHEET SC63.
3. FOR SECTION D-D, SEE SHEET SC64.
4. FOR TRANSVERSE TENDON PROFILES, SEE SHEETS SC70 & SC71.
5. FOR LONGITUDINAL TENDON PROFILE, SEE SHEETS SC65 THRU SC69.
6. FOR ADDITIONAL END BEAM REINFORCEMENT, SEE SHEETS SC62 THRU SC64a.
7. FOR BURSTING REINFORCEMENT, SEE SHEET SC64a.
8. BOTTOM TRANSVERSE PT SHOWN SCREENED IN PLAN VIEW.
9. FOR ADDITIONAL CORBEL REINFORCEMENT AND DETAILS, SEE SHEET SC64b.

RECORD DRAWINGS

No.	Date	Revisions	By

HNTB CORPORATION

STATE OF WISCONSIN
DEPARTMENT OF TRANSPORTATION

STRUCTURE B-40-413A

Designed By	SL	Design Checked	TZ	Drawn By	BM	Plans Checked	AP

SOUTH CABLE STAY
ABUTMENT END BEAM
1 OF 6

SHEET SC61 OF

STATE PROJECT I.D.	SHEET NUMBER
2235-00-70	8.83

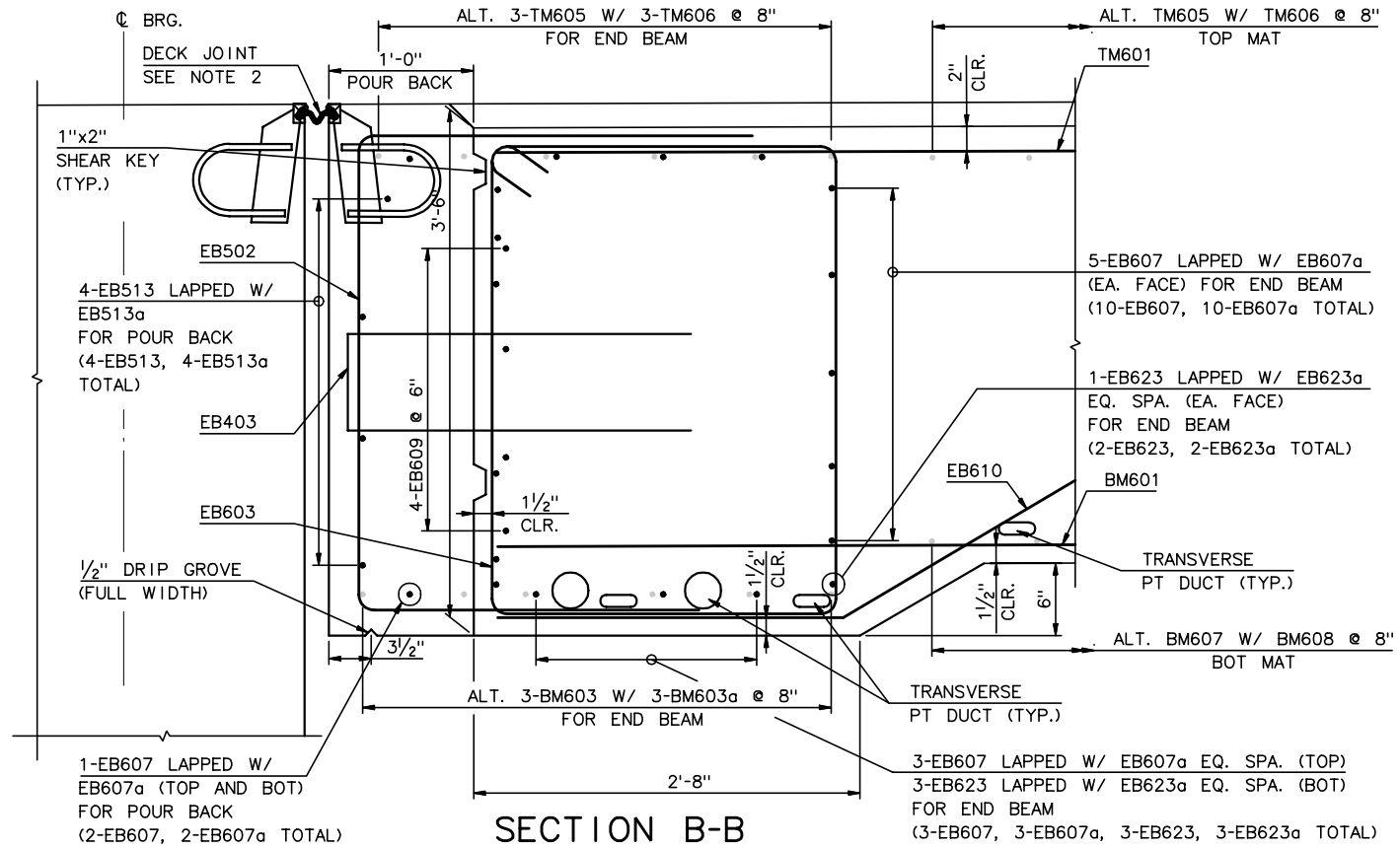

SECTION B-B

1½" = 1'-0"

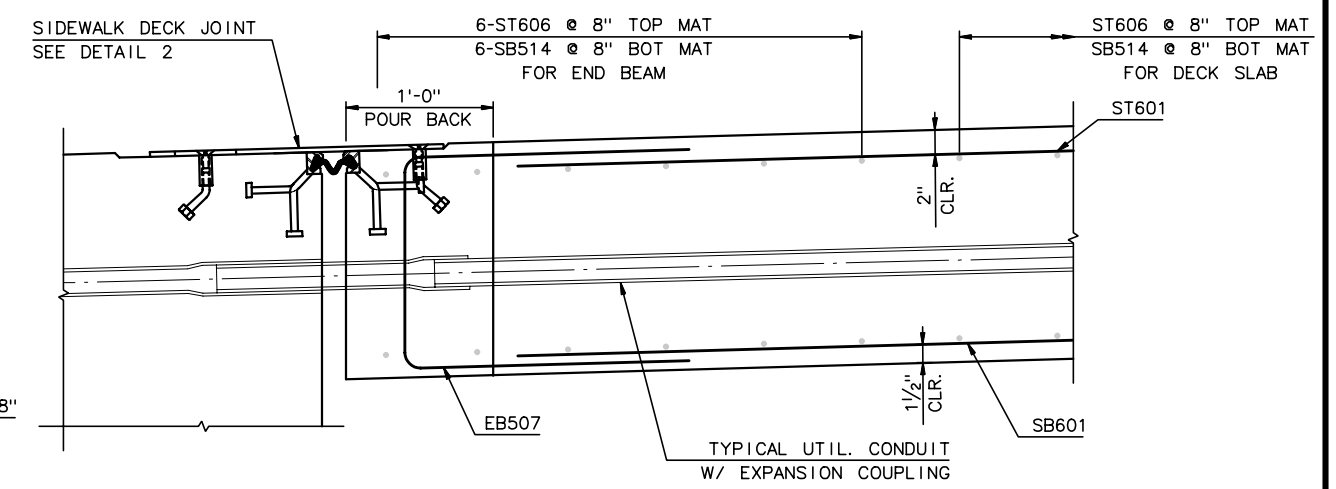

SECTION F-F

1½" = 1'-0"

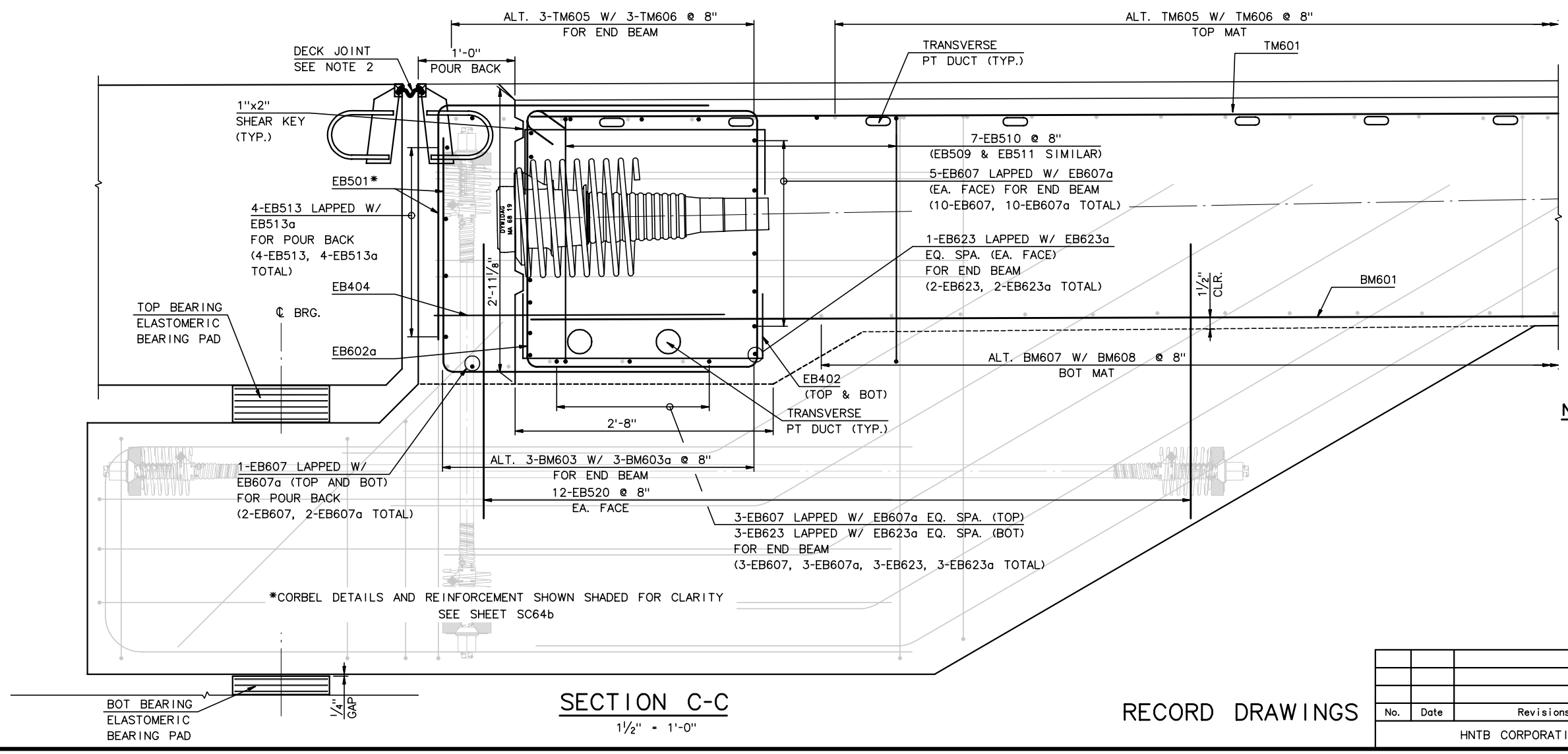

SECTION C-C

1½" = 1'-0"

NOTES:

1. FOR LOCATION OF SECTIONS B-B, C-C, & F-F, SEE SHEET SC61.
2. FOR DECK JOINT DETAILS, SEE SHEET SC75.
3. FOR ADDITIONAL END BEAM REINFORCEMENT, SEE SHEETS SC61, SC63 THRU SC64b.

RECORD DRAWINGS

No.	Date	Revisions	By

HNTB CORPORATION

STATE OF WISCONSIN
DEPARTMENT OF TRANSPORTATION

STRUCTURE B-40-413A

Designed By	SL	Design Checked	TZ	Drawn By	BM	Plans Checked	AP

SOUTH CABLE STAY
ABUTMENT END BEAM
2 OF 6

SHEET SC62 OF .

STATE PROJECT I.D.	SHEET NUMBER
2235-00-70	8.84

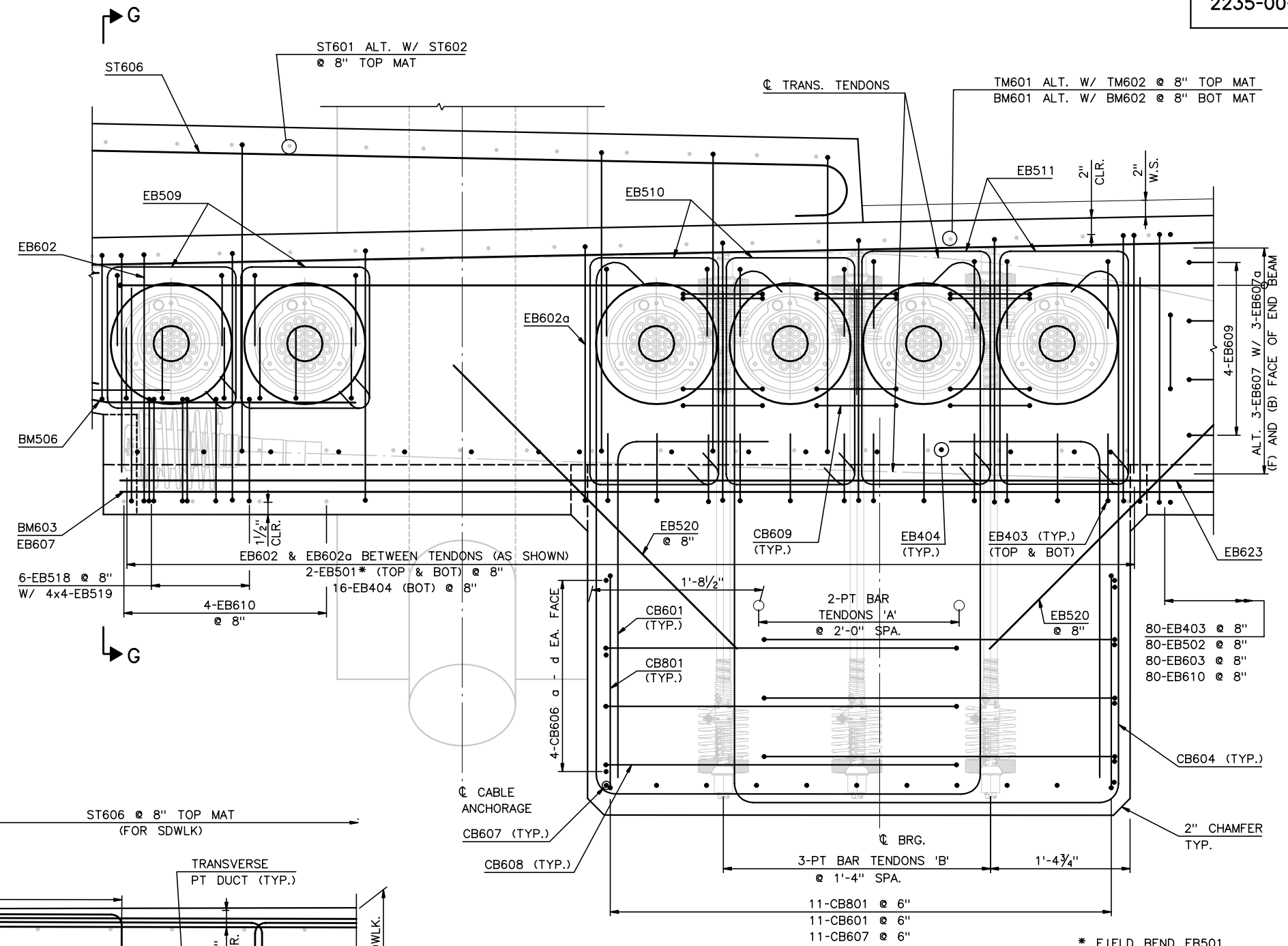

* FIELD BEND EB501

SECTION H-H

1½" = 1'-0"

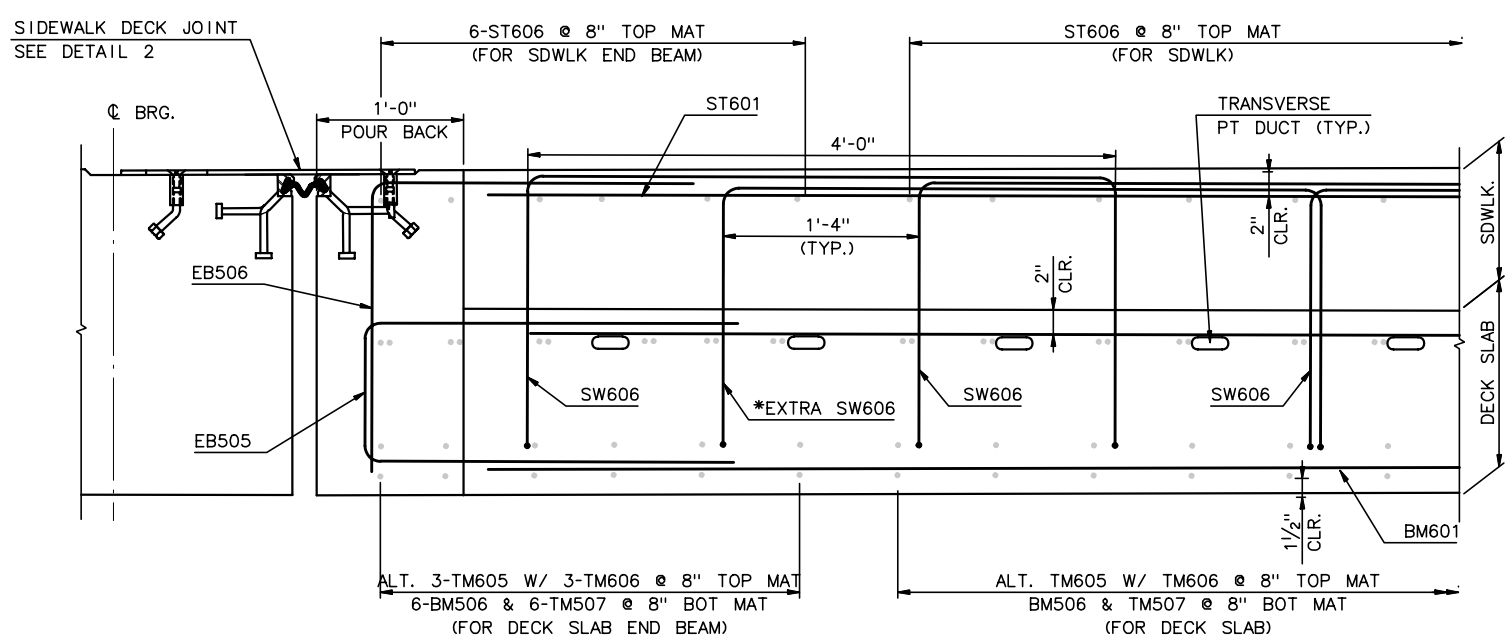

SECTION E-E

1½" = 1'-0"

*NOTE: SW601 THRU SW607 FOLLOW SIMILAR LAYOUT TO SW606, BARS SHALL BE SPACED TO PROVIDE A VERTICAL LEG AT 1'-4" ONE ADDITIONAL BAR REQUIRED AT EACH END.

NOTES:

1. FOR LOCATION OF SECTIONS E-E & H-H SEE SHEET SC61.
2. FOR SECTION G-G, SEE SHEET SC64.
3. FOR DECK JOINT DETAILS, SEE SHEET SC75.
4. FOR ADDITIONAL END BEAM REINFORCEMENT, SEE SHEETS SC61, SC2, & SC64 THRU SC64b.

RECORD DRAWINGS

No.	Date	Revisions	By

HNTB CORPORATION

STATE OF WISCONSIN
DEPARTMENT OF TRANSPORTATION

STRUCTURE B-40-413A

Designed By	SL	Design Checked	TZ	Drawn By	BM	Plans Checked	AP

SOUTH CABLE STAY
ABUTMENT END BEAM
3 OF 6

SHEET SC63 OF .

STATE PROJECT I.D.	SHEET NUMBER
2235-00-70	8.85

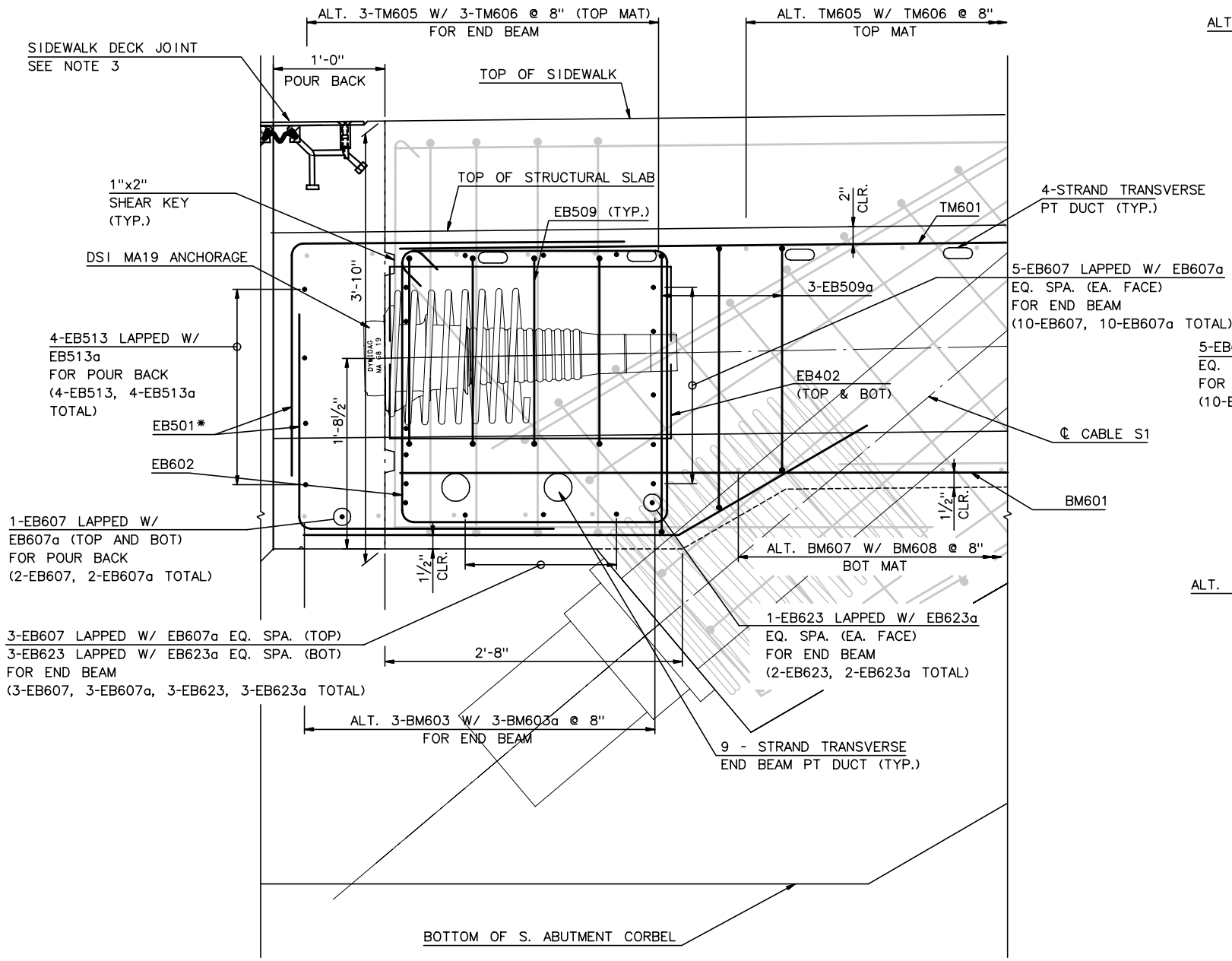

SECTION D-D

1½" = 1'-0"

NOTE: SIDEWALK STEEL NOT SHOWN FOR CLARITY.

* FIELD BEND EB501

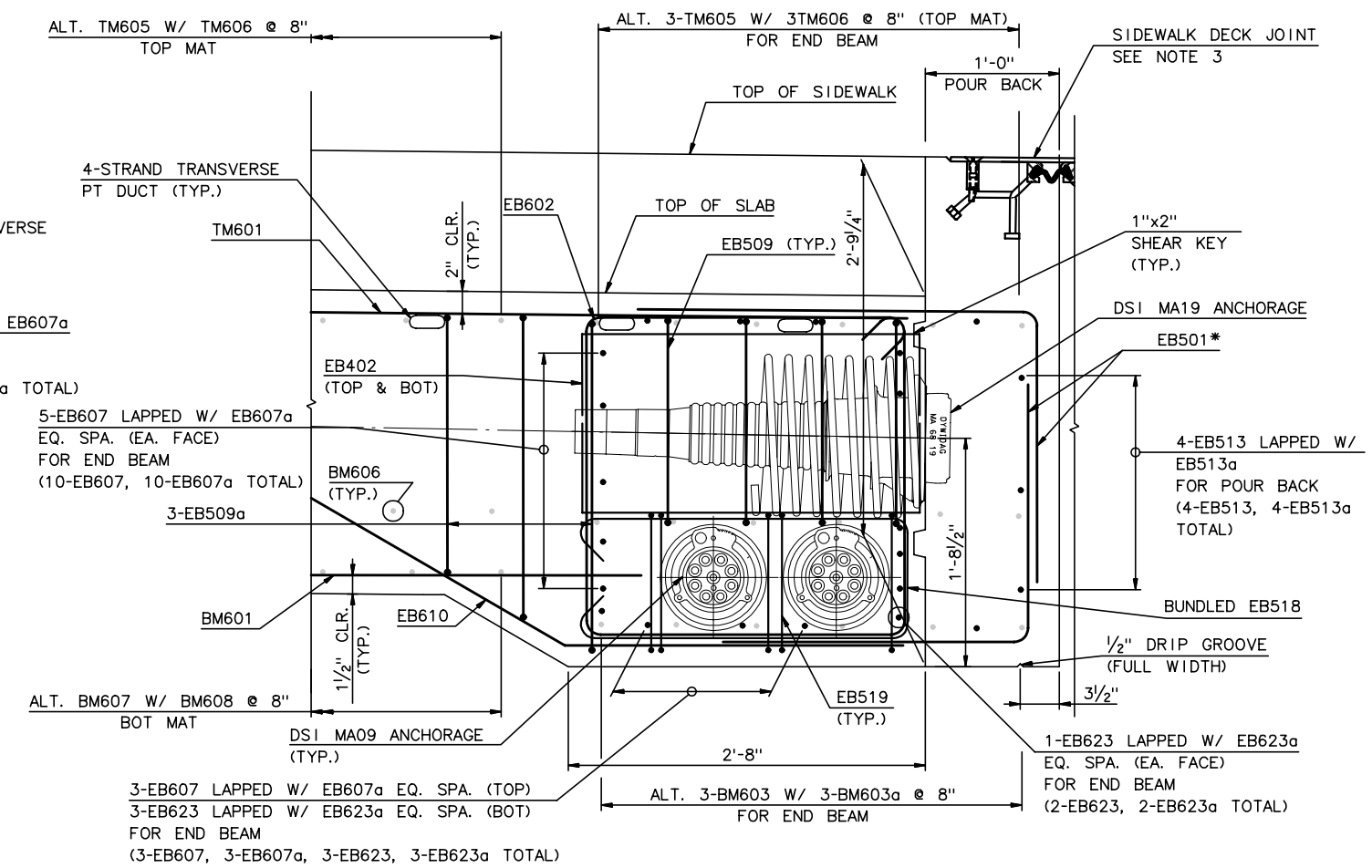

SECTION G-G

1½" = 1'-0"

NOTE: SIDEWALK STEEL NOT SHOWN FOR CLARITY.

* FIELD BEND EB501

NOTES:

1. FOR LOCATION OF SECTION D-D, SEE SHEET SC61.
2. FOR LOCATION OF SECTION G-G, SEE SHEET SC63.
3. FOR DECK JOINT DETAILS, SEE SHEET SC75.
4. IN SECTION D-D, CABLE ANCHORAGE STEEL SHOWN SHADED FOR CLARITY.

RECORD DRAWINGS

No.	Date	Revisions	By

HNTB CORPORATION

STATE OF WISCONSIN
DEPARTMENT OF TRANSPORTATION

STRUCTURE B-40-413A

Designed By	SL	Design Checked	TZ	Drawn By	BM	Plans Checked	AP

SOUTH CABLE STAY
ABUTMENT END BEAM
4 OF 6

SHEET SC64 OF .

STATE PROJECT I.D.	SHEET NUMBER
2235-00-70	8.86

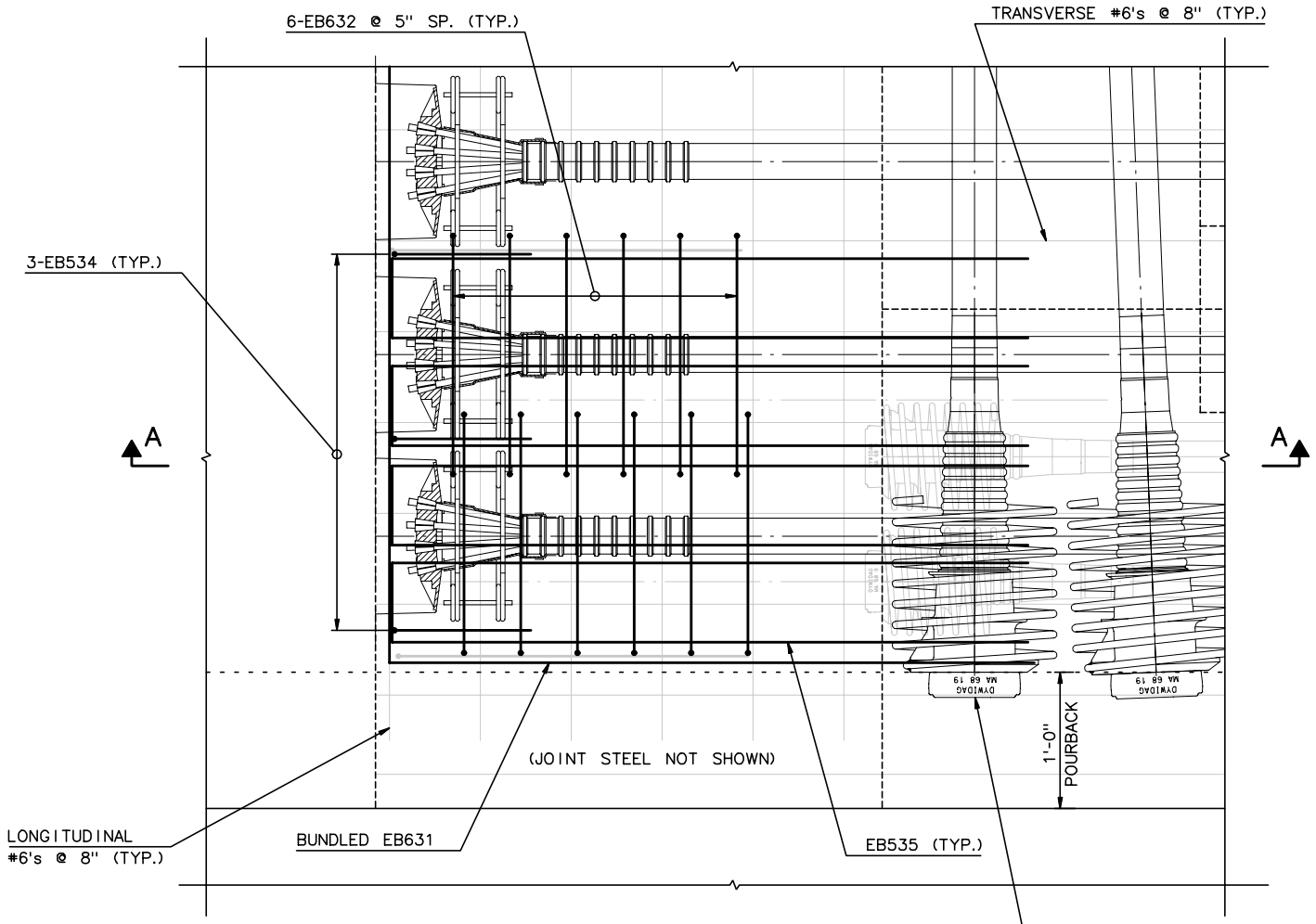

BLOCKOUT - PLAN

1½" = 1'-0"

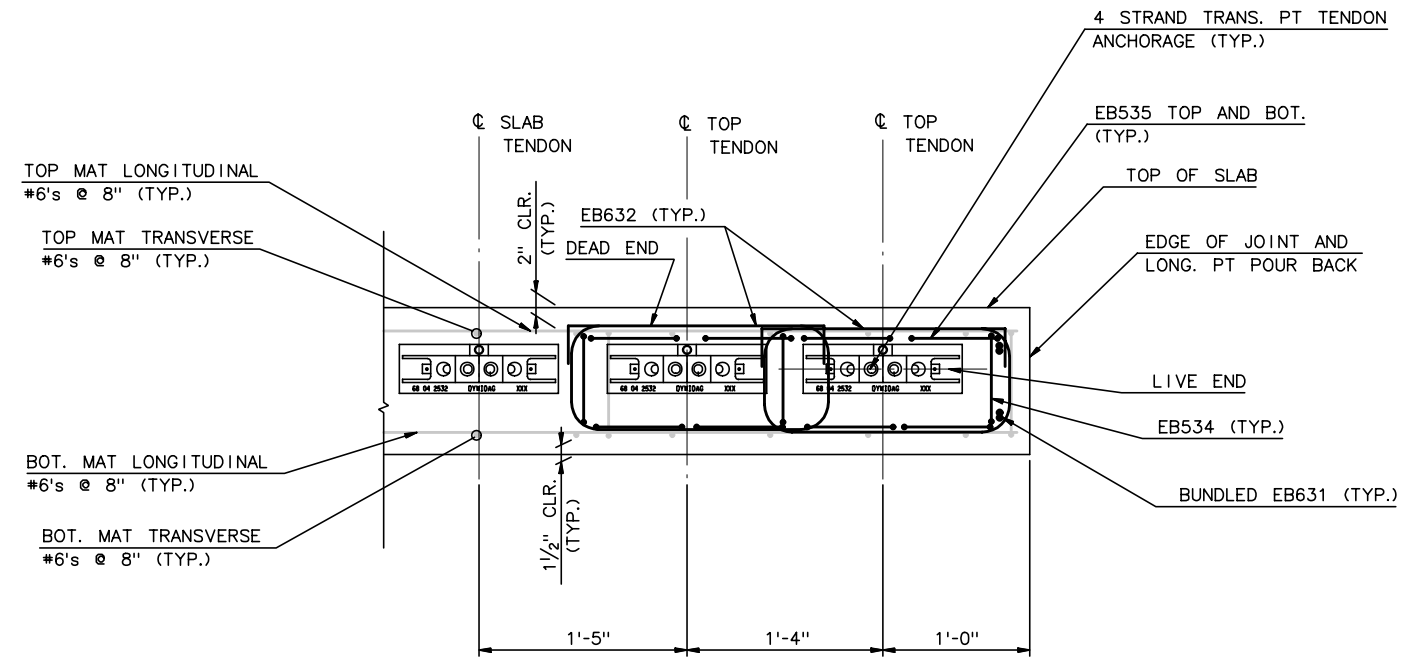

NOTE: SIDEWALK NOT SHOWN FOR CLARITY.

SECTION B-B
END BEAM LOCAL PT REINF.

1½" = 1'-0"

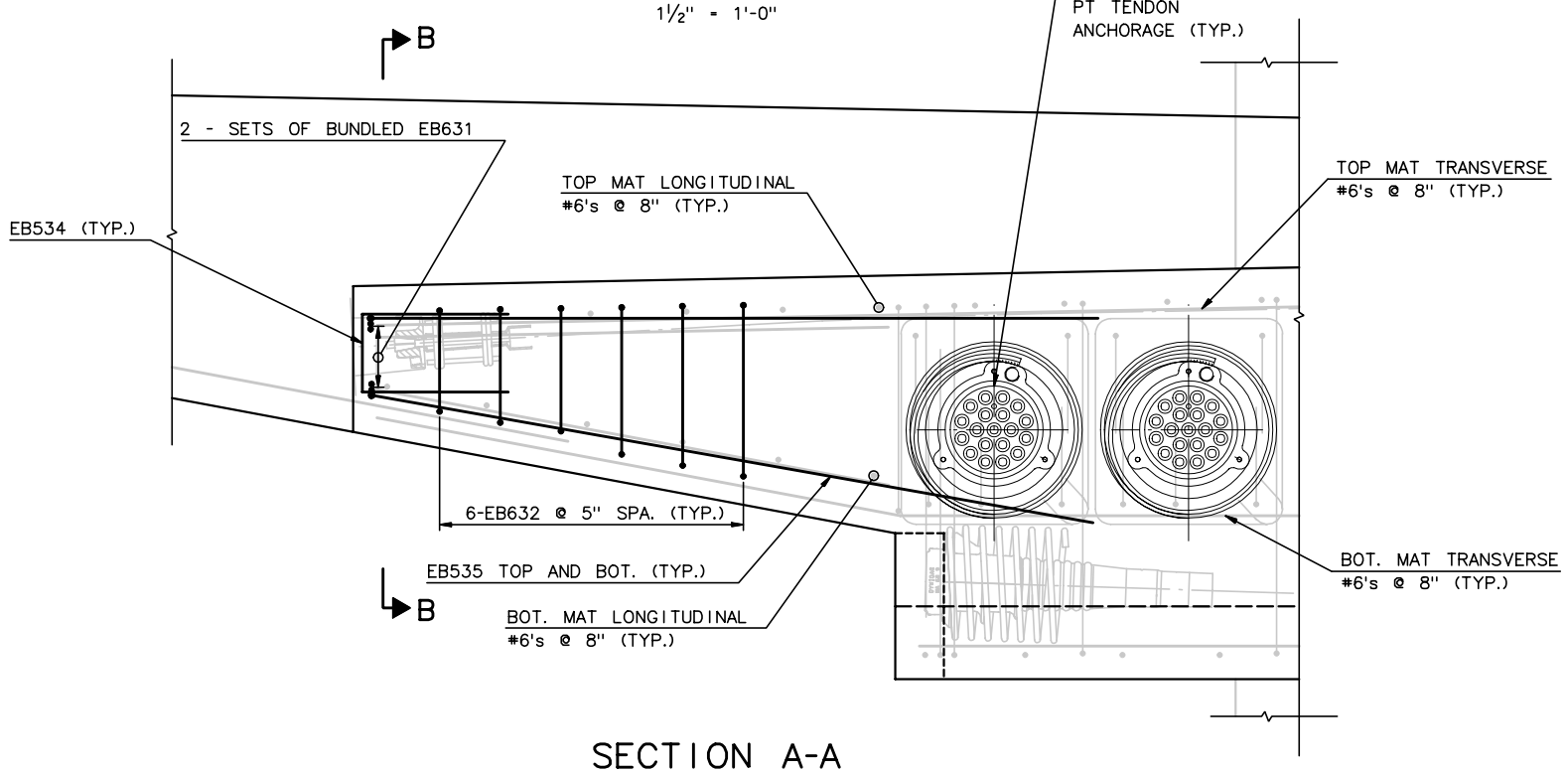

SECTION A-A
BLOCKOUT - ELEVATION

1½" = 1'-0"

NOTES:

1. SIDEWALK STEEL NOT SHOWN FOR CLARITY.

RECORD DRAWINGS

No.	Date	Revisions	By

HNTB CORPORATION

STATE OF WISCONSIN
DEPARTMENT OF TRANSPORTATION

STRUCTURE B-40-413A

Designed By	CE	Design Checked	TZ	Drawn By	SL	Plans Checked	AP

SOUTH CABLE STAY ABUTMENT END BEAM 5 OF 6

SHEET SC64a OF .

j:\cadd\ff31185\dgn\as built\south cablestay\sc64a-abendb5.dgn 02/11/03 02:58:15 PM

STATE PROJECT I.D.	SHEET NUMBER
2235-00-70	8.87

PT BAR QUANITIES			
PT BAR	DSI 1¼" ø PT BAR LENGTH*	QUANTITY OF BARS	ANCHORAGE PLATES
'A'	11'-4"	4	8 - 6"X7"X1½"
'B'	5'-0"	6	12 - 6"X7"X1½"
TOTAL 1¼" ø PT BAR LENGTH	= 75'-4"	14 TOTAL	20 - 6"X7"X1½" TOTAL

*LENGTH IS FROM ANCHOR PT. TO ANCHOR PT. ADDITIONAL LENGTH FOR STRESSING IS NOT INCLUDED.

NOTES:

1. FOR LOCATION OF SECTIONS C-C SEE SHEET SC61.
2. FOR DECK JOINT DETAILS, SEE SHEET SC75.
3. FOR ADDITIONAL END BEAM REINFORCEMENT, SEE SHEETS SC61 THRU SC64a.
4. SPIRAL TIE AT EACH PT BAR TENDON SHALL CONFORM TO ASTM A82 W5.5 SMOOTH WIRE WITH 8 TURNS AT PITCH 1¾", O.D. 8½".

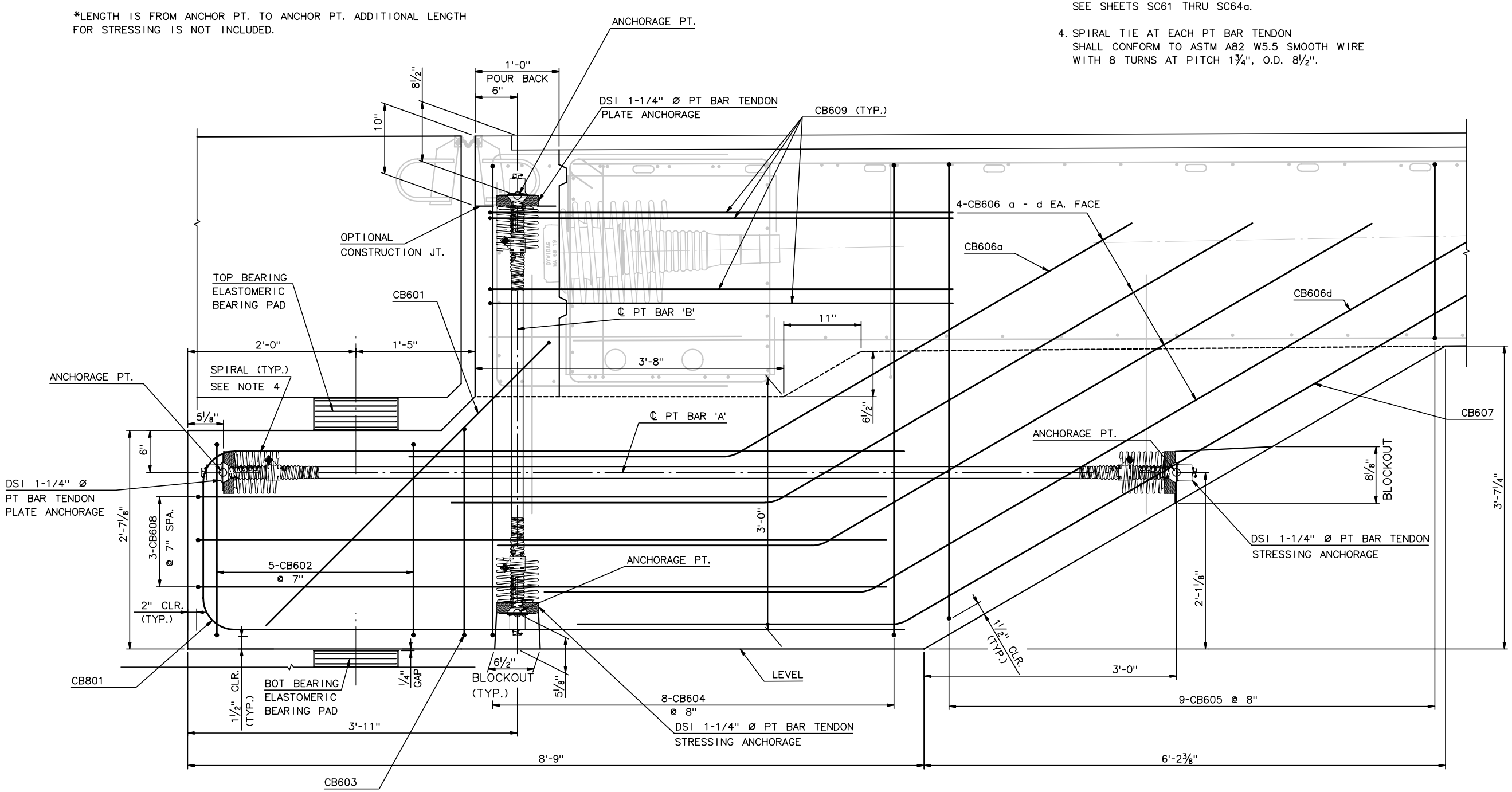

SECTION C-C

1½" = 1'-0"

RECORD DRAWINGS

No.	Date	Revisions	By
1	1-23-02	ADD TAPER DIMS	AP

HNTB CORPORATION

STATE OF WISCONSIN
DEPARTMENT OF TRANSPORTATION

STRUCTURE B-40-413A

Designed By	SL	Design Checked	TZ	Drawn By	BM	Plans Checked	AP

SOUTH CABLE STAY
ABUTMENT END BEAM
6 OF 6

SHEET SC64b OF .

STATE PROJECT I.D.	SHEET NUMBER
2235-00-70	8.88

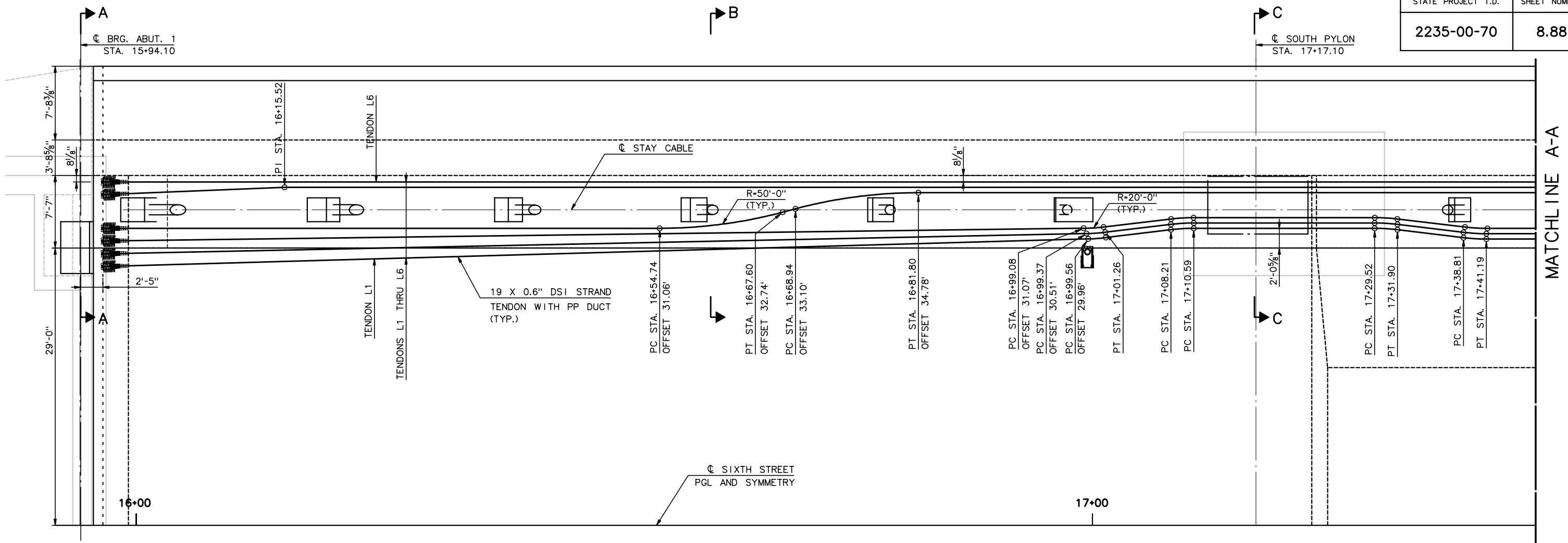

TENDON HORIZONTAL PROFILE
HALF PLAN

N.T.S.

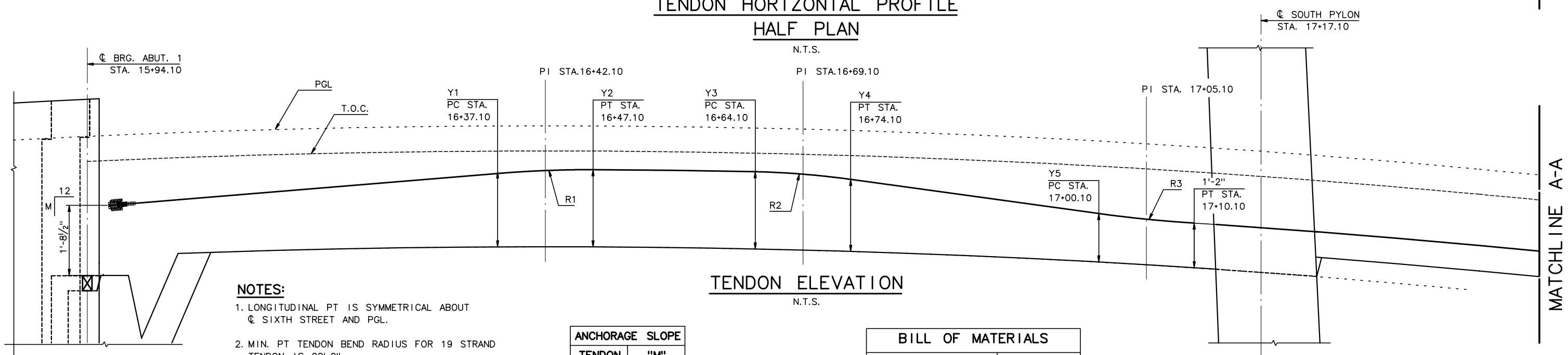

TENDON ELEVATION

N.T.S.

NOTES:

1. LONGITUDINAL PT IS SYMMETRICAL ABOUT ℄ SIXTH STREET AND PGL.
2. MIN. PT TENDON BEND RADIUS FOR 19 STRAND TENDON IS 20'-0".
3. ALL PT DIMENSIONS ARE TO CENTER OF DUCT.
4. TENDONS L1 THRU L6 SHALL BE DOUBLE END STRESSED TO 824 KIPS.
5. SEE SHEET SC66 FOR VALUES OF Y AND R.
6. FOR SECTIONS A-A, B-B AND C-C, SEE SHEET SC69.

ANCHORAGE SLOPE	
TENDON	"M"
L1	0.243
L2	0.241
L3	0.238
L4	0.224
L5	0.221
L6	0.219

BILL OF MATERIALS	
ITEMS	QUANTITY
DSI MA19 ANCHORAGES	24
LIN. FT * 0.6" STRAND	228 STRANDS X 580'
LIN. FT POLYPROPELENE DUCT	12 X 580'

* LENGTH DOES NOT INCLUDE ADDITIONAL STRESSING LENGTH

RECORD DRAWINGS

No.	Date	Revisions	By

HNTB CORPORATION

STATE OF WISCONSIN
DEPARTMENT OF TRANSPORTATION

STRUCTURE B-40-413A

Designed By	SL	Design Checked	TZ	Drawn By	JE	Plans Checked	SL

SOUTH CABLE STAY
LONGITUDINAL TENDON
1 OF 5

SHEET SC65 OF .

STATE PROJECT I.D.	SHEET NUMBER
2235-00-70	8.89

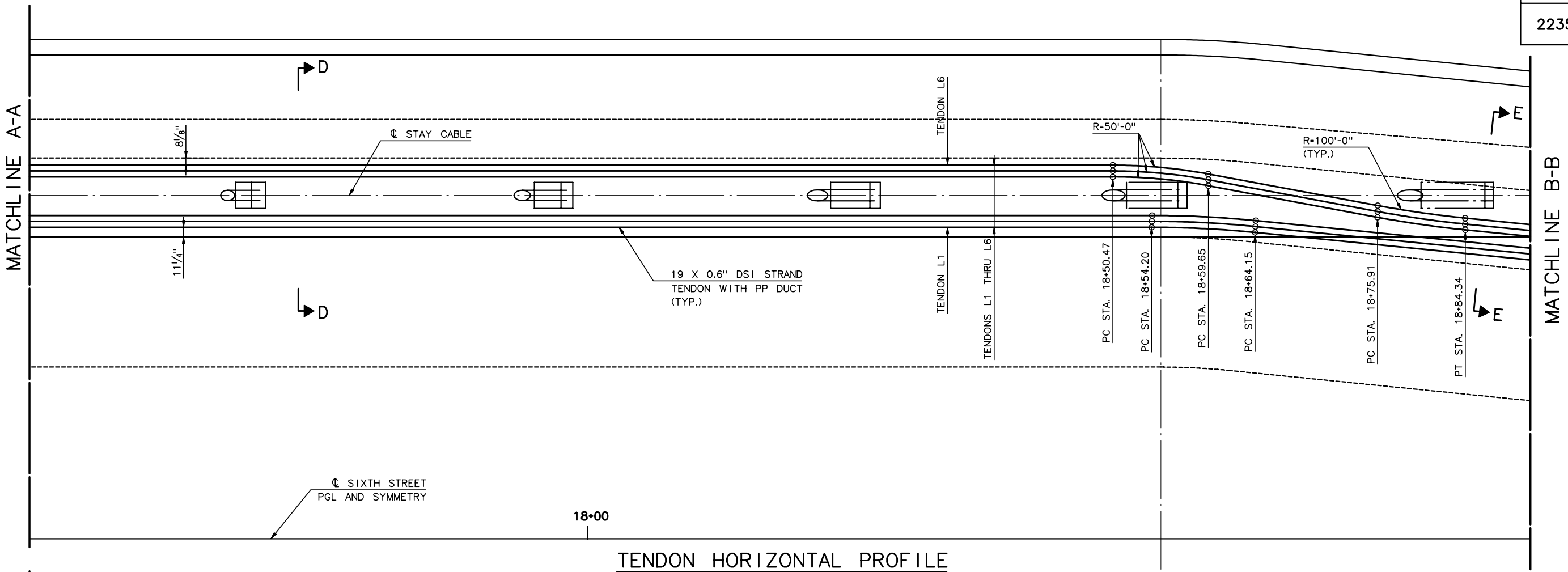

TENDON HORIZONTAL PROFILE
HALF PLAN

N.T.S.

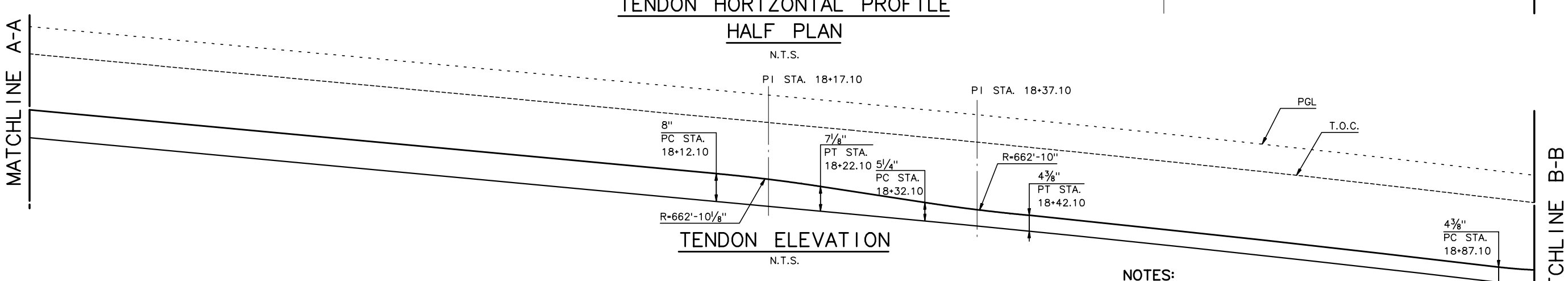

TENDON ELEVATION

N.T.S.

TENDON	Y1	R1	Y2	Y3	R2	Y4	Y5	R3	R4	Y6	Y7	Y8	Y9	R5	R6	Y10
L1	1'-9 1/2"	479'-6 1/8"	1'-10 5/8"	1'-10 5/8"	412'-11 7/8"	1'-9 1/4"	1'-3 1/4"	531'-1 1/4"	175'-5 1/2"	7 7/8"	1'-6"	1'-5 7/8"	8 1/8"	164'-10"	167'-10 7/8"	8"
L2	1'-9 3/8"	484'-9 7/8"	1'-10 1/2"	1'-10 1/2"	407'-8 1/4"	1'-9 1/8"	1'-3"	675'-9 3/4"	177'-3 3/4"	7 3/4"	1'-5 7/8"	1'-5 3/4"	8"	166'-3 1/4"	171'-1 5/8"	7 7/8"
L3	1'-9 1/4"	490'-2 7/8"	1'-10 3/8"	1'-10 3/8"	412'-6 1/2"	1'-9"	1'-3"	689'-3 1/4"	180'-8 5/8"	7 3/4"	1'-5 5/8"	1'-5 1/2"	8"	169'-5 3/8"	174'-3 3/4"	7 7/8"
L4	1'-8 5/8"	519'-3 5/8"	1'-9 3/4"	1'-9 3/4"	438'-8 3/8"	1'-8 1/2"	1'-2 7/8"	765'-6"	184'-3 5/8"	7 5/8"	1'-5 3/8"	1'-5 3/8"	7 7/8"	172'-9 1/2"	177'-7 1/4"	7 3/4"
L5	1'-8 1/2"	525'-6 3/8"	1'-9 5/8"	1'-9 5/8"	444'-4"	1'-8 3/8"	1'-2 7/8"	782'-9 7/8"	186'-1 1/4"	7 5/8"	1'-5 1/4"	1'-5 1/4"	7 7/8"	174'-5 7/8"	181'-0 1/4"	7 3/4"
L6	1'-8 1/2"	531'-11"	1'-9 1/2"	1'-9 1/2"	450'-1 3/8"	1'-8 1/4"	1'-2 7/8"	800'-11"	187'-11 5/8"	7 5/8"	1'-5 1/8"	1'-5 1/8"	7 7/8"	176'-2 5/8"	184'-6 7/8"	7 5/8"

TENDON	Y11	Y12	Y13	R7	R8	Y14	Y15	Y16	Y17	R9	R10	Y18	Y19	Y20	Y21	R11
L1	1'-6 5/8"	1'-6 1/2"	8 3/8"	153'-2"	164'-6 3/4"	8"	1'-6 5/8"	1'-6 1/2"	8 1/4"	139'-1"	175'-1 7/8"	7 3/4"	1'-5 3/4"	1'-5 3/4"	8"	164'-5 7/8"
L2	1'-6 3/8"	1'-6 3/8"	8 1/4"	155'-8 7/8"	167'-8 1/2"	8"	1'-6 3/8"	1'-6 3/8"	8 1/4"	148'-3 3/4"	176'-9 1/2"	7 3/4"	1'-5 5/8"	1'-5 5/8"	8"	166'-0 1/4"
L3	1'-6 1/8"	1'-6 1/8"	8 1/4"	158'-6 3/4"	170'-9"	7 7/8"	1'-6 1/8"	1'-6 1/8"	8 1/4"	150'-10 3/8"	178'-5 3/4"	7 3/4"	1'-5 1/2"	1'-5 1/2"	8"	167'-7 1/4"
L4	1'-5 7/8"	1'-5 7/8"	8 1/8"	161'-5 7/8"	173'-11"	7 7/8"	1'-5 7/8"	1'-5 7/8"	8 1/8"	153'-6 1/8"	180'-2 1/2"	7 3/4"	1'-5 3/8"	1'-5 3/8"	8"	169'-2 5/8"
L5	1'-5 5/8"	1'-5 5/8"	8"	164'-6 1/4"	177'-2 1/4"	7 3/4"	1'-5 5/8"	1'-5 5/8"	8"	156'-3"	181'-11 1/2"	7 5/8"	1'-5 1/4"	1'-5 1/4"	7 7/8"	170'-10 1/4"
L6	1'-5 3/8"	1'-5 3/8"	8"	167'-8"	180'-7"	7 3/4"	1'-5 1/2"	1'-5 3/8"	8"	159'-1"	183'-8 7/8"	7 5/8"	1'-5 1/8"	1'-5 1/8"	7 7/8"	172'-6 1/4"

NOTES:

1. LONGITUDINAL PT IS SYMMETRICAL ABOUT ℄ SIXTH STREET AND PGL.
2. MIN. PT TENDON BEND RADIUS FOR 19 STRAND TENDON IS 20'-0".
3. ALL PT DIMENSIONS ARE TO CENTER OF DUCT.
4. TENDONS L1 THRU L6 SHALL BE DOUBLE END STRESSED TO 824 KIPS.
5. FOR SECTIONS D-D AND E-E, SEE SHEET SC69.

RECORD DRAWINGS

No.	Date	Revisions	By

HNTB CORPORATION

STATE OF WISCONSIN
DEPARTMENT OF TRANSPORTATION

STRUCTURE B-40-413A

Designed By	SL	Design Checked	TZ	Drawn By	JE	Plans Checked	SL

SOUTH CABLE STAY
LONGITUDINAL PT
2 OF 5

SHEET SC66 OF .

STATE PROJECT I.D.	SHEET NUMBER
2235-00-70	8.90

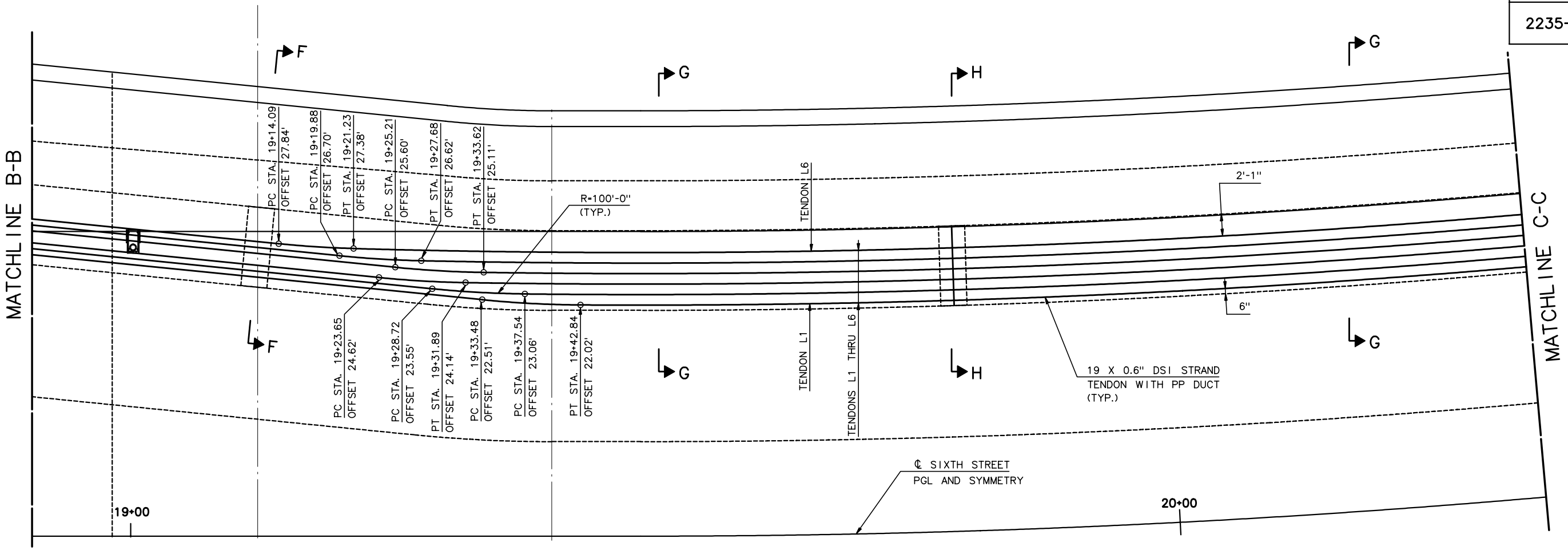

TENDON HORIZONTAL PROFILE
HALF PLAN

N.T.S.

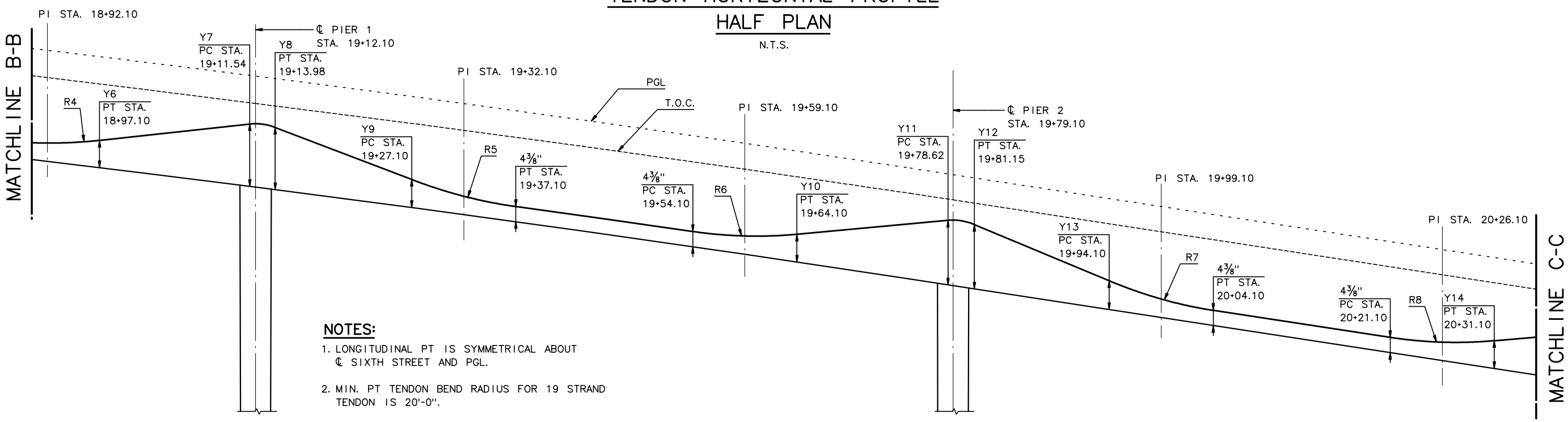

TENDON ELEVATION

N.T.S.

NOTES:

1. LONGITUDINAL PT IS SYMMETRICAL ABOUT ℄ SIXTH STREET AND PGL.
2. MIN. PT TENDON BEND RADIUS FOR 19 STRAND TENDON IS 20'-0".
3. ALL PT DIMENSIONS ARE TO CENTER OF DUCT.
4. TENDONS L1 THRU L6 SHALL BE DOUBLE END STRESSED TO 824 KIPS.
5. SEE SHEET SC66 FOR VALUES OF Y AND R.
6. FOR SECTIONS F-F, G-G AND H-H, SEE SHEET SC69.

RECORD DRAWINGS

No.	Date	Revisions	By

HNTB CORPORATION

STATE OF WISCONSIN
DEPARTMENT OF TRANSPORTATION

STRUCTURE B-40-413A

Designed By	SL	Design Checked	TZ	Drawn By	JE	Plans Checked	SL

SOUTH CABLE STAY
LONGITUDINAL PT
3 OF 5

SHEET SC67 OF .

STATE PROJECT I.D.	SHEET NUMBER
2235-00-70	8.91

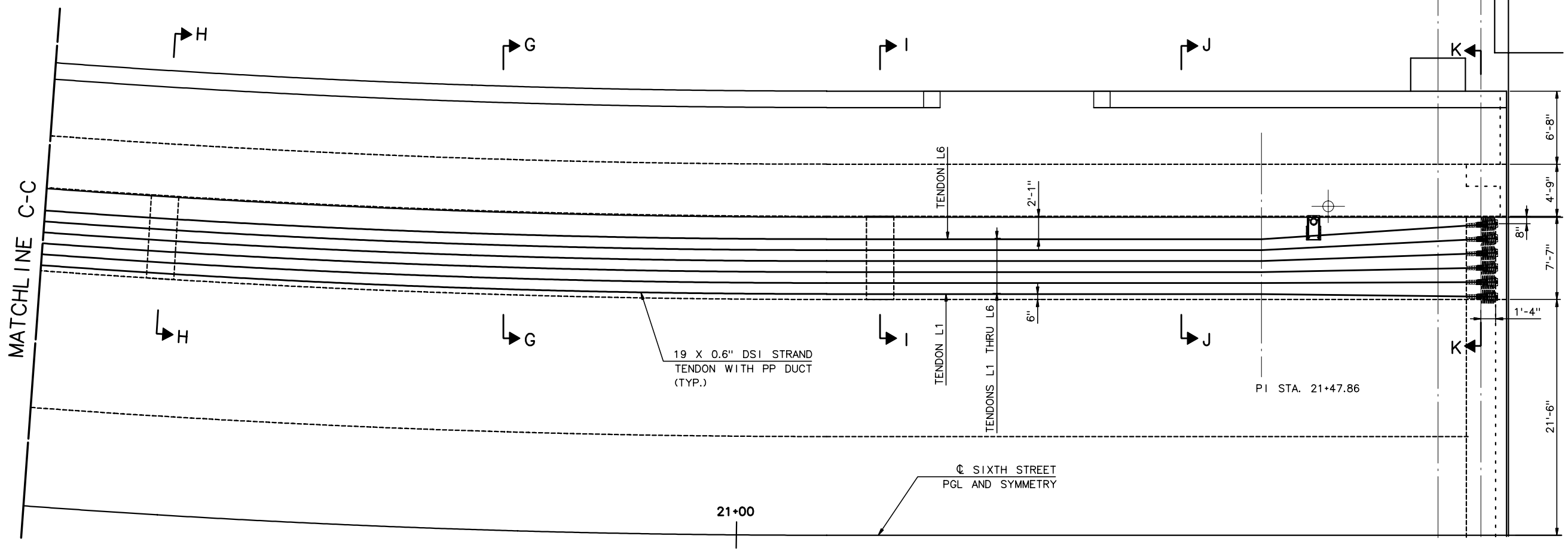

TENDON HORIZONTAL PROFILE
HALF PLAN

N.T.S.

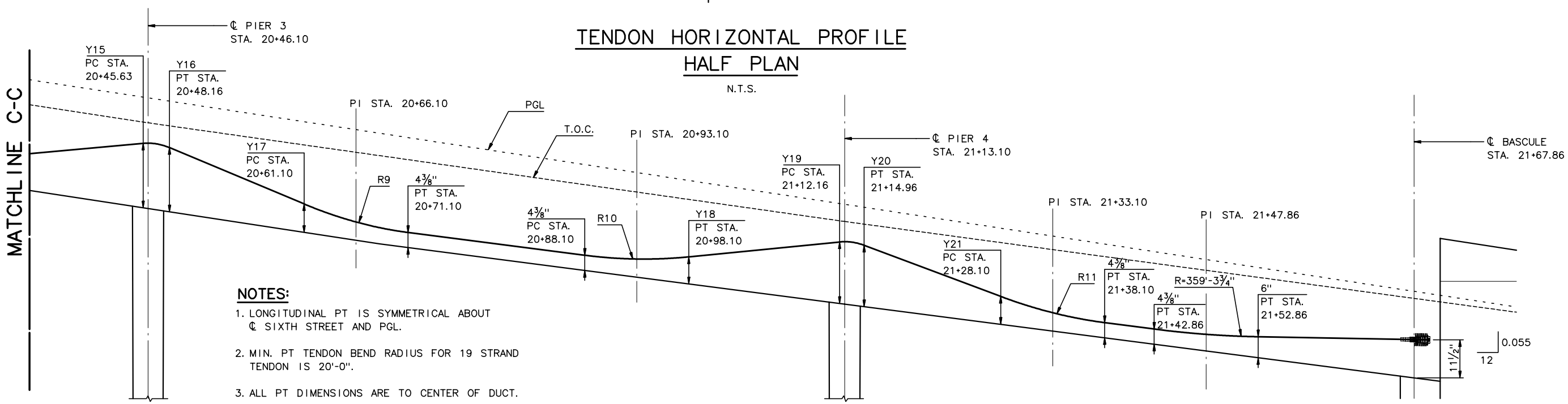

TENDON ELEVATION

N.T.S.

NOTES:

1. LONGITUDINAL PT IS SYMMETRICAL ABOUT ℄ SIXTH STREET AND PGL.
2. MIN. PT TENDON BEND RADIUS FOR 19 STRAND TENDON IS 20'-0".
3. ALL PT DIMENSIONS ARE TO CENTER OF DUCT.
4. TENDONS L1 THRU L6 SHALL BE DOUBLE END STRESSED TO 824 KIPS.
5. SEE SHEET SC66 FOR VALUES OF Y AND R.
6. FOR SECTIONS G-G, H-H, I-I, J-J AND K-K, SEE SHEET SC69.

RECORD DRAWINGS

No.	Date	Revisions	By

HNTB CORPORATION

STATE OF WISCONSIN
DEPARTMENT OF TRANSPORTATION

STRUCTURE B-40-413A

Designed By	SL	Design Checked	TZ	Drawn By	JE	Plans Checked	SL

SOUTH CABLE STAY
LONGITUDINAL PT
4 OF 5

SHEET SC68 OF .

STATE PROJECT I.D.	SHEET NUMBER
2235-00-70	8.92

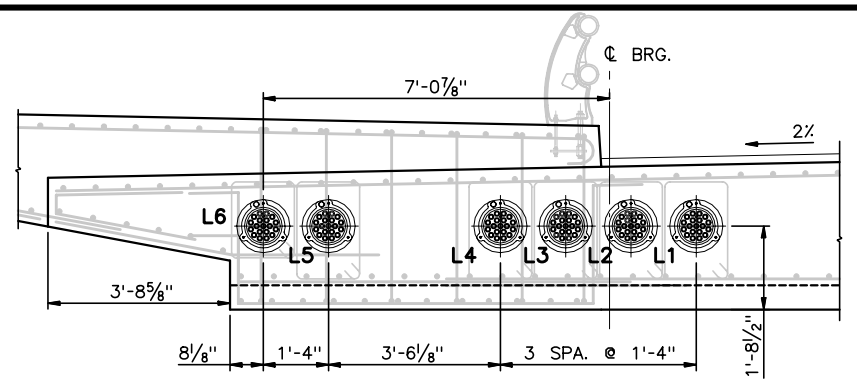

SECTION A-A
½" = 1'-0"

TENDON	DIMENSION "A"
L1	1'-11¼"
L2	1'-11"
L3	1'-10¾"
L4	1'-10⅝"
L5	1'-9⅝"
L6	1'-9½"

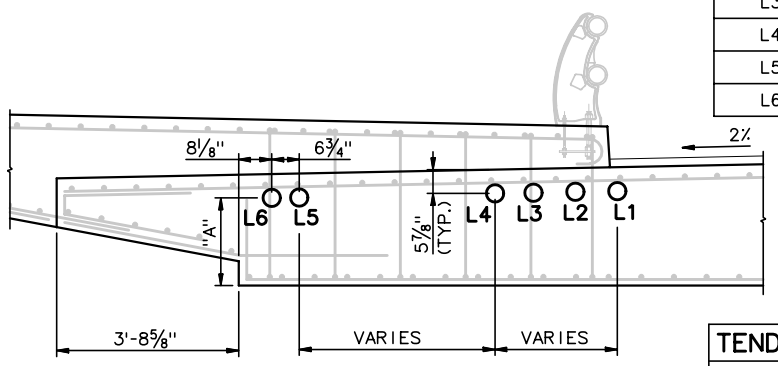

SECTION B-B
½" = 1'-0"

TENDON	DIMENSION "B"
L1	1'-6¼"
L2	1'-6⅛"
L3	1'-5⅞"
L4	1'-5⅝"
L5	1'-5½"
L6	1'-5⅜"

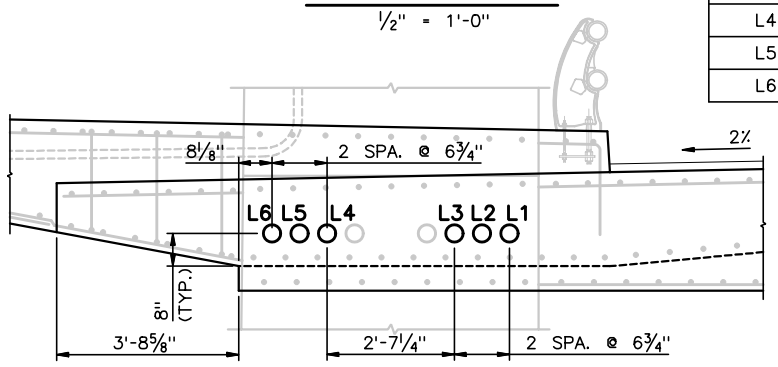

SECTION C-C
½" = 1'-0"

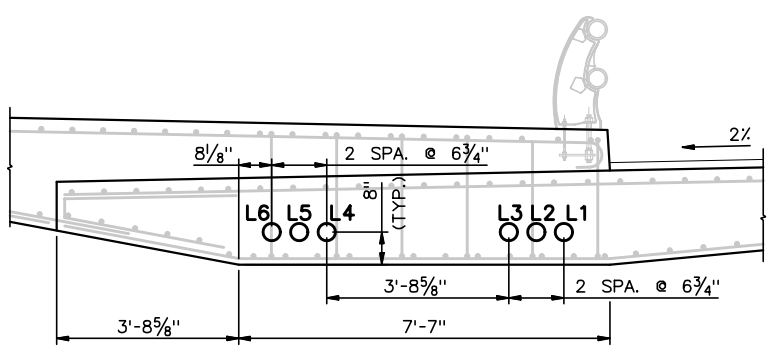

SECTION D-D
½" = 1'-0"

TENDON	DIMENSION "C"
L1	1'-6⅞"
L2	1'-6⅝"
L3	1'-6⅜"
L4	1'-6⅛"
L5	1'-5⅞"
L6	1'-5⅝"

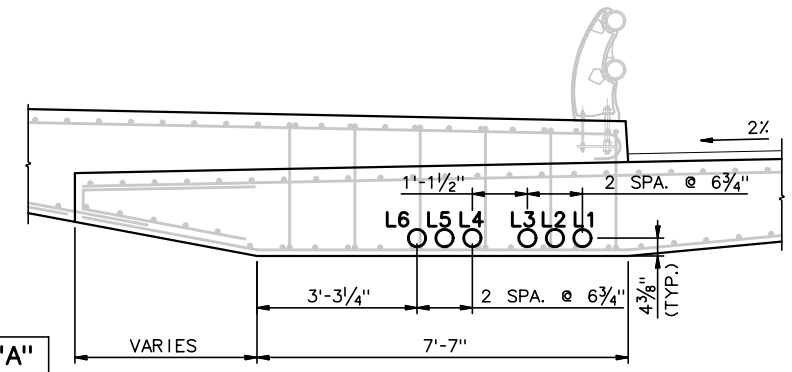

SECTION E-E
½" = 1'-0"

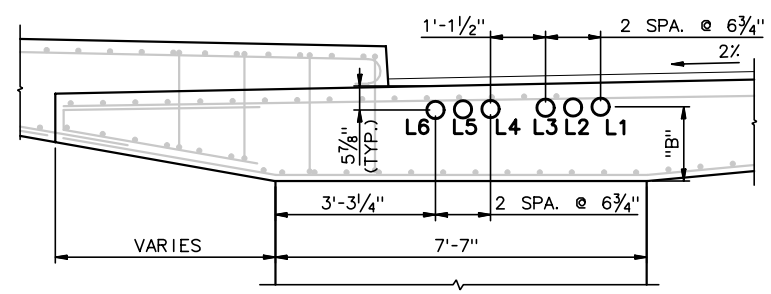

SECTION F-F
½" = 1'-0"

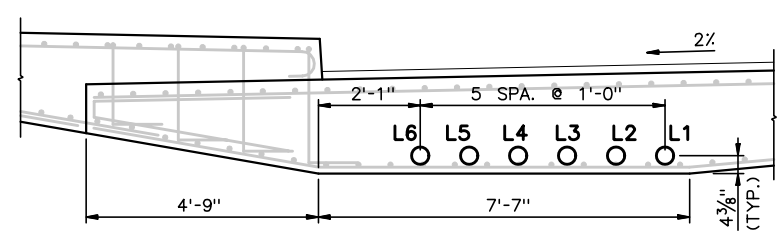

SECTION G-G
½" = 1'-0"

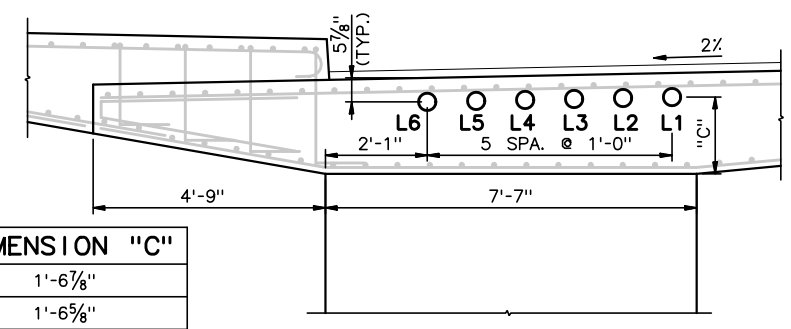

SECTION H-H
½" = 1'-0"

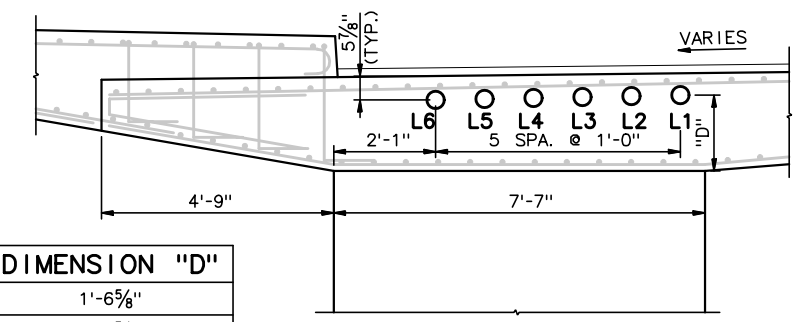

SECTION I-I
½" = 1'-0"

TENDON	DIMENSION "D"
L1	1'-6⅝"
L2	1'-6⅜"
L3	1'-6⅛"
L4	1'-5⅞"
L5	1'-5⅝"
L6	1'-5⅜"

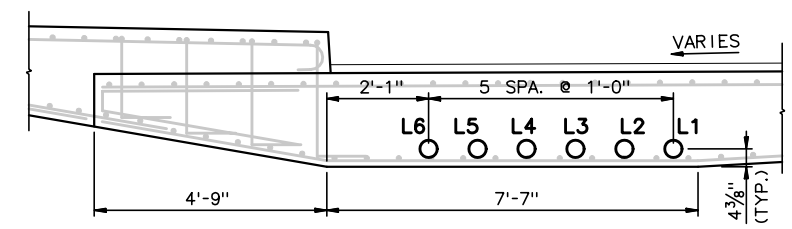

SECTION J-J
½" = 1'-0"

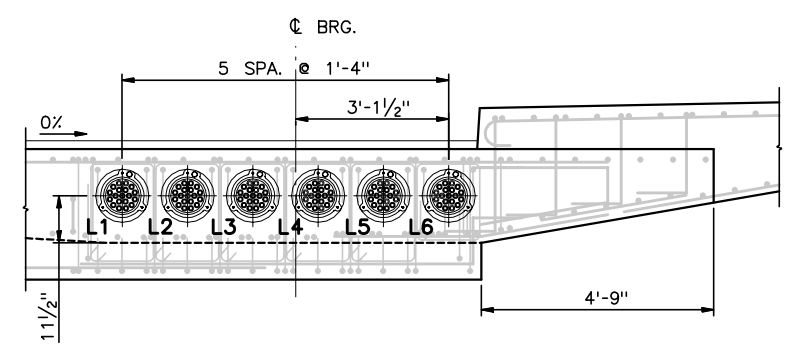

SECTION K-K
½" = 1'-0"

NOTES:

1. ALL PT DIMENSIONS ARE TO CENTER OF DUCT.

RECORD DRAWINGS

No.	Date	Revisions	By

HNTB CORPORATION

STATE OF WISCONSIN
DEPARTMENT OF TRANSPORTATION

STRUCTURE B-40-413A

Designed By	SL	Design Checked	AP	Drawn By	JE	Plans Checked	SL

SOUTH CABLE STAY
LONGITTUDINAL PT
5 OF 5

SHEET SC69 OF .

STATE PROJECT I.D.	SHEET NUMBER
2235-00-70	8.93

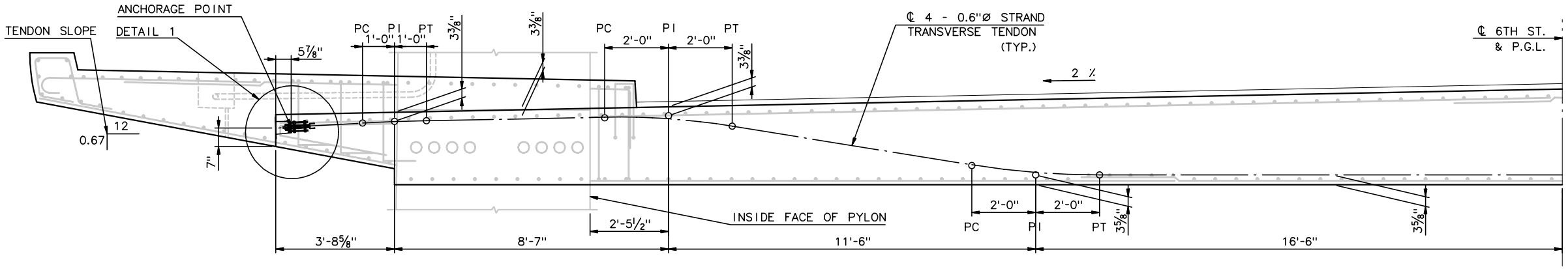

PROFILE A - BACKSPAN (PYLON SECTION SHOWN)

½" = 1'-0"

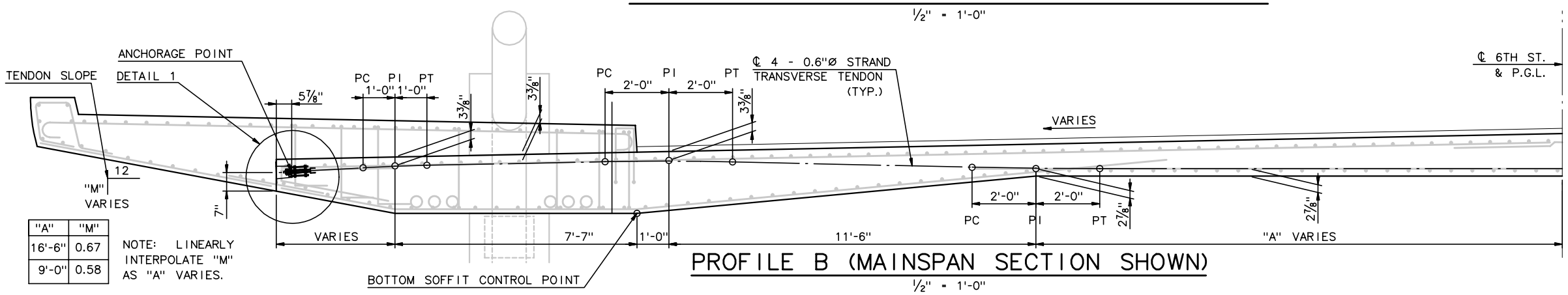

"A"	"M"
16'-6"	0.67
9'-0"	0.58

NOTE: LINEARLY INTERPOLATE "M" AS "A" VARIES.

PROFILE B (MAINSPAN SECTION SHOWN)

½" = 1'-0"

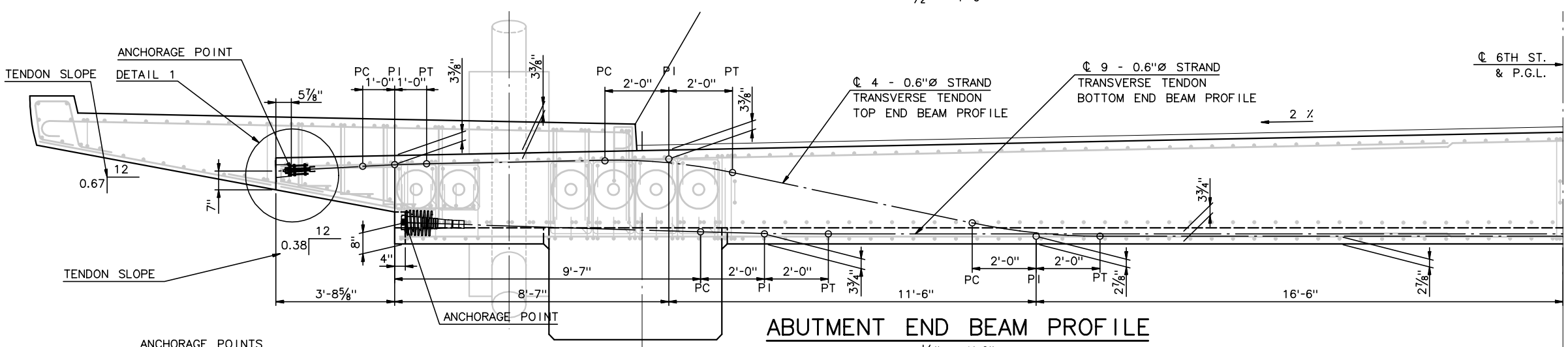

ABUTMENT END BEAM PROFILE

½" = 1'-0"

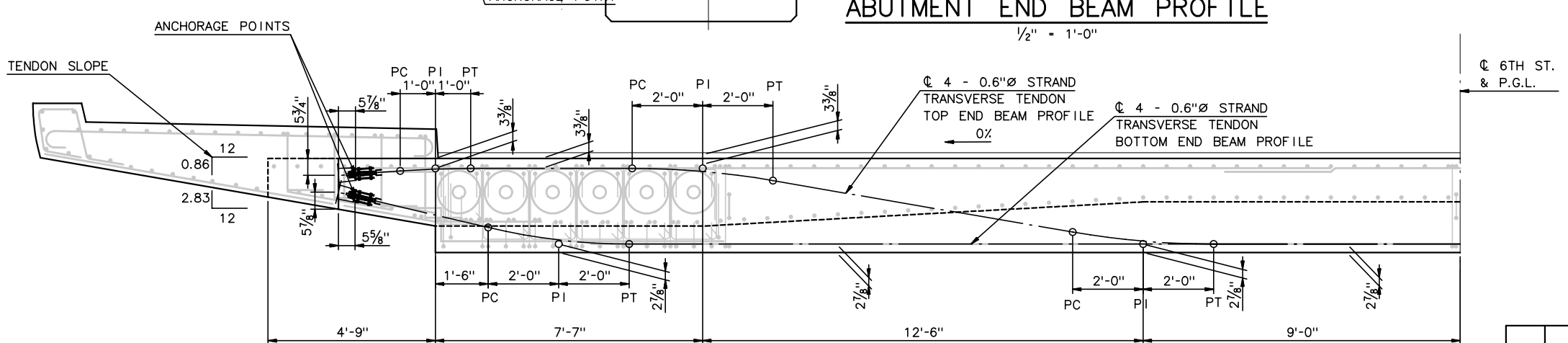

BASCULE END BEAM PROFILE

½" = 1'-0"

NOTES:

1. ALL TENDON DIMENSIONS ARE TO THE CENTERLINE OF DUCT.
2. THE MINIMUM BEND RADIUS FOR A 4 STRAND TENDON SHALL BE 15'-0".
3. ALL "PROFILE A" 4 STRAND TENDONS SHALL BE SINGLE-END STRESSED TO 46.88 KIPS/STRAND. ALTERNATE STRESSING END OF TENDON.
4. ALL "PROFILE B" 4 STRAND TENDONS SHALL BE SINGLE-END STRESSED TO 44.0 KIPS/STRAND. ALTERNATE STRESSING END OF TENDON.
5. ALL BASCULE END BEAM 4 STRAND TENDONS SHALL BE SINGLE-END STRESSED TO 46.88 KIPS/STRAND. ALTERNATE STRESSING END OF TENDON.
6. BOTH TOP ABUTMENT END BEAM 4 STRAND TENDONS SHALL BE DOUBLE-END STRESSED TO 46.88 KIPS/STRAND.
7. BOTH BOTTOM ABUTMENT END BEAM 9 STRAND TENDONS SHALL BE SINGLE-END STRESSED TO 43.4 KIPS/STRAND. ALTERNATE STRESSING END OF TENDON.
8. FILL POCKET FORMER BLOCKOUT WITH NON-SHRINK GROUT.
9. RAILING NOT SHOWN FOR CLARITY.
10. FOR DETAIL 1 SEE SHEET SC71.

RECORD DRAWINGS

No.	Date	Revisions	By

HNTB CORPORATION

STATE OF WISCONSIN
DEPARTMENT OF TRANSPORTATION

STRUCTURE B-40-413A

Designed By	CE	Design Checked	TZ	Drawn By	CE	Plans Checked	TZ

SOUTH CABLE STAYED TRANSVERSE PT 1 OF 2

SHEET SC70 OF

STATE PROJECT I.D.	SHEET NUMBER
2235-00-70	8.94

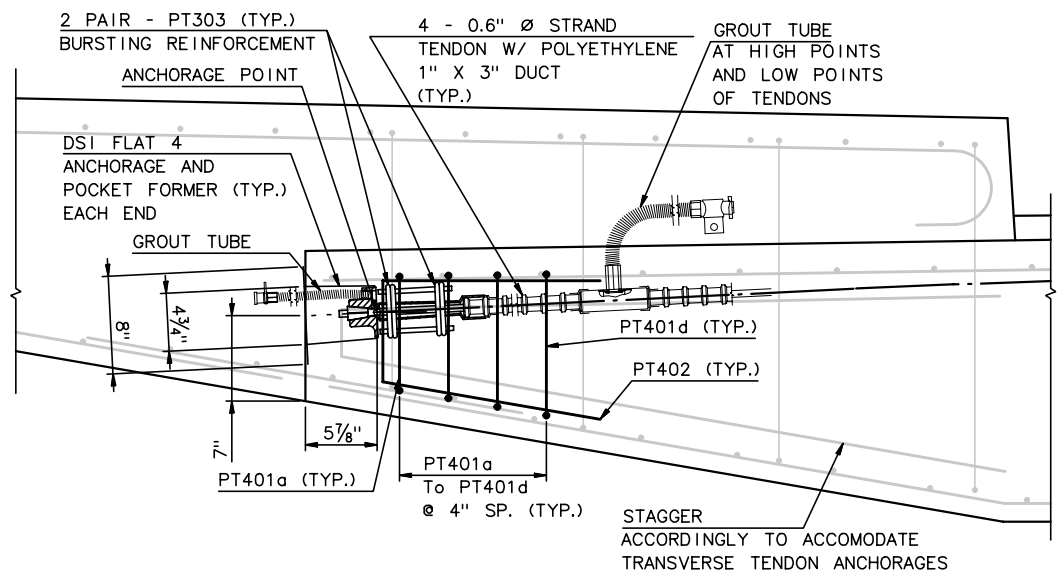

DETAIL 1

1½" = 1'-0"

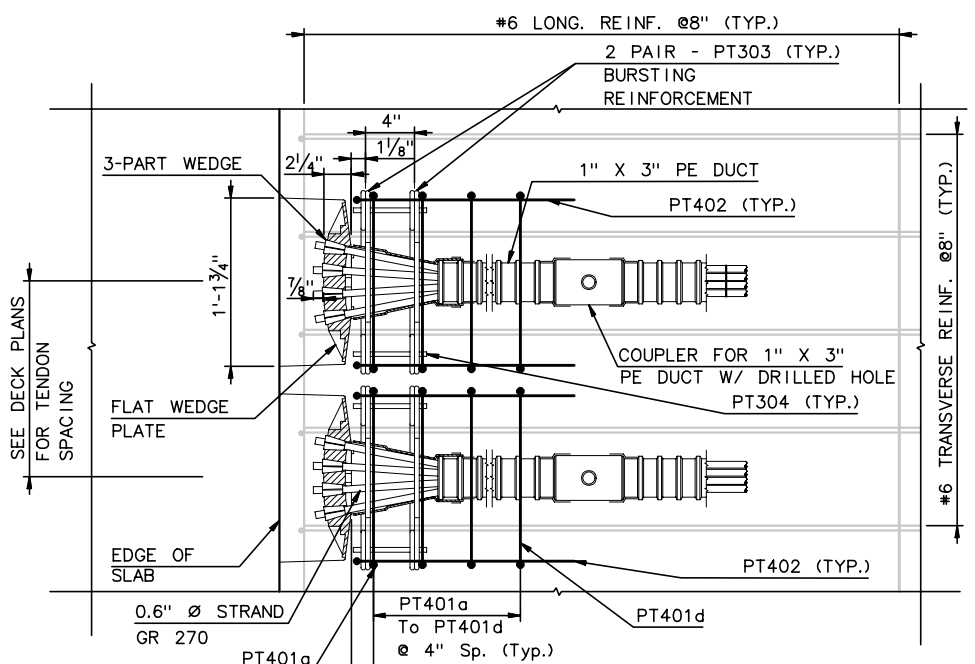

PLAN DETAIL 1

1½" = 1'-0"

QUANTITIES

ITEM				QUANTITY
DSI FLAT 4 ANCHORAGES				646
DSI MA9 ANCHORAGES				4
LIN. FT 1" X 3" 4 STR. POLYETHYLENE DUCT*, (3" Ø PPEX3 DUCT FOR 9 STRAND)				
ABUTMENT END BEAM	TOP	2 TENDONS	4 STR/TENDON	@ 80'-1"
	BOTTOM	2 TENDONS	9 STR/TENDON	@ 72'-7"
"PROFILE A"	BACKSPAN	71 TENDONS	4 STR/TENDON	@ 79'-11"
"PROFILE B"	MAINSPAN	91 TENDONS	4 STR/TENDON	@ 79'-8"
	STA. 18+59.61 TO 18+66.27	1 SERIES OF 6 TENDONS	4 STR/TENDON	@ 79'-8" TO 78'-7"
	STA. 18+68.25 TO 18+80.24	1 SERIES OF 7 TENDONS	4 STR/TENDON	@ 78'-4" TO 76'-5"
	STA. 18+83.23 TO 19+01.23	1 SERIES OF 10 TENDONS	4 STR/TENDON	@ 75'-11" TO 73'-0"
	STA. 19+02.77 TO 19+21.43	1 SERIES OF 15 TENDONS	4 STR/TENDON	@ 72'-9" TO 69'-9"
	STA. 19+24.10 TO 19+40.10	1 SERIES OF 7 TENDONS	4 STR/TENDON	@ 69'-4" TO 66'-9"
	STA. 19+42.77 TO 21+65.78	110 TENDONS	4 STR/TENDON	@ 66'-9"
BASCULE END BEAM	TOP	2 TENDONS	4 STR/TENDON	@ 63'-1"
	BOTTOM	2 TENDONS	4 STR/TENDON	@ 63'-0"
TOTAL 325 TENDONS				24130'-4"
LIN. FT * 0.6" STRAND				97247'-2"

* LENGTH IS FROM ANCHOR POINT TO ANCHOR POINT. ADDITIONAL LENGTH FOR STRESSING IS NOT INCLUDED.

NOTES:

1. FOR ADDITIONAL NOTES SEE SHEET SC70.
2. FOR END BEAM ANCHORAGE DETAILS SEE END BEAM DRAWINGS.

RECORD DRAWINGS

No.	Date	Revisions	By
1	10-19-01	REV. "PROFILE A" QUANTITY	CE

HNTB CORPORATION

STATE OF WISCONSIN
DEPARTMENT OF TRANSPORTATION

STRUCTURE B-40-413A

Designed By	CE	Design Checked	TZ	Drawn By	JE	Plans Checked	CE

SOUTH CABLE STAYED TRANSVERSE PT 2 OF 2

SHEET SC71 OF

STATE PROJECT I.D.	SHEET NUMBER
2235-00-70	8.95

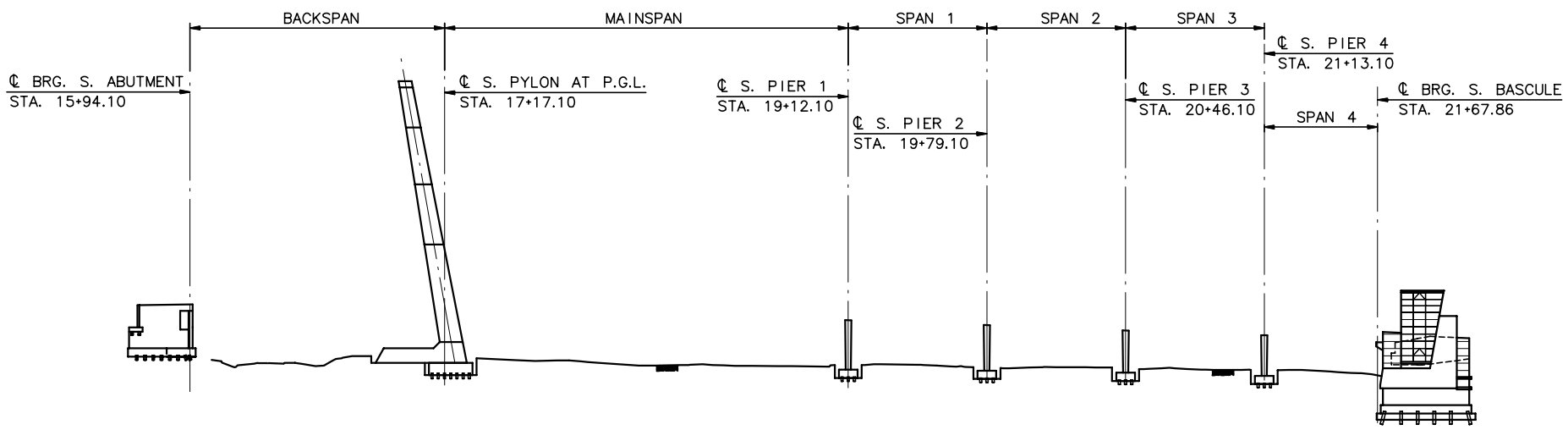

STAGE 1

1" = 40'-0"

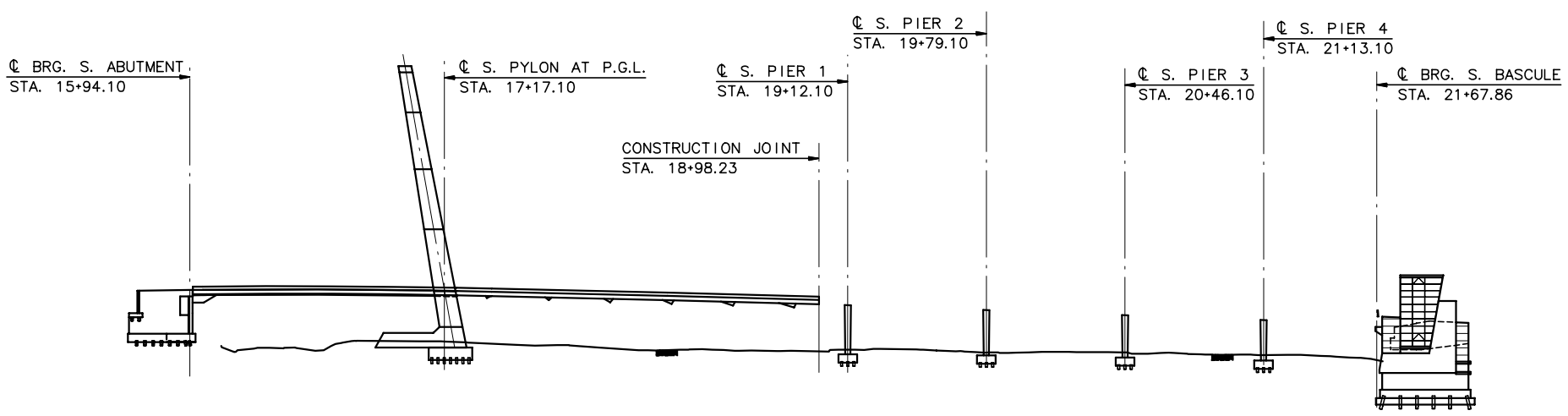

STAGE 2

1" = 40'-0"

NOTE: FALSEWORK NOT SHOWN

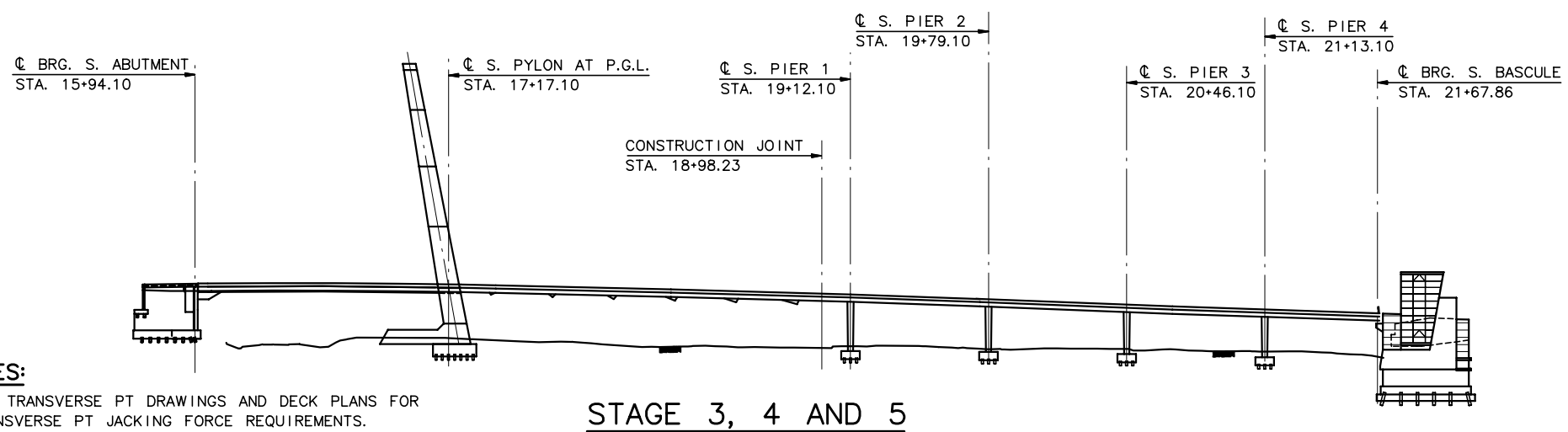

STAGE 3, 4 AND 5

1" = 40'-0"

NOTE: FALSEWORK NOT SHOWN

NOTES:

1. SEE TRANSVERSE PT DRAWINGS AND DECK PLANS FOR TRANSVERSE PT JACKING FORCE REQUIREMENTS.
2. ALL LONGITUDINAL TENDONS ARE DOUBLE-END STRESSED TO A JACKING FORCE OF 824 KIPS.

STAGE 1:

1. EXCAVATE PIERS 1-4 AND SOUTH PYLON PILE FOUNDATIONS.
2. DRIVE PILES FOR PIERS 1-4 AND SOUTH PYLON.
3. CONSTRUCT PIERS 1-4 FOOTINGS AND SOUTH PYLON FOOTINGS.
4. CONSTRUCT PIERS 1-4 AND SOUTH PYLON.
5. EXCAVATE S. ABUTMENT WEST WING WALL AND STEM WALL FOOTINGS.
6. CONSTRUCT S. ABUTMENT WEST WING WALL.
7. CONSTRUCT S. ABUTMENT STEM WALL TO ELEVATION 33.00.

STAGE 2:

1. PLACE SUPERSTRUCTURE FALSEWORK FROM S. ABUTMENT TO S. BASCULE.
2. CONSTRUCT SUPERSTRUCTURE SLAB FOR MAINSPAN AND BACKSPAN.
3. TRANSVERSE POST-TENSIONING SEQUENCE:

STEP 1 - PRIOR TO POST-TENSIONING, CONCRETE MUST REACH A MINIMUM COMPRESSIVE STRENGTH OF 4500 PSI.

STEP 2 - STRESS ALL STAGE 2 TRANSVERSE TENDONS. BEGIN STRESSING AT SOUTH ABUTMENT AND PROCEED NORTH TO CONSTRUCTION JOINT.

STEP 3 - GROUT ALL TENDONS PER PTI "GUIDE SPECFICATIONS FOR GROUNTING OF POST-TENSIONED STRUCTURES", FIRST EDITION, FEBRUARY 2001.

FOR TRANSVERSE POST-TENSIONING STRESSING FORCES, SEE SHTS SC70 - SC71.

STAGE 3:

1. CONSTRUCT SUPERSTRUCTURE SLAB FOR SPANS 1-4.
2. TRANSVERSE POST-TENSIONING SEQUENCE:

STEP 1 - PRIOR TO POST-TENSIONING, CONCRETE MUST REACH A MINIMUM COMPRESSIVE STRENGTH OF 4500 PSI.

STEP 2 - STRESS ALL STAGE 3 TRANSVERSE TENDONS. BEGIN STRESSING AT THE CONSTRUCTION JOINT AND PROCEED NORTH TO THE BASCULE END BEAM.

STEP 3 - GROUT ALL TENDONS PER PTI "GUIDE SPECFICATIONS FOR GROUNTING OF POST-TENSIONED STRUCTURES", FIRST EDITION, FEBRUARY 2001.

FOR TRANSVERSE POST-TENSIONING STRESSING FORCES, SEE SHTS SC70 - SC71.

STAGE 4:

LONGITUDINAL POST-TENSIONING SEQUENCE:

PRIOR TO POST-TENSIONING, CONCRETE MUST REACH A MINIMUM COMPRESSIVE STRENGTH OF 4500 PSI.

STEP 1 - STRESS LONGITUDINAL TENDONS L1 AND L6.

STEP 2 - STRESS LONGITUDINAL TENDONS L2 AND L5.

STEP 3 - STRESS LONGITUDINAL TENDONS L3 AND L4.

STEP 4 - GROUT ALL TENDONS PER PTI "GUIDE SPECFICATIONS FOR GROUNTING OF POST-TENSIONED STRUCTURES", FIRST EDITION, FEBRUARY 2001.

FOR LONGITUDINAL POST-TENSIONING STRESSING FORCES, SEE SHTS SC65 - SC69.

STAGE 5:

1. COMPLETE CONSTRUCTION OF S. ABUTMENT STEM WALL.

RECORD DRAWINGS

No.	Date	Revisions	By
1	3-21-02	REV PT SEQUENCE	AP

HNTB CORPORATION

STATE OF WISCONSIN
DEPARTMENT OF TRANSPORTATION

STRUCTURE B-40-413A

Designed By	SL	Design Checked	TZ	Drawn By	SL	Plans Checked	AP

SOUTH CABLESTAY CONSTRUCTION SEQUENCE 1 OF 2

SHEET SC73 OF .

STATE PROJECT I.D.	SHEET NUMBER
2235-00-70	8.96

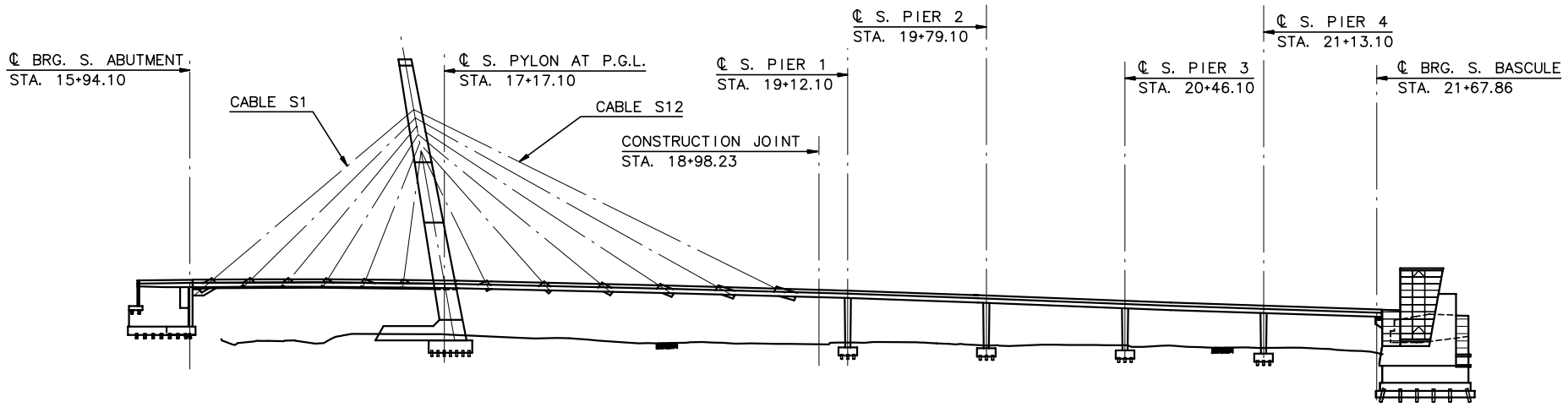

STAGE 6, 7 AND 8

1" = 40'-0"

NOTE: FALSEWORK NOT SHOWN

STAGE 6:

1. CONSTRUCT SIDEWALKS AND CABLE BLISTERS.

2. INSTALL STAY CABLES.

STAGE 7:

STAY CABLE STRESSING SEQUENCE:

STEP 1 - STRESS S7 TO 373 KIPS (28.69 KIPS/STR)
- STRESS S6 TO 290 KIPS (16.11 KIPS/STR)

STEP 2 - STRESS S8 TO 708 KIPS (26.22 KIPS/STR)
- STRESS S5 TO 359 KIPS (17.10 KIPS/STR)

STEP 3 - STRESS S9 TO 695 KIPS (23.97 KIPS/STR)
- STRESS S4 TO 430 KIPS (20.48 KIPS/STR)

STEP 4 - STRESS S10 TO 803 KIPS (22.94 KIPS/STR)
- STRESS S3 TO 534 KIPS (24.27 KIPS/STR)

STEP 5 - STRESS S11 TO 780 KIPS (22.29 KIPS/STR)
- STRESS S2 TO 742 KIPS (24.73 KIPS/STR)

STEP 6 - STRESS S12 TO 790 KIPS (21.94 KIPS/STR)
- STRESS S1 TO 834 KIPS (23.17 KIPS/STR)

NOTE:

ALTERNATE STRESS MAINSPAN CABLE PAIRS WITH BACKSPAN CABLE PAIRS, STARTING WITH MAINSPAN. THE CORRESPONDING EAST AND WEST CABLES SHALL BE STRESSED SIMULTANEOUSLY. (I.E. S7E AND S7W)

STAGE 8:

1. REMOVE SUPERSTRUCTURE FALSEWORK.

STAGE 9:

1. PLACE 3 LINE AND 2 LINE RAILING, EXPANSION JOINTS, STREET LIGHTS, WARNING GATES, TRAFFIC SIGNALS, PYLON LIGHT FIXTURE AND WEARING SURFACE.

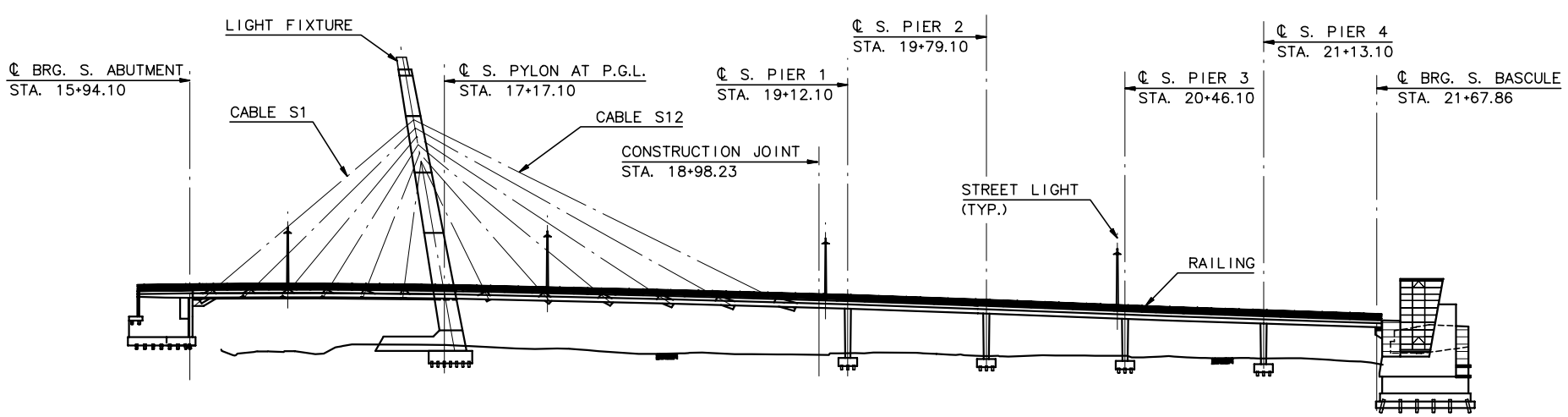

STAGE 9

1" = 40'-0"

RECORD DRAWINGS

No.	Date	Revisions	By
1	5-15-02	REVISE CABLE STRESSING	BM

HNTB CORPORATION

STATE OF WISCONSIN
DEPARTMENT OF TRANSPORTATION

STRUCTURE B-40-413A

Designed By	SL	Design Checked	AP	Drawn By	SL	Plans Checked	AP

SOUTH CABLESTAY CONSTRUCTION SEQUENCE 2 OF 2

SHEET SC73b OF .

STATE PROJECT I.D.	SHEET NUMBER
2235-00-70	8.97

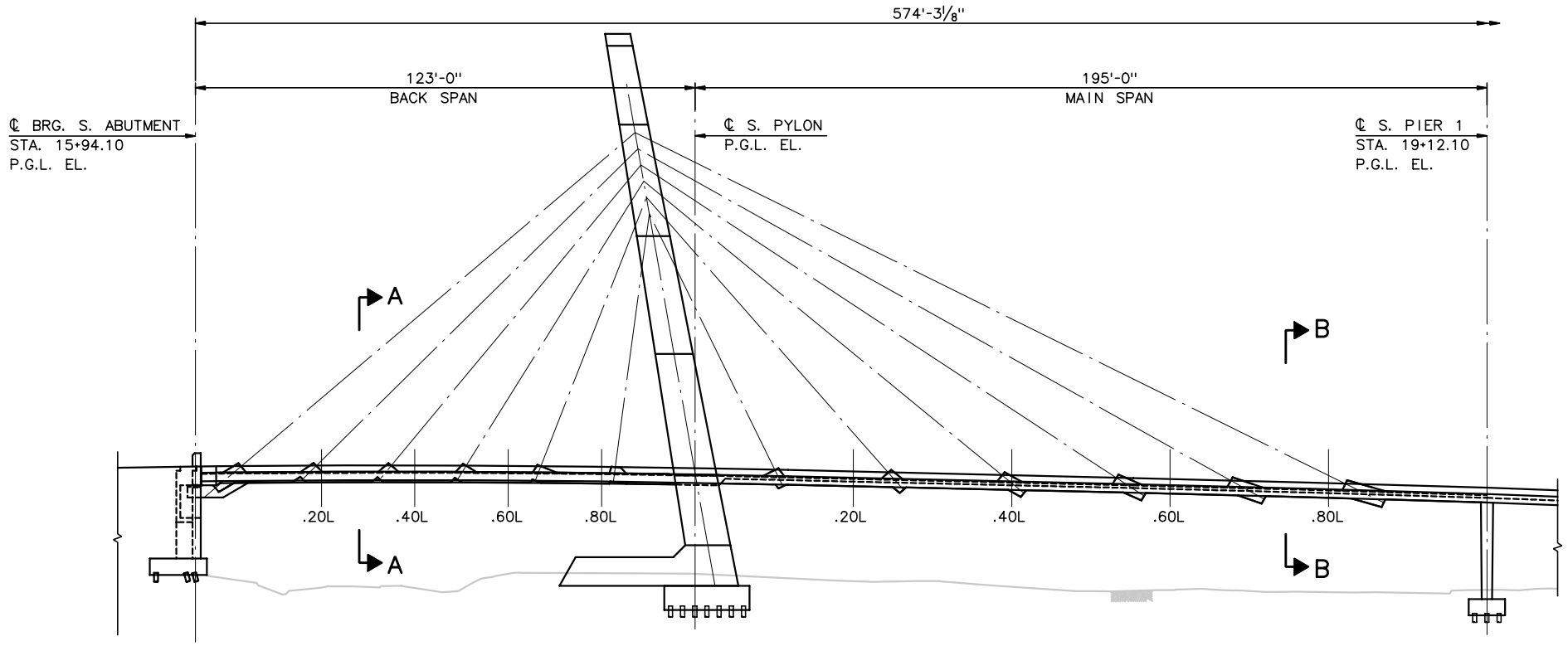

ELEVATION

1" = 20'-0"

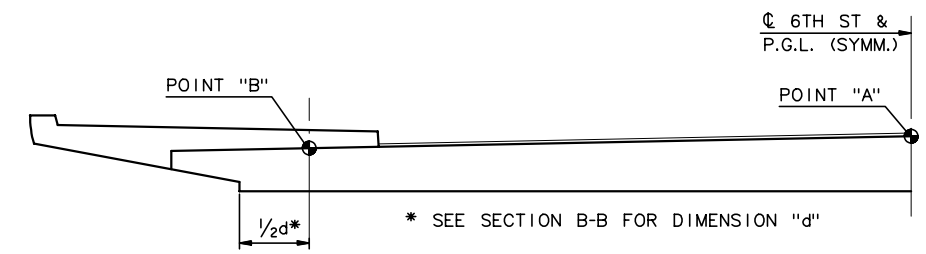

SECTION A-A

3/16" = 1'-0"

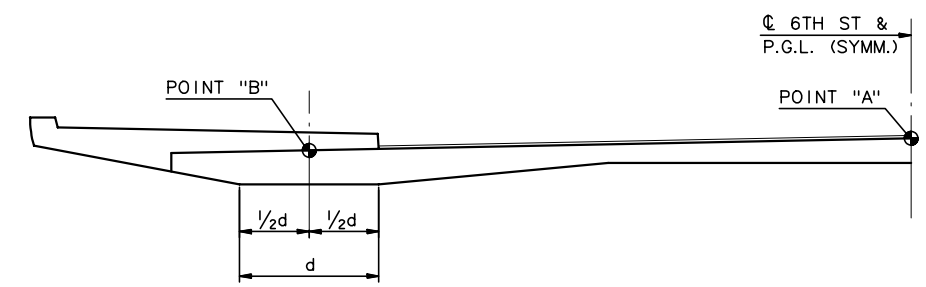

SECTION B-B

3/16" = 1'-0"

ESTIMATED DEFLECTIONS POINT "A" (INCHES)											
	BACK SPAN						MAIN SPAN				
	℄ BRG.	.20L	.40L	.60L	.80L	℄ S. PYLON	.20L	.40L	.60L	.80L	℄ PIER 1
BEGIN SERVICE	-0.50	-0.37	-0.43	+0.08	-0.04	-0.20	-1.30	-1.81	-1.48	-0.76	-0.31
END SERVICE	-0.84	-0.60	-0.72	-0.16	-0.30	-0.48	-2.52	-3.95	-3.58	-2.00	-0.59

ESTIMATED DEFLECTIONS POINT "B" (INCHES)											
	BACK SPAN						MAIN SPAN				
	℄ BRG.	.20L	.40L	.60L	.80L	℄ S. PYLON	.20L	.40L	.60L	.80L	℄ PIER 1
BEGIN SERVICE	0.00	+0.20	+0.11	+0.58	+0.43	0.00	-0.26	-0.26	+0.02	+0.32	0.00
END SERVICE	0.00	+0.38	+0.20	+0.68	+0.48	0.00	-0.79	-1.39	-1.08	-0.22	0.00

NOTES:

1. BEGIN SERVICE REPRESENTS THE ESTIMATED DEFLECTIONS AT THE START OF SERVICE. ALL POST-TENSIONING, PLACEMENT OF SUPERIMPOSED DEAD LOADS AND CABLE STRESSING HAS OCCURED.
2. END OF SERVICE DEFLECTIONS INCLUDE TIME EFFECTS.

RECORD DRAWINGS

No.	Date	Revisions	By

HNTB CORPORATION

STATE OF WISCONSIN
DEPARTMENT OF TRANSPORTATION

STRUCTURE B-40-413A

Designed By	SL	Design Checked	TZ	Drawn By	DS	Plans Checked	AP

SOUTH CABLE STAY DEFLECTIONS 1 OF 2

SHEET SC73c OF

STATE PROJECT I.D.	SHEET NUMBER
2235-00-70	8.98

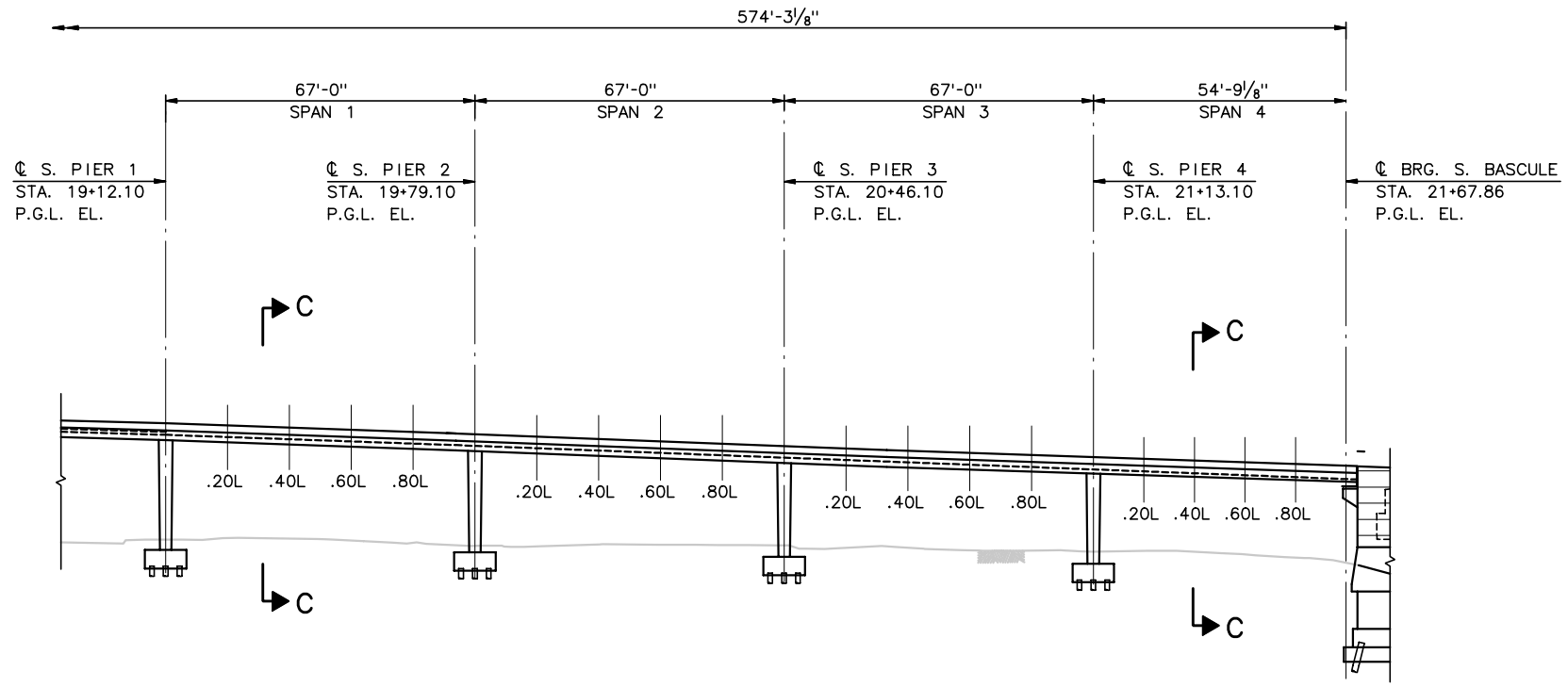

ELEVATION

1" = 20'-0"

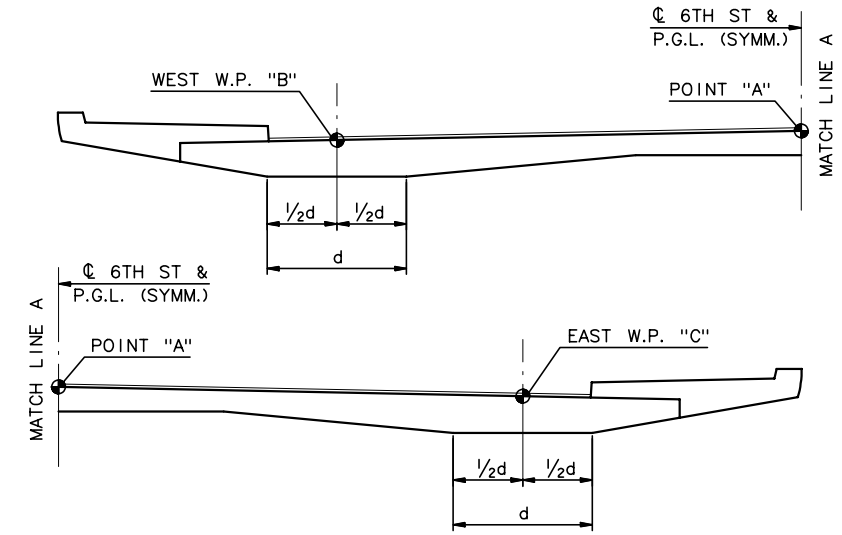

SECTION C-C

3/16" = 1'-0"

ESTIMATED DEFLECTIONS POINT "A" (INCHES)

	SPAN 1						SPAN 2					SPAN 3					SPAN 4				
	℄ PIER 1	.20L	.40L	.60L	.80L	℄ PIER 2	.20L	.40L	.60L	.80L	℄ PIER 3	.20L	.40L	.60L	.80L	℄ PIER 4	.20L	.40L	.60L	.80L	℄ BRG.
BEGIN SERVICE	-0.31	-0.40	-0.48	-0.42	-0.20	-0.02	-0.05	-0.16	-0.19	-0.10	-0.01	-0.07	-0.20	-0.23	-0.11	+0.06	+0.14	+0.14	+0.24	+0.08	-0.17
END SERVICE	-0.59	-0.66	-0.82	-0.79	-0.44	-0.14	-0.20	-0.42	-0.50	-0.30	-0.12	-0.25	-0.54	-0.61	-0.38	-0.04	+0.13	+0.16	+0.20	+0.02	-0.28

ESTIMATED DEFLECTIONS WEST WORK POINT "B" (INCHES)

	SPAN 1						SPAN 2					SPAN 3					SPAN 4				
	℄ PIER 1	.20L	.40L	.60L	.80L	℄ PIER 2	.20L	.40L	.60L	.80L	℄ PIER 3	.20L	.40L	.60L	.80L	℄ PIER 4	.20L	.40L	.60L	.80L	℄ BRG.
BEGIN SERVICE	0.00	-0.05	-0.07	-0.06	-0.05	0.00	+0.07	+0.12	+0.06	+0.01	0.00	+0.05	+0.07	+0.02	-0.04	0.00	+0.16	+0.30	+0.41	+0.22	0.00
END SERVICE	0.00	-0.06	-0.16	-0.19	-0.13	0.00	+0.06	+0.04	-0.04	-0.06	0.00	+0.01	-0.05	-0.14	-0.17	0.00	+0.24	+0.42	+0.49	+0.28	0.00

ESTIMATED DEFLECTIONS EAST WORK POINT "C" (INCHES)

	SPAN 1						SPAN 2					SPAN 3					SPAN 4				
	℄ PIER 1	.20L	.40L	.60L	.80L	℄ PIER 2	.20L	.40L	.60L	.80L	℄ PIER 3	.20L	.40L	.60L	.80L	℄ PIER 4	.20L	.40L	.60L	.80L	℄ BRG.
BEGIN SERVICE	0.00	-0.06	-0.11	-0.10	-0.05	0.00	+0.04	+0.01	-0.05	-0.04	0.00	+0.02	-0.02	-0.10	-0.10	0.00	+0.18	+0.34	+0.44	+0.24	0.00
END SERVICE	0.00	-0.07	-0.20	-0.24	-0.14	0.00	0.00	-0.11	-0.19	-0.13	0.00	-0.02	-0.18	-0.30	-0.25	0.00	+0.28	+0.48	+0.53	+0.30	0.00

NOTES:

1. BEGIN SERVICE REPRESENTS THE ESTIMATED DEFLECTIONS AT THE START OF SERVICE. ALL POST-TENSIONING, PLACEMENT OF SUPERIMPOSED DEAD LOADS AND CABLE STRESSING HAS OCCURED.
2. END OF SERVICE DEFLECTIONS INCLUDE TIME EFFECTS.

RECORD DRAWINGS

No.	Date	Revisions	By
1	2-10-01	DEL SECT D, CLARIFY WP C	AP

HNTB CORPORATION

STATE OF WISCONSIN
DEPARTMENT OF TRANSPORTATION

STRUCTURE B-40-413A

Designed By	SL	Design Checked	TZ	Drawn By	DS	Plans Checked	AP

SOUTH CABLE STAY DEFLECTIONS 2 OF 2

SHEET SC73d OF

STATE PROJECT I.D.	SHEET NUMBER
2235-00-70	8.99

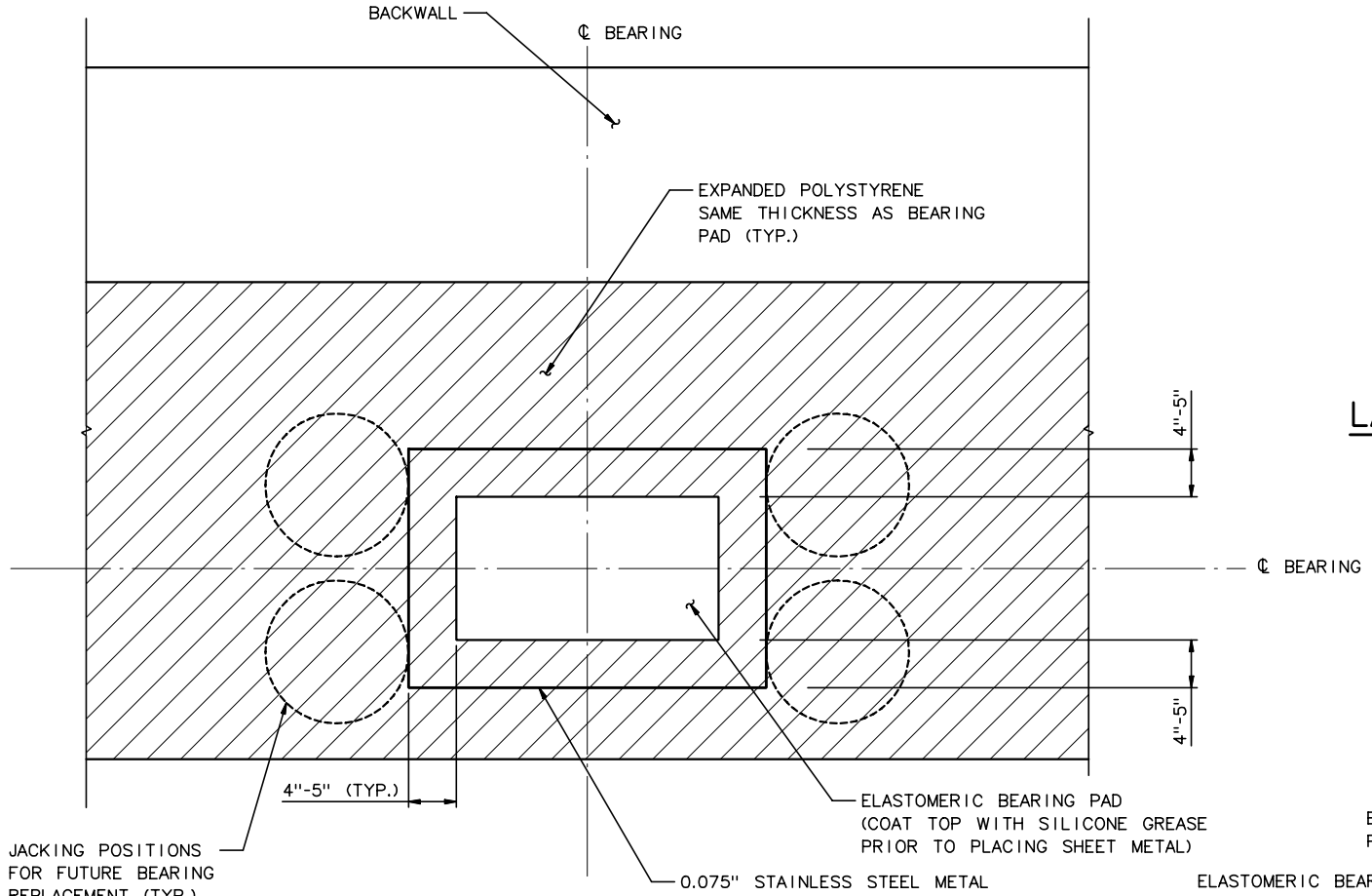

PLAN

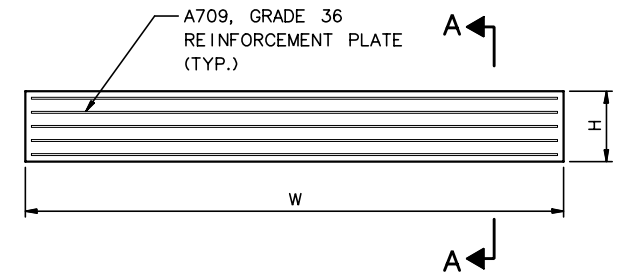

LAMINATED ELASTOMERIC BEARING ELEVATION

3" = 1'-0"

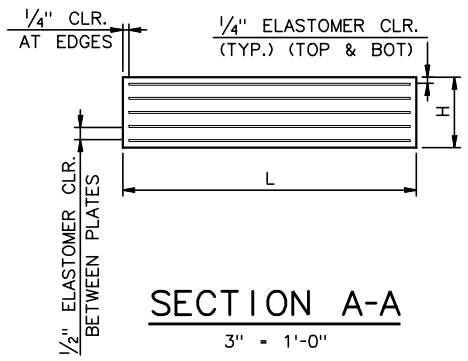

SECTION A-A

3" = 1'-0"

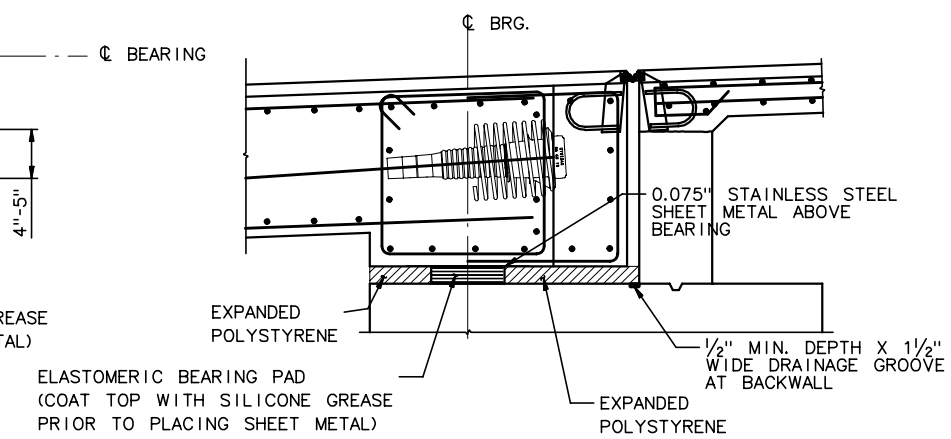

TYPICAL SECTION AT BASCULE

3/4" = 1'-0"

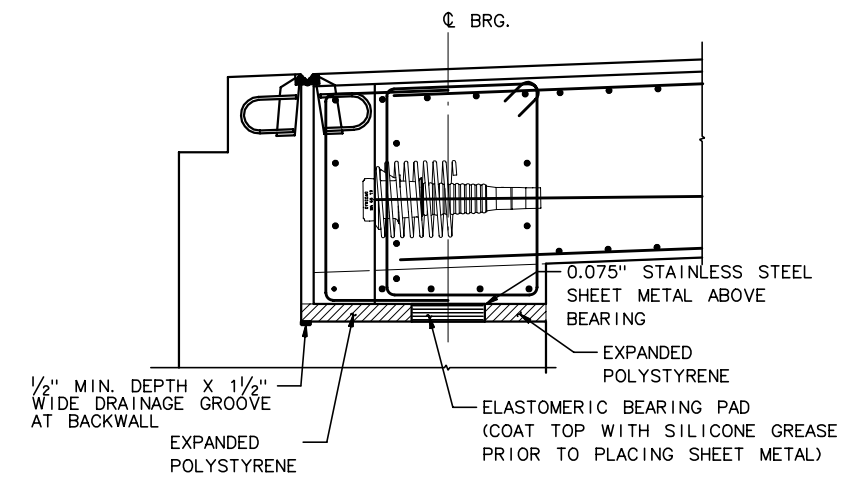

TYPICAL SECTION AT ABUTMENT

3/4" = 1'-0"

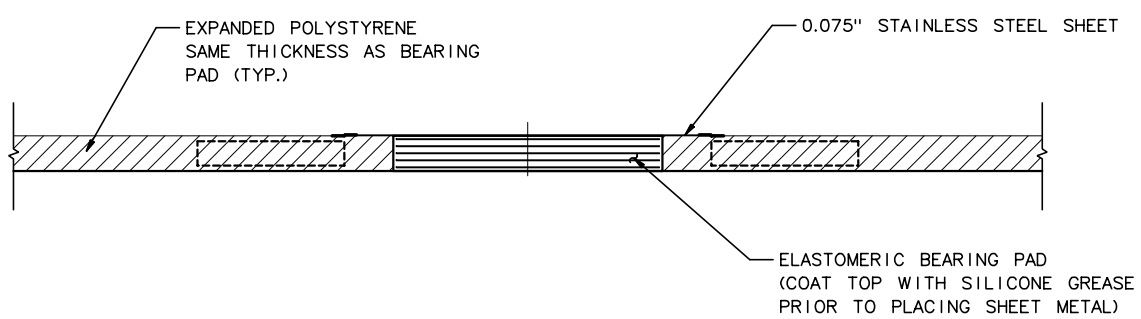

ELEVATION

BEARING SEAT DETAILS

(SUPERSTRUCTURE NOT SHOWN)

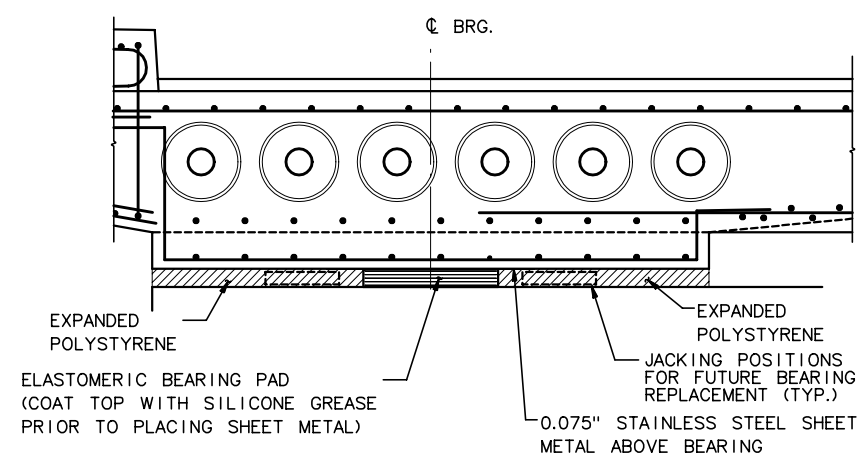

TYPICAL ELEVATION AT BASCULE

(ABUTMENT SIMILAR)

3/4" = 1'-0"

NOTES:

1. ROUGHEN BEARING SEAT REGION WITH STIFF BRUSH TO APPROX. 1/8" AMPLITUDE PRIOR TO CONCRETE SETTING
2. THOROUGHLY COAT TOP OF BEARING WITH SILICONE GREASE PRIOR TO PLACING STAINLESS STEEL SHEET METAL ON BEARING.
3. SEAL JOINTS BETWEEN STAINLESS STEEL SHEET METAL AND EXPANDED POLYSTYRENE TO PREVENT CEMENT LEAKAGE BETWEEN STAINLESS STEEL METAL SHEETS AND BEARING.
4. REMOVE EXPANDED POLYSTYRENE AND/OR OTHER FORM WORK AFTER CASTING OF SUPERSTRUCTURE
5. REINFORCEMENT STEEL PLATES SHALL CONFORM TO ASTM A709, GRADE 36.
6. STAINLESS STEEL PLATE SHALL CONFORM TO ASTM A240 TYPE 304 AND SHALL BE POLISHED TO A #8 MIRROR FINISH.
7. ELASTOMERIC DUROMETER SHALL BE 55±5.
8. MINIMUM BEARING DEAD LOAD WITHOUT FUTURE WEARING SURFACE PROVIDED FOR FUTURE JACKING REQUIREMENTS.
9. SLOPE ALL SURFACES AWAY FROM BEARING AREA.
10. PROVIDE 3/4" DRIP GROOVE TRANSVERSELY ON UNDERSIDE OF STRUCTURE, SEE DECK DETAILS.

LAMINATED ELASTOMERIC BEARING DETAILS

BEARING LOCATON	STATION	# OF BRGS	L (IN)	W (IN)	STEEL REINFORCEMENT PLATES		TOTAL BEARING HT	0.075" STAINLESS STEEL SHEET SIZE	MIN. SUPERSTRUCTURE DL PER BEARING *
					PLATE THICKNESS	QTY.			
S. BASCULE S. CORBEL	21+67.86	2	15	20	.075"	12	6.90"	25" X 30"	325 KIPS
S. ABUTMENT TOP BRG	15+94.10	2	12	18	.075"	8	4.60"	20" X 26"	230 KIPS
S. ABUTMENT BOTTOM BRG (LOAD REVERSAL)	15+94.10	2	6	12	.075"	3	1.73"	N/A	N/A

*SEE NOTE 8

AS BUILT

No.	Date	Revisions	By

HNTB CORPORATION

STATE OF WISCONSIN
DEPARTMENT OF TRANSPORTATION

STRUCTURE B-40-413A

Designed By	AP	Design Checked	TZ	Drawn By	JE	Plans Checked	AP

SOUTH CABLE STAY BEARING DETAILS

SHEET SC74 OF .

STATE PROJECT I.D.	SHEET NUMBER
2235-00-70	8.100

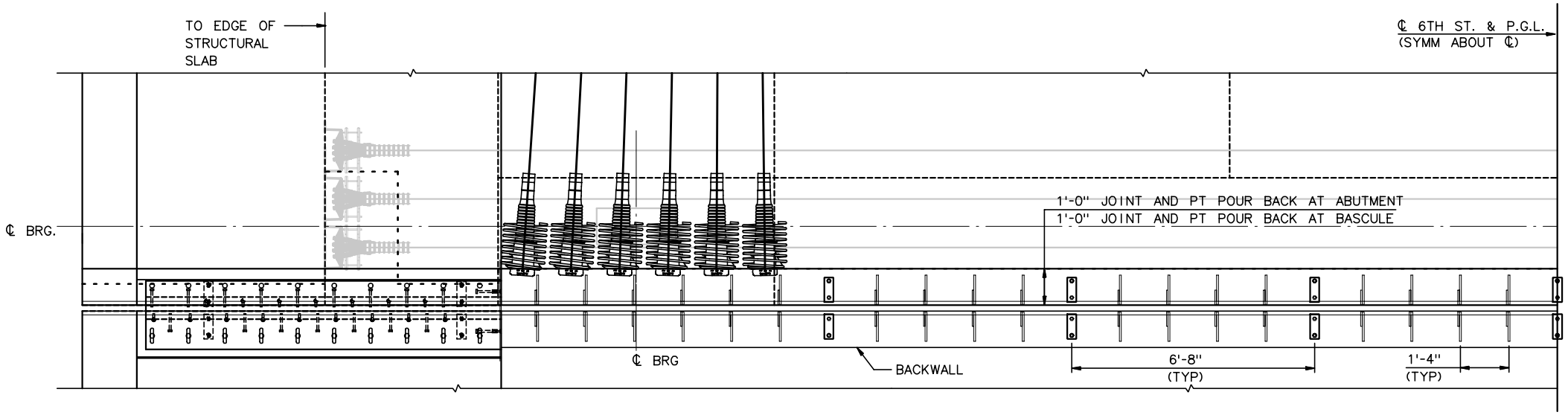

EXPANSION JOINT PLAN

½" = 1'-0"

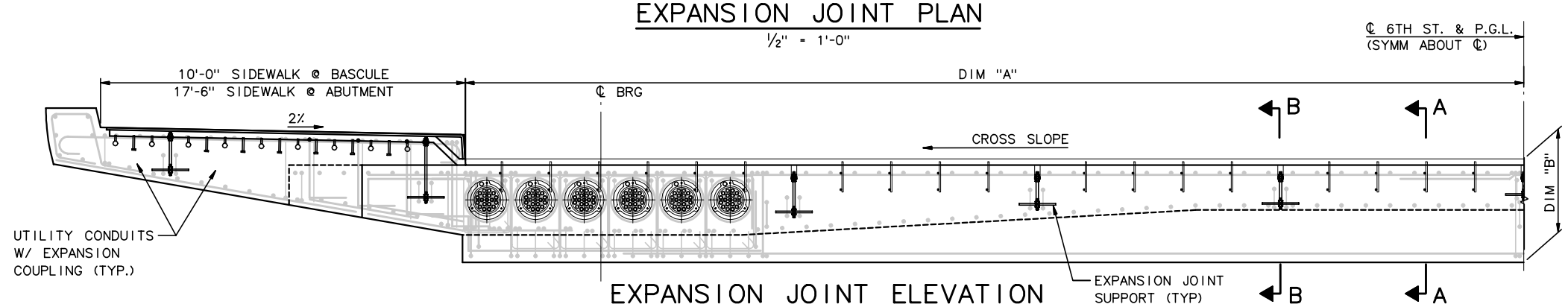

EXPANSION JOINT ELEVATION

½" = 1'-0"

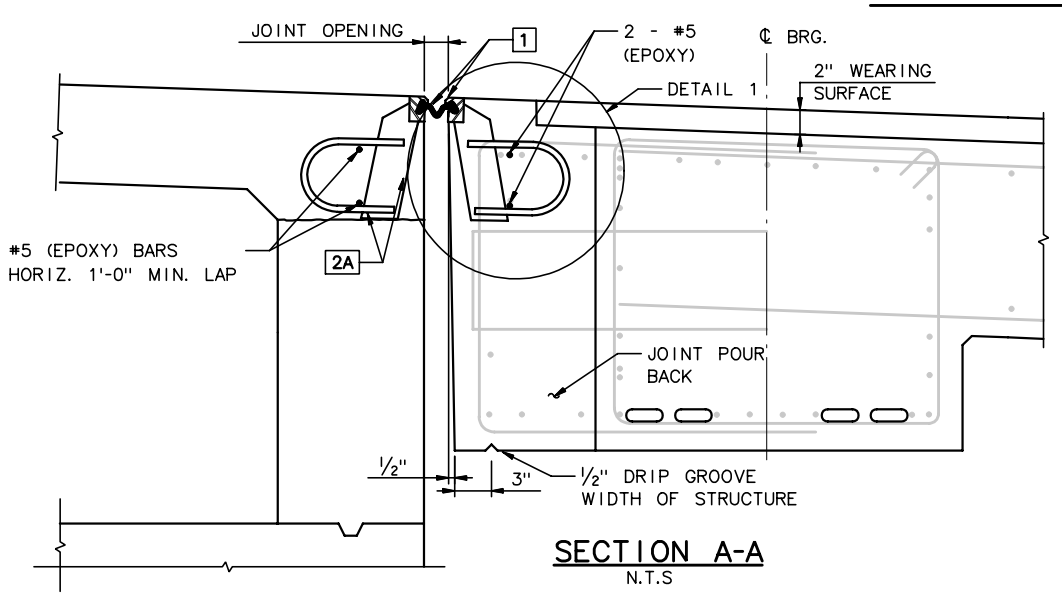

SECTION A-A

N.T.S

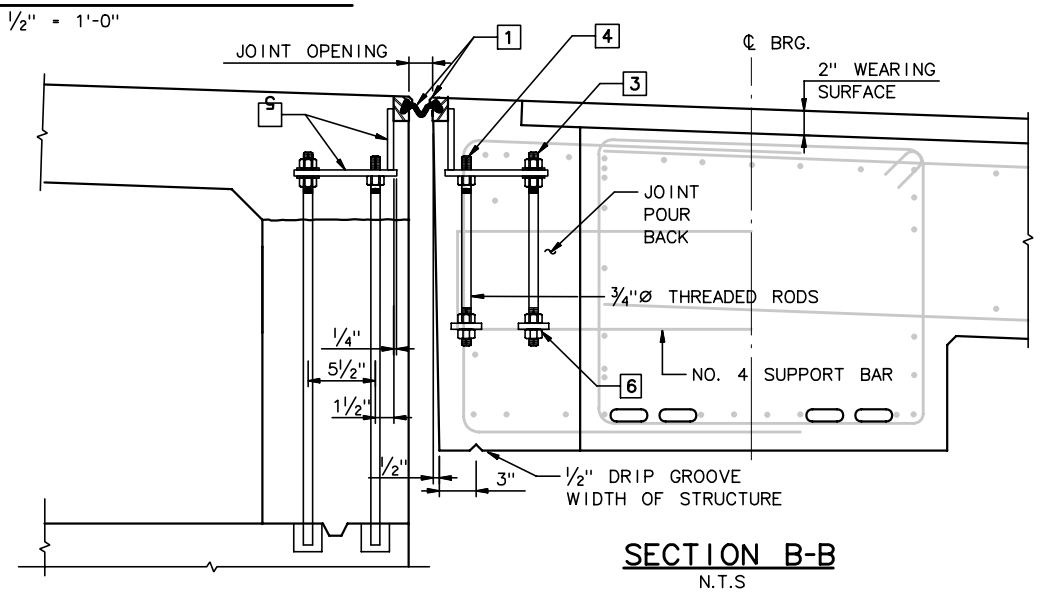

SECTION B-B

N.T.S

SECTIONS THRU JOINT AT BASCULE

EXPANSION JOINT LOCATION	DIM "A"	DIM "B"	CROSS SLOPE	JOINT OPENING AT			MOVEMENT RATING (INCHES)	STRIP SEAL SIZE	STEEL EXTRUSION	MANUFACTURER/ PRODUCT *
				85°F	45°F	5°F				
SOUTH BASCULE SOUTH PIER STA. 21+67.86	29.01'	2'-10"	0%	1.0"	1.95"	2.9"	4.4"	5"	1¼" x 2"	DS BROWN SSA2-A2R-XTRA
SOUTH ABUTMENT STA. 15+95.51	29.01'	3'-6"	2%	1.0"	1.60"	2.20"	2.5"	4"	1¼" x 2"	DS BROWN SSA2-A2R400

* SEE NOTE 1

LEGEND:

REF. SHEET 2 OF 2

1. NEOPRENE AND STEEL EXTRUSION SHALL BE SET BY THE TABLE BELOW. SEAL AND EXTRUSIONS BY OTHER MANUFACTURERS MEETING THE DETAILS OF THESE PLANS AND EQUIVALENT TO THE PRODUCTS BELOW SHALL BE ACCEPTABLE.

2. STUDS ⅝"Ø x 6⅜" LONG AT 6" ALTERNATE CENTERS. WELD TO EXTRUSIONS, BEND AS SHOWN AFTER WELDING.

2A. ½" THICK ANCHOR PLATE WITH ⅝"Ø ROD. WELD ROD TO ANCHOR PLATE, WELD ANCHOR PL. TO NO. 1 AT 1'-4" CTRS.

3. ¾"Ø GALVANIZED THREADED ROD WITH 2 NUTS AND WASHERS. ON BACKWALL SIDE GROUT THREADED ROD INTO FIELD DRILLED HOLES IN BACKWALL .

4. ¾"Ø THREADED ROD WITH NUT. TACK WELD NUT TO NO. 5. ON BACKWALL SIDE GROUT THREADED ROD INTO FIELD DRILLED HOLES IN BACKWALL .

5. FABRICATE SUPPORT FROM 3" x ½" BAR AS SHOWN OR EQUIVALENT. SHOP OR FIELD WELD TO NO. 1. IF FIELD WELDED, COVER WELDED AREAS WITH EPOXY-COATING MATERIAL. PROVIDE 1½"Ø HOLE FOR NO. 3 & 1"Ø HOLE FOR NO. 4.

6. GALV. ½" X 2½" X 12" SUPPORT BAR W/ SLOTTED HOLES FOR NO. 3 & 4.

REF. SHEET 2 OF 2

7. ¾"Ø x 1 ½" STAINLESS STEEL FLAT HEAD MACHINE SCREWS. RECESS 1/16" BELOW PLATE SURFACE.

8. ¾"Ø x 4" GALVANIZED HEX HEAD BOLT. BEND 45°.

9. ¾"Ø x 2¼" GALVANIZED THREADED COUPLING.

10. GALVANIZED SIDEWALK PLATE ⅜" x 2'-0" WIDE. BEND DOWN FACE OF SIDEWALK WITH CSK HOLES FOR NO. 7.

11. 1" x 5" SLOTTED CSK. HOLE FOR NO. 7. SLOT PARALLEL TO DIRECTION OF MOVEMENT.

NOTES:

1. ONE FIELD SPLICE PERMITTED IN STEEL EXTRUSIONS. GRIND SPLICE SMOOTH. NO SPLICING PERMITTED IN NEOPRENE STRIP SEAL.
2. AFTER FABRICATION, BUT BEFORE SHIPMENT, STRAIGHTEN STEEL EXTRUSIONS SUCH THAT THEY SHALL BE FREE FROM WARP, TWIST & SWEEP.
3. FABRICATOR SHALL PROVIDE MEANS OF KEEPING GALVANIZED EXTRUSIONS CLEAN & SMOOTH DURING SHIPMENT AND PRIOR TO APPLYING LUBRICANT ADHESIVE FOR NEOPRENE GLAND INSTALLATION.
4. SANDBLAST PLATES & EXTRUSIONS AFTER FABRICATION IN ACCORDANCE WITH SSPC SP. #6 "COMMERCIAL BLAST CLEANING". AFTER BLAST CLEANING, THE PLATES & EXTRUSIONS SHALL BE HOT DIPPED GALVANIZED.
5. ANCHOR SYSTEM NO. 8 & NO. 9 SHALL CONFORM TO ASTM A307 & SHALL BE GALVANIZED IN ACCORDANCE WITH ASTM A153 CLASS C & D.
6. THE STEEL EXTRUSION, SUPPORT BAR, AND PROTECTION ANGLE ARMOR SHALL CONFORM TO ASTM A709 GRADE 36, AND GALVANIZED CONFORMING TO THE REQUIREMENTS OF ASTM A123

AS BUILT

No.	Date	Revisions	By
1	12-19-01	REV. ABUT GEOMETRY	AP

HNTB CORPORATION

STATE OF WISCONSIN
DEPARTMENT OF TRANSPORTATION

STRUCTURE B-40-413A

Designed By AP | Design Checked JE | Drawn By JE | Plans Checked AP

EXPANSION JOINT DETAILS 1 OF 3

SHEET SC75 OF .

STATE PROJECT I.D.	SHEET NUMBER
2235-00-70	8.101

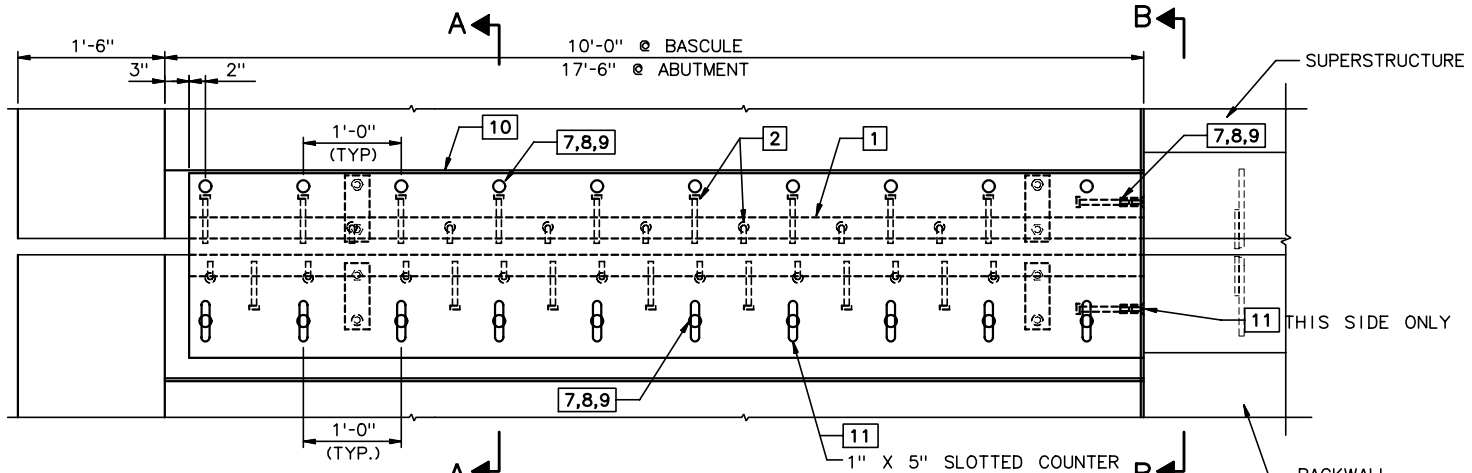

PLAN AT SIDEWALK

1" = 1'-0"

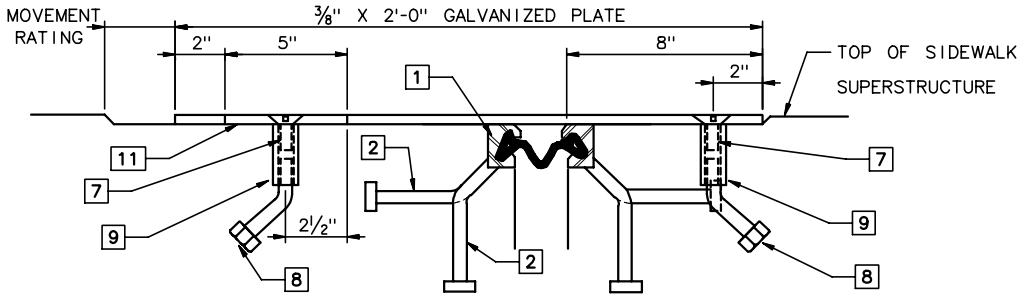

SECTION A-A (SIDEWALK SECT. ONLY)

3" = 1'-0"

NOTES:

1. WORK THIS DRAWING WITH EXPANSION JOINT DETAILS SHEET 1 OF 2 FOR SECTION LOCATIONS, LEGEND, AND NOTES.

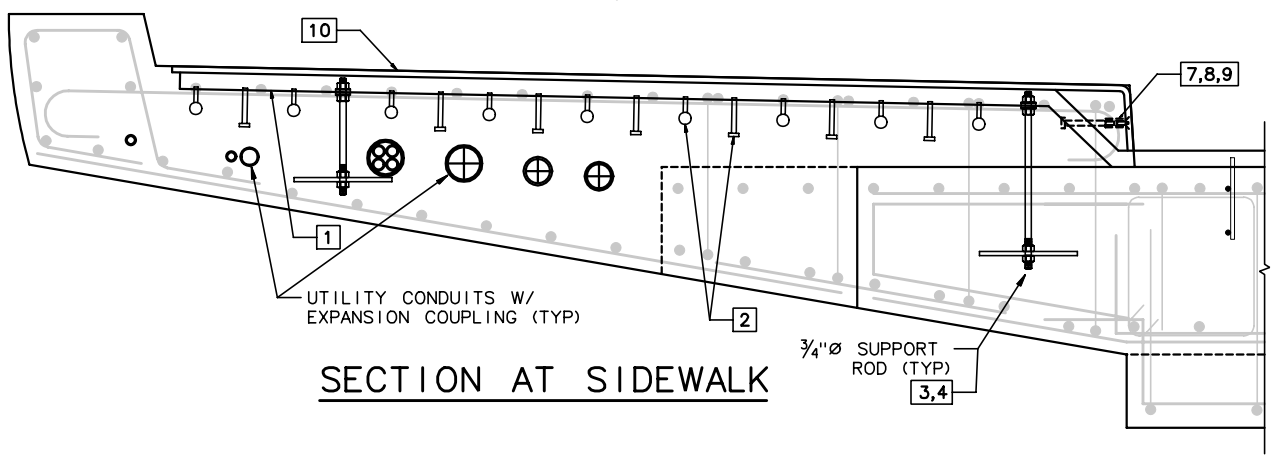

SECTION AT SIDEWALK

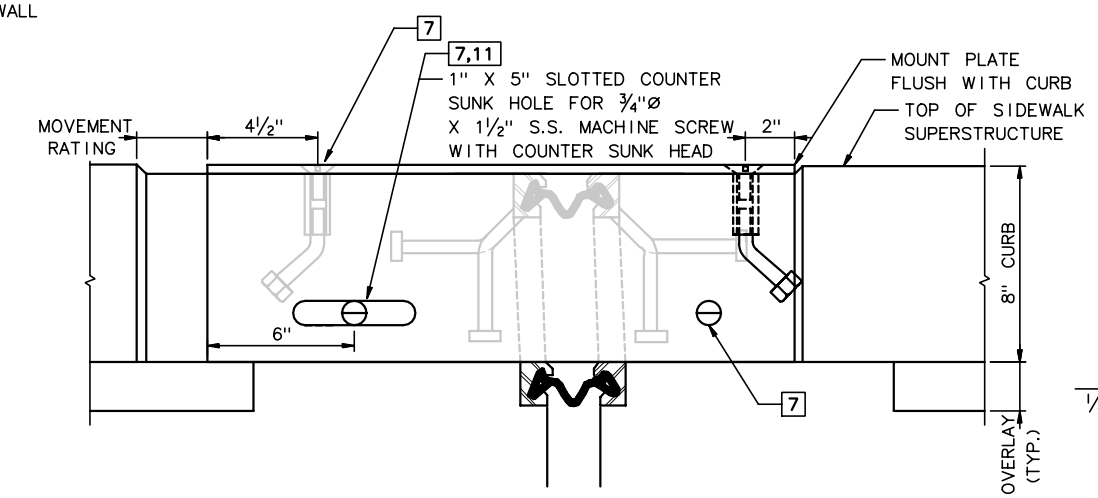

SECTION B-B (AT FACE OF 8" CURB)

3" = 1'-0"

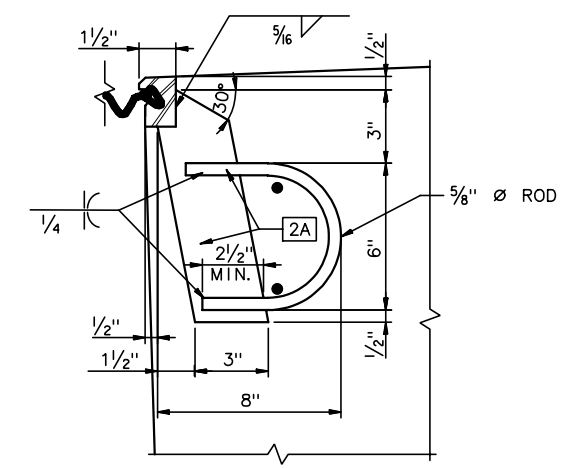

DETAIL 1

3" = 1'-0"

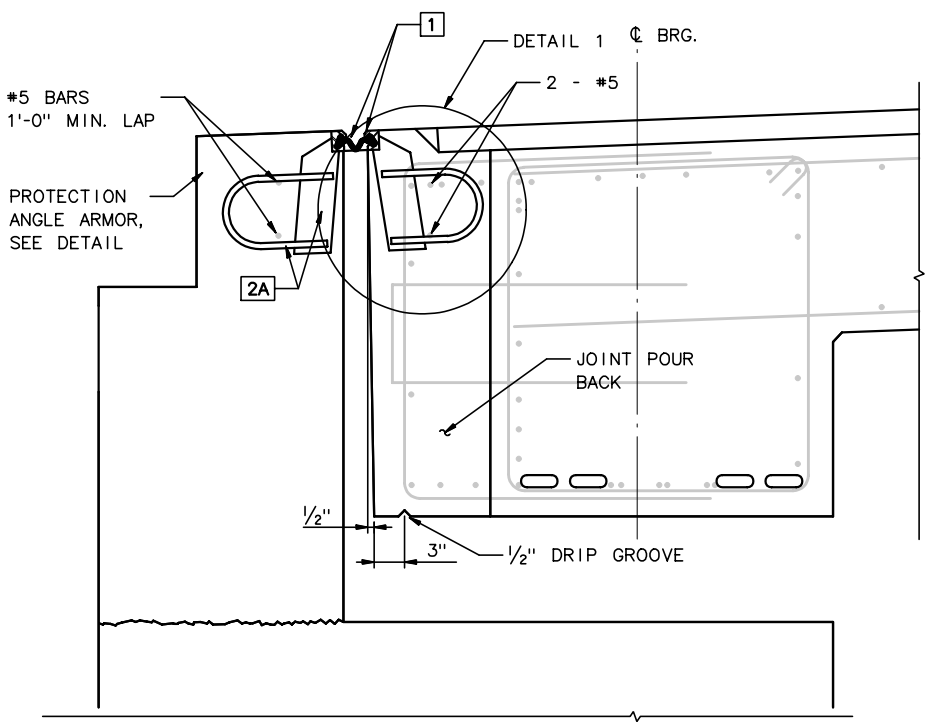

SECTION A-A

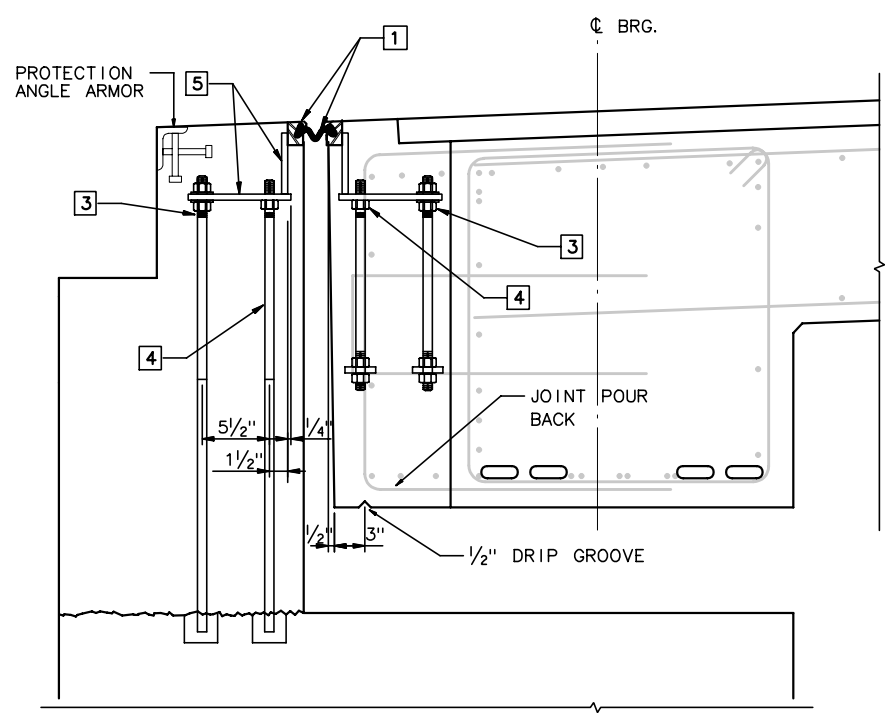

SECTION B-B

SECTION THRU JOINT AT ABUTMENT

1½" = 1'-0"

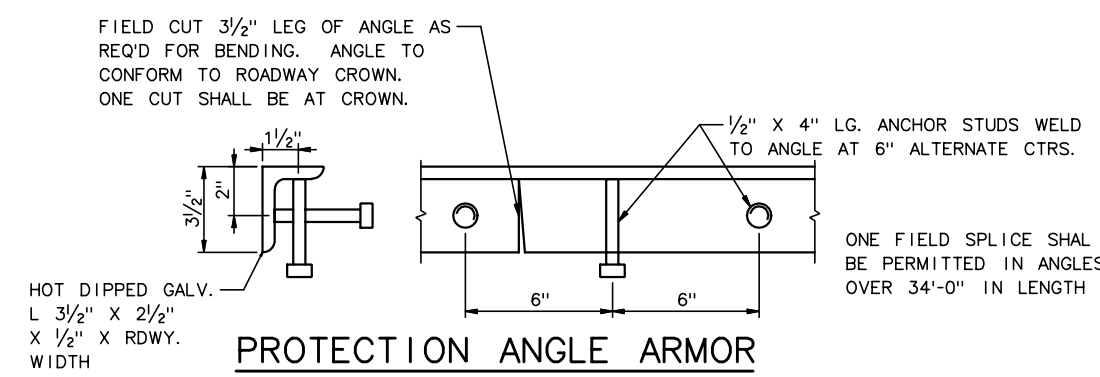

PROTECTION ANGLE ARMOR

3" = 1'-0"

AS BUILT

No.	Date	Revisions	By
1	12-19-01	REV ABUT SDWLK	AP

HNTB CORPORATION

STATE OF WISCONSIN
DEPARTMENT OF TRANSPORTATION

STRUCTURE B-40-413A

Designed By	AP	Design Checked	JE	Drawn By	JE	Plans Checked	AP

EXPANSION JOINT DETAILS 2 OF 3

SHEET SC76 OF .

STATE PROJECT I.D.	SHEET NUMBER
2235-00-70	8.102

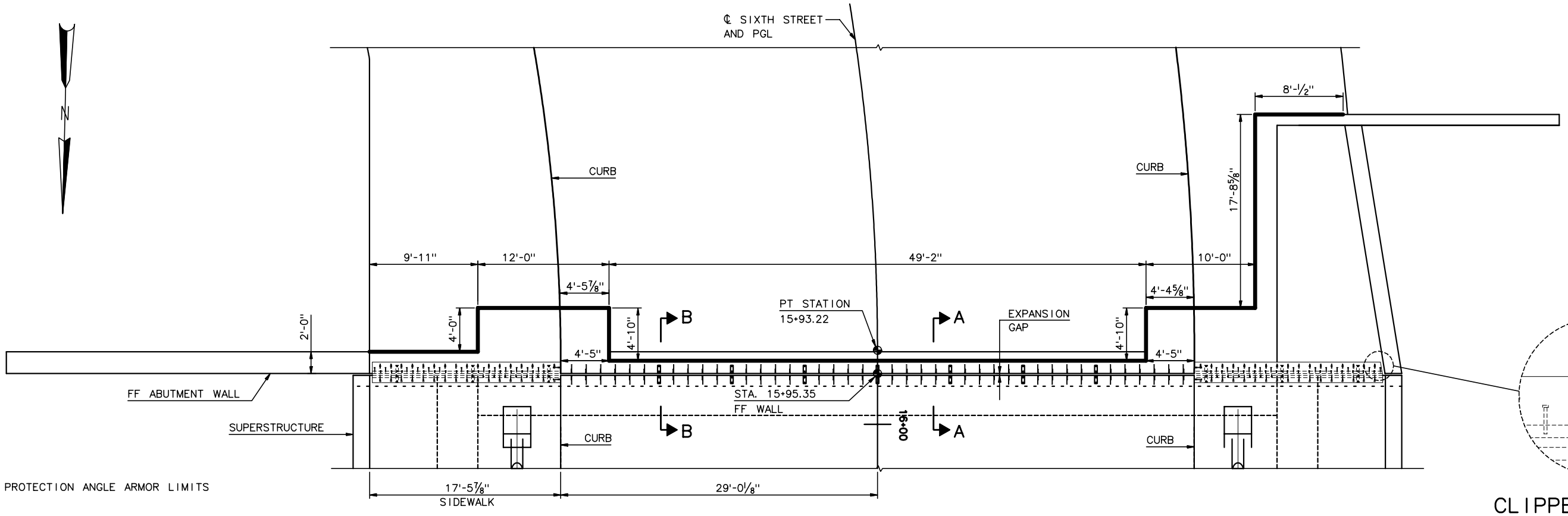

ABUTMENT EXPANSION JOINT PLAN

3/16" = 1'-0"

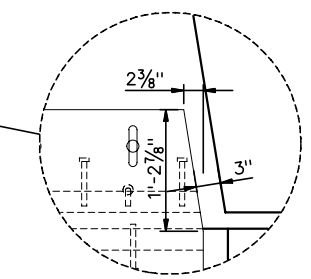

CLIPPED CORNER DETAIL

1" = 1'-0"

LEGEND:

PROTECTION ANGLE ARMOR LIMITS

NOTES:

1. FOR HARDWARE AND MATERIAL NOTES, SEE SHT. SC75.
2. FOR EXPANSION GAP SETTING DIMENSIONS SEE CT. SC75.
3. FOR PROTECTION ANGLE ARMOR DETAILS, SEE SHT. SC76.
4. FOR SECTIONS A AND B, SEE SHT. SC76.
5. FOR TYPICAL SIDEWALK PLATE DETAILS, SEE SHT. SC76a.

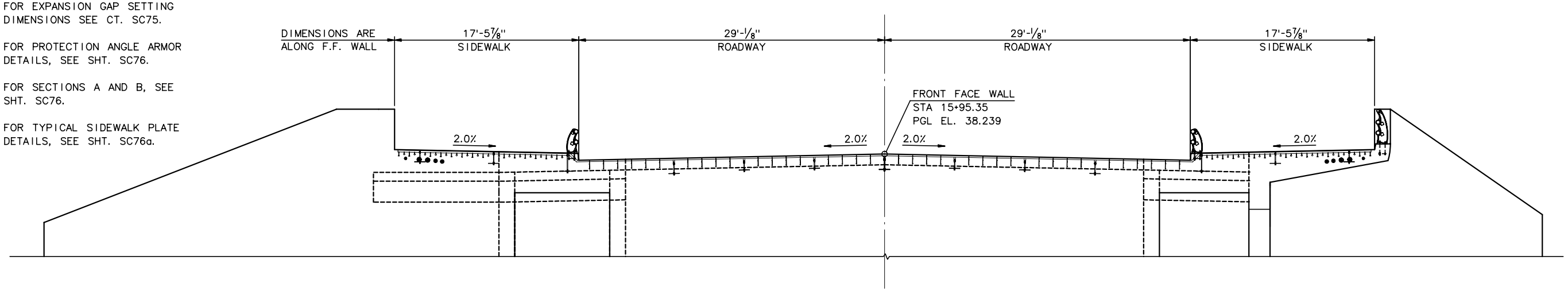

ABUTMENT EXPANSION JOINT ELEVATION

3/16" = 1'-0"

AS BUILT

No.	Date	Revisions	By

HNTB CORPORATION

STATE OF WISCONSIN
DEPARTMENT OF TRANSPORTATION

STRUCTURE B-40-413A

Designed By	GD	Design Checked	AP	Drawn By	JE	Plans Checked	AP

SOUTH CABLE STAY
JOINT DETAIL
3 OF 3

SHEET SC76a OF .

j:\cadd\ff31185\dgn\as built\south cablestay\sc76a-jointdet3.dgn 02/11/03 02:58:31 PM

STATE PROJECT I.D.	SHEET NUMBER
2235-00-70	8.103

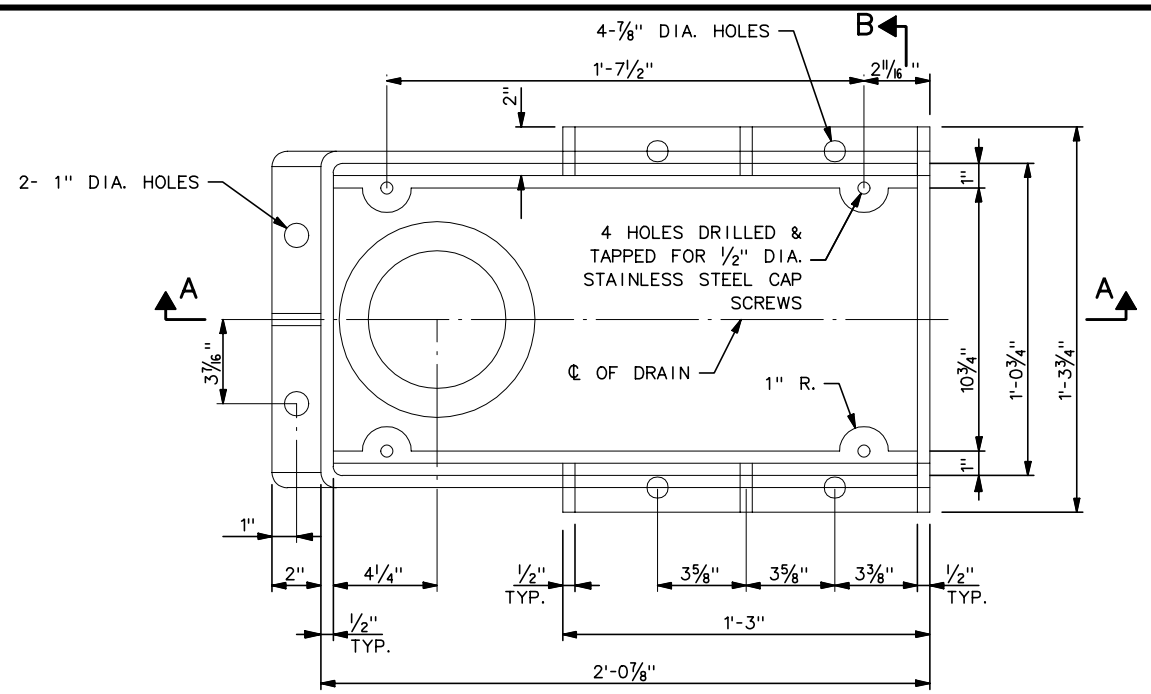

PLAN

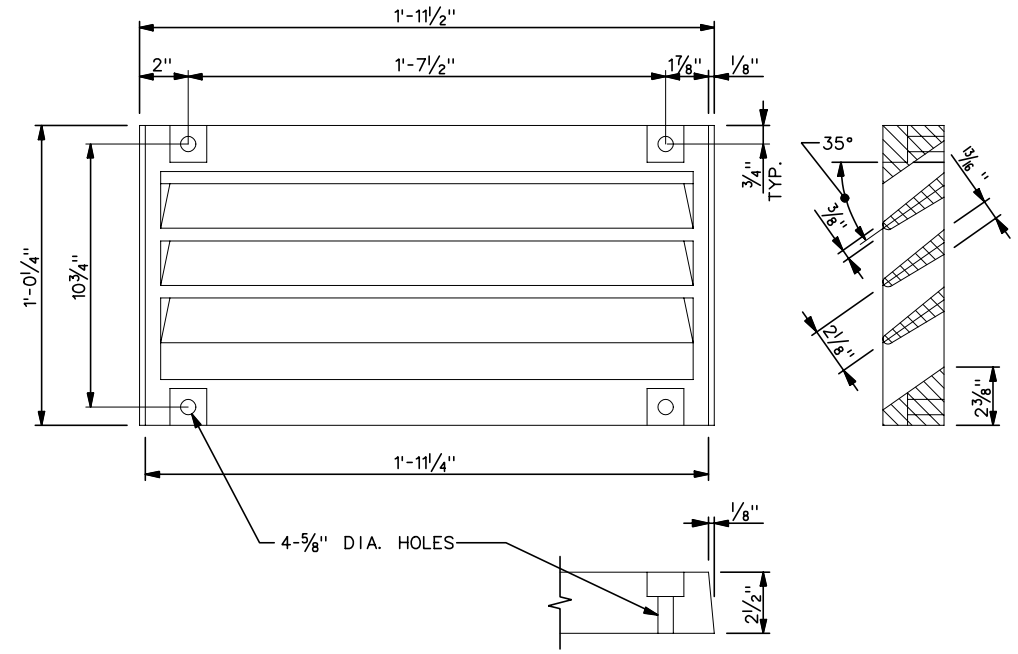

GRATE CASTING DETAIL

ATTACH GRATE TO FRAME FOR SHIPMENT

NOTES:

1. DRAIN TO CONFORM TO NEENAH TYPE R-3922.
2. ALL MATERIAL FOR CASTING, EXCLUDING GRATE HOLD DOWN SCREWS, SHALL BE GRAY IRON CONFORMING TO ASTM A48, CLASS 30. (APPROX. WEIGHT = 225 LBS)
3. ALL BRACKET STEEL SHOWN AND BOLTS, NUTS AND WASHERS SHALL BE HOT-DIPPED GALVANIZED IN ACCORDANCE WITH ASTM A153 CLASS C. GALVANIZED NUTS SHALL BE TAPPED OVERSIZE IN ACCORDANCE WITH THE REQUIREMENTS OF ASTM A563 AND SHALL MEET THE REQUIREMENTS OF SUPPLEMENTARY REQUIREMENTS OF S1 OF ASTM A563.
4. THREADED 6" DIA. DOWNSPOUTS SHALL BE GREY IRON CONFORMING TO ASTM A48, CLASS 30, SUPPLIED IN 4' SECTIONS. DOWNSPOUTS TO BE FLAME CUT IN THE FIELD TO MEET REQUIRED DIMENSIONS AND GROUND SMOOTH.
5. 6"Ø FIBERGLASS DOWNSPOUT PIPING SHALL CONFORM TO ASTM D2996 AND ASTM 2310. DOWNSPOUT PIPING SHALL BE THROUGH COLORED CONCRETE GRAY.
6. ALL DOWNSPOUTS SHALL TIE INTO THE STORM SEWER SYSTEM, SEE FOUNDATION PLAN FOR TIE-IN LOCATIONS.

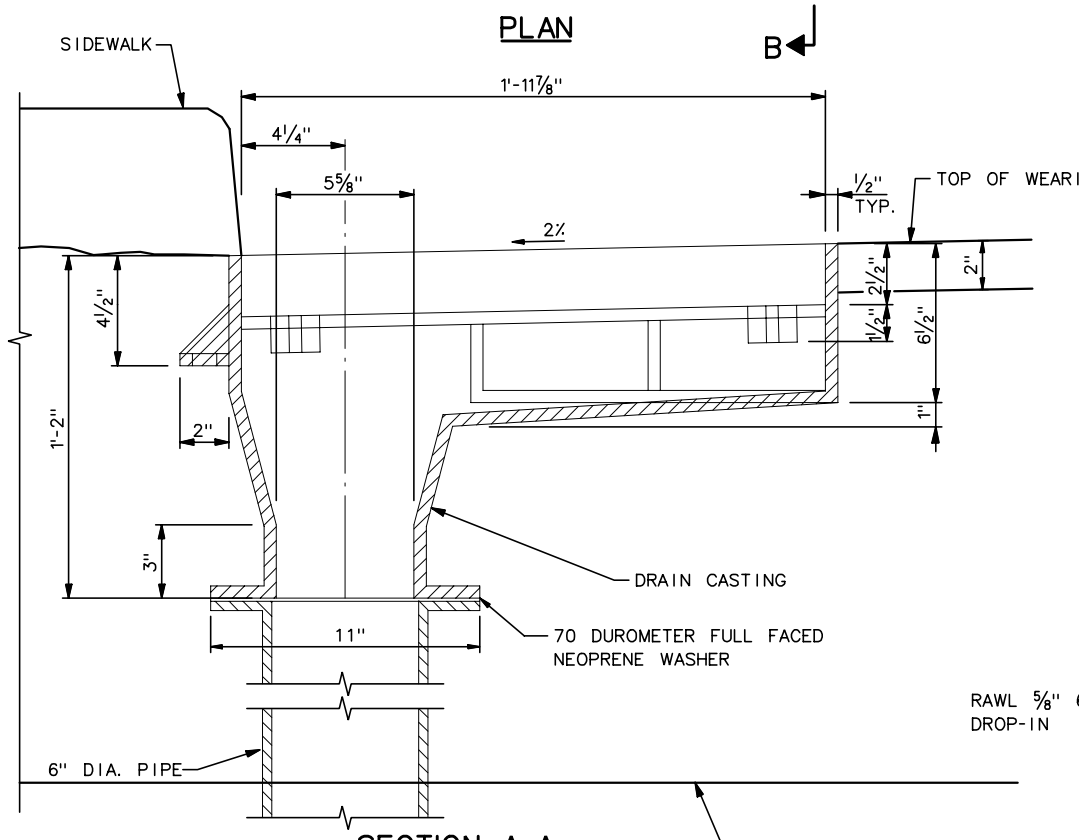

SECTION A-A PROFILE 1

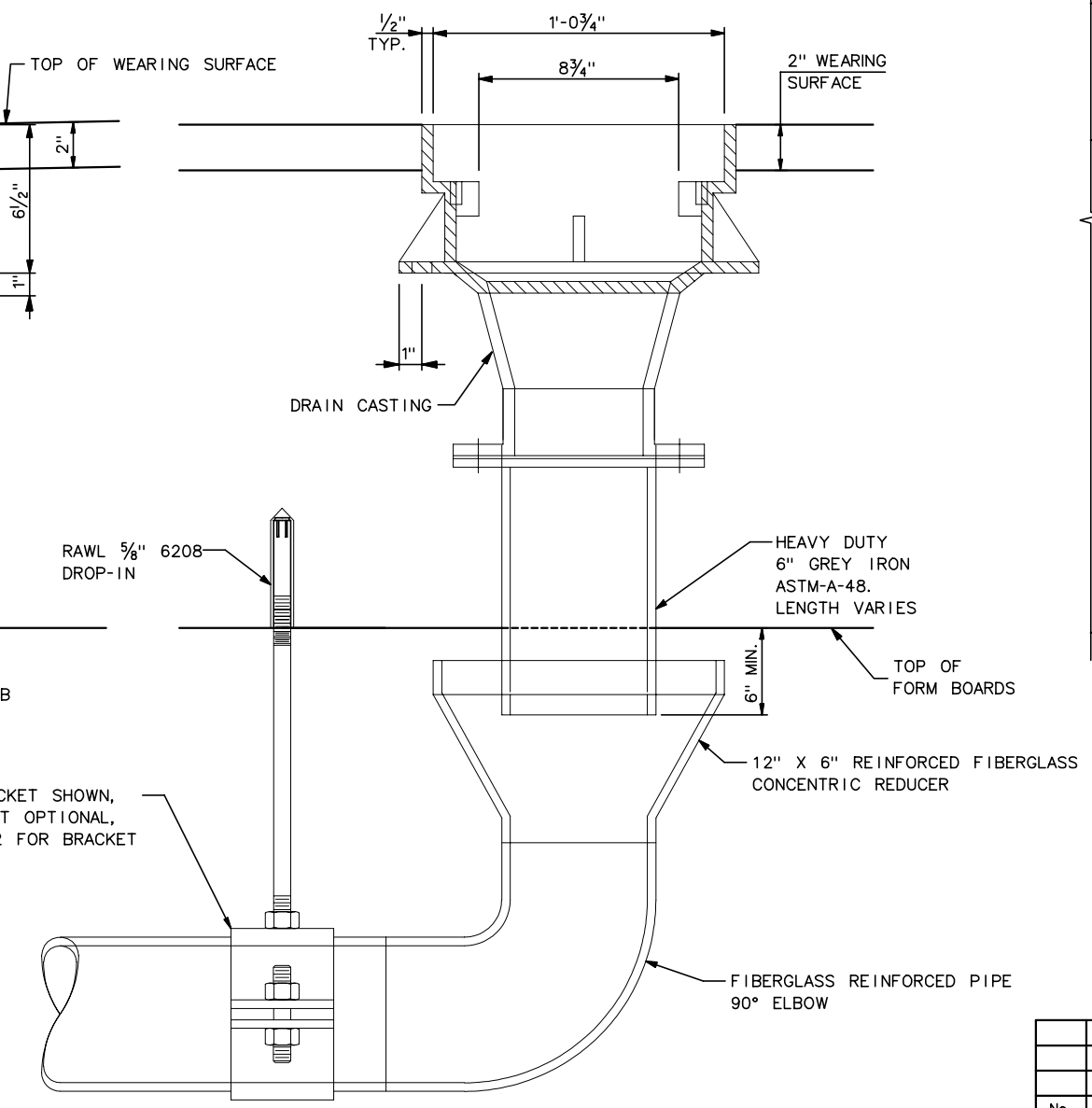

SECTION B-B

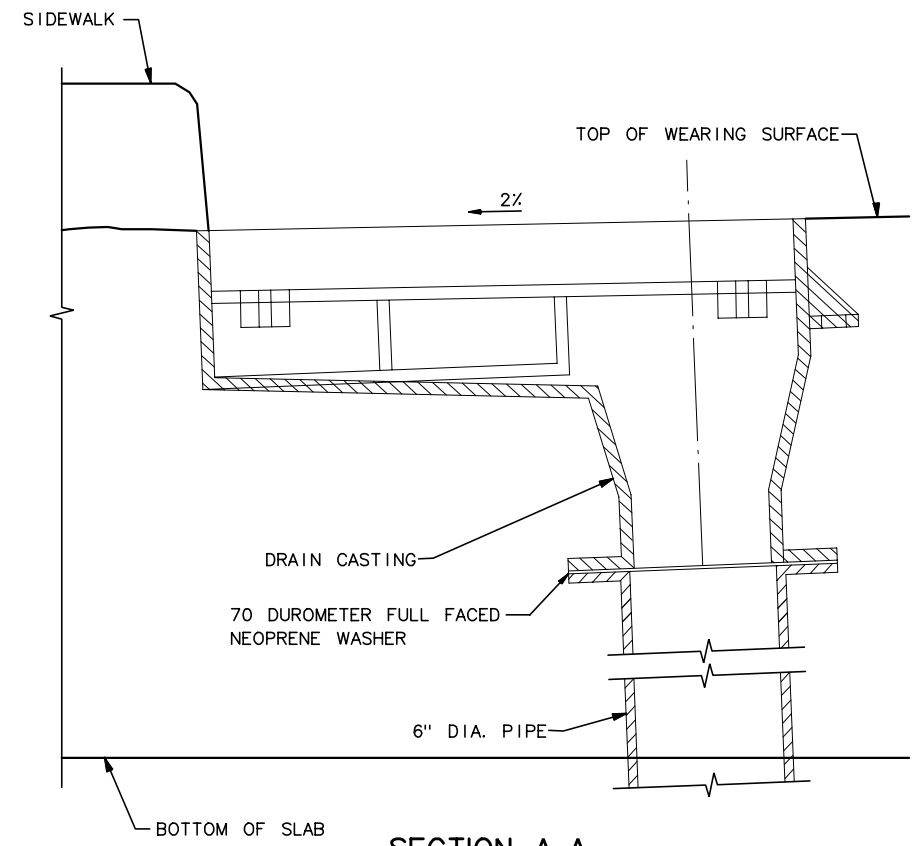

SECTION A-A PROFILE 2

AS BUILT

No.	Date	Revisions	By

HNTB CORPORATION

STATE OF WISCONSIN
DEPARTMENT OF TRANSPORTATION

STRUCTURE B-40-413A

Designed By	BW	Design Checked	JE	Drawn By	KO	Plans Checked	AP

SOUTH CABLE STAY DRAINAGE DETAILS 1 OF 2

SHEET SC77 OF .

STATE PROJECT I.D.	SHEET NUMBER
2235-00-70	8.104

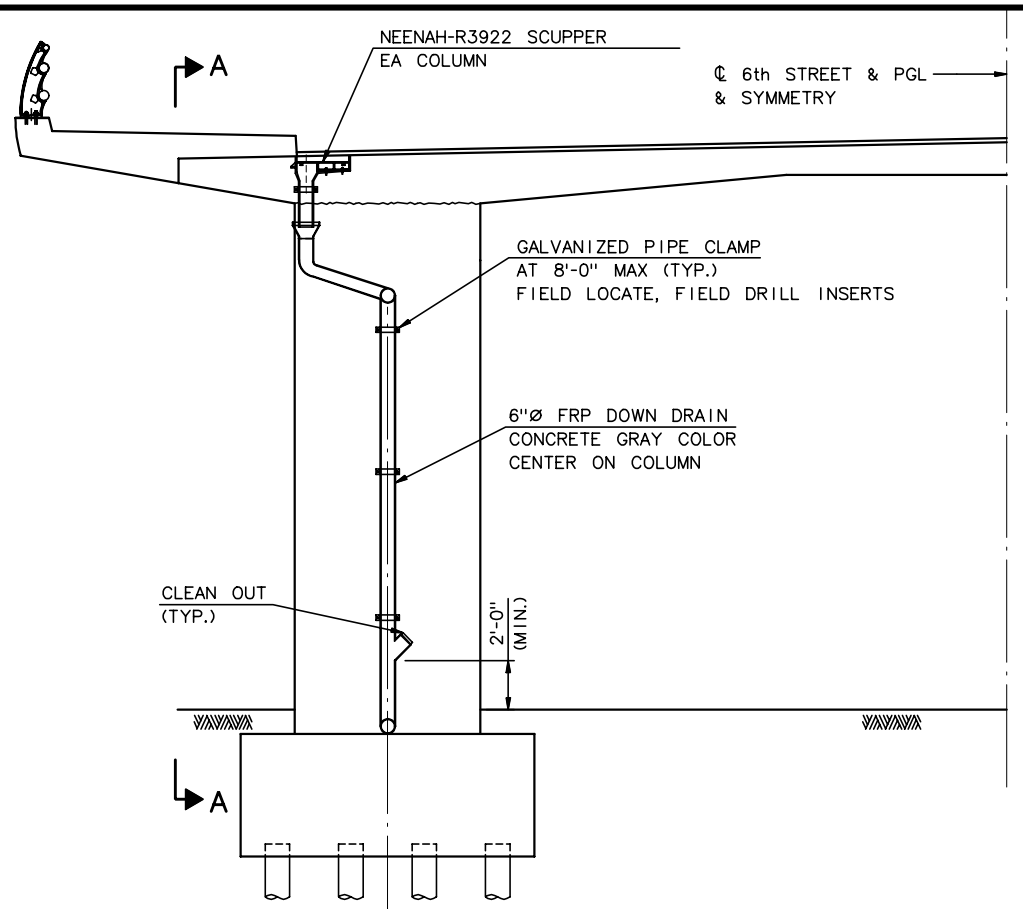

TYPICAL DRAINAGE DETAIL @ PIER

1/4" = 1'-0"

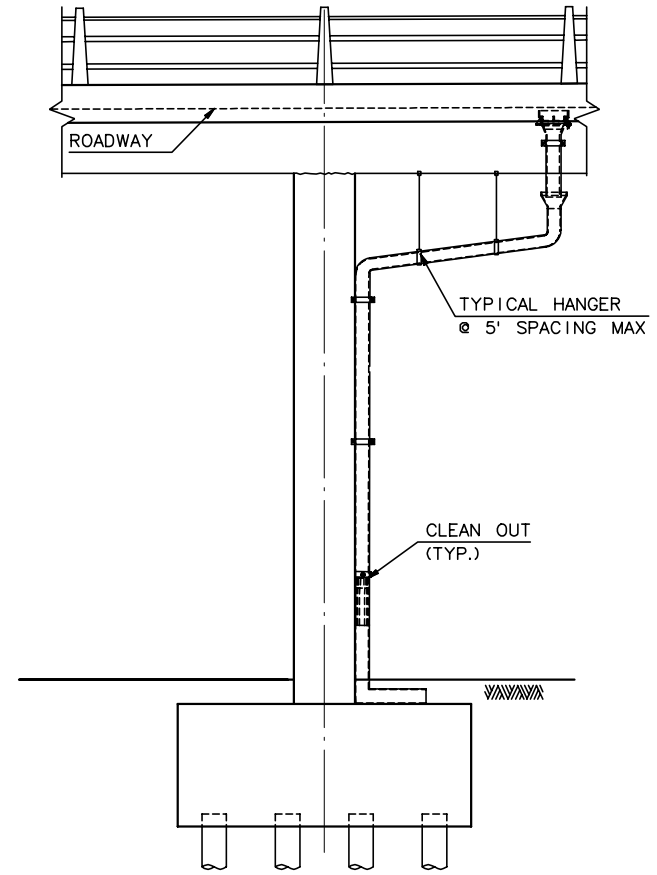

SECTION A-A

1/4" = 1'-0"

LEGEND:

1. NEW 6" DOWNSPOUT PIPEING SHALL BE REINFORCED THERMOSETTING RESIN PIPING (RTRP) CONFORMING TO ASTM D2996 & 2310 THROUGH COLORED CONCRETE GRAY
2. ASTM A307, HOT DIPPED GALVANIZED PER ASTM, A153 CLASS C.

NOTES:

1. TIGHTEN CLAMPS TO A TIGHT SLIP FIT (FOR TEMP. EXPANSION).
2. ALL ELBOWS TO BE LONG RADIUS TYPE.

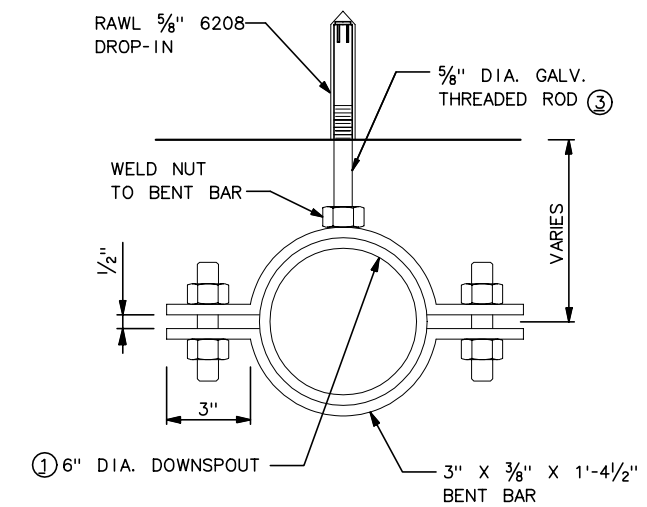

FIXED HANGER BRACKET DETAIL

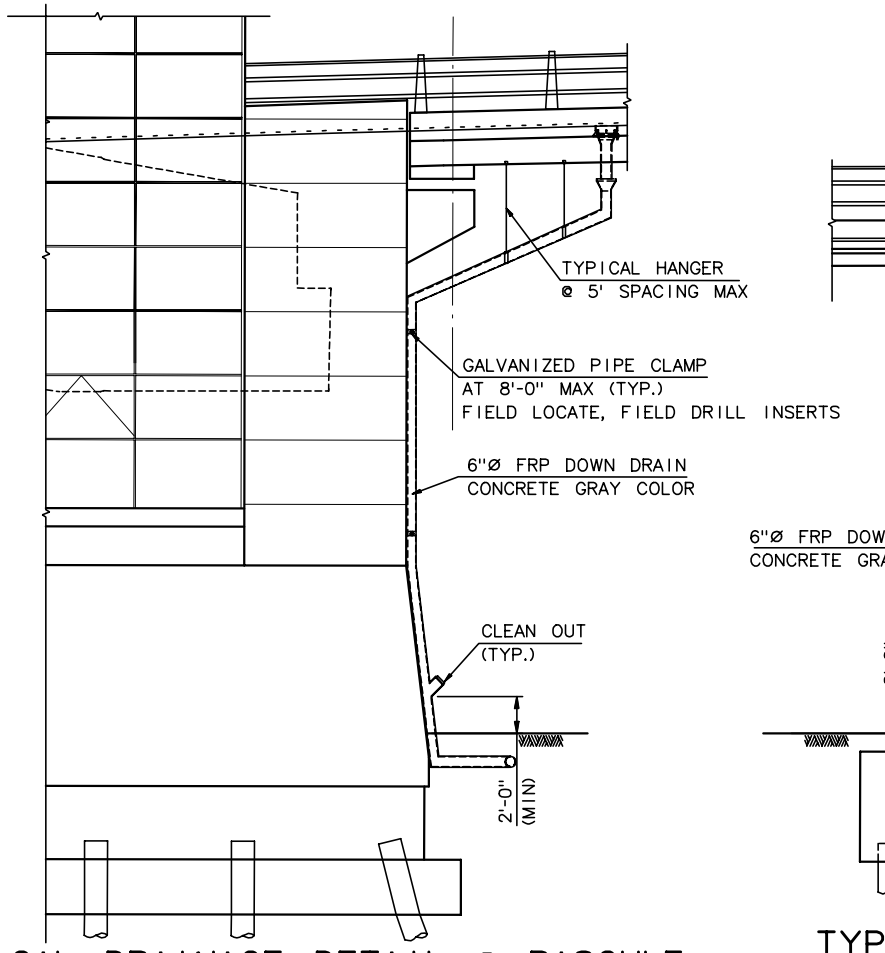

TYPICAL DRAINAGE DETAIL @ BASCULE

N.T.S.

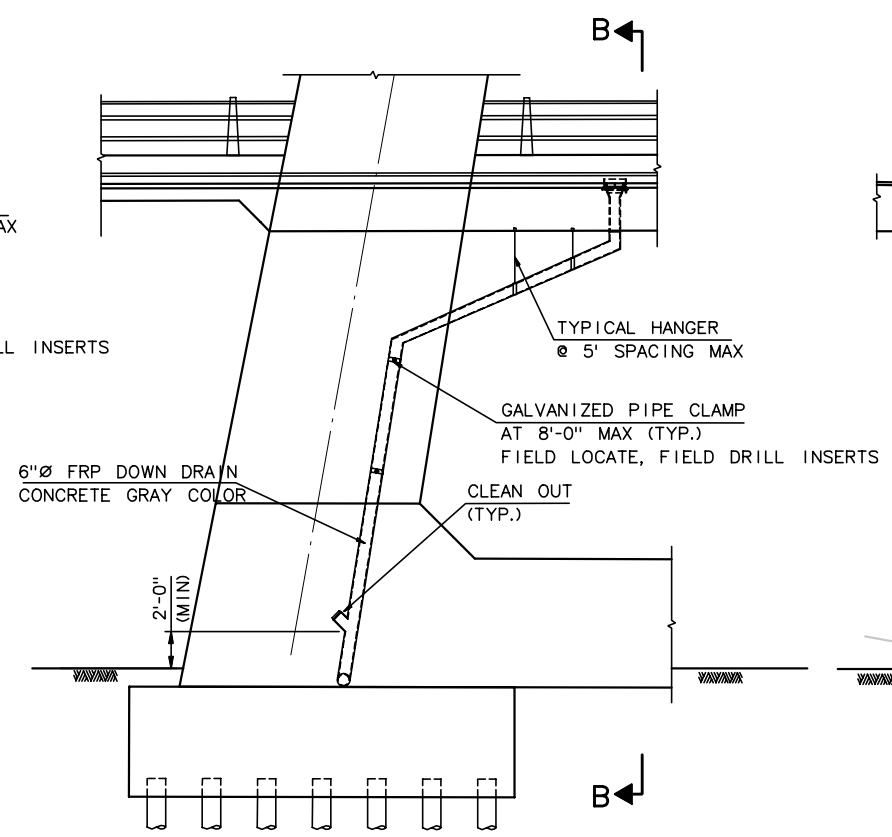

TYPICAL DRAINAGE DETAIL @ PYLON

N.T.S.

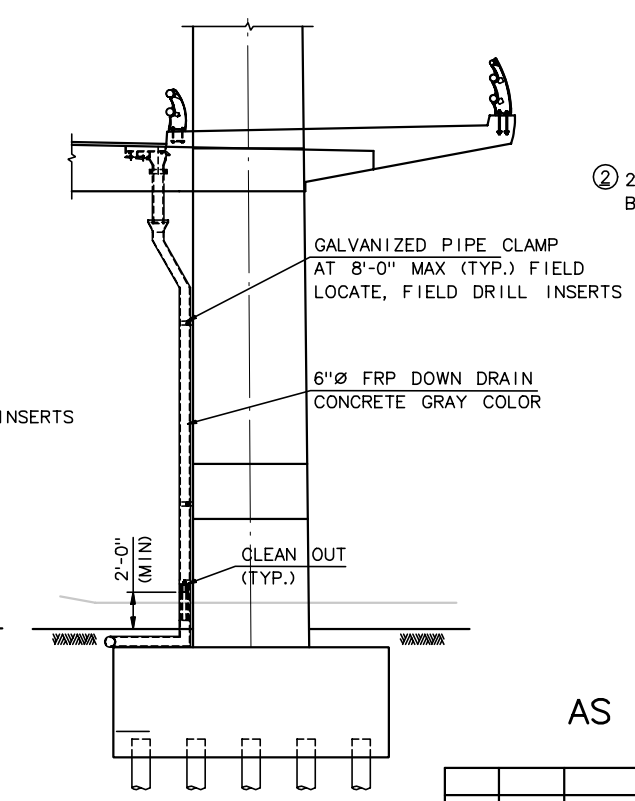

SECTION B-B

N.T.S.

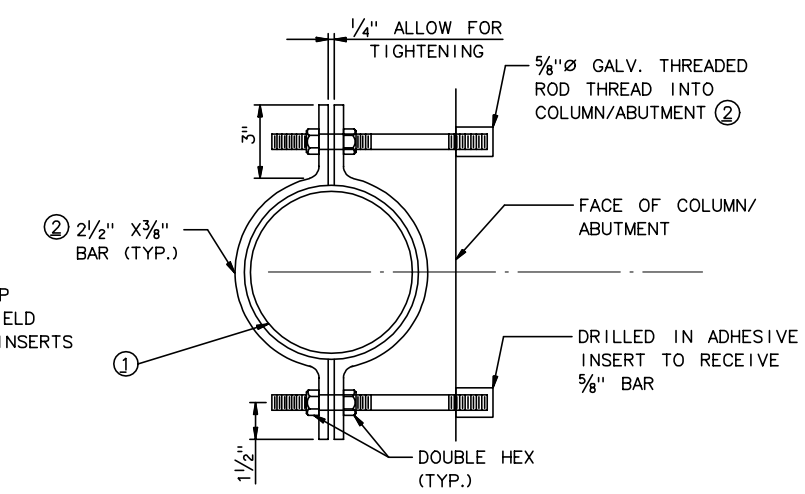

COLUMN/ ABUTMENT BRACKET DETAIL

AS BUILT

No.	Date	Revisions	By

HNTB CORPORATION

STATE OF WISCONSIN
DEPARTMENT OF TRANSPORTATION

STRUCTURE B-40-413A

Designed By	AP	Design Checked	CD	Drawn By	JE	Plans Checked	AP

SOUTH CABLE STAY
DRAINAGE DETAILS
2 OF 2

SHEET SC78 OF .

J:\cadd\ff31185\dgn\AS BUILT\SOUTH CABLESTAY\SC78-DrainDet2.dgn 04/10/03 06:04:04 PM

STATE PROJECT I.D.	SHEET NUMBER
2235-00-70	8.105

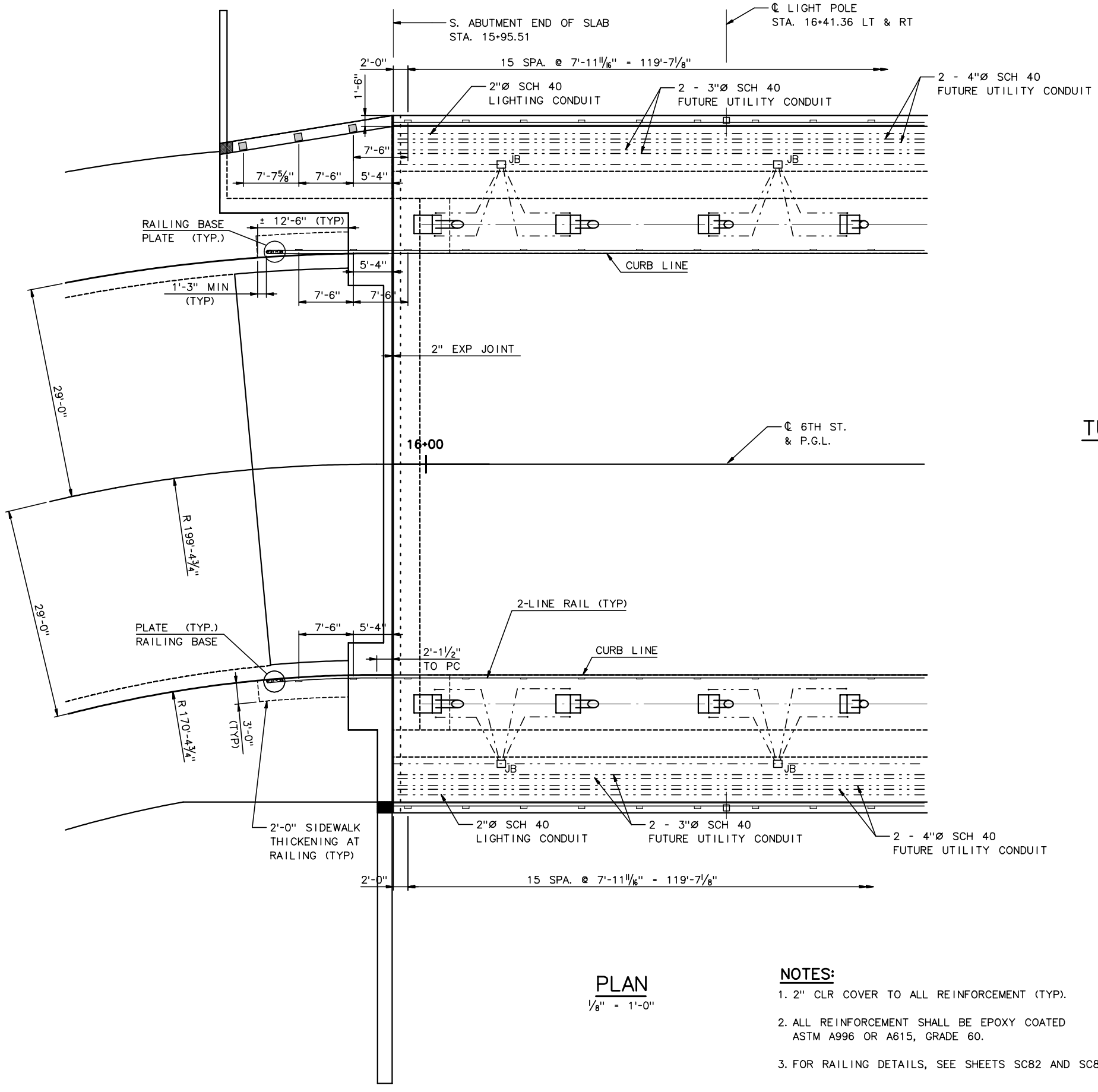

PLAN

1/8" = 1'-0"

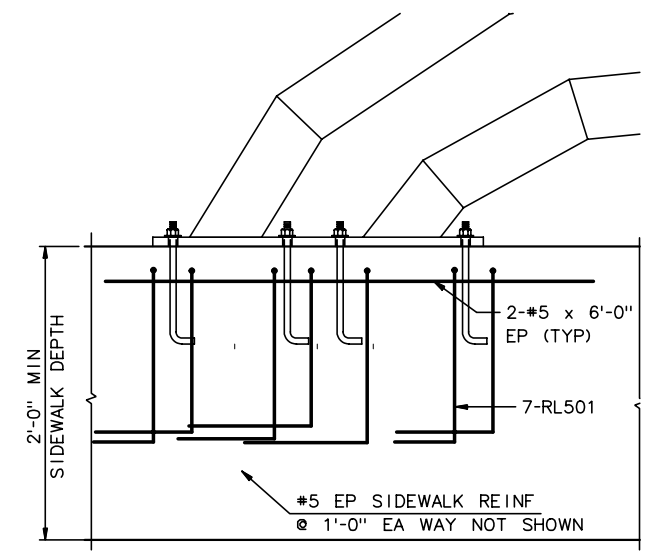

TURN DOWN ANCHOR ON AT GRADE SIDEWALK

1 1/2" = 1'-0"

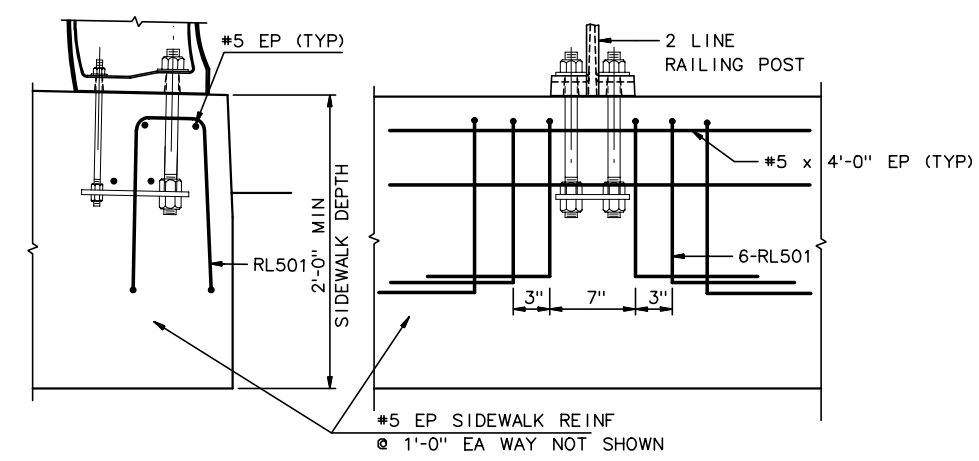

RAILING ANCHOR ON AT GRADE SIDEWALK

1 1/2" = 1'-0"

NOTES:

1. 2" CLR COVER TO ALL REINFORCEMENT (TYP).
2. ALL REINFORCEMENT SHALL BE EPOXY COATED ASTM A996 OR A615, GRADE 60.
3. FOR RAILING DETAILS, SEE SHEETS SC82 AND SC83.

AS BUILT

No.	Date	Revisions	By

HNTB CORPORATION

STATE OF WISCONSIN
DEPARTMENT OF TRANSPORTATION

STRUCTURE B-40-413A

Designed By	GH	Design Checked	AP	Drawn By	GH	Plans Checked	AP

RAILING AND UTILITY LAYOUT ABUTMENT

SHEET SC78a OF .

STATE PROJECT I.D.	SHEET NUMBER
2235-00-70	8.106

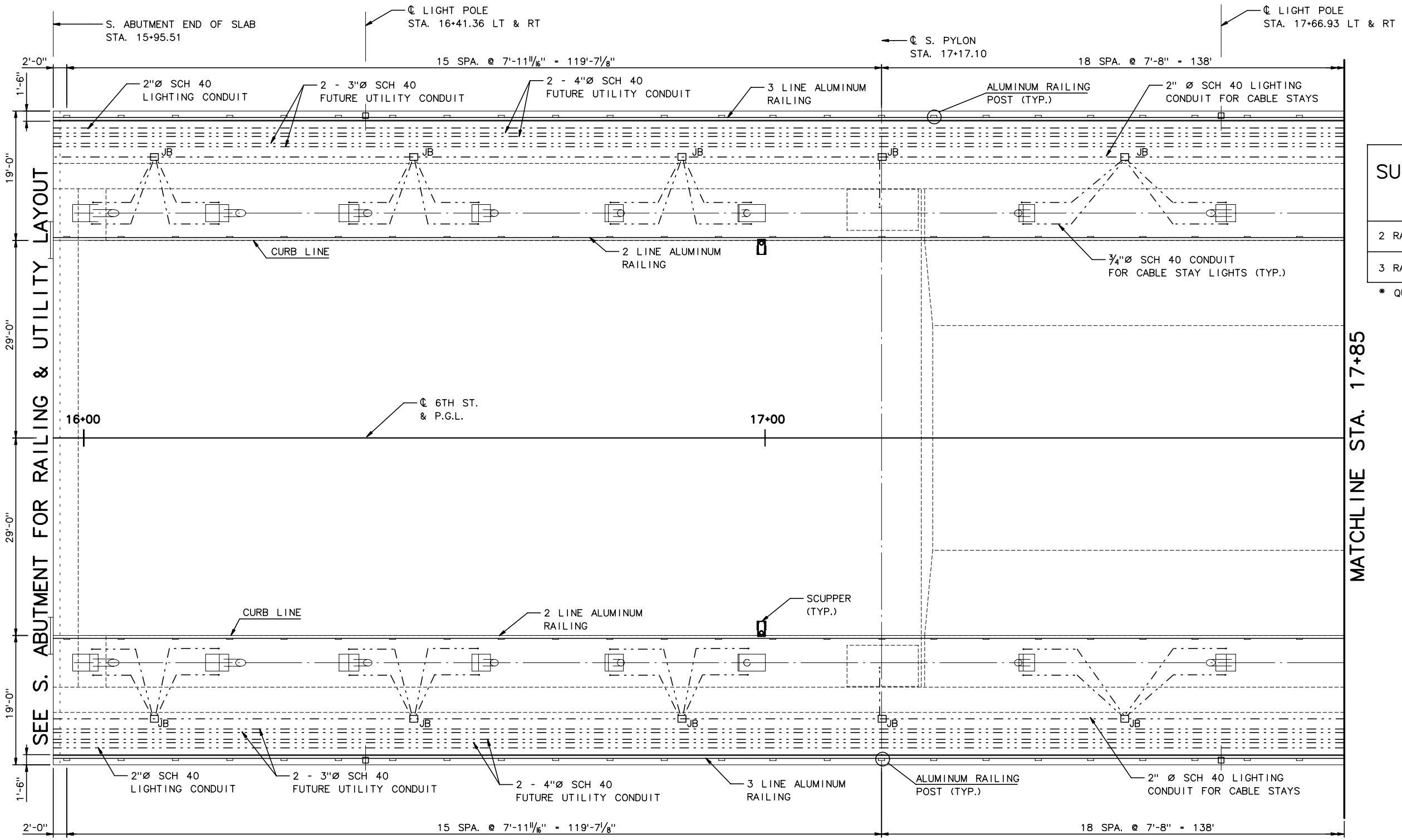

PLAN

1/8" = 1'-0"

SUPERSTRUCTURE RAILING QUANTITIES*

2 RAIL	LINEAR FEET	628
	NUMBER OF POSTS	82
3 RAIL	LINEAR FEET	1150
	NUMBER OF POSTS	152

* QUANTITIES DO NOT INCLUDE ABUTMENT RAILING

LEGEND:

JB: JUNCTION BOX

NOTES:

1. FOR DECK LAYOUT GEOMETRY, SEE DECK SLAB SHTS SC31 THRU SC38.
2. FOR RAILING DETAILS, SEE SHTS SC82 AND SC83.
3. FOR SCUPPER DETAILS, SEE SHTS SC77 THRU SC78.

AS BUILT

No.	Date	Revisions	By

HNTB CORPORATION

STATE OF WISCONSIN
DEPARTMENT OF TRANSPORTATION

STRUCTURE B-40-413A

Designed By	GH	Design Checked	AP	Drawn By	GH	Plans Checked	AP

RAILING AND UTILITY LAYOUT 1 OF 3

SHEET SC79 OF .

STATE PROJECT I.D.	SHEET NUMBER
2235-00-70	8.107

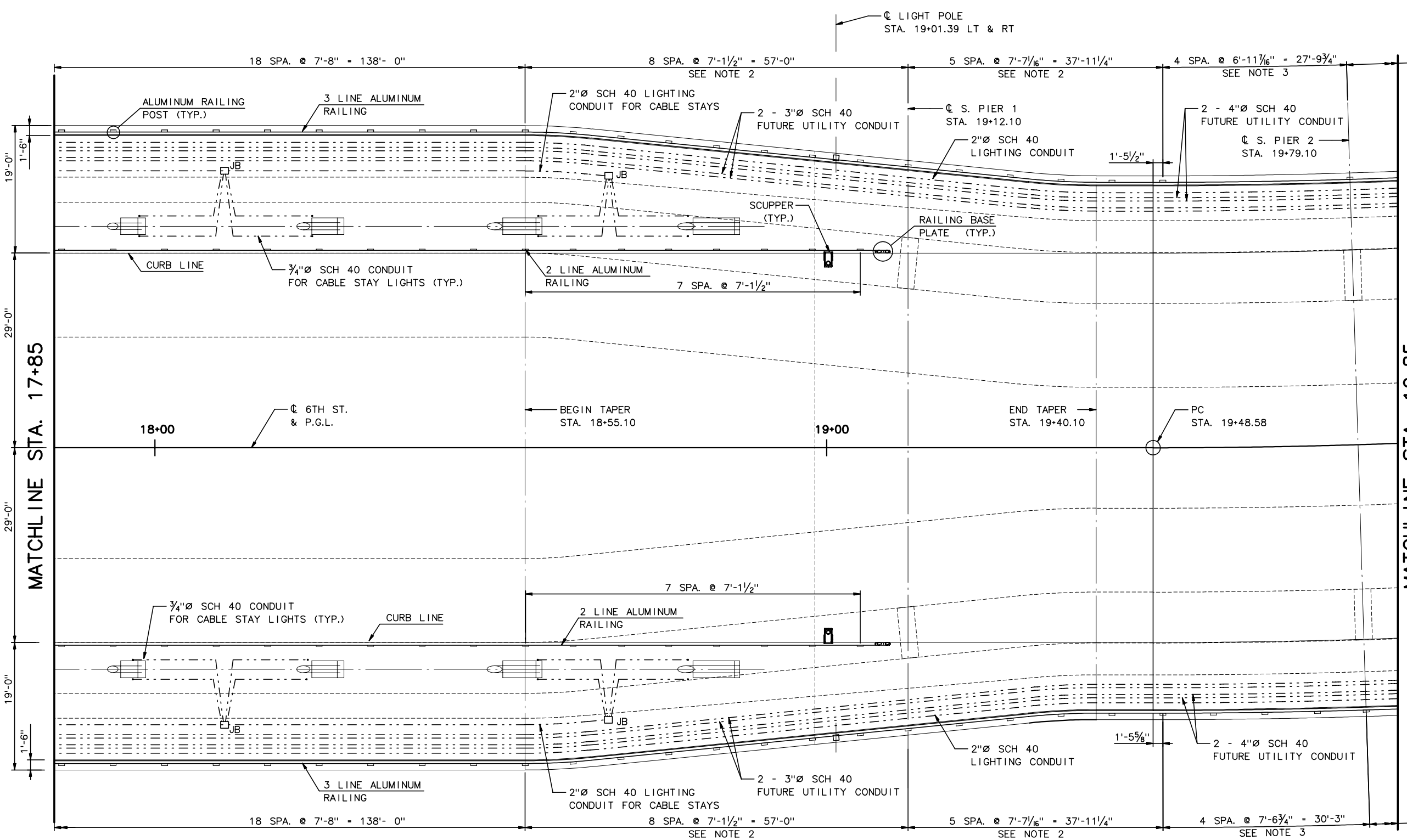

PLAN

⅛" = 1'-0"

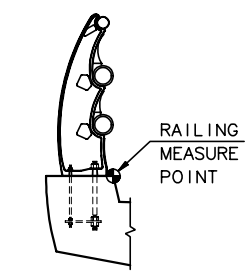

DETAIL 1

N.T.S.

LEGEND:

JB: JUNCTION BOX

NOTES:

1. NOTES SEE SHT SC79
2. RAILING MEASURED NORMAL AND HORIZONTAL W/ PGL.
3. RAILING MEASURED ALONG INSIDE TOP OF PEDESTRIAN CURB. (SEE DETAIL 1)

AS BUILT

No.	Date	Revisions	By

HNTB CORPORATION

STATE OF WISCONSIN
DEPARTMENT OF TRANSPORTATION

STRUCTURE B-40-413A

Designed By	GH	Design Checked	AP	Drawn By	GH	Plans Checked	AP

RAILING AND UTILITY LAYOUT 2 OF 3

SHEET SC80 OF .

STATE PROJECT I.D.	SHEET NUMBER
2235-00-70	8.108

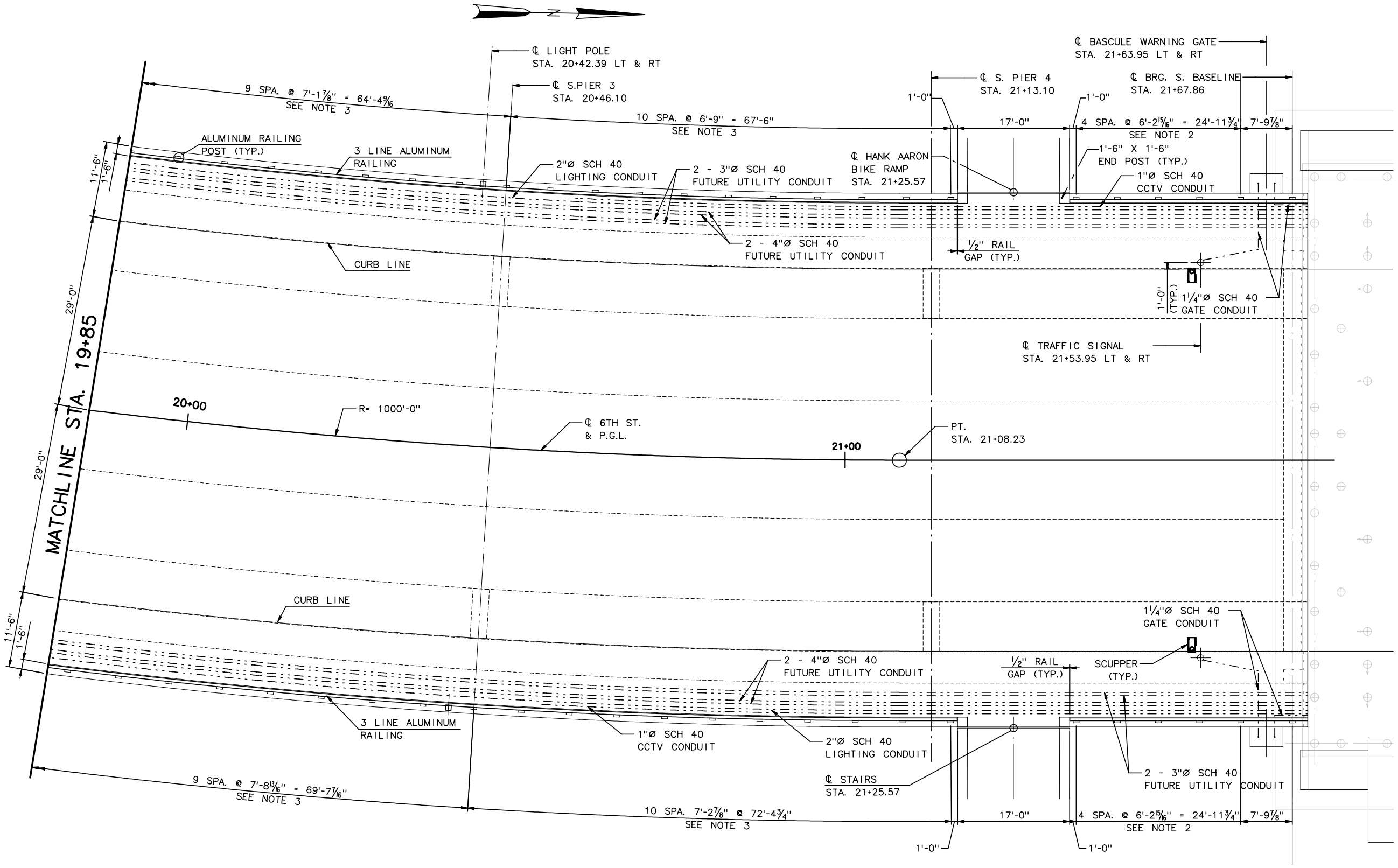

PLAN

⅛" = 1'-0"

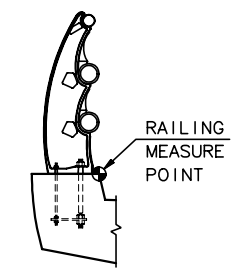

DETAIL 1

N.T.S.

LEGEND:

JB: JUNCTION BOX

NOTES:

1. NOTES SEE SHT SC79
2. RAILING MEASURED NORMAL AND HORIZONTAL W/ PGL.
3. RAILING MEASURED ALONG INSIDE TOP OF PEDESTRIAN CURB. (SEE DETAIL 1)

AS BUILT

No.	Date	Revisions	By
1	4-10-02	ADD BIKE/STAIRS, REV RAILING	AP

HNTB CORPORATION

STATE OF WISCONSIN
DEPARTMENT OF TRANSPORTATION

STRUCTURE B-40-413A

Designed By	GH	Design Checked	AP	Drawn By	GH	Plans Checked	AP

RAILING AND UTILITY LAYOUT 3 OF 3

SHEET SC81 OF .

STATE PROJECT I.D.	SHEET NUMBER
2235-00-70	8.109

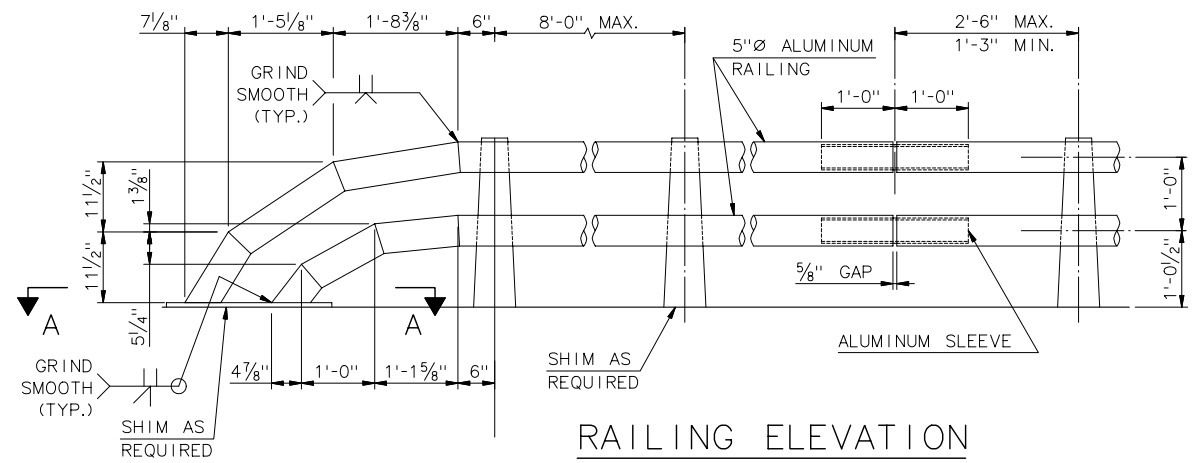

RAILING ELEVATION

3/4" = 1'-0"

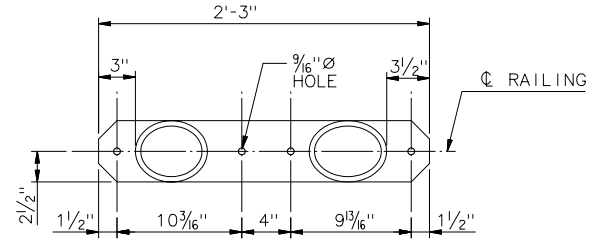

BASE PLATE DETAIL

SECTION A-A

1 1/2" = 1'-0"

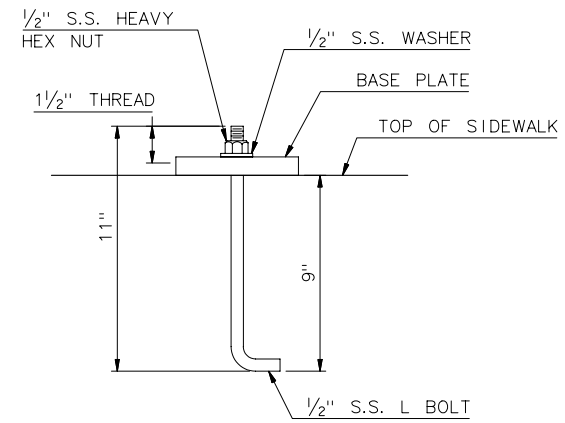

BASE PLATE ANCHOR BOLT DETAIL

3" = 1'-0"

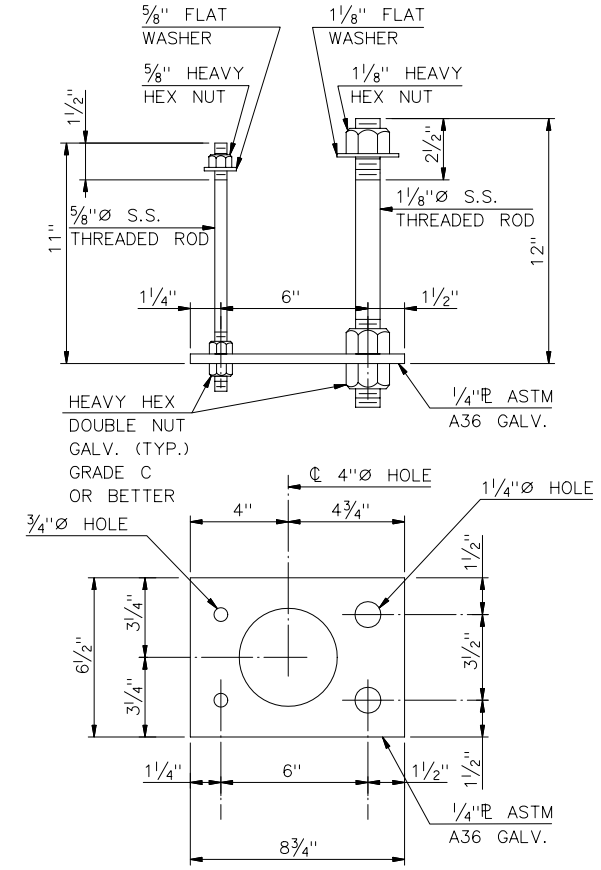

NOTE: BOLT THREADS MAY BE ROLLED OR CUT

ANCHORAGE DETAIL

3" = 1'-0"

NOTES:

1. THIS RAILING IS SIMILAR TO THE AASHTO CRASH TESTED BR2 TYPE A ALUMINUM RAILING.
2. ELECTRODES FOR WELDING SHALL CONFORM TO AWS A5.10, ALLOY ER.
3. ALL WELDS TO BE SMOOTH AND FREE FROM SHARP EDGES AND/OR BURRS.
4. POST TO BE ALUMINUM ALLOY PERMANENT CASTING CONFORMING TO AASHTO DESIGNATION M193 (ASTM B 108, ALLOY A444).
5. RAILS AND SPLICE SLEEVES SHALL BE ASTM B221, ALLOY 6061-T6.
6. ALL POSTS SHALL BE SET NORMAL TO THE PGL. RAILS SHALL BE ATTACHED TO A MINIMUM OF 4 POSTS.
7. ALL RAILS SHALL BE FREE FROM SHARP EDGES OR BURRS THAT COULD CAUSE INJURY.
8. HOLES FOR BOLTS IN RAILS ARE TO BE FIELD DRILLED TO INSURE PROPER FIT.

RAIL TO POST HARDWARE:

RAILING BOLT ASSEMBLY MATERIALS SHALL BE AS FOLLOWS:

STAINLESS STEEL THREADED RODS SHALL BE ASTM A276 TYPE 304, ANNEALED COLD FINISHED. MIN TENSILE STRENGTH SHALL BE 90 KSI.

STAINLESS STEEL HEX NUTS AND WASHERS SHALL BE ASTM A276 TYPE 300 SERIES

ANCHOR HARDWARE:

ALL THREADED RODS SHALL BE STAINLESS STEEL ASTM A276 TYPE 300 OR 400 SERIES WITH A MIN. TENSILE STRENGTH OF 90 ksi, MIN. YIELD STRENGTH OF 35 ksi AND MIN. ELONGATION OF 15% IN 2 INCHES.

ALL HEAVY HEX NUTS AND WASHERS SHALL BE STAINLESS STEEL U.N.O.

NEOPRENE PADS SHALL HAVE A NOMINAL DUROMETER HARDNESS OF 60±5

SHIM MATERIAL SHALL BE ASTM B209, ALLOY 1100-0.

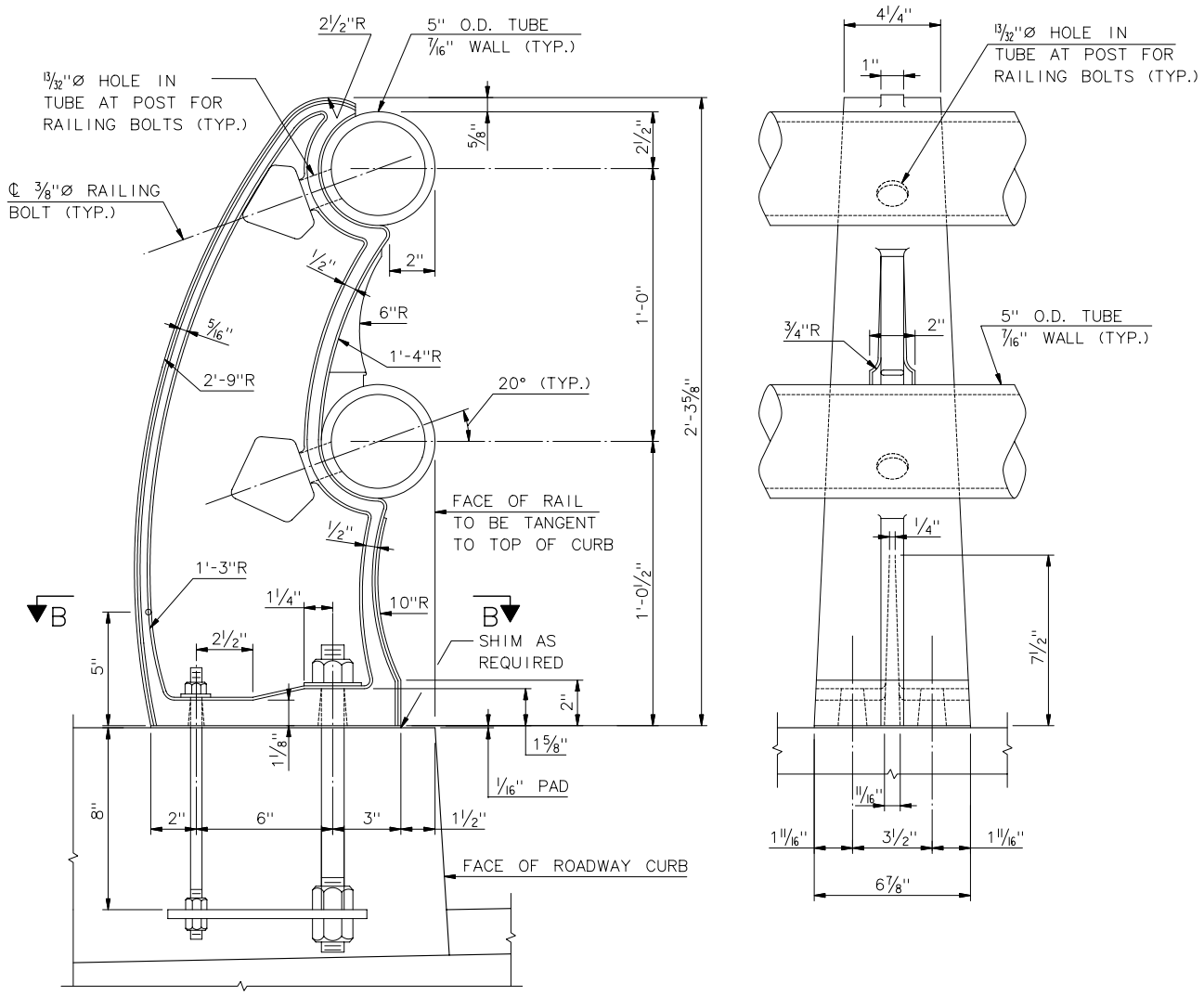

ALUMINUM RAILING POST

3" = 1'-0"

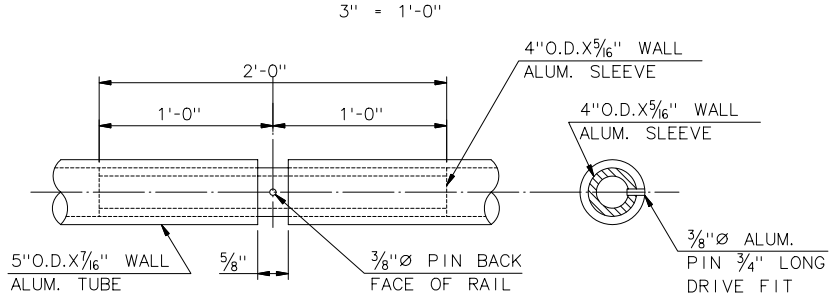

ALUMINUM SLEEVE

N.T.S.

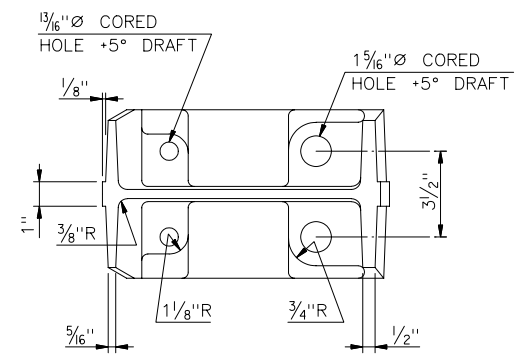

SECTION B-B

3" = 1'-0"

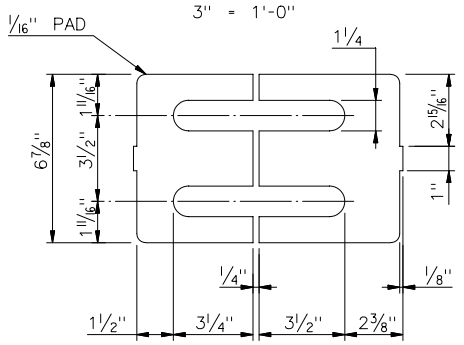

NOTE: PREFORMED PADS SHALL CONSIST OF COTTON FIBERS BONDED WITH NATURAL OR SYNTHETIC RUBBER. WEIGHT OF FIBER SHALL BE APPROX. 50% OF THE TOTAL WEIGHT OF THE PAD. ULTIMATE BREAKDOWN LIMIT OF THE PAD UNDER COMPRESSIVE LOADING SHALL BE AT LEAST 10,000 P.S.I.

RUBBER FIBER PAD

3" = 1'-0"

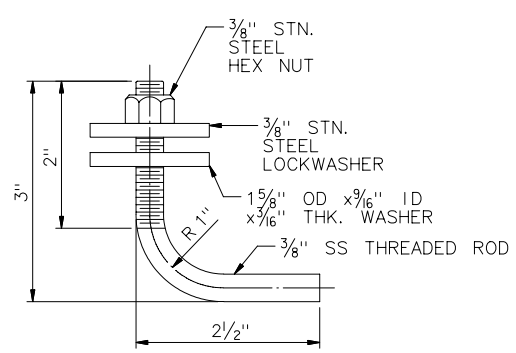

3/8"Ø RAILING BOLT

1" = 1'-0"

RECORD DRAWING

No.	Date	Revisions	By

HNTB CORPORATION

STATE OF WISCONSIN
DEPARTMENT OF TRANSPORTATION

STRUCTURE B-40-413A

Designed By	AP	Design Checked	TZ	Drawn By	DS	Plans Checked	AP

2 LINE ALUMINUM RAILING DETAILS

SHEET SC82 OF

J:\cadd\ff31185\dgn\AS BUILT\SOUTH CABLESTAY\SC82-RAILING_2LINE.dgn 4/17/2003 9:46:34 AM

STATE PROJECT I.D.	SHEET NUMBER
2235-00-70	8.110

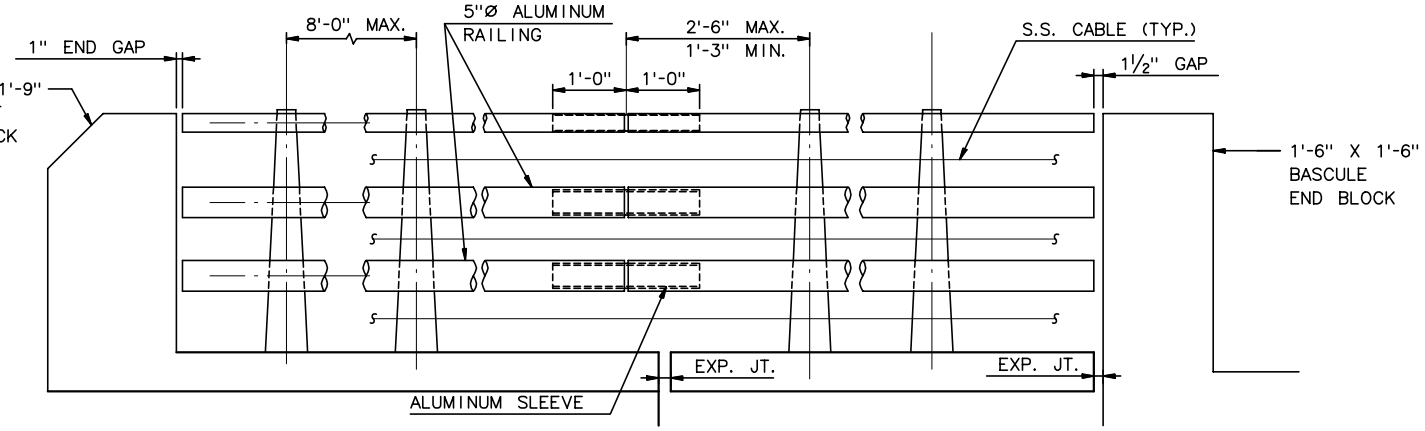

ABUTMENT TERMINATION

BASCULE TERMINATION

RAILING ELEVATION

¾" = 1'-0"

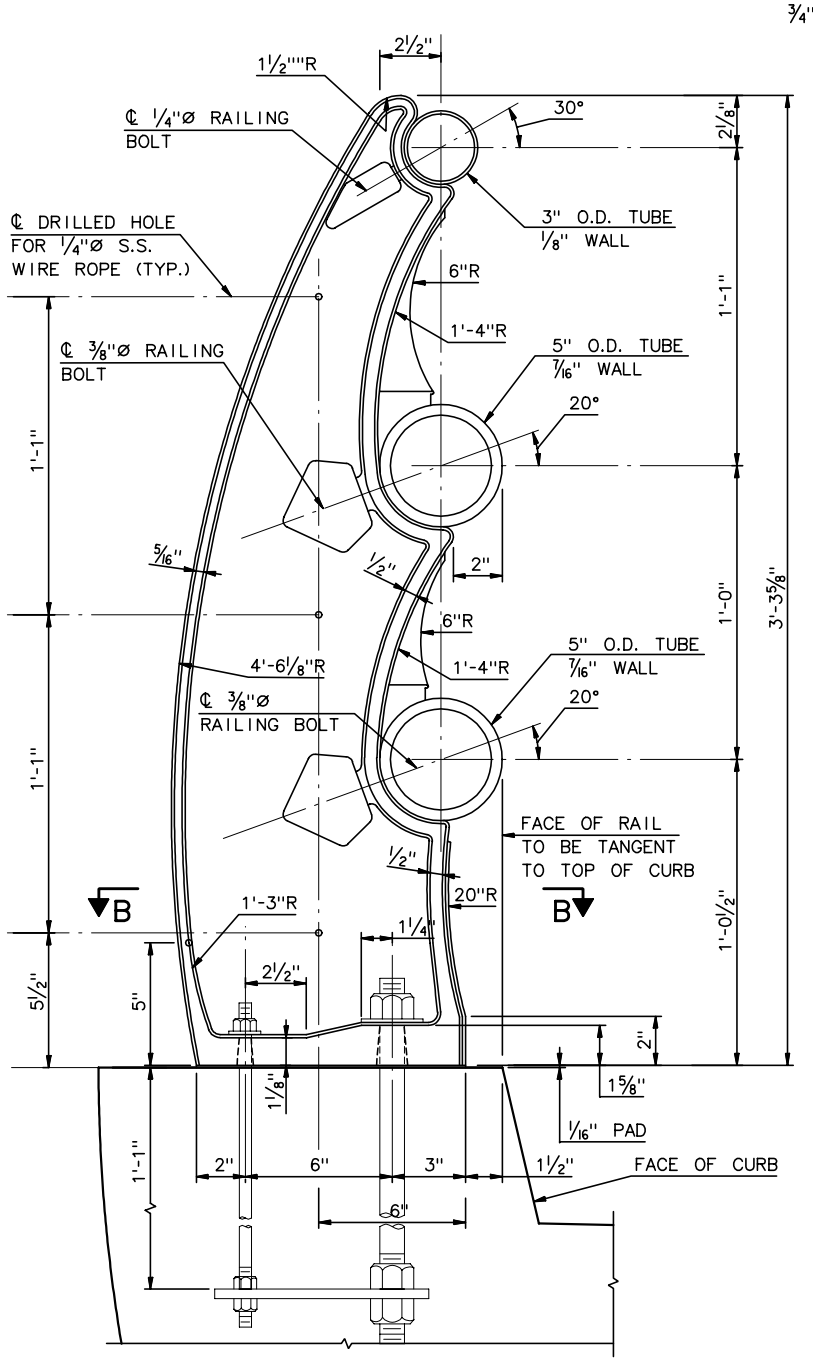

ALUMINUM RAILING POST

3" = 1'-0"

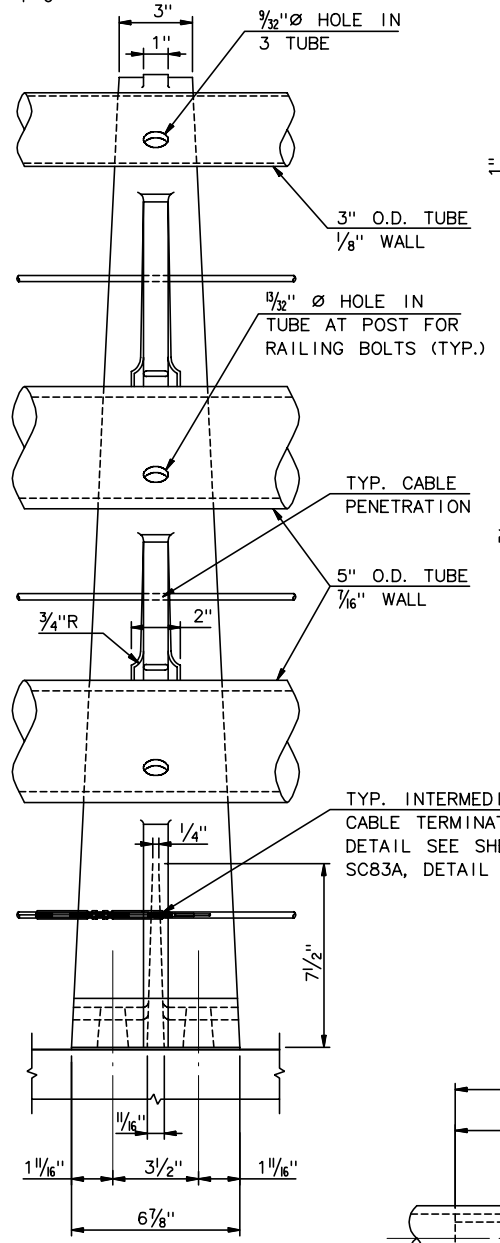

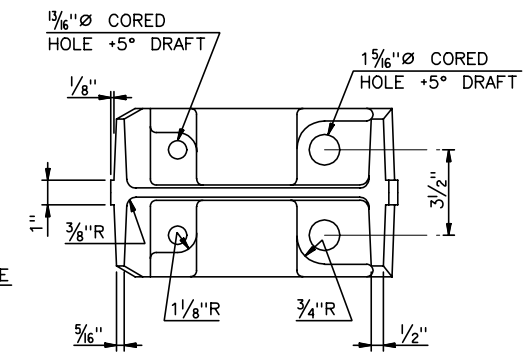

SECTION B-B

3" = 1'-0"

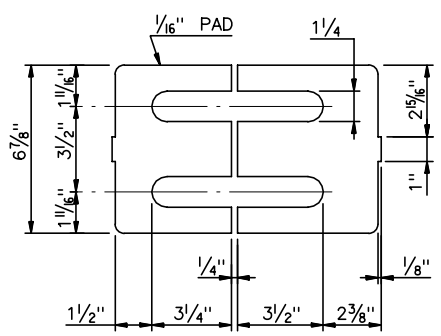

NOTE: PREFORMED PADS SHALL CONSIST OF COTTON FIBERS BONDED WITH NATURAL OR SYNTHETIC RUBBER. WEIGHT OF FIBER SHALL BE APPROX. 50% OF THE TOTAL WEIGHT OF THE PAD. ULTIMATE BREAKDOWN LIMIT OF THE PAD UNDER COMPRESSIVE LOADING SHALL BE AT LEAST 10,000 P.S.I.

RUBBER FIBER PAD

3" = 1'-0"

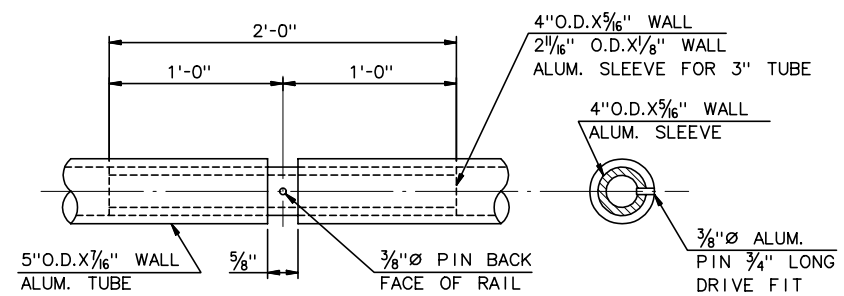

ALUMINUM SLEEVE

N.T.S.

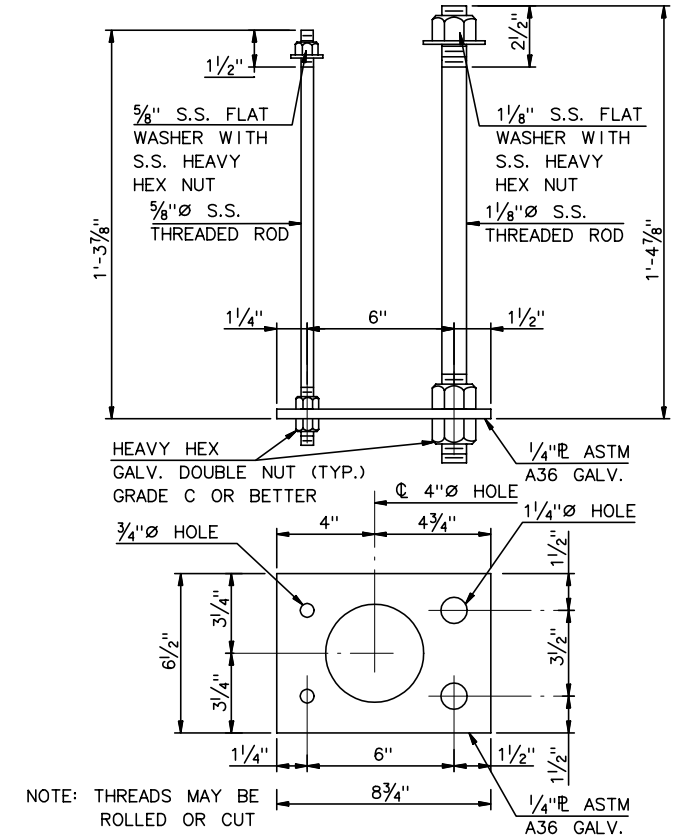

NOTE: THREADS MAY BE ROLLED OR CUT

ANCHORAGE DETAIL

3" = 1'-0"

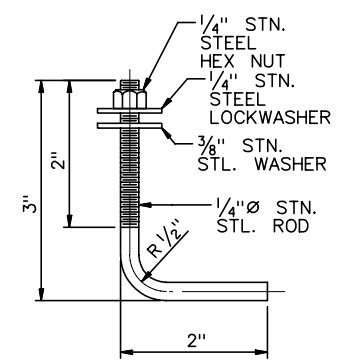

¼"Ø RAILING BOLT

1" = 1'-0"

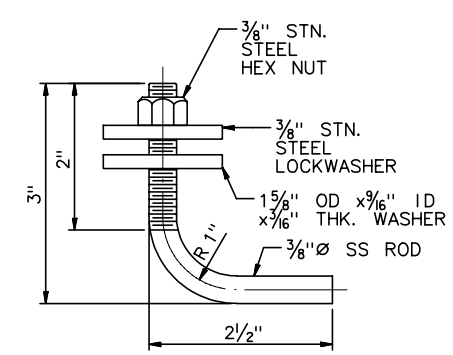

⅜"Ø RAILING BOLT

1" = 1'-0"

NOTES:

1. THIS RAILING IS BASED ON THE AASHTO CRASH TESTED BR2 TYPE A ALUMINUM RAILING
2. ELECTRODES FOR WELDING SHALL CONFORM TO AWS A5.10, ALLOY ER.
3. ALL WELDS TO BE SMOOTH AND FREE FROM SHARP EDGES AND/OR BURRS.
4. POST TO BE ALUMINUM ALLOY PERMANENT MOLD CASTING CONFORMING TO AASHTO DESIGNATION M193, ALLOY A444-T4.
5. RAILS AND SPLICE SLEEVES SHALL BE ALUMINUM ALLOY EXTRUDED TUBING 6061-T6 PER ASTM B221.
6. ALL POSTS SHALL BE SET NORMAL TO THE PGL. RAILS SHALL BE ATTACHED TO A MINIMUM OF 4 POSTS.
7. ALL RAILS SHALL BE FREE FROM SHARP EDGES OR BURRS THAT COULD CAUSE INJURY.
8. HOLES FOR BOLTS IN RAILS ARE TO BE FIELD DRILLED TO INSURE PROPER FIT.

9 FOR PEDESTRAIN CABLE DETAILS SEE SC83A.

RAIL TO POST HARDWARE:

RAILING BOLT ASSEMBLY MATERIALS SHALL BE AS FOLLOWS:

STAINLESS STEEL THREADED RODS SHALL BE ASTM A276 TYPE 304, ANNEALED COLD FINISHED. MIN TENSILE STRENGTH SHALL BE 90 KSI.

STAINLESS STEEL HEX NUTS AND WASHERS SHALL BE ASTM A276 TYPE 300 SERIES

ANCHOR HARDWARE:

ALL THREADED RODS SHALL BE STAINLESS STEEL ASTM A276 TYPE 300 OR 400 SERIES WITH A MIN. TENSILE STENGTH OF 90 KSI, MIN. YIELD STRENGTH OF 35 KSI AND MIN ELONGATION OF 15% IN 2 INCHES.

ALL HEAVY HEX NUTS AND WASHERS SHALL BE STAINLESS STEEL U.N.O.

NEOPRENE PADS SHALL HAVE A NOMINAL DUROMETER HARDNESS OF 60±5

SHIM MATERIAL SHALL BE ASTM B209, ALLOY 1100-0.

CABLE HARDWARE:

REFER TO SC83A.

RECORD DRAWING

No.	Date	Revisions	By

HNTB CORPORATION

STATE OF WISCONSIN
DEPARTMENT OF TRANSPORTATION

STRUCTURE B-40-413A

Designed By	AP	Design Checked	TZ	Drawn By	DS	Plans Checked	AP

3 LINE ALUMINUM RAILING DETAILS

SHEET SC83 OF

STATE PROJECT I.D.	SHEET NUMBER
2235-00-70	8.111

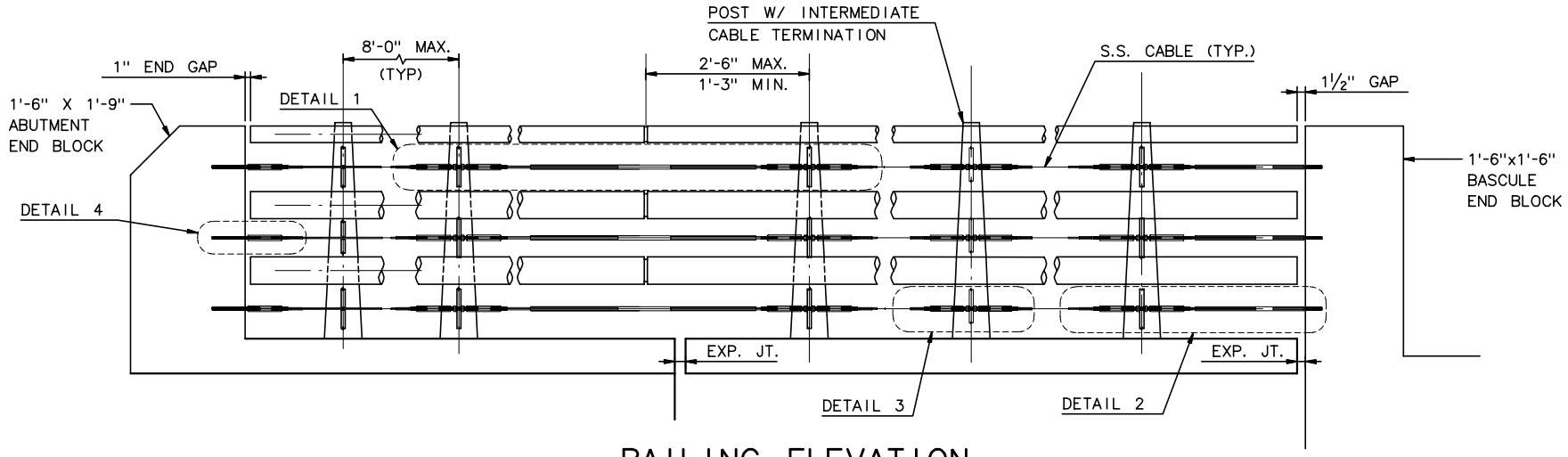

RAILING ELEVATION

¾" = 1'-0"

HARDWARE:

CABLE

- ¼" Ø S.S. 1x19 CLASS
- BREAKING STRENGTH OF 8,200 LBS.

THREADED ROD

- S.S. A276 TYPE 300 OR 400 SERIES
- MIN. TENSILE STRENGTH = 90 KSI

THREADED HEX SWAGED STUD

THREAD SIZE: ½- 20
LENGTH OF THREAD : 3" MIN
TOTAL LENGTH : AS MANUFACTURER REQUIRED FOR ¼- 1x19 SS CABLE
PART NO. H58-50FCC
THE CABLE CONNECTION
5224 HIGHWAY 50E
CARSON CITY, NY 89701
800-851-2961
OR EQUIVALENT

NOTES:

1. CABLES SHALL BE TIGHTENED AFTER ATTACHMENT OF RAILING.
2. INTERMEDIATE CABLE TERMINATORS SHALL BE LOCATED AT ±75'.

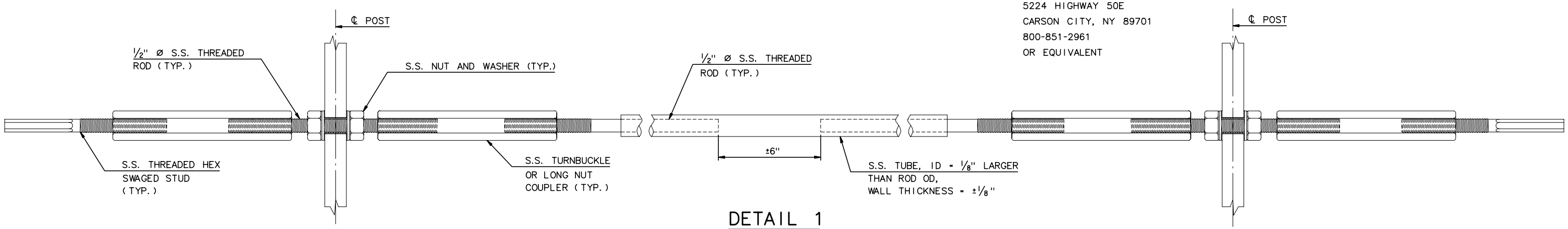

DETAIL 1

N.T.S.

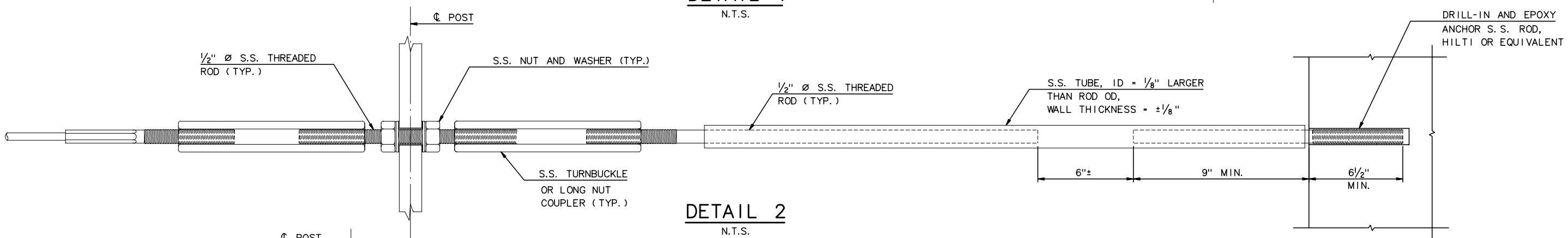

DETAIL 2

N.T.S.

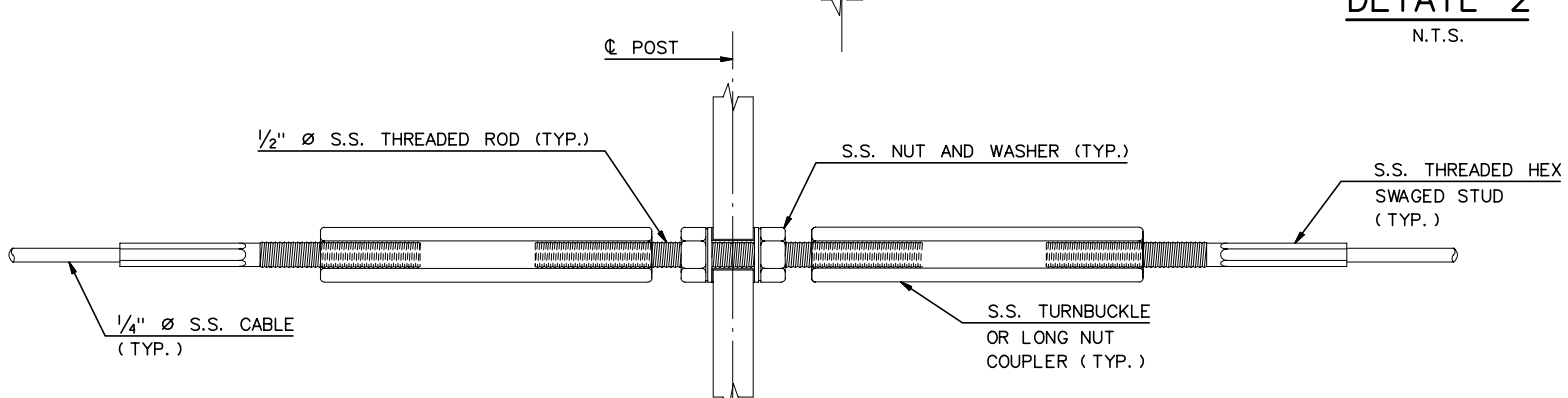

DETAIL 3

N.T.S.

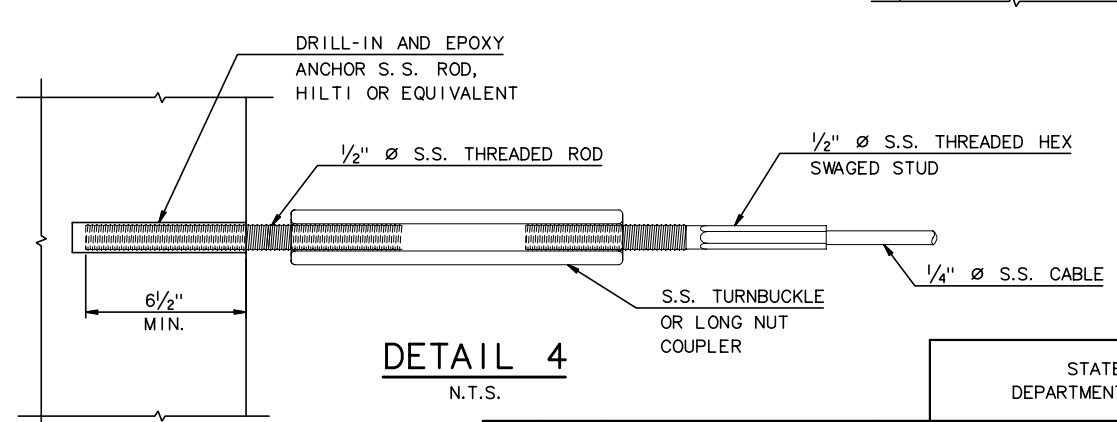

DETAIL 4

N.T.S.

RECORD DRAWING

No.	Date	Revisions	By

HNTB CORPORATION

STATE OF WISCONSIN
DEPARTMENT OF TRANSPORTATION

STRUCTURE B-40-413A

Designed By TPZ	Design Checked AJP	Drawn By GMZ	Plans Checked AJP

PEDESTRIAN RAILING CABLE DETAILS

SHEET SC83a OF

STATE PROJECT I.D.	SHEET NUMBER
2235-00-70	8.112

SOUTH CABLE STAY ABUTMENT - FOOTING REINFORCEMENT

BAR MARK	BAR SIZE	LOCATION COMMENT	NO.	LTH/BAR DECIMAL FT	TOTAL WT (LB)	BEND TYPE	A			B			C			D			E			F/R			G			H			I			J			K			O		
							FT	IN	1/4	FT	IN	1/4	FT	IN	1/4	FT	IN	1/4	FT	IN	1/4	FT	IN	1/4	FT	IN	1/4	FT	IN	1/4	FT	IN	1/4	FT	IN	1/4	FT	IN	1/4	FT	IN	1/4
PL401	4	Pile 10 3/4"	425	3.094	878.5	T3																															1	0	0	0	8	0
PL601	6	Pile 10 3/4" 2' Footing	40	10.083	605.8	2	1	0	0	9	1	0																														
PL801	8	Pile 10 3/4" 4' Footing	316	11.250	9491.9	STR				11	3	0																														
F501	5		8	40.000	333.8	STR				40	0	0																														
F502	5		2	40.000	83.4	STR				40	0	0																														
F503	5		4	40.000	166.9	STR				40	0	0																														
F504	5		4	40.000	166.9	STR				40	0	0																														
F505	5		2	9.500	19.8	STR				9	6	0																														
F506	5		2	6.000	12.5	STR				6	0	0																														
F507	5		2	32.167	67.1	STR				32	2	0																														
F508	5		2	20.000	41.7	STR				20	0	0																														
F509	5		2	11.500	24.0	STR				11	6	0																														
F510	5		53	8.917	492.9	S3	0	5	2	1	0	0	6	0	0	1	0	0							0	5	2																
F511	5		53	6.958	384.6	T9	0	5	2	6	0	0													0	6	0																
F512	5		26	27.000	732.2	17				1	0	0	26	0	0	0	0	0																									
F513	5		26	12.000	325.4	17				4	0	0	8	0	0	0	0	0																									
F601	6		56	54.667	4598.1	17				2	8	0	52	0	0	0	0	0																									
F602	6		40	49.000	2943.9	STR				49	0	0																														
F603	6		16	47.667	1145.525	17				2	8	0	45	0	0	0	0	0																									
F604	6		40	35.417	2127.833	17				2	8	0	32	9	0	0	0	0																									
F605	6		48	37.500	2703.6	17				2	8	0	32	2	0	2	8	0																									
F701	7		132	14.833	4002.2	17				2	8	0	9	6	0	2	8	0																									
F702	7		74	16.833	2546.1	17				2	8	0	11	6	0	2	8	0																									
F901	9		320	18.833	20490.7	17				2	8	0	13	6	0	2	8	0																									
W501	5	Epoxy Coated	87	20.250	1837.5	2	1	0	0	19	3	0													0	0	0																
W502	5	Epoxy Coated	85	17.250	1529.3	2	1	0	0	16	3	0													0	0	0																
W503	5	Epoxy Coated 1 Series of 17	17	17.000	301.4	2	1	0	0	19 to 13	0 to 0	0 to 0													0	0	0																
W504	5	Epoxy Coated	43	14.083	631.6	2	1	0	0	13	1	0													0	0	0																
W505	5	Epoxy Coated	8	13.750	114.7	2	1	0	0	12	9	0													0	0	0																
W506	5	Epoxy Coated 1 Series of 20	20	9.625	200.8	2	1	0	0	12 to 4	9 to 6	0 to 0													0	0	0																
W601	6	Epoxy Coated	16	13.750	330.4	2	1	0	0	12	9	0													0	0	0																
W602	6 6	Epoxy Coated 1 Series of 39	39	9.625	563.8	2	1	0	0	12 to 4	9 to 6	0 to 0													0	0	0																
W701	7	Epoxy Coated	16	20.583	673.157	2	1	4	0	19	3	0													0	0	0																
W702	7	Epoxy Coated	16	17.583	575.0	2	1	4	0	16	3	0													0	0	0																
W703	7	Epoxy Coated 1 Series of 34	34	17.333	1204.6	2	1	4	0	19 to 13	0 to 0	0 to 0													0	0	0																
W704	7	Epoxy Coated	60	14.333	1757.8	2	1	4	0	13	0	0													0	0	0																
W705	7	Epoxy Coated	60	10.333	1267.3	2	1	4	0	9	0	0													0	0	0																
W901	9	Epoxy Coated	90	20.833	6375.0	2	1	7	0	19	3	0													0	0	0																
W902	9	Epoxy Coated	88	17.833	5335.7	2	1	7	0	16	3	0													0	0	0																
W903	9	Epoxy Coated	47	14.667	2343.7	2	1	7	0	13	1	0													0	0	0																
				TOTAL WT =	79427.4																																					

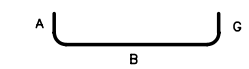

TYPE 2

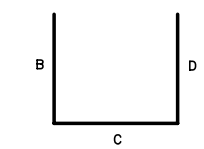

TYPE 17

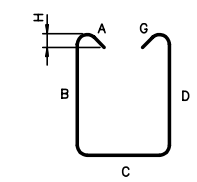

TYPE S3

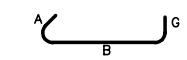

TYPE T9

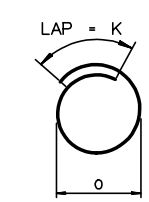

TYPE T3

NOTES:

1. EPOXY COATED REINFORCEMENT IS NOTED AS "EPOXY COATED".
2. ALL REINFORCING SHALL BE ASTM A615 OR A996, GRADE 60.

AS BUILT

No.	Date	Revisions	By

HNTB CORPORATION

STATE OF WISCONSIN
DEPARTMENT OF TRANSPORTATION

STRUCTURE

Designed By	GD	Design Checked	TZ	Drawn By	BM	Plans Checked	AP

SOUTH CABLE STAY ABUTMENT FOOTING BARLIST

SHEET SC84 OF

STATE PROJECT I.D.	SHEET NUMBER
2235-00-70	8.113

SOUTH CABLE STAY ABUTMENT - WALL REINFORCEMENT

BAR MARK	BAR SIZE	LOCATION COMMENT	NO.	LTH/BAR DECIMAL FT	TOTAL WT (LB)	BEND TYPE	A			B			C			D			E			F/R			G			H			I			J			K			O		
							FT	IN	1/4	FT	IN	1/4	FT	IN	1/4	FT	IN	1/4	FT	IN	1/4	FT	IN	1/4	FT	IN	1/4	FT	IN	1/4	FT	IN	1/4	FT	IN	1/4	FT	IN	1/4	FT	IN	1/4
W401	4	Epoxy	76	11.750	596.5	2	0	6	0	11	3	0													0	0	0															
W507	5	Epoxy	153	10.000	1595.8	STR				10	0	0																														
W508	5	Epoxy Coated 1 Series of 16	16	9.125	152.3	STR				12 to 6	3 to 0	0 to 0																														
W509	5	Epoxy	44	20.000	917.8	STR				20	0	0																														
W510	5	Epoxy	60	40.000	2503.2	STR				40	0	0																														
W511	5	Epoxy	16	40.000	667.5	17				38	6	0	1	6	0	0	0	0																								
W513	5	Epoxy	22	23.000	527.8	17				21	6	0	1	6	0	0	0	0																								
W514	5	Epoxy	8	25.500	212.8	STR				25	6	0																														
W515	5	Epoxy	34	11.500	407.8	17				10	0	0	1	6	0	0	0	0																								
W516	5	Epoxy	16	20.000	333.8	17				10	0	0	10	0	0	0	0	0																								
W517	5	Epoxy	25	7.583	197.7	17				3	0	0	1	7	0	3	0	0																								
W518	5	Epoxy	38	10.458	414.5	17				5	0	0	0	5	2	5	0	0																								
W519	5	Epoxy	17	12.583	223.1	17				6	0	0	0	7	0	6	0	0																								
W520	5	Epoxy	8	38.500	321.2	17				37	0	0	1	6	0																											
W521	5	Epoxy	8	38.500	321.2	17				37	0	0	1	6	0																											
W522	5	Epoxy	8	20.333	169.7	17				18	10	0	1	6	0																											
W523	5	Epoxy	8	20.333	169.661	17				18	10	0	1	6	0																											
W524	5	Epoxy	8	25.000	208.600	17				23	6	0	1	6	0																											
W525	5	Epoxy	8	25.000	208.6	17				23	6	0	1	6	0																											
W526	5	Epoxy Coated 2 Series of 14	28	19.000	554.9	STR				32 to 6	0 to 0	0 to 0																														
W527	5	Epoxy	24	17.333	433.9	STR				17	4	0																														
W528	5	Epoxy	12	9.583	119.9	17				4	0	0	1	7	0	4	0	0																								
W529	5	Epoxy Coated 2 Series of 13	26	16.750	454.2	STR				25 to 8	6 to 0	0 to 0																														
W530	5	Epoxy	186	7.583	1471.2	17				1	0	0	5	7	0	1	0	0																								
W531	5	Epoxy	56	13.083	764.2	2	0	10	0	11	5	0													0	10	0																
W533	5	Epoxy	52	6.917	375.1	2	0	8	0	5	7	0													0	8	0																
W535	5	Epoxy	78	9.000	732.2	S9	0	7	0	2	8	0	2	6	0	2	8	0							0	7	0																
W536	5	Epoxy	50	10.083	525.8	2	2	4	0	5	5	0	2	4	0																											
W537	5	Epoxy	110	6.875	788.8	H15	0	6	0	1	3	0	2	2	2	0	7	2	1	7	0	0	8	2				1	6	0							0	6	0			
W538	5	Epoxy	135	8.417	1185.1	17				3	6	0	1	5	0	3	6	0																								
W539	5	Epoxy	63	5.750	377.8	17				2	6	0	0	9	0	2	6	0																								
W540	5	Epoxy	28	22.250	649.8	STR				22	3	0																														
W541	5	Epoxy	47	5.854	286.977	H10	1	0	0	1	3	1	1	0	3	1	6	1							1	0	0	1	2	2	0	2	1	0	4		1	0	2	0	7	0
W542	5	Epoxy Coated 1 Series of 24	24	10.750	269.1	STR				12 to 9	6 to 0	0 to 0																														
W543	5	Epoxy Coated 1 Series of 14	14	6.771	98.9	17				2	6	0	2	9 to 0	0 to 2	2	6	0																								
W544	5	Epoxy Coated	11	10.000	114.7	17				5	0	0	5	0	0	0	0	0																								

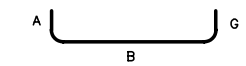

TYPE 2

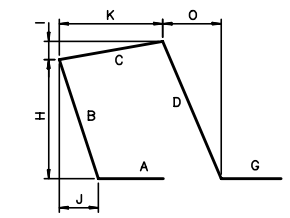

TYPE H10

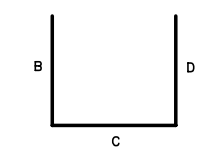

TYPE 17

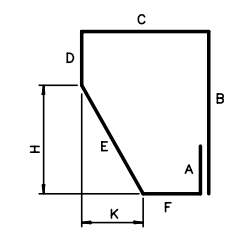

TYPE H15

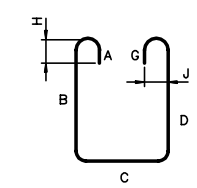

TYPE S9

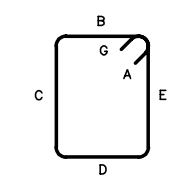

TYPE T1

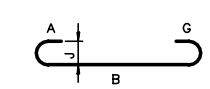

TYPE 1

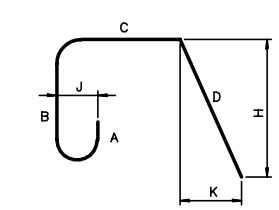

TYPE 12

NOTES:

1. ALL REINFORCING STEEL IS EPOXY COATED U.N.O.
2. ALL REINFORCING SHALL BE ASTM A615 OR A996, GRADE 60.

AS BUILT

No.	Date	Revisions	By
1	11-21-01	MK W531 BEND	AP

HNTB CORPORATION

STATE OF WISCONSIN
DEPARTMENT OF TRANSPORTATION

STRUCTURE B-40-413A

Designed By	GD	Design Checked	TZ	Drawn By	GD	Plans Checked	AP

SOUTH CABLE STAY ABUTMENT WALL BARLIST 1 OF 2

SHEET SC84a OF

STATE PROJECT I.D.	SHEET NUMBER
2235-00-70	8.114

SOUTH CABLE STAY ABUTMENT - WALL REINFORCEMENT

BAR MARK	BAR SIZE	LOCATION COMMENT	NO.	LTH/BAR DECIMAL FT	TOTAL WT (LB)	BEND TYPE	A			B			C			D			E			F/R			G			H			I			J			K			O		
							FT	IN	1/4	FT	IN	1/4	FT	IN	1/4	FT	IN	1/4	FT	IN	1/4	FT	IN	1/4	FT	IN	1/4	FT	IN	1/4	FT	IN	1/4	FT	IN	1/4	FT	IN	1/4	FT	IN	1/4
W550	5	Epoxy Coated	8	9.000	75.1	17				2	0	0	7	0	0	0	0	0																								
W551	5	Epoxy Coated	8	17.000	141.8	17				2	0	0	15	0	0	0	0	0																								
W552	5	Epoxy Coated	9	11.500	108.0	STR				11	6	0																														
W603	6	Epoxy Coated	134	10.000	2012.7	STR				10	0	0																														
W604	6	Epoxy Coated 1 Series of 32	32	9.125	438.6	STR				12 to 6	3 to 0	0 to 0																														
W605	6	Epoxy Coated	22	13.500	446.1	2	1	0	0	11	6	0													1	0	0															
W606	6	Epoxy Coated	46	11.750	811.8	12	0	0	0	0	0	0	4	9	0	7	0	0										7	0	0							0	1	2			
W607	6	Epoxy Coated 1 Series of 46	46	12.083	834.9	1	0	8	0	12 to 8	8 to 10	0 to 0													0	8	0															
W706	7	Epoxy Coated	38	11.000	854.4	STR				11	0	0																														
W707	7	Epoxy Coated	112	19.000	4349.6	STR				19	0	0																														
W707a	7	Epoxy Coated	112	10.000	2289.3	17				3	0	0	7	0	0	0	0	0																								
W708	7	Epoxy Coated	26	19.417	1031.9	17				4	0	0	11	5	0	4	0	0																								
T401	4	Epoxy Coated	1	5.000	3.3	T1				1	4	0	1	2	0	1	4	0	1	2	0																					
T402	4	Epoxy Coated	9	5.667	34.1	T1				1	8	0	1	2	0	1	8	0	1	2	0																					
T403	4	Epoxy Coated	1	4.500	3.006	T1				1	1	0	1	2	0	1	1	0	1	2	0																					
T404	4	Epoxy Coated	8	5.167	27.611	T1				1	5	0	1	2	0	1	5	0	1	2	0																					
EP501	5	Epoxy Coated	20	8.000	166.9	STR				8	0	0																														
EP502	5	Epoxy Coated	6	5.583	34.9	17				1	0	0	4	7	0	0	0	0																								

TOTAL WT =	33016.2

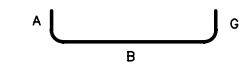

TYPE 2

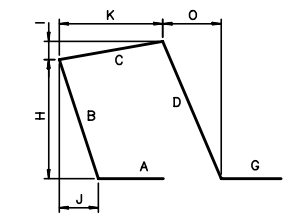

TYPE H10

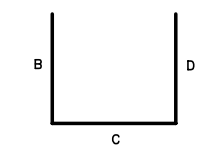

TYPE 17

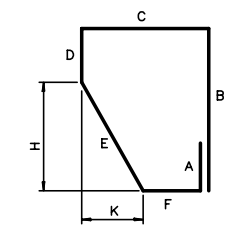

TYPE H15

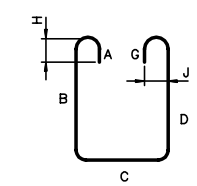

TYPE S9

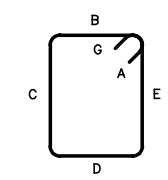

TYPE T1

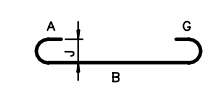

TYPE 1

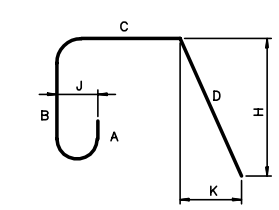

TYPE 12

NOTES:

1. ALL REINFORCING STEEL IS EPOXY COATED U.N.O.
2. ALL REINFORCING SHALL BE ASTM A615 OR A996, GRADE 60.

AS BUILT

No.	Date	Revisions	By
1	11-21-01	REV TOTAL WEIGHT	AP

HNTB CORPORATION

STATE OF WISCONSIN
DEPARTMENT OF TRANSPORTATION

STRUCTURE B-40-413A

Designed By	GD	Design Checked	TZ	Drawn By	GD	Plans Checked	AP

SOUTH CABLE STAY ABUTMENT WALL BARLIST 2 OF 2

SHEET SC84b OF

STATE PROJECT I.D.	SHEET NUMBER
2235-00-70	8.115

SOUTH PIER 1 - WEST FOOTING/COLUMN STA. 19+12.10

BAR MARK	BAR SIZE	LOCATION COMMENT	NO.	LTH/BAR DECIMAL FT	TOTAL WT (LB)	BEND TYPE	A			B			C			D			E			F/R			G			H			I			J			K			O		
							FT	IN	1/4	FT	IN	1/4	FT	IN	1/4	FT	IN	1/4	FT	IN	1/4	FT	IN	1/4	FT	IN	1/4	FT	IN	1/4	FT	IN	1/4	FT	IN	1/4	FT	IN	1/4	FT	IN	1/4
F501	5		36	4.667	175.2	2		10	0	3	0	0														10	0																
F502	5		8	8.500	70.9	STR				8	6	0																														
F601	6		36	10.500	567.8	2	1	0	0	8	6	0													1	0	0																
F801	8		36	11.167	1073.3	2	1	4	0	8	6	0													1	4	0																
PL401	4	Pile/Footing Connection	40	3.094	82.7	T3																															1	0	0	0	8	0
PL801	8	Pile/Footing Connection	48	11.250	1441.8	STR				11	3	0																														
T501	5	Epoxy Coated 1 series of 55	55	19.896	1141.3	T1		5	2	2	0 TO 7	2 1	7	2	0	2	0 TO 7	2 1	7	2	0					5	2																
T502	5	Epoxy Coated	110	8.104	929.8	T9		5	2	7	2	0														6	0																
T503	5	Epoxy Coated 7 series of 55	385	3.281	1317.6	T9		5	2	2	0 TO 7	2 1														6	0																
C1101	11	Epoxy Coated	20	21.333	2266.9	2	2	0	0	19	4	0													0	0	0																
C1102	11	Epoxy Coated	20	13.333	1416.8	2	2	0	0	11	4	0													0	0	0																
C1103	11	Epoxy Coated	20	27.271	2897.8	2	2	0	0	25	3	2													0	0	0																
C1104	11	Epoxy Coated	20	19.271	2047.7	2	2	0	0	17	3	2													0	0	0																

TOTAL WT = 15429.6

SOUTH PIER 1 - EAST FOOTING/COLUMN STA. 19+12.10

BAR MARK	BAR SIZE	LOCATION COMMENT	NO.	LTH/BAR DECIMAL FT	TOTAL WT (LB)	BEND TYPE	A			B			C			D			E			F/R			G			H			I			J			K			O		
							FT	IN	1/4	FT	IN	1/4	FT	IN	1/4	FT	IN	1/4	FT	IN	1/4	FT	IN	1/4	FT	IN	1/4	FT	IN	1/4	FT	IN	1/4	FT	IN	1/4	FT	IN	1/4	FT	IN	1/4
F501	5		36	4.667	175.2	2		10	0	3	0	0														10	0																
F502	5		8	8.500	70.9	STR				8	6	0																														
F601	6		36	10.500	567.8	2	1	0	0	8	6	0													1	0	0																
F801	8		36	11.167	1073.3	2	1	4	0	8	6	0													1	4	0																
PL401	4	Pile/Footing Connection	40	3.094	82.7	T3																															1	0	0	0	8	0
PL801	8	Pile/Footing Connection	48	11.250	1441.8	STR				11	3	0																														
T501	5	Epoxy Coated 1 series of 55	55	19.896	1141.3	T1		5	2	2	0 TO 7	2 1	7	2	0	2	0 TO 7	2 1	7	2	0					5	2																
T502	5	Epoxy Coated	110	8.104	929.8	T9		5	2	7	2	0														6	0																
T503	5	Epoxy Coated 7 series of 55	385	3.281	1317.6	T9		5	2	2	0 TO 7	2 1														6	0																
C1101	11	Epoxy Coated	20	21.333	2266.9	2	2	0	0	19	4	0													0	0	0																
C1102	11	Epoxy Coated	20	13.333	1416.8	2	2	0	0	11	4	0													0	0	0																
C1103	11	Epoxy Coated	20	27.271	2897.8	2	2	0	0	25	3	2													0	0	0																
C1104	11	Epoxy Coated	20	19.271	2047.7	2	2	0	0	17	3	2													0	0	0																

TOTAL WT = 15429.6

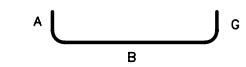

TYPE 2

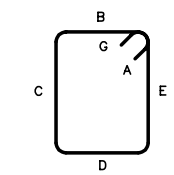

TYPE T1

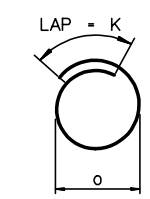

TYPE T3

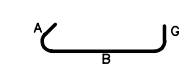

TYPE T9

NOTES:

1. EPOXY COATED REINFORCING STEEL IS NOTED AS "EPOXY COATED".
2. ALL REINFORCING SHALL BE ASTM A615 OR A996, GRADE 60.

AS BUILT

No.	Date	Revisions	By

HNTB CORPORATION

STATE OF WISCONSIN
DEPARTMENT OF TRANSPORTATION

STRUCTURE B-40-413A

Designed By	SL	Design Checked	AP	Drawn By	BM	Plans Checked	AP

SOUTH CABLE STAY PIER 1 BARLIST

SHEET SC84c OF

STATE PROJECT I.D.	SHEET NUMBER
2235-00-70	8.116

S. PIER 2 - WEST FOOTING/COLUMN STA. 19+79.10

BAR MARK	BAR SIZE	LOCATION COMMENT	NO.	LTH/BAR DECIMAL FT	TOTAL WT (LB)	BEND TYPE	A			B			C			D			E			F/R			G			H			I			J			K			O		
							FT	IN	1/4	FT	IN	1/4	FT	IN	1/4	FT	IN	1/4	FT	IN	1/4	FT	IN	1/4	FT	IN	1/4	FT	IN	1/4	FT	IN	1/4	FT	IN	1/4	FT	IN	1/4	FT	IN	1/4
F501	5		36	4.667	175.2	2		10	0	3	0	0														10	0																
F502	5		8	8.500	70.9	STR				8	6	0																														
F601	6		36	10.500	567.8	2	1	0	0	8	6	0													1	0	0																
F801	8		36	11.167	1073.3	2	1	4	0	8	6	0													1	4	0																
PL401	4	Pile/Footing Connection	40	3.094	82.7	T3																															1	0	0	0	8	0
PL801	8	Pile/Footing Connection	48	11.250	1441.8	STR				11	3	0																														
T501	5	Epoxy Coated 1 series of 49	49	19.896	1016.8	T1		5	2	2	0 TO 7	2 1	7	2	0	2	0 TO 7	2 1	7	2	0					5	2																
T502	5	Epoxy Coated	98	8.104	828.4	T9		5	2	7	2	0														6	0																
T503	5	Epoxy Coated 7 series of 49	343	3.281	1173.9	T9		5	2	2	0 TO 7	2 1														6	0																
C901	9	Epoxy Coated	20	15.083	1025.7	2	1	7	0	13	6	0													0	0	0																
C902	9	Epoxy Coated	20	10.083	685.7	2	1	7	0	8	6	0													0	0	0																
C903	9	Epoxy Coated	20	24.854	1690.1	2	1	7	0	23	3	2													0	0	0																
C904	9	Epoxy Coated	20	20.604	1401.1	2	1	7	0	19	0	2													0	0	0																

TOTAL WT = 11233.3

S. PIER 2 - EAST FOOTING/COLUMN STA. 19+79.10

BAR MARK	BAR SIZE	LOCATION COMMENT	NO.	LTH/BAR DECIMAL FT	TOTAL WT (LB)	BEND TYPE	A			B			C			D			E			F/R			G			H			I			J			K			O		
							FT	IN	1/4	FT	IN	1/4	FT	IN	1/4	FT	IN	1/4	FT	IN	1/4	FT	IN	1/4	FT	IN	1/4	FT	IN	1/4	FT	IN	1/4	FT	IN	1/4	FT	IN	1/4	FT	IN	1/4
F501	5		36	4.667	175.2	2		10	0	3	0	0														10	0																
F502	5		8	8.500	70.9	STR				8	6	0																														
F601	6		36	10.500	567.8	2	1	0	0	8	6	0													1	0	0																
F801	8		36	11.167	1073.3	2	1	4	0	8	6	0													1	4	0																
PL401	4	Pile/Footing Connection	40	3.094	82.7	T3																															1	0	0	0	8	0
PL801	8	Pile/Footing Connection	48	11.250	1441.8	STR				11	3	0																														
T501	5	Epoxy Coated 1 series of 49	49	19.896	1016.8	T1		5	2	2	0 TO 7	2 1	7	2	0	2	0 TO 7	2 1	7	2	0					5	2																
T502	5	Epoxy Coated	98	8.104	828.4	T9		5	2	7	2	0														6	0																
T503	5	Epoxy Coated 7 series of 49	343	3.281	1173.9	T9		5	2	2	0 TO 7	2 1														6	0																
C901	9	Epoxy Coated	20	15.083	1025.7	2	1	7	0	13	6	0													0	0	0																
C902	9	Epoxy Coated	20	10.083	685.7	2	1	7	0	8	6	0													0	0	0																
C903	9	Epoxy Coated	20	24.854	1690.1	2	1	7	0	23	3	2													0	0	0																
C904	9	Epoxy Coated	20	20.604	1401.1	2	1	7	0	19	0	2													0	0	0																

TOTAL WT = 11233.3

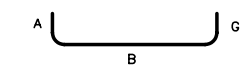

TYPE 2

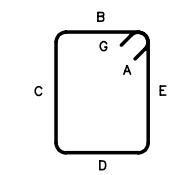

TYPE T1

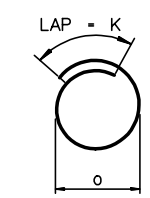

TYPE T3

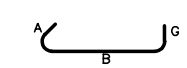

TYPE T9

NOTES:

1. EPOXY COATED REINFORCING STEEL IS NOTED AS "EPOXY COATED".
2. ALL REINFORCING SHALL BE ASTM A615 OR A996, GRADE 60.

AS BUILT

No.	Date	Revisions	By

HNTB CORPORATION

STATE OF WISCONSIN
DEPARTMENT OF TRANSPORTATION

STRUCTURE B-40-413A

Designed By	SL	Design Checked	AP	Drawn By	BM	Plans Checked	AP

SOUTH CABLE STAY PIER 2 BARLIST

SHEET SC85 OF

STATE PROJECT I.D.	SHEET NUMBER
2235-00-70	8.117

S. PIER 3 - WEST FOOTING/COLUMN STA. 20+46.10

BAR MARK	BAR SIZE	LOCATION COMMENT	NO.	LTH/BAR DECIMAL FT	TOTAL WT (LB)	BEND TYPE	A			B			C			D			E			F/R			G			H			I			J			K			O		
							FT	IN	1/4	FT	IN	1/4	FT	IN	1/4	FT	IN	1/4	FT	IN	1/4	FT	IN	1/4	FT	IN	1/4	FT	IN	1/4	FT	IN	1/4	FT	IN	1/4	FT	IN	1/4	FT	IN	1/4
F501	5		36	4.667	175.2	2		10	0	3	0	0														10	0																
F502	5		8	8.500	70.9	STR				8	6	0																														
F601	6		36	10.500	567.8	2	1	0	0	8	6	0													1	0	0																
F801	8		36	11.167	1073.3	2	1	4	0	8	6	0													1	4	0																
PL401	4	Pile/Footing Connection	40	3.094	82.7	T3																															1	0	0	0	8	0
PL801	8	Pile/Footing Connection	48	11.250	1441.8	STR				11	3	0																														
T501	5	Epoxy Coated 1 series of 46	46	19.896	954.6	T1		5	2	2	0 TO 7	2	7	2	0	2	0 TO 7	2	7	2	0					5	2																
T502	5	Epoxy Coated	92	8.104	777.6	T9		5	2	7	2	0														6	0																
T503	5	Epoxy Coated 7 series of 46	322	3.281	1102.0	T9		5	2	2	0 TO 7	2														6	0																
C901	9	Epoxy Coated	20	15.083	1025.7	2	1	7	0	13	6	0													0	0	0																
C902	9	Epoxy Coated	20	10.083	685.7	2	1	7	0	8	6	0													0	0	0																
C903	9	Epoxy Coated	20	23.281	1583.1	2	1	7	0	21	8	3													0	0	0																
C904	9	Epoxy Coated	20	19.031	1294.1	2	1	7	0	17	5	3													0	0	0																

TOTAL WT = 10834.5

S. PIER 3 - EAST FOOTING/COLUMN STA. 20+46.10

BAR MARK	BAR SIZE	LOCATION COMMENT	NO.	LTH/BAR DECIMAL FT	TOTAL WT (LB)	BEND TYPE	A			B			C			D			E			F/R			G			H			I			J			K			O		
							FT	IN	1/4	FT	IN	1/4	FT	IN	1/4	FT	IN	1/4	FT	IN	1/4	FT	IN	1/4	FT	IN	1/4	FT	IN	1/4	FT	IN	1/4	FT	IN	1/4	FT	IN	1/4	FT	IN	1/4
F501	5		36	4.667	175.2	2		10	0	3	0	0														10	0																
F502	5		8	8.500	70.9	STR				8	6	0																														
F601	6		36	10.500	567.8	2	1	0	0	8	6	0													1	0	0																
F801	8		36	11.167	1073.3	2	1	4	0	8	6	0													1	4	0																
PL401	4	Pile/Footing Connection	40	3.094	82.7	T3																															1	0	0	0	8	0
PL801	8	Pile/Footing Connection	48	11.250	1441.8	STR				11	3	0																														
T501	5	Epoxy Coated 1 series of 46	46	19.896	954.6	T1		5	2	2	0 TO 7	2	7	2	0	2	0 TO 7	2	7	2	0					5	2																
T502	5	Epoxy Coated	92	8.104	777.6	T9		5	2	7	2	0														6	0																
T503	5	Epoxy Coated 7 series of 46	322	3.281	1102.0	T9		5	2	2	0 TO 7	2														6	0																
C901	9	Epoxy Coated	20	15.083	1025.7	2	1	7	0	13	6	0													0	0	0																
C902	9	Epoxy Coated	20	10.083	685.7	2	1	7	0	8	6	0													0	0	0																
C903	9	Epoxy Coated	20	23.281	1583.1	2	1	7	0	21	8	3													0	0	0																
C904	9	Epoxy Coated	20	19.031	1294.1	2	1	7	0	17	5	3													0	0	0																

TOTAL WT = 10834.5

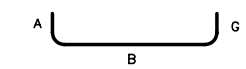

TYPE 2

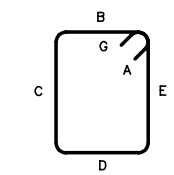

TYPE T1

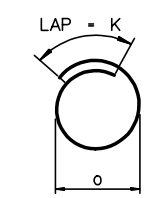

TYPE T3

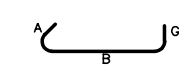

TYPE T9

NOTES:

1. EPOXY COATED REINFORCING STEEL IS NOTED AS "EPOXY COATED".
2. ALL REINFORCING SHALL BE ASTM A615 OR A996, GRADE 60.

AS BUILT

No.	Date	Revisions	By

HNTB CORPORATION

STATE OF WISCONSIN
DEPARTMENT OF TRANSPORTATION

STRUCTURE B-40-413A

Designed By	SL	Design Checked	AP	Drawn By	BM	Plans Checked	AP

SOUTH CABLE STAY PIER 3 BARLIST

SHEET SC86 OF

STATE PROJECT I.D.	SHEET NUMBER
2235-00-70	8.118

S. PIER 4 - WEST FOOTING/COLUMN STA. 21+13.10

BAR MARK	BAR SIZE	LOCATION COMMENT	NO.	LTH/BAR DECIMAL FT	TOTAL WT (LB)	BEND TYPE	A			B			C			D			E			F/R			G			H			I			J			K			O		
							FT	IN	1/4	FT	IN	1/4	FT	IN	1/4	FT	IN	1/4	FT	IN	1/4	FT	IN	1/4	FT	IN	1/4	FT	IN	1/4	FT	IN	1/4	FT	IN	1/4	FT	IN	1/4	FT	IN	1/4
F501	5		36	4.667	175.2	2		10	0	3	0	0														10	0																
F502	5		8	8.500	70.9	STR				8	6	0																														
F601	6		36	10.500	567.8	2	1	0	0	8	6	0													1	0	0																
F801	8		36	11.167	1073.3	2	1	4	0	8	6	0													1	4	0																
PL401	4	Pile/Footing Connection	40	3.094	82.7	T3																															1	0	0	0	8	0
PL801	8	Pile/Footing Connection	48	11.250	1441.8	STR				11	3	0																														
T501	5	Epoxy Coated 1 series of 44	44	19.896	913.1	T1		5	2	2	0 TO 7	2	7	2	0	2	0 TO 7	2	7	2	0					5	2																
T502	5	Epoxy Coated	88	8.104	743.8	T9		5	2	7	2	0														6	0																
T503	5	Epoxy Coated 7 series of 44	308	3.281	1054.1	T9		5	2	2	0 TO 7	2														6	0																
C901	9	Epoxy Coated	20	15.083	1025.7	2	1	7	0	13	6	0													0	0	0																
C902	9	Epoxy Coated	20	10.083	685.7	2	1	7	0	8	6	0													0	0	0																
C903	9	Epoxy Coated	20	22.500	1530.0	2	1	7	0	20	11	0													0	0	0																
C904	9	Epoxy Coated	20	18.250	1241.0	2	1	7	0	16	8	0													0	0	0																

TOTAL WT = 10605.0

S. PIER 4 - EAST FOOTING/COLUMN STA. 21+13.10

BAR MARK	BAR SIZE	LOCATION COMMENT	NO.	LTH/BAR DECIMAL FT	TOTAL WT (LB)	BEND TYPE	A			B			C			D			E			F/R			G			H			I			J			K			O		
							FT	IN	1/4	FT	IN	1/4	FT	IN	1/4	FT	IN	1/4	FT	IN	1/4	FT	IN	1/4	FT	IN	1/4	FT	IN	1/4	FT	IN	1/4	FT	IN	1/4	FT	IN	1/4	FT	IN	1/4
F501	5		36	4.667	175.2	2		10	0	3	0	0														10	0																
F502	5		8	8.500	70.9	STR				8	6	0																														
F601	6		36	10.500	567.8	2	1	0	0	8	6	0													1	0	0																
F801	8		36	11.167	1073.3	2	1	4	0	8	6	0													1	4	0																
PL401	4	Pile/Footing Connection	40	3.094	82.7	T3																															1	0	0	0	8	0
PL801	8	Pile/Footing Connection	48	11.250	1441.8	STR				11	3	0																														
T501	5	Epoxy Coated 1 series of 44	44	19.896	913.1	T1		5	2	2	0 TO 7	2	7	2	0	2	0 TO 7	2	7	2	0					5	2																
T502	5	Epoxy Coated	88	8.104	743.8	T9		5	2	7	2	0														6	0																
T503	5	Epoxy Coated 7 series of 44	308	3.281	1054.1	T9		5	2	2	0 TO 7	2														6	0																
C901	9	Epoxy Coated	20	15.083	1025.7	2	1	7	0	13	6	0													0	0	0																
C902	9	Epoxy Coated	20	10.083	685.7	2	1	7	0	8	6	0													0	0	0																
C903	9	Epoxy Coated	20	22.500	1530.0	2	1	7	0	20	11	0													0	0	0																
C904	9	Epoxy Coated	20	18.250	1241.0	2	1	7	0	16	8	0													0	0	0																

TOTAL WT = 10605.0

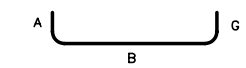

TYPE 2

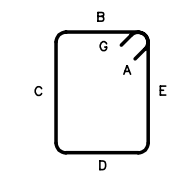

TYPE T1

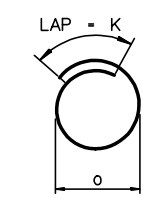

TYPE T3

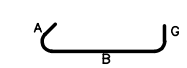

TYPE T9

NOTES:

1. EPOXY COATED REINFORCING STEEL IS NOTED AS "EPOXY COATED".
2. ALL REINFORCING SHALL BE ASTM A615 OR A996, GRADE 60.

AS BUILT

No.	Date	Revisions	By

HNTB CORPORATION

STATE OF WISCONSIN
DEPARTMENT OF TRANSPORTATION

STRUCTURE B-40-413A

Designed By	SL	Design Checked	AP	Drawn By	BM	Plans Checked	AP

SOUTH CABLE STAY PIER 4 BARLIST

SHEET SC87 OF

STATE PROJECT I.D.	SHEET NUMBER
2235-00-70	8.119

S. PYLON - WEST FOOTING

BAR MARK	BAR SIZE	LOCATION COMMENT	NO.	LTH/BAR DECIMAL FT	TOTAL WT (LB)	BEND TYPE	A			B			C			D			E			F/R			G			H			I			J			K			O		
							FT	IN	¼	FT	IN	¼	FT	IN	¼	FT	IN	¼	FT	IN	¼	FT	IN	¼	FT	IN	¼	FT	IN	¼	FT	IN	¼	FT	IN	¼	FT	IN	¼	FT	IN	¼
PL901	9	Pile/Footing Connection	108	12.000	4406.4	STR				12	0	0																														
PL401	4	Pile/Footing Connection	135	2.761	249.0	T3																															1	0	0	0	8	0
F801	8		30	17.167	1375.1	2	1	4	0	14	6	0													1	4	0															
F802	8		24	23.167	1484.5	2	1	4	0	20	6	0													1	4	0															
F803	8		76	5.250	1065.3	STR				5	3	0																														
F1101	11		31	18.500	3047.0	2	2	0	0	14	6	0													2	0	0															
F1102	11		46	24.500	5987.8	2	2	0	0	20	6	0													2	0	0															
FD501	5	Epoxy 4 series of 7	28	12.083	352.9	T9		5	2	11	2	0														6	0															
											TO																															
										11	1	0																														
FD502	5	Epoxy	161	2.917	489.8	T9		5	2	1	11	2														6	0															
FD503	5	Epoxy 4 series of 7	28	6.896	201.4	T9		5	2	5	11	2														6	0															
											TO																															
										5	11	0																														
FD901	9	Epoxy Dowel	54	8.500	1560.6	STR				8	6	0																														
FD902	9	Epoxy Dowel	54	12.000	2203.2	STR				12	0	0																														

TOTAL WT = 22422.9

S. PYLON - EAST FOOTING

BAR MARK	BAR SIZE	LOCATION COMMENT	NO.	LTH/BAR DECIMAL FT	TOTAL WT (LB)	BEND TYPE	A			B			C			D			E			F/R			G			H			I			J			K			O		
							FT	IN	¼	FT	IN	¼	FT	IN	¼	FT	IN	¼	FT	IN	¼	FT	IN	¼	FT	IN	¼	FT	IN	¼	FT	IN	¼	FT	IN	¼	FT	IN	¼	FT	IN	¼
PL901	9	Pile/Footing Connection	108	12.000	4406.4	STR				12	0	0																														
PL401	4	Pile/Footing Connection	135	2.761	249.0	T3																															1	0	0	0	8	0
F801	8		30	17.167	1375.1	2	1	4	0	14	6	0													1	4	0															
F802	8		24	23.167	1484.5	2	1	4	0	20	6	0													1	4	0															
F803	8		76	5.250	1065.3	STR				5	3	0																														
F1101	11		31	18.500	3047.0	2	2	0	0	14	6	0													2	0	0															
F1102	11		46	24.500	5987.8	2	2	0	0	20	6	0													2	0	0															
FD501	5	Epoxy 4 series of 7	28	12.083	352.9	T9		5	2	11	2	0														6	0															
											TO																															
										11	1	0																														
FD502	5	Epoxy	161	2.917	489.8	T9		5	2	1	11	2														6	0															
FD503	5	Epoxy 4 series of 7	28	6.896	201.4	T9		5	2	5	11	2														6	0															
											TO																															
										5	11	0																														
FD901	9	Epoxy Dowel	54	8.500	1560.6	STR				8	6	0																														
FD902	9	Epoxy Dowel	54	12.000	2203.2	STR				12	0	0																														

TOTAL WT = 22422.9

NOTES:

1. ALL EPOXY COATED REINFORCING STEEL IS NOTED AS "EPOXY".
2. ALL REINFORCING SHALL BE ASTM A615 OR ASTM A616, GRADE 60.

AS BUILT

No.	Date	Revisions	By

HNTB CORPORATION

STATE OF WISCONSIN
DEPARTMENT OF TRANSPORTATION

STRUCTURE B-40-413A

Designed By	AP	Design Checked	TZ	Drawn By	BM	Plans Checked	AP

SOUTH CABLE STAY PYLON FOOTING BARLIST

SHEET SC88 OF

STATE PROJECT I.D.	SHEET NUMBER
2235-00-70	8.120

S. CABLE STAYED PYLON - WEST PYLON LIFT 1 (EL 9.820 TO 19.820)

BAR MARK	BAR SIZE	LOCATION COMMENT	NO.	LTH/BAR DECIMAL FT	TOTAL WT (LB)	BEND TYPE	A			B			C			D			E			F/R			G			H			I			J			K			O		
							FT	IN	1/4	FT	IN	1/4	FT	IN	1/4	FT	IN	1/4	FT	IN	1/4	FT	IN	1/4	FT	IN	1/4	FT	IN	1/4	FT	IN	1/4	FT	IN	1/4	FT	IN	1/4	FT	IN	1/4
P901	9	EPOXY COATED	108	15.000	5508.0	STR				15	0	0																														
P501	5	EPOXY COATED 4 series of 20	80	11.844	988.2	T9		5	2	11 to 10	1 to 8	0 1										6	0																			
P502	5	EPOXY COATED 2 series of 20	40	16.542	690.1	T1		5	2	1	11	2	5 to 5	11 to 9	0 2	1	11	2	5 to 5	11 to 9	0 2	5	2																			
P502a	5	EPOXY COATED 2 series of 20	40	17.750	740.5	T1		5	2	1	11	2	6 to 6	6 to 4	3 1	1	11	2	6 to 6	6 to 4	3 1	5	2																			
P503	5	EPOXY COATED	420	2.917	1277.7	T9		5	2	1	11	2										6	0																			
B501	5	EPOXY COATED	182	7.375	1400.0	T9		5	2	6	5	0										6	0																			
B502	5	EPOXY COATED	149	6.542	1016.6	T9		5	2	5	7	0										6	0																			
B503	5	EPOXY COATED	2	6.542	13.6	T9		5	2	5	7	0										6	0																			
B504	5	EPOXY COATED	2	5.083	10.6	T9		5	2	4	1	2										6	0																			
B505	5	EPOXY COATED	2	3.521	7.3	T9		5	2	2	6	3										6	0																			
B506	5	EPOXY COATED	2	2.083	4.3	T9		5	2	1	1	2										6	0																			
B507	5	EPOXY COATED	11	6.542	75.1	T9		5	2	5	7	0										6	0																			
B508	5	EPOXY COATED	7	11.563	84.4	S13				2	0	0	7	6	3	2	0	0						6	5	0											4	0	0			
B601	6	EPOXY COATED	22	35.000	1156.5	STR				35	0	0																														
B602	6	EPOXY COATED	14	10.000	210.3	STR				10	0	0																														
B1001	10	EPOXY COATED	10	36.833	1584.9	2	1	10	0	35	0	0										0	0																			

TOTAL WT = 14768.3

S. CABLE STAYED PYLON - EAST PYLON LIFT 1 (EL 9.820 TO 19.820)

BAR MARK	BAR SIZE	LOCATION COMMENT	NO.	LTH/BAR DECIMAL FT	TOTAL WT (LB)	BEND TYPE	A			B			C			D			E			F/R			G			H			I			J			K			O		
							FT	IN	1/4	FT	IN	1/4	FT	IN	1/4	FT	IN	1/4	FT	IN	1/4	FT	IN	1/4	FT	IN	1/4	FT	IN	1/4	FT	IN	1/4	FT	IN	1/4	FT	IN	1/4	FT	IN	1/4
P901	9	EPOXY COATED	108	15.000	5508.0	STR				15	0	0																														
P501	5	EPOXY COATED 4 series of 20	80	11.844	988.2	T9		5	2	11 to 10	1 to 8	0 1										6	0																			
P502	5	EPOXY COATED 2 series of 20	40	16.542	690.1	T1		5	2	1	11	2	5 to 5	11 to 9	0 2	1	11	2	5 to 5	11 to 9	0 2	5	2																			
P502a	5	EPOXY COATED 2 series of 20	40	17.750	740.5	T1		5	2	1	11	2	6 to 6	6 to 4	3 1	1	11	2	6 to 6	6 to 4	3 1	5	2																			
P503	5	EPOXY COATED	420	2.917	1277.7	T9		5	2	1	11	2										6	0																			
B501	5	EPOXY COATED	182	7.375	1400.0	T9		5	2	6	5	0										6	0																			
B502	5	EPOXY COATED	149	6.542	1016.6	T9		5	2	5	7	0										6	0																			
B503	5	EPOXY COATED	2	6.542	13.6	T9		5	2	5	7	0										6	0																			
B504	5	EPOXY COATED	2	5.083	10.6	T9		5	2	4	1	2										6	0																			
B505	5	EPOXY COATED	2	3.521	7.3	T9		5	2	2	6	3										6	0																			
B506	5	EPOXY COATED	2	2.083	4.3	T9		5	2	1	1	2										6	0																			
B507	5	EPOXY COATED	11	6.542	75.1	T9		5	2	5	7	0										6	0																			
B508	5	EPOXY COATED	7	11.563	84.4	S13				2	0	0	7	6	3	2	0	0						6	5	0											4	0	0			
B601	6	EPOXY COATED	22	35.000	1156.5	STR				35	0	0																														
B602	6	EPOXY COATED	14	10.000	210.3	STR				10	0	0																														
B1001	10	EPOXY COATED	10	36.833	1584.9	2	1	10	0	35	0	0										0	0																			

TOTAL WT = 14768.3

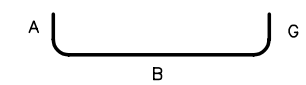

TYPE 2

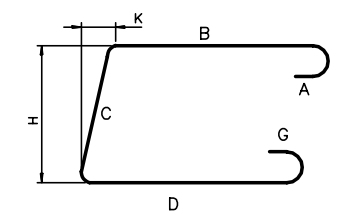

TYPE S13

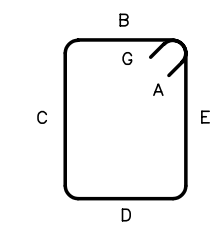

TYPE T1

TYPE T9

NOTES:

1. ALL REINFORCING STEEL IS EPOXY COATED U.N.O.
2. ALL REINFORCING SHALL BE ASTM A615 OR A996, GRADE 60.

AS BUILT

No.	Date	Revisions	By

HNTB CORPORATION

STATE OF WISCONSIN
DEPARTMENT OF TRANSPORTATION

STRUCTURE B-40-413A

Designed By	SL	Design Checked	TZ	Drawn By	BM	Plans Checked	AP

SOUTH CABLE STAY PYLON LIFT 1 BARLIST

SHEET SC89 OF

STATE PROJECT I.D.	SHEET NUMBER
2235-00-70	8.121

S. CABLE STAYED PYLON - EAST PYLON LIFT 2 (EL 19.820 TO 36.997)

BAR MARK	BAR SIZE	LOCATION COMMENT	NO.	LTH/BAR DECIMAL FT	TOTAL WT (LB)	BEND TYPE	A			B			C			D			E			F/R			G			H			I			J			K			O		
							FT	IN	1/4	FT	IN	1/4	FT	IN	1/4	FT	IN	1/4	FT	IN	1/4	FT	IN	1/4	FT	IN	1/4	FT	IN	1/4	FT	IN	1/4	FT	IN	1/4	FT	IN	1/4	FT	IN	1/4
P902	9	EPOXY COATED	108	22.250	8170.2	STR				22	3	0																														
P504	5	EPOXY COATED 4 series of 34	136	11.313	1604.7	T9		5	2	10 to 10	8 to 0	1 to 1														6	0															
P505	5	EPOXY COATED 2 series of 34	68	16.146	1145.1	T1		5	2	1	11	0	5 to 5	9 to 7	2 to 1	1	11	0	5 to 5	9 to 7	2 to 1					5	2															
P505a	5	EPOXY COATED 2 series of 34	68	17.063	1210.1	T1		5	2	1	11	0	6 to 5	4 to 11	1 to 2	1	11	0	6 to 5	4 to 11	1 to 2					5	2															
P506	5	EPOXY COATED	714	2.875	2141.0	T9		5	2	1	11	0														6	0															
DB601	6	EPOXY COATED	64	4.500	432.6	H2				4	6	0																														
DB602	6	EPOXY COATED	18	8.500	229.8	STR				8	6	0																														
DB602A	6	EPOXY COATED	18	12.000	324.4	STR				12	0	0																														
DB603	6	EPOXY COATED	9	5.000	67.6	STR				5	0	0																														

TOTAL WT = 15325.5

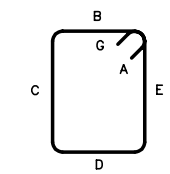

TYPE T1

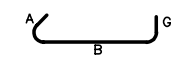

TYPE T9

S. CABLE STAYED PYLON - WEST PYLON LIFT 2 (EL 19.820 TO 36.997)

BAR MARK	BAR SIZE	LOCATION COMMENT	NO.	LTH/BAR DECIMAL FT	TOTAL WT (LB)	BEND TYPE	A			B			C			D			E			F/R			G			H			I			J			K			O		
							FT	IN	1/4	FT	IN	1/4	FT	IN	1/4	FT	IN	1/4	FT	IN	1/4	FT	IN	1/4	FT	IN	1/4	FT	IN	1/4	FT	IN	1/4	FT	IN	1/4	FT	IN	1/4	FT	IN	1/4
P902	9	EPOXY COATED	108	22.250	8170.2	STR				22	3	0																														
P504	5	EPOXY COATED 4 series of 34	136	11.313	1604.7	T9		5	2	10 to 10	8 to 0	1 to 1														6	0															
P505	5	EPOXY COATED 2 series of 34	68	16.146	1145.1	T1		5	2	1	11	0	5 to 5	9 to 7	2 to 1	1	11	0	5 to 5	9 to 7	2 to 1					5	2															
P505a	5	EPOXY COATED 2 series of 34	68	17.063	1210.1	T1		5	2	1	11	0	6 to 5	4 to 11	1 to 2	1	11	0	6 to 5	4 to 11	1 to 2					5	2															
P506	5	EPOXY COATED	714	2.875	2141.0	T9		5	2	1	11	0														6	0															
DB601	6	EPOXY COATED	64	4.500	432.6	H2				4	6	0																														
DB602	6	EPOXY COATED	18	8.500	229.8	STR				8	6	0																														
DB602A	6	EPOXY COATED	18	12.000	324.4	STR				12	0	0																														
DB603	6	EPOXY COATED	9	5.000	67.6	STR				5	0	0																														

TOTAL WT = 15325.5

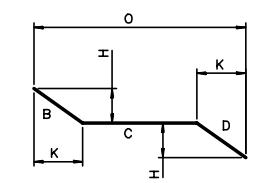

TYPE 19

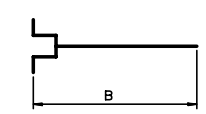

DOWEL BAR WITH FORMSAVER COUPLER

TYPE H2

NOTES:

1. ALL REINFORCING STEEL IS EPOXY COATED U.N.O.
2. ALL REINFORCING SHALL BE ASTM A615 OR A996, GRADE 60.

AS BUILT

No.	Date	Revisions	By
1	7-10-01	Clarify EPOXY Coated Comments	BM

HNTB CORPORATION

STATE OF WISCONSIN
DEPARTMENT OF TRANSPORTATION

STRUCTURE B-40-413A

Designed By	CE	Design Checked	TZ	Drawn By	BM	Plans Checked	AP

SOUTH CABLE STAY PYLON LIFT 2 BARLIST

SHEET SC90 OF

STATE PROJECT I.D.	SHEET NUMBER
2235-00-70	8.122

S. CABLE STAYED PYLON - EAST PYLON LIFT 3 (EL 36.997 TO 66.920)

BAR MARK	BAR SIZE	LOCATION COMMENT	NO.	LTH/BAR DECIMAL FT	TOTAL WT (LB)	BEND TYPE	A			B			C			D			E			F/R			G			H			I			J			K			O		
							FT	IN	1/4	FT	IN	1/4	FT	IN	1/4	FT	IN	1/4	FT	IN	1/4	FT	IN	1/4	FT	IN	1/4	FT	IN	1/4	FT	IN	1/4	FT	IN	1/4	FT	IN	1/4	FT	IN	1/4
P903	9	EPOXY COATED	108	35.250	12943.8	STR				35	3	0																														
P903a	9	EPOXY COATED	2	15.000	102.0	STR				15	0	0																														
P507	5	EPOXY COATED 4 series of 30	120	10.698	1339.0	T9		5	2	10 to 9	0 to 5	1 to 2														6	0															
P508	5	EPOXY COATED 2 series of 30	60	15.729	984.3	T1		5	2	1	10	2	5 to 5	7 to 5	1 to 2	1	10	2	5 to 5	7 to 5	1 to 2					5	2															
P508a	5	EPOXY COATED 2 series of 30	60	16.250	1016.9	T1		5	2	1	10	2	5 to 5	11 to 7	2 to 2	1	10	2	5 to 5	11 to 7	2 to 2					5	2															
P509	5	EPOXY COATED	630	2.833	1861.8	T9		5	2	1	10	2														6	0															
P510	5	EPOXY COATED 4 series of 30	120	10.125	1267.2	T9		5	2	9 to 8	5 to 10	2 to 2														6	0															
P511	5	EPOXY COATED 2 series of 30	60	15.292	957.0	T1		5	2	1	9	3	5 to 5	5 to 3	2 to 2	1	9	3	5 to 5	5 to 3	2 to 2					5	2															
P511a	5	EPOXY COATED 2 series of 30	60	15.458	967.4	T1		5	2	1	9	3	5 to 5	7 to 3	2 to 2	1	9	3	5 to 5	7 to 3	2 to 2					5	2															
P512	5	EPOXY COATED	630	2.771	1820.7	T9		5	2	1	9	3														6	0															
DB601	6	EPOXY COATED	36	4.500	243.3	H2				4	6	0																														
DB602	6	EPOXY COATED	10	8.500	127.7	STR				8	6	0																														
DB602A	6	EPOXY COATED	8	12.000	144.2	STR				12	0	0																														

TOTAL WT = 23775.2

S. CABLE STAYED PYLON - WEST PYLON LIFT 3 (EL 36.997 TO 66.920)

BAR MARK	BAR SIZE	LOCATION COMMENT	NO.	LTH/BAR DECIMAL FT	TOTAL WT (LB)	BEND TYPE	A			B			C			D			E			F/R			G			H			I			J			K			O		
							FT	IN	1/4	FT	IN	1/4	FT	IN	1/4	FT	IN	1/4	FT	IN	1/4	FT	IN	1/4	FT	IN	1/4	FT	IN	1/4	FT	IN	1/4	FT	IN	1/4	FT	IN	1/4	FT	IN	1/4
P903	9	EPOXY COATED	108	35.250	12943.8	STR				35	3	0																														
P903a	9	EPOXY COATED	2	15.000	102.0	STR				15	0	0																														
P507	5	EPOXY COATED 4 series of 30	120	10.698	1339.0	T9		5	2	10 to 9	0 to 5	1 to 2														6	0															
P508	5	EPOXY COATED 2 series of 30	60	15.729	984.3	T1		5	2	1	10	2	5 to 5	7 to 5	1 to 2	1	10	2	5 to 5	7 to 5	1 to 2					5	2															
P508a	5	EPOXY COATED 2 series of 30	60	16.250	1016.9	T1		5	2	1	10	2	5 to 5	11 to 7	2 to 2	1	10	2	5 to 5	11 to 7	2 to 2					5	2															
P509	5	EPOXY COATED	630	2.833	1861.8	T9		5	2	1	10	2														6	0															
P510	5	EPOXY COATED 4 series of 30	120	10.125	1267.2	T9		5	2	9 to 8	5 to 10	2 to 2														6	0															
P511	5	EPOXY COATED 2 series of 30	60	15.292	957.0	T1		5	2	1	9	3	5 to 5	5 to 3	2 to 2	1	9	3	5 to 5	5 to 3	2 to 2					5	2															
P511a	5	EPOXY COATED 2 series of 30	60	15.458	967.4	T1		5	2	1	9	3	5 to 5	7 to 3	2 to 2	1	9	3	5 to 5	7 to 3	2 to 2					5	2															
P512	5	EPOXY COATED	630	2.771	1820.7	T9		5	2	1	9	3														6	0															
DB601	6	EPOXY COATED	36	4.500	243.3	H2				4	6	0																														
DB602	6	EPOXY COATED	10	8.500	127.7	STR				8	6	0																														
DB602A	6	EPOXY COATED	8	12.000	144.2	STR				12	0	0																														

TOTAL WT = 23775.2

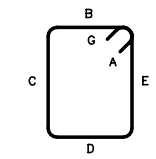

TYPE T1

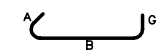

TYPE T9

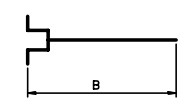

DOWEL BAR WITH FORMSAVER COUPLER

TYPE H2

NOTES:

1. ALL REINFORCING STEEL IS EPOXY COATED U.N.O.
2. ALL REINFORCING SHALL BE ASTM A615 OR A996, GRADE 60.

AS BUILT

No.	Date	Revisions	By

HNTB CORPORATION

STATE OF WISCONSIN
DEPARTMENT OF TRANSPORTATION

STRUCTURE B-40-413A

Designed By	SL	Design Checked	TZ	Drawn By	BM	Plans Checked	AP

SOUTH CABLE STAY PYLON LIFT 3 BARLIST

SHEET SC91 OF

STATE PROJECT I.D.	SHEET NUMBER
2235-00-70	8.123

S. CABLE STAYED PYLON - EAST PYLON LIFT 4 (EL 66.92 TO 96.00)

BAR MARK	BAR SIZE	LOCATION COMMENT	NO.	LTH/BAR DECIMAL FT	TOTAL WT (LB)	BEND TYPE	A			B			C			D			E			F/R			G			H			I			J			K			O		
							FT	IN	¼	FT	IN	¼	FT	IN	¼	FT	IN	¼	FT	IN	¼	FT	IN	¼	FT	IN	¼	FT	IN	¼	FT	IN	¼	FT	IN	¼	FT	IN	¼	FT	IN	¼
P904	9	EPOXY COATED	68	34.000	7860.8	STR				34	0	0																														
P905	9	EPOXY COATED	16	30.917	1681.9	2	1	7	0	29	4	0													0	0	0															
P906	9	EPOXY COATED	16	26.833	1459.7	2	1	7	0	25	3	0													0	0	0															
P907	9	EPOXY COATED	2	18.313	124.5	14	0	0	0	3	5	3	14	10	0	0	0	0							0	0	0	1	3	0							3	3	0			
P908	9	EPOXY COATED	2	22.396	152.3	14	0	0	0	3	5	3	18	11	0	0	0	0							0	0	0	1	3	0							3	3	0			
P909	9	EPOXY COATED	2	23.396	159.1	14	0	0	0	3	5	3	19	11	0	0	0	0							0	0	0	1	3	0							3	3	0			
P910	9	EPOXY COATED	2	27.396	186.3	14	0	0	0	3	5	3	23	11	0	0	0	0							0	0	0	1	3	0							3	3	0			
P911	9	EPOXY COATED	2	14.208	96.6	14	0	0	0	3	5	3	7	3	0	3	5	3							0	0	0	1	3	0							3	3	0			
P513	5	EPOXY COATED 4 Series of 37	148	9.469	1461.6	T9	0	5	2	8 to 8	10 to 1	2 to 3													0	6	0															
P514	5	EPOXY COATED 2 Series of 37	74	14.750	1138.4	T1	0	5	2	1	8	3	5	3 to 1	2 to 0	1	8	3	5	3 to 1	2 to 0				0	5	2															
P514a	5	EPOXY COATED 2 Series of 37	74	14.208	1096.6	T1	0	5	2	1	8	3	5	2 to 4	0 to 0	1	8	3	5	2 to 4	0 to 0				0	5	2															
P515	5	EPOXY COATED	851	2.688	2385.4	T9	0	5	2	1	8	3													0	6	0															
P516	5	EPOXY COATED 4 Series of 18	72	8.906	668.8	T9	0	5	2	8 to 7	1 to 9	3 to 0													0	6	0															
P517	5	EPOXY COATED	72	7.167	538.2	T1	0	5	2	1	5	2	1	7	3	1	5	2	1	7	3				0	6	0															
P517a	5	EPOXY COATED 2 Series of 18	36	13.375	502.2	T1	0	5	2	1	7	3	4 to 4	8 to 6	0 to 0	1	7	3	4 to 4	8 to 6	0 to 0				0	5	2															
P518	5	EPOXY COATED	324	2.604	880.0	T9	0	5	2	1	7	3													0	6	0															
P519	5	EPOXY COATED	216	4.500	1013.8	T12	0	5	2	3	7	0													0	5	2															
P520	5	EPOXY COATED	4	8.708	36.3	T9	0	5	2	7	9	0													0	6	0															
P521	5	EPOXY COATED	4	7.000	29.2	T1	0	5	2	1	5	0	1	7	2	1	5	0	1	7	2				0	5	2															
P521a	5	EPOXY COATED	2	13.208	27.6	T1	0	5	2	1	7	3	4	6	0	1	7	3	4	6	0				0	5	2															
P522	5	EPOXY COATED	18	2.583	48.5	T9	0	5	2	1	7	2													0	6	0															
P523	5	EPOXY COATED	16	4.500	75.1	T12	0	5	2	3	7	0													0	5	2															

TOTAL WT = 21623.0

NOTES:

1. ALL REINFORCING STEEL IS EPOXY COATED U.N.O.
2. ALL REINFORCING SHALL BE ASTM A615 OR A996, GRADE 60.

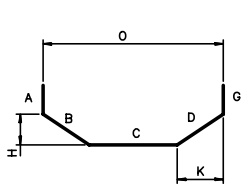

TYPE 14

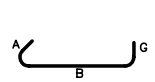

TYPE T9

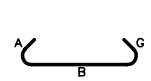

TYPE T12

TYPE 2

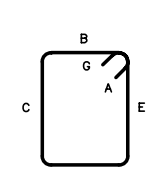

TYPE T1

AS BUILT

No.	Date	Revisions	By

HNTB CORPORATION

STATE OF WISCONSIN
DEPARTMENT OF TRANSPORTATION

STRUCTURE B-40-413A

Designed By	SL	Design Checked	TZ	Drawn By	BM	Plans Checked	AP

SOUTH CABLE STAY
EAST PYLON
LIFT 4 BARLIST

SHEET SC92 OF .

STATE PROJECT I.D.	SHEET NUMBER
2235-00-70	8.124

S. CABLE STAYED PYLON - WEST PYLON LIFT 4 (EL 66.92 TO 96.00)

BAR MARK	BAR SIZE	LOCATION COMMENT	NO.	LTH/BAR DECIMAL FT	TOTAL WT (LB)	BEND TYPE	A			B			C			D			E			F/R			G			H			I			J			K			O		
							FT	IN	¼	FT	IN	¼	FT	IN	¼	FT	IN	¼	FT	IN	¼	FT	IN	¼	FT	IN	¼	FT	IN	¼	FT	IN	¼	FT	IN	¼	FT	IN	¼	FT	IN	¼
P904	9	EPOXY COATED	68	34.000	7860.8	STR				34	0	0																														
P905	9	EPOXY COATED	16	30.917	1681.9	2	1	7	0	29	4	0													0	0	0															
P906	9	EPOXY COATED	16	26.833	1459.7	2	1	7	0	25	3	0													0	0	0															
P907	9	EPOXY COATED	2	18.313	124.5	14	0	0	0	3	5	3	14	10	0	0	0	0							0	0	0	1	3	0							3	3	0			
P908	9	EPOXY COATED	2	22.396	152.3	14	0	0	0	3	5	3	18	11	0	0	0	0							0	0	0	1	3	0							3	3	0			
P909	9	EPOXY COATED	2	23.396	159.1	14	0	0	0	3	5	3	19	11	0	0	0	0							0	0	0	1	3	0							3	3	0			
P910	9	EPOXY COATED	2	27.396	186.3	14	0	0	0	3	5	3	23	11	0	0	0	0							0	0	0	1	3	0							3	3	0			
P911	9	EPOXY COATED	2	14.208	96.6	14	0	0	0	3	5	3	7	3	0	3	5	3							0	0	0	1	3	0							3	3	0			
P513	5	EPOXY COATED 4 Series of 37	148	9.469	1461.6	T9	0	5	2	8 to 8	10 to 1	2 to 3													0	6	0															
P514	5	EPOXY COATED 2 Series of 37	74	14.750	1138.4	T1	0	5	2	1	8	3	5	3 to 1	2 to 0	1	8	3	5	3 to 1	2 to 0				0	5	2															
P514a	5	EPOXY COATED 2 Series of 37	74	14.208	1096.6	T1	0	5	2	1	8	3	5	2 to 4	0 to 0	1	8	3	5	2 to 4	0 to 0				0	5	2															
P515	5	EPOXY COATED	851	2.688	2385.4	T9	0	5	2	1	8	3													0	6	0															
P516	5	EPOXY COATED 4 Series of 18	72	8.906	668.8	T9	0	5	2	8 to 7	1 to 9	3 to 0													0	6	0															
P517	5	EPOXY COATED	72	7.167	538.2	T1	0	5	2	1	5	2	1	7	3	1	5	2	1	7	3				0	6	0															
P517a	5	EPOXY COATED 2 Series of 18	36	13.375	502.2	T1	0	5	2	1	7	3	4 to 4	8 to 6	0 to 0	1	7	3	4 to 4	8 to 6	0 to 0				0	5	2															
P518	5	EPOXY COATED	324	2.604	880.0	T9	0	5	2	1	7	3													0	6	0															
P519	5	EPOXY COATED	216	4.500	1013.8	T12	0	5	2	3	7	0													0	5	2															
P520	5	EPOXY COATED	4	8.708	36.3	T9	0	5	2	7	9	0													0	6	0															
P521	5	EPOXY COATED	4	7.000	29.2	T1	0	5	2	1	5	0	1	7	2	1	5	0	1	7	2				0	5	2															
P521a	5	EPOXY COATED	2	13.208	27.6	T1	0	5	2	1	7	3	4	6	0	1	7	3	4	6	0				0	5	2															
P522	5	EPOXY COATED	18	2.583	48.5	T9	0	5	2	1	7	2													0	6	0															
P523	5	EPOXY COATED	16	4.500	75.1	T12	0	5	2	3	7	0													0	5	2															

TOTAL WT = 21623.0

NOTES:

1. ALL REINFORCING STEEL IS EPOXY COATED U.N.O.
2. ALL REINFORCING SHALL BE ASTM A615 OR A996, GRADE 60.

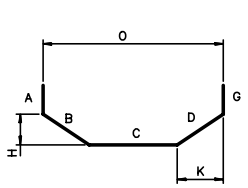

TYPE 14

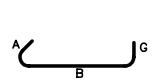

TYPE T9

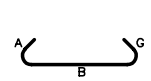

TYPE T12

TYPE 2

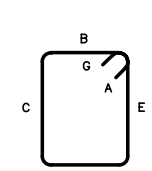

TYPE T1

AS BUILT

No.	Date	Revisions	By

HNTB CORPORATION

STATE OF WISCONSIN
DEPARTMENT OF TRANSPORTATION

STRUCTURE B-40-413A

Designed By	SL	Design Checked	TZ	Drawn By	BM	Plans Checked	AP

SOUTH CABLE STAY
WEST PYLON
LIFT 4 BARLIST

SHEET SC93 OF .

STATE PROJECT I.D.	SHEET NUMBER
2235-00-70	8.125

S. CABLE STAYED PYLON - EAST PYLON LIFT 5 (EL 96.000 TO 123.430)

BAR MARK	BAR SIZE	LOCATION COMMENT	NO.	LTH/BAR DECIMAL FT	TOTAL WT (LB)	BEND TYPE	A			B			C			D			E			F/R			G			H			I			J			K			O		
							FT	IN	1/4	FT	IN	1/4	FT	IN	1/4	FT	IN	1/4	FT	IN	1/4	FT	IN	1/4	FT	IN	1/4	FT	IN	1/4	FT	IN	1/4	FT	IN	1/4	FT	IN	1/4	FT	IN	1/4
P915	9	EPOXY COATED	60	32.750	6681.0	STR				32	9	0																														
P916	9	EPOXY COATED	4	10.667	145.1	14	0	0	0	3	5	0	3	10	0	3	5	0							0	0	0	1	1	3							3	2	2			
P917	9	EPOXY COATED	4	9.833	133.7	14	0	0	0	3	5	0	3	0	0	3	5	0							0	0	0	1	1	3							3	2	2			
P918	9	EPOXY COATED	4	9.583	130.3	14	0	0	0	3	5	0	2	9	0	3	5	0							0	0	0	1	1	3							3	2	2			
P919	9	EPOXY COATED	4	9.500	129.2	14	0	0	0	3	5	0	2	8	0	3	5	0							0	0	0	1	1	3							3	2	2			
P920	9	EPOXY COATED	4	15.417	209.7	14	0	0	0	3	5	0	12	0	0	0	0	0							0	0	0	1	1	3							3	2	2			
P525	5	EPOXY COATED 2 Series of 55	110	7.604	872.4	T1		5	2	1	5	2	2 1	1 to 7	3 2	1	5	2	2 1	1 to 7	3 2					5	2															
P526	5	EPOXY COATED	220	2.417	554.5	T9		5	2	1	5	2														6	0															
P527	5	EPOXY COATED 2 Series of 55	110	2.844	326.3	T9		5	2	2 1	1 to 7	3 2														6	0															
P528	5	EPOXY COATED 2 Series of 55	110	7.875	903.5	T1		5	2	1 1	9 to 5	0 1	2 1	1 to 7	3 2	1 1	9 to 5	0 1	2 1	1 to 7	3 2					5	2															
P529	5	EPOXY COATED 4 Series of 55	220	2.646	607.1	T9		5	2	1 1	9 to 7	0 2														6	0															
P530	5	EPOXY COATED 4 Series of 55	220	2.844	652.5	T9		5	2	2 1	1 to 7	3 2														6	0															
P531	5	EPOXY COATED	4	5.875	24.5	T12		5	2	4	11	2														5	2															
P532	5	EPOXY COATED	9	5.792	54.4	T12		5	2	4	10	2														5	2															
P533	5	EPOXY COATED	8	5.729	47.8	T12		5	2	4	9	3														5	2															
P534	5	EPOXY COATED	7	5.688	41.5	T12		5	2	4	9	1														5	2															
P535	5	EPOXY COATED	7	5.625	41.1	T12		5	2	4	8	2														5	2															
P536	5	EPOXY COATED	8	5.604	46.8	T12		5	2	4	8	1														5	2															
P537	5	EPOXY COATED	7	5.854	42.7	T12		5	2	4	11	1														5	2															
P538	5	EPOXY COATED	8	5.792	48.3	T12		5	2	4	10	2														5	2															
P539	5	EPOXY COATED	7	5.729	41.8	T12		5	2	4	9	3														5	2															
P540	5	EPOXY COATED	7	5.688	41.5	T12		5	2	4	9	1														5	2															
P541	5	EPOXY COATED	7	5.625	41.1	T12		5	2	4	8	2														5	2															
P542	5	EPOXY COATED	7	5.583	40.8	T12		5	2	4	8	0														5	2															

TOTAL WT = 11857.6

NOTES:

1. ALL REINFORCING STEEL IS EPOXY COATED U.N.O.
2. ALL REINFORCING SHALL BE ASTM A615 OR A996, GRADE 60.

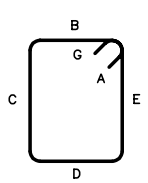

TYPE T1

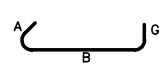

TYPE T9

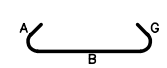

TYPE T12

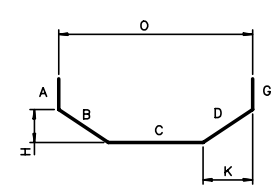

TYPE 14

AS BUILT

No.	Date	Revisions	By

HNTB CORPORATION

STATE OF WISCONSIN
DEPARTMENT OF TRANSPORTATION

STRUCTURE B-40-413A

Designed By	SL	Design Checked	TZ	Drawn By	BM	Plans Checked	AP

SOUTH CABLE STAY
EAST PYLON
LIFT 5 BARLIST

SHEET SC94 OF .

STATE PROJECT I.D.	SHEET NUMBER
2235-00-70	8.126

S. CABLE STAYED PYLON - WEST PYLON LIFT 5 (EL 96.000 TO 123.430)

BAR MARK	BAR SIZE	LOCATION COMMENT	NO.	LTH/BAR DECIMAL FT	TOTAL WT (LB)	BEND TYPE	A			B			C			D			E			F/R			G			H			I			J			K			O		
							FT	IN	1/4	FT	IN	1/4	FT	IN	1/4	FT	IN	1/4	FT	IN	1/4	FT	IN	1/4	FT	IN	1/4	FT	IN	1/4	FT	IN	1/4	FT	IN	1/4	FT	IN	1/4	FT	IN	1/4
P915	9	EPOXY COATED	60	32.750	6681.0	STR				32	9	0																														
P916	9	EPOXY COATED	4	10.667	145.1	14	0	0	0	3	5	0	3	10	0	3	5	0							0	0	0	1	1	3							3	2	2			
P917	9	EPOXY COATED	4	9.833	133.7	14	0	0	0	3	5	0	3	0	0	3	5	0							0	0	0	1	1	3							3	2	2			
P918	9	EPOXY COATED	4	9.583	130.3	14	0	0	0	3	5	0	2	9	0	3	5	0							0	0	0	1	1	3							3	2	2			
P919	9	EPOXY COATED	4	9.500	129.2	14	0	0	0	3	5	0	2	8	0	3	5	0							0	0	0	1	1	3							3	2	2			
P920	9	EPOXY COATED	4	15.417	209.7	14	0	0	0	3	5	0	12	0	0	0	0	0							0	0	0	1	1	3							3	2	2			
P525	5	EPOXY COATED 2 Series of 55	110	7.604	872.4	T1		5	2	1	5	2	2	1	3	1	5	2	2	1	3					5	2															
													1	to 7	2				1	to 7	2																					
P526	5	EPOXY COATED	220	2.417	554.5	T9		5	2	1	5	2														6	0															
P527	5	EPOXY COATED 2 Series of 55	110	2.844	326.3	T9		5	2	2	1	3														6	0															
										1	to 7	2																														
P528	5	EPOXY COATED 2 Series of 55	110	7.875	903.5	T1		5	2	1	9	0	2	1	3	1	9	0	2	1	3					5	2															
										1	to 5	1	1	to 7	2	1	to 5	1	1	to 7	2																					
P529	5	EPOXY COATED 4 Series of 55	220	2.646	607.1	T9		5	2	1	9	0														6	0															
										1	to 7	2																														
P530	5	EPOXY COATED 4 Series of 55	220	2.844	652.5	T9		5	2	2	1	3														6	0															
										1	to 7	2																														
P531	5	EPOXY COATED	4	5.875	24.5	T12		5	2	4	11	2														5	2															
P532	5	EPOXY COATED	9	5.792	54.4	T12		5	2	4	10	2														5	2															
P533	5	EPOXY COATED	8	5.729	47.8	T12		5	2	4	9	3														5	2															
P534	5	EPOXY COATED	7	5.688	41.5	T12		5	2	4	9	1														5	2															
P535	5	EPOXY COATED	7	5.625	41.1	T12		5	2	4	8	2														5	2															
P536	5	EPOXY COATED	8	5.604	46.8	T12		5	2	4	8	1														5	2															
P537	5	EPOXY COATED	7	5.854	42.7	T12		5	2	4	11	1														5	2															
P538	5	EPOXY COATED	8	5.792	48.3	T12		5	2	4	10	2														5	2															
P539	5	EPOXY COATED	7	5.729	41.8	T12		5	2	4	9	3														5	2															
P540	5	EPOXY COATED	7	5.688	41.5	T12		5	2	4	9	1														5	2															
P541	5	EPOXY COATED	7	5.625	41.1	T12		5	2	4	8	2														5	2															
P542	5	EPOXY COATED	7	5.583	40.8	T12		5	2	4	8	0														5	2															

TOTAL WT = 11857.6

NOTES:

1. ALL REINFORCING STEEL IS EPOXY COATED U.N.O.
2. ALL REINFORCING SHALL BE ASTM A615 OR A996, GRADE 60.

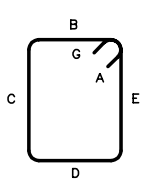

TYPE T1

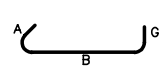

TYPE T9

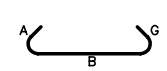

TYPE T12

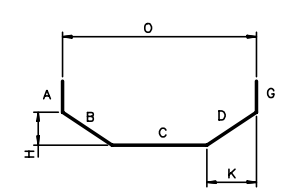

TYPE 14

AS BUILT

No.	Date	Revisions	By

HNTB CORPORATION

STATE OF WISCONSIN
DEPARTMENT OF TRANSPORTATION

STRUCTURE B-40-413A

Designed By	SL	Design Checked	TZ	Drawn By	BM	Plans Checked	AP

SOUTH CABLE STAY
WEST PYLON
LIFT 5 BARLIST

SHEET SC95 OF .

STATE PROJECT I.D.	SHEET NUMBER
2235-00-70	8.127

S. CABLE STAYED PYLON - WEST PYLON LIFT 6 & 7 (EL 123.430 TO 145.820)

BAR MARK	BAR SIZE	LOCATION COMMENT	NO.	LTH/BAR DECIMAL FT	TOTAL WT (LB)	BEND TYPE	A			B			C			D			E			F/R			G			H			I			J			K			O		
							FT	IN	1/4	FT	IN	1/4	FT	IN	1/4	FT	IN	1/4	FT	IN	1/4	FT	IN	1/4	FT	IN	1/4	FT	IN	1/4	FT	IN	1/4	FT	IN	1/4	FT	IN	1/4	FT	IN	1/4
P725	7	EPOXY COATED	48	22.250	2183.0	STR				22	3	0																														
P726	7	EPOXY COATED	10	19.250	393.5	STR				19	3	0																														
P545	5	EPOXY COATED 2 Series of 23	46	15.646	750.7	T1		5	2	1	1	1	6	8 to 10	1 0	1	1	1	6	8 to 10	1 0					5	2															
P546	5	EPOXY COATED 6 Series of 20	120	5.510	689.7	T9		5	2	4	5 to 8	1 0														6	0															
P547	5	EPOXY COATED 3 Series of 20	60	7.271	455.0	T9		5	2	6	8 to 11	1 1														6	0															
P548	5	EPOXY COATED	4	12.833	53.5	17				3	6	0	5	10	0	3	6	0																								
P549	5	EPOXY COATED	22	6.000	137.7	17				2	6	0	1	0	0	2	6	0																								
P550	5	EPOXY COATED	30	2.063	64.5	T9		5	2	1	1	1														6	0															

TOTAL WT = 4727.6

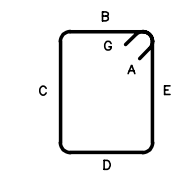

TYPE T1

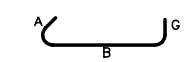

TYPE T9

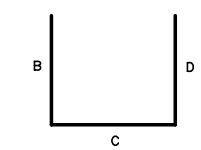

TYPE 17

S. CABLE STAYED PYLON - EAST PYLON LIFT 6 & 7 (EL 123.430 TO 145.820)

BAR MARK	BAR SIZE	LOCATION COMMENT	NO.	LTH/BAR DECIMAL FT	TOTAL WT (LB)	BEND TYPE	A			B			C			D			E			F/R			G			H			I			J			K			O		
							FT	IN	1/4	FT	IN	1/4	FT	IN	1/4	FT	IN	1/4	FT	IN	1/4	FT	IN	1/4	FT	IN	1/4	FT	IN	1/4	FT	IN	1/4	FT	IN	1/4	FT	IN	1/4	FT	IN	1/4
P725	7	EPOXY COATED	48	22.250	2183.0	STR				22	3	0																														
P726	7	EPOXY COATED	10	19.250	393.5	STR				19	3	0																														
P545	5	EPOXY COATED 2 Series of 23	46	15.646	750.7	T1		5	2	1	1	1	6	8 to 10	1 0	1	1	1	6	8 to 10	1 0					5	2															
P546	5	EPOXY COATED 6 Series of 20	120	5.510	689.7	T9		5	2	4	5 to 8	1 0														6	0															
P547	5	EPOXY COATED 3 Series of 20	60	7.271	455.0	T9		5	2	6	8 to 11	1 1														6	0															
P548	5	EPOXY COATED	4	12.833	53.5	17				3	6	0	5	10	0	3	6	0																								
P549	5	EPOXY COATED	22	6.000	137.7	17				2	6	0	1	0	0	2	6	0																								
P550	5	EPOXY COATED	30	2.063	64.5	T9		5	2	1	1	1														6	0															

TOTAL WT = 4727.6

NOTES:

1. ALL REINFORCING STEEL IS EPOXY COATED U.N.O.
2. ALL REINFORCING SHALL BE ASTM A615 OR A996, GRADE 60.

AS BUILT

No.	Date	Revisions	By
1	7/19/01	REV SERIES BAR QUANTITY	AP

HNTB CORPORATION

STATE OF WISCONSIN
DEPARTMENT OF TRANSPORTATION

STRUCTURE B-40-413A

Designed By	SL	Design Checked	TZ	Drawn By	BM	Plans Checked	AP

SOUTH CABLE STAY PYLON LIFTS 6 & 7 BARLIST

SHEET SC96 OF .

STATE PROJECT I.D.	SHEET NUMBER
2235-00-70	8.128

SOUTH CABLE STAY BASCULE END BEAM BARLIST

BAR MARK	BAR SIZE	LOCATION COMMENT	NO.	LTH/BAR DECIMAL FT	TOTAL WT (LB)	BEND TYPE	A			B			C			D			E			F/R			G			H			I			J			K			O		
							FT	IN	1/4	FT	IN	1/4	FT	IN	1/4	FT	IN	1/4	FT	IN	1/4	FT	IN	1/4	FT	IN	1/4	FT	IN	1/4	FT	IN	1/4	FT	IN	1/4	FT	IN	1/4	FT	IN	1/4
EB401	4	Epoxy Coated	60	3.708	148.6	2	0	8	0	2	4	2													0	8	0															
EB403	4	Epoxy Coated	64	5.333	228.0	17				2	4	0	0	8	0	2	4	0																								
EB404	4	Epoxy Coated	20	2.333	31.2	STR				2	4	0																														
EB503	5	Epoxy Coated	52	4.833	262.1	STR				4	10	0																														
EB504	5	Epoxy Coated	64	7.958	531.2	17				2	10	0	2	3	2	2	10	0																								
EB505	5	Epoxy Coated 2 Series of 7	14	6.813	99.5	17				2	10	0	0	9	2	2	10	0																								
														TO																												
													1	6	0																											
EB506	5	Epoxy Coated 2 Series of 4	8	4.896	40.9	17				2	10	0	1	9	1	0	0	0																								
														TO																												
													2	4	1																											
EB507	5	Epoxy Coated 2 Series of 8	16	6.938	115.8	17				2	10	0	0	10	3	2	10	0																								
														TO																												
													1	7	3																											
EB508	5	Epoxy Coated	34	6.417	227.5	T1	0	5	2	1	4	0	1	5	0	1	4	0	1	5	0				0	5	2															
EB512	5	Epoxy Coated	50	7.917	412.854	T1	0	5	2	1	4	0	2	2	0	1	4	0	2	2	0				0	5	2															
EB513	5	Epoxy Coated	3	28.000	87.612	17				1	0	0	27	0	0	0	0	0																								
EB513b	5	Epoxy Coated	3	35.167	110.036	17				1	0	0	34	2	0	0	0	0																								
EB514	5	Epoxy Coated	12	2.583	32.333	17				1	0	0	0	7	0	1	0	0																								
EB515	5	Epoxy Coated	16	9.917	165.489	17				4	8	0	0	7	0	4	8	0																								
EB606	6	Epoxy Coated	76	10.750	1227.134	T1	0	8	0	2	4	2	2	4	0	2	4	2	2	4	0				0	8	0															
EB607	6	Epoxy Coated	16	28.000	672.9	17				1	0	0	27	0	0	0	0	0																								
EB607b	6	Epoxy Coated	16	35.167	845.1	17				1	0	0	34	2	0	0	0	0																								
EB608	6	Epoxy Coated	3	44.000	198.3	17				1	0	0	42	0	0	1	0	0																								
EB610	6	Epoxy Coated	8	13.333	160.2	17				6	8	0	6	8	0	0	0	0																								
EB611	6	Epoxy Coated	12	13.750	247.8	17				5	6	2	2	8	0	5	6	2																								
EB612	6	Epoxy Coated 4 Series of 6	24	7.583	273.4	T1	0	8	0	1	9	0	1	6	0	1	9	0	1	6	0				0	8	0															
														TO						TO																						
													1	3	0				1	3	0																					
				TOTAL WT =	6118.0																																					

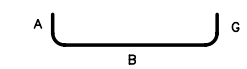

TYPE 2

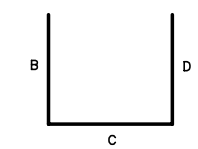

TYPE 17

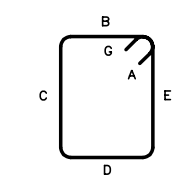

TYPE T1

NOTES:

1. ALL REINFORCING STEEL IS EPOXY COATED U.N.O.
2. ALL REINFORCING SHALL BE ASTM A615 OR A996, GRADE 60.

AS BUILT

No.	Date	Revisions	By

HNTB CORPORATION

STATE OF WISCONSIN
DEPARTMENT OF TRANSPORTATION

STRUCTURE B-40-413A

Designed By	SL	Design Checked	TZ	Drawn By	BM	Plans Checked	AP

SOUTH CABLE STAY BASCULE END BEAM BARLIST

SHEET SC97 OF

S. CABLESTAY BARLIST CABLE ANCHORAGES-1

STATE PROJECT I.D.	SHEET NUMBER
2235-00-70	8.129

BAR MARK	BAR SIZE	LOCATION COMMENT	NO.	LTH/BAR DECIMAL FT	TOTAL WT (LB)	BEND TYPE	A			B			C			D			E			F/R			G			H			I			J			K			O		
							FT	IN	¼	FT	IN	¼	FT	IN	¼	FT	IN	¼	FT	IN	¼	FT	IN	¼	FT	IN	¼	FT	IN	¼	FT	IN	¼	FT	IN	¼	FT	IN	¼	FT	IN	¼
SPIRAL	5	Epoxy Coated	24	86.394	2162.6	H1				0	2	0	2	0	0																									1	10	0
CA501	5	Epoxy Coated 2 SERIES OF 6 BARS	12	12.771	159.8	S3	0	8	0	4	4 TO 10	1 0	2	3	0	4	4 TO 10	1 0							0	8	0	0	4	2												
CA502	5	Epoxy Coated 2 SERIES OF 6 BARS	12	12.792	160.1	S3	0	8	0	4	3 TO 10	3 3	2	3	0	4	3 TO 10	3 3							0	8	0	0	4	2												
CA503	5	Epoxy Coated 2 SERIES OF 6 BARS	12	12.833	160.6	S3	0	8	0	4	3 TO 5	0 0	2	3	0	4	3 TO 5	0 0							0	8	0	0	4	2												
CA504	5	Epoxy Coated 2 SERIES OF 6 BARS	12	12.979	162.4	S3	0	8	0	4	2 TO 5	1 2	2	3	0	4	2 TO 5	1 2							0	8	0	0	4	2												
CA505	5	Epoxy Coated 2 SERIES OF 3 BARS	6	11.625	72.7	S3	0	8	0	3	10 TO 4	1 2	2	3	0	3	10 TO 4	1 2							0	8	0	0	4	2												
CA506	5	Epoxy Coated 2 SERIES OF 3 BARS	6	11.375	71.2	S3	0	8	0	3	8 TO 4	1 1	2	3	0	3	8 TO 4	1 1							0	8	0	0	4	2												
CA507	5	Epoxy Coated 2 SERIES OF 3 BARS	6	11.063	69.229	S3	0	8	0	3	6 TO 3	0 3	2	3	0	3	6 TO 3	0 3							0	8	0	0	4	2												
CA508	5	Epoxy Coated 2 SERIES OF 2 BARS	4	10.917	45.5	S3	0	8	0	3	6 TO 3	0 10 0	2	3	0	3	6 TO 3	0 10 0							0	8	0	0	4	2												
CA509	5	Epoxy Coated	12	11.167	139.8	S3	0	8	0	3	9	2	2	3	0	3	9	2							0	8	0	0	4	2												
CA510	5	Epoxy Coated	8	10.708	89.4	S3	0	8	0	3	6	3	2	3	0	3	6	3							0	8	0	0	4	2												
CA511	5	Epoxy Coated	2	10.333	21.6	S3	0	8	0	3	4	2	2	3	0	3	4	2							0	8	0	0	4	2												
CA512	5	Epoxy Coated 2 SERIES OF 4 BARS	8	11.875	99.1	S3	0	8	0	3	10 TO 4	3 3	2	3	0	3	10 TO 4	3 3							0	8	0	0	4	2												
CA513	5	Epoxy Coated 2 SERIES OF 5 BARS	10	11.833	123.4	S3	0	8	0	3	9 TO 4	0 6 0	2	3	0	3	9 TO 4	0 6 0							0	8	0	0	4	2												
CA514	5	Epoxy Coated 2 SERIES OF 6 BARS	12	11.667	146.0	S3	0	8	0	3	5 TO 4	0 8 0	2	3	0	3	5 TO 4	0 8 0							0	8	0	0	4	2												
CA515	5	Epoxy Coated 2 SERIES OF 6 BARS	12	11.792	147.6	S3	0	8	0	3	3 TO 4	0 11 2	2	3	0	3	3 TO 4	0 11 2							0	8	0	0	4	2												
CA516	5	Epoxy Coated	16	11.000	183.6	2	0	6	0	10	0	0													0	6	0															
CA517	5	Epoxy Coated	16	9.750	162.7	2	0	6	0	8	9	0													0	6	0															
CA518	5	Epoxy Coated	16	8.667	144.6	2	0	6	0	7	8	0													0	6	0															
CA519	5	Epoxy Coated	16	7.417	123.8	2	0	6	0	6	5	0													0	6	0															
CA520	5	Epoxy Coated	8	11.417	95.3	2	0	6	0	10	5	0													0	6	0															
CA521	5	Epoxy Coated	8	10.083	84.1	2	0	6	0	9	1	0													0	6	0															
CA522	5	Epoxy Coated	8	9.000	75.1	2	0	6	0	8	0	0													0	6	0															
CA523	5	Epoxy Coated	8	7.750	64.7	2	0	6	0	6	9	0													0	6	0															
CA524	5	Epoxy Coated	24	9.292	232.6	S3	0	8	0	2	10	1	2	3	0	2	10	1							0	8	0	0	4	2												

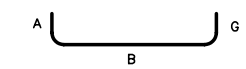

TYPE 2

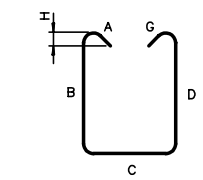

TYPE S3

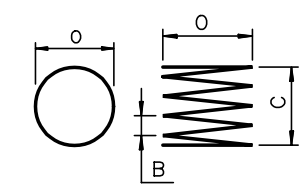

1½TURNS AT ENDS

TYPE H1

NOTES:

1. ALL REINFORCING STEEL IS EPOXY COATED U.N.O.
2. ALL REINFORCING SHALL BE ASTM A615 OR A996, GRADE 60.

AS BUILT

No.	Date	Revisions	By

HNTB CORPORATION

STATE OF WISCONSIN
DEPARTMENT OF TRANSPORTATION

STRUCTURE B-40-413A

Designed By	TZ	Design Checked	CE	Drawn By	CE	Plans Checked	TZ

SOUTH CABLE STAY CABLE ANCHORAGE BARLIST - 1 OF 2

SHEET SC98 OF

STATE PROJECT I.D.	SHEET NUMBER
2235-00-70	8.130

S. CABLESTAY BARLIST CABLE ANCHORAGES-2

BAR MARK	BAR SIZE	LOCATION COMMENT	NO.	LTH/BAR DECIMAL FT	TOTAL WT (LB)	BEND TYPE	A			B			C			D			E			F/R			G			H			I			J			K			O		
							FT	IN	¼	FT	IN	¼	FT	IN	¼	FT	IN	¼	FT	IN	¼	FT	IN	¼	FT	IN	¼	FT	IN	¼	FT	IN	¼	FT	IN	¼	FT	IN	¼	FT	IN	¼
CA525	5	Epoxy Coated	20	8.917	186.0	S3	0	8	0	2	8	0	2	3	0	2	8	0							0	8	0	0	4	2												
CA526	5	Epoxy Coated	32	8.375	279.5	S3	0	8	0	2	6	1	2	0	0	2	6	1							0	8	0	0	4	2												
CA527	5	Epoxy Coated	16	6.000	100.1	2	0	6	0	5	0	0													0	6	0															
CA528	5	Epoxy Coated	16	5.000	83.4	2	0	6	0	4	0	0													0	6	0															
CA529	5	Epoxy Coated	8	6.417	53.5	2	0	6	0	5	5	0													0	6	0															
CA530	5	Epoxy Coated	8	5.250	43.8	2	0	6	0	4	3	0													0	6	0															
CA531	5	Epoxy Coated	4	3.167	13.2	STR				3	2	0																														
CA532	5	Epoxy Coated	76	10.500	832.3	S3	0	8	0	3	0	2	3	1	0	3	0	2							0	8	0	0	4	2												
CA533	5	Epoxy Coated 2 SERIES OF 2 BARS	4	10.833	45.2	S3	0	8	0	2	11 TO 3	2 5 2	3	1	0	2	11 TO 3	2 5 2							0	8	0	0	4	2												
CA534	5	Epoxy Coated	136	3.500	496.5	2	0	6	0	3	0	0													0	0	0															
CA535	5	Epoxy Coated	12	8.583	107.4	S3	0	8	0	2	6	0	2	3	0	2	6	0							0	8	0	0	4	2												
CA536	5	Epoxy Coated	4	9.167	38.2	34				3	2	0	6	0	0	0	0	0										3	1	2							0	0	0			
CA537	5	Epoxy Coated	12	8.083	101.2	34				3	10	0	4	3	0	0	0	0										3	9	1							0	0	0			
CA538	5	Epoxy Coated	56	8.583	501.3	S3	0	8	0	2	6	0	2	3	0	2	6	0							0	8	0	0	4	2												
CA539	5	Epoxy Coated	4	5.167	21.6	2	0	6	0	4	2	0													0	6	0															
CA540	5	Epoxy Coated	4	5.500	22.9	2	0	6	0	4	6	0													0	6	0															
CA541	5	Epoxy Coated	4	6.000	25.032	2	0	6	0	5	0	0													0	6	0															
CA542	5	Epoxy Coated	4	6.500	27.118	2	0	6	0	5	6	0													0	6	0															
CA543	5	Epoxy Coated	8	10.458	87.3	S3	0	8	0	3	6	3	2	0	0	3	6	3							0	8	0	0	4	2												
CA544	5	Epoxy Coated	26	10.250	278.0	S3	0	8	0	3	4	0	2	3	0	3	4	0							0	8	0	0	4	2												
CA545	5	Epoxy Coated	16	8.667	144.6	2	0	6	0	7	8	0													0	6	0															
CA546	5	Epoxy Coated	8	9.000	75.1	2	0	6	0	8	0	0													0	6	0															
CA547	5	Epoxy Coated	8	9.417	78.6	S3	0	8	0	3	0	2	2	0	0	3	0	2							0	8	0	0	4	2												
CA601	6	Epoxy Coated	24	14.250	513.7	34				4	3	0	10	0	0	0	0	0										4	2	1							0	0	0			
CA602	6	Epoxy Coated	8	11.750	141.2	34				4	9	0	7	0	0	0	0	0										4	8	1							0	0	0			
CA603	6	Epoxy Coated	64	21.083	2026.7	S3	0	8	0	2	5	0	18	0	0	0	0	0							0	0	0	0	4	2												
CA604	6	Epoxy Coated	8	11.333	136.2	34				5	6	0	5	10	0	0	0	0										5	5	0							0	0	0			
CA605	6	Epoxy Coated	8	9.667	116.2	34				5	6	0	4	2	0	0	0	0										5	5	0							0	0	0			
CA606	6	Epoxy Coated	40	15.083	906.2	S3	0	8	0	2	5	0	12	0	0	0	0	0							0	0	0	0	4	2												
CA607	6	Epoxy Coated	8	9.604	115.4	34				3	10	0	2	1	1	3	8	0										3	9	1							2	2	3			
CA608	6	Epoxy Coated	8	15.000	180.2	34				7	0	0	8	0	0	0	0	0										0	11	0							0	0	0			
CA609	6	Epoxy Coated	8	11.250	135.2	34				3	3	0	8	0	0	0	0	0										3	1	1							0	0	0			
CA610	6	Epoxy Coated	52	12.000	937.2	STR				12	0	0																														
CA611	6	Epoxy Coated	4	10.333	62.1	34				4	4	0	6	0	0	0	0	0										4	3	1							0	0	0			
CA612	6	Epoxy Coated	8	10.000	120.2	34				5	0	0	5	0	0	0	0	0										4	11	0							0	0	0			
CA613	6	Epoxy Coated	4	11.333	68.1	34				6	6	0	4	10	0	0	0	0										6	4	3							0	0	0			
CA614	6	Epoxy Coated	8	14.333	172.229	34				6	4	0	8	0	0	0	0	0										2	2	3							0	0	0			
CA615	6	Epoxy Coated	8	13.000	156.2	34				5	0	0	8	0	0	0	0	0										2	7	2							0	0	0			
CA616	6	Epoxy Coated	8	12.000	144.2	34				4	0	0	8	0	0	0	0	0										2	6	2							0	0	0			
CA617	6	Epoxy Coated	8	11.833	142.2	34				3	10	0	8	0	0	0	0	0										2	8	3							0	0	0			
CA618	6	Epoxy Coated	26	16.250	634.6	S10				6	8	0	2	11	0	6	8	0																								
CA619	6	Epoxy Coated	8	11.833	142.2	34				3	10	0	8	0	0	0	0	0										3	3	2							0	0	0			
CA620	6	Epoxy Coated	8	12.417	149.2	34				4	5	0	8	0	0	0	0	0										3	3	2							0	0	0			
CA621	6	Epoxy Coated	8	12.667	152.2	34				4	8	0	8	0	0	0	0	0										3	0	2							0	0	0			
CA622	6	Epoxy Coated	8	13.000	156.2	34				5	0	0	8	0	0	0	0	0										2	9	3							0	0	0			
CA623	6	Epoxy Coated	8	8.917	107.1	S3	0	8	0	3	5	0	4	10	0	0	0	0							0	0	0	0	4	2												
CA624	6	Epoxy Coated	8	12.833	154.2	34				4	10	0	8	4	0	0	0	0										4	9	0							0	0	0			

TOTAL WT - 16208.6

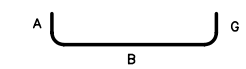

TYPE 2

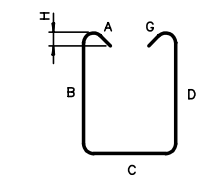

TYPE S3

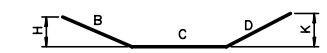

TYPE 34

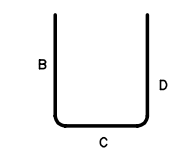

TYPE S10

NOTES:

1. ALL REINFORCING STEEL IS EPOXY COATED U.N.O.
2. ALL REINFORCING SHALL BE ASTM A615 OR A996, GRADE 60.

AS BUILT

No.	Date	Revisions	By

HNTB CORPORATION

STATE OF WISCONSIN
DEPARTMENT OF TRANSPORTATION

STRUCTURE

Designed By TZ	Design Checked CE	Drawn By CE	Plans Checked TZ

SOUTH CABLE STAY CABLE ANCHORAGE BARLIST - 2 OF 2

SHEET SC99 OF

STATE PROJECT I.D.	SHEET NUMBER
2235-00-70	8.131

SOUTH CABLE STAY BOT MAT BARLIST

BAR MARK	BAR SIZE	LOCATION COMMENT	NO.	LTH/BAR DECIMAL FT	TOTAL WT (LB)	BEND TYPE	A			B			C			D			E			F/R			G			H			I			J			K			O		
							FT	IN	1/4	FT	IN	1/4	FT	IN	1/4	FT	IN	1/4	FT	IN	1/4	FT	IN	1/4	FT	IN	1/4	FT	IN	1/4	FT	IN	1/4	FT	IN	1/4	FT	IN	1/4	FT	IN	1/4
BM601	6	Epoxy Coated	738	60.000	66508.6	STR				60	0	0																														
BM602	6	Epoxy Coated	57	57.000	4880.0	STR				57	0	0																														
BM603	6	Epoxy Coated	6	27.000	243.3	STR				27	0	0																														
BM603a	6	Epoxy Coated	6	50.000	450.6	STR				50	0	0																														
BM604	6	Epoxy Coated	64	34.000	3268.4	STR				34	0	0																														
BM506	5	Epoxy Coated	352	5.813	2134.0	29				3	7	3	2	2	0	0	0	0										0	8	0							0	0	0			
BM607	6	Epoxy Coated	158	43.917	10422.1	17				42	5	0	1	6	0	0	0	0																								
BM608	6	Epoxy Coated	158	34.917	8286.3	17				33	5	0	1	6	0	0	0	0																								
BM610	6	Epoxy Coated	66	5.000	495.7	17				1	6	0	2	0	0	1	6	0																								
BM611	6	Epoxy Coated	8	13.875	166.7	STR				13	10	2																														
BM611a	6	Epoxy Coated	8	15.854	190.5	STR				15	10	1																														
BM611b	6	Epoxy Coated	8	16.250	195.3	STR				16	3	0																														
BM611c	6	Epoxy Coated	16	16.500	396.5	STR				16	6	0																														
BM612	6	Epoxy Coated	10	41.354	621.1	STR				41	4	1																														
BM612a	6	Epoxy Coated	10	24.000	360.5	STR				24	0	0																														
BM613	6	Epoxy Coated	48	10.000	721.0	29				4	0	0	6	0	0	0	0	0										2	10	0							0	0	0			
BM614	6	Epoxy Coated	8	11.625	139.7	STR				11	7	2																														
BM614a	6	Epoxy Coated	4	15.146	91.0	STR				15	1	3																														
BM615	6	Epoxy Coated 2 SERIES OF 18	36	36.208	1957.857	29				3	2	2	33	0	0	0	0	0										2 TO 0	3 TO 0	1 TO 2							0	0	0			
BM616	6	Epoxy Coated	56	36.208	3045.6	29				3	2	2	33	0	0	0	0	0										2	3	1							0	0	0			
BM617	6	Epoxy Coated	16	24.500	588.8	H3				24	6	0																														
BM618	6	Epoxy Coated	16	39.500	949.3	H3				39	6	0																														
BM619	6	Epoxy Coated	32	11.333	544.7	H3				11	4	0																														
BM520	5	Epoxy Coated	378	27.917	11006.3	34				3	7	2	7	7	0	16	8	2											8	0							1	7	0			
BM621	6	Epoxy Coated	200	37.000	11114.8	STR				37	0	0																														
BM522	5	Epoxy Coated	24	7.292	182.5	12	0	0	0	1	6	0	2	2	0	3	7	2										0	8	0				0	0		3	6	3			
BM523	5	Epoxy Coated	30	20.792	650.6	12	0	0	0	1	6	0	2	7	0	16	8	2										1	6	2				0	0		16	7	1			
BM624	6	Epoxy Coated	14	50.000	1051.4	STR				50	0	0																														
BM625	6	Epoxy Coated	4	27.667	166.2	STR				27	8	0																														
BM625a	6	Epoxy Coated	4	27.417	164.7	STR				27	5	0																														
BM625b	6	Epoxy Coated	4	27.125	163.0	STR				27	1	2																														
BM625c	6	Epoxy Coated	4	26.750	160.7	STR				26	9	0																														
BM626	6	Epoxy Coated	66	41.750	4138.8	STR				41	9	0																														
BM627	6	Epoxy Coated 2 SERIES OF 4	8	50.000	600.8	STR				40 TO 60	0 TO 0	0 TO 0																														
BM628	6	Epoxy Coated	2	44.000	132.176	29				39	0	0	5	0	0	0	0	0										4	0	0							0	0	0			
BM629	6	Epoxy Coated	2	34.125	102.5	29				24	6	0	9	7	2	0	0	0										2	5	0							0	0	0			
BM630	6	Epoxy Coated	112	51.833	8719.6	29				39	0	0	12	10	0	0	0	0										3	10	0							0	0	0			
BM631	6	Epoxy Coated 4 SERIES OF 7	28	51.833	2179.9	29				42	0	0	9	10	0	0	0	0										3 TO 3	6 TO 11	0 TO 0							0	0	0			
BM632	6	Epoxy Coated 2 SERIES OF 6	12	34.250	617.3	STR				17 TO 51	6 TO 0	0 TO 0																														

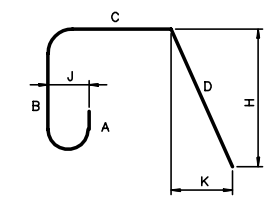

TYPE 12

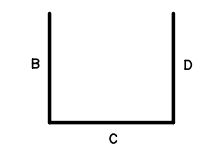

TYPE 17

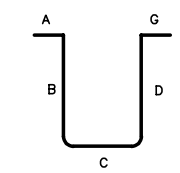

TYPE S4

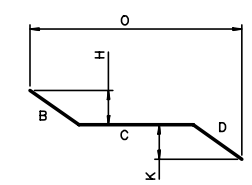

TYPE 29

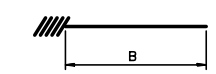

DOWEL-IN THREADED
FOR FORMSAVER COUPLER

TYPE H3

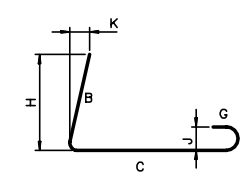

TYPE 30

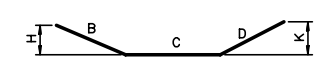

TYPE 34

NOTES:

1. ALL REINFORCING STEEL IS EPOXY COATED U.N.O.
2. ALL REINFORCING SHALL BE ASTM A615 OR A996, GRADE 60.

RECORD DRAWING

No.	Date	Revisions	By

HNTB CORPORATION

STATE OF WISCONSIN
DEPARTMENT OF TRANSPORTATION

STRUCTURE B-40-413A

Designed By	SL	Design Checked	CE	Drawn By	BM	Plans Checked	AP

SCS SUPERSTRUCTURE BOT MAT BARLIST 1 OF 2

SHEET SC100 OF

STATE PROJECT I.D.	SHEET NUMBER
2235-00-70	8.132

SOUTH CABLE STAY BOT MAT BARLIST

BAR MARK	BAR SIZE	LOCATION COMMENT	NO.	LTH/BAR DECIMAL FT	TOTAL WT (LB)	BEND TYPE	A			B			C			D			E			F/R			G			H			I			J			K			O		
							FT	IN	1/4	FT	IN	1/4	FT	IN	1/4	FT	IN	1/4	FT	IN	1/4	FT	IN	1/4	FT	IN	1/4	FT	IN	1/4	FT	IN	1/4	FT	IN	1/4	FT	IN	1/4	FT	IN	1/4
BM633	6	Epoxy Coated 1 SERIES OF 129	129	29.500	5715.9	STR				37 TO 22	0 TO 0	0 TO 0																														
BM534	5	Epoxy Coated	6	4.604	28.8	30				1	0	0	3	7	1										0	0	0	0	11	3				0	0		11	2	0			
BM535	5	Epoxy Coated 2 SERIES OF 124	248	29.208	7555.1	34				4 TO 3	8 TO 7	0 TO 0	7	7	0	17	6	0										0	8	3							1	6	0			
BM636	6	Epoxy Coated	2	24.000	72.1	STR				24	0	0																														
BM537	5	Epoxy Coated	402	29.750	12473.8	34				4	8	0	7	7	0	17	6	0										0	8	3							1	6	0			
BM638	6	Epoxy Coated	353	22.000	11664.5	STR				22	0	0																														
BM545	5	Epoxy Coated	12	5.625	70.4	29				2	7	2	3	0	0	0	0	0										0	5	2							0	0	0			
BM546	5	Epoxy Coated 2 SERIES OF 152	304	29.750	9432.9	34				4	8	0	7	7	0	17	6	0										0	9	2							1 TO 0	4 TO 11	2 TO 2			
BM649	6	Epoxy Coated	153	35.000	8043.2	STR				35	0	0																														
BM649a	6	Epoxy Coated	51	32.000	2451.3	STR				32	0	0																														
BM650	6	Epoxy Coated	6	56.750	511.4	S4	1	0	0	2	0	0	53	9	0	0	0	0							0	0	0															
BM651	6	Epoxy Coated	6	11.000	99.1	S4	1	0	0	2	0	0	8	0	0	0	0	0							0	0	0															
BM653	6	Epoxy Coated	2	14.500	43.558	STR				14	6	0																														

TOTAL WT = 205970.7

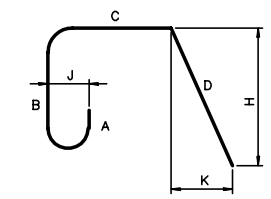

TYPE 12

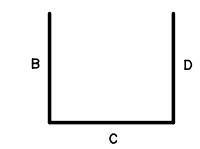

TYPE 17

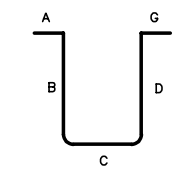

TYPE S4

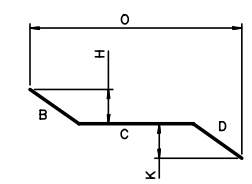

TYPE 29

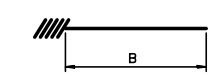

DOWEL-IN THREADED
FOR FORMSAVER COUPLER

TYPE H3

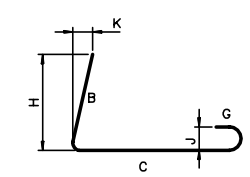

TYPE 30

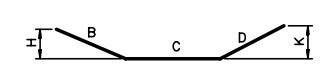

TYPE 34

NOTES:

1. ALL REINFORCING STEEL IS EPOXY COATED U.N.O.
2. ALL REINFORCING SHALL BE ASTM A615 OR A996, GRADE 60.

RECORD DRAWING

No.	Date	Revisions	By
1	12-13-01	REV MK BM650, BM651 G DIM	AP

HNTB CORPORATION

STATE OF WISCONSIN
DEPARTMENT OF TRANSPORTATION

STRUCTURE B-40-413A

Designed By	SL	Design Checked	CE	Drawn By	BM	Plans Checked	AP

SCS SUPERSTRUCTURE
BOT MAT BARLIST
2 OF 2

SHEET SC101 OF

STATE PROJECT I.D.	SHEET NUMBER
2235-00-70	8.133

SOUTH CABLE STAY TOP MAT BARLIST

BAR MARK	BAR SIZE	LOCATION COMMENT	NO.	LTH/BAR DECIMAL FT	TOTAL WT (LB)	BEND TYPE	A			B			C			D			E			F/R			G			H			I			J			K			O		
							FT	IN	1/4	FT	IN	1/4	FT	IN	1/4	FT	IN	1/4	FT	IN	1/4	FT	IN	1/4	FT	IN	1/4	FT	IN	1/4	FT	IN	1/4	FT	IN	1/4	FT	IN	1/4	FT	IN	1/4
TM601	6	Epoxy Coated	914	60.000	82369.7	STR				60	0	0																														
TM602	6	Epoxy Coated	60	57.000	5136.8	STR				57	0	0																														
TM603	6	Epoxy Coated	4	16.771	100.8	STR				16	9	1																														
TM603a	6	Epoxy Coated	4	16.938	101.8	STR				16	11	1																														
TM603b	6	Epoxy Coated	8	17.042	204.8	STR				17	0	2																														
TM603c	6	Epoxy Coated	4	17.167	103.1	STR				17	2	0																														
TM603d	6	Epoxy Coated	4	7.500	45.1	STR				7	6	0																														
TM604	6	Epoxy Coated	96	10.000	1441.9	29				4	0	0	6	0	0	0	0	0										2	10	0							0	0	0			
TM605	6	Epoxy Coated	357	31.167	16712.0	STR				31	2	0																														
TM606	6	Epoxy Coated	357	53.167	28508.7	STR				53	2	0																														
TM507	5	Epoxy Coated	1746	7.708	14037.5	12	0	0	0	3	6	0	0	8	2	3	6	0										3	6	0				0	0	0	0	7	3			
TM507a	5	Epoxy Coated	12	6.208	77.7	12	0	0	0	2	8	0	0	10	2	2	8	0										2	8	0				0	0	0	0	7	3			
TM608	6	Epoxy Coated	54	45.583	3697.2	2	1	0	0	44	7	0													0	0	0															
TM608a	6	Epoxy Coated	54	23.583	1912.8	2	1	0	0	22	7	0													0	0	0															
TM609	6	Epoxy Coated	54	6.667	540.7	2	1	0	0	5	8	0													0	0	0															
TM611	6	Epoxy Coated	14	40.083	842.9	STR				40	1	0																														
TM611a	6	Epoxy Coated	14	25.000	525.7	STR				25	0	0																														
TM612	6	Epoxy Coated	12	13.833	249.3	STR				13	10	0																														
TM613	6	Epoxy Coated	16	21.500	516.688	H3				21	6	0																														
TM614	6	Epoxy Coated	16	39.500	949.264	H3				39	6	0																														
TM615	6	Epoxy Coated	32	3.625	174.2	H3				3	7	2																														
TM616	6	Epoxy Coated	14	50.500	1061.9	STR				50	6	0																														
TM617	6	Epoxy Coated	8	26.625	319.9	STR				26	7	2																														
TM617a	6	Epoxy Coated	4	26.250	157.7	STR				26	3	0																														
TM617b	6	Epoxy Coated	4	26.000	156.2	STR				26	0	0																														
TM617c	6	Epoxy Coated	4	25.792	155.0	STR				25	9	2																														
TM618	6	Epoxy Coated 2 SERIES OF 4	8	48.125	578.3	STR				36 TO 60	3 0	0 0																														
TM619	6	Epoxy Coated 2 SERIES OF 6	12	36.271	653.7	STR				18 TO 54	6 0	2 0																														
TM620	6	Epoxy Coated	2	29.000	87.1	29				25	0	0	4	0	0	0	0	0										2	0	0							0	0	0			
TM621	6	Epoxy Coated 1 SERIES OF 129	129	28.000	5425.2	STR				24 TO 31	10 2	0 0																														
TM622	6	Epoxy Coated 1 SERIES OF 129	129	50.000	9687.9	STR				46 TO 53	10 2	0 0																														
TM623	6	Epoxy Coated	359	46.833	25253.4	STR				46	10	0																														
TM624	6	Epoxy Coated	359	24.833	13390.6	STR				24	10	0																														
TM625	6	Epoxy Coated	153	35.000	8043.2	STR				35	0	0																														
TM625a	6	Epoxy Coated	51	32.000	2451.3	STR				32	0	0																														

TOTAL WT = 225670.0

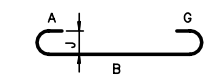

TYPE 1

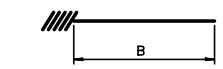

DOWEL-IN THREADED
FOR FORMSAVER COUPLER

TYPE H3

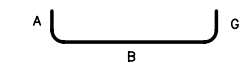

TYPE 2

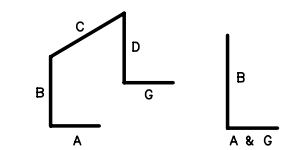

TYPE H14

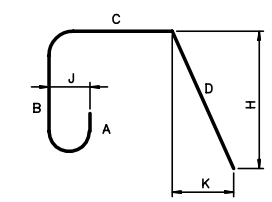

TYPE 12

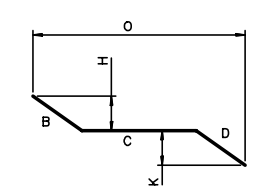

TYPE 29

NOTES:

1. ALL REINFORCING STEEL IS EPOXY COATED U.N.O.
2. ALL REINFORCING SHALL BE ASTM A615 OR A996, GRADE 60.

RECORD DRAWING

No.	Date	Revisions	By

HNTB CORPORATION

STATE OF WISCONSIN
DEPARTMENT OF TRANSPORTATION

STRUCTURE B-40-413A

Designed By	SL	Design Checked	TPZ	Drawn By	GMZ	Plans Checked	AJP

SUPERSTRUCTURE BARLIST TOP MAT 1 OF 1

SHEET SC102 OF

STATE PROJECT I.D.	SHEET NUMBER
2235-00-70	8.134

SOUTH CABLE STAY TOP MAT SIDEWALK BARLIST

BAR MARK	BAR SIZE	LOCATION COMMENT	NO.	LTH/BAR DECIMAL FT	TOTAL WT (LB)	BEND TYPE	A			B			C			D			E			F/R			G			H			I			J			K			O		
							FT	IN	1/4	FT	IN	1/4	FT	IN	1/4	FT	IN	1/4	FT	IN	1/4	FT	IN	1/4	FT	IN	1/4	FT	IN	1/4	FT	IN	1/4	FT	IN	1/4	FT	IN	1/4	FT	IN	1/4
ST601	6	Epoxy Coated	362	60.000	32623.4	STR				60	0	0																														
ST602	6	Epoxy Coated	34	57.000	2910.9	STR				57	0	0																														
ST603	6	Epoxy Coated	4	16.771	100.8	STR				16	9	1																														
ST603a	6	Epoxy Coated	4	16.938	101.8	STR				16	11	1																														
ST603b	6	Epoxy Coated	8	17.042	204.8	STR				17	0	2																														
ST603c	6	Epoxy Coated	4	17.167	103.1	STR				17	2	0																														
ST603d	6	Epoxy Coated	4	7.500	45.1	STR				7	6	0																														
ST604	6	Epoxy Coated	96	10.000	1441.9	29				4	0	0	6	0	0	0	0	0										2	10	0							0	0	0			
ST505	5	Epoxy Coated	1758	5.813	10657.8	H10	1	0	0	1	3	0	1	1	0	1	5	3							1	0	0	1	2	1	0	2	1	0	4	2	1	0	3	0	7	0
ST606	6	Epoxy Coated	702	19.875	20956.3	1	0	8	0	18	6	2													0	8	0							0	6	0						
ST607	6	Epoxy Coated	48	14.667	1057.4	1	0	8	0	13	4	0													0	8	0							0	6	0						
ST608	6	Epoxy Coated	54	3.625	294.0	1	0	8	0	2	3	2													0	8	0							0	6	0						
ST610	6	Epoxy Coated	14	40.083	842.9	STR				40	1	0																														
ST610a	6	Epoxy Coated	14	25.000	525.7	STR				25	0	0																														
ST611	6	Epoxy Coated	28	10.000	420.6	H3				10	0	0																														
ST611a	6	Epoxy Coated	28	10.667	448.6	1	0	0	0	10	0	0													0	8	0							0	6	0						
ST612	6	Epoxy Coated	32	4.000	192.3	H3				4	0	0																														
ST613	6	Epoxy Coated	12	13.833	249.3	STR				13	10	0																														
ST614	6	Epoxy Coated	14	50.500	1061.914	STR				50	6	0																														
ST615	6	Epoxy Coated	8	26.625	319.926	STR				26	7	2																														
ST615a	6	Epoxy Coated	4	26.250	157.7	STR				26	3	0																														
ST615b	6	Epoxy Coated	4	26.000	156.2	STR				26	0	0																														
ST615c	6	Epoxy Coated	4	25.792	155.0	STR				25	9	2																														
ST616	6	Epoxy Coated	8	35.000	420.6	STR				35	0	0																														
ST617	6	Epoxy Coated 2 SERIES OF 4	8	50.500	606.8	STR				41 TO 60	0 0	0 0																														
ST618	6	Epoxy Coated	16	50.229	1207.1	H7				9	11	3	6	0	0	34	3	0				100	2	0				3	10	3				3	5	0	9	11	2			
ST619	6	Epoxy Coated 2 SERIES OF 7	14	31.500	662.4	STR				11 TO 52	0 0	0 0																														
ST620	6	Epoxy Coated	6	12.750	114.9	1	0	8	0	11	5	0													0	8	0							0	6	0						
ST621	6	Epoxy Coated 2 SERIES OF 126	252	16.104	6095.5	1	0	8	0	18 TO 11	6 0	2 0													0	8	0							0	6	0						
ST622	6	Epoxy Coated	718	12.333	13300.7	1	0	8	0	11	0	0													0	8	0							0	6	0						
ST623	6	Epoxy Coated	19	56.000	1598.1	STR				56	0	0																														
ST624	6	Epoxy Coated	38	38.000	2168.9	STR				38	0	0																														
RL501	5	Epoxy Coated	328	6.167	2109.641	H14	0	10	0	2	0	0	0	6	0	2	0	0							0	10	0															
RL502	5	Epoxy Coated	164	2.000	342.1	STR				2	0	0																														
JB601	6	Epoxy Coated	8	12.500	150.2	1	0	8	0	11	2	0													0	8	0							0	6	0						
JB602	6	Epoxy Coated	56	10.000	841.1	STR				10	0	0																														
JB603	6	Epoxy Coated	4	6.229	37.4	1	0	8	0	4	10	3													0	8	0							0	6	0						
JB604	6	Epoxy Coated	4	5.167	31.0	1	0	8	0	4	6	0													0	0	0							0	6	0						
JB605	6	Epoxy Coated	4	4.000	24.0	H3				4	0	0																														
JB606	6	Epoxy Coated	24	13.083	471.6	1	0	8	0	11	9	0													0	8	0							0	6	0						
JB607	6	Epoxy Coated	24	6.667	240.3	1	0	8	0	5	4	0													0	8	0							0	6	0						

TOTAL WT = 101202.2

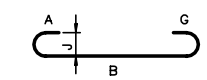

TYPE 1

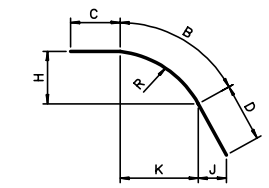

TYPE H7

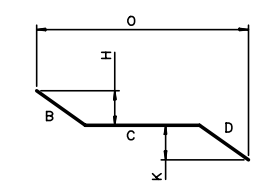

TYPE 29

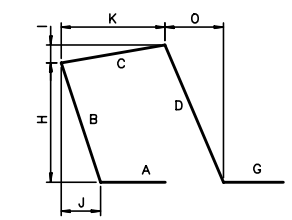

TYPE H10

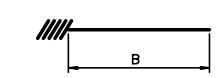

DOWEL-IN THREADED
FOR FORMSAVER COUPLER

TYPE H3

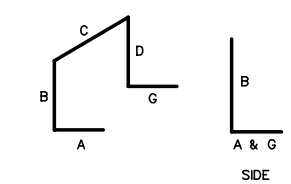

TYPE H14

NOTES:

1. ALL REINFORCING STEEL IS EPOXY COATED U.N.O.
2. ALL REINFORCING SHALL BE ASTM A615 OR A996, GRADE 60.

RECORD DRAWING

No.	Date	Revisions	By

HNTB CORPORATION

STATE OF WISCONSIN
DEPARTMENT OF TRANSPORTATION

STRUCTURE B-40-413A

Designed By	SL	Design Checked	TPZ	Drawn By	GMZ	Plans Checked	AJP

SIDEWALK TOP MAT BARLIST 1 OF 1

SHEET SC103 OF

STATE PROJECT I.D.	SHEET NUMBER
2235-00-70	8.135

SOUTH CABLE STAY SDWLK. BOT. MAT BARLIST

BAR MARK	BAR SIZE	LOCATION COMMENT	NO.	LTH/BAR DECIMAL FT	TOTAL WT (LB)	BEND TYPE	A			B			C			D			E			F/R			G			H			I			J			K			O		
							FT	IN	1/4	FT	IN	1/4	FT	IN	1/4	FT	IN	1/4	FT	IN	1/4	FT	IN	1/4	FT	IN	1/4	FT	IN	1/4	FT	IN	1/4	FT	IN	1/4	FT	IN	1/4	FT	IN	1/4
SB601	6	Epoxy Coated	159	60.000	14329.1	STR				60	0	0																														
SB602	6	Epoxy Coated	14	57.000	1198.6	STR				57	0	0																														
SB607	6	Epoxy Coated	4	34.417	206.8	STR				34	5	0																														
SB608	6	Epoxy Coated	20	41.750	1254.2	STR				41	9	0																														
SB609	6	Epoxy Coated	38	51.417	2934.7	29				40	0	0	11	5	0	0	0	0										3	10	3							0	0	0			
SB610	6	Epoxy Coated	8	49.979	600.5	H7				9	11	3	5	6	0	34	6	0				100	2	0					6	0				3	5		9	11	3			
SB612	6	Epoxy Coated	11	56.000	925.2	STR				56	0	0																														
SB613	6	Epoxy Coated	22	35.083	1159.3	STR				35	1	0																														
SB514	5	Epoxy Coated	750	7.292	5703.9	STR				7	3	2																														
SB515	5	Epoxy Coated 2 SERIES OF 129	258	6.781	1824.8	STR				6 TO 7	3 TO 3	0 TO 3																														
SB516	5	Epoxy Coated	706	6.250	4602.2	STR				6	3	0																														
SB516a	5	Epoxy Coated	12	8.292	103.8	STR				8	3	2																														
DB501	5	Epoxy Coated	1714	3.000	5363.1	STR				3	0	0																														

TOTAL WT = 40206.2

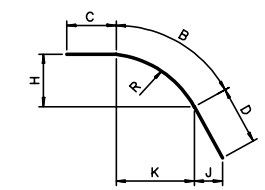

TYPE H7

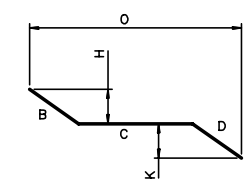

TYPE 29

NOTES:

1. ALL REINFORCING STEEL IS EPOXY COATED U.N.O.
2. ALL REINFORCING SHALL BE ASTM A615 OR A996, GRADE 60.

RECORD DRAWING

No.	Date	Revisions	By

HNTB CORPORATION

STATE OF WISCONSIN
DEPARTMENT OF TRANSPORTATION

STRUCTURE B-40-413A

Designed By	SL	Design Checked	CE	Drawn By	BM	Plans Checked	AP

SCS SUPERSTRUCTURE
SDWLK BOT MAT BARLIST
1 OF 1

SHEET SC104 OF

STATE PROJECT I.D.	SHEET NUMBER
2235-00-70	8.136

SOUTH CABLE STAY ABUTMENT END BEAM BARLIST

BAR MARK	BAR SIZE	LOCATION COMMENT	NO.	LTH/BAR DECIMAL FT	TOTAL WT (LB)	BEND TYPE	A			B			C			D			E			F/R			G			H			I			J			K			O		
							FT	IN	1/4	FT	IN	1/4	FT	IN	1/4	FT	IN	1/4	FT	IN	1/4	FT	IN	1/4	FT	IN	1/4	FT	IN	1/4	FT	IN	1/4	FT	IN	1/4	FT	IN	1/4	FT	IN	1/4
EB402	4	Epoxy Coated	60	3.708	148.6	2	0	8	0	2	4	2													0	8	0															
EB403	4	Epoxy Coated	80	5.667	302.8	17				2	6	0	0	8	0	2	6	0																								
EB404	4	Epoxy Coated	32	3.000	64.1	STR				3	0	0																														
EB405	4	Epoxy Coated	16	1.667	17.8	T9	0	4	0	0	11	2													0	4	2															
EB501	5	Epoxy Coated	64	5.500	367.1	STR				5	6	0																														
EB502	5	Epoxy Coated 2 Series of 40	80	9.406	784.9	17				2	10	0	3	6 TO 11	2 1	2	10	0																								
EB505	5	Epoxy Coated 2 Series of 7	14	6.740	98.4	17				2	10	0	0	8 TO 5	3 0	2	10	0																								
EB506	5	Epoxy Coated 2 Series of 3	6	4.917	30.8	17				2	10	0	1	10 TO 4	0 0	0	0	0																								
EB506a	5	Epoxy Coated	8	5.833	48.7	17				2	10	0	3	0	0	0	0	0																								
EB507	5	Epoxy Coated 2 Series of 10	20	7.073	147.5	17				2	10	0	0	11 TO 10	1 2	2	10	0																								
EB509	5	Epoxy Coated	28	6.417	187.392	T1	0	5	2	1	4	0	1	5	0	1	4	0	1	5	0				0	5	2															
EB509a	5	Epoxy Coated 4 Series of 3	12	8.000	100.128	T1	0	5	2	1	4	0	2	5 TO 11	2 2	1	4	0	2 1	5 TO 11	2 2				0	5	2															
EB510	5	Epoxy Coated	28	8.500	248.2	T1	0	5	2	1	4	0	2	5	2	1	4	0	2	5	2				0	5	2															
EB511	5	Epoxy Coated	28	8.583	250.7	T1	0	5	2	1	4	0	2	6	0	1	4	0	2	6	0				0	5	2															
EB513	5	Epoxy Coated	4	31.000	129.3	17				1	0	0	30	0	0	0	0	0																								
EB513a	5	Epoxy Coated	4	48.000	200.3	17				1	0	0	47	0	0	0	0	0																								
EB518	5	Epoxy Coated	12	6.771	84.7	S3	0	5	2	2	5	0	1	0	1	2	5	0							0	5	2															
EB519	5	Epoxy Coated	40	2.083	86.9	T9	0	5	2	1	1	2	0	6	0																											
EB520	5	Epoxy Coated	48	4.000	200.3	STR				4	0	0																														
EB534	5	Epoxy Coated	12	2.646	33.1	17				1	0	0	0	7	3	1	0	0																								
EB535	5	Epoxy Coated	16	10.583	176.6	17				5	0	0	0	7	0	5	0	0																								
EB602	6	Epoxy Coated 2 Series of 3	6	11.125	100.3	T1	0	8	0	2	4	2	2	6 TO 6	0 2	2	4	2	2 2	6 TO 6	0 2				0	8	0															
EB602a	6	Epoxy Coated 2 Series of 5	10	11.333	170.2	T1	0	8	0	2	4	2	2	7 TO 8	0 0	2	4	2	2 2	7 TO 8	0 0				0	8	0															
EB603	6	Epoxy Coated 2 Series of 40	80	11.958	1436.9	T1	0	8	0	2	4	2	2	8 TO 2	0 2	2	4	2	2 3	8 TO 2	0 2				0	8	0															
EB607	6	Epoxy Coated	19	28.000	799.1	17				1	0	0	27	0	0	0	0	0																								
EB607a	6	Epoxy Coated	19	51.000	1455.4	17				1	0	0	50	0	0	0	0	0																								
EB609	6	Epoxy Coated	4	53.500	321.4	17				1	0	0	51	6	0	1	0	0																								
EB610	6	Epoxy Coated	88	5.167	682.9	29				2	4	2	2	9	2	0	0	0										1	2	2							0	0	0			
EB623	6	Epoxy Coated	5	27.000	202.8	STR				27	0	0																														
EB623a	6	Epoxy Coated	5	50.000	375.5	STR				50	0	0																														
EB631	6	Epoxy Coated	8	10.000	120.2	17				5	0	0	5	0	0	0	0	0																								

TYPE 2

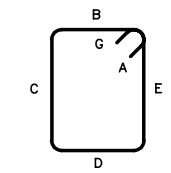

TYPE T1

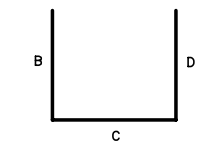

TYPE 17

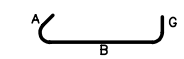

TYPE T9

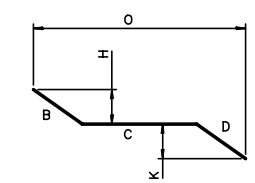

TYPE 29

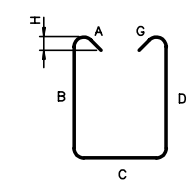

TYPE S3

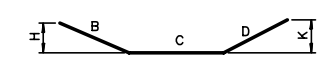

TYPE 34

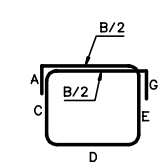

TYPE H13

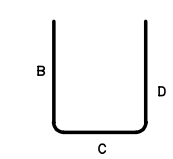

TYPE S10

NOTES:

1. ALL REINFORCING STEEL IS EPOXY COATED U.N.O.
2. ALL REINFORCING SHALL BE ASTM A615 OR A996, GRADE 60.

RECORD DRAWING

No.	Date	Revisions	By

HNTB CORPORATION

STATE OF WISCONSIN
DEPARTMENT OF TRANSPORTATION

STRUCTURE B-40-413A

Designed By	CE	Design Checked	TZ	Drawn By	BM	Plans Checked	AP

SCS ABUTMENT END BEAM BARLIST 1 OF 2

SHEET SC105 OF

STATE PROJECT I.D.	SHEET NUMBER
2235-00-70	8.137

SOUTH CABLE STAY ABUTMENT END BEAM BARLIST

BAR MARK	BAR SIZE	LOCATION COMMENT	NO.	LTH/BAR DECIMAL FT	TOTAL WT (LB)	BEND TYPE	A			B			C			D			E			F/R			G			H			I			J			K			O		
							FT	IN	1/4	FT	IN	1/4	FT	IN	1/4	FT	IN	1/4	FT	IN	1/4	FT	IN	1/4	FT	IN	1/4	FT	IN	1/4	FT	IN	1/4	FT	IN	1/4	FT	IN	1/4	FT	IN	1/4
EB632	6	Epoxy Coated 4 Series of 6	24	7.708	277.9	H13	0	8	0	2	8	0	0 TO 1	9 TO 2	1 TO 1	1	9	0	0 TO 1	9 TO 2	1 TO 1				0	8	0															
CB601	6	Epoxy Coated	22	6.250	206.5	2	1	6	0	4	9	0													0	0	0															
CB602	6	Epoxy Coated	20	13.583	408.0	T1	0	8	0	3	10	0	2	3	2	3	10	0	2	3	2				0	8	0															
CB603	6	Epoxy Coated	4	14.167	85.1	T1	0	8	0	3	10	0	2	7	0	3	10	0	2	7	0				0	8	0															
CB604	6	Epoxy Coated	32	16.000	769.0	S3	0	8	0	5	5	0	3	10	0	5	5	0							0	8	0	0	4	2												
CB605	6	Epoxy Coated 4 Series of 9	36	16.417	887.7	T1	0	8	0	3	10	0	5 TO 2	5 TO 0	0 TO 0	3	10	0	5 TO 2	5 TO 0	0 TO 0				0	8	0	0	4	2												
CB606a	6	Epoxy Coated	4	9.333	56.1	34				5	6	0	3	10	0	0	0	0										2	9	1							0	0	0			
CB606b	6	Epoxy Coated	4	10.417	62.6	34				6	7	0	3	10	0	0	0	0										3	3	3							0	0	0			
CB606c	6	Epoxy Coated	4	11.417	68.6	34				7	7	0	3	10	0	0	0	0										3	10	0							0	0	0			
CB606d	6	Epoxy Coated	4	12.500	75.1	34				8	8	0	3	10	0	0	0	0										4	4	2							0	0	0			
CB607	6	Epoxy Coated	22	13.333	440.6	34				9	6	0	3	10	0	0	0	0										4	9	1							0	0	0			
CB608	6	Epoxy Coated	12	20.167	363.5	S10				8	4	0	3	6	0	8	4	0																								
CB609	6	Epoxy Coated	24	11.833	426.6	S10				5	6	0	0	10	0	5	6	0																								
CB801	8	Epoxy Coated	22	18.750	1101.4	S10				8	4	0	2	1	0	8	4	0																								

TOTAL WT = 14601.730

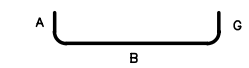

TYPE 2

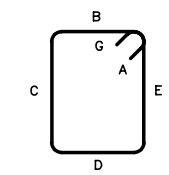

TYPE T1

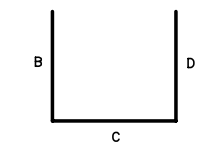

TYPE 17

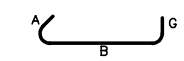

TYPE T9

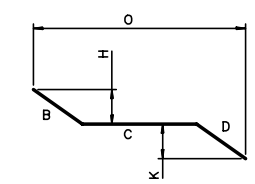

TYPE 29

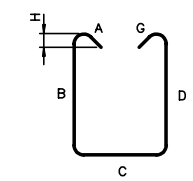

TYPE S3

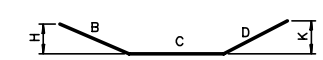

TYPE 34

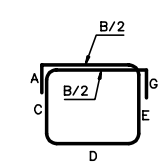

TYPE H13

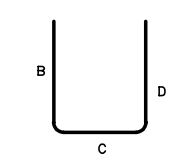

TYPE S10

NOTES:

1. ALL REINFORCING STEEL IS EPOXY COATED U.N.O.
2. ALL REINFORCING SHALL BE ASTM A615 OR A996, GRADE 60.

RECORD DRAWING

No.	Date	Revisions	By

HNTB CORPORATION

STATE OF WISCONSIN
DEPARTMENT OF TRANSPORTATION

STRUCTURE B-40-413A

Designed By	CE	Design Checked	TZ	Drawn By	BM	Plans Checked	AP

SCS ABUTMENT END BEAM BARLIST 2 OF 2

SHEET SC105a OF

STATE PROJECT I.D.	SHEET NUMBER
2235-00-70	8.138

SOUTH CABLE STAY SIDEWALK BARLIST

BAR MARK	BAR SIZE	LOCATION COMMENT	NO.	LTH/BAR DECIMAL FT	TOTAL WT (LB)	BEND TYPE	A			B			C			D			E			F/R			G			H			I			J			K			O		
							FT	IN	1/4	FT	IN	1/4	FT	IN	1/4	FT	IN	1/4	FT	IN	1/4	FT	IN	1/4	FT	IN	1/4	FT	IN	1/4	FT	IN	1/4	FT	IN	1/4	FT	IN	1/4	FT	IN	1/4
SW601	6	EPOXY COATED	94	11.792	1664.8	S4	1	0	0	2	10	3	4	0	0	2	10	3							1	0	0															
SW602	6	EPOXY COATED	94	11.875	1676.6	S4	1	0	0	2	11	1	4	0	0	2	11	1							1	0	0															
SW603	6	EPOXY COATED	86	11.917	1539.3	S4	1	0	0	2	11	2	4	0	0	2	11	2							1	0	0															
SW604	6	EPOXY COATED	86	12.000	1550.1	S4	1	0	0	3	0	0	4	0	0	3	0	0							1	0	0															
SW605	6	EPOXY COATED	200	10.833	3254.3	H14	1	0	0	2	5	0	4	0	0	2	5	0							1	0	0															
SW606	6	EPOXY COATED	200	10.542	3166.7	H14	1	0	0	2	3	1	4	0	0	2	3	1							1	0	0															
SW607	6	EPOXY COATED	200	10.042	3016.5	H14	1	0	0	2	0	1	4	0	0	2	0	1							1	0	0															
SW608	6	EPOXY COATED	102	10.792	1653.3	S4	1	0	0	2	4	3	4	0	0	2	4	3							1	0	0															
SW609	6	EPOXY COATED	102	10.875	1666.1	S4	1	0	0	2	5	1	4	0	0	2	5	1							1	0	0															
SW610	6	EPOXY COATED	100	10.917	1639.7	S4	1	0	0	2	5	2	4	0	0	2	5	2							1	0	0															
SW611	6	EPOXY COATED	100	11.000	1652.2	S4	1	0	0	2	6	0	4	0	0	2	6	0							1	0	0															
SW612	6	EPOXY COATED 2 SERIES OF 7	14	8.146	171.3	H14	1	0	0	2	0 TO 3	1	4	0	0	2	0 TO 3	1							1	0	0															
SW613	6	EPOXY COATED 2 SERIES OF 11	22	8.219	271.6	H14	1	0	0	2	0 TO 5	1	4	0	0	2	0 TO 5	1							1	0	0															
SW614	6	EPOXY COATED	60	10.750	968.8	S4	1	0	0	2	4	2	4	0	0	2	4	2							1	0	0															
SW615	6	EPOXY COATED 2 SERIES OF 30	60	8.302	748.184	S4	1	0	0	2	2 TO 5	0	4	0	0	2	2 TO 5	0							1	0	0															
SW616	6	EPOXY COATED 2 SERIES OF 30	60	8.208	739.7	S4	1	0	0	1	11 TO 5	2	4	0	0	1	11 TO 5	2							1	0	0															
SW617	6	EPOXY COATED 2 SERIES OF 17	34	8.135	415.5	S4	1	0	0	1	9 TO 6	1	4	0	0	1	9 TO 6	1							1	0	0															
SW618	6	EPOXY COATED 2 SERIES OF 25	50	8.260	620.4	S4	1	0	0	2	0 TO 6	1	4	0	0	2	0 TO 6	1							1	0	0															
SW619	6	EPOXY COATED	173	10.708	2782.5	H14	1	0	0	2	4	1	4	0	0	2	4	1							1	0	0															
SW620	6	EPOXY COATED	173	10.333	2685.1	H14	1	0	0	2	2	0	4	0	0	2	2	0							1	0	0															
SW621	6	EPOXY COATED	173	9.917	2576.8	H14	1	0	0	1	11	2	4	0	0	1	11	2							1	0	0															
SW622	6	EPOXY COATED	173	9.542	2479.4	H14	1	0	0	1	9	1	4	0	0	1	9	1							1	0	0															
				TOTAL WT =	36938.8																																					

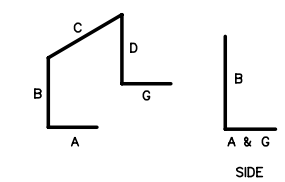

TYPE H14

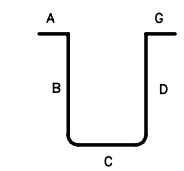

TYPE S4

NOTES:

1. ALL REINFORCING STEEL IS EPOXY COATED U.N.O.
2. ALL REINFORCING SHALL BE ASTM A615 OR A996, GRADE 60.

RECORD DRAWING

No.	Date	Revisions	By

HNTB CORPORATION

STATE OF WISCONSIN
DEPARTMENT OF TRANSPORTATION

STRUCTURE B-40-413A

Designed By	AP	Design Checked	TZ	Drawn By	GMZ	Plans Checked	AP

SLAB-SIDEWALK BARLIST

SHEET SC106 OF

STATE PROJECT I.D.	SHEET NUMBER
2235-00-70	8.139

SOUTH CABLESTAY TRANSVERSE PT BARLIST

BAR MARK	BAR SIZE	LOCATION COMMENT	NO.	LTH/BAR DECIMAL FT	TOTAL WT (LB)	BEND TYPE	A			B			C			D			E			F/R			G			H			I			J			K			O		
							FT	IN	1/4	FT	IN	1/4	FT	IN	1/4	FT	IN	1/4	FT	IN	1/4	FT	IN	1/4	FT	IN	1/4	FT	IN	1/4	FT	IN	1/4	FT	IN	1/4	FT	IN	1/4	FT	IN	1/4
PT303	3	Epoxy Coated	2584	2.417	2348.0	3	0	4	1	0	3	1	0	4	1	0	5	2	0	4	1	0	3	1	0	4	1	0	4	0				0	4	4				1	3	0
PT304	3	Epoxy Coated	2584	0.500	485.8	STR				0	6	0																														
PT401a	4	Epoxy Coated	634	6.625	2805.8	H13	0	6	0	2	8	0	0	9	3	1	4	0	0	9	3				0	6	0															
PT401b	4	Epoxy Coated	634	6.750	2858.7	H13	0	6	0	2	8	0	0	10	2	1	4	0	0	10	2				0	6	0															
PT401c	4	Epoxy Coated	634	6.875	2911.6	H13	0	6	0	2	8	0	0	11	1	1	4	0	0	11	1				0	6	0															
PT401d	4	Epoxy Coated	634	7.000	2964.6	H13	0	6	0	2	8	0	1	0	0	1	4	0	1	0	0				0	6	0															
PT402	4	Epoxy Coated	1268	3.646	3088.1	T15	0	0	0	1	6	0	0	7	3	1	6	0	0	0	0				0	0	0	0	0	0				0	3	3	1	5	3			
PT403	4	Epoxy Coated	230	5.667	870.6	17				2	6	0	0	8	0	2	6	0																								

TOTAL WT = 18333.2

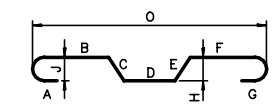

TYPE 3

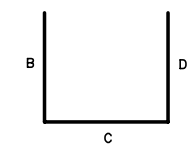

TYPE 17

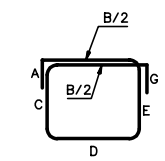

TYPE H13

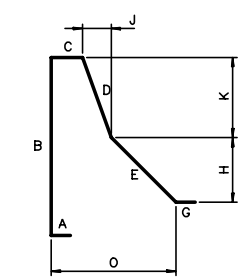

TYPE T15

NOTES:

1. ALL REINFORCING STEEL IS EPOXY COATED U.N.O.
2. ALL REINFORCING SHALL BE ASTM A615 OR A996, GRADE 60.

RECORD DRAWING

No.	Date	Revisions	By

HNTB CORPORATION

STATE OF WISCONSIN
DEPARTMENT OF TRANSPORTATION

STRUCTURE B-40-413A

Designed By	TZ	Design Checked	CE	Drawn By	CE	Plans Checked	TZ

SOUTH CABLE STAY TRANSVERSE PT BARLIST

SHEET SC107 OF