APPENDIX D

Cable Stay Assemblies Data

CABLE STAY ASSEMBLIES

Sixth Street Viaduct Project
WisDOT Project I.D. 2235-00-70

Milwaukee
gateway partners

W. Virginia Street to W. Clybourn Street
City of Milwaukee

A joint venture of Zenith Tech, Inc., HNTB and Lunda Construction Company
N3 W23650 Badinger Road Waukesha, Wisconsin 53187
262.524.1800 262.524.1840 FAX

TABLE OF CONTENTS

	SECTION
INTRODUCTION	1
STAY FABRICATION PROCEDURE	2
STAY ERECTION PROCEDURE	3
PE SHEATHING REPAIR WORK METHOD	4
CON TEN With POWER SEATING STRESSING PROCEDURE	5
INSTALLATION AND STRESSING SEQUENCES	6
POST BLOCKING PROCEDURE	7
CABLE CLAMP INSTALLATION PROCEDURE	8
DAMPER PROCEDURE	8
CABLE STAY INSTALLATION SAFETY PROCEDURE	9
CABLE STAY COMPONENT DRAWINGS	10
APPLICABLE PLAN SHEETS	11
NORTH CABLE STAY	11
SOUTH CABLE STAY	11
STRESSING RECORDS FOR NORTH CABLE STAYS	12
LIFT OFF TESTS – NORTH CABLE STAYS	13
STRESSING RECORDS FOR SOUTH CABLE STAYS	14
LIFT OFF TESTS – SOUTH CABLE STAYS	15
EQUIPMENT CALIBRATION WORKSHEETS	16

INTRODUCTION

The Cable-Stay Assemblies are an integral part of the Sixth Street Viaduct project. There are two assemblies as part of this project, the North Cable Stay on Structures B-40-413C and the South Cable Stay on Structure B-40-414A. Each stay cable system consists of parallel, greased and sheathed strands encased in a polyethylene pipe.

This document describes the procedures, methods, components and results of fabricating, erecting, stressing, testing and installing these stay cable assemblies.

Stay Fabrication Procedure:

The stay fabrication will be done on the finished concrete deck. Caution should be exercised that the strand sheathing does not get damaged during cutting and pulling to length. The following procedure should be followed.

1. Survey and mark each "stay assembly length LA" on the deck starting from one fixed location. The fixed location represents the lower end of the top anchor. The bottom anchor will move according to the stay assembly length.
2. Layout a plastic or plywood sheath to protect the HDPE sheathing.
3. Layout the pre-assembled and cut to length HDPE stay pipe including the vandalism pipe and the transition cover.
4. Install the O-ring on the bottom guide pipe and the O-ring on the PE flange at the tower.
5. Fix the anchors at the designated locations. Make sure that the orientation of the hole pattern is the same in both anchors.
6. Cut the strands to length and strip the PE sheathing at both ends to the required length.
7. Push one strand at a time into the pipe and install the strands in the designated holes, see sketch 1 & 2. Make sure that the strands are not crossing within the pipe during installation. Make preparations for the strand tail on the top anchor not to exceed 2 inches.
8. Seat the wedges in the top anchor and pre-seat them with a pipe.
9. Install the filler strands at the top anchor according to the pattern and secure the strands with a tape to the bundle. Use normal PT wedges 68 00 0536 to secure the filler strands in the top anchor and pre-seat them with a pipe.
10. Install the wedge keeper plate at the top anchor and secure to anchor head.
11. Install two (2) eye bolts to pull the anchor head during installation.
12. Install the bottom wedges for two strands at the top of the anchor and two wedges at the bottom strands. Secure the top wedges with a pipe and secure the bottom wedges only for later removal.
13. Install the keeper plate in the bottom and attach eyebolts for pulling the cable.
14. Install the cable clamp at the top end to lift the PE pipe.

Stay Erection Procedure:

The stays are pre-assembled at the deck level and lifted into place using cranes and the spreaders. In general, the stays will be lifted at the top end with the crane and then the bottom anchor socket will be lowered into the deck guide pipe. Once the bottom anchor head is guided through the bearing plate, the stay will be lowered further to allow the top anchor to be fed into the top guide pipe. At the Contractors option, the top exterior guide pipe extension could be removed to facilitate the installation. In this case the exterior extension shall be placed onto the stay prior to lifting and secured in place. For the longer stays the installation maybe reversed and the cable could be installed first at the top anchor.

The following procedure shall be considered:

1. Place the ring nuts in the top and bottom location.
2. Install a winch to pull the anchor through the top guide pipe
3. Install a lifting strap onto the strands above the HDPE sheath for the main lifting point.
4. Install a shackle at the HDPE lifting clamp and connect a cable to the lifting hook.
5. Raise the cable on the main lifting point until the bottom strand tail is above the deck guide pipe.
6. Insert PE guide strips into the guide pipe to facilitate sliding the anchor through the pipe a through the bearing plate.
7. Lower the cable into the guide pipe until the anchor shows up at the bearing plate.
8. Make sure that the threads are not damaged.
9. Continue lowering the stay until the top anchor can be inserted into the tower guide pipe.
10. Connect the winch cable at the eyehooks of the top anchor.
11. Insert the PE glide strips into the guide pipe and secure.
12. Slowly raise the stay on the main cable support and pull the anchor with the winch at the same time until the anchor exits in the tower window.
13. Install the ring nut at the top end
14. Make sure that the anchor is centered on the bearing plate.
15. Release the winch and engage the ring nut to take the tendon force.
16. Re-grip the stay pipe in the middle or in the third points for longer stays and lift the stay to take out the catenary.
17. Install the ring nut at the bottom anchor; make sure that the ring nut is placed as shown on the installation drawing.
18. Remove the bottom retainer plate.
19. Remove the wedges from the lower strands. The wedges from the two top strands stay in place.
20. Make sure that the anchor is centered on the bearing plate.
21. Slowly release the cranes until the two top strands carry the stay weight.
22. Proceed with the erection of the next stay.

PE SHEATHING REPAIR WORK METHOD

1.0 Scope

1.1 This work method is for the repair of the PE Sheathing of the supplied 0.6inch (15.2mm) waxed and sheathed cable stay strand. This work method is a guide only and may be altered depending on the existing site conditions.

1.2 The Engineer shall select appropriate sections of the work method to ensure that the specification is comprehensive for specified work.

2.0 General Requirements

2.1 The Contractor shall comply with all written recommendations of Dywidag-Systems International regarding applications of the specified system.

2.2 During assembly and installation of the cable stay(s) continual caution to avoid any damage to the PE Sheathing must be performed.

2.3 During assembly and installation of the cable stay(s) continual inspections must be performed to identify all abrasions, cuts and gouges of the PE Sheathing. Inspection to include identifying all damages of the 0.6inch (15.2mm) cable stay strand. All cable stay strand displaying any damage to the ASTM A416 Seven Wire 0.6inch (15.2mm) Lo-Lax steel must be replaced.

2.4 Cable stay strand showing cuts, abrasions and/ or gouges of the PE Sheathing, but no damage to the 0.6inch (15.2mm) strand, must be repaired using either a High Shrink Tube, High Shrink Wrap and / or High Shrink Sleeve.

3.0 Materials

3.1 The High Shrink Canusa Tube materials shall be comprised of either:
(a) CPX 100 General Purpose, Flexible Polyolefin
(b) OR equivalent, including Canusa Wrap or Wrapid Sleeve.

3.2 The physical specification values shall meet the values given on the data sheet for the type of High Shrink Sleeve required.

3.3 The High Shrink Material(s) used to repair must be a minimum equivalent in thickness, after fully recovered from heating, to the PE Sheathing to be repaired.

3.4 The High Shrink Material(s) used to repair shall not result in an outer diameter larger then the holes in the DYNA Grip Anchorage. Repair must allow for future cable stay strand replacement, if required.

4.0 General Surface Preparation Requirements

4.1 Remove dirt, grease and oils including excessive moisture and frost in accordance with the requirements of SSPC-SP-1, "Solvent Cleaning".

4.2 Remove all sharp points and edges.

4.3 Remove any rust, paint and foreign matter by hand and/ or power tools cleaning in accordance with SSPC-SP-2, "Hand Tool Cleaning".

5.0 Application of Heat Shrink Sleeve

5.1 The High Shrink Sleeve shall be cut longitudinally and wrapped over the repair area using a minimum 3inch (76.2mm) overlap on all applications. Where additional protection is required, the use of additional High Shrink Sleeves or High Shrink Wrap shall be used to provide a double thickness of High Shrink Sleeve.

5.2 The High Shrink Wrap may be applied longitudinally, i.e. "cigarette wrapped", when the space is too restricted or confined to apply in the preferred spiral manner. Use a minimum 3inch (76.2mm) overlap, and keep the overlap on the topside of the strand to provide a weatherboard effect.

5.3 Upon wrapping of the repair area, the High Shrink Sleeve shall be heated using only a CHGN Electric Heat Gun. NO FLAME OR TORCH LIKE EQUIPMENT SHALL BE USED TO HEAT THE HIGH SHRINK MATERIALS.

5.4 When Using the Canusa Wrap hold end of tape firmly against the starting point and firmly press on the surface. Unroll the Wrap, keeping the Wrap close to the surface. Do not get a long lead of Wrap as it will tend to fold and gap on the surface being repaired. The Wrap is best applied by rolling it around the strand and giving it proper tension. The High Shrink Wrap must overlap the Wrap a minimum one-half the width of the Wrap to be used.

5.5 Apply sufficient tension to provide continuous adhesion, but do not stretch the Wrap. As application proceeds, press out all folds and air pockets that may occur.

5.6 Maintain a minimum 6inch (152.4mm) overlap when overlapping one roll with the end of a new roll. Overlap must occur on the top half of the pipe.

5.7 While evenly heating the High Shrink material, ensure a smooth overlap in the direction of the spiral to provide proper sealing of the overlap.

5.8 On all vertical applications, including inclined applications, begin at the bottom and proceed up thereby creating a "weatherboard" overlap.

6.0 Quality Control/ Quality Assurance.

6.1 All repairs will be recorded (i.e Strand No., Location, Type of damage, Size, Repair method used, etc…) to ensure that should the stay strand need to be replaced, in future, it will be possible to determine if this were a previously damaged strand and what proper method to be used for removal/ replacement.

6.2 All repairs recorded will require to be copied to the Stay Cable/ Post-Tension Supplier.

CON TEN With POWER SEATING STRESSING PROCEDURE

1.0 Description of CON-TEN Stressing System

1.1 Special stressing equipment, consisting of a hydraulic unit and 2 single-strand stressing jacks each with 140 or 180KN tensile force, was developed for the CON-TEN stressing system of DSI, Munich.

1.2 The CON-TEN stressing system is used to stress cables, for example for cable-stayed bridges, consisting of a large number of single pre-stressing strands, with single-strand stressing jacks, so that each strand in the cable has the same tensile force, although during the subsequent stressing operations the tensile force in the already pre-stressed strands would become constantly smaller because of the deformation of the bridge building.

This problem is solved by applying a stressing jack (Pilot jack) to an already stressed strand and a second stressing jack (Active jack) to a second and thereafter to the following strands and by stressing with both jacks simultaneously until the second stressing jack – the active jack – reaches the same forces as the pilot jack. When attaining the same force and having covered a specified adjustable stroke both stressing jacks are stopped simultaneously. This ensures that the same tensile force is obtained in the two strands and in all other strands.

The first strand to be stressed is stressed with a force that takes account of the deformation of the bridge building under full pre-stress, which means that the first strand is overstressed. The tensile force is controlled by means of an adjustable pressure-relief valve.

The second and all further strands are not stressed by force, but it is switched off as soon as an additional elongation is detected in the first stressed strand by means of the pilot jack. The switch-off is done by proximity switch, which, after the first strand is stressed, is adjusted in accordance with the distance after which the pilot and active jacks should be stopped.

After the complete bridge has been stressed with CON-TEN stressing jacks and the desired deformation of the bridge achieved, the stressing is finished. If there are deviations from the desired deformation, complete stay cables are typically stressed using gradient stressing jacks and readjusted with threaded rings and shims.

2.0 Bond Socket Procedure

2.1 In the BOND SOCKET procedure either strands without plastic sheathing/ coating or plastic-sheathed strands that are already stripped in the anchorage area are used. After stressing, concrete is injected into the anchoring area, by which means the vibrating stress from traffic and wind load is dampened and does not reach the anchoring wedges.

Stressing Jacks with a tensile force of 140KN at 700bar, outside diameter 65mm, strand spacing 2x33 mm, have been developed for the BOND SOCKET stressing procedure.

In the BOND SOCKET procedure, only the pilot jack is given a limit (proximity) switch to switch off the combined stressing procedure of the pilot and active jacks (Proximity switch X13).

3.0 Scope

3.1 The following manual is a step-by-step guide for the proper operation of the CON TEN system using the power-seating device.

3.2 These step-by-step procedures are a guide only and are subject to revision to accommodate changes contractually or onsite.

4.0 CON TEN Equipment

4.1 Hydraulic Pump

4.1.1 A Siemens S7 PLC controls the pump unit. This is accommodated in the switchbox together with the power supply unit (Fig 1A and B).

FIGURE 1A. CON TEN Hydraulic Pump Rear View.

FIGURE 1B. CON TEN Hydraulic Pump Front View.

4.1.2 The hydraulic pump to operate the seating device can easily be identified by the additional valve block, located at the lower front, below the standard block (Fig 2).

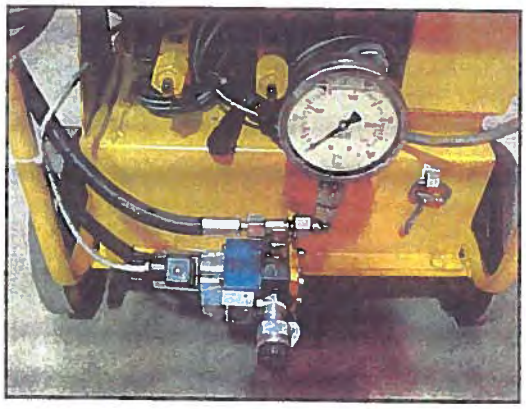

FIGURE 2. Power-Seating Hydraulic Valve Block.

4.1.3 The standard hydraulic block contains connections to attach the hydraulic hoses for both stressing jacks. The proper connection between the hydraulic pump and stressing jacks can be identified by the connections' designation. Male and female hydraulic fittings avoid wrong connections. It is important to ensure the hydraulic connections are completely tightened. If incorrectly attached the hydraulic fitting will not be properly opened. To correct any hydraulic connection should be completed with no pressure in the hydraulic system. The correctness of the various hydraulic connections can be proof tested by operating the stressing jacks separately.

4.1.4 The Switchbox contains the following control elements:

4.1.4.1 Mode Selector Switch
4.1.4.2 Control light for Mode 1, Adjustment Mode
4.1.4.3 Start pump
4.1.4.4 Selector switch pump
4.1.4.5 Main switch
4.1.4.6 Proximity switch connections (pnp break contact 10-35V)
4.1.4.7 Remote Control Unit (Manual control)

4.2 Mode Selector Switch (Fig 3)

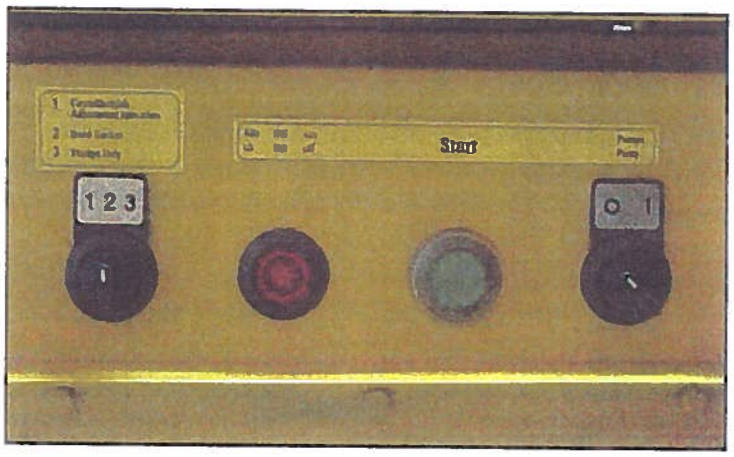

FIGURE 3. From Left to Right; Mode Selector Switch, Signal Light Indicator, Push Button START and Selector Switch ON/ OFF.

4.2.1.1 Position "1", adjustment (emergency) mode. In Mode 1 the Limit Switch X13 has no control. The Pilot Jack and Active Jack can be operated both separately or together.

4.2.1.2 Position "2", Stressing operations are controlled by Limit Switch X13 mounted on the Pilot Jack (Bond Socket Mode). The hydraulic pump continues to provide pressure for stressing until the Limit Switch X13 has been activated.

4.2.1.3 Position "3", not required (Wedge Only Mode).

4.3 Selector Switch Pump (Fig 3)

4.3.1 Position 0, Pump "Off"
4.3.2 Position 1, Pump "On"

4.4 Main Switch (Fig 4)

FIGURE 4. Main Power Switch.

4.4.1 Position 0, Control "Off"
4.4.2 Position 1, Control "On"

4.5 Proximity Switch Connections (Fig 5)

4.5.1 INI1, Knife closed, X10, INPUTI1.2
4.5.2 INI2, Knife open, X11, INPUT1.3
4.5.3 INI3, Active Jack, X12, INPUT1.4
4.5.4 INI4, Pilot Jack, X13, INPUT1.5

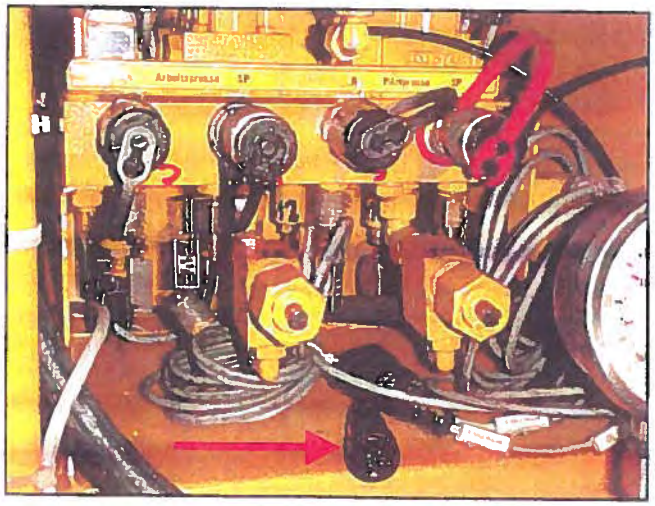

FIGURE 5. Proximity Switch Connections.

4.6 Remote Control Unit (Fig 6)

FIGURE 6. Remote Control Switch.

4.6.1 The Left column of buttons determines the operation to perform.

4.6.1.1 Button "SP", Stressing
4.6.1.2 Button "R", Quick Return Stroke
4.6.1.3 Button "F", Fine Return Stroke
4.6.1.4 Button "G", Special Function (Power Seating)

4.6.2 The right column of buttons serves to choose the jack for the selected action.

4.6.2.1 Button "P+A", Pilot and Active Jacks operate simultaneously
4.6.2.2 Button "P", Pilot Jack
4.6.2.3 Button "A", Active Jack

4.6.3 Special Functions

4.6.3.1 Buttons "G" and "A", Effective in Modes 1 and 2. Activation of Power Seating Device.

4.6.4 The signal light at the top center of the remote control signals whether or not the adjustment mode is active. A flashing light means adjustment mode is activated.

4.6.5 The mushroom button at the bottom right corner of the remote control serves as an emergency stop. This button can be unlocked by twisting it clockwise.

4.7 Active Jack with Power Seating Device (Fig 7)

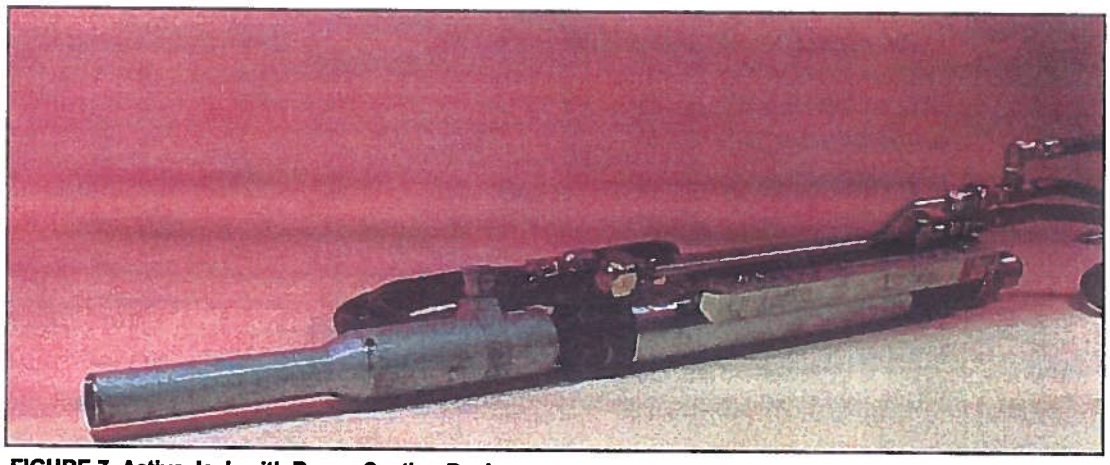

FIGURE 7. Active Jack with Power-Seating Device.

4.7.1 The power-seating device can only be used if the hydraulic pump has been upgraded accordingly. Clicking buttons "G" and "A" activates the power seating mechanism. The power seating mechanism continues to operate until buttons "F" and "A" have been pressed and are released again. Until buttons "F" and "A" are pressed the power-seating device will remain active.

4.8 Pilot Jack with Elongation Chair (Fig 8)

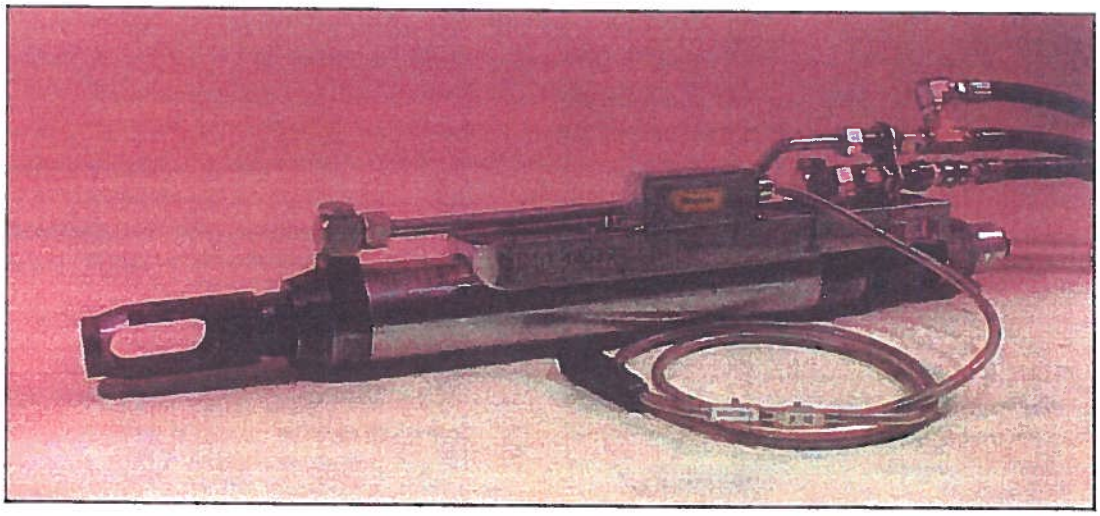

FIGURE 8. Pilot Jack with Elongation Chair.

4.9 Proximity Switch (Fig 9)

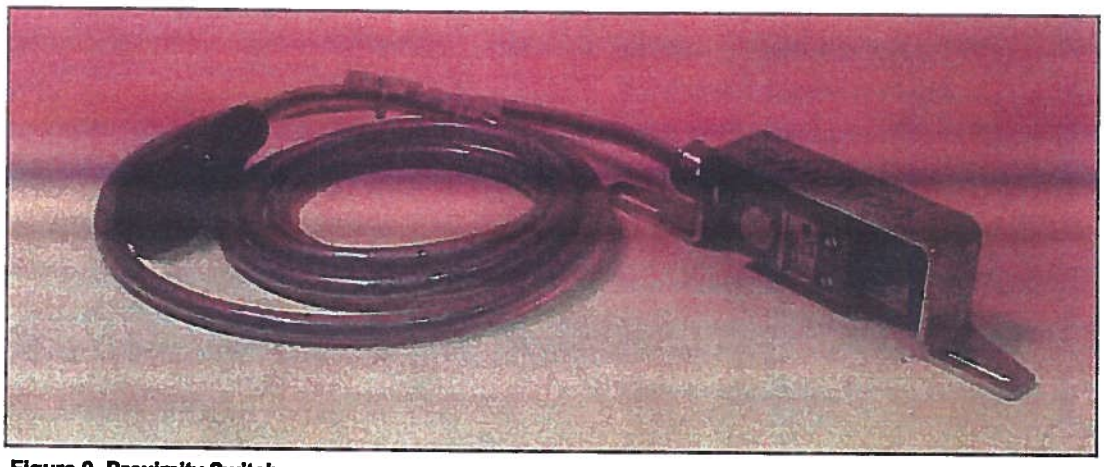

Figure 9. Proximity Switch.

5.0 Preconditions

5.1 All CON TEN equipment are to be properly connected to the hydraulic pump.

5.2 All CON TEN jacks must be tested by means of visually inspecting the moving of the piston rod in both directions.

5.3 During the assembly of the cable stay anchorage, or prior to stressing, it is important that the wedges' outer surface are well greased before inserting onto the strand and into the anchor block wedge cavity.

6.0 General Notes

6.1 Initially set the hydraulic pump to operate in Mode 1.

6.2 The pressure shall be adjusted below the evaluated maximum specified load.

6.3 Press the "SP" and "A" buttons till the active jack's piston is completely driven out.

6.4 Continue to press the "SP" and "A" buttons and adjust the pressure by means of turning the reduction valve's rotary head (Fig 10) clockwise (Increase) or counter-clockwise (Decrease).

6.5 Continue to press the "SP" and "A" buttons until the specified initial load is achieved.

6.6 Upon achieving the specified load, return the piston rod completely by pressing the "F" and "A" buttons (Fine Retract) for 5 to 10 seconds and then "R" and "A" (Quick Retract).

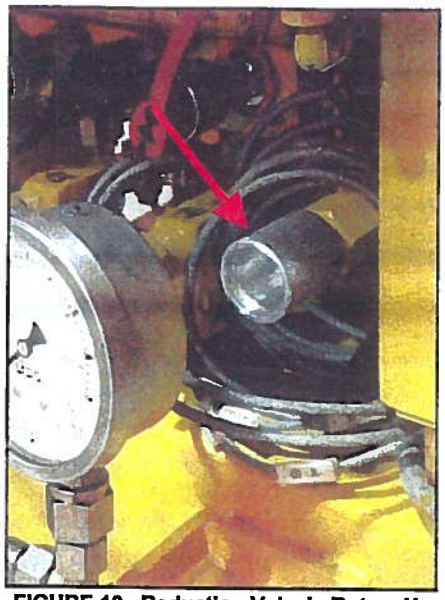

FIGURE 10. Reduction Valve's Rotary Head.

ATTENTION, it is important to begin retracting with the Fine Retract button (F) to slowly and safely release the load and allow time for properly handling of the Active Jack.

7.0 Installation of the First Strand (Pilot Strand)

7.1 Insert the power-seating device into the front of the active jack.

7.2 Push both the active jack and power-seating nose onto the first strand (Pilot strand) as shown in Figure 11.

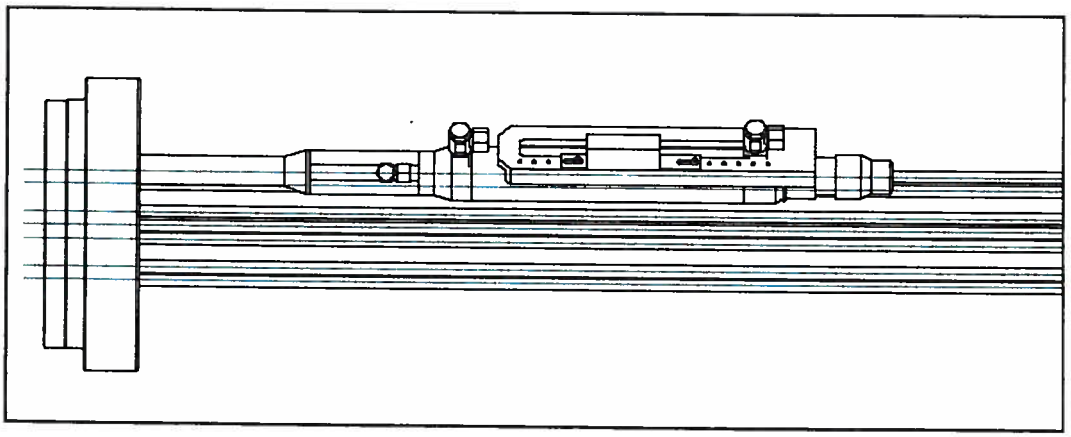

FIGURE 11. Active Jack with Power-Seating Device Installed on the First Strand Specified as the Pilot Strand.

ATTENTION, the seating nose must be centered accurately to the seating cone/ wedge axis. Rotate the seating device to a position that allows monitoring of the wedge's movement through the view slit located at the base of the seating device. Again, the hydraulic pump is set to operate in Mode 1.

7.3 The specified first strand is stressed by pressing the "SP" and "A" buttons.

7.4 If the piston rod is fully extended, first press "F" and "A" until the pressure is decreased significantly (The wedge returns into the anchorage wedge cavity).

7.5 Press the "R" and "A" buttons until the piston rod is completely retracted. Since the stressing wedge inside the active jack is locked onto the strand the seating device will move away from the wedge plate as the piston rod retracts.

7.6 When the piston rod is fully retracted the stressing wedge opens automatically. Push both the active jack and seating device forward.

ATTENTION, the seating device must be centered accurately to the seating cone/ wedge axis.

Repeat steps 4.1 to 4.6 until the specified load is achieved by rotating the reduction valve's rotary head and the piston rod does not extend any further.

7.7 Press the "SP" and "A" buttons and turn the reduction valve's rotary head slowly clockwise, simultaneously, until the pressure gauge (Fig 12) indicates the specified load.

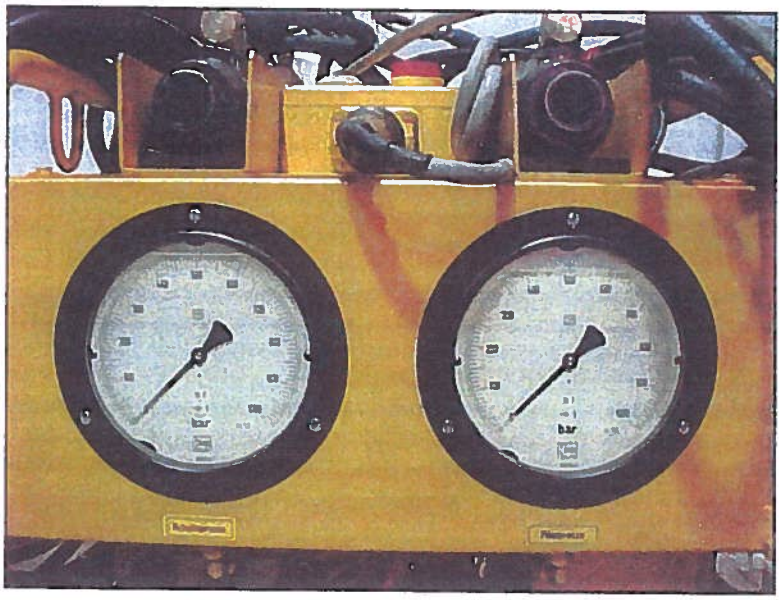

FIGURE 12. From Left to Right, Active Jack and Pilot Jack Pressure Gauges.

7.8 Switch the hydraulic pump to Mode 2.

7.9 Click buttons "G" and "A" to activate the power-seating device.

7.10 After three (3) to five (5) seconds click the "F" and "A" buttons for an additional three (3) to five (%) seconds.

7.11 Now press the "R" and "A" buttons until the piston rod is completely retracted. Since the stressing wedge inside the active jack is locked onto the strand the seating device will move away from the wedge plate as the piston rod retracts.

7.12 When the piston rod is fully retracted the stressing wedge opens automatically. Pull back both the active jack and seating device.

8.0 Installation of the Pilot Jack

8.1 The pilot jack is furnished with a special nose-piece equipped with a large window (Elongation Chair).

8.2 The hydraulic pump is switched to operate in Mode 1.

8.3 The pilot jack is also equipped with both a half shell (Fig 13) and strand clamping bush (Fig 14).

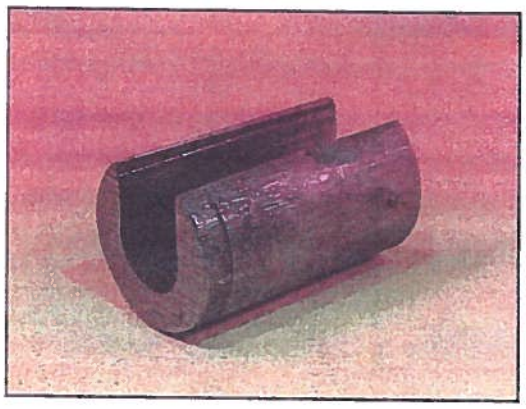

FIGURE 13. Half Shell.

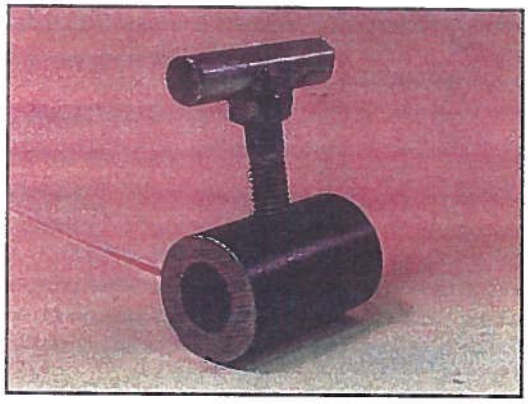

FIGURE 14. Strand Clamping Bush.

8.4 Push both the pilot jack with elongation chair onto the already stressed pilot strand (Fig 15).

8.5 Press buttons "R" and "P" to ensure that the piston rod is completely retracted.

8.6 With the pilot jack fully retracted and pushed forward against the cable stay anchorage, insert the 50mm half shell at the rear of the jack and then attach the strand clamping bush behind the half shell. The 50mm distance allows the stressing wedge to properly clamp the strand, while extending the piston rod, as the pilot jack is extended against the surface of the wedge plate.

8.7 Reduce the pressure by turning the reduction valve's rotary head counterclockwise.

8.8 Click buttons "SP" and "P" repeatedly while centering the pilot jack nose to the strand and seating cone/ wedge's axis.

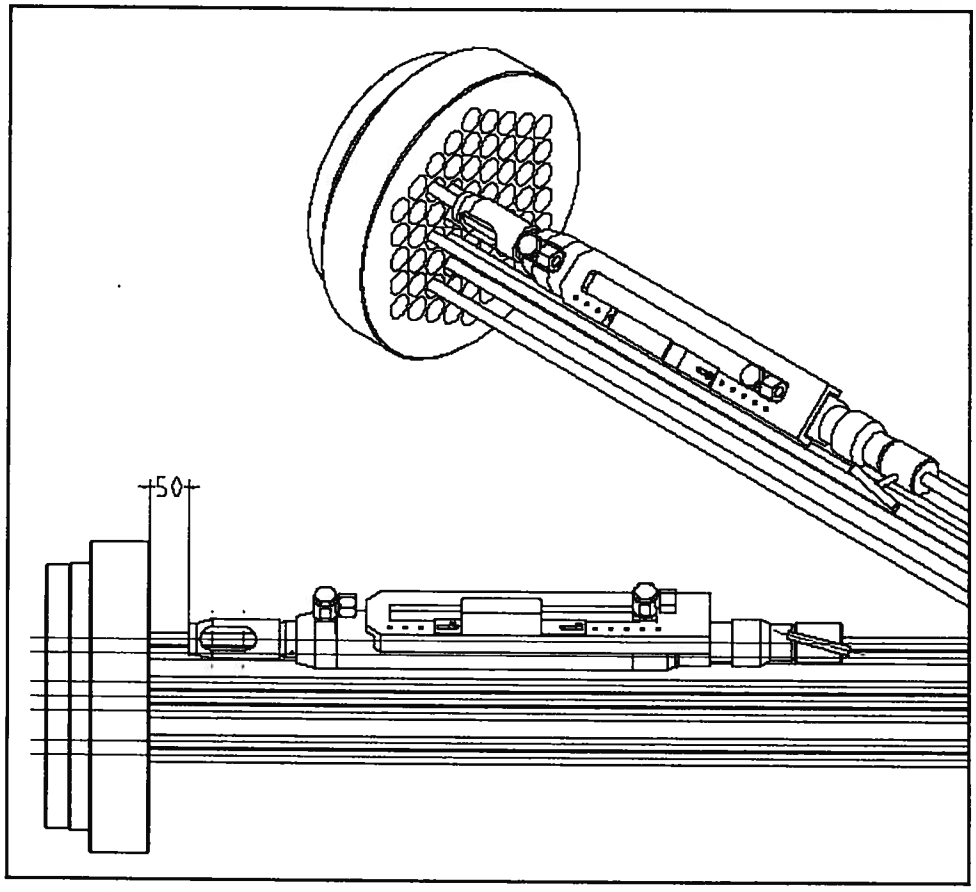

FIGURE 15. Pilot Jack with Elongation Chair Installed onto Specified Pilot Strand.

8.9 Once the pilot jack is firm against the cable stay anchorage, continue to press buttons "SP" and "P" while increasing the pressure until the specified load is achieved. When the specified load is obtained, the wedge should be lifted off from the anchorage wedge cavity by only a few millimeters.

8.10 Unscrew the screws that fasten the proximity switch X13.

8.11 Carefully slide the proximity switch in the direction of the arrow shown in Figure 16.

8.12 While moving the proximity switch carefully monitor the orange signal light.

8.13 When you near the upper hydraulic fitting of the pilot jack the signal light will change.

8.14 The proximity switch must be fixed at the location when the signal light changes it's status while sliding it carefully in the direction of the arrow. Fix the proximity switch with the signal light off.

8.15 Switch the hydraulic pump to operate in Mode 2.

8.16 Click buttons "F" and "P" till the proximity switch X13 light signal changes (now on).

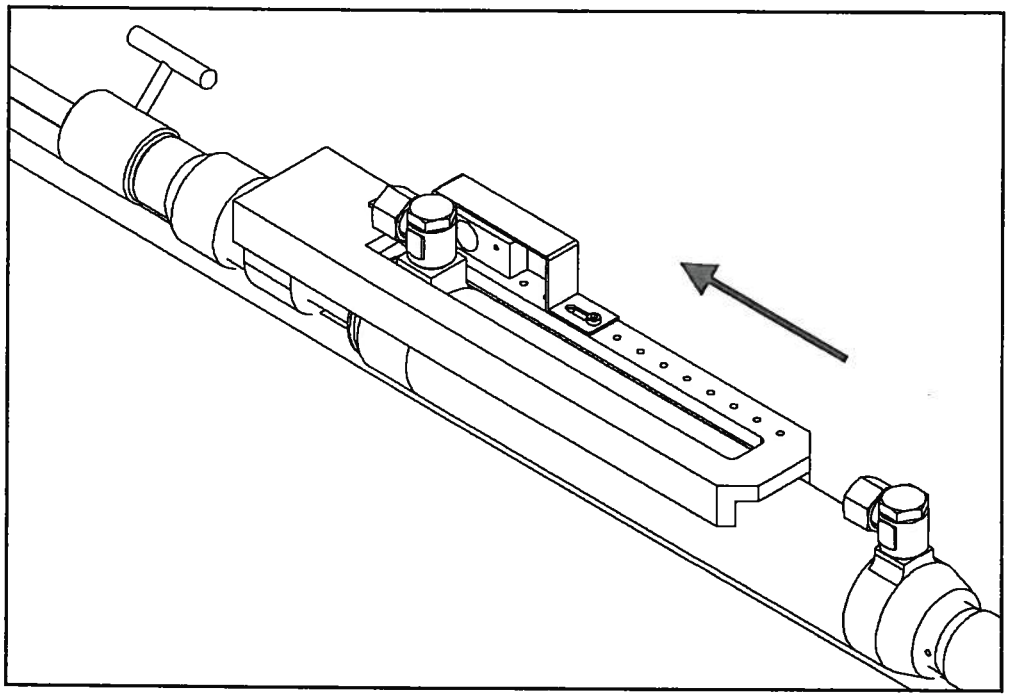

FIGURE 16. Proximity Switch X13 with Housing.

8.17 Press buttons "SP" and "P" the hydraulic pump will automatically stop operating when the proximity switch changes status (Signal light off). When the hydraulic pump stops the pressure gauge should display the specified load of the first strand.

ATTENTION, when changing the pilot jack to another stressed strand, ensure the position of the proximity switch X13 must not be altered.

9.0 Changing the Pilot Jack to another Stressed Strand

9.1 Dismantle the pilot jack from the present stressed strand.

9.2 Install the pilot jack on to the next specified pilot strand.

9.3 The hydraulic pump to operate in Mode 2.

9.4 The half shell and strand clamping bush is available.

9.5 Push the pilot jack with the elongation chair on to the already stressed pilot strand.

9.6 Press buttons "R" and "P" to ensure that the piston rod is fully retracted.

9.7 With the pilot jack fully retracted and pushed forward against the cable stay anchorage, insert the 50mm half shell at the rear of the jack and then attach the clamping bush behind the half shell. The 50mm distance allows the stressing wedge to properly clamp the strand, while extending the piston rod, as the pilot jack is extended against the surface of the wedge plate.

9.8 Click buttons "SP" and "P" repeatedly while centering the pilot jack nose to the strand and seating cone/ wedge's axis.

9.9 Press buttons "SP" and "P" until the hydraulic pump automatically stops. During this re-stressing operation carefully check the pilot jack pressure gauge to ensure that the strand is not overstressed.

9.10 When the hydraulic pump stops operating, by means of status change of Limit Switch X13, the strand's wedge should be lifted out of the anchorage wedge cavity a few millimeters.

10.0Stressing of Consecutive Strands with the Active Jack (Figure 17)

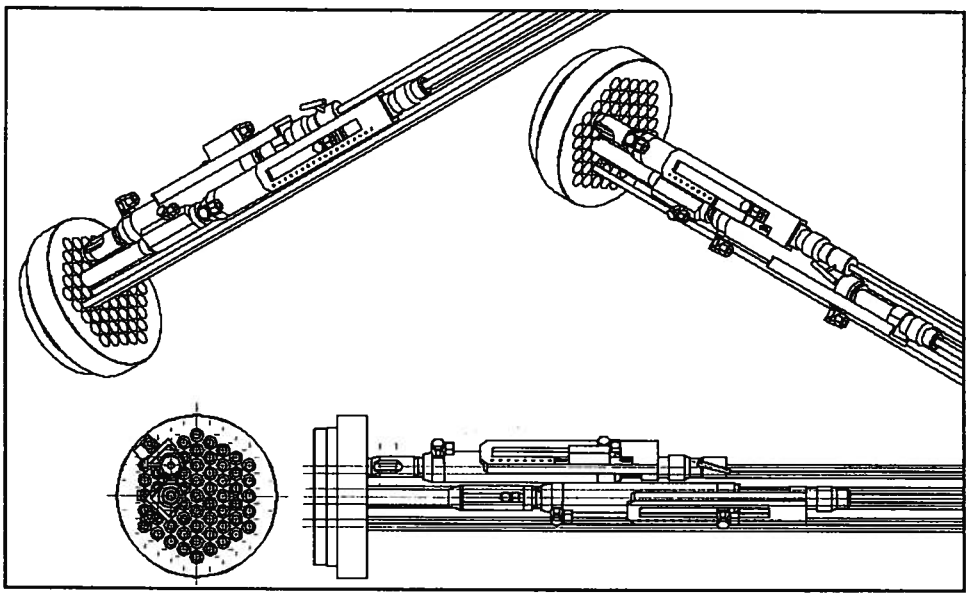

FIGURE 17. Situation During Normal Stressing Procedure.

10.1 The pilot jack is installed properly on the pilot strand.

10.2 The hydraulic pump is switched to operate in Mode 2.

10.3 The power-seating device is mounted on to the active jack.

10.4 Push the active jack with the power-seating device on to the next specified unstressed strand.

10.5 Center the power-seating device carefully with the wedge seating cone axis.

10.6 Click "SP" and "A+P" repeatedly to seat the active jack firmly against the anchorage.

10.7 Before continuing, ensure that the proximity switch X13 located on the pilot jack did not activate by the upper hydraulic fitting (Orange signal light is off). If the signal light is off, click buttons "F" and "P" till the limit switch changes it's status (Orange signal light is on).

10.8 To continue stressing with the active jack, press buttons "SP" and "A+P".

10.9 When the active jack piston rod has reached full stroke, press buttons "F" and "P" until the pressure on the active jack has reduced significantly.

10.10 Press buttons "R" and "A" to retract the active jack's piston rod completely.

10.11 Again, push the active jack with power-seating device forward.

10.12 Carefully center the active jack and power-seating device.

10.13 Continue to repeat steps 7.6 to 7.12 until the hydraulic pump (Stressing operation) is halted, automatically, by the proximity switch X13 on the pilot jack.

10.14 Click buttons "G" and "A" to activate the power-seating device.

10.15 After three (3) to five (5) seconds press buttons "F" and "A" for an additional three (3) to five (5) seconds.

10.16 Press buttons "R" and "A" to retract the active jack's piston rod completely.

10.17 Dismantle the active jack with power-seating device from the newly stressed strand and push onto the next specified unstressed strand to be stressed. Repeat the aforementioned cycle until all specified unstressed strand have been stressed.

ATTENTION, as shown in Figure 18 it is important to take care of the orientation of the jacks in order to avoid any mutual interference.

SAMPLE

STAY CABLES STRESSED WITH CONTEN METHOD

DYWIDAG-SYSTEMS INTERNATIONAL

BASIC DATA

Project:	**Sixth Street Cable Stayed Bridge- Milwaukee**
Cable Designation:	N12
Cable Type:	C37
Strand Type:	ASTM A416-96 Grade 270,Low Relaxation; 0,6"
Number of Strands:	37
Cross-Sectional Area of 1 Strand:	140 mm²
Modulus of Elasticity of Strands:	195000 N/mm²
Weight of one Strand (wax-sheath):	1.22 kg/m
Weight of PE Tube:	5.73 kg/m
Weight of Winch Rope:	1.00 kg/m

	Coordinates of Bearing Plate				Chord Tensile Force
	at Deck		at Pylon		
	X_A [m]	Y_A [m]	X_B [m]	Y_B [m]	[kN]
Before first Stressing	1171.501	9.513	1227.146	35.961	0
After first Stressing	1171.501	9.513	1227.146	35.961	2890

SAMPLE

Calculation of Strand Elongation and Stressing Force for ConTen Method

Sixth Street Cable Stayed Bridge- Milwaukee **N12** **Type C37**

Strand Type: ASTM A416-96 Grade 270,Low Relaxation; 0,6"
Modulus of Elasticity: E = 195,000 N/mm²
Cross-Section of Monostrand: A = 140 mm²

Weight of Monostrand: g_S = 1.22 kg/m
Weight of PE Tube: g_T = 5.73 kg/m
Weight of Winch Rope: g_W = 1.00 kg/m

n: No. of stressed Strands
u: No. of unstressed Strands
w: No. of Winch Ropes

n	u	w	Coordinates Deck X_A [m]	Y_A [m]	Coordinates Pylon X_B [m]	Y_B [m]	Chord Tensile Force Z [kN]	Z / n [kN]	unl. Cable $L_{cab}=L_x-\Delta L_1$ [m]	Chord L_{ch} [m]	Elongation ΔL_1 [mm]	Cable-chord ΔL_2 [mm]	max Sag $d_\perp$ [m]	Stressing Force S_{deck} [kN]	S_{pylon} [kN]
37	0	0	1171.501	9.513	1227.146	35.961	2890.0	78.11	61.43408	61.610	176.3	0.2	0.075	77.95	78.27
0	0	1	1171.501	9.513	1227.146	35.961	50.0			81.610		14.4	0.577	49.90	50.16
1	36	0	1171.501	9.513	1227.146	35.961	130.7	130.74	61.4341	61.610	296.5	120.4	1.669	131.17	131.40
2	35	0	1171.501	9.513	1227.146	35.961	200.8	100.40	61.4341	61.610	227.0	51.0	1.086	100.43	100.73
3	34	0	1171.501	9.513	1227.146	35.961	270.9	90.30	61.4341	61.610	204.0	28.0	0.805	90.23	90.55
4	33	0	1171.501	9.513	1227.146	35.961	342.7	85.68	61.4341	61.610	193.5	17.5	0.636	85.57	85.89
5	32	0	1171.501	9.513	1227.146	35.961	416.0	83.20	61.4341	61.610	187.9	11.9	0.524	83.08	83.40
6	31	0	1171.501	9.513	1227.146	35.961	491.6	81.94	61.4336	61.610	185.0	8.5	0.443	81.81	82.13
7	30	0	1171.501	9.513	1227.146	35.961	567.3	81.04	61.4336	61.610	182.9	6.4	0.384	80.90	81.22
8	29	0	1171.501	9.513	1227.146	35.961	642.9	80.37	61.4337	61.610	181.4	5.0	0.339	80.22	80.54
9	28	0	1171.501	9.513	1227.146	35.961	718.6	79.84	61.4339	61.610	180.2	4.0	0.303	79.69	80.01
10	27	0	1171.501	9.513	1227.146	35.961	794.2	79.42	61.4341	61.610	179.3	3.3	0.274	79.27	79.59
11	26	0	1171.501	9.513	1227.146	35.961	871.3	79.21	61.4340	61.610	178.8	2.7	0.250	79.05	79.38
12	25	0	1171.501	9.513	1227.146	35.961	948.3	79.03	61.4340	61.610	178.4	2.3	0.230	78.87	79.20
13	24	0	1171.501	9.513	1227.146	35.961	1025.4	78.88	61.4340	61.610	178.0	2.0	0.213	78.72	79.04
14	23	0	1171.501	9.513	1227.146	35.961	1102.4	78.75	61.4341	61.610	177.7	1.7	0.198	78.59	78.91
15	22	0	1171.501	9.513	1227.146	35.961	1179.5	78.63	61.4341	61.610	177.5	1.5	0.185	78.48	78.80
16	21	0	1171.501	9.513	1227.146	35.961	1257.0	78.56	61.4341	61.610	177.3	1.3	0.173	78.41	78.73
17	20	0	1171.501	9.513	1227.146	35.961	1334.5	78.50	61.4341	61.610	177.2	1.2	0.163	78.34	78.67
18	19	0	1171.501	9.513	1227.146	35.961	1412.0	78.44	61.4341	61.610	177.0	1.0	0.154	78.29	78.61
19	18	0	1171.501	9.513	1227.146	35.961	1489.5	78.39	61.4341	61.610	176.9	0.9	0.146	78.24	78.56
20	17	0	1171.501	9.513	1227.146	35.961	1567.0	78.35	61.4341	61.610	176.8	0.8	0.139	78.19	78.51
21	16	0	1171.501	9.513	1227.146	35.961	1644.8	78.32	61.4341	61.610	176.8	0.8	0.133	78.17	78.49
22	15	0	1171.501	9.513	1227.146	35.961	1722.6	78.30	61.4341	61.610	176.7	0.7	0.127	78.14	78.46
23	14	0	1171.501	9.513	1227.146	35.961	1800.4	78.28	61.4341	61.610	176.7	0.6	0.121	78.12	78.44
24	13	0	1171.501	9.513	1227.146	35.961	1878.2	78.26	61.4341	61.610	176.6	0.6	0.116	78.10	78.42
25	12	0	1171.501	9.513	1227.146	35.961	1956.0	78.24	61.4341	61.610	176.6	0.5	0.111	78.08	78.40
26	11	0	1171.501	9.513	1227.146	35.961	2033.8	78.22	61.4341	61.610	176.5	0.5	0.107	78.06	78.39
27	10	0	1171.501	9.513	1227.146	35.961	2111.6	78.21	61.4341	61.610	176.5	0.5	0.103	78.05	78.37
28	9	0	1171.501	9.513	1227.146	35.961	2189.4	78.19	61.4341	61.610	176.5	0.4	0.100	78.03	78.36
29	8	0	1171.501	9.513	1227.146	35.961	2267.2	78.18	61.4341	61.610	176.4	0.4	0.096	78.02	78.34
30	7	0	1171.501	9.513	1227.146	35.981	2345.0	78.17	61.4341	61.610	176.4	0.4	0.093	78.01	78.33
31	6	0	1171.501	9.513	1227.146	35.961	2422.8	78.15	61.4341	61.610	176.4	0.4	0.090	77.99	78.32
32	5	0	1171.501	9.513	1227.146	35.961	2500.6	78.14	61.4341	61.610	176.4	0.3	0.087	77.98	78.31
33	4	0	1171.501	9.513	1227.146	35.961	2578.4	78.13	61.4341	61.610	176.3	0.3	0.085	77.97	78.30
34	3	0	1171.501	9.513	1227.146	35.961	2656.2	78.12	61.4341	61.610	176.3	0.3	0.082	77.96	78.29
35	2	0	1171.501	9.513	1227.146	35.961	2734.0	78.11	61.4341	61.610	176.3	0.3	0.080	77.95	78.28
36	1	0	1171.501	9.513	1227.146	35.961	2812.0	78.11	61.4341	61.610	176.3	0.3	0.078	77.95	78.27
37	0	0	1171.501	9.513	1227.146	35.961	2890.0	78.11	61.4341	61.610	176.3	0.2	0.075	77.95	78.27

SAMPLE

STRESSING RECORD FOR STAY CABLES WITH CONTEN METHOD 1st STRESSING

DYWIDAG-SYSTEMS INTERNATIONAL

Project: Sixth Street Cable Stayed Bridge- Milwaukee

Page

Cable no.	N12	Cable Type	C37	Length of cable	61.610 m	No. of strands	37
Construction stage	11.2	Length of jack	900 mm	Relieve	10.0 mm	Slip	3.0 mm
Jack type	ConTen 140 kN	Jack no.	00136563	Piston area	19.6 cm²	Friction	2.4%
Tension side	Pylon	Date of tensioining		Person resp. for tensioning works		Owner's representative	
Temperature of 1st strand							

Se-quence	Strand number for		Required force at anchorage after relieve	Gauge pressure before relieve		Elongation theoretical before relieve	Strand protrusion		Partial elongation		Remark
	Working jack	Pilot jack	[kN]	theoretical [bar]	actual [bar]	[mm]	at pressure of 100 bar [mm]	at final pressure [mm]	actual [mm]	theoretical [mm]	
1	34	-	131.4	710		-				-	
2	22		100.7	549		312.8				255.8	
3	33		90.5	496		243.0				194.0	
4	9		85.9	472		219.8				173.2	
5	15		83.4	459		209.2				163.6	
6	21		82.1	452		204.1				158.9	
7	25		81.2	447		200.7				155.9	
8	10		80.5	444		198.5				153.8	
9	4		80.0	441		196.8				152.2	
10	3		79.6	439		195.6				151.0	
11	8	34	79.4	438		194.9				150.4	
12	20		79.2	437		194.4				149.9	
13	35		79.0	436		194.0				149.5	
14	17		78.9	435		193.6				149.1	
15	5		78.8	435		193.3				148.8	
16	1		78.7	434		193.1				148.6	
17	2		78.7	434		192.9				148.5	
18	14		78.6	434		192.8				148.3	
19	32		78.6	434		192.6				148.2	
20	23		78.5	433		192.5				148.1	
21	24		78.5	433		192.4				148.0	
22	16		78.5	433		192.4				147.9	
23	26		78.4	433		192.3				147.9	
24	11		78.4	433		192.3				147.8	
25	6		78.4	433		192.2				147.8	
26	7	8	78.4	433		192.2				147.7	
27	13		78.4	433		192.1				147.7	
28	31		78.4	433		192.1				147.7	
29	27		78.3	432		192.0				147.6	
30	18		78.3	432		192.0				147.6	
31	12		78.3	432		192.0				147.6	
32	19		78.3	432		192.0				147.6	

SAMPLE

STRESSING RECORD FOR STAY CABLES WITH CONTEN METHOD 1st STRESSING

DYWIDAG-SYSTEMS INTERNATIONAL

Project: Sixth Street Cable Stayed Bridge- Milwaukee

Page

Cable no.	N12	Cable Type	C37	Length of cable	61.610 m	No. of strands	37
Construction stage	11.2	Length of jack	900 mm	Relieve	10.0 mm	Slip	3.0 mm
Jack type	ConTen 140 kN	Jack no.	00136563	Piston area	19.6 cm²	Friction	2.4%
Tension side	Pylon	Date of tensioining		Person resp. for tensioning works		Owner's representative	
Temperature of 1st strand							

Se-quence	Strand number for		Required force at anchorage after relieve	Gauge pressure before relieve		Elongation theoretical before relieve	Strand protrusion		Partial elongation		Remark
	Working jack	Pilot jack	[kN]	theoretical [bar]	actual [bar]	[mm]	at pressure of 100 bar [mm]	at final pressure [mm]	actual [mm]	theoretical [mm]	
33	30	8	78.3	432		191.9				147.5	
34	36		78.3	432		191.9				147.5	
35	28		78.3	432		191.9				147.5	
36	29		78.3	432		191.9				147.5	
37	37		78.3	432		191.9				147.5	

SAMPLE

CORRECTIVE STRESSING WITH GRADIENT JACK

DYWIDAG-SYSTEMS INTERNATIONAL

Project: **Sixth Street Cable Stayed Bridge- Milwaukee** **Page**

Cable no.	N12	Cable type	C37	Length of cable	61.610 m
Construction stage	12.1	No. of strands	37	Cross-sect. of cable	51.8 cm²
Tensioning side	deck	Design Temperature	20 °C	Relieve	1.0 mm
Jack type	Gradient Jack C 61	No. of pistons	8	Single piston area	126.9 cm²
Jack no.		Friction f =	2.0%	Total piston area A_{tot} =	1015 cm²
Date of tensioning		Person resp. for tensioning works		Owner's representative	

1	2	3	4	5	6	7	8	9
Temperature of strands	Required stressing force after relieve	Gauge pressure before relieve			Stressing force ΔS for elongation	Elongation Δl before relieve		Remark
		required	actual at lift off test	Deviation Δp (3)-(4)	(see note 1)	theoretical (see note 2)	actual	
	[kN]	[bar]	[bar]	[bar]	[kN]	[mm]	[mm]	
-5 °C	3187	322						
0 °C	3126	316						
5 °C	3066	310						
10 °C	3005	304						
15 °C	2945	298						
20 °C	**2884**	**291**						
25 °C	2823	285						
30 °C	2763	279						
35 °C	2702	273						
40 °C	2642	267						
45 °C	2581	261						
50 °C	2520	255						

Note 1: $\Delta S = \Delta p \cdot A_{tot} / (1 + f) / 100 =$ $\Delta p \cdot 9.953$ (Δp in bar, ΔS in kN)

Note 2: $\Delta l = \Delta S \cdot l / (E \cdot A_{cable})$ + relieve + deformation of structure

$\Rightarrow \Delta l = \Delta S \cdot 0.0610$ + 1.0 mm + deformation of structure (ΔS in kN, Δl in mm)

SAMPLE

CORRECTIVE STRESSING WITH GRADIENT JACK

DYWIDAG-SYSTEMS INTERNATIONAL

Project: **Sixth Street Cable Stayed Bridge- Milwaukee** **Page**

Cable no.	N12	Cable type	C37	Length of cable	61.610 m
Construction stage	12.1	No. of strands	37	Cross-sect. of cable	51.8 cm²
Tensioning side	pylon	Design Temperature	20 °C	Relieve	1.0 mm
Jack type	Gradient Jack C 61	No. of pistons	8	Single piston area	126.9 cm²
Jack no.		Friction f =	2.0%	Total piston area A_{tot} =	1015 cm²
Date of tensioning		Person resp. for tensioning works		Owner's representative	

1	2	3	4	5	6	7	8	9
Temperature of strands	Required stressing force after relieve	Gauge pressure before relieve			Stressing force ΔS for elongation	Elongation Δl before relieve		Remark
		required	actual at lift off test	Deviation Δp (3)-(4)	(see note 1)	theoretical (see note 2)	actual	
	[kN]	[bar]	[bar]	[bar]	[kN]	[mm]	[mm]	
-5 °C	3199	323						
0 °C	3138	317						
5 °C	3078	311						
10 °C	3017	305						
15 °C	2957	299						
20 °C	**2896**	**293**						
25 °C	2835	287						
30 °C	2775	280						
35 °C	2714	274						
40 °C	2654	268						
45 °C	2593	262						
50 °C	2532	256						

Note 1: $\Delta S = \Delta p \cdot A_{tot} / (1 + f) / 100 =$ $\Delta p \cdot 9.953$ (Δp in bar, ΔS in kN)

Note 2: $\Delta l = \Delta S \cdot l / (E \cdot A_{cable})$ + relieve + deformation of structure

$\Rightarrow \Delta l = \Delta S \cdot 0.0610$ + 1.0 mm + deformation of structure (ΔS in kN, Δl in mm)

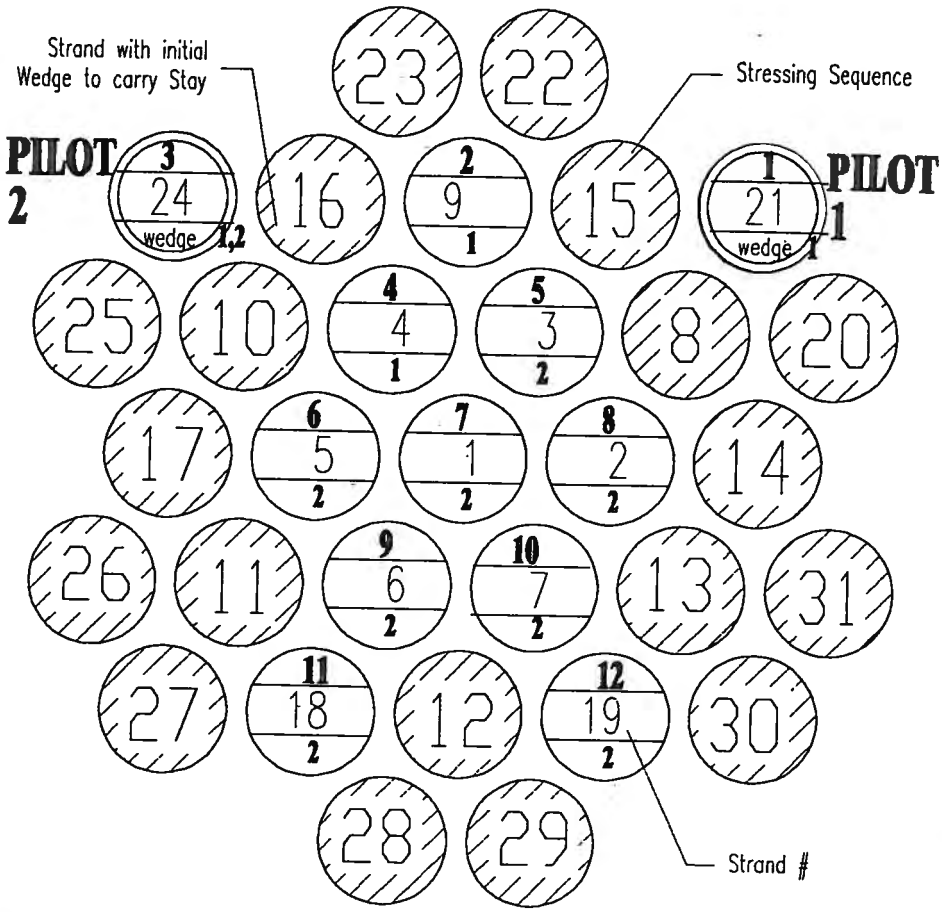

1.) SET PILOT @ 21 stress 9, 24, 4

2.) SET PILOT @ 24 stress 3,5,1,2,6,7,18,19

Stay 7-N:

DYWIDAG SYSTEMS INTERNATIONAL USA, Inc.		DRAWING NUMBER EA – 01
6TH STREET BRIDGE STAY 7N STRESSING AND INSTALLATION		
DATE 02-06-02 DRAWN: EA APPROVED:		

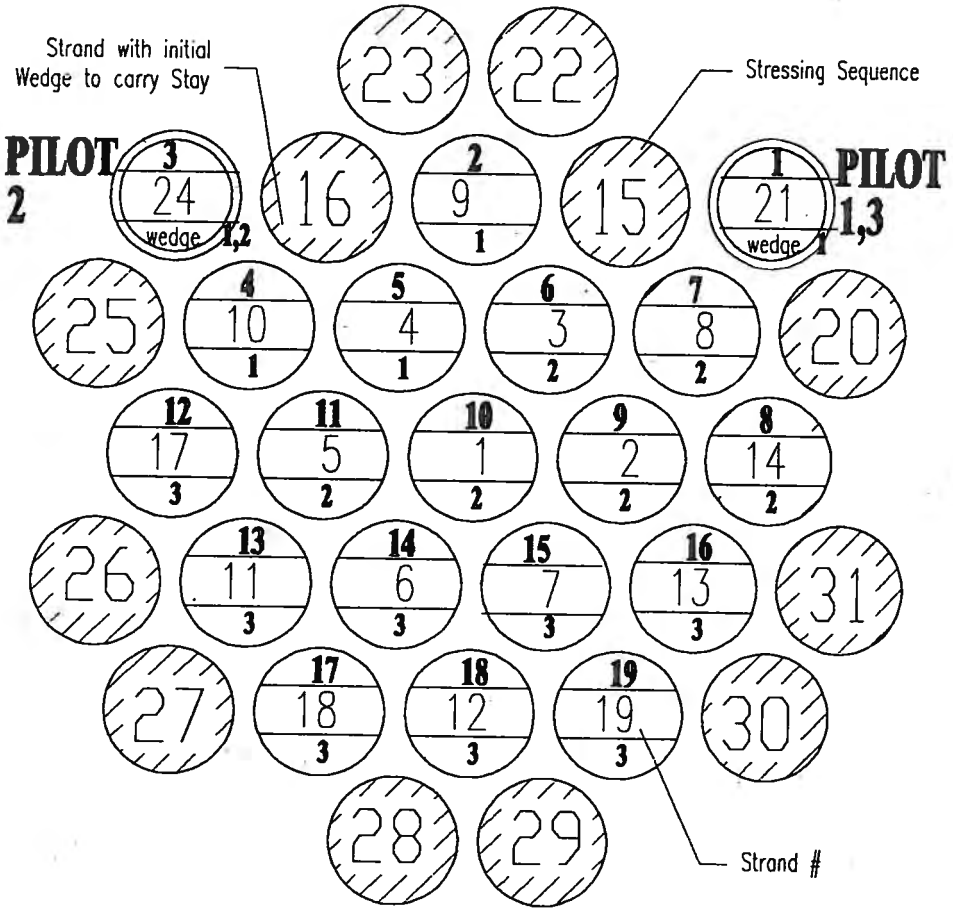

1.) SET PILOT @ 21 stress 9,24,10,4,

2.) SET PILOT @ 24 stress 3,8,14,2,1,5

3.) SET PILOT @ 21 stress 17,11,6,7,13,18,12,19

Stay 6-N:

DYWIDAG SYSTEMS INTERNATIONAL USA, Inc.	DIMENSIONS: INCH (mm) FOR REFERENCE ONLY	QUALITY PLAN NUMBER	DRAWING NUMBER EA – 02
6TH STREET BRIDGE STAY 6N STRESSING AND INSTALLATION		REV. DATE NAME	
DATE: 02-06-02 DRAWN: E.A. APPROVED:			

DYWIDAG-SYSTEMS INTERNATIONAL, USA, INC. DSI

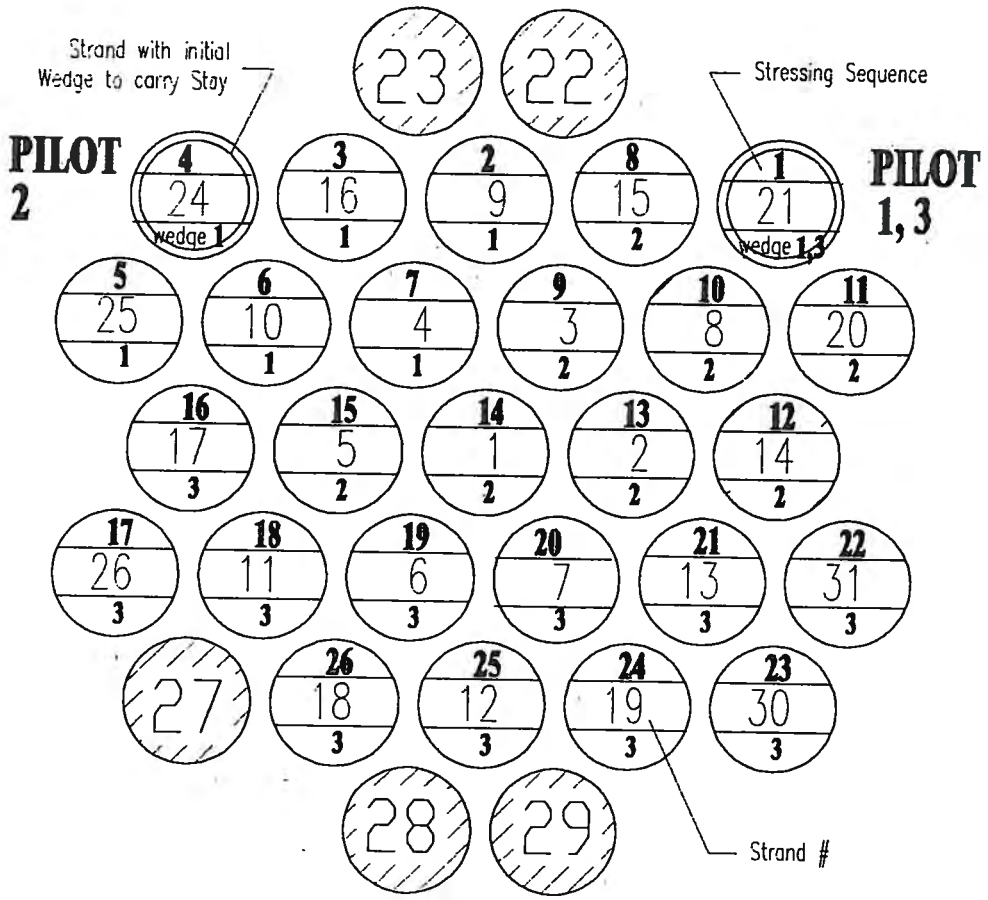

1.) SET PILOT @ 21 stress 9,16,24,25,10,4

2.) SET PILOT @ 24 stress 15,3,8,20,14,2,1,5

3.) SET PILOT @ 21 stress 17,26,11,6,7,13,31, 30,19,12,18

Stay 8-N:

DYWIDAG SYSTEMS INTERNATIONAL USA, Inc.

6TH STREET BRIDGE

STAY 8N STRESSING AND INSTALLATION

02-06-02 DRAWN: E.A.

EA – 03

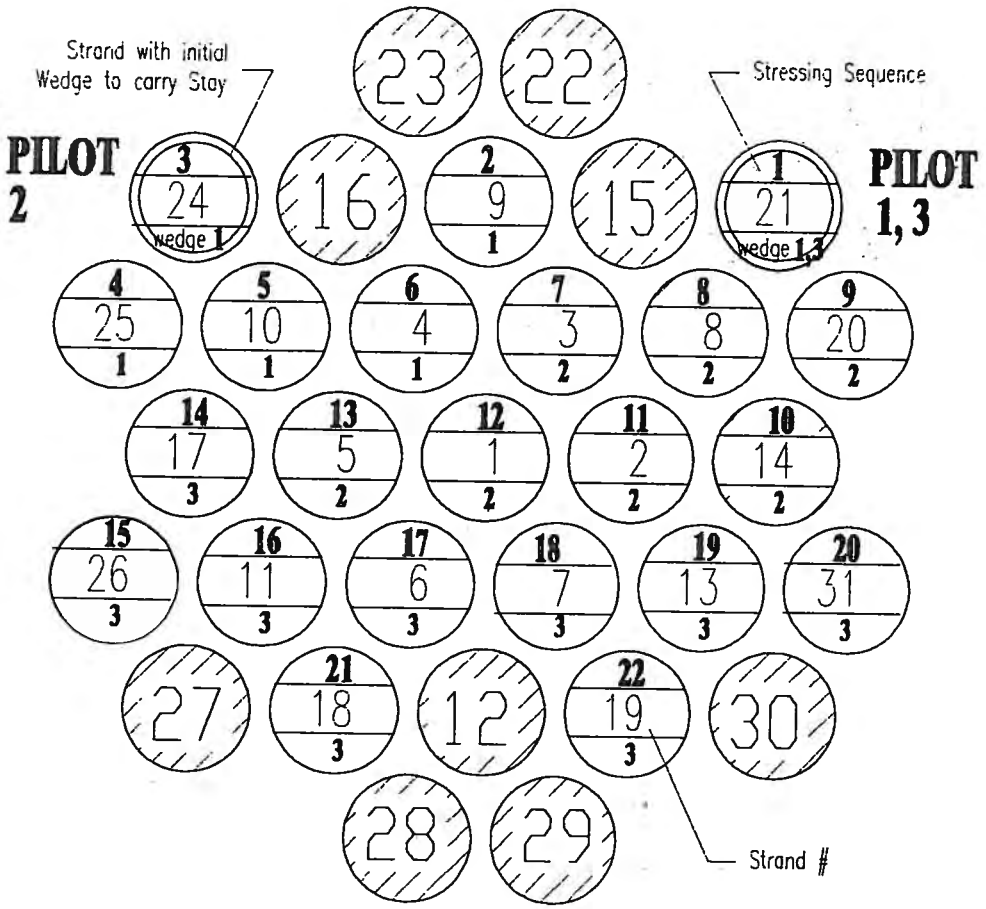

1.) SET PILOT @ 21 stress 9,24,25,10,4

2.) SET PILOT @ 24 stress 3,8,20,14,2,1,5

3.) SET PILOT @ 21 stress 17,26,11,6,7,13,31,18,19

Stay 5-N:

DYWIDAG SYSTEMS INTERNATIONAL USA, Inc.

6TH STREET BRIDGE

STAY 5N STRESSING AND INSTALLATION

EA – 04

02-06-02 DRAWN: E.A.

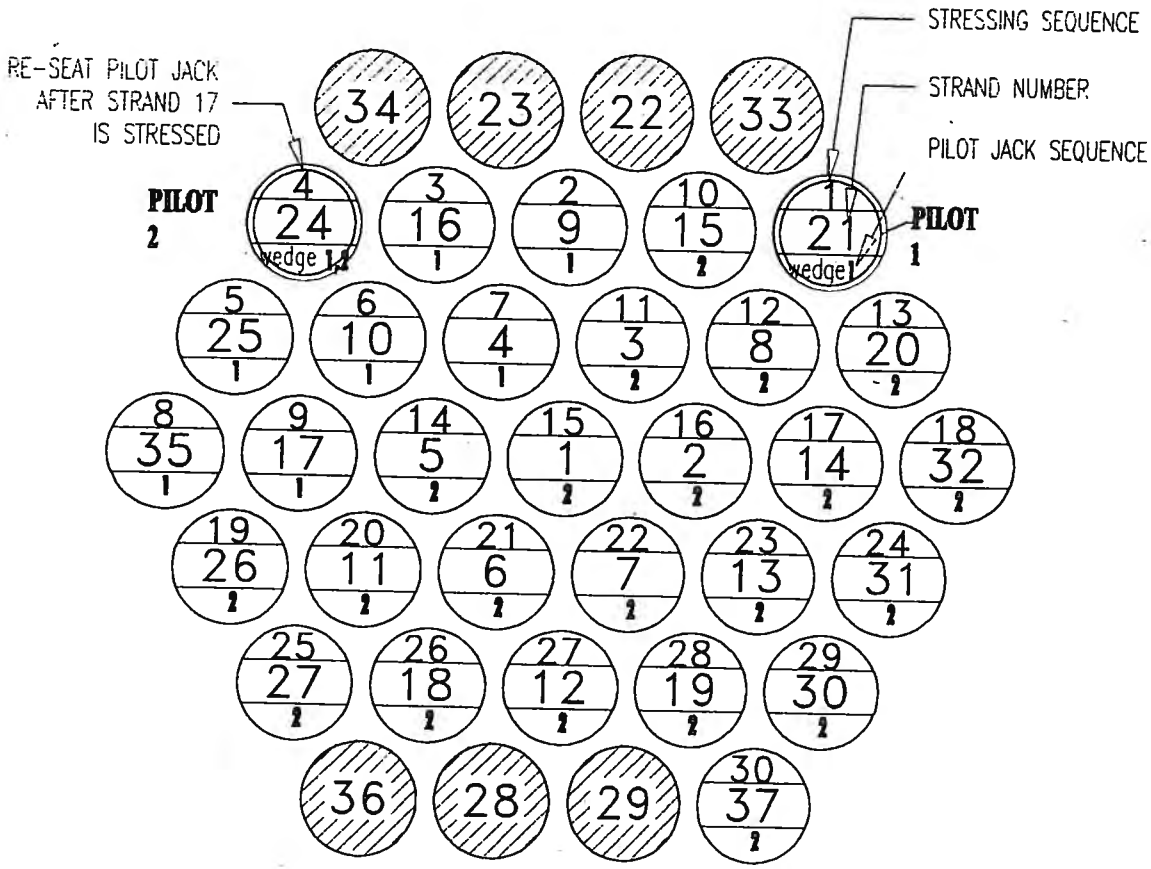

1.) SET PILOT @ 21 stress 9,16,24,25,10,7,35,17

2.) SET PILOT @ 24 stress 15,3,8,20,5,1,2,14,32,26,11, 6,7,13,31,27,18,12,19,30,37

Stay 9-N:

DYWIDAG SYSTEMS INTERNATIONAL USA, Inc.

6TH STREET BRIDGE
STAY 9N STRESSING AND INSTALLATION

02-06-02 DRAWN: E.A.

EA – 05

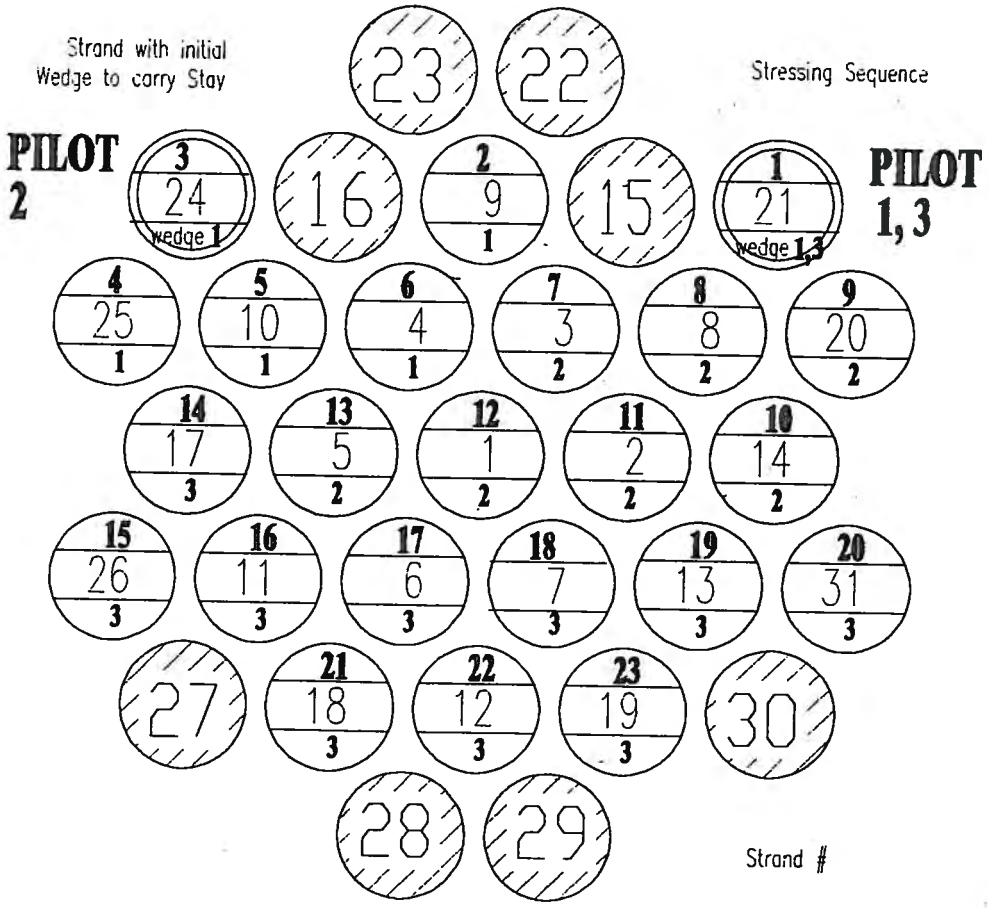

1.) SET PILOT @ 21 stress 9,24,25,10,4

2.) SET PILOT @ 24 stress 3,8,20,14,2,1,5

3.) SET PILOT @ 21 stress 17,26,11,6,7,13,31, 18,12,19

Stay 4-N:

DYWIDAG SYSTEMS INTERNATIONAL USA, Inc.

6TH STREET BRIDGE

STAY 4N STRESSING AND INSTALLATION

02-06-02 DRAWN: E.A.

EA – 06

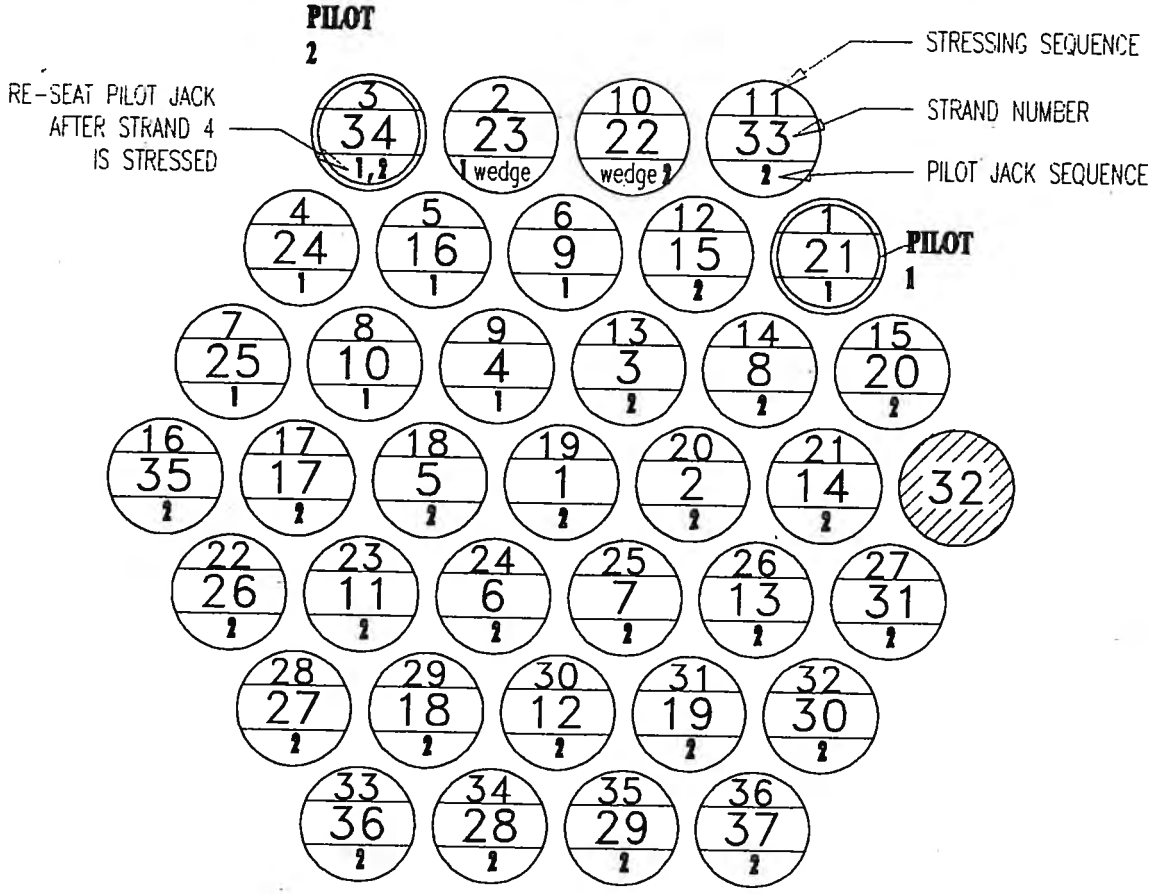

1.) SET PILOT @ 21 stress 23, 34,24,16,9,25,10,4

2.) SET PILOT @ 34 stress 22,33,15,3,8,20,35,17, 5,1,2,14,26,11,6,7,13,31,27,18,12,19,30,36,28,29,37

Stay 10-N:

DYWIDAG SYSTEMS INTERNATIONAL USA, Inc.

6TH STREET BRIDGE
STAY 10N STRESSING AND INSTALLATION

02-06-02 DRAWN: E.A.

EA – 07

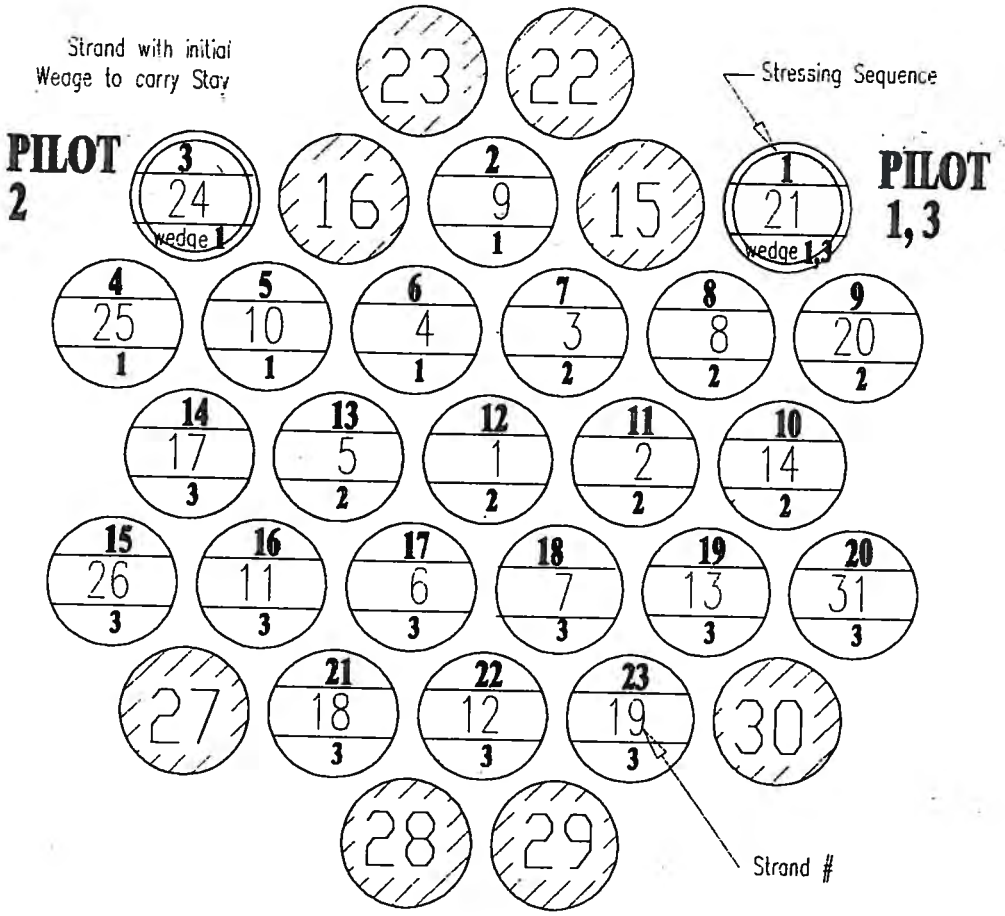

1.) SET PILOT @ 21 stress 9,24,25,10,4

2.) SET PILOT @ 24 stress 3,8,20,14,2,1,5

3.) SET PILOT @ 21 stress 17,26,11,6,7,13,31, 18,12,19

Stay 3-N:

DYWIDAG SYSTEMS INTERNATIONAL USA, Inc.

6TH STREET BRIDGE

STAY 3N STRESSING AND INSTALLATION

02-06-02 DRAWN: EA

EA - 08

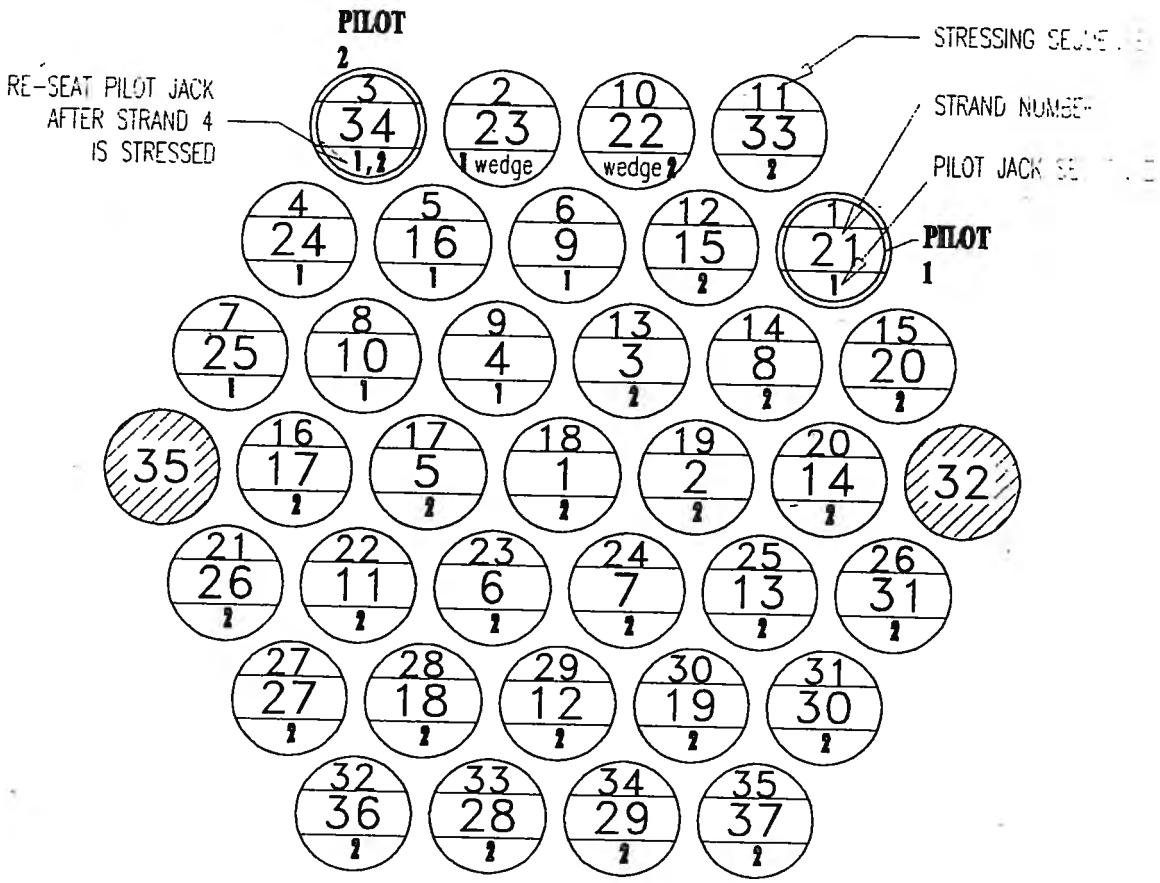

1.) SET PILOT @ 21 stress 23,34,24,16,9,25,10,4

2.) SET PILOT @ 34 stress 22,33,15,3,8,20,17,5,1,[illegible]4, 26,11,6,7,13,31,27,18,12,19,30,36,28,29,37

Stay 11-N:

DYWIDAG SYSTEMS INTERNATIONAL USA, Inc.

6TH STREET BRIDGE
STAY 11N STRESSING AND INSTALLATION

02-06-02 DRAWN: E.A.

A – 09

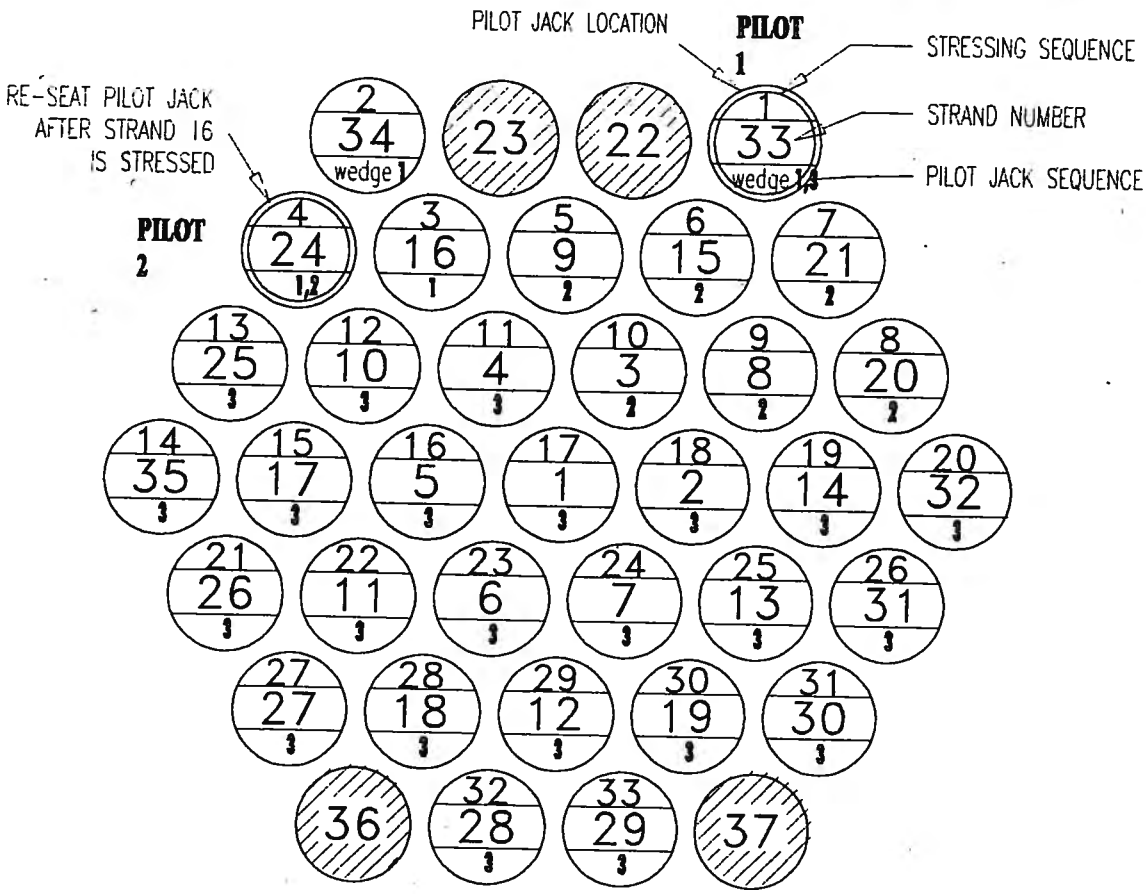

1.) SET PILOT @ 33 stress 34,16,24

2.) SET PILOT @ 24 stress 9,15,21,20,8,3

2.) SET PILOT @ 33 stress 4,10,25,35,17,5,1,2,14,32,26, 11,6,7,13,31,27,18,12,19,30,28,29

Stay 2-N:

DYWIDAG SYSTEMS INTERNATIONAL USA, Inc.

6TH STREET BRIDGE
STAY 2N STRESSING AND INSTALLATION

02-06-02 DRAWN: E.A.

EA - 10

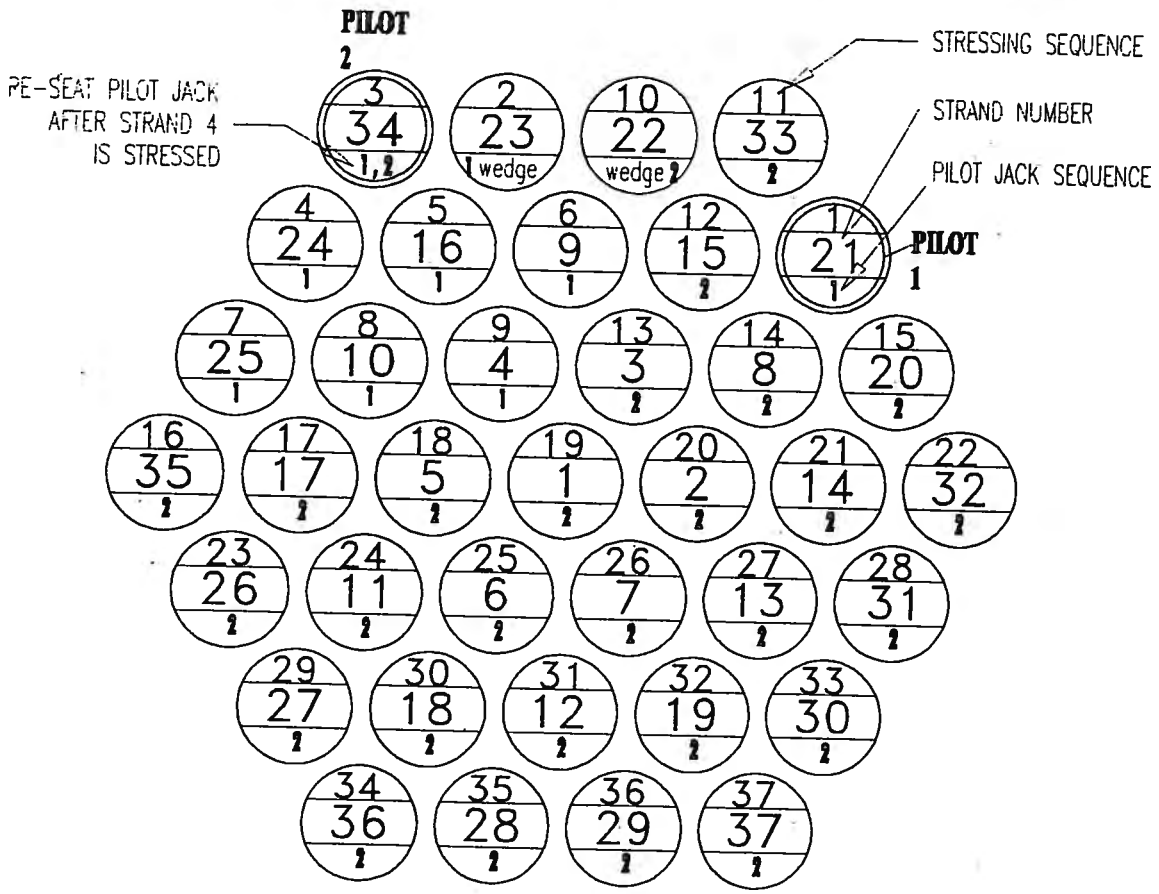

1.) SET PILOT @ 21 stress 23,34,24,16,9,25,10,4

2.) SET PILOT @ 34 stress 22,33,15,3,8,20,35,17,5,1,2,14, 32,26,11,6,7,13,31,27,18,12,19,30,36,28,29,37

Stay 12-N:

DYWIDAG SYSTEMS INTERNATIONAL USA, Inc.

6TH STREET BRIDGE
STAY 12N STRESSING AND INSTALLATION

02-06-02 DRAWN: EA

EA - 11

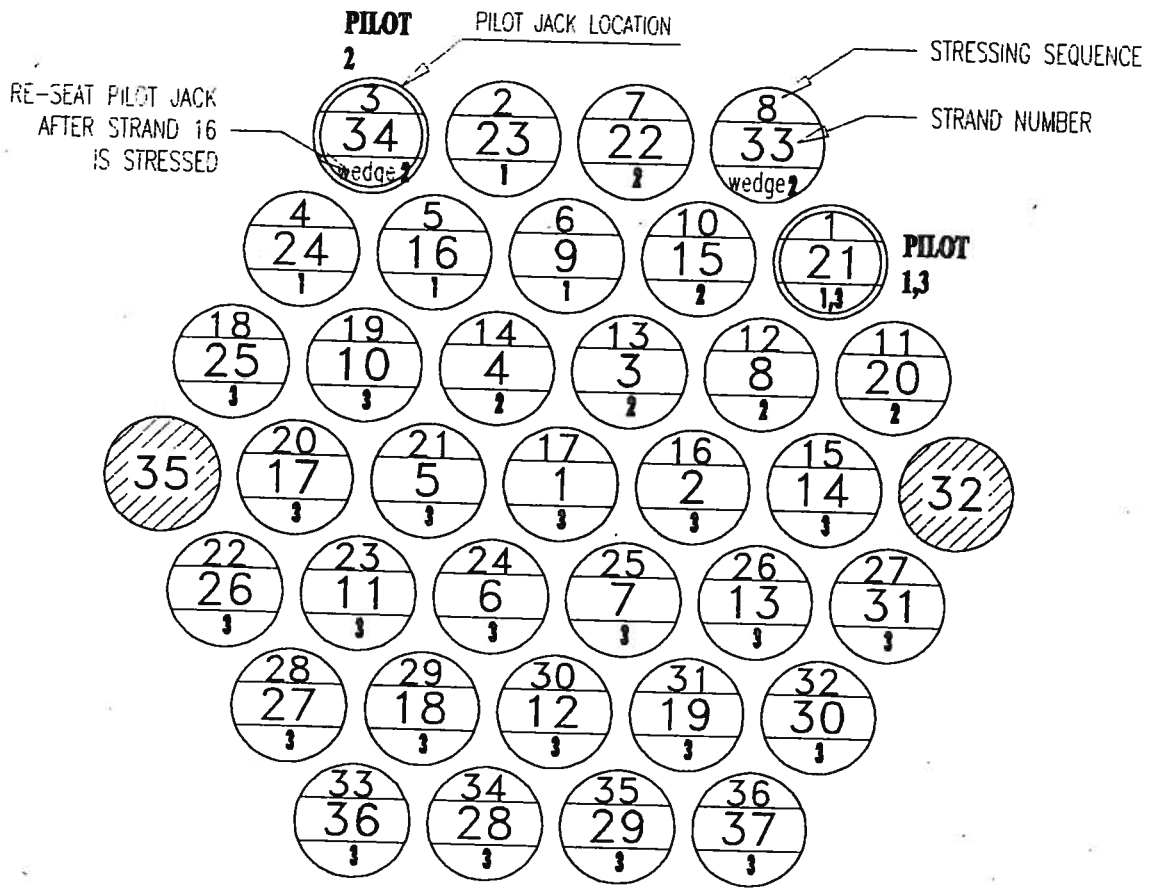

1.) SET PILOT @ 21 stress 23,34,24,16,9

2.) SET PILOT @ 34 stress 22,33,15,20,8,3,4,14,2,1

2.) SET PILOT @ 21 stress 25,10,17,5,26,11,6,7,13, 31,27,18,12,19,30,36,28,29,37

Stay 1-N:

DYWIDAG SYSTEMS INTERNATIONAL USA, Inc.

6TH STREET BRIDGE

STAY 1N STRESSING AND INSTALLATION

02-06-02 DRAWN: E.A.

EA – 12

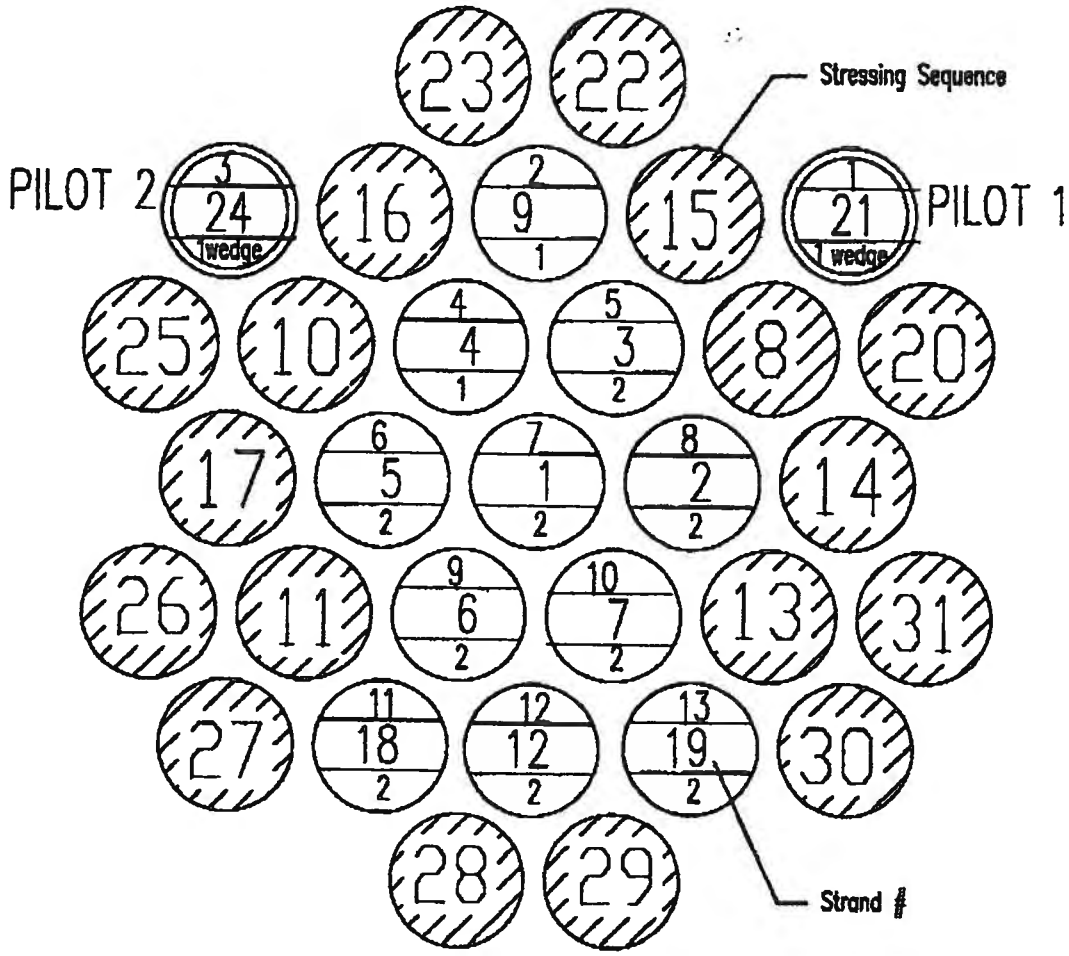

1.) SET PILOT @ 21 stress 9, 24, 4

2.) SET PILOT @ 24 stress 3,5,1,2,6,7,18,12,19

Stay 7-S:

DYWIDAG SYSTEMS INTERNATIONAL USA, Inc.	DIMENSIONS: INCH [mm] mm FOR REFERENCE ONLY	QUALITY PLAN NUMBER:	DRAWING NUMBER EA – 01
6TH STREET BRIDGE STAY 7N STRESSING AND INSTALLATION		REV. DATE NAME	
DATE: 02-08-02 DRAWN: EA MODIFIED: SL ON 4-22-02			
		DYWIDAG-SYSTEMS INTERNATIONAL, USA, INC. DSI	

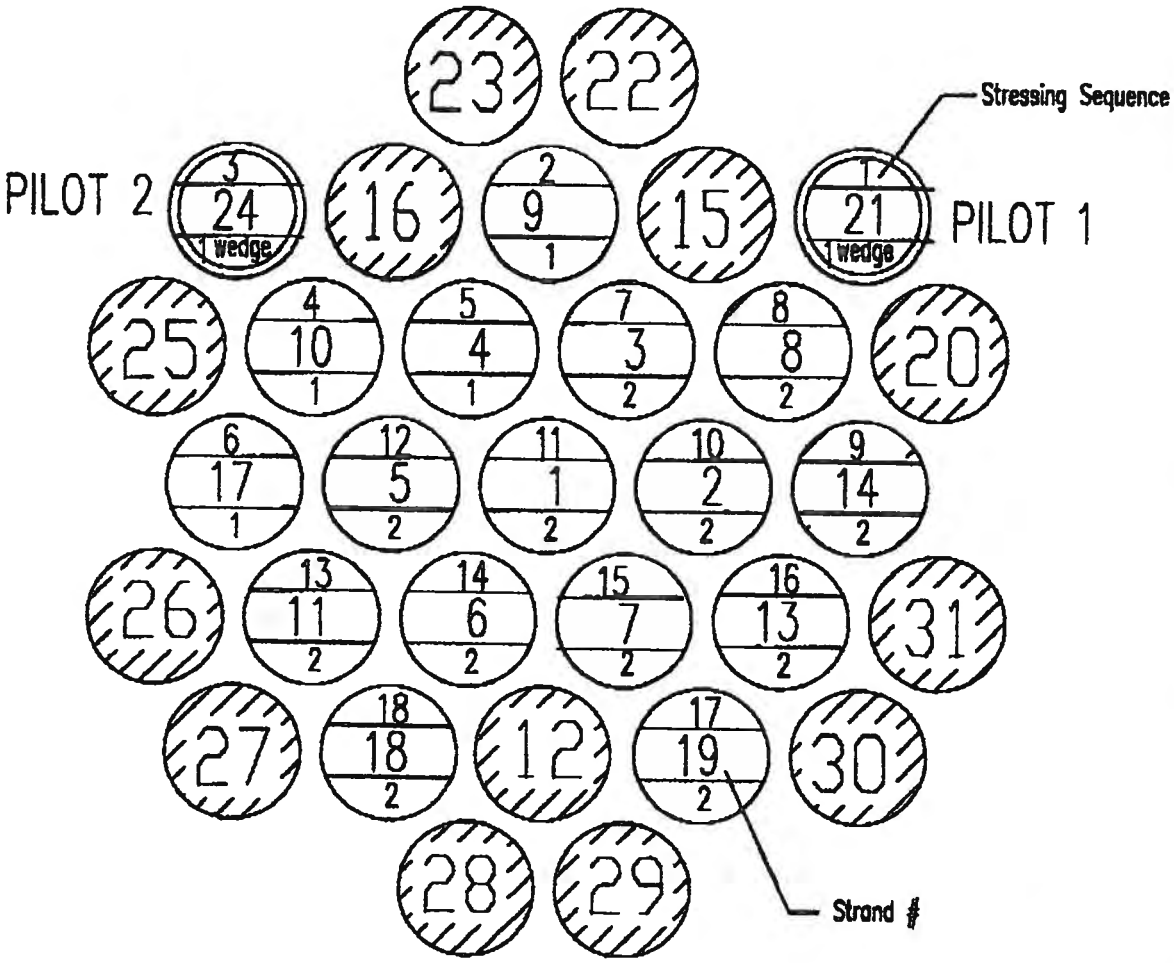

1.) SET PILOT @ 21 stress 9,24,10,4,17

2.) SET PILOT @ 24 stress 3,8,14,2,1,5,11, 6,7,13,19,18

Stay 6-S:

DYWIDAG SYSTEMS INTERNATIONAL USA, Inc.	DIMENSIONS: INCH [mm] mm FOR REFERENCE ONLY	QUALITY PLAN NUMBER:	DRAWING NUMBER EA - 02
6TH STREET BRIDGE STAY 6N STRESSING AND INSTALLATION		REV. DATE NAME	
DATE: 02-06-02 DRAWN: EA MODIFIED: S.L ON 4-22-02			
		DYWIDAG-SYSTEMS INTERNATIONAL, USA, INC. DSI	

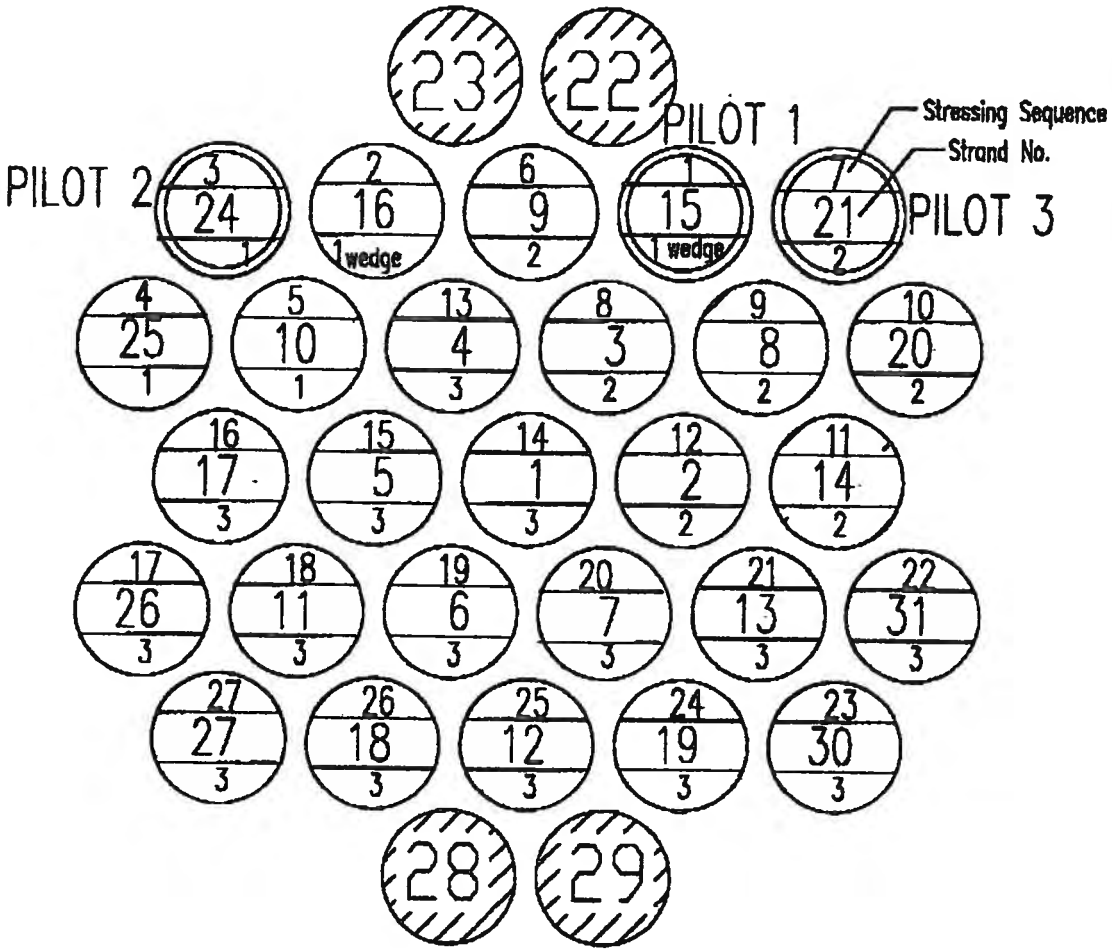

1.) SET PILOT @ 15 stress 16,24,25,10

2.) SET PILOT @ 24 stress 9,21,3,8,20,14,2

3.) SET PILOT @ 21 stress 4,1,5,17,26,11,6,7, 13,31,30,19,12,18,27

Stay 8-S:

DYWIDAG SYSTEMS INTERNATIONAL USA, Inc.	DIMENSIONS: INCH [mm] mm FOR REFERENCE ONLY	QUALITY PLAN NUMBER:	DRAWING NUMBER EA - 03
6TH STREET BRIDGE STAY 8N STRESSING AND INSTALLATION		REV. / DATE / NAME	
DATE: 02-06-02 DRAWN: EA. MODIFIED: SL ON 4-22-02			
	DYWIDAG-SYSTEMS INTERNATIONAL, USA, INC. DSI		

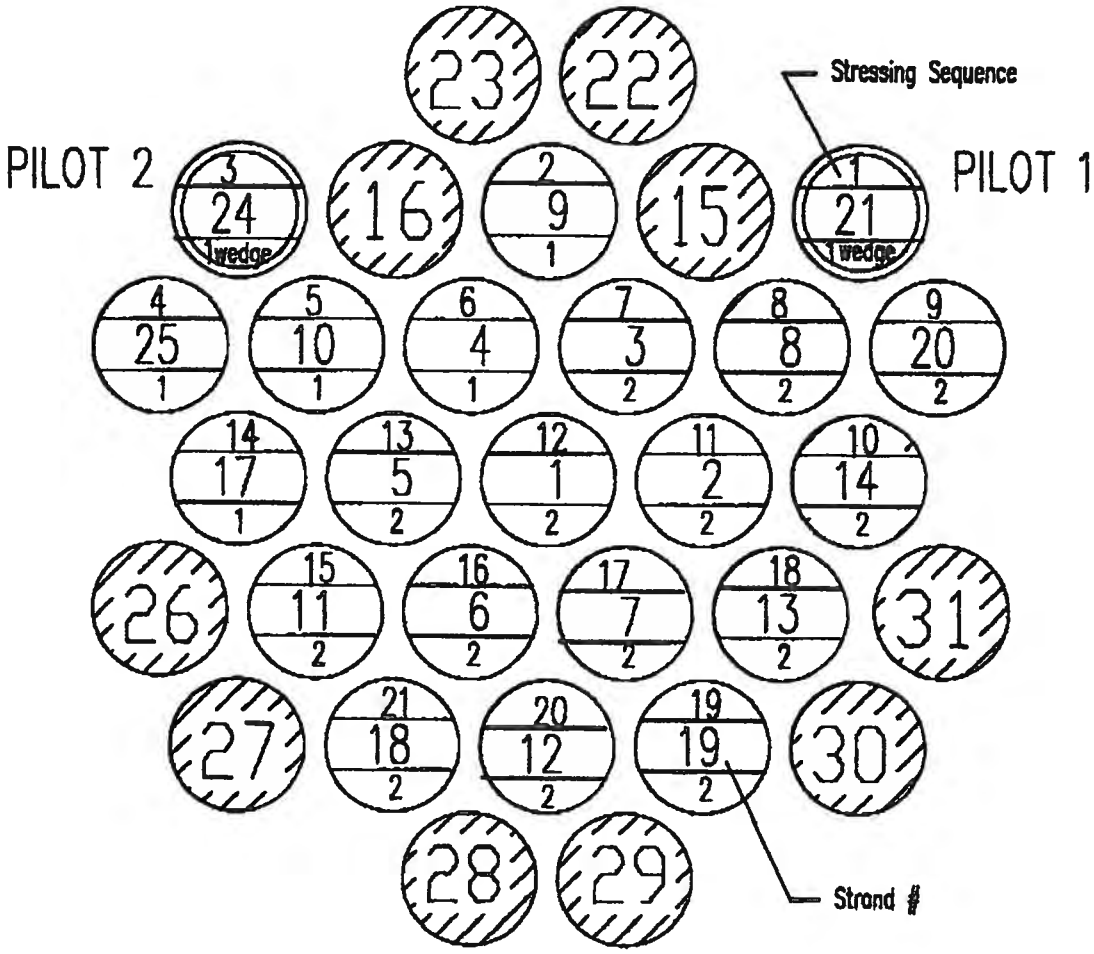

1.) SET PILOT @ 21 stress 9,24,25,10,4,17

2.) SET PILOT @ 24 stress 3,8,20,14,2,1,5,11, 6,7,13,19,12,18

Stay 5-S:

DYWIDAG SYSTEMS INTERNATIONAL USA, Inc.	DIMENSIONS: INCH [mm] mm FOR REFERENCE ONLY	QUALITY PLAN NUMBER:	DRAWING NUMBER EA - 04
6TH STREET BRIDGE STAY 5N STRESSING AND INSTALLATION		REV. DATE NAME	
DATE: 02-08-02 DRAWN: EA MODIFIED: SL ON 4-22-02			
		DYWIDAG-SYSTEMS INTERNATIONAL, USA, INC. DSI	

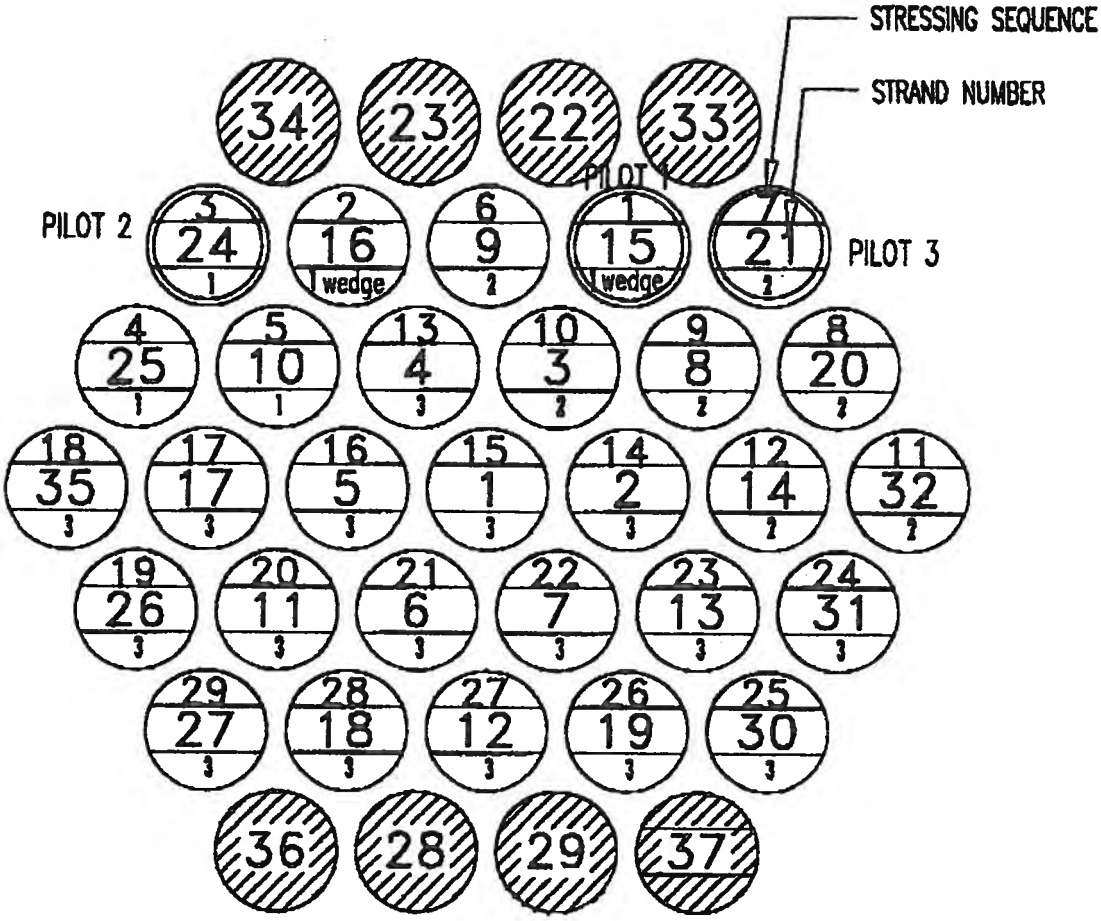

1.) SET PILOT @ 15 stress 16,24,25,10

2.) SET PILOT @ 24 stress 9,21,20,8,3,32,14

2.) SET PILOT @ 21 stress 4,2,1,5,17,35,26,11,
6,7,13,31,30,19,12,18,27

Stay 9-S:

DYWIDAG SYSTEMS INTERNATIONAL USA, Inc.	DIMENSIONS: INCH [mm] mm FOR REFERENCE ONLY	QUALITY PLAN NUMBER:	DRAWING NUMBER EA - 05
6TH STREET BRIDGE STAY 9N STRESSING AND INSTALLATION		REV. DATE NAME	
DATE: 02-06-02 DRAWN: E.A. MODIFIED: S.L. ON 04-22-02			
		DYWIDAG-SYSTEMS INTERNATIONAL, USA, INC. DSI	

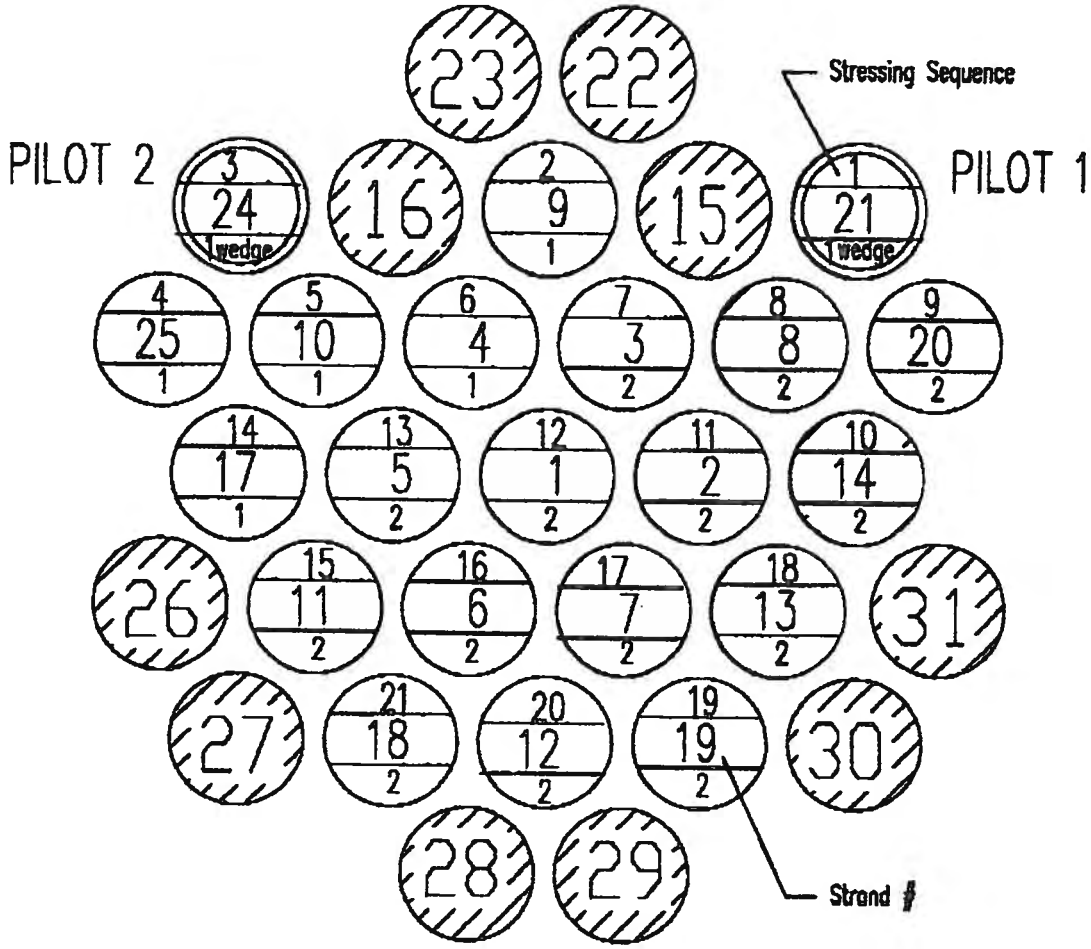

1.) SET PILOT @ 21 stress 9,24,25,10,4,17

2.) SET PILOT @ 24 stress 3,8,20,14,2,1,5,11, 6,7,13,19,12,18

Stay 4-S:

DYWIDAG SYSTEMS INTERNATIONAL USA, Inc.	DIMENSIONS: INCH [mm] mm FOR REFERENCE ONLY	QUALITY PLAN NUMBER:	DRAWING NUMBER EA - 06
6TH STREET BRIDGE STAY 4N STRESSING AND INSTALLATION		REV. / DATE / NAME	
DATE: 02-03-02 DRAWN: E.A. MODIFIED: S.L ON 4-22-02			
		DYWIDAG-SYSTEMS INTERNATIONAL, USA, INC. DSI	

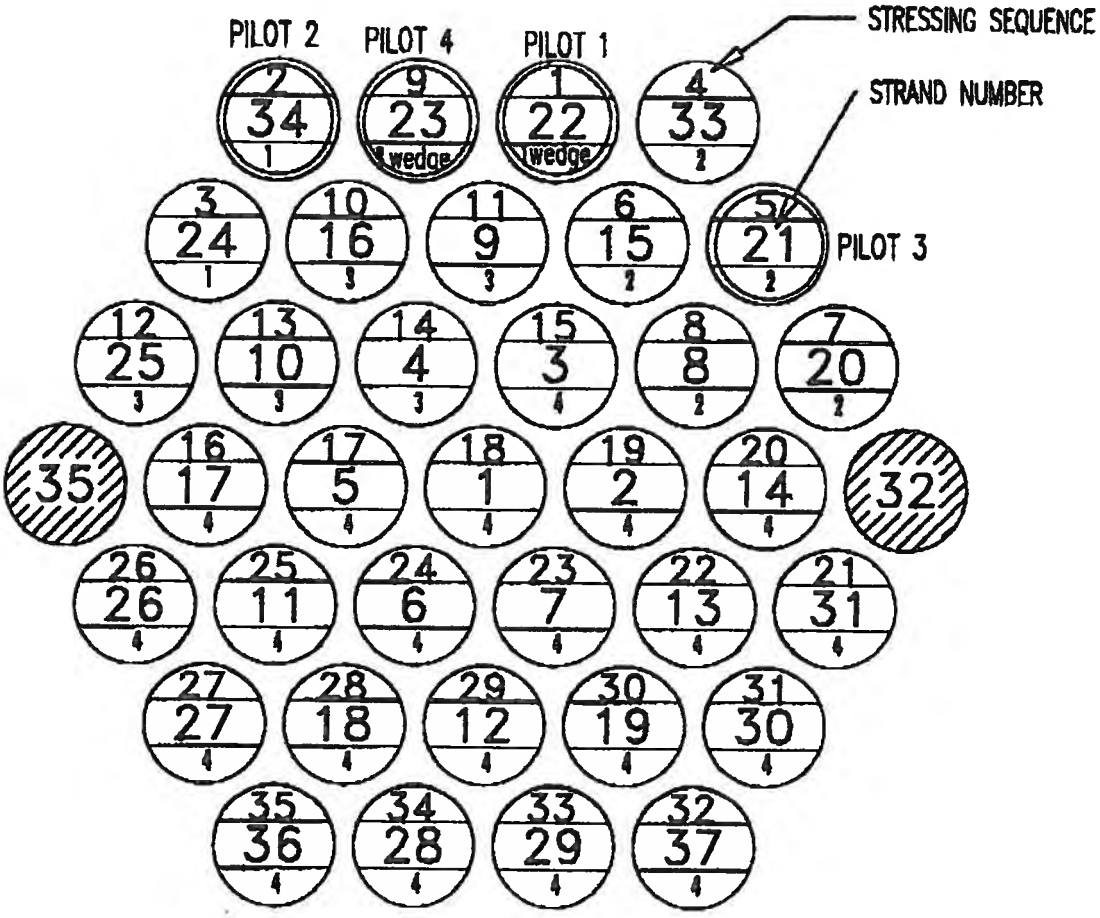

1.) SET PILOT @ 22 stress 34,24

2.) SET PILOT @ 34 stress 33,21,15,20,8

3.) SET PILOT @ 21 stress 23,16,9,25,10,4

4.) SET PILOT @ 23 stress 3,17,5,1,2,14,31, 13,7,6,11,26,27,18,12,19,30,37,29,28,36

Stay 10-S:

DYWIDAG SYSTEMS INTERNATIONAL USA, Inc.	DIMENSIONS: INCH [mm] mm FOR REFERENCE ONLY	QUALITY PLAN NUMBER:	DRAWING NUMBER EA - 07
6TH STREET BRIDGE STAY 10N STRESSING AND INSTALLATION		REV. DATE NAME	
DATE: 02-08-02 DRAWN: EA MODIFIED: S.L ON 04-22-02			
		DYWIDAG-SYSTEMS INTERNATIONAL, USA, INC. DSI	

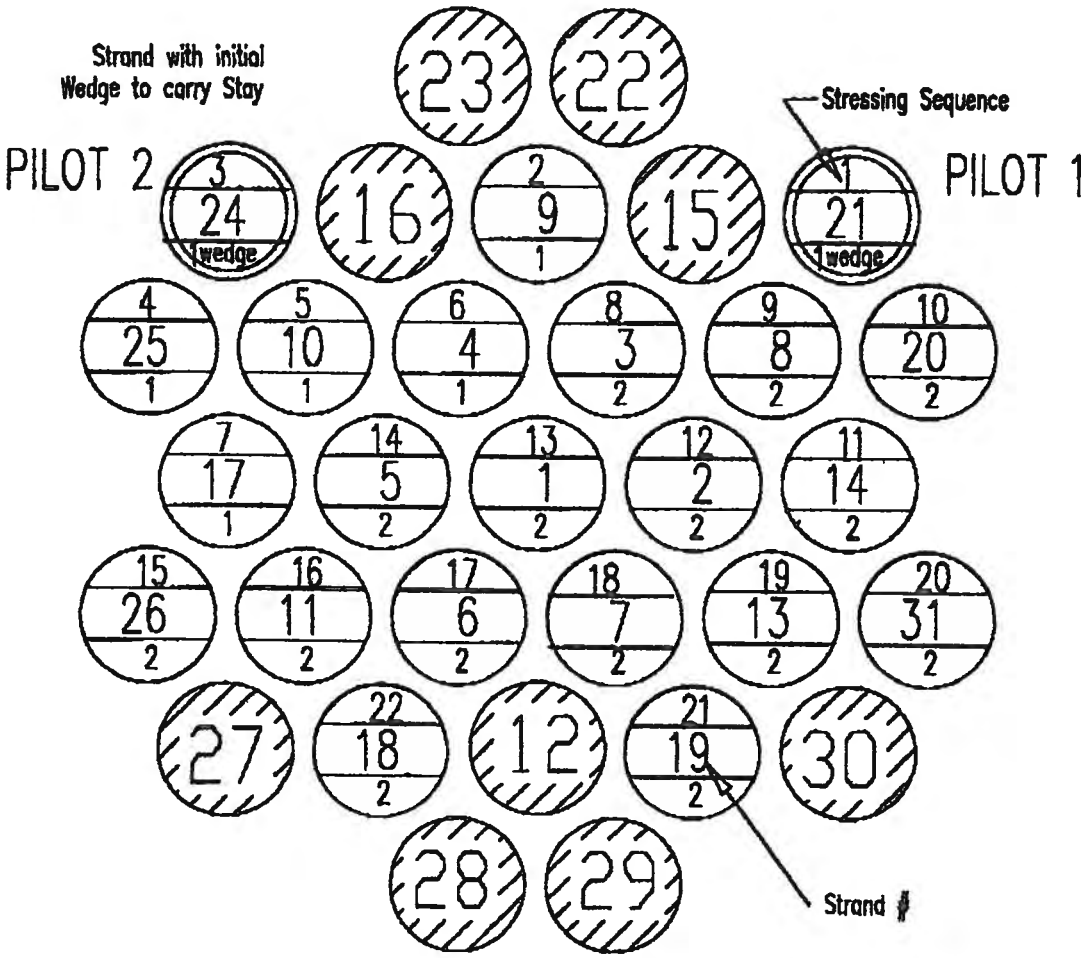

1.) SET PILOT @ 21 stress 9,24,25,10,4,17

2.) SET PILOT @ 24 stress 3,8,20,14,2,1,5,26,11, 6,7,13,31,19,18

Stay 3-S:

DYWIDAG SYSTEMS INTERNATIONAL USA, Inc.	DIMENSIONS: INCH [mm] mm FOR REFERENCE ONLY	QUALITY PLAN NUMBER:	DRAWING NUMBER EA - 08
6TH STREET BRIDGE STAY 3N STRESSING AND INSTALLATION		REV. DATE NAME	
DATE: 02-08-02 DRAWN: E.A. MODIFIED: S.I. ON 4-22-02			
		DYWIDAG-SYSTEMS INTERNATIONAL, USA, INC. DSI	

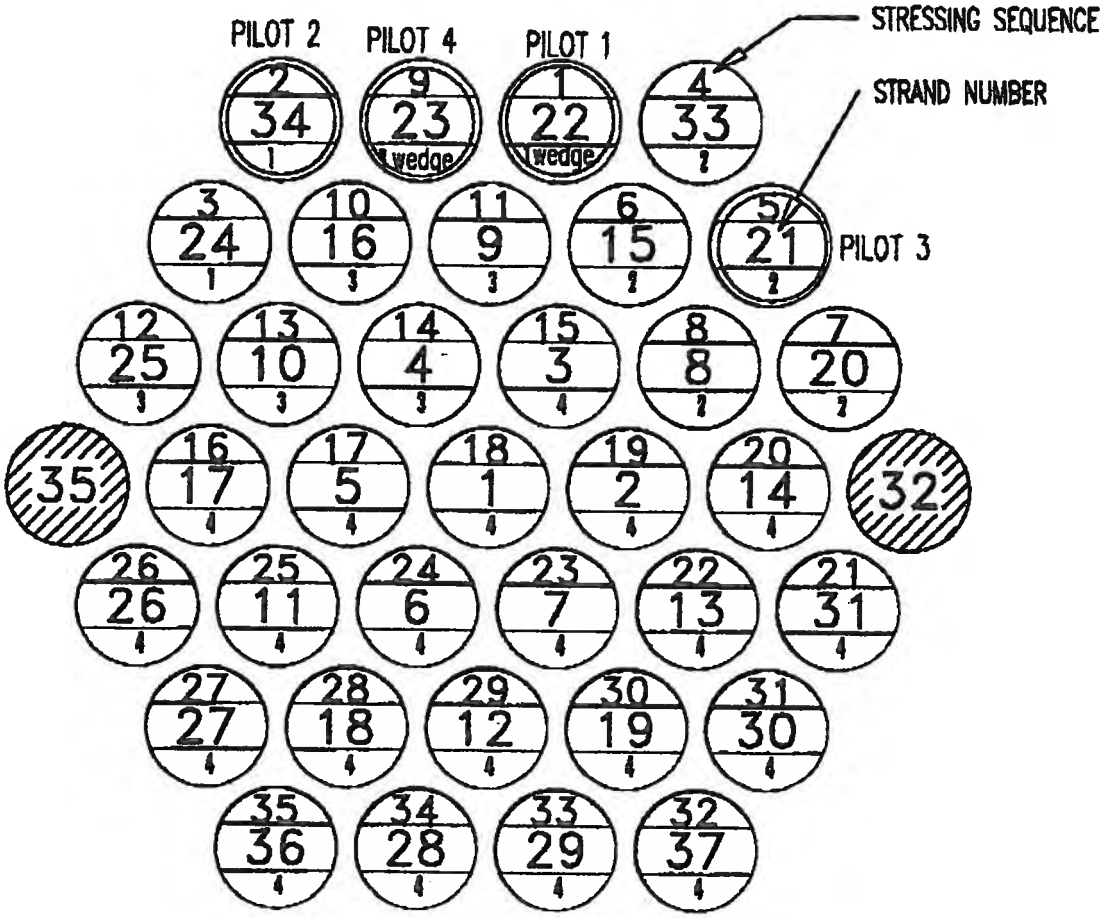

1.) SET PILOT @ 22 stress 34,24

2.) SET PILOT @ 34 stress 33,21,15,20,8

3.) SET PILOT @ 21 stress 23,16,9,25,10,4

4.) SET PILOT @ 23 stress 3,17,5,1,2,14,31, 13,7,6,11,26,27,18,12,19,30,37,29,28,36

Stay 11-S:

DYWIDAG SYSTEMS INTERNATIONAL USA, Inc.	DIMENSIONS: INCH [mm] mm FOR REFERENCE ONLY	QUALITY PLAN NUMBER:	DRAWING NUMBER EA - 09
6TH STREET BRIDGE STAY 11N STRESSING AND INSTALLATION		REV. DATE NAME	
DATE: 02-06-02 DRAWN: EA MODIFIED: S.I. ON 04-22-02			
		DYWIDAG-SYSTEMS INTERNATIONAL, USA, INC. DSI	

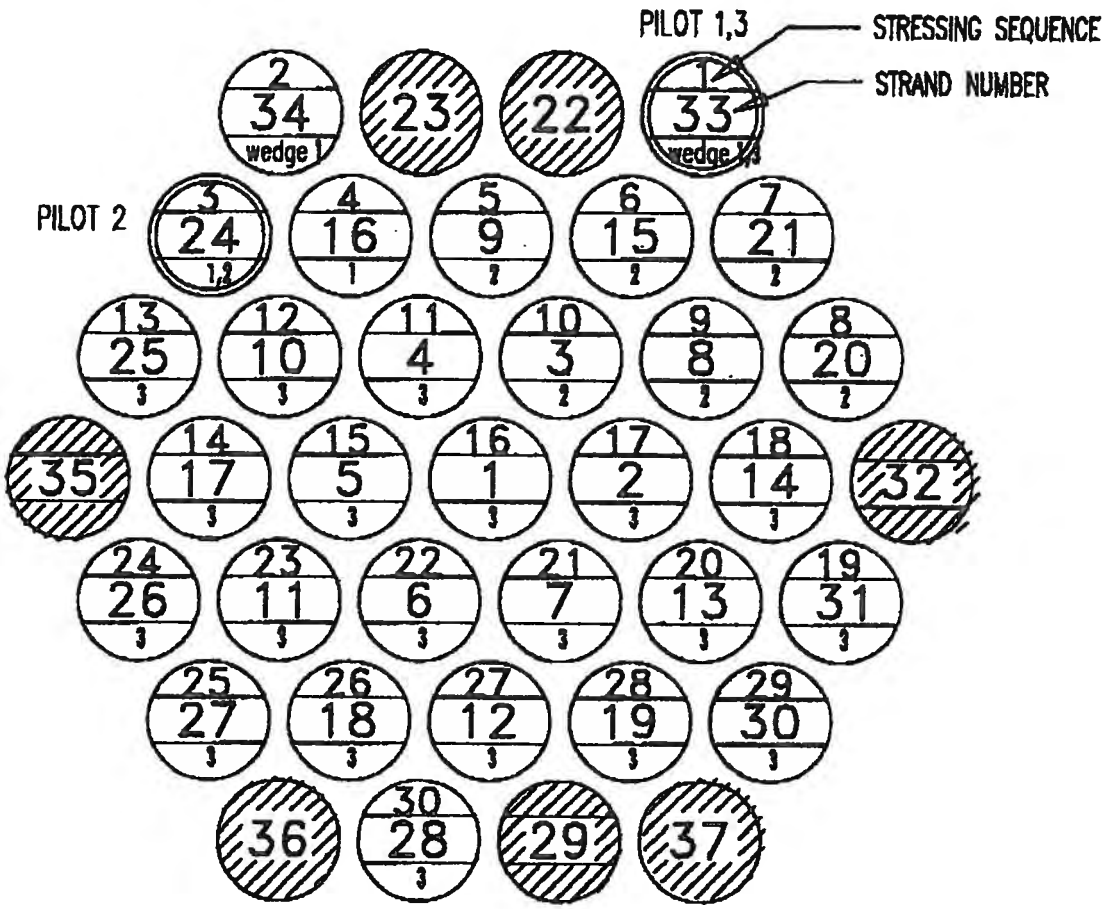

1.) SET PILOT @ 33 stress 34,24,16

2.) SET PILOT @ 24 stress 9,15,21,20,8,3

3.) SET PILOT @ 33 stress 4,10,25,17,5,1,2,14,31, 13,7,6,11,26,27,18,12,19,30,28

Stay 2-S:

DYWIDAG SYSTEMS INTERNATIONAL USA, Inc.	DIMENSIONS: INCH (mm) mm FOR REFERENCE ONLY	QUALITY PLAN NUMBER:	DRAWING NUMBER EA - 10
6TH STREET BRIDGE STAY 2N STRESSING AND INSTALLATION		REV. DATE NAME	
DATE: 02-05-02 DRAWN: E.A. MODIFIED: S.L. ON 04-22-02			
		DYWIDAG-SYSTEMS INTERNATIONAL, USA, INC. DSI	

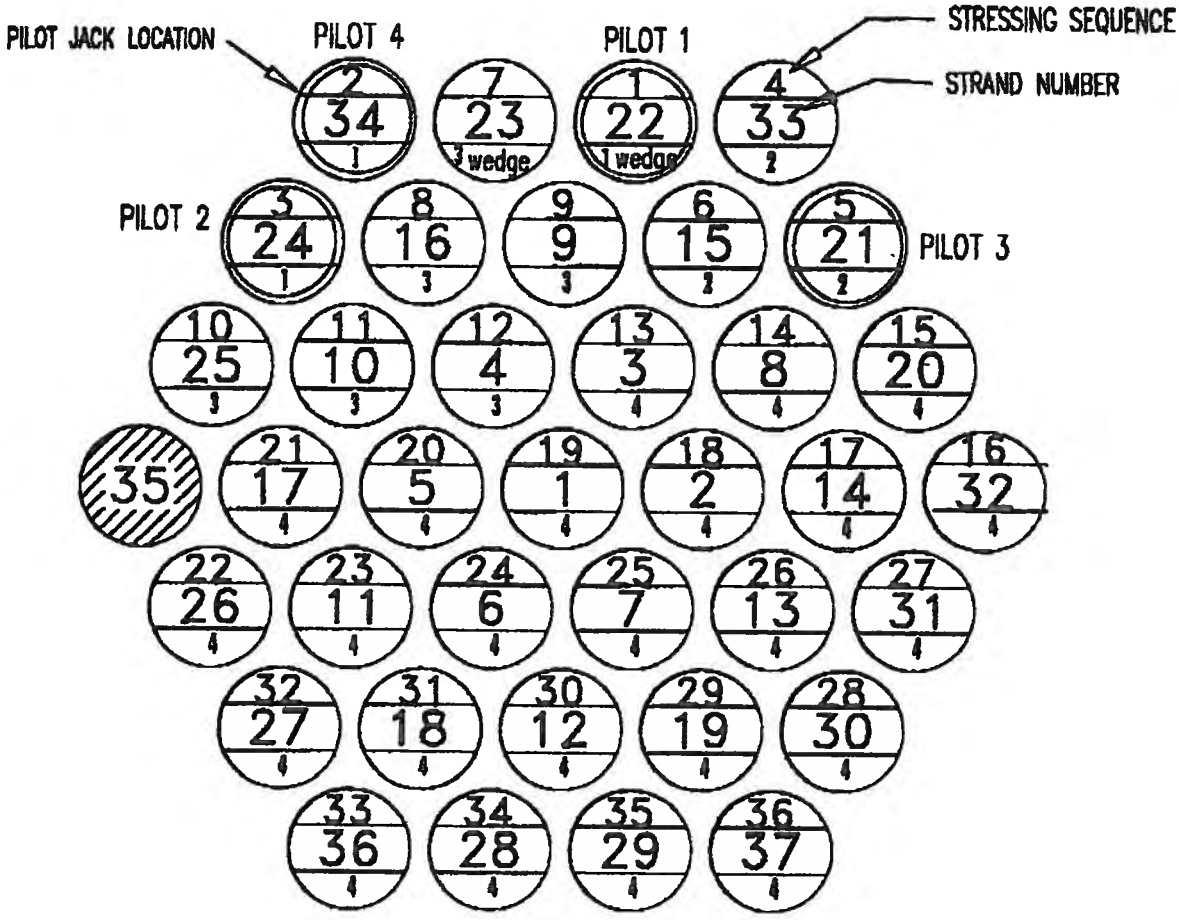

1.) SET PILOT @ 22 stress 34,24

2.) SET PILOT @ 24 stress 33,21,15

3.) SET PILOT @ 21 stress 23,16,9,25,10,4

4.) SET PILOT @ 34 stress 3,8,20,32,14,2,1,5,17,26,11
6,7,13,31,30,19,12,18,27,36,28,29,37

Stay 12-S:

DYWIDAG SYSTEMS INTERNATIONAL USA, Inc.	DIMENSIONS: INCH (mm) mm FOR REFERENCE ONLY	QUALITY PLAN NUMBER:	DRAWING NUMBER
6TH STREET BRIDGE STAY 12N STRESSING AND INSTALLATION		REV. DATE NAME	EA - 11
DATE: 02-06-02 DRAWN: EA MODIFIED: SL ON 04-05-02			
		DYWIDAG-SYSTEMS INTERNATIONAL, USA, INC. DSI	

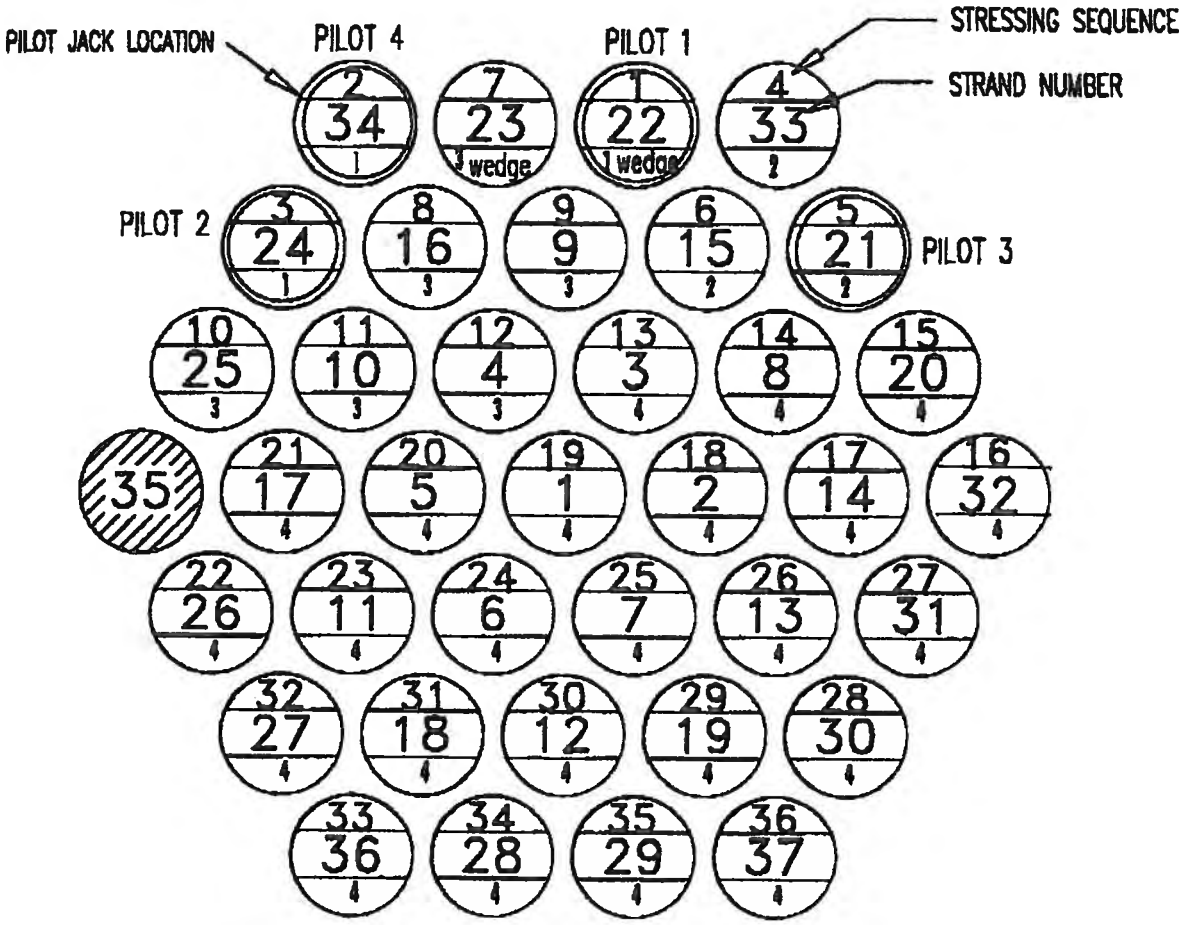

1.) SET PILOT @ 22 stress 34,24

2.) SET PILOT @ 24 stress 33,21,15

3.) SET PILOT @ 21 stress 23,16,9,25,10,4

4.) SET PILOT @ 34 stress 3,8,20,32,14,2,1,5,17,26,11
6,7,13,31,30,19,12,18,27,36,28,29,37

Stay 1-S:

DYWIDAG SYSTEMS INTERNATIONAL USA, Inc.	DIMENSIONS: INCH [mm] mm FOR REFERENCE ONLY	QUALITY PLAN NUMBER:	DRAWING NUMBER EA - 12
6TH STREET BRIDGE STAY 1N STRESSING AND INSTALLATION		REV. DATE NAME	
DATE: 02-06-02 DRAWN: E.A. MODIFIED: S.L ON 04-22-02			
		DYWIDAG-SYSTEMS INTERNATIONAL, USA, INC. DSI	

Post Blocking Procedure for North Bridge:

All wedges shall be post-blocked after the final stay adjustment is performed and the overall geometry is satisfactory. The post-blocking force will raise the force in the wedges to the equivalent to 50% of GUTS. This will provide the additional assurance that the wedges are fully engaged and properly seated. The following procedure shall be used for post-blocking:

1. Prepare the strands by cutting the tails to the required length.
2. Clean-off the anchor from all cutting dust, use compressed air.
3. Install the post-blocking chair.
4. Insert the plunger over the strand to be post-blocked.
5. Install the center hole ram and apply the pressure for the post-blocking force.
6. Monitor the wedge movement.
7. Proceed with the next strand.

Post Blocking Forces

Stay #:	Cable Type	Strands #	Stay Force kips	Stress Level ksi	Percent (%)	Post Blocking Level ksi	Post Blocking Force/Strand kips
1N	37	35	790.0	104.0	38.52	135	6.7
2N	37	33	785.0	109.6	40.60	135	5.5
3N	31	23	560.0	112.2	41.56	135	4.9
4N	31	23	500.0	100.2	37.10	135	7.6
5N	31	22	390.0	81.7	30.26	135	11.6
6N	31	19	340.0	82.5	30.54	135	11.4
7N	31	12	315.0	121.0	44.80	135	3.0
8N	31	26	720.0	127.6	47.26	135	1.6
9N	37	30	770.0	118.3	43.81	135	3.6
10N	37	36	840.0	107.5	39.82	135	6.0
11N	37	35	770.0	101.4	37.55	135	7.3
12N	37	37	800.0	99.6	36.90	135	7.7

Post Blocking Procedure for South Bridge:

All wedges shall be post-blocked after the final stay adjustment is performed and the overall geometry is satisfactory. The post-blocking force will raise the force in the wedges to the equivalent to 50% of GUTS. This will provide the additional assurance that the wedges are fully engaged and properly seated. The following procedure shall be used for post-blocking:

1. Prepare the strands by cutting the tails to the required length.
2. Clean-off the anchor from all cutting dust, use compressed air.
3. Install the post-blocking chair.
4. Insert the plunger over the strand to be post-blocked.
5. Install the center hole ram and apply the pressure for the post-blocking force.
6. Monitor the wedge movement.
7. Proceed with the next strand.

Post Blocking Forces

Stay #:	Cable Type	Strands #	Stay Force kips	Stress Level ksi	Percent (%)	Post Blocking Level ksi	Post Blocking Force/Strand kips
S1	37	36	834	106.8	39.54	135	6.1
S2	37	30	742	114.0	42.21	135	4.6
S3	31	22	534	111.9	41.43	135	5.0
S4	31	21	430	94.4	34.95	135	8.8
S5	31	21	359	78.8	29.18	135	12.2
S6	31	18	290	74.2	27.50	135	13.2
S7	31	13	373	132.2	48.97	135	0.6*
S8	31	27	708	120.8	44.76	135	3.1
S9	37	29	695	110.4	40.90	135	5.3
S10	37	35	803	105.7	39.16	135	6.4
S11	37	35	780	102.7	38.04	135	7.0
S12	37	36	790	101.1	37.45	135	7.4

*** Use minimum 1.5 kips**

Cable Clamp Installation Procedure:

Cable clamps will be installed near the top and bottom exit pipes on each cable after the cable force and geometry are approved. The DSI three part clamping system will be used. The following basic procedure will be used for clamp installation:

1. Expose the strand to be clamped by moving the PE sleeve up or down to the length of cable needed.
2. Place the temporary hydraulic clamp/jack on the top and bottom of the area to be clamped.
3. Pressurize the temporary jack to compress the strands.
4. Install the required spacers. This will vary depending on the number of strands.
5. Place the three wedges of the clamp system on the strands. Make sure the wedges are equally spaced on the strands.
6. Install the first of three clamping devices on the wedges.
7. Tighten the bolt securing the clamping device to the wedges.
8. Repeat steps 6 and 7 until all three of the tightening devices are installed.
9. Remove temporary clamp/jack.
10. Proceed with next clamp installation location.

The top clamps cannot be installed until the dampers are installed on the bottom clamps.

Damper Procedure:

Dampers will be installed around the bottom clamping system on each cable only. The damper fits around the clamp system and inside the exit pipes. Each damper is custom made so it is imperative to place individual dampers in the correct location. The following procedure will be used for damper manufacture and installation:

1. Measure damper dimensions for each cable after three part clamping system is in place. Measure diameter, circumference, and eccentricity of the clamp in the exit pipe.
2. Send dimensions to DSI for shop drawings and fabrication.
3. Install dampers.
4. Place rubber wafers around clamping system. The top of each wafer will be marked to ensure proper alignment of damper.
5. Insert through bolts in holes in damper wafers.
6. Place nuts on bottom side of bolt.
7. Install wing nut on the bolt on the topside of the wafer.
8. Repeat steps 5-7 for the remaining bolt holes.
9. Slide the exit pipe over the damper assembly to its bolt up location.
10. Bolt the exit pipe to the bridge deck.
11. Tighten the wing nuts on the damper assembly to compress the rubber wafers to make a tight seal with the inside of the exit pipe.
12. Connect the exit pipe to the PE pipe.
13. Proceed with the next cable.

Note: Measurements can be taken on more than one clamp system and submitted to DSI at a time.

February 1, 2002

6th St. Cable Stay Installation Safety Policy

The following procedures must be followed while installing Cables on Pylon:

Prior to the commencement of work that day: All interested parties will conduct a pre-work safety meeting which will include: (1) Personnel responsible for the picking and installation (crane operator, lift operator, installer), (2) weights of load and proper rigging, (3) signals from crane operator to foreman, and the "zone of safety." "Zone of safety" will be diameter around operation where loads will not pass through as well as ongoing stressing operations. (4) Flagging procedures for all pedestrian and railroad traffic. –notification to railroad prior to stressing for their flagging procedures.

A. While installing cables, **Aerial Lift Safety Practices** will be followed.

1. The lift will be operated by qualified personnel only.
2. Daily inspection on the lift will be completed before operation –(refer to inspection sheet in lifts on site.)
3. To avoid falls always wear a full body harness and maintain 100% continuous tie-off using a shock absorbing lanyard.
4. Do not lift cables with aerial lift like a crane.
5. Do not exceed the manufactures rated platform capacity- refer to the mechanical capacity indicator and identified load rating. Calculate the weight in the basket, including employees and equipment.
6. Area in the lift area will be clear of employees, including overhead loads.

B. Picking the Load

1. Operator has right of refusal for picking the load. If he is uncomfortable with rigging, he may shut load down until load is secure for the lift.

2. Visually inspect rigging prior to operation. Make sure it is able to carry the load.

3. Only authorized personnel will be allowed on deck while operation is ongoing.

C. Stressing Cables

1. Refer to previous 6th St. Post Tension Safety Policy.

Questions concerning safety procedures refer to:

Bill Belongea (262) 366-9557
Gary Kaas (715) 797-0701
Chris Urech (262) 366-5357

6th Street Bridge – Milwaukee, WI

31 and 37-0.6"
DYNA GRIP
type I/II
Stay Cable System

© 2001 DYWIDAG-Systems International, U.S.A., Inc.

Drawing Index

6th Street

Drawing No.		Description	ASTM	Material	Rev.	Status
		Anchors				
092 031 2701	092 037 2701	anchor block, live end			1 and 1	
092 031 2711	092 037 2711	anchor block, fixed end			1 and 1	
092 031 2702	092 037 2702	ring nut			2 and 2	
092 031 2709	092 037 2709	keeper plate			1 and 1	
		Deviation				
092 031 2721	092 037 2721	Neoprene sealing plate				
092 031 2722	092 037 2722	Spacer plate				
092 031 2723	092 037 2723	Steel compression plate			1 and 1	
	092 000 2724	Steel high strength tension bolts, live end				
	092 000 2725	Steel high strength tension bolts, fixed end				
	092 000 2726	Sealing plate plug				prelim.
		Sheathing				
	092 000 2731	Transition cover			1	
	092 000 2732	PE Flange, girder			1	
	092 000 2733	PE Sleeve, girder			1	
	092 000 2734	PE Transition tube			1	
	092 000 2735	PE Tube			1	
	092 000 2736	PE Collar			1	
	092 000 2737	PE Sleeve, tower			1	
	092 000 2738	PE Flange, tower			1	
	092 000 2739	Steel anti-vandalism tube			2	
	092 000 2740	O-Ring girder			1	
	092 000 2741	O-Ring tower			1	
	092 000 2742	Flange ring, tower			1	
	092 000 2744	Transition cover hardware				obsolete
	092 000 2745	S.S. Clamps			1	
	092 000 2746	Sealing boot			1	
		Cable clamps and dampers				
	092 000 2750	Cable clamp			1	prelim.
	092 000 2753	Neoprene vibration damper				
		Sealing caps				
092 031 2704	092 037 2704	Sealing cap, live end			1 and 1	
092 031 2714	092 037 2714	Sealing cap, fixed end			1 and 1	
092 031 2703	092 037 2703	Sealing cap gasket				
		Assembly				
	CH-2019N	Tower pipe assembly, north			2	
	CH-2019B	Tower pipe assembly, south			1	
	CH-2019N	Girder pipe assembly, north			1	
	CH-2019S	Girder pipe assembly, south			1	
	CH-2023	Weld detail mating plates			1	
	CH-2047	PE Tube assembly			1	
	CH-2048	Overall cable layout			2	
	CH-2080	Anchor assembly, live end			1	
	CH-2081	Anchor assembly, fixed end			1	
	Bolts 6th Street	Bolt list				12/13/2001
		Strand				
	68 00 5942	Compression tube for Installation				
	68 00 0064	0.6" wedge-only wedge			1	
	302663	0.6" waxed and sheathed strand				prelim.
		Testing				
	CH- ...	test set up 31-0.6" axial / fatigue				
	CH- ...	test set up 37-0.6" axial / fatigue				

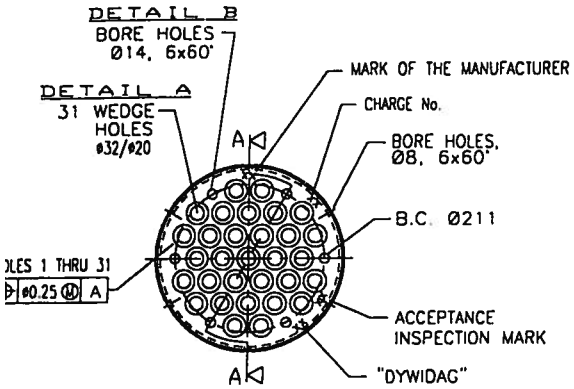

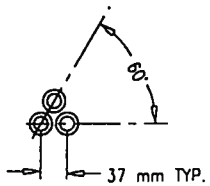

WEDGE HOLE PATTERN
(FOR REFERENCE ONLY)

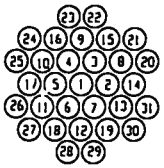

HOLE COORDINATES		
	X (mm)	Y (mm)
1	0.00	0.00
2	37.00	0.00
3	18.50	32.04
4	- 18.50	32.04
5	- 37.00	0.00
6	- 18.50	- 32.04
7	18.50	- 32.04
8	55.50	32.04
9	0.00	64.08
10	- 55.50	32.04
11	- 55.50	- 32.04
12	0.00	- 64.08
13	55.50	- 32.04
14	74.00	0.00
15	37.00	64.08
16	- 37.00	64.08
17	- 74.00	0.00
18	- 37.00	- 64.08
19	37.00	- 64.08
20	92.50	32.04
21	74.00	64.08
22	18.50	96.13
23	- 18.50	96.13
24	- 74.00	64.08
25	- 92.50	32.04
26	- 92.50	- 32.04
27	- 74.00	- 64.08
28	- 18.50	- 96.13
29	18.50	- 96.13
30	74.00	- 64.08
31	92.50	- 32.04

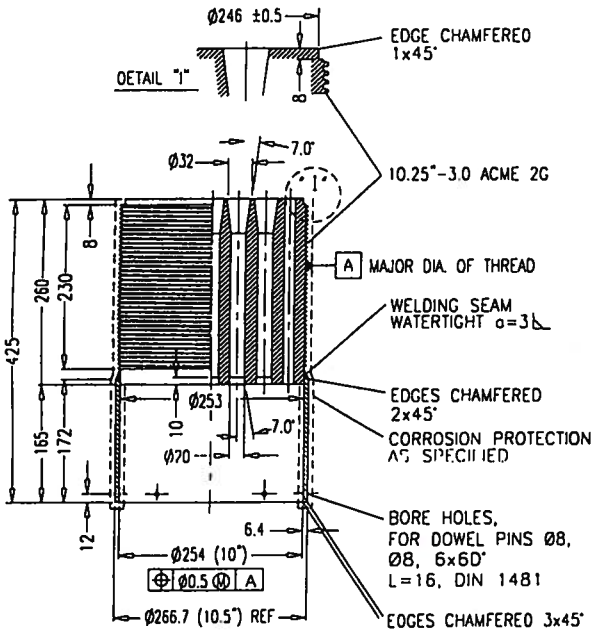

TOLERANCES ACC. MANUFACTURING SUPERVISION AND BORE COORDINATES TABLE.

SECTION A-A

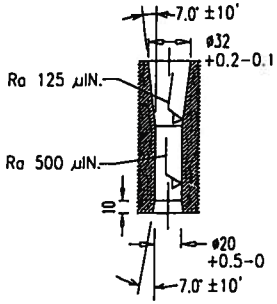

DETAIL A

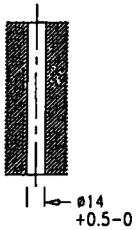

DETAIL B

10.25"-3.0 ACME 2G				
DIAMETER	MINOR	PITCH	MAJOR	
MINIMUM MAXIMUM	9.842" 9.897"	10.021" 10.058"	10.233" 10.250"	EXTERNAL THREAD WEDGE PLATE
MINIMUM MAXIMUM	9.917" 9.933"	10.083" 10.120"	10.270" 10.290"	INTERNAL THREAD RING NUT

PIPE: ASTM A513
WEDGE PLATE: ASTM A29, AISI C1045 BAR
NORMALIZED TO: fy,min. = 54 KSI
fu,min. = 85 KSI

1 — WEIGHT ADDED.

DYWIDAG CABLE SYSTEMS	DIMENSIONS: mm SCALE mm (in)	Q.A.	QUALITY PLAN NUMBER	PART NUMBER 092 031 2701
31-0.6" DYNA GRIP ANCHOR TYPE I STRESSING END 6TH ST. BRIDGE	TOLERANCES: ± 0.5 UNLESS NOTED	WEIGHT 790 LBS.	REV. 1 / DATE 10-31-01 / NAME H.K.	
DATE: 09-13-01 / DWG: R. SHARMA / CHK: H.K. / APP: K.S.	MATERIAL: SEE ABOVE	SCALE 1:7		DRAWING NUMBER 092 031 2701
This drawing, the pertinent enclosures, descriptions, calculations etc. and their contents are the property of DYWIDAG SYSTEMS INTERNATIONAL, USA, INC. They are not allowed to be duplicated with-out our permission. They are also not to be shown or explained for any reason to a third party other than for reasons expressly intended by the original receiver. They have to be returned on request.	DYWIDAG-SYSTEMS INTERNATIONAL, USA, INC. DSI			

REDUCED COPY

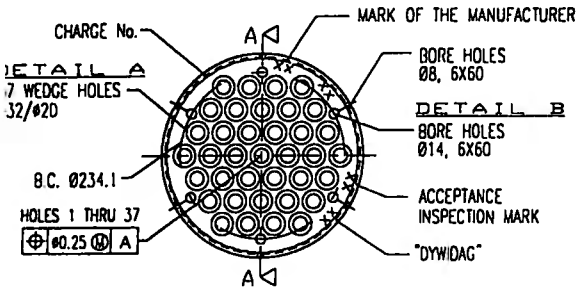

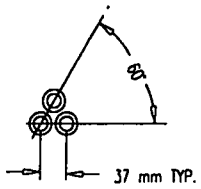

WEDGE HOLE PATTERN
(FOR REFERENCE ONLY)

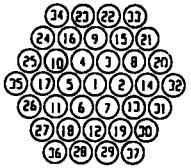

HOLE COORDINATES		
	X (mm)	Y (mm)
1	0.00	0.00
2	37.00	0.00
3	18.50	32.04
4	- 18.50	32.04
5	- 37.00	0.00
6	- 18.50	- 32.04
7	18.50	- 32.04
8	55.50	32.04
9	0.00	64.08
10	- 55.50	32.04
11	- 55.50	- 32.04
12	0.00	- 64.08
13	55.50	- 32.04
14	74.00	0.00
15	37.00	64.08
16	- 37.00	64.08
17	- 74.00	0.00
18	- 37.00	- 64.08
19	37.00	- 64.08
20	92.50	32.04
21	74.00	64.08
22	18.50	96.13
23	- 18.50	96.13
24	- 74.00	64.08
25	- 92.50	32.04
26	- 92.50	- 32.04
27	- 74.00	- 64.08
28	- 18.50	- 96.13
29	18.50	- 96.13
30	74.00	- 64.08
31	92.50	- 32.04
32	111.00	0.00
33	55.50	96.13
34	- 55.50	96.13
35	- 111.00	0.00
36	- 55.50	- 96.13
37	55.50	- 96.13

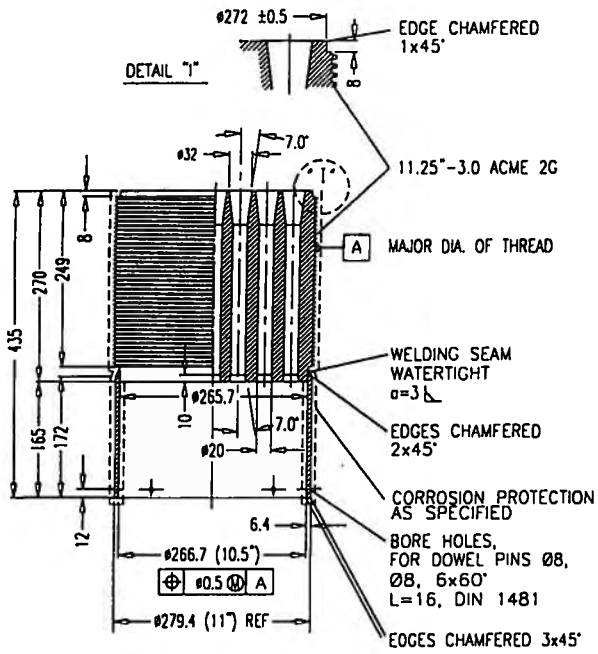

TOLERANCES ACC. MANUFACTURING SUPERVISION AND BORE COORDINATES TABLE.

SECTION A-A

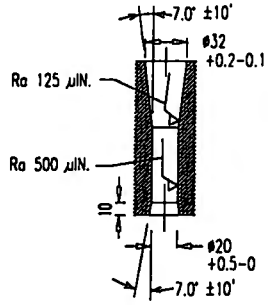

DETAIL A

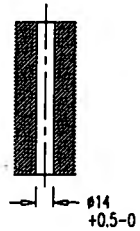

DETAIL B

11.25"-3.0 ACME 2G				
DIAMETER	MINOR	PITCH	MAJOR	
MINIMUM MAXIMUM	10.840" 10.897"	11.019" 11.057"	11.233" 11.250"	EXTERNAL THREAD WEDGE PLATE
MINIMUM MAXIMUM	10.917" 10.933"	11.083" 11.121"	11.270" 11.290"	INTERNAL THREAD RING NUT

MATERIAL:
PIPE: ASTM A513
WEDGE PLATE: ASTM A29, AISI C1045 BAR
NORMALIZED TO: fy,min. = 54 KSI
fu,min. = 85 KSI

1 → WEIGHT ADDED.

DYWIDAG CABLE SYSTEMS	DIMENSIONS: mm SCALE mm (in)	O.A.	QUALITY PLAN NUMBER				PART NUMBER 092 037 2701
37-0.6" DYNA GRIP ANCHOR TYPE I, STRESSING END 6TH ST. BRIDGE	TOLERANCES: ± 0.5 UNLESS NOTED	WEIGHT 290 LBS.	REV.	DATE	NAME		
DATE: 09-21-01 DWG: G. MALECKI CHK: H.K. APP: K.S.	MATERIAL: SEE ABOVE	SCALE 1:7	1	10-31-01	H.K.		DRAWING NUMBER 092 037 2701

This drawing, the pertinent enclosures, descriptions, calculations etc. and their contents are the property of DYWIDAG SYSTEMS INTERNATIONAL, USA, INC. They are not allowed to be duplicated without our permission. They are also not to be shown or explained for any reason to a third party other than for reasons expressly intended by the original receiver. They have to be returned on request.

DYWIDAG-SYSTEMS INTERNATIONAL, USA, INC. DSI

REDUCED COPY

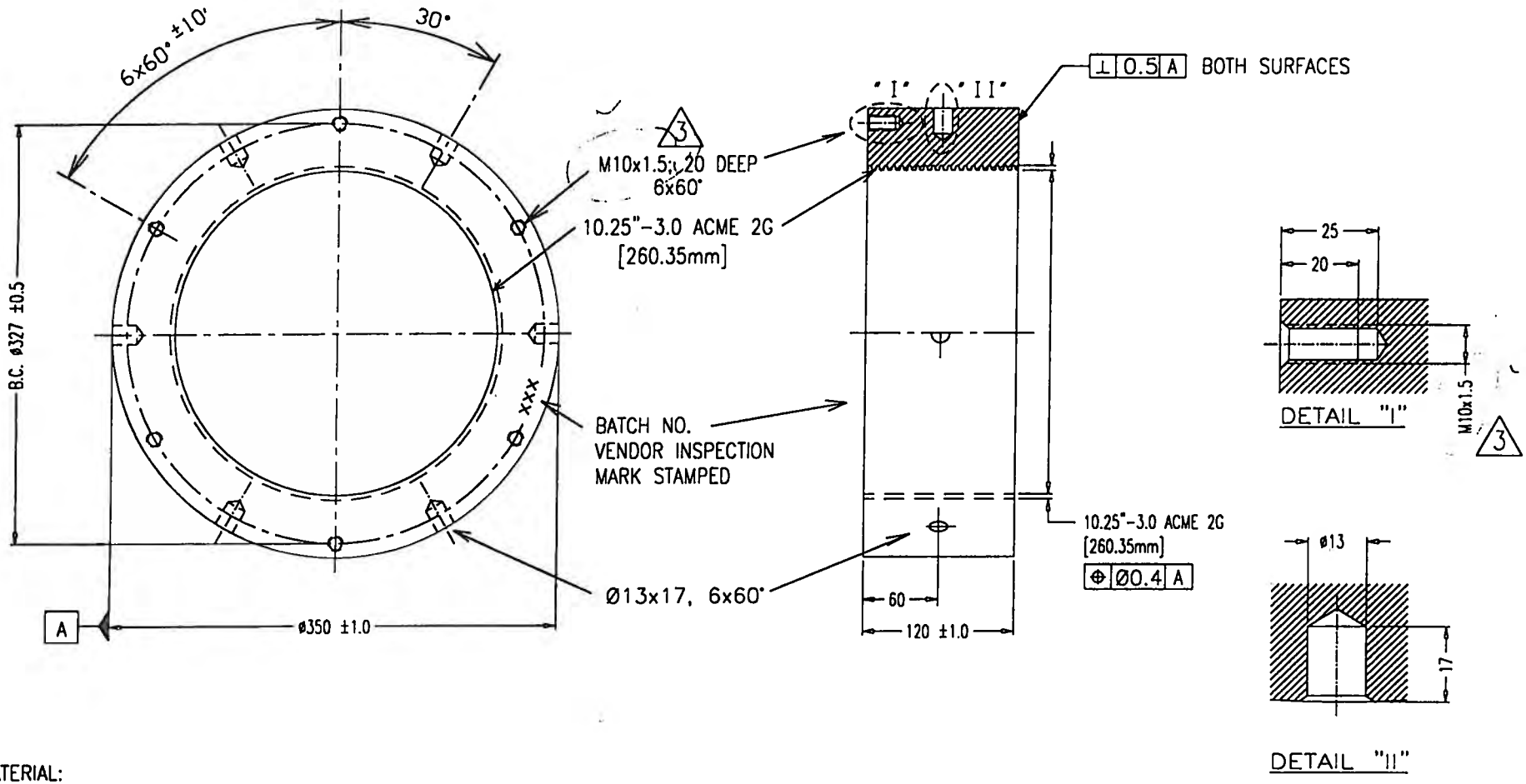

MATERIAL:
ASTM A29
AISI C1045 RING
NORMALIZED TO fy,min. = 45 ksi

DYWIDAG CABLE SYSTEMS			DIMENSIONS: mm	O.A.	QUALITY PLAN NUMBER:			PART NUMBER 092 031 2702
31-0.6" RING NUT 6TH ST. BRIDGE			TOLERANCE: ±0.5 UNLESS NOTED	WEIGHT 89.5 LBS.	REV.	DATE	NAME	
					1	Sept. 18, 2001	HFK	
					2	10-30-01	H.K.	
DATE: 08-29-01	DWG: G. MALECKI	CHK: H.K.	APP: K.S.	MATERIAL: SEE ABOVE	SCALE 1:5	3	H.K.	
This drawing, the pertinent enclossures, descriptions, calculations etc. and their contents are the property of DYWIDAG SYSTEMS INTERNATIONAL, USA, INC. They are not allowed to be duplicated with-out our permission. They are also not to be shown or explained for any reason to a third party other than for reasons expressly intended by the original receiver. They have to be returned on request.								DRAWING NUMBER 092 031 2702
DYWIDAG-SYSTEMS INTERNATIONAL, USA, INC.								

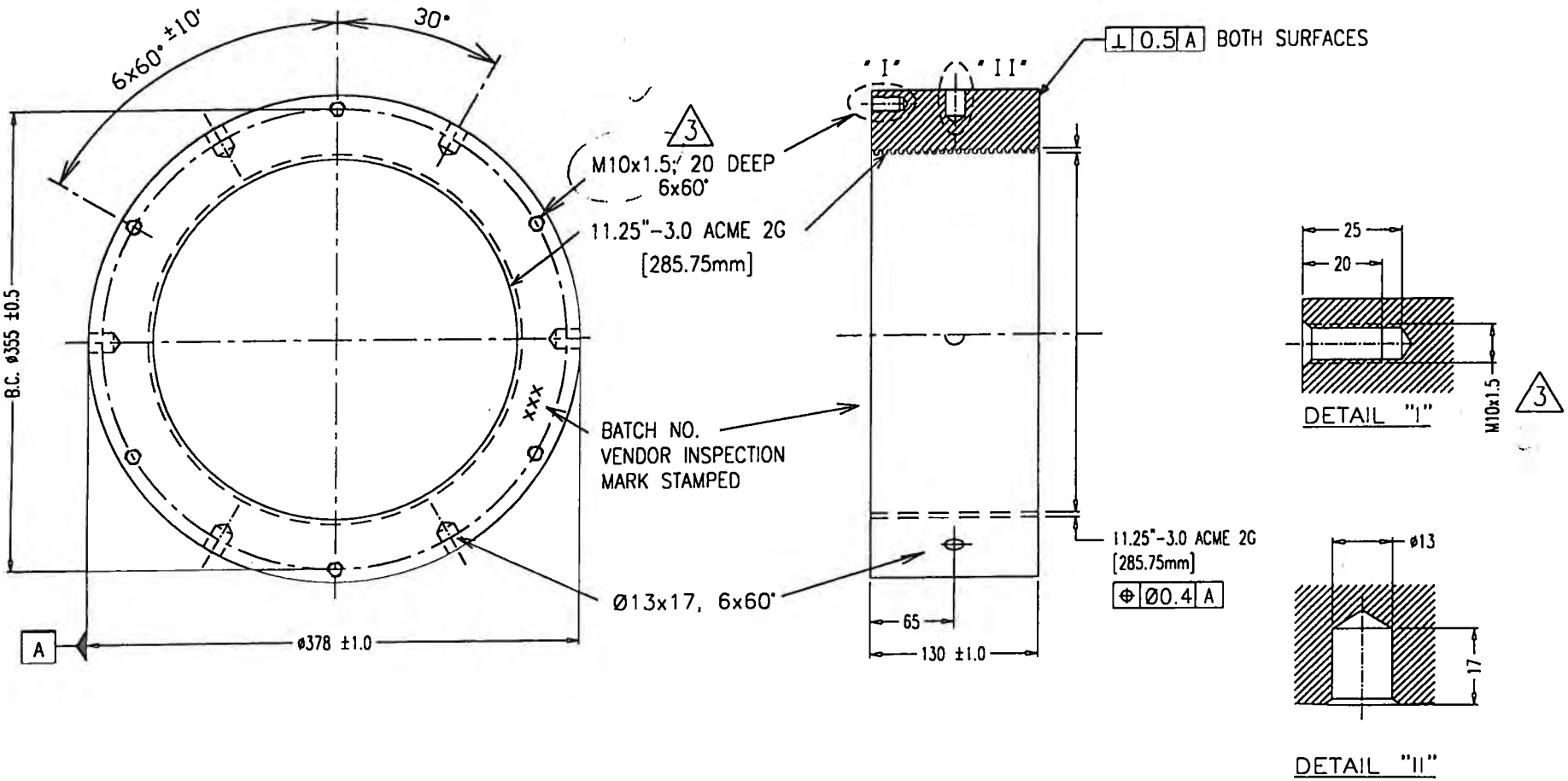

MATERIAL:
ASTM A29
AISI C1045 RING
NORMALIZED TO fy,min. = 45 ksi

DYWIDAG CABLE SYSTEMS	DIMENSIONS: mm	O.A.	QUALITY PLAN NUMBER:				PART NUMBER 092 037 2702
37-0.6" RING NUT 6TH ST. BRIDGE	TOLERANCE: ±0.5 UNLESS NOTED	WEIGHT 108.2 LBS.	REV.	DATE	NAME		
			1	Sept. 18, 2001	HFK		
			2	10-30-01	H.K.		
DATE: 08-29-01 / DWG: G. MALECKI / CHK: / APP:	MATERIAL: ASTM A668 GR F	SCALE 1:5	3		H.K.		
This drawing, the pertinent enclossures, descriptions, calculations etc. and their contents are the property of DYWIDAG SYSTEMS INTERNATIONAL, USA, INC. They are not allowed to be duplicated with-out our permission. They are also not to be shown or explained for any reason to a third party other than for reasons expressly intended by the original receiver. They have to be returned on request.							DRAWING NUMBER 092 037 2702
	DYWIDAG-SYSTEMS INTERNATIONAL, USA, INC. DSI						

X

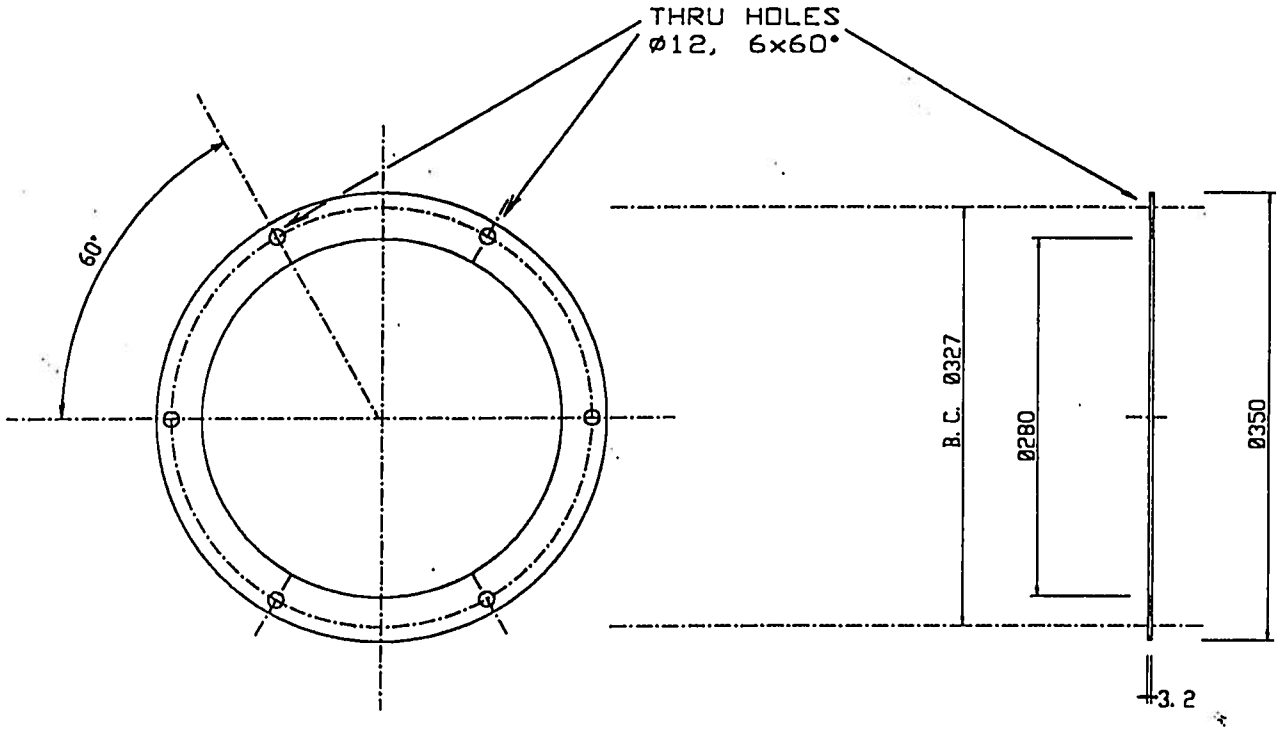

DYWIDAG CABLE SYSTEMS	DIMENSIONS: [mm]	Q.A.	QUALITY PLAN NUMBER:				PART NUMBER 092 031 2703
31-0.6" SEALING CAP GASKET 6TH ST. BRIDGE	TOLERANCES: ±0.5 UNLESS NOTED	WEIGHT 0.44 LBS.	REV.	DATE	NAME		
DATE: 10-01-01 / DWG: R. SHARMA / CHK: H.F.K. / APP: K.S.	BUNA, BLACK 60±5 DUROMETER ASTM-D2000 1BF609	SCALE					DRAWING NUMBER 092 031 2703
This drawing, the pertinent enclossures, descriptions, calculations etc. and their contents are the property of DYWIDAG SYSTEMS INTERNATIONAL, USA, INC. They are not allowed to be duplicated with-out our permission. They are also not to be shown or explained for any reason to a third party other than for reasons expressly intended by the original receiver. They have to be returned on request.	DYWIDAG-SYSTEMS INTERNATIONAL, USA, INC. DSI						

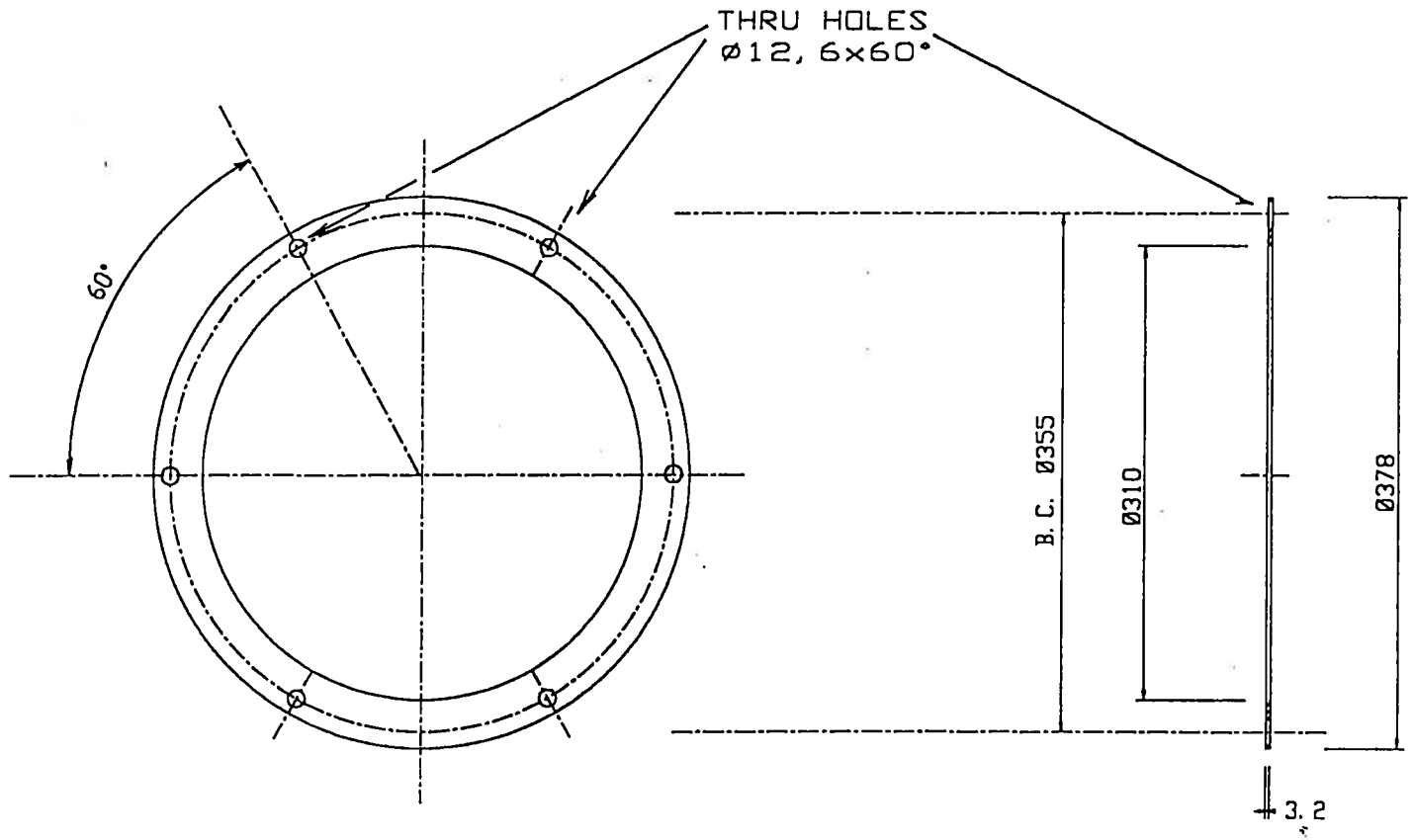

DYWIDAG CABLE SYSTEMS	DIMENSIONS: (mm)	Q.A.	QUALITY PLAN NUMBER:	PART NUMBER 092 037 2703
37-0.6" SEALING CAP GASKET 6TH ST. BRIDGE	TOLERANCES: ±0.5 UNLESS NOTED	WEIGHT 0.44 LBS.	REV. / DATE / NAME	
DATE: 10-01-01 / DWG: R. SHARMA / CHK: HFK / APP: KS	BUNA, BLACK 60±5 DUROMETER ASTM-D2000 1BF609	SCALE		DRAWING NUMBER 092 037 2703
This drawing, the pertinent enclossures, descriptions, calculations etc. and their contents are the property of DYWIDAG SYSTEMS INTERNATIONAL, USA, INC. They are not allowed to be duplicated with-out our permission. They are also not to be shown or explained for any reason to a third party other than for reasons expressly intended by the original receiver. They have to be returned on request.	DYWIDAG-SYSTEMS INTERNATIONAL, USA, INC.			

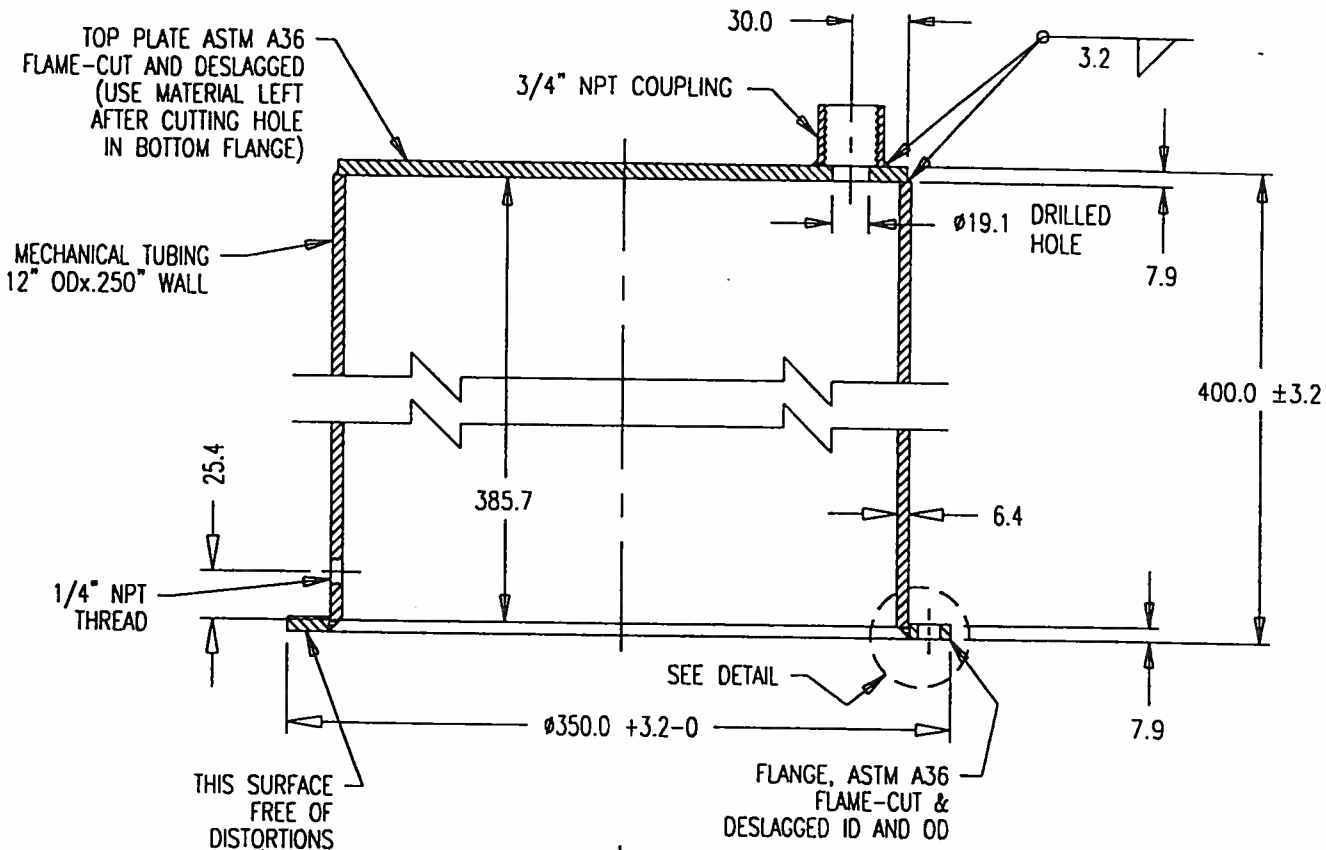

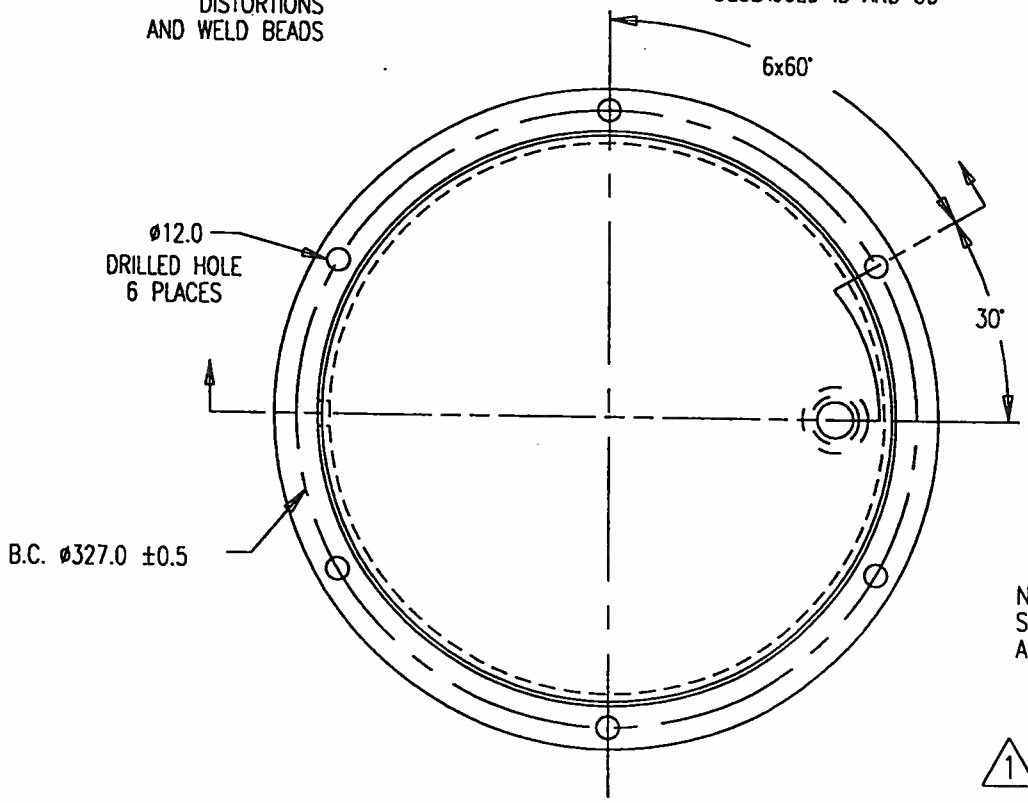

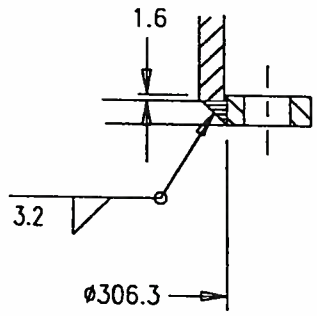

DETAIL
SCALE: NTS

NOTE:
SEALING CAP IS GALVANIZED
ACCORDING TO ASTM A123.

1 → WEIGHT ADDED.

DYWIDAG CABLE SYSTEMS	DIMENSIONS: mm	O.A.	QUALITY PLAN NUMBER:			PART NUMBER 092 031 2704
31-0.6" SEALING CAP A, LIVE END 6TH ST. BRIDGE	TOLERANCES: ±0.5 UNLESS NOTED	WEIGHT 52.7 LBS.	REV. 1	DATE 10-30-01	NAME H.K.	
DATE: 09-28-01 / DWG: R. SHARMA / CHK: H.K. / APP: K.S. (SI)	MATERIAL: SEE ABOVE	SCALE 1:4				DRAWING NUMBER 092 031 2704
DYWIDAG-SYSTEMS INTERNATIONAL, USA, INC.						

This drawing, the pertinent enclossures, descriptions, calculations etc. and their contents are the property of DYWIDAG SYSTEMS INTERNATIONAL, USA, INC. They are not allowed to be duplicated with-out our permission. They are also not to be shown or explained for any reason to a third party other than for reasons expressly intended by the original receiver. They have to be returned on request.

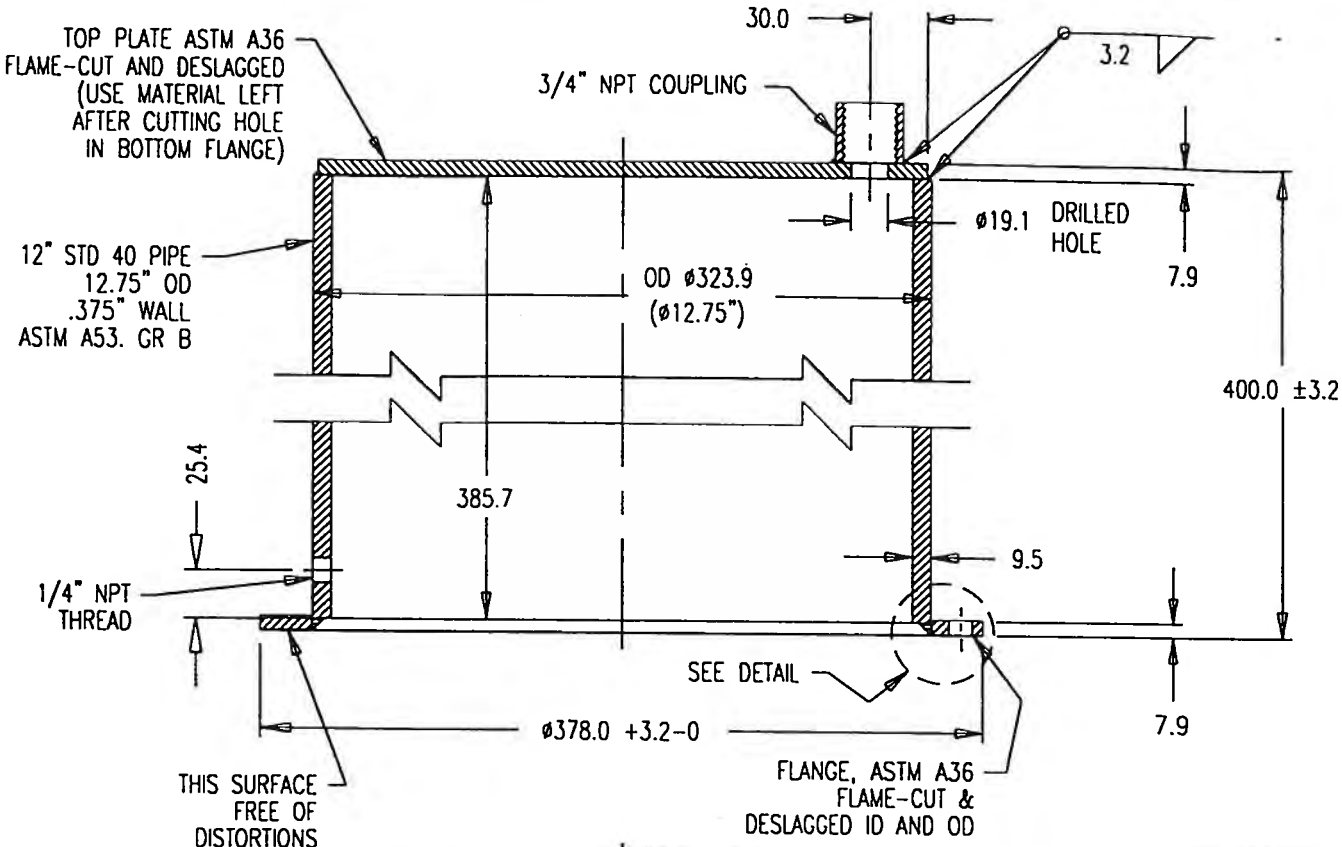

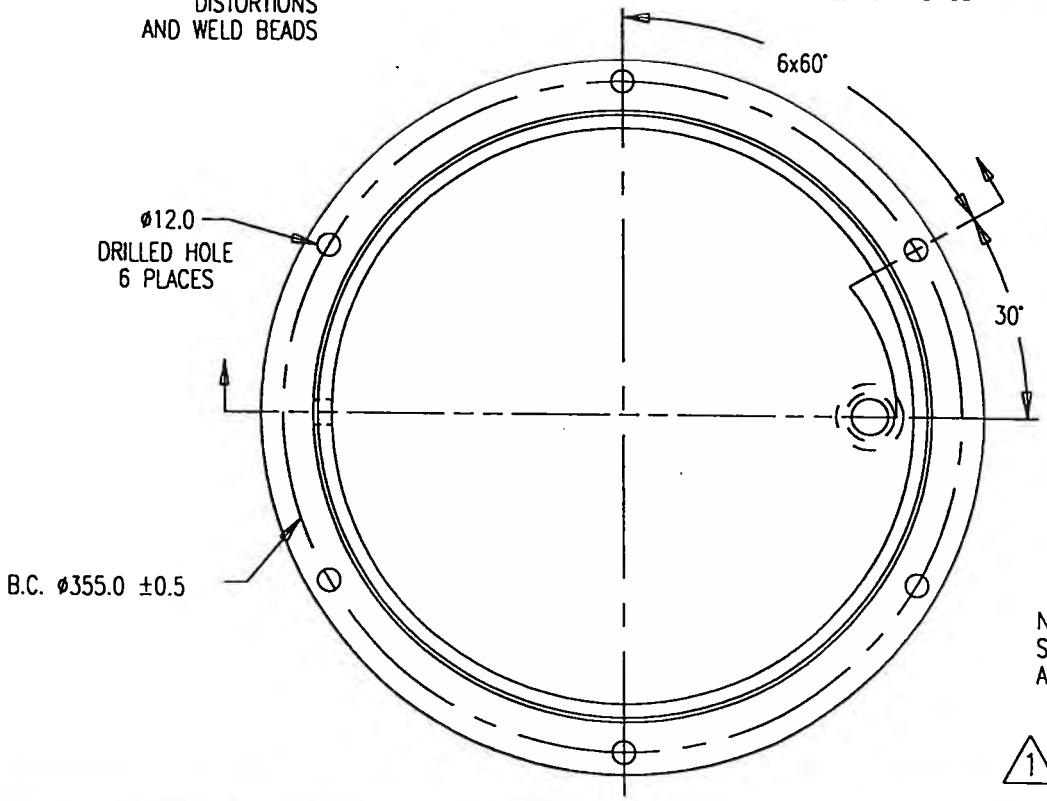

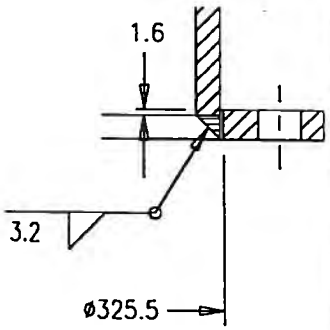

DETAIL
SCALE: NTS

NOTE:
SEALING CAP IS GALVANIZED
ACCORDING TO ASTM A123.

1 → WEIGHT ADDED.

DYWIDAG CABLE SYSTEMS	DIMENSIONS: mm	Q.A.	QUALITY PLAN NUMBER:			PART NUMBER 092 037 2704
37-0.6" SEALING CAP A, LIVE END 6TH ST. BRIDGE	TOLERANCES: ±0.5 UNLESS NOTED	WEIGHT 81.9 LBS.	REV. 1	DATE 10-30-01	NAME H.K.	
DATE: 09-28-01 / DWG: R. SHARMA / CHK: H.K. / APP: K.S.	MATERIAL: SEE ABOVE	SCALE 1:4				DRAWING NUMBER 092 037 2704

This drawing, the pertinent enclossures, descriptions, calculations etc. and their contents are the property of DYWIDAG SYSTEMS INTERNATIONAL, USA, INC. They are not allowed to be duplicated with-out our permission. They are also not to be shown or explained for any reason to a third party other than for reasons expressly intended by the original receiver. They have to be returned on request.

DYWIDAG-SYSTEMS INTERNATIONAL USA INC

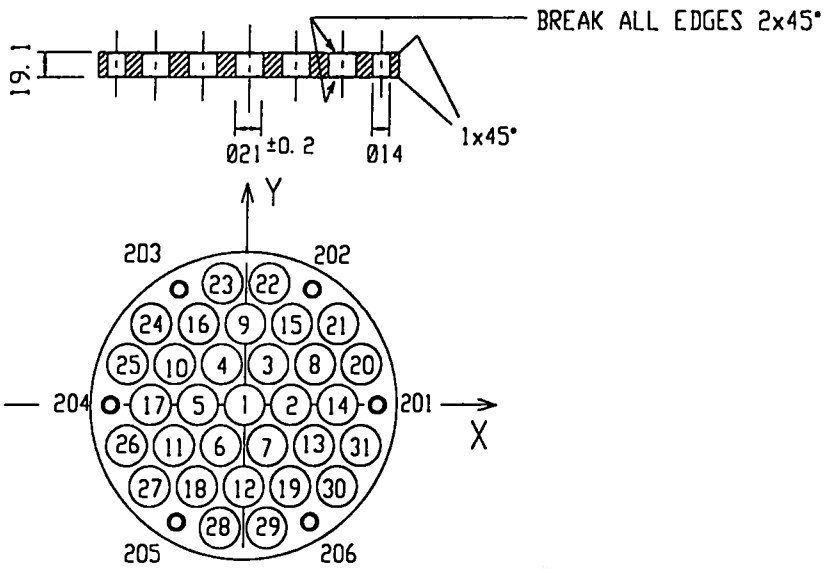

HOLE LOCATION (±0.2mm)					
Pos.	X	Y	Pos.	X	Y
1	0.00	0.00	20	92.50	32.04
2	37.00	0.00	21	74.00	64.08
3	18.50	32.04	22	18.50	96.13
4	-18.50	32.04	23	-18.50	96.13
5	-37.00	0.00	24	-74.00	64.08
6	-18.50	-32.04	25	-92.50	32.04
7	18.50	-32.04	26	-92.50	-32.04
8	55.50	32.04	27	-74.00	-64.09
9	0.00	64.08	28	-18.50	-96.13
10	-55.50	32.04	29	18.50	-96.13
11	-55.50	-32.04	30	74.00	-64.08
12	0.00	-64.08	31	92.50	-32.04
13	55.50	-32.04	201	105.50	0.00
14	74.00	0.00	202	52.75	91.37
15	37.00	64.09	203	-52.75	91.37
16	-37.00	64.09	204	-105.50	0.00
17	-74.00	0.00	205	-52.75	-91.37
18	-37.00	-64.09	206	52.75	-91.37
19	37.00	-64.09			

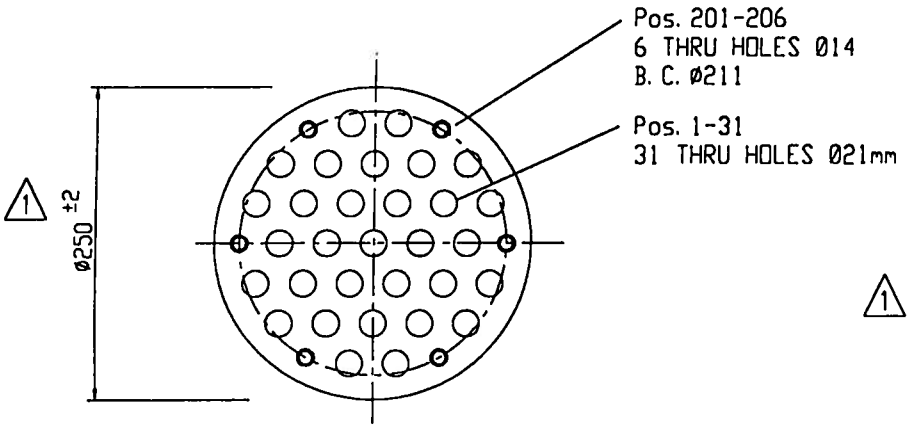

NOTE:
1 PART DIPPED IN BEL-RAY RP-30 FOR CORROSION PROTECTION.

DYWIDAG CABLE SYSTEMS	DIMENSIONS: mm	Q.A.	QUALITY PLAN NUMBER:				PART NUMBER 092 031 2709
31-0.6" KEEPER PLATE 6TH ST. BRIDGE	TOLERANCES: ±0.5 UNLESS NOTED	WEIGHT 11.9 LBS.	REV. 1	DATE 12-01-01	NAME H.K.		
DATE: 10-02-01 DWG: G. MALECKI CHK: H.K. APP: K.S.	MATERIAL: ASTM A36	SCALE NTS					
This drawing, the pertinent enclossures, descriptions, calculations etc. and their contents are the property of DYWIDAG SYSTEMS INTERNATIONAL, USA, INC. They are not allowed to be duplicated with-out our permission. They are also not to be shown or explained for any reason to a third party other than for reasons expressly intended by the original receiver. They have to be returned on request.							DRAWING NUMBER 092 031 2709
	DYWIDAG-SYSTEMS INTERNATIONAL, USA, INC. DSI						

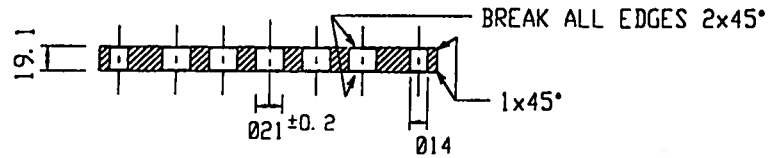

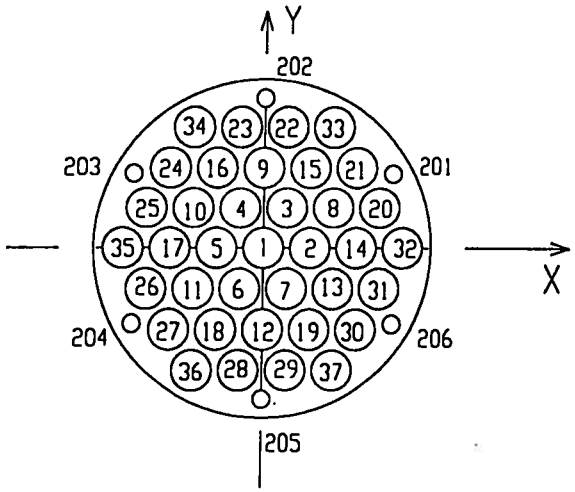

HOLE LOCATION (±0.2mm)					
Pos.	X	Y	Pos.	X	Y
1	0.00	0.00	20	92.50	32.04
2	37.00	0.00	21	74.00	64.08
3	18.50	32.04	22	18.50	96.13
4	- 18.50	32.04	23	- 18.50	96.13
5	- 37.00	0.00	24	- 74.00	64.08
6	- 18.50	- 32.04	25	- 92.50	32.04
7	18.50	- 32.04	26	- 92.50	- 32.04
8	55.50	32.04	27	- 74.00	- 64.09
9	0.00	64.08	28	- 18.50	- 96.13
10	- 55.50	32.04	29	18.50	- 96.13
11	- 55.50	- 32.04	30	74.00	- 64.08
12	0.00	- 64.08	31	92.50	- 32.04
13	55.50	- 32.04	32	111.00	0.00
14	74.00	0.00	33	55.50	96.13
15	37.00	64.09	34	- 55.50	96.13
16	- 37.00	64.09	35	-111.00	0.00
17	- 74.00	0.00	36	- 55.50	- 96.13
18	- 37.00	- 64.09	37	55.50	- 96.13
19	37.00	- 64.09	201	103.06	59.50
			202	0.00	119.00
			203	-103.06	59.50
			204	-103.06	- 59.50
			205	0.00	-119.00
			206	103.06	- 59.50

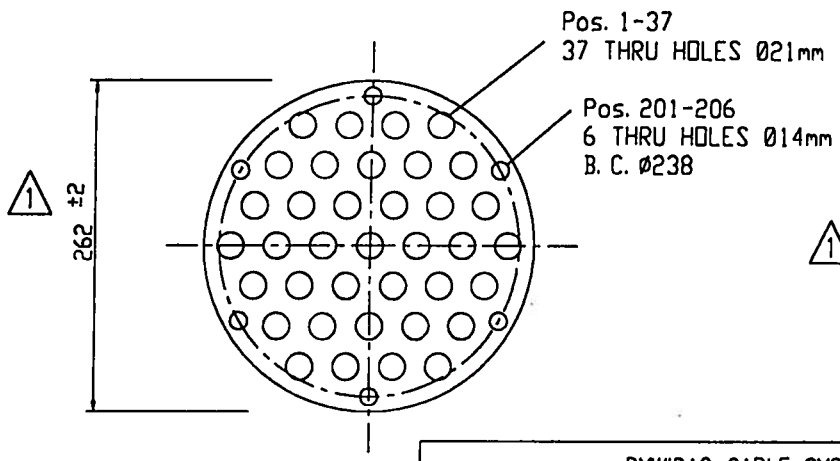

NOTE:
1 PART DIPPED IN BEL-RAY RP-30 FOR CORROSION PROTECTION.

DYWIDAG CABLE SYSTEMS	DIMENSIONS: mm	Q.A.	QUALITY PLAN NUMBER:				PART NUMBER 092 037 2709
37-0.6" KEEPER PLATE 6TH ST. BRIDGE	TOLERANCES: ±0.5 UNLESS NOTED	WEIGHT 15.0 LBS.	REV. 1	DATE 12-01-01	NAME H.K.		
DATE: 10-03-01 DWG: G. MALECKI CHK: H.K. APP: K.S.	MATERIAL: ASTM A36	SCALE NTS					DRAWING NUMBER 092 037 2709

This drawing, the pertinent enclossures, descriptions, calculations etc. and their contents are the property of DYWIDAG SYSTEMS INTERNATIONAL, USA, INC. They are not allowed to be duplicated with-out our permission. They are also not to be shown or explained for any reason to a third party other than for reasons expressly intended by the original receiver. They have to be returned on request.

DYWIDAG-SYSTEMS INTERNATIONAL, USA, INC. DSI

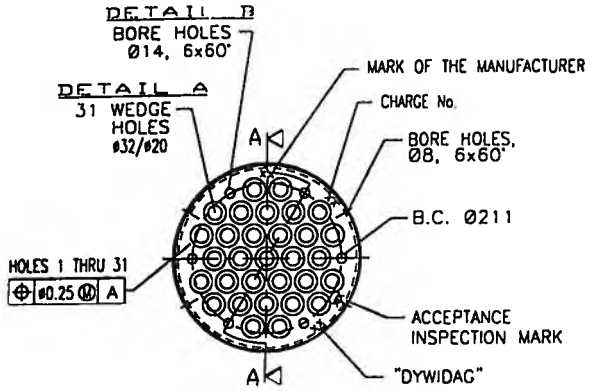

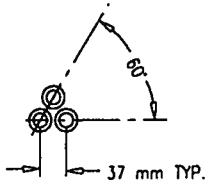

WEDGE HOLE PATTERN
(FOR REFERENCE ONLY)

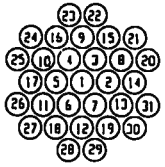

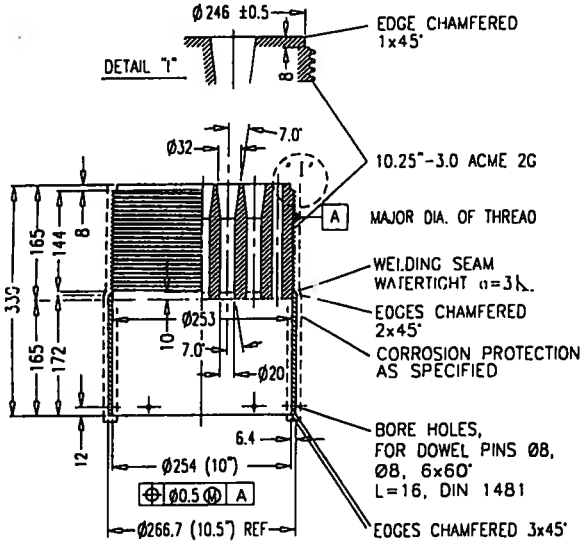

TOLERANCES ACC. MANUFACTURING SUPERVISION AND BORE COORDINATES TABLE.

SECTION A-A

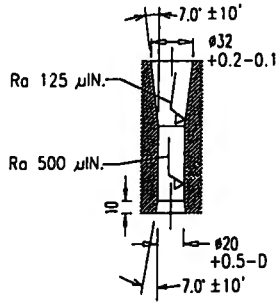

DETAIL A

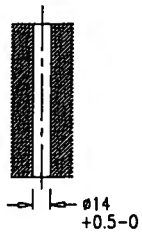

DETAIL B

10.25"-3.0 ACME 2G				
DIAMETER	MINOR	PITCH	MAJOR	
MINIMUM MAXIMUM	9.842" 9.897"	10.021" 10.058"	10.233" 10.250"	EXTERNAL THREAD WEDGE PLATE
MINIMUM MAXIMUM	9.917" 9.933"	10.083" 10.120"	10.270" 10.290"	INTERNAL THREAD RING NUT

MATERIAL:
PIPE: ASTM A513
WEDGE PLATE: ASTM A29, AISI C1045 BAR
NORMALIZED TO: fy,min. = 54 KSI
fu,min. = 85 KSI

HOLE COORDINATES		
	X (mm)	Y (mm)
1	0.00	0.00
2	37.00	0.00
3	18.50	32.04
4	- 18.50	32.04
5	- 37.00	0.00
6	- 18.50	- 32.04
7	18.50	- 32.04
8	55.50	32.04
9	0.00	64.08
10	- 55.50	32.04
11	- 55.50	- 32.04
12	0.00	- 64.08
13	55.50	- 32.04
14	74.00	0.00
15	37.00	64.08
16	- 37.00	64.08
17	- 74.00	0.00
18	- 37.00	- 64.08
19	37.00	- 64.08
20	92.50	32.04
21	74.00	64.08
22	18.50	96.13
23	- 18.50	96.13
24	- 74.00	64.08
25	- 92.50	32.04
26	- 92.50	- 32.04
27	- 74.00	- 64.08
28	- 18.50	- 96.13
29	18.50	- 96.13
30	74.00	- 64.08
31	92.50	- 32.04

1 → WEIGHT ADDED.

DYWIDAG CABLE SYSTEMS	DIMENSIONS: mm SCALE mm (in)	O.A.	QUALITY PLAN NUMBER				PART NUMBER 092 031 2711
31-0.6" DYNA GRIP ANCHOR TYPE II, FIXED END 6TH ST. BRIDGE	TOLERANCES: ± 0.5 UNLESS NOTED	WEIGHT 160 LBS.	REV.	DATE	NAME		
			1	10-31-01	H.K.		
DATE: 09-21-01 / DWG: R. SHARMA / CHK: H.K. / APP: K.S.	MATERIAL: SEE ABOVE	SCALE 1:7					DRAWING NUMBER 092 031 2711

This drawing, the pertinent enclosures, descriptions, calculations etc. and their contents are the property of DYWIDAG SYSTEMS INTERNATIONAL, USA, INC. They are not allowed to be duplicated with-out our permission. They are also not to be shown or explained for any reason to a third party other than for reasons expressly intended by the original receiver. They have to be returned on request.

DYWIDAG-SYSTEMS INTERNATIONAL, USA, INC. DSI

REDUCED COPY

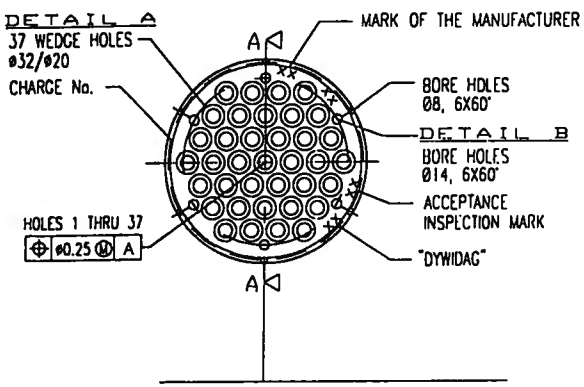

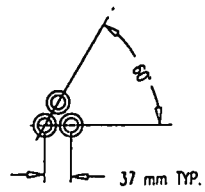

WEDGE HOLE PATTERN
(FOR REFERENCE ONLY)

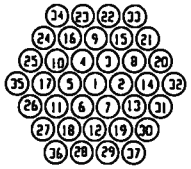

HOLE COORDINATES		
	X (mm)	Y (mm)
1	0.00	0.00
2	37.00	0.00
3	18.50	32.04
4	- 18.50	32.04
5	- 37.00	0.00
6	- 18.50	- 32.04
7	18.50	- 32.04
8	55.50	32.04
9	0.00	64.08
10	- 55.50	32.04
11	- 55.50	- 32.04
12	0.00	- 64.08
13	55.50	- 32.04
14	74.00	0.00
15	37.00	64.08
16	- 37.00	64.08
17	- 74.00	0.00
18	- 37.00	- 64.08
19	37.00	- 64.08
20	92.50	32.04
21	74.00	64.08
22	18.50	96.13
23	- 18.50	96.13
24	- 74.00	64.08
25	- 92.50	32.04
26	- 92.50	- 32.04
27	- 74.00	- 64.08
28	- 18.50	- 96.13
29	18.50	- 96.13
30	74.00	- 64.08
31	92.50	- 32.04
32	111.00	0.00
33	55.50	96.13
34	- 55.50	96.13
35	- 111.00	0.00
36	- 55.50	- 96.13
37	55.50	- 96.13

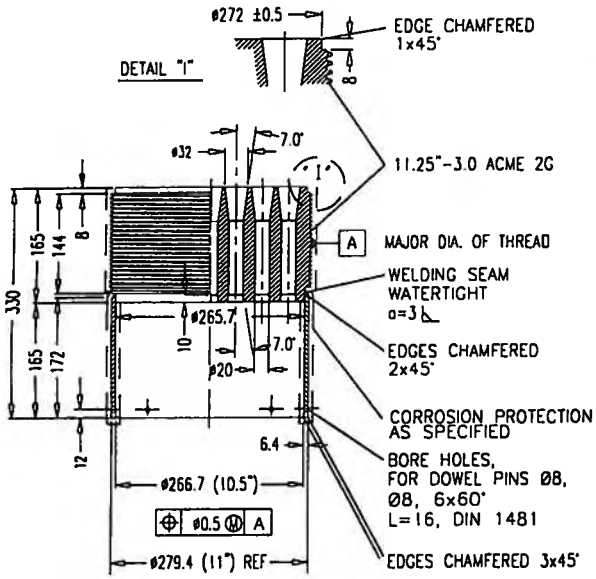

TOLERANCES ACC. MANUFACTURING SUPERVISION AND BORE COORDINATES TABLE.

SECTION A-A

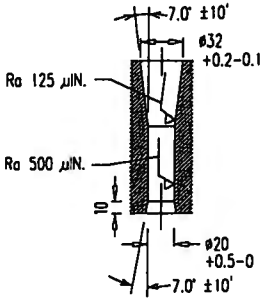

DETAIL A

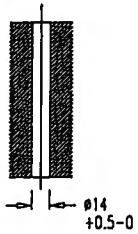

DETAIL B

11.25"-3.0 ACME 2G				
DIAMETER	MINOR	PITCH	MAJOR	
MINIMUM MAXIMUM	10.840" 10.897"	11.019" 11.057"	11.233" 11.250"	EXTERNAL THREAD WEDGE PLATE
MINIMUM MAXIMUM	10.917" 10.933"	11.083" 11.121"	11.270" 11.290"	INTERNAL THREAD RING NUT

MATERIAL:
PIPE: ASTM A513
WEDGE PLATE: ASTM A29, AISI C1045 BAR
NORMALIZED TO: fy,min. = 54 KSI
fu,min. = 85 KSI

1 → WEIGHT ADDED.

DYWIDAG CABLE SYSTEMS	DIMENSIONS: mm SCALE mm (in)	Q.A.	QUALITY PLAN NUMBER:				PART NUMBER 092 037 2711
37-0.6" DYNA GRIP ANCHOR TYPE II, FIXED END 6TH ST. BRIDGE	TOLERANCES: ± 0.5 UNLESS NOTED	WEIGHT 180 LBS.	REV.	DATE	NAME		
DATE: 09-21-01 DWG: G. MALECKI CHK: H.R. APP: K.S.	MATERIAL: SEE ABOVE	SCALE 1:7	1	10-31-01	H.K.		DRAWING NUMBER 092 037 2711
This drawing, the pertinent enclosures, descriptions, calculations etc. and their contents are the property of DYWIDAG SYSTEMS INTERNATIONAL, USA, INC. They are not allowed to be duplicated with-out our permission. They are also not to be shown or explained for any reason to a third party other than for reasons expressly intended by the original receiver. They have to be returned on request.	DYWIDAG-SYSTEMS INTERNATIONAL, USA, INC. DSI						

REDUCED COPY

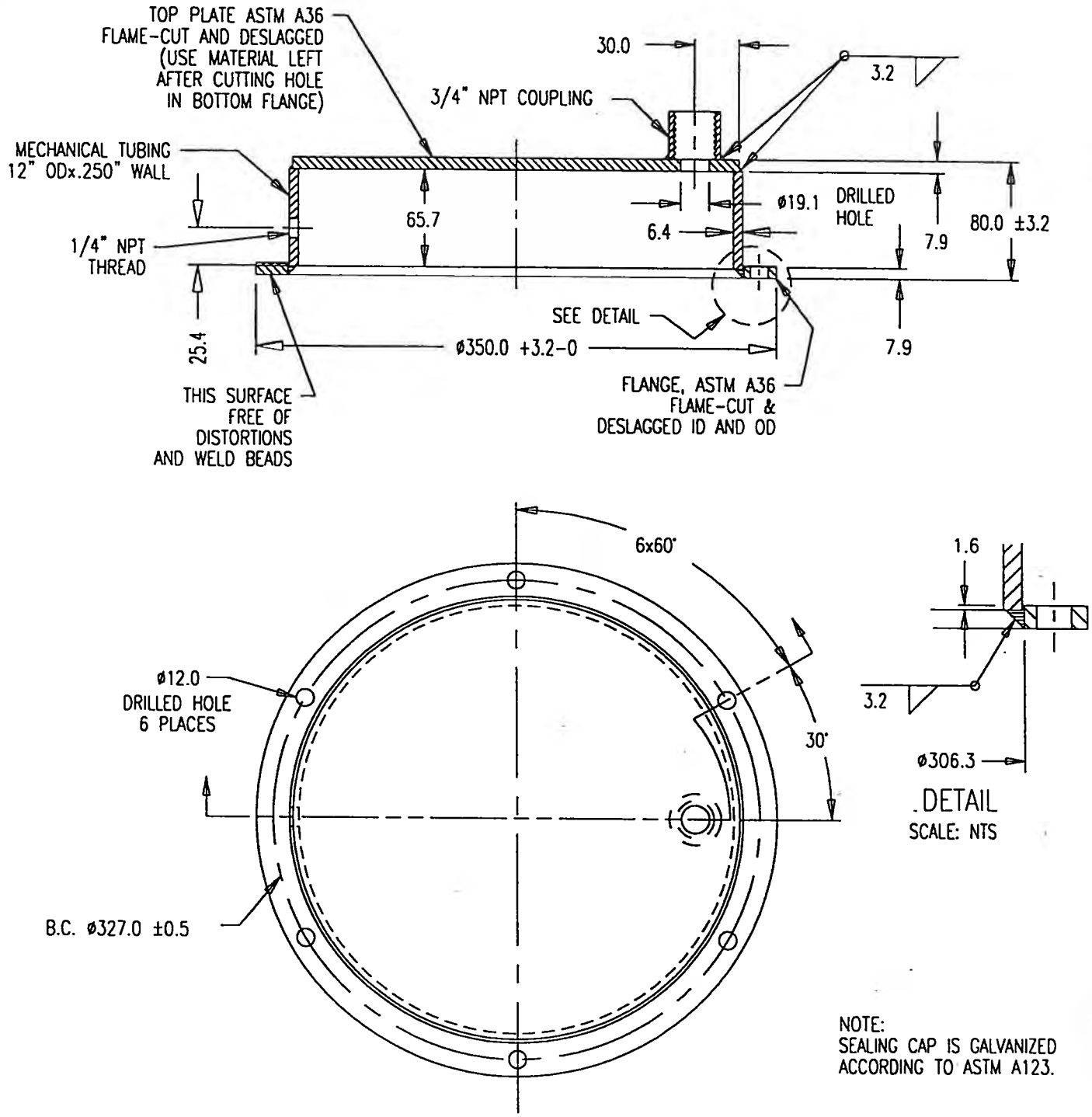

DYWIDAG CABLE SYSTEMS	DIMENSIONS: mm	Q.A.	QUALITY PLAN NUMBER:				PART NUMBER 092 031 2714
31-0.6" SEALING CAP B, DEAD END 6TH ST. BRIDGE	TOLERANCES: ±0.5 UNLESS NOTED	WEIGHT 19.8 LBS.	REV.	DATE	NAME		
			1	10-30-01	H.K.		
DATE: 09-28-01 / DWG: R. SHARMA / CHK: H.K. / APP: K.S.	MATERIAL: SEE ABOVE	SCALE 1:4					DRAWING NUMBER 092 031 2714

This drawing, the pertinent enclossures, descriptions, calculations etc. and their contents are the property of DYWIDAG SYSTEMS INTERNATIONAL, USA, INC. They are not allowed to be duplicated with-out our pernission. They are also not to be shown or explained for any reason to a third party other than for reasons expressly intended by the original receiver. They have to be returned on request.

DYWIDAG-SYSTEMS INTERNATIONAL, USA, INC. DSI

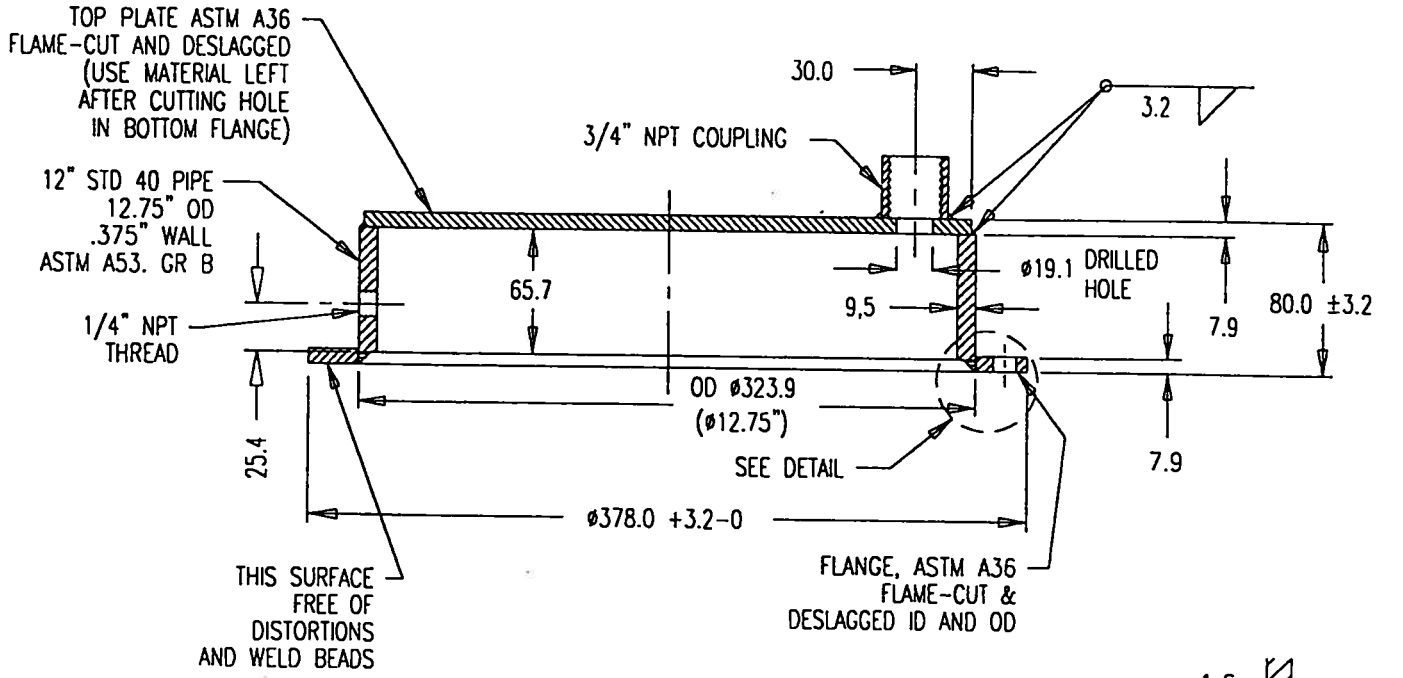

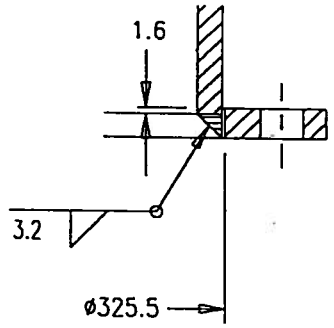

DETAIL
SCALE: NTS

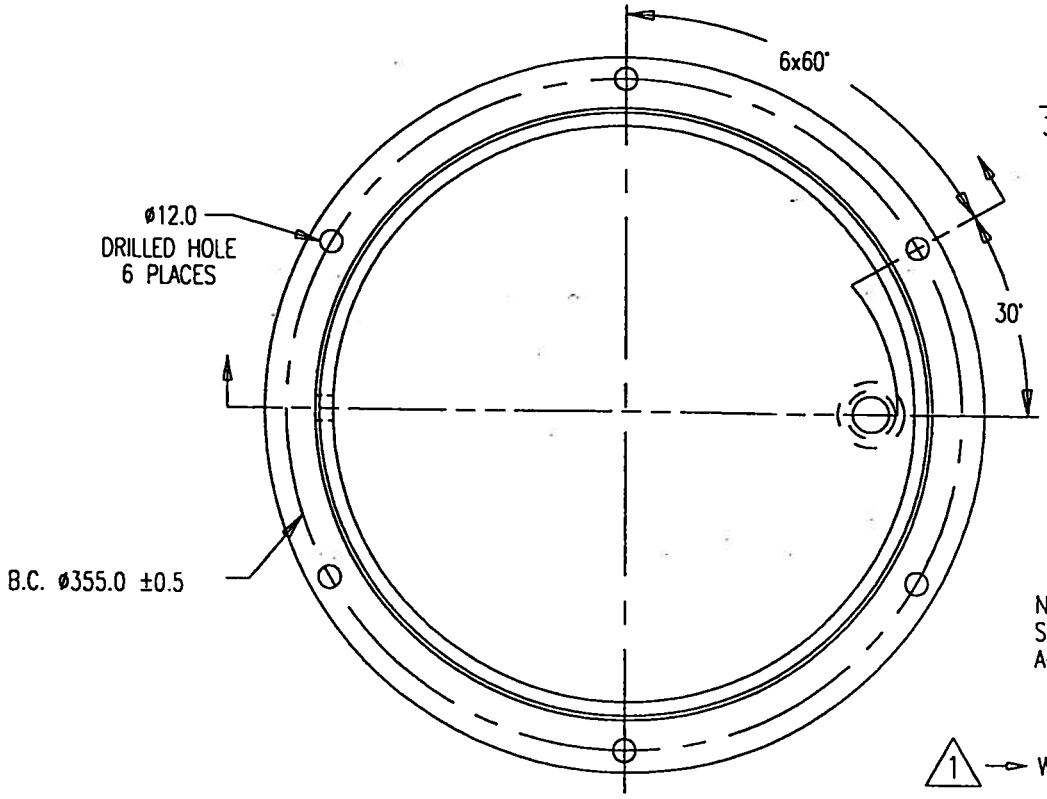

NOTE:
SEALING CAP IS GALVANIZED
ACCORDING TO ASTM A123.

1 → WEIGHT ADDED.

DYWIDAG CABLE SYSTEMS	DIMENSIONS: mm	O.A.	QUALITY PLAN NUMBER:			PART NUMBER 092 037 2714
37-0.6" SEALING CAP B, DEAD END 6TH ST. BRIDGE	TOLERANCES: ±0.5 UNLESS NOTED	WEIGHT 25.7 LBS.	REV. 1	DATE 10-30-01	NAME H.K.	
DATE: 09-28-01 | DWG: R. SHARMA | CHK: H.K. | APP: K.S.	MATERIAL: SEE ABOVE	SCALE 1:4				DRAWING NUMBER 092 037 2714

This drawing, the pertinent enclossures, descriptions, calculations etc. and their contents are the property of DYWIDAG SYSTEMS INTERNATIONAL, USA, INC. They are not allowed to be duplicated with-out our permission. They are also not to be shown or explained for any reason to a third party other than for reasons expressly intended by the original receiver. They have to be returned on request.

DYWIDAG-SYSTEMS INTERNATIONAL. USA. INC. DSI

HOLE LOCATION (±0.5mm)					
Pos.	X	Y	Pos.	X	Y
1	0.00	0.00	20	92.50	32.04
2	37.00	0.00	21	74.00	64.08
3	18.50	32.04	22	18.50	96.13
4	-18.50	32.04	23	-18.50	96.13
5	-37.00	0.00	24	-74.00	64.08
6	-18.50	-32.04	25	-92.50	32.04
7	18.50	-32.04	26	-92.50	-32.04
8	55.50	32.04	27	-74.00	-64.09
9	0.00	64.08	28	-18.50	-96.13
10	-55.50	32.04	29	18.50	-96.13
11	-55.50	-32.04	30	74.00	-64.08
12	0.00	-64.08	31	92.50	-32.04
13	55.50	-32.04	201	105.50	0.00
14	74.00	0.00	202	52.75	91.37
15	37.00	64.09	203	-52.75	91.37
16	-37.00	64.09	204	-105.50	0.00
17	-74.00	0.00	205	-52.75	-91.37
18	-37.00	-64.09	206	52.75	-91.37
19	37.00	-64.09			

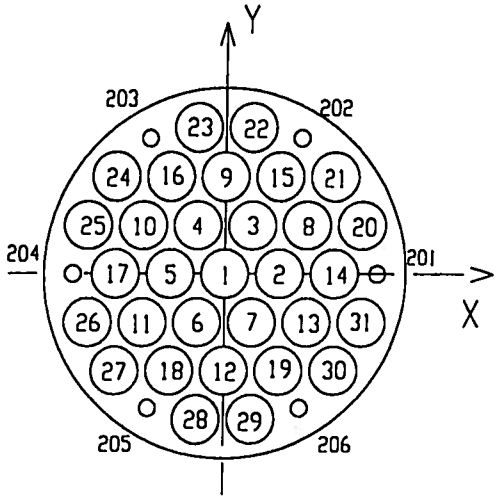

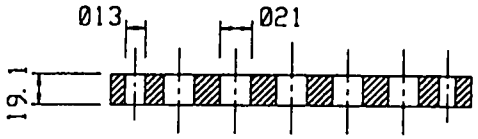

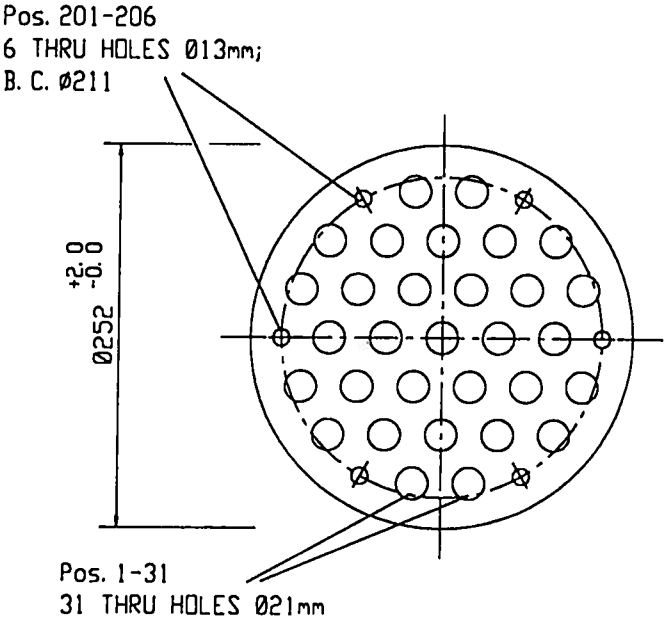

DYWIDAG CABLE SYSTEMS	DIMENSIONS: mm	D.A.	QUALITY PLAN NUMBER:		PART NUMBER 092 031 2721
31-0.6" SEALING PLATE 6TH ST. BRIDGE	TOLERANCES: ±0.5 UNLESS NOTED	WEIGHT 2.4 LBS.	REV. / DATE / NAME		
DATE: 10-03-01 / DWG: G. MALECKI / CHK: H.K. / APP: K.S. (S.I.)	MATERIAL: BUNA BLACK 40 ±5 DUROMETER ASTM D-2000 1BF508	SCALE NTS			DRAWING NUMBER 092 031 2721
This drawing, the pertinent enclossures, descriptions, calculations etc. and their contents are the property of DYWIDAG SYSTEMS INTERNATIONAL, USA, INC. They are not allowed to be duplicated with-out our permission. They are also not to be shown or explained for any reason to a third party other than for reasons expressly intended by the original receiver. They have to be returned on request.	DYWIDAG-SYSTEMS INTERNATIONAL, USA, INC. DSI				

HOLE LOCATION (±0.5mm)					
Pos.	X	Y	Pos.	X	Y
1	0.00	0.00	20	92.50	32.04
2	37.00	0.00	21	74.00	64.08
3	18.50	32.04	22	18.50	96.13
4	-18.50	32.04	23	-18.50	96.13
5	-37.00	0.00	24	-74.00	64.08
6	-18.50	-32.04	25	-92.50	32.04
7	18.50	-32.04	26	-92.50	-32.04
8	55.50	32.04	27	-74.00	-64.09
9	0.00	64.08	28	-18.50	-96.13
10	-55.50	32.04	29	18.50	-96.13
11	-55.50	-32.04	30	74.00	-64.08
12	0.00	-64.08	31	92.50	-32.04
13	55.50	-32.04	32	111.00	0.00
14	74.00	0.00	33	55.50	96.13
15	37.00	64.09	34	-55.50	96.13
16	-37.00	64.09	35	-111.00	0.00
17	-74.00	0.00	36	-55.50	-96.13
18	-37.00	-64.09	37	55.50	-96.13
19	37.00	-64.09	201	103.06	59.50
			202	0.00	119.00
			203	-103.06	59.50
			204	-103.06	-59.50
			205	0.00	-119.00
			206	103.06	-59.50

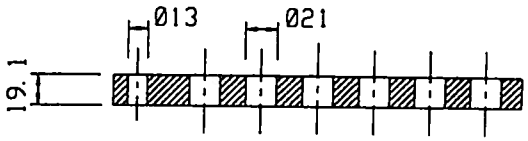

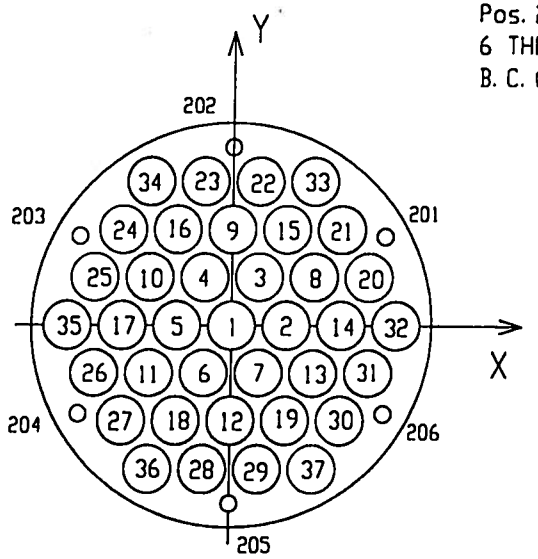

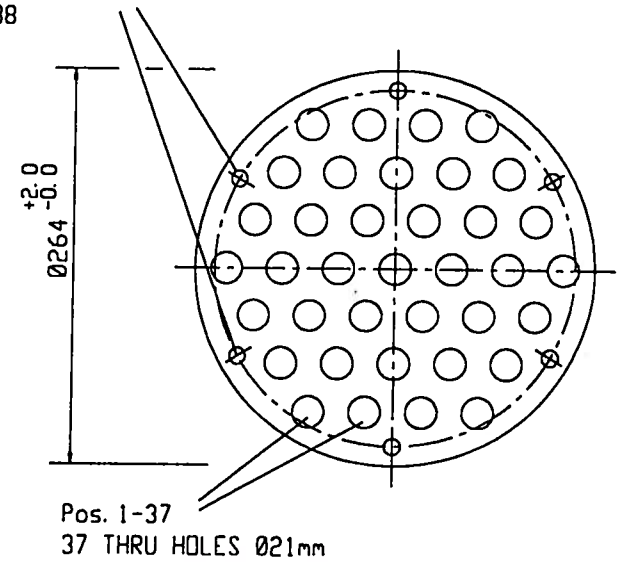

DYWIDAG CABLE SYSTEMS	DIMENSIONS: mm	Q.A.	QUALITY PLAN NUMBER:
37-0.6" SEALING PLATE 6TH ST. BRIDGE	TOLERANCES: ±0.5 UNLESS NOTED	WEIGHT 2.8 LBS.	REV. / DATE / NAME
DATE: 10-03-01 / DWG: G. MALECKI / CHK: H.K. / APP: K.S.	MATERIAL: BUNA BLACK 40 ±5 DUROMETER ASTM D-2000 1BF508	SCALE NTS	

PART NUMBER 092 037 2721

DRAWING NUMBER 092 037 2721

This drawing, the pertinent enclossures, descriptions, calculations etc. and their contents are the property of DYWIDAG SYSTEMS INTERNATIONAL, USA, INC. They are not allowed to be duplicated with-out our permission. They are also not to be shown or explained for any reason to a third party other than for reasons expressly intended by the original receiver. They have to be returned on request.

DYWIDAG-SYSTEMS INTERNATIONAL, USA, INC. DSI

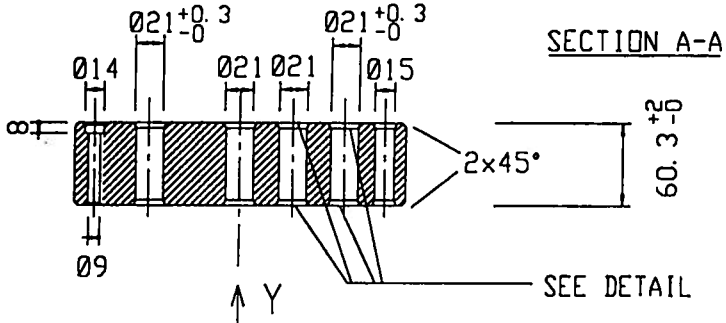

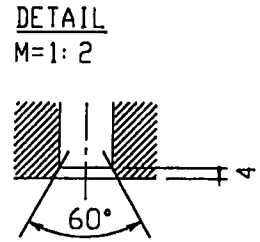

HOLE LOCATION (±0.2mm)					
Pos.	X	Y	Pos.	X	Y
1	0.00	0.00	201	105.50	0.00
2	38.00	0.00	202	52.75	91.37
3	19.00	32.91	203	-52.75	91.37
4	-19.00	32.91	204	-105.50	0.00
5	-38.00	0.00	205	-52.75	-91.37
6	-19.00	-32.91	206	52.75	-91.37
7	19.00	-32.91	301	92.66	53.50
8	56.80	32.79	302	-92.66	53.50
9	0.00	66.58	303	0.00	-107.00
10	-56.80	32.79			
11	-56.80	-32.79			
12	0.00	-65.58			
13	56.80	-32.79			
14	75.50	0.00			
15	37.75	65.39			
16	-37.75	65.38			
17	-75.50	0.00			
18	-37.75	-65.39			
19	37.75	-65.39			
20	93.91	32.53			
21	75.13	65.07			
22	18.78	97.60			
23	-18.78	97.60			
24	-75.13	65.07			
25	-93.91	32.53			
26	-93.91	-32.53			
27	-75.13	-65.07			
28	-18.78	-97.60			
29	18.78	-97.60			
30	75.13	-65.06			
31	93.92	-32.53			

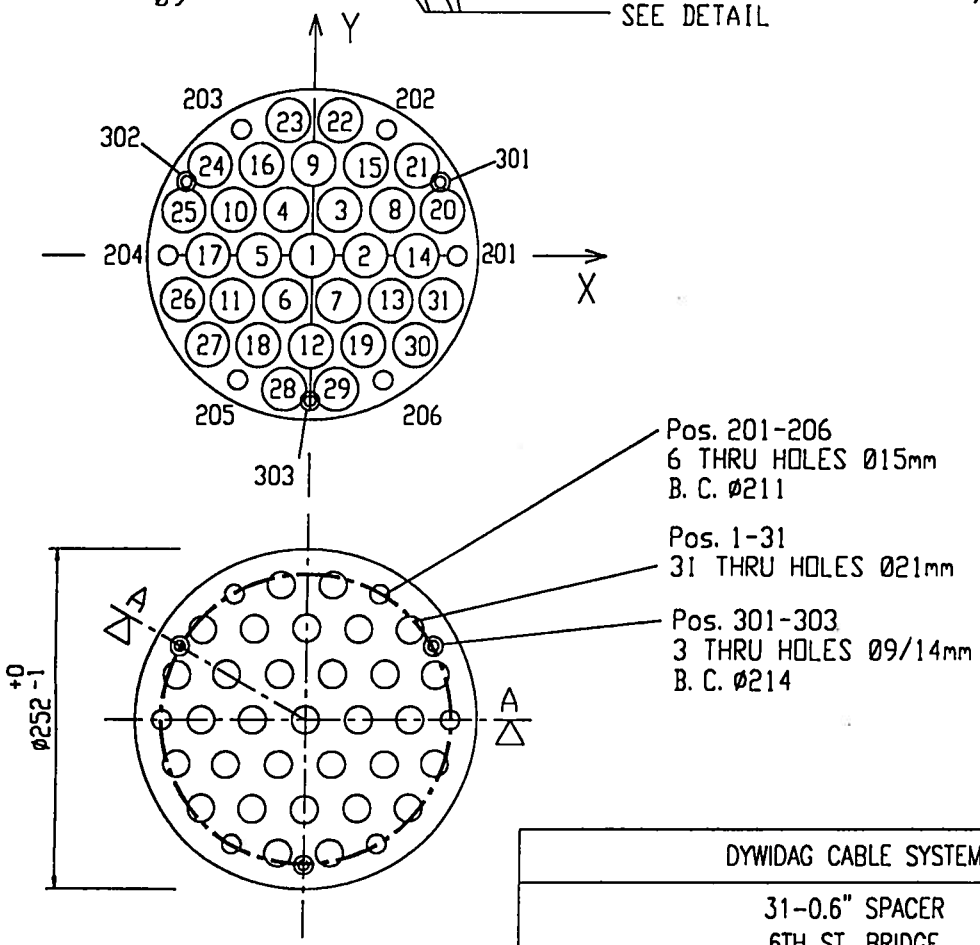

PART NUMBER WAS 092 031 2726.

DYWIDAG CABLE SYSTEMS	DIMENSIONS: mm	Q.A.	QUALITY PLAN NUMBER:	PART NUMBER 092 031 2722
31-0.6" SPACER 6TH ST. BRIDGE	TOLERANCES: ±0.5 UNLESS NOTED	WEIGHT 4.4 LBS.	REV. / DATE / NAME	
DATE: 10-30-01 / DWG: G. MALECKI / CHK: H.K. HK / APP: K.S. (S.F.)	MATERIAL: HDPE BLACK	SCALE NTS		DRAWING NUMBER 092 031 2722

This drawing, the pertinent enclossures, descriptions, calculations etc. and their contents are the property of DYWIDAG SYSTEMS INTERNATIONAL, USA, INC. They are not allowed to be duplicated with-out our permission. They are also not to be shown or explained for any reason to a third party other than for reasons expressly intended by the original receiver. They have to be returned on request.

DYWIDAG-SYSTEMS INTERNATIONAL, USA, INC. DSI

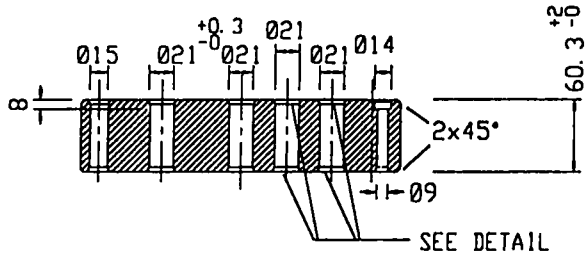

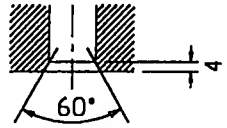

DETAIL

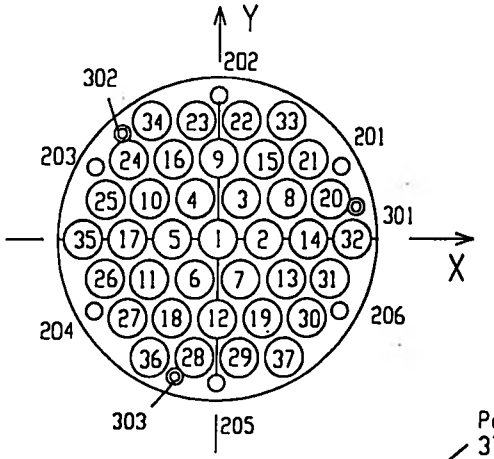

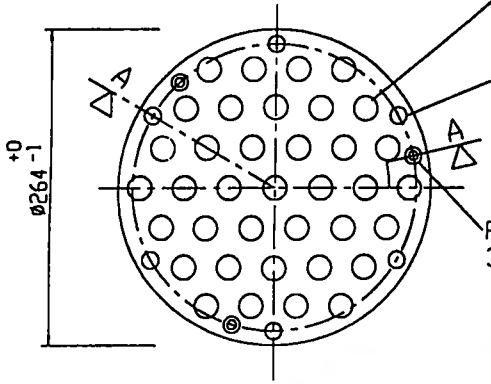

HOLE LOCATION (±0.2mm)					
Pos.	X	Y	Pos.	X	Y
1	0.00	0.00	32	112.50	0.00
2	38.00	0.00	33	56.25	97.43
3	19.00	32.91	34	-56.25	97.43
4	-19.00	32.91	35	-112.50	0.00
5	-38.00	0.00	36	-56.25	-97.43
6	-19.00	-32.91	37	56.25	-97.43
7	19.00	-32.91	201	103.06	59.50
8	56.80	32.79	202	0.00	119.00
9	0.00	66.58	203	-103.06	59.50
10	-56.80	32.79	204	-103.06	-59.50
11	-56.80	-32.79	205	0.00	-119.00
12	0.00	-65.58	206	103.06	-59.50
13	56.80	-32.79	301	116.61	23.73
14	75.50	0.00	302	-78.86	89.12
15	37.75	65.39	303	-37.75	-112.85
16	-37.75	65.38			
17	-75.50	0.00			
18	-37.75	-65.39			
19	37.75	-65.39			
20	93.91	32.53			
21	75.13	65.07			
22	18.78	97.60			
23	-18.78	97.60			
24	-75.13	65.07			
25	-93.91	32.53			
26	-93.91	-32.53			
27	-75.13	-65.07			
28	-18.78	-97.60			
29	18.78	-97.60			
30	75.13	-65.06			
31	93.92	-32.53			
32	112.50	0.00			
33	56.25	97.43			
34	-56.25	97.43			
35	-112.50	0.00			
36	-56.25	-97.43			
37	56.25	-97.43			

PART NUMBER WAS 092 037 2726.

DYWIDAG CABLE SYSTEMS	DIMENSIONS: mm	Q.A.	QUALITY PLAN NUMBER:	PART NUMBER 092 037 2722
37-0.6" SPACER 6TH ST. BRIDGE	TOLERANCES: ±0.5 UNLESS NOTED	WEIGHT 5.7 LBS.	REV. / DATE / NAME	
DATE: 10-30-01 / DWG: G. MALECKI / CHK: H.K. / APP: K.S.	MATERIAL: HDPE BLACK	SCALE NTS		DRAWING NUMBER 092 037 2722

This drawing, the pertinent enclossures, descriptions, calculations etc. and their contents are the property of DYWIDAG SYSTEMS INTERNATIONAL, USA, INC. They are not allowed to be duplicated with-out our permission. They are also not to be shown or explained for any reason to a third party other than for reasons expressly intended by the original receiver. They have to be returned on request.

DYWIDAG-SYSTEMS INTERNATIONAL, USA, INC. DSI

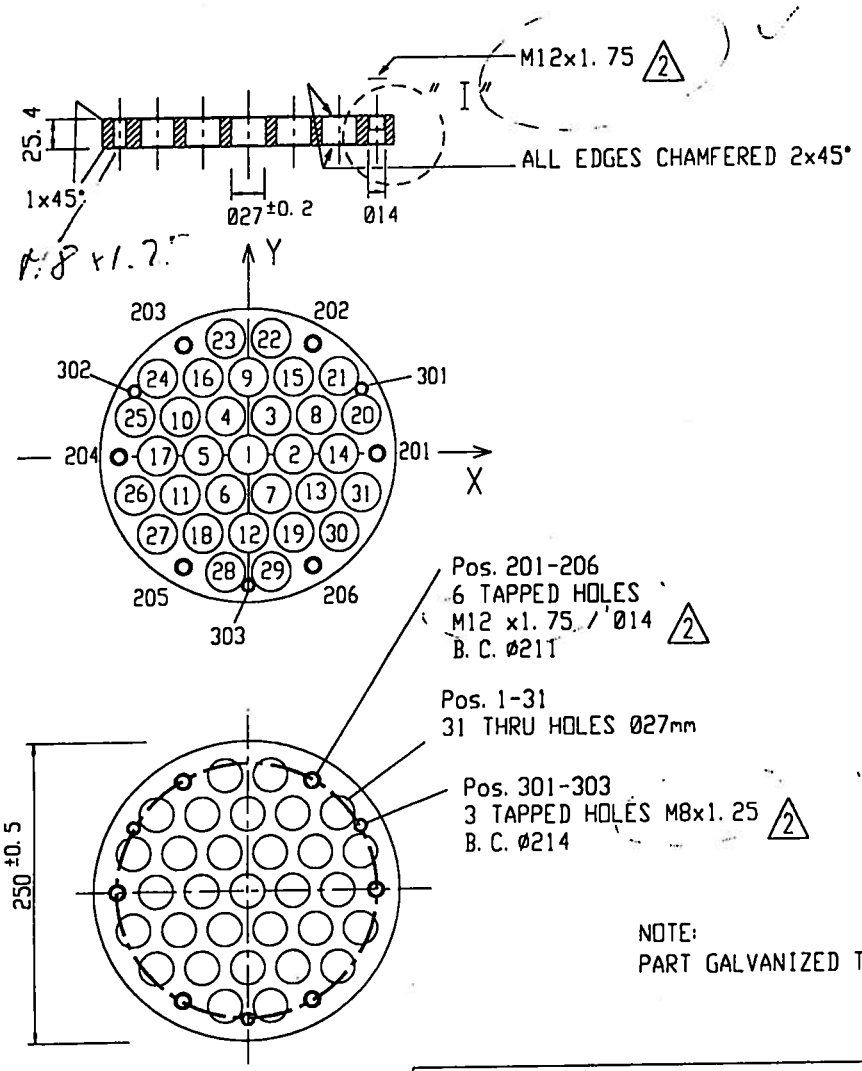

DETAIL "I"
M=1:1

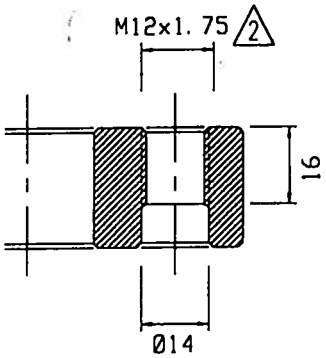

HOLE LOCATION (±0.2mm)		
Pos.	X	Y
1	0.00	0.00
2	37.00	0.00
3	18.50	32.04
4	-18.50	32.04
5	-37.00	0.00
6	-18.50	-32.04
7	18.50	-32.04
8	55.07	31.79
9	0.00	63.58
10	-55.07	31.79
11	-55.07	-31.79
12	0.00	-63.58
13	55.07	-31.79
14	73.50	0.00
15	36.75	63.65
16	-36.75	63.65
17	-73.50	0.00
18	-36.75	-63.65
19	36.75	-63.65
20	91.55	31.72
21	73.24	63.43
22	18.31	95.14
23	-18.31	95.14
24	-73.24	63.43
25	-91.55	31.71
26	-91.55	-31.71
27	-73.24	-63.43
28	-18.31	-95.14
29	18.31	-95.14
30	73.24	-63.43
31	91.55	-31.71
201	105.50	0.00
202	52.75	91.37
203	-52.75	91.37
204	-105.50	0.00
205	-52.75	-91.37
206	52.75	-91.37
301	92.66	53.50
302	-92.66	53.50
303	0.00	-107.00

NOTE:
PART GALVANIZED TO ASTM A123.

PART NUMBER WAS 092 031 2727.

DYWIDAG CABLE SYSTEMS	DIMENSIONS: mm	Q.A.	QUALITY PLAN NUMBER:				PART NUMBER 092 031 2723
31-0.6" COMPRESSION PLATE 6TH ST. BRIDGE	TOLERANCES: ±0.5 UNLESS NOTED	WEIGHT 11.9 LBS.	REV. 1	DATE 12-01-01	NAME H.K.		
			2		H.K.		
DATE: 10-30-01 / DWG: G. MALECKI / CHK: H.K. / APP: K.S.	MATERIAL: ASTM A36	SCALE NTS					DRAWING NUMBER 092 031 2723
This drawing, the pertinent enclossures, descriptions, calculations etc. and their contents are the property of DYWIDAG SYSTEMS INTERNATIONAL, USA, INC. They are not allowed to be duplicated with-out our permission. They are also not to be shown or explained for any reason to a third party other than for reasons expressly intended by the original receiver. They have to be returned on request.	DYWIDAG-SYSTEMS INTERNATIONAL, USA, INC. DSI						

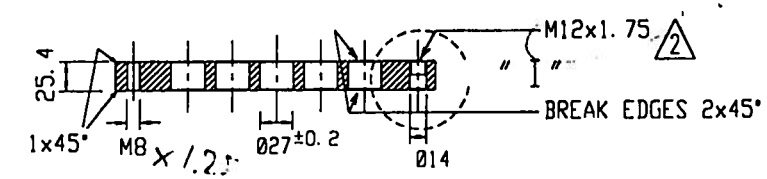

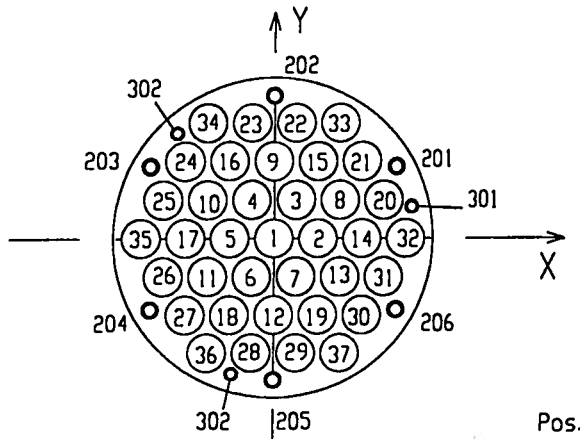

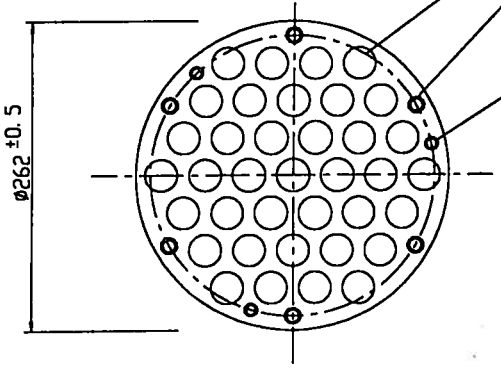

Pos. 1-37
37 THRU HOLES Ø27mm

Pos. 201-206
6 TAPPED HOLES
M12x1.75 / Ø14 (2)
B.C. Ø238

Pos. 301-303
3 TAPPED HOLES
M8x1.25
B. C. Ø238 (2)

NOTE:
PART GALVANIZED TO ASTM A123.

HOLE LOCATION (±0.2mm)					
Pos.	X	Y	Pos.	X	Y
1	0.00	0.00	20	91.55	31.72
2	37.00	0.00	21	73.24	63.43
3	18.50	32.04	22	18.31	95.14
4	-18.50	32.04	23	-18.31	95.14
5	-37.00	0.00	24	-73.24	63.43
6	-18.50	-32.04	25	-91.55	31.71
7	18.50	-32.04	26	-91.55	-31.71
8	55.07	31.79	27	-73.24	-63.43
9	0.00	63.58	28	-18.31	-95.14
10	-55.07	31.79	29	18.31	-95.14
11	-55.07	-31.79	30	73.24	-63.43
12	0.00	-63.58	31	91.55	-31.71
13	55.07	-31.79	32	110.00	0.00
14	73.50	0.00	33	55.00	95.26
15	36.75	63.65	34	-55.00	95.26
16	-36.75	63.65	35	-110.00	0.00
17	-73.50	0.00	36	-55.00	-95.26
18	-36.75	-63.65	37	55.00	-95.26
19	36.75	-63.65	201	103.06	59.50
			202	0.00	119.00
			203	-103.06	59.50
			204	-103.06	-59.50
			205	0.00	-119.00
			206	103.06	-59.50
			301	116.61	23.73
			302	-78.86	89.12
			303	-37.75	-112.85

DETAIL "I"

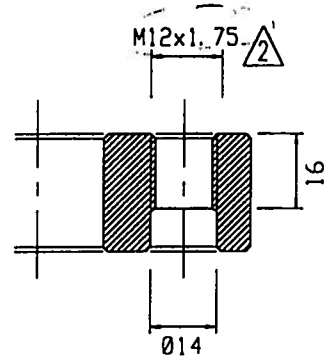

PART NUMBER WAS 092 037 2727.

DYWIDAG CABLE SYSTEMS	DIMENSIONS: mm	Q.A.	QUALITY PLAN NUMBER:				PART NUMBER 092 037 2723
37-0.6" COMPRESSION PLATE 6TH ST. BRIDGE	TOLERANCES: ±0.5 UNLESS NOTED	WEIGHT 15.0 LBS.	REV. 1	DATE 12-01-01	NAME H.K.		
			2		H.K.		
DATE: 10-30-01 / DWG: G. MALECKI / CHK: H.K. / APP: K.S.	MATERIAL: ASTM A36	SCALE NTS					DRAWING NUMBER 092 037 2723

This drawing, the pertinent enclossures, descriptions, calculations etc. and their contents are the property of DYWIDAG SYSTEMS INTERNATIONAL, USA, INC. They are not allowed to be duplicated with-out our permission. They are also not to be shown or explained for any reason to a third party other than for reasons expressly intended by the original receiver. They have to be returned on request.

DYWIDAG-SYSTEMS INTERNATIONAL, USA, INC. DSI

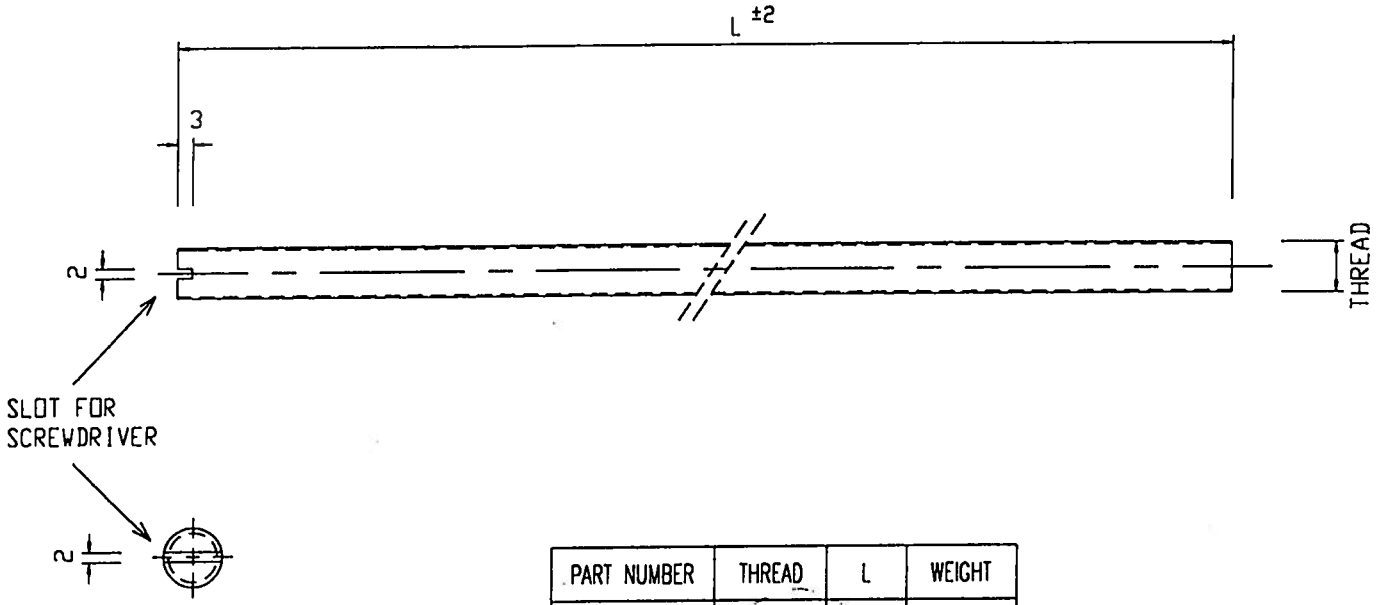

PART NUMBER	THREAD	L	WEIGHT
092 031 2724	M12x1.75	465	0.78 LBS
092 037 2724	M12X1.75	475	0.80 LBS

GALVANIZED PER SPECIFICATION.

1 — THREAD IN TABLE MODIFIED.

DYWIDAG CABLE SYSTEMS	DIMENSIONS: mm	Q.A.	QUALITY PLAN NUMBER:	PART NUMBER
FULL THREADED STUD, LIVE END 6TH ST. BRIDGE	TOLERANCES: ±0.5 UNLESS NOTED		REV. / DATE / NAME 1 / / H.K.	092 031 2724 092 037 2724
DATE: 10-03-01 / DWG: G. MALECKI / CHK: H.K. / APP: K.S.	MATERIAL: A193 GR B7	SCALE NTS		DRAWING NUMBER 092 000 2724

This drawing, the pertinent enclossures, descriptions, calculations etc. and their contents are the property of DYWIDAG SYSTEMS INTERNATIONAL, USA, INC. They are not allowed to be duplicated with-out our permission. They are also not to be shown or explained for any reason to a third party other than for reasons expressly intended by the original receiver. They have to be returned on request.

DYWIDAG-SYSTEMS INTERNATIONAL, USA, INC. DSI

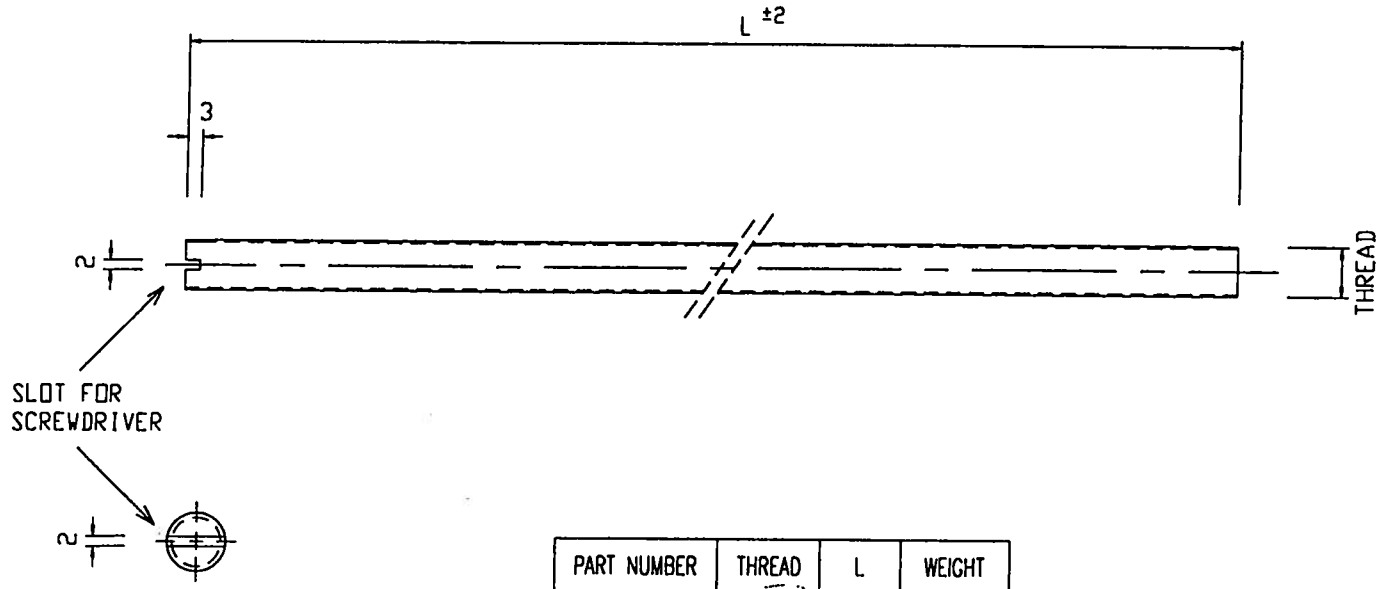

PART NUMBER	THREAD	L	WEIGHT
092 000 2725	M12x1.75	370	0.62 LBS

GALVANIZED PER SPECIFICATION.

△1 → THREAD IN TABLE MODIFIED.

DYWIDAG CABLE SYSTEMS	DIMENSIONS: mm	Q.A.	QUALITY PLAN NUMBER:	PART NUMBER 092 000 2725
FULL THREADED STUD, DEAD END 6TH ST. BRIDGE	TOLERANCES: ±0.5 UNLESS NOTED		REV. 1 / DATE / NAME H.K.	
DATE: 10-03-01 / DWG: G. MALECKI / CHK: H.K. / APP: K.S.	MATERIAL: A193 GR B7	SCALE NTS		DRAWING NUMBER 092 000 2725
This drawing, the pertinent enclossures, descriptions, calculations etc. and their contents are the property of DYWIDAG SYSTEMS INTERNATIONAL, USA, INC. They are not allowed to be duplicated with-out our permission. They are also not to be shown or explained for any reason to a third party other than for reasons expressly intended by the original receiver. They have to be returned on request.	DYWIDAG-SYSTEMS INTERNATIONAL, USA, INC. DSI			

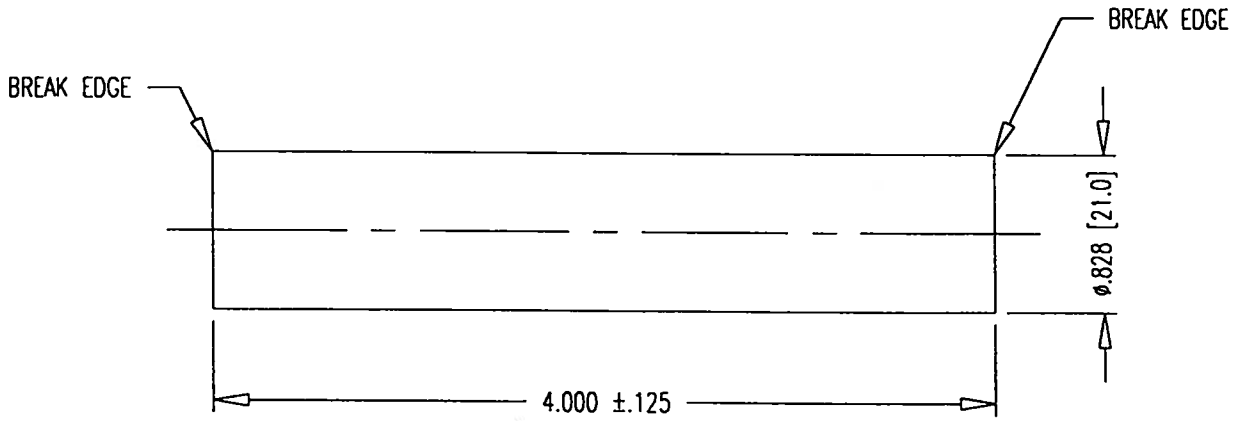

probably not to be used. Instead use dummy strands.

M.

DYWIDAG CABLE SYSTEMS	DIMENSIONS: INCH [mm] mm FOR REFERENCE ONLY	Q.A.	QUALITY PLAN NUMBER:				PART NUMBER 092 000 2726
SEALING PLATE PLUG 6TH STREET BRIDGE PRELIMINARY	TOLERANCES: ±.020 UNLESS NOTED	WEIGHT .07 LBS.	REV.	DATE	NAME		
DATE: 11-27-01 | DWG: G. MALECKI | CHK: H.K. | APP: K.S.	MATERIAL: HDPE BLACK	SCALE 1:1					DRAWING NUMBER 092 000 2726

This drawing, the pertinent enclossures, descriptions, calculations etc. and their contents are the property of DYWIDAG SYSTEMS INTERNATIONAL, USA, INC. They are not allowed to be duplicated with-out our permission. They are also not to be shown or explained for any reason to a third party other than for reasons expressly intended by the original receiver. They have to be returned on request

DYWIDAG-SYSTEMS INTERNATIONAL USA, INC.

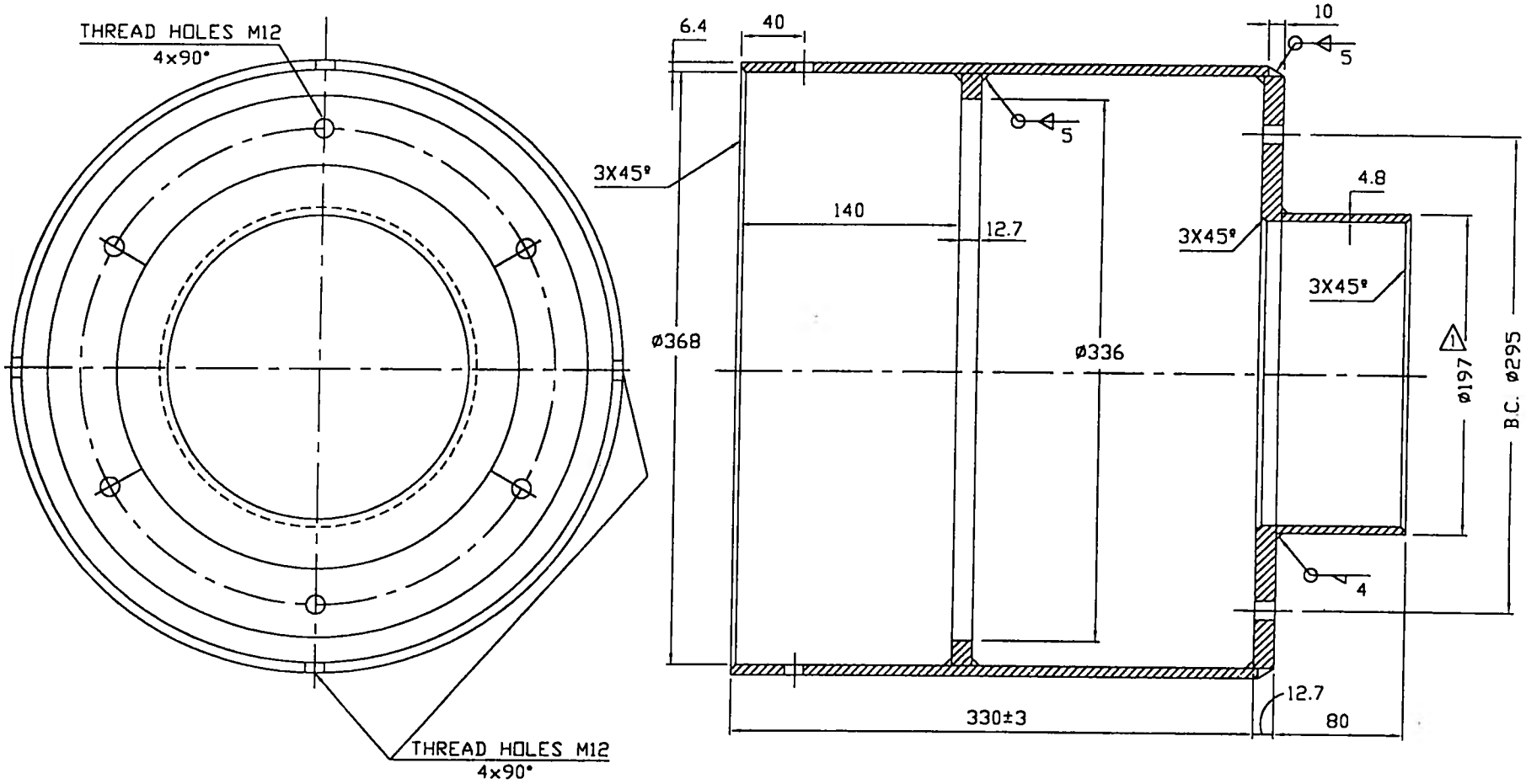

- ø TOLERANCE -1,+2mm.
- ALL STEEL SHALL HAVE MIN. Fy=250MPa.
- GALVANIZED PER SPECIFICATION.
- WELD ELECTRODE Fu=480 MPa.

1 → WEIGHT ADDED.

DYWIDAG CABLE SYSTEMS	DIMENSIONS: mm	Q.A.	QUALITY PLAN NUMBER:				PART NUMBER 092 000 2731
TRANSITION COVER 6TH ST. BRIDGE	TOLERANCES: ±0.5 UNLESS NOTED	WEIGHT 252.2 LBS.	REV. 1	DATE 10-31-01	NAME H.K.		
DATE: 10-01-01 / DWG: R. SHARMA / CHK: H.K. / APP: K.S. (S1)	MATERIAL: A36/A53	SCALE 1:4					DRAWING NUMBER 092 000 2731
This drawing, the pertinent enclossures, descriptions, calculations etc. and their contents are the property of DYWIDAG SYSTEMS INTERNATIONAL, USA, INC. They are not allowed to be duplicated with-out our pernission. They are also not to be shown or explained for any reason to a third party other than for reasons expressly intended by the original receiver. They have to be returned on request.	DYWIDAG-SYSTEMS INTERNATIONAL, USA, INC. DSI						

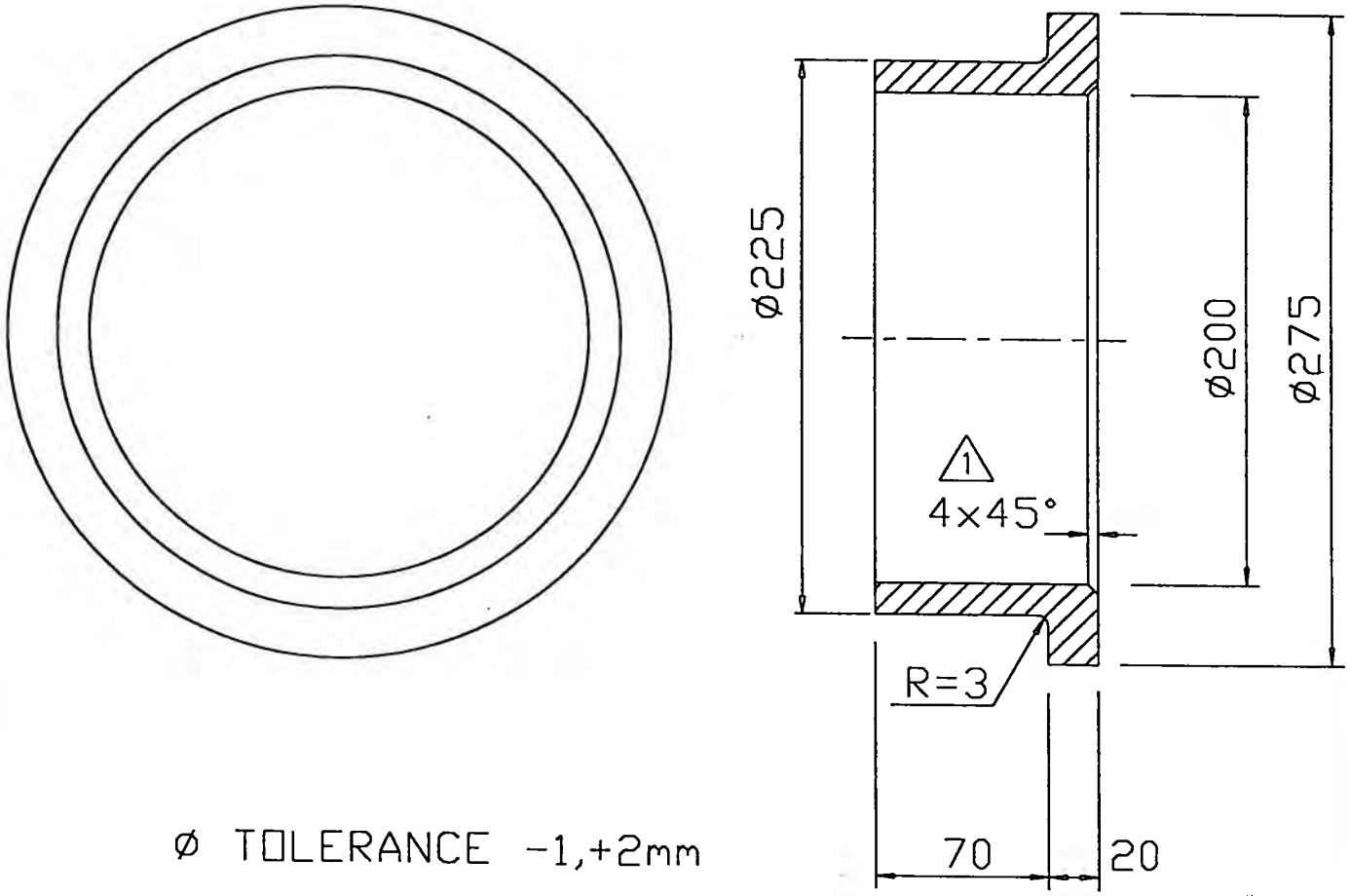

ø TOLERANCE -1,+2mm

1 → WEIGHT ADDED.

DYWIDAG CABLE SYSTEMS	DIMENSIONS: mm		QUALITY PLAN NUMBER:			PART NUMBER 092 000 2732
PE-FLANGE - GIRDER	TOLERANCES: ±2 UNLESS NOTED	WEIGHT 2.21 LBS.	REV. 1	DATE 10-30-01	NAME H.K.	
DATE: 10-03-01 / DWG: L.G. & G.M. / CHK: H.K. / APP: K.S.	MATERIAL: HDPE-BLACK	SCALE 1:3				DRAWING NUMBER 092 000 2732

This drawing, the pertinent enclossures, descriptions, calculations etc. and their contents are the property of DYWIDAG SYSTEMS INTERNATIONAL, USA, INC. They are not allowed to be duplicated with-out our pernission. They are also not to be shown or explained for any reason to a third party other than for reasons

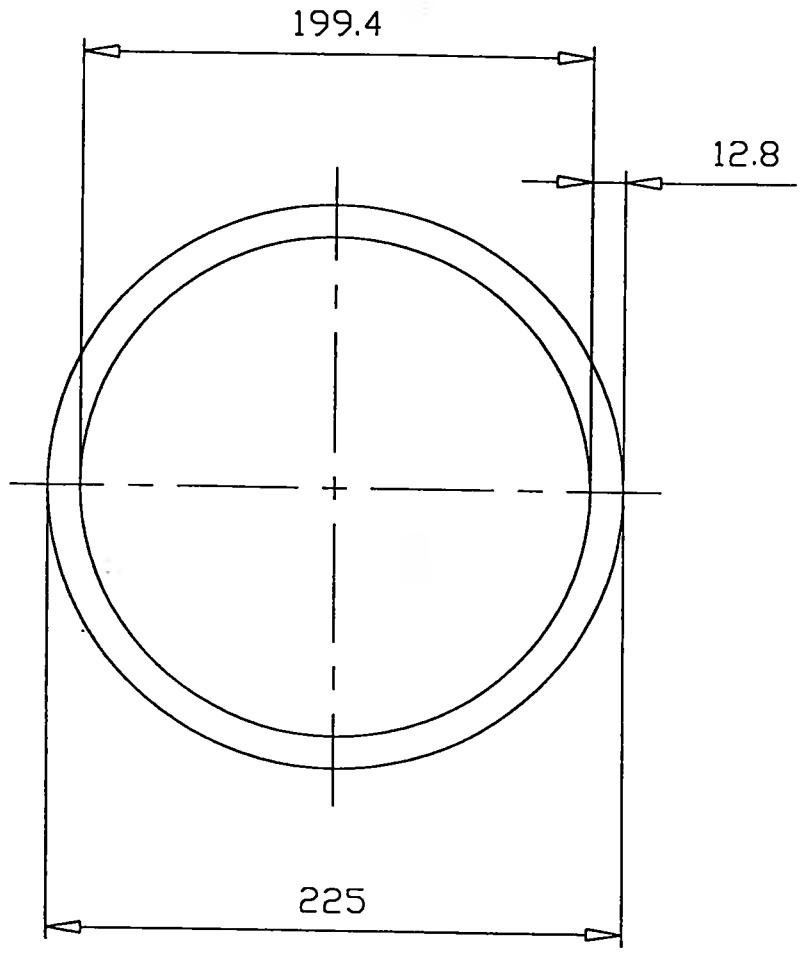

NOTE:

1 FOR CUTTING LENGTH REFER TO DRAWING CH-2047.

1 → WEIGHT ADDED.

DYWIDAG CABLE SYSTEMS	DIMENSIONS: mm		QUALITY PLAN NUMBER:			PART NUMBER 092 000 2733
PE SLEEVE – GIRDER 6TH ST. BRIDGE	TOLERANCES: ±3 UNLESS NOTED	WEIGHT 5.1 LBS./FT.	REV. 1	DATE 10-31-01	NAME H.K.	
DATE: 10-05-01 DWG: RS CHK: H.K. APP: K.S. (SI)	MATERIAL: BLACK HDPE	SCALE 1:3				DRAWING NUMBER 092 000 2733

This drawing, the pertinent enclossures, descriptions, calculations etc. and their contents are the property of DYWIDAG SYSTEMS INTERNATIONAL, USA, INC. They are not allowed to be duplicated with-out our permission. They are also not to be shown or explained for any reason to a third party other than for reasons expressly intended by the original receiver. They have to be returned on request.

DYWIDAG-SYSTEMS INTERNATIONAL USA INC

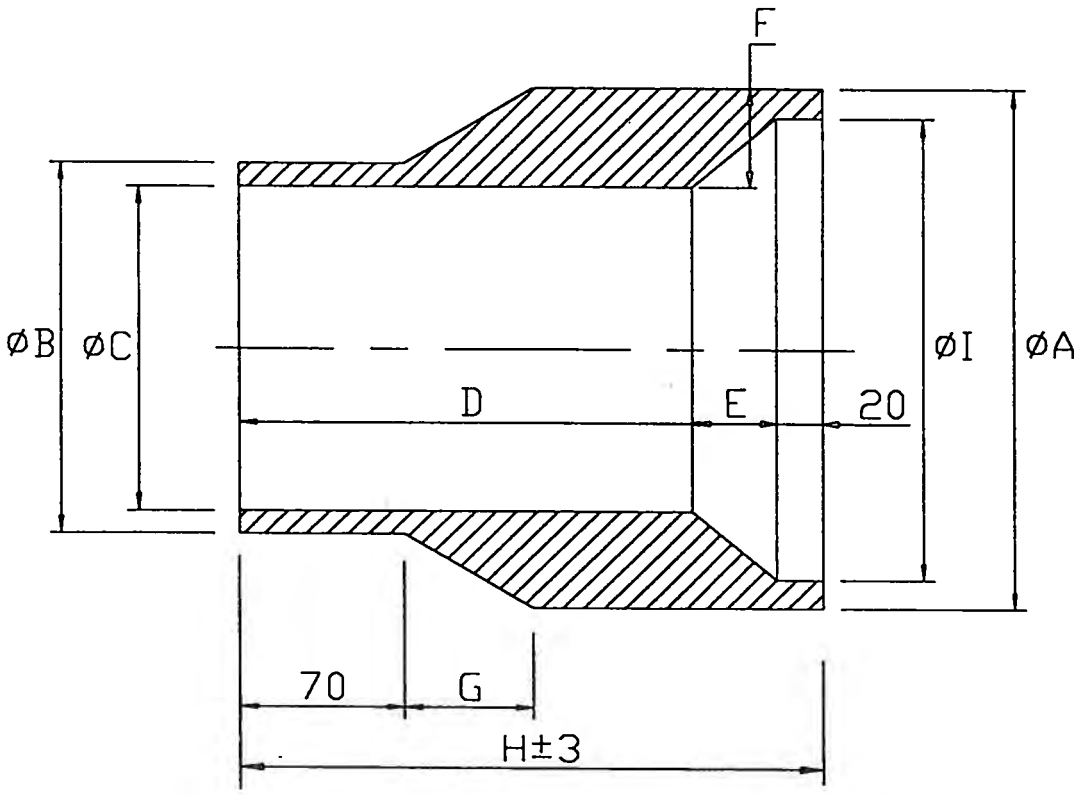

PART NUMBER	A	B	C	D	E	F	G	H	I	WEIGHT
092 031 2734	225	160	141.8	193	37	42	50	250	199.4	6.87 LBS.
092 037 2734	225	180	159.6	204	26	33	37	250	199.4	6.41 LBS.

Ø TOLERANCE -1,+2mm

NOTE: ØA AND ØB MATCH SDR 17 PIPE.

1 → WEIGHTS ADDED.

DYWIDAG CABLE SYSTEMS

31/37-0.6" PE-TRANSITION TUBE

DATE: 10-02-01 | DWG: L.G. & G.M. | CHK: H.K. | APP: K.S.

This drawing, the pertinent enclossures, descriptions, calculations etc. and their contents are the property of DYWIDAG SYSTEMS INTERNATIONAL, USA, INC. They are not allowed to be duplicated with-out our permission. They are also not to be shown or explained for any reason to a third party other than for reasons

DIMENSIONS: mm

TOLERANCES: ±2 UNLESS NOTED

MATERIAL: HDPE - BLACK

SCALE NTS

QUALITY PLAN NUMBER:

REV.	DATE	NAME
1	10-30-01	H.K.

PART NUMBER: 092 031 2734, 092 037 2734

DRAWING NUMBER: 092 000 2734

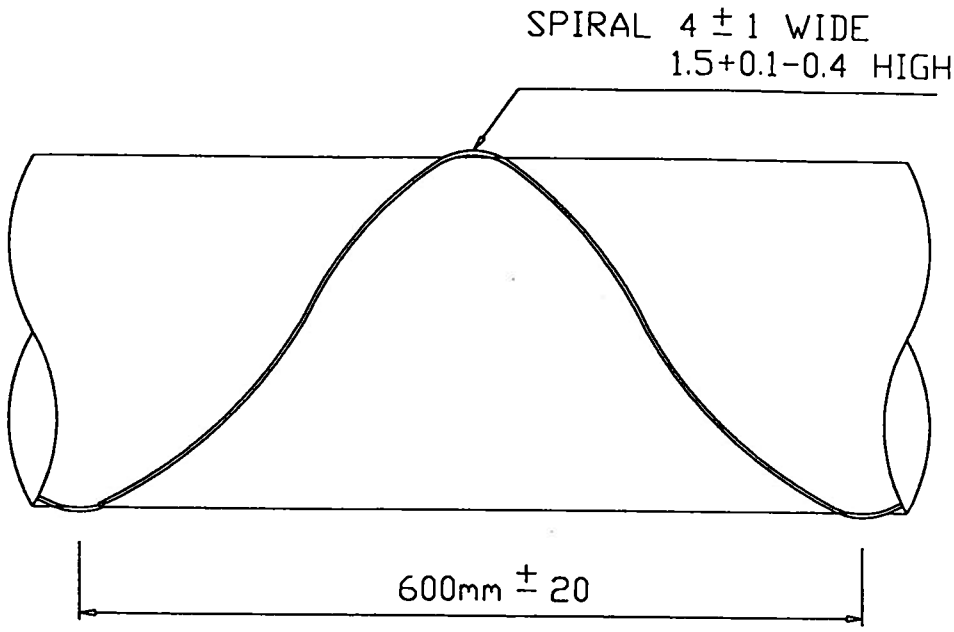

SPIRAL DETAILS

SHORT DISCONTINUITY IN SPIRAL IS ACCEPTABLE.

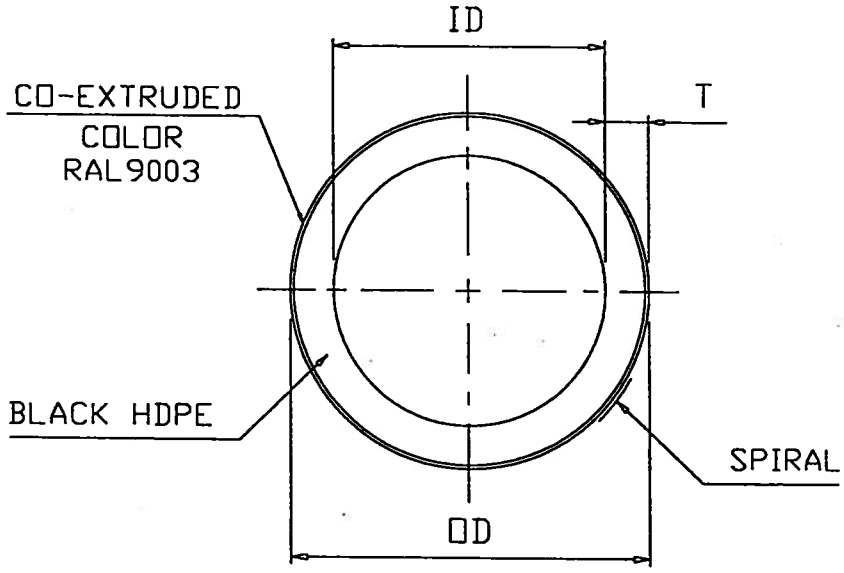

PART NUMBER	OD	ID	T*	WEIGHT
092 031 2735	160	141.8	9.1	~2.57 LBS./FT.
092 037 2735	180	159.6	10.2	~3.24 LBS./FT.

* SDR 17

- SEE PROJECT SPECIFICATIONS.

1 → WEIGHTS ADDED.

FOR CUTTING LENGTH REFFER TO DRAWING NO. CH-2047

DYWIDAG CABLE SYSTEMS	DIMENSIONS: mm		QUALITY PLAN NUMBER:				PART NUMBER
PE TUBE - CABLE 6TH ST. BRIDGE	TOLERANCES: ±3 UNLESS NOTED	WEIGHT	REV.	DATE	NAME		092 031 2735 092 037 2735
			1	10-30-01	H.K.		
DATE: 10-05-01 / DWG: RS / CHK: H.K. / APP: K.S. (S.F.)	MATERIAL: HDPE - CO-EX	SCALE NTS					DRAWING NUMBER 092 000 2735

This drawing, the pertinent enclossures, descriptions, calculations etc. and their contents are the property of DYWIDAG SYSTEMS INTERNATIONAL, USA, INC. They are not allowed to be duplicated with-out our permission. They are also not to be shown or explained for any reason to a third party other than for reasons expressly intended by the original receiver. They have to be returned on request.

DYWIDAG-SYSTEMS INTERNATIONAL USA, INC.

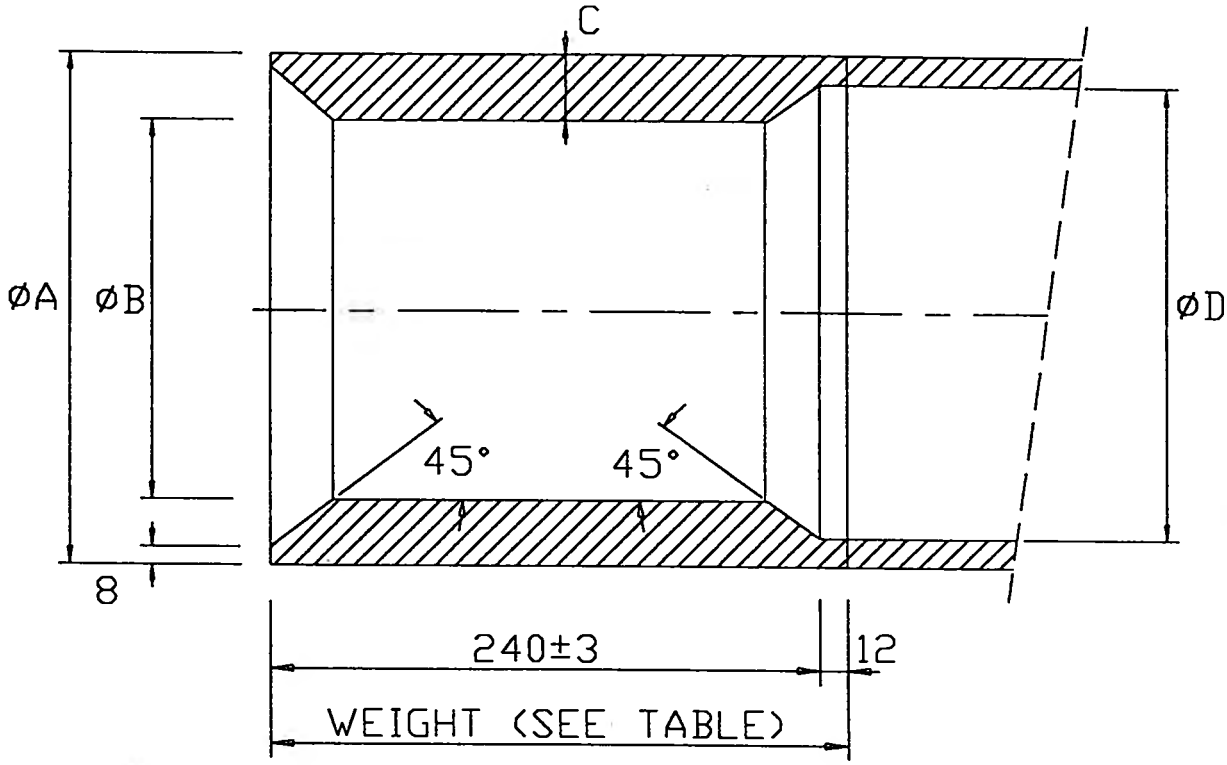

PART NUMBER	A	B	C	D	WEIGHT
092 031 2736	225	169	28	199.4	7.97 LBS.
092 037 2736	225	191	17	199.4	5.35 LBS.

Ø TOLERANCE -1,+3mm

1 → WEIGHT ADDED.

DYWIDAG CABLE SYSTEMS

31/37-0.6" PE-COLLAR

DATE: 10-03-01 | DWG: L.G. & G.M. | CHK: H.K. HFK | APP: K.S. (SI)

This drawing, the pertinent enclossures, descriptions, calculations etc. and their contents are the property of DYWIDAG SYSTEMS INTERNATIONAL, USA, INC. They are not allowed to be duplicated with-out our permission. They are also not to be shown or explained for any reason to a third party other than for reasons

DIMENSIONS: mm

TOLERANCES: ±2 UNLESS NOTED

MATERIAL: HDPE - BLACK

SCALE NTS

QUALITY PLAN NUMBER:

REV.	DATE	NAME
1	10-30-01	H.K.

PART NUMBER
092 031 2736
092 037 2736

DRAWING NUMBER
092 000 2736

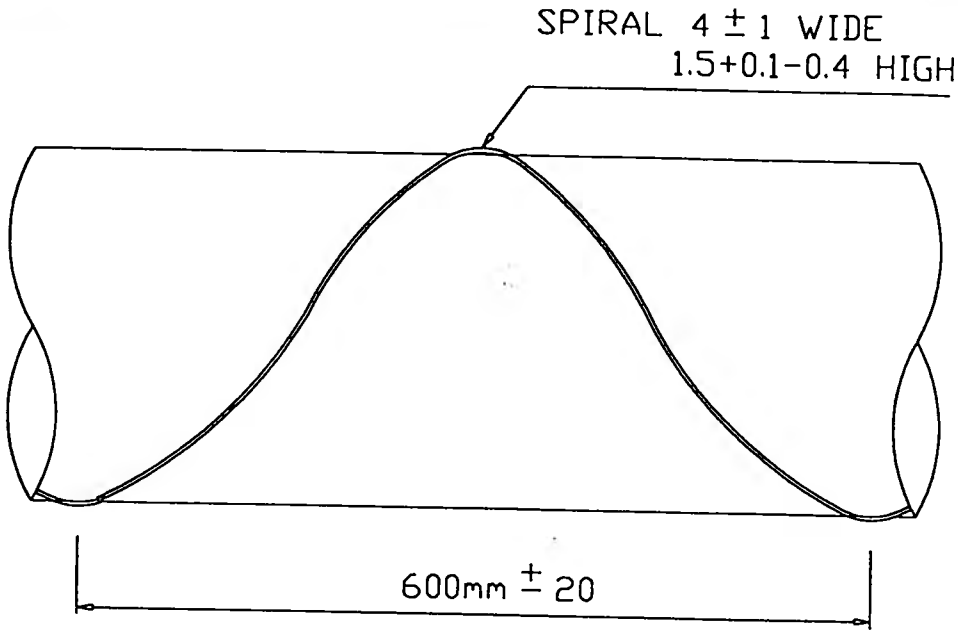

SPIRAL DETAILS

SHORT DISCONTINUITY IN SPIRAL IS ACCEPTABLE.

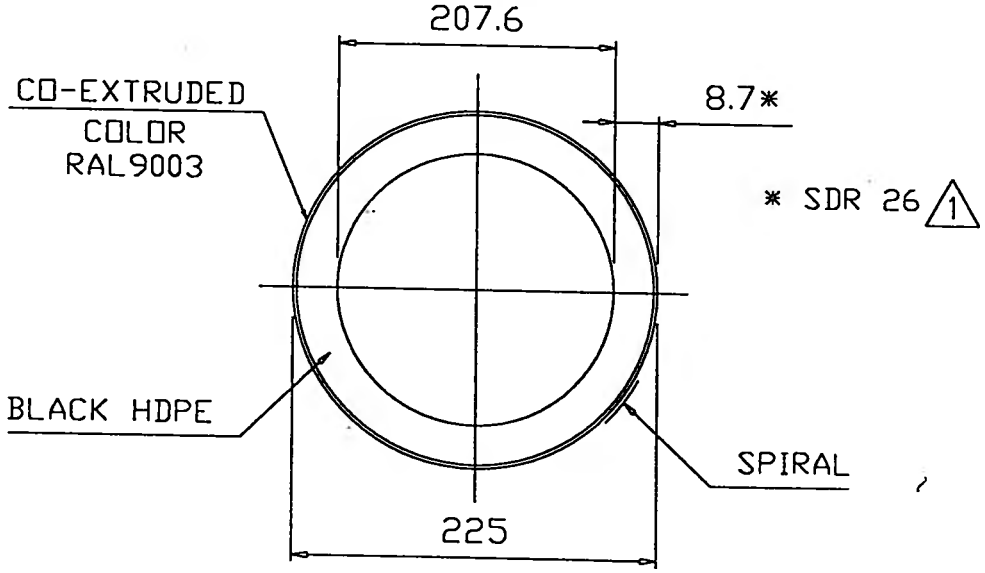

- SEE PROJECT SPECIFICATIONS.

1 → WEIGHT ADDED.

FOR CUTTING LENGTH REFFER TO DRAWING NO. CH-2047

DYWIDAG CABLE SYSTEMS	DIMENSIONS: mm		QUALITY PLAN NUMBER:				PART NUMBER
PE SLEEVE - TOWER 6TH ST. BRIDGE	TOLERANCES: ±2 UNLESS NOTED	WEIGHT ~3.52 LBS./FT.	REV. 1	DATE 10-31-01	NAME H.K.		092 000 2737
DATE: 07-26-00 DWG: RS CHK: H.K. APP: K.S.	MATERIAL: HDPE - CO-EX	SCALE					DRAWING NUMBER 092 000 2737

This drawing, the pertinent enclossures, descriptions, calculations etc. and their contents are the property of DYWIDAG SYSTEMS INTERNATIONAL, USA, INC. They are not allowed to be duplicated with-out our permission. They are also not to be shown or explained for any reason to a third party other than for reasons expressly intended by the original receiver. They have to be returned on request.

DYWIDAG-SYSTEMS INTERNATIONAL USA INC

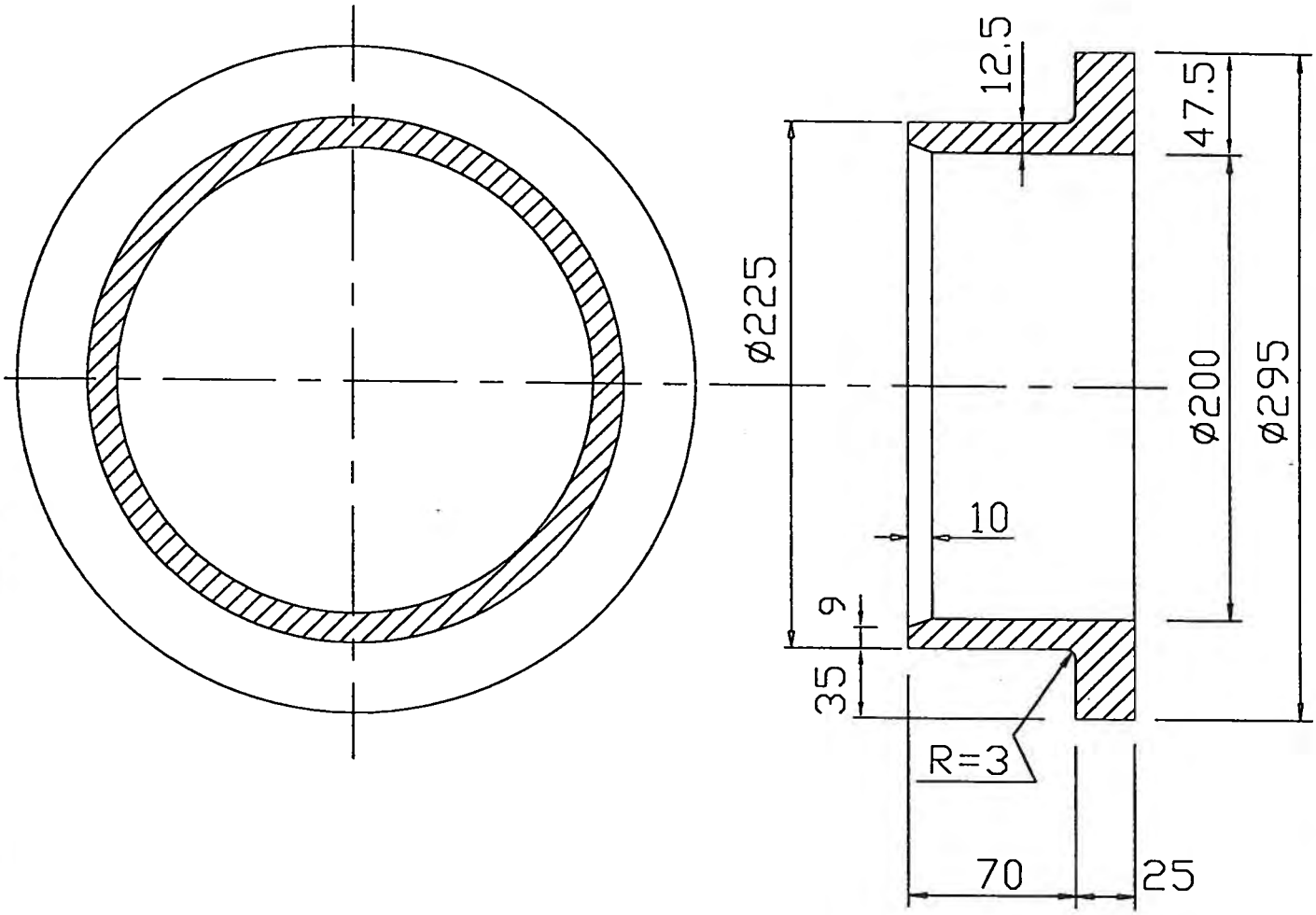

ø TOLERANCE -1,+3mm

DYWIDAG CABLE SYSTEMS	DIMENSIONS: mm		QUALITY PLAN NUMBER:				PART NUMBER 092 000 2738
PE-FLANGE - TOWER	TOLERANCES: ±3 UNLESS NOTED	WEIGHT 2.92 LBS.	REV. 1	DATE 10-31-01	NAME H.K.		
DATE: 10-03-01 | DWG: L.G. & G.M. | CHK: H.K. HK | APP: K.S. (S.I.)	MATERIAL: HDPE-BLACK	SCALE 1:3					DRAWING NUMBER 092 000 2738

This drawing, the pertinent enclossures, descriptions, calculations etc. and their contents are the property of DYWIDAG SYSTEMS INTERNATIONAL, USA, INC. They are not allowed to be duplicated with-out our permission. They are also not to be shown or explained for any reason to a third party other than for reasons

NORTH BRIDGE			
CABLE	TYPE	L [m]	WEIGHT (lbs.)
N1	C37	2.342	98.37
N2	C37	2.150	91.04
N3	C31	1.958	83.71
N4	C31	1.774	76.69
N5	C31	1.617	70.70
N6	C31	1.518	66.92
N7	C31	1.680	73.10
N8	C31	2.023	86.19
N9	C37	2.419	101.31
N10	C37	2.817	116.50
N11	C37	3.198	130.93
N12	C37	3.556	144.71

SOUTH BRIDGE			
CABLE	TYPE	L [m]	WEIGHT (lbs.)
S1	C37	2.362	99.16
S2	C37	2.156	91.29
S3	C31	1.953	83.54
S4	C31	1.764	76.33
S5	C31	1.607	70.33
S6	C31	1.512	66.71
S7	C31	1.699	73.85
S8	C31	2.070	88.01
S9	C37	2.484	103.81
S10	C37	2.898	119.62
S11	C37	3.301	135.00
S12	C37	3.703	150.35

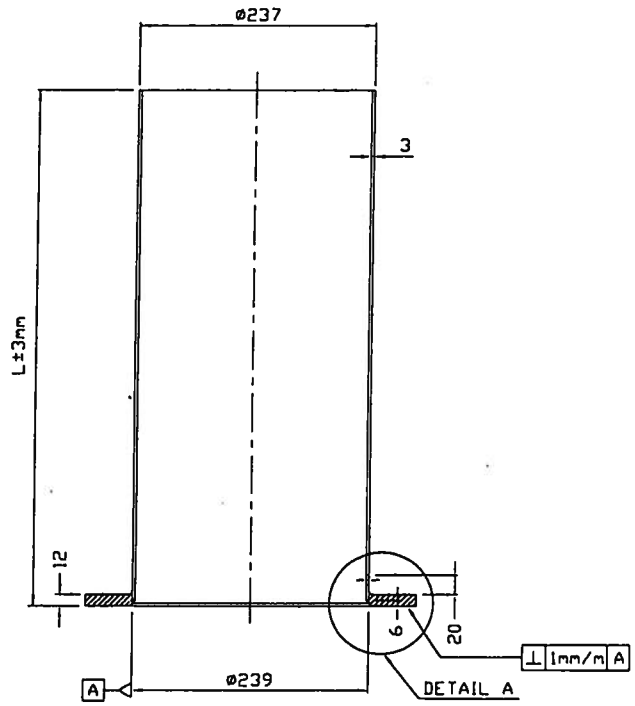

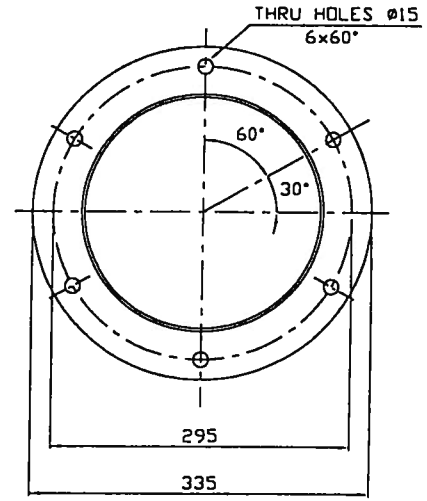

DETAIL A

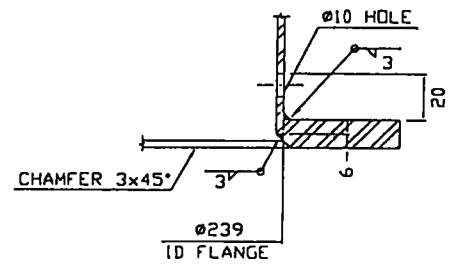

2 — SOUTH TABLE ADDED.

- ø TOLERANCE -1,+2mm.
- STEEL Fy=250MPa.
- GALVANIZED PER SPECIFICATION.
- WELD ELECTRODE Fu=480 MPa.

DYWIDAG CABLE SYSTEMS	DIMENSIONS: mm	Q.A.	QUALITY PLAN NUMBER:	PART NUMBER 092 000 2739
STEEL ANTI-VANDALISM TUBE 6TH ST. BRIDGE	TOLERANCES: ±0.5 UNLESS NOTED		REV. / DATE / NAME: 1 11-06-01 H.K.; 2 11-19-01 H.K.	
DATE: 10-01-01 | DWG: R. SHARMA | CHK: H.K. | APP: K.S.	MATERIAL: A36	SCALE NTS		DRAWING NUMBER 092 000 2739
This drawing, the pertinent enclossures, descriptions, calculations etc. and their contents are the property of DYWIDAG SYSTEMS INTERNATIONAL, USA, INC. They are not allowed to be duplicated with-out our permission. They are also not to be shown or explained for any reason to a third party other than for reasons expressly intended by the original receiver. They have to be returned on request.	DYWIDAG-SYSTEMS INTERNATIONAL, USA, INC.			

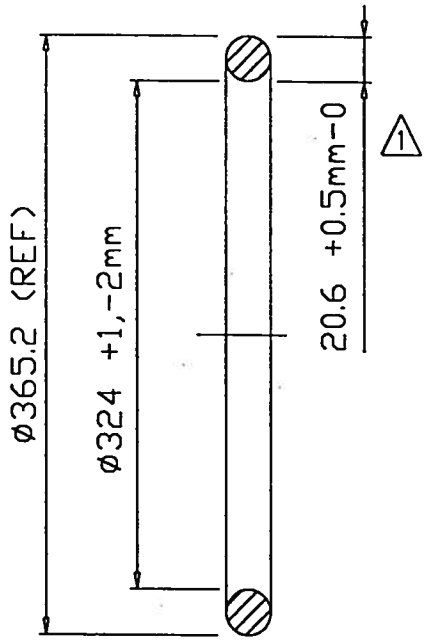

1 → WEIGHT ADDED.

DYWIDAG CABLE SYSTEMS	DIMENSIONS: mm		QUALITY PLAN NUMBER:				PART NUMBER 092 000 2740
O-RING - GIRDER	TOLERANCES: ±3 UNLESS NOTED	WEIGHT .81 LBS.	REV. 1	DATE 10-31-01	NAME H.K.		
DATE: 10-03-01 | DWG: L.G. & C.M. | CHK: H.K. HFK | APP: K.S.	MATERIAL: NEOPRENE DURO 50	SCALE					DRAWING NUMBER 092 000 2740

This drawing, the pertinent enclossures, descriptions, calculations etc. and their contents are the property of DYWIDAG SYSTEMS INTERNATIONAL, USA, INC. They are not allowed to be duplicated with-out our permission. They are also not to be shown or explained for any reason to a third party other than for reasons expressly intended by the original receiver. They have to be returned on request.

DYWIDAG-SYSTEMS INTERNATIONAL USA, INC.

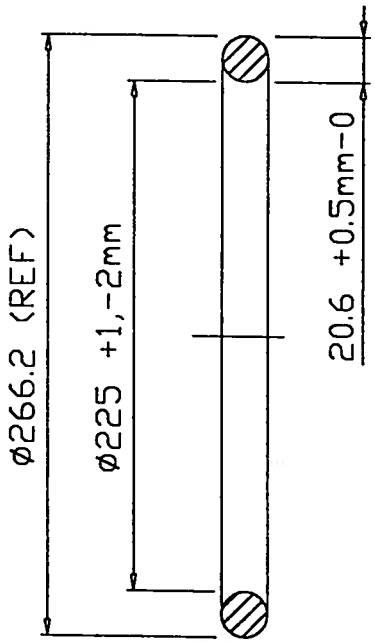

1 → WEIGHT ADDED.

DYWIDAG CABLE SYSTEMS	DIMENSIONS: mm		QUALITY PLAN NUMBER:			PART NUMBER 092 000 2741
O-RING - TOWER	TOLERANCES: ±3 UNLESS NOTED	WEIGHT .58 LBS.	REV. 1	DATE 10-31-01	NAME H.K.	
DATE: 10-03-01 DWG: L.G. & G.M. CHK: H.K. APP: K.S.	MATERIAL: NEOPRENE DURO 50	SCALE NTS				DRAWING NUMBER 092 000 2741

This drawing, the pertinent enclossures, descriptions, calculations etc. and their contents are the property of DYWIDAG SYSTEMS INTERNATIONAL, USA, INC. They are not allowed to be duplicated with-out our permission. They are also not to be shown or explained for any reason to a third party other than for reasons

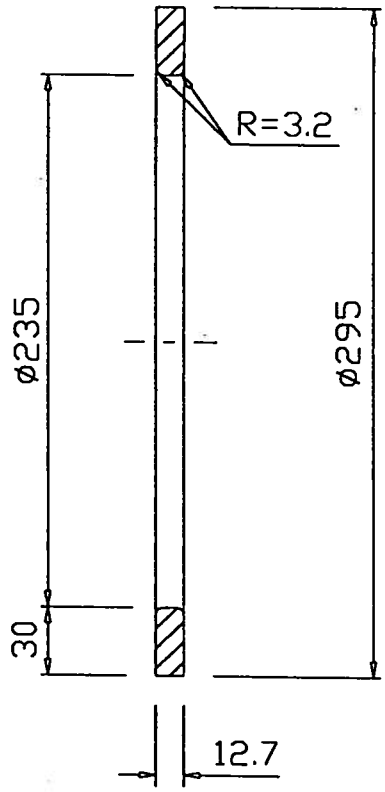

ø TOLERANCE -1,+3mm

- GALVANIZED PER SPECIFICATION.

1 → WEIGHT ADDED.

DYWIDAG CABLE SYSTEMS	DIMENSIONS: mm		QUALITY PLAN NUMBER:			PART NUMBER 092 000 2742
FLANGE RING - TOWER	TOLERANCES: ±1 UNLESS NOTED	WEIGHT 5.49 LBS.	REV. 1	DATE 10-31-01	NAME H.K.	
DATE: 10-03-01 DWG: L.G. & G.M. CHK: H.K. APP: K.S. (ST)	MATERIAL: ASTM A36	SCALE NTS				DRAWING NUMBER 092 000 2742

This drawing, the pertinent enclossures, descriptions, calculations etc. and their contents are the property of DYWIDAG SYSTEMS INTERNATIONAL, USA, INC. They are not allowed to be duplicated with-out our permission. They are also not to be shown or explained for any reason to a third party other than for reasons expressly intended by the original receiver. They have to be returned on request.

DYWIDAG-SYSTEMS INTERNATIONAL USA, INC.

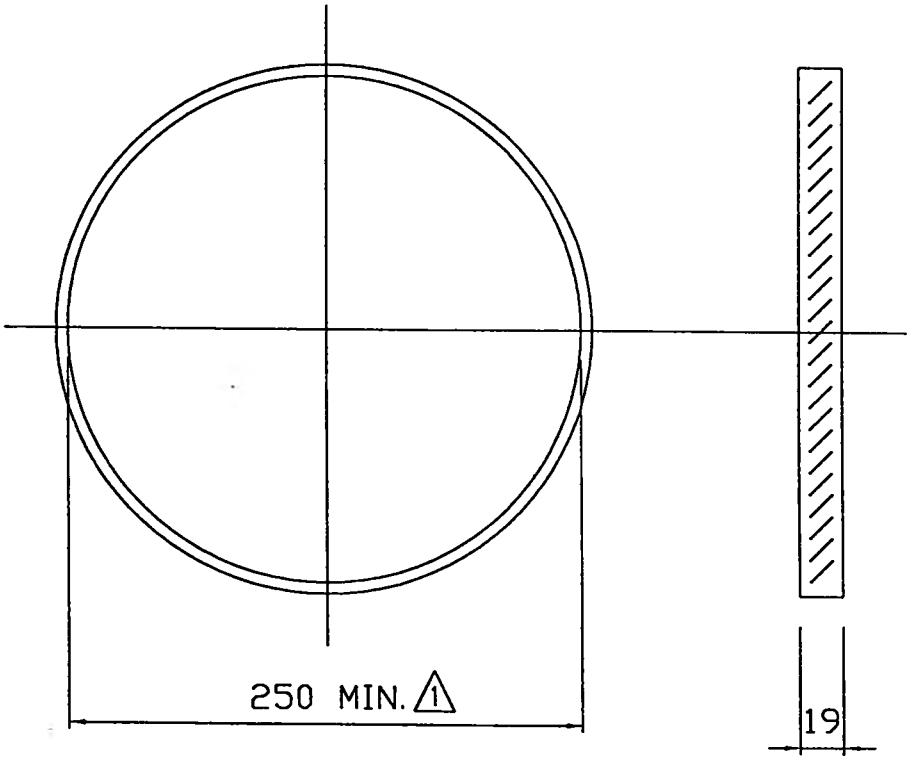

- HEAVY DUTY CONSTRUCTION QUALITY SS CLAMP.

DYWIDAG CABLE SYSTEMS	DIMENSIONS: mm		QUALITY PLAN NUMBER:				PART NUMBER 092 000 2745
STAINLESS STEEL CLAMPS 6TH ST. BRIDGE	TOLERANCES: ±0.5 UNLESS NOTED	WEIGHT	REV.	DATE	NAME		
			1	10-31-01	H.K.		
DATE: 10-05-01 / DWG: RS / CHK: H.K. / APP: K.S.	MATERIAL: STAINLESS STEEL	SCALE NTS					
							DRAWING NUMBER 092 000 2745

This drawing, the pertinent enclossures, descriptions, calculations etc. and their contents are the property of DYWIDAG SYSTEMS INTERNATIONAL, USA, INC. They are not allowed to be duplicated with-out our permission. They are also not to be shown or explained for any reason to a third party other than for reasons expressly intended by the original receiver. They have to be returned on request.

DYWIDAG-SYSTEMS INTERNATIONAL USA, INC.

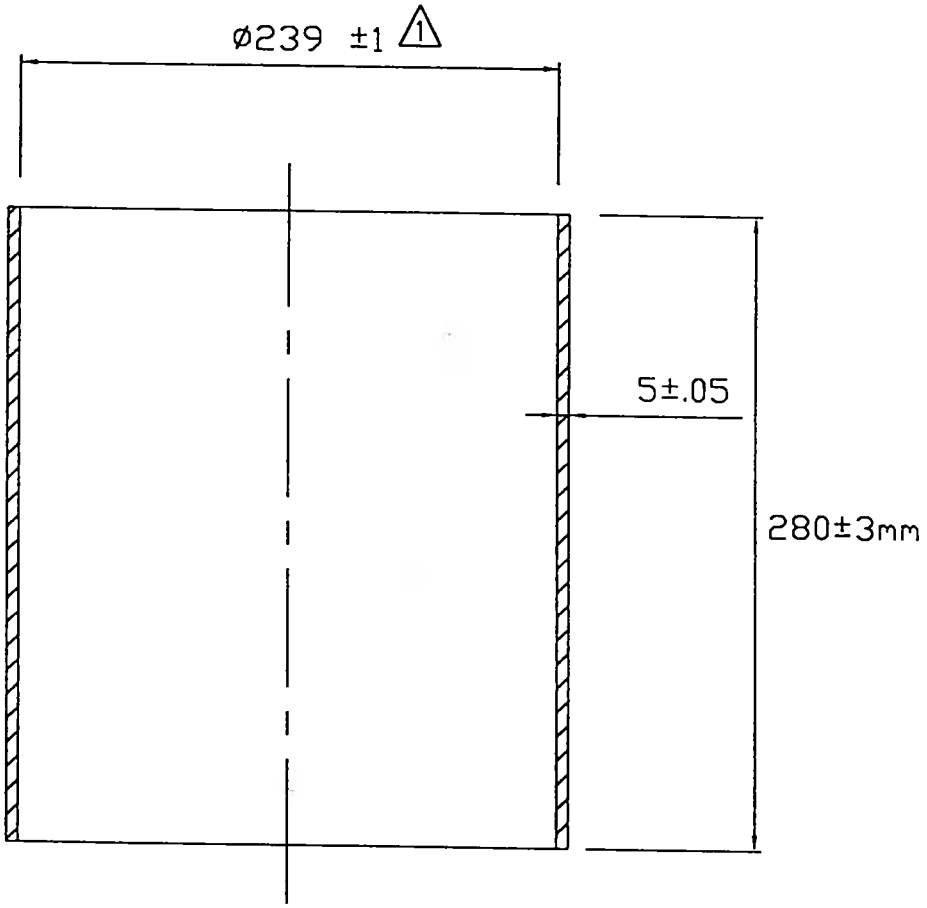

1 → WEIGHT ADDED.

DYWIDAG POST-TENSIONING SYSTEMS	DIMENSIONS: mm		QUALITY PLAN NUMBER:			PART NUMBER 092 000 2746
SEALING BOOT 6TH ST. BRIDGE	TOLERANCES: SEE ABOVE	WEIGHT ~2.42 LBS.	REV. 1	DATE 10-31-01	NAME H.K.	
DATE: 10-05-01 DWG: RS CHK: H.K. APP: K.S.	MATERIAL: NAT. RUBBER	SCALE NTS				DRAWING NUMBER 092 000 2746

This drawing, the pertinent enclossures, descriptions, calculations etc. and their contents are the property of DYWIDAG SYSTEMS INTERNATIONAL, USA, INC. They are not allowed to be duplicated with-out our permission. They are also not to be shown or explained for any reason to a third party other than for reasons expressly intended by the original receiver. They have to be returned on request.

DYWIDAG-SYSTEMS INTERNATIONAL USA INC

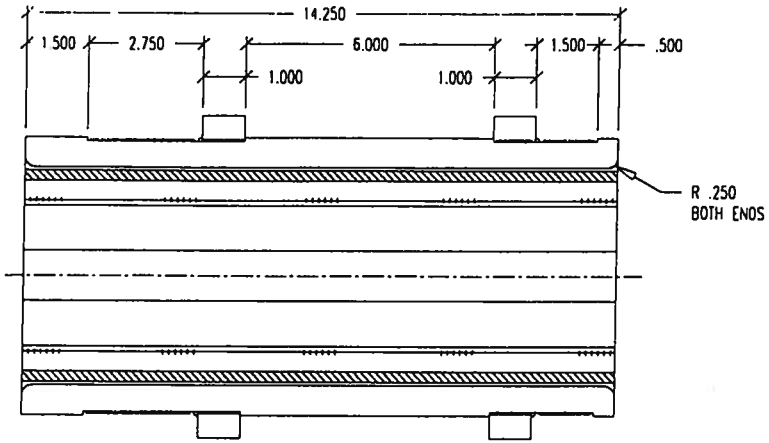

SECTION A-A

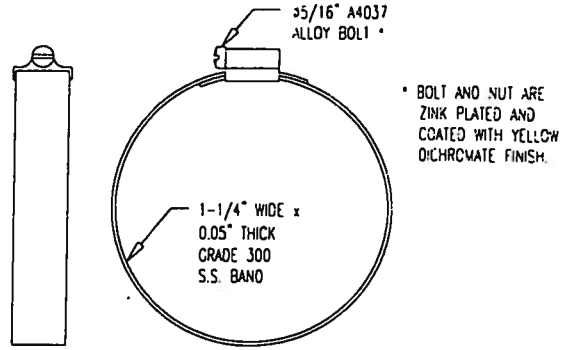

S.S. BAND 092 000 2754

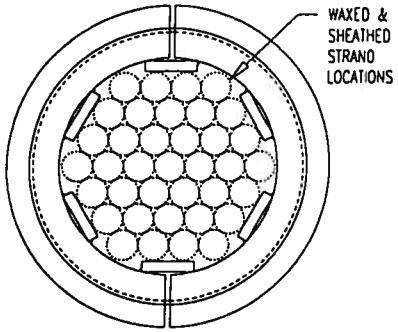

LEFT SIDE VIEW

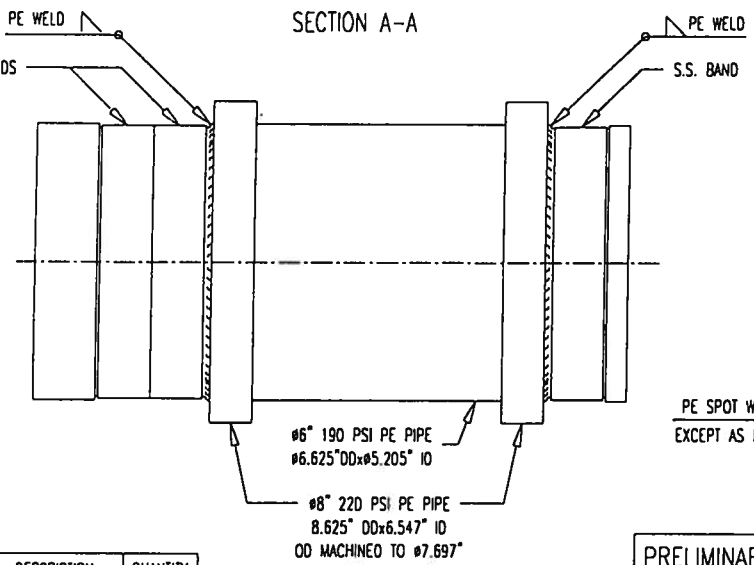

FRONT VIEW

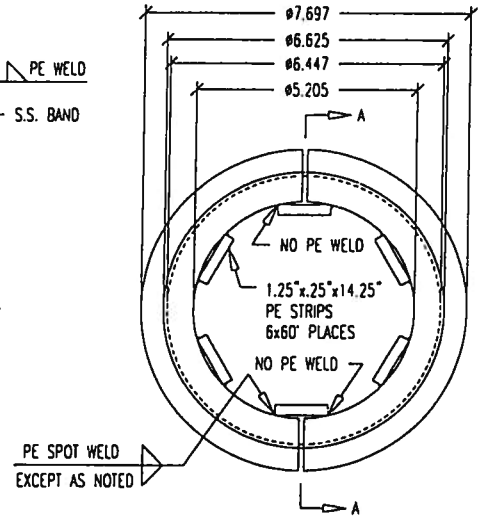

RIGHT SIDE VIEW

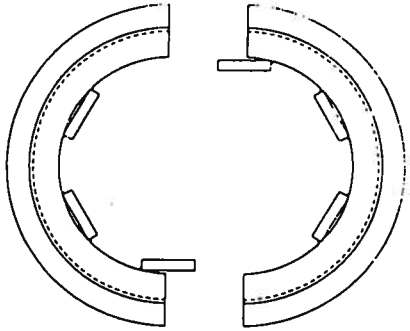

RIGHT SIDE VIEW
(WITHOUT S.S. BANDS)

PART NUMBER	DESCRIPTION	QUANTITY
092 000 2750	PE CABLE CLAMP ASSEMBLY	1
092 000 2752	PE PIPE ø6" 190 PSI & ø8" 220 PSI	1
092 000 2754	S.S. BAND	3
092 000 2755	PE STRIP	6

PRELIMINARY

⚠1 → STEEL CLAMP ELIMINATED; S.S BAND DETAIL ADDED; 2 S.S. BANDS ADDED; AXIAL DIM. CHANGED

DYWIDAG CABLE SYSTEMS

PE CABLE CLAMP ASSEMBLY
6TH ST. BRIDGE

DATE: 11-06-01 | DWG: G. MALECKI | CHK: H.K. | APP: K.S.

This drawing, the pertinent enclosures, descriptions, calculations etc. and their contents are the property of DYWIDAG SYSTEMS INTERNATIONAL, USA, INC. They are not allowed to be duplicated without our permission. They are also not to be shown or explained for any reason to a third party other than for reasons expressly intended by the original receiver. They have to be returned on request.

DIMENSIONS: INCH | O.A.

TOLERANCES ±.020 UNLESS NOTED

MATERIAL: SEE ABOVE | SCALE 1:3

QUALITY PLAN NUMBER:

REV.	DATE	NAME
1	11-15-01	H.K.

PART NUMBER: 092 000 2750, 092 000 2752, 092 000 2754, 092 000 2755

DRAWING NUMBER: 092 000 2750

DYWIDAG-SYSTEMS INTERNATIONAL, USA, INC. DSI

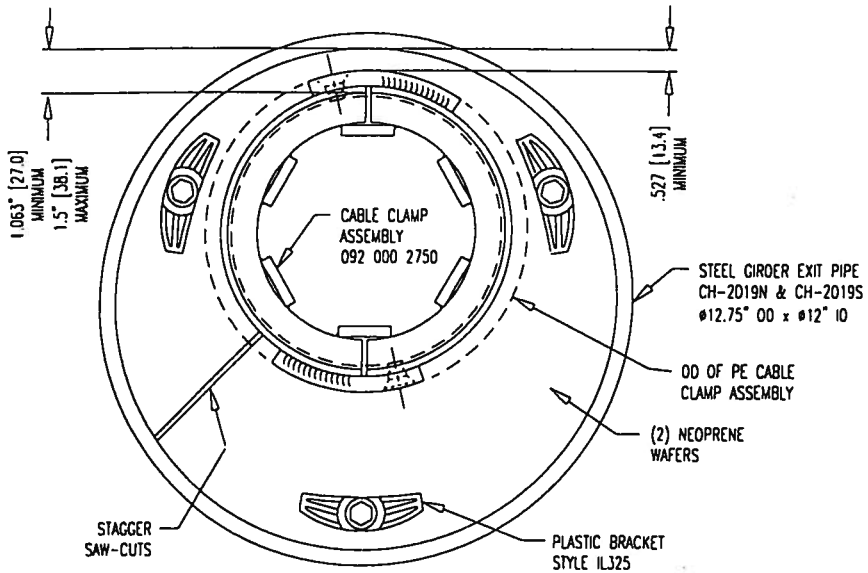

ECCENTRIC CONFIGURATION

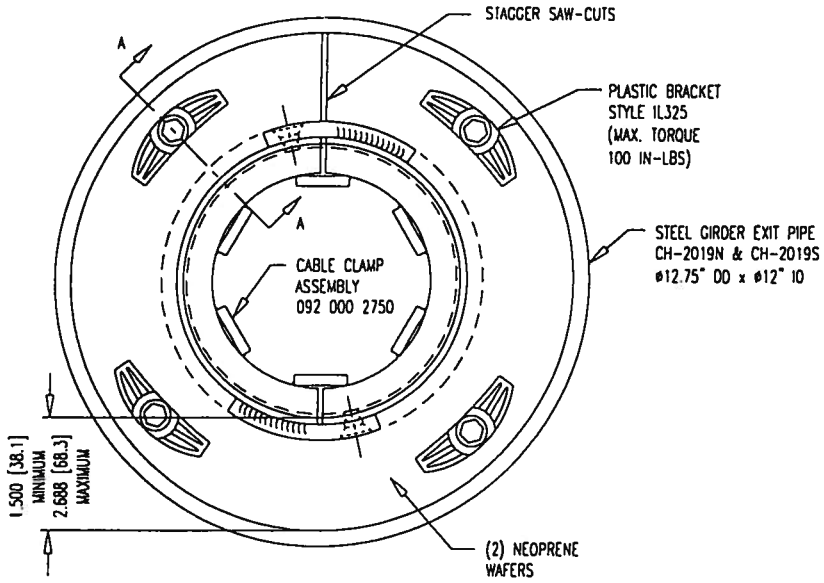

CONCENTRIC CONFIGURATION

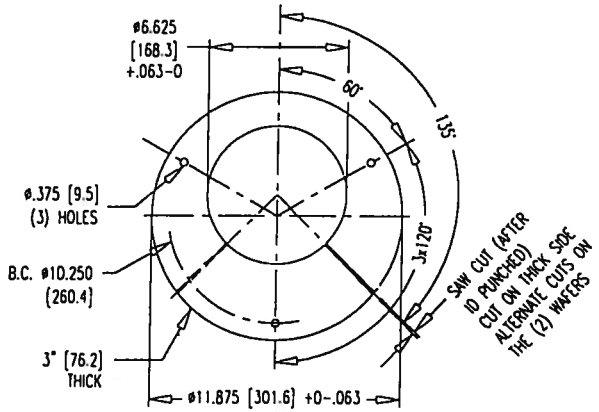

NEOPRENE WAFER
50 DUROMETER HARDNESS
ECCENTRIC CONFIGURATION (MIN. WALL 1.063"-1.5")
ID LOCATION TO BE DETERMINED BY FIELD MEASUREMENTS--AND PUNCHED ON SITE

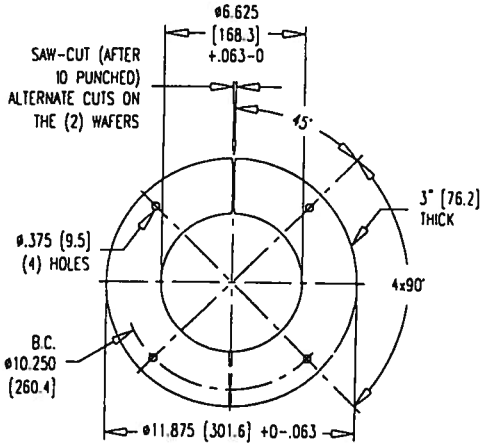

NEOPRENE WAFER
50 DUROMETER HARDNESS
CONCENTRIC CONFIGURATION (MIN. WALL 1.5"-2.6.8")
ID LOCATION TO BE DETERMINED BY FIELD MEASUREMENTS--AND PUNCHED ON SITE

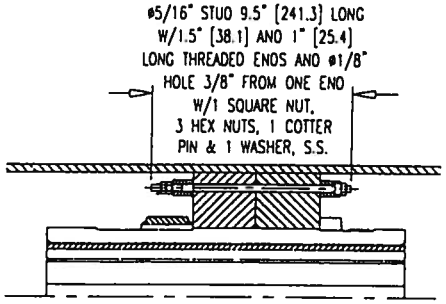

SECTION A-A
(SHOWN AS IF PE PIPE WAS CENTERED INSIDE STEEL PIPE)

1. TORQUE ALL BOLTS EVENLY.
2. PRE-GREASE ID OF STEEL GIRDER EXIT PIPE TO MAKE DAMPER PLACEMENT EASIER.
3. PRE-GREASE BOLTS BEFORE INSTALLATION.
4. STAINLESS STEEL HARDWARE ONLY.
5. USE LOCKTITE ON SOCKET HEAD CAP SCREWS.

DYWIDAG CABLE SYSTEMS	DIMENSIONS INCH (mm) mm FOR REFERENCE ONLY	QUALITY PLAN NUMBER	PART NUMBER 092 000 2753
31/37-0.6" NEOPRENE VIBRATION DAMPER 6TH ST. BRIDGE	WEIGHT	REV. / DATE / NAME	
DATE: 11-06-01 / DWG: D. MALECKI / CHK: H.K. HKR / APP: K.S.	MATERIAL: SEE ABOVE	SCALE 1:3 1:6	DRAWING NUMBER 092 000 2753
This drawing, the pertinent enclosures, descriptions, calculations etc. and their contents are the property of DYWIDAG SYSTEMS INTERNATIONAL, USA, INC. They are not allowed to be duplicated with-out our permission. They are also not to be shown or explained for any reason to a third party other than for reasons expressly intended by the original receiver. They are to be returned on request.			
DYWIDAG-SYSTEMS INTERNATIONAL, USA, INC. DSI			

REDUCED COPY

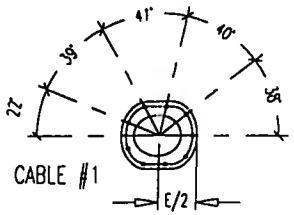

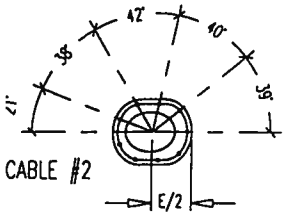

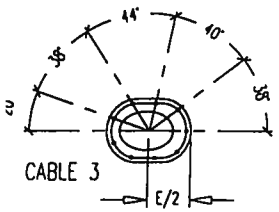

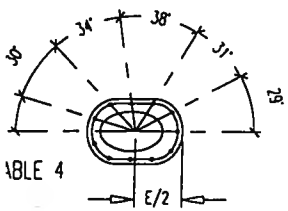

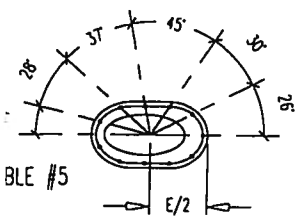

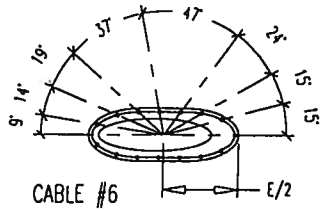

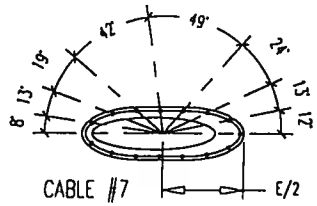

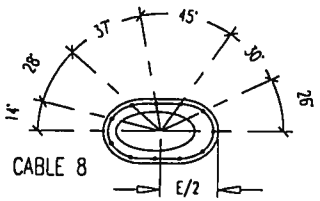

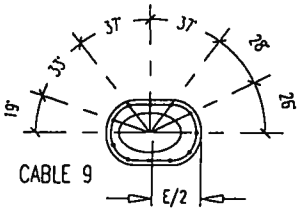

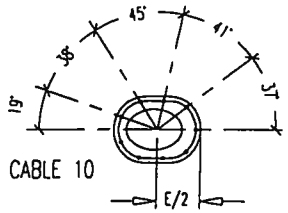

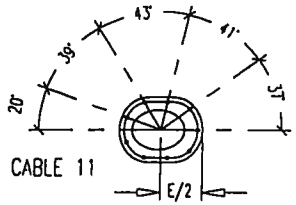

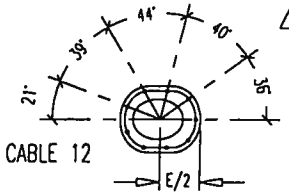

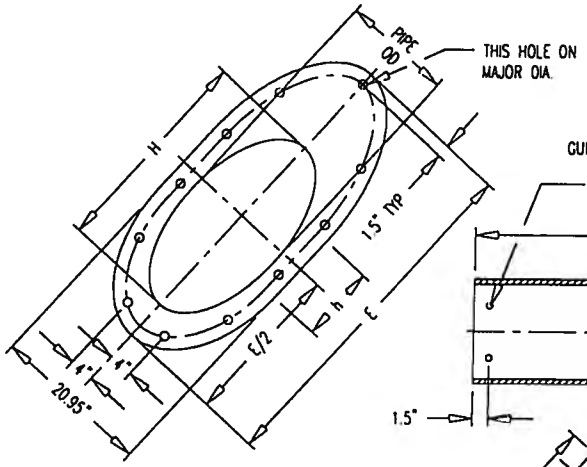

VIEW A-A

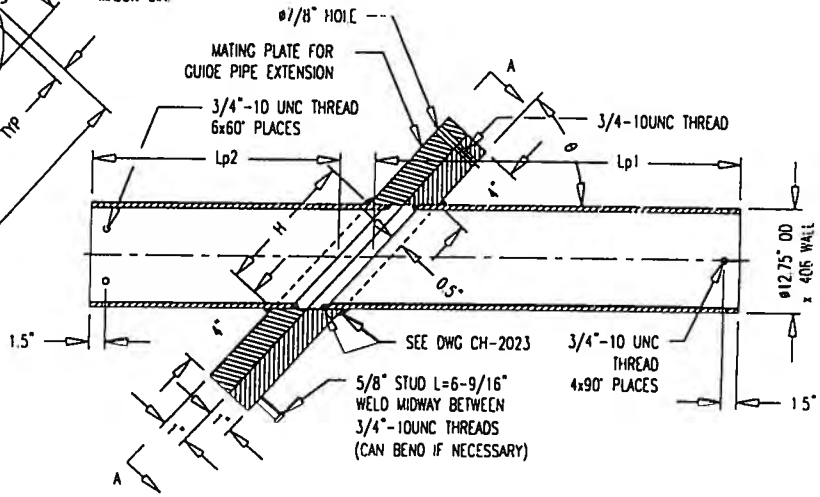

NOTES:
1. PIPE SHALL BE A53B TYPE E.
2. PLATES SHALL BE A572 GR 50.
3. GALVANIZE TO ASTM A123, WISCONSIN D.O.T. SPECS AFTER WELDING.
4. TO BE BLASTED AFTER WELDING--NO SCALE.
5. ALL THREADED HOLES TO BE PLUGGED BY THROW-AWAY BOLTS DURING GALVANIZING FOR THREAD PROTECTION.
6. ALL FLANGE MOUNTING BOLTS 3/4"-10UNC GRADE A490 2" LONG, MECHANICALLY GALVANIZED.

CABLE #	θ (degree) ±0.2°	Lp1 (ft)	Lp2 (ft)	H (in)	h (in)	E (in)	NO. OF HOLES	PLATE WT (lbs)	PIPE LP1 WT (lbs)	PIPE LP2 WT (lbs)
1	58.49	1.947	4.664	14.955	8.000	24.181	9	80.70	104.50	220.2
2	54.12	2.149	4.462	15.736	8.000	25.182	9	83.14	115.31	210.7
3	48.34	2.443	4.322	17.066	8.000	26.846	9	87.13	131.09	204.1
4	40.64	2.939	4.305	19.576	12.000	29.906	11	99.40	157.70	203.2
5	30.23	4.481	4.515	25.326	12.000	36.759	11	115.07	240.44	213.2
6	16.56	9.188	4.896	44.736	18.000	59.463	15	173.62	493.02	231.2
7	15.09	10.443	4.910	48.978	18.000	64.396	15	184.61	560.32	231.8
8	30.53	4.391	4.184	25.100	12.000	36.491	11	114.46	235.59	197.6
9	40.03	3.193	3.971	19.824	12.000	30.206	11	100.09	171.34	187.5
10	46.14	2.730	4.013	17.683	8.000	27.605	9	88.92	146.46	189.5
11	50.31	2.453	4.157	16.568	8.000	26.228	9	85.66	131.59	196.3
12	53.32	2.254	4.350	15.899	8.000	25.389	9	83.64	120.95	205.4

△1 → TITLE CHANGED.

OYWIDAG CABLE SYSTEMS

TOWER PIPE ASSEMBLY, NORTH
6TH ST. BRIDGE

DATE: 04-05-01 | DWG: G. MALECKI | CHK: H.K. | APP: K.S.

This drawing, the pertinent enclosures, descriptions, calculations etc and their contents are the property of DYWIDAG SYSTEMS INTERNATIONAL, USA, INC. They are not allowed to be duplicated without our permission. They are also not to be shown or explained for any reason to a third party other than for reasons expressly intended by the original receiver. They have to be returned on request.

DIMENSIONS: INCH | O.A. | SCALE NTS

REV.	DATE	NAME
1	04-18-01	A.W.
2	10-31-01	H.K.

DRAWING NUMBER CH-2019A

DYWIDAG-SYSTEMS INTERNATIONAL, USA, INC. DSI

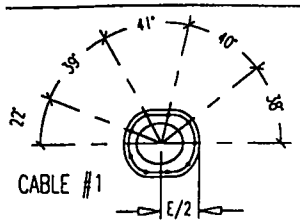

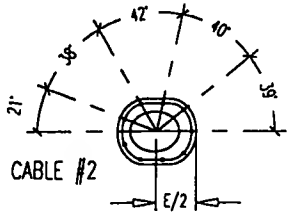

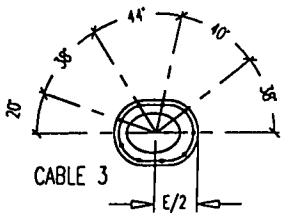

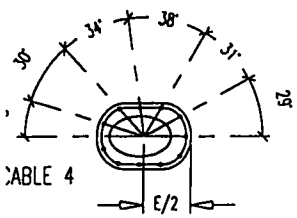

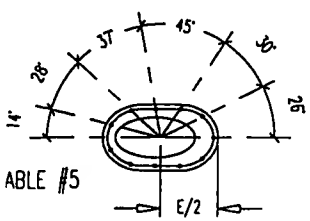

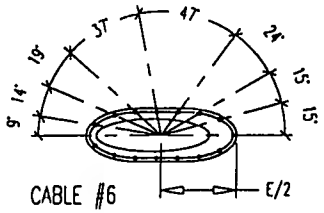

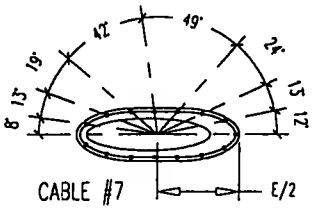

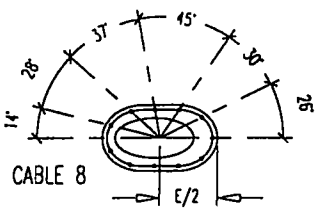

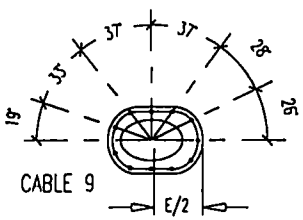

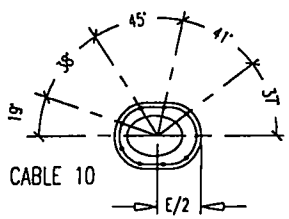

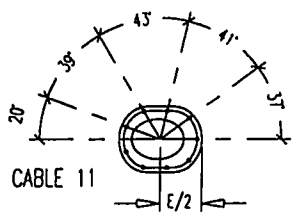

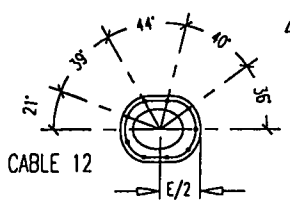

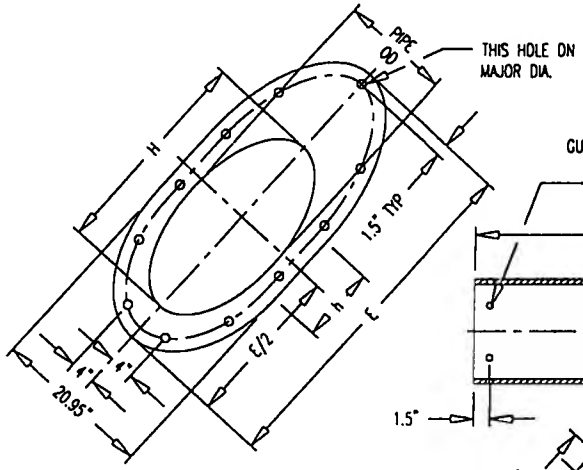

VIEW A-A

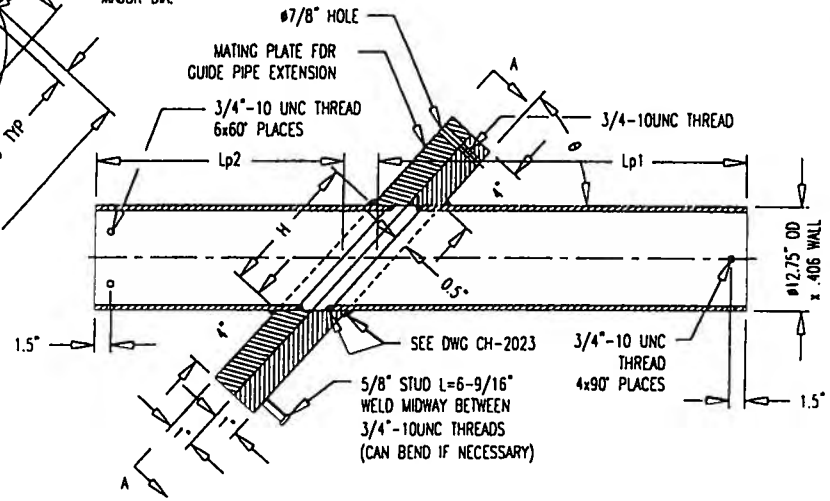

NOTES:
1. PIPE SHALL BE A53B TYPE E.
2. PLATES SHALL BE A572 GR 50.
3. GALVANIZE TO ASTM A123, WISCONSIN D.O.T. SPECS AFTER WELDING.
4. TO BE BLASTED AFTER WELDING--NO SCALE.
5. ALL THREADED HOLES TO BE PLUGGED BY THROW-AWAY BOLTS DURING GALVANIZING FOR THREAD PROTECTION.
6. ALL FLANGE MOUNTING BOLTS 3/4"-10UNC GRADE A490 2" LONG, MECHANICALLY GALVANIZED.

CABLE #	θ (degree) ±0.2°	Lp1 (ft)	Lp2 (ft)	H (in)	h (in)	E (in)	NO. OF HOLES	PLATE WT (lbs)	PIPE LP1 WT (lbs)	PIPE LP2 WT (lbs)
1	58.54	1.945	4.664	14.955	8.000	24.171	9	80.70	104.36	220.2
2	54.24	2.146	4.462	15.736	8.000	25.153	9	83.14	115.12	210.7
3	48.52	2.436	4.322	17.066	8.000	26.786	9	87.13	130.73	204.1
4	40.80	2.929	4.305	19.576	12.000	29.828	11	99.40	157.15	203.2
5	30.34	4.465	4.515	25.326	12.000	36.658	11	115.07	239.59	213.2
6	16.59	9.172	4.896	44.736	18.000	59.371	15	173.62	492.17	231.2
7	14.97	10.527	4.910	48.978	18.000	64.853	15	184.61	564.85	231.8
8	30.15	4.443	4.184	25.100	12.000	36.827	11	114.46	238.41	197.6
9	39.46	3.234	3.971	19.824	12.000	30.494	11	100.09	173.53	187.5
10	45.44	2.764	4.013	17.683	8.000	27.863	9	88.92	148.31	189.5
11	49.52	2.482	4.157	16.568	8.000	26.471	9	85.66	133.17	196.3
12	52.43	2.281	4.350	15.899	8.000	25.625	9	83.64	122.42	205.4

△1 → TITLE CHANGED.

OYWIDAG CABLE SYSTEMS

TOWER PIPE ASSEMBLY, SOUTH
6TH ST. BRIDGE

DATE: 07-06-01 | DWG: G. VALECCHI | CHK: H.K. | APP: K.S.

DIMENSIONS: INCH

Q.A.

SCALE NTS

REV.	DATE	NAME
1	10-31-01	H.K.

DRAWING NUMBER CH-2019B

This drawing, the pertinent enclosures, descriptions, calculations etc. and their contents are the property of DYWIDAG SYSTEMS INTERNATIONAL, USA, INC. They are not allowed to be duplicated without our permission. They are also not to be shown or explained for any reason to a third party other than for reasons expressly intended by the original receiver. They have to be returned on request.

DYWIDAG-SYSTEMS INTERNATIONAL, USA, INC. DSI

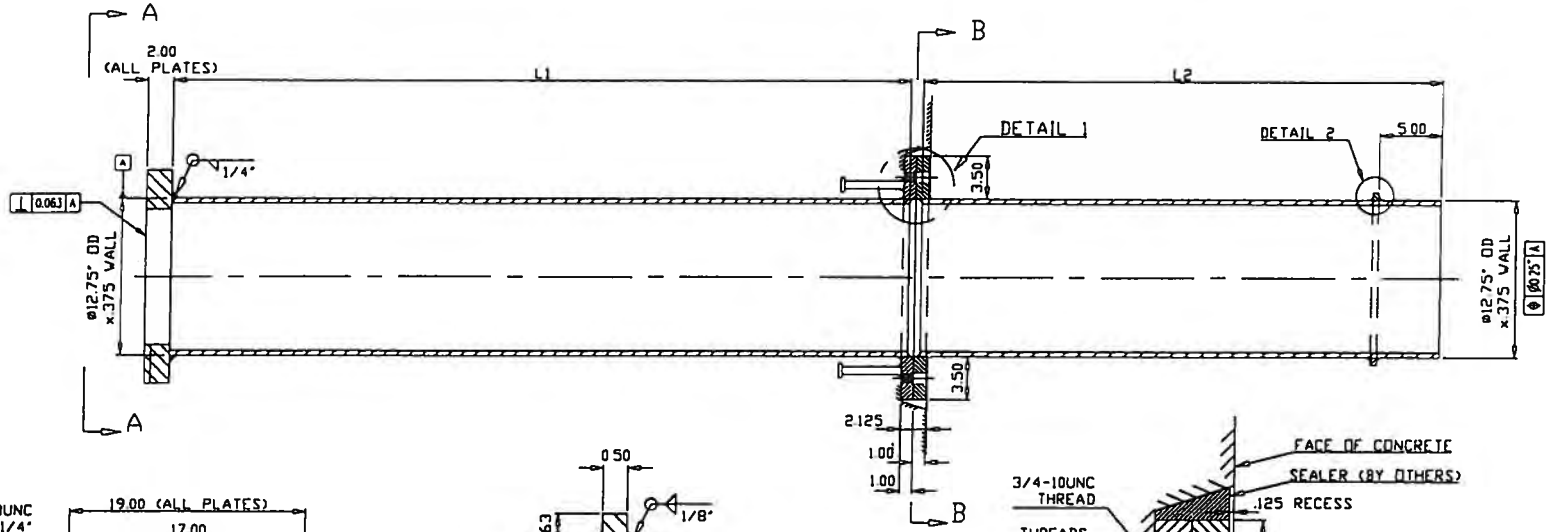

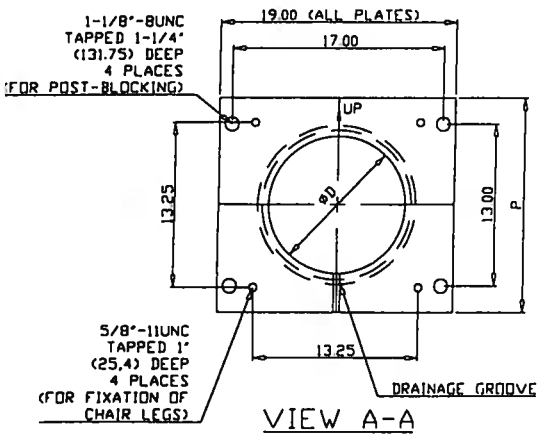

VIEW A-A

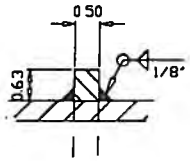

DETAIL 2

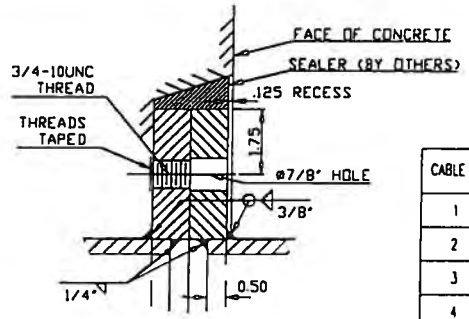

DETAIL 1

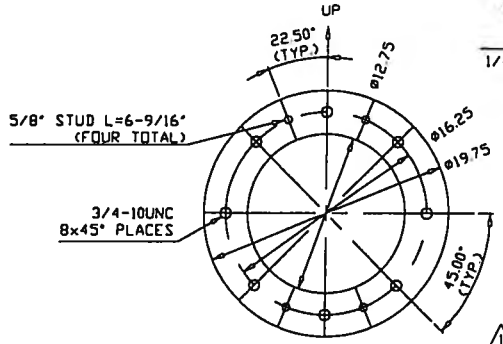

SECTION B-B

CABLE #	CABLE TYPE	L1 (ft)	L2 (ft)	PLATE P (in)	PLATE O (in)
1	37	6.694	3.487	18.5	11.625
2	37	4.521	3.173	18.5	11.625
3	31	4.223	2.858	17.25	10.625
4	31	3.892	2.556	17.25	10.625
5	31	3.647	2.299	17.25	10.625
6	31	3.575	2.136	17.25	10.625
7	31	4.316	2.401	17.25	10.625
8	31	5.438	2.965	17.25	10.625
9	37	6.703	3.614	18.5	11.625
10	37	7.912	4.267	18.5	11.625
11	37	9.061	4.892	18.5	11.625
12	37	10.135	5.479	18.5	11.625

1 → L2 VALUES CHANGED IN TABLE.

NORTH

DRAWING NUMBER WAS CH-2019-BOT, REV. 3 ("NORTH" WAS ADDED, NO OTHER CHANGES).

NOTES:
1. PIPE SHALL BE A53B TYPE E.
2. PLATES SHALL BE A572 GR 50.
3. GALVANIZE TO ASTM A123, WISCONSIN D.O.T. SPECS AFTER WELDING.
4. TO BE BLASTED AFTER WELDING--NO SCALE.
5. ALL THREADED HOLES TO BE PLUGGED BY THROW-AWAY BOLTS DURING GALVANIZING FOR THREAD PROTECTION.
6. ALL FLANGE MOUNTING BOLTS 3/4"-10UNC GRADE A490 1.5" LONG, MECHANICALLY GALVANIZED.

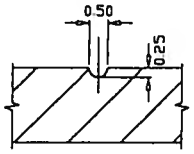

DRAINAGE GROOVE DETAIL

TOLERANCES ACCORDING TO ASME Y14.5M-1994.

DYWIDAG CABLE SYSTEMS	DIMENSIONS: INCH UNLESS NOTED	Q.A.		DRAWING NUMBER
GIROER PIPE ASSEMBLY--NORTH BRIDGE 6TH STREET BRIDGE 414 MILWAUKEE GATEWAY PARTNERS			REV. 1 / DATE 10-19-01 / NAME H.K.	CH-2019-N
DATE: 09-13-01 / DWG: LG & CM / CHK: H.K. / APP: K.S.		SCALE NTS		

This drawing, the pertinent enclosures, descriptions, calculations etc. and their contents are the property of DYWIDAG SYSTEMS INTERNATIONAL, USA, INC. They are not allowed to be duplicated without our permission. They are also not to be shown or explained for any reason to a third party other than for reasons expressly intended by the original receiver. They have to be returned on request.

DYWIDAG-SYSTEMS INTERNATIONAL, USA, INC. DSI

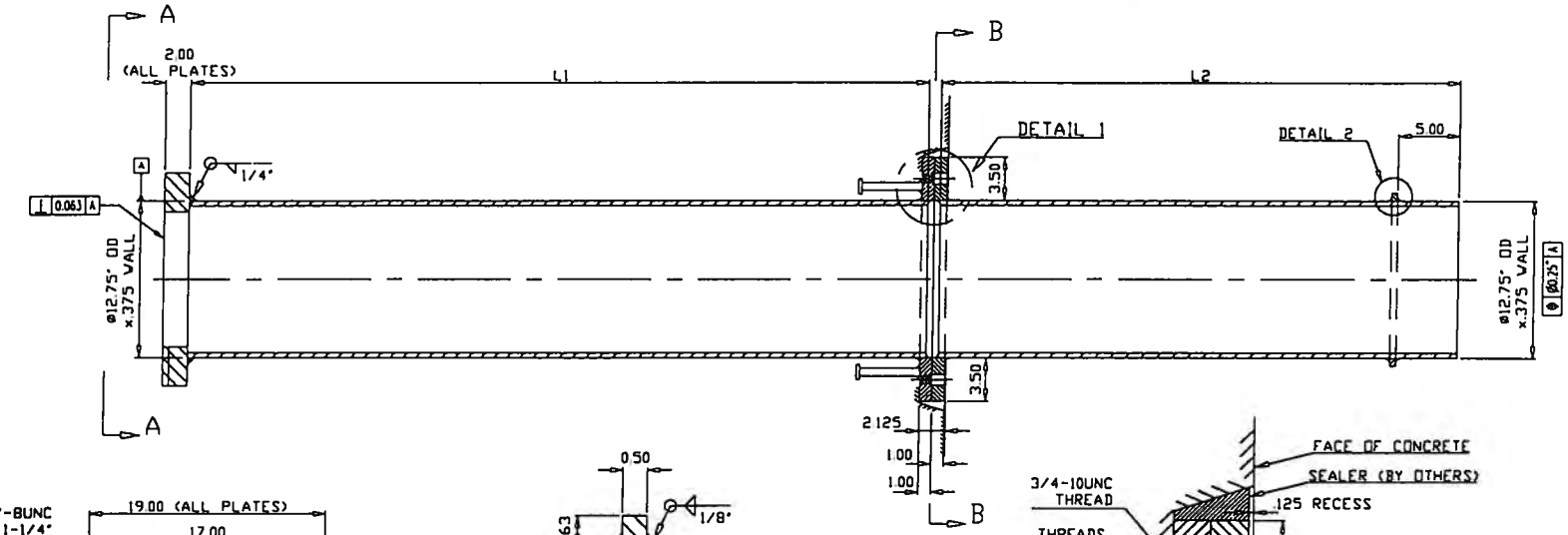

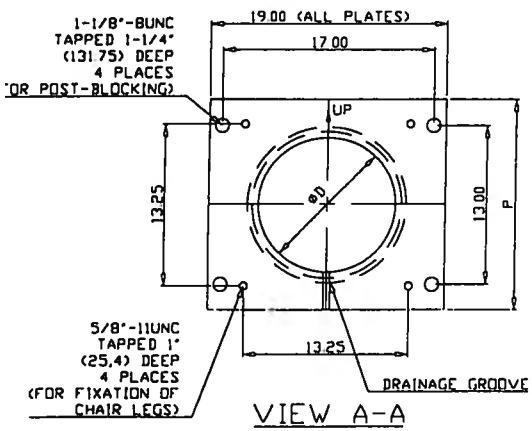

VIEW A-A

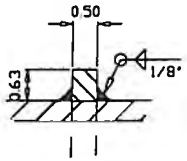

DETAIL 2

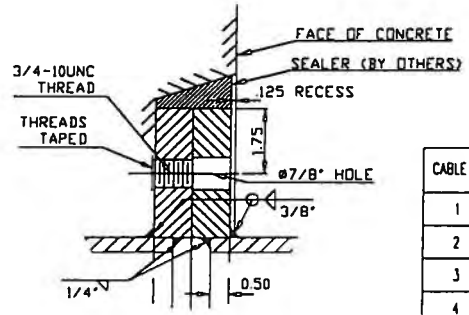

DETAIL 1

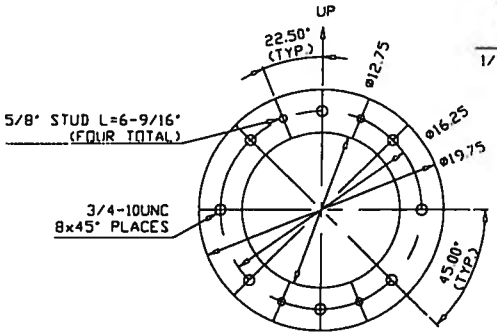

SECTION B-B

△1 → L1 & L2 VALUES CHANGED IN TABLE.

CABLE #	CABLE TYPE	L1 (ft)	L2 (ft)	PLATE P (in)	PLATE O (in)
1	37	8.145	3.616	18.5	11.625
2	37	4.562	3.306	18.5	11.625
3	31	4.241	2.991	17.25	10.625
4	31	3.895	2.687	17.25	10.625
5	31	3.645	2.426	17.25	10.625
6	31	3.574	2.262	17.25	10.625
7	31	4.368	2.524	17.25	10.625
8	31	5.515	3.071	17.25	10.625
9	37	6.795	3.690	18.5	11.625
10	37	8.018	4.305	18.5	11.625
11	37	9.223	4.884	18.5	11.625
12	37	10.373	5.418	18.5	11.625

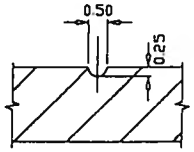

DRAINAGE GROOVE DETAIL

NOTES:
1. PIPE SHALL BE A53B TYPE E.
2. PLATES SHALL BE A572 GR 50.
3. GALVANIZE TO ASTM A123, WISCONSIN D.O.T. SPECS AFTER WELDING.
4. TO BE BLASTED AFTER WELDING--NO SCALE.
5. ALL THREADED HOLES TO BE PLUGGED BY THROW-AWAY BOLTS DURING GALVANIZING FOR THREAD PROTECTION.
6. ALL FLANGE MOUNTING BOLTS 3/4"-10UNC GRADE A490 1.5" LONG, MECHANICALLY GALVANIZED.

TOLERANCES ACCORDING TO ASME Y14.5M-1994.

SOUTH

DYWIDAG CABLE SYSTEMS	DIMENSIONS: INCH	D.A.				DRAWING NUMBER
GIRDER PIPE ASSEMBLY--SOUTH BRIDGE 6TH STREET BRIDGE 414 MILWAUKEE GATEWAY PARTNERS			REV. 1	DATE 10-19-01	NAME K.K.	CH-2019-S
DATE: 10-03-01 DWG: LG & CM CHK: SL APP: K.S.		SCALE NTS				

This drawing, the pertinent enclosures, descriptions, calculations etc and their contents are the property of DYWIDAG SYSTEMS INTERNATIONAL, USA, INC. They are not allowed to be duplicated with-out our permission. They are also not to be shown or explained for any reason to a third party other than for reasons expressly intended by the original receiver. They have to be returned on request.

DYWIDAG-SYSTEMS INTERNATIONAL, USA, INC. DSI

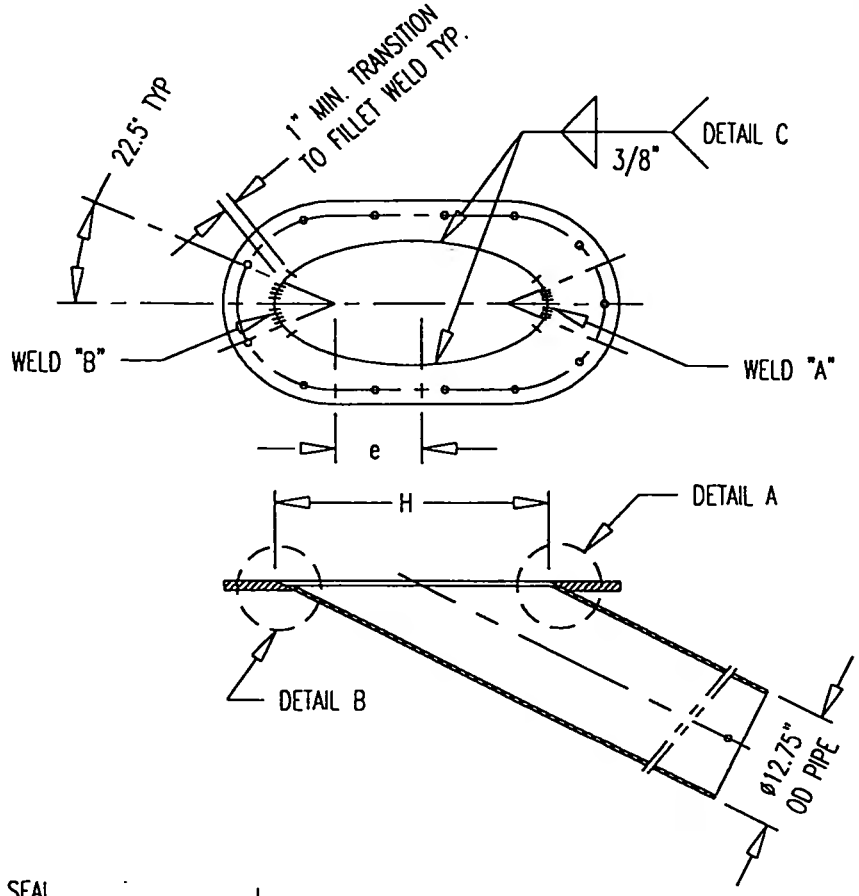

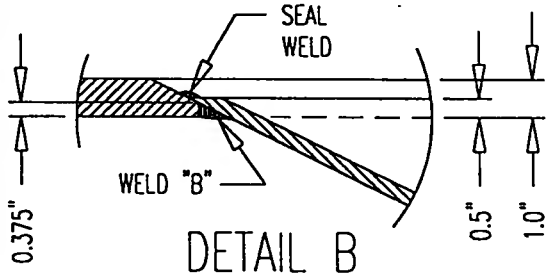

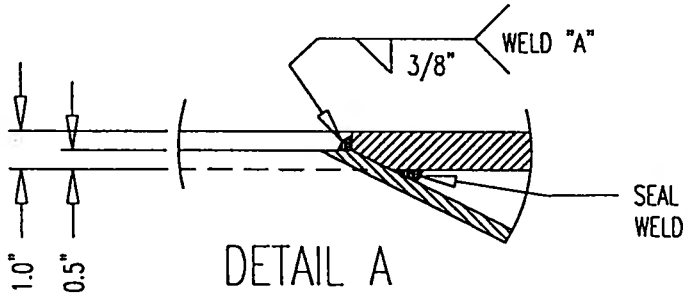

WELDING DETAILS			
CABLE #	θ (degree) ±0.2°	H (in)	e (in)
5	30.23	25.326	6
6	16.56	44.736	12
7	15.09	48.978	12
8	30.53	25.100	6
OTHER CABLES USE DETAIL C ALL AROUND			

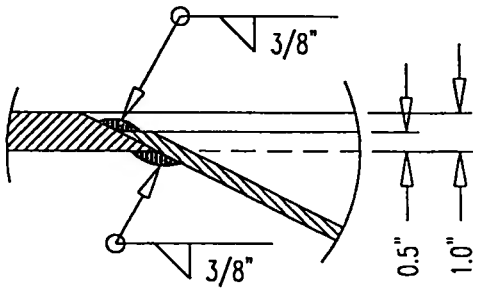

△1 → TITLE CHANGED.

DYWIDAG CABLE SYSTEMS	DIMENSIONS: INCH	Q.A.				DRAWING NUMBER CH-2023
WELD DETAIL 6TH ST., BRIDGE			REV.	DATE	NAME	
			1	10-31-01	H.K.	
DATE: 04-04-01 | DWG: G. MALECKI | CHK: HFK | APP:		SCALE NTS				

This drawing, the pertinent enclossures, descriptions, calculations etc. and their contents are the property of DYWIDAG SYSTEMS INTERNATIONAL, USA, INC. They are not allowed to be duplicated with-out our permission. They are also not to be shown or explained for any reason to a third party other than for reasons

DYWIDAG SYSTEMS INTERNATIONAL USA INC

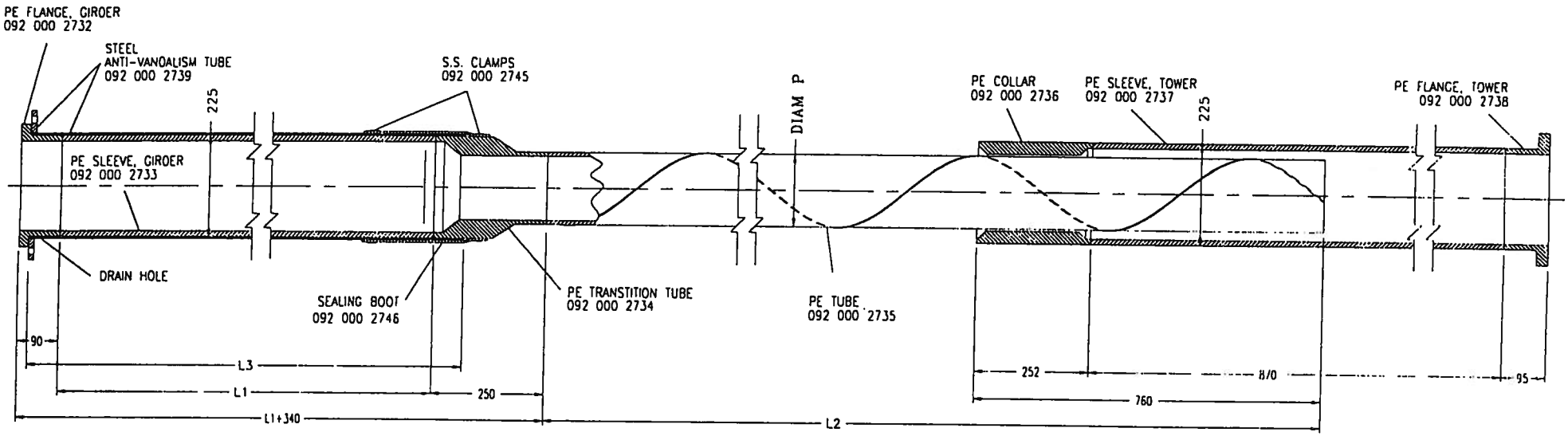

PE TUBE ASSEMBLY -- NORTH BRIDGE						
CABLE NO.	STRAND NO.	TYPE	L1 (m)	L2 (m)	L3 (m)	DIAM P (mm)
N1	35	C37	2.226	32.021	2.342	180
N2	33	C37	2.035	27.450	2.150	180
N3	23	C31	1.842	23.084	1.958	160
N4	23	C31	1.658	18.971	1.774	160
N5	22	C31	1.501	15.083	1.617	160
N6	19	C31	1.402	10.739	1.518	160
N7	12	C31	1.564	12.188	1.680	160
N8	26	C31	1.908	20.108	2.023	160
N9	30	C37	2.304	27.329	2.419	180
N10	36	C37	2.701	34.822	2.817	180
N11	35	C37	3.083	42.568	3.198	180
N12	37	C37	3.441	50.508	3.556	180

PE TUBE ASSEMBLY -- SOUTH BRIDGE						
CABLE NO.	STRAND NO.	TYPE	L1 (m)	L2 (m)	L3 (m)	DIAM P (mm)
S1	36	C37	2.246	31.950	2.362	180
S2	30	C37	2.040	27.360	2.156	180
S3	22	C31	1.837	22.980	1.953	160
S4	21	C31	1.648	18.863	1.764	160
S5	21	C31	1.491	14.987	1.607	160
S6	18	C31	1.396	10.676	1.512	160
S7	13	C31	1.583	12.221	1.699	160
S8	27	C31	1.954	20.236	2.070	160
S9	29	C37	2.368	27.523	2.484	180
S10	35	C37	2.782	35.062	2.898	180
S11	35	C37	3.185	42.838	3.301	180
S12	36	C37	3.587	50.787	3.703	180

1 → TABLE FOR SOUTH BRIDGE ADDED.

NOTES:
1. ALL DIMENSIONS IN mm UNLESS NOTED.
2. OVERLAP SHOWN AT 60°F.
3. TWO OF EACH CABLE NO. REQUIRED.

DYWIDAG CABLE SYSTEMS	DIMENSIONS: mm						DRAWING NUMBER CH-2047
PE TUBE ASSEMBLY 6TH ST. BRIDGE			REV.	DATE	NAME		
			1	11-19-01	K.H.		
DATE: 11-06-01 DWG: G. MALECKI CHK: H.K. APP: K.S.		SCALE M15					
This drawing, the pertinent enclosures, descriptions, calculations etc. and their contents are the property of DYWIDAG SYSTEMS INTERNATIONAL, USA, INC. They are not allowed to be duplicated without our permission. They are also not to be shown or explained for any reason to a third party other than for reasons expressly intended by the original receiver. They have to be returned on request.							DYWIDAG-SYSTEMS INTERNATIONAL, USA, INC. DSI

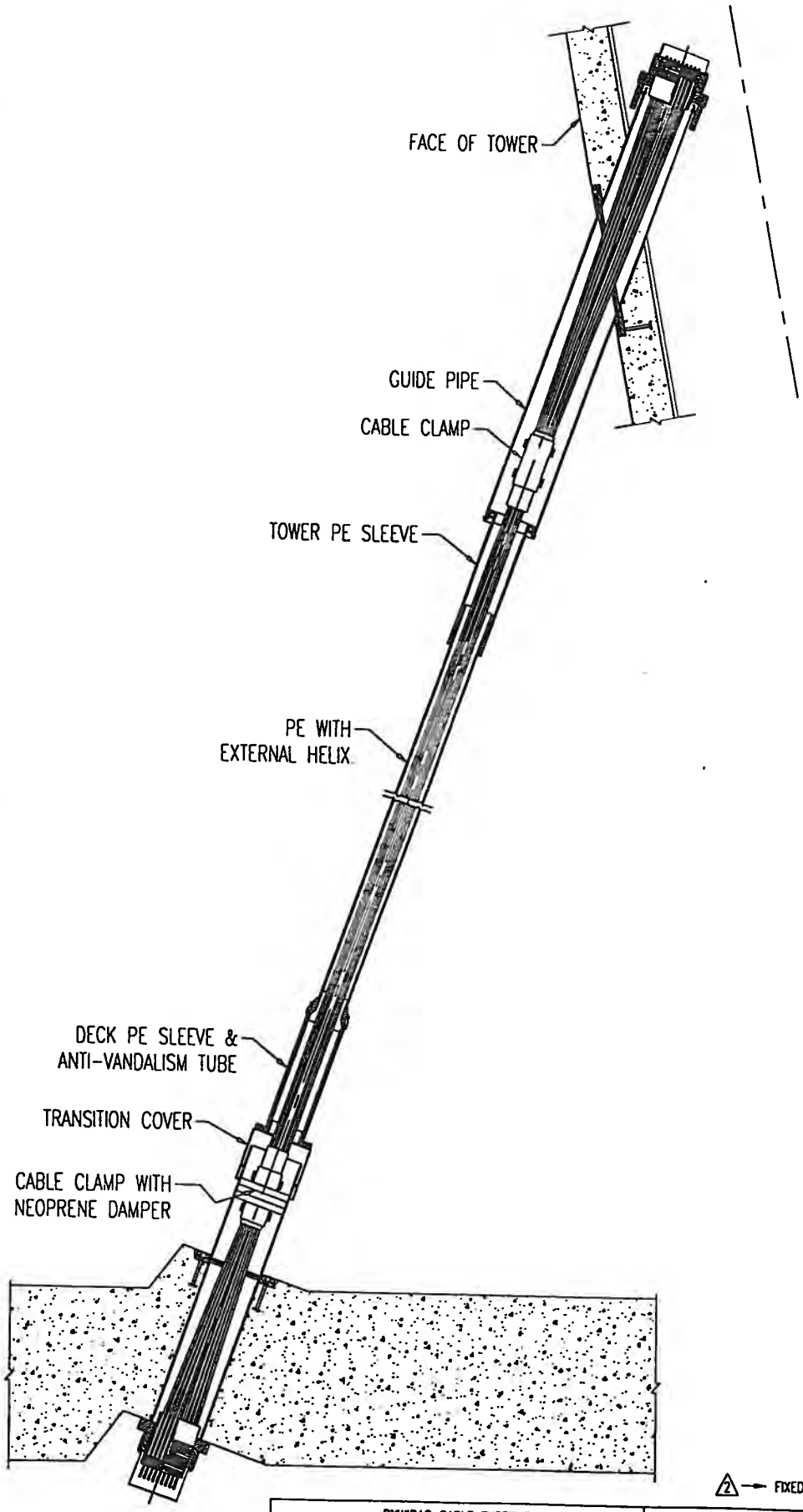

2 → FIXED END ANCHOR AND GROUT CAP SHORTENED.

DYWIDAG CABLE SYSTEMS		QUALITY PLAN NUMBER:	DRAWING NUMBER CH-2048
31/37-0.6" ANCHOR 6TH STREET BRIDGE		REV. / DATE / NAME 1 / 06-03-01 / A.W. 2 / 06-15-01 / A.W.	
DATE: 06-08-01 | DRC: G. VALECH | CHK: AW | APP:	SCALE APPROX 1:25		

This drawing, the pertinent enclosures, descriptions, calculations etc. and their contents are the property of DYWIDAG SYSTEMS INTERNATIONAL, USA, INC. They are not allowed to be duplicated without our permission. They are also not

REDUCED COPY
REDUCED COPY

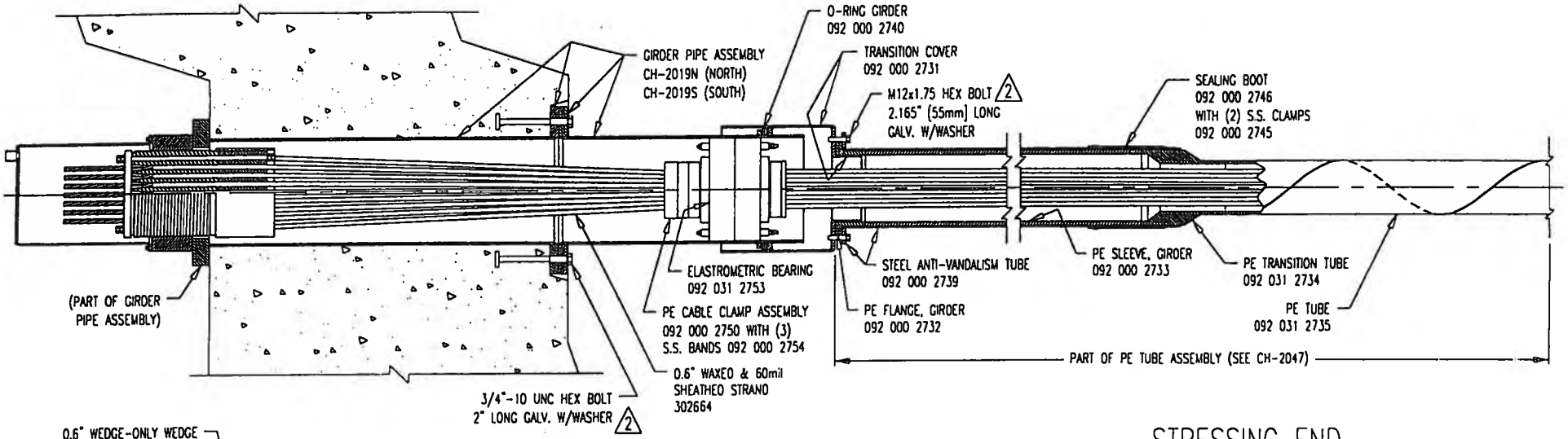

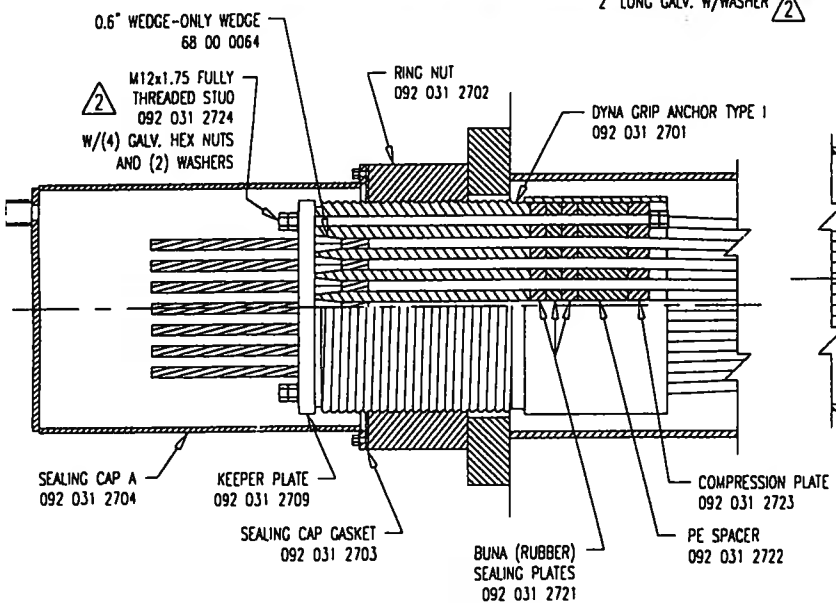

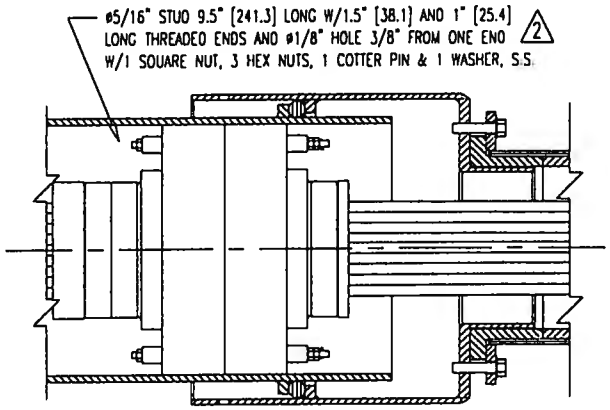

STRESSING END

31-0.6" SYSTEM SHOWN

PART NUMBERS FOR 37-0.6" SYSTEM ARE SIMILAR TO NUMBERS FOR 31-0.6" SYSTEM--JUST SUBSTITUTE "37" FOR "31".

PART NO.	DRAWING NO.	PART NO.	DRAWING NO.	PART NO.	DRAWING NO.
302664	302663	092 031 2723	092 031 2723	092 000 2745	092 000 2745
68 00 0064	68 00 0064	092 031 2724	092 000 2724	092 000 2746	092 000 2746
092 031 2701	092 031 2701	092 000 2731	092 000 2731	092 000 2750	092 000 2750
092 031 2702	092 031 2702	092 000 2732	092 000 2732	092 000 2753	092 000 2753
092 031 2703	092 031 2703	092 000 2733	092 000 2733	092 000 2754	092 000 2750
092 031 2704	092 031 2704	092 031 2734	092 000 2734	CH-2019N	CH-2019N
092 031 2709	092 031 2709	092 031 2735	092 000 2735	CH-2019S	CH-2019S
092 031 2721	092 031 2721	092 000 2739	092 000 2739		
092 031 2722	092 031 2722	092 000 2740	092 000 2740		
FOR 37 STRAND ANCHOR PART AND DRAWING NUMBERS, SUBSITUTE "037" FOR "031"					

2 → ELASTROMETRIC BEARING DETAIL ADDED & IT'S HARDWARE SWITCHED AROUND.

DYWIDAG CABLE SYSTEMS

31/37-0.6" ANCHOR--STRESSING END
6TH STREET BRIDGE

DATE: 10-17-01 | DWG: G. WALECKI | CHK: H.K. | APP: K.S.

This drawing, the pertinent enclosures, descriptions, calculations etc. and their contents are the property of DYWIDAG SYSTEMS INTERNATIONAL, USA, INC. They are not allowed to be duplicated with-out our permission. They are also not to be shown or explained for any reason to a third party other than for reasons expressly intended by the original receiver. They have to be returned on request

QUALITY PLAN NUMBER:

REV.	DATE	NAME
1	11-29-01	H.K.
2		H.K.

SCALE 1:12 1:6

DRAWING NUMBER: CH-2080

DYWIDAG-SYSTEMS INTERNATIONAL, USA, INC. DSI

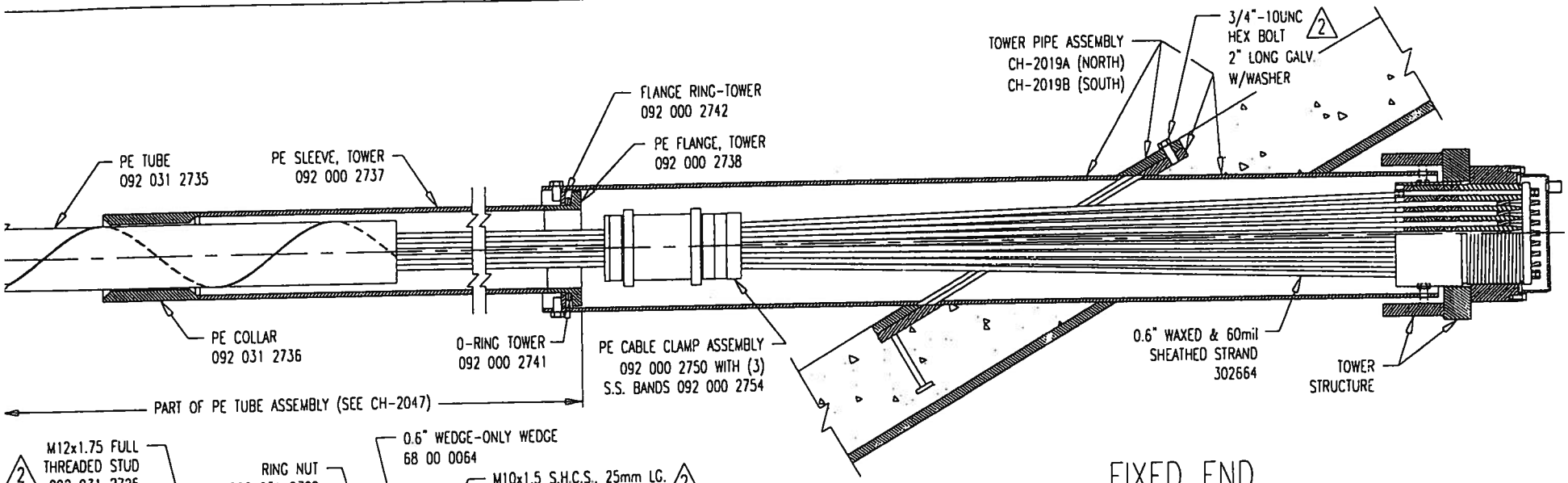

FIXED END

31-0.6" SYSTEM SHOWN

PART NUMBERS FOR 37-0.6" SYSTEM ARE SIMILAR TO NUMBERS FOR 31-0.6" SYSTEM--JUST SUBSTITUTE "37" FOR "31".

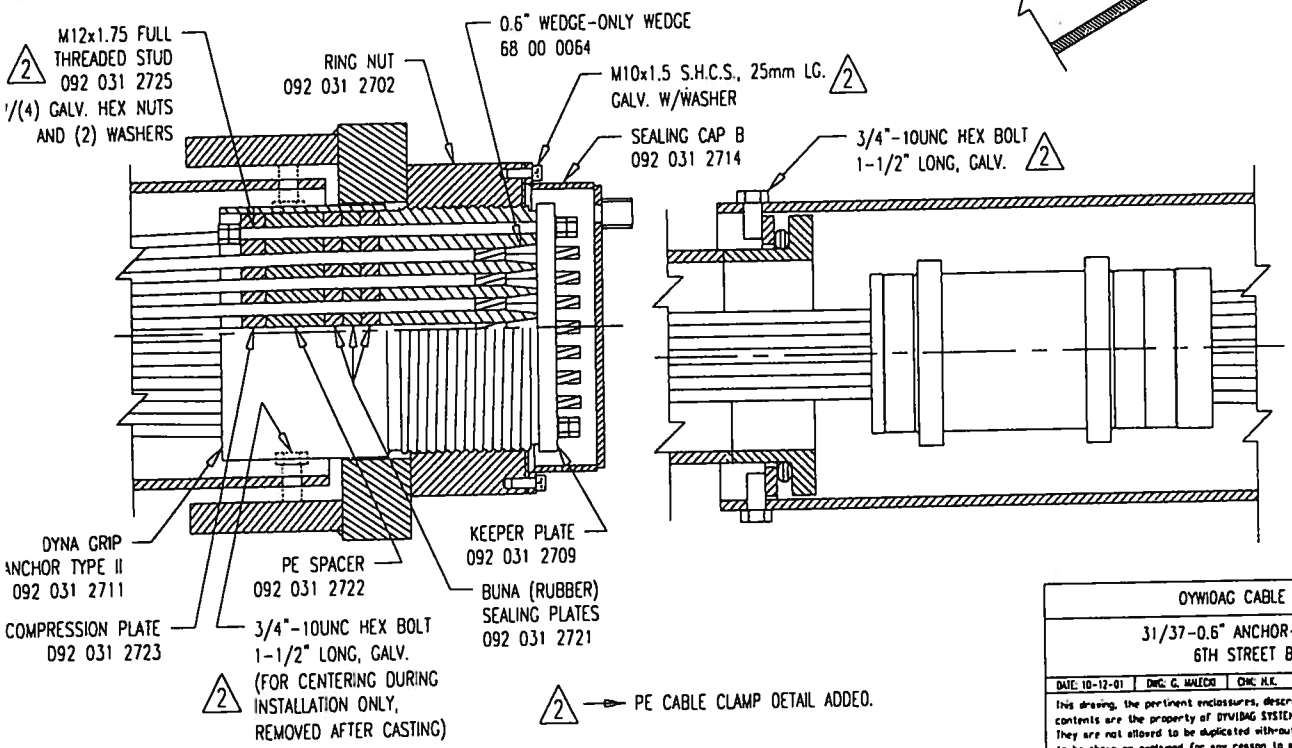

PART NO.	DRAWING NO.	PART NO.	DRAWING NO.	PART NO.	DRAWING NO.
302664	302663	092 031 2722	092 031 2722	092 000 2741	092 000 2741
68 00 0064	68 00 0064	092 031 2723	092 031 2723	092 000 2742	092 000 2742
092 031 2702	092 031 2702	092 031 2725	092 000 2725	092 000 2750	092 000 2750
092 031 2709	092 031 2709	092 031 2735	092 000 2735	092 000 2754	092 000 2750
092 031 2711	092 031 2711	092 031 2736	092 000 2736	CH-2019A	CH-2019A
092 031 2714	092 031 2714	092 000 2737	092 000 2737	CH-2019B	CH-2019B
092 031 2721	092 031 2721	092 000 2738	092 000 2738		
FOR 37 STRAND ANCHOR PART AND DRAWING NUMBERS, SUBSITUTE "037" FOR "031"					

OYWIDAG CABLE SYSTEMS

31/37-0.6" ANCHOR--FIXED END
6TH STREET BRIDGE

DATE: 10-12-01 | DWG: G. MALECKI | CHK: H.K. | APP: K.S.

This drawing, the pertinent enclosures, descriptions, calculations etc. and their contents are the property of DYWIDAG SYSTEMS INTERNATIONAL, USA, INC. They are not allowed to be duplicated without our permission. They are also not to be shown or explained for any reason to a third party other than for reasons expressly intended by the original receiver. They have to be returned on request.

QUALITY PLAN NUMBER:

REV.	DATE	NAME
1	11-29-01	H.K.
2		H.K.

SCALE APPROX 1:12 1:6

DRAWING NUMBER: CH-2081

DYWIDAG-SYSTEMS INTERNATIONAL, USA, INC. DSI

Bolts list

Component	Pieces	Description				Comments	Part No.	Total
Sealing cap	6	Socket head cap screw w/washer	M10 x 1.5 x 25 - 8.8		Zinc coated			576
Keeper plate	6	Full threaded stud	M12 x 1.75 x 370	A193 GR B7	Zinc coated	tower	092 000 2725	288
	6	Full threaded stud	M12 x 1.75 x 465	A193 GR B7	Zinc coated	girder, 31 strand system	092 031 2724	144
	6	Full threaded stud	M12 x 1.75 x 475	A193 GR B7	Zinc coated	girder, 37 strand system	092 037 2724	144
	24	Hex nut	M12 x 1.75 - 12	A194 GR 7	Zinc coated	for use with full threaded stud M12 x 1.75 A193 GR B7		2304
	12	Washer	dia. 12		Zinc coated	for use with full threaded stud M12 x 1.75 A193 GR B7		1152
Spacer plate	3	Socket head cap screw	M8 x 1.25 x 80 - 8.8		Zinc coated			288
Damper	4	Stud	dia. 5/16" x 9.5"	A193 GR B7	Zinc coated	1.5" and 1" threaded ends 5/16"-18 UNC		192
	4	Square nut	5/16"-18 UNC	A194 GR 7	Zinc coated	for use with threaded stud dia. 5/16"-18 UNC A193 GR B7		192
	12	Hex nut	5/16"-18 UNC	A194 GR 7	Zinc coated	for use with threaded stud dia. 5/16"-18 UNC A193 GR B7		576
	4	Washer	5/16"		Zinc coated	for use with threaded stud dia. 5/16"-18 UNC A193 GR B7		192
	4	Plastic bracket, pair		Plastic		Style IL325, see dwg. No. 092 000 2753		192
	4	Cotter pin				for use with threaded stud dia. 5/16"-18 UNC A193 GR B7		192
Transition cover	4	Hex cap screw	M12 x 1.75 x 25 - 8.8		Zinc coated	threaded up to the head		192
	6	Hex cap screw w/washer	M12 x 1.75 x 55 - 8.8		Zinc coated			288
Flange ring	6	Hex cap screw	3/4" x 1.5"-10 UNC	A325	Zinc coated	threaded up to the head		288
Girder exit pipe	8	Hex cap screw w/washer	3/4" x 2"-10 UNC	A325	Zinc coated			384
Tower exit pipe		Hex cap screw w/washer	3/4" x 2"-10 UNC	A325	Zinc coated	number per cable varies		512

Metric hardware in [mm]

12/17/2001
M. [illegible]

CROSS SECTION

LONGITUDINAL SECTION

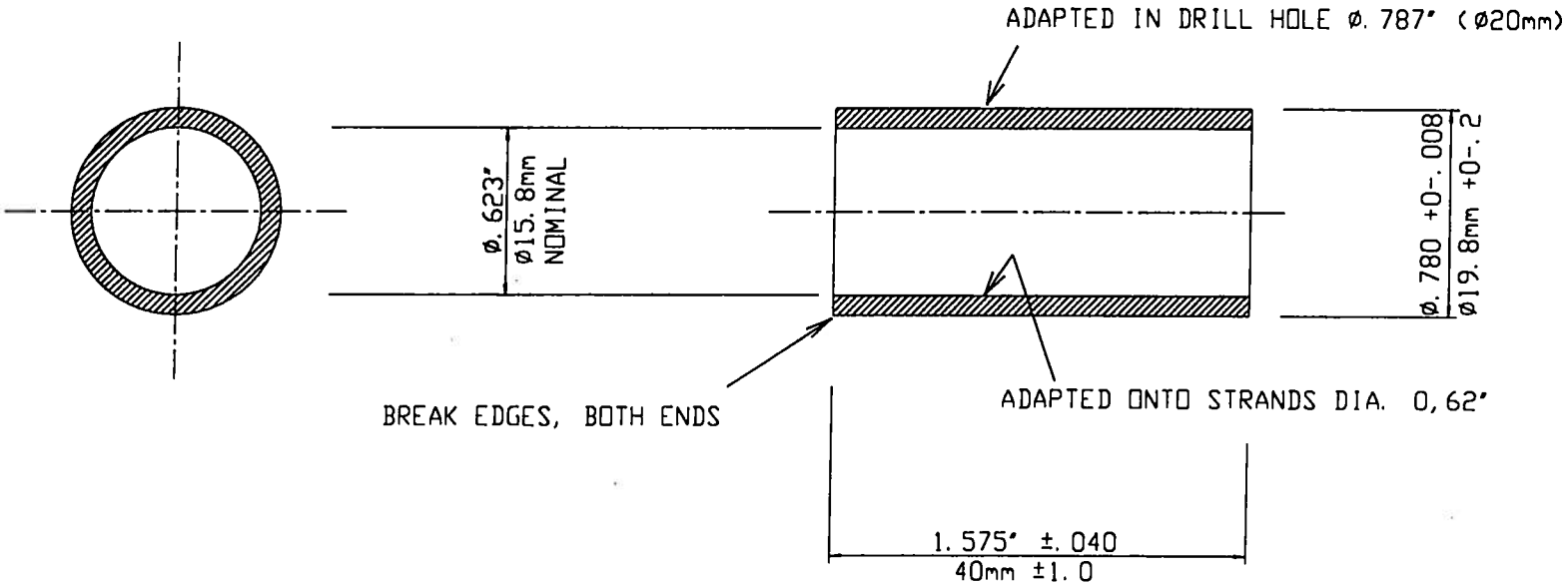

PART TO BE DIPPED IN BEL-RAY RP-30 FOR CORROSION PROTECTION.

REFERENCE GERMAN DRAWING ZT 5942 011.

DYWIDAG CABLE SYSTEMS	DIMENSIONS: INCH/mm	Q.A.	QUALITY PLAN NUMBER:				PART NUMBER 68 00 5942
31/37-0.6" STEEL COMPRESSION TUBE			REV.	DATE	NAME		
DATE: 12-01-01 | DWG: G. MALECKI | CHK: H.K. APP: K.S.	MATERIAL: 13/16" ODx.623" ID STEEL TUBING (OD MACHINED)	SCALE NTS					DRAWING NUMBER 68 00 5942
This drawing, the pertinent enclossures, descriptions, calculations etc. and their contents are the property of DYWIDAG SYSTEMS INTERNATIONAL, USA, INC. They are not allowed to be duplicated with-out our permission. They are also not to be shown or explained for any reason to a third party other than for reasons expressly intended by the original receiver. They have to be returned on request.	DYWIDAG-SYSTEMS INTERNATIONAL, USA, INC. DSI						

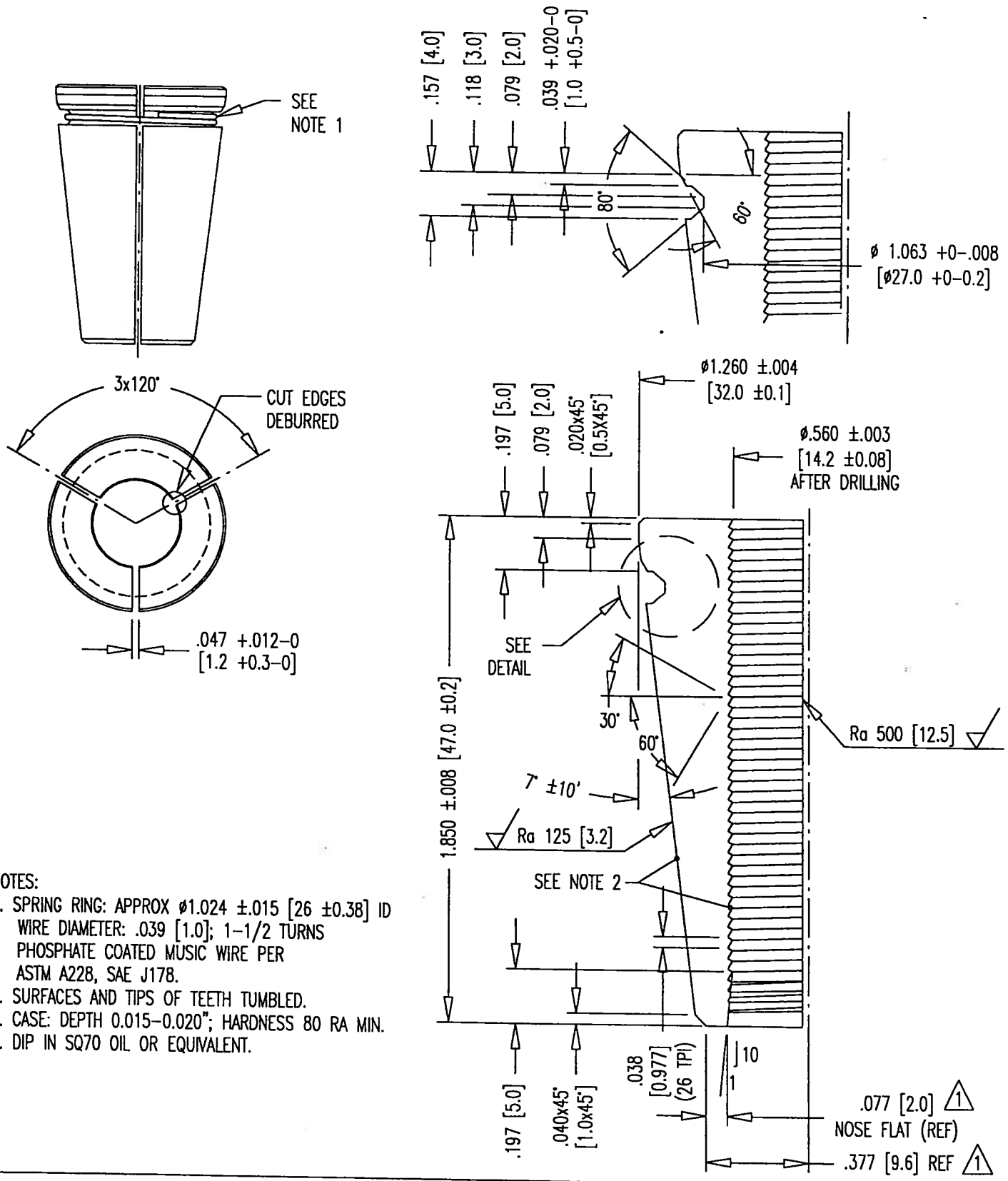

NOTES:

1. SPRING RING: APPROX ø1.024 ±.015 [26 ±0.38] ID
   WIRE DIAMETER: .039 [1.0]; 1-1/2 TURNS
   PHOSPHATE COATED MUSIC WIRE PER
   ASTM A228, SAE J178.
2. SURFACES AND TIPS OF TEETH TUMBLED.
3. CASE: DEPTH 0.015-0.020"; HARDNESS 80 RA MIN.
4. DIP IN SQ70 OIL OR EQUIVALENT.

DYWIDAG STAY-CABLE SYSTEMS	DIMENSIONS: INCH [mm] mm FOR REFERENCE ONLY	Q.A.	QUALITY PLAN NUMBER: QS00000500S			PART NUMBER 68 00 0064
0.6" WEDGE-ONLY WEDGE	TOLERANCES: ±.010 UNLESS NOTED	WEIGHT .29 LBS.	REV. 1	DATE 05-14-01	NAME A.W.	
DATE: 02-05-01 DWG: G. MALECKI CHK: APP:	MATERIAL: AISI 12L14 ASTM A108	SCALE 2:1 1:1				DRAWING NUMBER 68 00 0064

This drawing, the pertinent enclossures, descriptions, calculations etc. and their contents are the property of DYWIDAG SYSTEMS INTERNATIONAL, USA, INC. They are not allowed to be duplicated with-out our permission. They are also not to be shown or explained for any reason to a third party other than for reasons expressly intended by the original receiver. They have to be returned on request.

DYWIDAG-SYSTEMS INTERNATIONAL USA, INC.

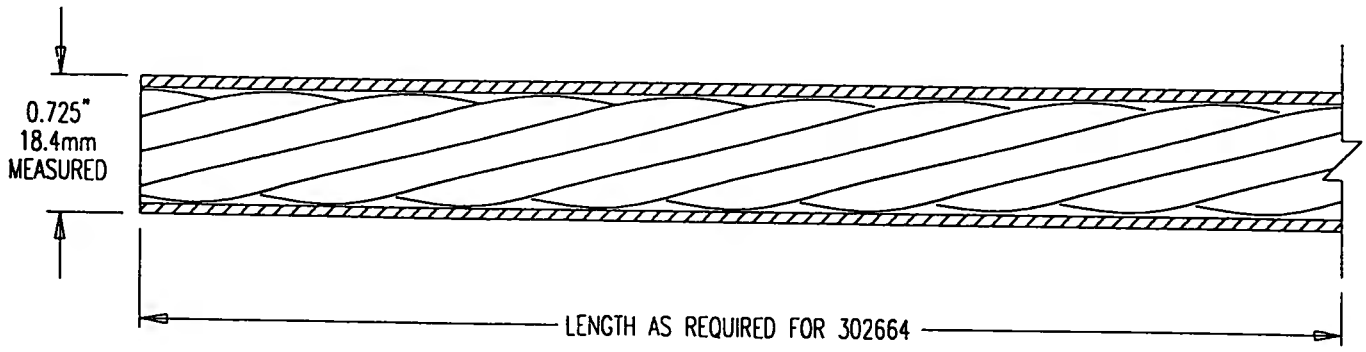

	MASTER PART		BILL OF MATERIALS					
	NUMBER	UNIT	COMPONENT PART NO.	QUANTITY*	STOCK QTY UNIT	DESCRIPTION	PART CATEGORY	WEIGHT PER UNIT
UNCUT	302663	FT	301010		LBS	PLASTIC COATING PELLETS	51	1
			301603	1	FT	0.6" BARE STRAND (STAY QUALITY)	51	.74
			301003	.03	LBS	WAX (VISCONORUST PT 3500)	51	1
CUT TO LENGTH	302664	FT	302663	1	FT	0.6" WAXED & SHEATHED STRAND	51	

* INCLUDES WASTE.

NOTE:
STRAND CAN BE DOMESTIC OR FOREIGN.

PRELIMINARY

DYWIDAG POST-TENSIONING SYSTEMS

0.6" WAXED & SHEATHED CABLE STAY STRAND
(60 MIL SHEATHING)

DATE: 12-01-01 | DWG: G. MALECKI | CHK: H.K. HFK | APP: K.S. [signature]

This drawing, the pertinent enclossures, descriptions, calculations etc. and their contents are the property of DYWIDAG SYSTEMS INTERNATIONAL, USA, INC. They are not allowed to be duplicated with-out our permission. They are also not to be shown or explained for any reason to a third party other than for reasons expressly intended by the original receiver. They have to be not used or copied

DIMENSIONS: INCH [mm] UNLESS NOTED

TOLERANCES: ±.020 UNLESS NOTED

MATERIAL: SEE ABOVE

Q.A.

WEIGHT PER/FT.

SCALE 1:1

QUALITY PLAN NUMBER: QS003026640

REV.	DATE	NAME	

PART NUMBER
302663
302664

DRAWING NUMBER
302663

DYWIDAG SYSTEMS INTERNATIONAL, USA, INC.

HOLE PATTERN
EMPTY HOLES
HATCHED

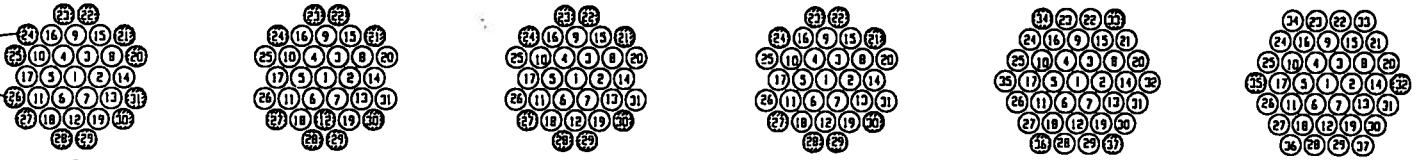

CABLE No.	6	5	4	3	2	1
NUMBER OF STRAND	19	22	23	23	33	35
CABLE SIZE	C31	C31	C31	C31	C37	C37

CROSS SECTION
WITH CABLE CLAMP

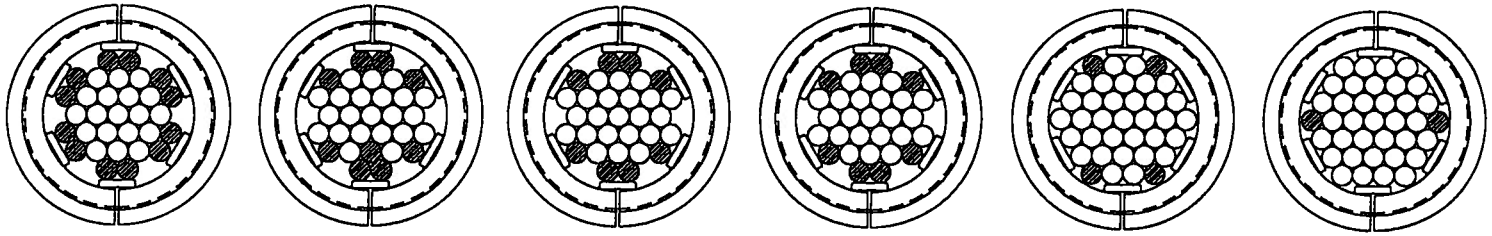

HOLE PATTERN
EMPTY HOLES
HATCHED

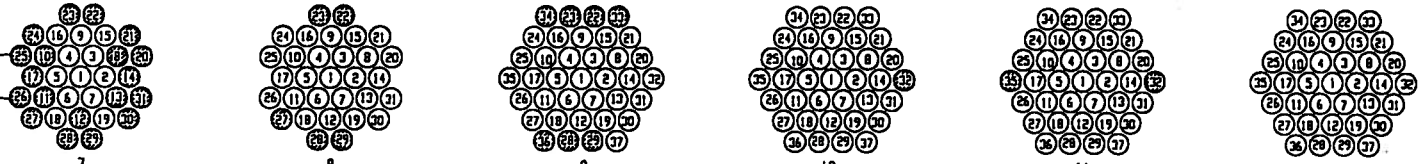

CABLE No.	7	8	9	10	11	12
NUMBER OF STRAND	12	26	30	36	35	37
CABLE SIZE	C31	C31	C37	C37	C37	C37

CROSS SECTION
WITH CABLE CLAMP

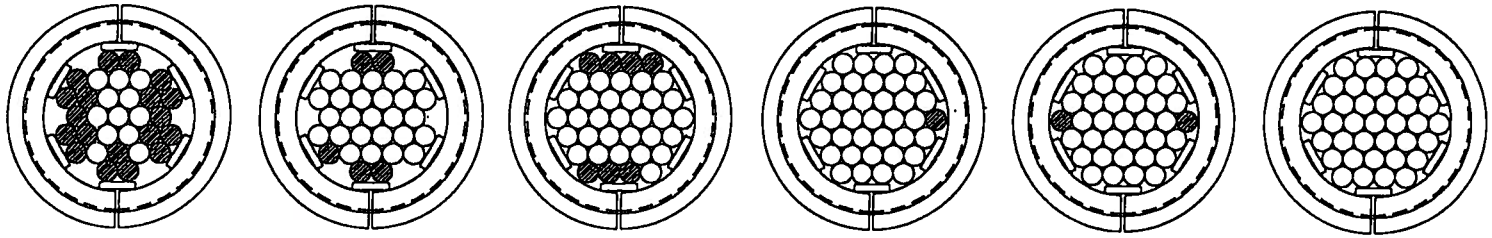

DYWIDAG CABLE SYSTEMS	DIMENSIONS:	G.A.	QUALITY PLAN NUMBER:		PART NUMBER SKETCH 01, DWG
6TH ST. BRIDGE NUMBER OF STRAND NORTH BRIDGE	TOLERANCES:	WEIGHT LBS.	REV. / DATE / NAME		
DATE: 10-04-01 / DWG: R. SHARMA / CHK: NFK / APP: KS		SCALE			DRAWING NUMBER SKETCH 01, DWG

This drawing, the pertinent enclosures, descriptions, calculations etc. and their contents are the property of DYWIDAG SYSTEMS INTERNATIONAL, USA, INC. They are not allowed to be duplicated without our permission. They are also not to be shown or explained for any reason to a third party other than for reasons expressly intended by the original receiver. They have to be returned on request.

DYWIDAG–SYSTEMS INTERNATIONAL, USA, INC. DSI

HOLE PATTERN
EMPTY HOLES
HATCHED

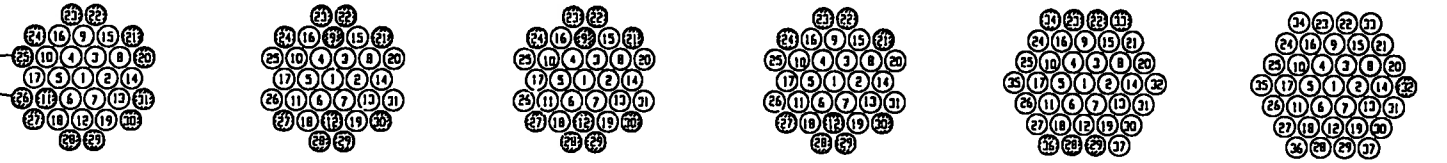

CABLE No.	6	5	4	3	2	1
NUMBER OF STRANO	18	21	21	22	30	36
CABLE SIZE	C31	C31	C31	C31	C37	C37

CROSS SECTION
WITH CABLE CLAMP

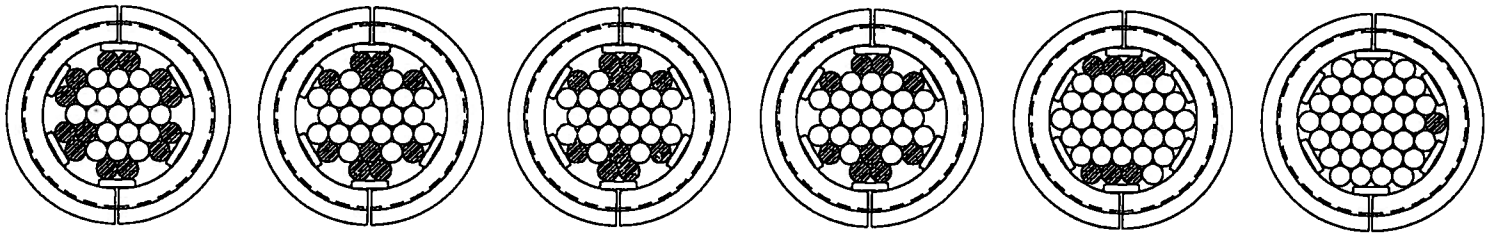

HOLE PATTERN
EMPTY HOLES
HATCHED

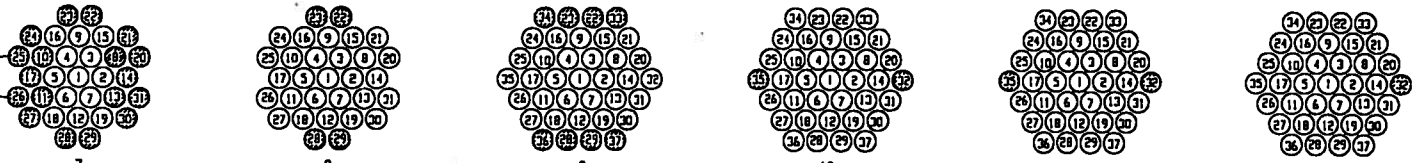

CABLE No.	7	8	9	10	11	12
NUMBER OF STRANO	13	27	29	35	35	36
CABLE SIZE	C31	C31	C37	C37	C37	C37

CROSS SECTION
WITH CABLE CLAMP

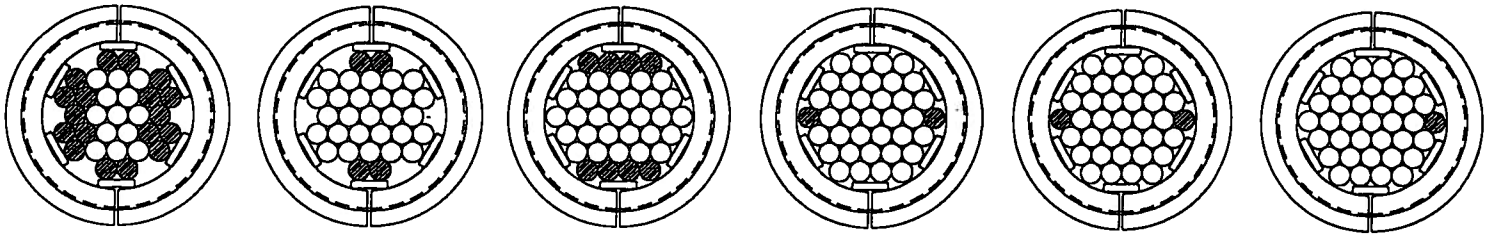

DYWIDAG CABLE SYSTEMS	DIMENSIONS:	G.A.	QUALITY PLAN NUMBER:		PART NUMBER SKETCH 02. DWG
6TH ST. BRIDGE NUMBER OF STRANO SOUTH BRIDGE	TOLERANCES:	WEIGHT LBS.	REV. / DATE / NAME		
DATE: 10-04-01 / DWG: R. SHARMA / CHK: HYK / APP: KS		SCALE			DRAWING NUMBER SKETCH 02. DWG

This drawing, the pertinent enclosures, descriptions, calculations etc. and their contents are the property of DYWIDAG SYSTEMS INTERNATIONAL, USA, INC. They are not allowed to be duplicated without our permission. They are also not to be shown or explained for any reason to a third party other than for reasons expressly intended by the original receiver. They have to be returned on request.

DYWIDAG-SYSTEMS INTERNATIONAL, USA, INC. DSI

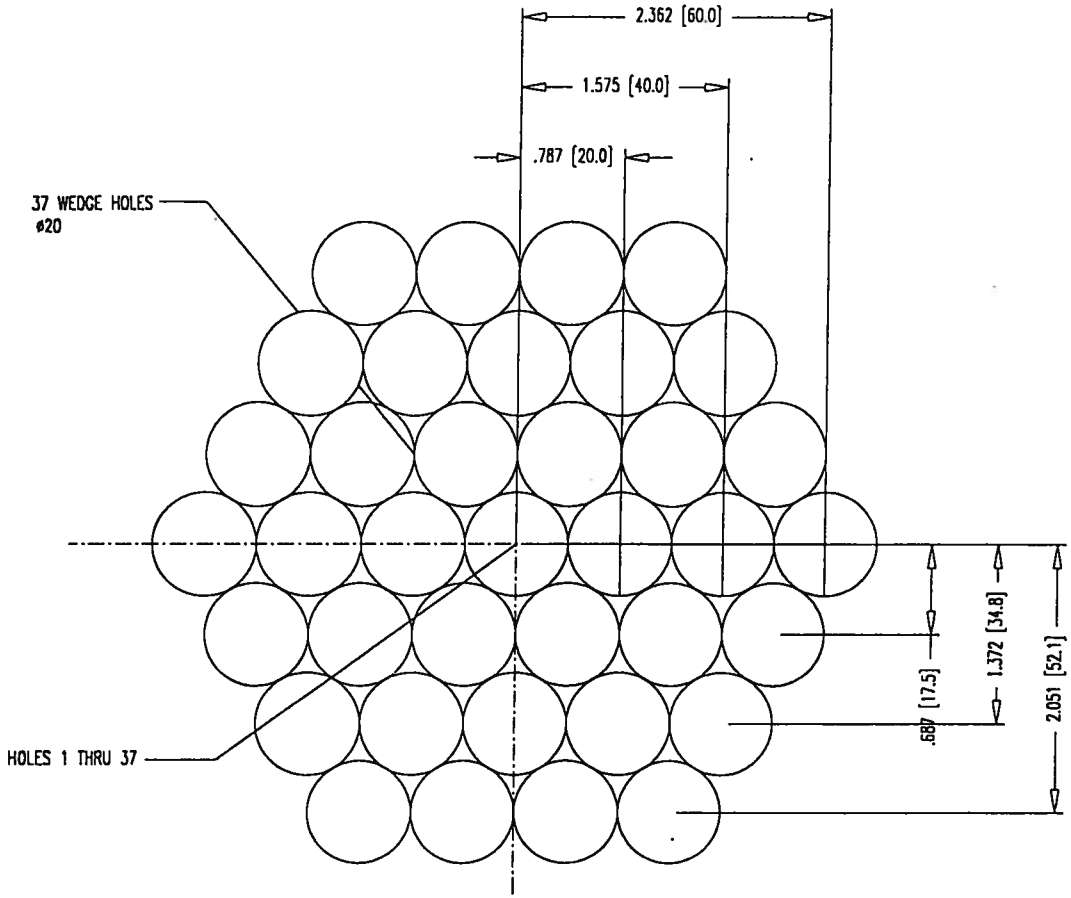

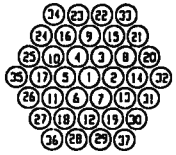

HOLE COORDINATES		
	X (mm)	Y (mm)
1	20.00	17.05
2	40.00	34.08
3	60.00	52.01

DYWIDAG CABLE SYSTEMS	DIMENSIONS: [mm]	G.A.	QUALITY PLAN NUMBER:	PART NUMBER SKETCH 03. DWG
37-0.6" DYNA GRIP ANCHOR TYPE 6TH ST. BRIDGE	TOLERANCES:	WEIGHT LBS.	REV. / DATE / NAME	
DATE: 10-04-01 / DRG: A. SHARMA / CHK: / APP:	SEE ABOVE	SCALE 1:7		DRAWING NUMBER SKETCH 03. DWG

This drawing, the pertinent enclosures, descriptions, calculations etc. and their contents are the property of DYWIDAG SYSTEMS INTERNATIONAL, USA, INC. They are not allowed to be duplicated without our permission. They are also not to be shown or explained for any reason to a third party other than for reasons expressly intended by the original receiver. They have to be returned on request.

DYWIDAG-SYSTEMS INTERNATIONAL, USA, INC. DSI

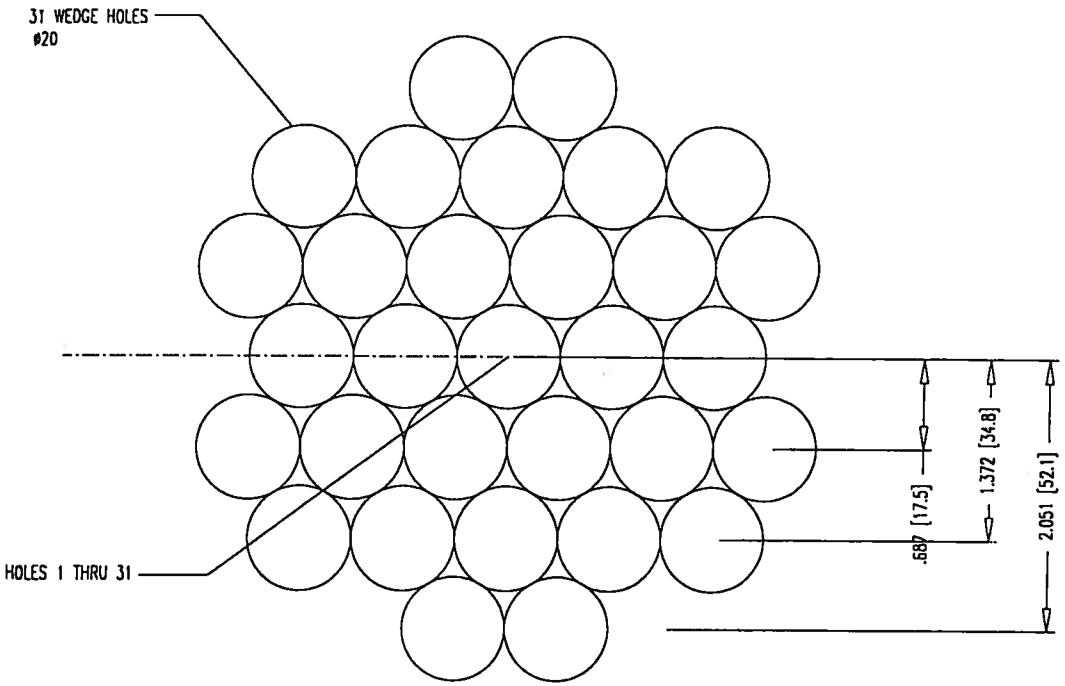

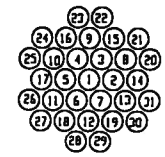

HOLE COORDINATES		
	X (mm)	Y (mm)
1		17.05
2		34.08
3		52.01

DYWIDAG CABLE SYSTEMS	DIMENSIONS: (mm)	Q.A.	QUALITY PLAN NUMBER:	PART NUMBER SKETCH 04. DWG
31-0.6" DYNA GRIP ANCHOR TYPE 6TH ST. BRIDGE	TOLERANCES:	WEIGHT LBS.	REV. / DATE / NAME	
DATE: 10-04-01 / DWG: R. SHARMA / CHK: / APP:	SEE ABOVE	SCALE 1:7		DRAWING NUMBER SKETCH 04. DWG
This drawing, the pertinent enclosures, descriptions, calculations etc. and their contents are the property of DYWIDAG SYSTEMS INTERNATIONAL, USA, INC. They are not allowed to be duplicated without our permission. They are also not to be shown or explained for any reason to a third party other than for reasons expressly intended by the original receiver. They have to be returned on request.	DYWIDAG-SYSTEMS INTERNATIONAL, USA, INC. DSI			

STATE PROJECT I.D.	SHEET NUMBER
2235-00-70	

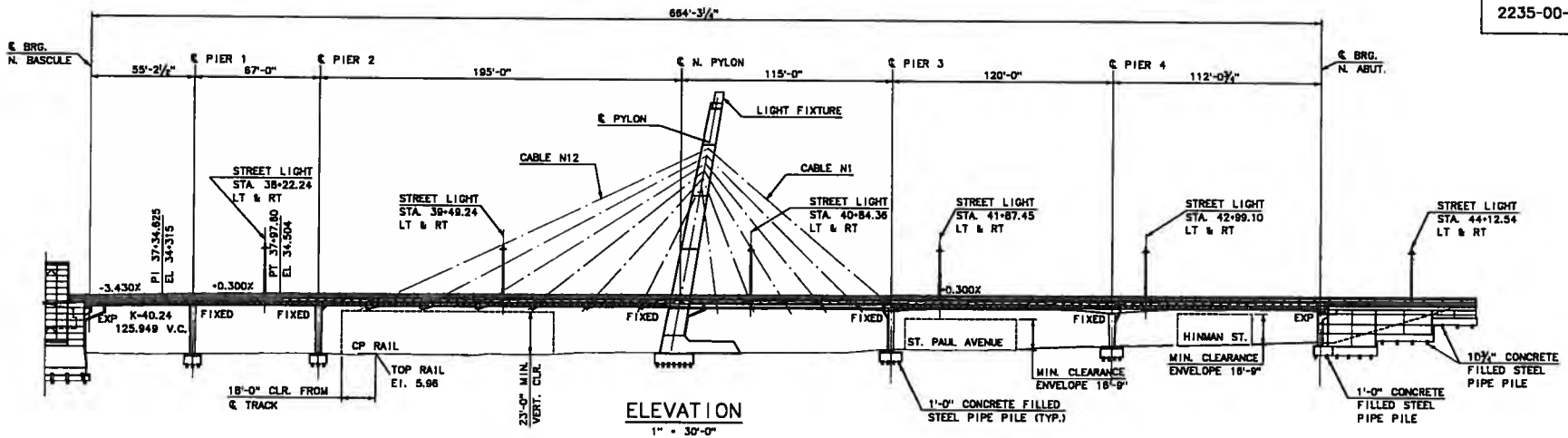

ELEVATION
1" = 30'-0"

NOTES:

1. FOR BRIDGE RAILING AND UTILITIES, SEE SHEETS NC99 - NC101.
2. FOR DECK PLAN GEOMETRY, SEE SHEETS NC37 - NC45.
3. FOR FOUNDATION GEOMETRY, SEE SHEET NC02.

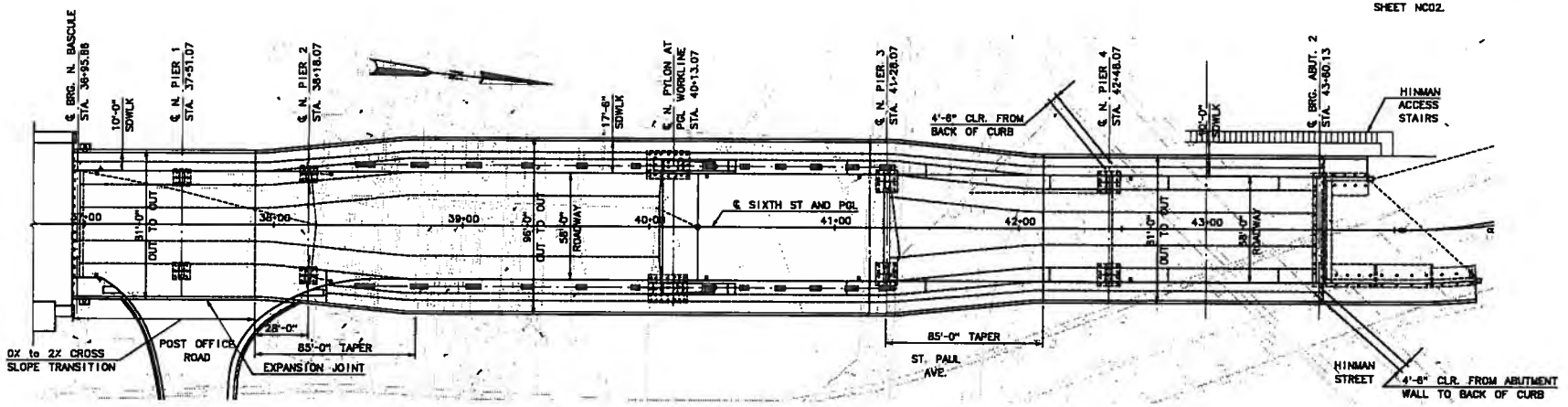

PLAN
1" = 30'-0"

FOR CONSTRUCTION

No.	Date	Revisions	By

HNTB CORPORATION

STATE OF WISCONSIN
DEPARTMENT OF TRANSPORTATION

STRUCTURE B-40-414C

Designed By	SL	Design Checked	AP	Drawn By	BM	Plans Checked	AP

NORTH CABLE STAY GENERAL PLAN AND ELEVATION

SHEET NC01 OF

j:\oadd\ff3885\dgn\north cablestay\nc01-gpke.dgn 12/05/01 04:03:45 PM

STATE PROJECT I.D.	SHEET NUMBER
XXXX-XX-XX	XXX

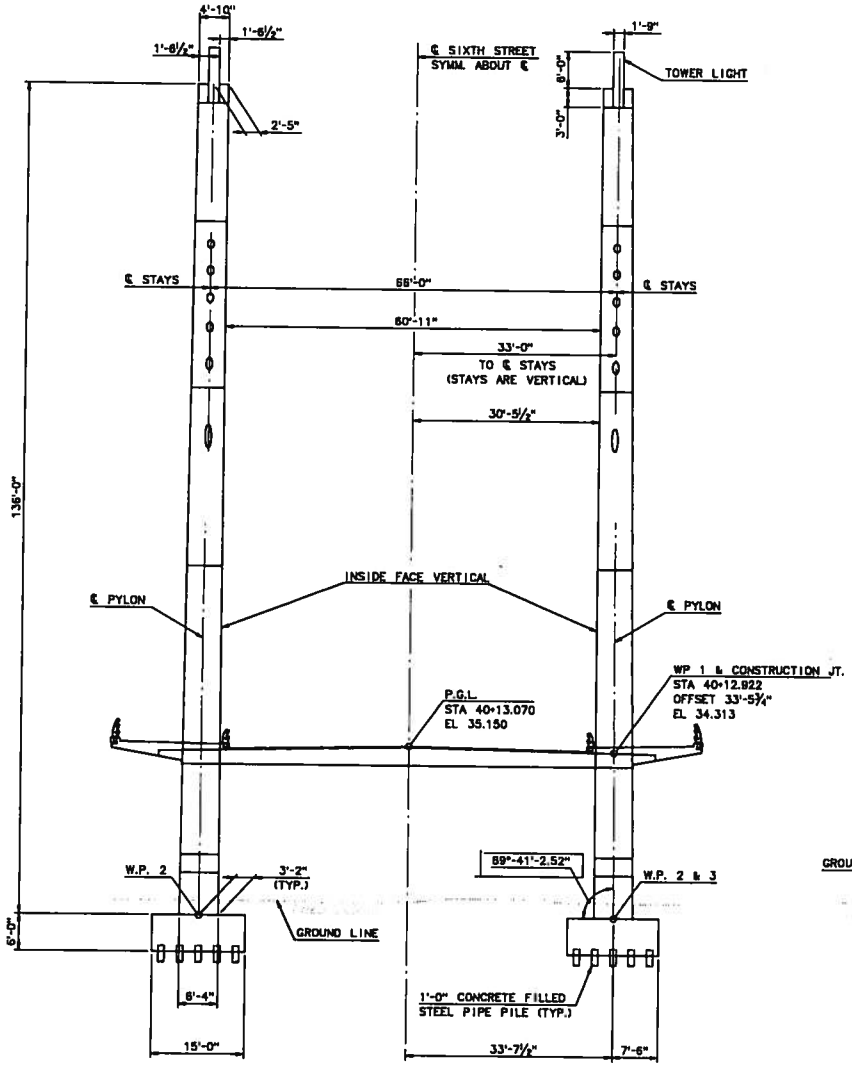

TRANSVERSE ELEVATION

1" = 10'-0"

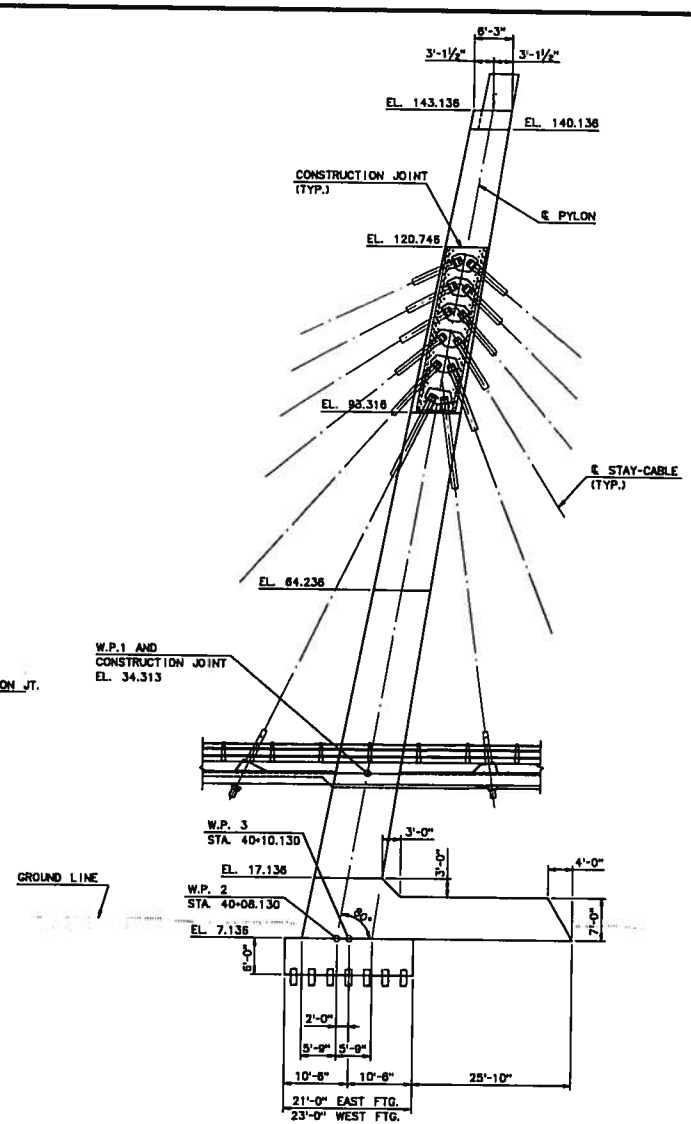

LONGITUDINAL ELEVATION

1" = 10'-0"

NOTES:

1. FOR PYLON REINFORCEMENT, SEE SHEETS

FOR CONSTRUCTION

No.	Date	Revisions	By
1	2-19-01	TRANS EL. TOWER ANGLE	SL

HNTB CORPORATION

STATE OF WISCONSIN
DEPARTMENT OF TRANSPORTATION

STRUCTURE B-40-414C

Designed By SL	Design Checked YZ	Drawn By DB	Plans Checked AP

PYLON ELEVATION

SHEET NC19 OF

j:\cadd\ff3885\dgn\north cablestay\nc19-pylonelev.dgn 12/05/01 04:15:25 PM

STATE PROJECT I.D.	SHEET NUMBER
2235-00-70	

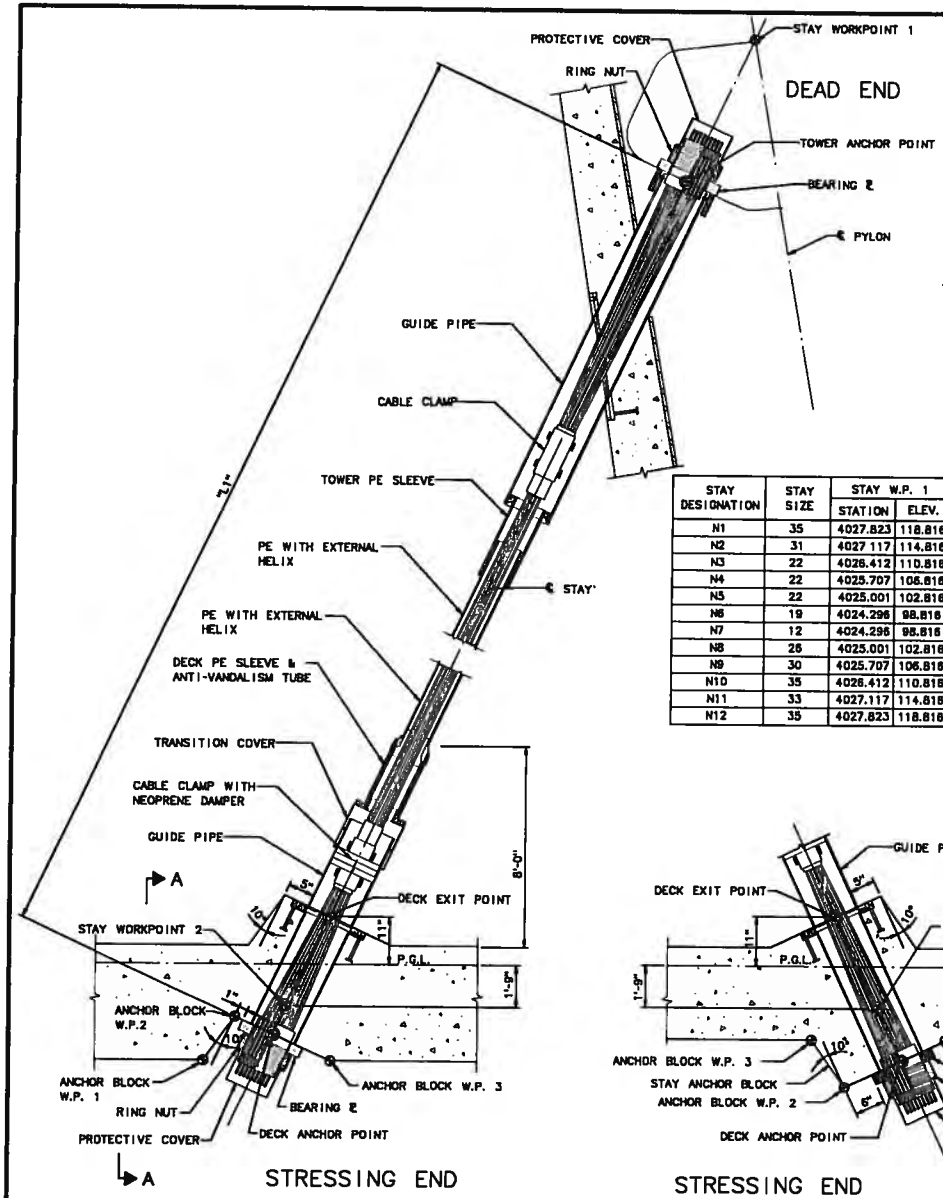

BACK SPAN STAY ELEVATION

N.T.S.

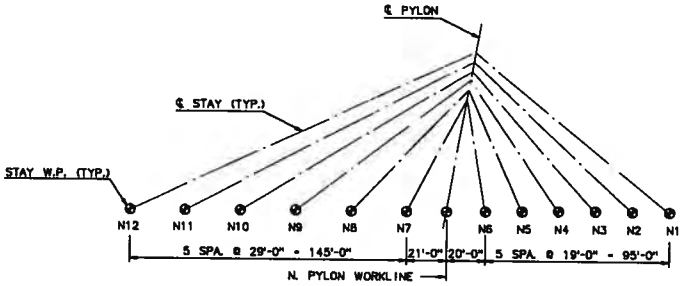

ELEVATION

N.T.S.

NOTES:

1. LENGTH "L1" SHOWN IS BASED ON THEORETICAL STRAIGHT LINE DIMENSIONS, ANCHOR POINT TO ANCHOR POINT, AND DOES NOT INCLUDE CABLE SAG.
2. DIMENSIONS AND LENGTHS SHOWN APPLY TO BOTH EAST AND WEST CABLES.
3. FOR CABLE ANCHORAGE REINFORCEMENT DETAILS SEE SHTS. NC69 AND NC70.
4. ALL CABLE WORKPOINTS ARE 33'-0" RIGHT AND LEFT OF SIXTH STREET PGL.

STAY DESIGNATION	STAY SIZE	STAY W.P. 1		STAY W.P. 2		TOWER A.P.		DECK A.P.		"L1"	ANCHOR BLOCK W.P. 1		ANCHOR BLOCK W.P. 2		ANCHOR BLOCK W.P. 3		"A"
		STATION	ELEV.	STATION	ELEV.	STATION	ELEV.	STATION	ELEV.		STATION	ELEV.	STATION	ELEV.	STATION	ELEV.	
N1	35	4027.823	118.818	4128.070	33.745	4029.368	117.504	4130.134	31.993	132.16	4132.469	31.608	4130.685	32.645	4129.573	31.329	1.105
N2	31	4027.117	114.818	4109.070	33.688	4028.630	113.318	4109.687	33.077	114.06	4112.444	32.196	4110.287	33.685	4108.880	32.258	0.844
N3	22	4026.412	110.818	4090.070	33.631	4027.876	109.041	4090.848	32.933	98.65	4092.899	32.222	4091.284	33.444	4089.776	32.214	0.997
N4	22	4025.707	106.818	4071.070	33.574	4027.090	104.583	4071.540	32.815	84.42	4073.183	32.164	4072.222	33.238	4070.478	32.156	1.145
N5	22	4025.001	102.818	4052.070	33.517	4026.051	100.129	4052.405	32.659	72.43	4053.868	32.105	4053.152	32.951	4050.969	32.097	1.308
N6	19	4024.296	98.818	4033.070	33.460	4024.845	94.729	4033.206	32.449	62.84	4034.183	32.047	4034.000	32.556	4030.123	32.035	1.451
N7	12	4024.296	98.818	3992.070	33.337	4022.516	95.199	3991.420	32.016	70.42	3990.609	32.416	3992.513	31.477	3993.207	32.424	2.244
N8	26	4025.001	102.818	3963.070	33.250	4023.102	100.683	3961.749	31.767	92.27	3961.122	32.328	3962.658	30.958	3964.411	32.337	2.242
N9	30	4025.707	106.818	3934.070	33.163	4023.833	105.310	3932.085	31.568	117.71	3931.548	32.239	3932.879	30.576	3935.944	32.252	2.247
N10	35	4026.412	110.818	3905.070	33.076	4024.599	109.855	3902.503	31.432	145.00	3902.046	32.150	3903.188	30.360	3907.548	32.167	2.184
N11	33	4027.117	114.818	3876.070	32.989	4025.340	113.853	3872.980	31.316	173.28	3872.579	32.062	3873.582	30.198	3879.294	32.082	2.093
N12	35	4027.823	118.818	3847.070	32.902	4026.088	117.982	3843.508	31.209	202.13	3843.148	31.974	3844.049	30.080	3851.170	31.998	2.038

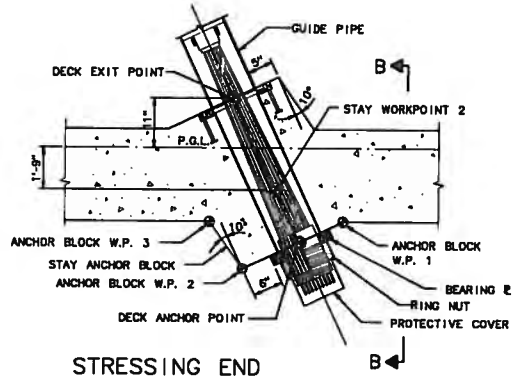

MAIN SPAN STAY ELEVATION

N.T.S.

100% SUBMITTAL

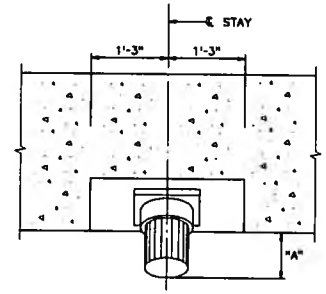

SECTION A-A

N.T.S.

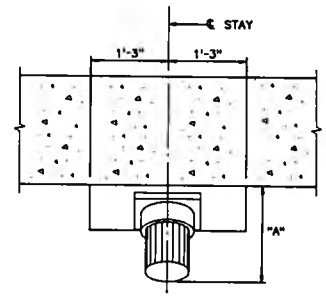

SECTION B-B

N.T.S.

No.	Date	Revisions	By

HNTB CORPORATION

STATE OF WISCONSIN
DEPARTMENT OF TRANSPORTATION

STRUCTURE B-40-414C

Designed By	SL	Design Checked	TZ	Drawn By	BM	Plans Checked	AP

NORTH CABLE STAY
STAY ANCHORAGE
DECK GEOMETRY

SHEET NC32 OF

J:\cadd\ff3885\dgn\north cablestay\nc32-staydet.dgn 12/05/01 04:15:47 PM

STATE PROJECT I.D.	SHEET NUMBER
2235-00-70	

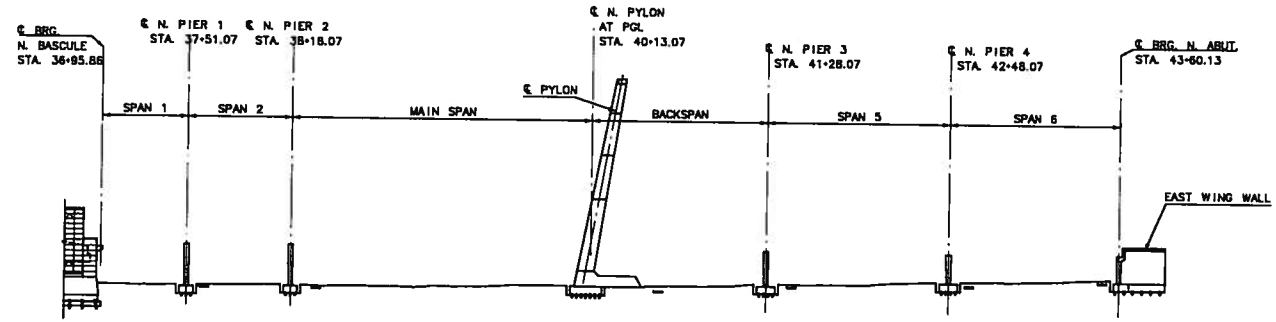

STAGE 1

1" = 40'-0"

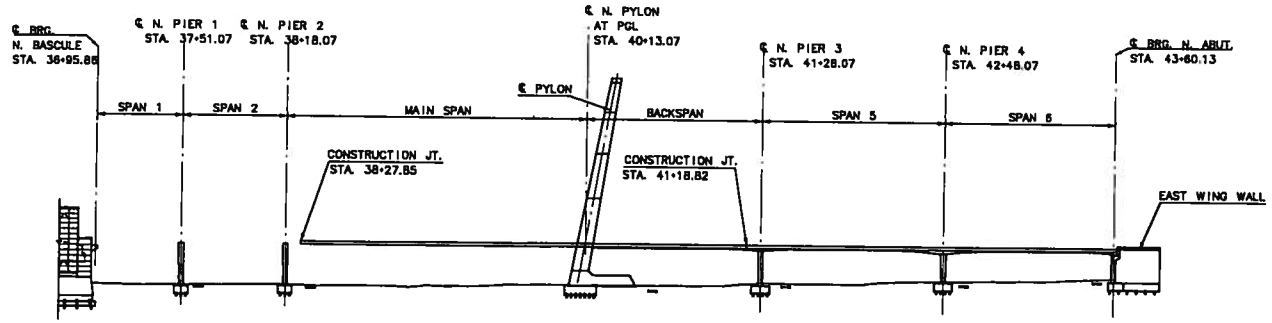

STAGE 3 AND 4

1" = 40'-0"

NOTE: FALSEWORK NOT SHOWN

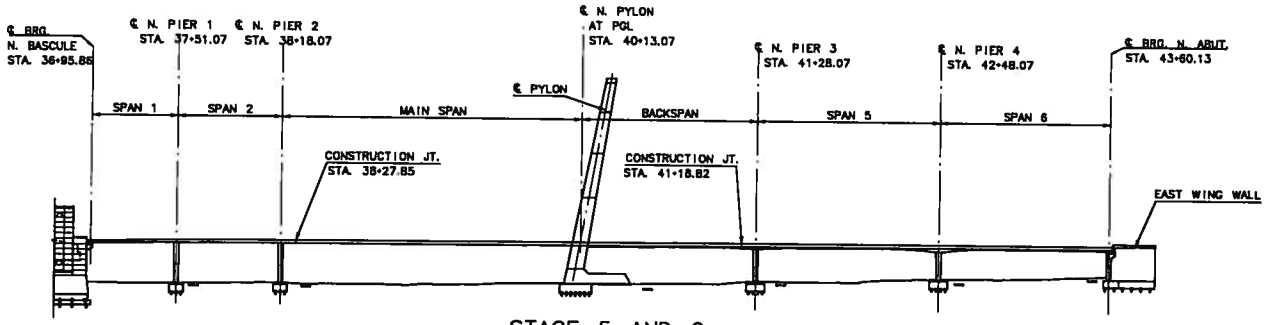

STAGE 5 AND 6

1" = 40'-0"

NOTE: FALSEWORK NOT SHOWN

STAGE 1:

1. EXCAVATE PIERS 1-4 AND NORTH PYLON PILE FOUNDATIONS.
2. DRIVE PILES FOR PIERS 1-4 AND NORTH PYLON.
3. CONSTRUCT PYLON FOOTINGS AND PIERS 1-4 FOOTINGS.
4. CONSTRUCT PIERS 1-4 AND NORTH PYLON.
5. EXCAVATE N. ABUTMENT WEST WING WALL AND STEM WALL FOOTINGS.
6. CONSTRUCT N. ABUTMENT WEST WING WALL AND STEM WALL FOOTINGS.
7. CONSTRUCT N. ABUTMENT WEST WING WALL AND STEM WALL.

STAGE 2:

1. PLACE SUPERSTRUCTURE FALSEWORK FROM N. ABUTMENT TO N. BASCULE.
2. CONSTRUCT SUPERSTRUCTURE SLAB FOR SPANS 5 AND 6. (STA. 41+18.82 TO N. ABUTMENT)

STAGE 3:

POST-TENSIONING SEQUENCE FOR SPANS 5 AND 6:

PRIOR TO POST-TENSIONING, CONCRETE MUST REACH A MINIMUM COMPRESSIVE STRENGTH OF 4500 PSI.

STEP 1 - STRESS ALL TRANSVERSE N. ABUTMENT END BEAM TENDONS (4 TENDONS) AND ALL PIER 3 CAP BEAM TENDONS (3 TENDONS).

STEP 2 - STRESS ALL TRANSVERSE TENDONS AT 1'-4" SPACING
- 12 TENDONS ADJACENT TO CONSTRUCTION JOINT
- 10 TENDONS ADJACENT TO N. ABUTMENT END BEAM
- 9 TENDONS AT LOCATION OF WIDTH FLARE DOWN
- 17 TENDONS AT PIER 4

STEP 3 - STRESS LONGITUNIDAL TENDONS L8 AND L10

STEP 4 - STRESS 50% OF REMAINING TRANSVERSE TENDONS
- 16 TENDONS SPAN 5
- 16 TENDONS SPAN 6

STEP 5 - STRESS LONGITUDINAL TENDONS L9 AND L11

STEP 6 - STRESS REMAINING TRANSVERSE TENDONS

STEP 7 - STRESS LONGITUDINAL TENDONS L7 AND L12

STEP 8 - GROUT ALL TENDONS PER THE PTI "GUIDE SPECIFICATIONS FOR GROUTING OF POST-TENSIONED STRUCTURE", FIRST EDITION, FEBRUARY 2001.

NOTES: SEE TRANSVERSE PT DRAWINGS AND DECK PLANS FOR TRANSVERSE PT JACKING FORCE REQUIREMENTS.
ALL LONGITUDINAL TENDONS ARE SINGLE-END STRESSED AT ABUTMENT TO A JACKING FORCE OF 824 KIPS.
STEPS 3 AND 4 MAY BE COMPLETED SIMULTANEOUSLY.
STEPS 5 AND 6 MAY ALSO BE COMPLETED SIMULTANEOUSLY.

STAGE 4:

1. CONSTRUCT SUPERSTRUCTURE SLAB FOR MAINSPAN AND BACKSPAN.
2. ALTERNATE END STRESS ALL TRANSVERSE PT IN MAINSPAN AND BACKSPAN. START AT PIER 3, STRESS ALL FROM WEST SIDE, THEN STRESS ALL FROM EAST SIDE.
3. GROUT ALL TRANSVERSE TENDONS.

FOR CONSTRUCTION

No.	Date	Revisions	By

HNTB CORPORATION

STATE OF WISCONSIN
DEPARTMENT OF TRANSPORTATION

STRUCTURE B-40-414C

Designed By	AP	Design Checked	TZ	Drawn By	CE	Plans Checked	AP

CONSTRUCTION STAGING 1 OF 2

SHEET NO92 OF .

j:\cadd\ff3885\dgn\north cablestay\no92-consaq1.dgn 12/05/01 04:18:03 PM

STATE PROJECT I.D.	SHEET NUMBER
2235-00-70	

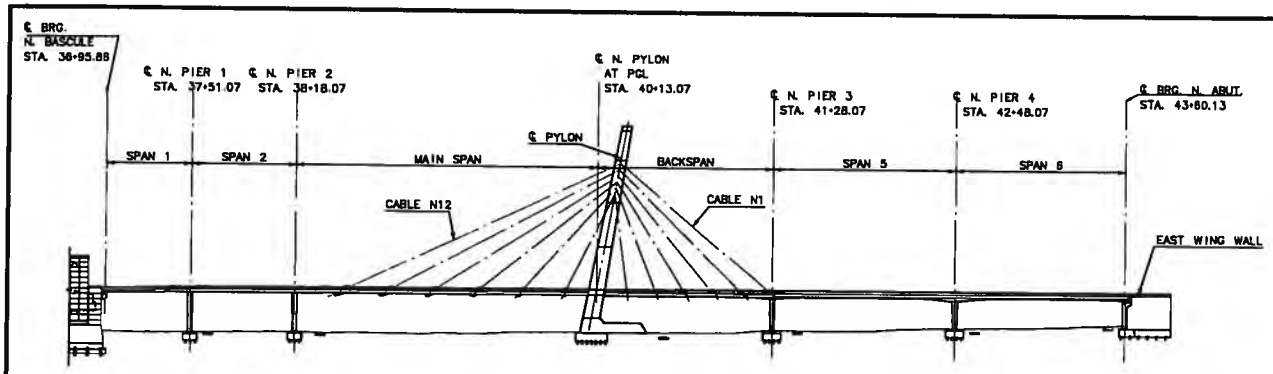

STAGE 7, 8, AND 9

1" = 40'-0"

NOTE: FALSEWORK NOT SHOWN

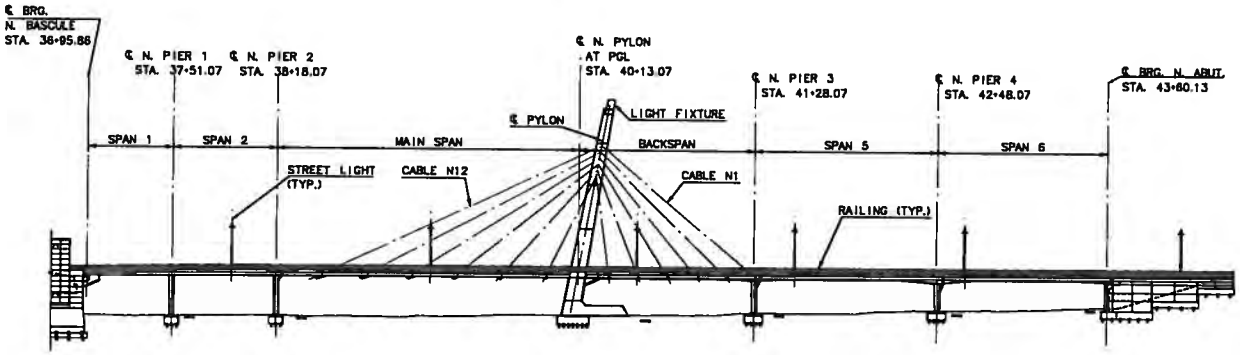

STAGE 10

1" = 40'-0"

STAGE 5:

CONSTRUCT SUPERSTRUCTURE SLAB FOR SPANS 1 AND 2. (N. BASCULE TO STA. 38+27.85).

STAGE 6:

POST-TENSIONING SEQUENCE FOR REMAINING SPANS:

PRIOR TO POST-TENSIONING, CONCRETE MUST REACH A MINIMUM COMPRESSIVE STRENGTH OF 4500 PSI.

STEP 1 - ALTERNATE END STRESS ALL TRANSVERSE TENDONS.

- START AT BASCULE END BEAM, STRESS ALL FROM WEST SIDE, THEN STRESS ALL FROM EAST SIDE.
- GROUT ALL TRANSVERSE TENDONS.

STEP 2 - STRESS LONGITUNIDAL TENDONS L2 AND L4

STEP 3 - STRESS LONGITUDINAL TENDONS L3 AND L5

STEP 4 - STRESS LONGITUDINAL TENDONS L1 AND L6

STEP 5 - GROUT LONGITUDINAL TENDONS L1-L6.

ALL TENDONS SHALL BE GROUTED PER THE PTI "GUIDE SPECIFICATIONS FOR GROUTING OF POST-TENSIONED STRUCTURE", FIRST EDITION, FEBRUARY 2001.

NOTES: SEE TRANSVERSE PT DRAWINGS AND DECK PLANS FOR TRANSVERSE PT JACKING FORCE REQUIREMENTS.
ALL LONGITUDINAL TENDONS ARE DOUBLE-END STRESSED TO A JACKING FORCE OF 835 KIPS.

STAGE 7:

1. CONSTRUCT ALL SIDEWALKS AND CABLE BLISTERS.
2. INSTALL CABLES.

STAGE 8:

CABLE STAY STRESSING SEQUENCE:

STEP 1 - STRESS N8 TO 340 KIPS (17.89 KIPS/STR)
- STRESS N7 TO 315 KIPS (26.25 KIPS/STR)

STEP 2 - STRESS N5 TO 420 KIPS (19.09 KIPS/STR)
- STRESS N8 TO 700 KIPS (28.92 KIPS/STR)

STEP 3 - STRESS N4 TO 470 KIPS (20.43 KIPS/STR)
- STRESS N9 TO 780 KIPS (28.00 KIPS/STR)

STEP 4 - STRESS N3 TO 530 KIPS (23.04 KIPS/STR)
- STRESS N10 TO 890 KIPS (24.72 KIPS/STR)

STEP 5 - STRESS N2 TO 770 KIPS (23.33 KIPS/STR)
- STRESS N11 TO 880 KIPS (24.57 KIPS/STR)

STEP 6 - STRESS N1 TO 765 KIPS (21.86 KIPS/STR)
- STRESS N12 TO 870 KIPS (23.51 KIPS/STR)

NOTE: THE CORRESPONDING NORTH AND SOUTH CABLES SHALL BE STRESSED SIMULTANEOUSLY. (I.E. N8 AND N7)

STAGE 9:

1. REMOVE SUPERSTRUCTURE FALSEWORK.
2. CONSTRUCT NORTH ABUTMENT EAST WINGWALL.

STAGE 10:

1. PLACE 3 LINE AND 2 LINE RAILING, EXPANSION JOINTS, STREET LIGHTS, PYLON LIGHT FIXTURE AND WEARING SURFACE.

FOR CONSTRUCTION

No.	Date	Revisions	By

HNTB CORPORATION

STATE OF WISCONSIN
DEPARTMENT OF TRANSPORTATION

STRUCTURE B-40-414C

Designed By	AP	Design Checked	TZ	Drawn By	CC	Plans Checked	AP

CONSTRUCTION STAGING 2 OF 2

SHEET NC92a OF .

STATE PROJECT I.D.	SHEET NUMBER
2235-00-70	

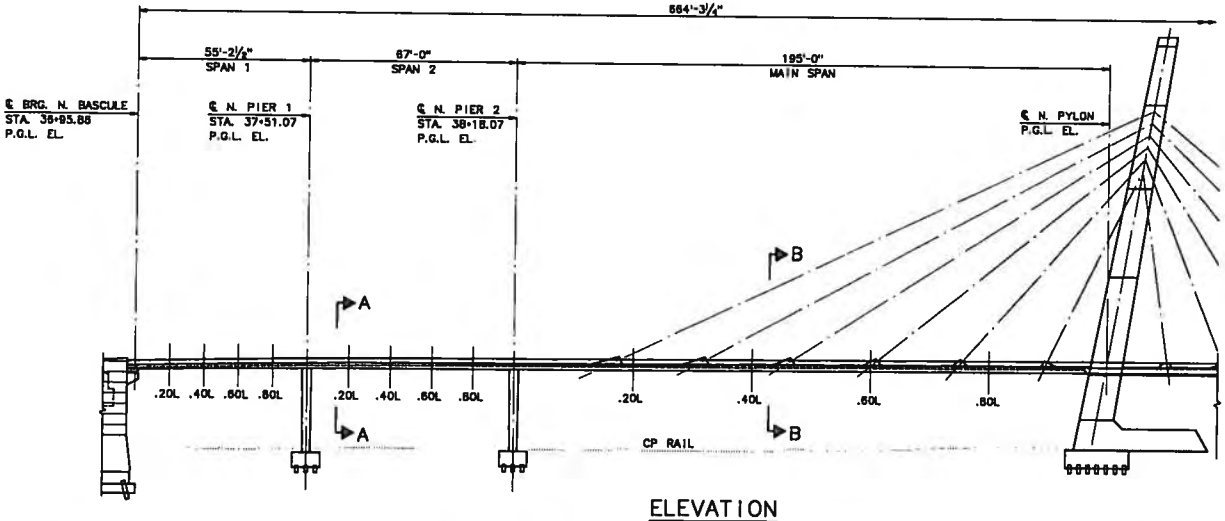

ELEVATION

1" = 20'-0"

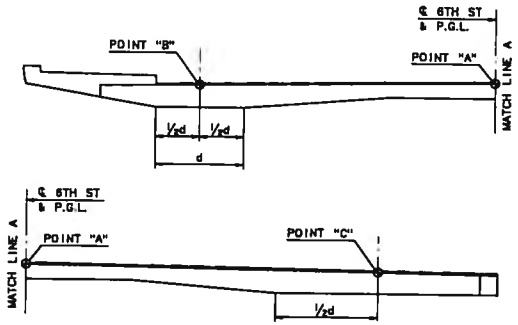

SECTION A-A

3/16" = 1'-0"

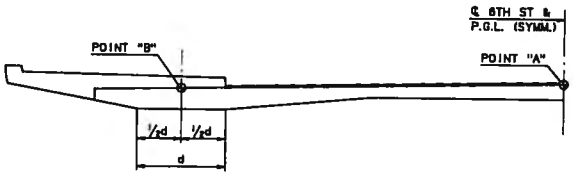

SECTION B-B

3/16" = 1'-0"

ESTIMATED DEFLECTIONS POINT "A" (INCHES)

	SPAN 1						SPAN 2					MAIN SPAN				
	℄ BRG.	.20L	.40L	.60L	.80L	℄ PIER 1	.20L	.40L	.60L	.80L	℄ PIER 2	.20L	.40L	.60L	.80L	℄ N. PYLON
BEGIN SERVICE	-0.02	+0.17	+0.30	+0.23	+0.23	+0.10	-0.20	-0.44	-0.55	-0.50	-0.40	+0.34	+0.07	-0.55	-0.67	-0.58
END SERVICE	-0.11	+0.12	+0.26	+0.25	+0.24	0.00	-0.53	-0.92	-1.01	-0.86	-0.76	-1.20	-2.38	-2.47	-2.05	-1.16

ESTIMATED DEFLECTIONS POINT "B" (INCHES)

	SPAN 1						SPAN 2					MAIN SPAN				
	℄ BRG.	.20L	.40L	.60L	.80L	℄ PIER 1	.20L	.40L	.60L	.80L	℄ PIER 2	.20L	.40L	.60L	.80L	℄ N. PYLON
BEGIN SERVICE	0.00	+0.13	+0.29	+0.22	+0.16	0.00	-0.16	-0.14	-0.11	-0.06	0.00	+0.74	+1.04	+0.46	+0.17	0.00
END SERVICE	0.00	+0.17	+0.35	+0.34	+0.24	0.00	-0.36	-0.38	-0.28	-0.12	0.00	-0.04	-0.24	-0.38	-0.26	0.00

ESTIMATED DEFLECTIONS POINT "C" (INCHES)

	SPAN 1						SPAN 2					MAIN SPAN				
	℄ BRG.	.20L	.40L	.60L	.80L	℄ PIER 1	.20L	.40L	.60L	.80L	℄ PIER 2	.20L	.40L	.60L	.80L	℄ N. PYLON
BEGIN SERVICE	0.00	+0.13	+0.29	+0.22	+0.16	0.00	-0.16	-0.14	-0.11	-0.06	0.00	+0.74	+1.04	+0.46	+0.17	0.00
END SERVICE	0.00	+0.17	+0.35	+0.34	+0.24	0.00	-0.36	-0.38	-0.28	-0.12	0.00	-0.04	-0.24	-0.38	-0.26	0.00

NOTES:

1. BEGIN SERVICE REPRESENTS THE ESTIMATED DEFLECTIONS AT THE START OF SERVICE. ALL POST-TENSIONING, PLACEMENT OF SUPERIMPOSED DEAD LOADS AND CABLE STRESSING HAS OCCURED.
2. END OF SERVICE DEFLECTIONS INCLUDE TIME EFFECTS.

FOR CONSTRUCTION

No.	Date	Revisions	By
1	10-02-01	SPANS 1 & 2 DEFLECTIONS	SL

HNTB CORPORATION

STATE OF WISCONSIN
DEPARTMENT OF TRANSPORTATION

STRUCTURE B-40-414C

Designed By SL | Design Checked TZ | Drawn By DS | Plans Checked AP

NORTH CABLE STAY DEFLECTIONS 1 OF 2

SHEET NC92b OF

j:\cadd\ff3885\dgn\north cablestay\nc92b-deflect1.dgn 12/05/01 04:58:06 PM

STATE PROJECT I.D.	SHEET NUMBER
2235-00-70	

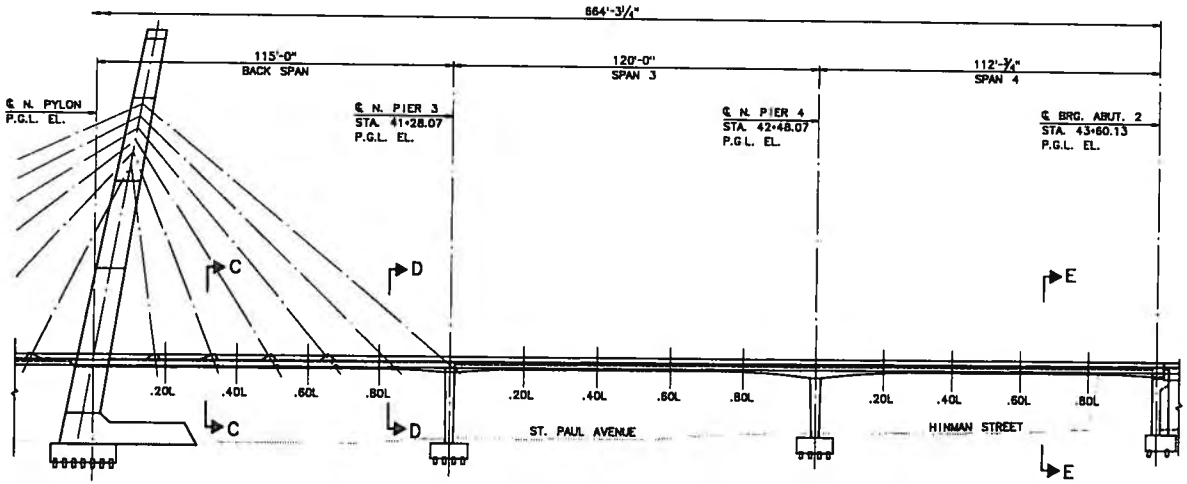

ELEVATION

1" = 20'-0"

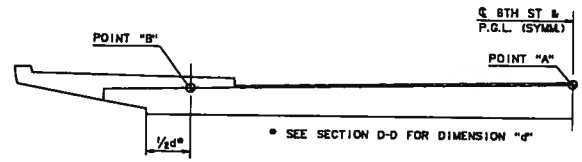

SECTION C-C

3/16" = 1'-0"

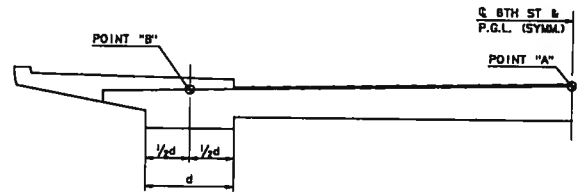

SECTION D-D

3/16" = 1'-0"

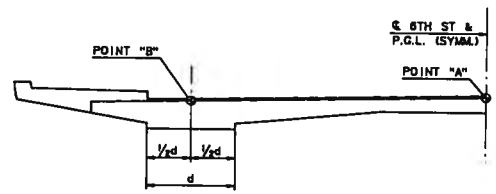

SECTION E-E

3/16" = 1'-0"

ESTIMATED DEFLECTIONS POINT "A" (INCHES)																
	BACK SPAN						SPAN 3					SPAN 4				
	℄ N. PYLON	.20L	.40L	.60L	.80L	℄ PIER 3	.20L	.40L	.60L	.80L	℄ PIER 4	.20L	.40L	.60L	.80L	℄ BRG.
BEGIN SERVICE	-0.58	-0.36	-0.06	+0.10	+0.14	-0.10	-0.88	-1.16	-0.79	-0.09	0.00	-0.50	-1.27	-1.79	-1.40	-0.62
END SERVICE	-1.16	-0.97	-0.46	-0.14	-0.02	-0.34	-1.52	-2.30	-1.90	-0.63	-0.04	-0.84	-1.85	-2.62	-1.97	-0.65

ESTIMATED DEFLECTIONS POINT "B" (INCHES)																
	BACK SPAN						SPAN 3					SPAN 4				
	℄ N. PYLON	.20L	.40L	.60L	.80L	℄ PIER 3	.20L	.40L	.60L	.80L	℄ PIER 4	.20L	.40L	.60L	.80L	℄ BRG.
BEGIN SERVICE	0.00	+0.04	+0.32	+0.43	+0.35	0.00	-0.86	-1.14	-0.78	-0.10	0.00	-0.54	-1.24	-1.72	-1.21	0.00
END SERVICE	0.00	-0.11	+0.36	+0.58	+0.47	0.00	-1.36	-2.14	-1.79	-0.60	0.00	-0.65	-1.70	-2.39	-1.57	0.00

NOTES:

1. BEGIN SERVICE REPRESENTS THE ESTIMATED DEFLECTIONS AT THE START OF SERVICE. ALL POST-TENSIONING, PLACEMENT OF SUPERIMPOSED DEAD LOADS AND CABLE STRESSING HAS OCCURED.
2. END OF SERVICE DEFLECTIONS INCLUDE TIME EFFECTS.

FOR CONSTRUCTION

No.	Date	Revisions	By

HNTB CORPORATION

STATE OF WISCONSIN
DEPARTMENT OF TRANSPORTATION

STRUCTURE B-40-414C

Designed By	SL	Design Checked	TZ	Drawn By	DS	Plans Checked	AP

NORTH CABLE STAY DEFLECTIONS 2 OF 2

SHEET NC92c OF

j:\oadd\ff3185\dgn\north cablestay\nc92c-deflect2.dgn 12/05/01 04:18:07 PM

STATE PROJECT I.D.	SHEET NUMBER
2235-00-70	XXX

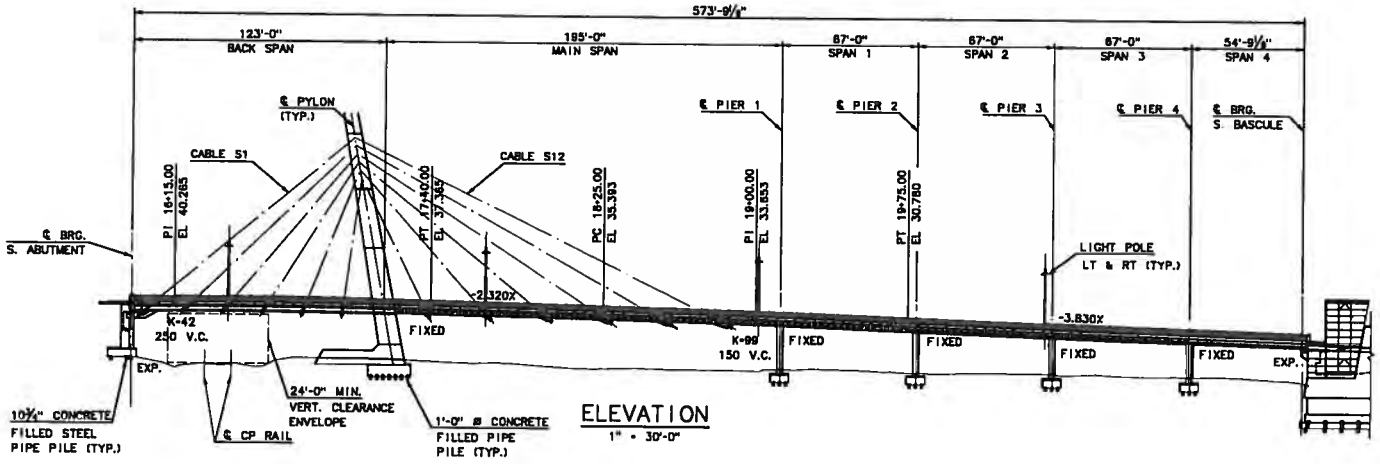

ELEVATION
1" = 30'-0"

NOTES:

1. FOR BRIDGE RAILING AND UTILITES, SEE SHEETS SC79 - SC81.
2. FOR DECK PLAN GEOMETRY, SEE SHEETS SC31 - SC46.
3. FOR FOUNDATION GEOMETRY, SEE SHEET SC02.

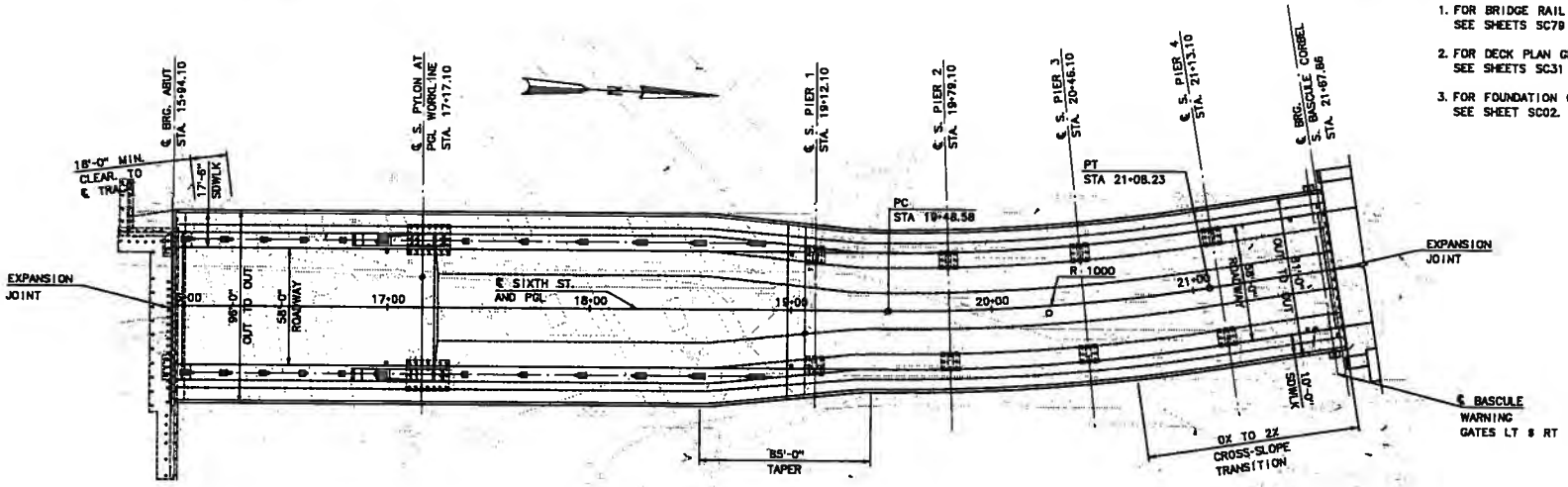

PLAN
1" = 30'-0"

100% SUBMITTAL

No.	Date	Revisions	By

HNTB CORPORATION

STATE OF WISCONSIN
DEPARTMENT OF TRANSPORTATION

STRUCTURE B-40-413A

Designed By	AP	Design Checked	TZ	Drawn By	BM	Plans Checked	AP

SOUTH CABLE STAY GENERAL PLAN AND ELEVATION

SHEET SC01 OF .

j:\codd\ff3185\dgn\south cablestay\sc01-gp&e.dgn 12/27/01 02:04:49 PM

STATE PROJECT I.D.	SHEET NUMBER
2235-00-70	XXX

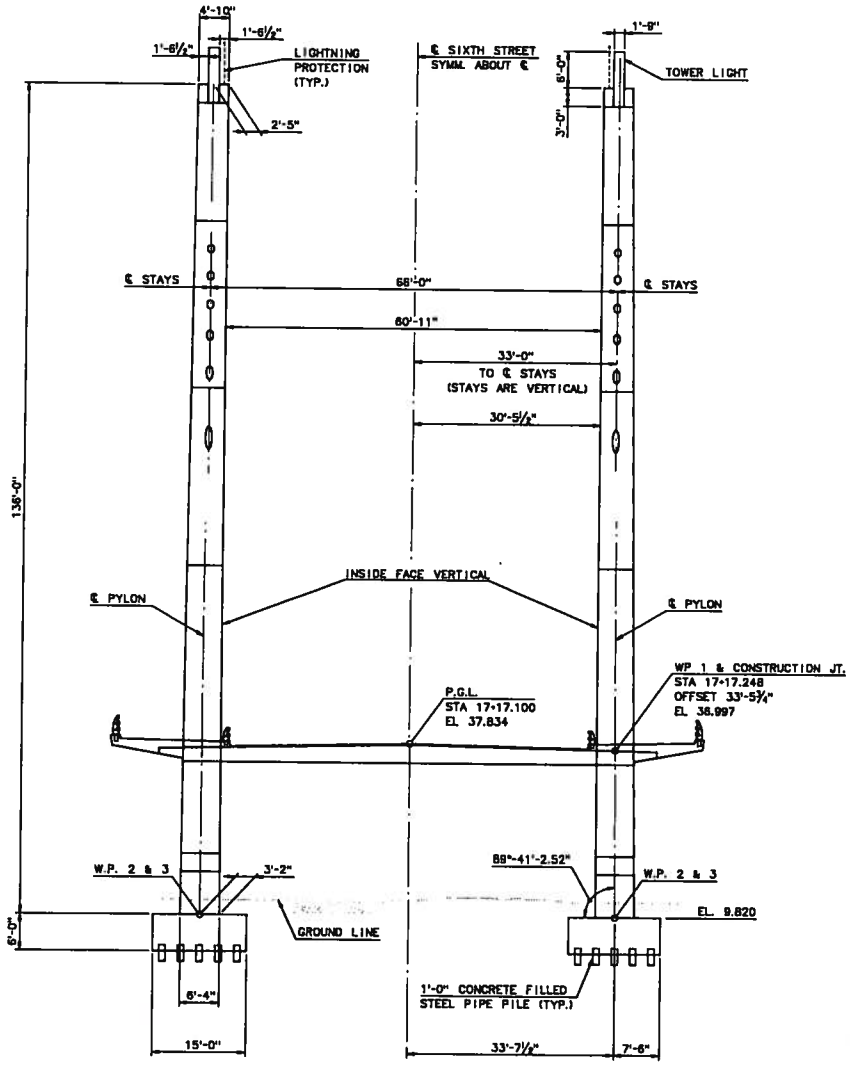

TRANSVERSE ELEVATION

1" = 10'-0"

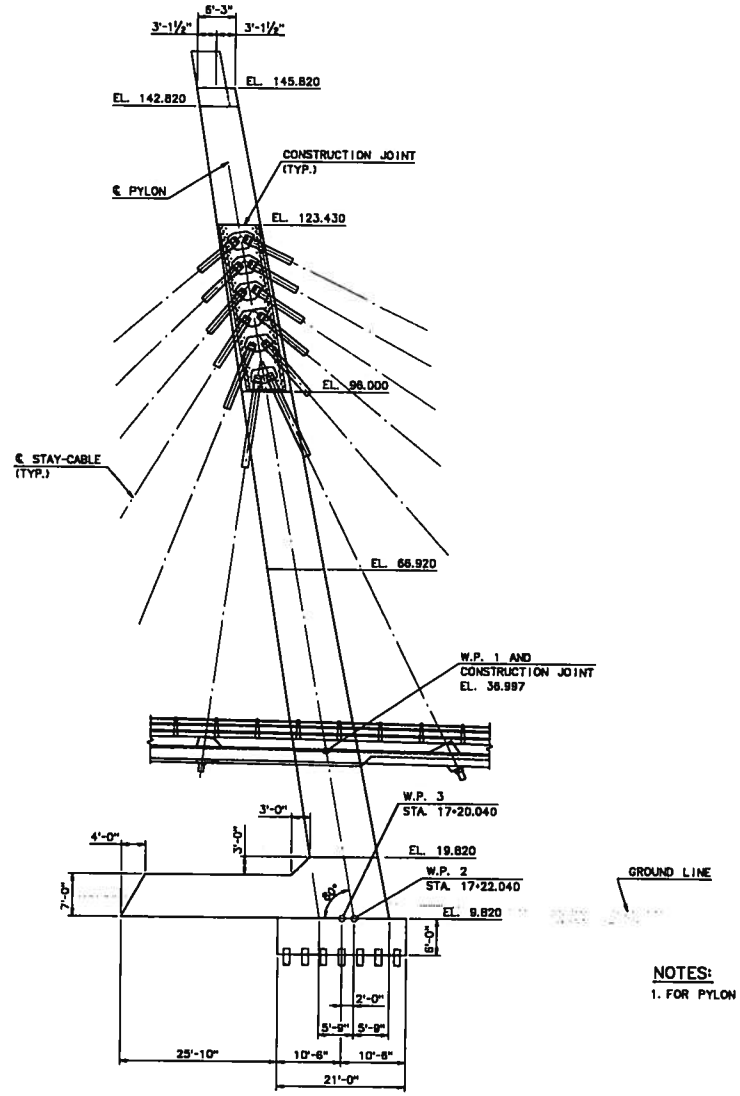

LONGITUDINAL ELEVATION

1" = 10'-0"

NOTES:

1. FOR PYLON REINFORCEMENT, SEE SHEETS

FOR CONSTRUCTION

No.	Date	Revisions	By

HNTB CORPORATION

STATE OF WISCONSIN
DEPARTMENT OF TRANSPORTATION

STRUCTURE B-40-413A

Designed By	SL	Design Checked	TPZ	Drawn By	BM	Plans Checked	AP

SOUTH CABLE STAY PYLON GEOMETRY

SHEET SC14 OF

j:\cadd\ff3885\dgn\south cablestay\sc14-pylongen.dgn 12/27/01 02:05:46 PM

STATE PROJECT I.D.	SHEET NUMBER
2235-00-70	

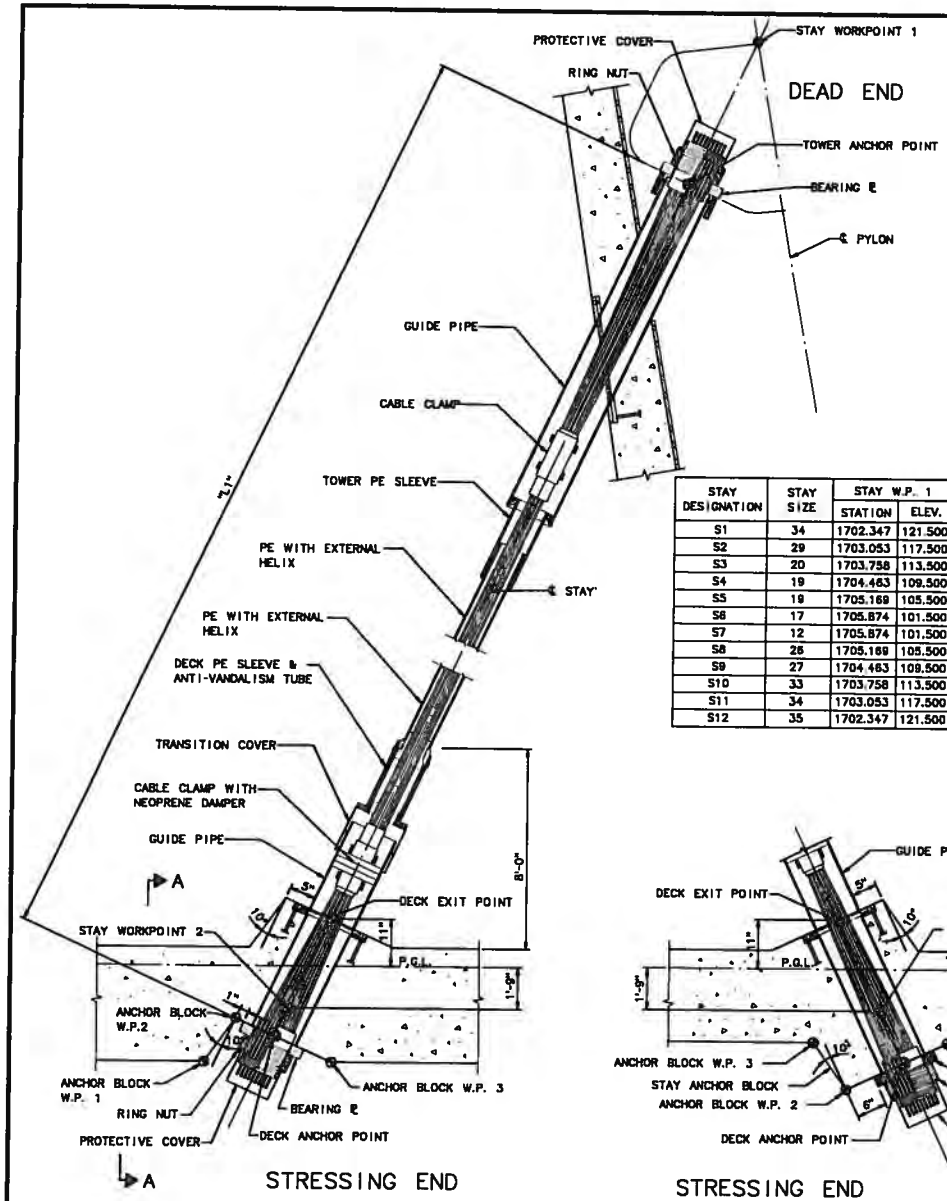

BACK SPAN STAY ELEVATION

N.T.S.

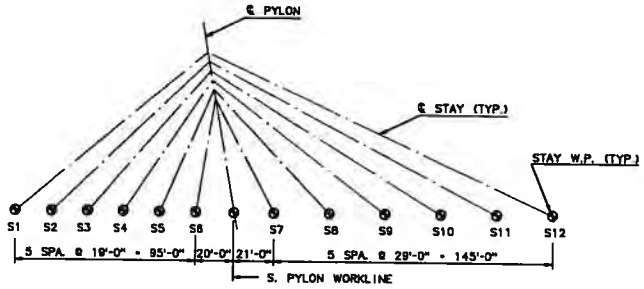

ELEVATION

N.T.S.

NOTES:

1. LENGTH "L1" SHOWN IS BASED ON THEORETICAL STRAIGHT LINE DIMENSIONS, ANCHOR POINT TO ANCHOR POINT, AND DOES NOT INCLUDE CABLE SAG.
2. DIMENSIONS AND LENGTHS SHOWN APPLY TO BOTH EAST AND WEST CABLES.
3. FOR CABLE ANCHORAGE REINFORCEMENT DETAILS SEE SHTS. SC56 THRU SC58b.
4. ALL CABLE WORKPOINTS ARE 33'-0" RIGHT AND LEFT OF SIXTH STREET PGL.

STAY DESIGNATION	STAY SIZE	STAY W.P. 1		STAY W.P. 2		TOWER A.P.		DECK A.P.		"L1"	ANCHOR BLOCK W.P. 1		ANCHOR BLOCK W.P. 2		ANCHOR BLOCK W.P. 3		"A"
		STATION	ELEV.	STATION	ELEV.	STATION	ELEV.	STATION	ELEV.		STATION	ELEV.	STATION	ELEV.	STATION	ELEV.	
S1	34	1702.347	121.500	1802.100	36.558	1700.801	120.190	1598.977	33.914	133.46	1598.421	34.572	1599.797	32.942	1603.605	35.156	2.295
S2	29	1703.053	117.500	1821.100	36.696	1701.539	116.007	1620.478	36.083	113.84	1617.798	35.261	1619.879	36.693	1621.268	35.280	0.904
S3	20	1703.758	113.500	1840.100	38.749	1702.293	111.733	1639.521	36.051	98.33	1637.447	35.329	1638.905	36.584	1640.387	35.332	1.041
S4	19	1704.463	109.500	1858.100	36.715	1703.078	107.278	1658.627	35.957	84.04	1656.979	35.306	1657.947	36.382	1659.687	35.296	1.200
S5	19	1705.169	105.500	1876.100	36.596	1704.117	102.824	1677.762	35.737	72.08	1676.502	35.192	1677.016	36.031	1679.208	35.168	1.374
S6	17	1705.874	101.500	1697.100	36.392	1705.324	97.420	1696.983	35.377	62.60	1695.010	34.989	1696.188	35.484	1700.260	34.932	1.520
S7	12	1705.874	101.500	1738.100	35.658	1707.850	97.852	1738.759	34.312	70.74	1739.565	34.708	1737.665	33.776	1736.941	34.767	2.308
S8	26	1705.169	105.500	1767.100	34.986	1707.074	103.330	1768.433	33.458	92.98	1769.064	34.023	1767.519	32.663	1765.719	34.101	2.288
S9	27	1704.463	109.500	1796.100	34.313	1706.343	107.958	1798.100	32.672	118.69	1798.643	33.337	1797.296	31.688	1794.167	33.441	2.270
S10	33	1703.758	113.500	1825.100	33.840	1705.577	112.303	1827.584	31.940	146.18	1828.150	32.652	1826.988	30.877	1822.544	32.782	2.182
S11	34	1703.053	117.500	1854.100	32.925	1704.837	116.501	1857.228	31.174	174.65	1857.638	31.915	1856.608	30.064	1850.734	32.095	2.106
S12	35	1702.347	121.500	1883.100	32.125	1704.109	120.629	1886.725	30.332	203.72	1887.096	31.091	1886.165	29.191	1878.755	31.333	2.043

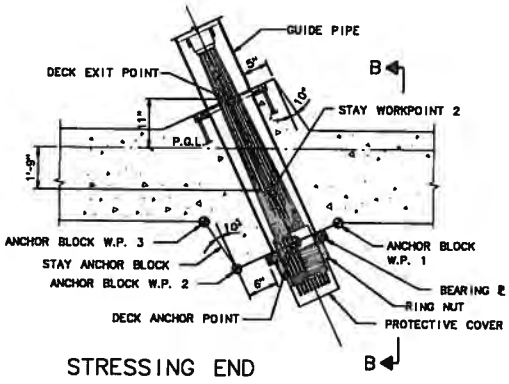

MAIN SPAN & S1 STAY ELEVATION

N.T.S.

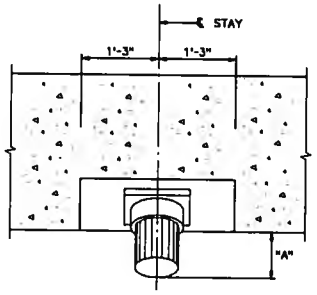

SECTION A-A

N.T.S.

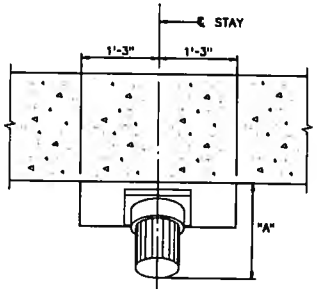

SECTION B-B

N.T.S.

FOR CONSTRUCTION

No.	Date	Revisions	By

HNTB CORPORATION

STATE OF WISCONSIN
DEPARTMENT OF TRANSPORTATION

STRUCTURE B-40-413A

Designed By	BL	Design Checked	TZ	Drawn By	BL	Plans Checked	AP

SOUTH CABLE STAY STAY ANCHORAGE DECK GEOMETRY

SHEET SC26 OF

j:\cadd\ff3885\dgn\south cablestay\sc26-staydet.dgn 12/27/01 02:06:14 PM

STATE PROJECT I.D.	SHEET NUMBER
2235-00-70	

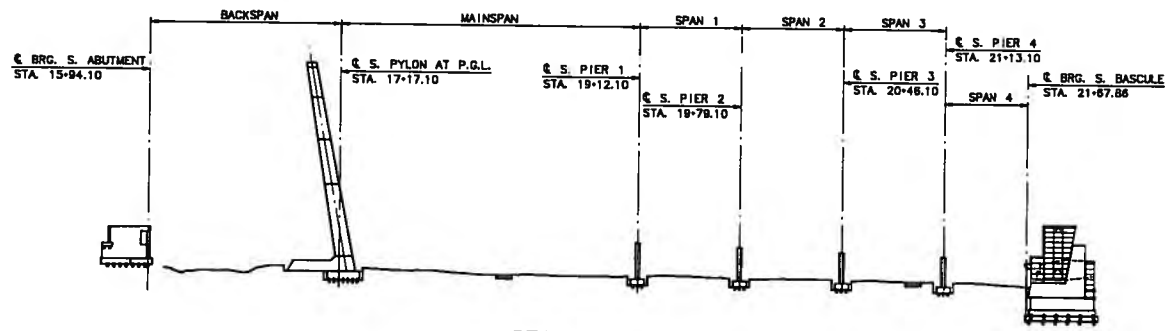

STAGE 1

1" = 40'-0"

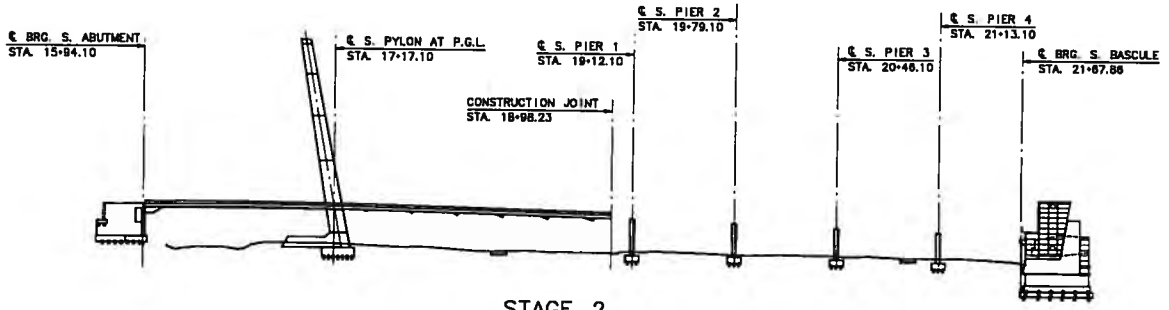

STAGE 2

1" = 40'-0"

NOTE: FALSEWORK NOT SHOWN

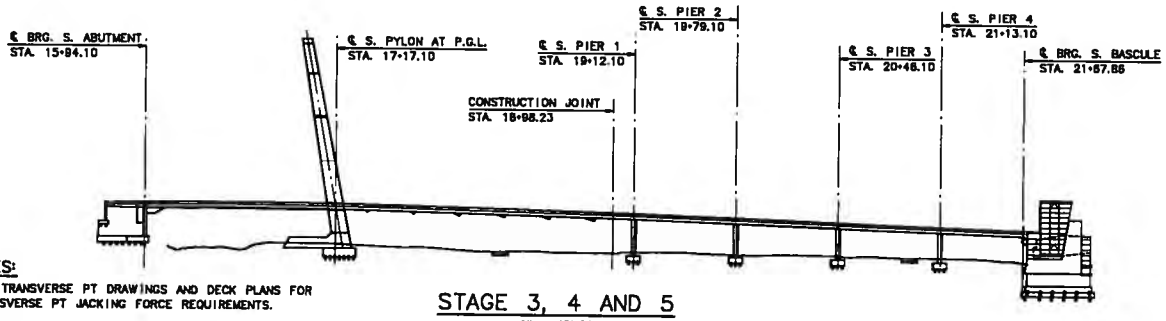

STAGE 3, 4 AND 5

1" = 40'-0"

NOTE: FALSEWORK NOT SHOWN

NOTES:

1. SEE TRANSVERSE PT DRAWINGS AND DECK PLANS FOR TRANSVERSE PT JACKING FORCE REQUIREMENTS.
2. ALL LONGITUDINAL TENDONS ARE DOUBLE-END STRESSED TO A JACKING FORCE OF 824 KIPS.

STAGE 1:

1. EXCAVATE PIERS 1-4 AND SOUTH PYLON PILE FOUNDATIONS.
2. DRIVE PILES FOR PIERS 1-4 AND SOUTH PYLON.
3. CONSTRUCT PIERS 1-4 FOOTINGS AND SOUTH PYLON FOOTINGS.
4. CONSTRUCT PIERS 1-4 AND SOUTH PYLON.
5. EXCAVATE S. ABUTMENT WEST WING WALL AND STEM WALL FOOTINGS.
6. CONSTRUCT S. ABUTMENT WEST WING WALL.
7. CONSTRUCT S. ABUTMENT STEM WALL TO ELEVATION 33.00.

STAGE 2:

1. PLACE SUPERSTRUCTURE FALSEWORK FROM S. ABUTMENT TO S. BASCULE.
2. CONSTRUCT SUPERSTRUCTURE SLAB FOR MAINSPAN AND BACKSPAN.

STAGE 3:

1. CONSTRUCT SUPERSTRUCTURE SLAB FOR SPANS 1-4.

STAGE 4:

POST-TENSIONING SEQUENCE:

PRIOR TO POST-TENSIONING, CONCRETE MUST REACH A MINIMUM COMPRESSIVE STRENGTH OF 4500 PSI.

STEP 1 - STRESS ALL TRANSVERSE S. ABUTMENT END BEAM TENDONS (2 - 4 STR. TENDONS, 2 - 8 STR. TENDONS) AND ALL S. BASCULE END BEAM TENDONS (4 - 4 STR. TENDONS).

STEP 2 - STRESS ALL TRANSVERSE TENDONS AT 1'-4" SPACING OVER SUPPORTS
- 16 TENDONS ADJACENT TO S. ABUTMENT END BEAM
- 21 TENDONS AT S. PYLON
- 60 TENDONS AT PIERS 1, 2, 3, AND 4 (15 AT EACH PIER)
- 10 TENDONS ADJACENT TO S. BASCULE END BEAM

STEP 3 - STRESS LONGITUDINAL TENDONS L1 AND L6.

STEP 4 - STRESS 50% OF REMAINING TRANSVERSE TENDONS
- 20 TENDONS IN BACKSPAN
- 55 TENDONS IN MAINSPAN
- 9 TENDONS IN SPAN 1
- 9 TENDONS IN SPAN 2
- 9 TENDONS IN SPAN 3
- 8 TENDONS IN SPAN 4

STEP 5 - STRESS LONGITUDINAL TENDONS L2 AND L5.

STEP 6 - STRESS REMAINING TRANSVERSE TENDONS.

STEP 7 - STRESS LONGITUDINAL TENDONS L3 AND L4.

STEP 8 - GROUT ALL TENDONS PER PTI "GUIDE SPECFICATIONS FOR GROUNTING OF POST-TENSIONED STRUCTURES", FIRST EDITION, FEBRUARY 2001.

STAGE 5:

1. COMPLETE CONSTRUCTION OF S. ABUTMENT STEM WALL.

FOR CONSTRUCTION

No.	Date	Revisions	By

HNTB CORPORATION

STATE OF WISCONSIN
DEPARTMENT OF TRANSPORTATION

STRUCTURE B-40-413A

Designed By	SL	Design Checked	TZ	Drawn By	SL	Plans Checked	AP

SOUTH CABLESTAY CONSTRUCTION SEQUENCE 1 OF 2

SHEET SC73 OF .

j:\cadd\ff3885\dgn\south cablestay\sc73-conseq1.dgn 12/27/01 02:08:33 PM

STATE PROJECT I.D.	SHEET NUMBER
2235-00-70	

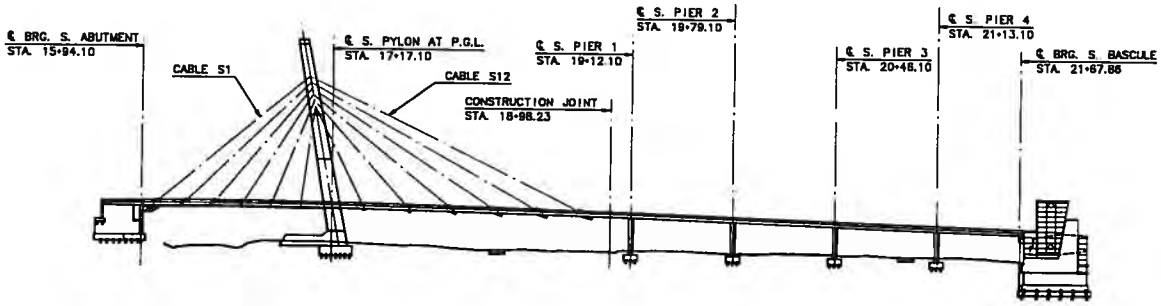

STAGE 6, 7 AND 8

1" = 40'-0"

NOTE: FALSEWORK NOT SHOWN

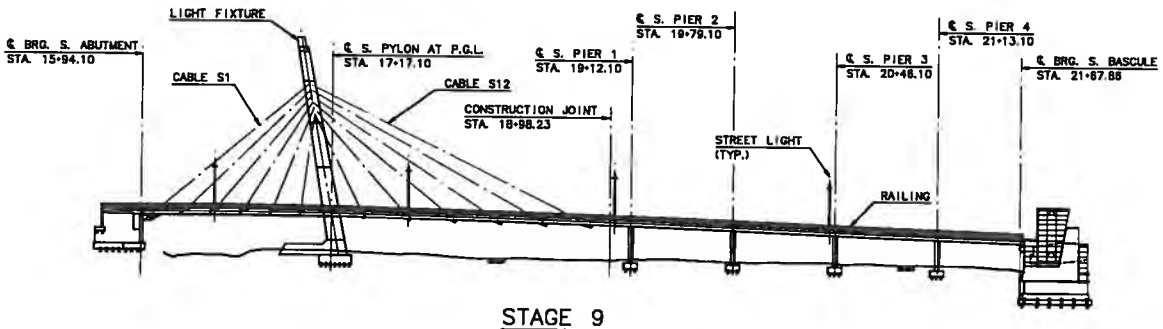

STAGE 9

1" = 40'-0"

STAGE 6:

1. CONSTRUCT SIDEWALKS AND CABLE BLISTERS.
2. INSTALL STAY CABLES.

STAGE 7:

STAY CABLE STRESSING SEQUENCE:

STEP 1 - STRESS S6 TO 300 KIPS (16.67 KIPS/STR)
- STRESS S7 TO 360 KIPS (27.69 KIPS/STR)

STEP 2 - STRESS S5 TO 350 KIPS (16.67 KIPS/STR)
- STRESS S8 TO 700 KIPS (25.93 KIPS/STR)

STEP 3 - STRESS S4 TO 400 KIPS (19.05 KIPS/STR)
- STRESS S9 TO 710 KIPS (24.48 KIPS/STR)

STEP 4 - STRESS S3 TO 500 KIPS (22.73 KIPS/STR)
- STRESS S10 TO 850 KIPS (24.29 KIPS/STR)

STEP 5 - STRESS S2 TO 710 KIPS (23.67 KIPS/STR)
- STRESS S11 TO 875 KIPS (25.00 KIPS/STR)

STEP 6 - STRESS S1 TO 825 KIPS (22.92 KIPS/STR)
- STRESS S12 TO 905 KIPS (25.14 KIPS/STR)

STAGE 8:

1. REMOVE SUPERSTRUCTURE FALSEWORK.

STAGE 9:

1. PLACE 3 LINE AND 2 LINE RAILING, EXPANSION JOINTS, STREET LIGHTS, WARNING GATES, TRAFFIC SIGNALS, PYLON LIGHT FIXTURE AND WEARING SURFACE.

FOR CONSTRUCTION

No.	Date	Revisions	By

HNTB CORPORATION

STATE OF WISCONSIN
DEPARTMENT OF TRANSPORTATION

STRUCTURE B-40-413A

Designed By	BL	Design Checked	AP	Drawn By	BL	Plans Checked	AP

SOUTH CABLESTAY CONSTRUCTION SEQUENCE 2 OF 2

SHEET SC73b OF .

J:\cadd\ff3885\dgn\south cablestay\soT3b-consseq2.dgn 12/27/01 02:08:35 PM

STATE PROJECT I.D.	SHEET NUMBER
2235-00-70	

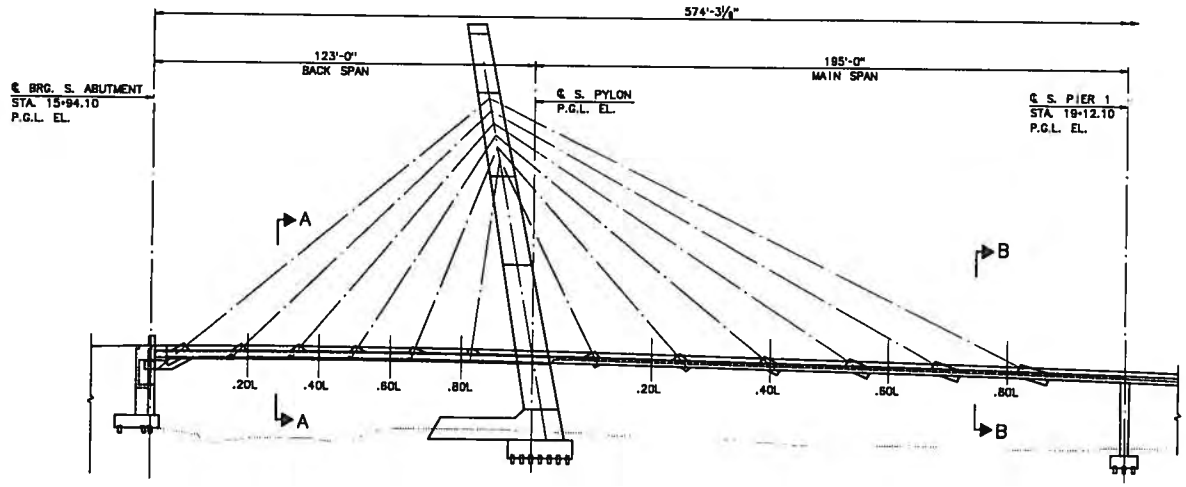

ELEVATION
1" = 20'-0"

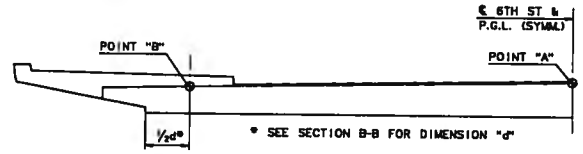

SECTION A-A
⅜" = 1'-0"

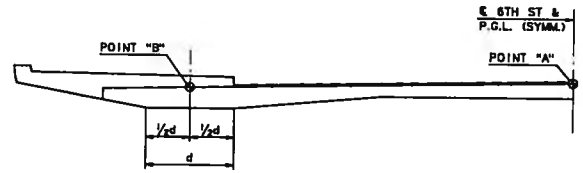

SECTION B-B
⅜" = 1'-0"

ESTIMATED DEFLECTIONS POINT "A" (INCHES)											
	BACK SPAN						MAIN SPAN				
	℄ BRG.	.20L	.40L	.60L	.80L	℄ S. PYLON	.20L	.40L	.60L	.80L	℄ PIER 1
BEGIN SERVICE	-0.50	-0.37	-0.43	+0.08	-0.04	-0.20	-1.30	-1.81	-1.48	-0.76	-0.31
END SERVICE	-0.84	-0.60	-0.72	-0.16	-0.30	-0.48	-2.52	-3.85	-3.58	-2.00	-0.59

ESTIMATED DEFLECTIONS POINT "B" (INCHES)											
	BACK SPAN						MAIN SPAN				
	℄ BRG.	.20L	.40L	.60L	.80L	℄ S. PYLON	.20L	.40L	.60L	.80L	℄ PIER 1
BEGIN SERVICE	0.00	+0.20	+0.11	+0.58	+0.43	0.00	-0.26	-0.26	+0.02	+0.32	0.00
END SERVICE	0.00	+0.38	+0.20	+0.68	+0.48	0.00	-0.79	-1.39	-1.08	-0.22	0.00

NOTES:

1. BEGIN SERVICE REPRESENTS THE ESTIMATED DEFLECTIONS AT THE START OF SERVICE. ALL POST-TENSIONING, PLACEMENT OF SUPERIMPOSED DEAD LOADS AND CABLE STRESSING HAS OCCURED.
2. END OF SERVICE DEFLECTIONS INCLUDE TIME EFFECTS.

FOR CONSTRUCTION

No.	Date	Revisions	By

HNTB CORPORATION

STATE OF WISCONSIN
DEPARTMENT OF TRANSPORTATION

STRUCTURE B-40-413A

Designed By SL | Design Checked TZ | Drawn By DB | Plans Checked AP

SOUTH CABLE STAY DEFLECTIONS 1 OF 2

SHEET SC73c OF

j:\cadd\ff3885\dgn\south cablestay\sc73c-deflect.dgn 12/27/01 02:26:11 PM

STATE PROJECT I.D.	SHEET NUMBER
2235-00-70	

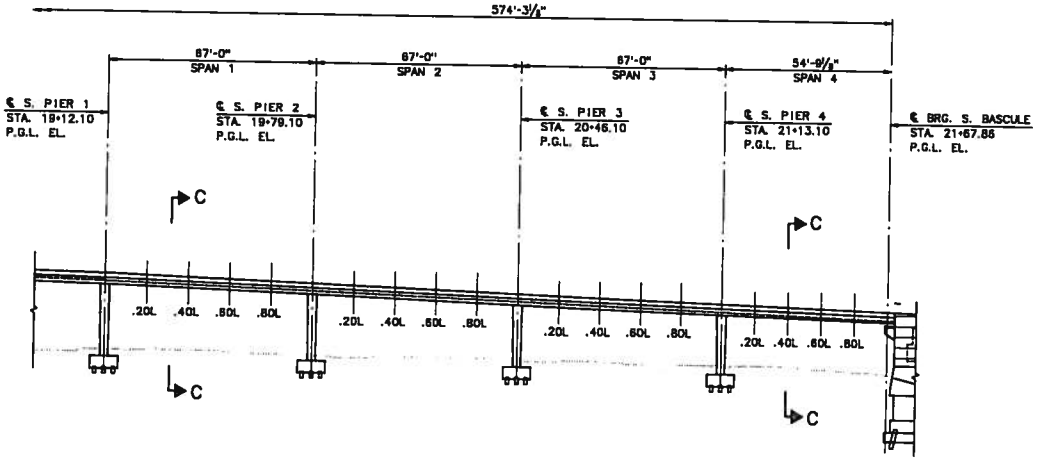

ELEVATION

1" = 20'-0"

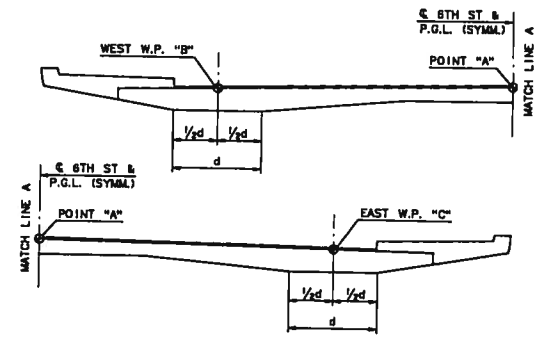

SECTION C-C

3/16" = 1'-0"

ESTIMATED DEFLECTIONS POINT "A" (INCHES)

	SPAN 1						SPAN 2					SPAN 3					SPAN 4				
	℄ PIER 1	.20L	.40L	.60L	.80L	℄ PIER 2	.20L	.40L	.60L	.80L	℄ PIER 3	.20L	.40L	.60L	.80L	℄ PIER 4	.20L	.40L	.60L	.80L	℄ BRG.
BEGIN SERVICE	-0.31	-0.40	-0.48	-0.42	-0.20	-0.02	-0.05	-0.16	-0.19	-0.10	-0.01	-0.07	-0.20	-0.23	-0.11	+0.06	+0.14	+0.14	+0.24	+0.08	-0.17
END SERVICE	-0.59	-0.66	-0.82	-0.79	-0.44	-0.14	-0.20	-0.42	-0.50	-0.30	-0.12	-0.25	-0.54	-0.61	-0.38	-0.04	+0.13	+0.16	+0.20	+0.02	-0.28

ESTIMATED DEFLECTIONS WEST WORK POINT "B" (INCHES)

	SPAN 1						SPAN 2					SPAN 3					SPAN 4				
	℄ PIER 1	.20L	.40L	.60L	.80L	℄ PIER 2	.20L	.40L	.60L	.80L	℄ PIER 3	.20L	.40L	.60L	.80L	℄ PIER 4	.20L	.40L	.60L	.80L	℄ BRG.
BEGIN SERVICE	0.00	-0.05	-0.07	-0.06	-0.05	0.00	+0.07	+0.12	+0.06	+0.01	0.00	+0.05	+0.07	+0.02	-0.04	0.00	+0.16	+0.30	+0.41	+0.22	0.00
END SERVICE	0.00	-0.06	-0.16	-0.19	-0.13	0.00	+0.06	+0.04	-0.04	-0.06	0.00	+0.01	-0.05	-0.14	-0.17	0.00	+0.24	+0.42	+0.49	+0.28	0.00

ESTIMATED DEFLECTIONS EAST WORK POINT "C" (INCHES)

	SPAN 1						SPAN 2					SPAN 3					SPAN 4				
	℄ PIER 1	.20L	.40L	.60L	.80L	℄ PIER 2	.20L	.40L	.60L	.80L	℄ PIER 3	.20L	.40L	.60L	.80L	℄ PIER 4	.20L	.40L	.60L	.80L	℄ BRG.
BEGIN SERVICE	0.00	-0.06	-0.11	-0.10	-0.05	0.00	+0.04	+0.01	-0.05	-0.04	0.00	+0.02	-0.02	-0.10	-0.10	0.00	+0.18	+0.34	+0.44	+0.24	0.00
END SERVICE	0.00	-0.07	-0.20	-0.24	-0.14	0.00	0.00	-0.11	-0.19	-0.13	0.00	-0.02	-0.18	-0.30	-0.25	0.00	+0.28	+0.48	+0.53	+0.30	0.00

NOTES:

1. BEGIN SERVICE REPRESENTS THE ESTIMATED DEFLECTIONS AT THE START OF SERVICE. ALL POST-TENSIONING, PLACEMENT OF SUPERIMPOSED DEAD LOADS AND CABLE STRESSING HAS OCCURED.
2. END OF SERVICE DEFLECTIONS INCLUDE TIME EFFECTS.

FOR CONSTRUCTION

No.	Date	Revisions	By
1	2-10-01	DEL SECT D, CLARIFY WP C	AP

HNTB CORPORATION

STATE OF WISCONSIN
DEPARTMENT OF TRANSPORTATION

STRUCTURE B-40-413A

Designed By BL | Design Checked TZ | Drawn By DS | Plans Checked AP

SOUTH CABLE STAY DEFLECTIONS 2 OF 2

SHEET SC73d OF

j:\oadd\ff3885\dgn\south cablestay\sc73d-deflect2.dgn 12/27/01 02:08:37 PM

STRESSING RECORD FOR STAY CABLES WITH CONTEN METHOD 1st STRESSING
DYWIDAG-SYSTEMS INTERNATIONAL

Project: Sixth Street Cable Stayed Bridge- Milwaukee

Cable no.	EAST N1	Cable Type	C37	Length of cable	40.269 m	No. of strands	35
Construction stage	11.2	Length of jack	1000 mm	Relieve	3.0 mm	Slip	3.0 mm
Jack type	ConTen 140 kN	Jack no.	DSI 19039	Piston area	26.5 cm²	Friction	0.0%
Tension side	Deck	Date of tensioining		Person resp. for tensioning works		Owner's representative	
Temperature of 1st strand		4/10/2002					

Se-quence	Strand number for		Required force at anchorage after relieve	Gauge pressure before relieve		Elongation theoretical before relieve	Strand protrusion		Partial elongation		Remark
	Working jack	Pilot jack		theoretical	actual		at pressure of 100 bar	at final pressure	actual	theoretical	
			[kN]	[bar]	[bar]	[mm]	[mm]	[mm]	[mm]	[mm]	
1	33	-	112.1	430		-				-	
2	23	33	98.2	378	410	175.7	85.0	213.0	128.0	129.2	
3	34		94.2	363	405	154.7	27.0	132.0	105.0	112.1	
4	24		92.2	355	400	148.7	75.0	195.0	120.0	106.8	
5	16		91.0	351	395	145.8	76.0	196.0	120.0	104.2	
6	22	24	89.6	345	390	143.2	84.0	203.0	119.0	101.8	
7	9		88.6	342	388	141.5	81.0	197.0	116.0	100.1	
8	15		87.8	339	385	140.3	81.0	196.0	115.0	98.9	
9	21		87.3	337	382	139.3	82.0	196.0	114.0	98.0	
10	20		86.8	335	380	138.6	73.0	185.0	112.0	97.2	
11	8		85.9	331	378	137.2	75.0	186.0	111.0	95.8	
12	3		85.1	328	374	136.0	83.0	183.0	100.0	94.6	
13	4	33	84.4	326	390	134.9	77.0	183.0	106.0	93.6	
14	10		83.9	324	379	134.1	76.0	188.0	112.0	92.7	
15	25		83.4	322	375	133.3	72.0	180.0	108.0	91.9	
16	17		82.5	319	370	132.0	75.0	182.0	107.0	90.6	
17	5		81.8	316	369	130.9	75.0	181.0	106.0	89.5	
18	1		81.1	314	365	129.9	77.0	184.0	107.0	88.5	
19	2		80.5	311	362	129.0	80.0	182.0	102.0	87.6	
20	14		80.0	309	360	128.2	78.0	182.0	104.0	86.7	
21	31		79.2	306	355	127.0	72.0	173.0	101.0	85.5	
22	13		78.5	304	352	125.9	78.0	178.0	100.0	84.5	
23	7		77.9	301	350	124.9	77.0	177.0	100.0	83.5	
24	6		77.3	299	350	124.0	70.0	170.0	100.0	82.6	
25	11		76.7	297	345	123.2	73.0	171.0	98.0	81.7	
26	26		75.9	294	341	122.0	71.0	168.0	97.0	80.5	
27	27		75.2	291	340	121.0	68.0	165.0	97.0	79.4	
28	18		74.6	289	340	120.0	72.0	167.0	95.0	78.4	
29	12		74.0	287	338	119.0	71.0	164.0	93.0	77.5	
30	19		73.4	284	335	118.1	72.0	167.0	95.0	76.6	
31	30		72.6	282	332	117.0	73.0	163.0	90.0	75.5	
32	37		72.0	279	330	116.0	68.0	160.0	92.0	74.4	
33	29		71.3	277	329	115.0	70.0	161.0	91.0	73.4	
34	28		70.7	274	328	114.1	70.0	163.0	93.0	72.5	
35	36		70.1	272	327	113.2	68.0	158.0	90.0	71.6	

STRESSING RECORD FOR STAY CABLES WITH CONTEN METHOD 2nd STRESSING
DYWIDAG-SYSTEMS INTENATIONAL

Project: Sixth Street Cable Stayed Bridge- Milwaukee

Cable no.	EAST N1	Cable type	C37	Length of cable	40.269 m	No. of strands	35
Construction stage	12.1	Length of jack	1000 mm	Relieve	3.0 mm	Slip	1.0 mm
Jack type	ConTen 140 kN	Jack no.	DSI 19039	Priston area	26.5 cm²	Friction	0.0%
Tension side	Deck	Date of tensioning		Person resp. for tensioning works		Owner's representative	
Temperature of 1st strand		4/10/2002					

Se-quence	Strand number for		Required force at anchorage after relieve	Gauge pressure before relieve		Elongation theoretical before relieve	Strand protrusion		Elongation		Remark
	Working jack	Pilot jack	[kN]	theoretical [bar]	actual [bar]	[mm]	before stressing [mm]	at final pressure [mm]	actual [mm]	theoretical [mm]	
1	33	-	110.0	422		67.0				67.0	
2	23	33	109.7	421	420	67.0	27.0	83.0	56.0	67.0	
3	34		109.4	420	421	67.0	27.0	81.0	54.0	67.0	
4	24		109.2	419	421	67.0	27.0	80.0	53.0	67.0	
5	16		108.9	418	420	66.9	27.0	83.0	56.0	66.9	
6	22	24	108.6	417	420	66.9	27.0	81	54.0	66.9	
7	9		108.3	416	419	66.9	27.0	81	54.0	66.9	
8	15		108.0	415	422	66.9	27.0	82	55.0	66.9	
9	21		107.8	414	421	66.9	27.0	82	55.0	66.9	
10	20		107.5	413	421	66.9	27.0	81	54.0	66.9	
11	8		107.2	412	420	66.9	27.0	81	54.0	66.9	
12	3		106.9	411	420	66.9	27.0	81	54.0	66.9	
13	4	33	106.7	410	415	66.9	27.0	79	52.0	66.9	
14	10		106.4	409	412	66.9	27.0	77	50.0	66.9	
15	25		106.1	408	412	66.8	27.0	76	49.0	66.8	
16	17		105.8	407	411	66.8	27.0	77	50.0	66.8	
17	5		105.5	406	410	66.8	27.0	78	51.0	66.8	
18	1		105.3	405	409	66.8	27.0	75	48.0	66.8	
19	2		105.0	404	408	66.8	27.0	82	55.0	66.8	
20	14		104.7	402	408	66.8	27.0	76	49.0	66.8	
21	31		104.4	401	405	66.8	27.0	76	49.0	66.8	
22	13		104.1	400	405	66.8	27.0	77	50.0	66.8	
23	7		103.9	399	402	66.8	27.0	76	49.0	66.8	
24	6		103.6	398	404	66.8	28.0	77	49.0	66.8	
25	11		103.3	397	404	66.7	27.0	76.0	49.0	66.7	
26	26		103.0	396	403	66.7	27.0	76.0	49.0	66.7	
27	27		102.8	395	402	66.7	27.0	77.0	50.0	66.7	
28	18		102.5	394	402	66.7	27.0	79.0	52.0	66.7	
29	12		102.2	393	402	66.7	27.0	78.0	51.0	66.7	
30	19		101.9	392	401	66.7	27.0	76.0	49.0	66.7	
31	30		101.6	391	400	66.7	27.0	76.0	49.0	66.7	
32	37		101.4	390	400	66.7	28.0	75.0	47.0	66.7	
33	29		101.1	389	399	66.7	27.0	76.0	49.0	66.7	
34	28		100.8	388	399	66.7	31.0	82.0	51.0	66.7	
35	36		100.2	386	398	66.6	27.0	75.0	48.0	66.6	

STRESSING RECORD FOR STAY CABLES WITH CONTEN METHOD 1st STRESSING
DYWIDAG-SYSTEMS INTERNATIONAL

Project: Sixth Street Cable Stayed Bridge- Milwaukee

Cable no.	EAST N2	Cable Type	C37	Length of cable	34.760 m	No. of strands	33
Construction stage	11.2	Length of jack	1000 mm	Relieve	3.0 mm	Slip	3.0 mm
Jack type	ConTen 140 kN	Jack no.	DSI 190397	Piston area	26.5 cm²	Friction	0.0%
Tension side	Deck	Date of tensioning		Person resp. for tensioning works		Owner's representative	
Temperature of 1st strand		4/8/2002					

Se-quence	Strand number for		Required force at anchorage after relieve	Gauge pressure before relieve		Elongation theoretical before relieve	Strand protrusion		Partial elongation		Remark
	Working jack	Pilot jack		theoretical	actual		at pressure of 100 bar	at final pressure	actual	theoretical	
			[kN]	[bar]	[bar]	[mm]	[mm]	[mm]	[mm]	[mm]	
1	33	-	110.0	424	424	-				-	
2	34		100.9	389	400	150.4	31.0	140.0	109.0	111.7	
3	16	33	98.2	379	387	138.4	63.0	166.0	103.0	101.9	
4	24		96.8	374	390	135.0	62.0	165.0	103.0	98.9	
5	9		95.7	370	374	133.0	60.0	158.0	98.0	97.1	
6	15		94.3	364	370	131.0	68.0	163.0	95.0	95.0	
7	21	24	93.3	361	366	129.6	67.0	160.0	93.0	93.6	
8	20		92.5	358	361	128.5	56.0	150.0	94.0	92.6	
9	8		91.9	355	359	127.7	72.0	164.0	92.0	91.8	
10	3		91.5	354	358	127.1	60.0	150.0	90.0	91.2	
11	4		90.4	350	353	125.7	64.0	153.0	89.0	89.7	
12	10		89.5	346	350	124.5	62.0	151.0	89.0	88.6	
13	25		88.8	344	348	123.5	62.0	149.0	87.0	87.6	
14	35		88.1	341	346	122.7	64.0	150.0	86.0	86.7	
15	17		87.6	339	342	122.0	71.0	158.0	87.0	86.0	
16	5		86.6	336	340	120.7	77.0	163.0	86.0	84.7	
17	1		85.8	332	339	119.6	66.0	151.0	85.0	83.6	
18	2		85.0	330	335	118.6	72.0	156.0	84.0	82.6	
19	14		84.4	327	330	117.7	73.0	154.0	81.0	81.7	
20	32		83.8	325	328	116.9	70.0	150.0	80.0	80.9	
21	26		82.9	321	325	115.7	65.0	145.0	80.0	79.7	
22	11	33	82.1	318	325	114.7	68.0	147.0	79.0	78.6	
23	6		81.3	315	320	113.7	68.0	144.0	76.0	77.7	
24	7		80.6	313	318	112.8	96.0	172.0	76.0	76.8	
25	13		80.0	311	310	112.0	69.0	144.0	75.0	75.9	
26	31		79.1	307	310	110.8	74.0	147.0	73.0	74.8	
27	27		78.3	304	308	109.8	67.0	140.0	73.0	73.7	
28	18		77.6	301	308	108.8	70.0	143.0	73.0	72.7	
29	12		76.8	299	305	107.8	68.0	140.0	72.0	71.7	
30	19		76.2	296	302	107.0	67.0	139.0	72.0	70.8	
31	30		75.4	293	299	105.9	69.0	139.0	70.0	69.8	
32	28		74.6	290	299	104.9	66.0	137.0	71.0	68.8	
33	29		73.9	288	296	104.0	64.0	133.0	69.0	67.8	

STRESSING RECORD FOR STAY CABLES WITH CONTEN METHOD 2nd STRESSING

DYWIDAG-SYSTEMS INTENATIONAL

Project: Sixth Street Cable Stayed Bridge- Milwaukee

Cable no.	EAST N2	Cable type	C37	Length of cable	34.760 m	No. of strands	33
Construction stage	12.1	Length of jack	1000 mm	Relieve	3.0 mm	Slip	1.0 mm
Jack type	ConTen 140 kN	Jack no.	DSI 190397	Priston area	26.5 cm²	Friction	0.0%
Tension side	Deck	Date of tensioning		Person resp. for tensioning works		Owner's representative	
Temperature of 1st strand		4/8/2002					

Se-quence	Strand number for		Required force at anchorage after relieve	Gauge pressure before relieve		Elongation theoretical before relieve	Strand protrusion		Elongation		Remark
	Working jack	Pilot jack	[kN]	theoretical [bar]	actual [bar]	[mm]	before stressing [mm]	at final pressure [mm]	actual [mm]	theoretical [mm]	
1	33	-	116.3	447	447	62.3				62.3	
2	34	33	116.0	446	440	62.3	27.0	84.0	57.0	62.3	
3	16		115.6	445	435	62.3	28.0	84.0	56.0	62.3	
4	24		115.3	444	430	62.3	28.0	79.0	51.0	62.3	
5	9	24	115.0	443	440	62.3	28.0	90.0	62.0	62.3	
6	15		114.7	441	438	62.3	28.0	90.0	62.0	62.3	
7	21		114.4	440	434	62.3	28.0	90.0	62.0	62.3	
8	20		114.0	439	434	62.3	28.0	88.0	60.0	62.3	
9	8		113.7	438	431	62.2	28.0	89.0	61.0	62.2	
10	3		113.4	436	431	62.2	43.0	104.0	61.0	62.2	
11	4	33	113.1	435	431	62.2	31.0	92.0	61.0	62.2	
12	10		112.7	434	430	62.2	28.0	88.0	60.0	62.2	
13	25		112.4	433	429	62.2	28.0	88.0	60.0	62.2	
14	35		112.1	432	427	62.2	28.0	87.0	59.0	62.2	
15	17		111.8	430	426	62.2	28.0	87.0	59.0	62.2	
16	5		111.5	429	425	62.2	27.0	89.0	62.0	62.2	
17	1		111.1	428	424	62.1	69.0	129.0	60.0	62.1	
18	2		110.8	427	424	62.1	30.0	91.0	61.0	62.1	
19	14		110.5	426	423	62.1	33.0	94.0	61.0	62.1	
20	32		110.2	424	421	62.1	31.0	91.0	60.0	62.1	
21	26		109.9	423	420	62.1	31.0	91.0	60.0	62.1	
22	11		109.5	422	419	62.1	27.0	85.0	58.0	62.1	
23	6		109.2	421	419	62.1	26.0	88.0	62.0	62.1	
24	7		108.9	419	418	62.1	27.0	90.0	63.0	62.1	
25	13		108.6	418	413	62.1	28.0	89.0	61.0	62.1	
26	31		108.2	417	413	62.0	27.0	88.0	61.0	62.0	
27	27		107.9	416	413	62.0	30.0	90.0	60.0	62.0	
28	18		107.6	415	412	62.0	27.0	87.0	60.0	62.0	
29	12		107.3	413	411	62.0	27.0	86.0	59.0	62.0	
30	19		107.0	412	410	62.0	27.0	87.0	60.0	62.0	
31	30		106.6	411	409	62.0	27.0	89.0	62.0	62.0	
32	28		106.3	410	408	62.0	26.0	86.0	60.0	62.0	
33	29		105.7	407	407	61.9	29.0	88.0	59.0	61.9	

STRESSING RECORD FOR STAY CABLES WITH CONTEN METHOD 1st STRESSING

DYWIDAG-SYSTEMS INTERNATIONAL

Project: Sixth Street Cable Stayed Bridge- Milwaukee

Cable no.	EAST N3	Cable Type	C31	Length of cable	30.071 m	No. of strands	23
Construction stage	11.2	Length of jack	1000 mm	Relieve	3.0 mm	Slip	3.0 mm
Jack type	ConTen 140 kN	Jack no.	DSI 190397	Piston area	26.5 cm²	Friction	0.0%
Tension side	Deck	Date of tensioining		Person resp. for tensioning works		Owner's representative	
Temperature of 1st strand		4/4/2002		Jason Samz			

Se-quence	Strand number for		Required force at anchorage after relieve	Gauge pressure before relieve		Elongation theoretical before relieve	Strand protrusion		Partial elongation		Remark
	Working jack	Pilot jack		theoretical	actual		at pressure of 100 bar	at final pressure	actual	theoretical	
			[kN]	[bar]	[bar]	[mm]	[mm]	[mm]	[mm]	[mm]	
1	21	-	99.7	386		-				-	
2	9		95.6	371	370	119.6	57.0	139.0	82.0	87.4	
3	24		94.1	365	370	115.0	35.0	116.0	81.0	83.5	
4	25	21	93.0	361	367	113.3	55.0	135.0	80.0	81.9	
5	10		92.0	357	359	112.0	57.0	134.0	77.0	80.6	
6	4		90.4	351	356	110.2	55.0	130.0	75.0	78.8	
7	17		89.3	347	350	108.9	54.0	128.0	74.0	77.5	
8	3		88.5	344	357	108.0	65.0	143.0	78.0	76.6	
9	8		87.9	342	350	107.2	59.0	134.0	75.0	75.8	
10	20		87.4	340	349	106.6	62.0	136.0	74.0	75.2	
11	14	24	86.1	335	346	105.2	52.0	125.0	73.0	73.8	
12	2		85.1	331	341	104.1	57.0	129.0	72.0	72.6	
13	1		84.2	328	339	103.1	57.0	127.0	70.0	71.6	
14	5		83.5	325	338	102.2	55.0	125.0	70.0	70.8	
15	26		82.9	323	329	101.5	52.0	120.0	68.0	70.0	
16	11		81.7	318	325	100.2	51.0	118.0	67.0	68.7	
17	6		80.7	315	322	99.1	52.0	117.0	65.0	67.6	
18	7		79.9	311	320	98.1	52.0	117.0	65.0	66.6	
19	13	21	79.1	308	318	97.1	52.0	116.0	64.0	65.6	
20	31		78.4	306	310	96.3	57.0	118.0	61.0	64.8	
21	18		77.4	302	310	95.2	51.0	118.0	67.0	63.7	
22	12		76.5	299	308	94.2	51.0	117.0	66.0	62.7	
23	19		75.7	296	310	93.3	54.0	114.0	60.0	61.7	

STRESSING RECORD FOR STAY CABLES WITH CONTEN METHOD 2nd STRESSING

DYWIDAG-SYSTEMS INTENATIONAL

Project: Sixth Street Cable Stayed Bridge- Milwaukee

Cable no.	EAST N3	Cable type	C31	Length of cable	30.071 m	No. of strands	23
Construction stage	12.1	Length of jack	1000 mm	Relieve	3.0 mm	Slip	1.0 mm
Jack type	ConTen 140 kN	Jack no.	DSI 190397	Priston area	26.5 cm²	Friction	0.0%
Tension side	Deck	Date of tensioning		Person resp. for tensioning works		Owner's representative	
Temperature of 1st strand		4/4/2002					

Se-quence	Strand number for		Required force at anchorage after relieve	Gauge pressure before relieve		Elongation theoretical before relieve	Strand protrusion		Elongation		Remark
	Working jack	Pilot jack		theoretical	actual		before stressing	at final pressure	actual	theoretical	
			[kN]	[bar]	[bar]	[mm]	[mm]	[mm]	[mm]	[mm]	
1	21	-	116.9	451		53.8				53.8	
2	9		116.5	450	455	53.8	19.0	79.0	60.0	53.8	
3	24		116.1	448	453	53.7	19.0	76.0	57.0	53.7	
4	25	21	115.8	447	451	53.7	19.0	75.0	56.0	53.7	
5	10		115.4	445	450	53.7	19.0	76.0	57.0	53.7	
6	4		115.0	444	449	53.7	19.0	76.0	57.0	53.7	
7	17		114.6	442	448	53.7	19.0	76.0	57.0	53.7	
8	3		114.2	441	439	53.7	19.0	72.0	53.0	53.7	
9	8		113.9	440	436	53.7	19.0	71.0	52.0	53.7	
10	20		113.5	438	436	53.6	20.0	71.0	51.0	53.6	
11	14	24	113.1	437	434	53.6	19.0	71.0	52.0	53.6	
12	2		112.7	435	432	53.6	20.0	71.0	51.0	53.6	
13	1		112.3	434	429	53.6	19.0	71.0	52.0	53.6	
14	5		112.0	432	429	53.6	20.0	70.0	50.0	53.6	
15	26		111.6	431	426	53.6	20.0	72.0	52.0	53.6	
16	11		111.2	430	426	53.6	19.0	72.0	53.0	53.6	
17	6		110.8	428	423	53.5	20.0	72.0	52.0	53.5	
18	7		110.4	427	422	53.5	20.0	72.0	52.0	53.5	
19	13	21	110.1	425	421	53.5	20.0	71.0	51.0	53.5	
20	31		109.7	424	421	53.5	19.0	73.0	54.0	53.5	
21	18		109.3	422	419	53.5	20.0	71.0	51.0	53.5	
22	12		108.9	421	417	53.5	20.0	71.0	51.0	53.5	
23	19		108.2	418	415	53.5	20.0	72.0	52.0	53.5	

STRESSING RECORD FOR STAY CABLES WITH CONTEN METHOD 1st STRESSING

DYWIDAG-SYSTEMS INTERNATIONAL

Project: Sixth Street Cable Stayed Bridge- Milwaukee

Cable no.	EAST N4	Cable Type	C31	Length of cable	25.715 m	No. of strands	23
Construction stage	11.2	Length of jack	1000 mm	Relieve	3.0 mm	Slip	3.0 mm
Jack type	ConTen 140 kN	Jack no.	DSI 190397	Piston area	26.5 cm²	Friction	0.0%
Tension side	Deck	Date of tensioining		Person resp. for tensioning works		Owner's representative	
Temperature of 1st strand		4/2/2002					

Se-quence	Strand number for		Required force at anchorage after relieve	Gauge pressure before relieve		Elongation theoretical before relieve	Strand protrusion		Partial elongation		Remark
	Working jack	Pilot jack		theoretical	actual		at pressure of 100 bar	at final pressure	actual	theoretical	
			[kN]	[bar]	[bar]	[mm]	[mm]	[mm]	[mm]	[mm]	
1	21	-	89.0	348		-				-	
2	9		86.3	337	330	93.3	56.0	117.0	61.0	65.7	
3	24		85.0	333	300	90.6	24.0	29.0	5.0	63.3	A prestressed condition seemed to be present.
4	25	21	84.0	329	325	89.3	54.0	112.0	58.0	62.1	
5	10		83.1	325	320	88.3	53.0	110.0	57.0	61.2	
6	4		81.6	320	317	86.9	52.0	109.0	57.0	59.7	
7	17		80.6	316	315	85.9	55.0	109.0	54.0	58.7	
8	3		79.8	313	309	85.1	53.0	106.0	53.0	57.9	
9	8		79.2	311	306	84.5	54.0	107.0	53.0	57.3	
10	20		78.8	309	300	84.1	56.0	109.0	53.0	56.9	
11	14		77.6	305	295	82.9	54.0	105.0	51.0	55.7	
12	2		76.6	301	296	81.9	56.0	107.0	51.0	54.7	
13	1		75.7	298	293	81.1	56.0	105.0	49.0	53.8	
14	5		75.0	295	289	80.4	62.0	110.0	48.0	53.1	
15	26	24	74.4	293	289	79.8	52.0	100.0	48.0	52.5	
16	11		73.3	289	285	78.7	51.0	98.0	47.0	51.4	
17	6		72.4	285	277	77.8	52.0	96.0	44.0	50.5	
18	7		71.6	282	276	77.0	56.0	102.0	46.0	49.7	
19	13		70.8	279	272	76.3	57.0	101.0	44.0	48.9	
20	31		70.2	277	269	75.6	51.0	94.0	43.0	48.3	
21	18		69.2	273	268	74.7	53.0	95.0	42.0	47.3	
22	12		68.4	270	262	73.8	51.0	92.0	41.0	46.5	
23	19		67.6	267	260	73.0	50.0	91.0	41.0	45.7	

STRESSING RECORD FOR STAY CABLES WITH CONTEN METHOD 2nd STRESSING

DYWIDAG-SYSTEMS INTENATIONAL

Project: Sixth Street Cable Stayed Bridge- Milwaukee

Cable no.	EAST N4	Cable Type	C31	Length of cable	25.715 m	No. of strands	23
Construction stage	12.1	Length of jack	1000 mm	Relieve	3.0 mm	Slip	1.0 mm
Jack type	ConTen 140 kN	Jack no.	DSI 190397	Priston area	26.5 cm²	Friction	0.0%
Tension side	Deck	Date of tensioning		Person resp. for tensioning works		Owner's representative	
Temperature of 1st strand		4/2/2002					

Se-quence	Strand number for		Required force at anchorage after relieve	Gauge pressure before relieve		Elongation theoretical before relieve	Strand protrusion		Elongation		Remark
	Working jack	Pilot jack		theoretical	actual		before stressing	at final pressure	actual	theoretical	
			[kN]	[bar]	[bar]	[mm]	[mm]	[mm]	[mm]	[mm]	
1	21	-	104.9	415	415	43.1	23.0	66.0	43.0	43.1	
2	9		104.5		416	43.1	23.0	71.0	48.0	43.1	
3	24		104.2		411	43.1	23.0	76.0	53.0	43.1	
4	25	21	103.8		411	43.1	23.0	71.0	48.0	43.1	
5	10		103.5		409	43.0	23.0	70.0	47.0	43.0	
6	4		103.1		408	43.0	23.0	71.0	48.0	43.0	
7	17		102.7		402	43.0	23.0	71.0	48.0	43.0	
8	3		102.4		401	43.0	23.0	70.0	47.0	43.0	
9	8		102.0		399	43.0	23.0	70.0	47.0	43.0	
10	20		101.6		399	43.0	23.0	70.0	47.0	43.0	
11	14		101.3		398	43.0	23.0	70.0	47.0	43.0	
12	2		100.9		392	43.0	23.0	69.0	46.0	43.0	
13	1		100.6		390	42.9	27.0	73.0	46.0	42.9	
14	5		100.2		388	42.9	23.0	69.0	46.0	42.9	
15	26	24	99.8		386	42.9	22.0	68.0	46.0	42.9	
16	11		99.5		382	42.9	23.0	70.0	47.0	42.9	
17	6		99.1		384	42.9	24.0	71.0	47.0	42.9	
18	7		98.7		379	42.9	23.0	68.0	45.0	42.9	
19	13		98.4		381	42.9	23.0	69.0	46.0	42.9	
20	31		98.0		378	42.8	22.0	68.0	46.0	42.8	
21	18		97.7		372	42.8	22.0	67.0	45.0	42.8	
22	12		97.3		372	42.8	22.0	68.0	46.0	42.8	
23	19		96.6		369	42.8	22.0	67.0	45.0	42.8	

STRESSING RECORD FOR STAY CABLES WITH CONTEN METHOD 1st STRESSING

DYWIDAG-SYSTEMS INTERNATIONAL

Project: Sixth Street Cable Stayed Bridge- Milwaukee

Cable no.	EAST N5	Cable Type	C31	Length of cable	22.054 m	No. of strands	22
Construction stage	11.2	Length of jack	1000 mm	Relieve	3.0 mm	Slip	3.0 mm
Jack type	ConTen 140 kN	Jack no.	DSI 190397	Piston area	26.5 cm²	Friction	0.0%
Tension side	Deck	Date of tensioining		Person resp. for tensioning works		Owner's representative	
Temperature of 1st strand		3/29/2002		Jason Samz			

Se-quence	Strand number for		Required force at anchorage after relieve	Gauge pressure before relieve		Elongation theoretical before relieve	Strand protrusion		Partial elongation		Remark
	Working jack	Pilot jack		theoretical	actual		at pressure of 100 bar	at final pressure	actual	theoretical	
			[kN]	[bar]	[bar]	[mm]	[mm]	[mm]	[mm]	[mm]	
1	21	-	69.8	277		-				-	
2	9		68.3	271	277	65.2	52.0	91.0	39.0	41.2	
3	24		67.4	268	276	63.7	45.0	84.0	39.0	39.9	
4	25	21	66.7	266	270	63.1	46.0	83.0	37.0	39.3	
5	10		66.1	263	269	62.5	47.0	84.0	37.0	38.7	
6	4		65.0	259	269	61.5	46.0	83.0	37.0	37.8	
7	17		64.2	256	269	60.8	53.0	84.0	31.0	37.1	
8	3		63.6	254	255	60.3	44.0	79.0	35.0	36.6	
9	8		63.1	252	250	60.0	46.0	80.0	34.0	36.2	
10	20	24	62.8	251	249	59.6	47.0	80.0	33.0	35.9	
11	14		61.9	247	245	58.9	46.0	79.0	33.0	35.1	
12	2		61.2	245	245	58.3	47.0	79.0	32.0	34.5	
13	1		60.6	242	240	57.8	49.0	79.0	30.0	34.0	
14	5		60.1	240	240	57.3	59.0	90.0	31.0	33.5	
15	26		59.6	239	238	57.0	49.0	79.0	30.0	33.1	
16	11		58.8	236	238	56.3	50.0	81.0	31.0	32.4	
17	6		58.1	233	235	55.7	52.0	83.0	31.0	31.8	
18	7	21	57.5	231	231	55.1	47.0	77.0	30.0	31.2	
19	13		56.9	229	230	54.7	46.0	74.0	28.0	30.7	
20	31		56.4	227	228	54.2	50.0	81.0	31.0	30.3	
21	18		55.7	224	228	53.7	44.0	73.0	29.0	29.7	
22	19		55.1	222	220	53.1	43.0	70.0	27.0	29.2	

STRESSING RECORD FOR STAY CABLES WITH CONTEN METHOD 2nd STRESSING

DYWIDAG-SYSTEMS INTENATIONAL

Project: Sixth Street Cable Stayed Bridge- Milwaukee

Cable no.	EAST N5	Cable Type	C31	Length of cable	22.054 m	No. of strands	22
Construction stage	12.1	Length of jack	1000 mm	Relieve	3.0 mm	Slip	1.0 mm
Jack type	ConTen 140 kN	Jack no.	DSI 190397	Priston area	26.5 cm²	Friction	0.0%
Tension side	Deck	Date of tensioning		Person resp. for tensioning works		Owner's representative	
Temperature of 1st strand		3/29/2002					

Se-quence	Strand number for		Required force at anchorage after relieve	Gauge pressure before relieve		Elongation theoretical before relieve	Strand protrusion		Elongation		Remark
	Working jack	Pilot jack		theoretical	actual		before stressing	at final pressure	actual	theoretical	
			[kN]	[bar]	[bar]	[mm]	[mm]	[mm]	[mm]	[mm]	
1	21	-	84.7	333	333	31.0	20.0	51.0	31.0	31.0	
2	9		84.4	332	330	31.0	20.0	54.0	34.0	31.0	
3	24		84.1	331	334	31.0	20.0	51.0	31.0	31.0	
4	25	21	83.8	330	334	31.0	18.0	51.0	33.0	31.0	
5	10		83.6	329	334	31.0	18.0	51.0	33.0	31.0	
6	4		83.3	328	333	31.0	20.0	50.0	30.0	31.0	
7	17		83.0	327	332	31.0	19.0	49.0	30.0	31.0	
8	3		82.8	326	330	31.0	19.0	52.0	33.0	31.0	
9	8		82.5	325	330	31.0	18.0	50.0	32.0	31.0	
10	20	24	82.2	324	329	30.9	18.0	50.0	32.0	30.9	
11	14		82.0	323	328	30.9	19.0	51.0	32.0	30.9	
12	2		81.7	322	324	30.9	18.0	50.0	32.0	30.9	
13	1		81.4	321	323	30.9	18.0	51.0	33.0	30.9	
14	5		81.2	320	322	30.9	23.0	55.0	32.0	30.9	
15	26		80.9	319	320	30.9	19.0	51.0	32.0	30.9	
16	11		80.6	318	319	30.9	19.0	51.0	32.0	30.9	
17	6		80.4	317	318	30.9	21.0	53.0	32.0	30.9	
18	7	24	80.1	316	317	30.9	18.0	50.0	32.0	30.9	
19	13		79.8	315	315	30.9	18.0	49.0	31.0	30.9	
20	31		79.5	314	315	30.8	19.0	52.0	33.0	30.8	
21	18		79.3	313	314	30.8	19.0	49.0	30.0	30.8	
22	19		78.7	311	312	30.8	18.0	50.0	32.0	30.8	

STRESSING RECORD FOR STAY CABLES WITH CONTEN METHOD 1st STRESSING

DYWIDAG-SYSTEMS INTERNATIONAL

Project: Sixth Street Cable Stayed Bridge- Milwaukee

Cable no.	EAST N6	Cable Type	C31	Length of cable	19.127 m	No. of strands	19
Construction stage	11.2	Length of jack	1000 mm	Relieve	3.0 mm	Slip	3.0 mm
Jack type	ConTen 140 kN	Jack no.	DSI 190397	Piston area	26.5 cm²	Friction	0.0%
Tension side	Deck	Date of tensioining		Person resp. for tensioning works		Owner's representative	
Temperature of 1st strand		3/27/2002					

Se-quence	Strand number for		Required force at anchorage after relieve	Gauge pressure before relieve		Elongation theoretical before relieve	Strand protrusion		Partial elongation		Remark
	Working jack	Pilot jack		theoretical	actual		at pressure of 100 bar	at final pressure	actual	theoretical	
			[kN]	[bar]	[bar]	[mm]	[mm]	[mm]	[mm]	[mm]	
1	21	-	60.7	245		-				-	
2	9		60.4	244	240	50.9	46.0	76.0	30.0	30.0	
3	24	21	60.0	243	242	50.6	47.0	76.0	29.0	29.7	
4	10		59.9	242	242	50.4	55.0	84.0	29.0	29.6	
5	4		59.5	240	241	50.1	61.0	90.0	29.0	29.3	
6	3		59.0	239	240	49.8	46.0	76.0	30.0	28.9	
7	8		58.7	237	241	49.6	47.0	74.0	27.0	28.7	
8	14	24	58.4	236	239	49.4	45.0	72.0	27.0	28.5	
9	2		58.2	236	236	49.2	45.0	73.0	28.0	28.3	
10	1		58.1	235	234	49.1	43.0	71.0	28.0	28.2	
11	5		57.7	234	234	48.8	45.0	76.0	31.0	27.9	
12	17		57.4	233	245	48.6	44.0	74.0	30.0	27.7	
13	11		57.1	232	245	48.4	44.0	74.0	30.0	27.5	
14	6		56.9	231	242	48.2	46.0	75.0	29.0	27.3	
15	7	21	56.7	230	241	48.1	60.0	89.0	29.0	27.2	
16	13		56.4	229	241	47.8	44.0	74.0	30.0	26.9	
17	18		56.1	228	240	47.6	43.0	71.0	28.0	26.7	
18	12		55.8	227	240	47.4	42.0	71.0	29.0	26.5	
19	19		55.6	226	240	47.3	44.0	70.0	26.0	26.4	

STRESSING RECORD FOR STAY CABLES WITH CONTEN METHOD 2nd STRESSING

DYWIDAG-SYSTEMS INTENATIONAL

Project: Sixth Street Cable Stayed Bridge- Milwaukee

Cable no.	EAST N6	Cable Type	C31	Length of cable	19.127 m	No. of strands	19
Construction stage	12.1	Length of jack	1000 mm	Relieve	3.0 mm	Slip	1.0 mm
Jack type	ConTen 140 kN	Jack no.	DSI 190397	Priston area	26.5 cm²	Friction	0.0%
Tension side	Deck	Date of tensioning		Person resp. for tensioning works		Owner's representative	
Temperature of 1st strand		3/28/2002					

Se-quence	Strand number for		Required force at anchorage after relieve	Gauge pressure before relieve		Elongation theoretical before relieve	Strand protrusion		Elongation		Remark
	Working jack	Pilot jack		theoretical	actual		before stressing	at final pressure	actual	theoretical	
			[kN]	[bar]	[bar]	[mm]	[mm]	[mm]	[mm]	[mm]	
1	21	-	81.7	324	324	25.3	32.0	56.0	24.0	25.3	
2	9	21	81.6	324	340	25.3	20.0	43.0	23.0	25.3	
3	24		81.4	323	335	25.3	20.0	44.0	24.0	25.3	
4	10		81.3	323	335	25.3	21.0	46.0	25.0	25.3	
5	4		81.2	322	332	25.3	22.0	49.0	27.0	25.3	
6	3	24	81.1	322	330	25.3	20.0	42.0	22.0	25.3	
7	8		81.0	322	332	25.3	20.0	45.0	25.0	25.3	
8	14		80.9	321	332	25.3	20.0	45.0	25.0	25.3	
9	2		80.7	321	331	25.3	20.0	46.0	26.0	25.3	
10	1		80.6	320	330	25.3	20.0	45.0	25.0	25.3	
11	5		80.5	320	332	25.3	20.0	46.0	26.0	25.3	
12	17	21	80.4	319	339	25.2	20.0	44.0	24.0	25.2	
13	11		80.3	319	337	25.2	20.0	44.0	24.0	25.2	
14	6		80.2	318	337	25.2	20.0	45.0	25.0	25.2	
15	7		80.0	318	332	25.2	20.0	45.0	25.0	25.2	
16	13		79.9	318	338	25.2	20.0	43.0	23.0	25.2	
17	18		79.8	317	337	25.2	20.0	45.0	25.0	25.2	
18	12		79.7	317	338	25.2	20.0	44.0	24.0	25.2	
19	19		79.5	316	334	25.2	19.0	43.0	24.0	25.2	

STRESSING RECORD FOR STAY CABLES WITH CONTEN METHOD 1st STRESSING

DYWIDAG-SYSTEMS INTERNATIONAL

Project: Sixth Street Cable Stayed Bridge- Milwaukee

Cable no.	EAST N7	Cable Type	C31	Length of cable	21.441 m	No. of strands	12
Construction stage	. 11.2	Length of jack	1000 mm	Relieve	3.0 mm	Slip	3.0 mm
Jack type	ConTen 140 kN	Jack no.	DSI 190397	Piston area	26.5 cm²	Friction	0.0%
Tension side	Deck	Date of tensioining	3/27/2002	Person resp. for tensioning works		Owner's representative	
Temperature of 1st strand				Jason Samz			

Se-quence	Strand number for		Required force at anchorage after relieve	Gauge pressure before relieve		Elongation theoretical before relieve	Strand protrusion		Partial elongation		Remark
	Working jack	Pilot jack		theoretical	actual		at pressure of 100 bar	at final pressure	actual	theoretical	
			[kN]	[bar]	[bar]	[mm]	[mm]	[mm]	[mm]	[mm]	
1	21	-	85.6	337		-				-	
2	9		84.9	334	342	76.4	-	-	-	53.6	
3	24	21	84.5	333	340	75.9	-	-	-	53.1	
4	4		84.1	332	338	75.5	70.0	122.0	52.0	52.8	
5	3		83.9	331	337	75.3	62.0	115.0	53.0	52.5	
6	5		83.3	329	336	74.9	71.0	123.0	52.0	52.1	
7	1		83.0	327	339	74.6	71.0	124.0	53.0	51.8	
8	2	24	82.7	326	340	74.3	57.0	109.0	52.0	51.5	
9	6		82.5	325	342	74.1	58.0	111.0	53.0	51.3	
10	7		82.3	325	341	74.0	53.0	105.0	52.0	51.2	
11	18		81.9	323	333	73.7	62.0	115.0	53.0	50.9	
12	19		81.6	322	340	73.4	56.0	109.0	53.0	50.7	

STRESSING RECORD FOR STAY CABLES WITH CONTEN METHOD 2nd STRESSING
DYWIDAG-SYSTEMS INTERNATIONAL

Project: **Sixth Street Cable Stayed Bridge- Milwaukee**

Cable no.	EAST N7	Cable Type	C31	Length of cable	21.441 m	No. of strands	12
Construction stage	12.1	Length of jack	1000 mm	Relieve	3.0 mm	Slip	1.0 mm
Jack type	ConTen 140 kN	Jack no.	DSI 190397	Piston area	26.5 cm²	Friction	0.0%
Tension side	Deck	Date of tensioining	3/27/2002	Person resp. for tensioning works		Owner's representative	
Temperature of 1st strand				Jason Samz			

Se-quence	Strand number for		Required force at anchorage after relieve	Gauge pressure before relieve		Elongation theoretical before relieve	Strand protrusion		Partial elongation		Remark
	Working jack	Pilot jack		theoretical	actual		at pressure of 100 bar	at final pressure	actual	theoretical	
			[kN]	[bar]	[bar]	[mm]	[mm]	[mm]	[mm]	[mm]	
1	21	-	118.2	460	460	37.1	25.0	62.0	37.0	37.1	
2	9		118.1	460	460	37.1	25.0	38.0	13.0	37.1	Mark as reference strand
3	24	21	117.9	459	459	37.1	25.0	60.0	35.0	37.1	
4	4		117.8	459	458	37.1	25.0	61.0	36.0	37.1	
5	3	.	117.7	458	446	37.1	25.0	59.0	34.0	37.1	
6	5		117.5	458	444	37.1	24.0	59.0	35.0	37.1	
7	1		117.4	457	443	37.1	25.0	60.0	35.0	37.1	
8	2	24	117.3	457	442	37.1	25.0	59.0	34.0	37.1	
9	6		117.2	456	442	37.1	25.0	60.0	35.0	37.1	
10	7		117.0	456	442	37.1	25.0	59.0	34.0	37.1	
11	18		116.9	455	441	37.1	25.0	60.0	35.0	37.1	
12	19		116.6	454	441	37.0	25.0	59.0	34.0	37.0	

STRESSING RECORD FOR STAY CABLES WITH CONTEN METHOD 1st STRESSING

DYWIDAG-SYSTEMS INTERNATIONAL

Project: Sixth Street Cable Stayed Bridge- Milwaukee

Cable no.	EAST N8	Cable Type	C31	Length of cable	28.064 m	No. of strands	26
Construction stage	11.2	Length of jack	1000 mm	Relieve	3.0 mm	Slip	3.0 mm
Jack type	ConTen 140 kN	Jack no.	DSI 190397	Piston area	26.5 cm²	Friction	0.0%
Tension side	Deck	Date of tensioining		Person resp. for tensioning works		Owner's representative	
Temperature of 1st strand		3/28/2002					

Se-quence	Strand number for		Required force at anchorage after relieve	Gauge pressure before relieve		Elongation theoretical before relieve	Strand protrusion		Partial elongation		Remark
	Working jack	Pilot jack		theoretical	actual		at pressure of 100 bar	at final pressure	actual	theoretical	
			[kN]	[bar]	[bar]	[mm]	[mm]	[mm]	[mm]	[mm]	
1	21	-	112.4	435		-				-	
2	9		108.6	421	420	125.9	57.0	156.0	99.0	96.0	
3	16		107.1	415	420	121.8	57.0	155.0	98.0	92.5	
4	24	21	106.0	411	420	120.2	68.0	160.0	92.0	90.9	
5	25		105.0	407	425	119.0	55.0	149.0	94.0	89.7	
6	10		103.4	401	419	117.3	57.0	150.0	93.0	88.1	
7	4		102.3	397	419	116.1	56.0	149.0	93.0	86.9	
8	17		101.5	394	418	115.2	59.0	141.0	82.0	86.0	
9	15		100.9	391	392	114.5	56.0	140.0	84.0	85.3	
10	3		100.4	389	388	114.0	57.0	141.0	84.0	84.7	
11	8	24	99.1	385	389	112.7	60.0	141.0	81.0	83.4	
12	20		98.1	381	388	111.6	62.0	140.0	78.0	82.3	
13	14		97.3	378	385	110.6	62.0	146.0	84.0	81.4	
14	2		96.5	375	382	109.8	27.0	106.0	79.0	80.6	
15	1		95.9	373	379	109.2	58.0	137.0	79.0	79.9	
16	5		94.8	368	375	108.0	67.0	148.0	81.0	78.7	
17	26		93.8	365	376	106.9	67.0	143.0	76.0	77.6	
18	11		92.9	361	371	106.0	51.0	127.0	76.0	76.7	
19	6		92.2	359	360	105.2	61.0	135.0	74.0	75.9	
20	7		91.5	356	359	104.5	58.0	130.0	72.0	75.1	
21	13	21	90.4	352	358	103.3	56.0	130.0	74.0	73.9	
22	31		89.4	348	350	102.2	57.0	130.0	73.0	72.9	
23	30		88.5	345	345	101.3	80.0	153.0	73.0	71.9	
24	19		87.7	342	350	100.4	64.0	134.0	70.0	71.0	
25	12		86.9	339	348	99.6	58.0	127.0	69.0	70.2	
26	18		86.1	336	343	98.7	58.0	127.0	69.0	69.3	

STRESSING RECORD FOR STAY CABLES WITH CONTEN METHOD 2nd STRESSING

DYWIDAG-SYSTEMS INTENATIONAL

Project: Sixth Street Cable Stayed Bridge- Milwaukee

Cable no.	EAST N8	Cable Type	C31	Length of cable	28.064 m	No. of strands	26
Construction stage	12.1	Length of jack	1000 mm	Relieve	3.0 mm	Slip	1.0 mm
Jack type	ConTen 140 kN	Jack no.	DSI 190397	~~Piston area~~	~~26.5 cm²~~	Friction	0.0%
Tension side	Deck	Date of tensioning		Person resp. for tensioning works		Owner's representative	
Temperature of 1st strand		3/29/2002					

Se-quence	Strand number for		Required force at anchorage after relieve	Gauge pressure before relieve		Elongation theoretical before relieve	Strand protrusion		Elongation		Remark
	Working jack	Pilot jack		theoretical	actual		before stressing	at final pressure	actual	theoretical	
			[kN]	[bar]	[bar]	[mm]	[mm]	[mm]	[mm]	[mm]	
1	21	-	132.9	512	511	57.1	21.0	73.0	52.0	57.1	
2	9	21	132.6	511	500	57.1	21.0	70.0	49.0	57.1	
3	16		132.2	509	505	57.1	20.0	69.0	49.0	57.1	
4	24		131.8	508	500	57.1	20.0	69.0	49.0	57.1	
5	25		131.4	507	499	57.0	20.0	67.0	47.0	57.0	
6	10		131.0	505	498	57.0	20.0	69.0	49.0	57.0	
7	4		130.7	504	497	57.0	21.0	70.0	49.0	57.0	
8	15	24	130.3	502	494	57.0	20.0	67.0	47.0	57.0	
9	3		129.9	501	486	57.0	20.0	72.0	52.0	57.0	
10	8		129.5	499	485	57.0	20.0	75.0	55.0	57.0	
11	20		129.1	498	482	57.0	20.0	75.0	55.0	57.0	
12	14		128.8	497	481	56.9	20.0	74.0	54.0	56.9	
13	2		128.4	495	480	56.9	20.0	73.0	53.0	56.9	
14	1		128.0	494	479	56.9	19.0	71.0	52.0	56.9	
15	5		127.6	492	479	56.9	22.0	77.0	55.0	56.9	
16	17	21	127.2	491	478	56.9	25.0	75.0	50.0	56.9	
17	26		126.9	489	470	56.9	21.0	77.0	56.0	56.9	
18	11		126.5	488	470	56.9	24.0	79.0	55.0	56.9	
19	6		126.1	486	469	56.8	21.0	71.0	50.0	56.8	
20	7		125.7	485	469	56.8	25.0	74.0	49.0	56.8	
21	13		125.3	484	470	56.8	20.0	72.0	52.0	56.8	
22	31		125.0	482	468	56.8	20.0	72.0	52.0	56.8	
23	30		124.6	481	463	56.8	20.0	74.0	54.0	56.8	
24	19		124.2	479	462	56.8	20.0	72.0	52.0	56.8	
25	12		123.8	478	460	56.8	24.0	77.0	53.0	56.8	
26	18		123.1	475	460	56.7	25.0	77.0	52.0	56.7	

STRESSING RECORD FOR STAY CABLES WITH CONTEN METHOD 1st STRESSING

DYWIDAG-SYSTEMS INTERNATIONAL

Project: Sixth Street Cable Stayed Bridge- Milwaukee

Cable no.	EAST N9	Cable Type	C37	Length of cable	35.763 m	No. of strands	30
Construction stage	11.2	Length of jack	1000 mm	Relieve	3.0 mm	Slip	3.0 mm
Jack type	ConTen 140 kN	Jack no.	DSI 190397	Piston area	26.5 cm²	Friction	0.0%
Tension side	Deck	Date of tensioining		Person resp. for tensioning works		Owner's representative	
Temperature of 1st strand		4/1/2002					

Se-quence	Strand number for		Required force at anchorage after relieve	Gauge pressure before relieve		Elongation theoretical before relieve	Strand protrusion		Partial elongation		Remark
	Working jack	Pilot jack		theoretical	actual		at pressure of 100 bar	at final pressure	actual	theoretical	
			[kN]	[bar]	[bar]	[mm]	[mm]	[mm]	[mm]	[mm]	
1	21	-	115.0	442		-				-	
2	9		105.9	408	400	161.1	85.0	199.0	114.0	121.6	
3	16		103.2	398	400	148.8	80.0	190.0	110.0	111.4	
4	24		101.8	392	385	145.3	100.0	200.0	100.0	108.3	
5	25		100.6	388	382	143.3	77.0	178.0	101.0	106.3	
6	10	21	99.1	382	379	141.0	83.0	180.0	97.0	104.2	
7	7		98.0	378	375	139.5	77.0	172.0	95.0	102.6	
8	35		97.2	375	372	138.4	69.0	162.0	93.0	101.5	
9	17		96.6	373	370	137.5	74.0	166.0	92.0	100.6	
10	15		96.1	371	364	136.8	76.0	166.0	90.0	99.9	
11	3		95.0	367	360	135.3	79.0	168.0	89.0	98.4	
12	8		94.1	363	353	134.0	82.0	166.0	84.0	97.1	
13	20		93.3	360	346	132.9	73.0	158.0	85.0	96.0	
14	5		92.6	358	346	132.0	74.0	156.0	82.0	95.1	
15	1		92.0	356	342	131.2	78.0	158.0	80.0	94.3	
16	2		91.0	352	337	129.8	72.0	152.0	80.0	92.9	
17	14		90.1	348	332	128.6	75.0	154.0	79.0	91.6	
18	32		89.2	345	331	127.5	73.0	149.0	76.0	90.5	
19	26		88.5	342	331	126.5	79.0	160.0	81.0	89.5	
20	11	24	87.9	340	325	125.6	71.0	149.0	78.0	88.7	
21	6		86.9	336	321	124.3	70.0	147.0	77.0	87.4	
22	7		86.0	333	319	123.1	67.0	143.0	76.0	86.2	
23	13		85.3	330	319	122.1	72.0	148.0	76.0	85.1	
24	31		84.5	327	315	121.1	68.0	143.0	75.0	84.1	
25	27		83.9	325	311	120.2	83.0	155.0	72.0	83.2	
26	18		82.9	321	308	118.9	70.0	142.0	72.0	81.9	
27	12		82.1	318	305	117.8	70.0	137.0	67.0	80.7	
28	19		81.2	315	304	116.7	67.0	135.0	68.0	79.6	
29	30		80.5	312	300	115.7	67.0	137.0	70.0	78.6	
30	37		79.8	310	302	114.7	67.0	136.0	69.0	77.6	

STRESSING RECORD FOR STAY CABLES WITH CONTEN METHOD 2nd STRESSING
DYWIDAG-SYSTEMS INTENATIONAL

Project: Sixth Street Cable Stayed Bridge- Milwaukee

Cable no.	EAST N9	Cable type	C37	Length of cable	35.763 m	No. of strands	30
Construction stage	12.1	Length of jack	1000 mm	Relieve	3.0 mm	Slip	1.0 mm
Jack type	ConTen 140 kN	Jack no.	DSI 190397	Priston area	26.5 cm²	Friction	0.0%
Tension side	Deck	Date of tensioning		Person resp. for tensioning work:		Owner's representative	
Temperature of 1st strand		4/1/2002					

Se-quence	Strand number for		Required force at anchorage after relieve	Gauge pressure before relieve		Elongation theoretical before relieve	Strand protrusion		Elongation		Remark
	Working jack	Pilot jack	[kN]	theoretical [bar]	actual [bar]	[mm]	before stressing [mm]	at final pressure [mm]	actual [mm]	theoretical [mm]	
1	21	-	124.4	478	478	67.1	25.0	92.0	67.0	67.1	
2	9	21	124.0	476	470	67.0	25.0	93.0	68.0	67.0	
3	16		123.7	475	471	67.0	25.0	89.0	64.0	67.0	
4	24		123.3	474	471	67.0	25.0	93.0	68.0	67.0	
5	25		123.0	472	470	67.0	25.0	92.0	67.0	67.0	
6	10		122.6	471	469	67.0	26.0	91.0	65.0	67.0	
7	7		122.3	470	466	67.0	26.0	91.0	65.0	67.0	
8	35		122.0	468	464	67.0	26.0	94.0	68.0	67.0	
9	17		121.6	467	464	67.0	26.0	94.0	68.0	67.0	
10	15	24	121.3	466	458	66.9	28.0	95.0	67.0	66.9	
11	3		120.9	465	454	66.9	28.0	97.0	69.0	66.9	
12	8		120.6	463	452	66.9	25.0	95.0	70.0	66.9	
13	20		120.2	462	451	66.9	25.0	92.0	67.0	66.9	
14	5		119.9	461	451	66.9	30.0	99.0	69.0	66.9	
15	1		119.5	459	449	66.9	30.0	96.0	66.0	66.9	
16	2		119.2	458	446	66.9	25.0	94.0	69.0	66.9	
17	14		118.9	457	441	66.9	26.0	96.0	70.0	66.9	
18	32		118.5	456	443	66.8	25.0	97.0	72.0	66.8	
19	26		118.2	454	442	66.8	25.0	95.0	70.0	66.8	
20	11		117.8	453	441	66.8	26.0	94.0	68.0	66.8	
21	6		117.5	452	441	66.8	30.0	99.0	69.0	66.8	
22	7		117.1	450	440	66.8	30.0	100.0	70.0	66.8	
23	13		116.8	449	436	66.8	32.0	96.0	64.0	66.8	
24	31		116.4	448	434	66.8	25.0	90.0	65.0	66.8	
25	27		116.1	446	432	66.8	31.0	97.0	66.0	66.8	
26	18		115.8	445	428	66.7	25.0	91.0	66.0	66.7	
27	12		115.4	444	425	66.7	26.0	94.0	68.0	66.7	
28	19		115.1	443	424	66.7	26.0	91.0	65.0	66.7	
29	30		114.7	441	421	66.7	25.0	90.0	65.0	66.7	
30	37		114.0	439	420	66.7	25.0	89.0	64.0	66.7	

STRESSING RECORD FOR STAY CABLES WITH CONTEN METHOD 1st STRESSING

DYWIDAG-SYSTEMS INTERNATIONAL

Project: Sixth Street Cable Stayed Bridge- Milwaukee

Cable no.	EAST N10	Cable Type	C37	Length of cable	44.027 m	No. of strands	36
Construction stage	11.2	Length of jack	1000 mm	Relieve	3.0 mm	Slip	3.0 mm
Jack type	ConTen 140 kN	Jack no.	DSI 190397	Piston area	26.5 cm²	Friction	0.0%
Tension side	Deck	Date of tensioining	4/3/2002	Person resp. for tensioning work		Owner's representative	
Temperature of 1st strand							

Se-quence	Strand number for		Required force at anchorage after relieve	Gauge pressure before relieve		Elongation theoretical before relieve	Strand protrusion		Partial elongation		Remark
	Working jack	Pilot jack		theoretical	actual		at pressure of 100 bar	at final pressure	actual	theoretical	
			[kN]	[bar]	[bar]	[mm]	[mm]	[mm]	[mm]	[mm]	
1	21	-	119.9	459		-				-	
2	23		101.8	391	400	203.6	76.0	222.0	146.0	151.5	
3	34		96.5	371	385	174.2	87.0	213.0	126.0	127.2	
4	24		94.1	362	380	165.6	82.0	200.0	118.0	119.8	
5	16		92.6	356	372	161.5	78.0	193.0	115.0	116.1	
6	9	21	91.2	351	363	158.5	79.0	186.0	107.0	113.3	
7	25		90.2	347	361	156.5	76.0	183.0	107.0	111.4	
8	10		89.4	344	359	155.1	77.0	181.0	104.0	110.0	
9	4		88.8	342	356	154.0	80.0	189.0	109.0	109.0	
10	22		88.4	340	359	153.2	70.0	177.0	107.0	108.2	
11	33		87.5	337	358	151.7	128.0	234.0	106.0	106.6	
12	15		86.7	334	352	150.4	84.0	186.0	102.0	105.4	
13	3		86.1	332	351	149.4	72.0	176.0	104.0	104.4	
14	8		85.6	330	348	148.5	81.0	182.0	101.0	103.5	
15	20		85.1	328	348	147.7	75.0	177.0	102.0	102.7	
16	35		84.4	325	345	146.4	77.0	176.0	99.0	101.4	
17	17		83.7	323	339	145.3	74.0	169.0	95.0	100.3	
18	5		83.1	320	339	144.3	71.0	171.0	100.0	99.2	
19	1		82.5	318	334	143.4	78.0	178.0	100.0	98.3	
20	2		82.1	316	333	142.6	72.0	170.0	98.0	97.5	
21	14		81.3	314	329	141.4	74.0	172.0	98.0	96.3	
22	26		80.7	311	329	140.3	72.0	166.0	94.0	95.3	
23	11	34	80.1	309	325	139.4	76.0	172.0	96.0	94.3	
24	6		79.6	307	320	138.5	70.0	167.0	97.0	93.4	
25	7		79.1	305	319	137.6	72.0	168.0	96.0	92.5	
26	13		78.4	303	317	136.5	71.0	161.0	90.0	91.4	
27	31		77.7	300	317	135.4	70.0	156.0	86.0	90.3	
28	27		77.1	298	315	134.4	72.0	158.0	86.0	89.3	
29	18		76.6	296	312	133.5	70.0	160.0	90.0	88.4	
30	12		76.1	294	309	132.7	69.0	158.0	89.0	87.5	
31	19		75.4	291	305	131.5	73.0	159.0	86.0	86.4	
32	30		74.8	289	302	130.5	69.0	151.0	82.0	85.3	
33	36		74.2	287	301	129.5	71.0	151.0	80.0	84.3	
34	28		73.6	285	300	128.6	71.0	150.0	79.0	83.4	
35	29		73.1	283	298	127.7	73.0	152.0	79.0	82.5	
36	37		72.5	280	295	126.8	72.0	149.0	77.0	81.6	

STRESSING RECORD FOR STAY CABLES WITH CONTEN METHOD 2nd STRESSING
DYWIDAG-SYSTEMS INTENATIONAL

Project: Sixth Street Cable Stayed Bridge- Milwaukee

Cable no.	EAST N10	Cable type	C37	Length of cable	44.027 m	No. of strands	36
Construction stage	12.1	Length of jack	1000 mm	Relieve	3.0 mm	Slip	1.0 mm
Jack type	ConTen 140 kN	Jack no.	DSI 190397	Priston area	26.5 cm²	Friction	0.0%
Tension side	Deck	Date of tensioning		Person resp. for tensioning works		Owner's representative	
Temperature of 1st strand		4/3/2002					

Se-quence	Strand number for		Required force at anchorage after relieve	Gauge pressure before relieve		Elongation theoretical before relieve	Strand protrusion		Elongation		Remark
	Working jack	Pilot jack		theoretical	actual		before stressing	at final pressure	actual	theoretical	
			[kN]	[bar]	[bar]	[mm]	[mm]	[mm]	[mm]	[mm]	
1	21	-	112.7	419		73.1				73.1	
2	23		112.5		420	73.1	21.0	90.0	69.0	73.1	
3	34		112.2		398	73.1	22.0	75.0	53.0	73.1	
4	24		112.0		400	73.1	22.0	76.0	54.0	73.1	
5	16	21	111.7		389	73.1	22.0	75.0	53.0	73.1	
6	9		111.5		389	73.1	23.0	83.0	60.0	73.1	
7	25		111.2		399	73.1	22.0	81.0	59.0	73.1	
8	10		110.9		399	73.1	22.0	81.0	59.0	73.1	
9	4		110.7		400	73.1	22.0	82.0	60.0	73.1	
10	22		110.4		385	73.1	21.0	73.0	52.0	73.1	
11	33		110.2		394	73.0	21.0	77.0	56.0	73.0	
12	15		109.9		395	73.0	24.0	82.0	58.0	73.0	
13	3		109.7		394	73.0	22.0	75.0	53.0	73.0	
14	8		109.4		394	73.0	22.0	79.0	57.0	73.0	
15	20		109.2		394	73.0	21.0	75.0	54.0	73.0	
16	35		108.9		395	73.0	22.0	78.0	56.0	73.0	
17	17		108.7		394	73.0	22.0	79.0	57.0	73.0	
18	5		108.4		395	73.0	22.0	77.0	55.0	73.0	
19	1		108.2		394	73.0	22.0	75.0	53.0	73.0	
20	2		107.9		392	73.0	22.0	75.0	53.0	73.0	
21	14		107.7		390	73.0	22.0	75.0	53.0	73.0	
22	26		107.4		389	72.9	22.0	78.0	56.0	72.9	
23	11	34	107.2		391	72.9	27.0	81.0	54.0	72.9	
24	6		106.9		388	72.9	23.0	73.0	50.0	72.9	
25	7		106.7		388	72.9	26.0	78.0	52.0	72.9	
26	13		106.4		387	72.9	22.0	77.0	55.0	72.9	
27	31		106.2		385	72.9	22.0	77.0	55.0	72.9	
28	27		105.9		385	72.9	22.0	80.0	58.0	72.9	
29	18		105.7		382	72.9	22.0	72.0	50.0	72.9	
30	12		105.4		380	72.9	30.0	83.0	53.0	72.9	
31	19		105.1		381	72.9	22.0	76.0	54.0	72.9	
32	30		104.9		380	72.8	22.0	78.0	56.0	72.8	
33	36		104.6		380	72.8	22.0	79.0	57.0	72.8	
34	28		104.4		380	72.8	25.0	81.0	56.0	72.8	
35	29		104.1		379	72.8	22.0	78.0	56.0	72.8	
36	37		103.6		380	72.8	22.0	79.0	57.0	72.8	

STRESSING RECORD FOR STAY CABLES WITH CONTEN METHOD 1st STRESSING

DYWIDAG-SYSTEMS INTERNATIONAL

Project: Sixth Street Cable Stayed Bridge- Milwaukee

Cable no.	EAST N11	Cable Type	C37	Length of cable	52.585 m	No. of strands	35
Construction stage	11.2	Length of jack	1000 mm	Relieve	3.0 mm	Slip	3.0 mm
Jack type	ConTen 140 kN	Jack no.	DSI 19039	Piston area	26.5 cm²	Friction	0.0%
Tension side	Deck	Date of tensioining		Person resp. for tensioning works		Owner's representative	
Temperature of 1st strand		4/5/2002					

Se-quence	Strand number for		Required force at anchorage after relieve	Gauge pressure before relieve		Elongation theoretical before relieve	Strand protrusion		Partial elongation		Remark
	Working jack	Pilot jack		theoretical	actual		at pressure of 100 bar	at final pressure	actual	theoretical	
			[kN]	[bar]	[bar]	[mm]	[mm]	[mm]	[mm]	[mm]	
1	21	-	122.3	467		-				-	
2	23		98.4	377	420	245.8	98.0	285.0	187.0	180.6	
3	34		90.9	349	395	199.3	93.0	238.0	145.0	142.2	
4	24		87.4	336	375	184.7	79.0	214.0	135.0	129.6	
5	16	21	85.5	328	368	178.0	75.0	204.0	129.0	123.8	
6	9		83.9	322	366	173.7	72.0	203.0	131.0	119.8	
7	25		82.8	318	360	170.9	75.0	204.0	129.0	117.2	
8	10		82.0	315	359	169.0	73.0	198.0	125.0	115.3	
9	4		81.4	313	355	167.5	71.0	196.0	125.0	113.9	
10	22		80.9	311	312	166.3	24.0	128.0	104.0	112.8	
11	23		80.1	308	315	164.7	134.0	240.0	106.0	111.2	
12	15		79.5	306	315	163.4	78.0	181.0	103.0	110.0	
13	3		78.9	304	312	162.4	84.0	188.0	104.0	108.9	
14	8		78.5	302	312	161.4	82.0	187.0	105.0	107.9	
15	20		78.1	300	310	160.6	72.0	177.0	105.0	107.1	
16	17		77.5	298	309	159.4	68.0	170.0	102.0	105.9	
17	5		76.9	296	308	158.3	76.0	179.0	103.0	104.8	
18	1		76.4	294	305	157.3	77.0	176.0	99.0	103.8	
19	2		76.0	292	304	156.4	77.0	175.0	98.0	102.9	
20	14		75.6	291	302	155.6	77.0	177.0	100.0	102.1	
21	26		75.0	289	300	154.5	70.0	168.0	98.0	101.0	
22	11	34	74.5	287	298	153.4	72.0	168.0	96.0	99.9	
23	6		74.0	285	295	152.5	74.0	168.0	94.0	98.9	
24	7		73.5	283	295	151.6	71.0	165.0	94.0	98.1	
25	13		73.1	282	295	150.8	72.0	165.0	93.0	97.2	
26	31		72.6	280	295	149.7	72.0	166.0	94.0	96.1	
27	27		72.1	278	290	148.7	74.0	166.0	92.0	95.1	
28	18		71.6	276	289	147.7	69.0	161.0	92.0	94.2	
29	12		71.1	274	288	146.8	67.0	158.0	91.0	93.3	
30	19		70.7	273	286	146.0	69.0	159.0	90.0	92.4	
31	30		70.2	271	280	145.0	73.0	136.0	63.0	91.4	Set wedges at 100 Bar
32	36		69.7	269	280	144.0	67.0	158.0	91.0	90.4	
33	28		69.2	267	280	143.1	69.0	155.0	86.0	89.5	
34	29		68.8	265	279	142.2	69.0	157.0	88.0	88.6	
35	37		68.4	264	279	141.4	72.0	160.0	88.0	87.8	

STRESSING RECORD FOR STAY CABLES WITH CONTEN METHOD 2nd STRESSING

DYWIDAG-SYSTEMS INTENATIONAL

Project: Sixth Street Cable Stayed Bridge- Milwaukee

Cable no.	EAST N11	Cable type	C37	Length of cable	52.585 m	No. of strands	35
Construction stage	12.1	Length of jack	1000 mm	Relieve	3.0 mm	Slip	1.0 mm
Jack type	ConTen 140 kN	Jack no.	DSI 19039	Priston area	26.5 cm²	Friction	0.0%
Tension side	Deck	Date of tensioning		Person resp. for tensioning works		Owner's representative	
Temperature of 1st strand		4/5/2002		Jason Samz			

Se-quence	Strand number for		Required force at anchorage after relieve	Gauge pressure before relieve		Elongation theoretical before relieve	Strand protrusion		Elongation		Remark
	Working jack	Pilot jack	[kN]	theoretical [bar]	actual [bar]	[mm]	before stressing [mm]	at final pressure [mm]	actual [mm]	theoretical [mm]	
1	21	-	104.7	401		78.0				78.0	
2	23		104.5	400	400	78.0	20.0	85.0	65.0	78.0	
3	34		104.3	399	399	78.0	18.0	78.0	60.0	78.0	
4	24		104.1	398	399	78.0	18.0	82.0	64.0	78.0	
5	16		103.9	398	395	78.0	18.0	83.0	65.0	78.0	
6	9	21	103.7	397	398	78.0	19.0	82.0	63.0	78.0	
7	25		103.5	396	397	78.0	19.0	79.0	60.0	78.0	
8	10		103.3	395	395	78.0	18.0	82.0	64.0	78.0	
9	4		103.1	395	394	77.9	19.0	69.0	50.0	77.9	
10	22		102.9	394	377	77.9	20.0	89.0	69.0	77.9	
11	23		102.7	393	385	77.9	18.0	95.0	77.0	77.9	
12	15		102.5	392	384	77.9	18.0	89.0	71.0	77.9	
13	3		102.3	392	385	77.9	19.0	91.0	72.0	77.9	
14	8		102.1	391	383	77.9	19.0	89.0	70.0	77.9	
15	20		101.9	390	383	77.9	18.0	90.0	72.0	77.9	
16	17		101.7	389	382	77.9	19.0	89.0	70.0	77.9	
17	5		101.5	389	381	77.9	18.0	90.0	72.0	77.9	
18	1		101.3	388	375	77.9	23.0	92.0	69.0	77.9	
19	2		101.1	387	380	77.9	18.0	88.0	70.0	77.9	
20	14		100.9	386	380	77.9	18.0	88.0	70.0	77.9	
21	26		100.7	386	379	77.9	18.0	90.0	72.0	77.9	
22	11		100.5	385	380	77.8	19.0	92.0	73.0	77.8	
23	6	34	100.3	384	375	77.8	21.0	89.0	68.0	77.8	
24	7		100.1	383	379	77.8	18.0	88.0	70.0	77.8	
25	13		99.9	383	379	77.8	18.0	89.0	71.0	77.8	
26	31		99.7	382	378	77.8	18.0	88.0	70.0	77.8	
27	27		99.5	381	375	77.8	19.0	90.0	71.0	77.8	
28	18		99.3	380	370	77.8	19.0	89.0	70.0	77.8	
29	12		99.1	380	372	77.8	19.0	90.0	71.0	77.8	
30	19		98.9	379	372	77.8	20.0	89.0	69.0	77.8	
31	30		98.7	378	370	77.8	18.0	109.0	91.0	77.8	
32	36		98.5	377	370	77.8	33.0	102.0	69.0	77.8	
33	28		98.3	377	370	77.8	22.0	93.0	71.0	77.8	
34	29		98.1	376	368	77.8	22.0	91.0	69.0	77.8	
35	37		97.7	374	367	77.7	18.0	85.0	67.0	77.7	

STRESSING RECORD FOR STAY CABLES WITH CONTEN METHOD 1st STRESSING
DYWIDAG-SYSTEMS INTERNATIONAL

Project: Sixth Street Cable Stayed Bridge- Milwaukee

Cable no.	EAST N12	Cable Type	C37	Length of cable	61.327 m	No. of strands	37
Construction stage	11.2	Length of jack	1000 mm	Relieve	3.0 mm	Slip	3.0 mm
Jack type	ConTen 140 kN	Jack no.	DSI 190397	Piston area	26.5 cm²	Friction	0.0%
Tension side	Deck	Date of tensioining		Person resp. for tensioning works		Owner's representative	
Temperature of 1st strand		4/9/2002					

Se-quence	Strand number for		Required force at anchorage after relieve	Gauge pressure before relieve		Elongation theoretical before relieve	Strand protrusion		Partial elongation		Remark
	Working jack	Pilot jack		theoretical	actual		at pressure of 100 bar	at final pressure	actual	theoretical	
			[kN]	[bar]	[bar]	[mm]	[mm]	[mm]	[mm]	[mm]	
1	22	-	132.5	505		-				-	
2	34	22	102.0	390	405	307.9	126.0	350.0	224.0	228.9	
3	33		91.9	351	345	239.1	28.0	193.0	165.0	171.1	
4	21	34	87.0	333	335	216.0	27.0	183.0	156.0	151.1	
5	15		84.3	323	320	205.0	110.0	242.0	132.0	141.5	
6	23		82.4	316	310	198.6	28.0	150.0	122.0	135.7	
7	9		81.1	311	306	194.5	130.0	251.0	121.0	131.9	
8	16		80.1	307	304	191.6	108.0	228.0	120.0	129.2	
9	24	21	79.4	304	300	189.4	98.0	215.0	117.0	127.2	
10	25		78.7	302	295	187.8	98.0	212.0	114.0	125.6	
11	10		78.0	299	290	185.9	99.0	212.0	113.0	123.8	
12	4		77.4	297	289	184.5	100.0	214.0	114.0	122.4	
13	3		76.9	295	290	183.2	97.0	206.0	109.0	121.1	
14	8		76.5	293	292	182.2	104.0	218.0	114.0	120.1	
15	20		76.1	292	290	181.2	101.0	214.0	113.0	119.2	
16	35		75.6	290	289	179.9	97.0	204.0	107.0	117.9	
17	17		75.1	288	288	178.8	96.0	203.0	107.0	116.8	
18	5		74.6	287	285	177.8	94.0	198.0	104.0	115.8	
19	1		74.3	285	282	176.9	99.0	201.0	102.0	114.9	
20	2		73.9	284	280	176.1	103.0	206.0	103.0	114.0	
21	14		73.4	282	280	175.0	107.0	207.0	100.0	112.9	
22	32		73.0	280	279	174.0	120.0	220.0	100.0	111.9	
23	26		72.6	279	276	173.0	94.0	191.0	97.0	111.0	
24	11		72.2	277	275	172.2	92.0	194.0	102.0	110.1	
25	6	33	71.9	276	274	171.4	98.0	199.0	101.0	109.3	
26	7		71.4	274	272	170.4	101.0	199.0	98.0	108.3	
27	13		71.0	273	270	169.4	105.0	200.0	95.0	107.3	
28	31		70.6	271	270	168.5	110.0	214.0	104.0	106.4	
29	27		70.2	270	270	167.6	100.0	197.0	97.0	105.5	
30	18		69.9	269	269	166.9	93.0	190.0	97.0	104.7	
31	12		69.5	267	268	165.9	100.0	194.0	94.0	103.7	
32	19		69.1	265	266	164.9	101.0	196.0	95.0	102.8	
33	30		68.7	264	265	164.0	110.0	202.0	92.0	101.9	
34	36		68.3	263	264	163.2	99.0	190.0	91.0	101.0	
35	28		68.0	261	263	162.4	97.0	189.0	92.0	100.2	
36	29		67.5	260	260	161.5	101.0	193.0	92.0	99.3	
37	37		67.2	258	260	160.6	118.0	210.0	92.0	98.4	

STRESSING RECORD FOR STAY CABLES WITH CONTEN METHOD 2nd STRESSING
DYWIDAG-SYSTEMS INTENATIONAL

Project: **Sixth Street Cable Stayed Bridge- Milwaukee**

Cable no.	EAST N12	Cable type	C37	Length of cable	61.327 m	No. of strands	37
Construction stage	12.1	Length of jack	1000 mm	Relieve	3.0 mm	Slip	1.0 mm
Jack type	ConTen 140 kN	Jack no.	DSI 190397	Priston area	26.5 cm²	Friction	0.0%
Tension side	Deck	Date of tensioning		Person resp. for tensioning works		Owner's representative	
Temperature of 1st strand		4/9/2002					

Se-quence	Strand number for		Required force at anchorage after relieve	Gauge pressure before relieve		Elongation theoretical before relieve	Strand protrusion		Elongation		Remark
	Working jack	Pilot jack	[kN]	theoretical [bar]	actual [bar]	[mm]	before stressing [mm]	at final pressure [mm]	actual [mm]	theoretical [mm]	
1	22	-	102.0	390	390	86.3				86.3	
2	34	22	101.9	389	389	86.3	28.0	102.0	74.0	86.3	
3	33		101.7	389	389	86.2	28.0	113.0	85.0	86.2	
4	21	34	101.5	388	388	86.2	28.0	107.0	79.0	86.2	
5	15		101.4	387	388	86.2	28.0	107.0	79.0	86.2	
6	23		101.2	387	386	86.2	28.0	111.0	83.0	86.2	
7	9		101.0	386	384	86.2	32.0	115.0	83.0	86.2	
8	16		100.9	385	383	86.2	28.0	110.0	82.0	86.2	
9	24	21	100.7	385	383	86.2	28.0	111.0	83.0	86.2	
10	25		100.6	384	382	86.2	28.0	113.0	85.0	86.2	
11	10		100.4	384	380	86.2	28.0	110.0	82.0	86.2	
12	4		100.2	383	380	86.2	29.0	113.0	84.0	86.2	
13	3		100.1	382	380	86.2	28.0	106.0	78.0	86.2	
14	8		99.9	382	379	86.2	31.0	114.0	83.0	86.2	
15	20		99.7	381	378	86.2	28.0	110.0	82.0	86.2	
16	35		99.6	381	375	86.2	28.0	106.0	78.0	86.2	
17	17		99.4	380	374	86.2	29.0	101.0	72.0	86.2	
18	5		99.3	379	372	86.2	28.0	105.0	77.0	86.2	
19	1		99.1	379	370	86.1	28.0	106.0	78.0	86.1	
20	2		98.9	378	370	86.1	28.0	107.0	79.0	86.1	
21	14		98.8	377	369	86.1	28.0	107.0	79.0	86.1	
22	32		98.6	377	370	86.1	28.0	113.0	85.0	86.1	
23	26		98.4	376	370	86.1	28.0	112.0	84.0	86.1	
24	11		98.3	376	369	86.1	28.0	105.0	77.0	86.1	
25	6	33	98.1	375	370	86.1	28.0	110.0	82.0	86.1	
26	7		98.0	374	369	86.1	28.0	109.0	81.0	86.1	
27	13		97.8	374	369	86.1	28.0	108.0	80.0	86.1	
28	31		97.6	373	370	86.1	28.0	110.0	82.0	86.1	
29	27		97.5	373	369	86.1	28.0	106.0	78.0	86.1	
30	18		97.3	372	369	86.1	28.0	105.0	77.0	86.1	
31	12		97.1	371	368	86.1	28.0	109.0	81.0	86.1	
32	19		97.0	371	368	86.1	28.0	105.0	77.0	86.1	
33	30		96.8	370	367	86.1	28.0	105.0	77.0	86.1	
34	36		96.7	369	366	86.1	28.0	105.0	77.0	86.1	
35	28		96.5	369	366	86.1	28.0	102.0	74.0	86.1	
36	29		96.3	368	360	86.0	28.0	102.0	74.0	86.0	
37	37		96.0	367	364	86.0	28.0	102.0	74.0	86.0	

STRESSING RECORD FOR STAY CABLES WITH CONTEN METHOD 1st STRESSING
DYWIDAG-SYSTEMS INTERNATIONAL

Project: **Sixth Street Cable Stayed Bridge- Milwaukee**

Cable no.	WEST N1	Cable Type	C37	Length of cable	40.269 m	No. of strands	35
Construction stage	11.2	Length of jack	1000 mm	Relieve	3.0 mm	Slip	3.0 mm
Jack type	ConTen 140 kN	Jack no.	DSI 19039	Piston area	26.5 cm²	Friction	0.0%
Tension side	Deck	Date of tensioining		Person resp. for tensioning works		Owner's representative	
Temperature of 1st strand		4/10/2002					

Se-quence	Strand number for		Required force at anchorage after relieve	Gauge pressure before relieve		Elongation theoretical before relieve	Strand protrusion		Partial elongation		Remark
	Working jack	Pilot jack		theoretical	actual		at pressure of 100 bar	at final pressure	actual	theoretical	
			[kN]	[bar]	[bar]	[mm]	[mm]	[mm]	[mm]	[mm]	
1	33	-	112.1	430		-				-	
2	23		98.2	378	408	175.7	71.0	206.0	135.0	129.2	
3	34	33	94.2	363	402	154.7	23.0	121.0	98.0	112.1	
4	24		92.2	355	400	148.7	66.0	191.0	125.0	106.8	
5	16		91.0	351	392	145.8	67.0	187.0	120.0	104.2	
6	22		89.6	345	389	143.2	70.0	195.0	125.0	101.8	
7	9		88.6	342	380	141.5	69.0	181.0	112.0	100.1	
8	15		87.8	339	372	140.3	69.0	181.0	112.0	98.9	
9	21	24	87.3	337	368	139.3	69.0	179.0	110.0	98.0	
10	20		86.8	335	364	138.6	72.0	179.0	107.0	97.2	
11	8		85.9	331	360	137.2	68.0	176.0	108.0	95.8	
12	3		85.1	328	358	136.0	76.0	181.0	105.0	94.6	
13	4		84.4	326	358	134.9	69.0	176.0	107.0	93.6	
14	10		83.9	324	356	134.1	70.0	179.0	109.0	92.7	
15	25		83.4	322	355	133.3	72.0	175.0	103.0	91.9	
16	17		82.5	319	351	132.0	73.0	177.0	104.0	90.6	
17	5		81.8	316	349	130.9	69.0	172.0	103.0	89.5	
18	1		81.1	314	345	129.9	69.0	171.0	102.0	88.5	
19	2		80.5	311	345	129.0	43.0	143.0	100.0	87.6	
20	14		80.0	309	342	128.2	71.0	169.0	98.0	86.7	
21	31		79.2	306	340	127.0	59.0	162.0	103.0	85.5	
22	13		78.5	304	337	125.9	59.0	165.0	106.0	84.5	
23	7		77.9	301	335	124.9	70.0	163.0	93.0	83.5	
24	6	33	77.3	299	334	124.0	71.0	166.0	95.0	82.6	
25	11		76.7	297	330	123.2	69.0	163.0	94.0	81.7	
26	26		75.9	294	327	122.0	68.0	158.0	90.0	80.5	
27	27		75.2	291	325	121.0	63.0	155.0	92.0	79.4	
28	18		74.6	289	323	120.0	66.0	162.0	96.0	78.4	
29	12		74.0	287	320	119.0	61.0	152.0	91.0	77.5	
30	19		73.4	284	319	118.1	78.0	166.0	88.0	76.6	
31	30		72.6	282	317	117.0	65.0	152.0	87.0	75.5	
32	37		72.0	279	314	116.0	61.0	151.0	90.0	74.4	
33	29		71.3	277	312	115.0	64.0	151.0	87.0	73.4	
34	28		70.7	274	310	114.1	63.0	148.0	85.0	72.5	
35	36		70.1	272	308	113.2	65.0	150.0	85.0	71.6	

STRESSING RECORD FOR STAY CABLES WITH CONTEN METHOD 2nd STRESSING
DYWIDAG-SYSTEMS INTENATIONAL

Project: **Sixth Street Cable Stayed Bridge- Milwaukee**

Cable no.	WEST N1	Cable type	C37	Length of cable	40.269 m	No. of strands	35
Construction stage	12.1	Length of jack	1000 mm	Relieve	3.0 mm	Slip	1.0 mm
Jack type	ConTen 140 kN	Jack no.	DSI 19039	Priston area	26.5 cm²	Friction	0.0%
Tension side	Deck	Date of tensioning		Person resp. for tensioning works		Owner's representative	
Temperature of 1st strand		4/10/2002					

Se-quence	Strand number for		Required force at anchorage after relieve	Gauge pressure before relieve		Elongation theoretical before relieve	Strand protrusion		Elongation		Remark
	Working jack	Pilot jack	[kN]	theoretical [bar]	actual [bar]	[mm]	before stressing [mm]	at final pressure [mm]	actual [mm]	theoretical [mm]	
1	33	-	110.0	422		67.0				67.0	
2	23		109.7	421	421	67.0	23.0	79.0	56.0	67.0	
3	34	33	109.4	420	420	67.0	22.0	74.0	52.0	67.0	
4	24		109.2	419	420	67.0	23.0	78.0	55.0	67.0	
5	16		108.9	418	419	66.9	23.0	78.0	55.0	66.9	
6	22		108.6	417	419	66.9	23.0	79.0	56.0	66.9	
7	9		108.3	416	418	66.9	23.0	83.0	60.0	66.9	
8	15		108.0	415	416	66.9	23.0	80.0	57.0	66.9	
9	21	24	107.8	414	414	66.9	26.0	85.0	59.0	66.9	
10	20		107.5	413	413	66.9	27.0	86.0	59.0	66.9	
11	8		107.2	412	411	66.9	23.0	84.0	61.0	66.9	
12	3		106.9	411	410	66.9	23.0	84.0	61.0	66.9	
13	4		106.7	410	410	66.9	23.0	79.0	56.0	66.9	
14	10		106.4	409	409	66.9	23.0	79.0	56.0	66.9	
15	25		106.1	408	408	66.8	23.0	76.0	53.0	66.8	
16	17		105.8	407	408	66.8	24.0	80.0	56.0	66.8	
17	5		105.5	406	407	66.8	23.0	77.0	54.0	66.8	
18	1		105.3	405	405	66.8	23.0	77.0	54.0	66.8	
19	2		105.0	404	404	66.8	23.0	78.0	55.0	66.8	
20	14		104.7	402	403	66.8	23.0	79.0	56.0	66.8	
21	31		104.4	401	402	66.8	23.0	78.0	55.0	66.8	
22	13		104.1	400	401	66.8	24.0	77.0	53.0	66.8	
23	7		103.9	399	400	66.8	23.0	77.0	54.0	66.8	
24	6	33	103.6	398	400	66.8	23.0	79.0	56.0	66.8	
25	11		103.3	397	399	66.7	24.0	78.0	54.0	66.7	
26	26		103.0	396	398	66.7	24.0	79.0	55.0	66.7	
27	27		102.8	395	397	66.7	23.0	77.0	54.0	66.7	
28	18		102.5	394	396	66.7	24.0	78.0	54.0	66.7	
29	12		102.2	393	395	66.7	23.0	79.0	56.0	66.7	
30	19		101.9	392	394	66.7	24.0	76.0	52.0	66.7	
31	30		101.6	391	393	66.7	24.0	78.0	54.0	66.7	
32	37		101.4	390	393	66.7	24.0	74.0	50.0	66.7	
33	29		101.1	389	391	66.7	24.0	77.0	53.0	66.7	
34	28		100.8	388	390	66.7	28.0	80.0	52.0	66.7	
35	36		100.2	386	389	66.6	24.0	76.0	52.0	66.6	

STRESSING RECORD FOR STAY CABLES WITH CONTEN METHOD 1st STRESSING

DYWIDAG-SYSTEMS INTERNATIONAL

Project: **Sixth Street Cable Stayed Bridge- Milwaukee**

Cable no. WEST N2	Cable Type C37	Length of cable 34.760 m	No. of strands 33
Construction stage 11.2	Length of jack 1000 mm	Relieve 3.0 mm	Slip 3.0 mm
Jack type ConTen 140 kN	Jack no. DSI 190397	Piston area 26.5 cm²	Friction 0.0%
Tension side Deck	Date of tensioining 4/8/2002	Person resp. for tensioning works	Owner's representative
Temperature of 1st strand			

Se-quence	Strand number for		Required force at anchorage after relieve	Gauge pressure before relieve		Elongation theoretical before relieve	Strand protrusion		Partial elongation		Remark
	Working jack	Pilot jack		theoretical	actual		at pressure of 100 bar	at final pressure	actual	theoretical	
			[kN]	[bar]	[bar]	[mm]	[mm]	[mm]	[mm]	[mm]	
1	33	-	110.0	424		-				-	
2	34		100.9	389	394	150.4	82.0	197.0	115.0	111.7	
3	16	33	98.2	379	388	138.4	71.0	173.0	102.0	101.9	
4	24		96.8	374	383	135.0	69.0	168.0	99.0	98.9	
5	9		95.7	370	379	133.0	81.0	179.0	98.0	97.1	
6	15		94.3	364	371	131.0	70.0	164.0	94.0	95.0	
7	21	24	93.3	361	368	129.6	70.0	163.0	93.0	93.6	
8	20		92.5	358	365	128.5	69.0	163.0	94.0	92.6	
9	8		91.9	355	361	127.7	92.0	183.0	91.0	91.8	
10	3		91.5	354	359	127.1	91.0	184.0	93.0	91.2	
11	4		90.4	350	354	125.7	63.0	157.0	94.0	89.7	
12	10		89.5	346	351	124.5	82.0	172.0	90.0	88.6	
13	25		88.8	344	348	123.5	76.0	162.0	86.0	87.6	
14	35		88.1	341	344	122.7	73.0	160.0	87.0	86.7	
15	17		87.6	339	342	122.0	73.0	157.0	84.0	86.0	
16	5		86.6	336	339	120.7	76.0	161.0	85.0	84.7	
17	1		85.8	332	336	119.6	64.0	147.0	83.0	83.6	
18	2		85.0	330	334	118.6	70.0	150.0	80.0	82.6	
19	14		84.4	327	331	117.7	67.0	147.0	80.0	81.7	
20	32		83.8	325	329	116.9	64.0	146.0	82.0	80.9	
21	26		82.9	321	326	115.7	60.0	140.0	80.0	79.7	
22	11	33	82.1	318	323	114.7	62.0	142.0	80.0	78.6	
23	6		81.3	315	321	113.7	66.0	144.0	78.0	77.7	
24	7		80.6	313	319	112.8	61.0	139.0	78.0	76.8	
25	13		80.0	311	316	112.0	76.0	154.0	78.0	75.9	
26	31		79.1	307	314	110.8	70.0	145.0	75.0	74.8	
27	27		78.3	304	310	109.8	70.0	144.0	74.0	73.7	
28	18		77.6	301	308	108.8	60.0	137.0	77.0	72.7	
29	12		76.8	299	305	107.8	70.0	143.0	73.0	71.7	
30	19		76.2	296	301	107.0	71.0	143.0	72.0	70.8	
31	30		75.4	293	299	105.9	68.0	139.0	71.0	69.8	
32	28		74.6	290	295	104.9	64.0	132.0	68.0	68.8	
33	29		73.9	288	293	104.0	63.0	133.0	70.0	67.8	

STRESSING RECORD FOR STAY CABLES WITH CONTEN METHOD 2nd STRESSING

DYWIDAG-SYSTEMS INTENATIONAL

Project: Sixth Street Cable Stayed Bridge- Milwaukee

Cable no.	WEST N2	Cable type	C37	Length of cable	34.760 m	No. of strands	33
Construction stage	12.1	Length of jack	1000 mm	Relieve	3.0 mm	Slip	1.0 mm
Jack type	ConTen 140 kN	Jack no.	DSI 190397	Priston area	26.5 cm²	Friction	0.0%
Tension side	Deck	Date of tensioning		Person resp. for tensioning works		Owner's representative	
Temperature of 1st strand		4/8/2002		Columba Cannon			

Se-quence	Strand number for		Required force at anchorage after relieve	Gauge pressure before relieve		Elongation theoretical before relieve	Strand protrusion		Elongation		Remark
	Working jack	Pilot jack	[kN]	theoretical [bar]	actual [bar]	[mm]	before stressing [mm]	at final pressure [mm]	actual [mm]	theoretical [mm]	
1	33	-	116.3	447		62.3				62.3	
2	34		116.0	446	446	62.3	27.0	91.0	64.0	62.3	
3	16	33	115.6	445	446	62.3	27.0	90.0	63.0	62.3	
4	24		115.3	444	444	62.3	27.0	88.0	61.0	62.3	
5	9		115.0	443	442	62.3	30.0	89.0	59.0	62.3	
6	15		114.7	441	442	62.3	26.0	88.0	62.0	62.3	
7	21	24	114.4	440	440	62.3	30.0	91.0	61.0	62.3	
8	20		114.0	439	439	62.3	31.0	90.0	59.0	62.3	
9	8		113.7	438	437	62.2	28.0	90.0	62.0	62.2	
10	3		113.4	436	436	62.2	31.0	91.0	60.0	62.2	
11	4		113.1	435	434	62.2	28.0	89.0	61.0	62.2	
12	10		112.7	434	434	62.2	27.0	88.0	61.0	62.2	
13	25		112.4	433	433	62.2	27.0	89.0	62.0	62.2	
14	35		112.1	432	431	62.2	27.0	87.0	60.0	62.2	
15	17		111.8	430	431	62.2	27.0	87.0	60.0	62.2	
16	5		111.5	429	430	62.2	27.0	89.0	62.0	62.2	
17	1		111.1	428	430	62.1	27.0	89.0	62.0	62.1	
18	2		110.8	427	429	62.1	30.0	92.0	62.0	62.1	
19	14		110.5	426	428	62.1	26.0	89.0	63.0	62.1	
20	32		110.2	424	427	62.1	27.0	88.0	61.0	62.1	
21	26		109.9	423	425	62.1	27.0	88.0	61.0	62.1	
22	11	33	109.5	422	424	62.1	27.0	88.0	61.0	62.1	
23	6		109.2	421	422	62.1	29.0	91.0	62.0	62.1	
24	7		108.9	419	421	62.1	27.0	89.0	62.0	62.1	
25	13		108.6	418	419	62.1	27.0	89.0	62.0	62.1	
26	31		108.2	417	418	62.0	27.0	88.0	61.0	62.0	
27	27		107.9	416	417	62.0	27.0	87.0	60.0	62.0	
28	18		107.6	415	416	62.0	27.0	88.0	61.0	62.0	
29	12		107.3	413	415	62.0	27.0	89.0	62.0	62.0	
30	19		107.0	412	414	62.0	27.0	88.0	61.0	62.0	
31	30		106.6	411	413	62.0	27.0	90.0	63.0	62.0	
32	28		106.3	410	411	62.0	33.0	95.0	62.0	62.0	
33	29		105.7	407	409	61.9	27.0	88.0	61.0	61.9	

STRESSING RECORD FOR STAY CABLES WITH CONTEN METHOD 1st STRESSING

DYWIDAG-SYSTEMS INTERNATIONAL

Project: Sixth Street Cable Stayed Bridge- Milwaukee

Cable no.	WEST N3	Cable Type	C31	Length of cable	30.071 m	No. of strands	23
Construction stage	11.2	Length of jack	1000 mm	Relieve	3.0 mm	Slip	3.0 mm
Jack type	ConTen 140 kN	Jack no.	DSI 190397	Piston area	26.5 cm²	Friction	0.0%
Tension side	Deck	Date of tensioining		Person resp. for tensioning works		Owner's representative	
Temperature of 1st strand		4/4/2002		Columba Cannon			

Se-quence	Strand number for		Required force at anchorage after relieve	Gauge pressure before relieve		Elongation theoretical before relieve	Strand protrusion		Partial elongation		Remark
	Working jack	Pilot jack		theoretical	actual		at pressure of 100 bar	at final pressure	actual	theoretical	
			[kN]	[bar]	[bar]	[mm]	[mm]	[mm]	[mm]	[mm]	
1	21	-	99.7	386		-				-	
2	9		95.6	371	368	119.6	67.0	154.0	87.0	87.4	
3	24		94.1	365	361	115.0	67.0	152.0	85.0	83.5	
4	25		93.0	361	358	113.3	70.0	152.0	82.0	81.9	
5	10	21	92.0	357	356	112.0	64.0	149.0	85.0	80.6	
6	4		90.4	351	350	110.2	81.0	163.0	82.0	78.8	
7	17		89.3	347	347	108.9	67.0	146.0	79.0	77.5	
8	3		88.5	344	319	108.0	86.0	156.0	70.0	76.6	
9	8		87.9	342	312	107.2	67.0	136.0	69.0	75.8	
10	20		87.4	340	309	106.6	60.0	126.0	66.0	75.2	
11	14		86.1	335	308	105.2	63.0	129.0	66.0	73.8	
12	2		85.1	331	303	104.1	67.0	132.0	65.0	72.6	
13	1		84.2	328	299	103.1	82.0	144.0	62.0	71.6	
14	5		83.5	325	295	102.2	75.0	137.0	62.0	70.8	
15	26		82.9	323	292	101.5	63.0	128.0	65.0	70.0	
16	11	24	81.7	318	288	100.2	57.0	117.0	60.0	68.7	
17	6		80.7	315	285	99.1	63.0	121.0	58.0	67.6	
18	7		79.9	311	282	98.1	58.0	116.0	58.0	66.6	
19	13		79.1	308	280	97.1	61.0	118.0	57.0	65.6	
20	31		78.4	306	278	96.3	61.0	116.0	55.0	64.8	
21	18		77.4	302	276	95.2	59.0	113.0	54.0	63.7	
22	12		76.5	299	274	94.2	69.0	124.0	55.0	62.7	
23	19		75.7	296	271	93.3	59.0	112.0	53.0	61.7	

STRESSING RECORD FOR STAY CABLES WITH CONTEN METHOD 2nd STRESSING

DYWIDAG-SYSTEMS INTENATIONAL

Project: Sixth Street Cable Stayed Bridge- Milwaukee

Cable no. WEST N3	Cable type C31	Length of cable 30.071 m	No. of strands 23
Construction stage 12.1	Length of jack 1000 mm	Relieve 3.0 mm	Slip 1.0 mm
Jack type ConTen 140 kN	Jack no. DSI 190397	Priston area 26.5 cm²	Friction 0.0%
Tension side Deck	Date of tensioning 4/4/2002	Person resp. for tensloning works	Owner's representative
Temperature of 1st strand			

Se-quence	Strand number for		Required force at anchorage after relieve	Gauge pressure before relieve		Elongation theoretical before relieve	Strand protrusion		Elongation		Remark
	Working jack	Pilot jack	[kN]	theoretical [bar]	actual [bar]	[mm]	before stressing [mm]	at final pressure [mm]	actual [mm]	theoretical [mm]	
1	21	-	116.9	451		53.8				53.8	
2	9		116.5	450	450	53.8	26.0	88.0	62.0	53.8	
3	24		116.1	448	450	53.7	27.0	87.0	60.0	53.7	
4	25		115.8	447	449	53.7	26.0	87.0	61.0	53.7	
5	10	21	115.4	445	449	53.7	27.0	86.0	59.0	53.7	
6	4		115.0	444	445	53.7	27.0	87.0	60.0	53.7	
7	17		114.6	442	445	53.7	30.0	90.0	60.0	53.7	
8	3		114.2	441	439	53.7	27.0	93.0	66.0	53.7	
9	8		113.9	440	434	53.7	27.0	90.0	63.0	53.7	
10	20		113.5	438	436	53.6	27.0	93.0	66.0	53.6	
11	14	24	113.1	437	433	53.6	27.0	93.0	66.0	53.6	
12	2		112.7	435	433	53.6	27.0	93.0	66.0	53.6	
13	1		112.3	434	432	53.6	34.0	98.0	64.0	53.6	
14	5		112.0	432	431	53.6	27.0	90.0	63.0	53.6	
15	26		111.6	431	428	53.6	27.0	91.0	64.0	53.6	
16	11		111.2	430	427	53.6	28.0	91.0	63.0	53.6	
17	6		110.8	428	426	53.5	28.0	91.0	63.0	53.5	
18	7		110.4	427	423	53.5	28.0	91.0	63.0	53.5	
19	13	21	110.1	425	421	53.5	27.0	92.0	65.0	53.5	
20	31		109.7	424	420	53.5	27.0	91.0	64.0	53.5	
21	18		109.3	422	419	53.5	27.0	91.0	64.0	53.5	
22	12		108.9	421	416	53.5	29.0	92.0	63.0	53.5	
23	19		108.2	418	414	53.5	27.0	90.0	63.0	53.5	

STRESSING RECORD FOR STAY CABLES WITH CONTEN METHOD 1st STRESSING

DYWIDAG-SYSTEMS INTERNATIONAL

Project: Sixth Street Cable Stayed Bridge- Milwaukee

Cable no. WEST N4	Cable Type C31	Length of cable 25.715 m	No. of strands 23
Construction stage 11.2	Length of jack 1000 mm	Relieve 3.0 mm	Slip 3.0 mm
Jack type ConTen 140 kN	Jack no. DSI 190397	Piston area 26.5 cm²	Friction 0.0%
Tension side Deck	Date of tensioining	Person resp. for tensioning works	Owner's representative
Temperature of 1st strand	4/2/2002		

Se-quence	Strand number for		Required force at anchorage after relieve	Gauge pressure before relieve		Elongation theoretical before relieve	Strand protrusion		Partial elongation		Remark
	Working jack	Pilot jack		theoretical	actual		at pressure of 100 bar	at final pressure	actual	theoretical	
			[kN]	[bar]	[bar]	[mm]	[mm]	[mm]	[mm]	[mm]	
1	21	-	89.0	348		-				-	
2	9		86.3	337	340	93.3	57.0	121.0	64.0	65.7	
3	24		85.0	333	331	90.6	44.0	107.0	63.0	63.3	
4	25	21	84.0	329	326	89.3	54.0	115.0	61.0	62.1	
5	10		83.1	325	322	88.3	54.0	113.0	59.0	61.2	
6	4		81.6	320	319	86.9	53.0	113.0	60.0	59.7	
7	17		80.6	316	313	85.9	57.0	114.0	57.0	58.7	
8	3		79.8	313	302	85.1	52.0	106.0	54.0	57.9	
9	8		79.2	311	297	84.5	54.0	107.0	53.0	57.3	
10	20		78.8	309	293	84.1	56.0	108.0	52.0	56.9	
11	14		77.6	305	290	82.9	54.0	105.0	51.0	55.7	
12	2		76.6	301	288	81.9	52.0	102.0	50.0	54.7	
13	1		75.7	298	285	81.1	52.0	101.0	49.0	53.8	
14	5		75.0	295	280	80.4	32.0	80.0	48.0	53.1	
15	26	24	74.4	293	279	79.8	56.0	101.0	45.0	52.5	
16	11		73.3	289	273	78.7	59.0	104.0	45.0	51.4	
17	6		72.4	285	271	77.8	63.0	109.0	46.0	50.5	
18	7		71.6	282	268	77.0	50.0	96.0	46.0	49.7	
19	13		70.8	279	264	76.3	55.0	100.0	45.0	48.9	
20	31		70.2	277	261	75.6	55.0	98.0	43.0	48.3	
21	18		69.2	273	259	74.7	51.0	95.0	44.0	47.3	
22	12		68.4	270	256	73.8	51.0	93.0	42.0	46.5	
23	19		67.6	267	252	73.0	51.0	92.0	41.0	45.7	

STRESSING RECORD FOR STAY CABLES WITH CONTEN METHOD 2nd STRESSING

DYWIDAG-SYSTEMS INTENATIONAL

Project: Sixth Street Cable Stayed Bridge- Milwaukee

Cable no.	WEST N4	Cable Type	C31	Length of cable	25.715 m	No. of strands	23
Construction stage	12.1	Length of jack	1000 mm	Relieve	3.0 mm	Slip	1.0 mm
Jack type	ConTen 140 kN	Jack no.	DSI 190397	Priston area	26.5 cm²	Friction	0.0%
Tension side	Deck	Date of tensioning		Person resp. for tensioning works		Owner's representative	
Temperature of 1st strand		4/2/2002					

Se-quence	Strand number for		Required force at anchorage after relieve	Gauge pressure before relieve		Elongation theoretical before relieve	Strand protrusion		Elongation		Remark
	Working jack	Pilot jack	[kN]	theoretical [bar]	actual [bar]	[mm]	before stressing [mm]	at final pressure [mm]	actual [mm]	theoretical [mm]	
1	21	-	104.9	423		43.1				43.1	
2	9		104.5		421	43.1	26.0	78.0	52.0	43.1	
3	24		104.2		420	43.1	26.0	78.0	52.0	43.1	
4	25	21	103.8		419	43.1	27.0	77.0	50.0	43.1	
5	10		103.5		418	43.0	30.0	80.0	50.0	43.0	
6	4		103.1		418	43.0	26.0	77.0	51.0	43.0	
7	17		102.7		414	43.0	27.0	78.0	51.0	43.0	
8	3		102.4		402	43.0	27.0	77.0	50.0	43.0	
9	8		102.0		399	43.0	27.0	76.0	49.0	43.0	
10	20		101.6		399	43.0	26.0	77.0	51.0	43.0	
11	14		101.3		397	43.0	26.0	75.0	49.0	43.0	
12	2		100.9		393	43.0	27.0	77.0	50.0	43.0	
13	1		100.6		391	42.9	28.0	79.0	51.0	42.9	
14	5		100.2		389	42.9	36.0	85.0	49.0	42.9	
15	26	24	99.8		387	42.9	27.0	75.0	48.0	42.9	
16	11		99.5		382	42.9	26.0	76.0	50.0	42.9	
17	6		99.1		380	42.9	27.0	76.0	49.0	42.9	
18	7		98.7		380	42.9	27.0	77.0	50.0	42.9	
19	13		98.4		378	42.9	30.0	79.0	49.0	42.9	
20	31		98.0		375	42.8	27.0	75.0	48.0	42.8	
21	18		97.7		374	42.8	34.0	84.0	50.0	42.8	
22	12		97.3		372	42.8	27.0	75.0	48.0	42.8	
23	19		96.6		371	42.8	27.0	75.0	48.0	42.8	

STRESSING RECORD FOR STAY CABLES WITH CONTEN METHOD 1st STRESSING

DYWIDAG-SYSTEMS INTERNATIONAL

Project: Sixth Street Cable Stayed Bridge- Milwaukee

Cable no.	WEST N5	Cable Type	C31	Length of cable	22.054 m	No. of strands	22
Construction stage	11.2	Length of jack	1000 mm	Relieve	3.0 mm	Slip	3.0 mm
Jack type	ConTen 140 kN	Jack no.	DSI 190397	Piston area	26.5 cm²	Friction	0.0%
Tension side	Deck	Date of tensioining		Person resp. for tensioning works		Owner's representative	
Temperature of 1st strand		3/29/2002		Jason Samz			

Se-quence	Strand number for		Required force at anchorage after relieve	Gauge pressure before relieve		Elongation theoretical before relieve	Strand protrusion		Partial elongation		Remark
	Working jack	Pilot jack		theoretical	actual		at pressure of 100 bar	at final pressure	actual	theoretical	
			[kN]	[bar]	[bar]	[mm]	[mm]	[mm]	[mm]	[mm]	
1	21	-	69.8	277		-				-	
2	9		68.3	271	261	65.2	26.0	71.0	45.0	41.2	
3	24		67.4	268	271	63.7	30.0	71.0	41.0	39.9	
4	25	21	66.7	266	268	63.1	60.0	103.0	43.0	39.3	
5	10		66.1	263	263	62.5	61.0	101.0	40.0	38.7	
6	4		65.0	259	260	61.5	63.0	101.0	38.0	37.8	
7	3		64.2	256	258	60.8	65.0	102.0	37.0	37.1	
8	8		63.6	254	249	60.3	59.0	92.0	33.0	36.6	
9	20		63.1	252	247	60.0	53.0	88.0	35.0	36.2	
10	14	24	62.8	251	243	59.6	55.0	88.0	33.0	35.9	
11	2		61.9	247	242	58.9	68.0	101.0	33.0	35.1	
12	1		61.2	245	238	58.3	53.0	85.0	32.0	34.5	
13	5		60.6	242	237	57.8	54.0	85.0	31.0	34.0	
14	17		60.1	240	237	57.3	65.0	99.0	34.0	33.5	
15	26		59.6	239	236	57.0	63.0	94.0	31.0	33.1	
16	11		58.8	236	235	56.3	55.0	83.0	28.0	32.4	
17	6		58.1	233	234	55.7	54.0	82.0	28.0	31.8	
18	7	21	57.5	231	226	55.1	51.0	79.0	28.0	31.2	
19	13		56.9	229	224	54.7	50.0	81.0	31.0	30.7	
20	31		56.4	227	222	54.2	53.0	82.0	29.0	30.3	
21	18		55.7	224	221	53.7	50.0	76.0	26.0	29.7	
22	19		55.1	222	219	53.1	51.0	79.0	28.0	29.2	

STRESSING RECORD FOR STAY CABLES WITH CONTEN METHOD 2nd STRESSING

DYWIDAG-SYSTEMS INTENATIONAL

Project: Sixth Street Cable Stayed Bridge- Milwaukee

Cable no.	WEST N5	Cable Type	C31	Length of cable	22.054 m	No. of strands	22
Construction stage	12.1	Length of jack	1000 mm	Relieve	3.0 mm	Slip	1.0 mm
Jack type	ConTen 140 kN	Jack no.	DSI 190397	Priston area	26.5 cm²	Friction	0.0%
Tension side	Deck	Date of tensioning		Person resp. for tensioning works		Owner's representative	
Temperature of 1st strand		3/29/2002					

Se-quence	Strand number for		Required force at anchorage after relieve	Gauge pressure before relieve		Elongation theoretical before relieve	Strand protrusion		Elongation		Remark
	Working jack	Pilot jack	[kN]	theoretical [bar]	actual [bar]	[mm]	before stressing [mm]	at final pressure [mm]	actual [mm]	theoretical [mm]	
1	21	-	84.7	333		31.0				31.0	
2	9		84.4	332	330	31.0	27.0	58.0	31.0	31.0	
3	24		84.1	331	330	31.0	27.0	58.0	31.0	31.0	
4	25	21	83.8	330	329	31.0	27.0	57.0	30.0	31.0	
5	10		83.6	329	328	31.0	30.0	59.0	29.0	31.0	
6	4		83.3	328	327	31.0	27.0	57.0	30.0	31.0	
7	17		83.0	327	326	31.0	28.0	59.0	31.0	31.0	
8	3		82.8	326	320	31.0	26.0	60.0	34.0	31.0	
9	8		82.5	325	319	31.0	26.0	55.0	29.0	31.0	
10	20	24	82.2	324	317	30.9	26.0	55.0	29.0	30.9	
11	14		82.0	323	316	30.9	27.0	56.0	29.0	30.9	
12	2		81.7	322	316	30.9	29.0	60.0	31.0	30.9	
13	1		81.4	321	316	30.9	27.0	57.0	30.0	30.9	
14	5		81.2	320	316	30.9	30.0	61.0	31.0	30.9	
15	26		80.9	319	313	30.9	26.0	55.0	29.0	30.9	
16	11		80.6	318	311	30.9	26.0	54.0	28.0	30.9	
17	6		80.4	317	309	30.9	27.0	56.0	29.0	30.9	
18	7	21	80.1	316	309	30.9	27.0	57.0	30.0	30.9	
19	13		79.8	315	309	30.9	27.0	57.0	30.0	30.9	
20	31		79.5	314	308	30.8	26.0	57.0	31.0	30.8	
21	18		79.3	313	305	30.8	29.0	58.0	29.0	30.8	
22	19		78.7	311	304	30.8	28.0	58.0	30.0	30.8	

STRESSING RECORD FOR STAY CABLES WITH CONTEN METHOD 1st STRESSING

DYWIDAG-SYSTEMS INTERNATIONAL

Project: Sixth Street Cable Stayed Bridge- Milwaukee

Cable no.	WEST N6	Cable Type	C31	Length of cable	19.127 m	No. of strands	19
Construction stage	11.2	Length of jack	1000 mm	Relleve	3.0 mm	Slip	3.0 mm
Jack type	ConTen 140 kN	Jack no.	DSI 190397	Piston area	26.5 cm²	Friction	0.0%
Tension side	Deck	Date of tensioining		Person resp. for tensioning works		Owner's representative	
Temperature of 1st strand		3/27/2002					

Se-quence	Strand number for		Required force at anchorage after relleve	Gauge pressure before relieve		Elongation theoretical before relieve	Strand protrusion		Partial elongation		Remark
	Working jack	Pilot jack		theoretical	actual		at pressure of 100 bar	at final pressure	actual	theoretical	
			[kN]	[bar]	[bar]	[mm]	[mm]	[mm]	[mm]	[mm]	
1	21	-	60.7	245		-				-	
2	9	21	60.4	244	241	50.9	45.0	72.0	27.0	30.0	
3	24		60.0	243	237	50.6	67.0	94.0	27.0	29.7	
4	10		59.9	242	236	50.4	48.0	75.0	27.0	29.6	
5	4		59.5	240	232	50.1	43.0	68.0	25.0	29.3	
6	3	24	59.0	239	235	49.8	50.0	80.0	30.0	28.9	
7	8		58.7	237	235	49.6	43.0	72.0	29.0	28.7	
8	14		58.4	236	225	49.4	50.0	75.0	25.0	28.5	
9	2		58.2	236	228	49.2	48.0	75.0	27.0	28.3	
10	1		58.1	235	230	49.1	50.0	76.0	26.0	28.2	
11	5		57.7	234	230	48.8	49.0	76.0	27.0	27.9	
12	17	21	57.4	233	235	48.6	52.0	78.0	26.0	27.7	
13	11		57.1	232	238	48.4	48.0	75.0	27.0	27.5	
14	6		56.9	231	235	48.2	45.0	73.0	28.0	27.3	
15	7		56.7	230	238	48.1	48.0	78.0	30.0	27.2	
16	13		56.4	229	235	47.8	46.0	72.0	26.0	26.9	
17	18		56.1	228	235	47.6	46.0	72.0	26.0	26.7	
18	12		55.8	227	233	47.4	46.0	73.0	27.0	26.5	
19	19		55.6	226	230	47.3	62.0	91.0	29.0	26.4	

STRESSING RECORD FOR STAY CABLES WITH CONTEN METHOD 2nd STRESSING

DYWIDAG-SYSTEMS INTENATIONAL

Project: Sixth Street Cable Stayed Bridge- Milwaukee

Cable no.	WEST N6	Cable Type	C31	Length of cable	19.127 m	No. of strands	19
Construction stage	12.1	Length of jack	1000 mm	Relieve	3.0 mm	Slip	1.0 mm
Jack type	ConTen 140 kN	Jack no.	DSI 190397	Priston area	26.5 cm²	Friction	0.0%
Tension side	Deck	Date of tensioning		Person resp. for tensioning works		Owner's representative	
Temperature of 1st strand		3/28/2002					

Se-quence	Strand number for		Required force at anchorage after relieve	Gauge pressure before relieve		Elongation theoretical before relieve	Strand protrusion		Elongation		Remark
	Working jack	Pilot jack		theoretical	actual		before stressing	at final pressure	actual	theoretical	
			[kN]	[bar]	[bar]	[mm]	[mm]	[mm]	[mm]	[mm]	
1	21	-	81.7	324		25.3				25.3	
2	9	21	81.6	324	324	25.3	26.0	55.0	29.0	25.3	
3	24		81.4	323	303	25.3	26.0	48.0	22.0	25.3	
4	10		81.3	323	302	25.3	27.0	49.0	22.0	25.3	
5	4		81.2	322	302	25.3	27.0	54.0	27.0	25.3	
6	3	24	81.1	322	298	25.3	26.0	46	20.0	25.3	
7	8		81.0	322	299	25.3	26.0	47	21.0	25.3	
8	14		80.9	321	300	25.3	26.0	47	21.0	25.3	
9	2		80.7	321	300	25.3	26.0	47	21.0	25.3	
10	1		80.6	320	300	25.3	27.0	47	20.0	25.3	
11	5		80.5	320	300	25.3	26.0	52	26.0	25.3	
12	17	21	80.4	319	321	25.2	27.0	50	23.0	25.2	
13	11		80.3	319	320	25.2	26.0	49	23.0	25.2	
14	6		80.2	318	319	25.2	27.0	50	23.0	25.2	
15	7		80.0	318	319	25.2	27.0	50	23.0	25.2	
16	13		79.9	318	319	25.2	26.0	49	23.0	25.2	
17	18		79.8	317	319	25.2	26.0	48	22.0	25.2	
18	12		79.7	317	318	25.2	26.0	49	23.0	25.2	
19	19		79.5	316	318	25.2	26.0	49	23.0	25.2	

STRESSING RECORD FOR STAY CABLES WITH CONTEN METHOD 1st STRESSING

DYWIDAG-SYSTEMS INTERNATIONAL

Project: Sixth Street Cable Stayed Bridge- Milwaukee

Cable no.	WEST N7	Cable Type	C31	Length of cable	21.441 m	No. of strands	12
Construction stage	11.2	Length of jack	1000 mm	Relieve	3.0 mm	Slip	3.0 mm
Jack type	ConTen 140 kN	Jack no.	DSI 190397	Piston area	26.5 cm²	Friction	0.0%
Tension side	Deck	Date of tensioining	3/26/2002	Person resp. for tensioning works		Owner's representative	
Temperature of 1st strand							

Se-quence	Strand number for		Required force at anchorage after relieve	Gauge pressure before relieve		Elongation theoretical before relieve	Strand protrusion		Partial elongation		Remark
	Working jack	Pilot jack		theoretical	actual		at pressure of 100 bar	at final pressure	actual	theoretical	
			[kN]	[bar]	[bar]	[mm]	[mm]	[mm]	[mm]	[mm]	
1	21	-	85.6	337	337	-				-	
2	9		84.9	334	345	76.4	0.0	0.0	0.0	53.6	
3	24	21	84.5	333	300	75.9	68.0	115.0	47.0	53.1	
4	4		84.1	332	298	75.3	76.0	122.0	46.0	52.8	
5	3		83.9	331	317	74.9	70.0	121.0	51.0	52.5	
6	5		83.3	329	319	74.6	67.0	117.0	50.0	52.1	
7	1		83.0	327	321	74.3	70.0	123.0	53.0	51.8	
8	2	24	82.7	326	320	74.1	69.0	120.0	51.0	51.5	
9	6		82.5	325	319	74.0	79.0	127.0	48.0	51.3	
10	7		82.3	325	318	73.7	59.0	109.0	50.0	51.2	
11	18		81.9	323	318	73.4	68.0	117.0	49.0	50.9	
12	19		81.6	322	316	48.4	78.0	127.0	49.0	50.7	

STRESSING RECORD FOR STAY CABLES WITH CONTEN METHOD 2nd STRESSING
DYWIDAG-SYSTEMS INTERNATIONAL

Project: Sixth Street Cable Stayed Bridge- Milwaukee

Cable no.	WEST N7	Cable Type	C31	Length of cable	21.441 m	No. of strands	12
Construction stage	12.1	Length of jack	1000 mm	Relieve	3.0 mm	Slip	1.0 mm
Jack type	ConTen 140 kN	Jack no.	DSI 190397	Piston area	26.5 cm²	Friction	0.0%
Tension side	Deck	Date of tensioining	3/26/2002	Person resp. for tensioning works		Owner's representative	
Temperature of 1st strand							

Se-quence	Strand number for		Required force at anchorage after relieve	Gauge pressure before relieve		Elongation theoretical before relieve	Strand protrusion		Partial elongation		Remark
	Working jack	Pilot jack		theoretical	actual		at pressure of 100 bar	at final pressure	actual	theoretical	
			[kN]	[bar]	[bar]	[mm]	[mm]	[mm]	[mm]	[mm]	
1	21	-	118.2	460		37.1				37.1	
2	9		118.1	460	460	37.1	27.0	61.0	34.0	37.1	
3	24	21	117.9	459	459	37.1	27.0	69.0	42.0	37.1	
4	4		117.8	459	458	37.1	27.0	72.0	45.0	37.1	Sensor broken
5	3		117.7	.458	446	37.1	26.0	63.0	37.0	37.1	Sensor fixed and reset
6	5		117.5	458	444	37.1	26.0	61.0	35.0	37.1	
7	1		117.4	457	443	37.1	27.0	62.0	35.0	37.1	
8	2	24	117.3	457	442	37.1	26.0	62.0	36.0	37.1	
9	6		117.2	456	442	37.1	27.0	63.0	36.0	37.1	
10	7		117.0	456	442	37.1	26.0	64.0	38.0	37.1	
11	18		116.9	455	441	37.1	25.0	62.0	37.0	37.1	
12	19		116.6	454	441	37.0	26.0	63.0	37.0	37.0	

STRESSING RECORD FOR STAY CABLES WITH CONTEN METHOD 1st STRESSING

DYWIDAG-SYSTEMS INTERNATIONAL

Project: Sixth Street Cable Stayed Bridge- Milwaukee

Cable no.	WEST N8	Cable Type	C31	Length of cable	28.064 m	No. of strands	26
Construction stage	11.2	Length of jack	1000 mm	Relieve	3.0 mm	Slip	3.0 mm
Jack type	ConTen 140 kN	Jack no.	DSI 190397	Piston area	26.5 cm²	Friction	0.0%
Tension side	Deck	Date of tensioining		Person resp. for tensioning works		Owner's representative	
Temperature of 1st strand		3/28/2002					

Se-quence	Strand number for		Required force at anchorage after relieve	Gauge pressure before relieve		Elongation theoretical before relieve	Strand protrusion		Partial elongation		Remark
	Working jack	Pilot jack		theoretical	actual		at pressure of 100 bar	at final pressure	actual	theoretical	
			[kN]	[bar]	[bar]	[mm]	[mm]	[mm]	[mm]	[mm]	
1	21	-	112.4	435		-				-	
2	9	21	108.6	421	430	125.9	67.0	169.0	102.0	96.0	
3	16		107.1	415	418	121.8	64.0	157.0	93.0	92.5	
4	24		106.0	411	414	120.2	125.0	217.0	92.0	90.9	
5	25		105.0	407	414	119.0	113.0	206.0	93.0	89.7	
6	10		103.4	401	414	117.3	63.0	151.0	88.0	88.1	
7	4		102.3	397	414	116.1	69.0	161.0	92.0	86.9	
8	17	24	101.5	394	412	115.2	69.0	160.0	91.0	86.0	
9	15		100.9	391	385	114.5	70.0	154.0	84.0	85.3	
10	3		100.4	389	382	114.0	66.0	153.0	87.0	84.7	
11	8		99.1	385	377	112.7	65.0	145.0	80.0	83.4	
12	20		98.1	381	373	111.6	69.0	151.0	82.0	82.3	
13	14		97.3	378	371	110.6	66.0	151.0	85.0	81.4	
14	2		96.5	375	366	109.8	72.0	154.0	82.0	80.6	
15	1		95.9	373	364	109.2	62.0	139.0	77.0	79.9	
16	5	21	94.8	368	361	108.0	69.0	142.0	73.0	78.7	
17	26		93.8	365	358	106.9	59.0	129.0	70.0	77.6	
18	11		92.9	361	355	106.0	58.0	125.0	67.0	76.7	
19	6		92.2	359	351	105.2	62.0	132.0	70.0	75.9	
20	7		91.5	356	346	104.5	58.0	128.0	70.0	75.1	
21	13		90.4	352	344	103.3	60.0	128.0	68.0	73.9	
22	31		89.4	348	342	102.2	71.0	144.0	73.0	72.9	
23	30		88.5	345	341	101.3	67.0	134.0	67.0	71.9	
24	19		87.7	342	340	100.4	64.0	130.0	66.0	71.0	
25	12		86.9	339	339	99.6	57.0	124.0	67.0	70.2	
26	18		86.1	336	333	98.7	56.0	119.0	63.0	69.3	

STRESSING RECORD FOR STAY CABLES WITH CONTEN METHOD 2nd STRESSING

DYWIDAG-SYSTEMS INTENATIONAL

Project: Sixth Street Cable Stayed Bridge- Milwaukee

Cable no.	WEST N8	Cable Type	C31	Length of cable	28.064 m	No. of strands	26
Construction stage	12.1	Length of jack	1000 mm	Relieve	3.0 mm	Slip	1.0 mm
Jack type	ConTen 140 kN	Jack no.	DSI 190397	Priston area	26.5 cm²	Friction	0.0%
Tension side	Deck	Date of tensioning		Person resp. for tensioning works		Owner's representative	
Temperature of 1st strand		3/29/2002					

Se-quence	Strand number for		Required force at anchorage after relieve	Gauge pressure before relieve		Elongation theoretical before relieve	Strand protrusion		Elongation		Remark
	Working jack	Pilot jack		theoretical	actual		before stressing	at final pressure	actual	theoretical	
			[kN]	[bar]	[bar]	[mm]	[mm]	[mm]	[mm]	[mm]	
1	21	-	132.9	512		57.1				57.1	
2	9		132.6	511	511	57.1	27.0	79.0	52.0	57.1	
3	16		132.2	509	506	57.1	26.0	83.0	57.0	57.1	
4	24	21	131.8	508	507	57.1	27.0	85.0	58.0	57.1	
5	25		131.4	507	507	57.0	26.0	87.0	61.0	57.0	
6	10		131.0	505	506	57.0	26.0	88.0	62.0	57.0	
7	4		130.7	504	506	57.0	26.0	82.0	56.0	57.0	
8	17		130.3	502	504	57.0	30.0	89.0	59.0	57.0	
9	15		129.9	501	495	57.0	26.0	86.0	60.0	57.0	
10	3		129.5	499	499	57.0	26.0	86.0	60.0	57.0	
11	8	24	129.1	498	498	57.0	27.0	89.0	62.0	57.0	
12	20		128.8	497	497	56.9	26.0	86.0	60.0	56.9	
13	14		128.4	495	496	56.9	27.0	89.0	62.0	56.9	
14	2		128.0	494	491	56.9	27.0	85.0	58.0	56.9	
15	1		127.6	492	491	56.9	26.0	87.0	61.0	56.9	
16	5		127.2	491	490	56.9	26.0	88.0	62.0	56.9	
17	26		126.9	489	488	56.9	27.0	87.0	60.0	56.9	
18	11		126.5	488	486	56.9	27.0	87.0	60.0	56.9	
19	6		126.1	486	484	56.8	26.0	88.0	62.0	56.8	
20	7		125.7	485	480	56.8	27.0	86.0	59.0	56.8	
21	13	21	125.3	484	478	56.8	27.0	86.0	59.0	56.8	
22	31		125.0	482	478	56.8	27.0	84.0	57.0	56.8	
23	30		124.6	481	472	56.8	26.0	88.0	62.0	56.8	
24	19		124.2	479	472	56.8	27.0	86.0	59.0	56.8	
25	12		123.8	478	471	56.8	31.0	89.0	58.0	56.8	
26	18		123.1	475	469	56.7	27.0	87.0	60.0	56.7	

STRESSING RECORD FOR STAY CABLES WITH CONTEN METHOD 1st STRESSING

DYWIDAG-SYSTEMS INTERNATIONAL

Project: Sixth Street Cable Stayed Bridge- Milwaukee

Cable no.	WEST N9	Cable Type	C37	Length of cable	35.763 m	No. of strands	30
Construction stage	11.2	Length of jack	1000 mm	Relieve	3.0 mm	Slip	3.0 mm
Jack type	ConTen 140 kN	Jack no.	DSI 190397	Piston area	26.5 cm²	Friction	0.0%
Tension side	Deck	Date of tensioining		Person resp. for tensioning works		Owner's representative	
Temperature of 1st strand		4/1/2002					

Se-quence	Strand number for		Required force at anchorage after relieve	Gauge pressure before relieve		Elongation theoretical before relieve	Strand protrusion		Partial elongation		Remark
	Working jack	Pilot jack		theoretical	actual		at pressure of 100 bar	at final pressure	actual	theoretical	
			[kN]	[bar]	[bar]	[mm]	[mm]	[mm]	[mm]	[mm]	
1	21	-	115.0	442		-				-	
2	9		105.9	408	408	161.1	73.0	189.0	116.0	121.6	
3	16		103.2	398	400	148.8	71.0	179.0	108.0	111.4	
4	24		101.8	392	388	145.3	115.0	218.0	103.0	108.3	
5	25	21	100.6	388	388	143.3	74.0	174.0	100.0	106.3	
6	10		99.1	382	383	141.0	86.0	183.0	97.0	104.2	
7	7		98.0	378	379	139.5	86.0	183.0	97.0	102.6	
8	35		97.2	375	375	138.4	66.0	168.0	102.0	101.5	
9	17		96.6	373	372	137.5	67.0	169.0	102.0	100.6	
10	15		96.1	371	361	136.8	81.0	174.0	93.0	99.9	
11	3		95.0	367	353	135.3	71.0	161.0	90.0	98.4	
12	8		94.1	363	350	134.0	71.0	161.0	90.0	97.1	
13	20		93.3	360	349	132.9	70.0	158.0	88.0	96.0	
14	5		92.6	358	346	132.0	87.0	171.0	84.0	95.1	
15	1		92.0	356	340	131.2	69.0	153.0	84.0	94.3	
16	2		91.0	352	337	129.8	75.0	157.0	82.0	92.9	
17	14		90.1	348	336	128.6	69.0	151.0	82.0	91.6	
18	32		89.2	345	331	127.5	68.0	145.0	77.0	90.5	
19	26		88.5	342	331	126.5	65.0	146.0	81.0	89.5	
20	11	24	87.9	340	328	125.6	68.0	147.0	79.0	88.7	
21	6		86.9	336	327	124.3	66.0	144.0	78.0	87.4	
22	7		86.0	333	322	123.1	66.0	145.0	79.0	86.2	
23	13		85.3	330	320	122.1	67.0	142.0	75.0	85.1	
24	31		84.5	327	316	121.1	66.0	140.0	74.0	84.1	
25	27		83.9	325	313	120.2	65.0	142.0	77.0	83.2	
26	18		82.9	321	311	118.9	64.0	137.0	73.0	81.9	
27	12		82.1	318	309	117.8	66.0	138.0	72.0	80.7	
28	19		81.2	315	306	116.7	66.0	136.0	70.0	79.6	
29	30		80.5	312	304	115.7	70.0	139.0	69.0	78.6	
30	37		79.8	310	302	114.7	63.0	132.0	69.0	77.6	

STRESSING RECORD FOR STAY CABLES WITH CONTEN METHOD 2nd STRESSING
DYWIDAG-SYSTEMS INTENATIONAL

Project: Sixth Street Cable Stayed Bridge- Milwaukee

Cable no.	WEST N9	Cable type	C37	Length of cable	35.763 m	No. of strands	30
Construction stage	12.1	Length of jack	1000 mm	Relieve	3.0 mm	Slip	1.0 mm
Jack type	ConTen 140 kN	Jack no.	DSI 190397	Piston area	26.5 cm²	Friction	0.0%
Tension side	Deck	Date of tensioning		Person resp. for tensioning works		Owner's representative	
Temperature of 1st strand		4/1/2002					

Se-quence	Strand number for		Required force at anchorage after relieve	Gauge pressure before relieve		Elongation theoretical before relieve	Strand protrusion		Elongation		Remark
	Working jack	Pilot jack	[kN]	theoretical [bar]	actual [bar]	[mm]	before stressing [mm]	at final pressure [mm]	actual [mm]	theoretical [mm]	
1	21	-	124.4	478		67.1				67.1	
2	9		124.0	476	477	67.0	28.0	101.0	73.0	67.0	
3	16		123.7	475	476	67.0	27.0	98.0	71.0	67.0	
4	24		123.3	474	475	67.0	29.0	98.0	69.0	67.0	
5	25	21	123.0	472	472	67.0	27.0	105.0	78.0	67.0	Columba believes that
6	10		122.6	471	469	67.0	37.0	105.0	68.0	67.0	the number should be
7	7		122.3	470	469	67.0	27.0	96.0	69.0	67.0	27 before stressing.
8	35		122.0	468	467	67.0	26.0	97.0	71.0	67.0	
9	17		121.6	467	463	67.0	27.0	96.0	69.0	67.0	
10	15		121.3	466	459	66.9	28.0	99.0	71.0	66.9	
11	3		120.9	465	458	66.9	27.0	99.0	72.0	66.9	
12	8		120.6	463	455	66.9	27.0	98.0	71.0	66.9	
13	20		120.2	462	453	66.9	27.0	99.0	72.0	66.9	
14	5		119.9	461	451	66.9	26.0	98.0	72.0	66.9	
15	1		119.5	459	448	66.9	28.0	97.0	69.0	66.9	
16	2		119.2	458	446	66.9	27.0	98.0	71.0	66.9	
17	14		118.9	457	444	66.9	28.0	98.0	70.0	66.9	
18	32		118.5	456	462	66.8	27.0	99.0	72.0	66.8	
19	26		118.2	454	440	66.8	41.0	112.0	71.0	66.8	
20	11	24	117.8	453	439	66.8	28.0	97.0	69.0	66.8	
21	6		117.5	452	437	66.8	38.0	109.0	71.0	66.8	
22	7		117.1	450	436	66.8	28.0	98.0	70.0	66.8	
23	13		116.8	449	433	66.8	27.0	98.0	71.0	66.8	
24	31		116.4	448	431	66.8	27.0	99.0	72.0	66.8	
25	27		116.1	446	429	66.8	28.0	98.0	70.0	66.8	
26	18		115.8	445	427	66.7	28.0	105.0	77.0	66.7	
27	12		115.4	444	424	66.7	28.0	105.0	77.0	66.7	
28	19		115.1	443	421	66.7	28.0	103.0	75.0	66.7	
29	30		114.7	441	420	66.7	27.0	98.0	71.0	66.7	
30	37		114.0	439	418	66.7	35.0	103.0	68.0	66.7	

STRESSING RECORD FOR STAY CABLES WITH CONTEN METHOD 1st STRESSING

DYWIDAG-SYSTEMS INTERNATIONAL

Project: Sixth Street Cable Stayed Bridge- Milwaukee

Cable no.	WEST N10	Cable Type	C37	Length of cable	44.027 m	No. of strands	36
Construction stage	11.2	Length of jack	1000 mm	Relieve	3.0 mm	Slip	3.0 mm
Jack type	ConTen 140 kN	Jack no.	DSI 190397	Piston area	26.5 cm²	Friction	0.0%
Tension side	Deck	Date of tensioining		Person resp. for tensioning works		Owner's representative	
Temperature of 1st strand		4/3/2002					

Se-quence	Strand number for		Required force at anchorage after relieve	Gauge pressure before relieve		Elongation theoretical before relieve	Strand protrusion		Partial elongation		Remark
	Working jack	Pilot jack		theoretical	actual		at pressure of 100 bar	at final pressure	actual	theoretical	
			[kN]	[bar]	[bar]	[mm]	[mm]	[mm]	[mm]	[mm]	
1	21	-	119.9	459		-				-	
2	23		101.8	391	393	203.6	120.0	261.0	141.0	151.5	
3	34		96.5	371	360	174.2	105.0	225.0	120.0	127.2	
4	24		94.1	362	345	165.6	88.0	188.0	100.0	119.8	
5	16		92.6	356	340	161.5	94.0	195.0	101.0	116.1	
6	9	21	91.2	351	337	158.5	88.0	188.0	100.0	113.3	
7	25		90.2	347	335	156.5	80.0	181.0	101.0	111.4	
8	10		89.4	344	331	155.1	80.0	177.0	97.0	110.0	
9	4		88.8	342	330	154.0	90.0	187.0	97.0	109.0	
10	22		88.4	340	321	153.2	33.0	130.0	97.0	108.2	
11	33		87.5	337	319	151.7	157.0	250.0	93.0	106.6	
12	15		86.7	334	319	150.4	86.0	180.0	94.0	105.4	
13	3		86.1	332	316	149.4	89.0	179.0	90.0	104.4	
14	8		85.6	330	310	148.5	77.0	168.0	91.0	103.5	
15	20		85.1	328	308	147.7	77.0	164.0	87.0	102.7	
16	35		84.4	325	304	146.4	78.0	164.0	86.0	101.4	
17	17		83.7	323	302	145.3	76.0	163.0	87.0	100.3	
18	5		83.1	320	300	144.3	77.0	165.0	88.0	99.2	
19	1		82.5	318	297	143.4	82.0	166.0	84.0	98.3	
20	2		82.1	316	297	142.6	70.0	153.0	83.0	97.5	
21	14		81.3	314	297	141.4	80.0	165.0	85.0	96.3	
22	26		80.7	311	297	140.3	74.0	163.0	89.0	95.3	
23	11	34	80.1	309	296	139.4	75.0	158.0	83.0	94.3	
24	6		79.6	307	295	138.5	70.0	153.0	83.0	93.4	
25	7		79.1	305	292	137.6	74.0	159.0	85.0	92.5	
26	13		78.4	303	284	136.5	69.0	149.0	80.0	91.4	
27	31		77.7	300	283	135.4	72.0	149.0	77.0	90.3	
28	27		77.1	298	282	134.4	74.0	152.0	78.0	89.3	
29	18		76.6	296	280	133.5	75.0	151.0	76.0	88.4	
30	12		76.1	294	279	132.7	68.0	144.0	76.0	87.5	
31	19		75.4	291	279	131.5	73.0	150.0	77.0	86.4	
32	30		74.8	289	275	130.5	74.0	148.0	74.0	85.3	
33	36		74.2	287	275	129.5	74.0	148.0	74.0	84.3	
34	28		73.6	285	273	128.6	68.0	145.0	77.0	83.4	
35	29		73.1	283	273	127.7	70.0	144.0	74.0	82.5	
36	37		72.5	280	270	126.8	71.0	144.0	73.0	81.6	

STRESSING RECORD FOR STAY CABLES WITH CONTEN METHOD 2nd STRESSING
DYWIDAG-SYSTEMS INTENATIONAL

Project: **Sixth Street Cable Stayed Bridge- Milwaukee**

Cable no.	WEST N10	Cable type	C37	Length of cable	44.027 m	No. of strands	36
Construction stage	12.1	Length of jack	1000 mm	Relieve	3.0 mm	Slip	1.0 mm
Jack type	ConTen 140 kN	Jack no.	DSI 190397	Priston area	26.5 cm²	Friction	0.0%
Tension side	Deck	Date of tensioning		Person resp. for tensioning works		Owner's representative	
Temperature of 1st strand		4/3/2002					

Se-quence	Strand number for		Required force at anchorage after relieve	Gauge pressure before relieve		Elongation theoretical before relieve	Strand protrusion		Elongation		Remark
	Working jack	Pilot jack		theoretical	actual		before stressing	at final pressure	actual	theoretical	
			[kN]	[bar]	[bar]	[mm]	[mm]	[mm]	[mm]	[mm]	
1	21	-	112.7	443		73.1				73.1	
2	23		112.5		441	73.1	27.0	107.0	80.0	73.1	
3	34		112.2		430	73.1	27.0	104.0	77.0	73.1	
4	24		112.0		429	73.1	27.0	110.0	83.0	73.1	
5	16		111.7		428	73.1	28.0	108.0	80.0	73.1	
6	9	21	111.5		425	73.1	30.0	112.0	82.0	73.1	
7	25		111.2		425	73.1	27.0	112.0	85.0	73.1	
8	10		110.9		425	73.1	27.0	111.0	84.0	73.1	
9	4		110.7		423	73.1	31.0	112.0	81.0	73.1	
10	22		110.4		422	73.1	27.0	104.0	77.0	73.1	
11	33		110.2		420	73.0	27.0	105.0	78.0	73.0	
12	15		109.9		419	73.0	27.0	107.0	80.0	73.0	
13	3		109.7		419	73.0	30.0	110.0	80.0	73.0	
14	8		109.4		418	73.0	28.0	105.0	77.0	73.0	
15	20		109.2		417	73.0	33.0	112.0	79.0	73.0	
16	35		108.9		415	73.0	28.0	108.0	80.0	73.0	
17	17		108.7		414	73.0	27.0	105.0	78.0	73.0	
18	5		108.4		412	73.0	27.0	107.0	80.0	73.0	
19	1		108.2		410	73.0	28.0	109.0	81.0	73.0	
20	2		107.9		409	73.0	27.0	106.0	79.0	73.0	
21	14		107.7		409	73.0	27.0	102.0	75.0	73.0	
22	26		107.4		408	72.9	27.0	99.0	72.0	72.9	
23	11	34	107.2		408	72.9	27.0	102.0	75.0	72.9	
24	6		106.9		407	72.9	31.0	108.0	77.0	72.9	
25	7		106.7		405	72.9	30.0	107.0	77.0	72.9	
26	13		106.4		403	72.9	28.0	106.0	78.0	72.9	
27	31		106.2		401	72.9	27.0	102.0	75.0	72.9	
28	27		105.9		400	72.9	30.0	109.0	79.0	72.9	
29	18		105.7		399	72.9	27.0	105.0	78.0	72.9	
30	12		105.4		397	72.9	31.0	106.0	75.0	72.9	
31	19		105.1		397	72.9	27.0	101.0	74.0	72.9	
32	30		104.9		394	72.8	27.0	104.0	77.0	72.8	
33	36		104.6		394	72.8	28.0	105.0	77.0	72.8	
34	28		104.4		392	72.8	27.0	103.0	76.0	72.8	
35	29		104.1		391	72.8	27.0	101.0	74.0	72.8	
36	37		103.6		389	72.8	30.0	105.0	75.0	72.8	

STRESSING RECORD FOR STAY CABLES WITH CONTEN METHOD 1st STRESSING

DYWIDAG-SYSTEMS INTERNATIONAL

Project: Sixth Street Cable Stayed Bridge- Milwaukee

Cable no.	WEST N11	Cable Type	C37	Length of cable	52.585 m	No. of strands	35
Construction stage	11.2	Length of jack	1000 mm	Relieve	3.0 mm	Slip	3.0 mm
Jack type	ConTen 140 kN	Jack no.	DSI 19039	Piston area	26.5 cm²	Friction	0.0%
Tension side	Deck	Date of tensioining		Person resp. for tensioning works		Owner's representative	
Temperature of 1st strand		4/5/2002					

Se-quence	Strand number for		Required force at anchorage after relieve	Gauge pressure before relieve		Elongation theoretical before relieve	Strand protrusion		Partial elongation		Remark
	Working jack	Pilot jack		theoretical	actual		at pressure of 100 bar	at final pressure	actual	theoretical	
			[kN]	[bar]	[bar]	[mm]	[mm]	[mm]	[mm]	[mm]	
1	21	-	122.3	467		-				-	
2	23		98.4	377	430	245.8	107.0	297.0	190.0	180.6	
3	34		90.9	349	405	199.3	122.0	317.0	195.0	142.2	
4	24		87.4	336	395	184.7	86.0	245.0	159.0	129.6	
5	16		85.5	328	392	178.0	98.0	253.0	155.0	123.8	
6	9	21	83.9	322	391	173.7	104	256	152.0	119.8	
7	25		82.8	318	391	170.9	85	232	147.0	117.2	
8	10		82.0	315	389	169.0	87	233	146.0	115.3	
9	4		81.4	313	388	167.5	34	181	147.0	113.9	
10	22		80.9	311	335	166.3	50	176	126.0	112.8	
11	23		80.1	308	334	164.7	30	153	123.0	111.2	
12	15		79.5	306	334	163.4	99.0	225.0	126.0	110.0	
13	3		78.9	304	334	162.4	89.0	214.0	125.0	108.9	
14	8		78.5	302	332	161.4	84.0	202.0	118.0	107.9	
15	20		78.1	300	332	160.6	84.0	204.0	120.0	107.1	
16	17		77.5	298	330	159.4	78.0	200.0	122.0	105.9	
17	5		76.9	296	328	158.3	87.0	202.0	115.0	104.8	
18	1		76.4	294	327	157.3	82.0	198.0	116.0	103.8	
19	2		76.0	292	324	156.4	90.0	200.0	110.0	102.9	
20	14		75.6	291	321	155.6	73.0	188.0	115.0	102.1	
21	26		75.0	289	318	154.5	75.0	183.0	108.0	101.0	
22	11		74.5	287	315	153.4	84.0	190.0	106.0	99.9	
23	6	34	74.0	285	314	152.5	84.0	189.0	105.0	98.9	
24	7		73.5	283	312	151.6	80.0	183.0	103.0	98.1	
25	13		73.1	282	309	150.8	78.0	181.0	103.0	97.2	
26	31		72.6	280	308	149.7	80.0	181.0	101.0	96.1	
27	27		72.1	278	305	148.7	82.0	183.0	101.0	95.1	
28	18		71.6	276	304	147.7	73.0	176.0	103.0	94.2	
29	12		71.1	274	303	146.8	87.0	187.0	100.0	93.3	
30	19		70.7	273	298	146.0	78.0	174.0	96.0	92.4	
31	30		70.2	271	296	145.0	71.0	168.0	97.0	91.4	
32	36		69.7	269	294	144.0	72.0	168.0	96.0	90.4	
33	28		69.2	267	293	143.1	96.0	195.0	99.0	89.5	
34	29		68.8	265	290	142.2	78.0	176.0	98.0	88.6	
35	37		68.4	264	288	141.4	72.0	168.0	96.0	87.8	

STRESSING RECORD FOR STAY CABLES WITH CONTEN METHOD 2nd STRESSING

DYWIDAG-SYSTEMS INTENATIONAL

Project: Sixth Street Cable Stayed Bridge- Milwaukee

Cable no.	WEST N11	Cable type	C37	Length of cable	52.585 m	No. of strands	35
Construction stage	12.1	Length of jack	1000 mm	Relieve	3.0 mm	Slip	1.0 mm
Jack type	ConTen 140 kN	Jack no.	DSI 19039	Priston area	26.5 cm²	Friction	0.0%
Tension side	Deck	Date of tensioning		Person resp. for tensioning works		Owner's representative	
Temperature of 1st strand		4/5/2002					

Se-quence	Strand number for		Required force at anchorage after relieve	Gauge pressure before relieve		Elongation theoretical before relieve	Strand protrusion		Elongation		Remark
	Working jack	Pilot jack	[kN]	theoretical [bar]	actual [bar]	[mm]	before stressing [mm]	at final pressure [mm]	actual [mm]	theoretical [mm]	
1	21	-	104.7	401		78.0				78.0	
2	23	21	104.5	400	399	78.0	28.0	78.0	50.0	78.0	
3	34		104.3	399	398	78.0	28.0	80.0	52.0	78.0	
4	24		104.1	398	397	78.0	28.0	73.0	45.0	78.0	
5	16		103.9	398	396	78.0	28.0	70.0	42.0	78.0	
6	9		103.7	397	396	78.0	27	76	49.0	78.0	
7	25		103.5	396	394	78.0	27	65	38.0	78.0	
8	10		103.3	395	392	78.0	28	66	38.0	78.0	
9	4		103.1	395	392	77.9	28	68	40.0	77.9	
10	22	34	102.9	394	390	77.9	27	83	56.0	77.9	
11	23		102.7	393	389	77.9	27	86	59.0	77.9	
12	15		102.5	392	387	77.9	30	86	56.0	77.9	
13	3		102.3	392	387	77.9	29	84	55.0	77.9	
14	8		102.1	391	386	77.9	38	95	57.0	77.9	
15	20		101.9	390	384	77.9	27	78	51.0	77.9	
16	17		101.7	389	383	77.9	28	84	56.0	77.9	
17	5		101.5	389	383	77.9	27	88	61.0	77.9	
18	1		101.3	388	383	77.9	28	88	60.0	77.9	
19	2		101.1	387	382	77.9	28	78	50.0	77.9	
20	14		100.9	386	381	77.9	27	85	58.0	77.9	
21	26		100.7	386	382	77.9	27	86	59.0	77.9	
22	11		100.5	385	382	77.8	31	94	63.0	77.8	
23	6		100.3	384	381	77.8	27	88	61.0	77.8	
24	7		100.1	383	381	77.8	28	87	59.0	77.8	
25	13		99.9	383	381	77.8	57.0	120.0	63.0	77.8	
26	31		99.7	382	381	77.8	39.0	100.0	61.0	77.8	
27	27		99.5	381	381	77.8	31.0	91.0	60.0	77.8	
28	18		99.3	380	381	77.8	27.0	87.0	60.0	77.8	
29	12		99.1	380	380	77.8	27.0	87.0	60.0	77.8	
30	19		98.9	379	379	77.8	27.0	91.0	64.0	77.8	
31	30		98.7	378	378	77.8	59.0	120.0	61.0	77.8	
32	36		98.5	377	377	77.8	30.0	105.0	75.0	77.8	
33	28		98.3	377	378	77.8	28.0	101.0	73.0	77.8	
34	29		98.1	376	375	77.8	30.0	93.0	63.0	77.8	
35	37		97.7	374	375	77.7	27.0	90.0	63.0	77.7	

STRESSING RECORD FOR STAY CABLES WITH CONTEN METHOD 1st STRESSING
DYWIDAG-SYSTEMS INTERNATIONAL

Project: Sixth Street Cable Stayed Bridge- Milwaukee

Cable no.	WEST N12	Cable Type	C37	Length of cable	61.327 m	No. of strands	37
Construction stage	11.2	Length of jack	1000 mm	Relieve	3.0 mm	Slip	3.0 mm
Jack type	ConTen 140 kN	Jack no.	DSI 190397	Piston area	26.5 cm²	Friction	0.0%
Tension side	Deck	Date of tensioining		Person resp. for tensioning works		Owner's representative	
Temperature of 1st strand		4/9/2002		Columba Cannon			

Se-quence	Strand number for		Required force at anchorage after relieve	Gauge pressure before relieve		Elongation theoretical before relieve	Strand protrusion		Partial elongation		Remark
	Working jack	Pilot jack		theoretical	actual		at pressure of 100 bar	at final pressure	actual	theoretical	
			[kN]	[bar]	[bar]	[mm]	[mm]	[mm]	[mm]	[mm]	
1	22	-	132.5	505		-				-	
2	34	22	102.0	390	381	307.9	33.0	243.0	210.0	228.9	
3	33		91.9	351	330	239.1	30.0	176.0	146.0	171.1	
4	21	34	87.0	333	319	216.0	99.0	235.0	136.0	151.1	
5	15		84.3	323	305	205.0	105.0	224.0	119.0	141.5	
6	23		82.4	316	304	198.6	128.0	258.0	130.0	135.7	
7	9		81.1	311	302	194.5	104.0	231.0	127.0	131.9	
8	16		80.1	307	300	191.6	110.0	236.0	126.0	129.2	
9	24	21	79.4	304	292	189.4	135.0	259.0	124.0	127.2	
10	25		78.7	302	284	187.8	103.0	205.0	102.0	125.6	
11	10		78.0	299	280	185.9	97.0	201.0	104.0	123.8	
12	4		77.4	297	275	184.5	98.0	197.0	99.0	122.4	
13	3		76.9	295	270	183.2	106.0	205.0	99.0	121.1	
14	8		76.5	293	267	182.2	98.0	194.0	96.0	120.1	
15	20		76.1	292	262	181.2	100.0	192.0	92.0	119.2	
16	35		75.6	290	261	179.9	97.0	189.0	92.0	117.9	
17	17		75.1	288	260	178.8	84.0	177.0	93.0	116.8	
18	5		74.6	287	259	177.8	87.0	178.0	91.0	115.8	
19	1		74.3	285	257	176.9	89.0	176.0	87.0	114.9	
20	2		73.9	284	256	176.1	88.0	183.0	95.0	114.0	
21	14		73.4	282	254	175.0	87.0	178.0	91.0	112.9	
22	32		73.0	280	252	174.0	88.0	174.0	86.0	111.9	
23	26		72.6	279	250	173.0	88.0	176.0	88.0	111.0	
24	11		72.2	277	250	172.2	91.0	179.0	88.0	110.1	
25	6	33	71.9	276	248	171.4	88.0	171.0	83.0	109.3	
26	7		71.4	274	245	170.4	89.0	174.0	85.0	108.3	
27	13		71.0	273	243	169.4	91.0	172.0	81.0	107.3	
28	31		70.6	271	242	168.5	86.0	170.0	84.0	106.4	
29	27		70.2	270	242	167.6	84.0	167.0	83.0	105.5	
30	18		69.9	269	241	166.9	85.0	167.0	82.0	104.7	
31	12		69.5	267	240	165.9	83.0	163.0	80.0	103.7	
32	19		69.1	265	239	164.9	90.0	170.0	80.0	102.8	
33	30		68.7	264	238	164.0	85.0	169.0	84.0	101.9	
34	36		68.3	263	237	163.2	85.0	164.0	79.0	101.0	
35	28		68.0	261	236	162.4	84.0	162.0	78.0	100.2	
36	29		67.5	260	235	161.5	87.0	165.0	78.0	99.3	
37	37		67.2	258	232	160.6	80.0	157.0	77.0	98.4	

STRESSING RECORD FOR STAY CABLES WITH CONTEN METHOD 2nd STRESSING
DYWIDAG-SYSTEMS INTENATIONAL

Project: Sixth Street Cable Stayed Bridge- Milwaukee

Cable no.	WEST N12	Cable type	C37	Length of cable	61.327 m	No. of strands	37
Construction stage	12.1	Length of jack	1000 mm	Relieve	3.0 mm	Slip	1.0 mm
Jack type	ConTen 140 kN	Jack no.	DSI 190397	Priston area	26.5 cm²	Friction	0.0%
Tension side	Deck	Date of tensioning		Person resp. for tensioning works		Owner's representative	
Temperature of 1st strand		4/9/2002					

Sequence	Strand number for		Required force at anchorage after relieve	Gauge pressure before relieve		Elongation theoretical before relieve	Strand protrusion		Elongation		Remark
	Working jack	Pilot jack	[kN]	theoretical [bar]	actual [bar]	[mm]	before stressing [mm]	at final pressure [mm]	actual [mm]	theoretical [mm]	
1	22	-	102.0	390	401	86.3				86.3	
2	34	22	101.9	389	398	86.3	26.0	119.0	93.0	86.3	
3	33		101.7	389	393	86.2	27.0	126.0	99.0	86.2	
4	21	34	101.5	388	393	86.2	26.0	120.0	94.0	86.2	
5	15		101.4	387	392	86.2	26.0	127.0	101.0	86.2	
6	23		101.2	387	391	86.2	24.0	112.0	88.0	86.2	
7	9		101.0	386	390	86.2	24.0	101.0	77.0	86.2	
8	16		100.9	385	389	86.2	24.0	103.0	79.0	86.2	
9	24	21	100.7	385	388	86.2	24.0	103.0	79.0	86.2	
10	25		100.6	384	387	86.2	25.0	132.0	107.0	86.2	
11	10		100.4	384	385	86.2	24.0	122.0	98.0	86.2	
12	4		100.2	383	383	86.2	25.0	118.0	93.0	86.2	
13	3		100.1	382	381	86.2	29.0	137.0	108.0	86.2	
14	8		99.9	382	380	86.2	26.0	116.0	90.0	86.2	
15	20		99.7	381	380	86.2	30.0	129.0	99.0	86.2	
16	35		99.6	381	379	86.2	25.0	118.0	93.0	86.2	
17	17		99.4	380	378	86.2	29.0	127.0	98.0	86.2	
18	5		99.3	379	378	86.2	24.0	123.0	99.0	86.2	
19	1		99.1	379	376	86.1	25.0	119.0	94.0	86.1	
20	2		98.9	378	375	86.1	26.0	119.0	93.0	86.1	
21	14		98.8	377	376	86.1	26.0	120.0	94.0	86.1	
22	32		98.6	377	374	86.1	30.0	129.0	99.0	86.1	
23	26		98.4	376	374	86.1	24.0	119.0	95.0	86.1	
24	11		98.3	376	372	86.1	24.0	121.0	97.0	86.1	
25	6	33	98.1	375	371	86.1	24.0	124.0	100.0	86.1	
26	7		98.0	374	371	86.1	26.0	122.0	96.0	86.1	
27	13		97.8	374	371	86.1	26.0	125.0	99.0	86.1	
28	31		97.6	373	370	86.1	29.0	133.0	104.0	86.1	
29	27		97.5	373	369	86.1	24.0	121.0	97.0	86.1	
30	18		97.3	372	368	86.1	29.0	124.0	95.0	86.1	
31	12		97.1	371	368	86.1	25.0	125.0	100.0	86.1	
32	19		97.0	371	368	86.1	24.0	123.0	99.0	86.1	
33	30		96.8	370	367	86.1	24.0	115.0	91.0	86.1	
34	36		96.7	369	367	86.1	24.0	119.0	95.0	86.1	
35	28		96.5	369	366	86.1	24.0	122.0	98.0	86.1	
36	29		96.3	368	365	86.0	32.0	131.0	99.0	86.0	
37	37		96.0	367	363	86.0	25.0	124.0	99.0	86.0	

NORTH CABLE STAY PYLON MONITORING

DATE	3/26/2002	3/26/2002	3/27/2002	3/27/2002	3/27/2002	3/28/2002	3/28/2002	3/28/2002
	BASELINE	70% N7	Morning	100% N7	70% N6	Morning	100% N6	70% N8
WEST N1	37.21							
WEST N2	36.97							
WEST N3	36.80							
WEST N4	36.68							
WEST N5	36.52			36.53	36.52	36.52	36.52	
WEST N6	36.25	36.26	36.25	36.26	36.25	36.26	36.26	
WEST N7	36.54	36.55	36.54	36.55	36.54	36.55	36.55	36.55
WEST N8	36.55	36.56	36.55	36.56	36.56	36.56	36.56	36.58
WEST N9	36.55						36.56	36.57
WEST N10	36.56							
WEST N11	36.51							
WEST N12	36.47							
CL 1	35.26							
CL 2	35.25							
CL 3	35.17							
CL 4	35.20							
CL 5	35.17			35.18	35.17	35.17	35.18	
CL 6	35.14	35.14	35.13	35.14	35.14	35.13	35.13	
CL 7	35.14	35.14	35.13	35.14	35.14	35.14	35.14	35.15
CL 8	35.05	35.05	35.05	35.06	35.05	35.05	35.05	35.06
CL 9	34.96						34.96	34.97
CL 10	34.87							
CL 11	34.72							
CL 12	34.60							
EAST N1	37.17							
EAST N2	36.98							
EAST N3	36.81							
EAST N4	36.69							
EAST N5	36.55			36.56	36.55	36.55	36.55	
EAST N6	36.28	36.28	36.28	36.29	36.28	36.28	36.28	
EAST N7	36.51	36.52	36.51	36.53	36.52	36.52	36.52	36.52
EAST N8	36.54	36.54	36.54	36.55	36.55	36.54	36.54	36.56
EAST N9	36.57						36.57	36.58
EAST N10	36.56							
EAST N11	36.52							
EAST N12	36.48							
WEST TOP OF WINDOW ELEVATION	40+28.62	40+28.59	40+28.62	40+28.60	40+28.63	40+28.63	40+28.62	40+28.47
	-33.68	-33.66	-33.67	-33.71	-33.73	-33.67	-33.67	-33.67
			120.45	120.46	120.39	120.46	120.46	120.50
WEST BOTTOM OF WINDOW ELEVATION	40+23.81	40+23.77	40+23.81	40+23.79	40+23.81	40+23.80	40+23.80	40+23.72
	-33.73	-33.72	-33.72	-33.74	-33.72	-33.72	-33.73	-33.73
			94.65	94.63	94.62	94.62	94.64	94.65
EAST TOP OF WINDOW ELEVATION	40+28.57	40+28.53	40+28.58	40+28.55	40+28.61	40+28.59	40+28.59	40+28.44
	32.12	32.15	32.14	32.10	32.14	32.12	32.13	32.11
			120.35	120.35	120.35	120.38	120.38	120.41
EAST BOTTOM OF WINDOW ELEVATION	40+23.83	40+23.81	40+23.84	40+23.82	40+23.84	40+23.84	40+23.82	40+23.75
	32.15	32.17	32.16	32.13	32.16	32.15	32.15	32.14
			94.56	94.56	94.56	94.56	94.57	94.6
TEMPERATURE	28F	34F	28F	41F	42F	36F	38F	43F
CONDITION	P. SUNNY	SUNNY	SUNNY	SUNNY	SUNNY	CLOUDY	CLOUDY	CLOUDY
TIME		3:41PM	7:21AM	11:00AM	2:40PM	7:00AM	8:50AM	2:00PM

NORTH CABLE STAY PYLON MONITORING

DATE	3/29/2002	3/29/2002	3/29/2002	3/29/2002	4/1/2002	4/1/2002	4/1/2002	4/2/2002
	Morning	100% N8	70% N5	100% N5	Morning	70% N9	100% N9	Morning
WEST N1								
WEST N2								
WEST N3							36.81	36.82
WEST N4	36.68	36.68	36.69	36.69			36.69	36.71
WEST N5	36.52	36.53	36.54	36.54			36.54	36.56
WEST N6	36.26	36.27	36.27	36.27				
WEST N7	36.55	36.55						
WEST N8	36.58	36.59			36.6	36.6	36.59	
WEST N9	36.56	36.57			36.57	36.59	36.59	
WEST N10					36.56	36.57	36.56	
WEST N11								
WEST N12								
CL 1								
CL 2								
CL 3							35.18	35.18
CL 4	35.2	35.2	35.21	35.2			35.2	35.21
CL 5	35.18	35.18	35.18	35.18			35.18	35.19
CL 6	35.14	35.14	35.14	35.14				
CL 7	35.14	35.14						
CL 8	35.05	35.06			35.06	35.07	35.05	
CL 9	34.97	34.97			34.96	34.98	34.97	
CL 10					34.86	34.88	34.86	
CL 11								
CL 12								
EAST N1								
EAST N2								
EAST N3							36.81	36.83
EAST N4	36.69	36.69	36.7	36.7			36.7	36.71
EAST N5	36.56	36.56	36.57	36.57			36.57	36.59
EAST N6	36.29	36.29	36.3	36.29				
EAST N7	36.52	36.52						
EAST N8	36.56	36.57			36.58	36.59	36.57	
EAST N9	36.58	36.59			36.58	36.61	36.61	
EAST N10					36.56	36.57	36.56	
EAST N11								
EAST N12								
WEST TOP	40+28.45	40+28.33	40+28.41	40+28.48	40+28.46	40+28.28	40+28.18	40+28.17
OF WINDOW	-33.68	-33.67	-33.66	-33.67	-33.66	-33.67	-33.66	-33.63
ELEVATION	120.51	120.51	120.49	120.48	120.47	120.52	120.55	120.53
WEST BOTTOM	40+23.72	40+23.64	40+23.69	40+23.72	40+23.71	40+23.60	40+23.54	40+23.53
OF WINDOW	-33.72	-33.73	-33.72	-33.73	-33.72	-33.72	-33.71	-33.71
ELEVATION	94.65	94.67	94.66	94.66	94.65	94.67	94.68	94.7
EAST TOP	40+28.43	40+28.31	40+28.39	40+28.47	40+28.44	40+28.28	40+28.17	40+28.16
OF WINDOW	32.12	32.1	32.11	32.1	32.11	32.09	32.07	32.07
ELEVATION	120.43	120.43	120.41	120.41	120.39	120.44	120.46	120.47
EAST BOTTOM	40+23.75	40+23.65	40+23.69	40+23.75	40+23.76	40+23.63	40+23.57	40+23.57
OF WINDOW	32.14	32.14	32.14	32.15	32.14	32.13	32.13	32.12
ELEVATION	94.61	94.6	94.59	94.6	94.59	94.6	94.62	94.61
TEMPERATURE	40F	41F	47F	44F	32F	35F	35F	35F
CONDITION	CLOUDY	CLOUDY	Hard Rain	Cloudy	P. Cloudy	P. Sunny	Cloudy	Rain
TIME	7:00AM	8:15AM	11:00AM	2:10PM	7:15AM	10:30AM	1:00PM	7:30AM

NORTH CABLE STAY PYLON MONITORING

DATE	4/2/2002	4/2/2002	4/3/2002	4/3/2002	4/3/2002	4/4/2002	4/4/2002	4/4/2002
	70% N4	100% N4	Morning	70% N10	100% N10	Morning	70% N3	100% N3
WEST N1								
WEST N2						36.99	37	37.01
WEST N3	36.82	36.83				36.85	36.86	36.86
WEST N4	36.71	36.72				36.75	36.76	36.75
WEST N5	36.56	36.56						
WEST N6								
WEST N7								
WEST N8								
WEST N9			36.63	36.61	36.61			
WEST N10			36.58	36.59	36.6			36.62
WEST N11			36.51	36.51	36.52			36.53
WEST N12								36.48
CL 1								
CL 2						35.26	35.26	25.26
CL 3	35.18	35.19				35.2	35.2	35.2
CL 4	35.21	35.22				35.23	35.23	35.23
CL 5	35.18	35.19						
CL 6								
CL 7								
CL 8								
CL 9			34.99	34.99	34.99			
CL 10			34.88	34.88	34.88			34.91
CL 11			34.71	34.71	34.72			34.73
CL 12								34.59
EAST N1								
EAST N2						36.99	37.01	37
EAST N3	36.83	36.84				36.85	36.87	36.86
EAST N4	36.71	36.73				36.75	36.76	36.76
EAST N5	36.58	36.59						
EAST N6								
EAST N7								
EAST N8								
EAST N9			36.64	36.62	36.63			
EAST N10			36.58	36.59	36.6			36.62
EAST N11			36.52	36.53	36.53			36.54
EAST N12								36.49
WEST TOP	40+28.25	40+28.31	40+28.33	40+28.15	40+28.06	40+28.06	40+28.14	40+28.20
OF WINDOW	-33.64	-33.64	-33.64	-33.66	-33.65	-33.62	-33.62	-33.63
ELEVATION	120.51	120.51	120.5	120.53	120.45	120.57	120.54	120.51
WEST BOTTOM	40+23.58	40+23.62	40+23.63	40+23.53	40+23.47	40+23.46	40+23.52	40+23.54
OF WINDOW	-33.71	-33.71	-33.71	-33.72	-33.71	-33.69	-33.69	-33.7
ELEVATION	94.68	94.67	94.67	94.69	94.7	94.68	94.68	94.68
EAST TOP	40+28.24	40+28.30	40+28.31	40+28.12	40+28.05	40+28.04	40+28.15	40+28.19
OF WINDOW	32.07	32.08	32.05	32.04	32.04	32.04	32.05	32.05
ELEVATION	120.43	120.42	120.4	120.44	120.45	120.47	120.45	120.45
EAST BOTTOM	40+23.61	40+23.64	40+23.67	40+23.54	40+23.50	40+23.49	40+23.55	40+23.59
OF WINDOW	32.12	32.12	32.11	32.1	32.11	32.1	32.1	32.1
ELEVATION	94.59	94.59	94.6	94.6	94.61	94.63	94.62	94.59
TEMPERATURE	36F	36F	32F	38F	36F	32F	32F	34F
CONDITION	LT. Rain	Cloudy	Sunny	P. Sunny	Cloudy	Cloudy	Cloudy	Cloudy
TIME	9:18AM	12:55PM	7:30AM	11:53AM	3:20PM	7:30AM	8:42AM	11:20AM

NORTH CABLE STAY PYLON MONITORING

DATE	4/5/2002	4/5/2002	4/8/2002	4/8/2002	4/8/2002	4/9/2002	4/9/2002	4/9/2002
	70% N11	100% N11	Morning	70% N2	100% N2	Morning	70% N12	100% N12
WEST N1		37.21	37.21	37.22	37.22			
WEST N2		37.02	37.02	37.04	37.04			
WEST N3		36.89	36.9	36.9	36.9			
WEST N4								
WEST N5								
WEST N6								
WEST N7								
WEST N8								
WEST N9								
WEST N10	36.62	36.61				36.66	36.65	36.64
WEST N11	36.54	36.54				36.59	36.61	36.59
WEST N12	36.48	36.48				36.5	36.54	36.53
CL 1		35.26	35.26	35.27	35.27			
CL 2		35.27	35.28	35.29	35.29			
CL 3		35.22	35.23	35.23	35.23			
CL 4								
CL 5								
CL 6								
CL 7								
CL 8								
CL 9								
CL 10	34.9	34.9				34.91	34.91	34.91
CL 11	34.73	34.72				34.74	34.74	34.75
CL 12	34.6	34.59				34.6	34.61	34.62
EAST N1		37.17	37.18	37.19	37.18			
EAST N2		37.02	37.02	37.04	37.04			
EAST N3		36.9	36.91	36.91	36.91			
EAST N4								
EAST N5								
EAST N6								
EAST N7								
EAST N8								
EAST N9								
EAST N10	36.62	36.61				36.66	36.64	36.63
EAST N11	36.55	36.55				36.59	36.6	36.59
EAST N12	36.49	36.49				36.5	36.53	36.54
WEST TOP	40+28.08	40+28.03	*	*	*	40+28.17	40+28.09	40+28.03
OF WINDOW	-33.64	-33.62	*	*	*	-33.61	-33.61	-33.61
ELEVATION	120.52	120.54	*	*	*	120.52	120.53	120.55
WEST BOTTOM	40+23.50	40+23.46	*	40+23.54	*	40+23.53	40+23.50	40+23.47
OF WINDOW	-33.69	-33.69	*	-33.68	*	-33.69	-33.68	-33.69
ELEVATION	94.67	94.68	*	94.68	*	94.68	94.67	94.69
EAST TOP	40+28.07	40+28.02	*	*	*	40+28.16	40+28.08	40+28.02
OF WINDOW	32.03	32.03	*	*	*	32.03	32.03	32.03
ELEVATION	120.43	120.45	*	*	*	120.46	120.47	120.48
EAST BOTTOM	40+23.54	40+23.5	*	*	*	40+23.58	40+23.53	40+23.51
OF WINDOW	32.1	32.1	*	*	*	32.09	32.1	32.09
ELEVATION	94.6	94.6	*	*	*	94.6	94.63	94.62
TEMPERATURE	34F	38F	48F	46F	46F	39F	42F	43F
CONDITION	Sunny	Cloudy	Foggy*	Rain Fog	Rain Fog	Cloudy	Cloudy	P. Sunny
TIME	9:25AM	11:58AM	7:30AM	12:27PM	2:52PM	7:15AM	10:22AM	1:43PM

* It is too foggy to survey the tower points at this time

NORTH CABLE STAY PYLON MONITORING

DATE	4/10/2002	4/10/2002	4/10/2002	3/26/2002	4/10/2002	
	Morning	70% N1	100% N1	BASELINE	FINAL	
WEST N1	37.24	37.23	37.22	37.21	37.22	-0.01
WEST N2	37.09	37.06	37.04	36.97	37.04	-0.07
WEST N3	36.96	36.92	36.88	36.80	36.88	-0.08
WEST N4			36.76	36.68	36.76	-0.08
WEST N5			36.58	36.52	36.58	-0.06
WEST N6			36.28	36.25	36.28	-0.03
WEST N7			36.53	36.54	36.53	0.01
WEST N8			36.6	36.55	36.6	-0.05
WEST N9			36.66	36.55	36.66	-0.11
WEST N10			36.7	36.56	36.7	-0.14
WEST N11			36.66	36.51	36.66	-0.15
WEST N12			36.58	36.47	36.58	-0.11
CL 1	35.28	35.27	35.26	35.26	35.26	0.00
CL 2	35.31	35.3	35.28	35.25	35.28	-0.03
CL 3	35.27	35.24	35.22	35.17	35.22	-0.05
CL 4			35.24	35.20	35.24	-0.04
CL 5			35.2	35.17	35.2	-0.03
CL 6			35.15	35.14	35.15	-0.01
CL 7			35.12	35.14	35.12	0.02
CL 8			35.06	35.05	35.06	-0.01
CL 9			35.02	34.96	35.02	-0.06
CL 10			34.97	34.87	34.97	-0.10
CL 11			34.81	34.72	34.81	-0.09
CL 12			34.65	34.60	34.65	-0.05
EAST N1	37.21	37.19	37.18	37.17	37.18	-0.01
EAST N2	37.09	37.06	37.04	36.98	37.04	-0.06
EAST N3	36.97	36.93	36.89	36.81	36.89	-0.08
EAST N4			36.76	36.69	36.76	-0.07
EAST N5			36.61	36.55	36.61	-0.06
EAST N6			36.3	36.28	36.3	-0.02
EAST N7			36.5	36.51	36.5	0.01
EAST N8			36.58	36.54	36.58	-0.04
EAST N9			36.67	36.57	36.67	-0.10
EAST N10			36.69	36.56	36.69	-0.13
EAST N11			36.65	36.52	36.65	-0.13
EAST N12			36.58	36.48	36.58	-0.10
WEST TOP	40+28.03	40+28.15	40+28.19	40+28.62	40+28.19	0.43
OF WINDOW	-33.57	-33.62	-33.62	-33.68	-33.62	-0.06
ELEVATION	120.56	120.51	120.51		120.51	
WEST BOTTOM	40+23.48	40+23.53	40+23.56	40+23.81	40+23.56	0.25
OF WINDOW	-33.67	-33.69	-33.69	-33.73	-33.69	-0.04
ELEVATION	94.68	94.66	94.66		94.66	
EAST TOP	40+28.03	40+28.14	40+28.18	40+28.57	40+28.18	0.39
OF WINDOW	32.03	32.01	32.02	32.12	32.02	0.10
ELEVATION	120.46	120.44	120.44		120.44	
EAST BOTTOM	40+23.52	40+23.58	40+23.60	40+23.83	40+23.60	0.23
OF WINDOW	32.09	32.09	32.1	32.15	32.1	0.05
ELEVATION	94.62	94.61	94.59		94.59	
TEMPERATURE	38F	51F	53F	28F	53F	
CONDITION	Sunny	Sunny	Sunny	P. SUNNY	Sunny	
TIME	7:16AM	11:37AM	2:27PM		2:27PM	
			LAST CABLE			

STAY CABLES STRESSED WITH CONTEN METHOD

DYWIDAG-SYSTEMS INTERNATIONAL

Lift-Off Test

Project: **Sixth Street Cable Stayed Bridge- Milwaukee**

Cable Designation:	N5-WEST
Cable Type:	C31
Number of Strands:	22
Cable Length:	22.054 m
Date of Lift-Off:	4/12/2002
Time of Lift-Off:	10:43AM
Ambient Temperature:	58F
Weather Condition:	Cloudy
Engineer Present:	Jason Samz

First Operation

Strand No.	Dial readings (Bar)	
	First	Second
25	368	
20	355	
18	339	
19	353	

Second Operation

Strand No.	Dial readings (Bar)	
	First	Second
9	350	
26	360	

STAY CABLES STRESSED WITH CONTEN METHOD

DYWIDAG-SYSTEMS INTERNATIONAL DSI

Lift-Off Test

Project: **Sixth Street Cable Stayed Bridge- Milwaukee**

Cable Designation:	N11-WEST
Cable Type:	C37
Number of Strands:	35
Cable Length:	52.585 m
Date of Lift-Off:	4/12/2002
Time of Lift-Off:	12:59PM
Ambient Temperature:	58F
Weather Condition:	Cloudy
Engineer Present:	Jason Samz

First Operation

Strand No.	Dial readings (Bar)	
	First	Second
25	394	
20	392	
36	391	
37	395	
26	390	
21	411	

Second Operation

Strand No.	Dial readings (Bar)	
	First	Second
23	406	
5	397	
7	390	

STAY CABLES STRESSED WITH CONTEN METHOD

DYWIDAG-SYSTEMS INTERNATIONAL

Lift-Off Test

Project: **Sixth Street Cable Stayed Bridge- Milwaukee**

Cable Designation:	N9-EAST
Cable Type:	C37
Number of Strands:	30
Cable Length:	35.763 m
Date of Lift-Off:	4/15/2002
Time of Lift-Off:	7:30AM
Ambient Temperature:	66F
Weather Condition:	Cloudy
Engineer Present:	Jason Samz

First Operation

Strand No.	Dial readings (Bar)	
	First	Second
27	360	
30	362	
25	371	
20	360	
9	370	
12	359	

Second Operation

Strand No.	Dial readings (Bar)	
	First	Second
37	359	
5	362	
7	368	

STAY CABLES STRESSED WITH CONTEN METHOD

DYWIDAG-SYSTEMS INTERNATIONAL

Lift-Off Test

Project: **Sixth Street Cable Stayed Bridge- Milwaukee**

Cable Designation:	N3-EAST
Cable Type:	C31
Number of Strands:	23
Cable Length:	30.071 m
Date of Lift-Off:	4/15/2002
Time of Lift-Off:	9:30AM
Ambient Temperature:	69F
Weather Condition:	P. Sunny
Engineer Present:	Jason Samz

First Operation

Strand No. .	Dial readings (Bar)	
	First	Second
25	375	
20	368	
18	362	
19	373	

Second Operation

Strand No.	Dial readings (Bar)	
	First	Second
9	373	
12	371	

STRESSING RECORD FOR STAY CABLES WITH CONTEN METHOD 1st STRESSING
DYWIDAG-SYSTEMS INTERNATIONAL

Project: **Sixth Street Cable Stayed Bridge- Milwaukee**

Cable no.	EAST S1	Cable Type	C37	Length of cable	40.689 m	No. of strands	36
Construction stage	11.2	Length of jack	1000 mm	Relieve	3.0 mm	Slip	3.0 mm
Jack type	ConTen 140 kN	Jack no.	DSI 19039	Piston area	26.5 cm²	Friction	0.0%
Tension side	Deck	Date of tensioining		Person resp. for tensioning works		Owner's representative	
Temperature of 1st strand		6/13/2002		Columba Cannon			

Se-quence	Strand number for		Required force at anchorage after relieve	Gauge pressure before relieve		Elongation theoretical before relieve	Strand protrusion		Partial elongation		Remark
	Working jack	Pilot jack		theoretical	actual		at pressure of 100 bar	at final pressure	actual	theoretical	
			[kN]	[bar]	[bar]	[mm]	[mm]	[mm]	[mm]	[mm]	
1	22	-	113.5	436	436	-				-	
2	34	22	99.0	381	420	179.5	72.0	207.0	135.0	132.4	
3	24		94.9	365	415	157.5	69.0	204.0	135.0	114.4	
4	33	24	92.9	358	409	151.2	78.0	211.0	133.0	109.0	
5	21		91.7	353	402	148.2	68.0	198.0	130.0	106.3	
6	15		90.4	348	398	145.8	75.0	198.0	123.0	104.0	
7	23	21	89.5	345	396	144.2	24.0	29.0	5.0	102.4	
8	16		88.8	342	395	143.0	74.0	199.0	125.0	101.2	
9	9		88.2	340	393	142.1	75.0	198.0	123.0	100.3	
10	25		87.8	339	390	141.4	69.0	190.0	121.0	99.6	
11	10		86.9	335	387	140.0	65.0	186.0	121.0	98.3	
12	4		86.2	333	381	138.9	68.0	188.0	120.0	97.2	
13	3	34	85.6	330	377	138.0	69.0	184.0	115.0	96.2	
14	8		85.1	328	372	137.2	71.0	186.0	115.0	95.4	
15	20		84.6	327	366	136.5	73.0	185.0	112.0	94.7	
16	32		83.9	324	364	135.3	69.0	177.0	108.0	93.5	
17	14		83.2	321	362	134.3	71.0	187.0	116.0	92.5	
18	2		82.6	319	360	133.3	79.0	183.0	104.0	91.6	
19	1		82.1	317	358	132.5	76.0	181.0	105.0	90.7	
20	5		81.6	315	355	131.8	74.0	180.0	106.0	90.0	
21	17		80.9	313	351	130.7	69.0	174.0	105.0	88.9	
22	26		80.2	310	349	129.7	63.0	170.0	107.0	87.8	
23	11		79.6	308	346	128.7	64.0	167.0	103.0	86.9	
24	6		79.1	306	344	127.9	67.0	166.0	99.0	86.1	
25	7		78.6	304	340	127.1	80.0	183.0	103.0	85.3	
26	13		77.9	301	338	126.1	72.0	173.0	101.0	84.2	
27	31		77.2	299	336	125.1	77.0	174.0	97.0	83.2	
28	30		76.6	296	333	124.2	66.0	166.0	100.0	82.3	
29	19		76.1	294	331	123.3	62.0	162.0	100.0	81.4	
30	12		75.5	292	330	122.5	67.0	165.0	98.0	80.6	
31	18		74.9	290	328	121.5	71.0	165.0	94.0	79.6	
32	27		74.2	288	326	120.5	65.0	159.0	94.0	78.6	
33	36		73.6	285	324	119.6	63.0	156.0	93.0	77.7	
34	28		73.1	283	321	118.7	67.0	161.0	94.0	76.8	
35	29		72.6	281	319	117.9	64.0	155.0	91.0	76.0	
36	37		72.0	279	317	117.0	62.0	156.0	94.0	75.1	

STRESSING RECORD FOR STAY CABLES WITH CONTEN METHOD 2nd STRESSING
DYWIDAG-SYSTEMS INTENATIONAL

Project: Sixth Street Cable Stayed Bridge- Milwaukee

Cable no.	EAST S1	Cable Type	C37	Length of cable	40.689 m	No. of strands	36
Construction stage	12.1	Length of jack	1000 mm	Relieve	3.0 mm	Slip	1.0 mm
Jack type	ConTen 140 kN	Jack no.	DSI 190397	Priston area	26.5 cm²	Friction	0.0%
Tension side	Deck	Date of tensioning		Person resp. for tensioning works		Owner's representative	
Temperature of 1st strand		6/13/2002					

Se-quence	Strand number for		Required force at anchorage after relieve	Gauge pressure before relieve		Elongation theoretical	Strand protrusion		Elongation		Remark
	Working jack	Pilot jack	[kN]	theoretical [bar]	actual [bar]	before relieve [mm]	before stressing [mm]	at final pressure [mm]	actual [mm]	theoretical [mm]	
1	22	-	112.0	430	430	67.9				67.9	
2	34	22	111.8	429	429	67.9	24.0	82.0	58.0	67.9	
3	24		111.5	428	429	67.9	24.0	76.0	52.0	67.9	
4	33	24	111.3	427	428	67.9	24.0	80.0	56.0	67.9	
5	21		111.0	426	427	67.9	24.0	80.0	56.0	67.9	
6	15		110.8	425	426	67.9	24.0	79.0	55.0	67.9	
7	23	21	110.5	424	425	67.9	24.0	75.0	51.0	67.9	
8	16		110.2	423	423	67.9	24.0	72.0	48.0	67.9	
9	9		110.0	422	422	67.9	25.0	74.0	49.0	67.9	
10	25		109.7	421	422	67.8	24.0	75.0	51.0	67.8	
11	10		109.5	420	421	67.8	24.0	73.0	49.0	67.8	
12	4		109.2	419	420	67.8	24.0	78.0	54.0	67.8	
13	3	34	109.0	419	419	67.8	25.0	80.0	55.0	67.8	
14	8		108.7	418	419	67.8	24.0	82.0	58.0	67.8	
15	20		108.5	417	418	67.8	25.0	81.0	56.0	67.8	
16	32		108.2	416	417	67.8	25.0	79.0	54.0	67.8	
17	14		108.0	415	415	67.8	24.0	78.0	54.0	67.8	
18	2		107.7	414	415	67.8	25.0	79.0	54.0	67.8	
19	1		107.5	413	413	67.8	25.0	78.0	53.0	67.8	
20	5		107.2	412	413	67.8	25.0	80.0	55.0	67.8	
21	17		106.9	411	412	67.7	25.0	80.0	55.0	67.7	
22	26		106.7	410	411	67.7	29.0	83.0	54.0	67.7	
23	11		106.4	409	410	67.7	25.0	79.0	54.0	67.7	
24	6		106.2	408	409	67.7	24.0	78.0	54.0	67.7	
25	7		105.9	407	409	67.7	28.0	81.0	53.0	67.7	
26	13		105.7	406	408	67.7	25.0	79.0	54.0	67.7	
27	31		105.4	405	407	67.7	25.0	79.0	54.0	67.7	
28	30		105.2	404	406	67.7	26.0	78.0	52.0	67.7	
29	19		104.9	403	405	67.7	25.0	77.0	52.0	67.7	
30	12		104.7	402	404	67.7	24.0	77.0	53.0	67.7	
31	18		104.4	401	402	67.6	25.0	77.0	52.0	67.6	
32	27		104.2	400	401	67.6	27.0	79.0	52.0	67.6	
33	36		103.9	399	400	67.6	25.0	77.0	52.0	67.6	
34	28		103.7	398	399	67.6	27.0	80.0	53.0	67.6	
35	29		103.4	397	398	67.6	25.0	77.0	52.0	67.6	
36	37		102.9	396	397	67.6	29.0	81.0	52.0	67.6	

STRESSING RECORD FOR STAY CABLES WITH CONTEN METHOD 1st STRESSING
DYWIDAG-SYSTEMS INTERNATIONAL

Project: **Sixth Street Cable Stayed Bridge- Milwaukee**

Cable no.	WEST S1	Cable Type	C37	Length of cable	40.689 m	No. of strands	36
Construction stage	11.2	Length of jack	1000 mm	Relieve	3.0 mm	Slip	3.0 mm
Jack type	ConTen 140 kN	Jack no.	DSI 19039	Piston area	26.5 cm²	Friction	0.0%
Tension side	Deck	Date of tensioining		Person resp. for tensioning works		Owner's representative	
Temperature of 1st strand		6/13/2002		Jason Samz			

Se-quence	Strand number for		Required force at anchorage after relieve	Gauge pressure before relieve		Elongation theoretical before relieve	Strand protrusion		Partial elongation		Remark
	Working jack	Pilot jack		theoretical	actual		at pressure of 100 bar	at final pressure	actual	theoretical	
			[kN]	[bar]	[bar]	[mm]	[mm]	[mm]	[mm]	[mm]	
1	22	-	113.5	436	437	-				-	
2	34	22	99.0	381	440	179.5	76.0	215.0	139.0	132.4	
3	24		94.9	365	430	157.5	74.0	203.0	129.0	114.4	
4	33	24	92.9	358	412	151.2	81.0	210.0	129.0	109.0	
5	21		91.7	353	412	148.2	74.0	202.0	128.0	106.3	
6	15		90.4	348	406	145.8	78.0	202.0	124.0	104.0	
7	23	21	89.5	345	415	144.2	25.0	30.0	5.0	102.4	
8	16		88.8	342	409	143.0	85.0	212.0	127.0	101.2	
9	9		88.2	340	409	142.1	77.0	200.0	123.0	100.3	
10	25		87.8	339	400	141.4	80.0	204.0	124.0	99.6	
11	10		86.9	335	398	140.0	76.0	198.0	122.0	98.3	
12	4		86.2	333	397	138.9	85.0	207.0	122.0	97.2	
13	3	34	85.6	330	394	138.0	85.0	206.0	121.0	96.2	
14	8		85.1	328	390	137.2	73.0	192.0	119.0	95.4	
15	20		84.6	327	388	136.5	85.0	202.0	117.0	94.7	
16	32		83.9	324	385	135.3	76.0	192.0	116.0	93.5	
17	14		83.2	321	380	134.3	71.0	185.0	114.0	92.5	
18	2		82.6	319	379	133.3	72.0	187.0	115.0	91.6	
19	1		82.1	317	376	132.5	71.0	183.0	112.0	90.7	
20	5		81.6	315	374	131.8	80.0	193.0	113.0	90.0	
21	17		80.9	313	371	130.7	75.0	187.0	112.0	88.9	
22	26		80.2	310	369	129.7	112.0	224.0	112.0	87.8	
23	11		79.6	308	365	128.7	102.0	212.0	110.0	86.9	
24	6		79.1	306	362	127.9	85.0	191.0	106.0	86.1	
25	7		78.6	304	360	127.1	81.0	188.0	107.0	85.3	
26	13		77.9	301	357	126.1	70.0	176.0	106.0	84.2	
27	31		77.2	299	355	125.1	70.0	174.0	104.0	83.2	
28	30		76.6	296	352	124.2	72.0	180.0	108.0	82.3	
29	19		76.1	294	350	123.3	76.0	177.0	101.0	81.4	
30	12		75.5	292	349	122.5	76.0	177.0	101.0	80.6	
31	18		74.9	290	347	121.5	87.0	187.0	100.0	79.6	
32	27		74.2	288	342	120.5	72.0	172.0	100.0	78.6	
33	36		73.6	285	340	119.6	79.0	177.0	98.0	77.7	
34	28		73.1	283	339	118.7	86.0	185.0	99.0	76.8	
35	29		72.6	281	337	117.9	80.0	180.0	100.0	76.0	
36	37		72.0	279	335	117.0	66.0	165.0	99.0	75.1	

STRESSING RECORD FOR STAY CABLES WITH CONTEN METHOD 2nd STRESSING
DYWIDAG-SYSTEMS INTENATIONAL

Project: **Sixth Street Cable Stayed Bridge- Milwaukee**

Cable no.	WEST S1	Cable Type	C37	Length of cable	40.689 m	No. of strands	36
Construction stage	12.1	Length of jack	1000 mm	Relieve	3.0 mm	Slip	1.0 mm
Jack type	ConTen 140 kN	Jack no.	DSI 190397	Priston area	26.5 cm²	Friction	0.0%
Tension side	Deck	Date of tensioning		Person resp. for tensioning works		Owner's representative	
Temperature of 1st strand		6/13/2002					

Se-quence	Strand number for		Required force at anchorage after relieve	Gauge pressure before relieve		Elongation theoretical before relieve	Strand protrusion		Elongation		Remark
	Working jack	Pilot jack	[kN]	theoretical [bar]	actual [bar]	[mm]	before stressing [mm]	at final pressure [mm]	actual [mm]	theoretical [mm]	
1	22	-	112.0	430	430	67.9				67.9	
2	34	22	111.8	429	430	67.9	31.0	80.0	49.0	67.9	
3	24		111.5	428	429	67.9	25.0	74.0	49.0	67.9	
4	33	24	111.3	427	427	67.9	28.0	81.0	53.0	67.9	
5	21		111.0	426	425	67.9	25.0	73.0	48.0	67.9	
6	15		110.8	425	423	67.9	24.0	74.0	50.0	67.9	
7	23	21	110.5	424	424	67.9	24.0	29.0	5.0	67.9	
8	16		110.2	423	426	67.9	24.0	74.0	50.0	67.9	
9	9		110.0	422	425	67.9	39.0	87.0	48.0	67.9	
10	25		109.7	421	425	67.8	29.0	78.0	49.0	67.8	
11	10		109.5	420	420	67.8	25.0	74.0	49.0	67.8	
12	4		109.2	419	420	67.8	40.0	90.0	50.0	67.8	
13	3	34	109.0	419	420	67.8	24.0	73.0	49.0	67.8	
14	8		108.7	418	419	67.8	26.0	75.0	49.0	67.8	
15	20		108.5	417	419	67.8	26.0	74.0	48.0	67.8	
16	32		108.2	416	419	67.8	25.0	71.0	46.0	67.8	
17	14		108.0	415	418	67.8	27.0	75.0	48.0	67.8	
18	2		107.7	414	417	67.8	25.0	71.0	46.0	67.8	
19	1		107.5	413	415	67.8	27.0	74.0	47.0	67.8	
20	5		107.2	412	415	67.8	23.0	71.0	48.0	67.8	
21	17		106.9	411	414	67.7	25.0	74.0	49.0	67.7	
22	26		106.7	410	413	67.7	24.0	74.0	50.0	67.7	
23	11		106.4	409	412	67.7	27.0	79.0	52.0	67.7	
24	6		106.2	408	411	67.7	25.0	74.0	49.0	67.7	
25	7		105.9	407	410	67.7	43.0	91.0	48.0	67.7	
26	13		105.7	406	410	67.7	49.0	96.0	47.0	67.7	
27	31		105.4	405	409	67.7	26.0	74.0	48.0	67.7	
28	30		105.2	404	408	67.7	29.0	75.0	46.0	67.7	
29	19		104.9	403	408	67.7	27.0	74.0	47.0	67.7	
30	12		104.7	402	408	67.7	45.0	90.0	45.0	67.7	
31	18		104.4	401	407	67.6	47.0	94.0	47.0	67.6	
32	27		104.2	400	406	67.6	26.0	74.0	48.0	67.6	
33	36		103.9	399	406	67.6	28.0	76.0	48.0	67.6	
34	28		103.7	398	406	67.6	28.0	75.0	47.0	67.6	
35	29		103.4	397	405	67.6	24.0	69.0	45.0	67.6	
36	37		102.9	396	404	67.6	24.0	70.0	46.0	67.6	

STRESSING RECORD FOR STAY CABLES WITH CONTEN METHOD 1st STRESSING
DYWIDAG-SYSTEMS INTERNATIONAL

Project: **Sixth Street Cable Stayed Bridge- Milwaukee**

Cable no.	EAST S2	Cable Type	C37	Length of cable	34.688 m	No. of strands	30
Construction stage	11.2	Length of jack	1000 mm	Relieve	3.0 mm	Slip	3.0 mm
Jack type	ConTen 140 kN	Jack no.	DSI 19039	Piston area	26.5 cm²	Friction	0.0%
Tension side	Deck	Date of tensioining		Person resp. for tensioning works		Owner's representative	
Temperature of 1st strand		6/12/2002		Columba Cannon			

Se-quence	Strand number for		Required force at anchorage after relieve	Gauge pressure before relieve		Elongation theoretical before relieve	Strand protrusion		Partial elongation		Remark
	Working jack	Pilot jack		theoretical	actual		at pressure of 100 bar	at final pressure	actual	theoretical	
			[kN]	[bar]	[bar]	[mm]	[mm]	[mm]	[mm]	[mm]	
1	33	-	108.8	419	419	-				-	
2	34	33	100.8	389	410	148.5	28.0	52.0	24.0	110.3	
3	24		98.4	380	401	138.0	71.0	175.0	104.0	101.7	
4	16		97.1	375	398	134.9	70.0	172.0	102.0	99.0	
5	9	24	96.1	371	395	133.2	62.0	170.0	108.0	97.3	
6	15		94.7	366	390	131.2	72.0	176.0	104.0	95.3	
7	21		93.7	362	385	129.8	74.0	173.0	99.0	94.0	
8	20		93.0	359	380	128.8	75.0	172.0	97.0	93.0	
9	8		92.4	357	375	128.0	73.0	170.0	97.0	92.2	
10	3		91.9	356	372	127.4	74.0	171.0	97.0	91.6	
11	4	33	90.9	352	369	126.0	68.0	162.0	94.0	90.2	
12	10		90.0	348	365	124.9	63.0	159.0	96.0	89.0	
13	25		89.3	346	361	123.9	64.0	154.0	90.0	88.1	
14	17		88.7	343	358	123.1	66.0	157.0	91.0	87.2	
15	5		88.1	341	354	122.4	73.0	157.0	84.0	86.5	
16	1		87.2	338	350	121.2	71.0	157.0	86.0	85.3	
17	2		86.3	334	345	120.1	72.0	159.0	87.0	84.2	
18	14		85.6	332	341	119.1	65.0	154.0	89.0	83.2	
19	31		84.9	329	338	118.2	66.0	148.0	82.0	82.3	
20	13		84.4	327	335	117.4	65.0	147.0	82.0	81.5	
21	7		83.5	324	332	116.3	70.0	154.0	84.0	80.4	
22	6		82.7	321	330	115.2	65.0	145.0	80.0	79.3	
23	11		81.9	318	328	114.3	70.0	145.0	75.0	78.3	
24	26		81.3	315	325	113.4	65.0	140.0	75.0	77.4	
25	27		80.7	313	321	112.6	62.0	140.0	78.0	76.6	
26	18		79.8	310	319	111.4	68.0	143.0	75.0	75.5	
27	12		79.0	307	316	110.4	66.0	141.0	75.0	74.4	
28	19		78.2	304	313	109.4	69.0	143.0	74.0	73.4	
29	30		77.5	301	310	108.5	67.0	142.0	75.0	72.5	
30	28		76.9	299	308	107.6	68.0	139.0	71.0	71.6	

STRESSING RECORD FOR STAY CABLES WITH CONTEN METHOD 2nd STRESSING
DYWIDAG-SYSTEMS INTENATIONAL

Project: Sixth Street Cable Stayed Bridge- Milwaukee

Cable no.	EAST S2	Cable Type	C37	Length of cable	34.688 m	No. of strands	30
Construction stage	12.1	Length of jack	1000 mm	Relieve	3.0 mm	Slip	1.0 mm
Jack type	ConTen 140 kN	Jack no.	DSI 190397	Priston area	26.5 cm²	Friction	0.0%
Tension side	Deck	Date of tensioning		Person resp. for tensioning works		Owner's representative	
Temperature of 1st strand		6/12/2002					

Se-quence	Strand number for		Required force at anchorage after relieve	Gauge pressure before relieve		Elongation theoretical before relieve	Strand protrusion		Elongation		Remark
	Working jack	Pilot jack	[kN]	theoretical [bar]	actual [bar]	[mm]	before stressing [mm]	at final pressure [mm]	actual [mm]	theoretical [mm]	
1	33	-	119.4	459	459	62.5				62.5	
2	34	33	119.1	458	458	62.5	31.0	89.0	58.0	62.5	
3	24		118.7	457	457	62.5	26.0	84.0	58.0	62.5	
4	16		118.4	455	456	62.5	27.0	84.0	57.0	62.5	
5	9	24	118.1	454	453	62.5	25.0	83.0	58.0	62.5	
6	15		117.8	453	452	62.5	26.0	82.0	56.0	62.5	
7	21		117.5	452	451	62.5	31.0	82.0	51.0	62.5	
8	20		117.2	451	449	62.4	27.0	82.0	55.0	62.4	
9	8		116.8	449	448	62.4	26.0	83.0	57.0	62.4	
10	3		116.5	448	447	62.4	26.0	81.0	55.0	62.4	
11	4	33	116.2	447	447	62.4	28.0	88.0	60.0	62.4	
12	10		115.9	446	445	62.4	27.0	86.0	59.0	62.4	
13	25		115.6	445	443	62.4	27.0	83.0	56.0	62.4	
14	17		115.3	443	441	62.4	27.0	85.0	58.0	62.4	
15	5		114.9	442	441	62.4	27.0	83.0	56.0	62.4	
16	1		114.6	441	440	62.4	34.0	97.0	63.0	62.4	
17	2		114.3	440	440	62.3	27.0	85.0	58.0	62.3	
18	14		114.0	439	439	62.3	26.0	85.0	59.0	62.3	
19	31		113.7	437	437	62.3	26.0	84.0	58.0	62.3	
20	13		113.3	436	435	62.3	27.0	87.0	60.0	62.3	
21	7		113.0	435	433	62.3	27.0	87.0	60.0	62.3	
22	6		112.7	434	432	62.3	29.0	88.0	59.0	62.3	
23	11		112.4	433	431	62.3	25.0	83.0	58.0	62.3	
24	26		112.1	432	429	62.3	25.0	85.0	60.0	62.3	
25	27		111.8	430	427	62.3	25.0	84.0	59.0	62.3	
26	18		111.4	429	426	62.2	27.0	87.0	60.0	62.2	
27	12		111.1	428	424	62.2	28.0	84.0	56.0	62.2	
28	19		110.8	427	423	62.2	26.0	84.0	58.0	62.2	
29	30		110.5	426	422	62.2	26.0	83.0	57.0	62.2	
30	28		109.9	423	420.0	62.2	27.0	85.0	58.0	62.2	

STRESSING RECORD FOR STAY CABLES WITH CONTEN METHOD 1st STRESSING
DYWIDAG-SYSTEMS INTERNATIONAL

Project: Sixth Street Cable Stayed Bridge- Milwaukee

Cable no.	WEST S2	Cable Type	C37	Length of cable	34.688 m	No. of strands	30
Construction stage	11.2	Length of jack	1000 mm	Relieve	3.0 mm	Slip	3.0 mm
Jack type	ConTen 140 kN	Jack no.	DSI 19039	Piston area	26.5 cm²	Friction	0.0%
Tension side	Deck	Date of tensioining		Person resp. for tensioning works		Owner's representative	
Temperature of 1st strand		6/12/2002					

Se-quence	Strand number for		Required force at anchorage after relieve	Gauge pressure before relieve		Elongation theoretical before relieve	Strand protrusion		Partial elongation		Remark
	Working jack	Pilot jack		theoretical	actual		at pressure of 100 bar	at final pressure	actual	theoretical	
			[kN]	[bar]	[bar]	[mm]	[mm]	[mm]	[mm]	[mm]	
1	33	-	108.8	419	419	-				-	
2	34	33	100.8	389	415	148.5	22.0	27.0	5.0	110.3	Wedge did not move
3	24		98.4	380	407	138.0	74.0	180.0	106.0	101.7	
4	16		97.1	375	400	134.9	62.0	166.0	104.0	99.0	
5	9	24	96.1	371	400	133.2	73.0	178.0	105.0	97.3	
6	15		94.7	366	396	131.2	74.0	178.0	104.0	95.3	
7	21		93.7	362	390	129.8	65.0	168.0	103.0	94.0	
8	20		93.0	359	389	128.8	66.0	167.0	101.0	93.0	
9	8		92.4	357	386	128.0	70.0	170.0	100.0	92.2	
10	3		91.9	356	380	127.4	68.0	160.0	92.0	91.6	
11	4	33	90.9	352	380	126.0	81.0	178.0	97.0	90.2	
12	10		90.0	348	376	124.9	80.0	177.0	97.0	89.0	
13	25		89.3	346	371	123.9	59.0	154.0	95.0	88.1	
14	17		88.7	343	369	123.1	70.0	160.0	90.0	87.2	
15	5		88.1	341	365	122.4	68.0	161.0	93.0	86.5	
16	1		87.2	338	361	121.2	71.0	164.0	93.0	85.3	
17	2		86.3	334	358	120.1	78.0	170.0	92.0	84.2	
18	14		85.6	332	356	119.1	69.0	158.0	89.0	83.2	
19	31		84.9	329	351	118.2	63.0	149.0	86.0	82.3	
20	13		84.4	327	349	117.4	62.0	148.0	86.0	81.5	
21	7		83.5	324	345	116.3	74.0	158.0	84.0	80.4	
22	6		82.7	321	341	115.2	58.0	142.0	84.0	79.3	
23	11		81.9	318	339	114.3	80.0	164.0	84.0	78.3	
24	26		81.3	315	338	113.4	64.0	147.0	83.0	77.4	
25	27		80.7	313	334	112.6	64.0	145.0	81.0	76.6	
26	18		79.8	310	331	111.4	65.0	147.0	82.0	75.5	
27	12		79.0	307	329	110.4	60.0	138.0	78.0	74.4	
28	19		78.2	304	326	109.4	64.0	142.0	78.0	73.4	
29	30		77.5	301	323	108.5	63.0	138.0	75.0	72.5	
30	28		76.9	299	320	107.6	71.0	147.0	76.0	71.6	

STRESSING RECORD FOR STAY CABLES WITH CONTEN METHOD 2nd STRESSING
DYWIDAG-SYSTEMS INTENATIONAL

Project: **Sixth Street Cable Stayed Bridge- Milwaukee**

Cable no.	WEST S2	Cable Type	C37	Length of cable	34.688 m	No. of strands	30
Construction stage	12.1	Length of jack	1000 mm	Relieve	3.0 mm	Slip	1.0 mm
Jack type	ConTen 140 kN	Jack no.	DSI 190397	Priston area	26.5 cm²	Friction	0.0%
Tension side	Deck	Date of tensioning		Person resp. for tensioning works		Owner's representative	
Temperature of 1st strand		6/12/2002					

Se-quence	Strand number for		Required force at anchorage after relieve	Gauge pressure before relieve		Elongation theoretical before relieve	Strand protrusion		Elongation		Remark
	Working jack	Pilot jack	[kN]	theoretical [bar]	actual [bar]	[mm]	before stressing [mm]	at final pressure [mm]	actual [mm]	theoretical [mm]	
1	33	-	119.4	459	459	62.5				62.5	
2	34	33	119.1	458	463	62.5	24.0	73.0		62.5	
3	24		118.7	457	460	62.5	21.0	82.0		62.5	
4	16		118.4	455	460	62.5	21.0	82.0		62.5	
5	9	24	118.1	454	456	62.5	28.0	87.0		62.5	
6	15		117.8	453	455	62.5	39	97		62.5	
7	21		117.5	452	452	62.5	28	87		62.5	
8	20		117.2	451	450	62.4	29	85		62.4	
9	8		116.8	449	449	62.4	32	90		62.4	
10	3		116.5	448	448	62.4	35	97		62.4	
11	4	33	116.2	447	450	62.4	30	90		62.4	
12	10		115.9	446	450	62.4	28	90		62.4	
13	25		115.6	445	449	62.4	31	90		62.4	
14	17		115.3	443	448	62.4	33	94		62.4	
15	5		114.9	442	447	62.4	28	91		62.4	
16	1		114.6	441	446	62.4	51	112		62.4	
17	2		114.3	440	445	62.3	41	102		62.3	
18	14		114.0	439	444	62.3	29	85		62.3	
19	31		113.7	437	443	62.3	28	88		62.3	
20	13		113.3	436	442	62.3	31	90		62.3	
21	7		113.0	435	441	62.3	28	87		62.3	
22	6		112.7	434	440	62.3	28	87		62.3	
23	11		112.4	433	438	62.3	28	89		62.3	
24	26		112.1	432	437	62.3	29	88		62.3	
25	27		111.8	430	435	62.3	29.0	89.0		62.3	
26	18		111.4	429	433	62.2	29.0	89.0		62.2	
27	12		111.1	428	431	62.2	28.0	87.0		62.2	
28	19		110.8	427	430	62.2	53.0	112.0		62.2	
29	30		110.5	426	429	62.2	28.0	87.0		62.2	
30	28		109.9	423	427	62.2	29.0	87.0		62.2	

STRESSING RECORD FOR STAY CABLES WITH CONTEN METHOD 1st STRESSING
DYWIDAG-SYSTEMS INTERNATIONAL

Project: **Sixth Street Cable Stayed Bridge- Milwaukee**

Cable no.	EAST S3	Cable Type	C31	Length of cable	29.963 m	No. of strands	22
Construction stage	11.2	Length of jack	1000 mm	Relieve	3.0 mm	Slip	3.0 mm
Jack type	ConTen 140 kN	Jack no.	DSI 19039	Piston area	26.5 cm²	Friction	0.0%
Tension side	Deck	Date of tensioining		Person resp. for tensioning works		Owner's representative	
Temperature of 1st strand		6/11/2002					

Se-quence	Strand number for		Required force at anchorage after relieve	Gauge pressure before relieve		Elongation theoretical before relieve	Strand protrusion		Partial elongation		Remark
	Working jack	Pilot jack		theoretical	actual		at pressure of 100 bar	at final pressure	actual	theoretical	
			[kN]	[bar]	[bar]	[mm]	[mm]	[mm]	[mm]	[mm]	
1	21	-	97.8	379	379	-				-	
2	9	21	94.0	365	375	117.2	61.0	149.0	88.0	85.0	
3	24		92.5	359	370	112.7	31.0	95.0	64.0	81.3	
4	25		91.4	355	369	111.0	63.0	145.0	82.0	79.7	
5	10		90.4	351	365	109.8	62.0	143.0	81.0	78.6	
6	4		88.9	346	361	108.1	65.0	142.0	77.0	76.8	
7	17		87.9	342	358	106.9	59.0	138.0	79.0	75.6	
8	3	24	87.1	339	357	105.9	66.0	145.0	79.0	74.7	
9	8		86.5	336	354	105.2	68.0	145.0	77.0	73.9	
10	20		86.0	334	349	104.7	63.0	139.0	76.0	73.4	
11	14		84.8	330	344	103.3	61.0	135.0	74.0	72.0	
12	2		83.7	326	340	102.1	60.0	134.0	74.0	70.8	
13	1		82.9	323	337	101.2	62.0	139.0	77.0	69.8	
14	5		82.2	320	333	100.3	63.0	134.0	71.0	69.0	
15	26		81.5	318	330	99.6	58.0	131.0	73.0	68.3	
16	11		80.4	314	326	98.4	60.0	129.0	69.0	67.0	
17	6		79.5	310	322	97.3	60.0	129.0	69.0	65.9	
18	7		78.6	307	319	96.3	61.0	128.0	67.0	64.9	
19	13		77.9	304	317	95.5	64.0	130.0	66.0	64.1	
20	31		77.2	301	313	94.7	58.0	126.0	68.0	63.3	
21	19		76.3	298	310	93.6	63.0	125.0	62.0	62.2	
22	18		75.5	295	308	92.7	56.0	120.0	64.0	61.2	

STRESSING RECORD FOR STAY CABLES WITH CONTEN METHOD 2nd STRESSING
DYWIDAG-SYSTEMS INTENATIONAL

Project: **Sixth Street Cable Stayed Bridge- Milwaukee**

Cable no.	EAST S3	Cable Type	C31	Length of cable	29.963 m	No. of strands	22
Construction stage	12.1	Length of jack	1000 mm	Relieve	3.0 mm	Slip	1.0 mm
Jack type	ConTen 140 kN	Jack no.	DSI 190397	Priston area	26.5 cm²	Friction	0.0%
Tension side	Deck	Date of tensioning		Person resp. for tensioning works		Owner's representative	
Temperature of 1st strand		6/11/2002					

Se-quence	Strand number for		Required force at anchorage after relieve	Gauge pressure before relieve		Elongation theoretical before relieve	Strand protrusion		Elongation		Remark
	Working jack	Pilot jack	[kN]	theoretical [bar]	actual [bar]	[mm]	before stressing [mm]	at final pressure [mm]	actual [mm]	theoretical [mm]	
1	21	-	115.9	447	447	52.7				52.7	
2	9	21	115.5	446	446	52.7	29.0	84.0	55.0	52.7	
3	24		115.2	445	444	52.7	27.0	79.0	52.0	52.7	
4	25		114.8	443	444	52.7	31.0	82.0	51.0	52.7	
5	10		114.4	442	442	52.7	27.0	80.0	53.0	52.7	
6	4		114.1	440	441	52.7	31	86	55.0	52.7	
7	17		113.7	439	439	52.7	32	84	52.0	52.7	
8	3	24	113.3	438	438	52.7	27	79	52.0	52.7	
9	8		113.0	436	436	52.6	27	77	50.0	52.6	
10	20		112.6	435	434	52.6	27	77	50.0	52.6	
11	14		112.2	433	432	52.6	27	77	50.0	52.6	
12	2		111.9	432	431	52.6	28	78	50.0	52.6	
13	1		111.5	431	430	52.6	27	79	52.0	52.6	
14	5		111.1	429	429	52.6	31	83	52.0	52.6	
15	26		110.8	428	427	52.6	27	77	50.0	52.6	
16	11		110.4	427	426	52.5	27	77	50.0	52.5	
17	6		110.0	425	424	52.5	27	77	50.0	52.5	
18	7		109.7	424	423	52.5	27	76	49.0	52.5	
19	13		109.3	422	421	52.5	27	73	46.0	52.5	
20	31		108.9	421	420	52.5	26	76	50.0	52.5	
21	19		108.6	420	419	52.5	28	75	47.0	52.5	
22	18		107.8	417	416.0	52.5	26.0	74.0	48.0	52.5	

STRESSING RECORD FOR STAY CABLES WITH CONTEN METHOD 1st STRESSING
DYWIDAG-SYSTEMS INTERNATIONAL

Project: **Sixth Street Cable Stayed Bridge- Milwaukee**

Cable no.	WEST S3	Cable Type	C31	Length of cable	29.963 m	No. of strands	22
Construction stage	11.2	Length of jack	1000 mm	Relieve	3.0 mm	Slip	3.0 mm
Jack type	ConTen 140 kN	Jack no.	DSI 19039	Piston area	26.5 cm²	Friction	0.0%
Tension side	Deck	Date of tensioining		Person resp. for tensioning works		Owner's representative	
Temperature of 1st strand		6/11/2002					

Se-quence	Strand number for		Required force at anchorage after relieve	Gauge pressure before relieve		Elongation theoretical before relieve	Strand protrusion		Partial elongation		Remark
	Working jack	Pilot jack		theoretical	actual		at pressure of 100 bar	at final pressure	actual	theoretical	
			[kN]	[bar]	[bar]	[mm]	[mm]	[mm]	[mm]	[mm]	
1	21	-	97.8	379	379	-				-	
2	9	21	94.0	365	367	117.2	77.0	160.0	83.0	85.0	
3	24		92.5	359	360	112.7	47.0	126.0	79.0	81.3	
4	25		91.4	355	357	111.0	61.0	140.0	79.0	79.7	
5	10		90.4	351	352	109.8	70.0	150.0	80.0	78.6	
6	4		88.9	346	347	108.1	68.0	144.0	76.0	76.8	
7	17		87.9	342	344	106.9	60.0	133.0	73.0	75.6	
8	3	24	87.1	339	340	105.9	80.0	155.0	75.0	74.7	
9	8		86.5	336	339	105.2	68.0	138.0	70.0	73.9	
10	20		86.0	334	334	104.7	57.0	127.0	70.0	73.4	
11	14		84.8	330	330	103.3	58.0	129.0	71.0	72.0	
12	2		83.7	326	328	102.1	62.0	132.0	70.0	70.8	
13	1		82.9	323	325	101.2	70.0	138.0	68.0	69.8	
14	5		82.2	320	319	100.3	59.0	125.0	66.0	69.0	
15	26		81.5	318	316	99.6	68.0	133.0	65.0	68.3	
16	11		80.4	314	312	98.4	56.0	121.0	65.0	67.0	
17	6		79.5	310	310	97.3	56.0	120.0	64.0	65.9	
18	7		78.6	307	307	96.3	58.0	120.0	62.0	64.9	
19	13		77.9	304	303	95.5	59.0	120.0	61.0	64.1	
20	31		77.2	301	301	94.7	65.0	125.0	60.0	63.3	
21	19		76.3	298	299	93.6	55.0	114.0	59.0	62.2	
22	18		75.5	295	295	92.7	59.0	116.0	57.0	61.2	

STRESSING RECORD FOR STAY CABLES WITH CONTEN METHOD 2nd STRESSING
DYWIDAG-SYSTEMS INTENATIONAL

Project: **Sixth Street Cable Stayed Bridge- Milwaukee**

Cable no.	WEST S3	Cable Type	C31	Length of cable	29.963 m	No. of strands	22
Construction stage	12.1	Length of jack	1000 mm	Relieve	3.0 mm	Slip	1.0 mm
Jack type	ConTen 140 kN	Jack no.	DSI 190397	Priston area	26.5 cm²	Friction	0.0%
Tension side	Deck	Date of tensioning		Person resp. for tensioning work		Owner's representative	
Temperature of 1st strand		6/11/2002		Jason Samz			

Se-quence	Strand number for		Required force at anchorage after relieve	Gauge pressure before relieve		Elongation theoretical	Strand protrusion		Elongation		Remark
	Working jack	Pilot jack	[kN]	theoretical [bar]	actual [bar]	before relieve [mm]	before stressing [mm]	at final pressure [mm]	actual [mm]	theoretical [mm]	
1	21	-	115.9	447	447	52.7				52.7	
2	9		115.5	446	445	52.7	38.0	90.0	52.0	52.7	
3	24		115.2	445	445	52.7	25.0	81.0	56.0	52.7	
4	25	21	114.8	443	444	52.7	25.0	82.0	57.0	52.7	
5	10		114.4	442	442	52.7	25.0	81.0	56.0	52.7	
6	4		114.1	440	440	52.7	25.0	80.0	55.0	52.7	
7	17		113.7	439	439	52.7	25.0	81.0	56.0	52.7	
8	3		113.3	438	442	52.7	29.0	88.0	59.0	52.7	
9	8		113.0	436	442	52.6	88.0	141.0	53.0	52.6	
10	20		112.6	435	441	52.6	29.0	88.0	59.0	52.6	
11	14		112.2	433	440	52.6	37.0	97.0	60.0	52.6	
12	2		111.9	432	439	52.6	26.0	84.0	58.0	52.6	
13	1		111.5	431	437	52.6	25.0	84.0	59.0	52.6	
14	5		111.1	429	435	52.6	28.0	89.0	61.0	52.6	
15	26	24	110.8	428	432	52.6	25.0	82.0	57.0	52.6	
16	11		110.4	427	430	52.5	25.0	83.0	58.0	52.5	
17	6		110.0	425	430	52.5	25.0	83.0	58.0	52.5	
18	7		109.7	424	429	52.5	25.0	83.0	58.0	52.5	
19	13		109.3	422	426	52.5	25.0	82.0	57.0	52.5	
20	31		108.9	421	422	52.5	25.0	82.0	57.0	52.5	
21	19		108.6	420	421	52.5	25.0	82.0	57.0	52.5	
22	18		107.8	417	420.0	52.5	25.0	83.0	58.0	52.5	

STRESSING RECORD FOR STAY CABLES WITH CONTEN METHOD 1st STRESSING

DYWIDAG-SYSTEMS INTERNATIONAL

Project: **Sixth Street Cable Stayed Bridge- Milwaukee**

Cable no.	EAST S4	Cable Type	C31	Length of cable	25.593 m	No. of strands	21
Construction stage	11.2	Length of jack	1000 mm	Relieve	3.0 mm	Slip	3.0 mm
Jack type	ConTen 140 kN	Jack no.	DSI 19039	Piston area	26.5 cm²	Friction	0.0%
Tension side	Deck	Date of tensioining		Person resp. for tensioning works		Owner's representative	
Temperature of 1st strand		6/7/2002					

Se-quence	Strand number for		Required force at anchorage after relieve	Gauge pressure before relieve		Elongation theoretical before relieve	Strand protrusion		Partial elongation		Remark
	Working jack	Pilot jack		theoretical	actual		at pressure of 100 bar	at final pressure	actual	theoretical	
			[kN]	[bar]	[bar]	[mm]	[mm]	[mm]	[mm]	[mm]	
1	21	-	82.8	324	324	-				-	
2	9	21	80.1	314	320	86.9	60.0	119.0	59.0	59.2	
3	24		78.9	309	311	84.2	52.0	110.0	58.0	57.0	
4	25		77.9	306	304	82.9	57.0	108.0	51.0	55.8	
5	10		77.0	302	302	82.0	60.0	111.0	51.0	54.9	
6	4		75.6	297	300	80.6	55.0	106.0	51.0	53.5	
7	17		74.6	293	295	79.6	54.0	103.0	49.0	52.5	
8	3	24	73.8	290	290	78.9	59.0	107.0	48.0	51.7	
9	8		73.2	288	286	78.3	60.0	106.0	46.0	51.1	
10	20		72.8	286	283	77.8	55.0	101.0	46.0	50.7	
11	14		71.6	282	280	76.7	54.0	99.0	45.0	49.5	
12	2		70.7	279	275	75.8	59.0	102.0	43.0	48.6	
13	1		69.9	276	272	75.0	54.0	97.0	43.0	47.8	
14	5		69.2	273	269	74.3	53.0	97.0	44.0	47.1	
15	11		68.6	271	265	73.7	54.0	93.0	39.0	46.5	
16	6		67.6	267	261	72.7	55.0	96.0	41.0	45.5	
17	7		66.7	263	258	71.8	52.0	93.0	41.0	44.6	
18	13		65.8	260	256	71.1	59.0	97.0	38.0	43.8	
19	19		65.1	258	252	70.3	52.0	94.0	42.0	43.0	
20	12		64.5	255	250	69.7	54.0	91.0	37.0	42.4	
21	18		63.6	252	249	68.9	56.0	93.0	37.0	41.6	

STRESSING RECORD FOR STAY CABLES WITH CONTEN METHOD 2nd STRESSING
DYWIDAG-SYSTEMS INTENATIONAL

Project: Sixth Street Cable Stayed Bridge- Milwaukee

Cable no.	EAST S4	Cable Type	C31	Length of cable	25.593 m	No. of strands	21
Construction stage	12.1	Length of jack	1000 mm	Relieve	3.0 mm	Slip	1.0 mm
Jack type	ConTen 140 kN	Jack no.	DSI 190397	Priston area	26.5 cm²	Friction	0.0%
Tension side	Deck	Date of tensioning		Person resp. for tensioning works		Owner's representative	
Temperature of 1st strand		6/8/2002		Columba Cannon			

Se-quence	Strand number for		Required force at anchorage after relieve	Gauge pressure before relieve		Elongation theoretical before relieve	Strand protrusion		Elongation		Remark
	Working jack	Pilot jack	[kN]	theoretical [bar]	actual [bar]	[mm]	before stressing [mm]	at final pressure [mm]	actual [mm]	theoretical [mm]	
1	21	-	98.4	383	383	40.2				40.2	
2	9	21	98.0	382	383	40.2	27.0	68.0	41.0	40.2	
3	24		97.7	380	381	40.2	26.0	67.0	41.0	40.2	
4	25		97.3	379	380	40.2	32.0	74.0	42.0	40.2	
5	10		97.0	378	379	40.2	25.0	68.0	43.0	40.2	
6	4		96.6	376	378	40.2	26.0	68.0	42.0	40.2	
7	17		96.3	375	377	40.2	26.0	67.0	41.0	40.2	
8	3	24	95.9	374	375	40.2	26.0	71.0	45.0	40.2	
9	8		95.5	372	374	40.1	26.0	71.0	45.0	40.1	
10	20		95.2	371	372	40.1	29.0	75.0	46.0	40.1	
11	14		94.8	370	371	40.1	26.0	68.0	42.0	40.1	
12	2		94.5	368	369	40.1	26.0	68.0	42.0	40.1	
13	1		94.1	367	368	40.1	31.0	75.0	44.0	40.1	
14	5		93.8	366	366	40.1	26.0	69.0	43.0	40.1	
15	11		93.4	364	365	40.1	26.0	70.0	44.0	40.1	
16	6		93.1	363	362	40.1	27.0	70.0	43.0	40.1	
17	7		92.7	362	361	40.0	26.0	69.0	43.0	40.0	
18	13		92.4	360	360	40.0	26.0	70.0	44.0	40.0	
19	19		92.0	359	358	40.0	31.0	73.0	42.0	40.0	
20	12		91.7	358	357	40.0	31.0	74.0	43.0	40.0	
21	18		91.0	355	356	40.0	30.0	73.0	43.0	40.0	

STRESSING RECORD FOR STAY CABLES WITH CONTEN METHOD 1st STRESSING

DYWIDAG-SYSTEMS INTERNATIONAL

Project: **Sixth Street Cable Stayed Bridge- Milwaukee**

Cable no.	WEST S4	Cable Type	C31	Length of cable	25.593 m	No. of strands	21
Construction stage	11.2	Length of jack	1000 mm	Relieve	3.0 mm	Slip	3.0 mm
Jack type	ConTen 140 kN	Jack no.	DSI 19039	Piston area	26.5 cm²	Friction	0.0%
Tension side	Deck	Date of tensioining		Person resp. for tensioning works		Owner's representative	
Temperature of 1st strand		6/7/2002		Jason Samz			

Se-quence	Strand number for		Required force at anchorage after relieve	Gauge pressure before relieve		Elongation theoretical before relieve	Strand protrusion		Partial elongation		Remark
	Working jack	Pilot jack		theoretical	actual		at pressure of 100 bar	at final pressure	actual	theoretical	
			[kN]	[bar]	[bar]	[mm]	[mm]	[mm]	[mm]	[mm]	
1	21	-	82.8	324	324	-				-	
2	9	21	80.1	314	319	86.9	62.0	121.0	59.0	59.2	
3	24		78.9	309	312	84.2	60.0	115.0	55.0	57.0	
4	25		77.9	306	310	82.9	50.0	105.0	55.0	55.8	
5	10		77.0	302	308	82.0	52.0	106.0	54.0	54.9	
6	4		75.6	297	303	80.6	48	100	52.0	53.5	
7	17		74.6	293	300	79.6	46	98	52.0	52.5	
8	3	24	73.8	290	289	78.9	54	104	50.0	51.7	
9	8		73.2	288	286	78.3	52	101	49.0	51.1	
10	20		72.8	286	281	77.8	47	94	47.0	50.7	
11	14		71.6	282	280	76.7	61	107	46.0	49.5	
12	2		70.7	279	278	75.8	49.0	95.0	46.0	48.6	
13	1		69.9	276	274	75.0	49.0	95.0	46.0	47.8	
14	5		69.2	273	270	74.3	49.0	94.0	45.0	47.1	
15	11		68.6	271	268	73.7	45.0	90.0	45.0	46.5	
16	6		67.6	267	264	72.7	68.0	110.0	42.0	45.5	
17	7		66.7	263	260	71.8	44.0	86.0	42.0	44.6	
18	13		65.8	260	258	71.1	59.0	99.0	40.0	43.8	
19	19		65.1	258	255	70.3	51.0	92.0	41.0	43.0	
20	12		64.5	255	253	69.7	44.0	85.0	41.0	42.4	
21	18		63.6	252	251	68.9	46.0	85.0	39.0	41.6	

STRESSING RECORD FOR STAY CABLES WITH CONTEN METHOD 2nd STRESSING
DYWIDAG-SYSTEMS INTENATIONAL

Project: Sixth Street Cable Stayed Bridge- Milwaukee

Cable no.	WEST S4	Cable Type	C31	Length of cable	25.593 m	No. of strands	21
Construction stage	12.1	Length of jack	1000 mm	Relieve	3.0 mm	Slip	1.0 mm
Jack type	ConTen 140 kN	Jack no.	DSI 190397	Priston area	26.5 cm²	Friction	0.0%
Tension side	Deck	Date of tensioning		Person resp. for tensioning works		Owner's representative	
Temperature of 1st strand		6/8/2002					

Se-quence	Strand number for		Required force at anchorage after relieve	Gauge pressure before relieve		Elongation theoretical before relieve	Strand protrusion		Elongation		Remark
	Working jack	Pilot jack	[kN]	theoretical [bar]	actual [bar]	[mm]	before stressing [mm]	at final pressure [mm]	actual [mm]	theoretical [mm]	
1	21	-	98.4	383	383	40.2				40.2	
2	9	21	98.0	382	383	40.2	26.0	72.0	46.0	40.2	
3	24		97.7	380	382	40.2	27.0	70.0	43.0	40.2	
4	25		97.3	379	381	40.2	31.0	73.0	42.0	40.2	
5	10		97.0	378	380	40.2	27.0	70.0	43.0	40.2	
6	4		96.6	376	379	40.2	26.0	70.0	44.0	40.2	
7	17		96.3	375	378	40.2	28.0	71.0	43.0	40.2	
8	3	24	95.9	374	370	40.2	32.0	74.0	42.0	40.2	
9	8		95.5	372	369	40.1	31.0	74.0	43.0	40.1	
10	20		95.2	371	368	40.1	27.0	69.0	42.0	40.1	
11	14		94.8	370	366	40.1	30.0	71.0	41.0	40.1	
12	2		94.5	368	364	40.1	27.0	69.0	42.0	40.1	
13	1		94.1	367	362	40.1	28.0	70.0	42.0	40.1	
14	5		93.8	366	360	40.1	28.0	72.0	44.0	40.1	
15	11		93.4	364	359	40.1	32.0	74.0	42.0	40.1	
16	6		93.1	363	358	40.1	28.0	69.0	41.0	40.1	
17	7		92.7	362	357	40.0	27.0	69.0	42.0	40.0	
18	13		92.4	360	354	40.0	33.0	75.0	42.0	40.0	
19	19		92.0	359	352	40.0	28.0	68.0	40.0	40.0	
20	12		91.7	358	350	40.0	28.0	71.0	43.0	40.0	
21	18		91.0	355	349	40.0	28.0	68.0	40.0	40.0	

STRESSING RECORD FOR STAY CABLES WITH CONTEN METHOD 1st STRESSING

DYWIDAG-SYSTEMS INTERNATIONAL

Project: **Sixth Street Cable Stayed Bridge- Milwaukee**

Cable no.	EAST S5	Cable Type	C31	Length of cable	21.942 m	No. of strands	21
Construction stage	11.2	Length of jack	1000 mm	Relieve	3.0 mm	Slip	3.0 mm
Jack type	ConTen 140 kN	Jack no.	DSI 19039	Piston area	26.5 cm²	Friction	0.0%
Tension side	Deck	Date of tensioning		Person resp. for tensioning works		Owner's representative	
Temperature of 1st strand		6/6/2002					

Se-quence	Strand number for		Required force at anchorage after relieve	Gauge pressure before relieve		Elongation theoretical before relieve	Strand protrusion		Partial elongation		Remark
	Working jack	Pilot jack		theoretical	actual		at pressure of 100 bar	at final pressure	actual	theoretical	
			[kN]	[bar]	[bar]	[mm]	[mm]	[mm]	[mm]	[mm]	
1	21	-	67.7	269	269	-				-	
2	9	21	66.1	263	267	63.1	54.0	92.0	38.0	39.1	
3	24		65.2	260	264	61.6	69.0	107.0	38.0	37.9	
4	25		64.5	257	261	60.9	54.0	92.0	38.0	37.2	
5	10		63.8	255	259	60.3	51.0	88.0	37.0	36.6	
6	4		62.6	250	257	59.3	61	100	39.0	35.6	
7	17		61.8	247	254	58.6	51	88	37.0	34.9	
8	3	24	61.2	245	254	58.1	60	96	36.0	34.4	
9	8		60.8	243	252	57.7	53	90	37.0	34.0	
10	20		60.4	242	251	57.4	54	90	36.0	33.6	
11	14		59.5	238	250	56.6	52	89	37.0	32.9	
12	2		58.7	235	248	56.0	47.0	84.0	37.0	32.2	
13	1		58.0	233	245	55.4	52.0	85.0	33.0	31.6	
14	5		57.5	231	240	55.0	56.0	87.0	31.0	31.2	
15	11		57.0	229	235	54.6	50.0	81.0	31.0	30.7	
16	6		56.2	226	232	53.9	54.0	85.0	31.0	30.0	
17	7		55.5	223	229	53.3	51.0	82.0	31.0	29.4	
18	13		54.9	221	227	52.7	51.0	79.0	28.0	28.9	
19	19		54.3	219	224	52.3	50.0	79.0	29.0	28.4	
20	12		53.8	217	222	51.8	51.0	77.0	26.0	27.9	
21	18		53.1	214	219	51.3	51.0	76.0	25.0	27.4	

STRESSING RECORD FOR STAY CABLES WITH CONTEN METHOD 2nd STRESSING
DYWIDAG-SYSTEMS INTENATIONAL

Project: Sixth Street Cable Stayed Bridge- Milwaukee

Cable no.	EAST S5	Cable Type	C31	Length of cable	21.942 m	No. of strands	21
Construction stage	12.1	Length of jack	1000 mm	Relieve	3.0 mm	Slip	1.0 mm
Jack type	ConTen 140 kN	Jack no.	DSI 190397	Priston area	26.5 cm²	Friction	0.0%
Tension side	Deck	Date of tensioning		Person resp. for tensioning works		Owner's representative	
Temperature of 1st strand		6/7/2002					

Se-quence	Strand number for		Required force at anchorage after relieve	Gauge pressure before relieve		Elongation theoretical before relieve	Strand protrusion		Elongation		Remark
	Working jack	Pilot jack	[kN]	theoretical [bar]	actual [bar]	[mm]	before stressing [mm]	at final pressure [mm]	actual [mm]	theoretical [mm]	
1	21	-	81.8	323	323	30.1				30.1	
2	9	21	81.5	322	323	30.1	26.0	58.0	32.0	30.1	
3	24		81.3	321	321	30.1	26.0	55.0	29.0	30.1	
4	25		81.0	319	320	30.1	26.0	55.0	29.0	30.1	
5	10		80.7	318	319	30.1	25.0	55.0	30.0	30.1	
6	4		80.4	317	318	30.1	26.0	51.0	25.0	30.1	
7	17		80.1	316	315	30.1	25.0	53.0	28.0	30.1	
8	3	24	79.9	315	314	30.1	25.0	52.0	27.0	30.1	
9	8		79.6	314	312	30.1	25.0	51.0	26.0	30.1	
10	20		79.3	313	312	30.0	25.0	51.0	26.0	30.0	
11	14		79.0	312	311	30.0	26.0	51.0	25.0	30.0	
12	2		78.7	311	310	30.0	25.0	53.0	28.0	30.0	
13	1		78.5	310	309	30.0	25.0	52.0	27.0	30.0	
14	5		78.2	309	308	30.0	29.0	57.0	28.0	30.0	
15	11		77.9	308	307	30.0	26.0	53.0	27.0	30.0	
16	6		77.6	307	305	30.0	26.0	52.0	26.0	30.0	
17	7		77.3	306	304	30.0	28.0	57.0	29.0	30.0	
18	13		77.0	305	303	30.0	26.0	55.0	29.0	30.0	
19	19		76.8	304	302	30.0	27.0	56.0	29.0	30.0	
20	12		76.5	302	301	29.9	26.0	56.0	30.0	29.9	
21	18		75.9	300	300	29.9	26.0	54.0	28.0	29.9	

STRESSING RECORD FOR STAY CABLES WITH CONTEN METHOD 1st STRESSING
DYWIDAG-SYSTEMS INTERNATIONAL

Project: **Sixth Street Cable Stayed Bridge- Milwaukee**

Cable no.	WEST S5	Cable Type	C31	Length of cable	21.942 m	No. of strands	21
Construction stage	11.2	Length of jack	1000 mm	Relieve	3.0 mm	Slip	3.0 mm
Jack type	ConTen 140 kN	Jack no.	DSI 19039	Piston area	26.5 cm²	Friction	0.0%
Tension side	Deck	Date of tensioning		Person resp. for tensioning work		Owner's representative	
Temperature of 1st strand		6/6/2002					

Se-quence	Strand number for		Required force at anchorage after relieve	Gauge pressure before relieve		Elongation theoretical before relieve	Strand protrusion		Partial elongation		Remark
	Working jack	Pilot jack		theoretical	actual		at pressure of 100 bar	at final pressure	actual	theoretical	
			[kN]	[bar]	[bar]	[mm]	[mm]	[mm]	[mm]	[mm]	
1	21	-	67.7	269	269	-				-	
2	9	21	66.1	263	260	63.1	54.0	91.0	37.0	39.1	
3	24		65.2	260	257	61.6	132.0	167.0	35.0	37.9	
4	25		64.5	257	255	60.9	51.0	85.0	34.0	37.2	
5	10		63.8	255	253	60.3	54.0	87.0	33.0	36.6	
6	4		62.6	250	250	59.3	60.0	94.0	34.0	35.6	
7	17		61.8	247	248	58.6	54.0	86.0	32.0	34.9	
8	3	24	61.2	245	244	58.1	60.0	91.0	31.0	34.4	
9	8		60.8	243	240	57.7	51.0	82.0	31.0	34.0	
10	20		60.4	242	238	57.4	54.0	84.0	30.0	33.6	
11	14		59.5	238	238	56.6	50.0	80.0	30.0	32.9	
12	2		58.7	235	233	56.0	57.0	86.0	29.0	32.2	
13	1		58.0	233	232	55.4	47.0	76.0	29.0	31.6	
14	5		57.5	231	229	55.0	57.0	86.0	29.0	31.2	
15	11		57.0	229	226	54.6	90.0	117.0	27.0	30.7	
16	6		56.2	226	225	53.9	84.0	112.0	28.0	30.0	
17	7		55.5	223	222	53.3	72.0	99.0	27.0	29.4	
18	13		54.9	221	221	52.7	62.0	87.0	25.0	28.9	
19	19		54.3	219	219	52.3	60.0	86.0	26.0	28.4	
20	12		53.8	217	217	51.8	72.0	96.0	24.0	27.9	
21	18		53.1	214	213	51.3	74.0	98.0	24.0	27.4	

STRESSING RECORD FOR STAY CABLES WITH CONTEN METHOD 2nd STRESSING
DYWIDAG-SYSTEMS INTENATIONAL

Project: Sixth Street Cable Stayed Bridge- Milwaukee

Cable no.	WEST S5	Cable Type	C31	Length of cable	21.942 m	No. of strands	21
Construction stage	12.1	Length of jack	1000 mm	Relieve	3.0 mm	Slip	1.0 mm
Jack type	ConTen 140 kN	Jack no.	DSI 190397	Priston area	26.5 cm²	Friction	0.0%
Tension side	Deck	Date of tensioning		Person resp. for tensioning works		Owner's representative	
Temperature of 1st strand		6/7/2002					

Se-quence	Strand number for		Required force at anchorage after relieve	Gauge pressure before relieve		Elongation theoretical	Strand protrusion		Elongation		Remark
	Working jack	Pilot jack		theoretical	actual	before relieve	before stressing	at final pressure	actual	theoretical	
			[kN]	[bar]	[bar]	[mm]	[mm]	[mm]	[mm]	[mm]	
1	21	-	81.8	323	323	30.1				30.1	
2	9	21	81.5	322	325	30.1	27.0	59.0	32.0	30.1	
3	24		81.3	321	322	30.1	24.0	58.0	34.0	30.1	
4	25		81.0	319	321	30.1	24.0	55.0	31.0	30.1	
5	10		80.7	318	320	30.1	25.0	56.0	31.0	30.1	
6	4		80.4	317	319	30.1	26.0	56.0	30.0	30.1	
7	17		80.1	316	318	30.1	24.0	55.0	31.0	30.1	
8	3	24	79.9	315	315	30.1	30.0	60.0	30.0	30.1	
9	8		79.6	314	314	30.1	25.0	55.0	30.0	30.1	
10	20		79.3	313	312	30.0	25.0	55.0	30.0	30.0	
11	14		79.0	312	311	30.0	25.0	56.0	31.0	30.0	
12	2		78.7	311	310	30.0	25.0	55.0	30.0	30.0	
13	1		78.5	310	310	30.0	30.0	61.0	31.0	30.0	
14	5		78.2	309	309	30.0	41.0	71.0	30.0	30.0	
15	11		77.9	308	308	30.0	24.0	55.0	31.0	30.0	
16	6		77.6	307	307	30.0	27.0	57.0	30.0	30.0	
17	7		77.3	306	305	30.0	25.0	55.0	30.0	30.0	
18	13		77.0	305	304	30.0	25.0	57.0	32.0	30.0	
19	19		76.8	304	302	30.0	28.0	59.0	31.0	30.0	
20	12		76.5	302	301	29.9	24.0	56.0	32.0	29.9	
21	18		75.9	300	300.0	29.9	32.0	63.0	31.0	29.9	

STRESSING RECORD FOR STAY CABLES WITH CONTEN METHOD 1st STRESSING
DYWIDAG-SYSTEMS INTERNATIONAL

Project: **Sixth Street Cable Stayed Bridge- Milwaukee**

Cable no.	EAST S6	Cable Type	C31	Length of cable	19.071 m	No. of strands	18
Construction stage	11.2	Length of jack	1000 mm	Relieve	3.0 mm	Slip	3.0 mm
Jack type	ConTen 140 kN	Jack no.	DSI 19039	Piston area	26.5 cm²	Friction	0.0%
Tension side	Deck	Date of tensioning		Person resp. for tensioning works		Owner's representative	
Temperature of 1st strand		6/5/2002					

Se-quence	Strand number for		Required force at anchorage after relieve	Gauge pressure before relieve		Elongation theoretical before relieve	Strand protrusion		Partial elongation		Remark
	Working jack	Pilot jack		theoretical	actual		at pressure of 100 bar	at final pressure	actual	theoretical	
			[kN]	[bar]	[bar]	[mm]	[mm]	[mm]	[mm]	[mm]	
1	21	-	54.4	221	221	-				-	
2	9	21	54.1	220	221	46.2	73.0	98.0	25.0	25.2	
3	24		53.9	219	220	45.9	71.0	96.0	25.0	25.0	
4	10		53.6	218	219	45.7	48.0	73.0	25.0	24.8	
5	4		53.4	217	218	45.5	49.0	73.0	24.0	24.6	
6	17		53.0	216	218	45.2	53.0	76.0	23.0	24.3	
7	3	24	52.6	215	217	45.0	45.0	71.0	26.0	24.0	
8	8		52.4	214	216	44.8	46.0	69.0	23.0	23.8	
9	14		52.2	213	215	44.7	45.0	71.0	26.0	23.7	
10	2		52.1	213	214	44.6	43.0	70.0	27.0	23.6	
11	1		51.8	211	213	44.3	43.0	72.0	29.0	23.3	
12	5		51.5	210	212	44.1	50.0	74.0	24.0	23.1	
13	11		51.3	209	212	43.9	49.0	72.0	23.0	23.0	
14	6		51.1	209	210	43.8	46.0	71.0	25.0	22.8	
15	7		50.9	208	210	43.7	47.0	70.0	23.0	22.7	
16	13		50.6	207	209	43.4	47.0	70.0	23.0	22.4	
17	19		50.3	206	209	43.2	47.0	69.0	22.0	22.2	
18	18		50.1	205	208	43.1	58.0	81.0	23.0	22.0	

STRESSING RECORD FOR STAY CABLES WITH CONTEN METHOD 2nd STRESSING
DYWIDAG-SYSTEMS INTENATIONAL

Project: Sixth Street Cable Stayed Bridge- Milwaukee

Cable no.	EAST S6	Cable Type	C31	Length of cable	19.071 m	No. of strands	18
Construction stage	12.1	Length of jack	1000 mm	Relieve	3.0 mm	Slip	1.0 mm
Jack type	ConTen 140 kN	Jack no.	DSI 190397	Priston area	26.5 cm²	Friction	0.0%
Tension side	Deck	Date of tensioning		Person resp. for tensioning work		Owner's representative	
Temperature of 1st strand		6/6/2002					

Se-quence	Strand number for		Required force at anchorage after relieve	Gauge pressure before relieve		Elongation theoretical before relieve	Strand protrusion		Elongation		Remark
	Working jack	Pilot jack		theoretical	actual		before stressing	at final pressure	actual	theoretical	
			[kN]	[bar]	[bar]	[mm]	[mm]	[mm]	[mm]	[mm]	
1	21	-	73.4	293	293	23.1				23.1	
2	9		73.3	293	293	23.1	27.0	50.0	23.0	23.1	
3	24		73.2	292	293	23.1	27.0	49.0	22.0	23.1	
4	10	21	73.1	292	292	23.1	26.0	50.0	24.0	23.1	
5	4		73.0	292	291	23.1	27.0	49.0	22.0	23.1	
6	17		72.9	291	291	23.1	27.0	48.0	21.0	23.1	
7	3		72.8	291	290	23.0	27.0	51.0	24.0	23.0	
8	8		72.7	290	289	23.0	27.0	49.0	22.0	23.0	
9	14		72.6	290	289	23.0	27.0	49.0	22.0	23.0	
10	2		72.5	290	289	23.0	27.0	50.0	23.0	23.0	
11	1		72.4	289	289	23.0	26.0	48.0	22.0	23.0	
12	5	24	72.3	289	289	23.0	27.0	49.0	22.0	23.0	
13	11		72.2	288	288	23.0	29.0	51.0	22.0	23.0	
14	6		72.1	288	288	23.0	27.0	49.0	22.0	23.0	
15	7		72.0	288	288	23.0	28.0	51.0	23.0	23.0	
16	13		71.9	287	288	23.0	26.0	49.0	23.0	23.0	
17	19		71.8	287	287	23.0	26.0	48.0	22.0	23.0	
18	18		71.6	286	287	23.0	27.0	49.0	22.0	23.0	

STRESSING RECORD FOR STAY CABLES WITH CONTEN METHOD 1st STRESSING
DYWIDAG-SYSTEMS INTERNATIONAL

Project: **Sixth Street Cable Stayed Bridge- Milwaukee**

Cable no.	WEST S6	Cable Type	C31	Length of cable	19.071 m	No. of strands	18
Construction stage	11.2	Length of jack	1000 mm	Relieve	3.0 mm	Slip	3.0 mm
Jack type	ConTen 140 kN	Jack no.	DSI 19039	Piston area	26.5 cm²	Friction	0.0%
Tension side	Deck	Date of tensioning		Person resp. for tensioning works		Owner's representative	
Temperature of 1st strand		6/5/2002					

Se-quence	Strand number for		Required force at anchorage after relieve	Gauge pressure before relieve		Elongation theoretical before relieve	Strand protrusion		Partial elongation		Remark
	Working jack	Pilot jack		theoretical	actual		at pressure of 100 bar	at final pressure	actual	theoretical	
			[kN]	[bar]	[bar]	[mm]	[mm]	[mm]	[mm]	[mm]	
1	21	-	54.4	221	221	-				-	
2	9	21	54.1	220	220	46.2	57.0	81.0	24.0	25.2	
3	24		53.9	219	220	45.9	151.0	172.0	21.0	25.0	
4	10		53.6	218	219	45.7	46.0	71.0	25.0	24.8	
5	4		53.4	217	218	45.5	116.0	141.0	25.0	24.6	
6	17		53.0	216	217	45.2	47.0	71.0	24.0	24.3	
7	3	24	52.6	215	214	45.0	46.0	68.0	22.0	24.0	
8	8		52.4	214	214	44.8	49.0	71.0	22.0	23.8	
9	14		52.2	213	213	44.7	45.0	68.0	23.0	23.7	
10	2		52.1	213	212	44.6	56.0	78.0	22.0	23.6	
11	1		51.8	211	211	44.3	45.0	69.0	24.0	23.3	
12	5		51.5	210	210	44.1	51.0	73.0	22.0	23.1	
13	11		51.3	209	210	43.9	45.0	66.0	21.0	23.0	
14	6		51.1	209	209	43.8	45.0	66.0	21.0	22.8	
15	7		50.9	208	208	43.7	47.0	71.0	24.0	22.7	
16	13		50.6	207	207	43.4	80.0	101.0	21.0	22.4	
17	19		50.3	206	205	43.2	65.0	86.0	21.0	22.2	
18	18		50.1	205	204	43.1	69.0	90.0	21.0	22.0	

STRESSING RECORD FOR STAY CABLES WITH CONTEN METHOD 2nd STRESSING
DYWIDAG-SYSTEMS INTENATIONAL

Project: **Sixth Street Cable Stayed Bridge- Milwaukee**

Cable no.	WEST S6	Cable Type	C31	Length of cable	19.071 m	No. of strands	18
Construction stage	12.1	Length of jack	1000 mm	Relieve	3.0 mm	Slip	1.0 mm
Jack type	ConTen 140 kN	Jack no.	DSI 190397	Priston area	26.5 cm²	Friction	0.0%
Tension side	Deck	Date of tensioning		Person resp. for tensioning works		Owner's representative	
Temperature of 1st strand		6/6/2002					

Se-quence	Strand number for		Required force at anchorage after relieve	Gauge pressure before relieve		Elongation theoretical before relieve	Strand protrusion		Elongation		Remark
	Working jack	Pilot jack	[kN]	theoretical [bar]	actual [bar]	[mm]	before stressing [mm]	at final pressure [mm]	actual [mm]	theoretical [mm]	
1	21	-	73.4	293	293	23.1				23.1	
2	9		73.3	293	289	23.1	30.0	53.0	23.0	23.1	
3	24		73.2	292	289	23.1	30.0	51.0	21.0	23.1	
4	10	21	73.1	292	288	23.1	25.0	47.0	22.0	23.1	
5	4		73.0	292	288	23.1	25.0	47.0	22.0	23.1	
6	17		72.9	291	288	23.1	26.0	46.0	20.0	23.1	
7	3		72.8	291	289	23.0	25.0	47.0	22.0	23.0	
8	8		72.7	290	289	23.0	25.0	47.0	22.0	23.0	
9	14		72.6	290	289	23.0	28.0	52.0	24.0	23.0	
10	2		72.5	290	288	23.0	23.0	46.0	23.0	23.0	
11	1		72.4	289	288	23.0	23.0	46.0	23.0	23.0	
12	5		72.3	289	288	23.0	25.0	48.0	23.0	23.0	
13	11	24	72.2	288	287	23.0	64.0	87.0	23.0	23.0	
14	6		72.1	288	287	23.0	29.0	51.0	22.0	23.0	
15	7		72.0	288	286	23.0	25.0	46.0	21.0	23.0	
16	13		71.9	287	286	23.0	24.0	48.0	24.0	23.0	
17	19		71.8	287	285	23.0	24.0	46.0	22.0	23.0	
18	18		71.6	286	284.0	23.0	24.0	48.0	24.0	23.0	

STRESSING RECORD FOR STAY CABLES WITH CONTEN METHOD 1st STRESSING
DYWIDAG-SYSTEMS INTERNATIONAL

Project: **Sixth Street Cable Stayed Bridge- Milwaukee**

Cable no.	EAST	S7	Cable Type	C31	Length of cable	21.591 m	No. of strands 13
Construction stage		11.2	Length of jack	1000 mm	Relieve	3.0 mm	Slip 3.0 mm
Jack type		ConTen 140 kN	Jack no.	DSI 19039	Piston area	26.5 cm²	Friction 0.0%
Tension side		Deck	Date of tensioning		Person resp. for tensioning works		Owner's representative
Temperature of 1st strand			6/5/2002				

Se-quence	Strand number for		Required force at anchorage after relieve	Gauge pressure before relieve		Elongation theoretical before relieve	Strand protrusion		Partial elongation		Remark
	Working jack	Pilot jack		theoretical	actual		at pressure of 100 bar	at final pressure	actual	theoretical	
			[kN]	[bar]	[bar]	[mm]	[mm]	[mm]	[mm]	[mm]	
1	21	-	94.2	369	369	-				-	
2	9		93.5	367	360	84.1				61.1	
3	24	21	93.0	365	349	83.5	101.0	160.0	59.0	60.6	
4	4		92.6	364	348	83.1	63.0	126.0	63.0	60.2	
5	3		92.3	362	349	82.8	67.0	121.0	54.0	59.9	
6	5		91.6	360	348	82.2	71.0	132.0	61.0	59.4	
7	1		91.2	358	344	81.9	63.0	113.0	50.0	59.0	
8	2		90.9	357	339	81.6	61.0	113.0	52.0	58.7	
9	6	24	90.6	356	335	81.4	70.0	120.0	50.0	58.5	
10	7		90.4	355	331	81.2	74.0	122.0	48.0	58.3	
11	18		89.9	353	329	80.8	53.0	102.0	49.0	57.9	
12	12		89.5	352	327	80.5	52.0	102.0	50.0	57.6	
13	19		89.2	351	325	80.2	51.0	100.0	49.0	57.3	

STRESSING RECORD FOR STAY CABLES WITH CONTEN METHOD 2nd STRESSING
DYWIDAG-SYSTEMS INTENATIONAL

Project: **Sixth Street Cable Stayed Bridge- Milwaukee** **Page** 2

Cable no.	EAST S7	Cable Type	C31	Length of cable	21.591 m	No. of strands	13
Construction stage	12.1	Length of jack	1000 mm	Relieve	3.0 mm	Slip	1.0 mm
Jack type	ConTen 140 kN	Jack no.	DSI 190397	Priston area	26.5 cm²	Friction	0.0%
Tension side	Deck	Date of tensioning		Person resp. for tensioning works		Owner's representative	
Temperature of 1st strand		6/5/2002					

Se-quence	Strand number for		Required force at anchorage after relieve	Gauge pressure before relieve		Elongation theoretical	Strand protrusion		Elongation		Remark
	Working jack	Pilot jack	[kN]	theoretical [bar]	actual [bar]	before relieve [mm]	before stressing [mm]	at final pressure [mm]	actual [mm]	theoretical [mm]	
1	21	-	129.5	503		40.7				40.7	
2	9		129.4	502	503	40.7	27.0	72.0	45.0	40.7	
3	24	21	129.2	502	502	40.7	26.0	75.0	49.0	40.7	
4	4		129.1	501	501	40.7	26.0	74.0	48.0	40.7	
5	3		128.9	500	500	40.7	26.0	77.0	51.0	40.7	
6	5		128.7	500	499	40.7	27.0	81.0	54.0	40.7	
7	1		128.6	499	499	40.7	28.0	79.0	51.0	40.7	
8	2		128.4	499	497	40.7	27.0	73.0	46.0	40.7	
9	6	24	128.3	498	497	40.7	27.0	74.0	47.0	40.7	
10	7		128.1	497	497	40.6	27.0	74.0	47.0	40.6	
11	18		128.0	497	497	40.6	27.0	75.0	48.0	40.6	
12	12		127.8	496	496	40.6	27.0	78.0	51.0	40.6	
13	19		127.5	495	496.0	40.6	26.0	73.0	47.0	40.6	

STRESSING RECORD FOR STAY CABLES WITH CONTEN METHOD 1st STRESSING
DYWIDAG-SYSTEMS INTERNATIONAL

Project: **Sixth Street Cable Stayed Bridge- Milwaukee** **Page** 1

Cable no.	WEST S7	Cable Type	C31	Length of cable	21.591 m	No. of strands	13
Construction stage	11.2	Length of jack	1000 mm	Relleve	3.0 mm	Slip	3.0 mm
Jack type	ConTen 140 kN	Jack no.	DSI 19039	Piston area	26.5 cm²	Friction	0.0%
Tension side	Deck	Date of tensioning		Person resp. for tensioning works		Owner's representative	
Temperature of 1st strand		6/5/2002					

Se-quence	Strand number for		Required force at anchorage after relieve	Gauge pressure before relieve		Elongation theoretical before relieve	Strand protrusion		Partial elongation		Remark
	Working jack	Pilot jack		theoretical	actual		at pressure of 100 bar	at final pressure	actual	theoretical	
			[kN]	[bar]	[bar]	[mm]	[mm]	[mm]	[mm]	[mm]	
1	21	-	94.2	369	369	-				-	
2	9		93.5	367	367	84.1	52.0	112.0	60.0	61.1	
3	24	21	93.0	365	366	83.5	60.0	120.0	60.0	60.6	
4	4		92.6	364	365	83.1	65.0	123.0	58.0	60.2	
5	3		92.3	362	362	82.8	53.0	113.0	60.0	59.9	
6	5		91.6	360	360	82.2	56.0	115.0	59.0	59.4	
7	1		91.2	358	360	81.9	52.0	112.0	60.0	59.0	
8	2		90.9	357	357	81.6	52.0	110.0	58.0	58.7	
9	6	24	90.6	356	356	81.4	51.0	110.0	59.0	58.5	
10	7		90.4	355	354	81.2	62.0	120.0	58.0	58.3	
11	18		89.9	353	352	80.8	53.0	109.0	56.0	57.9	
12	12		89.5	352	349	80.5	54.0	110.0	56.0	57.6	
13	19		89.2	351	348	80.2	80.0	136.0	56.0	57.3	

STRESSING RECORD FOR STAY CABLES WITH CONTEN METHOD 2nd STRESSING
DYWIDAG-SYSTEMS INTENATIONAL

Project: **Sixth Street Cable Stayed Bridge- Milwaukee** **Page** 2

Cable no.	WEST S7	Cable Type	C31	Length of cable	21.591 m	No. of strands	13
Construction stage	12.1	Length of jack	1000 mm	Relieve	3.0 mm	Slip	1.0 mm
Jack type	ConTen 140 kN	Jack no.	DSI 190397	Priston area	26.5 cm²	Friction	0.0%
Tension side	Deck	Date of tensioning		Person resp. for tensioning works		Owner's representative	
Temperature of 1st strand		6/5/2002					

Se-quence	Strand number for		Required force at anchorage after relieve	Gauge pressure before relieve		Elongation theoretical	Strand protrusion		Elongation		Remark
	Working jack	Pilot jack	[kN]	theoretical [bar]	actual [bar]	before relieve [mm]	before stressing [mm]	at final pressure [mm]	actual [mm]	theoretical [mm]	
1	21	-	129.5	503	503	40.7				40.7	
2	9		129.4	502	509	40.7	28.0	71.0	43.0	40.7	
3	24	21	129.2	502	509	40.7	28.0	71.0	43.0	40.7	
4	4		129.1	501	508	40.7	28.0	72.0	44.0	40.7	
5	3		128.9	500	512	40.7	30.0	72.0	42.0	40.7	
6	5		128.7	500	509	40.7	27.0	71.0	44.0	40.7	
7	1		128.6	499	505	40.7	29.0	71.0	42.0	40.7	
8	2		128.4	499	502	40.7	28.0	71.0	43.0	40.7	
9	6	24	128.3	498	500	40.7	32.0	75.0	43.0	40.7	
10	7		128.1	497	499	40.6	28.0	71.0	43.0	40.6	
11	18		128.0	497	499	40.6	34.0	77.0	43.0	40.6	
12	12		127.8	496	498	40.6	27.0	72.0	45.0	40.6	
13	19		127.5	495	498.0	40.6	28.0	70.0	42.0	40.6	

STRESSING RECORD FOR STAY CABLES WITH CONTEN METHOD 1st STRESSING

DYWIDAG-SYSTEMS INTERNATIONAL

Project: **Sixth Street Cable Stayed Bridge- Milwaukee**

Cable no.	EAST S8	Cable Type	C31	Length of cable	28.362 m	No. of strands	27
Construction stage	11.2	Length of jack	1000 mm	Relieve	3.0 mm	Slip	3.0 mm
Jack type	ConTen 140 kN	Jack no.	DSI 19039	Piston area	26.5 cm²	Friction	0.0%
Tension side	Deck	Date of tensioning		Person resp. for tensioning works		Owner's representative	
Temperature of 1st strand		6/6/2002					

Se-quence	Strand number for		Required force at anchorage after relieve	Gauge pressure before relieve		Elongation theoretical before relieve	Strand protrusion		Partial elongation		Remark
	Working jack	Pilot jack		theoretical	actual		at pressure of 100 bar	at final pressure	actual	theoretical	
			[kN]	[bar]	[bar]	[mm]	[mm]	[mm]	[mm]	[mm]	
1	15	-	108.5	420	420	-				-	
2	16	15	104.3	404	409	122.9	121.0	222.0	101.0	92.5	
3	24		102.7	398	403	118.3	73.0	165.0	92.0	88.6	
4	25		101.6	394	401	116.7	69.0	163.0	94.0	87.1	
5	10		100.6	390	399	115.4	53.0	154.0	101.0	85.8	
6	9	24	99.1	385	397	113.8	61.0	151.0	90.0	84.2	
7	21		98.1	381	394	112.6	60.0	143.0	83.0	83.0	
8	3		97.3	378	389	111.7	63.0	151.0	88.0	82.2	
9	8		96.7	375	387	111.1	61.0	144.0	83.0	81.5	
10	20		96.2	374	381	110.5	65.0	150.0	85.0	80.9	
11	14		95.0	369	378	109.3	63.0	144.0	81.0	79.7	
12	2		94.0	365	376	108.2	65.0	146.0	81.0	78.6	
13	4	21	93.2	362	372	107.3	71.0	149.0	78.0	77.7	
14	1		92.5	360	368	106.5	69.0	145.0	76.0	76.9	
15	5		91.9	357	363	105.9	59.0	141.0	82.0	76.2	
16	17		90.8	353	361	104.7	60.0	141.0	81.0	75.1	
17	26		89.8	350	358	103.7	76.0	149.0	73.0	74.0	
18	11		89.0	346	353	102.8	67.0	147.0	80.0	73.1	
19	6		88.2	344	350	102.0	69.0	155.0	86.0	72.3	
20	7		87.6	341	348	101.2	83.0	155.0	72.0	71.6	
21	13		86.5	337	343	100.1	56.0	126.0	70.0	70.4	
22	31		85.6	334	340	99.1	53.0	127.0	74.0	69.4	
23	30		84.8	331	338	98.2	53.0	129.0	76.0	68.5	
24	19		84.0	328	335	97.4	60.0	133.0	73.0	67.6	
25	12		83.3	325	332	96.6	55.0	124.0	69.0	66.9	
26	18		82.4	321	329	95.6	57.0	128.0	71.0	65.9	
27	27		81.5	318	325	94.7	62.0	136.0	74.0	64.9	

STRESSING RECORD FOR STAY CABLES WITH CONTEN METHOD 2nd STRESSING
DYWIDAG-SYSTEMS INTENATIONAL

Project: **Sixth Street Cable Stayed Bridge- Milwaukee**

Cable no.	EAST S8	Cable Type	C31	Length of cable	28.362 m	No. of strands	27
Construction stage	12.1	Length of jack	1000 mm	Relieve	3.0 mm	Slip	1.0 mm
Jack type	ConTen 140 kN	Jack no.	DSI 190397	Priston area	26.5 cm²	Friction	0.0%
Tension side	Deck	Date of tensioning		Person resp. for tensioning works		Owner's representative	
Temperature of 1st strand		6/6/2002					

Se-quence	Strand number for		Required force at anchorage after relieve	Gauge pressure before relieve		Elongation theoretical	Strand protrusion		Elongation		Remark
	Working jack	Pilot jack	[kN]	theoretical [bar]	actual [bar]	before relieve [mm]	before stressing [mm]	at final pressure [mm]	actual [mm]	theoretical [mm]	
1	15	-	126.3	487	487	55.3				55.3	
2	16	15	126.0	486	487	55.3	27.0	84.0	57.0	55.3	
3	24		125.6	485	486	55.3	27.0	85.0	58.0	55.3	
4	25		125.2	483	485	55.2	26.0	86.0	60.0	55.2	
5	10		124.9	482	484	55.2	27.0	86.0	59.0	55.2	
6	9	24	124.5	480	483	55.2	26.0	84.0	58.0	55.2	
7	21		124.1	479	481	55.2	27.0	83.0	56.0	55.2	
8	3		123.8	478	479	55.2	26.0	85.0	59.0	55.2	
9	8		123.4	476	478	55.2	26.0	90.0	64.0	55.2	
10	20		123.1	475	476	55.2	27.0	84.0	57.0	55.2	
11	14		122.7	474	474	55.2	27.0	85.0	58.0	55.2	
12	2		122.3	472	472	55.1	27.0	84.0	57.0	55.1	
13	4	21	122.0	471	472	55.1	27.0	86.0	59.0	55.1	
14	1		121.6	469	470	55.1	27.0	85.0	58.0	55.1	
15	5		121.2	468	469	55.1	27.0	87.0	60.0	55.1	
16	17		120.9	467	468	55.1	27.0	87.0	60.0	55.1	
17	26		120.5	465	466	55.1	27.0	91.0	64.0	55.1	
18	11		120.1	464	465	55.1	27.0	92.0	65.0	55.1	
19	6		119.8	463	462	55.0	27.0	84.0	57.0	55.0	
20	7		119.4	461	460	55.0	26.0	83.0	57.0	55.0	
21	13		119.0	460	459	55.0	26.0	83.0	57.0	55.0	
22	31		118.7	458	458	55.0	26.0	84.0	58.0	55.0	
23	30		118.3	457	456	55.0	27.0	83.0	56.0	55.0	
24	19		118.0	456	454	55.0	27.0	84.0	57.0	55.0	
25	12		117.6	454	453	55.0	28.0	86.0	58.0	55.0	
26	18		117.2	453	451	55.0	27.0	84.0	57.0	55.0	
27	27		116.5	450	449	54.9	27.0	84.0	57.0	54.9	

STRESSING RECORD FOR STAY CABLES WITH CONTEN METHOD 1st STRESSING
DYWIDAG-SYSTEMS INTERNATIONAL

Project: **Sixth Street Cable Stayed Bridge- Milwaukee**

Cable no.	WEST S8	Cable Type	C31	Length of cable	28.362 m	No. of strands	27
Construction stage	11.2	Length of jack	1000 mm	Relieve	3.0 mm	Slip	3.0 mm
Jack type	ConTen 140 kN	Jack no.	DSI 19039	Piston area	26.5 cm²	Friction	0.0%
Tension side	Deck	Date of tensioning		Person resp. for tensioning works		Owner's representative	
Temperature of 1st strand		6/6/2002					

Se-quence	Strand number for		Required force at anchorage after relieve	Gauge pressure before relieve		Elongation theoretical before relieve	Strand protrusion		Partial elongation		Remark
	Working jack	Pilot jack		theoretical	actual		at pressure of 100 bar	at final pressure	actual	theoretical	
			[kN]	[bar]	[bar]	[mm]	[mm]	[mm]	[mm]	[mm]	
1	15	-	108.5	420	420	-				-	
2	16	15	104.3	404	410	122.9	33.0	125.0	92.0	92.5	
3	24		102.7	398	407	118.3	75.0	165.0	90.0	88.6	
4	25		101.6	394	400	116.7	62.0	149.0	87.0	87.1	
5	10		100.6	390	396	115.4	70.0	156.0	86.0	85.8	
6	9	24	99.1	385	385	113.8	64.0	144.0	80.0	84.2	
7	21		98.1	381	382	112.6	63.0	144.0	81.0	83.0	
8	3		97.3	378	378	111.7	60.0	139.0	79.0	82.2	
9	8		96.7	375	375	111.1	63.0	142.0	79.0	81.5	
10	20		96.2	374	371	110.5	64.0	141.0	77.0	80.9	
11	14		95.0	369	368	109.3	67.0	145.0	78.0	79.7	
12	2		94.0	365	365	108.2	65.0	141.0	76.0	78.6	
13	4	21	93.2	362	360	107.3	76.0	155.0	79.0	77.7	
14	1		92.5	360	360	106.5	80.0	155.0	75.0	76.9	
15	5		91.9	357	358	105.9	90.0	161.0	71.0	76.2	
16	17		90.8	353	355	104.7	65.0	137.0	72.0	75.1	
17	26		89.8	350	350	103.7	64.0	136.0	72.0	74.0	
18	11		89.0	346	348	102.8	70.0	141.0	71.0	73.1	
19	6		88.2	344	345	102.0	82.0	154.0	72.0	72.3	
20	7		87.6	341	344	101.2	86.0	158.0	72.0	71.6	
21	13		86.5	337	340	100.1	69.0	138.0	69.0	70.4	
22	31		85.6	334	338	99.1	70.0	140.0	70.0	69.4	
23	30		84.8	331	335	98.2	60.0	130.0	70.0	68.5	
24	19		84.0	328	330	97.4	62.0	132.0	70.0	67.6	
25	12		83.3	325	330	96.6	64.0	130.0	66.0	66.9	
26	18		82.4	321	327	95.6	60.0	125.0	65.0	65.9	
27	27		81.5	318	323	94.7	65.0	130.0	65.0	64.9	

STRESSING RECORD FOR STAY CABLES WITH CONTEN METHOD 2nd STRESSING
DYWIDAG-SYSTEMS INTENATIONAL

Project: Sixth Street Cable Stayed Bridge- Milwaukee

Cable no.	WEST S8	Cable Type	C31	Length of cable	28.362 m	No. of strands	27
Construction stage	12.1	Length of jack	1000 mm	Relieve	3.0 mm	Slip	1.0 mm
Jack type	ConTen 140 kN	Jack no.	DSI 190397	Priston area	26.5 cm²	Friction	0.0%
Tension side	Deck	Date of tensioning		Person resp. for tensioning works		Owner's representative	
Temperature of 1st strand		6/6/2002					

Se-quence	Strand number for		Required force at anchorage after relieve	Gauge pressure before relieve		Elongation theoretical	Strand protrusion		Elongation		Remark
	Working jack	Pilot jack	[kN]	theoretical [bar]	actual [bar]	before relieve [mm]	before stressing [mm]	at final pressure [mm]	actual [mm]	theoretical [mm]	
1	15	-	126.3	487	487	55.3				55.3	
2	16	15	126.0	486	490	55.3	26.0	85.0	59.0	55.3	
3	24		125.6	485	485	55.3	26.0	84.0	58.0	55.3	
4	25		125.2	483	484	55.2	37.0	93.0	56.0	55.2	
5	10		124.9	482	484	55.2	26.0	83.0	57.0	55.2	
6	9	24	124.5	480	480	55.2	26.0	81.0	55.0	55.2	
7	21		124.1	479	479	55.2	26.0	85.0	59.0	55.2	
8	3		123.8	478	479	55.2	30.0	90.0	60.0	55.2	
9	8		123.4	476	479	55.2	25.0	85.0	60.0	55.2	
10	20		123.1	475	475	55.2	29.0	86.0	57.0	55.2	
11	14		122.7	474	474	55.2	27.0	85.0	58.0	55.2	
12	2		122.3	472	472	55.1	25.0	84.0	59.0	55.1	
13	4	21	122.0	471	471	55.1	26.0	85.0	59.0	55.1	
14	1		121.6	469	470	55.1	25.0	85.0	60.0	55.1	
15	5		121.2	468	469	55.1	28.0	85.0	57.0	55.1	
16	17		120.9	467	466	55.1	26.0	85.0	59.0	55.1	
17	26		120.5	465	465	55.1	26.0	85.0	59.0	55.1	
18	11		120.1	464	463	55.1	40.0	98.0	58.0	55.1	
19	6		119.8	463	461	55.0	30.0	90.0	60.0	55.0	
20	7		119.4	461	460	55.0	26.0	84.0	58.0	55.0	
21	13		119.0	460	459	55.0	27.0	84.0	57.0	55.0	
22	31		118.7	458	455	55.0	26.0	83.0	57.0	55.0	
23	30		118.3	457	454	55.0	27.0	85.0	58.0	55.0	
24	19		118.0	456	452	55.0	26.0	85.0	59.0	55.0	
25	12		117.6	454	449	55.0	31.0	88.0	57.0	55.0	
26	18		117.2	453	445	55.0	31.0	87.0	56.0	55.0	
27	27		116.5	450	442	54.9	26.0	85.0	59.0	54.9	

STRESSING RECORD FOR STAY CABLES WITH CONTEN METHOD 1st STRESSING

DYWIDAG-SYSTEMS INTERNATIONAL

Project: Sixth Street Cable Stayed Bridge- Milwaukee

Cable no.	EAST S9	Cable Type	C37	Length of cable	36.160 m	No. of strands	29
Construction stage	11.2	Length of jack	1000 mm	Relieve	3.0 mm	Slip	3.0 mm
Jack type	ConTen 140 kN	Jack no.	DSI 19039	Piston area	26.5 cm²	Friction	0.0%
Tension side	Deck	Date of tensioning		Person resp. for tensioning works		Owner's representative	
Temperature of 1st strand		6/7/2002					

Se-quence	Strand number for		Required force at anchorage after relieve	Gauge pressure before relieve		Elongation theoretical before relieve	Strand protrusion		Partial elongation		Remark
	Working jack	Pilot jack		theoretical	actual		at pressure of 100 bar	at final pressure	actual	theoretical	
			[kN]	[bar]	[bar]	[mm]	[mm]	[mm]	[mm]	[mm]	
1	15	-	108.4	417	417	-				-	
2	16	15	98.9	381	400	153.8	117.0	231.0	114.0	113.5	
3	24		96.0	371	389	140.7	75.0	179.0	104.0	102.8	
4	25		94.6	365	381	137.0	68.0	169.0	101.0	99.5	
5	10		93.4	361	374	134.9	73.0	170.0	97.0	97.5	
6	9	24	92.0	355	368	132.7	89.0	188.0	99.0	95.4	
7	21		91.0	351	363	131.2	88.0	187.0	99.0	93.9	
8	20		90.2	349	359	130.1	78.0	171.0	93.0	92.8	
9	8		89.6	346	355	129.3	79.0	174.0	95.0	92.0	
10	3		89.1	345	350	128.6	79.0	164.0	85.0	91.3	
11	32		88.0	341	349	127.1	65.0	153.0	88.0	89.8	
12	14		87.2	337	346	125.9	68.0	156.0	88.0	88.6	
13	4	21	86.4	334	340	124.9	79.0	165.0	86.0	87.5	
14	2		85.8	332	337	124.0	70.0	152.0	82.0	86.6	
15	1		85.2	330	333	123.2	82.0	163.0	81.0	85.9	
16	5		84.2	326	330	121.9	85.0	164.0	79.0	84.5	
17	17		83.4	323	327	120.8	77.0	158.0	81.0	83.4	
18	35		82.6	320	324	119.7	67.0	147.0	80.0	82.3	
19	26		82.0	318	321	118.8	66.0	144.0	78.0	81.4	
20	11		81.4	315	318	118.0	80.0	154.0	74.0	80.6	
21	6		80.5	312	316	116.7	71.0	149.0	78.0	79.3	
22	7		79.6	309	312	115.6	69.0	147.0	78.0	78.2	
23	13		78.9	306	310	114.6	70.0	148.0	78.0	77.2	
24	31		78.2	303	306	113.7	81.0	151.0	70.0	76.2	
25	30		77.6	301	303	112.8	66.0	136.0	70.0	75.3	
26	19		76.7	298	300	111.6	70.0	138.0	68.0	74.1	
27	12		75.9	295	298	110.5	62.0	135.0	73.0	73.0	
28	18		75.2	292	294	109.5	65.0	136.0	71.0	72.0	
29	27		74.5	289	291.0	108.6	63.0	132.0	69.0	71.1	

STRESSING RECORD FOR STAY CABLES WITH CONTEN METHOD 2nd STRESSING
DYWIDAG-SYSTEMS INTENATIONAL

Project: Sixth Street Cable Stayed Bridge- Milwaukee

Cable no.	EAST S9	Cable Type	C37	Length of cable	36.160 m	No. of strands	29
Construction stage	12.1	Length of jack	1000 mm	Relieve	3.0 mm	Slip	1.0 mm
Jack type	ConTen 140 kN	Jack no.	DSI 190397	Priston area	26.5 cm²	Friction	0.0%
Tension side	Deck	Date of tensioning		Person resp. for tensioning works		Owner's representative	
Temperature of 1st strand		6/7/2002					

Se-quence	Strand number for		Required force at anchorage after relieve	Gauge pressure before relieve		Elongation theoretical before relieve	Strand protrusion		Elongation		Remark
	Working jack	Pilot jack	[kN]	theoretical [bar]	actual [bar]	[mm]	before stressing [mm]	at final pressure [mm]	actual [mm]	theoretical [mm]	
1	15	-	115.8	445	445	63.1				63.1	
2	16	15	115.5	444	445	63.1	25.0	91.0	66.0	63.1	
3	24		115.2	443	444	63.1	24.0	84.0	60.0	63.1	
4	25		114.9	442	442	63.1	25.0	85.0	60.0	63.1	
5	10		114.5	440	440	63.1	25.0	86.0	61.0	63.1	
6	9	24	114.2	439	439	63.1	25.0	84.0	59.0	63.1	
7	21		113.9	438	437	63.1	25.0	87.0	62.0	63.1	
8	20		113.6	437	435	63.0	25.0	86.0	61.0	63.0	
9	8		113.2	436	433	63.0	26.0	85.0	59.0	63.0	
10	3		112.9	434	431	63.0	28.0	89.0	61.0	63.0	
11	32		112.6	433	430	63.0	25.0	84.0	59.0	63.0	
12	14		112.3	432	429	63.0	28.0	87.0	59.0	63.0	
13	4	21	111.9	431	429	63.0	25.0	86.0	61.0	63.0	
14	2		111.6	429	426	63.0	29.0	92.0	63.0	63.0	
15	1		111.3	428	424	63.0	27.0	87.0	60.0	63.0	
16	5		111.0	427	421	62.9	28.0	88.0	60.0	62.9	
17	17		110.7	426	419	62.9	25.0	84.0	59.0	62.9	
18	35		110.3	425	417	62.9	27.0	85.0	58.0	62.9	
19	26		110.0	423	415	62.9	25.0	83.0	58.0	62.9	
20	11		109.7	422	413	62.9	25.0	84.0	59.0	62.9	
21	6		109.4	421	410	62.9	29.0	87.0	58.0	62.9	
22	7		109.0	420	408	62.9	29.0	85.0	56.0	62.9	
23	13		108.7	418	408	62.9	28.0	86.0	58.0	62.9	
24	31		108.4	417	406	62.8	25.0	82.0	57.0	62.8	
25	30		108.1	416	404	62.8	25	83.0	58.0	62.8	
26	19		107.7	415	402	62.8	27.0	85.0	58.0	62.8	
27	12		107.4	414	401	62.8	25.0	83.0	58.0	62.8	
28	18		107.1	412	400	62.8	26.0	84.0	58.0	62.8	
29	27		106.4	410	399	62.8	25.0	84.0	59.0	62.8	

STRESSING RECORD FOR STAY CABLES WITH CONTEN METHOD 1st STRESSING
DYWIDAG-SYSTEMS INTERNATIONAL

Project: **Sixth Street Cable Stayed Bridge- Milwaukee**

Cable no.	WEST S9	Cable Type	C37	Length of cable	36.160 m	No. of strands	29
Construction stage	11.2	Length of jack	1000 mm	Relieve	3.0 mm	Slip	3.0 mm
Jack type	ConTen 140 kN	Jack no.	DSI 19039	Piston area	26.5 cm²	Friction	0.0%
Tension side	Deck	Date of tensioning		Person resp. for tensioning works		Owner's representative	
Temperature of 1st strand		6/7/2002					

Se-quence	Strand number for		Required force at anchorage after relieve	Gauge pressure before relieve		Elongation theoretical before relieve	Strand protrusion		Partial elongation		Remark
	Working jack	Pilot jack		theoretical	actual		at pressure of 100 bar	at final pressure	actual	theoretical	
			[kN]	[bar]	[bar]	[mm]	[mm]	[mm]	[mm]	[mm]	
1	15	-	108.4	417	417	-				-	
2	16	15	98.9	381	380	153.8	26.0	133.0	107.0	113.5	
3	24		96.0	371	370	140.7	72.0	170.0	98.0	102.8	
4	25		94.6	365	362	137.0	68.0	165.0	97.0	99.5	
5	10		93.4	361	358	134.9	70.0	163.0	93.0	97.5	
6	9	24	92.0	355	350	132.7	92	186	94.0	95.4	
7	21		91.0	351	348	131.2	86	179	93.0	93.9	
8	20		90.2	349	345	130.1	71	160	89.0	92.8	
9	8		89.6	346	340	129.3	73	163	90.0	92.0	
10	3		89.1	345	338	128.6	86	170	84.0	91.3	
11	32		88.0	341	335	127.1	81	164	83.0	89.8	
12	14		87.2	337	330	125.9	64.0	150.0	86.0	88.6	
13	4	21	86.4	334	335	124.9	90.0	173.0	83.0	87.5	
14	2		85.8	332	330	124.0	86.0	170.0	84.0	86.6	
15	1		85.2	330	328	123.2	73.0	155.0	82.0	85.9	
16	5		84.2	326	326	121.9	81.0	161.0	80.0	84.5	
17	17		83.4	323	321	120.8	66.0	146.0	80.0	83.4	
18	35		82.6	320	320	119.7	67.0	144.0	77.0	82.3	
19	26		82.0	318	316	118.8	63.0	140.0	77.0	81.4	
20	11		81.4	315	312	118.0	66.0	143.0	77.0	80.6	
21	6		80.5	312	310	116.7	63.0	139.0	76.0	79.3	
22	7		79.6	309	309	115.6	75.0	151.0	76.0	78.2	
23	13		78.9	306	305	114.6	66.0	140.0	74.0	77.2	
24	31		78.2	303	302	113.7	76.0	147.0	71.0	76.2	
25	30		77.6	301	301	112.8	64.0	134.0	70.0	75.3	
26	19		76.7	298	299	111.6	76.0	146.0	70.0	74.1	
27	12		75.9	295	295	110.5	63.0	132.0	69.0	73.0	
28	18		75.2	292	291	109.5	66.0	134.0	68.0	72.0	
29	27		74.5	289	289.0	108.6	65.0	131.0	66.0	71.1	

STRESSING RECORD FOR STAY CABLES WITH CONTEN METHOD 2nd STRESSING
DYWIDAG-SYSTEMS INTENATIONAL

Project: **Sixth Street Cable Stayed Bridge- Milwaukee**

Cable no.	WEST S9	Cable Type	C37	Length of cable	36.160 m	No. of strands	29
Construction stage	12.1	Length of jack	1000 mm	Relieve	3.0 mm	Slip	1.0 mm
Jack type	ConTen 140 kN	Jack no.	DSI 190397	Priston area	26.5 cm²	Friction	0.0%
Tension side	Deck	Date of tensioning		Person resp. for tensioning works		Owner's representative	
Temperature of 1st strand		6/7/2002					

Se-quence	Strand number for		Required force at anchorage after relieve	Gauge pressure before relieve		Elongation theoretical before relieve	Strand protrusion		Elongation		Remark
	Working jack	Pilot jack		theoretical	actual		before stressing	at final pressure	actual	theoretical	
			[kN]	[bar]	[bar]	[mm]	[mm]	[mm]	[mm]	[mm]	
1	15	-	115.8	445	445	63.1				63.1	
2	16	15	115.5	444	444	63.1	22.0	88.0	66.0	63.1	
3	24		115.2	443	442	63.1	21.0	89.0	68.0	63.1	
4	25		114.9	442	442	63.1	21.0	89.0	68.0	63.1	
5	10		114.5	440	441	63.1	21.0	89.0	68.0	63.1	
6	9	24	114.2	439	438	63.1	21.0	87.0	66.0	63.1	
7	21		113.9	438	436	63.1	22.0	90.0	68.0	63.1	
8	20		113.6	437	432	63.0	25.0	92.0	67.0	63.0	
9	8		113.2	436	431	63.0	21.0	86.0	65.0	63.0	
10	3		112.9	434	430	63.0	21.0	87.0	66.0	63.0	
11	32		112.6	433	429	63.0	25.0	92.0	67.0	63.0	
12	14		112.3	432	425	63.0	25.0	91.0	66.0	63.0	
13	4	21	111.9	431	430	63.0	21.0	87.0	66.0	63.0	
14	2		111.6	429	430	63.0	47.0	114.0	67.0	63.0	
15	1		111.3	428	429	63.0	20.0	88.0	68.0	63.0	
16	5		111.0	427	428	62.9	51.0	117.0	66.0	62.9	
17	17		110.7	426	426	62.9	22.0	90.0	68.0	62.9	
18	35		110.3	425	425	62.9	21.0	89.0	68.0	62.9	
19	26		110.0	423	424	62.9	21.0	90.0	69.0	62.9	
20	11		109.7	422	422	62.9	21.0	88.0	67.0	62.9	
21	6		109.4	421	421	62.9	25.0	92.0	67.0	62.9	
22	7		109.0	420	420	62.9	28.0	94.0	66.0	62.9	
23	13		108.7	418	419	62.9	25.0	91.0	66.0	62.9	
24	31		108.4	417	417	62.8	48.0	116.0	68.0	62.8	
25	30		108.1	416	415	62.8	25.0	94.0	69.0	62.8	
26	19		107.7	415	411	62.8	23.0	91.0	68.0	62.8	
27	12		107.4	414	410	62.8	19.0	86.0	67.0	62.8	
28	18		107.1	412	409	62.8	19.0	87.0	68.0	62.8	
29	27		106.4	410	408	62.8	19.0	87.0	68.0	62.8	

STRESSING RECORD FOR STAY CABLES WITH CONTEN METHOD 1st STRESSING
DYWIDAG-SYSTEMS INTERNATIONAL

Project: **Sixth Street Cable Stayed Bridge- Milwaukee**

Cable no.	EAST S10	Cable Type	C37	Length of cable	44.540 m	No. of strands	35
Construction stage	11.2	Length of jack	1000 mm	Relieve	3.0 mm	Slip	3.0 mm
Jack type	ConTen 140 kN	Jack no.	DSI 19039	Piston area	26.5 cm²	Friction	0.0%
Tension side	Deck	Date of tensioining		Person resp. for tensioning works		Owner's representative	
Temperature of 1st strand		6/10/2002		Columba Cannon			

Se-quence	Strand number for		Required force at anchorage after relieve	Gauge pressure before relieve		Elongation theoretical before relieve	Strand protrusion		Partial elongation		Remark
	Working jack	Pilot jack		theoretical	actual		at pressure of 100 bar	at final pressure	actual	theoretical	
			[kN]	[bar]	[bar]	[mm]	[mm]	[mm]	[mm]	[mm]	
1	22	-	117.2	449	449	-				-	
2	34	22	99.2	381	382	201.5	100.0	242.0	142.0	148.6	
3	24		93.9	361	360	171.7	89.0	207.0	118.0	124.1	
4	33	34	91.5	352	347	163.0	111.0	222.0	111.0	116.6	
5	21		90.0	346	340	158.9	88.0	192.0	104.0	113.0	
6	15		88.6	341	338	155.9	82	185	103.0	110.1	
7	20		87.6	337	330	153.9	78	177	99.0	108.3	
8	8		86.8	334	329	152.5	79	176	97.0	106.9	
9	23	21	86.3	332	329	151.4	121	222	101.0	105.8	
10	16		85.8	330	328	150.6	96	195	99.0	105.0	
11	9		85.0	327	324	149.1	107	205	98.0	103.5	
12	25		84.3	325	320	147.9	80.0	174.0	94.0	102.3	
13	10		83.7	322	318	146.9	82.0	177.0	95.0	101.3	
14	4		83.2	321	318	146.0	87.0	177.0	90.0	100.5	
15	3	23	82.7	319	318	145.3	89.0	186.0	97.0	99.7	
16	17		82.0	316	317	144.0	78.0	178.0	100.0	98.5	
17	5		81.3	314	316	143.0	86.0	185.0	99.0	97.4	
18	1		80.8	312	314	142.0	81.0	174.0	93.0	96.4	
19	2		80.3	310	313	141.1	82.0	176.0	94.0	95.5	
20	14		79.8	308	310	140.4	79.0	177.0	98.0	94.8	
21	31		79.1	305	309	139.2	77.0	169.0	92.0	93.6	
22	13		78.5	303	308	138.2	73.0	166.0	93.0	92.6	
23	7		78.0	301	305	137.3	80.0	170.0	90.0	91.6	
24	6		77.4	299	303	136.4	88.0	174.0	86.0	90.8	
25	11		77.0	297	301	135.6	80.0	168.0	88.0	90.0	
26	26		76.3	295	300	134.5	72.0	162.0	90.0	88.8	
27	27		75.7	292	298	133.5	71.0	160.0	89.0	87.8	
28	18		75.1	290	296	132.5	71.0	159.0	88.0	86.8	
29	12		74.6	288	294	131.6	75.0	161.0	86.0	85.9	
30	19		74.1	286	293	130.8	79.0	160.0	81.0	85.1	
31	30		73.5	284	292	129.7	75.0	160.0	85.0	84.0	
32	37		72.9	282	288	128.7	75.0	156.0	81.0	83.0	
33	29		72.3	280	285	127.8	73.0	154.0	81.0	82.1	
34	28		71.8	278	282	126.9	71.0	151.0	80.0	81.2	
35	36		71.3	276	280.0	126.1	69.0	149.0	80.0	80.3	

STRESSING RECORD FOR STAY CABLES WITH CONTEN METHOD 2nd STRESSING
DYWIDAG-SYSTEMS INTENATIONAL

Project: Sixth Street Cable Stayed Bridge- Milwaukee

Cable no.	EAST S10	Cable Type	C37	Length of cable	44.540 m	No. of strands	35
Construction stage	12.1	Length of jack	1000 mm	Relieve	3.0 mm	Slip	1.0 mm
Jack type	ConTen 140 kN	Jack no.	DSI 190397	Priston area	26.5 cm²	Friction	0.0%
Tension side	Deck	Date of tensioning		Person resp. for tensioning work		Owner's representative	
Temperature of 1st strand		6/11/2002					

Se-quence	Strand number for		Required force at anchorage after relieve	Gauge pressure before relieve		Elongation theoretical before relieve	Strand protrusion		Elongation		Remark
	Working jack	Pilot jack	[kN]	theoretical [bar]	actual [bar]	[mm]	before stressing [mm]	at final pressure [mm]	actual [mm]	theoretical [mm]	
1	22	-	110.3	423	423	71.9				71.9	
2	34	22	110.1	422	422	71.9	27.0	105.0	78.0	71.9	
3	24		109.8	421	420	71.9	27.0	105.0	78.0	71.9	
4	33	34	109.6	420	420	71.8	27.0	108.0	81.0	71.8	
5	21		109.4	419	419	71.8	27.0	108.0	81.0	71.8	
6	15		109.1	418	418	71.8	27.0	104.0	77.0	71.8	
7	20		108.9	417	418	71.8	27.0	108.0	81.0	71.8	
8	8		108.6	417	417	71.8	28.0	108.0	80.0	71.8	
9	23	21	108.4	416	415	71.8	26.0	101.0	75.0	71.8	
10	16		108.2	415	413	71.8	31.0	102.0	71.0	71.8	
11	9		107.9	414	409	71.8	27.0	97.0	70.0	71.8	
12	25		107.7	413	407	71.8	27.0	98.0	71.0	71.8	
13	10		107.4	412	407	71.8	27.0	100.0	73.0	71.8	
14	4		107.2	411	406	71.8	27.0	97.0	70.0	71.8	
15	3	23	107.0	410	406	71.8	27.0	95.0	68.0	71.8	
16	17		106.7	409	405	71.7	28.0	93.0	65.0	71.7	
17	5		106.5	408	404	71.7	30.0	96.0	66.0	71.7	
18	1		106.2	408	404	71.7	27.0	98.0	71.0	71.7	
19	2		106.0	407	403	71.7	28.0	94.0	66.0	71.7	
20	14		105.8	406	402	71.7	28.0	94.0	66.0	71.7	
21	31		105.5	405	400	71.7	28.0	93.0	65.0	71.7	
22	13		105.3	404	400	71.7	28.0	94.0	66.0	71.7	
23	7		105.0	403	399	71.7	27.0	93.0	66.0	71.7	
24	6		104.8	402	399	71.7	28.0	92.0	64.0	71.7	
25	11		104.6	401	398	71.7	28.0	94.0	66.0	71.7	
26	26		104.3	400	396	71.7	31.0	96.0	65.0	71.7	
27	27		104.1	399	395	71.6	27.0	94.0	67.0	71.6	
28	18		103.8	398	395	71.6	27.0	92.0	65.0	71.6	
29	12		103.6	398	393	71.6	27.0	93.0	66.0	71.6	
30	19		103.3	397	391	71.6	31.0	97.0	66.0	71.6	
31	30		103.1	396	390	71.6	29.0	98.0	69.0	71.6	
32	37		102.9	395	389	71.6	27.0	91.0	64.0	71.6	
33	29		102.6	394	388	71.6	42.0	105.0	63.0	71.6	
34	28		102.4	393	388	71.6	27.0	91.0	64.0	71.6	
35	36		101.9	391	386	71.6	28.0	92.0	64.0	71.6	

STRESSING RECORD FOR STAY CABLES WITH CONTEN METHOD 1st STRESSING
DYWIDAG-SYSTEMS INTERNATIONAL

Project: **Sixth Street Cable Stayed Bridge- Milwaukee**

Cable no.	WEST S10	Cable Type	C37	Length of cable	44.540 m	No. of strands	35
Construction stage	11.2	Length of jack	1000 mm	Relieve	3.0 mm	Slip	3.0 mm
Jack type	ConTen 140 kN	Jack no.	DSI 19039	Piston area	26.5 cm²	Friction	0.0%
Tension side	Deck	Date of tensioining		Person resp. for tensioning works		Owner's representative	
Temperature of 1st strand		6/10/2002					

Se-quence	Strand number for		Required force at anchorage after relieve	Gauge pressure before relieve		Elongation theoretical before relieve	Strand protrusion		Partial elongation		Remark
	Working jack	Pilot jack		theoretical	actual		at pressure of 100 bar	at final pressure	actual	theoretical	
			[kN]	[bar]	[bar]	[mm]	[mm]	[mm]	[mm]	[mm]	
1	22	-	117.2	449	449	-				-	
2	34	22	99.2	381	400	201.5	34.0	181.0	147.0	148.6	
3	24		93.9	361	390	171.7	94.0	226.0	132.0	124.1	
4	33	34	91.5	352	355	163.0	114.0	225.0	111.0	116.6	
5	21		90.0	346	353	158.9	97.0	215.0	118.0	113.0	
6	15		88.6	341	350	155.9	106.0	221.0	115.0	110.1	
7	20		87.6	337	350	153.9	94.0	203.0	109.0	108.3	
8	8		86.8	334	349	152.5	96.0	205.0	109.0	106.9	
9	23	21	86.3	332	320	151.4	32.0	131.0	99.0	105.8	
10	16		85.8	330	319	150.6	99.0	194.0	95.0	105.0	
11	9		85.0	327	315	149.1	96.0	187.0	91.0	103.5	
12	25		84.3	325	312	147.9	91.0	182.0	91.0	102.3	
13	10		83.7	322	310	146.9	100.0	191.0	91.0	101.3	
14	4		83.2	321	308	146.0	97.0	190.0	93.0	100.5	
15	3	23	82.7	319	310	145.3	95.0	182.0	87.0	99.7	
16	17		82.0	316	309	144.0	83.0	172.0	89.0	98.5	
17	5		81.3	314	306	143.0	90.0	180.0	90.0	97.4	
18	1		80.8	312	302	142.0	76.0	166.0	90.0	96.4	
19	2		80.3	310	300	141.1	85.0	172.0	87.0	95.5	
20	14		79.8	308	298	140.4	80.0	166.0	86.0	94.8	
21	31		79.1	305	293	139.2	71.0	162.0	91.0	93.6	
22	13		78.5	303	290	138.2	75.0	159.0	84.0	92.6	
23	7		78.0	301	289	137.3	76.0	157.0	81.0	91.6	
24	6		77.4	299	288	136.4	82.0	166.0	84.0	90.8	
25	11		77.0	297	286	135.6	75.0	155.0	80.0	90.0	
26	26		76.3	295	285	134.5	78.0	158.0	80.0	88.8	
27	27		75.7	292	283	133.5	75.0	155.0	80.0	87.8	
28	18		75.1	290	282	132.5	90.0	167.0	77.0	86.8	
29	12		74.6	288	280	131.6	70.0	152.0	82.0	85.9	
30	19		74.1	286	279	130.8	72.0	154.0	82.0	85.1	
31	30		73.5	284	278	129.7	91.0	166.0	75.0	84.0	
32	37		72.9	282	275	128.7	70.0	146.0	76.0	83.0	
33	29		72.3	280	274	127.8	70.0	145.0	75.0	82.1	
34	28		71.8	278	272	126.9	75.0	148.0	73.0	81.2	
35	36		71.3	276	271	126.1	74.0	147.0	73.0	80.3	

STRESSING RECORD FOR STAY CABLES WITH CONTEN METHOD 2nd STRESSING
DYWIDAG-SYSTEMS INTENATIONAL

Project: **Sixth Street Cable Stayed Bridge- Milwaukee**

Cable no.	WEST S10	Cable Type	C37	Length of cable	44.540 m	No. of strands	35
Construction stage	12.1	Length of jack	1000 mm	Relieve	3.0 mm	Slip	1.0 mm
Jack type	ConTen 140 kN	Jack no.	DSI 190397	Priston area	26.5 cm²	Friction	0.0%
Tension side	Deck	Date of tensioning		Person resp. for tensioning works		Owner's representative	
Temperature of 1st strand		6/11/2002		Jason Samz			

Se-quence	Strand number for		Required force at anchorage after relieve	Gauge pressure before relieve		Elongation theoretical before relieve	Strand protrusion		Elongation		Remark
	Working jack	Pilot jack	[kN]	theoretical [bar]	actual [bar]	[mm]	before stressing [mm]	at final pressure [mm]	actual [mm]	theoretical [mm]	
1	22	-	110.3	423	423	71.9				71.9	
2	34	22	110.1	422	422	71.9	27.0	88.0	61.0	71.9	
3	24		109.8	421	421	71.9	29.0	85.0	56.0	71.9	
4	33	34	109.6	420	420	71.8	30.0	101.0	71.0	71.8	
5	21		109.4	419	419	71.8	30.0	98.0	68.0	71.8	
6	15		109.1	418	417	71.8	90	154	64.0	71.8	
7	20		108.9	417	415	71.8	27	92	65.0	71.8	
8	8		108.6	417	413	71.8	31	94	63.0	71.8	
9	23	21	108.4	416	408	71.8	26	95	69.0	71.8	
10	16		108.2	415	408	71.8	37	107	70.0	71.8	
11	9		107.9	414	404	71.8	26	93	67.0	71.8	
12	25		107.7	413	404	71.8	29	98	69.0	71.8	
13	10		107.4	412	402	71.8	26	97	71.0	71.8	
14	4		107.2	411	402	71.8	26	95	69.0	71.8	
15	3	23	107.0	410	400	71.8	37	96	59.0	71.8	
16	17		106.7	409	399	71.7	26	94	68.0	71.7	
17	5		106.5	408	398	71.7	30	103	73.0	71.7	
18	1		106.2	408	397	71.7	30	100	70.0	71.7	
19	2		106.0	407	398	71.7	29	101	72.0	71.7	
20	14		105.8	406	396	71.7	37	110	73.0	71.7	
21	31		105.5	405	394	71.7	28	100	72.0	71.7	
22	13		105.3	404	394	71.7	35	109	74.0	71.7	
23	7		105.0	403	390	71.7	36	110	74.0	71.7	
24	6		104.8	402	390	71.7	27	103	76.0	71.7	
25	11		104.6	401	389	71.7	26.0	99.0	73.0	71.7	
26	26		104.3	400	388	71.7	27.0	96.0	69.0	71.7	
27	27		104.1	399	387	71.6	26.0	100.0	74.0	71.6	
28	18		103.8	398	385	71.6	26.0	101.0	75.0	71.6	
29	12		103.6	398	383	71.6	27.0	102.0	75.0	71.6	
30	19		103.3	397	381	71.6	27.0	98.0	71.0	71.6	
31	30		103.1	396	381	71.6	27.0	96.0	69.0	71.6	
32	37		102.9	395	380	71.6	27.0	98.0	71.0	71.6	
33	29		102.6	394	379	71.6	28.0	98.0	70.0	71.6	
34	28		102.4	393	379	71.6	27.0	95.0	68.0	71.6	
35	36		101.9	391	378.0	71.6	26.0	94.0	68.0	71.6	

STRESSING RECORD FOR STAY CABLES WITH CONTEN METHOD 1st STRESSING

DYWIDAG-SYSTEMS INTERNATIONAL

Project: **Sixth Street Cable Stayed Bridge- Milwaukee**

Cable no.	EAST S11	Cable Type	C37	Length of cable	53.226 m	No. of strands	35
Construction stage	11.2	Length of jack	1000 mm	Relieve	3.0 mm	Slip	3.0 mm
Jack type	ConTen 140 kN	Jack no.	DSI 19039	Piston area	26.5 cm²	Friction	0.0%
Tension side	Deck	Date of tensioining		Person resp. for tensioning works		Owner's representative	
Temperature of 1st strand		6/11/2002					

Se-quence	Strand number for		Required force at anchorage after relieve	Gauge pressure before relieve		Elongation theoretical before relieve	Strand protrusion		Partial elongation		Remark
	Working jack	Pilot jack		theoretical	actual		at pressure of 100 bar	at final pressure	actual	theoretical	
			[kN]	[bar]	[bar]	[mm]	[mm]	[mm]	[mm]	[mm]	
1	22	-	122.2	467	467	-				-	
2	34	22	98.1	376	368	248.5	107.0	283.0	176.0	182.4	
3	24		90.5	347	350	201.1	92.0	235.0	143.0	143.1	
4	33	34	87.0	334	337	186.1	134.0	258.0	124.0	130.4	
5	21		85.1	327	328	179.2	98.0	214.0	116.0	124.4	
6	15		83.6	321	320	175.0	89.0	200.0	111.0	120.5	
7	20		82.5	317	312	172.3	93.0	200.0	107.0	117.9	
8	8		81.8	314	308	170.3	84.0	191.0	107.0	116.1	
9	23	21	81.1	312	313	168.9	27.0	139.0	112.0	114.7	
10	16		80.6	310	310	167.8	99.0	204.0	105.0	113.6	
11	9		79.9	307	306	166.3	113.0	215.0	102.0	112.1	
12	25		79.3	305	305	165.0	86.0	195.0	109.0	110.9	
13	10		78.8	303	302	164.0	91.0	195.0	104.0	109.9	
14	4		78.4	301	301	163.1	99.0	203.0	104.0	109.0	
15	3	23	78.0	300	301	162.3	95.0	201.0	106.0	108.2	
16	17		77.5	298	299	161.2	86.0	189.0	103.0	107.1	
17	5		77.0	296	296	160.1	85.0	189.0	104.0	106.0	
18	1		76.5	294	293	159.2	90.0	191.0	101.0	105.1	
19	2		76.1	293	291	158.4	87.0	190.0	103.0	104.3	
20	14		75.7	291	290	157.7	89.0	191.0	102.0	103.6	
21	31		75.2	289	288	156.6	86.0	186.0	100.0	102.5	
22	13		74.7	288	287	155.7	97.0	196.0	99.0	101.5	
23	7		74.3	286	285	154.8	84.0	182.0	98.0	100.6	
24	6		73.9	284	283	154.0	91.0	186.0	95.0	99.8	
25	11		73.5	283	281	153.2	91.0	185.0	94.0	99.1	
26	26		73.0	281	280	152.2	81.0	177.0	96.0	98.1	
27	27		72.6	279	279	151.3	81.0	175.0	94.0	97.1	
28	18		72.1	278	278	150.4	90.0	181.0	91.0	96.3	
29	12		71.7	276	277	149.6	84.0	174.0	90.0	95.5	
30	19		71.3	275	275	148.9	90.0	183.0	93.0	94.7	
31	30		70.9	273	274	147.9	84.0	175.0	91.0	93.7	
32	37		70.4	271	272	147.0	89.0	177.0	88.0	92.8	
33	29		70.0	270	271	146.2	81.0	169.0	88.0	92.0	
34	28		69.6	268	269	145.4	79.0	167.0	88.0	91.2	
35	36		69.2	267	266	144.6	87.0	173.0	86.0	90.4	

STRESSING RECORD FOR STAY CABLES WITH CONTEN METHOD 2nd STRESSING
DYWIDAG-SYSTEMS INTENATIONAL

Project: Sixth Street Cable Stayed Bridge- Milwaukee

Cable no.	EAST S11	Cable Type	C37	Length of cable	53.226 m	No. of strands	35
Construction stage	12.1	Length of jack	1000 mm	Relieve	3.0 mm	Slip	1.0 mm
Jack type	ConTen 140 kN	Jack no.	DSI 190397	Priston area	26.5 cm²	Friction	0.0%
Tension side	Deck	Date of tensioning		Person resp. for tensioning work		Owner's representative	
Temperature of 1st strand		6/12/2002					

Se-quence	Strand number for		Required force at anchorage after relieve	Gauge pressure before relieve		Elongation theoretical	Strand protrusion		Elongation		Remark
	Working jack	Pilot jack		theoretical	actual	before relieve	before stressing	at final pressure	actual	theoretical	
			[kN]	[bar]	[bar]	[mm]	[mm]	[mm]	[mm]	[mm]	
1	22	-	105.3	403	403	78.4				78.4	
2	34	22	105.1	402	402	78.4	27.0	115.0	88.0	78.4	
3	24		104.9	402	401	78.4	27.0	112.0	85.0	78.4	
4	33	34	104.8	401	401	78.4	27.0	118.0	91.0	78.4	
5	21		104.6	400	400	78.4	30.0	114.0	84.0	78.4	
6	15		104.4	399	399	78.4	27.0	110.0	83.0	78.4	
7	20		104.2	399	399	78.4	27.0	111.0	84.0	78.4	
8	8		104.0	398	398	78.4	27.0	111.0	84.0	78.4	
9	23	21	103.9	397	398	78.4	31.0	104.0	73.0	78.4	
10	16		103.7	397	396	78.4	28.0	109.0	81.0	78.4	
11	9		103.5	396	394	78.3	27.0	106.0	79.0	78.3	
12	25		103.3	395	394	78.3	27.0	104.0	77.0	78.3	
13	10		103.1	395	394	78.3	27.0	104.0	77.0	78.3	
14	4		102.9	394	393	78.3	31.0	105.0	74.0	78.3	
15	3	23	102.8	393	392	78.3	28.0	107.0	79.0	78.3	
16	17		102.6	393	391	78.3	27.0	108.0	81.0	78.3	
17	5		102.4	392	391	78.3	28.0	103.0	75.0	78.3	
18	1		102.2	391	389	78.3	28.0	100.0	72.0	78.3	
19	2		102.0	391	388	78.3	27.0	101.0	74.0	78.3	
20	14		101.9	390	387	78.3	28.0	99.0	71.0	78.3	
21	31		101.7	389	387	78.3	26.0	102.0	76.0	78.3	
22	13		101.5	389	386	78.3	28.0	100.0	72.0	78.3	
23	7		101.3	388	385	78.3	27.0	98.0	71.0	78.3	
24	6		101.1	387	384	78.3	28.0	99.0	71.0	78.3	
25	11		101.0	386	383	78.3	27.0	102.0	75.0	78.3	
26	26		100.8	386	382	78.2	29.0	103.0	74.0	78.2	
27	27		100.6	385	382	78.2	30.0	101.0	71.0	78.2	
28	18		100.4	384	381	78.2	30.0	101.0	71.0	78.2	
29	12		100.2	384	380	78.2	28.0	101.0	73.0	78.2	
30	19		100.0	383	379	78.2	28.0	101.0	73.0	78.2	
31	30		99.9	382	378	78.2	27.0	100.0	73.0	78.2	
32	37		99.7	382	378	78.2	28.0	97.0	69.0	78.2	
33	29		99.5	381	378	78.2	28.0	102.0	74.0	78.2	
34	28		99.3	380	376	78.2	27.0	98.0	71.0	78.2	
35	36		99.0	379	375	78.2	27.0	101.0	74.0	78.2	

STRESSING RECORD FOR STAY CABLES WITH CONTEN METHOD 1st STRESSING
DYWIDAG-SYSTEMS INTERNATIONAL

Project: **Sixth Street Cable Stayed Bridge- Milwaukee**

Cable no.	WEST S11	Cable Type	C37	Length of cable	53.226 m	No. of strands	35
Construction stage	11.2	Length of jack	1000 mm	Relieve	3.0 mm	Slip	3.0 mm
Jack type	ConTen 140 kN	Jack no.	DSi 19039	Piston area	26.5 cm²	Friction	0.0%
Tension side	Deck	Date of tensioining		Person resp. for tensioning works		Owner's representative	
Temperature of 1st strand		6/11/2002					

Se-quence	Strand number for		Required force at anchorage after relieve	Gauge pressure before relieve		Elongation theoretical before relieve	Strand protrusion		Partial elongation		Remark
	Working jack	Pilot jack		theoretical	actual		at pressure of 100 bar	at final pressure	actual	theoretical	
			[kN]	[bar]	[bar]	[mm]	[mm]	[mm]	[mm]	[mm]	
1	22	-	122.2	467	467	-				-	
2	34	22	98.1	376	379	248.5	24.0	201.0	177.0	182.4	
3	24		90.5	347	349	201.1	98.0	237.0	139.0	143.1	
4	33	34	87.0	334	334	186.1	100.0	233.0	133.0	130.4	
5	21		85.1	327	330	179.2	91.0	214.0	123.0	124.4	
6	15		83.6	321	324	175.0	94	214	120.0	120.5	
7	20		82.5	317	322	172.3	94	210	116.0	117.9	
8	8		81.8	314	319	170.3	86	200	114.0	116.1	
9	23	21	81.1	312	300	168.9	54	155	101.0	114.7	
10	16		80.6	310	300	167.8	95	198	103.0	113.6	
11	9		79.9	307	298	166.3	102	205	103.0	112.1	
12	25		79.3	305	295	165.0	84.0	182.0	98.0	110.9	
13	10		78.8	303	292	164.0	86.0	186.0	100.0	109.9	
14	4		78.4	301	290	163.1	101.0	198.0	97.0	109.0	
15	3	23	78.0	300	292	162.3	87.0	185.0	98.0	108.2	
16	17		77.5	298	290	161.2	80.0	181.0	101.0	107.1	
17	5		77.0	296	289	160.1	81.0	178.0	97.0	106.0	
18	1		76.5	294	287	159.2	83.0	180.0	97.0	105.1	
19	2		76.1	293	285	158.4	84.0	180.0	96.0	104.3	
20	14		75.7	291	282	157.7	89.0	184.0	95.0	103.6	
21	31		75.2	289	280	156.6	81.0	176.0	95.0	102.5	
22	13		74.7	288	279	155.7	101.0	193.0	92.0	101.5	
23	7		74.3	286	278	154.8	81.0	174.0	93.0	100.6	
24	6		73.9	284	277	154.0	77.0	169.0	92.0	99.8	
25	11		73.5	283	276	153.2	82.0	175.0	93.0	99.1	
26	26		73.0	281	272	152.2	80.0	169.0	89.0	98.1	
27	27		72.6	279	272	151.3	80.0	169.0	89.0	97.1	
28	18		72.1	278	271	150.4	89.0	177.0	88.0	96.3	
29	12		71.7	276	269	149.6	80.0	166.0	86.0	95.5	
30	19		71.3	275	268	148.9	88.0	174.0	86.0	94.7	
31	30		70.9	273	267	147.9	78.0	164.0	86.0	93.7	
32	37		70.4	271	265	147.0	82.0	165.0	83.0	92.8	
33	29		70.0	270	263	146.2	77.0	160.0	83.0	92.0	
34	28		69.6	268	260	145.4	74.0	159.0	85.0	91.2	
35	36		69.2	267	260	144.6	85.0	162.0	77.0	90.4	

STRESSING RECORD FOR STAY CABLES WITH CONTEN METHOD 2nd STRESSING
DYWIDAG-SYSTEMS INTENATIONAL

Project: Sixth Street Cable Stayed Bridge- Milwaukee

Cable no.	WEST S11	Cable Type	C37	Length of cable	53.226 m	No. of strands	35
Construction stage	12.1	Length of jack	1000 mm	Relieve	3.0 mm	Slip	1.0 mm
Jack type	ConTen 140 kN	Jack no.	DSI 190397	Priston area	26.5 cm²	Friction	0.0%
Tension side	Deck	Date of tensioning		Person resp. for tensioning works		Owner's representative	
Temperature of 1st strand		6/12/2002					

Se-quence	Strand number for		Required force at anchorage after relieve	Gauge pressure before relieve		Elongation theoretical before relieve	Strand protrusion		Elongation		Remark
	Working jack	Pilot jack	[kN]	theoretical [bar]	actual [bar]	[mm]	before stressing [mm]	at final pressure [mm]	actual [mm]	theoretical [mm]	
1	22	-	105.3	403	404	78.4				78.4	
2	34	22	105.1	402	404	78.4	25.0	102.0	77.0	78.4	
3	24		104.9	402	401	78.4	23.0	97.0	74.0	78.4	
4	33	34	104.8	401	409	78.4	21.0	105.0	84.0	78.4	
5	21		104.6	400	406	78.4	25.0	105.0	80.0	78.4	
6	15		104.4	399	405	78.4	22.0	101.0	79.0	78.4	
7	20		104.2	399	405	78.4	23.0	104.0	81.0	78.4	
8	8		104.0	398	405	78.4	24.0	102.0	78.0	78.4	
9	23	21	103.9	397	400	78.4	21.0	103.0	82.0	78.4	
10	16		103.7	397	399	78.4	23.0	105.0	82.0	78.4	
11	9		103.5	396	398	78.3	22.0	105.0	83.0	78.3	
12	25		103.3	395	397	78.3	23.0	107.0	84.0	78.3	
13	10		103.1	395	396	78.3	25.0	104.0	79.0	78.3	
14	4		102.9	394	395	78.3	27.0	105.0	78.0	78.3	
15	3	23	102.8	393	395	78.3	22.0	104.0	82.0	78.3	
16	17		102.6	393	393	78.3	25.0	102.0	77.0	78.3	
17	5		102.4	392	391	78.3	26.0	103.0	77.0	78.3	
18	1		102.2	391	390	78.3	22.0	101.0	79.0	78.3	
19	2		102.0	391	389	78.3	23.0	101.0	78.0	78.3	
20	14		101.9	390	388	78.3	26.0	106.0	80.0	78.3	
21	31		101.7	389	386	78.3	22.0	99.0	77.0	78.3	
22	13		101.5	389	385	78.3	23.0	101.0	78.0	78.3	
23	7		101.3	388	383	78.3	22.0	101.0	79.0	78.3	
24	6		101.1	387	383	78.3	23.0	103.0	80.0	78.3	
25	11		101.0	386	382	78.3	23.0	97.0	74.0	78.3	
26	26		100.8	386	382	78.2	58.0	132.0	74.0	78.2	
27	27		100.6	385	381	78.2	54.0	129.0	75.0	78.2	
28	18		100.4	384	379	78.2	25.0	105.0	80.0	78.2	
29	12		100.2	384	378	78.2	26.0	101.0	75.0	78.2	
30	19		100.0	383	378	78.2	26.0	106.0	80.0	78.2	
31	30		99.9	382	376	78.2	26.0	105.0	79.0	78.2	
32	37		99.7	382	375	78.2	26.0	106.0	80.0	78.2	
33	29		99.5	381	374	78.2	34.0	110.0	76.0	78.2	
34	28		99.3	380	373	78.2	22.0	97.0	75.0	78.2	
35	36		99.0	379	372	78.2	27.0	106.0	79.0	78.2	

STRESSING RECORD FOR STAY CABLES WITH CONTEN METHOD 1st STRESSING
DYWIDAG-SYSTEMS INTERNATIONAL

Project: **Sixth Street Cable Stayed Bridge- Milwaukee**

Cable no.	EAST S12	Cable Type	C37	Length of cable	62.087 m	No. of strands	36
Construction stage	11.2	Length of jack	1000 mm	Relieve	3.0 mm	Slip	3.0 mm
Jack type	ConTen 140 kN	Jack no.	DSI 19039	Piston area	26.5 cm²	Friction	0.0%
Tension side	Deck	Date of tensioining		Person resp. for tensioning works		Owner's representative	
Temperature of 1st strand		6/13/2002		Columba Cannon			

Se-quence	Strand number for		Required force at anchorage after relieve	Gauge pressure before relieve		Elongation theoretical before relieve	Strand protrusion		Partial elongation		Remark
	Working jack	Pilot jack		theoretical	actual		at pressure of 100 bar	at final pressure	actual	theoretical	
			[kN]	[bar]	[bar]	[mm]	[mm]	[mm]	[mm]	[mm]	
1	22	-	131.0	499	499	-				-	
2	34	22	101.0	386	382	308.2			219.0	228.3	
3	24		91.0	348	344	239.5			166.0	170.6	
4	33	24	86.2	330	331	216.5	107.0	257.0	150.0	150.9	
5	21		83.6	320	321	205.6	97.0	241.0	144.0	141.4	
6	15		81.8	313	315	199.4	100	235	135.0	135.8	
7	23	21	80.6	309	311	195.4	24	163	139.0	132.1	
8	16		79.6	305	307	192.5	92	225	133.0	129.4	
9	9		78.9	302	304	190.4	107	237	130.0	127.5	
10	25		78.3	300	302	188.8	95	225	130.0	125.9	
11	10		77.6	298	300	187.1	91	219	128.0	124.3	
12	4		77.1	296	298	185.7	93.0	218.0	125.0	122.9	
13	3	34	76.6	294	291	184.6	94.0	212.0	118.0	121.8	
14	8		76.2	292	290	183.6	89.0	206.0	117.0	120.8	
15	20		75.9	291	287	182.7	86.0	203.0	117.0	120.0	
16	32		75.4	289	285	181.6	86.0	201.0	115.0	118.8	
17	14		74.9	288	282	180.5	92.0	206.0	114.0	117.7	
18	2		74.5	286	281	179.6	95.0	209.0	114.0	116.8	
19	1		74.2	285	280	178.8	85.0	199.0	114.0	116.0	
20	5		73.9	284	280	178.0	85.0	195.0	110.0	115.2	
21	17		73.4	282	279	177.0	97.0	204.0	107.0	114.2	
22	26		73.0	280	278	176.1	84.0	195.0	111.0	113.3	
23	11		72.7	279	277	175.2	89.0	200.0	111.0	112.4	
24	6		72.3	278	277	174.4	91.0	199.0	108.0	111.6	
25	7		72.0	277	274	173.7	86.0	191.0	105.0	110.9	
26	13		71.6	275	272	172.7	82.0	196.0	114.0	109.9	
27	31		71.2	274	271	171.9	86.0	192.0	106.0	109.1	
28	30		70.9	272	269	171.0	79.0	178.0	99.0	108.2	
29	19		70.6	271	268	170.3	82.0	185.0	103.0	107.5	
30	12		70.3	270	268	169.6	75.0	178.0	103.0	106.8	
31	18		69.9	268	266	168.7	81.0	183.0	102.0	105.8	
32	27		69.5	267	265	167.8	88.0	189.0	101.0	105.0	
33	36		69.2	266	263	167.0	85.0	184.0	99.0	104.2	
34	28		68.8	265	261	166.2	77.0	182.0	105.0	103.4	
35	29		68.5	263	260	165.5	74.0	172.0	98.0	102.7	
36	37		68.2	262	260	164.7	77.0	174.0	97.0	101.8	

STRESSING RECORD FOR STAY CABLES WITH CONTEN METHOD 2nd STRESSING
DYWIDAG-SYSTEMS INTENATIONAL

Project: Sixth Street Cable Stayed Bridge- Milwaukee

Cable no.	EAST S12	Cable Type	C37	Length of cable	62.087 m	No. of strands	36
Construction stage	12.1	Length of jack	1000 mm	Relieve	3.0 mm	Slip	1.0 mm
Jack type	ConTen 140 kN	Jack no.	DSI 190397	Priston area	26.5 cm²	Friction	0.0%
Tension side	Deck	Date of tensioning		Person resp. for tensioning work		Owner's representative	
Temperature of 1st strand		6/13/2002					

Se-quence	Strand number for		Required force at anchorage after relieve	Gauge pressure before relieve		Elongation theoretical before relieve	Strand protrusion		Elongation		Remark
	Working jack	Pilot jack	[kN]	theoretical [bar]	actual [bar]	[mm]	before stressing [mm]	at final pressure [mm]	actual [mm]	theoretical [mm]	
1	22	-	102.7	392	392	86.5				86.5	
2	34	22	102.5	392	392	86.5	25.0	122.0	97.0	86.5	
3	24		102.4	391	390	86.5	26.0	118.0	92.0	86.5	
4	33	24	102.2	391	390	86.5	26.0	113.0	87.0	86.5	
5	21		102.1	390	390	86.5	25.0	114.0	89.0	86.5	
6	15		102.0	389	390	86.5	26	112	86.0	86.5	
7	23	21	101.8	389	388	86.4	26	102	76.0	86.4	
8	16		101.7	388	386	86.4	25	98	73.0	86.4	
9	9		101.5	388	385	86.4	24	99	75.0	86.4	
10	25		101.4	387	384	86.4	25	97	72.0	86.4	
11	10		101.2	387	383	86.4	25	104	79.0	86.4	
12	4		101.1	386	382	86.4	25	100	75.0	86.4	
13	3	34	100.9	386	382	86.4	28	112	84.0	86.4	
14	8		100.8	385	382	86.4	25	107	82.0	86.4	
15	20		100.6	384	381	86.4	25	109	84.0	86.4	
16	32		100.5	384	381	86.4	25	109	84.0	86.4	
17	14		100.4	383	380	86.4	25	109	84.0	86.4	
18	2		100.2	383	379	86.4	28	110	82.0	86.4	
19	1		100.1	382	379	86.4	24	109	85.0	86.4	
20	5		99.9	382	379	86.4	28	119	91.0	86.4	
21	17		99.8	381	379	86.4	25	114	89.0	86.4	
22	26		99.6	381	379	86.4	24	111	87.0	86.4	
23	11		99.5	380	378	86.4	25	111	86.0	86.4	
24	6		99.3	380	378	86.4	25	110	85.0	86.4	
25	7		99.2	379	378	86.4	25.0	111.0	86.0	86.4	
26	13		99.0	378	378	86.3	25.0	118.0	93.0	86.3	
27	31		98.9	378	378	86.3	25.0	112.0	87.0	86.3	
28	30		98.8	377	377	86.3	25.0	113.0	88.0	86.3	
29	19		98.6	377	376	86.3	25.0	111.0	86.0	86.3	
30	12		98.5	376	375	86.3	25.0	115.0	90.0	86.3	
31	18		98.3	376	375	86.3	25.0	118.0	93.0	86.3	
32	27		98.2	375	375	86.3	24.0	113.0	89.0	86.3	
33	36		98.0	375	374	86.3	25.0	115.0	90.0	86.3	
34	28		97.9	374	372	86.3	25.0	109.0	84.0	86.3	
35	29		97.7	374	371	86.3	28.0	114.0	86.0	86.3	
36	37		97.4	372	371	86.3	25.0	110.0	85.0	86.3	

STRESSING RECORD FOR STAY CABLES WITH CONTEN METHOD 1st STRESSING
DYWIDAG-SYSTEMS INTERNATIONAL

Project: **Sixth Street Cable Stayed Bridge- Milwaukee**

Cable no.	WEST S12	Cable Type	C37	Length of cable	62.087 m	No. of strands	36
Construction stage	11.2	Length of jack	1000 mm	Relieve	3.0 mm	Slip	3.0 mm
Jack type	ConTen 140 kN	Jack no.	DSI 19039	Piston area	26.5 cm²	Friction	0.0%
Tension side	Deck	Date of tensioining		Person resp. for tensioning works		Owner's representative	
Temperature of 1st strand		6/13/2002					

Se-quence	Strand number for		Required force at anchorage after relieve	Gauge pressure before relieve		Elongation theoretical before relieve	Strand protrusion		Partial elongation		Remark
	Working jack	Pilot jack		theoretical	actual		at pressure of 100 bar	at final pressure	actual	theoretical	
			[kN]	[bar]	[bar]	[mm]	[mm]	[mm]	[mm]	[mm]	
1	22	-	131.0	499	499	-				-	
2	34	22	101.0	386	385	308.2	34.0	245.0	211.0	228.3	
3	24		91.0	348	350	239.5	29.0	191.0	162.0	170.6	
4	33	24	86.2	330	320	216.5	35.0	175.0	140.0	150.9	
5	21		83.6	320	310	205.6	105.0	235.0	130.0	141.4	
6	15		81.8	313	302	199.4	121.0	246.0	125.0	135.8	
7	23	21	80.6	309	298	195.4	42.0	161.0	119.0	132.1	
8	16		79.6	305	299	192.5	127.0	243.0	116.0	129.4	
9	9		78.9	302	294	190.4	108.0	224.0	116.0	127.5	
10	25		78.3	300	290	188.8	105.0	218.0	113.0	125.9	
11	10		77.6	298	288	187.1	96.0	204.0	108.0	124.3	
12	4		77.1	296	285	185.7	113.0	223.0	110.0	122.9	
13	3	34	76.6	294	290	184.6	101.0	216.0	115.0	121.8	
14	8		76.2	292	288	183.6	111.0	223.0	112.0	120.8	
15	20		75.9	291	286	182.7	121.0	227.0	106.0	120.0	
16	32		75.4	289	285	181.6	124.0	235.0	111.0	118.8	
17	14		74.9	288	282	180.5	101.0	217.0	116.0	117.7	
18	2		74.5	286	281	179.6	95.0	205.0	110.0	116.8	
19	1		74.2	285	281	178.8	99.0	201.0	102.0	116.0	
20	5		73.9	284	279	178.0	91.0	195.0	104.0	115.2	
21	17		73.4	282	276	177.0	95.0	195.0	100.0	114.2	
22	26		73.0	280	275	176.1	96.0	201.0	105.0	113.3	
23	11		72.7	279	273	175.2	99.0	201.0	102.0	112.4	
24	6		72.3	278	271	174.4	95.0	198.0	103.0	111.6	
25	7		72.0	277	270	173.7	85.0	188.0	103.0	110.9	
26	13		71.6	275	270	172.7	88.0	191.0	103.0	109.9	
27	31		71.2	274	269	171.9	89.0	192.0	103.0	109.1	
28	30		70.9	272	266	171.0	89.0	191.0	102.0	108.2	
29	19		70.6	271	265	170.3	86.0	185.0	99.0	107.5	
30	12		70.3	270	262	169.6	90.0	185.0	95.0	106.8	
31	18		69.9	268	262	168.7	89.0	186.0	97.0	105.8	
32	27		69.5	267	260	167.8	90.0	186.0	96.0	105.0	
33	36		69.2	266	260	167.0	95.0	191.0	96.0	104.2	
34	28		68.8	265	259	166.2	91.0	186.0	95.0	103.4	
35	29		68.5	263	258	165.5	95.0	190.0	95.0	102.7	
36	37		68.2	262	257	164.7	87.0	179.0	92.0	101.8	

STRESSING RECORD FOR STAY CABLES WITH CONTEN METHOD 2nd STRESSING
DYWIDAG-SYSTEMS INTENATIONAL

Project: Sixth Street Cable Stayed Bridge- Milwaukee

Cable no.	WEST S12	Cable Type	C37	Length of cable	62.087 m	No. of strands	36
Construction stage	12.1	Length of jack	1000 mm	Relieve	3.0 mm	Slip	1.0 mm
Jack type	ConTen 140 kN	Jack no.	DSI 190397	Priston area	26.5 cm²	Friction	0.0%
Tension side	Deck	Date of tensioning		Person resp. for tensioning works		Owner's representative	
Temperature of 1st strand		6/13/2002					

Se-quence	Strand number for		Required force at anchorage after relieve	Gauge pressure before relieve		Elongation theoretical	Strand protrusion		Elongation		Remark
	Working jack	Pilot jack		theoretical	actual	before relieve	before stressing	at final pressure	actual	theoretical	
			[kN]	[bar]	[bar]	[mm]	[mm]	[mm]	[mm]	[mm]	
1	22	-	102.7	392	392	86.5				86.5	
2	34	22	102.5	392	389	86.5	27.0	115.0	88.0	86.5	
3	24		102.4	391	389	86.5	27.0	109.0	82.0	86.5	
4	33	24	102.2	391	401	86.5	28.0	120.0	92.0	86.5	
5	21		102.1	390	390	86.5	28.0	116.0	88.0	86.5	
6	15		102.0	389	389	86.5	28.0	118.0	90.0	86.5	
7	23	21	101.8	389	389	86.4	27.0	115.0	88.0	86.4	
8	16		101.7	388	387	86.4	37.0	122.0	85.0	86.4	
9	9		101.5	388	388	86.4	45.0	132.0	87.0	86.4	
10	25		101.4	387	386	86.4	27.0	114.0	87.0	86.4	
11	10		101.2	387	385	86.4	28.0	117.0	89.0	86.4	
12	4		101.1	386	385	86.4	28.0	120.0	92.0	86.4	
13	3	34	100.9	386	386	86.4	50.0	138.0	88.0	86.4	
14	8		100.8	385	383	86.4	31.0	109.0	78.0	86.4	
15	20		100.6	384	381	86.4	27.0	109.0	82.0	86.4	
16	32		100.5	384	380	86.4	38.0	120.0	82.0	86.4	
17	14		100.4	383	379	86.4	31.0	112.0	81.0	86.4	
18	2		100.2	383	379	86.4	40.0	119.0	79.0	86.4	
19	1		100.1	382	379	86.4	28.0	113.0	85.0	86.4	
20	5		99.9	382	377	86.4	27.0	110.0	83.0	86.4	
21	17		99.8	381	377	86.4	26.0	107.0	81.0	86.4	
22	26		99.6	381	376	86.4	26.0	110.0	84.0	86.4	
23	11		99.5	380	375	86.4	27.0	110.0	83.0	86.4	
24	6		99.3	380	375	86.4	27.0	110.0	83.0	86.4	
25	7		99.2	379	375	86.4	26.0	107.0	81.0	86.4	
26	13		99.0	378	374	86.3	26.0	105.0	79.0	86.3	
27	31		98.9	378	372	86.3	30.0	111.0	81.0	86.3	
28	30		98.8	377	372	86.3	28.0	105.0	77.0	86.3	
29	19		98.6	377	371	86.3	32.0	114.0	82.0	86.3	
30	12		98.5	376	371	86.3	26.0	110.0	84.0	86.3	
31	18		98.3	376	371	86.3	31.0	113.0	82.0	86.3	
32	27		98.2	375	370	86.3	26.0	109.0	83.0	86.3	
33	36		98.0	375	370	86.3	26.0	109.0	83.0	86.3	
34	28		97.9	374	369	86.3	26.0	109.0	83.0	86.3	
35	29		97.7	374	369	86.3	30.0	112.0	82.0	86.3	
36	37		97.4	372	368	86.3	26.0	106.0	80.0	86.3	

STAY CABLES STRESSED WITH CONTEN METHOD

DYWIDAG-SYSTEMS INTERNATIONAL

Lift-Off Test

Project: **Sixth Street Cable Stayed Bridge- Milwaukee**

Cable Designation:	S5-WEST
Cable Type:	C31
Number of Strands:	21
Cable Length:	21.942 m
Date of Lift-Off:	6/14/2002
Time of Lift-Off:	9:51AM
Ambient Temperature:	62F
Weather Condition:	Pt. Cloudy
Engineer Present:	Jason Samz

Strand No.	Dial readings (Bar)
25	350
20	344
18	342
19	347
9	347
11	350

STAY CABLES STRESSED WITH CONTEN METHOD

DYWIDAG-SYSTEMS INTERNATIONAL

Lift-Off Test

Project: **Sixth Street Cable Stayed Bridge- Milwaukee**

Cable Designation:	S3-EAST
Cable Type:	C31
Number of Strands:	22
Cable Length:	29.963 m
Date of Lift-Off:	6/14/2002
Time of Lift-Off:	10:11AM
Ambient Temperature:	63F
Weather Condition:	Pt. Cloudy
Engineer Present:	Jason Samz

Strand No.	Dial readings (Bar)
25	391
20	384
18	382
19	384
9	384
26	390

STAY CABLES STRESSED WITH CONTEN METHOD

DYWIDAG-SYSTEMS INTERNATIONAL DSI

Lift-Off Test

Project: **Sixth Street Cable Stayed Bridge- Milwaukee**

Cable Designation:	S11-WEST
Cable Type:	C37
Number of Strands:	35
Cable Length:	53.226 m
Date of Lift-Off:	6/14/2002
Time of Lift-Off:	10:40AM
Ambient Temperature:	63 F
Weather Condition:	Pt. Cloudy
Engineer Present:	Jason Samz

Strand No.	Dial readings (Bar)
25	401
20	415
36	403
37	406
26	402
31	401
23	402
5	405
7	400

STAY CABLES STRESSED WITH CONTEN METHOD

DYWIDAG-SYSTEMS INTERNATIONAL

Lift-Off Test

Project: **Sixth Street Cable Stayed Bridge- Milwaukee**

Cable Designation:	S9-EAST
Cable Type:	C37
Number of Strands:	29
Cable Length:	36.160 m
Date of Lift-Off:	6/14/2002
Time of Lift-Off:	11:24AM
Ambient Temperature:	65 F
Weather Condition:	Pt. Cloudy
Engineer Present:	Jason Samz

Strand No.	Dial readings (Bar)
27	347
30	342
25	345
20	358
9	350
12	340
14	345
5	340
7	334

DYWIDAG SYSTEMS INTERNATIONAL, INC.
CALIBRATION WORKSHEET

DSI

DATE: 21 MARCH 02

RAM # 190397 THEO. RAM AREA 4.01 ACT. RAM AREA 4.11

MASTER GAUGE # P01673

SERVICE GAUGE1	GAUGE 2	GAUGE 3	GAUGE 4
4-8800			

LOAD CELL TYPE: SLOPE

LOAD CELL I.D. # 11401

METER NUMBER: 1375

METER SETTINGS: N/A

CONV. EQUATION= DIRECT

TEMP. 67°

HUMIDITY: 31%

CAL. BY: G. I. SMITH

VERIFIED BY:

CUSTOMER: MILWAUKEE GATEWAY

JOB # J000042

READINGS ARE IN KILO-NEWTONS

Master	Gauge 1	Gauge 2	Gauge 3	Gauge 4	R1	R2	R3	AVG.	Act ~~Kip~~ KN
1000	70 BAR				18	18	18	18	18
2000	140 BAR				36	36	36	36	36
3000	210 BAR				56	56	56	56	56
4000	280 BAR				74	74	74	74	74
5000	340 BAR				92	92	92	92	92
5500	380 BAR				101	101	101	101	101
6000	410 BAR				111	110	111	111	110.667
6500	450 BAR				120	120	120	120	120
7000	480 BAR				128	129	129	129	128.667
7500	520 BAR				137	137	137	137	137

DYWIDAG SYSTEMS INTERNATIONAL, INC.
GAUGE CALIBRATION WORKSHEET

DSI

DATE: 3-21-02

TEMP: 68°

GAUGE TYPE: 4" Helicoid

GAUGE I.D.# 4- 8800

CALIBRATED BY: G. Wilkinson

CUSTOMER: Milwaukee Gateway

JOB# J000092

STER INSTRUMENT: F310

TRACE# K3131-3

INSTRUMENT	TEST RUN 1	TEST RUN 2	TEST RUN 3	AVG. READING
0	0	0	0	0
1000	70 bar	70 bar	70 bar	70 bar
2000	140 bar	140 bar	140 bar	140 bar
3000	210 bar	210 bar	210 bar	210 bar
4000	280 bar	280 bar	280 bar	280 bar
5000	340 bar	340 bar	340 bar	340 bar
6000	410 bar	410 bar	410 bar	410 bar
7000	480 bar	480 bar	480 bar	480 bar
8000	560 bar	560 bar	560 bar	560 bar
9000	630 bar	630 bar	630 bar	630 bar

ALTHOUGH RAM/GAUGE COMBINATIONS ARE CALIBRATED AS A UNIT, GAUGES ARE CALIBRATED INDEPENDENTLY, AND ARE USEABLE ON OTHER DYWIDAG SYSTEM RAMS, WHEN THIS DOES NOT CONFLICT WITH PROJECT SPECIFICATIONS.

INSTRUCTIONS:

1. Each gauge must be calibrated to a Master Instrument that has been annually calibrated and traceable to NIST Standards.
2. Each gauge must be calibratedto meet or exceed ASME STD. 40.1
3. Each gauge will be calibrated before being used in a jack calibration.
4. Each gauge will be calibrated beore being sent to the customer as a replacement gauge.
5. Connect the gauge to the testing machine.
6. Pressurize the gauge in 10 increments throughout its entire range, 3 times.
7. Record the gauge and test standard readings.
8. If gauge is in need of adjustment, consult the manufacturers product manual contained in the DSI Equipment Dept. Calibration and Standard Books.
9. Forms to be completely filled out.
10. Form is to be filed in the gauge calibration file according to it's I.D. No. and with any associated equipment file. One copy to customer.

DYWIDAG SYSTEMS INTERNATIONAL, INC.
CALIBRATION WORKSHEET

DSI

DATE: 21 MARCH 01

RAM #: DSI 190392 THEO. RAM AREA: 4.01 ACT. RAM AREA: 4.12

MASTER GAUGE #: P01673

SERVICE GAUGE1: 4-8857 GAUGE 2: GAUGE 3: GAUGE 4:

LOAD CELL TYPE: SLOPE

LOAD CELL I.D. #: 11401

METER NUMBER: 1375

METER SETTINGS: NA

CONV. EQUATION=: DIRECT

TEMP.: 67°

HUMIDITY: 31%

CAL. BY: G. T. SMITH

VERIFIED BY:

CUSTOMER: Milwaukee Gateway

JOB #: J000092

READINGS ARE IN KILO-NEWTONS

Master	Gauge 1	Gauge 2	Gauge 3	Gauge 4	R1	R2	R3	AVG.	Act ~~kip~~ KN
1000	70 BAR				18	18	18	18	18
2000	140 BAR				37	36	37	37	36.667
3000	210 BAR				55	55	55	55	55
4000	280 BAR				74	74	74	74	74
5000	350 BAR				92	92	93	92	92.333
5500	380 BAR				101	101	101	101	101
6000	410 BAR				110	110	110	110	110
6500	450 BAR				119	119	120	119	119.333
[illegible]	480 BAR				129	128	128	128	128.333
7500	520 BAR				137	137	137	137	137

DYWIDAG SYSTEMS INTERNATIONAL, INC.
GAUGE CALIBRATION WORKSHEET

DSI

DATE: 3-21-02

TEMP: 68°

GAUGE TYPE: 4" Helicoid

GAUGE I.D.# 4-8857

CALIBRATED BY: G.W. Wilkinson

CUSTOMER: Milwaukee Gateway

JOB# J020077

STER INSTRUMENT: 8310

TRACE# K3131-3

INSTRUMENT	TEST RUN 1	TEST RUN 2	TEST RUN 3	AVG. READING
0	0	0	0	0
1000	70 bar	70 bar	70 bar	70 bar
2000	140 bar	140 bar	140 bar	140 bar
3000	210 bar	210 bar	210 bar	210 bar
4000	280 bar	280 bar	280 bar	280 bar
5000	340 bar	340 bar	340 bar	340 bar
6000	410 bar	410 bar	410 bar	410 bar
7000	480 bar	480 bar	480 bar	480 bar
8000	550 bar	550 bar	550 bar	550 bar
9000	620 bar	620 bar	620 bar	620 bar

ALTHOUGH RAM/GAUGE COMBINATIONS ARE CALIBRATED AS A UNIT, GAUGES ARE CALIBRATED INDEPENDENTLY, AND ARE USEABLE ON OTHER DYWIDAG SYSTEM RAMS, WHEN THIS DOES NOT CONFLICT WITH PROJECT SPECIFICATIONS.

INSTRUCTIONS:

1. Each gauge must be calibrated to a Master Instrument that has been annually calibrated and traceable to NIST Standards.
2. Each gauge must be calibratedto meet or exceed ASME STD. 40.1
3. Each gauge will be calibrated before being used in a jack calibration.
4. Each gauge will be calibrated beore being sent to the customer as a replacement gauge.
5. Connect the gauge to the testing machine.
6. Pressurize the gauge in 10 increments throughout its entire range, 3 times.
7. Record the gauge and test standard readings.
8. If gauge is in need of adjustment, consult the manufacturers product manual contained in the DSI Equipment Dept. Calibration and Standard Books.
9. Forms to be completely filled out.

Form is to be filed in the gauge calibration file according to it's I.D. No. and with any associated equipment file. One copy to customer.

DYWIDAG SYSTEMS INTERNATIONAL, INC.
CALIBRATION WORKSHEET

DSI

DATE: 21 MARCH 02

RAM # DSI 190393 THEO. RAM AREA 4.01 ACT. RAM AREA 4.11

MASTER GAUGE # P01673

SERVICE GAUGE1	GAUGE 2	GAUGE 3	GAUGE 4
4-8866			

LOAD CELL TYPE: SLOPE

LOAD CELL I.D. # 11401

METER NUMBER: 1375

METER SETTINGS: N A

CONV. EQUATION= DIRECT

TEMP. 67°

HUMIDITY: 31%

CAL. BY: G J. SMITH

VERIFIED BY:

CUSTOMER: Milwaukee Gateway

JOB # 1000097

READINGS ARE IN KILO-NEWTONS

Master	Gauge 1	Gauge 2	Gauge 3	Gauge 4	R1	R2	R3	AVG.	Act ~~Kip~~ KN
1000	70 BAR				18	19	18	18	18.333
2000	140 BAR				37	37	36	37	36.667
3000	210 BAR				56	56	56	56	56
4000	280 BAR				74	74	74	74	74
5200	340 BAR				92	92	92	92	92
5500	380 BAR				101	101	101	101	101
6000	410 BAR				110	110	110.	110	110
6500	450 BAR				119	119	119	119	119
[illegible]	480 BAR				128	128	128	128	128
7500	520 BAR				137	137	137	137	137

DYWIDAG SYSTEMS INTERNATIONAL, INC.
GAUGE CALIBRATION WORKSHEET

DSI

DATE: 3-21-02

TEMP: 63°

GAUGE TYPE: 4 Helicoid

GAUGE I.D.# 4-8866

CALIBRATED BY: G. Wilkinson

CUSTOMER: Milwaukee Gateway

JOB# J000092

STER INSTRUMENT: 8310

TRACE# K3131-3

INSTRUMENT	TEST RUN 1	TEST RUN 2	TEST RUN 3	AVG. READING
0	0	0	0	0
1000	70 bar	70 bar	70 bar	70 bar
2000	140 bar	140 bar	140 bar	140 bar
3000	210 bar	210 bar	210 bar	210 bar
4000	280 bar	280 bar	280 bar	280 bar
5000	340 bar	340 bar	340 bar	340 bar
6000	410 bar	410 bar	410 bar	410 bar
7000	480 bar	480 bar	480 bar	480 bar
8000	550 bar	550 bar	550 bar	550 bar
9000	620 bar	620 bar	620 bar	620 bar

ALTHOUGH RAM/GAUGE COMBINATIONS ARE CALIBRATED AS A UNIT, GAUGES ARE CALIBRATED INDEPENDENTLY, AND ARE USEABLE ON OTHER DYWIDAG SYSTEM RAMS, WHEN THIS DOES NOT CONFLICT WITH PROJECT SPECIFICATIONS.

INSTRUCTIONS:

1. Each gauge must be calibrated to a Master Instrument that has been annually calibrated and traceable to NIST Standards.
2. Each gauge must be calibratedto meet or exceed ASME STD. 40.1
3. Each gauge will be calibrated before being used in a jack calibration.
4. Each gauge will be callbrated beore being sent to the customer as a replacement gauge.
5. Connect the gauge to the testing machine.
6. Pressurize the gauge in 10 increments throughout its entire range, 3 times.
7. Record the gauge and test standard readings.
8. If gauge is in need of adjustment, consult the manufacturers product manual contained in the DSI Equipment Dept. Calibration and Standard Books.
9. Forms to be completely filled out.
10. Form is to be filed in the gauge calibration file according to it's I.D. No. and with any associated equipment file. One copy to customer.

DYWIDAG SYSTEMS INTERNATIONAL, INC.
CALIBRATION WORKSHEET

DSI

DATE: 21 MARCH 02

RAM # 190396 THEO. RAM AREA 4.01 ACT. RAM AREA 4.11

MASTER GAUGE # P01673

SERVICE GAUGE1	GAUGE 2	GAUGE 3	GAUGE 4
4-8801			

LOAD CELL TYPE: SLOPE

LOAD CELL I.D. # 11401

METER NUMBER: 1375

METER SETTINGS: NA

CONV. EQUATION= DIRECT

TEMP. 67°

HUMIDITY: 31%

CAL. BY: G I SMITH

VERIFIED BY:

CUSTOMER: M Wankee Gateway

JOB # J000092

READINGS ARE IN KILO-NEWTONS

Master	Gauge 1	Gauge 2	Gauge 3	Gauge 4	R1	R2	R3	AVG.	Act ~~Kip~~ KN
1000	70 BAR				18	18	18	18	18
2000	140 BAR				37	37	37	37	37
3000	210 BAR				56	56	56	56	56
4000	280 BAR				73	73	74	73	73.333
5000	340 BAR				93	92	92	92	92 333
5500	380 BAR				101	101	101	101	101
6000	410 BAR				110	110	110	110	110
6500	450 BAR				119	120	120	120	119.667
[illegible]00	480 BAR				128	128	129	128	128.333
7500	520 BAR				137	137	137	137	137

DYWIDAG SYSTEMS INTERNATIONAL, INC.
CALIBRATION WORKSHEET

DSI

DATE: 21 MARCH 02

RAM # 190396 THEO. RAM AREA 4.01 ACT. RAM AREA 4.11

MASTER GAUGE # P01673

SERVICE GAUGE1: 4-8801 GAUGE 2: GAUGE 3: GAUGE 4:

LOAD CELL TYPE: SLOPE

LOAD CELL I.D. # 11401

METER NUMBER: 1325

METER SETTINGS: N A

CONV. EQUATION= DIRECT

TEMP. 67°

HUMIDITY: 31%

CAL. BY: G I SMITH

VERIFIED BY:

CUSTOMER: MILWAUKEE GATEWAY

JOB # J000092

READINGS ARE IN KILO-NEWTONS

Master	Gauge 1	Gauge 2	Gauge 3	Gauge 4	R1	R2	R3	AVG.	Act ~~Kip~~ KN
1000	70 BAR				18	18	18	18	18
2000	140 BAR				37	37	37	37	37
3000	210 BAR				56	56	56	56	56
4000	280 BAR				73	73	74	73	73.333
5000	340 BAR				93	92	92	92	92.333
5500	380 BAR				101	101	101	101	101
6000	410 BAR				110	110	110	110	110
6500	450 BAR				119	120	120	120	119.667
7000	480 BAR				128	128	129	128	128.333
7500	520 BAR				137	137	137	137	137

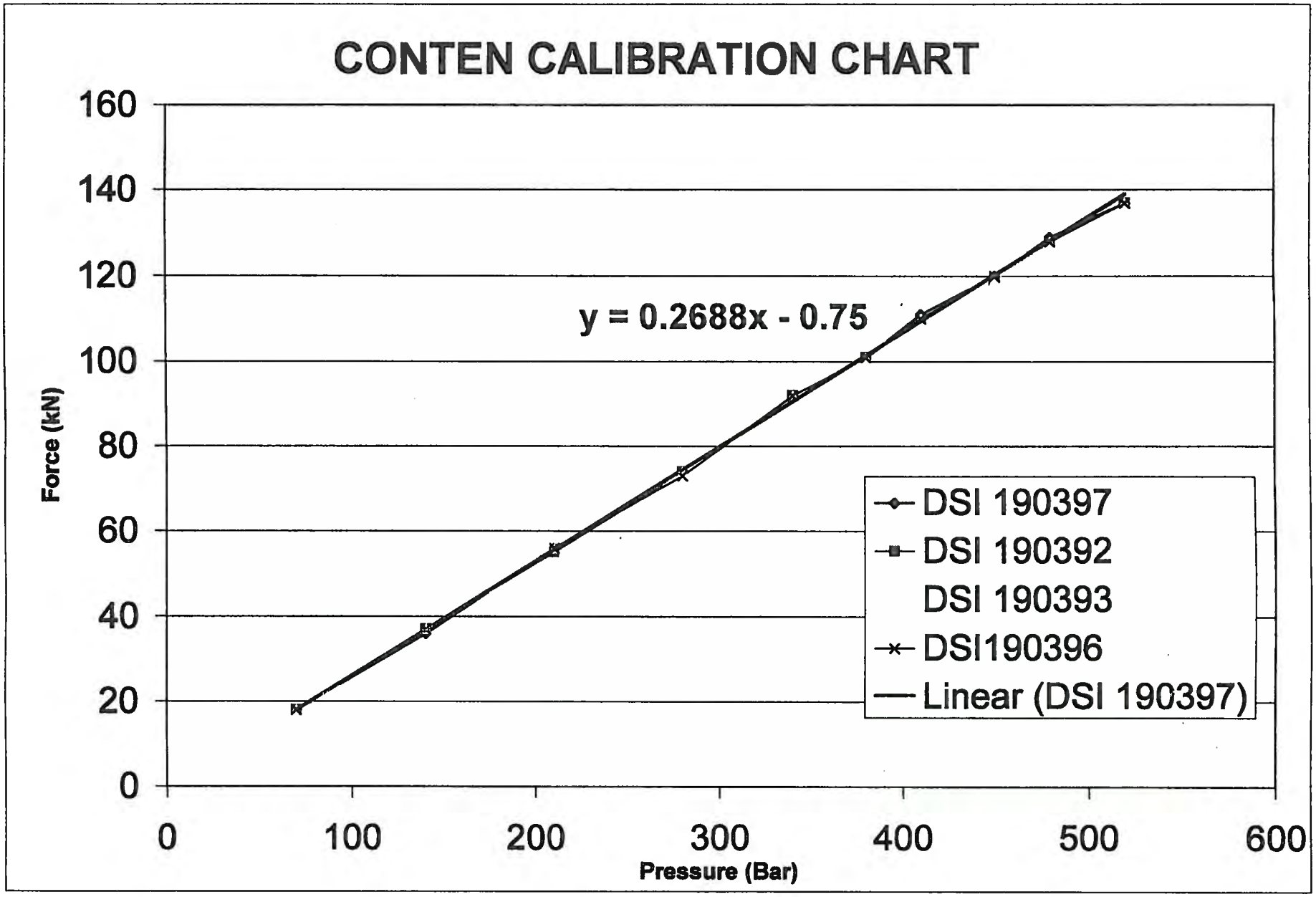
CONTEN CALIBRATION CHART
y = 0.2688x - 0.75
Force (kN)
Pressure (Bar)
0
20
40
60
80
100
120
140
160
0
100
200
300
400
500
600
DSI 190397
DSI 190392
DSI 190393
DSI190396
Linear (DSI 190397)