APPENDIX B

Manual for Inspection and Maintenance – Sixth Street Viaduct Cable-Stayed Bridge and Approaches

MANUAL FOR

INSPECTION AND MAINTENANCE

SIXTH STREET VIADUCT
CABLE-STAYED BRIDGE AND APPROACHES

MILWAUKEE, WISCONSIN

PREPARED BY

HNTB CORPORATION

SEPTEMBER, 2002

MANUAL FOR
INSPECTION AND MAINTENANCE
OF THE
SIXTH STREET VIADUCT
(STRUCTURES B-40-414C, B-40-414A, R-40-222, 223 & B-40-413A)

TABLE OF CONTENTS

	Page
SECTION 1 – BRIDGE IDENTIFICATION AND LOCATION	1-1
SECTION 2 – OBJECTIVE OF MANUAL	2-1
SECTION 3 – PRINCIPAL ELEMENTS OF THE BRIDGE	3-1
3.1 General description	
3.2 Superstructure	
3.3 Stay Cables	
3.4 Pylons	
3.5 Piers	
3.6 Abutments	
3.7 Lightning Protection System	
SECTION 4 – BRIDGE DESIGN CONSIDERATIONS	4-1
4.1 Overall Concept of Design	
4.2 Description of Loads	
4.2.1 Vertical Loads	
4.2.2 Horizontal Loads	
4.3 Project Design Criteria	
SECTION 5 – STRUCTURAL ROLE OF MAJOR BRIDGE ELEMENTS	5-1
5.1 Substructure Elements	
5.1.1 General	
5.1.2 Pylons	
5.1.2.1 Pylon Shafts	
5.1.2.2 Steel Anchor Box	
5.1.2.3 Foundations	
5.1.3 Piers	
5.1.3.1 Pier Shafts	
5.1.3.2 Foundations	
5.1.4 Abutments	
5.2 Superstructure Elements	
5.2.1 General	
5.2.2 Deck System	
5.2.3 End Beams	

5.2.4 Abutment Tie-Down Corbel
5.2.5 Post-Tensioning Systems
5.2.6 Deck Expansion Joint Assemblies
5.2.7 Elastomeric Bearings

5.3 Cable-Stay System
5.3.1 General
5.3.2 Stay Cable Strands
5.3.3 Cable Pipe
5.3.4 Cable Anchorages

SECTION 6 – SEQUENCE AND METHODS OF BRIDGE CONSTRUCTION 6-1

6.1 General
6.2 Construction Technique
6.3 Piers
6.4 Pylons
6.5 Superstructure
6.6 Design Modifications Made During Construction
6.6.1 Pylons
6.6.1.1 Foundations
6.6.1.2 Pylons
6.6.2 Superstructure
6.6.2.1 Value Engineering of South Approach
6.6.2.2 Bicycle Ramp
6.6.3 Cable-Stay System

6.7 Problems/Repairs Made During Construction
6.7.1 Post-Tensioning Anchorage Zone Delamination
6.7.2 Sidewalk Cracking at the North Cable Stayed Portion
6.7.3 Stay Cable Anchorage Ring Nut Rusting

SECTION 7 – INSPECTION PERSONNEL AND EQUIPMENT 7-1

7.1 Inspection Personnel
7.1.1 General
7.1.2 Project Engineer
7.1.3 Team Leader
7.1.4 Bridge Inspectors

7.2 Special Inspection Equipment

SECTION 8 – INSPECTION PROGRAM AND SCHEDULE 8-1

8.1 Inspection Program
8.1.1 Preparing for Inspection
8.1.2 Organizing the Inspection Routine
8.1.3 Reporting for Inspection

8.2 Inspection Schedule

SECTION 9 – INSPECTION PROCEDURES 9-1

9.1 General
9.2 Possible Deficiencies of Concrete Elements of Bridge
9.2.1 Cracking of Concrete
9.2.1.1 Causes of Cracking
9.2.1.2 Load-Related Cracks
9.2.1.3 Non-Load-Related Cracks
9.2.2 Spalling of Concrete
9.2.3 Leaching and Efflorescence

9.3 Deficiencies in Bridge Elements
9.3.1 Deficiencies in Substructure Elements
9.3.1.1 Piles
9.3.1.2 Footings
9.3.1.3 Pier Shafts
9.3.1.4 Pier Caps
9.3.1.5 Abutments
9.3.2 Deficiencies in Superstructure Elements
9.3.2.1 Deck System
9.3.2.2 Edge Girders
9.3.2.3 End Beams
9.3.2.4 Elastomeric Bearings
9.3.2.5 Post-Tensioning
9.3.2.5.1 Tendons
9.3.2.5.2 Anchorages
9.3.3 Deficiencies in Pylons
9.3.3.1 Pylon Shafts
9.3.3.2 Anchor Box
9.3.4 Deficiencies in Cable-Stay System
9.3.4.1 General
9.3.4.2 Strands
9.3.4.3 Stay Pipes
9.3.4.4 Anchorages
9.3.5 Deficiencies in Deck Elements
9.3.5.1 Wearing Surface
9.3.5.2 Aluminum Railing
9.3.5.3 Sidewalks
9.3.5.4 Drainage System
9.3.5.5 Expansion Joint Assemblies

9.4 Detailed Inspection Procedures
9.4.1 Crack Inspection
9.4.2 Spall Inspection

9.5 Survey of Bridge

SECTION 10 – MAINTENANCE AND REPAIR PROCEDURES 10-1

10.1 General
10.2 Deficiencies in Concrete
10.2.1 Crack Repairs
10.2.1.1 Introduction
10.2.1.2 Methods of Crack Repair
10.2.2 Spall Repairs

10.3 Corrosion of Reinforcing Steel
10.4 Replacement of Roadway Deck
10.5 Replacement of Wearing Surface and Addition of Future Wearing Surface
10.6 Elastomeric Bearing Pads
10.7 Expansion Joints
10.8 Post-Tensioning Systems
10.8.1 Ducts
10.8.2 Tendons
10.8.3 Anchorages

10.9 Cable-Stay System
10.9.1 Cable Stands
10.9.2 Cable Pipe
10.9.3 Cable Anchorages
10.9.4 Cable Replacement

10.10 Differential Settlement
10.11 Maximum Anticipated Vertical Deflections
10.12 Notification to the City of Milwaukee

LIST OF FIGURES

Figure No.	Title
2.1	Aerial Site Photo
3.1	South Cablestay Plan & Elavation
3.2	North Cablestay Plan & Elevation
3.3	Cablestay Typical Sections 1
3.4	Cablestay Typical Sections 2
3.5	South Approach Plan & Elevation
3.6	North Approach Plan & Elevation
3.7	North Approach Typical Sections
3.8	South Pylon Elevation
3.9	North North Elevation
3.10	Stay Cable Details
3.11	Lightning Protection Details
5.1	Steel Anchor Box
5.2	Pier Elevation
5.3	South Cablestay Abutment Corbel
5.4	South Cablestay Abutment
5.6	Transverse Post-tensioning Anchorage
5.7	Elastomeric Bearing Details
5.8	Stay Cable Designations
9.1	Load Related Cracks in Superstructure
9.2	Torsion Cracks
9.3	Cracks in End Beam
9.4	North Cable Stayed Sidewalk Cracking

APPENDIX

TABLE OF CONTENTS

SECTION	TITLE
I	Identification of Bridge Elements
II	Checklists for Maintenance and Inspection
III	Structural Condition Survey Forms
IV	Procedure for Stay-Cable Replacement
V	Information Recorded During Construction
VI	Load Ratings
VII	Report of Final Inspection (to be provided)
VIII	Field Bridge Inspection Report (Form EM 30-0198)
IX	Structural Inventory Data Forms
X	Contract Plans - Including As-Built and Shop Drawings (under separate cover)
XI	Design Calculations (under separate cover)
XII	Special Provisions (under separate cover, see RFP)
XIII	Sidewalk Cracking Photo Documentation – Before/After Repair Photos

MANUAL FOR INSPECTION AND MAINTENANCE
OF THE SIXTH STREET VIADUCT
CABLE-STAYED BRIDGES AND APPROACHES

SECTION 1

BRIDGE IDENTIFICATION AND LOCATION

Bridge Name ..... Sixth Street Viaduct

Structure Numbers

South Cable Stay Bridge B-40-413A

South Approach Structure R-40-222, 223

North Approach Bridge B-40-414A

North Cable Stay Bridge B-40-414C

County..... Milwaukee

State ..... Wisconsin

Owner ..... City of Milwaukee

Maintaining Agency ..... City of Milwaukee

Resident Engineer..... Wayne Conrad, P.E. Earth Tech

Designer of Record..... HNTB Corporation

Contractor ..... Milwaukee Gateway Partners (MGP)

SECTION 2

OBJECTIVE OF MANUAL

The objective of this manual is to provide recommended guidelines and procedures for inspection and maintenance of the post-tensioned concrete cable-stayed bridges and approaches of the Sixth Street Viaduct in Milwaukee, Wisconsin. Specifically, this manual applies to Structure Nos. B-40-413A, R-40-222, R-40-223, B-40-414A & B-40-414C. These structures consist of twin biaxially post-tensioned flat slab cable stayed bridges with main spans of 195 ft and biaxially post-tensioned flat slab concrete slab north approach spans. The south approach retaining structures, R-40-222 and R-40-223, consist of reinforced concrete retaining wall structures with the roadway supported on lightweight fill. The Maintenance and Operations Manual associated with the movable spans, Structure Nos. B-40-413B (south bascule bridge), and B-40-414B (north bascule bridge) are presented elsewhere and are not an integral part of this document, although many of the procedures presented herein are relevant to the bascule pier portions of these structures.

The overall length of the viaduct from south abutment to north abutment is 2766 ft. The south and north cable stayed units are approximately 664 ft and 566 ft in total length respectively. The south approach retaining structure is approximately 81 ft in length, and the north approach has a length of 267 ft. Geographically, the bridge connects downtown Milwaukee with the south side, (see Fig. 2.1). The bridge was opened to vehicular traffic on September 4th, 2002.

A systematic approach for maintenance and inspection of this facility is presented herein. This manual is to assist the staff of the City of Milwaukee in their effort to maintain this bridge in a structurally safe and serviceable condition during its service life and to protect their investment in this facility. It is recognized that programmed and effective inspections, repairs and

Figure 2.1 Aerial Site Photo

preventive maintenance will prolong the useful life of any structure and will reduce overall maintenance and operating costs.

Due to the unique characteristics of biaxially post-tensioned concrete flat slab cable stayed bridges and approaches, this document includes comprehensive descriptions of major structural elements, their role and importance to the structure, inspection and evaluation techniques to assess behavior /performance, and finally maintenance/repair techniques associated with any noted deficiencies. In addition, this manual provides a recommended methodology for recording inspection data and defines criteria for evaluating noted conditions against acceptable limits. These criteria indicate when corrective action and/or more detailed inspection or testing is warranted. Recommended maintenance and repair procedures are provided for common deficiencies associated with reinforced /post-tensioned concrete bridge superstructures.

Concrete cable stayed bridges are statically indeterminate structures with a high degree of redundancy. Flat slab cable stayed bridges are typically flexible structures with the structure geometry dependent upon the force in (and therefore length of) the stay cables, as well as creep and shrinkage of the deck and pylons. Given the inherent flexibility of this type of structure, together with the effects of creep and shrinkage, the geometry of cable stayed concrete bridges will change continually over time.

The provisions contained in this manual apply to the cable-stayed and approach spans, including the piers, pylons, and abutments. Excluded from this manual are the electrical installations for roadway lighting, stay cable aesthetic lighting and pylon aesthetic lighting. Conventional inspection, testing, and maintenance procedures associated with lighting systems on other City of Milwaukee bridges, performed by qualified electricians, will suffice.

It is noted that this manual has been developed in accordance with the *Guidelines for Developing Inspection Manuals for Concrete Segmental Bridges, FHWA IP-88/038* (September, 1988). This manual also serves as a supplement to the detailed bridge inspection practices contained in the current Federal Highway Administration's "Bridge Inspector's Training Manual" and should be used in conjunction with this document.

It is not the purpose of this manual to serve as a comprehensive document that provides all the guidance necessary for all aspects of maintenance and inspection of these structures during their

service life. Some maintenance and inspection efforts will undoubtedly require the specific expertise of contractors and engineers thoroughly familiar with aspects of cable stayed bridges.

SECTION 3

PRINCIPAL ELEMENTS OF THE BRIDGE

3.1 General Description

The cable-stayed spans of the Sixth Street Viaduct consist of twin bridges with 195 ft long main spans and 115 ft long back spans. The South Cable Stayed Bridge is flanked to the north by four continuous approach spans with span lengths of 3 spans at 67'-0", and a 54'-9 1/8" span. The North Cable Stayed Bridge is flanked to the south by two continuous approach spans with lengths of 55'-2 ½" and 67'-0" and to the north by two continuous approach spans with lengths of 120'-0" and 112'- ¾", respectively. The general plan and elevation of the cable-stayed spans are shown on Figs. 3.1 and 3.2 and typical cross-sections of the superstructure are depicted in Figs. 3.3 and 3.4.

The approach structures consist of a slab on lightweight fill structure and a 4-span continuous bridge. The 81'-3" long slab on lightweight fill structure serves as a transition between the South Bascule Bridge and finished grade at Canal Street. The 4-span continuous approach structure serves as a transition between finished grade at Canal Street and the North Bascule Bridge with span lengths of 67'-0", 67'-0", 67'-0" and 66'-0". The general plan and elevation of these spans are shown on Figs. 3.5 and 3.6 and cross-sections of the North Approach Bridge Superstructure is given in Fig. 3.7.

The horizontal alignment of the South Cable Stayed Bridge is on tangent over the cable portion of the spans transitioning to a 1000 ft radius horizontal curve. The North Cable Stayed Bridge is on a tangent alignment in its entirety.

The primary features crossed include the Canadian Pacific Freight Rail lines (North & South Cable Stayed Bridges) and the Amtrak rail line, as well as St. Paul Avenue and Hinman Street (North Cable Stayed Bridge only). For the south back span of the South Cable Stayed Bridge, a 24'-0" vertical clearance above top of rail is provided to the Canadian Pacific Rail lines. To help meet this clearance requirement, the back span stay cable anchorages are notched into the slab, whereby the stay cable anchorage plate does

not extend below the bottom soffit of the superstructure. For the North Cable Stayed Bridge, a clearance of 23'-0" is maintained to the Canadian Pacific and Amtrak Rail lines, and vertical clearances of 16'-9" are provided for both St Paul Avenue and Hinman Street.

It is noted that the railroad clearances are ***not*** based upon the condition when stay cables are being tensioned. *Re-tensioning of stay cables or removal of a"reference" strand as discussed in subsequent portions of this manual, may or may not violate railroad clearances. Prior to any stay cable jacking or reference strand removal operations, it is imperative that vertical and horizontal clearances to Amtrak and CP Rail facilities be verified based upon proposed jacking and inspection equipment.*

The cable-stayed superstructure is supported by ungrouted stay-cables comprised of 0.6" diameter 7 wire prestressing strands arranged in a semi-harp configuration. The pylons are solid reinforced concrete sections, except at the location of the stay anchorages where a composite steel anchor box is utilized. The longitudinal dimensions of the pylons are minimized to enhance the aesthetics of the bridge, thereby eliminating the possibility of tensioning the cables from the pylons. All stay cable stressing operations must therefore be conducted from below the superstructure.

Bearings have been eliminated to the extent possible in order to minimize future maintenance. Integral connections have been used between the superstructure and all piers as well as the superstructure and the pylon. Bearings and expansion joints are utilized only at the abutments and bascule pier locations. In addition, an expansion joint is provided at the interface between the post-office bridge and the North Cable Stayed Bridge.

3.2 Superstructure

The superstructure supports four 12'-0" lanes of traffic (two lanes in each direction) with two 5 ft bicycle lanes along each fascia, with no median barrier. The roadway width, curb to curb, is therefore 58'-0" along the entire alignment. For all portions of the bridge except the cable stayed spans, twin 10 ft sidewalks with 1-6" wide curbs are provided, giving a total out-to-out width of 81'-0" (Fig. 3.4). To accommodate the pylon and stay

cable anchorages, the sidewalk is widened to 17’-6”, resulting in an out-to-out superstructure width of 96’-0” over the cable stayed portion of the structure. The transition between the 81’0” width and the 96’-0” width is accommodated via an 85’-0” linear taper in sidewalk width.

The superstructure is comprised of a combined variable depth bi-directionally post-tensioned concrete flat slab system and conventionally reinforced concrete cantilevered sidewalks. Longitudinal and transverse post-tensioning is banded to enhance both the efficiency and ultimate strength of this superstructure system. The sidewalks are cast following the stressing of transverse and longitudinal post-tensioning and are therefore not subject to pre-compression and the stress limitations imposed in post-tensioned concrete construction. The reinforced concrete sidewalks and bi-directionally post-tensioned flat slab superstructure effectively act as a composite system.

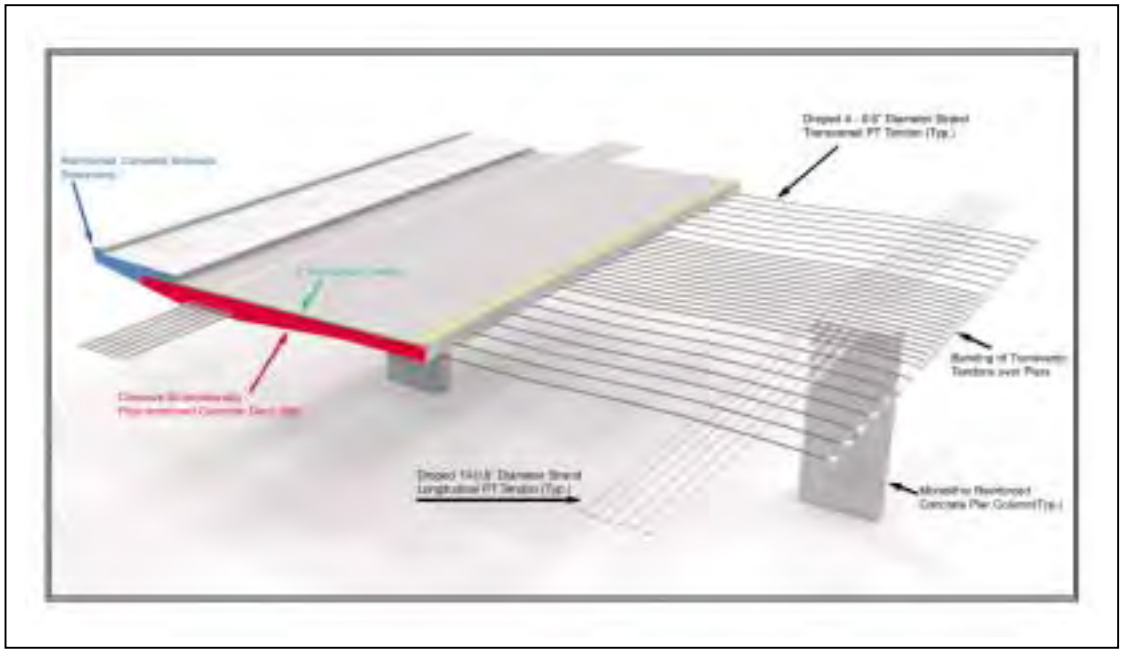

The superstructure depth varies transversely and longitudinally. For the typical approach span cross section, the slab varies transversely in depth from a maximum of 2’-6” to a minimum of 11” and a nominal thickness at midspan of 1’-4”. The cross-section incorporates a 2% cross slope to ensure proper deck drainage. The variations in slab depth follow the transverse moment demands associated with slab behavior under dead and live loads. At expansion joint locations, an end beam with a nominal 2’-8” depth is utilized to resist the increased dead and live load moments present at the slab edges. In

order to enhance constructability, the north approach end beams were designed to support a crane lifting the bascule girders. To provide additional ballast for the 115' back spans of the North and South Cable Stayed bridges, a nominal slab depth of 3'-0" was utilized.

The reinforced concrete sidewalk sections consist of an 11'-6" width (8'-8" cantilever beyond the post-tensioned deck slab) for the approaches and a 19'-0" width (11'-5" cantilever beyond the post-tensioned deck slab) for the cable stayed spans. The sidewalks incorporate an 8" curb adjacent to the 5 ft bicycle lanes and a 6" curb at the fascia pedestrian railings.

Longitudinally, the depth of the superstructure varies only within an edge beam area defined as a 7'-7" width that matches the transverse width of the piers. This edge beam is haunched at North Cable Stayed Piers 3, 4, and the North Abutment to accommodate the force demands associated with the 120' and 112' spans. For haunched section at Pier 4 see adjacent photo.

Edge Beam Haunch at Pier 4

Typically, the deck is post-tensioned longitudinally with 6 (six) longitudinal tendons each consisting of 19 low-relaxation steel 7-wire strands (270 ksi) having a nominal diameter of 0.6". For the 120' and 112' approach spans of the North Cable Stayed Bridge an additional 6 (six) longitudinal tendons were required to meet strength and serviceability requirements. All longitudinal tendons were installed in 4" nominal diameter high-density polyethylene (HDPE) ducts, meeting the requirements of the *PTI Guide Specification for Grouting of Post-Tensioned Structures*. Longitudinal tendons were double-end stressed.

Transverse post-tensioning consists of 4-strand tendons comprised of low-relaxation steel 7-wire strands (270 ksi) having a nominal diameter of 0.6", installed in flat polyethylene ducts. Transverse spacing of post-tensioning varies from a minimum of 1'-4" over the piers to a maximum of 3'-0" in the areas of reduced transverse moments (typically near

midspan). The 4-strand tendons were prefabricated and single end stressed (alternating west to east).

The roadway surface is overlaid with a microsilica concrete wearing surface averaging 2" in thickness.

Strip Seal Type Expansion joints are provided at the roadway level of the deck at each abutment and each bascule pier to accommodate changes of superstructure length due to temperature, creep and shrinkage in the concrete. In addition, a strip seal expansion joint is provided at the Post-Office Bridge North Cable Stayed Bridge interface to allow relative moment between these structures.

Steel laminated elastomeric bearings are utilized at abutment and bascule pier locations to transfer vertical dead and live loads. Lateral forces from temperature, creep, shrinkage, wind, seismic, and braking forces are also transmitted through the elastomeric bearings; however these forces are relatively small due to the low shear stiffness associated with elastomers. Since there is insufficient ballast for the South Cable-Stayed Bridge, the elastomeric bearings at the South Abutment serve as uplift bearings and are designed to resist uplift. This is accomplished by use of post-tensioned fingers which engage the abutment backwall.

Roadway drainage is provided by means of scuppers and down spouts along the gutter lines. Roadway drainage is discharged directly into the City of Milwaukee Storm Sewer System.

3.3 Stay Cables

The cable stayed superstructure is supported via 12 stay cables per side located at a constant 33 ft from the centerline of roadway. The stay cables are anchored below deck and at the pylon; all stressing operations were conducted from below deck due to the tight clearances at the pylon anchorages (Fig. 3.8 and 3.9). The back span cables are numbered sequentially N1-N6 and S1-S6 for the North and South Cable Stayed Bridges respectively. Similarly the main span cables are labeled N7-N12 and S7-S12. The longest back span and main span cables are N1, S1 and N12, S12 respectively.

Stay Cable Installation

The stay cable system consists of individually greased and sheathed 7-wire 0.6" nominal diameter strands with a Guaranteed Ultimate Strength (GUTS) of 270 ksi. Stay cables were fully prefabricated on the deck and installed as a unit (See adjacent photo). To stress the cables, a monostrand jack was utilized using the "Con-Ten" method (sometimes known as iso-tensioning) whereby a reference strand is stressed to a prescribed force and subsequently each strand is stressed such that the stress in the strand under tensioning is equilibrated with the reference strand. This technique ensures that the individual strands are tensioned equally.

The outer corrosion barrier consists of a white co-extruded HDPE pipe that incorporates an External Helix to mitigate rain-wind induced vibration. The outside diameter of the HDPE pipe is a constant 7.154".

Within the free length of the cable, the strands are compressed into an hexagonal bundle with the use of cable clamps adjacent to the pylon and deck anchorages. The deck cable clamp incorporates a neoprene donut to enhance the fatigue resistance of the stay cable anchorage and to assist in stay cable vibration mitigation. The stay guide pipes at the deck and pylon incorporate a flanged coupler to allow for guide pipe adjustment in the case of misalignment. Due to the tight construction tolerances maintained, there were no guide pipe adjustments necessary. For a diagrammatic representation of the stay cable system, refer to Fig. 3.10.

3.4 Pylons

Each pylon consists of twin reinforced concrete legs, 33'-0" measured transversely from centerline of bridge and located in line with the edge girders (Figs. 3.8 and 3.9). The legs are solid cross-sections and extend 100'-0" above the roadway to Elevations 145.820 and 143.136 for the South and North Bridges respectively. The pylon legs are inclined at a

10 degree angle to the vertical and taper both longitudinally and transversely, a “foot” extension at the base of the pylon cantilevers 25’-10 beyond the face of the pylon as a primarily architectural element.

The stay cables are anchored at the pylon with the use of a steel composite anchor box at Elevations 96.000 and 93.316 for the South and North Bridges respectively. The anchor box is comprised of a 27’6” high 1-1/4” web plates with cut-outs and stiffeners to provide bearing for the base plates. The anchor box was hot dip galvanized prior to installation. The anchor box is protected from the external environment by aluminum doors, that allow maintenance and inspection access to the anchor heads. Access to the pylon head for inspection is via a manlift or other suitable equipment, since fixed ladders and platforms have not been provided. The foundations for the pylons consist of high capacity concrete filled steel pipe piles.

Composite Pylon Anchor Box

3.5 Piers

The piers are concrete two-column bents that are integral with the superstructure. The solid section columns provide direct support at the edge girder lines. The columns are tapered longitudinally on the cable-stayed bridges to resist the longitudinal moments produced at the top of the columns. The foundations for the piers consist of high capacity concrete filled steel pipe piles. Only vertical piles were utilized to enhance the longitudinal flexibility of the piers.

3.6 Abutments

Abutments are located at the South ends of the South Cable Stayed Bridge and the North Approach and at the North end of the North Cable Stayed Bridge. The abutments serve as both an earth-retaining structure and as support for the superstructure. Due to the imbalance between the main span and back span of the South Cable Stayed Bridge, the south abutment serves as a tie-down abutment and incorporates uplift bearings. In addition, to provide access to the S1 stay cable anchorages for stressing, a recessed area in the south abutment backwall has been provided.

3.7 Lightning Protection System

Lightning protection is provided on top of each pylon shaft of the cable-stayed bridges (Fig. 3.11). The protection system consists of a lightning rod mounted to the pylon tops with anchor bolts. A lightning protection cable is embedded inside the entire length of the pylon shafts in order to ground the lightning rod.

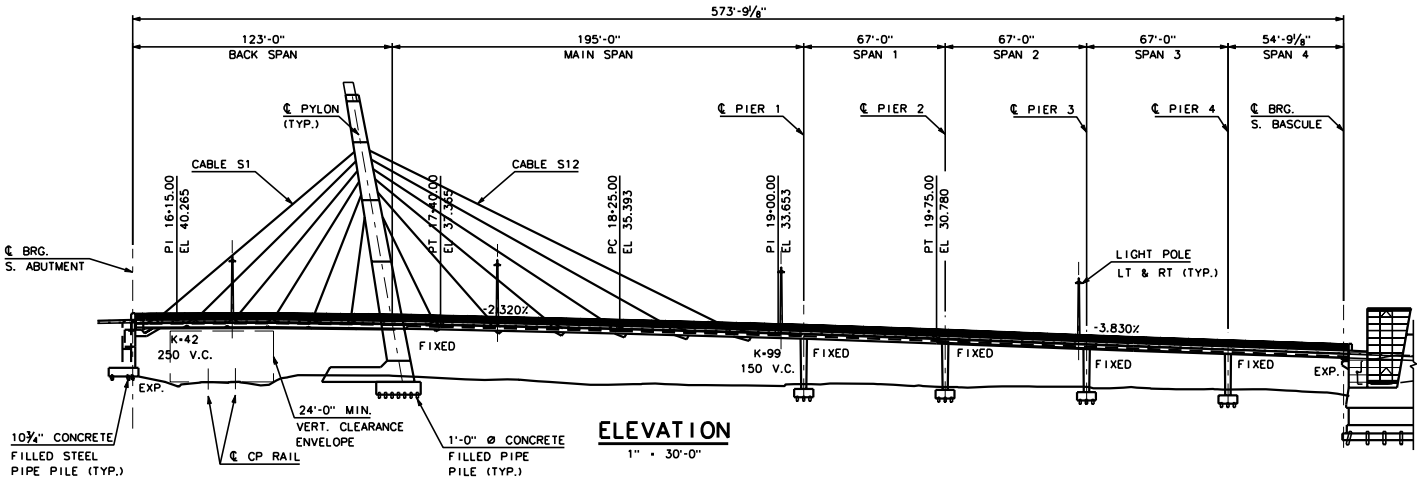

ELEVATION
1" = 30'-0"

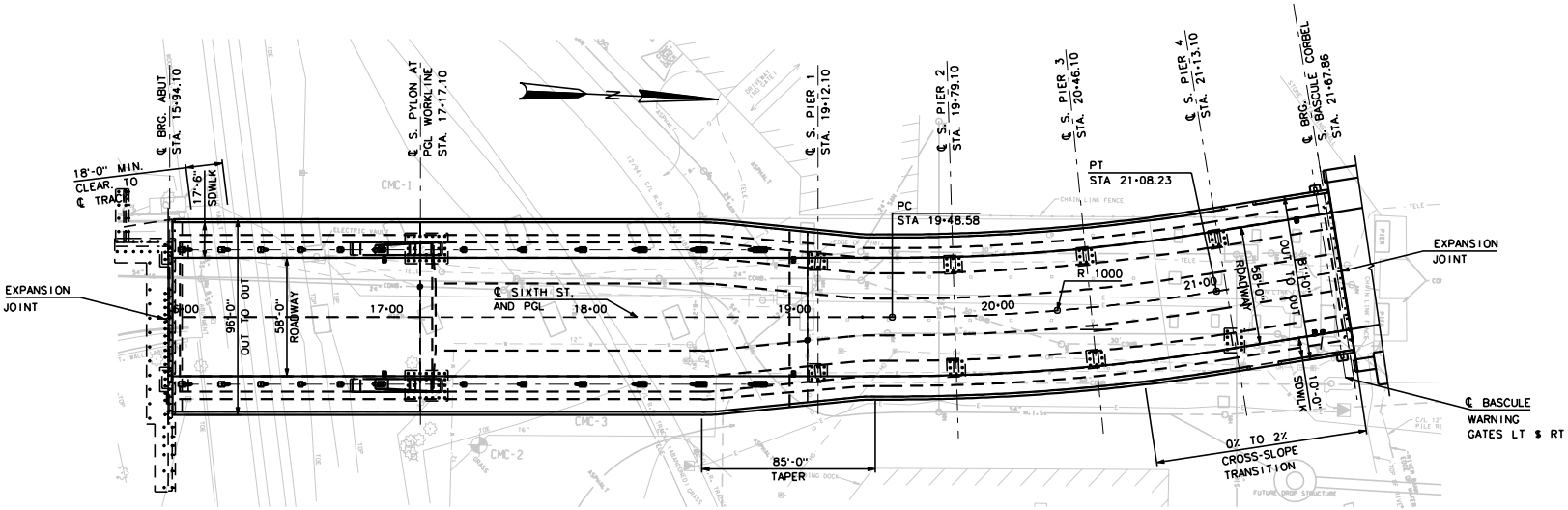

PLAN
1" = 30'-0"

FIGURE 3.1

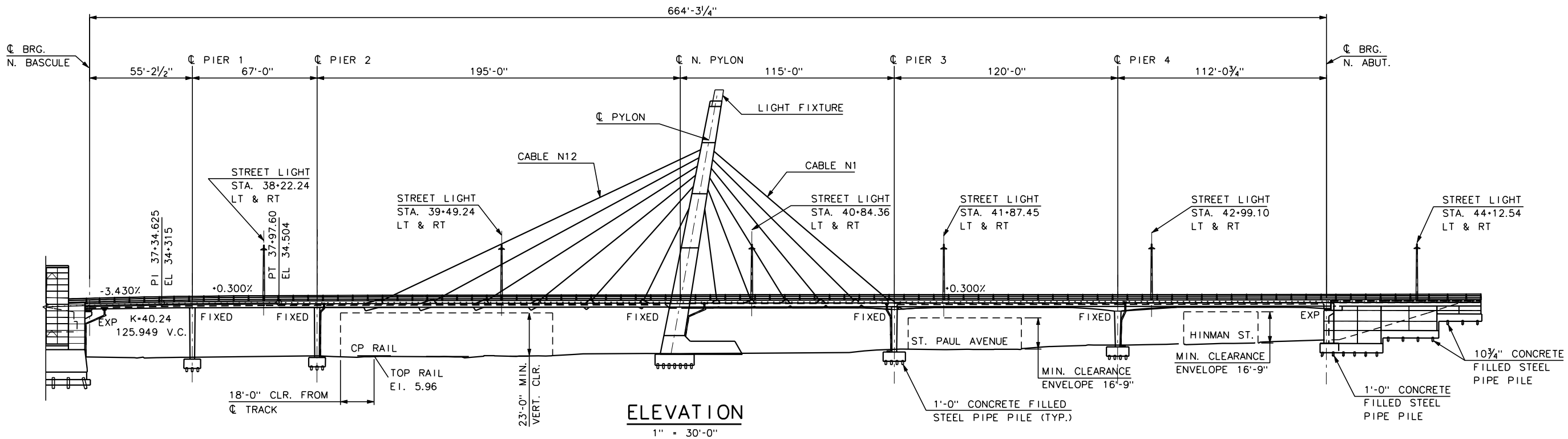

ELEVATION

1" = 30'-0"

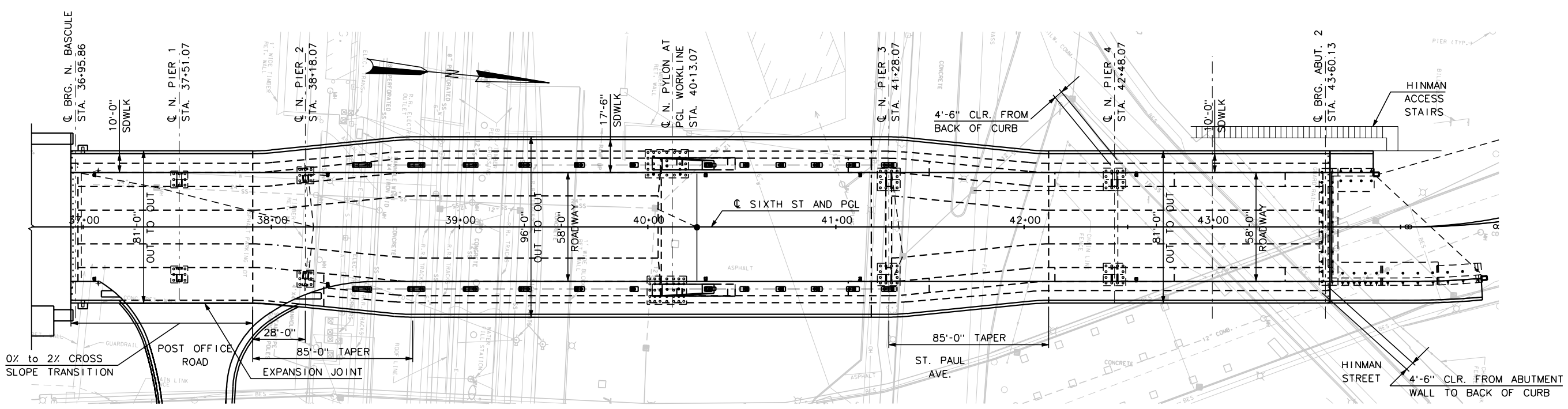

PLAN

1" = 30'-0"

FIGURE 3.2

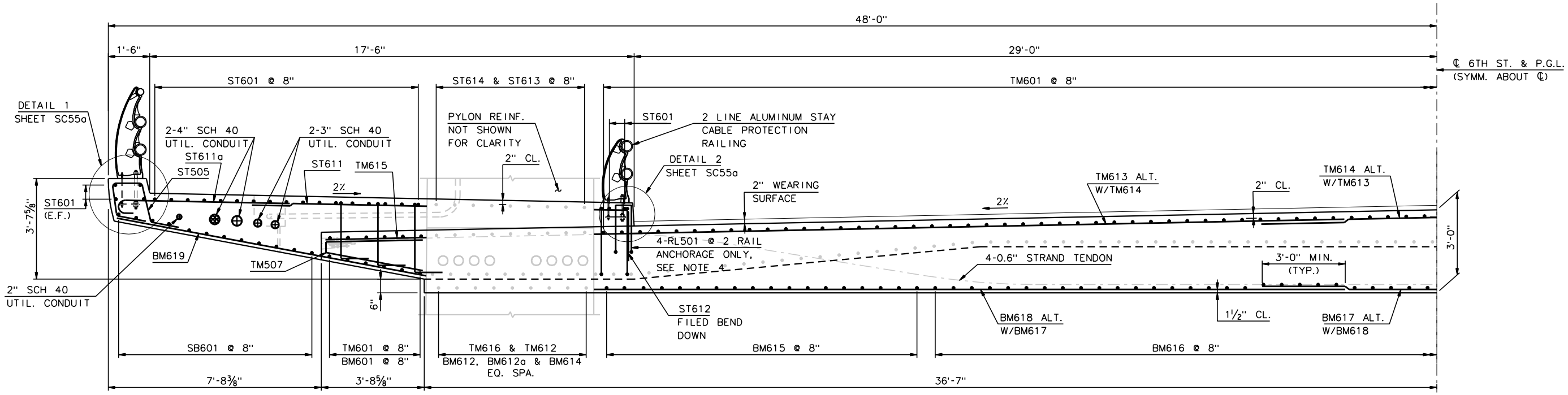

*BM601 BARS SHOWN SHADED FOR CLARITY.

TYPICAL BACKSPAN SECTION

½" = 1'-0"

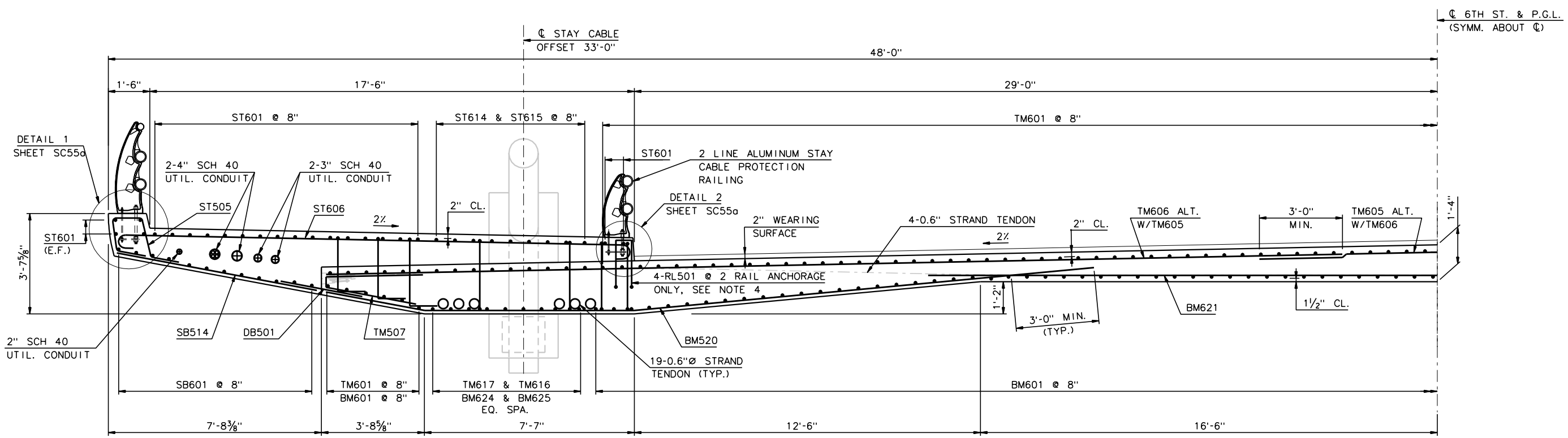

TYPICAL MAINSPAN SECTION

½" = 1'-0"

FIGURE 3.3

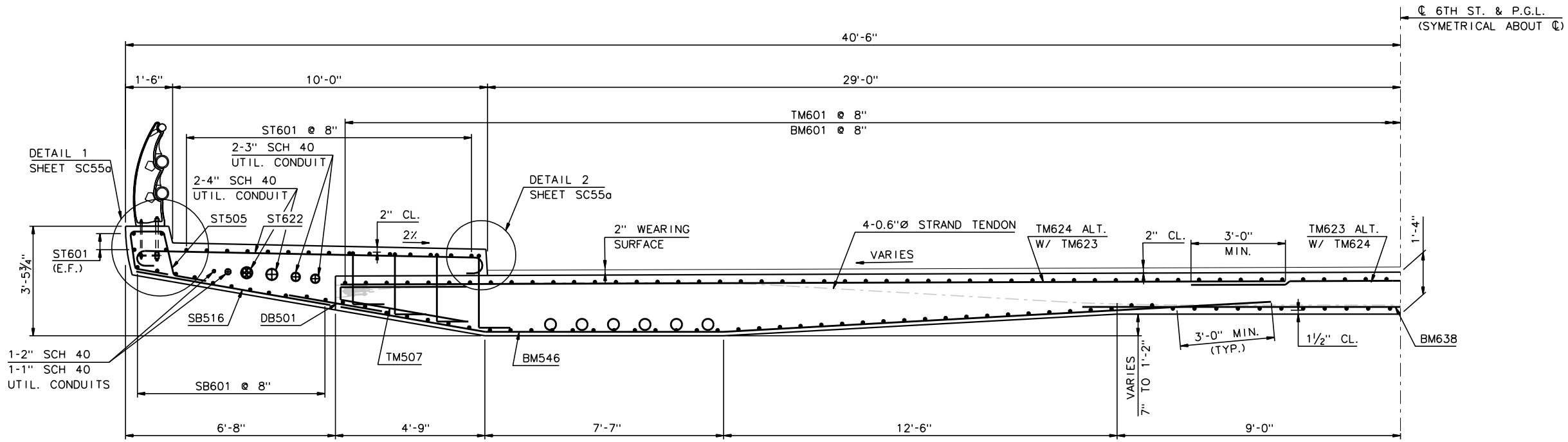

TYPICAL APPROACH SECTION

½" = 1'-0"

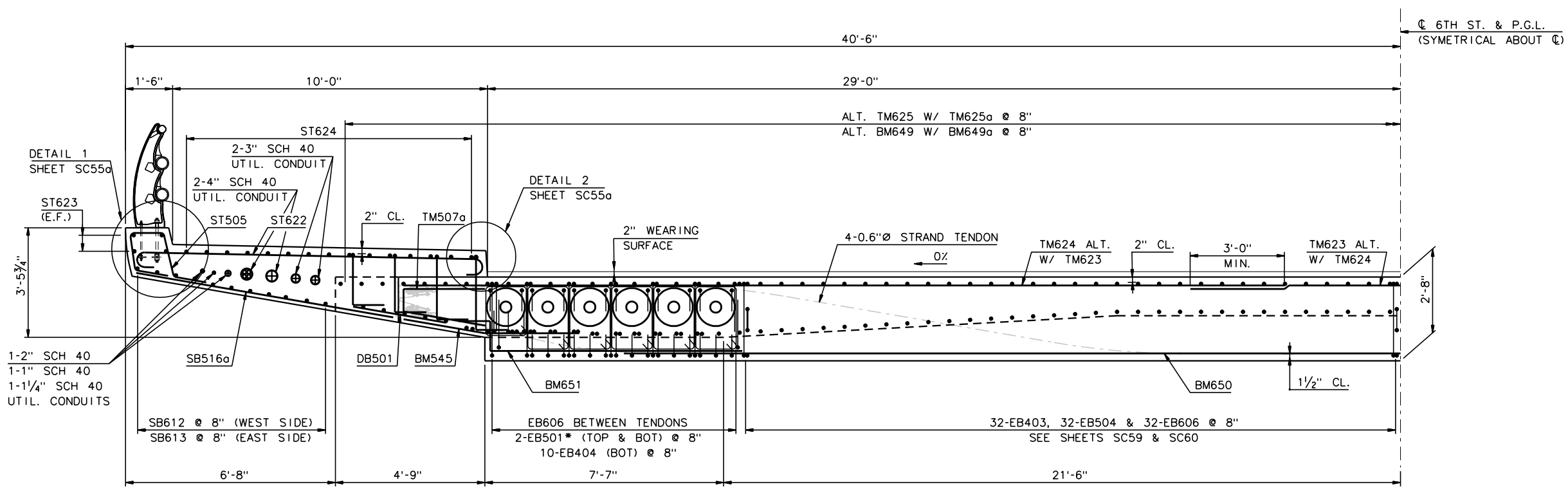

TYPICAL SECTION AT END BEAM

½" = 1'-0"

FIGURE 3.4

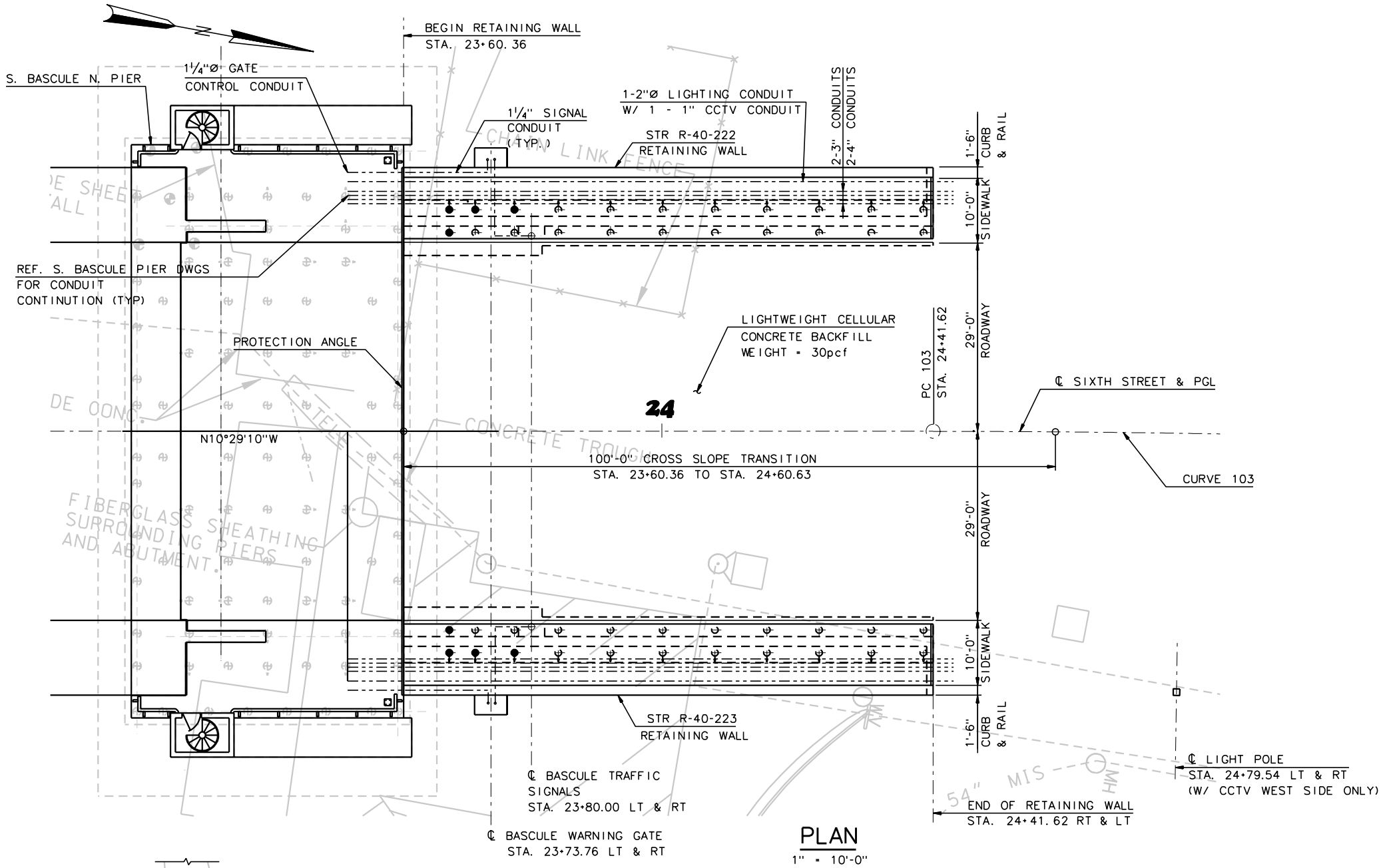

PLAN
1" = 10'-0"

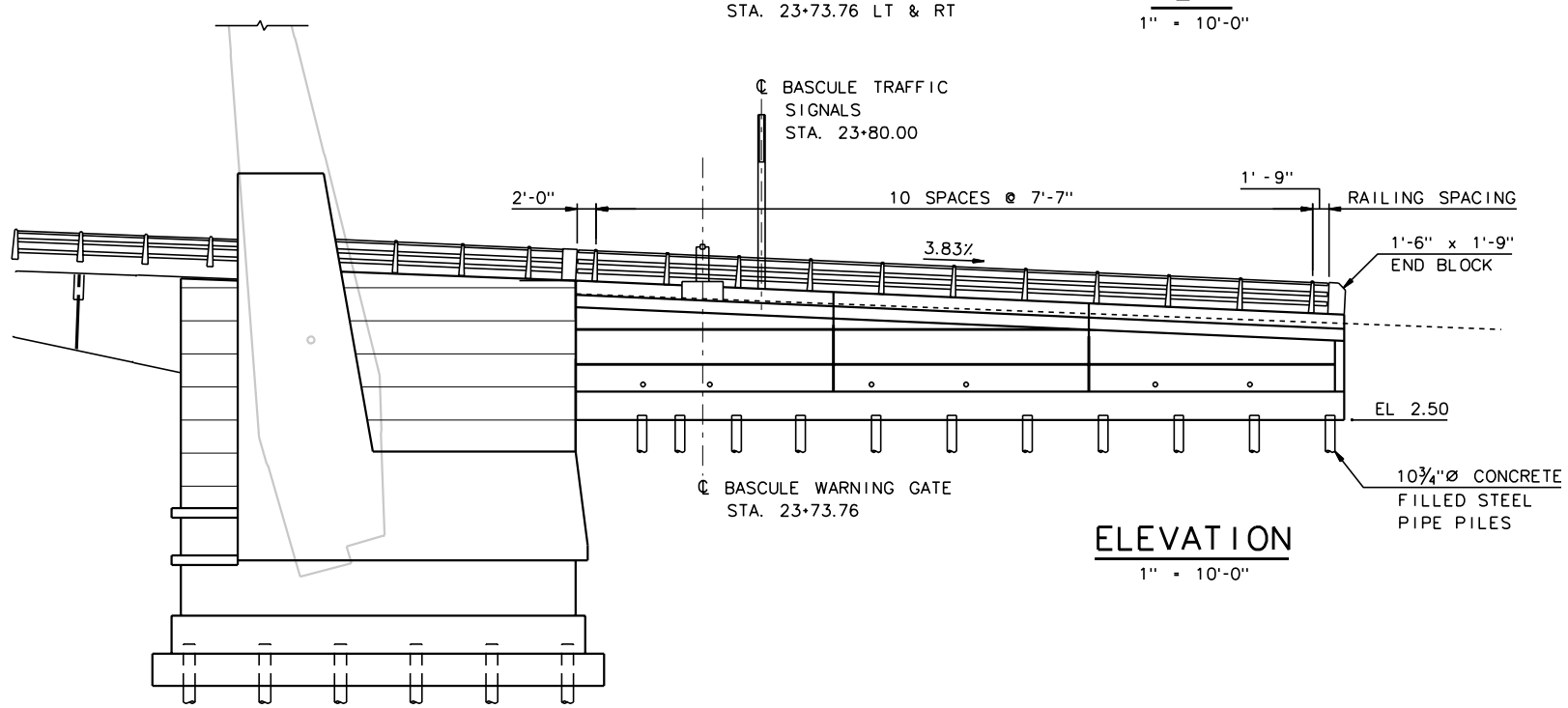

ELEVATION
1" = 10'-0"

FIGURE 3.5

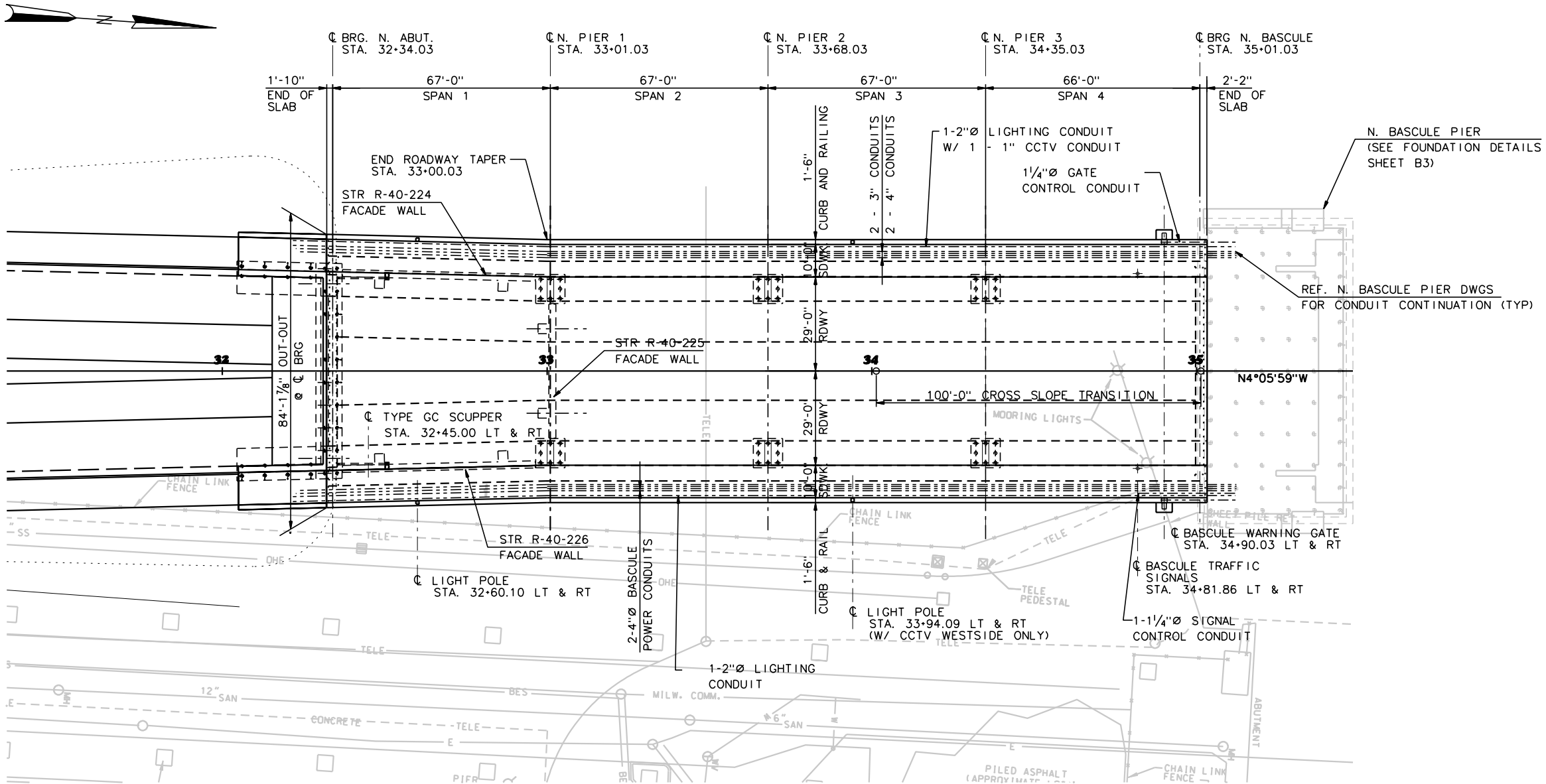

PLAN

1" = 20'-0"

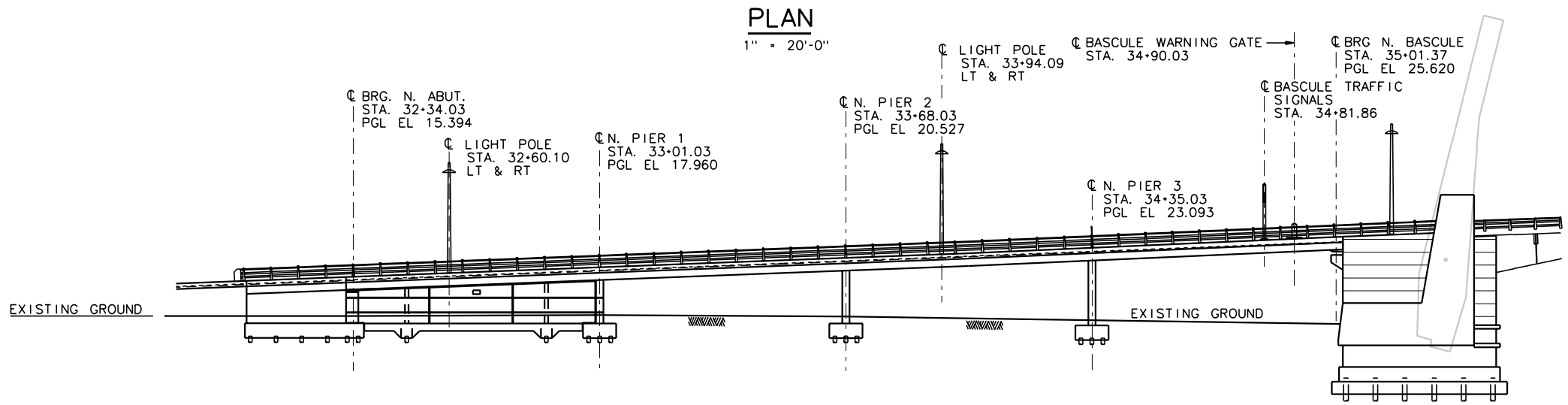

ELEVATION

1" = 20'-0"

FIGURE 3.6

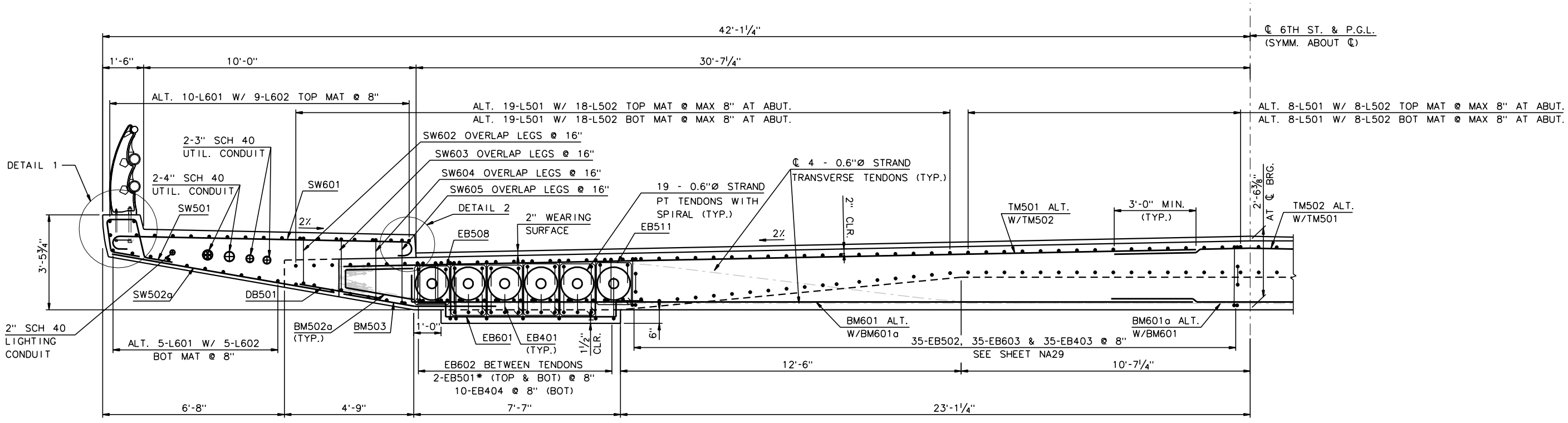

* FIELD BEND EB501

TYPICAL SECTION AT END BEAM

½" = 1'-0"

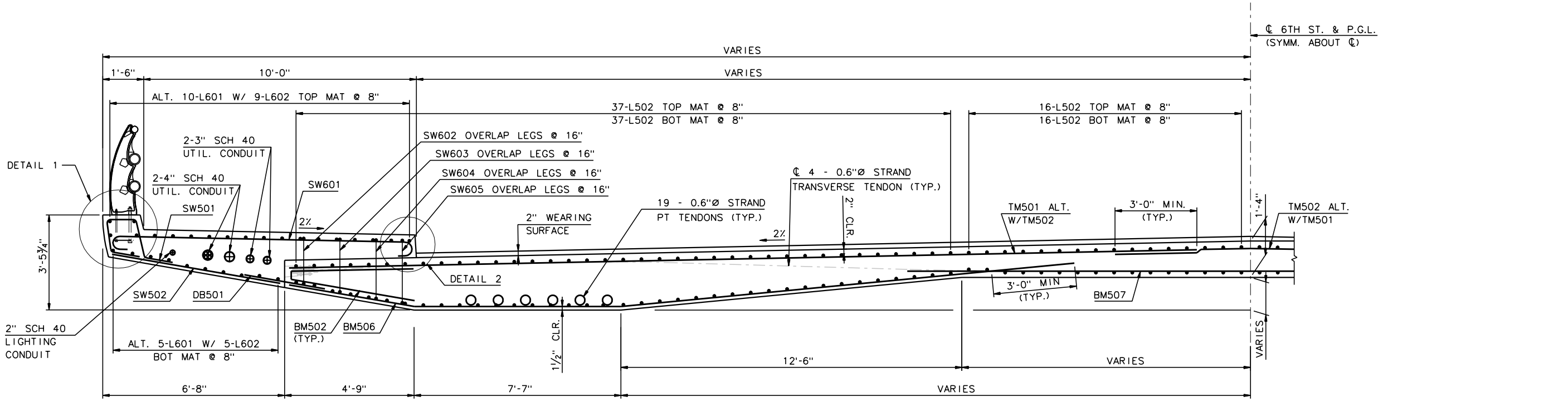

TYPICAL SECTION

½" = 1'-0"

FIGURE 3.7

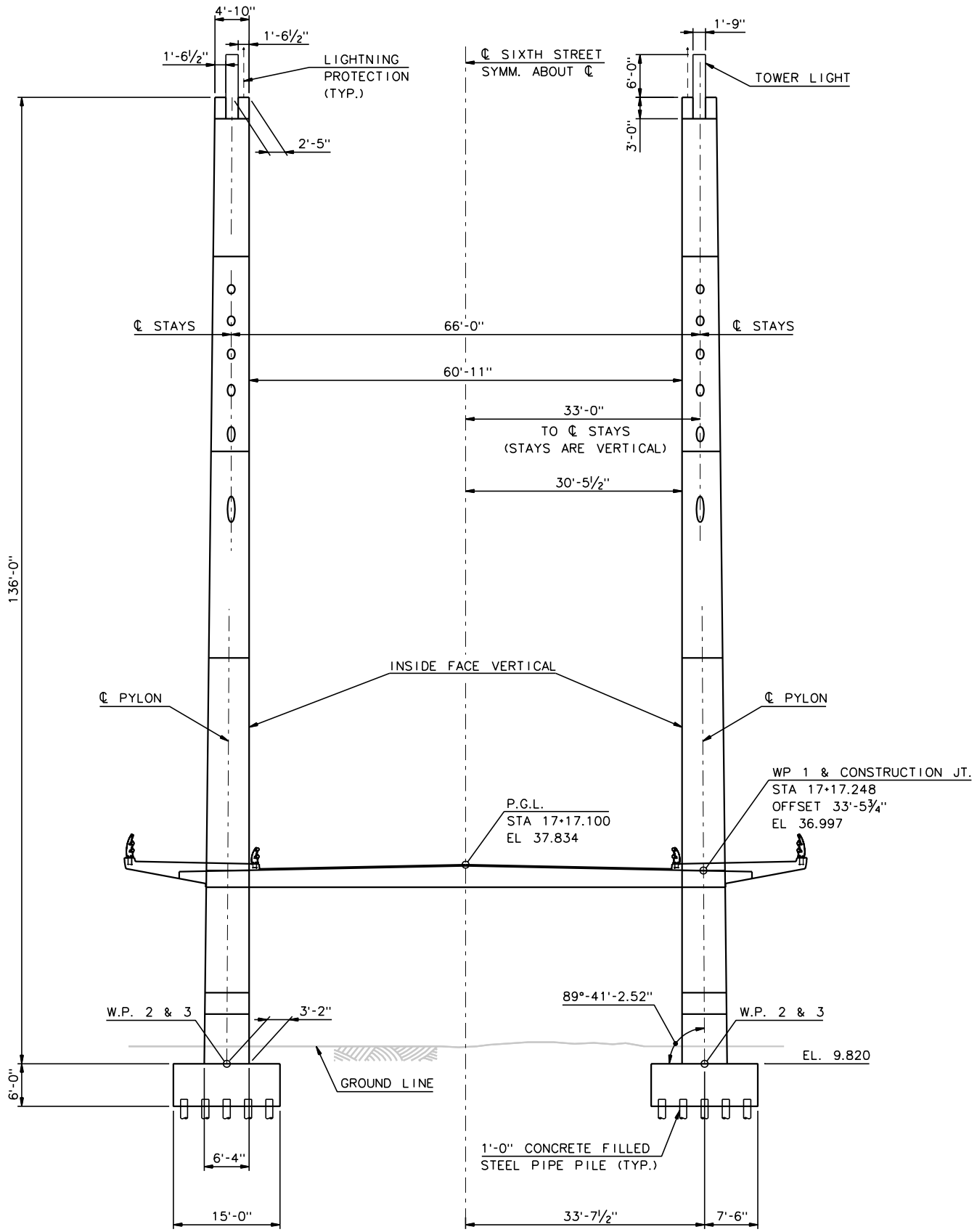

TRANSVERSE ELEVATION

1" = 10'-0"

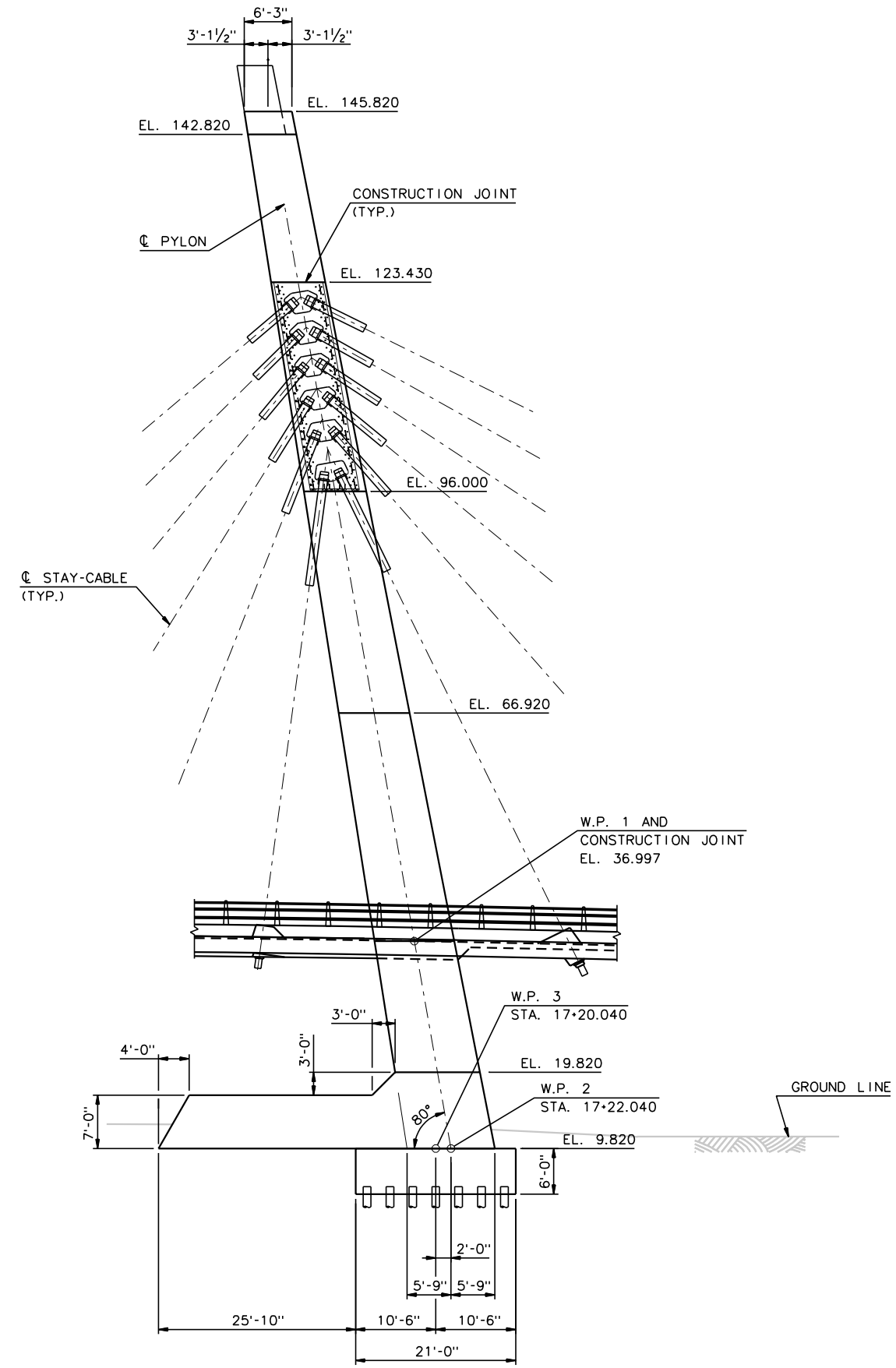

LONGITUDINAL ELEVATION

1" = 10'-0"

FIGURE 3.8

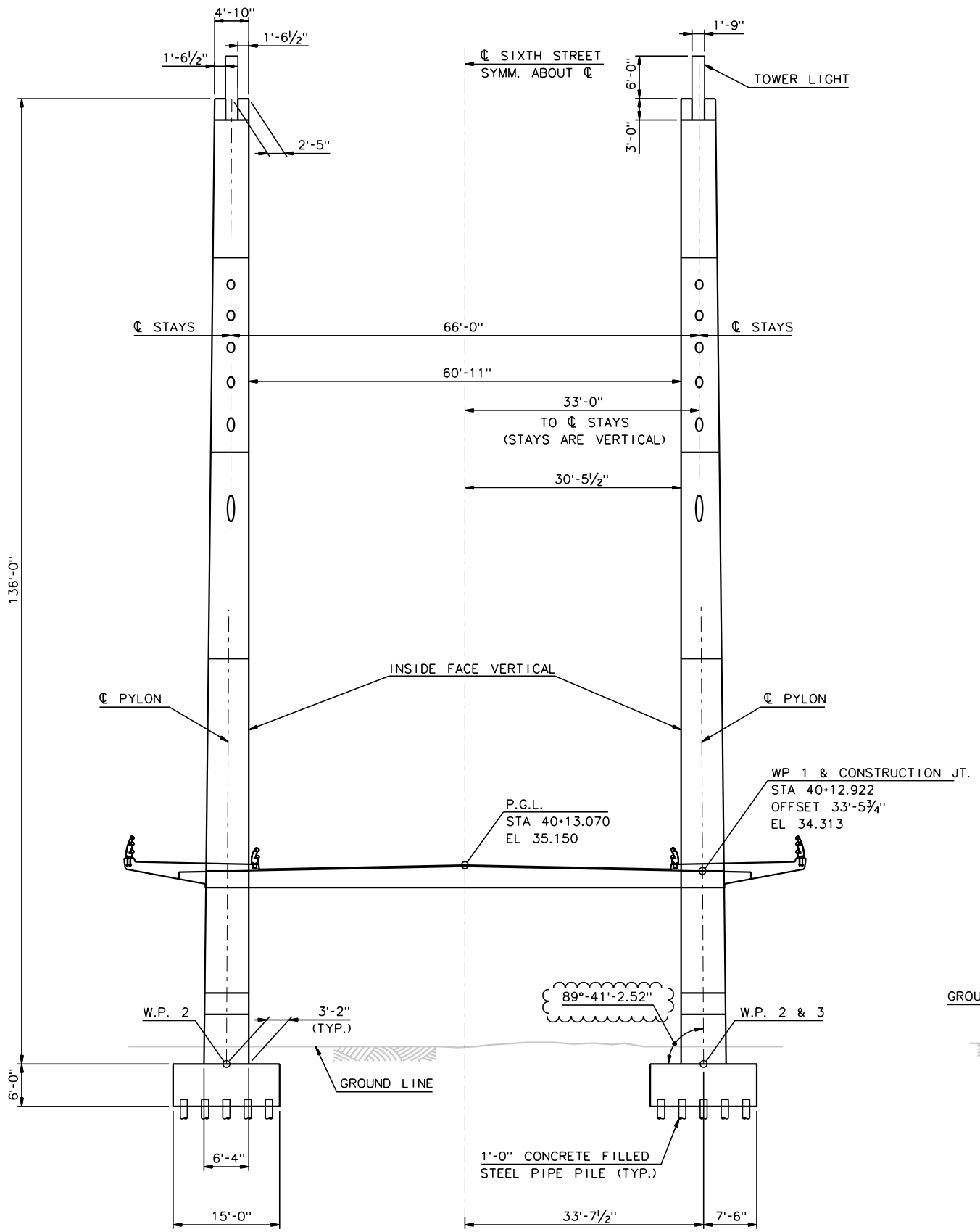

TRANSVERSE ELEVATION

1" = 10'-0"

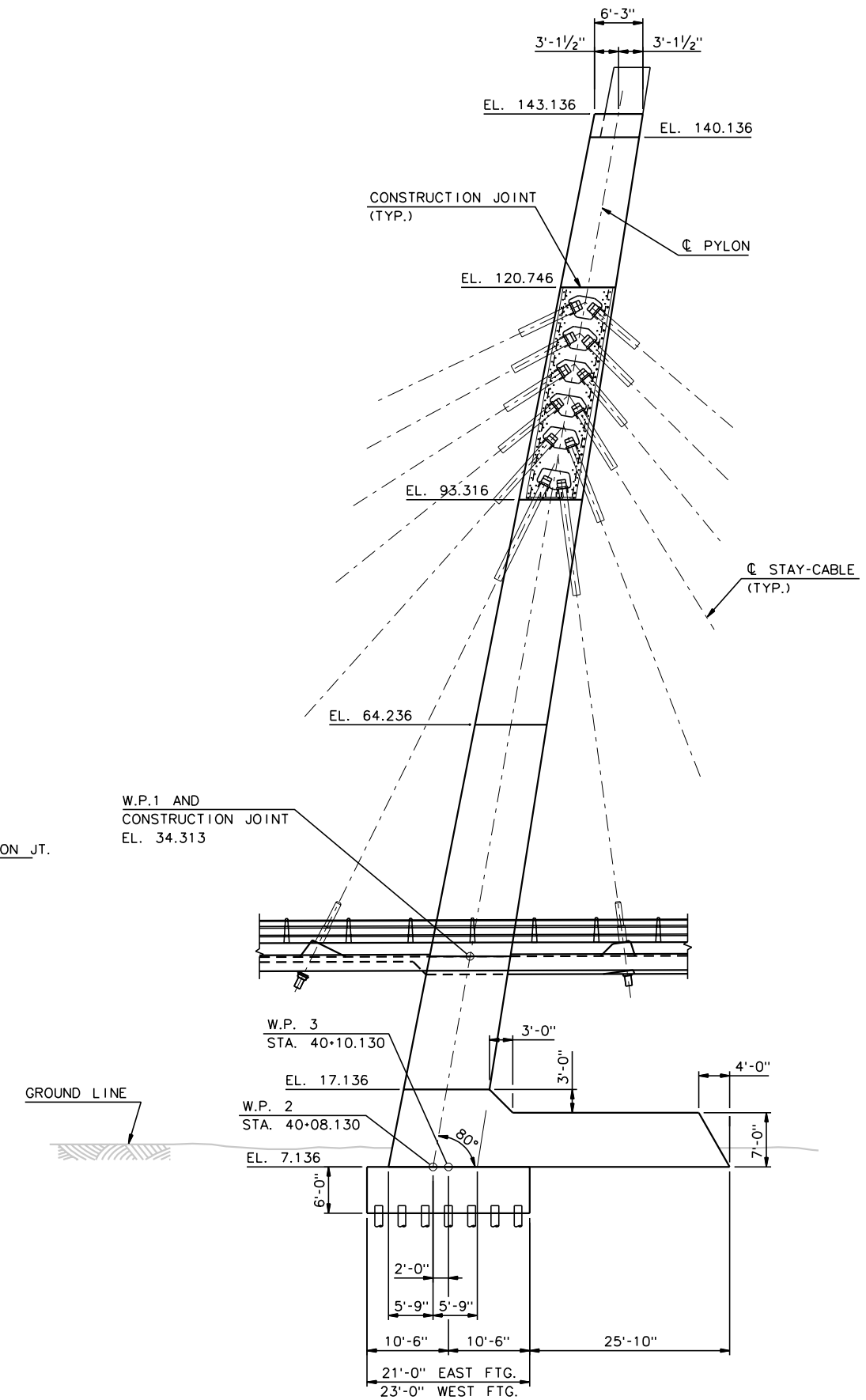

LONGITUDINAL ELEVATION

1" = 10'-0"

FIGURE 3.9

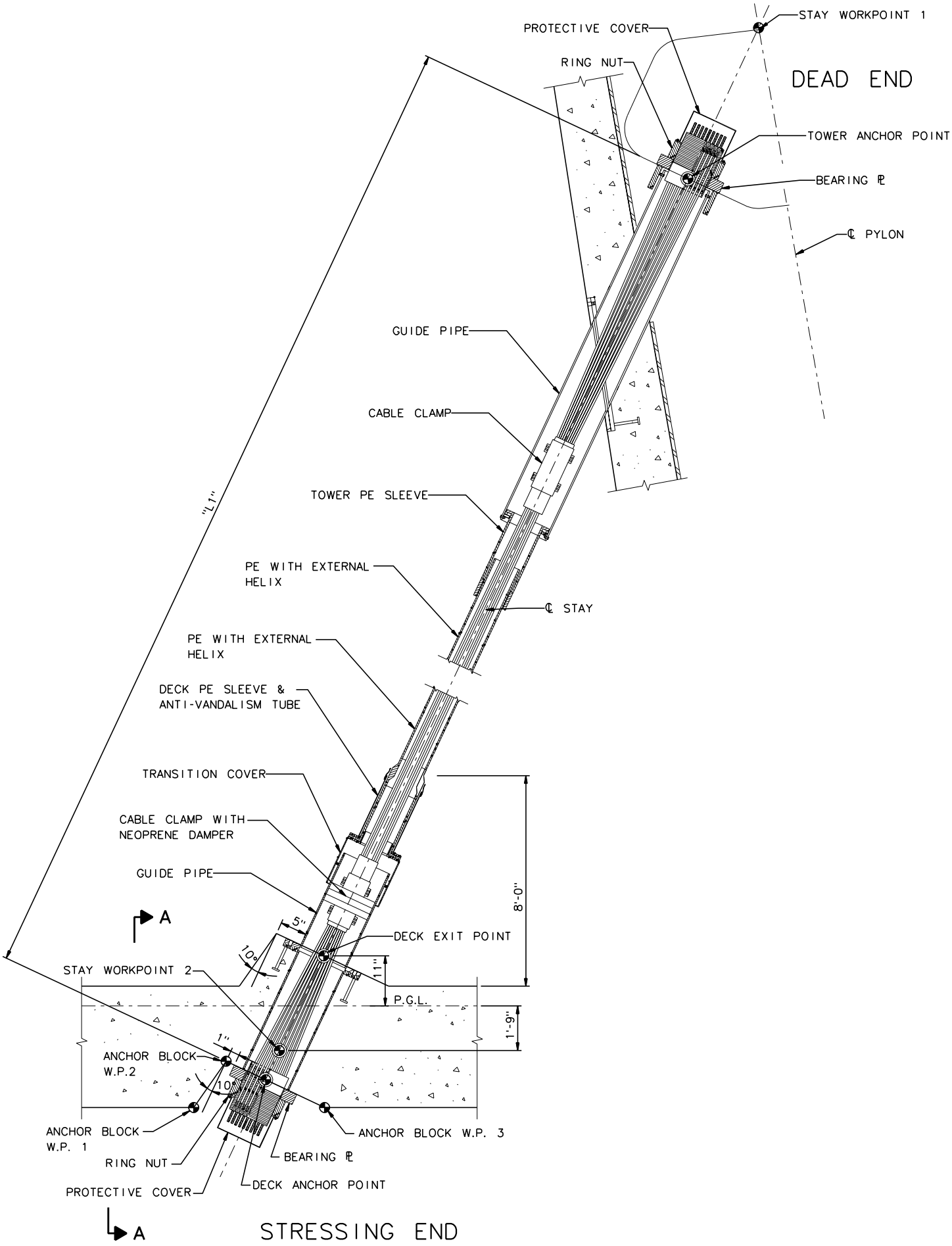

BACK SPAN STAY ELEVATION

N.T.S.

FIGURE 3.10

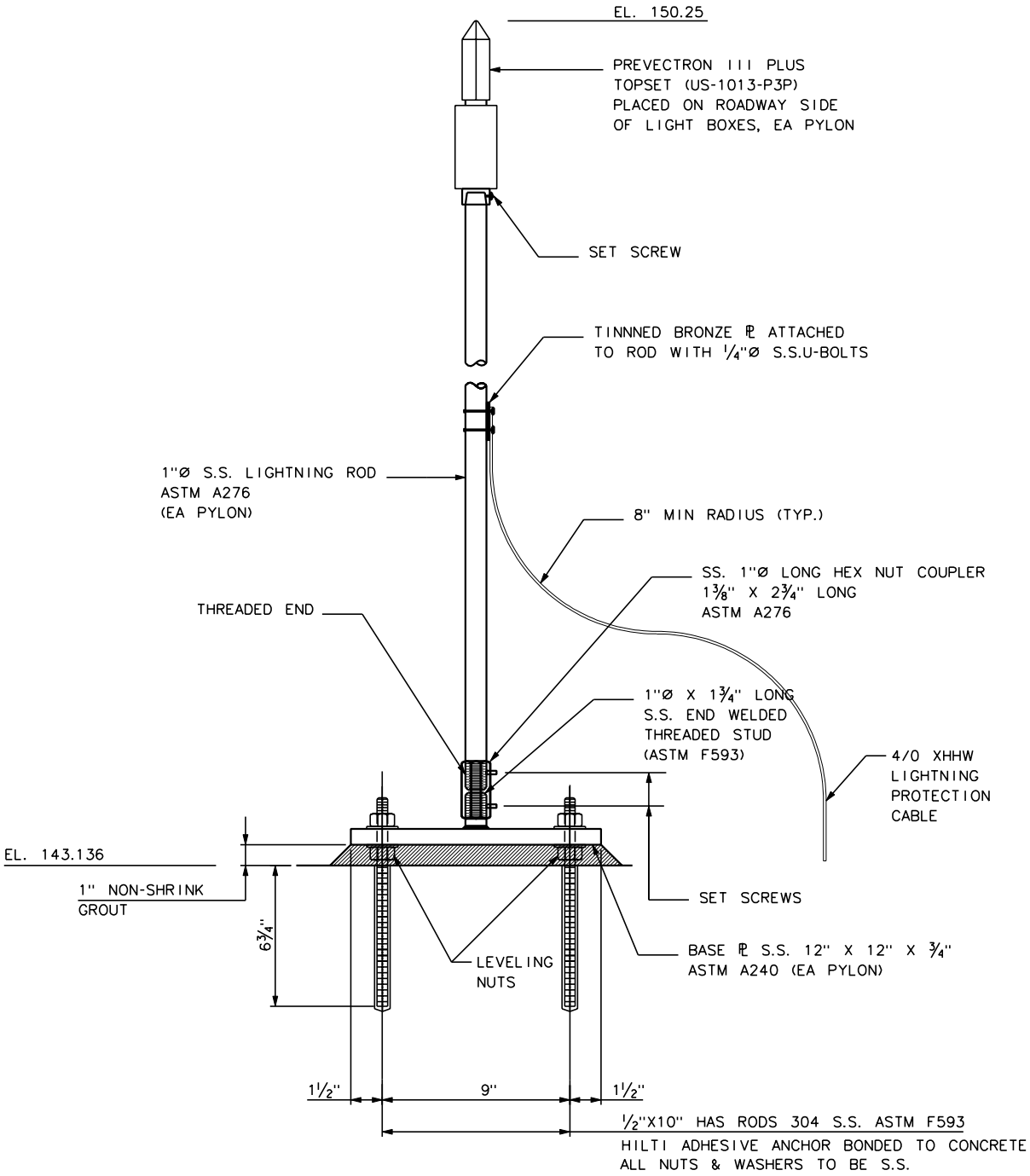

LIGHTNING PROTECTION DETAIL

3" = 1'-0"

FIGURE 3.11

SECTION 4

BRIDGE DESIGN CONSIDERATIONS

4.1 Overall Concept of Design

A cable-stayed bridge (Fig. 3.1) is a statically indeterminate structure in which the deck acts as a continuous plate supported elastically at the points of cable attachments. The cables support the deck in the vertical direction and resist torsion and to a lesser degree sidesway imposed on the deck due to eccentric live loading, wind, and seismic forces.

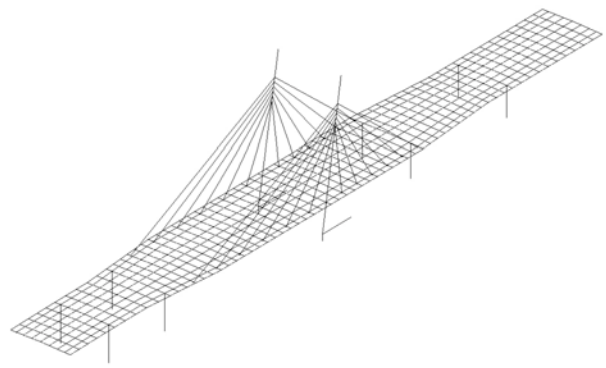

North Cable Stayed Grillage Model

The deck section, shown in Fig. 3.3, is torsionally weak, allowing for simple plate load distribution. For dead load, live load, wind load, temperature and seismic behavior, the structure was analyzed using a 3-dimensional space frame model (grillage model) with two planes of cables. In addition a complete Finite Element Model was utilized to verify the grillage model and to examine localized effects at the piers and the post-tensioning and stay cable anchorage regions. In addition, the grillage model accounts for time dependent effects such as creep and shrinkage.

4.2 Description of Loads

4.2.1 Vertical Loads

Vertical loads supported by the bridge consist of the weight of the various structural members of the bridge, the weight of the concrete sidewalk, the weight of the railings and utilities, the weight of the roadway wearing surface, the live load and the impact forces from live load. The design live load is a standard

AASHTO HS20 truck and lane loading. Detailed listing of these loads is contained in Section 4.3, which is adopted from the General Note Sheet of the Contract Documents.

4.2.2 Horizontal Loads

Horizontal loads supported by the bridge consist of wind loads in the transverse and longitudinal directions, expansion and contraction due to temperature, transverse and longitudinal seismic loads and creep and shrinkage of the concrete.

4.3 Project Design Criteria

Design Specifications

1. AASHTO "Standard Specifications for Highway Bridges," 16th Edition, including interims through 2000.
2. Wisconsin Bridge Manual, Volumes 1 and 2, January 1997 by State of Wisconsin D.O.T., Division of Transportation Infrastructure Development, Bureau of Structures.
3. Wisconsin D.O.T. Facilities Development Manual.
4. AASHTO “A Policy on Geometric Design of Highways and Streets,” 1990.
5. City of Milwaukee Roadway Design Criteria.
6. AWS Bridge Welding Code D1.5-1996.
7. AWS Structural Welding Code D1.1.-1996.
8. AASHTO "Guide Specifications For Fracture Critical Non-Redundant Steel Bridge Members," 1978, Including 1991 Interims.
9. Wind Design Specifications for Cable-Stayed Spans: ASCE Minimum Design Loads for Buildings and Other Structures, ANSI/ASCE 7-95 Approved June 6, 1996.
10. Recommendations for Stay Cable Design, Testing and Installation, Post-Tensioning Institute (PTI Recommendations), Committee on Cable-Stayed Bridges, August 1993.
11. CEB/FIP Model Code 1990, Comite Euro-International Du Beton, 1991.
12. CEB/FIP "Model Code for Concrete Structures," 3rd Edition, 1978, Appendix E, Time-Dependent Behavior of Concrete, Creep and Shrinkage.

13. "Sixth Street Viaduct Project Request for Proposal," Appendix B with Addendums 1-4 with modifications and additions specified herewith. WisDOT Project ID 2235-00-00.
14. P.T.I. "Specifications for Grouting of Post-Tensioned Structures," 1st Edition, February 2001.

Design Loads

Dead Loads

Weight of Reinforced Concrete:	150 pcf
Weight of Prestressed Concrete:	155 pcf
Weight of Steel:	490 pcf
Weight of Stay-Cables:	490 pcf
Initial Concrete Wearing Surface:	25 psf
Future Wearing Surface:	20 psf
Railing:	50 plf
Bridge Supported Utilities (Allowance):	400 plf

Live Loads

Highway Design Live Load: AASHTO HS-20.

Maximum Number of Design Lanes is 4 with Reduction for Multiple Lane Loading.

Impact is in Accordance with AASHTO Article 3.8 in Reference 1.

Sidewalk Live Load: 85 psf, Bridge Inspection Truck "Reach All UB 50." Wheel Spacing = 6'-4", Axle Loads = 17 kips, 21 kips, 21 kips, and Axle Spacing = 16', 4'

Live Load Rating

Structure No.	Inventory	Operating	Permit
B-40-413A	HS-27	HS-45	780 kips
B-40-414A	HS-24	HS-40	510 kips
B-40-414C	HS-32	HS-53	750 kips

Seismic Load

The structure is designed for an acceleration coefficient of 0.04g in rock with 90% probability of non-exceedance in 50 years.

Bridge shall be designed for Seismic Performance Category A.

Damping coefficient for the bridge shall be 5%.

Wind Loads

For the cable stayed bridges, wind loads shall be in accordance with ASCE minimum design loads for buildings and other structures, ANSI/ASCE 7-95 with a return period of 100 years.

The effect of wind on the stay cables and the pylon shall be evaluated by a wind engineering consultant.

Temperature Load

The Design Mean Temperature Shall Be:	45 ^{o}F
Thermal Coefficient for Concrete:	0.000006 per ^{o}F

Uniform Seasonal Temperature Rise and Fall for Concrete Structural Design:

Temperature Rise =	35 ^{o}F
Temperature Fall =	45 ^{o}F

For Steel Structural Design:

Temperature Rise =	75 ^{o}F
Temperature Fall =	75 ^{o}F

For Deck Movements for Design of Bearings and Expansion Joints:

Temperature Rise =	35 ^{o}F

Temperature Fall = 1.2 x the Combined Effect of Creep, Shrinkage, Elastic Shortening and Temperature Fall.

Uniform Temperature Change for the Cable from the Temperature of the Girders, Pylon and Pier:

Temperature Rise =	18 ^{o}F
Temperature Fall =	18 ^{o}F

Thermal Gradient Between Top & Bottom of Superstructure:	18 ^{o}F
Thermal Gradient Between North & South Faces of Pylon:	10 ^{o}F

Creep and Shrinkage

Strains Calculated in Accordance with CEB/FIP Model Code 1990.

Average Relative Humidity is Taken as 70%.

Stay Cable Replacement and Loss

Two lanes of traffic shall be maintained in the area of cable replacement.

The cable-stayed structures shall be designed to withstand the loss of any one stay cable.

Materials

Concrete

All concrete properties shall be in accordance with 28-day specified compressive strength (f'c) and concrete class as follows:

A) Abutments, masonry seals and piers shall provide a compressive strength of 4000 psi (Class D).

B) Pylon and superstructure slab shall provide a compressive strength of 6000 psi.

C) All other concrete shall provide a compressive strength of 3500 psi (Class A).

Reinforcing Steel

Reinforcing shall conform to the requirements of AASHTO M31, (ASTM A615) Grade 60. All reinforcing bars used in structural members partially or entirely above finished ground level shall be epoxy coated in accordance with AASHTO M284 (ASTM A775).

Concrete Cover

Concrete cover shown on plans does not include placement and fabrication tolerances unless shown as "Minimum Cover."

A) Superstructure

Top of Concrete Deck Slab:	2 in
Bottom of Concrete Deck Slab:	1 ½ in
Top and Side of Sidewalk and Curb:	2 in
Bottom of Sidewalk and Curb:	1 ½ in

B) Substructure

Abutment and retaining wall:	2 in
Pier:	2 ½ in
Concrete cast against earth:	3 in

Structural Steel

A) Structural carbon steel shall conform to the requirements of ASTM A 709, Grade 36 (AASHTO M 270, Grade 36).
B) High-strength low-alloy structural steel shall conform to the requirements of ASTM A 709, Grade 50 (AASHTO M 270, Grade 50).
C) Welded connections will be made using electrodes with a minimum tensile strength of 70 ksi. All welds will be AWS prequalified welds unless noted or shown otherwise.
D) Bolted connections are made with 7/8" diameter ASTM A325 Type 1 bolts in 15/16" diameter holes, unless noted otherwise. All bolts not encased in concrete shall be galvanized. Allowable shear for slip critical connections per AASHTO - Class A surface are as per AASHTO Table 10.57A.

Stay Cables

Strands shall be 0.6 in diameter low relaxation seven wire weldless strands conforming to ASTM A416, Grade 270.

Stays shall be placed inside a white, high-density polyethylene (HDPE) pipe meeting the requirements of P.T.I. recommendations (Reference 10, Section 3.4).

Post-Tensioning - Strand

All strands shall conform to the requirements of ASTM A416 Grade 270 for low relaxation, weldless strands.

Strands shall be placed inside a polyethylene (PE) pipe.

Post-Tensioning Parameters:

Modulus of Elasticity:	28500 ksi
Friction Coefficient:	0.23
Wobble Coefficient:	0.0002/ft
Maximum Stress During Jacking:	0.80 f's
Maximum Stress at Anchor after Seating:	0.70 f's
Maximum Stress at End of Seating Loss Zone:	0.75 f's
Maximum Stress after Losses:	0.72 f's
Assumed Anchor Set:	¼ in

Allowable Stresses/Loads

Reinforced Concrete

In accordance with AASHTO Standard Specifications for Highway Bridges.

Structural Steel

In accordance with AASHTO Standard Specifications for Highway Bridges.

Post-Tensioned Concrete

A) Temporary stresses before losses due to creep and shrinkage at time of transfer:

Compression:	0.55 f'ci
Tension at Top of Deck:	3 √f'c
Tension at Bottom of Deck:	6 √f'c

B) Stresses at service level after all losses have occurred:

Compression:	
Permanent Service Loads:	0.45 f'c
Permanent and Live Service Loads:	0.60 f'c
Tension at Top of Deck:	3 √f'c
Tension at Bottom of Deck:	6 √f'c

C) Replacement of any one stay cable with reduction of live load to two lanes in the area of the cable under exchange – allowable stresses are 125% of the design values.

D) Loss of any one stay cable – allowable stresses are 133% of the design values under full live load.

Stay Cables

A) AASHTO Group I (including "locked in" erection stresses, and creep and shrinkage):	0.45 f's
B) Other AASHTO Groups (with no overstress factors):	0.50 f's
C) During construction of cable-replacement:	0.56 f's

Foundation Data

Abutments shall be supported on 10 ¾" ϕ and 12" ϕ concrete filled steel pipe piles driven to an allowable bearing capacity as specified on the contract drawings.

Piers shall be supported on 12" ϕ concrete filled steel pipe piles driven to an allowable bearing capacity as specified on the contract drawings.

Pylons shall be supported on 12" ϕ concrete filled steel pipe pile driven to an allowable bearing capacity as specified on the contract drawings.

SECTION 5

STRUCTURAL ROLE OF MAJOR BRIDGE ELEMENTS

5.1 Substructure Elements

5.1.1 General

The substructure includes the elements of the bridge that support and transfer loads from the superstructure to the concrete filled steel pipe piles. The substructure consists of the pylons, piers and abutments, including their pile caps / foundations.

At each pylon, the superstructure loads are applied to the pylon shafts via the stay cables and the integral superstructure-to-pylon connection. The pylon shafts transmit vertical loads and moments to the pile caps and concrete filled steel pipe piles.

At the piers, loads are applied to the substructure through the superstructure system and transmitted through the pier columns to the pile foundations.

At the abutments, superstructure loads are applied to the substructure through the end beam and bearing assemblies and transmitted through the stem wall to the pile foundations. In addition, lateral soil pressure is applied to the abutment walls and wing walls consistent with the behavior of retained earth.

5.1.2 Pylons

5.1.2.1 Pylon Shafts

The two solid reinforced concrete shafts (Figs. 3.8 and 3.9) of each pylon serve as anchorages for the stay cables and transmit the cable and superstructure forces to the pile foundations. The stay cables are anchored inside the shafts by a steel

anchor box, transferring their loads directly to the pylon shafts as primarily axial forces with small bending. Each cable pair from the back span shares a work point with a cable pair from the main span at the centerline of the shaft and remain in a vertical plane at 33'-0" from centerline.

Pylon Shaft Reinforcement

The main reinforcement in the shafts consists of longitudinal reinforcing bars that are distributed around the perimeter to create a box in section, and are lap-spliced for continuity. The longitudinal reinforcement provides sectional resistance to the combination of axial force and biaxial flexure induced from dead load, live load, wind and seismic loads. The horizontal reinforcement consists of stirrups and cross ties, for concrete confinement and to resist longitudinal and transverse shear. The steel anchor box eliminated the need for anchorage zone reinforcement and post-tensioning that is typically required to resist bursting and splitting stresses at the pylon cable anchorages.

5.1.2.2 Steel Anchor Box

The steel anchor box consists of two 1 ¼" thick web plates with two ½" thick flange plates (Fig. 5.1) made composite with the pylon shaft with shear studs. Holes cut in the flange and web plates enable the stay cables to be threaded into the box and bear directly on the web plates with stiffeners. The holes in the web plates also facilitate inspection of the stay cable anchorages. The loads from the stay cables are transmitted through the anchor box to the pylon shaft.

Pylon Anchor Box Installation

5.1.2.3 Foundations

The footing of each pylon transfers vertical loads and moments from the pylon shafts above to 12” diameter concrete-filled steel pipe piles. Given the inclination of the pylon and the applied loads from the superstructure / stay cable system, it was necessary to offset the pylon foundations 2’-0” from the centerline of the pylon shaft in the longitudinal direction. The pylon piling in the foundation is subjected to small amounts of uplift under extreme load cases such as seismic and wind. The pile cap reinforcement and pile connections are designed to resist this uplift force together with the forces associated with dead load, live load, temperature, creep and shrinkage etc.

Concrete Filled Steel Pipe Pile Installation

5.1.3 Piers

5.1.3.1 Pier Shafts

The piers are two-column bents that are integral with the superstructure (Fig. 5.2). Conventionally-reinforced solid section columns provide direct support at the edge girder lines and transmit the loads to the pile foundation. The columns are tapered longitudinally on the cable stayed bridges to resist the longitudinal moments produced at the top of the columns.

A transverse cap beam spans between the tops of the columns at Pier 3 of the North Cable Stayed Bridge to provide the necessary resistance needed for the added transverse bending from anchoring the N1 stay cables.

The vertical reinforcement in the columns resists any tension that results from the combination of bending moment and axial force, induced by lateral loads such as wind and seismic, live loads, temperature and creep / shrinkage.

5.1.3.2 Foundations

The foundations for each pier are composed of separate footings, each supporting a pier column or shaft. The footing transfers vertical loads and moments to the 12" diameter concrete filled steel pipe piles. Transverse and longitudinal reinforcing steel is provided at the top and bottom of the footing to resist any tension due to flexure in the footing from these loadings.

5.1.4 Abutments

The abutments serve as both earth-retaining structures and supports for the superstructure. Loads from the superstructure are transmitted through the bearings to the stem walls of the abutments. The stem walls then transfer the loads to the concrete filled steel pipe piles.

The abutments are fairly typical of conventional bridge construction with the exception of the South Cable Stayed abutment. The stem wall of the South Cable Stayed abutment was detailed specially to act as a tie-down for the uplift generated at the South back span (Fig 5.4).

5.2 Superstructure Elements

5.2.1 General

The superstructure consists of a high-performance concrete deck system that supports vehicular traffic on the bridge. The superstructure is in-turn supported by the stay-cable system, the piers and the abutments.

5.2.2 Deck System

Fig 3.3 shows a typical cross-section of the bridge deck. It consists of the deck slab, sidewalk and parapets. The slab has a concave under deck in all locations except for the back spans of the cable-stayed bridges. The concave under-deck forms a longitudinal edge girder having a width of 7'-7" along the entire length of the bridge which coincides with the transverse width of the piers.

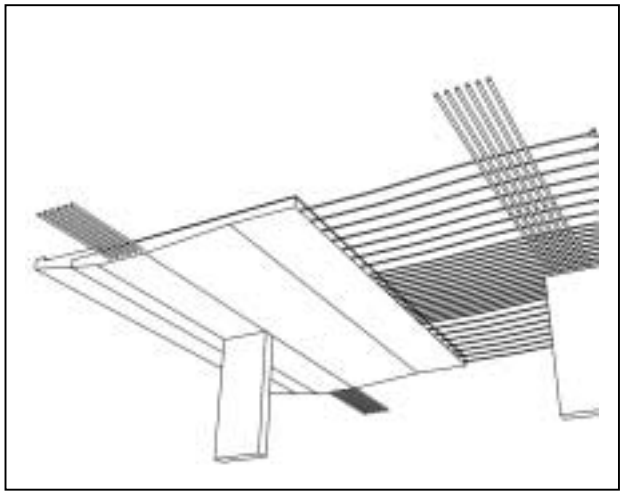

The superstructure is comprised of a composite system of a bidirectionally post-tensioned deck combined with a conventionally reinforced cantilever sidewalk. The post-tensioning is banded in the high moment areas to enhance efficiency and ultimate strength.

At the back spans of the cable stayed bridges, the concave portion is discontinued, with a level underdeck that extends 6" below the bottom of the edge girder. The added depth is needed to balance the unequal weight per unit length of the main span as compared to the back span. This balance optimizes the efficiency of the structure since it serves to minimize the longitudinal bending moments in the pylon under dead load.

5.2.3 End Beams

The end beams serve three primary functions, they:

- Support the deck slab at the expansion joint
- Provide adequate depth for an expansion joint blockout and subsequent joint installation

Resists the transverse component of the post-tensioning force associated with the anchorage of the longitudinal tendons.

5.2.4 Abutment Tie-Down Corbel

At the South Cable Stay Bridge abutment, a corbel (Fig. 5.3) extends from the back span superstructure to provide uplift resistance due to dead load, live load and other service loads. Elastomeric bearings are located on the top and bottom of the corbel, which fits inside a specially detailed abutment stem wall (Fig. 5.4). The primary bearings are the uplift bearings (situated on top of the corbel) since under dead load the uplift bearings are precompressed. However, to meet the spirit of the AASHTO requirements, an elastomeric bearing below the corbel is provided in the event of an unforeseen loading that overcomes the precompression of the uplift bearing.

5.2.5 Post-Tensioning Systems

Each post-tensioning system consists of steel tendons installed in polyethylene ducts embedded in the concrete member, and includes the tendon's associated anchorage device. After the concrete of the member has reached a prescribed minimum strength, tendons are stressed by jacking from one or both ends of the tendons (the live end), thereby transferring the stress as a compressive force throughout the member between the end anchorages. This compressive force will later resist any tendency toward tension in the concrete within that region due to subsequent loadings.

After all tendons are stressed, the annular spaces in the ducts not occupied by the tendons are filled with cement grout in accordance with the *PTI Guide Specifications for the Grouting of Post-Tensioned Structures.* The cement grout forms an integral part of the tendon's corrosion protection system.

150 ksi 1-1/4" diameter bar tendons were used to vertically and horizontally post-tension the abutment tie-down corbel of the South Cable Stayed Bridge. All other tendons in the superstructure consist of 0.6" nominal diameter 7-wire strands placed inside a polyethylene (PE) duct. All longitudinal post-tensioning consisted of 19-strand tendons, whereas the transverse post-tensioning was primarily comprised of 4-strand flat tendons.

The end anchorages for the bar tendons consist of a bearing distribution anchor plate held in position by hexagonal nuts. After jacking the proper force into the live end, the nut was re-tightened, the force was checked (lift-off-tests). The anchor plates at both ends distribute the force into the surrounding concrete.

The dead end of each strand tendon consists of multiplane or flat anchorages for longitudinal or transverse tendons respectively wherein the strands splay out from the duct end and the individual wires of each strand are separated into a bulb configuration (Fig. 5.5). The live end anchorage for the strand group consists of a device comprised of wedges (for each strand), a common wedge plate and a bearing distribution anchor plate. At both ends, bursting and spalling reinforcement have been provided in the vicinity of the tendon anchorages to resist the localized forces induced at the tendon anchorage zone.

Jacking of Longitudinal Tendons

The required post-tensioning (jacking) forces introduced into the longitudinal and transverse tendons are given in the contract documents. The longitudinal tendons were jacked using a multi-strand jack, whereby all 19-strands are stressed simultaneously. For the 4-strand transverse tendons, each strand is stressed individually.

To ensure that the strands were stressed in accordance with the design, tendon elongations were computed and compared with the field measured elongations, to ensure concurrence. MGP's design team approved all tendon stressing operations prior to grouting, using this well-established verification method.

Where strand tendons are set on a curved alignment, friction occurs between the strands and the duct during jacking. This friction results in partial loss of the post-tensioning force along the length of the tendon. Additional losses occur

from creep and shrinkage of the concrete that cause the strands to shorten over a period of time and thus reduce the force exerted on the concrete by the tendons. Relaxation of stress in the strands also reduces the force exerted on the concrete. The relaxation loss is kept to a minimum by the use of low-relaxation strands. Additional losses in the post-tensioning force occur as a result of elastic shortening. All the losses described above were taken into account in the design.

5.2.6 Deck Expansion Joint Assemblies

Expansion joints are used at each abutment, bascule pier and along the interface between the Post-Office Bridge and the North Cable Stayed Bridge. The expansion joints are of the strip seal type and allow for longitudinal movement of the superstructure due to temperature and the effects of creep and shrinkage of the concrete. The Post-Office – North Cable Stayed strip seal is designed to provide both relative longitudinal and transverse movements. It is noted that the strip seal provided has a relative transverse movement rating of +/- 2.0” in accordance with the manufacturer’s recommendations.

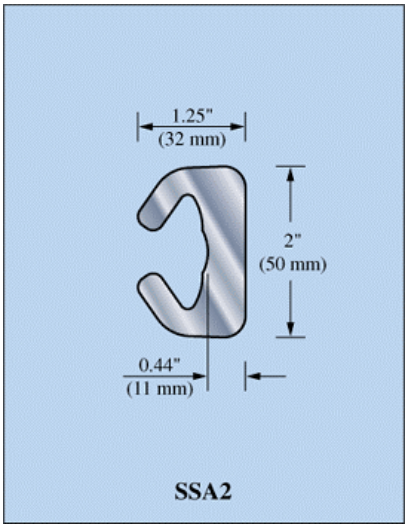

Frame Rails - Expansion Joint

The strip seals were provided by DS Brown and incorporated SSA2 frame rails with the A2R series Glands, depending upon movement requirements. The SSA2 frame rails depicted above were welded to ½” plate anchor bars spaced at a maximum of 1’4”.

5.2.7 Elastomeric Bearings

Steel Reinforced Elastomeric (neoprene) expansion bearing assemblies are used at the abutments to support the end beams and to serve as uplift bearings at the abutment corbel. The bearings are set on concrete pedestals cast monolithically with the end beam.

Each elastomeric bearing assembly consists of a polished stainless steel plate bonded to the top bearing plate sliding across a Teflon (TFE) sheet which is bonded to reinforced neoprene pad, as shown on Fig. 5.6. The neoprene pad is composed of alternating layers of elastomeric material and integrally-bonded steel plates. The purpose of the plates is to limit bulging of the elastomer under the combination of axial loads and end rotation.

Horizontal and vertical forces from the superstructure are carried through the elastomeric bearings to the abutment seat and bascule pier corbels. Elastomeric bearings are relatively stiff in compression and soft in shear (horizontal) deformation. This lateral deformation is desirable to reduce the horizontal force transferred to the abutment / bascule pier from superstructure horizontal movement.

5.3 Cable-Stay System

5.3.1 General

The cable-stay system is comprised of individually greased and sheathed 0.6” nominal diameter 7-wire strands, enclosed within a co-extruded HDPE pipe. The stay cable anchorages consist of an anchor head and wedge plate, where the individual strands are anchored together with a guide pipe, transition pipe, and cable clamp assembly that includes a neoprene damping element to mitigate stay cable vibrations. The numbering system of the cables is illustrated in Fig. 5.7. The number of strands for each stay cable varies, with 12 strands representing the smallest stay cable and 36 strands representing the largest of the stay cables.

Starting on the main span side, after the superstructure concrete has been post-tensioned and the reinforced concrete sidewalks installed, each cable pair is stressed from below deck using the Con-Ten (constant tension method). The required stressing forces introduced into the cables during construction are shown on the plans.

The cables were stressed initially to 70% of the full required force; the remaining force was applied to the cables after pylon and superstructure surveys together with jacking forces were evaluated and approved by the Engineer. Following approval, the stay cables were then stressed to 100% of their prescribed force using the same Con-Ten method. After completion of the stay cable installation, a selected number of cables were identified and lift-off-tests were performed to verify that the stay cable forces met the design requirements. Results from the lift-off tests generally demonstrated that the stay cable forces were within 2% of the design specified forces (i.e., the excellent agreement between design and installed stay forces).

Each stay cable contains an additional "reference" strand that may be removed during the service life of the bridge to evaluate the stay cable's corrosion protection system. These "reference strands" need not be replaced. A schedule for strand removal for inspection of the corrosion system is presented in more detail below.

5.3.2 Stay Cable Strands

The strands for the stay cables are 0.6" diameter low relaxation 7-wire weldless strands conforming to the requirements of ASTM A416, Grade 270. As part of the stay cable testing program, the strands did not meet the requirement of achieving 95% of GUTS following the 2,000,000 cycle fatigue tests. Since the stays failed at 90% of GUTS, the permissible DL + LL stress was reduced from 0.45 GUTS (121.5 ksi) to 90/95% *.45 GUTS = 115.1 ksi.

5.3.3 Stay Cable Pipe

The cable pipe assembly consists of the two-piece steel guide pipes, which are embedded in the pylon and the superstructure and the co-extruded HDPE stay pipe which serves as the external corrosion protection system along the cable free length. The co-extruded HDPE pipe incorporates a helix to help mitigate the potential for rain-wind induced vibration of the stay cable.

The galvanized steel guide pipes were fabricated in two pieces with a flanged connection for a number of reasons:

1. The guide pipes could be installed in the pylon concrete without having to cut holes in the forms.
2. The flange connection allows for alignment adjustment in the event that there are geometrical errors in the pipe location or orientation.
3. The guide pipes have not performed well in past applications, especially when the angle of the pipe makes an acute angle with the concrete surface. The two piece guide pipe assembly have enhanced replaceability should problems occur.

5.3.4 Cable Anchorages

The strands are anchored in a wedge plate which in-turn is anchored by standard DSI ring nuts bearing on a steel plate welded to the guide pipes (for construction convenience). Anchorage reinforcement, including spiral reinforcement was required at all edge girder anchorage zones. Similar details were not required at the pylon, given the presence of the steel anchor box. Details of the cable anchorages are shown in Fig. 5.8.

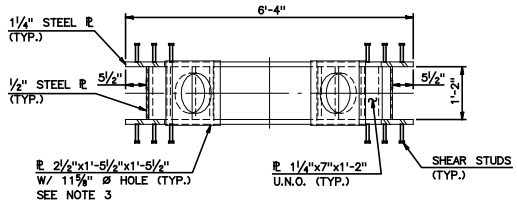

SECTION A-A
¾" = 1'-0"

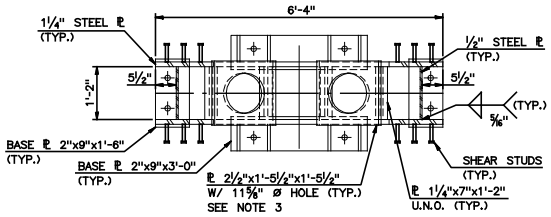

SECTION B-B
¾" = 1'-0"

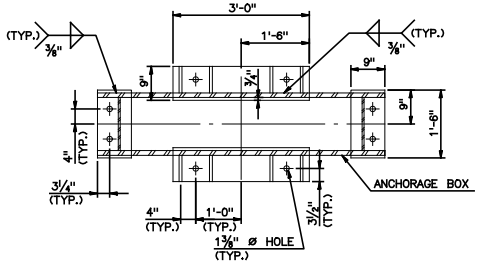

PLAN

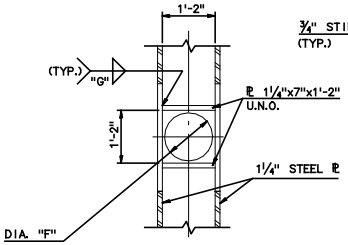

SECTION C-C
¾" = 1'-0"

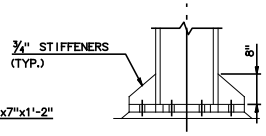

SIDE

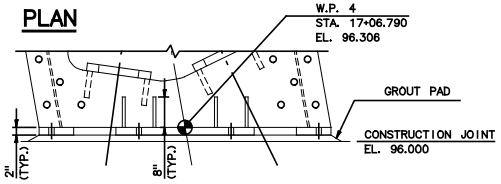

ELEVATION

BASE PLATES - 3 VIEWS
¾" = 1'-0"

STAY NO.	NO. OF STRANDS	DIM. "A"	β (DEG)	"C"	"D"	"E" (FT.)	DIA. "F" (FT)	WELD "G" (IN.)
S1	34	1'-9"	30.386	1'-3"	2'-9"	3.966	1.083	¾
S2	29	1'-9"	34.687	5'-3"	2'-10"	8.312	1.083	⅝
S3	20	1'-9"	40.401	9'-8"	2'-9"	12.802	1.083	½
S4	19	1'-9"	48.120	14'-2"	2'-8"	17.573	1.083	7/16
S5	19	1'-6"	58.584	18'-6"	2'-7"	23.039	1.083	7/16
S6	17	1'-3"	72.335	24'-0"	2'-5"	-	-	⅜
S7	12	1'-1½"	73.965	24'-0"	2'-5"	-	-	⅜
S8	26	1'-6"	58.780	18'-6"	2'-7"	22.114	1.083	⅝
S9	27	1'-7"	49.476	14'-2"	2'-8"	16.762	1.083	⅝
S10	33	1'-7"	43.490	9'-8"	2'-9"	12.105	1.083	¾
S11	34	1'-7"	39.415	5'-3"	2'-10"	7.702	1.083	¾
S12	35	1'-7"	36.502	1'-3"	2'-9"	3.420	1.083	¾

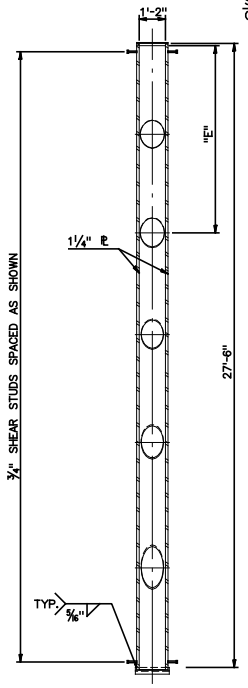

VIEW D-D
⅜" = 1'-0"

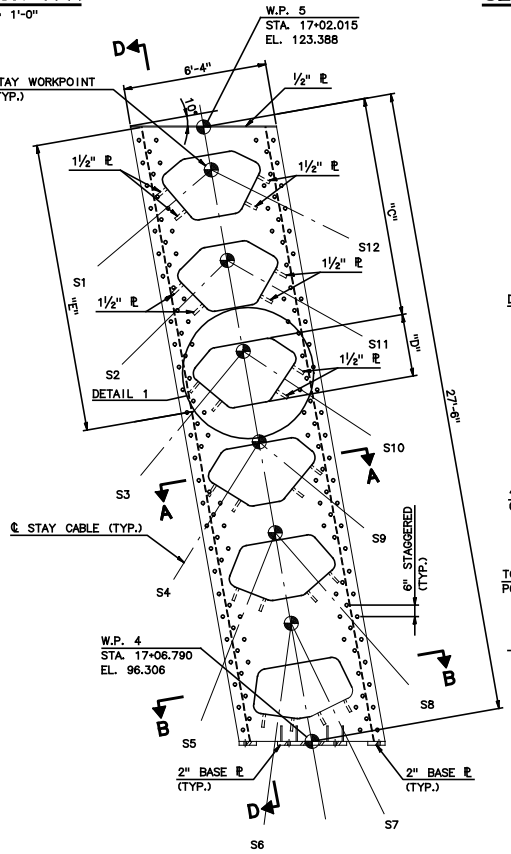

ELEVATION
⅜" = 1'-0"

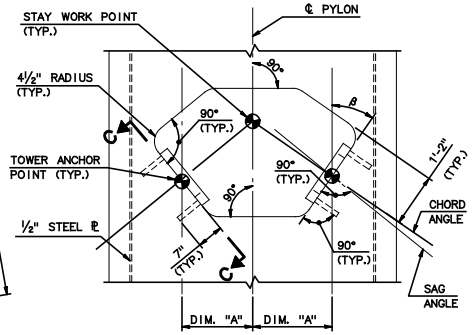

DETAIL 1
¾" = 1'-0"

FIGURE 5.1

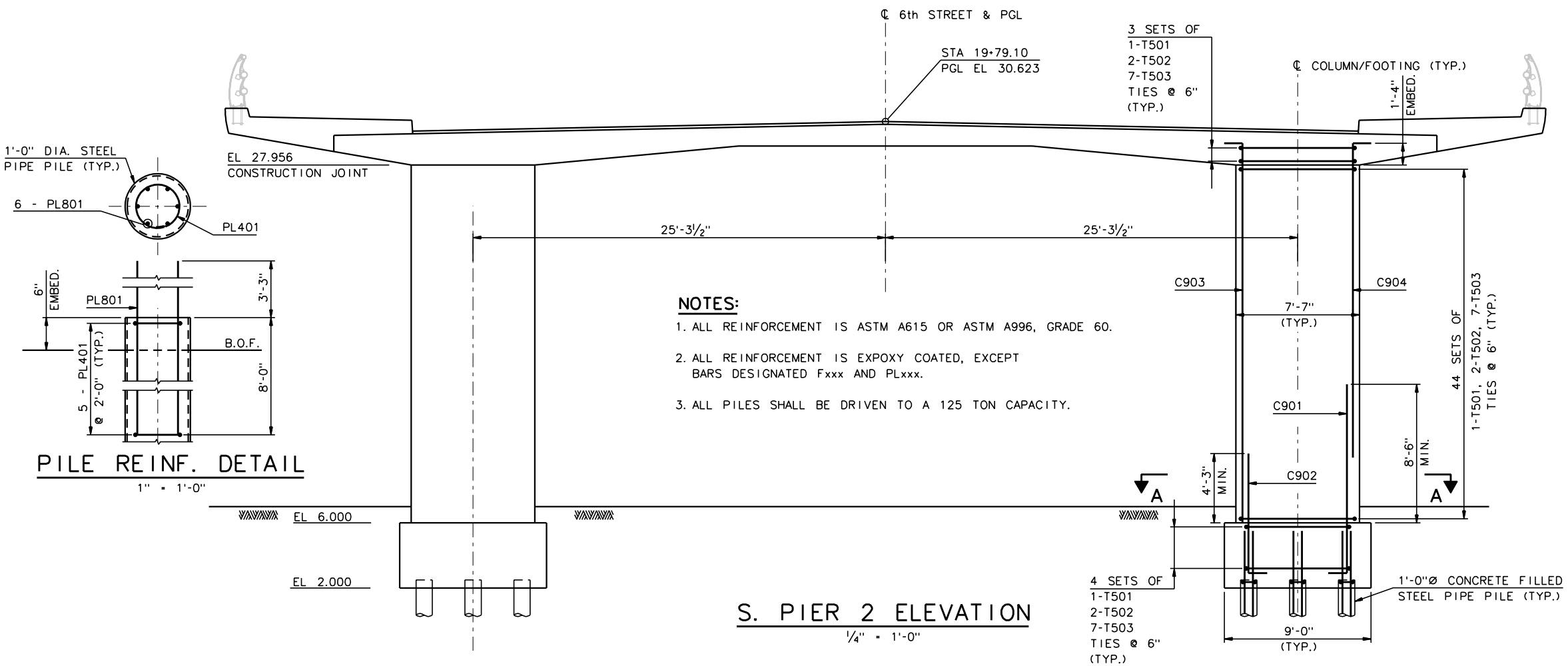

PILE REINF. DETAIL

1" = 1'-0"

S. PIER 2 ELEVATION

¼" = 1'-0"

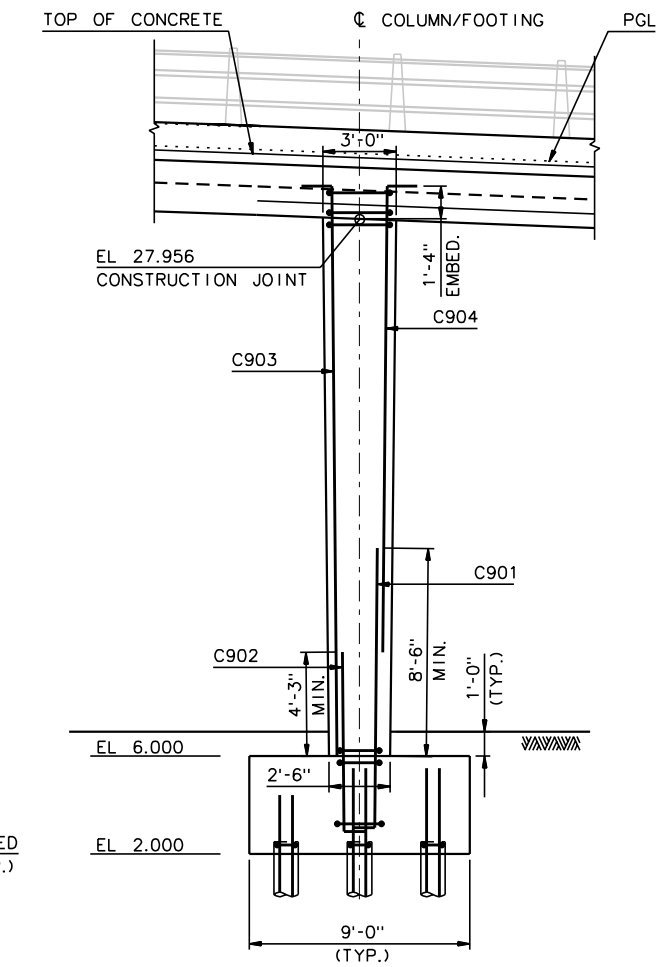

S. PIER 2 SIDE ELEVATION

¼" = 1'-0"

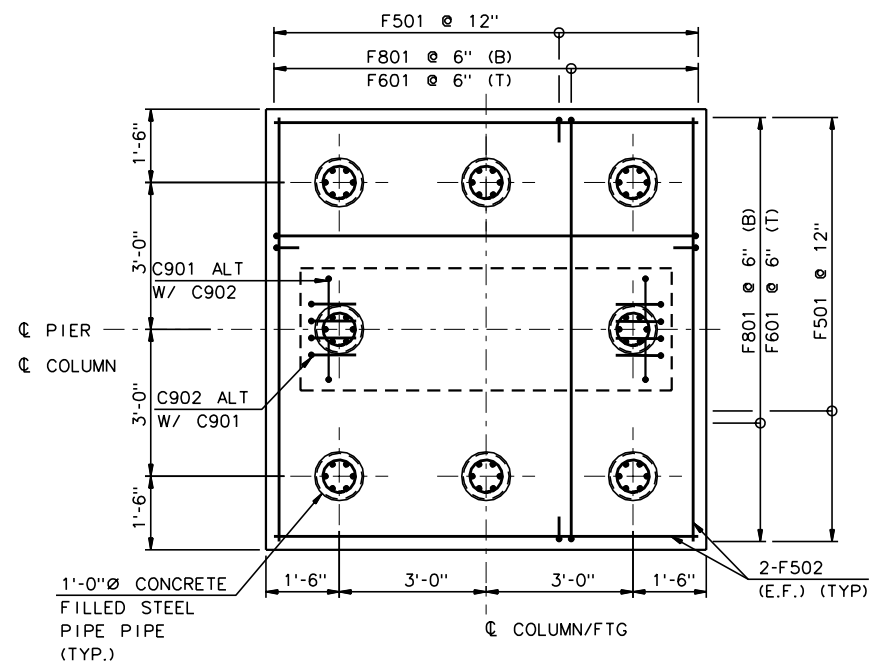

WEST FOOTING PLAN

½" = 1'-0"
(EAST FOOTING OPPOSITE HAND)

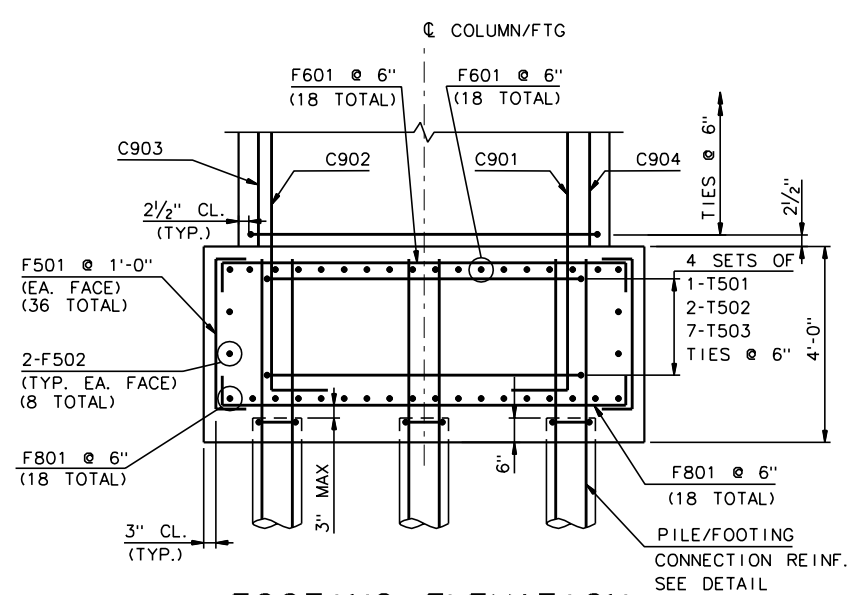

FOOTING ELEVATION

½" = 1'-0"

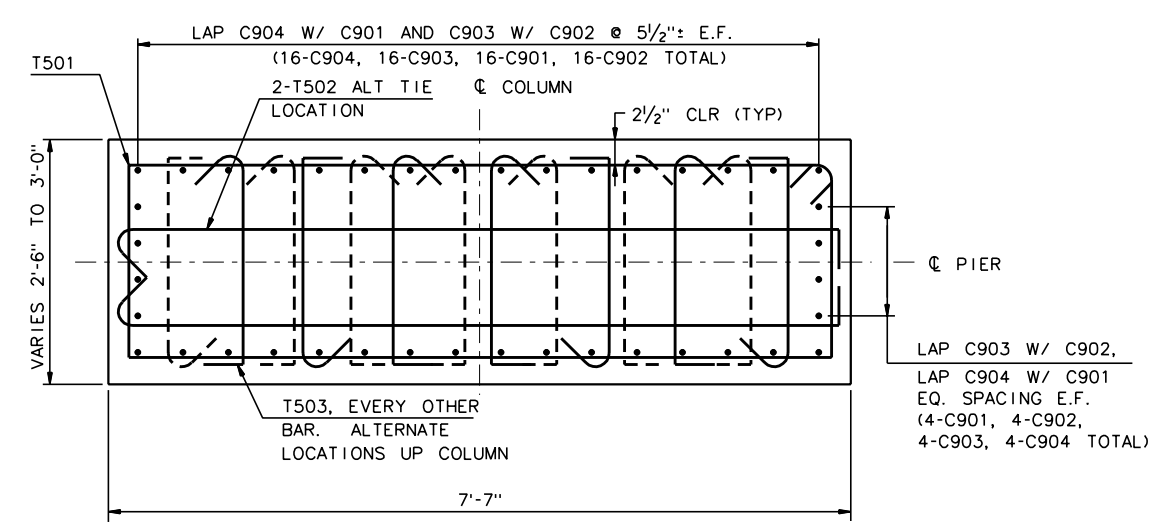

SECTION A-A

1" = 1'-0"

FIGURE 5.2

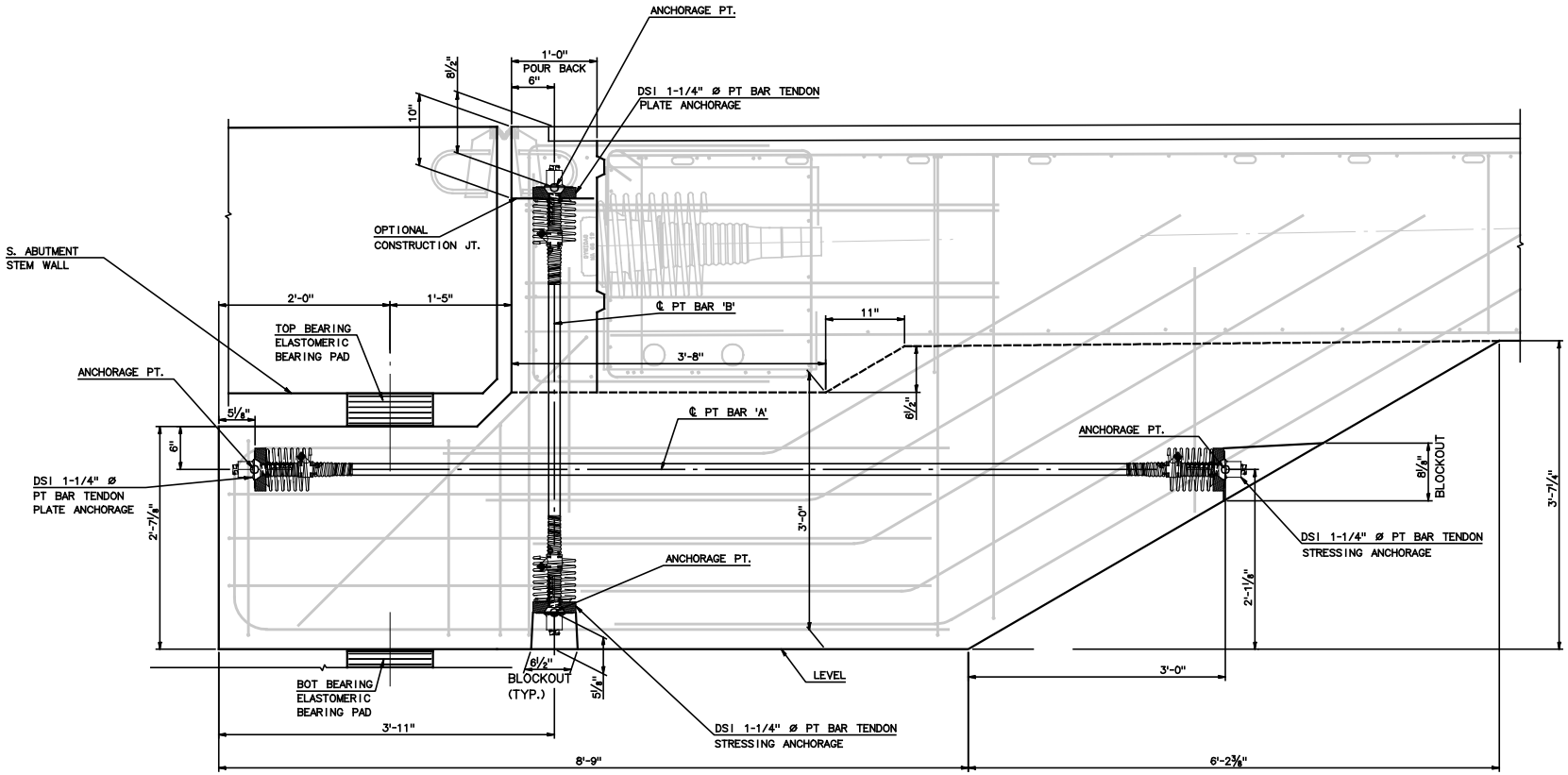

SOUTH ABUTMENT
TIE-DOWN CORBEL SECTION

FIGURE 5.3

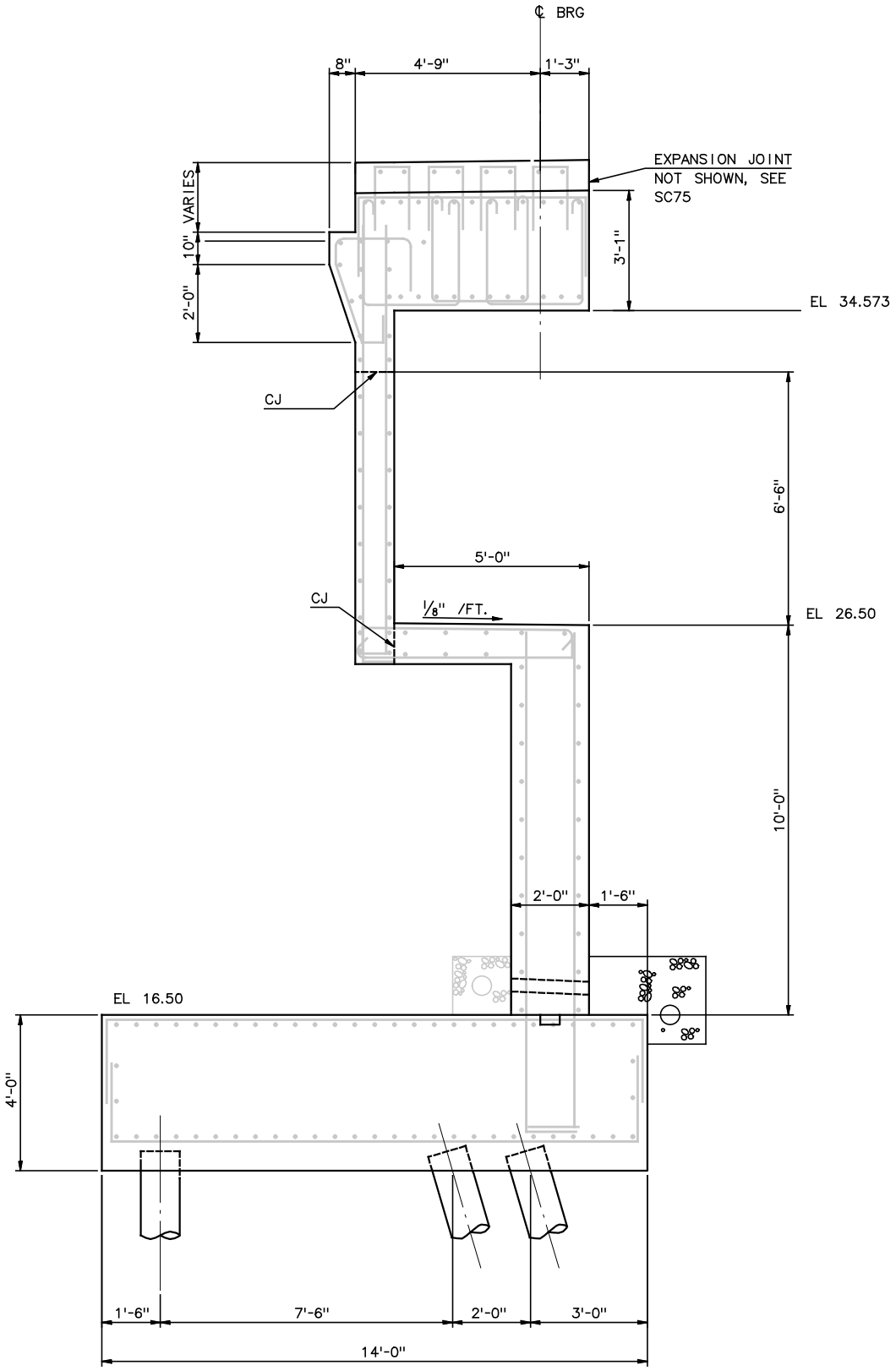

S. ABUTMENT STEM WALL
SECTION @ TIE-DOWN CORBEL

FIGURE 5.4

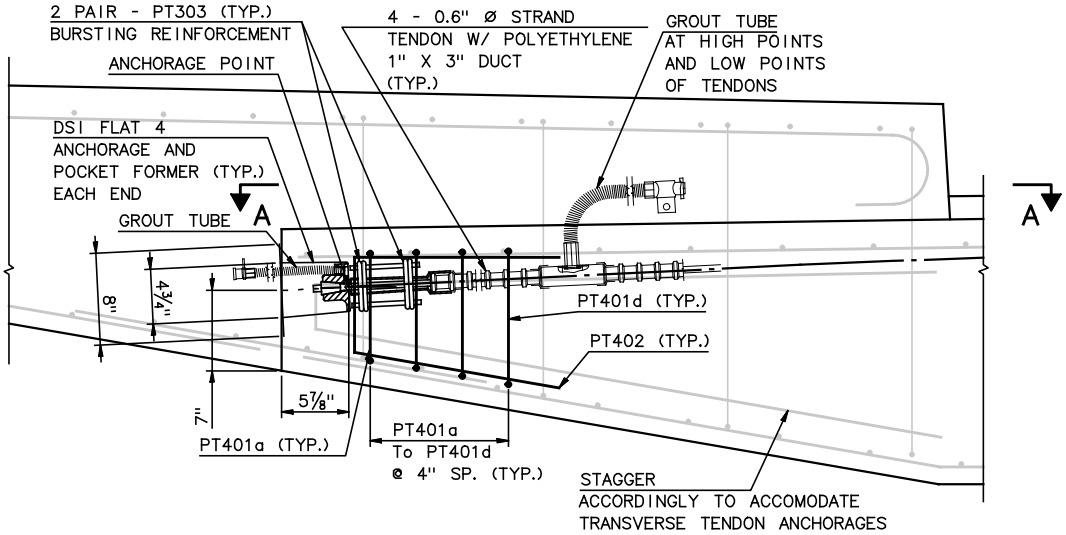

TRANSVERSE TENDON ACHORAGE

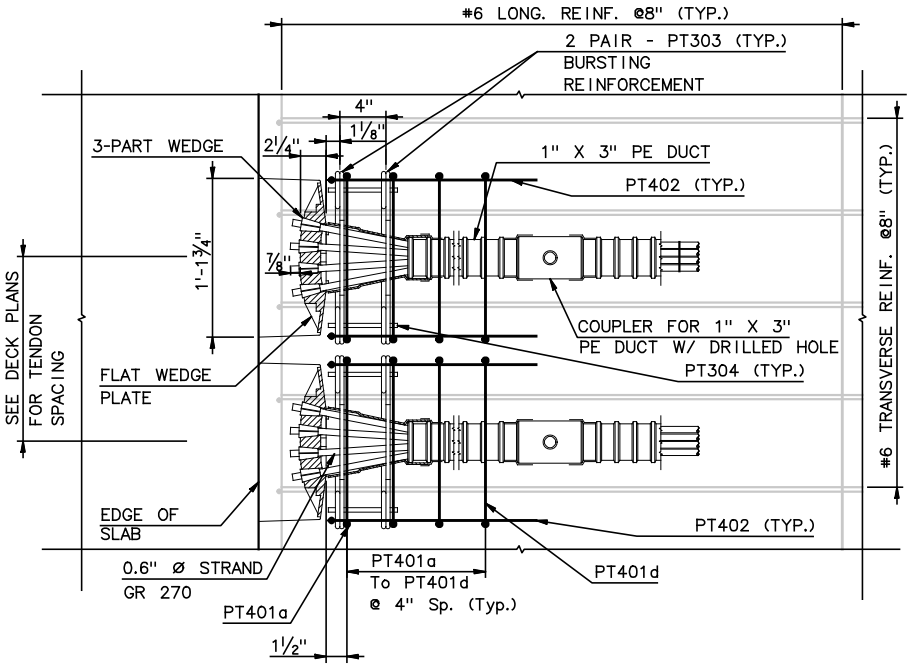

SECTION A-A

FIGURE 5.5

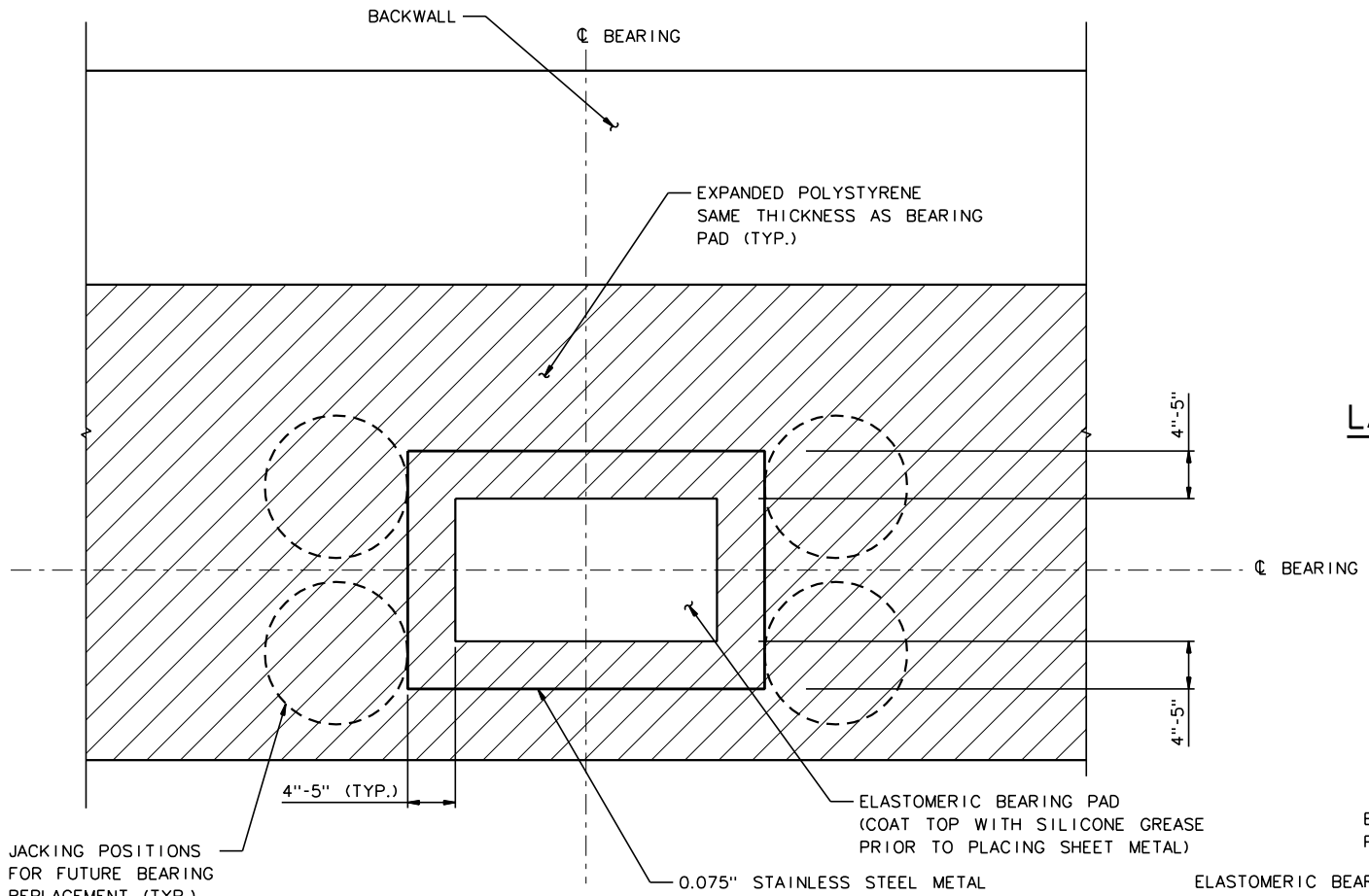

PLAN

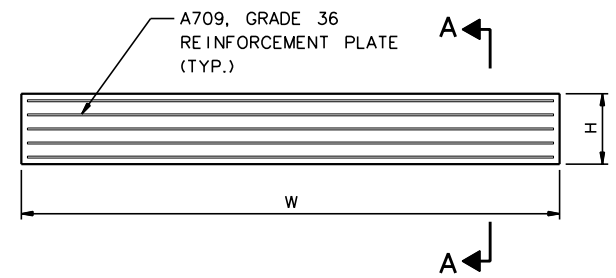

LAMINATED ELASTOMERIC BEARING ELEVATION

3" = 1'-0"

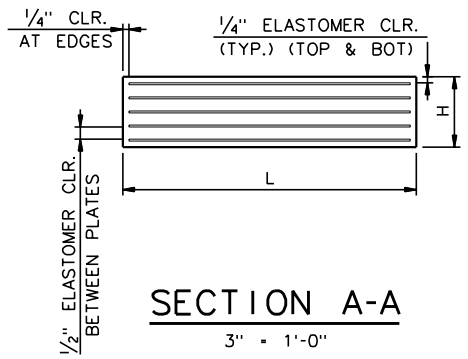

SECTION A-A

3" = 1'-0"

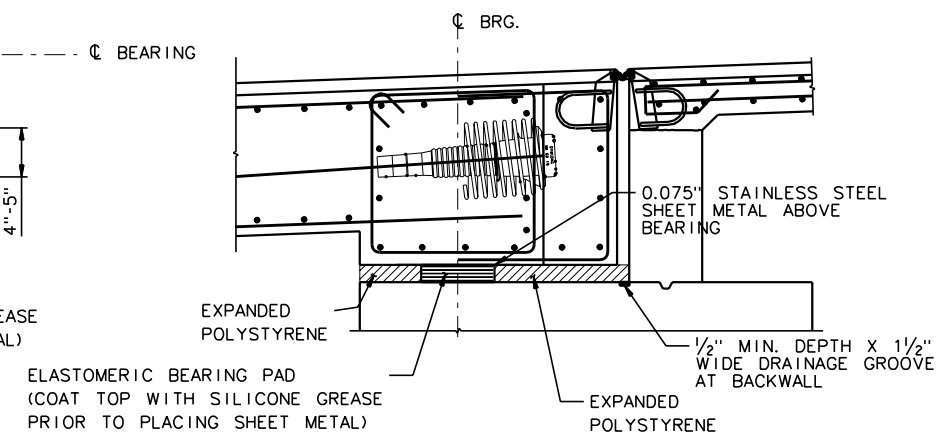

TYPICAL SECTION AT BASCULE

3/4" = 1'-0"

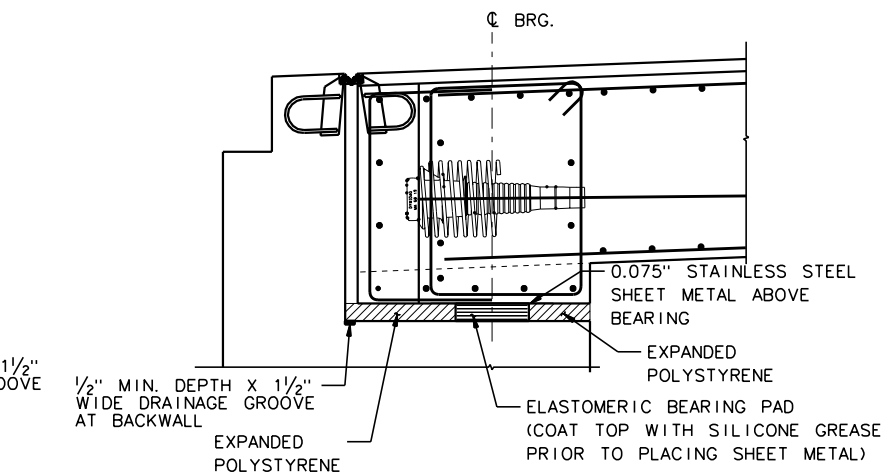

TYPICAL SECTION AT ABUTMENT

3/4" = 1'-0"

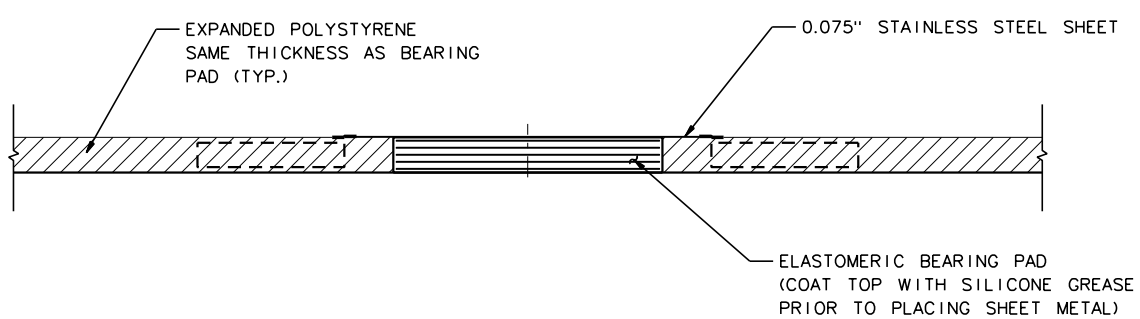

ELEVATION

BEARING SEAT DETAILS

(SUPERSTRUCTURE NOT SHOWN)

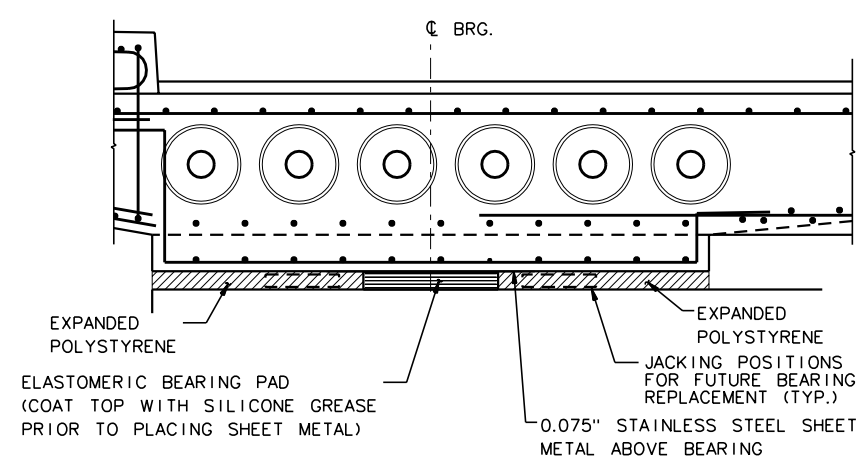

TYPICAL ELEVATION AT BASCULE

(ABUTMENT SIMILAR)

3/4" = 1'-0"

LAMINATED ELASTOMERIC BEARING DETAILS

BEARING LOCATON	STATION	# OF BRGS	L (IN)	W (IN)	STEEL REINFORCEMENT PLATES		TOTAL BEARING HT	0.075" STAINLESS STEEL SHEET SIZE	MIN. SUPERSTRUCTURE DL PER BEARING *
					PLATE THICKNESS	QTY.			
S. BASCULE S. CORBEL	21+67.86	2	15	20	.075"	12	6.90"	25" X 30"	325 KIPS
S. ABUTMENT TOP BRG	15+94.10	2	12	18	.075"	8	4.60"	20" X 26"	230 KIPS
S. ABUTMENT BOTTOM BRG (LOAD REVERSAL)	15+94.10	2	6	12	.075"	3	1.73"	N/A	N/A

*SEE NOTE 8

FIGURE 5.6

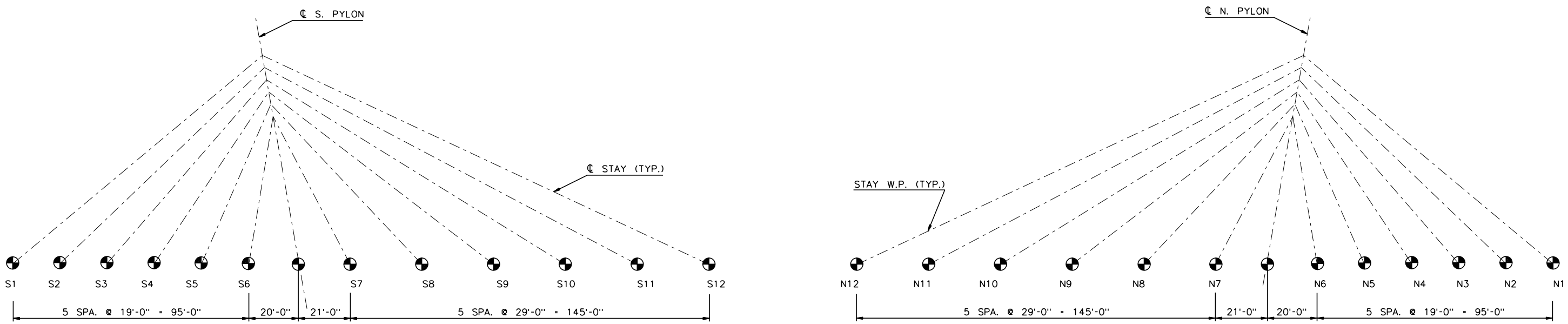

ELEVATION
N.T.S.

FIGURE 5.7

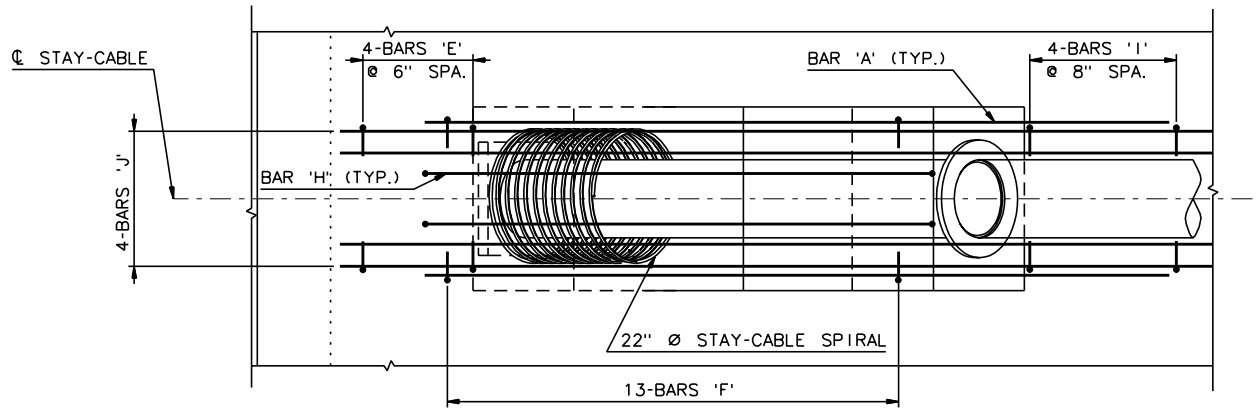

PLAN - TOP STEEL

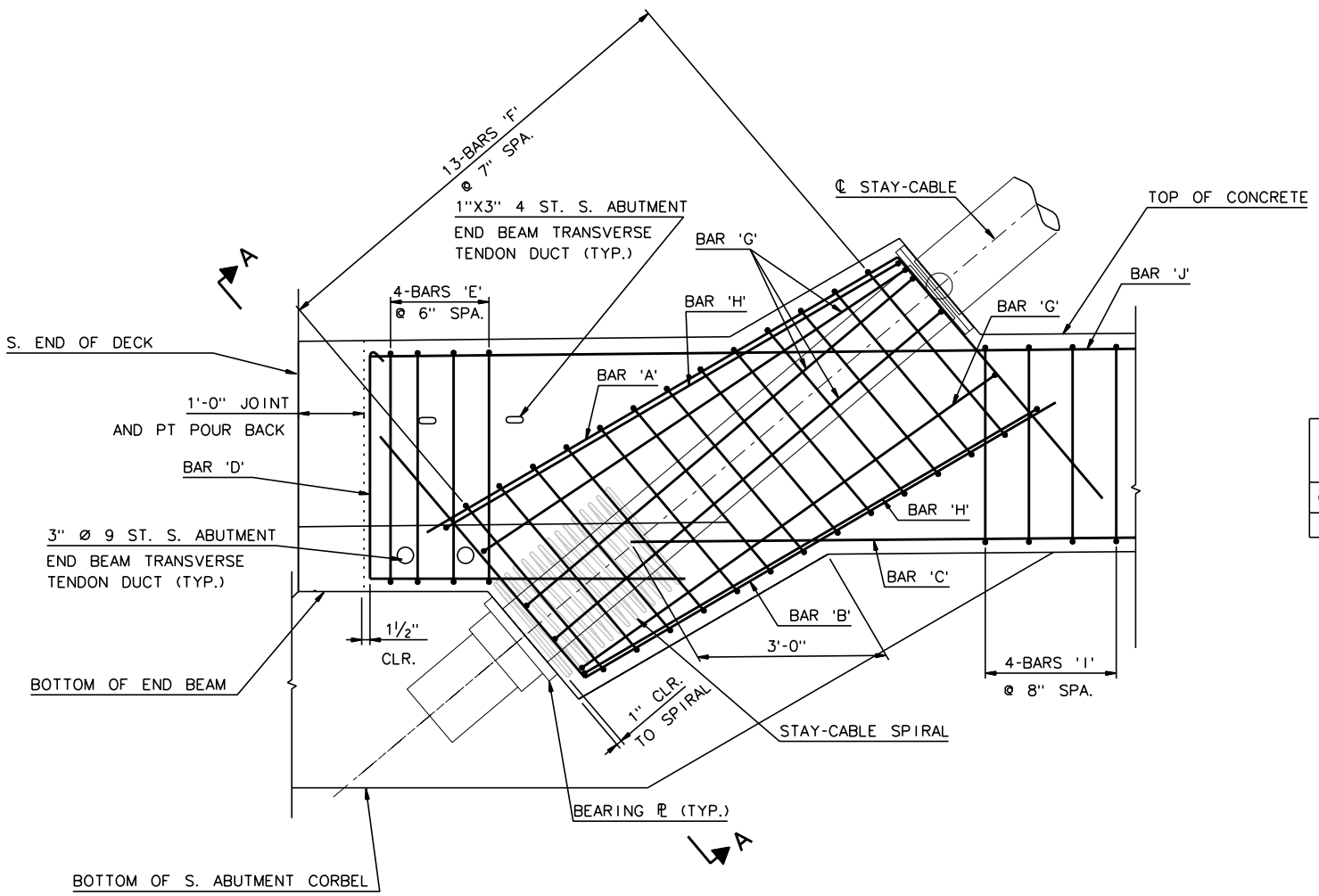

ELEVATION

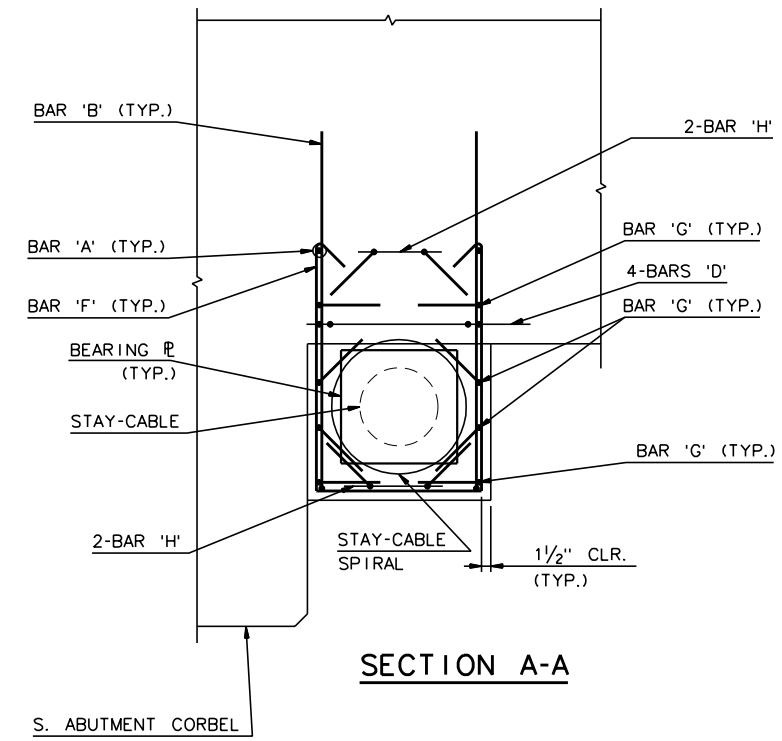

SECTION A-A

REINFORCING SCHEDULE FOR EACH STAY-CABLE ANCHORAGE

CABLE NO.	N-BAR 'A'	N-BAR 'B'	N-BAR 'C'	N-BAR 'D'	N-BAR 'E'	N-BAR 'F'	N-BAR 'G'	N-BAR 'H'	N-BAR 'I'	N-BAR 'J'
S1	2-CA624	2-CA624	4-CA610	4-CA623	4-CA543	13-CA544	8-CA545	4-CA546	4-CA547	4-CA606

CABLE S1 - DECK ANCHORAGE DETAILS

(EAST CABLE SHOWN, WEST SIMILAR)
¾" = 1'-0"

FIGURE 5.8

SECTION 6

SEQUENCE AND METHODS OF BRIDGE CONSTRUCTION

6.1 General

It is important that personnel responsible for the inspection and maintenance of the bridge understand the procedures used in its construction. Loads that are imposed during the construction of a post-tensioned cast-in-place concrete bridge have some affect on the behavior of the structure over its service life.

6.2 Construction Techniques

The entire bridge was built using cast-in-place concrete construction, with all superstructure concrete cast on falsework. The falsework was cambered in a manner such that following the casting of the concrete the bottom soffit of the bridge deck would conform to the grades specified in the contract drawings. The falsework consisted of rolled sections supported on a combination of steel pipe pile bents and mud slabs where site constraints would not permit pile installation. To account for camber and grade changes, timber fillers were bolted to the top flanges of the rolled sections. Transverse 4” by 4” members were then placed on top of the timber fillers followed by plywood soffit forms.

Falsework for Cable Stay Deck

Superstructure pours were limited to approximately 1200 cubic yards, given the constraints associated with site access, crew sizes, and project schedules. Therefore, the north approach deck was poured at one time from abutment to the bascule pier. The North Cable Stay Bridge deck was poured in three sections (i.e. there were two internal construction joints) and the South Cable Stayed Bridge deck was poured in two sections.

Wetted Burlap Curing

Following completion of the deck pours, the superstructure was moist-cured for a period of two weeks. Immediately after concrete placement and initial curing, the superstructure decks were covered and protected from the environment, with a continuous supply of water in accordance with the project specifications (wetted burlap method).

Following completion of the deck slab concreting and curing to a minimum strength of 4500 psi, a portion of the transverse post-tensioning was stressed. It was necessary to stress a portion of the transverse tendons prior to stressing the longitudinal tendons, since the transverse post-tensioning helps provide stress control in the anchorage zone and plan deviation areas of the longitudinal post-tensioning. Following the stressing of a minimum number of transverse tendons, the longitudinal tendons could be installed and stressed.

After all transverse and longitudinal tendons were stressed and the elongations approved by the Engineer, the tendons were grouted in accordance with the *PTI Guide Specifications for Grouting of Post-tensioned Structures.* As a project requirement, the tendons had to be stressed and grouted within 10 calendar days. For the North Cable Stayed Bridge, weather did not permit the grouting of 12 longitudinal tendons and the transverse tendons within the last two pours, therefore, a water soluble corrosion inhibitor was utilized to protect the strand for a period of approximately 3 months prior to grouting. In all other areas, the requirements of 10 calendar days were met.

Following completion of post-tensioning stressing operations, the reinforced concrete sidewalk was poured. Given this construction sequence, it is important to recognize that the sidewalks are not pre-tensioned and are therefore designed as reinforced concrete members.

Falsework removal could commence following an appropriate time frame for curing of the sidewalk concrete, which was typically a period of 3 to 4 days. In the case of the

North Approach deck, a portion of the falsework was stripped prior to sidewalk casting to enhance schedule. At all other locations, falsework was released and stripped only after curing of the sidewalk concrete. In addition, for the cable stayed spans, falsework could not be released and removed until after completion of the stay cable installation and stressing.

6.3 Piers

The pier foundations were constructed by excavating down to the proposed bottom of footing, driving the steel pipe piles, setting the reinforcing steel and then pouring the footing concrete. The pier shafts at each pier were constructed by conventional cast-in-place methods, using steel forms. All reinforcement in the pier shafts was epoxy coated to enhance the long-term durability of the substructures.

6.4 Pylons

The pylon foundations were constructed by excavating down to the proposed bottom of footing, driving the steel pipe piles, setting the reinforcing steel and then pouring the footing concrete.

The pylon shafts were constructed by conventional cast-in-place methods, using steel forms. Due to the 10 degree inclination of the pylon, a strut was provided to promote geometry control throughout construction. After completion of construction, the strut was removed to allow for superstructure falsework placement.

The steel anchor boxes were prefabricated and delivered to the site after the hot-dip galvanizing process. The anchor boxes were lifted into place and set on anchor bolts to allow for precise geometry control. After the geometry of the anchor boxes was verified, they were then made composite with the pylon shafts. Pylon construction preceded all

superstructure construction due to the support requirements associated with the pylon forming. Since the longitudinal and transverse deck post-tensioning had to pierce the pylon at deck level, both transverse and longitudinal post-tensioning ducts were provided in the pylon to accept the deck post-tensioning installed after erection of the deck falsework and bottom reinforcing mat.

6.5 Superstructure

After construction of the pylons and piers, the construction of the superstructure began with the erection of the falsework. Longitudinal and transverse bottom mat reinforcing was placed followed by placement of longitudinal and transverse post-tensioning and then top mat reinforcement. Longitudinal and transverse tendons were supported on chairs that were prefabricated to exact tendon elevations to achieve the tendon geometry specified in the design drawings. Chair spacing of 2 ft maximum was provided for all tendons.

A typical pour consisted of approximately 1200 cubic yards of concrete. After the concrete reached a minimum compressive strength of 4500 psi the transverse post-tensioning was jacked.

Monostrand Stressing Operations

The stay cable stressing operation began with the North main span cable pairs, N7. The East and West pair of cables was initially stressed to 70% of the required force and then to 100%. This procedure was utilized to minimize cracking of both the pylon and superstructure. The stressing continued with the back span cable pairs, N6 and continued with alternating stressing of back span and main span pairs until completion of stressing

operations. This procedure was designed to avoid the use of the multi-strand jack, which would have presented logistical difficulties and would have potentially required railroad track closures. Stressing each stay cable first to 70% and then to its final prescribed force allowed MGP to make any adjustments in the field necessary to meet the design targets for the stay cables.

After the all cables were stressed to final force, lift-off tests were conducted to establish the as-built stay cable forces. The results of the lift-off tests were accepted by the Engineer, since as measured stay cable forces compared very favorably with the design forces (typically within 2%). Following acceptance of the stay cable stressing, the stay cable strand tails were cut, and installation of the cable clamps and the corrosion protection system were completed.

Following completion of the cable stressing operation, falsework was removed and installation of the aluminum railing, wearing surface, and lighting were then completed.

The Sixth Street Viaduct was opened to traffic in September 4th, 2002

6.6 Design Modifications Made During Construction

6.6.1 Pylons

6.6.1.1 Foundations

Various piles did not meet the minimum bearing capacity values as specified on the plans due to damage as part of the installation process. Typical damage included end cap failures. Where such conditions were encountered, a conservative residual capacity was assigned and the foundation was re-evaluated with the affected pile's capacity reduced. In some cases, it was necessary to drive additional piles in order to meet the design requirements.

6.6.1.2 Pylons

The pylons were changed from hollow box sections with ladders and platforms within the box to solid sections with anchorage inspection access from a deck mounted man-lift. In addition, the pylon height was extended for aesthetic reasons.

6.6.2 Superstructure

6.6.2.1 Value Engineering of South Approach

The South Approach Bridge was changed from a 3-span continuous bridge to a slab on grade structure with retaining walls. In order to optimize the design of this structure and to overcome any settlement concerns, lightweight fill was provided instead of more conventional construction.

6.6.2.2 Bicycle Ramp

A bicycle ramp was added to the South Cable Stayed Bridge to allow for a future bicycle path connection.

6.6.3 Stay Cable System

Due to the measured performance of the stay cable system as part of the fatigue tests, a reduced capacity was assigned to the stay cables in accordance with the ratio of measured performance versus code specified performance. After the 2,000,000 cycle test, the stay cable system is intended to reach 95% of GUTS (guaranteed ultimate tensile strength). Since the two stay cable tests indicated that the stay cables only reached 90% of GUTS, the capacity of the stay cables was revised to the ratio of 90% / 95% resulting in an ultimate capacity of 255.8 ksi as opposed to 270 ksi. The number of strands in the stay cables were revised to ensure that they met this reduced capacity in accordance with the provisions of the *1993 PTI Specifications for Stay Cable Design, Testing and Installation.*

6.7 Problems / Repairs Made During Construction

6.7.1 Post-Tensioning Anchorage Zone Delamination

In general, the anchorage zone areas of the transverse and longitudinal deck post-tensioning demonstrated excellent performance, with no reported spalling or cracking. In one case, at the North Bascule pier end beam, the positioning of the post-tensioning anchorages relative to the spalling / bursting anchorage reinforcement was not in accordance with the design requirements. Two portions of the deck, approximately 4 ft by 8ft, immediately ahead of the longitudinal post-tensioning anchorage regions was hollow sounding after stressing of the longitudinal tendons and were determined to be delaminated. This hollow concrete was removed to the level of the top mat of reinforcement and repaired.

Concrete Removal in Delaminated Area at North Bascule End Beam

6.7.2 Sidewalk Cracking at the North Cable Stayed Portion

Along the cable stayed portion of the North Cable Stayed bridge, concrete cracking in the sidewalk in excess of the crack widths anticipated in design occurred. Shrinkage cracking was present within 40 minutes after placement of the sidewalk concrete, and it is likely that the post-tensioned deck slab offered significant restraint and is the primary cause of the level of cracking. For the North Cable Stayed sidewalk, due to weather constraints, there was a significant period of time between the post-tensioned deck slab placement and sidewalk placement (approximately 3 months).

Sidewalk Restraint Induced Cracking in the Vicinity of the Pylon

Therefore, a significant portion of the creep and shrinkage in the post-tensioned deck slab had occurred prior to placement of the sidewalk, and the deck slab offered significant restraint to the shrinkage associated with the curing of the sidewalk in this area. This combination resulted in the appearance of sidewalk cracking in excess of that predicted in the design. It is noted that the remaining sidewalk pours occurred within a few weeks of the completion of deck slab post-tensioning and only minor cracking of the sidewalk as anticipated in the design has occurred.

These cracks were repaired using the epoxy injection method which is described in more detail in subsequent sections below.

6.7.3 Stay Cable Anchorage Ring Nut Rusting

The ring nuts at the below deck stay cable anchorages were not carefully prepared prior to painting and are already showing signs of rusting. The painting system is the primary corrosion protection measure for the ring nuts and the ring nuts will have to be prepared in accordance with SSPC requirements and repainted.

SECTION 7

INSPECTION PERSONNEL AND EQUIPMENT

7.1 Inspection Personnel

7.1.1 General

The organizational unit responsible for the inspection of the cable-stayed spans shall consist of one or more inspection teams consisting of a Team Leader and at least two Bridge Inspectors, all under the supervision of a Project Engineer.

All personnel assigned to an inspection team must be in good health and be aware that inspecting, measuring, sketching and photographing bridge components while in difficult positions or at great heights will be necessary. The safety of all personnel is of utmost importance. Each inspector should always use good judgement, care and prudence in conducting any activities, both for his own safety and that of others.

It is highly recommended that all inspection personnel attend a comprehensive training program for bridge inspection with particular attention to structures of this type and to provisions and guidelines given in this Manual. A two day training program will be provided by MGP to introduce the City of Milwaukee's maintenance and inspection staff to the specific inspection requirements for these structures. This training program will occur on December 17th and 18th, 2002.

7.1.2 Project Engineer

The Project Engineer is the individual in overall charge of the teams delegated to inspecting, reporting and taking inventory. He should possess the following minimum qualifications:

1. A) Be a registered Professional Engineer; or
   B) Be qualified for registration as a Professional Engineer under the laws of the State; or

C) Have a minimum of 10 years experience in bridge inspection assignments in a responsible capacity and have completed a comprehensive training course based on the *Bridge Inspector's Training Manual*, which has been developed by a joint Federal-State task force, and subsequent additions to the manual.

2. Have extensive experience in the design and/or construction of long-span bridges.
3. Have a minimum of 5 years experience in bridge inspection assignments in a responsible capacity.

He will be responsible for the quality control of each inspection assignment, the thoroughness and completeness of the field inspection, and recording of notes, the analyses of all findings ascertained by the inspection, and any recommendations for rehabilitation of defects, posting for restricted load and/or speed, or any other courses of action deemed necessary as a result of the inspection. He will also be responsible for the review and confirmation of all information, data and reports relating to bridge conditions, prior to submission to his superior.

The problems encountered in a cable-stayed bridge are complex and variable. Therefore, his judgment and expertise will frequently be required for proper evaluation of the findings of an inspection team. He must be thoroughly familiar with the design and construction of the bridge, the as-built plans and shop drawings, and the provisions of this Manual. He must be able to recognize any structural deficiency, assess its seriousness, and take or recommend appropriate action to keep the bridge in a safe condition and provide for the safety of the traveling public. He must also recognize conditions where a problem is imminent so that preventative maintenance can be properly scheduled. It will be his responsibility to report immediately to his superiors any defect judged to be serious or any condition judged to be imminently dangerous, found and reported by an inspection team, and to provide his assessment of the cause and the best possible corrective action.

Consideration should be given to obtaining assistance whenever necessary from the design engineers of the cable-stayed bridge.

7.1.3 Team Leader

Each inspection team shall be under the supervision of a Team Leader. To qualify as a Team Leader, a person possess the following minimum qualifications:

1. Have the qualifications as specified under part 1 for the Project Engineer; or
2. Have a minimum of 5 years experience in bridge inspection assignments in a responsible capacity and have completed a comprehensive training course based on the *Bridge Inspector's Training Manual*, which has been developed by a joint Federal-State task force, and subsequent additions to the manual.
3. Possess certification as a Level III or IV Bridge Safety Inspector under the National Society of Professional Engineer's program for National Certification in Engineering Technologies (NICET).
4. Must have experience in the inspection of and in the design or construction of long span bridges.

He shall be thoroughly familiar with the provisions and guidelines of this Manual and shall meet all applicable local, state, and federal inspection guidelines.

The Team Leader shall be present at the bridge during field inspection and shall personally inspect the bridge and supervise the other team members during the inspection process to ensure that the bridge is properly inspected and conditions properly documented. He shall personally review and/or complete each inspection form.

The Team Leader must plan and approach each task of the inspection critically with the expectation of detecting defects or deficiencies. He must also observe the major elements of the bridge as a whole, concentrating on what conditions are to be expected and what conditions may be out of the ordinary. Any condition that cannot be justified logically must be questioned until a reasonable

explanation is found. He must instill this approach to inspection in the other members of his team.

He must immediately notify the Project Engineer of any serious defect or imminently dangerous or hazardous condition uncovered by him or his team.

7.1.4 Bridge Inspectors

Each Bridge Inspector shall have a minimum of 3 years experience in bridge design, construction and /or inspection.

He should be thoroughly familiar with all components of the bridge, the numbering or other identification systems for major components, the details of the as-built plans, and the provisions and guidelines of this Manual. He should also have an awareness of potential hazard of inspection procedures and exhibit a serious attitude towards the safety precautions to be taken while climbing and inspecting the bridge.

Some of the duties of the Bridge Inspector are:

1. Plan and prepare for inspection with proper plans, sketches, report forms, tools and equipment.
2. Inspect bridge components for structural and/or dimensional deficiencies.
3. Sketch and record deficiencies.
4. Photograph problem areas.
5. Take and record measurements, particularly at expansion joints and other components subject to movement survey.
6. Perform minor survey work to detect settlements, tilting or misalignments
7. Make basic computations relating to inspection tasks.
8. Promptly notify Team Leader of hazardous or imminently hazardous conditions.
9. Maintain records of inspection results.

7.2 Special Inspection Equipment

The following is a list of some of the special equipment that may be required and their application:

1. "Cherry-Picker" truck (truck-mounted platform or bucket that can be raised by means of a scissors-lift or a hydraulically-operated telescoping boom), stationed on the bridge roadway, to provide access to the stay cables and pylon shafts.

2. "Reach All UB50" truck (Truck-mounted platform or bucket that can be passed over the parapets to the underside of the deck, operable through hydraulically-operated folding telescoping booms), stationed on the sidewalks or the roadway deck, to provide access to the deck underside. It is noted that the sidewalks of the stay cable bridge have been designed specifically to allow the use of a Reach All UB50. It is also possible to use ground based inspection equipment given the relatively low height of the superstructure.

3. Surveying equipment, i.e., engineering level, transit, etc.

4. Ultrasonic instruments to identify areas having internal voids or honeycombs.

5. R-meter to detect embedded ferrous materials such as reinforcing bars and tendon ducts. It can also be used to measure concrete cover in the event roadway grinding is contemplated.

6. Penetrometer to determine existing concrete strength.
   - It is noted that nondestructive testing (NDT) methods for reinforced / post-tensioned concrete are developing rapidly and this list is not intended to be comprehensive and is expected to grow as emerging technologies become commercially available.

SECTION 8

INSPECTION PROGRAM AND SCHEDULE

8.1 Inspection Program

The development of a reasonable and effective program for the inspection of the bridge is of utmost importance to ensure that the condition of the various components of the structure are monitored on a regular basis. It must outline an actual plan and sequence for inspection, thus providing a working guide for the inspection team. It also assures a systematic and thorough inspection.

The inspection program shall consist of three phases: Preparing for the inspection; organizing the inspection routine; and reporting the findings of the inspection.

8.1.1 Preparing for the Inspection

Careful preparation and planning are essential for a well organized, complete and efficient inspection. During this phase, all available information and reports on the structure, including design and "as-built" plans, must be reviewed for:

A. Identification of bridge components and elements.
B. Current bridge inventory information including previous defects reported.
C. Information on repairs performed and reconstruction work performed since last inspection.
D. Results of latest engineering surveys.
E. Review guidelines of this Manual.

8.1.2 Organizing the Inspection Routine

The following tasks should be performed as part of the inspection routine:

A. Identify the portions of the structure to be inspected.

The bridges are categorized into six major components for the purposes of reference. For the purpose of this manual, a bridge component is defined as a group of bridge elements that serve the same structural function. The bridge components are: substructure, superstructure, pylons, cable-stay system, roadway features and non-structural features.

The following bridge elements should be inspected for each component of the bridge:

1. Substructure
   This consists of foundations, footings, abutments, pier shafts and cap beams.
2. Superstructure
   This consists of deck slab, end beams, edge girders, sidewalks and elastomeric bearings.
3. Pylon
   This consists of the pylon shafts extending above and below the roadway level and the pylon foot.
4. Cable-Stay System
   This consists of cable stays, guide pipes, PE pipes and anchorages.
5. Roadway Features
   This consists of the roadway wearing surface, aluminum railing, deck expansion joint assemblies, slope protection and the roadway drainage system.
6. Non-Structural Features
   This consists of roadway, lighting systems and utilities.

B. Determine the best time for inspection of the bridge elements, i.e., inspection of roadway surface during hours of minimum traffic, etc.
C. Establish sequence for inspection of the various bridge components.
D. Assign inspection responsibilities to bridge inspectors.
E. Make arrangements to ensure availability of special equipment and required tools.
F. Organize Special Inspection.

Special inspections should consist of :

1. Engineering surveys as outlined Section 9.5.
2. Rehabilitation work.

8.1.3 Reporting the Inspection

A good bridge inspection reporting system is essential in order to record and evaluate correctly and efficiently the condition of the bridge. It is also a valuable aid in determining maintenance priorities, replacement priorities, structure capacity, and the cost of maintaining the bridge.

The bridge inspection report should represent a systematic inventory of the current condition of all bridge components and elements and their possible future weakness. Minimum requirements for a good field reporting system are:

A. An inspection recording system, standard forms and standard drawings.
B. A standard notation for indicating the condition of the various elements.
C. A standard nomenclature for bridge components and elements.
D. Sketches and drawings of elements to be inspected.
E. A summary sheet

   1. Qualitative condition of the structure in general
   2. A quantitative summary of work needed by priority and its approximate cost.

F. A narrative summary section for short and concise reports of the condition of the bridge.
G. A section for special repair procedures that might be recommended by the Project Engineer.

The above items are considered to be minimal requirements in the establishment of an inspection reporting system. Special forms were prepared for the above items and are included in the Appendix.

8.2 Inspection Schedule

The frequency of inspection for the bridges has been established as noted below:

Initial Inspection	April 2004
Routine Inspection	October 2005
Routine Inspection	April 2007
Periodic Inspection	October 2008

The degree and frequency of inspection are outlined in the *FHWA Guidelines for Developing Inspection Manuals for Segmental Bridges*. Inspection periods will be re-evaluated after completion of the Periodic Inspection. Inspection periods shall meet the minimum standards imposed by any city, state, or federal requirements. Interim inspections may be required after a fire, vehicular accident, earthquake, or wind event, lightning strike, etc.

It is noted that a proposed schedule for special inspections of the stay cable corrosion protection system is presented in Section 9. This in depth inspection is planned on a ten year cycle (i.e. the stay cable reference strands for selected cables will be removed every 10 years). It is also advisable to conduct a geometry survey of the bridge deck, pylons, and piers in concert with the stay cable inspection to evaluate the long-term performance of the bridge

The above schedule should be followed as closely as possible to assure that the structure inspected within the required time span.

Scheduling of the inspection should be made far in advance to permit the combination of manpower, equipment and specialist personnel. At times, the weather conditions and seasonal traffic loads of the structure must be taken into consideration in scheduling the inspection.

The special inspections outlined in Section 8.1.2 and described in Section 9.5 should be scheduled when necessary.

SECTION 9

INSPECTION PROCEDURES

9.1 General

The inspection of the cable-stayed bridge should as a minimum satisfy the procedures for a static bridge inspection as outlined in the Code of Federal Regulations, Section 23, Part 650, Subpart C.

This section contains information supplemental to that code and special procedures necessary for a systematic and thorough inspection of the cable-stayed bridge.

This chapter is organized to provide information on:

1. Possible deficiencies that may occur at the various elements of the bridge
2. Procedure to inspect each element of the bridge
3. Detailed inspection procedures
4. Surveys of the bridge

9.2 Possible Deficiencies of Concrete Elements of Bridge

9.2.1 Cracking of Concrete

A bridge inspector should be constantly alert to detect cracking of concrete that may become a problem. It is therefore of primary importance to understand the causes of cracking and the various types that may be encountered.

9.2.1.1 Causes of Cracking

Concrete is a brittle material that will crack when subjected to tensile stresses that exceed its relatively low tensile strength.

The tensile stresses are caused by loads acting on the element (including the self-weight of the element) and/or by other effects such as shrinkage and temperature variations.

The tensile strength of concrete is measured in terms of its modulus of rupture which is equal to $7.5\sqrt{f'c}$ or approximately 10 percent of its compressive strength. Concrete is therefore weak in tension. In designing reinforced concrete flexural member, the tensile strength of concrete is neglected and any tensile stresses are assumed to be resisted only by the reinforcing steel embedded in concrete. The tensile strength of concrete is however a primary component in the shear and torsion design of reinforced concrete members.

Table 9.1 at the end of this section summarizes the kind of cracks that can occur by interactions involving the materials of concrete and its surrounding. Cracking can also be used to predict the cause of deterioration of concrete, since in many cases characteristic cracking patterns are produced. Table 9.2 summarizes types of cracking in concrete structures.

The following is a discussion of some of the reasons cracks may develop in a concrete structure.

9.2.1.2 Load-Related Cracks

External loads (such as vehicles) and self-weight induce compressive and tensile stresses in concrete. Reinforced concrete structures are designed so that concrete will resist compression and the reinforcing steel will resist any tensile stresses. When the reinforcing bar is subject to tension, it will elongate, and due to the bond between reinforcing bars and concrete, a certain degree of cracking is expected to develop. The elements of the structures designed as reinforced concrete are the deck slab, pylon shaft, pier shaft, pier cap and footing.

Load-related cracks are generalized as shear and bending cracks. Bending cracks of the superstructure are normally perpendicular to the longitudinal axis of the bridge and may be found in the edge girder and deck slab as shown in Fig. 9.1.

Shear cracks normally run diagonally as opposed to horizontal or vertical. Excessive shear in the edge girder results in diagonal tension which is evidenced by inclined cracks in Fig. 9.1. Excessive torsion in the edge girder is evidenced by continuous cracks around the girder (Fig. 9.2).

There is no relationship between the crack width and the severity of the condition. Fine-size cracks in the positive moment area of an end beam could be a warning of an imminent failure condition, while a medium-size crack in the massive pier shafts may not have any impeding danger. Also the structural significance of a load-related crack is not necessarily related to its width; i.e., the shear cracks are usually narrow. What is of primary importance is the mechanism that propagates the crack, and not the crack size itself. Load-related cracks that increase in width or length between inspections must be carefully monitored. An increase in crack width and/or length may indicate a progressive structural problem. This phenomenon should be a reason for increasing the frequency of inspection of an element of the bridge.

The end beams and edge girders are prestressed (post-tensioned) concrete members. In prestressed concrete design, high-strength bars or strands are embedded in the concrete under high tension which is held in equilibrium by compression stresses in the surrounding concrete after hardening. Because of this precompression, the concrete in a flexural member will crack on the tension side at a much larger load than when it is not precompressed. This reduces radically the tensile cracks in the end beams, as shown in Fig. 9.3.

9.2.1.3 Non-Load-Related Cracks

Cracks occur to a certain degree in all concrete members for non-load-related reasons, such as: plastic shrinkage of concrete during construction; large temperature differential in massive pours of concrete; or expansive forces created by chemical reactions within the concrete or by corrosion of reinforcing steel.

A. Temperature Variation in Massive Concrete Pours

During concrete operations, the concrete near the surface of a member readily releases the heat of hydration to the cooler surrounding air, resulting in higher concrete temperature at the interior of the member as compared to the surface. For massive concrete pours, the temperature differential within a member may cause tension stresses that exceed the tensile strength of concrete, thus causing the concrete to crack.

This type of cracking can be controlled through a combination of techniques such as:

1. Insulating the surface of the concrete to prevent heat loss.
2. Selection of concrete ingredients to minimize the heat generated by hydration of the cement.
3. Cooling component materials to reduce the temperature of concrete while in its plastic state.

Massive concrete members in the Sixth Street Bridge are: footings, pier shafts, pylon shafts and the deck segment consisting of the edge girder, and deck slab.

B. Shrinkage of Plastic Concrete

If the exposed surface of freshly poured concrete is not protected from rapid evaporation of moisture, the volume of concrete at the surface is reduced and cracks would form to accommodate this shrinkage. This type of cracking may run in any direction on the surface of concrete. Extensive shrinkage cracking occurred at the North Cable Stay sidewalks during construction, as shown on Fig. 9.4.

C. Shrinkage of Constrained Fresh Concrete

Cracks may occur when shrinkage of freshly placed concrete is constrained by previously hardened concrete, such as at a construction joint. These cracks are typically evenly distributed and are generally perpendicular to the construction joint.

D. Chemical Attack of Concrete

Cracking of concrete can be caused by adverse performance of any one of its major components – aggregate, paste or steel reinforcement – and can be due also to either chemical or physical causes.

Chemical reactions between the various components of concrete and a chemical that penetrates the hardened concrete may cause local expansive forces that create tensile stresses and possible cracking in concrete. Chemical reaction may occur between a compound in the cement and a sulfate compound in water penetrating the hardened concrete, or between alkali material contained in the cement and silica contained in the aggregate. The materials used to produce concrete for the Sixth Street Bridge are not known to be subject to these chemical reactions. Therefore, this type of cracking is not expected to occur.

In addition, the wearing surface applied to the roadway surface provides a relatively impervious protection to the concrete deck from roadway chemicals.

E. Physical Attack of Concrete

Cracking may occur from repeated cycles of freezing and thawing.

F. Corrosion of Reinforcing Steel

Corrosion of reinforcing steel increases the volume of the embedded steel, thus causing high radial bursting stresses in the concrete that may result in cracking and spalling.

In a good-quality, well-compacted concrete with adequate cover, reinforcing steel should not be susceptible to corrosion. This is because the high-alkaline conditions present within concrete cause a passive oxide film to form on the surface of the steel and prevent corrosion. Even in fully carbonated concrete where the reserve of alkalinity has been lost, corrosion of the reinforcing steel may not be a problem. The rate of corrosion depends on the availability of oxygen and water at the surface of the steel.

There are several methods to prevent corrosion of reinforcing steel. Some of these methods are:

1. reduction of permeability of the concrete
2. protective coatings on the concrete
3. protective coatings on the steel

All reinforcing steel used in the Sixth Street Viaduct was coated with a protective epoxy resin.

9.2.2 Spalling of Concrete

Spalling of concrete is a localized delamination or breaking out of pieces of concrete usually, within the depth of concrete cover over the reinforcement. The following are possible causes of spalling:

1. Expansive forces within the concrete as a result of corrosion of reinforcing steel or a chemical reaction between the components of concrete.
2. Construction-related defects, i.e., poor concrete consolidation or overstressing of post-tensioning tendons during jacking.

3. Impact due to a highway vehicle colliding with a superstructure element.

Spalling of the deck slab affects the riding surface of the bridge and will lead to pot-holes if proper repairs are not made. Spalling and pot-holes may be hazardous to the travelling public and may increase impact loading because a vehicle hitting a large hole in the deck will bounce. Spalling at other locations, i.e., edge girders may affect the load-carrying capacity of the members by exposing the reinforcing or prestressing steel to corrosion. Repairs for spalling are outlined in Article 10.2.2.

9.2.3 Leaching and Efflorescence

Efflorescence occurs on the surface of concrete when water can percolate through the material, continuously or intermittently, or when an exposed face is alternately wetted and dried. Efflorescence consists of deposited salts, i.e., sulfates and carbonates of sodium, that are leached out of concrete and are crystallized on subsequent evaporation of the water or interaction with carbon dioxide in the atmosphere.

Efflorescence is more of an aesthetic problem rather than one of durability, but it does indicate that substantial leaching is occurring in concrete. Extensive leaching causes an increase in porosity, therefore lowering the strength of concrete and increasing its vulnerability to aggressive chemicals.

The concrete mix provided for the Sixth Street Viaduct is of low permeability, virtually preventing the entry of water into and passage through concrete. The provision of proper drainage and the wearing surface on the deck also help towards more durable superstructure concrete elements.

9.3 Deficiencies in Bridge Elements

9.3.1 Deficiencies in Substructure Elements

9.3.1.1 Piles

The steel piles are not accessible for inspection because the footings are located deep below ground.

If exposed, steel piles should be checked for loss of section due to rust.

9.3.1.2 Footings

Footings would be visible only after extensive erosion. Deficiencies to look for are map cracking, leaching, spalling, hollow sounding concrete, large cracks or splitting, and evidence of corrosion in the reinforcing steel.

Check for evidence of settlement or other movement in the form of tilting of the pier, or unusual dips or rises in the superstructure. Differential settlement can cause large cracks in the pier.

9.3.1.3 Pier Shafts

Deficiencies to look for in the pier shafts are excessive cracking or spalling of concrete, hollow-sounding concrete, corrosion of reinforcing steel, map-cracking and efflorescence.

Because pier shaft movements (see Section 9.5), both vertical and horizontal, are for all practical purposes difficult to detect by eye, reference points should be established at the top and bottom of each shaft to detect and monitor periodically any movement by the use of surveying instruments, primarily due to settlement of the foundation.

9.3.1.4 Pier Caps

Deficiencies to look for in the pier caps are excessive cracking or spalling of concrete, hollow-sounding concrete, corrosion of reinforcing steel, map-cracking and efflorescence.

9.3.1.5 Abutments

Deficiencies to look for in the pier caps are excessive cracking or spalling of concrete, hollow-sounding concrete, corrosion of reinforcing steel, map-cracking and efflorescence.

9.3.2 Deficiencies in Superstructure Elements

9.3.2.1 Deck Slab

Deficiencies to look for are cracking or spalling of concrete, evidence of corrosion of reinforcing and post-tensioning steel, and dampness, efflorescence and leakage in the slab, especially close to the underside of the deck along curb lines and near the expansion joints. Load-related cracks on the stayed spans are expected to be minimal considering the fact that the deck is compressed by the cable thrust forces. Look for any unusual deflection and listen for any unusual sounds as traffic passes.

9.3.2.2 Edge Girders

Edge girders should be inspected for signs of cracking at the areas shown on Fig. 9.1. A crack in these areas is significant only if the width of the crack exceeds the maximum tolerable widths cited in Article 10.2 or if the length of the crack increases significantly between inspections. Look also for spalling or splitting of concrete at the exit points of the stay-cables in the concrete blister area and evidence of corrosion in the post-tensioning steel.

9.3.2.3 End Beams

Deficiencies to look for are cracking or spalling of concrete and evidence of corrosion in the post-tensioning steel. Check also for cracking of grout at the stressing end pockets. The end beams should be inspected for signs of cracking at the areas shown on Fig. 9.3. A crack in these areas is significant only if the width of the crack exceeds the maximum tolerable widths cited in Article 10.2 or if the length of the crack increases between inspections.

9.3.2.4 Elastomeric Bearings

Each elastomeric bearing pad assembly should be carefully inspected for the following problems:

1. Excessive bulging of the sides of the pad
2. Variation in the thickness of the pad and excessive horizontal deformation
3. Splits or tears in the elastomer (neoprene)
4. Gaps at contact surfaces
5. Evidence of corrosion on exposed steel surfaces
6. Tightness of anchor bolts
7. Spalling of concrete in the vicinity of the bearing

Splits and tears in the elastomer are the result of either excessive horizontal deformations or deficiencies in the manufacturing process. Excessive bulging of the pad sides is usually the result of lack of bonding between steel plates embedded in the pad and neoprene layers.

The longitudinal and lateral displacement of the bearing pads should be measured within 1/16” to determine if they are within reasonable limits. Deformation and temperature measurements should be recorded as shown in the contract drawings.

Any gaps at contact surfaces should develop because of an unusual bridge movement or if bearing surfaces are fabricated out of tolerance. Inspectors must

record the extent and width of gap so that remedial measures can be taken to ensure an evenly distributed load.

9.3.2.5 Post-Tensioning

9.3.2.5.1 Tendons

The post-tensioning tendons used on the bridge are embedded in the concrete and are not accessible for inspection. In the deck slab, edge girders and end beams, the tendons were installed in polyethylene ducts. After stressing the tendons, the ducts were pressure-grouted, providing a double corrosion protection for the tendon.

Cracking or spalling of post-tensioned concrete members might expose part of the duct. Tapping on the exposed duct with a light hammer would allow the inspector to detect any voids in the grout within the duct. Deficiencies that may indicate a need for maintenance are:

1. Cracks in polyethylene duct.
2. Voids in the tendon duct.

If a void is detected in the duct, it probably indicates the absence of grout. The tendon should then be inspected for possible corrosion. If the tendon should be exposed and the strands show pitting resulting in significant loss of steel cross-sectional area, the Engineering Department should be promptly notified to determine the necessary corrective action.

9.3.2.5.2 Anchorages

Inspectors should check for cracking of the grout used to cover the anchorage devices. Hairline cracks are insignificant; however, cracks greater than 1/32” should be sealed to prevent moisture intrusion.

9.3.3 Deficiencies in Pylons

9.3.3.1 Pylon Shafts

Deficiencies to look for in pylons are cracking or spalling of concrete, evidence of corrosion of reinforcing steel and water infiltration through the cable blockouts into the stay-cables.

Inspectors should monitor movements of the pylons under temperature, creep and shrinkage by establishing reference points at the top and base of each pylon.

9.3.3.2 Anchor Box

Deficiencies to look for in the pylon anchor box are cracking at weld locations and evidence of corrosion of the web plates. The flange plates are embedded in the pylon shaft and will not be visible.

9.3.4 Deficiencies in Stay-Cable System

9.3.4.1 General

Inspectors should carefully observe the stay-cable vertical alignment and look for any excess sag or uneven tension. They should also look for any abrupt bends or kinks in the cable pipe, particularly at the cable exit points in the pylon and edge girder.

9.3.4.2 Strands

A reference strand may be removed from each stay cable to evaluate the condition of the strand and the strand's individual corrosion protection system (grease and HDPE sheathing). The strand should be inspected for any signs of corrosion or damage to the strand. The cables have been designed with the assumption that one strand will be removed in the future, therefore the reference strand need not be replaced.

Strands are removed based on the following procedure:

1. Remove the transition covers and guide pipe extensions to provide access to the cable clamps.
2. Detension the cable clamps to allow sufficient clearance to allow individual strand removal.
3. Remove the protective anchorage covers at the top and bottom cable anchorages and identify the strand to be removed.
4. With a monostrand jack, stress the selected strand at the below deck anchorage to allow removal of the wedges.
5. Partially remove the wedges at the deck anchorage to allow detensioning of the strand. When the monostrand jack is near the end of its stroke, reseat the wedges and regrip the strand to allow this procedure to be repeated until the strand is detensioned.
6. After strand detensioning, remove the wedges of the detensioned strand at the pylon anchorage.
7. Following removal of the pylon anchorage wedges, the strand may be removed from the stay pipe for inspection and evaluation.
8. The blank strand hole must be plugged in accordance with Dywidag-Systems International recommendations. Prior to plugging, the corrosion protection measures of the anchorage may be evaluated with a borescope.

The proposed reference strand removal schedule is as follows:

September 2014 – Remove strands from stays N2 and S10
September 2024 – Remove strands from stays N7 and S1
September 2034 – Remove strands from stays N3 and S12
September 2044 – Remove strands from stays N9 and S4
September 2054 – Remove strands from stays N5 and S8
September 2064 – Remove strands from stays N11 and S6
September 2074 – Remove strands from stays N8 and S5

It is noted that in every 10 year period it is proposed that a total of 4 strands be removed, i.e. one set of reference strands from the North Cable Stayed Bridge (i.e. East and West sides) and one set of reference strands from the South Cable Stayed Bridge. Depending upon the performance of the stay cable corrosion protection system, this inspection program could be accelerated.

Any noted deficiencies in the stay cable corrosion protection system must be addressed immediately, as the stay cable system is a key component of the bridge main load carrying system.

9.3.4.3 Stay Pipes

The guide pipes are well protected and have been hot-dip galvanized prior to painting. In order to ensure adequate bond between the top coat system and the galvanizing, a galvanizing compatible painting system has been utilized. The pipes should be inspected for corrosion and pitting, especially at locations where the pipes were welded to the flanges, and any cracking at the welds.

It is noted that guide pipes have performed poorly on other concrete cable stayed bridges, especially at the exit points. The guide pipe flange connection details at both deck and pylon connections have been improved for the Sixth Street Viaduct to provide more durable long term performance. However, this area should be carefully inspected.

9.3.4.4 Anchorages

Deficiencies to look for are lack of watertightness at the cable exit points. In addition, the painting system is the primary means of corrosion protection of the ring nut and anchorage body. The painting system must be inspected and maintained in accordance with these guidelines.

9.3.5 Deficiencies in Deck Elements

9.3.5.1 Wearing Surface

The wearing surface consists of a microsilica concrete overlay on the roadway areas. Deficiencies that may affect the ride quality across the bridge are: cracking, raveling, pot-holing, rutting and drying out. Be aware that a wearing surface that appears good on a dry day may be hazardous when wet.

9.3.5.2 Aluminum Railing

The aluminum railing is attached to the deck slab with anchor bolts. Inspectors should carefully observe that all connections are in good condition and check to see if there are any missing, broken or loose parts.

Following a vehicular accident that includes a railing impact, all connections and railing elements must be carefully inspected and replaced if the components have sustained appreciably damaged.

The railing also included a pedestrian cable which should be inspected for loose and frayed sections.

9.3.5.3 Sidewalks

Deficiencies to look for are cracking or spalling of concrete, evidence of corrosion of reinforcing and efflorescence.

9.3.5.4 Drainage System

The surface of the deck slab should be checked for accumulation of water and plugged drains. Drains have been provided at regular spacing along the gutters. The inspectors should check for accumulation of debris around, over or in the drainage inlet, for any loose or broken parts

of the drain, and for any corrosive effects of drainage water on the drainage inlet.

9.3.5.5 Expansion Joint Assemblies

Each expansion joint assembly should be carefully checked for alignment of joint sides with the roadway. Any deviation greater than ¼" will cause harmful wheel impact and will shorten the expansion joint life unless corrective leveling is performed.

Inspectors should measure the expansion joint opening and record the concrete temperature at the time the measurements are made. The width of the joint is to be measured to within 1/16".

Careful attention should be given to detect loose or broken components of the joint, such as metal parts and fasteners. Where bolts are exposed, a wrench should be used to check the tightness of the bolts or nuts. The condition of the neoprene sealing elements should be checked for any ears or splits and the underside of the deck adjacent the joint inspected to see if the neoprene is effective in preventing water from leaking through the joint. Inspectors should look also for evidence of corrosion in metal components of the joint. If there is damage or distortion to the neoprene sealing element, corrective action is required.

9.4 Detailed Inspection Procedures

9.4.1 Crack Inspection

The importance of finding cracks in concrete members cannot be overemphasized. A study of their location, size and direction could help determine the causes of cracking and whether corrective action is necessary.

The location and extent of cracking could be determined by visual inspection, nondestructive testing, and tests of cores taken from the structure. The

discussion in the Section is concentrated on visual inspection and very briefly covers the two other methods.

Adequate lighting is of utmost importance when looking for cracks; therefore, the use of portable light is highly recommended. The bridge inspector shall be aware that fine cracks that are difficult to detect on a dry concrete surface are more easily observed on a surface that has been wetted and allowed to dry. In those areas of an element, as identified earlier in this manual, where fine cracks may indicate the function of the structure is seriously impaired, the inspection procedure should include saturating the concrete surface with water. If a crack extends through a concrete member, drippings of white lime may appear on the lower surface of the member. If a crack is fairly deep but not through the member, dark areas of dampness might appear on the surface.

Once the crack has been located, the following procedure could be used for measuring and reporting the status of cracking:

1. Clean the area adjacent the crack with a stiff bristle brush to expose the full length of the crack.
2. Draw a line approximately one inch away from the crack to identify the location and direction.
3. Draw an arrow pointing to the ends and label " end" and date.
4. Locate a straight portion at the maximum width and measure width. A commonly used device for this task is a transparent plastic card called a comparator with a scale showing different widths of lines varying in thickness from 0.004 to 0.03 of an inch. The card is placed over the crack and the line matching the crack indicates the appropriate width.
5. Draw an arrow pointing to location where the crack width was measured so that future measurements are taken at the same spot. Write down the width and date.
6. Measure the length of crack between the end arrows.
7. Verify if the crack extends through the member by inspecting the same location from the other side.
8. Take photograph and/or sketch the crack.

9. Record and report the length, width and depth of crack. (Location of exposed reinforcement, surface deterioration and rust staining should also be noted on the sketch.)

The above procedure can be used for inspecting and reporting isolated cracks. When cracks occur with great frequency in a limited area, the time required to measure and document their specific dimensions is prohibitive. In this case, cracks widths should be measured to determine their description, a classification of the cracks in terms of their width. Such a classification is included in Table 9.3 (at the end of this section), which is adopted from the FHWA "Guidelines for Developing Inspection Manuals for Segmental Bridges." The crack class of each crack or an approximate overall class for a group of cracks should be documented in the inspection report along with dimensions specifying their location.

In addition to the visual inspection outlined above, the location and extent of cracking could also be determined with nondestructive testing, and tests of cores taken from the structure. Nondestructive tests could be used to determine the presence of internal cracks and voids, and the depth of penetration of cracks visible at the surface. Cores taken from selected locations on the structure could provide the opportunity to accurately measure the width and depth of cracks. Core material and crack surfaces could be examined petrographically to determine the presence of deleterious substances in concrete.

9.4.2 Spall Inspection

The following procedure could be used to inspect spalling in concrete:

1. Tap the surface around the spall with a chipping hammer to remove all loose and unsound concrete.
2. Measure approximate area and depth of spall.
3. Check if any reinforcing steel or tendon duct is exposed and look for signs of corrosion.
4. Note if there is a crack at the base of the spall

5. Note signs of moisture.
6. Chip off a piece of concrete from the spall to determine general quality of concrete.
7. Check for hollow zones around spalled area.
8. Take photographs and /or sketch spalled area.
9. Record observations.

When spalling is frequent in a limited area, use of the above procedure may be impractical. In this case, spalls may be classified in accordance to their depth and characteristic appearance as noted on Table 9.3.

In general, the bridge inspector should look for spalling adjacent the deck expansion joints, at locations where cracking has become severe, and at areas where expansive chemical reactions within the concrete or extensive corrosion of embedded steel has occurred.

9.5 Survey of Bridge

Future surveys of the bridge should include:

1. Monitoring the settlement of the pylons and piers
2. Measuring the longitudinal and transverse displacements of the pylons.
3. Monitoring the profile grade of the roadway
4. Measuring expansion joint openings
5. Measuring elastomeric bearing deflections

Surveys should be conducted on a 10 year basis and could coincide with the reference strand removal schedule provided above.

Table 9.1			
Causes of Cracking in Concrete			
Component	Type	Cause of Distress	Environmental Factors(s)
Cement	Unsoundness	Volume Expansion	Moisture
	Temperature Cracking	Thermal stress	Temperature
Aggregate	Alkali-silica Reaction	Volume Expansion	Supply of moisture
	Frost attack	Hydraulic Pressure	Freezing and thawing
Cement paste	Plastic Shrinkage	Moisture Loss	Wind and temperature
	Drying Shrinkage	Moisture Loss	Relative humidity
	Sulfate attack	Volume Expansion	Sulfate ions
	Thermal Expansion	Volume Expansion	Temperature change
Reinforcement	Electro-chemical Corrosion	Volume Expansion	Oxygen moisture

Table 9.2		
Types of Cracking in Concrete Structures		
Nature of Crack	Cause of Cracking	General Location
Large, regularly spaced	Shrinkage cracking, thermal cracking	Footing, pedestals Deck slab
Coarse, irregular "map cracking"	Alkali-silica reaction	On surface of deck Slab
Fine, irregular "map cracking"	Excessive bleeding, plastic shrinkage	" "
Fine cracks parallel to each other	Plastic shrinkage	On surface of deck Slab
D-cracking	Excessive moisture contents, porous	Near Joints and Edges; Under bearing
	Aggregates	Areas
Cracking along rebars	Rebar corrosion	All concrete elements

Table 9.3

STRUCTURAL DEFICIENCY DESCRIPTIONS

SCALE FOR DESCRIBING CRACK WIDTHS:

DESCRIPTION	WIDTH RANGE
Hairline	less than 0.004 in, (0.1 mm)
Narrow	0.004 to 0.01 in, (0.1 to 0.3 mm)
Medium	0.01 to 0.03 in, (0.3 to 0.7 mm)
Wide	greater than 0.03 in, (0.7 mm)

SCALE FOR CLASSIFYING SPALLING:

CLASS	DEPTH AND APPEARANCE
Light	0 to ¼ in, (0 to 5 mm), coarse aggregate not exposed
Medium	¼ to ½ in, (5 to 10 mm), coarse aggregate exposed
Heavy	½ to 1 in, (10 to 25 mm), coarse aggregate projecting from the surface
Severe	over 1 in, (25 mm), loss of coarse aggregate particles

Note: Table 9.3 is adapted from the FHWA Guidelines for Developing Inspection Manuals for Segmental Concrete Bridges, Chapter 6.

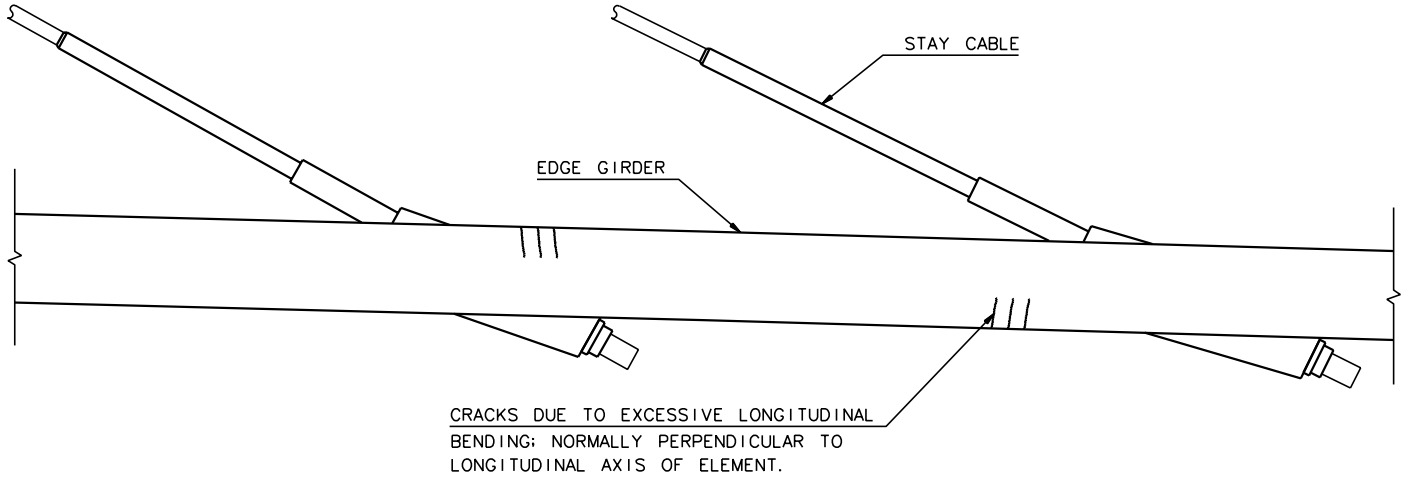

BENDING CRACKS

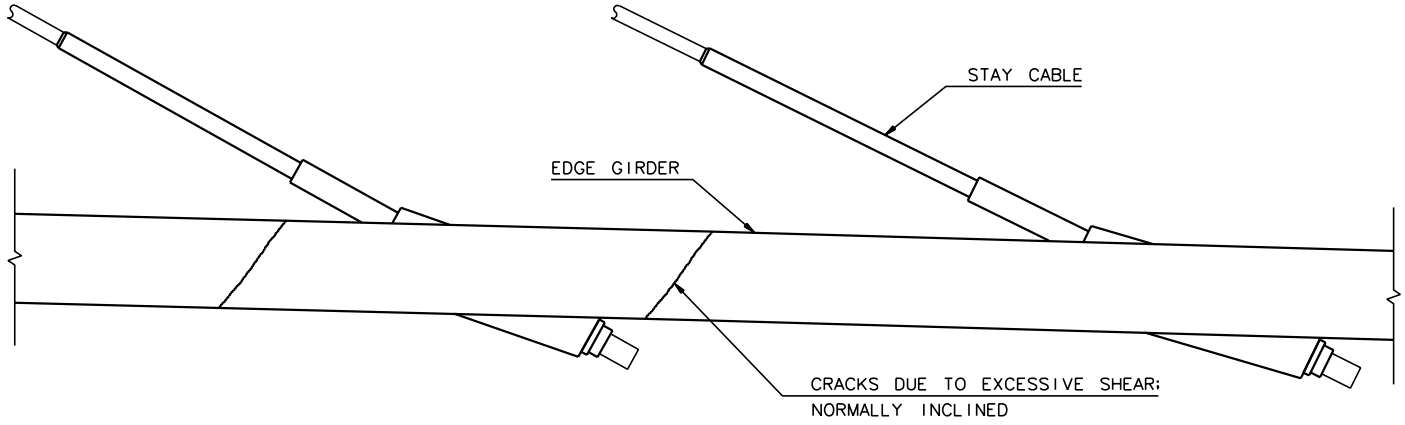

SHEAR CRACKS

LOAD RELATED CRACKS IN SUPERSTRUCTURE

FIGURE 9.1

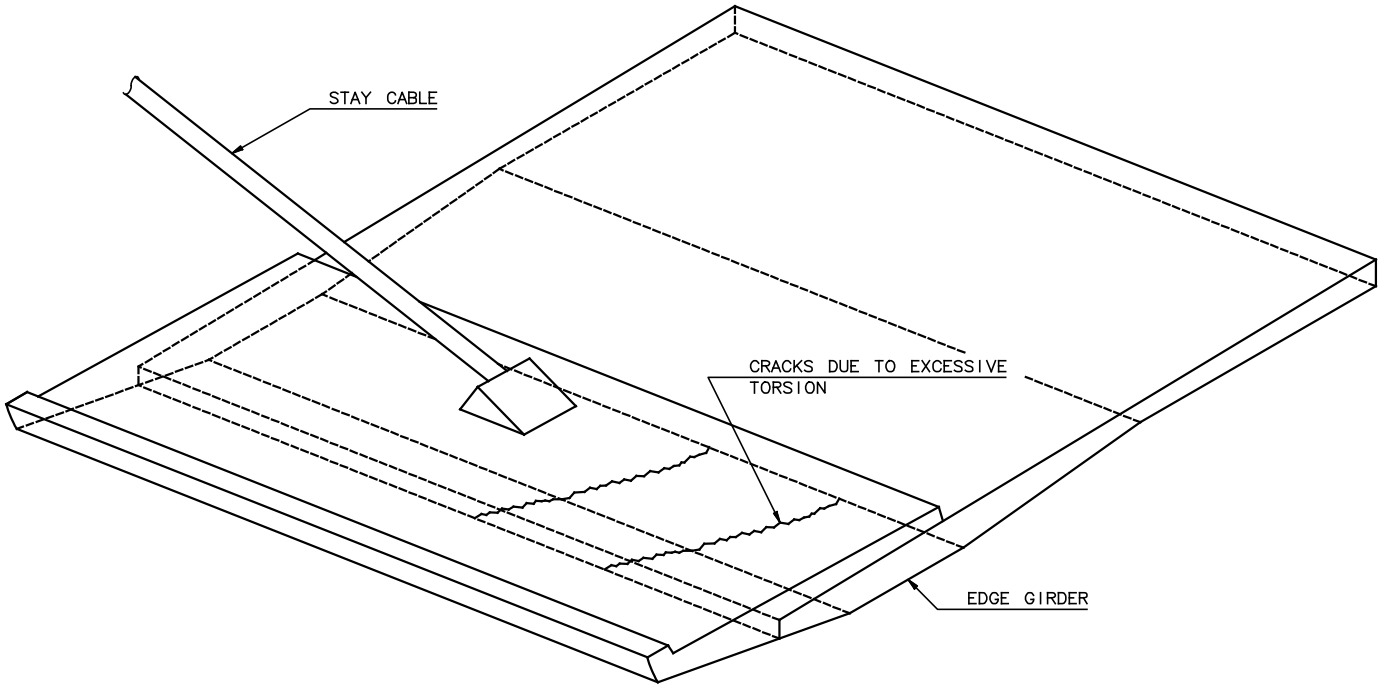

TORSION CRACKS

FIGURE 9.2

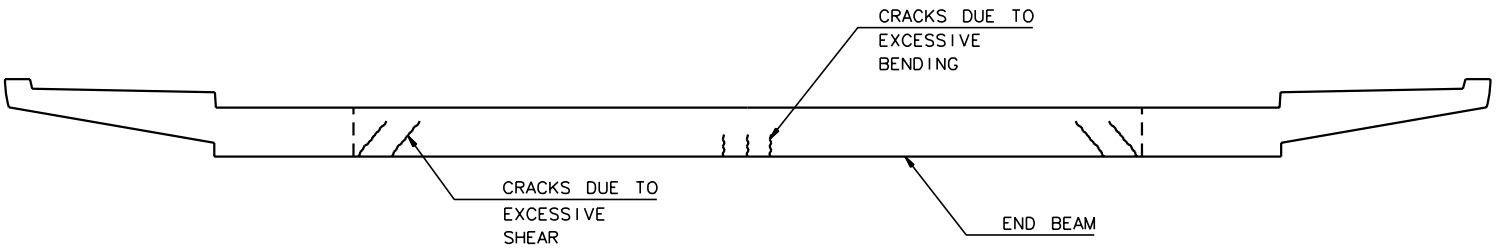

SHEAR AND BENDING CRACKS

CRACKS IN END BEAM

FIGURE 9.3

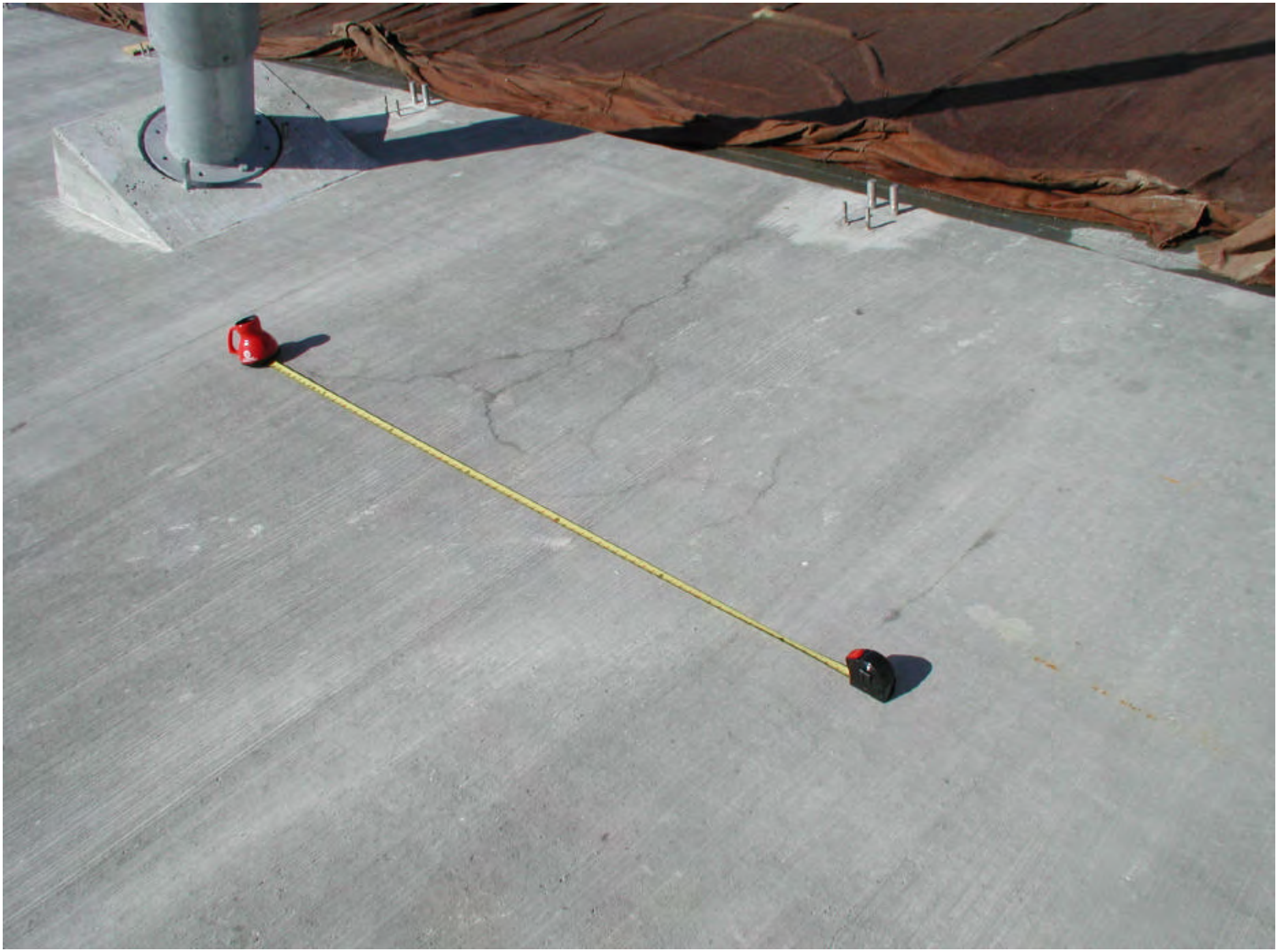

FIGURE 9.4

SECTION 10

MAINTENANCE AND REPAIR PROCEDURES

10.1 General

This chapter provides special procedures and guidelines for evaluating the results of an inspection of the bridge. It contains general criteria and limits for determining whether the existing physical condition in an element of the bridge requires corrective action to be undertaken and also describes specific maintenance and repair procedures.

Maintenance procedures are usually divided into routine maintenance and periodic maintenance. Routine maintenance consists of those activities conducted on a day-to-day or weekly basis, e.g., cleaning debris from expansion joints or scuppers. Periodic maintenance consists of those activities that are scheduled over a longer term and depend to a large extent on the findings of the inspection program.

The maintenance procedures discussed in this chapter are primarily in the periodic maintenance category. Routine maintenance procedures are only briefly mentioned and are to be performed in accordance with the WisDOT's practices for maintaining conventional bridges.

Repair procedures (e.g., replacing elastomeric bearing pads) are also covered in this chapter.

10.2 Deficiencies in Concrete

10.2.1 Crack Repairs

10.2.1.1 Introduction

Before proceeding with any repairs, an evaluation should be made to determine the causes and extent of cracking and the need for repairs.

The causes of cracks are discussed in Article 9.2 of this Manual. A detailed evaluation of observed cracking should determine which of these causes applies in a particular situation and whether the cracks are stress-related or nonstress-related.

When a crack is determined to be stress-related, the cause of overstressing of concrete and the mechanism that propagates the crack should be identified. The crack width or length should be closely monitored from inspection to inspection. An increase in width and/or length may indicate a progressive structural problem, thus requiring corrective action. The crack should be repaired if it reduces the strength, stiffness or durability of the structure to an unacceptable level. Repair may also be required to improve the appearance of the concrete surface. The project engineer is advised that some overstressing is expected during the service life of the bridge and in such case corrective action to eliminate this condition may not be necessary.

Nonstress-related cracks could also impair the function of the structure because they allow water and chemicals to enter the concrete and contribute to deterioration of concrete and corrosion of the embedded reinforcing steel. The effect of such cracking on the long-term performance of a concrete element is related to the environment in which the cracked concrete is located. The American Concrete Institute Committee 224 Report on “Control of Cracking in Concrete Structures” provides the following maximum tolerable widths of non-stress-related cracks at the tensile face of reinforced concrete structures:

Exposure Condition	Maximum Allowable Crack Width, Mils
Dry air or protective membrane	16
Humidity, moist air, soil	12
Exposure to deicing chemicals	7
Exposure to seawater and seawater spray; Wetting and drying	6

The following is a guide applying the above criteria to the various elements of the Sixth Street Viaduct:

NON-STRESS-RELATED CRACKS IN CONCRETE

Permissible Crack Widths

Element of Structure	Maximum Allowable Crack Width, Mils
Footings	8
Pylon Shafts	12
Pier Shaft and Capbeams	12
End beams	12
Edge girders	12
Deck slab	6

Cracks in reinforced concrete within the above tolerances should not be considered to be a significant factor in causing corrosion of the reinforcing steel.

10.2.1.2 Methods of Crack Repair

After the evaluation of a cracked concrete element and the determination of the cause of cracking, a suitable repair procedure could be selected. A successful repair procedure should consider the cause of the cracking. For example, if the cracks are due to a continuing foundation settlement, repairs will be of no use until the settlement problem is corrected.

An efficient and durable crack repair method should depend not only on the proper selection of materials but also on the proper preparation of the damaged concrete prior to restoration. The following general steps should become part of any crack repair procedure:

1. Expose crack to its full length by removing oil, grease, dust or loose material until a sound surface is reached. Contamination should be removed by flushing with water or other specially effective solvent. The solvent is blown out using compressed air or, if adequate time is provided, by air-drying.
2. Where possible, the opening should be prepared to ensure good bonding between the concrete and repair material, and to ensure proper consolidation.
3. Remove aggressive materials or prevent their reentry.

All cracks (except nonstress-related cracks within the tolerances given in Article 10.2.1.1) ranging from 0.006” to 3/8” width should be pressure-injected with an WisDOT-approved low-viscosity epoxy adhesive to ensure deep penetration. Epoxy injection would restore flexural stiffness if further cracking is not anticipated (the cause of cracking has been removed). Epoxy injection would also seal cracks against seepage. It is noted that epoxy injection requires a high degree of skill and experience for satisfactory execution, and application of the technique may be limited by the ambient temperature. This work should be subcontracted to a manufacturer-approved contractor with at least five years’ experience.

Cracks larger than 3/8” width should be dry-packed with an WisDOT-approved shrinkage-compensating grout. Fine cracks less than 0.006” in width should be surfaced sealed with an WisDOT-approved epoxy gel to avoid moisture penetration.

Since methods of crack repair in concrete are common to all types of concrete structures, further discussion of the subject is not necessary in this Manual.

10.2.2 Spall Repair

The need to repair a spall located in an area other than on the riding surface of the roadway depends on the severity of the spall, loss of concrete cover over reinforcing steel and its possible effect on corrosion of the reinforcing steel and post-tensioning duct. Extensive spalling in an area where concrete stresses are critical must be thoroughly studied to determine if the safe load carrying capacity of the bridge has been impaired. The following general procedure should be used in patching spalls:

1. Remove all loose and unsound concrete and thoroughly roughen the surface to be patched.
2. If reinforcing bars or tendon duct are exposed, remove concrete from around the entire perimeter of the bar or duct to provide 1 to 1 ½ inches clear space.
3. Chip the concrete along the edges of the patch to establish a 90º angle.
4. Thoroughly clean the area to be patched and the surface of exposed reinforcement or tendon duct to remove all dust and dirt and any foreign material that may affect bonding of the repair material.
5. Coat reinforcement or tendon duct with a WisDOT approved brushable epoxy coating.
6. Select a Portland cement mortar/concrete or epoxy mortar from an approved WisDOT product list and apply in accordance to the manufacture’s recommendation. The choice of material would depend on such factors as shrinkage, thermal coefficient of expansion, chemical resistance, thickness,

pumpability and cost. The material and environmental condition would dictate the method of application, i.e. troweled, formed, dry pumped etc.

7. Strike off, finish and cure the patching mortar as recommended by the manufacturer.

No saw-cutting, drilling or jackhammering should be implemented on deck spall repairs in order to avoid damage to the reinforcing bars and post-tensioning tendons. Extensive spalling of substructure elements may be repaired by use of a shortcrete type construction procedure. For large spalls a Type I cement with fine crushed stone may be used.

Repair of spalls on the riding surface of the bridge should be treated as a routine maintenance procedure and accomplished in accordance with the WisDOT's practices for maintaining conventional bridges.

10.3 Corrosion of Reinforcing Steel

The reinforcing steel used for the bridge is epoxy-coated. If the protective coating of an exposed rebar is destroyed, it should be repaired by removing any rust and applying an approved WisDOT epoxy coating, prior to making any concrete repairs.

10.4 Replacement of Roadway Deck

Removal of any major section of the deck slab by the conventional slab replacement method is not recommended since the slab is post-tensioned transversely and longitudinally. Replacement of the reinforced concrete sidewalk is possible, however care should be taken in any concrete demolition activities in the vicinity of the post-tensioning anchorages. *In addition, sidewalk removal in the vicinity of the stay cable anchorages is not permitted, since the sidewalk forms an integral part of the stay cable anchorage design.*

The reinforced concrete portion of the deck that supports the expansion joints may be replaced, however, care should be taken to avoid damage to the longitudinal post-tensioning anchorages.

Any deck repair that involves removing major sections of the slab will require consultation with engineers who is fully knowledgeable with the design and construction procedures for post-tensioned flat slab cable stayed bridges.

10.5 Replacement of Wearing Surface and Addition of Future Wearing Surface

Replacement of the wearing surface is preferred over the addition of a future wearing surface; however the bridge has been designed for the application of a future wearing surface. Prior to wearing surface replacement or the addition of a future wearing surface, the bridge must be surveyed in order to establish the baseline condition, and an engineer familiar with the design and behavior of flat slab post-tensioned cable stayed bridges should evaluate any modifications to grade. Restressing of stay cables could be considered to make grade adjustments for the stay cable supported decks; however such restressing must be based upon calculations completed by an engineer experienced with concrete cable stayed bridges.

10.6 Elastomeric Bearing Pads

Information obtained from periodic inspections of the elastomeric bearing pads shall be evaluated and repaired as follows:

A. Tears and Splits

Tears or splits in the elastomer material are not considered to be stress-related unless accompanied by excessive horizontal deformation of the pad. Defects that penetrate the elastomer no mater how slightly, while seemingly insignificant, should be filled to protect the steel plates from corrosion. The following procedure should be used:

1. Select an approved WisDOT urethane putty material that cures to a compatible Durometer hardness (50).

2. Sand the area in and around the tear or split to clean it thoroughly.
3. Remove loose particles.
4. Apply the manufacturer's recommended primer.
5. Fill the tear or split with putty and even surface.

Deep splits or tears and/or corrosion of steel plates indicate the need to replace a pad.

B. Excessive Bulging

Excessive bulging of all the vertical sides of the bearing pad is an indication of deficient bond between steel plates and elastomer layers. If it appear to be deteriorating from one inspection to the other, replacement of the pad should be planned.

C. Horizontal Displacement

The maximum permissible displacement between the relative positions of the top and bottom surfaces should not exceed 50% of the total thickness of the elastomer material. If displacement exceeds this value, the superstructure (approach span) must be raised by jacking up to allow the bearing pads to return to their unstressed configuration or to be replaced. This procedure requires an in-depth analysis by the Engineering Department to ensure that no detrimental effect will result.

If a bearing pad exhibits deficiencies in addition to excessive horizontal displacement, consideration should be given to replacing it with a new one while the superstructure is temporarily supported on jacks.

D. Gaps at Contact Surface

Any gaps at the contact of the bottom steel plate and concrete seat should be filled by pressure-injection of an WisDOT-approved epoxy.

10.7 Expansion Joints

Routine maintenance procedures of the expansion joints should include cleaning the joint from debris or other foreign materials that could restrict the opening or closing of the joint. Attention also should be given to detect looseness or breakage of any of the metal parts of the joint. If these deficiencies are not corrected, the bridge will be subjected to forces not accounted for in the design.

If periodic inspection reveals that water infiltrates the joint, this may be due to deterioration in a neoprene sealing element or gaps between the neoprene and the steel shapes to which the neoprene gland is attached. A repair procedure may involve splicing a rubber seal on the existing neoprene if it is slightly deteriorated, or replacing it with a new gland if the deterioration is extensive. Any repairs to the neoprene gland should be performed in accordance with the joint manufacturer's (DS Brown) recommendations.

The measurements of the expansion joint opening should be compared to the maximum capacity for each joint. The joint has a movement capacity of 4" longitudinally and 2" transversely (for the post-office north cable stay bridge expansion joint). Should these maximum capacities be exceeded, the joints may need to be reset or replaced. The following elements of the strip seal joint may be replaced: neoprene sealing elements between steel separation beams and bearings with PTFE surface underneath the support bar joist.

10.8 Post-Tensioning Systems

10.8.1 Ducts

Any cracks observed in a polyethylene pipe must be carefully evaluated to determine the cause. If the crack is due primarily to deterioration of the polyethylene material, it should be filled with a flexible mastic material. Splitting of the pipe can be prevented by wrapping a protective Tedlar tape around the pipe.

10.8.2 Tendons

If evidence of corrosion of post-tensioning steel (bar or strands) is reported, an investigation must be initiated to determine the cause. An evaluation should be made to determine the extent of loss on the cross-section area and how the structural capacity of the tendon has been affected.

If it is determined that there has been a significant loss of post-tensioning force in a tendon, particularly in the end beams and edge girders, an in-depth study must be undertaken by engineers experienced with post-tensioned flat slab behavior to evaluate the extent of the damage and to initiate appropriate corrective actions.

10.8.3 Anchorages

Minor cracking of a grout cap over a post-tensioning anchorage is insignificant unless there is evidence of steel corrosion. If the cracks are greater than 1/32" they should be sealed to prevent moisture intrusion. If cracking has progressed to a point where there is spalling of the grout, spalls should be patched in accordance with the procedure described in Section 10.2.2. Two applications of a coal-tar emulsion coating on the surface of the patched pocket are recommended.

10.9 Cable Stay System

10.9.1 Cable Strands

The stay cables were installed with an additional reference strand, which may be pulled and checked for corrosion. If there is evidence of deterioration because of corrosion, the entire stay cable should be replaced using the strand by strand replacement method. A cable replacement procedure is described in Section IV of the Appendix.

10.9.2 Cable Pipe

If evidence of corrosion of a steel guide pipe is observed, the cause of the corrosion should be determined and corrective action taken promptly.

The steel pipe's corrosion protection system includes hot dip galvanized and has been overcoated with a painting system compatible with galvanizing. Based on the findings in an inspection, the steel pipe may have to be repainted periodically.

Any cracks observed in a polyethylene pipe must be carefully evaluated to determine the cause. If the crack is due primarily to deterioration of the polyethylene material, it should be repaired in accordance with the manufacturer's recommendations. Significant damage to the HDPE could require replacement of this external corrosion protection barrier. Co-extruded HDPE systems with longitudinal seams may be installed without replacement of the stay cable.

10.9.3 Cable Anchorages

The cable anchorages at the pylons and below deck are subject to exposure to the environment and should be inspected for signs of corrosion. Particularly the ring nuts, which are not hot-dip galvanized, should be coated with a high performance painting system and should be monitored throughout the service life of the bridge. The protective strand cover should be evaluated to ensure it remains water-tight.

10.9.4 Cable-Stay Replacement

Any significant damage to a cable must be immediately evaluated by an Engineer who is knowledgeable in the design of cable-stayed bridges. Corrective action must then be initiated as appropriate.

A conceptual procedure for reference strand removal is provided in Section 9.3.4.2. Should complete stay cable replacement be required, the stay cable will

be replaced strand by strand following the procedures outlined in Section IV of the Appendix.

10.10 Differential Settlement

Determining the variations of elevation of the survey markers placed on top of the pylon foot will indicate the settlement of each pylon shaft.

Only differential settlements will affect the total load-bearing capacity of the bridge. The estimated allowable differential settlement of the two pylon shafts is 1". If this value were exceeded, a detailed analysis would be required to determine if corrective maintenance is necessary.

As part of any corrective maintenance program, elevations must be recorded on a monthly basis at the point experiencing excessive settlement. Curves of settlement versus elapsed time should be prepared to help monitor the rate of settlement.

10.11 Maximum Anticipated Vertical Deflections

Anticipated vertical deflections of the superstructure as a result of creep and shrinkage are provided in the contract drawings. It is noted that these deflections vary both transversely and longitudinally, owing the three dimensional behavior of the flat slab superstructure system. These deflections are due to creep and shrinkage of the superstructure and temperature variations in the deck, cables and pylons. The deflections presented in the contract drawings do not include any pylon settlements.

If the anticipated vertical deflections were exceeded, a detailed analysis would be required to determine if corrective procedures are necessary.

10.12 Notification to the City of Milwaukee

The conditions encountered in the inspection and maintenance of cable-stayed bridges are complex and variable. Consequently, it would be impossible to list all possible deficiencies; which would require closing of the bridge or substantial traffic restrictions.

Evaluation of deficiencies, which may seriously impair the integrity of the structure or produce a clearly hazardous condition, must of necessity be left to the judgement of the Project Engineer in charge of the inspections.

Any observed deficiencies with the above consequences shall require immediate verbal notification to the City of Milwaukee, followed by a written notification within 48 hours.

Milwaukee Gateway Partners Contact Information:

Theodore Zoli
HNTB Corporation
352 Seventh Avenue
New York, NY 10001
(212) 594-9717

Scott Piefer
Zenith Tech, Inc.
N6 W23633 Bluemound Road
Waukesha, WI 53188
(262) 524-1869

Tom Braun
Lunda Construction Co.
W229 North 2520 DuPlainville Road
Waukesha, WI 53186
(262) 547-1781

APPENDIX - SECTION I

Coding of Bridge Elements

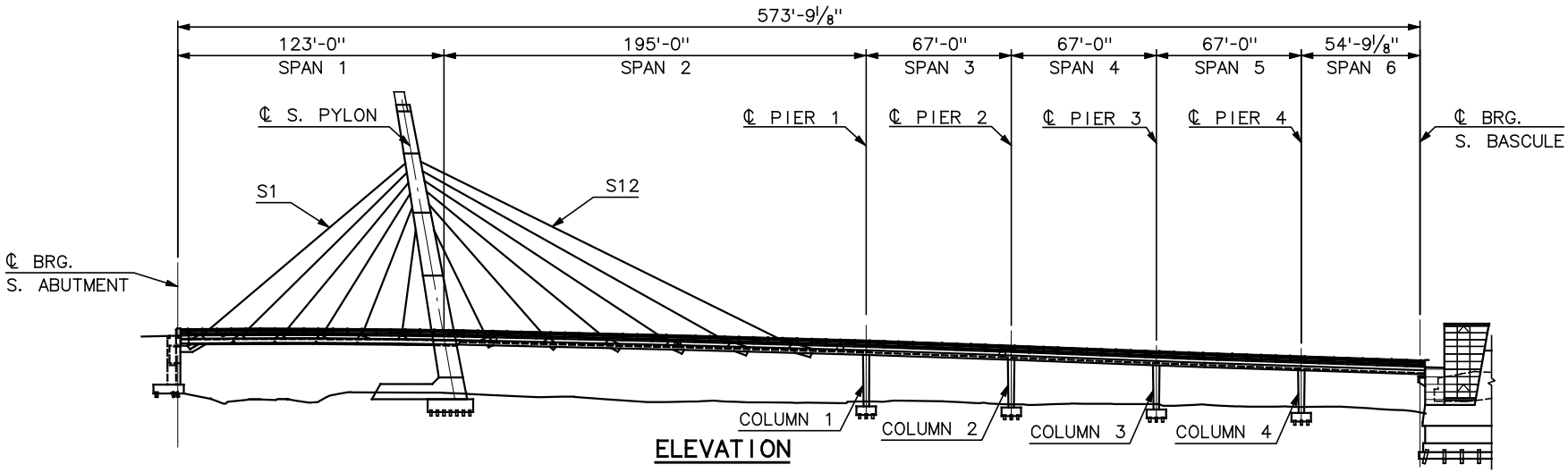

ELEVATION

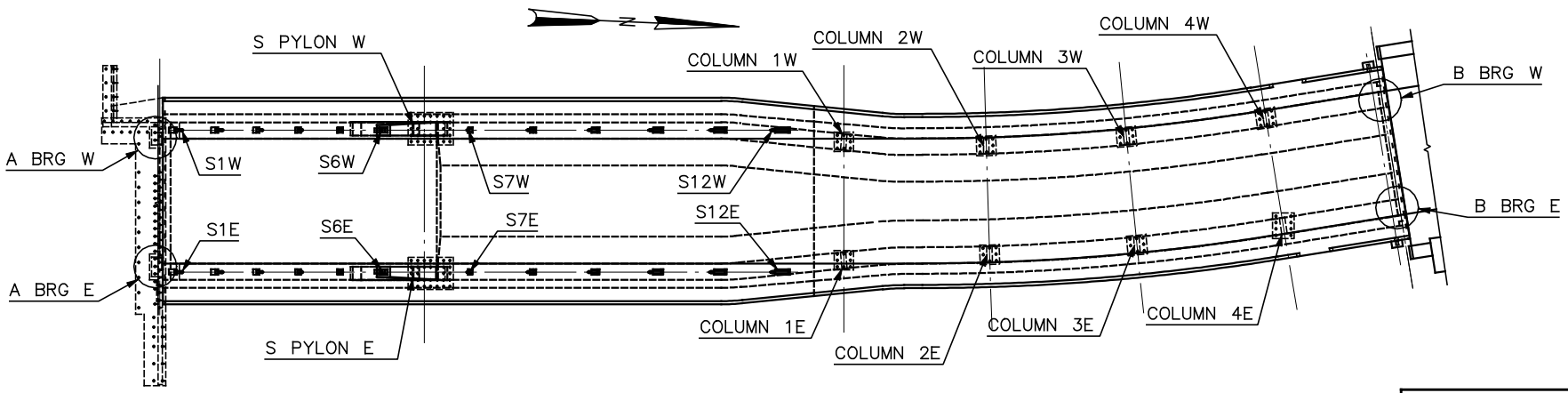

PLAN

SOUTH CABLE STAY
CODING

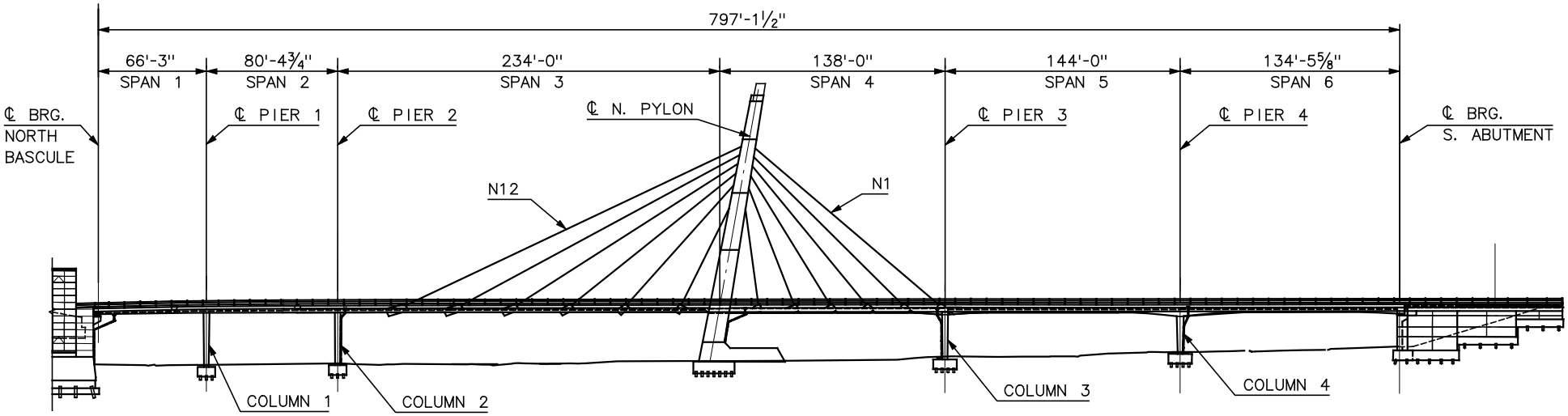

ELEVATION

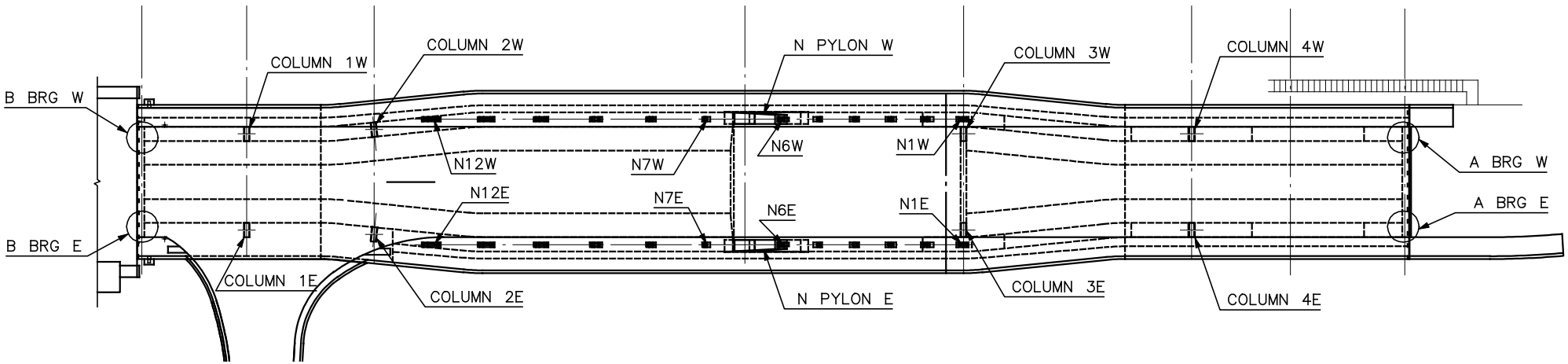

PLAN

NORTH CABLE STAY CODING

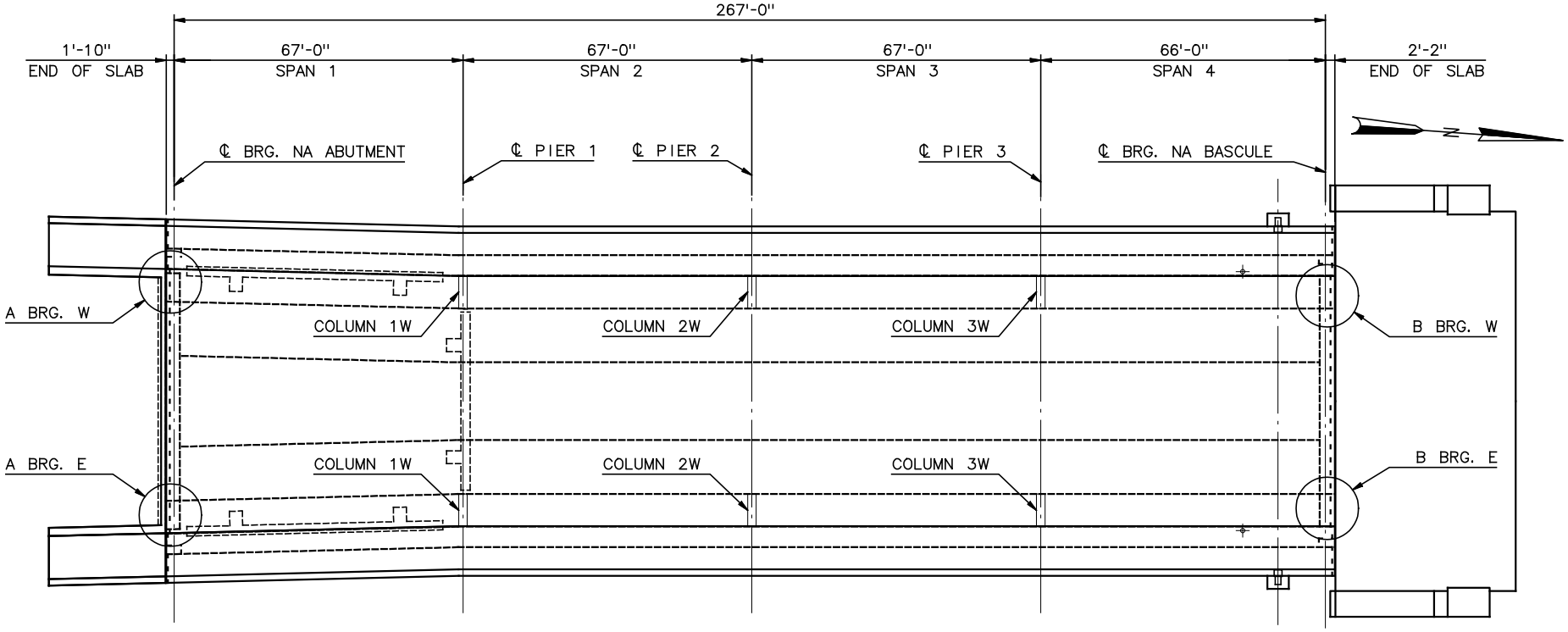

PLAN

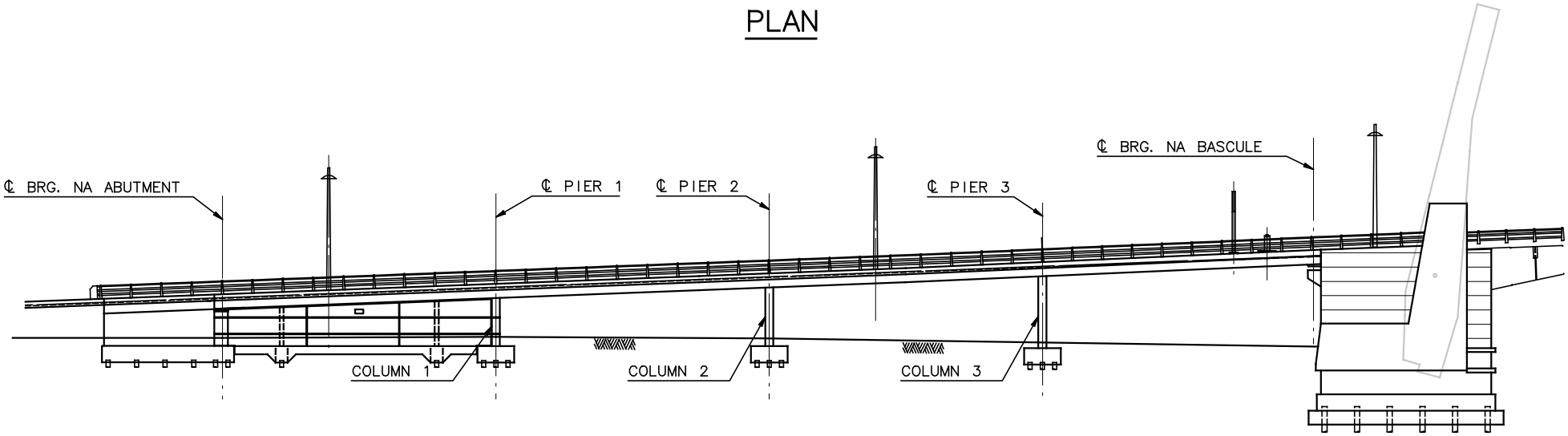

ELEVATION

NORTH APPROACH
CODING

APPENDIX - SECTION II

Checklists for Maintenance and Inspection

APPENDIX - SECTION II

CHECKLISTS FOR MAINTENANCE AND INSPECTION

This section provides checklists for the maintenance and inspection of the cable stayed and approach bridges approaches of the Sixth Street Viaduct.

The Standard WisDOT procedures shall apply for routine maintenance activities to the bridge. For the periodic maintenance, estimates are provided on tasks to be performed for certain elements of the bridge at scheduled intervals over time. However, these are only estimates. The inspections of the bridge would reveal if indeed these maintenance items are necessary at the time.

The annual and biennial inspection checklists given in this section serve as a guide to the bridge inspectors. It is strongly recommended that prior to a scheduled inspection, the bridge inspectors become thoroughly familiar with the provisions and procedures discussed in this Manual. They should also review information related to previous inspection. It cannot be over emphasized that the actual condition of a bridge element would establish its frequency of inspection.

If during the inspection and maintenance process any items need to be further clarified, then the bridge designer of record should be contacted.

SIXTH STREET VIADUCT

MAINTENANCE CHECKLIST

INTERVAL	ITEM	TASK
Monthly	Bridge Deck	Pick up debris and sweep bridge.
	Expansion Joints	Remove debris and report broken or loose components to the Department.
	Deck Drainage System	Remove debris from scuppers and report broken or loose components to the Department.
Yearly	Bridge Lighting	Check system for broken wires and excessive corrosion.
Every 10 years	Cable-Stay Corrosion Protection System	Remove reference strand.
	Geometry Survey	Survey deck & pylon geometry (evaluate settlements).
	Strip Seal Expansion Joints	Service expansion joints.

SIXTH STREET VIADUCT

MAINTENANCE CHECKLIST

INTERVAL	ITEM	TASK
Every 20 years	Concrete Structure	Repaint concrete surfaces.
Every 35 years	Elastomeric Bearing	Replace elastomeric bearings.
	Wearing Surface	Replace microsilica wearing surface.

SIXTH STREET VIADUCT

ANNUAL INSPECTION CHECKLIST

ITEM	WHAT TO LOOK FOR	REFERENCE IN MANUAL
General review of bridge	Cursory walk through inspection of all items listed in Biennial Inspection	Entire Section 9
General cleanliness	Debris accumulation, etc.	9.3.5.1, 9.3.5.4, 9.3.5.5
Lighting Systems	As per manufacturer's recommendations	

SIXTH STREET VIADUCT

BIENNIAL INSPECTION CHECKLIST

ITEM	WHAT TO LOOK FOR	REFERENCE IN MANUAL
SUBSTRUCTURE ELEMENTS		
Footings	Cracking or spalling of concrete. Corrosion of reinforcing steel.	9.3.1.2
Pier Shafts	Cracking or spalling of concrete. Corrosion of reinforcing steel.	9.3.1.3
Pier Caps	Cracking or spalling of concrete. Corrosion of reinforcing steel.	9.3.1.4
Pylons	Cracking or spalling of concrete. Corrosion of reinforcing steel. Anchor box cracking.	9.3.3

SIXTH STREET VIADUCT

BIENNIAL INSPECTION CHECKLIST

ITEM	WHAT TO LOOK FOR	REFERENCE IN MANUAL
SUBSTRUCTURE ELEMENTS		
Deck Slab	Cracking or spalling of concrete. Corrosion of reinforcing steel. Corrosion of post-tensioning steel	9.3.2.1
End Beams	Cracking or spalling of concrete. Corrosion of reinforcing steel. Corrosion of post-tensioning steel.	9.3.2.3
Edge Girders	Cracking or spalling of concrete. Corrosion of reinforcing steel.	9.3.2.2
Post-tensioning System	Corrosion of duct. Corrosion of post-tensioning steel. Cracking of mortar cap at anchorage. Corrosion of anchorage.	9.3.2.5
Cable-Stay System	Stay pipe and anchorage corrosion. Cracking of flange to pipe welds. Watertightness at cable exit points Ring nut painting system.	9.3.4
Elastomeric Bearings Pads	Excessive bulging of vertical sides. Excessive horizontal deformation. Splits or tears in the neoprene. Corrosion of steel plates.	9.3.2.4

SIXTH STREET VIADUCT

BIENNIAL INSPECTION CHECKLIST

ITEM	WHAT TO LOOK FOR	REFERENCE IN MANUAL
DECK ELEMENTS		
Roadway Wearing Surface	Riding Quality	9.3.5.1
Sidewalks	Cracking or spalling of concrete. Corrosion of reinforcing steel.	9.3.5.3
Expansion Joint Assemblies	Corrosion of joint assembly. Watertightness of joint. Missing, broken or loose joint Material. Excessive joint movement.	9.3.5.5
Drainage System	Accumulation of debris in drain inlet. Corrosion of drains. Loose or broken parts.	9.3.5.4

SIXTH STREET VIADUCT

SPECIAL INSPECTIONS

ITEM	INTERVAL	REFERENCE IN MANUAL
SURVEYS		9.5
Settlement of the pylons & piers	Every 10 years.	
Lateral displacement of pylons and approach piers	Every 10 years.	
Profile grade of roadway	Every 10 years.	
Expansion joint openings	Every 2 years.	
Elastomeric bearing deflections	Every 2 years.	

APPENDIX - SECTION III

Structural Condition Survey Forms

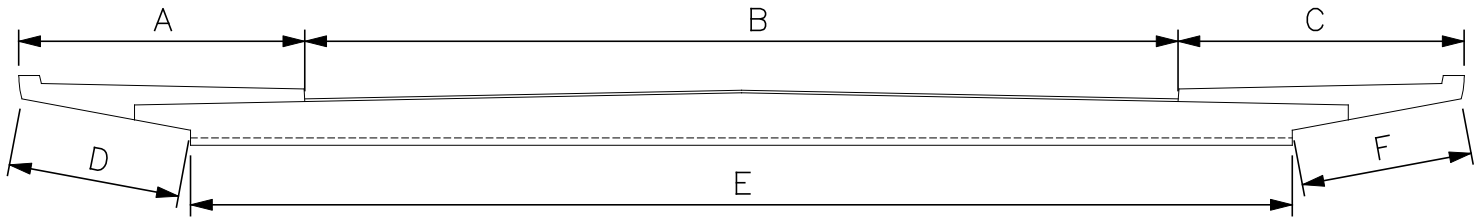

SECTION

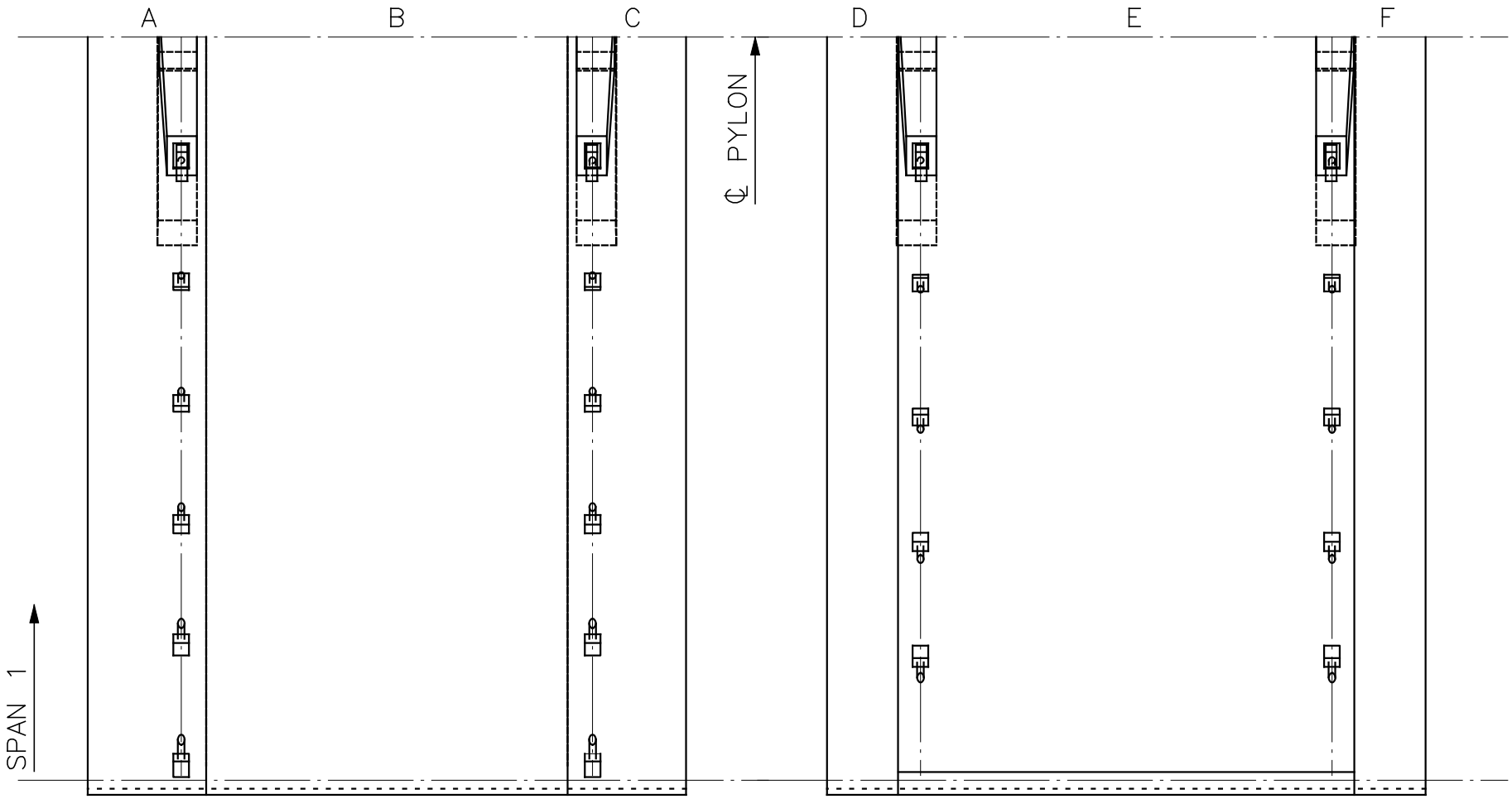

PLAN

REFLECTED PLAN

SOUTH CABLE STAY

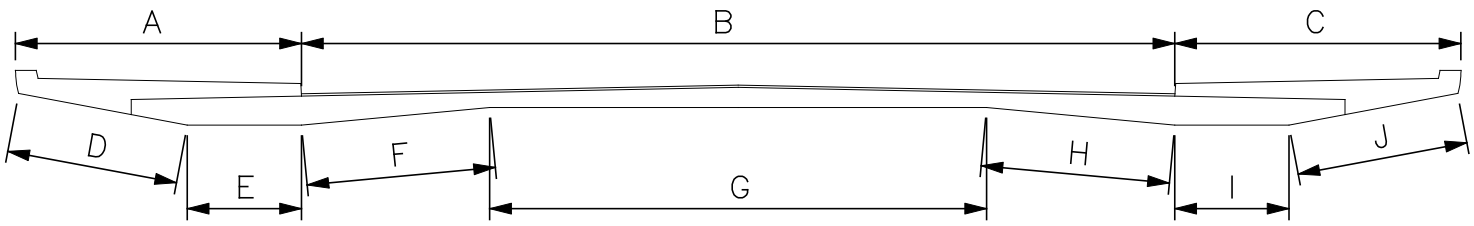

SECTION

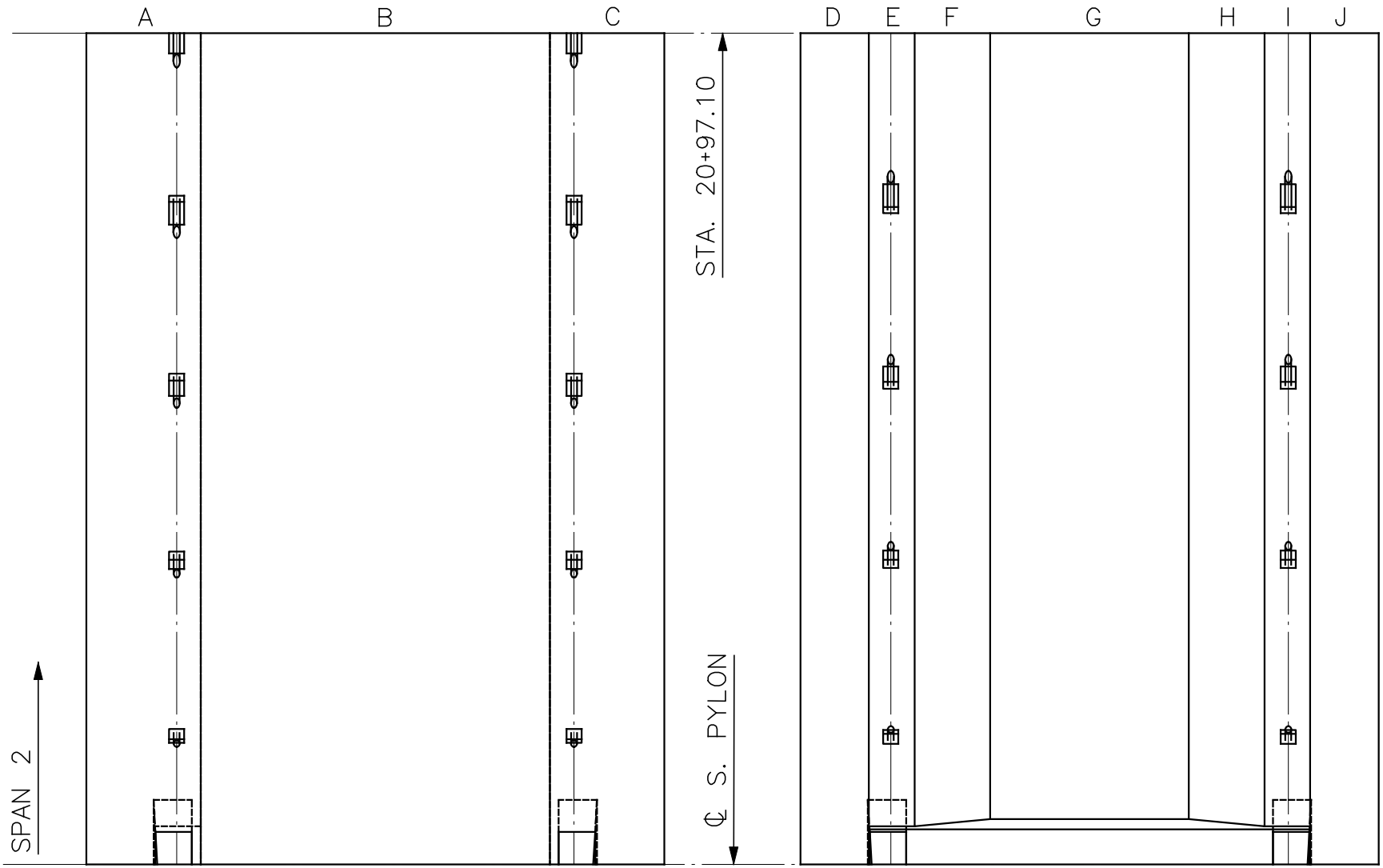

PLAN

REFLECTED PLAN

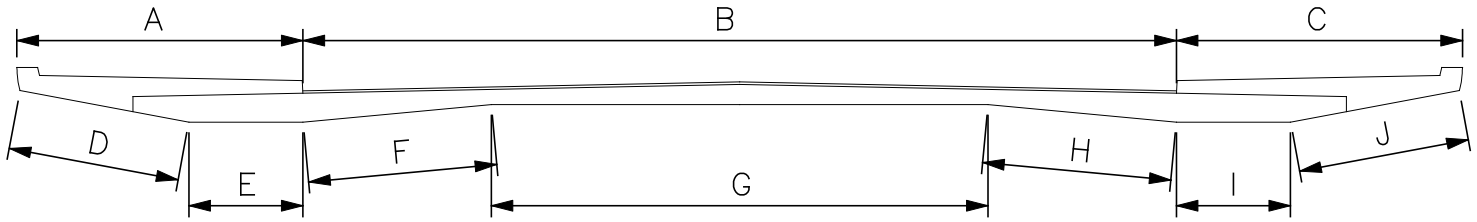

SECTION

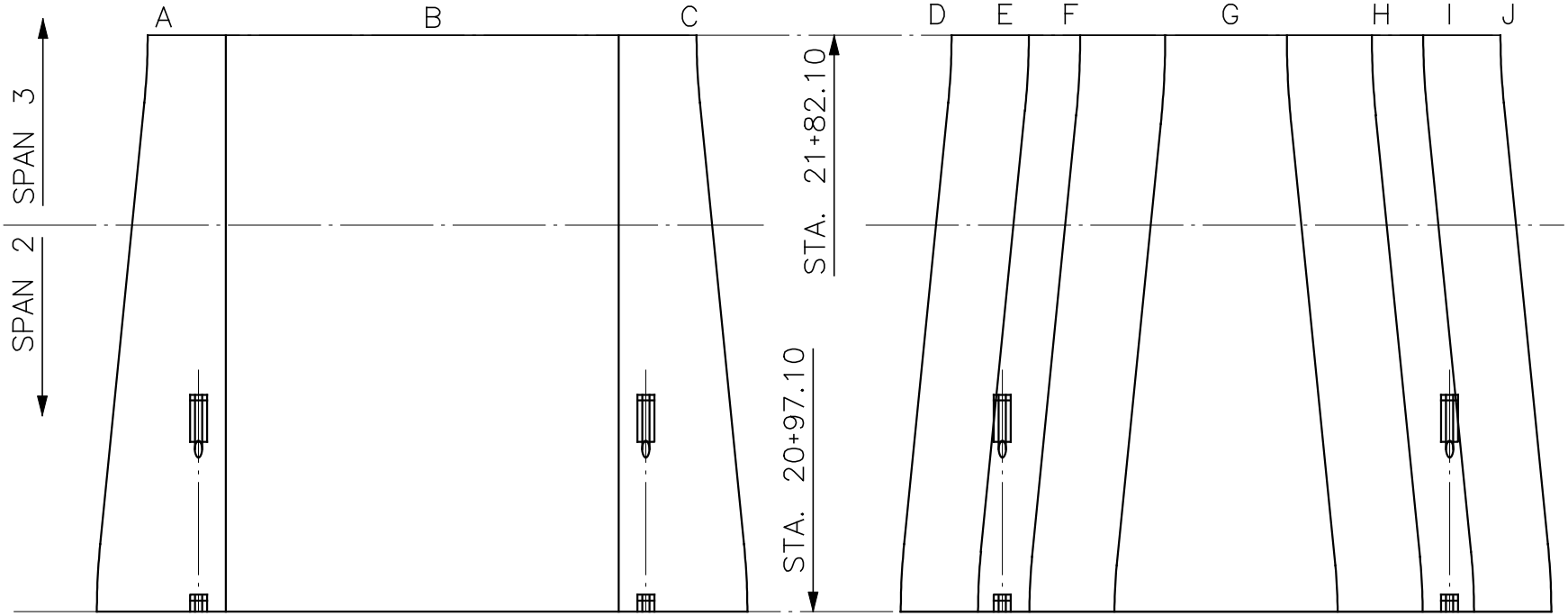

PLAN

REFLECTED PLAN

SOUTH CABLE STAY

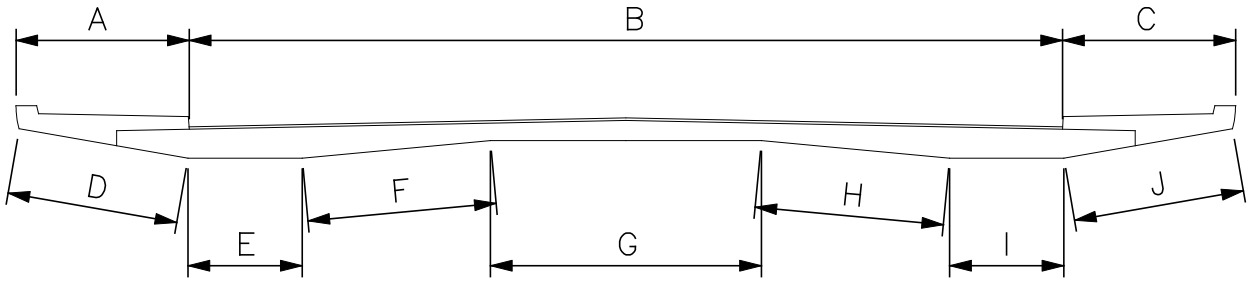

SECTION

PLAN

REFLECTED PLAN

SOUTH CABLE STAY

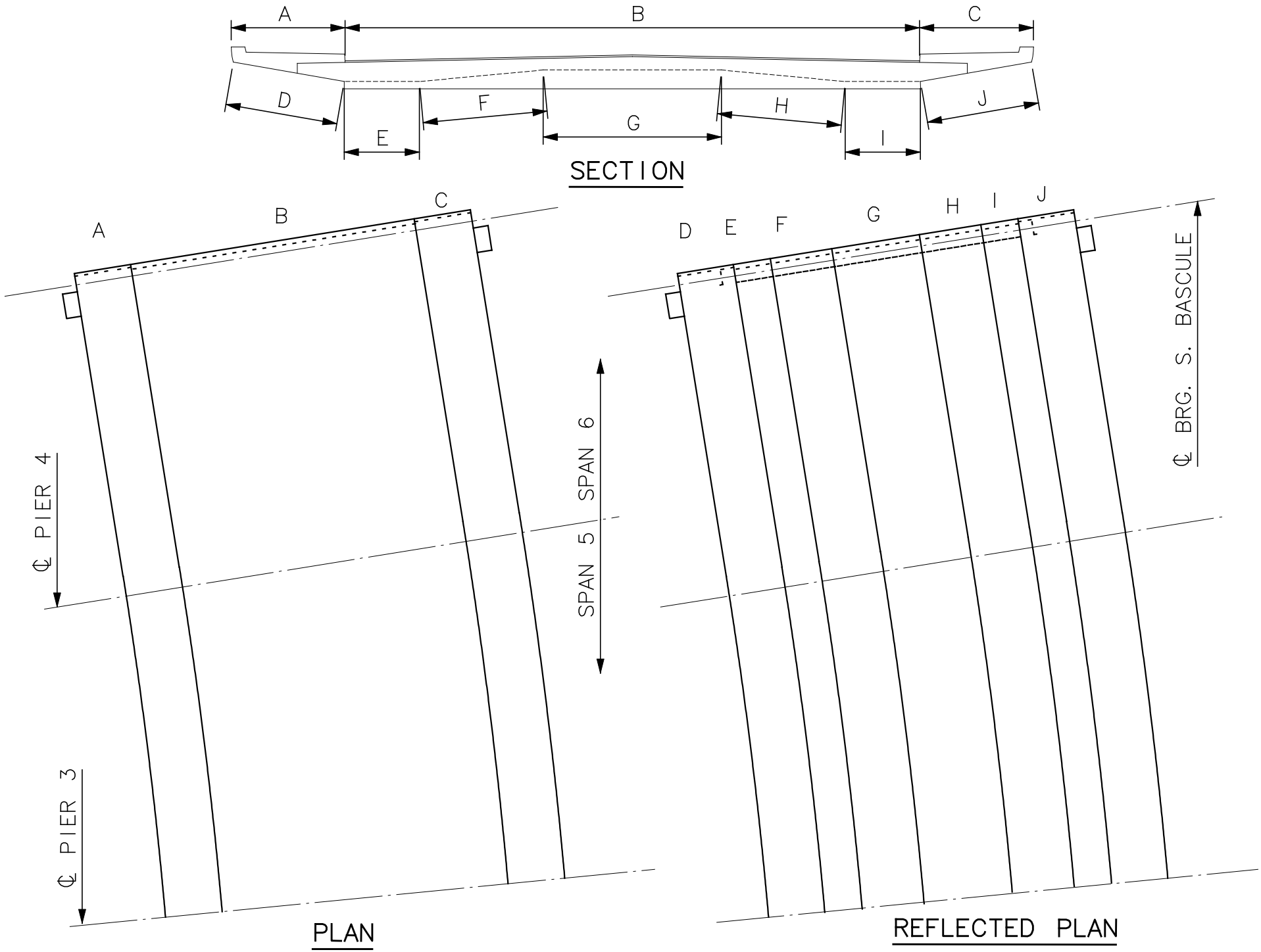

SOUTH CABLE STAY

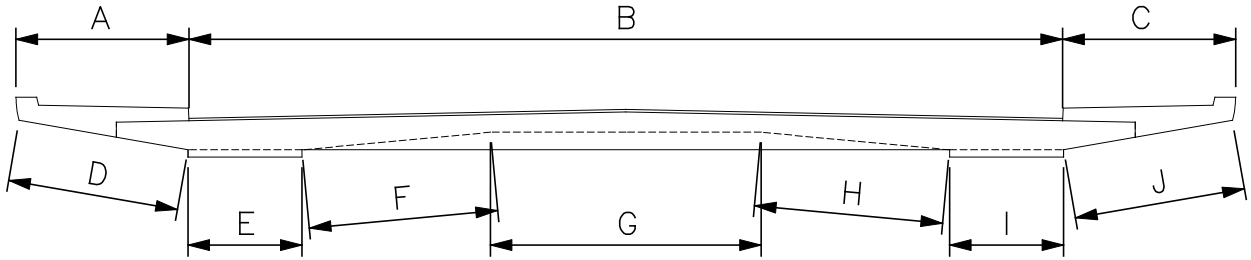

SECTION

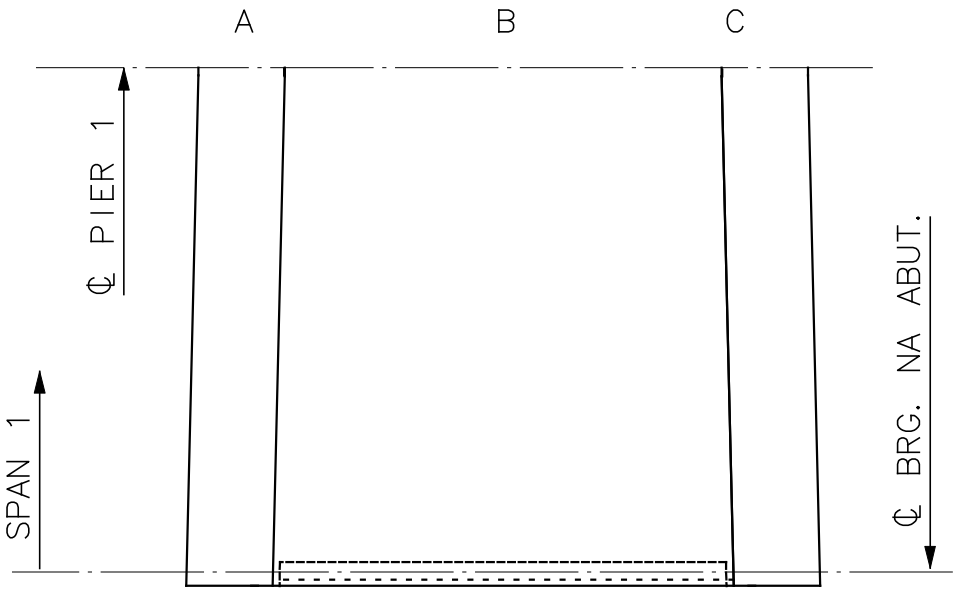

PLAN

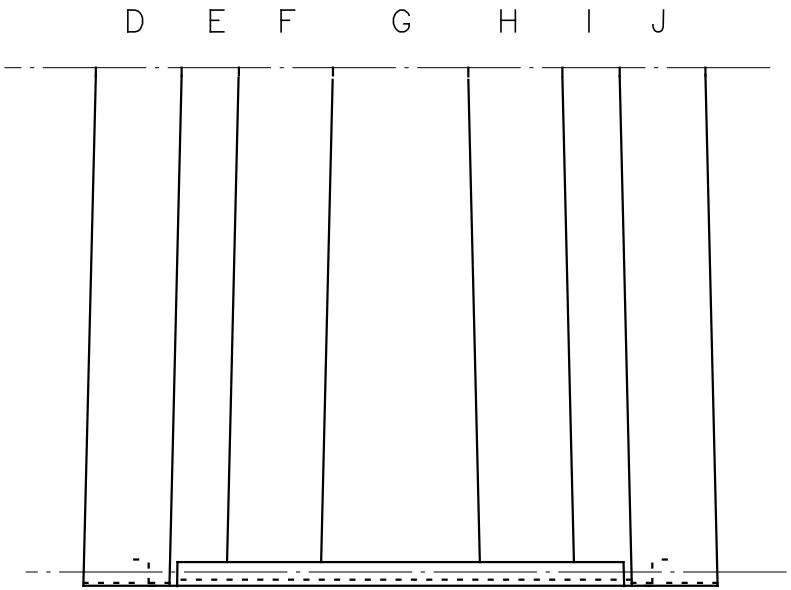

REFLECTED PLAN

NORTH APPROACH

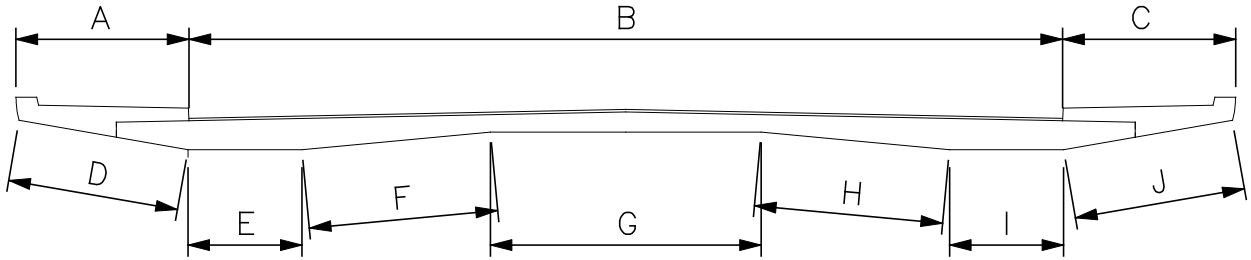

SECTION

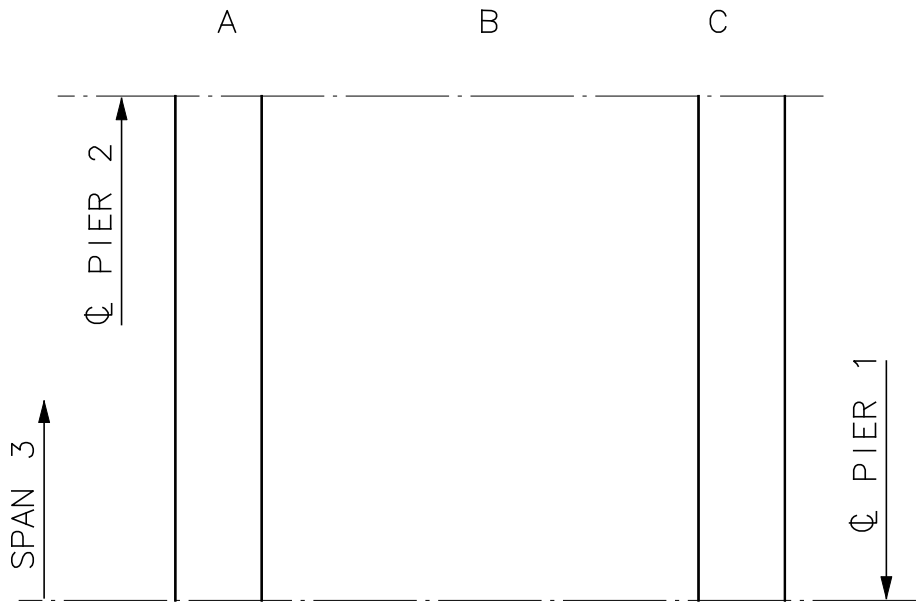

PLAN

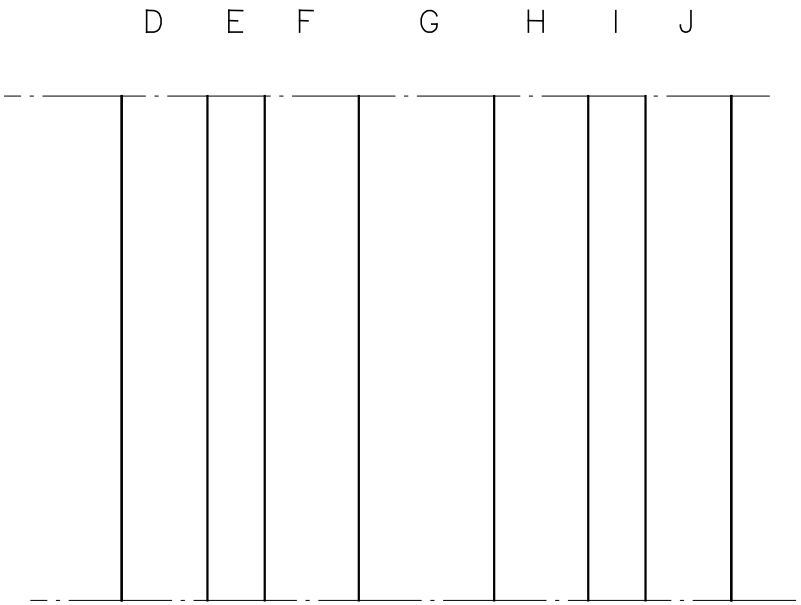

REFLECTED PLAN

NORTH APPROACH

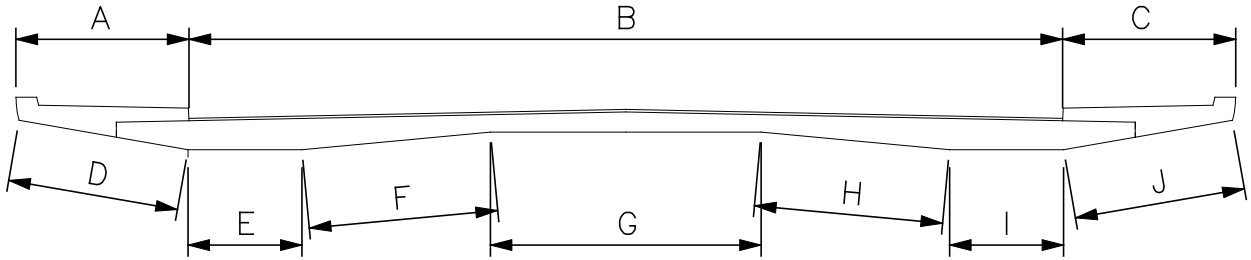

SECTION

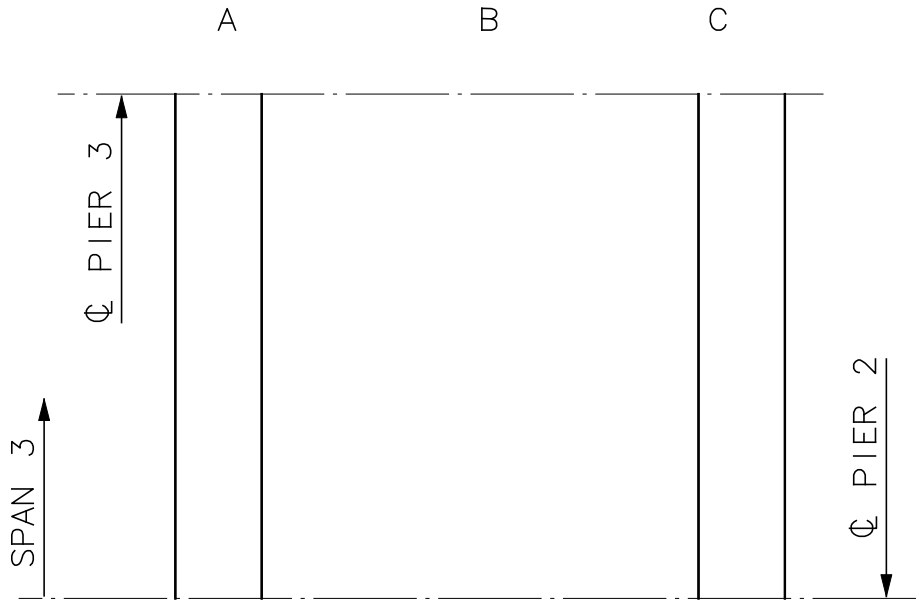

PLAN

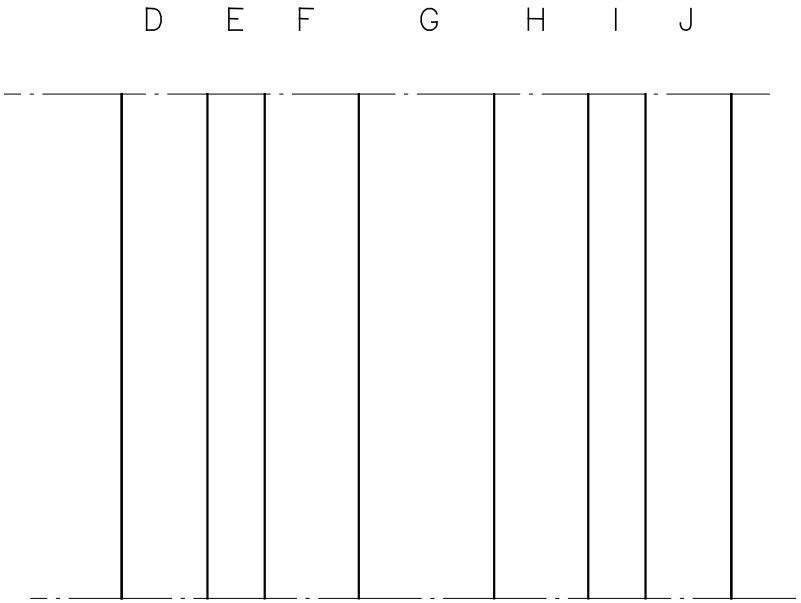

REFLECTED PLAN

NORTH APPROACH

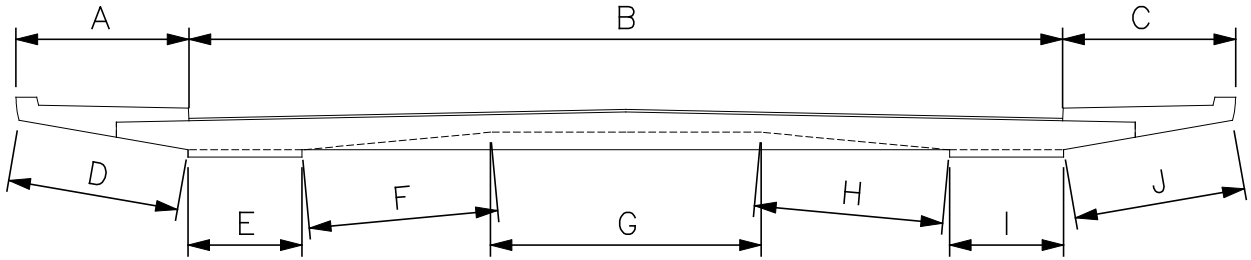

SECTION

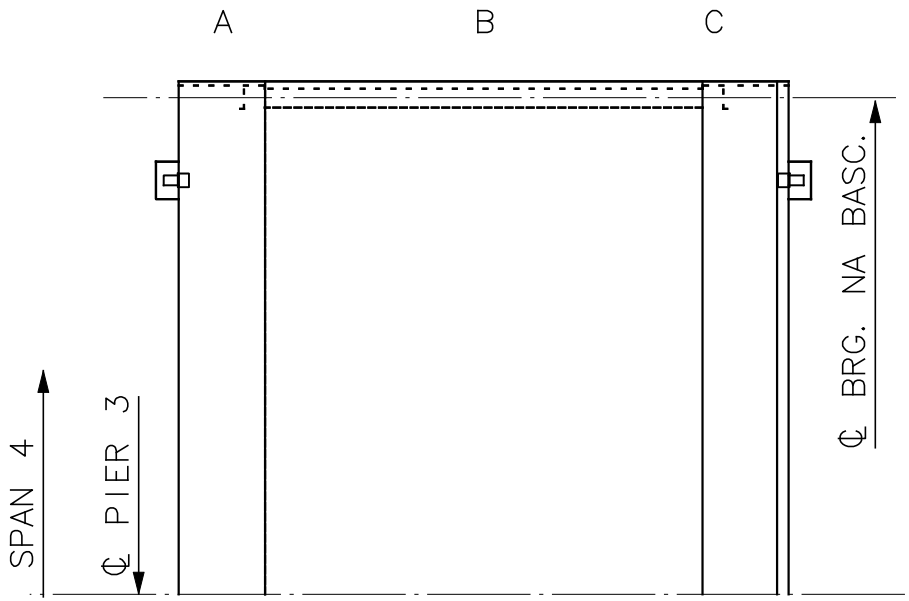

PLAN

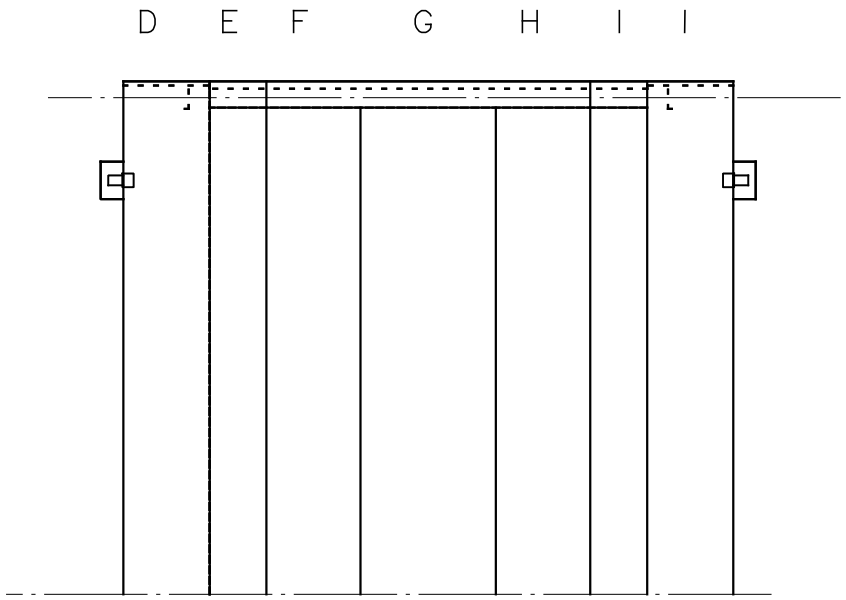

REFLECTED PLAN

NORTH APPROACH

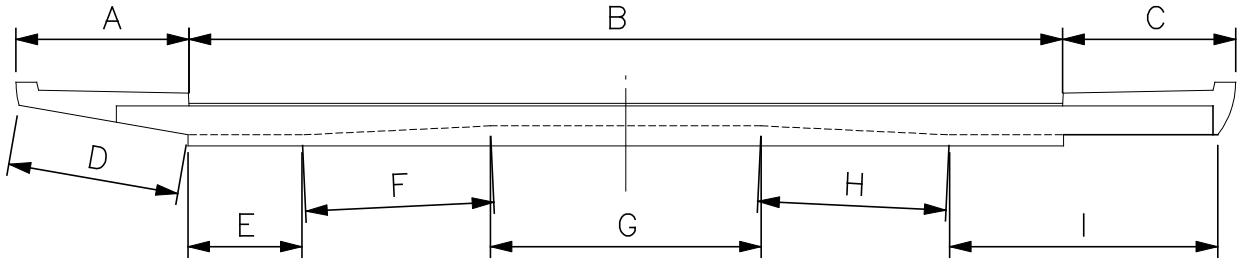

SECTION

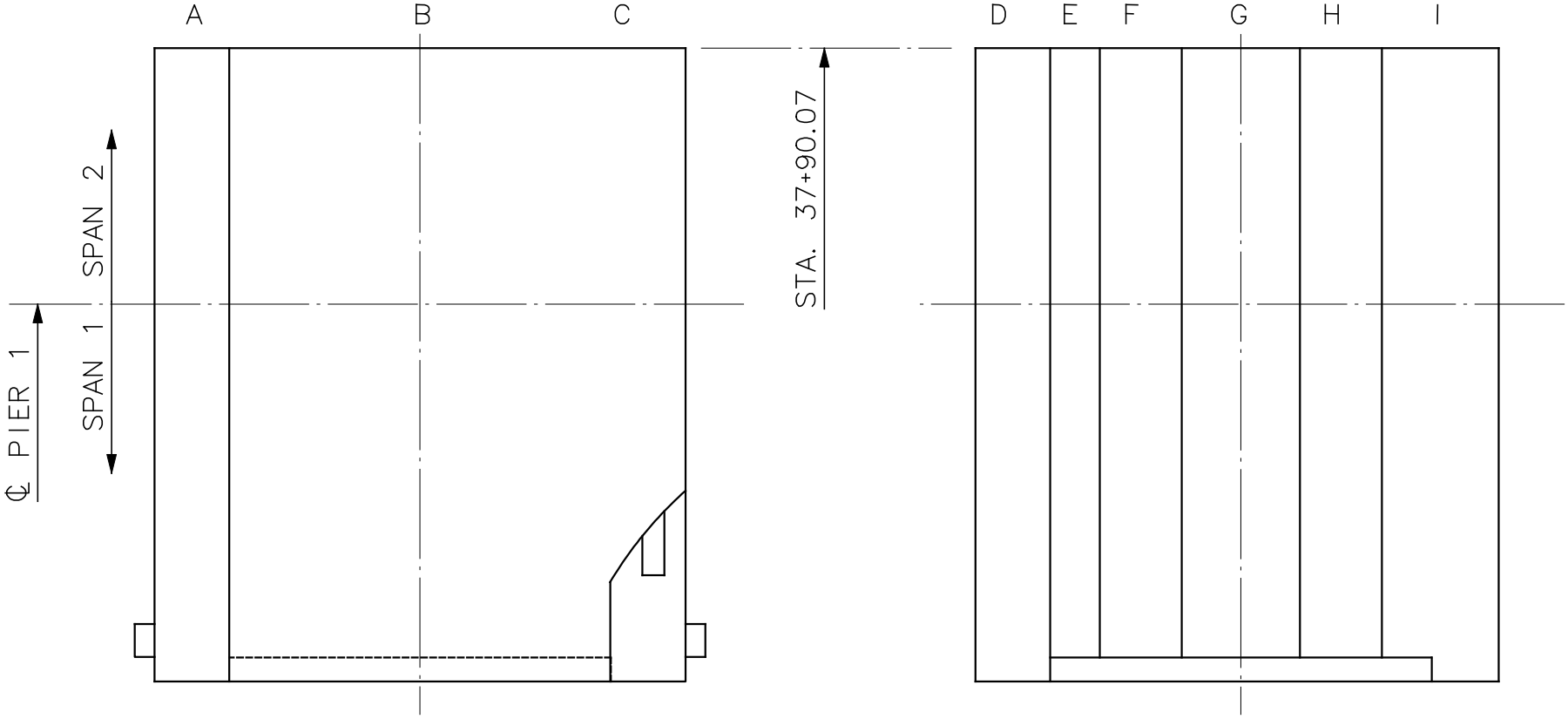

PLAN

REFLECTED PLAN

NORTH CABLE STAY

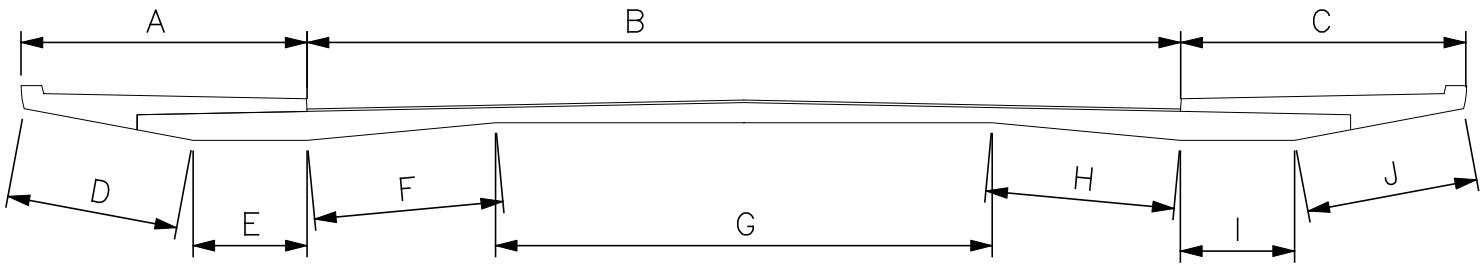

SECTION

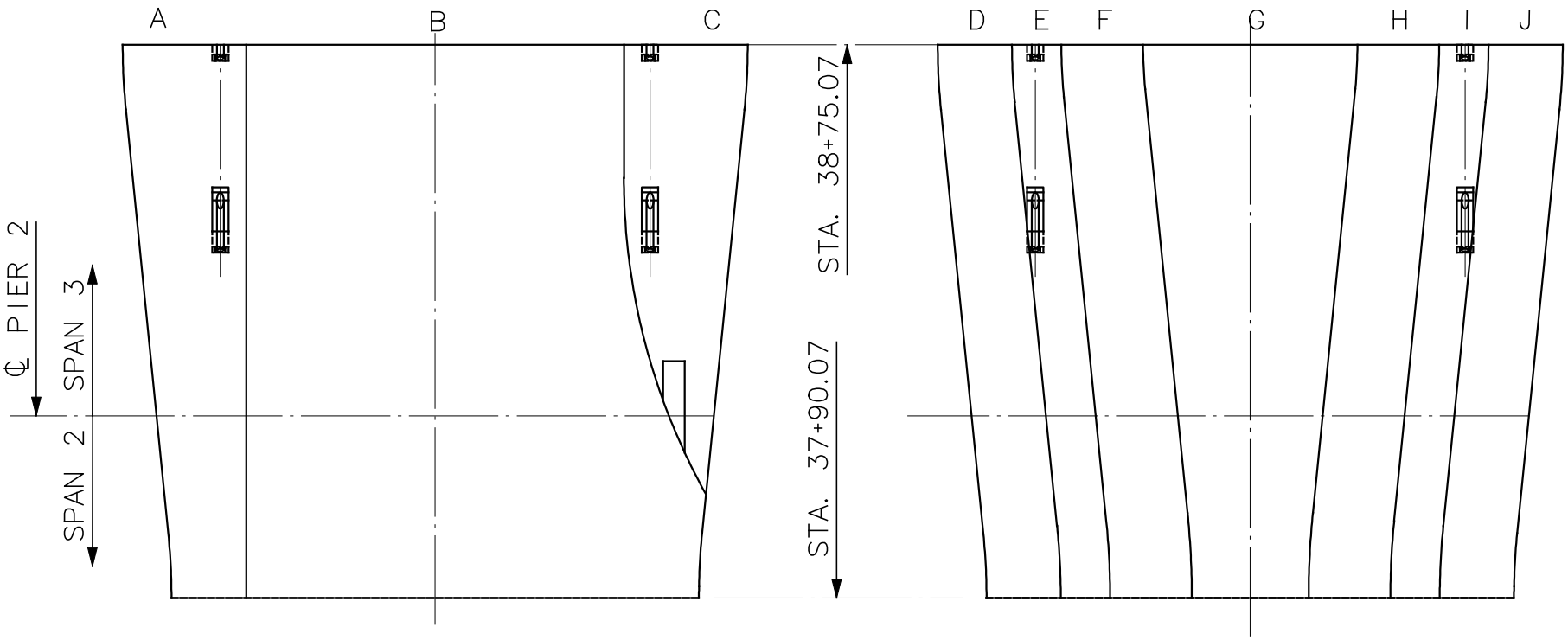

PLAN

REFLECTED PLAN

NORTH CABLE STAY

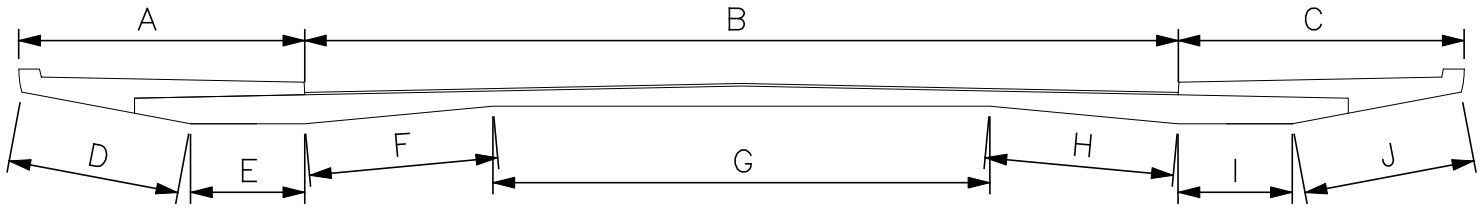

SECTION

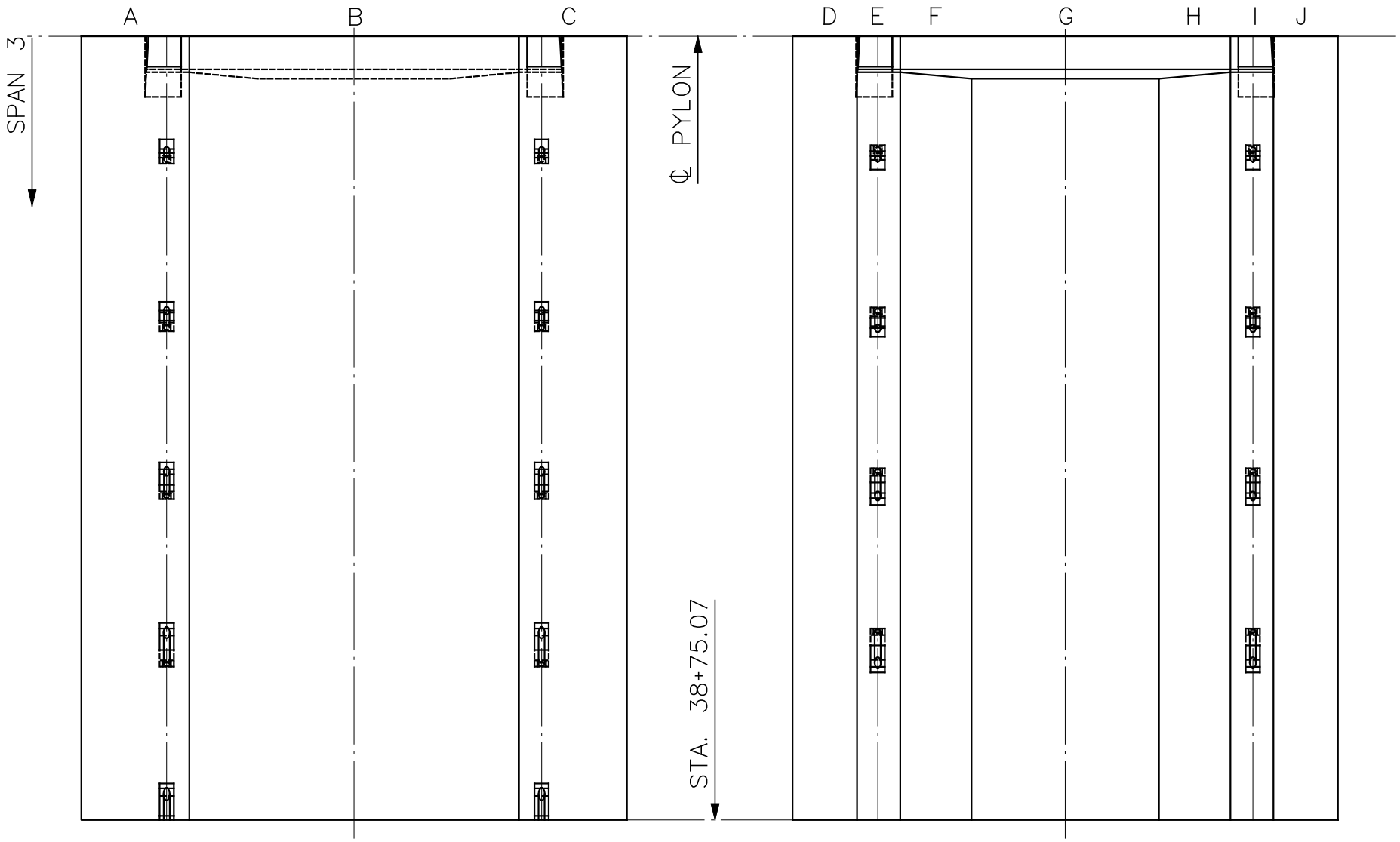

PLAN

REFLECTED PLAN

NORTH CABLE STAY

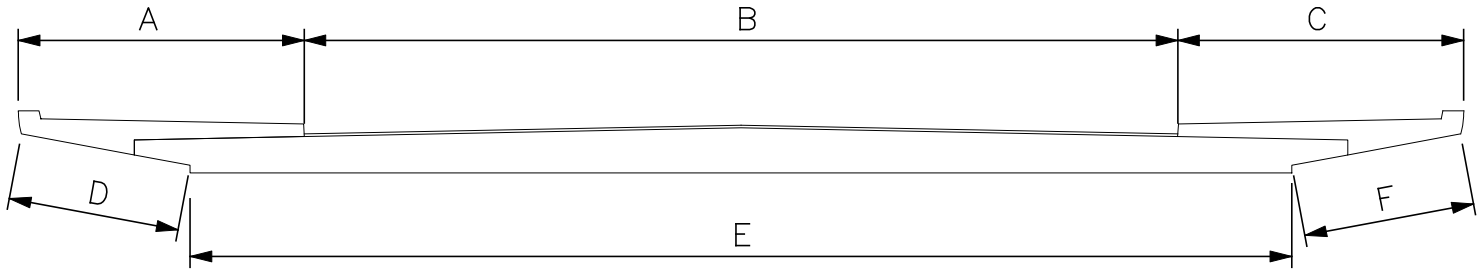

SECTION

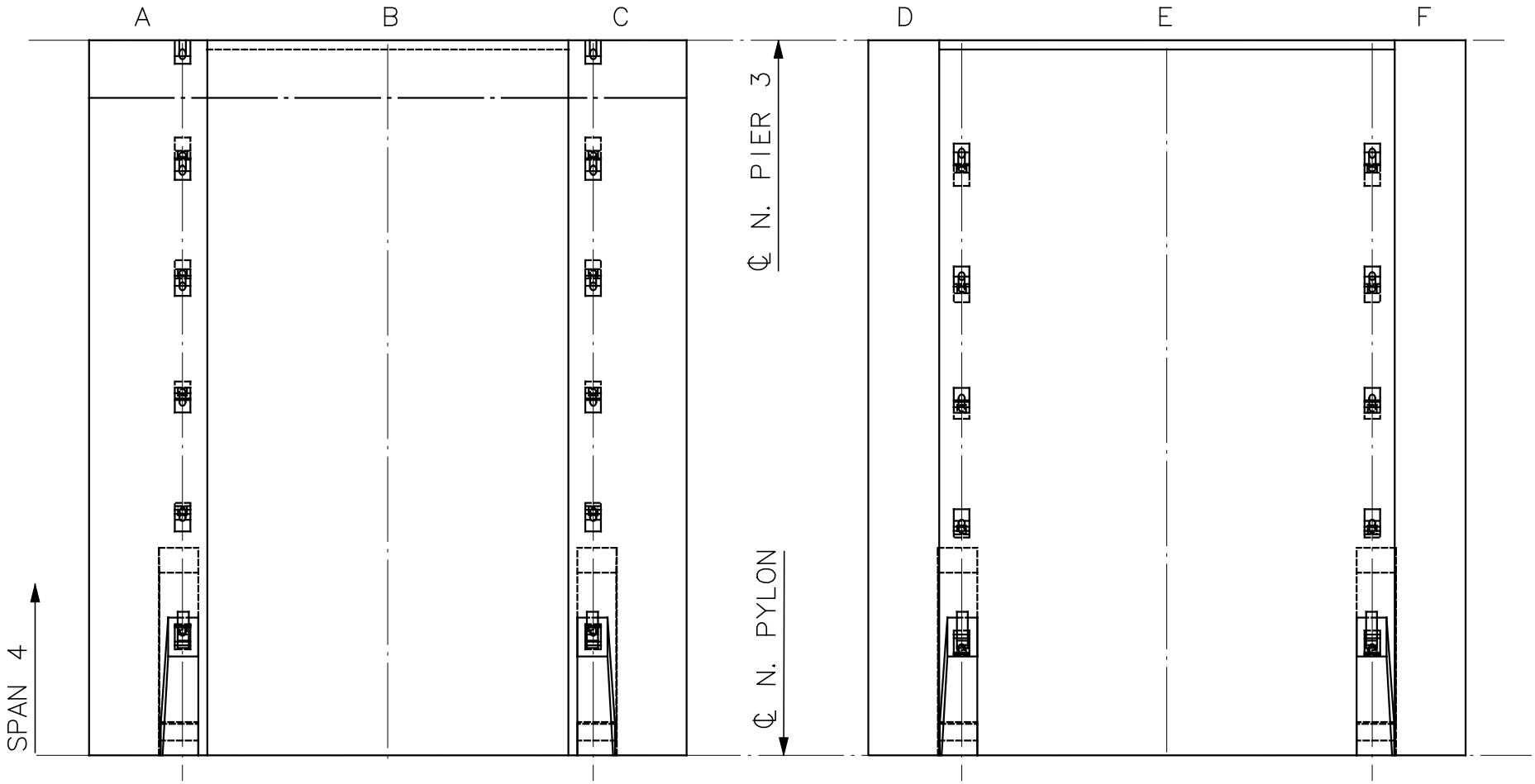

PLAN

REFLECTED PLAN

NORTH CABLE STAY

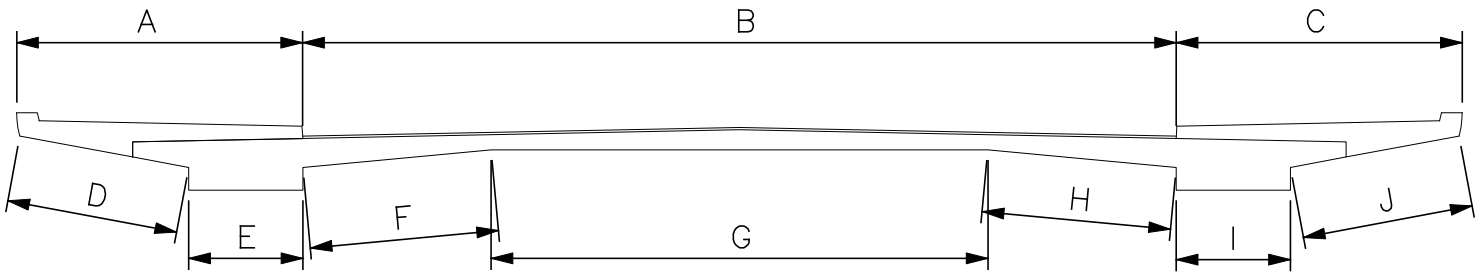

SECTION

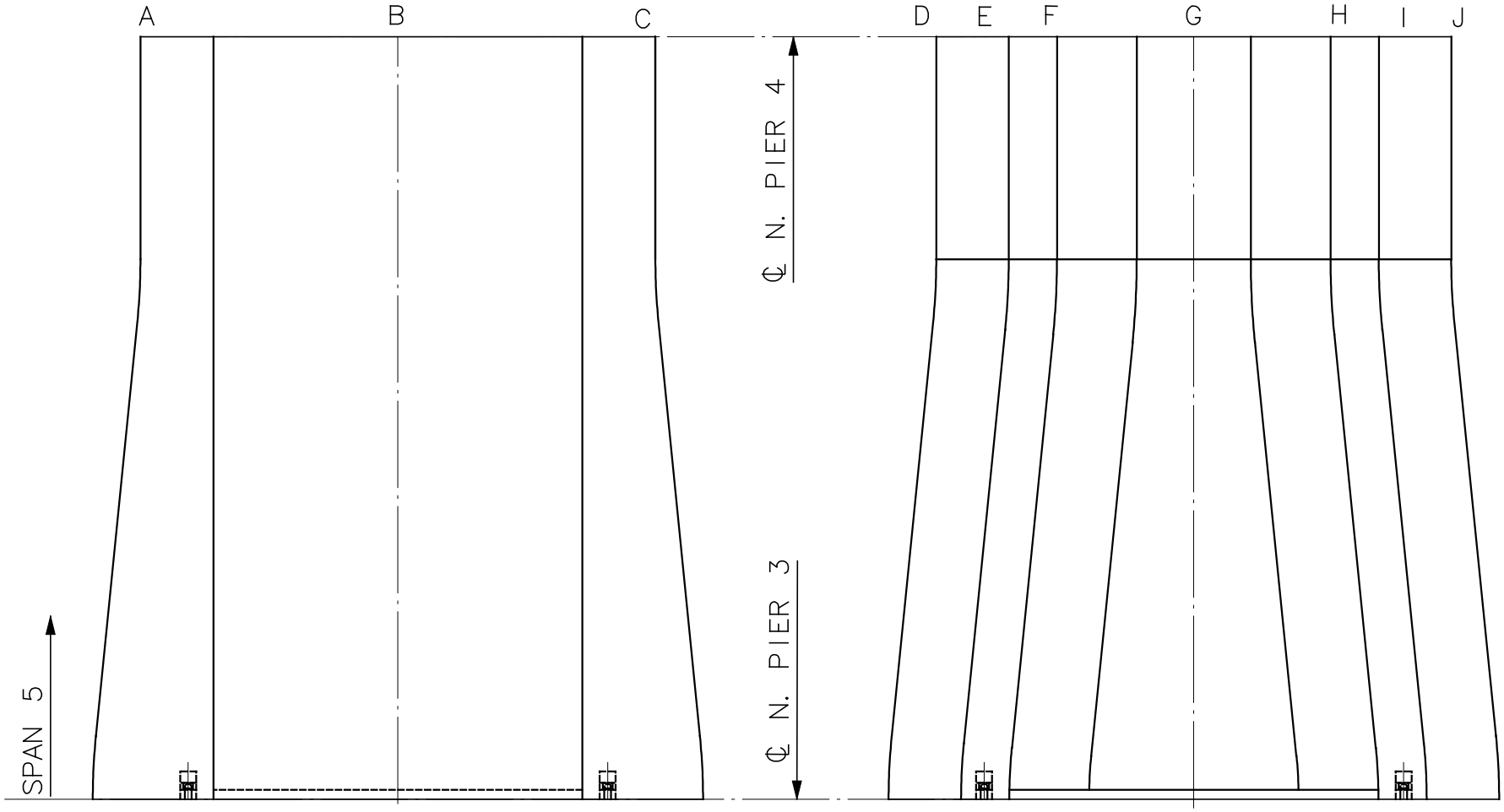

PLAN

REFLECTED PLAN

NORTH CABLE STAY

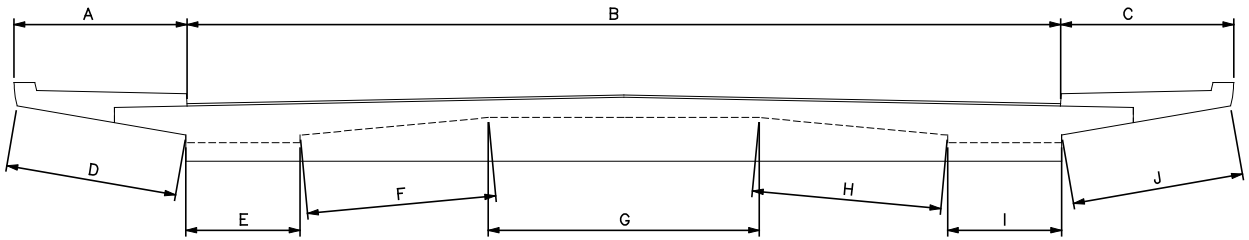

SECTION

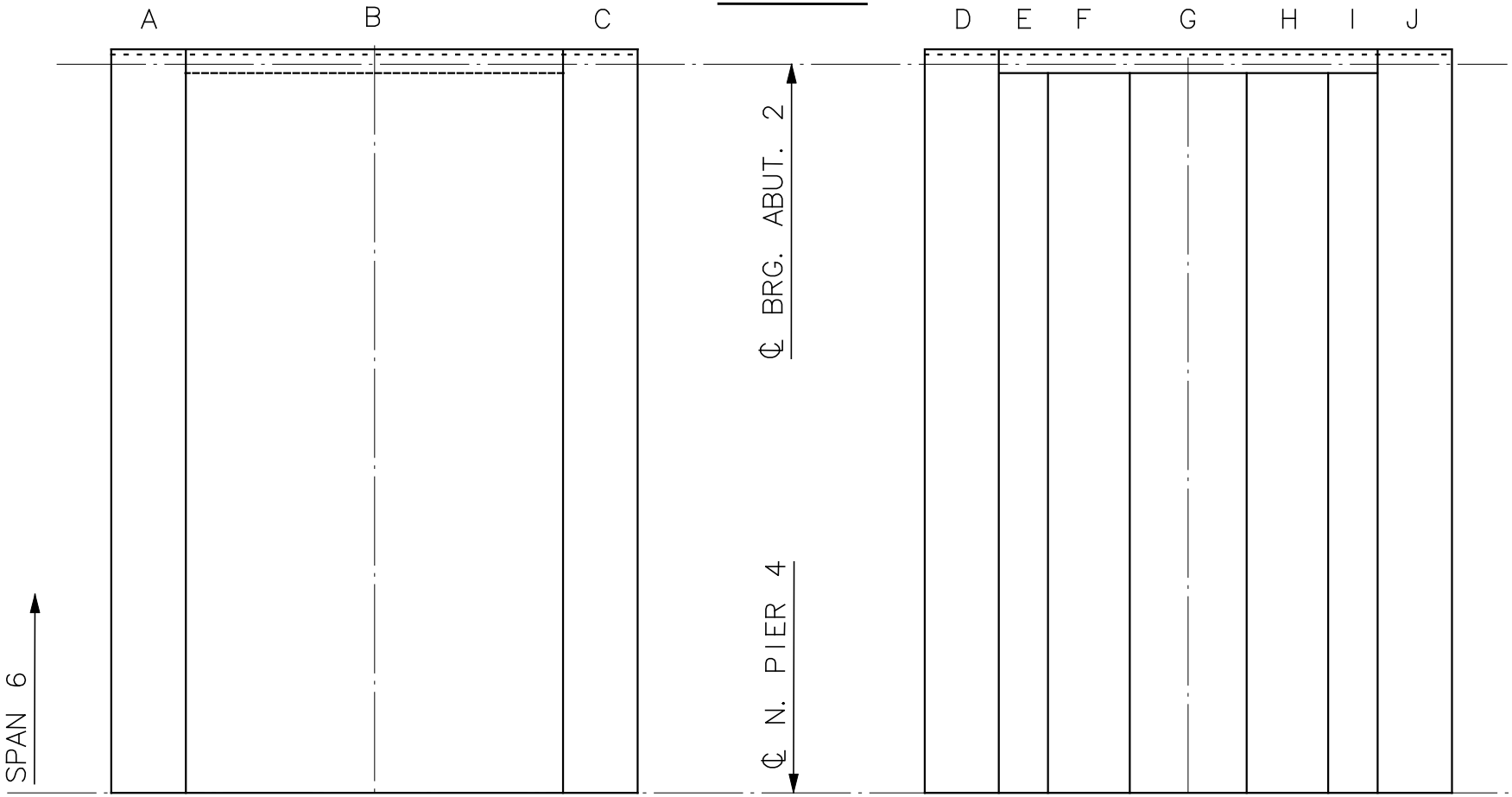

PLAN

REFLECTED PLAN

NORTH CABLE STAY

APPENDIX - SECTION IV

Procedure for Stay-Cable Replacement

APPENDIX – SECTION IV

PROCEDURE FOR STAY-CABLE REPLACEMENT

Strands are removed based on the following procedure:

1. Remove the transition covers and guide pipe extensions to provide access to the cable clamps.
2. Detension the cable clamps to allow sufficient clearance to allow individual strand removal.
3. Remove the protective anchorage covers at the top and bottom cable anchorages and identify the strand to be removed.
4. With a monostrand jack, stress the selected strand at the below deck anchorage to allow removal of the wedges.
5. Partially remove the wedges at the deck anchorage to allow detensioning of the strand. When the monostrand jack is near the end of its stroke, reseat the wedges and regrip the strand to allow this procedure to be repeated until the strand is detensioned.
6. After strand detensioning, remove the wedges of the detensioned strand at the pylon anchorage.
7. Splice the replacement strand to the existing strand to be removed.
8. Remove the existing strand from the pylon anchorage location with the aid of a winch.
9. Upon removal of the existing strand, the new strand is positioned and the wedges at the tower anchorage may be seated and the new strand is ready for stressing.
10. It is noted that only one cable can be removed in its entirety at any one time. If an entire cable is removed, no detensioning operations on adjacent cables is permitted.

The above procedure is only conceptual. Detailed procedures must be developed prior to the replacement of any stay cable. Any cable stressing operation must be performed by a contractor knowledgeable in this field, and under the direct supervision of an Engineer knowledgeable in cable-stay bridge design.

APPENDIX - SECTION V

Information Recorded During Construction

SOUTH CABLE STAY PYLON CABLE MONITORING

	6/5/02	6/5/02	6/5/02	6/5/02	6/6/02	6/6/02	6/6/02	6/6/02	6/6/02
	BASELINE	70% S7	100% S7	70% S6	Morning	100% S6	70% S8	100% S8	70% S5
WEST S1	39.71								
WEST S2	39.85								
WEST S3	39.86								
WEST S4	39.73							39.73	39.72
WEST S5	39.48		39.47	39.47	39.48	39.48		39.48	39.48
WEST S6	39.10	39.10	39.08	39.08	39.09	39.09		39.10	39.09
WEST S7	38.70	38.71	38.69	38.7	38.70	38.70	38.70	38.71	
WEST S8	38.29	38.29	38.28			38.29	38.30	38.32	
WEST S9	37.80					37.80	37.80	37.81	
WEST S10	37.24								
WEST S11	36.46								
WEST S12	35.66								
CL 1	38.15								
CL 2	38.27								
CL 3	38.32								
CL 4	38.28							38.29	38.28
CL 5	38.14		38.13	38.14	38.14	38.14		38.15	38.14
CL 6	37.98	37.98	37.96	37.96	37.99	37.97		38.00	37.98
CL 7	37.41	37.42	37.4	37.41	37.41	37.41	37.40	37.41	
CL 8	36.85	36.85	36.84			36.85	36.85	36.87	
CL 9	36.24					36.24	36.23	36.25	
CL 10	35.60								
CL 11	34.83								
CL 12	33.98								
EAST S1	39.73								
EAST S2	39.91								
EAST S3	39.87								
EAST S4	39.79							39.80	39.79
EAST S5	39.53		39.52	39.52	39.53	39.53		39.53	39.52
EAST S6	39.09	39.09	39.08	39.08	39.09	39.09		39.09	39.08
EAST S7	38.71	38.72	38.72	38.72	38.72	38.72	38.72	38.73	
EAST S8	38.28	38.28	38.27			38.28	38.29	38.31	
EAST S9	37.89					37.88	37.88	37.89	
EAST S10	37.19								
EAST S11	36.45								
EAST S12	35.67								
WEST TOP	1701.67	1701.69	1701.72	1701.69	1701.71	1701.72	1701.85	1701.95	1701.9
OF WINDOW	-32.16	-32.16	-32.15	-32.14	-32.15	-32.17	-32.18	-32.19	-32.18
ELEVATION	122.09	122.10	122.12	122.09	122.08	122.09	122.11	122.12	122.1
WEST BOTTOM	1706.26	1706.26		1706.25	1706.28	1706.29	1706.35	1706.44	1706.39
OF WINDOW	-32.14	-32.14		-32.14	-32.14	-32.17	-32.15	-32.16	-32.15
ELEVATION	97.28	97.28		97.27	97.24	97.23	97.28	97.28	97.26
EAST TOP	1701.61	1701.63	1701.66	1701.60	1701.64	1701.64	1701.77	1701.88	1701.8
OF WINDOW	33.69	33.70	33.70	33.71	33.69	33.66	33.66	33.65	33.67
ELEVATION	122.19	122.20	122.22	122.18	122.16	122.17	122.21	122.23	122.21
EAST BOTTOM	1706.09	1706.11		1706.10	1706.11	1706.12	1706.21	1706.27	1706.22
OF WINDOW	33.73	33.72		33.72	33.71	33.70	33.70	33.69	33.71
ELEVATION	97.34	97.35		97.33	97.32	97.32	97.35	97.35	97.34
TEMPERATURE	55F	55F	49F	50F	51F	54F	60F	65F	65F
CONDITION	Cloudy	Cloudy	Rainy	Cloudy	Sunny	Sunny	Sunny	Sunny	Sunny
TIME	8:00am	11:25am	2:00pm	3:45pm	7:15am	9:00am	11:30am	1:15pm	3:00pm
					6/6/02	6/6/02	6/6/02	6/6/02	6/6/02
					Morning	100% S6	70% S8	100% S8	70% S5

	SOUTH CABLE STAY PYLON CABLE MONITORING								
	6/7/02	6/7/02	6/7/02	6/7/02	6/7/02	6/8/02	6/8/02	6/10/02	6/11/02
	Morning	100% S5	70% S9	100% S9	70% S4	Morning	100% S4	70% S10	Morning
WEST S1									
WEST S2									
WEST S3				39.87	39.87	39.85	39.86		
WEST S4	39.73	39.74		39.74	39.75	39.75	39.75		
WEST S5	39.49	39.49		39.50	39.51	39.51	39.51		
WEST S6	39.10	39.10							
WEST S7									
WEST S8		38.34	38.33	38.34					
WEST S9		37.81	37.82	37.84			37.85	37.86	37.85
WEST S10		37.24	37.25	37.25			37.26	37.28	37.28
WEST S11							36.44	36.46	36.46
WEST S12									
CL 1									
CL 2									
CL 3				38.34	38.34	38.32	38.33		
CL 4	38.28	38.29		38.30	38.29	38.29	38.28		
CL 5	38.15	38.15		38.16	38.16	38.16	38.15		
CL 6	37.99	38.00							
CL 7									
CL 8		36.87	36.87	36.87					
CL 9		36.24	36.24	36.26			36.26	36.26	36.25
CL 10		35.60	35.60	35.61			35.60	Obs View	Obs View
CL 11							34.81	34.83	34.81
CL 12									
EAST S1									
EAST S2									
EAST S3				39.87	39.88	39.88	39.88		
EAST S4	39.80	39.80		39.82	39.81	39.82	39.82		
EAST S5	39.54	39.54		39.55	39.55	39.56	39.55		
EAST S6	39.10	39.10							
EAST S7									
EAST S8		38.33	38.32	38.32					
EAST S9		37.90	37.90	37.92			37.93	37.94	37.94
EAST S10		37.18	37.19	37.21			37.19	37.23	37.23
EAST S11							36.43	36.45	36.44
EAST S12									
WEST TOP	1701.9	1701.85	1702.03	1702.13	1702.03	1702	1701.99	1702.11	1702.13
OF WINDOW	-32.14	-32.15	-32.15	-32.15	-32.14	-32.11	-32.14	-32.14	-32.11
ELEVATION	122.12	122.11	122.15	122.16	122.13	122.15	122.15	122.16	122.17
WEST BOTTOM	1706.39	1706.36	1706.48	1706.53	1706.48	1706.45	1706.45	1706.51	1706.52
OF WINDOW	-32.14	-32.13	-32.14	-32.14	-32.15	-32.12	-32.13	-32.13	-32.12
ELEVATION	97.28	97.27	97.29	97.31	97.26	97.28	97.27	97.3	97.28
EAST TOP	1701.81	1701.77	1701.96	1702.03	1701.95	1701.91	1701.89	1702.04	1702.04
OF WINDOW	33.67	33.67	33.64	33.64	33.66	33.67	33.64	33.66	33.65
ELEVATION	122.21	122.21	122.23	122.24	122.23	122.24	122.22	122.26	122.26
EAST BOTTOM	1706.22	1706.19	1706.33	1706.37	1706.32	1706.29	1706.28	1706.35	1706.36
OF WINDOW	33.71	33.71	33.69	33.69	33.7	33.71	33.7	33.7	33.69
ELEVATION	97.35	97.33	97.36	97.35	97.35	97.37	97.36	97.38	97.38
TEMPERATURE	56F	57F	66F	73F	73F	61F	74F	85F	72F
CONDITION	P. Sunny	P Sunny	Sunny	Sunny	Sunny	Sunny	Sunny	P. Sunny	Cloudy
TIME	6:30am	8:30am	10:37am	12:30pm	2:48pm	6:45am	10:03am	3:11pm	7:00am
	6/7/02	6/7/02	6/7/02	6/7/02	6/7/02	6/8/02	6/8/02	6/10/02	6/11/02
	Morning	100% S5	70% S9	100% S9	70% S4	Morning	100% S4	70% S10	Morning

	SOUTH CABLE STAY PYLON CABLE MONITORING								
	6/11/02	6/11/02	6/11/02	6/11/02	6/12/02	6/12/02	6/12/02	6/12/02	6/13/02
	100% S10	70% S3	100% S3	70% S11	Morning	100% S11	70% S2	100% S2	Morning
WEST S1						39.74	39.76	39.77	
WEST S2	39.89	39.89	39.90			39.95	39.96	39.97	
WEST S3	39.90	39.91	39.92			39.97	39.98	39.98	
WEST S4	39.78	39.78	39.79						
WEST S5									
WEST S6									
WEST S7									
WEST S8									
WEST S9	37.85								
WEST S10	37.30		37.30	37.31	37.32	37.32			37.35
WEST S11	36.47		36.46	36.48	36.49	36.48			36.52
WEST S12			35.65	35.66	35.67	35.68			35.68
CL 1						38.17	38.17	38.18	
CL 2	38.29		38.30			38.32	38.33	38.34	
CL 3	38.34		38.35			38.38	38.39	38.40	
CL 4	38.31		38.31						
CL 5									
CL 6									
CL 7									
CL 8									
CL 9	36.25								
CL 10	Obs View		35.63	35.63	35.62	35.63			35.63
CL 11	34.82		34.82	34.83	34.82	34.84			34.84
CL 12			33.96	33.97	33.97	33.98			33.97
EAST S1						39.76	39.77	39.79	
EAST S2	39.94	39.94	39.96			40.00	40.02	40.03	
EAST S3	39.90	39.91	39.93			39.98	39.98	39.99	
EAST S4	39.85	39.84	39.85						
EAST S5									
EAST S6									
EAST S7									
EAST S8									
EAST S9	37.94								
EAST S10	37.24		37.25	37.24	37.26	37.26			37.28
EAST S11	36.45		36.45	36.45	36.47	36.50			36.50
EAST S12			35.61	35.67	35.67	35.70			35.69
WEST TOP	1702.22	1702.12	1702.08	1702.2	1702.23	1702.25	1702.18	1702.12	1702.12
OF WINDOW	-32.11	-32.11	-32.13	-32.1	-32.08	-32.07	-32.08	-32.09	-32.08
ELEVATION	122.18	122.16	122.14	122.18	122.17	122.19	122.16	122.15	122.12
WEST BOTTOM	1706.58	1706.52	1706.5	1706.56	1706.57	1706.59	1706.54	17.06.52	1706.51
OF WINDOW	-32.12	-32.12	-32.13	-32.12	-32.11	-32.09	-32.1	-32.11	-32.09
ELEVATION	97.33	97.29	97.27	97.3	97.29	97.31	97.29	97.28	97.27
EAST TOP	1702.14	1702.04	1702	1702.12	1702.14	1702.19	1702.11	1702.05	1702.04
OF WINDOW	33.63	33.64	33.64	33.64	33.64	33.63	33.63	33.64	33.63
ELEVATION	122.27	122.26	122.24	122.28	122.28	122.28	122.25	122.25	122.24
EAST BOTTOM	1706.42	1706.36	1706.34	1706.41	1706.42	1706.44	1706.39	1706.38	1706.36
OF WINDOW	33.69	33.69	33.69	33.69	33.69	33.7	33.69	33.69	33.67
ELEVATION	97.4	97.37	97.37	97.39	97.39	97.41	97.39	97.4	97.36
TEMPERATURE	75F		78F	80F	60F	60F	60F	60F	60F
CONDITION	Cloudy		Cloudy	P. Sunny	Cloudy	Cloudy	Cloudy	Cloudy	Cloudy
TIME	8:54am		1:15pm	3:57pm	7:00am	8:37am	12:13pm	2 :31pm	7:00am
	6/11/02		6/11/02	6/11/02	6/12/02	6/12/02	6/12/02	6/12/02	6/13/02
	100% S10		100% S3	70% S11	Morning	100% S11	70% S2	100% S2	Morning

	SOUTH CABLE STAY PYLON CABLE MONITORING								
	6/13/02	6/13/02	6/13/02	6/14/02	6/14/02				
	70%S12	100% S12	70% S1	Morning	100% S1				
WEST S1		39.78	39.79	39.79	39.80				
WEST S2		40.02	40.02	40.00	40.00				
WEST S3		40.04	40.01	40.01	40.01				
WEST S4					39.85				
WEST S5					39.53				
WEST S6					39.13				
WEST S7					38.70				
WEST S8					38.34				
WEST S9					37.89				
WEST S10	37.32	37.32			37.36				
WEST S11	36.51	36.51			36.56				
WEST S12	35.69	35.70			35.75				
CL 1		38.19	38.19	38.18	38.19				
CL 2		38.46	38.35	38.35	38.35				
CL 3		38.43	38.41	38.40	38.40				
CL 4					38.35				
CL 5					38.18				
CL 6					37.99				
CL 7					37.40				
CL 8					36.86				
CL 9					36.27				
CL 10	35.62	35.62			35.65				
CL 11	34.83	34.84			34.88				
CL 12	33.98	33.99			34.01				
EAST S1		39.81	39.81	39.80	39.81				
EAST S2		40.07	40.06	40.06	40.06				
EAST S3		40.05	40.02	40.01	40.02				
EAST S4					39.91				
EAST S5					39.60				
EAST S6					39.12				
EAST S7					38.71				
EAST S8					38.32				
EAST S9					37.96				
EAST S10	37.27	37.27			37.30				
EAST S11	36.50	36.51			36.55				
EAST S12	35.71	35.72			35.75				
WEST TOP	1702.22	1702.29	1702.14	1702.16	1702.12				
OF WINDOW	-32.06	-32.08	-32.07	-32.06	-32.06				
ELEVATION	122.17	122.16	122.14	122.15	122.14				
WEST BOTTOM	1706.57	1706.60	1706.53	1706.53	1706.52				
OF WINDOW	-32.1	-32.10	-32.10	-32.09	-32.1				
ELEVATION	97.29	97.27	97.27	97.28	97.25				
EAST TOP	1702.15	1702.21	1702.09	1702.08	1702.06				
OF WINDOW	33.62	33.61	33.61	33.61	33.61				
ELEVATION	122.26	122.26	122.24	122.24	122.22				
EAST BOTTOM	1706.42	1706.45	1706.39	1706.39	1706.37				
OF WINDOW	33.67	33.67	33.68	33.68	33.67				
ELEVATION	97.37	97.38	97.38	97.37	97.37				
TEMPERATURE	60F	60F	60F	60F	60F				
CONDITION	Cloudy	Cloudy	Cloudy	P. Sunny	P. Cloudy				
TIME	9:08am	11:24	2:49pm	6:50am	9:04am				
	6/13/02	6/13/02	6/13/02	6/14/02	6/14/02				
	70%S12	100% S12	70% S1	Morning	100% S1				

NORTH CABLE STAY PYLON CABLE MONITORING

	3/26/02	3/26/02	3/27/02	3/27/02	3/27/02	3/28/02	3/28/02	3/28/02	3/29/02
	BASELINE	70% N7	Morning	100% N7	70% N6	Morning	100% N6	70% N8	Morning
WEST N1	37.21								
WEST N2	36.97								
WEST N3	36.80								
WEST N4	36.68								36.68
WEST N5	36.52			36.53	36.52	36.52	36.52		36.52
WEST N6	36.25	36.26	36.25	36.26	36.25	36.26	36.26		36.26
WEST N7	36.54	36.55	36.54	36.55	36.54	36.55	36.55	36.55	36.55
WEST N8	36.55	36.56	36.55	36.56	36.56	36.56	36.56	36.58	36.58
WEST N9	36.55						36.56	36.57	36.56
WEST N10	36.56								
WEST N11	36.51								
WEST N12	36.47								
CL 1	35.26								
CL 2	35.25								
CL 3	35.17								
CL 4	35.20								35.2
CL 5	35.17			35.18	35.17	35.17	35.18		35.18
CL 6	35.14	35.14	35.13	35.14	35.14	35.13	35.13		35.14
CL 7	35.14	35.14	35.13	35.14	35.14	35.14	35.14	35.15	35.14
CL 8	35.05	35.05	35.05	35.06	35.05	35.05	35.05	35.06	35.05
CL 9	34.96						34.96	34.97	34.97
CL 10	34.87								
CL 11	34.72								
CL 12	34.60								
EAST N1	37.17								
EAST N2	36.98								
EAST N3	36.81								
EAST N4	36.69								36.69
EAST N5	36.55			36.56	36.55	36.55	36.55		36.56
EAST N6	36.28	36.28	36.28	36.29	36.28	36.28	36.28		36.29
EAST N7	36.51	36.52	36.51	36.53	36.52	36.52	36.52	36.52	36.52
EAST N8	36.54	36.54	36.54	36.55	36.55	36.54	36.54	36.56	36.56
EAST N9	36.57						36.57	36.58	36.58
EAST N10	36.56								
EAST N11	36.52								
EAST N12	36.48								
WEST TOP	4028.62	4028.59	4028.62	4028.60	4028.63	4028.63	4028.62	4028.47	4028.45
OF WINDOW	-33.68	-33.66	-33.67	-33.71	-33.73	-33.67	-33.67	-33.67	-33.68
ELEVATION			120.45	120.46	120.39	120.46	120.46	120.50	120.51
WEST BOTTOM	4023.81	4023.77	4023.81	4023.79	4023.81	4023.80	4023.80	4023.72	4023.72
OF WINDOW	-33.73	-33.72	-33.72	-33.74	-33.72	-33.72	-33.73	-33.73	-33.72
ELEVATION			94.65	94.63	94.62	94.62	94.64	94.65	94.65
EAST TOP	4028.57	4028.53	4028.58	4028.55	4028.61	4028.59	4028.59	4028.44	4028.43
OF WINDOW	32.12	32.15	32.14	32.10	32.14	32.12	32.13	32.11	32.12
ELEVATION			120.35	120.35	120.35	120.38	120.38	120.41	120.43
EAST BOTTOM	4023.83	4023.81	4023.84	4023.82	4023.84	4023.84	4023.82	4023.75	4023.75
OF WINDOW	32.15	32.17	32.16	32.13	32.16	32.15	32.15	32.14	32.14
ELEVATION			94.56	94.56	94.56	94.56	94.57	94.6	94.61
TEMPERATURE			28F	41F	42F	36F	38F	43F	40F
CONDITION			SUNNY	SUNNY	SUNNY	CLOUDY	CLOUDY	CLOUDY	CLOUDY
TIME			7:21AM	11:00AM	2:40PM	7:00AM	8:50AM	2:00PM	7:00AM

NORTH CABLE STAY PYLON CABLE MONITORING

	3/29/02	3/29/02	3/29/02	4/1/02	4/1/02	4/1/02	4/2/02	4/2/02	4/2/02	4/3/02
	100% N8	70% N5	100% N5	Morning	70% N9	100% N9	Morning	70% N4	100% N4	Morning
WEST N1										
WEST N2										
WEST N3						36.81	36.82	36.82	36.83	
WEST N4	36.68	36.69	36.69			36.69	36.71	36.71	36.72	
WEST N5	35.53	36.54	36.54			36.54	36.56	36.56	36.56	
WEST N6	36.27	36.27	36.27							
WEST N7	36.55									
WEST N8	36.59			36.60	36.60	36.59				
WEST N9	36.57			36.57	36.59	36.59				36.63
WEST N10				36.56	36.57	36.56				36.58
WEST N11										36.51
WEST N12										
CL 1										
CL 2										
CL 3						35.18	35.18	35.18	35.19	
CL 4	35.2	35.21	35.2			35.2	35.21	35.21	35.22	
CL 5	35.18	35.18	35.18			35.18	35.19	35.18	35.19	
CL 6	35.14	35.14	35.14							
CL 7	35.14									
CL 8	35.06			35.06	35.07	35.05				
CL 9	34.97			34.96	34.98	34.97				34.99
CL 10				34.86	34.88	34.86				34.88
CL 11										34.71
CL 12										
EAST N1										
EAST N2										
EAST N3						36.81	36.83	36.83	36.84	
EAST N4	36.69	36.7	36.7			36.7	36.71	36.71	36.73	
EAST N5	36.56	36.57	36.57			36.57	36.59	36.58	36.59	
EAST N6	36.29	36.3	36.29							
EAST N7	36.52									
EAST N8	36.57			36.58	36.59	36.57				
EAST N9	36.59			36.58	36.61	36.61				36.64
EAST N10				36.56	36.57	36.56				36.58
EAST N11										36.52
EAST N12										
WEST TOP	4028.33	4028.41	4028.48	4028.46	4028.28	4028.18	4028.17	4028.25	4028.31	4028.33
OF WINDOW	-33.67	-33.66	-33.67	-33.66	-33.67	-33.66	-33.63	-33.64	-33.64	-33.64
ELEVATION	120.51	120.49	120.48	120.47	120.52	120.55	120.53	120.51	120.51	120.5
WEST BOTTOM	4023.64	4023.69	4023.72	4023.71	4023.6	4023.54	4023.53	4023.58	4023.62	4023.63
OF WINDOW	-33.73	-33.72	-33.73	-33.72	-33.72	-33.71	-33.71	-33.71	-33.71	-33.71
ELEVATION	94.67	94.66	94.66	94.65	96.67	96.68	94.7	94.68	94.67	94.67
EAST TOP	4028.31	4028.39	4028.47	4028.44	4028.28	4028.17	4028.16	4028.24	4028.3	4028.31
OF WINDOW	32.1	32.11	32.1	32.11	32.09	32.07	32.07	32.07	32.08	32.05
ELEVATION	120.43	120.41	120.41	120.39	120.44	120.46	120.47	120.43	120.42	120.4
EAST BOTTOM	4023.65	4023.69	4023.75	4023.76	4023.63	4023.57	4023.57	4023.61	4023.64	4023.67
OF WINDOW	32.14	32.14	32.15	32.14	32.13	32.13	32.12	32.12	32.12	32.11
ELEVATION	94.6	94.59	94.6	94.59	94.6	94.62	94.61	94.59	94.59	94.6
TEMPERATURE	41F	47F	44F	32F	35F	35F	35F	36F	36F	32F
CONDITION	CLOUDY	Hard Rain	Cloudy	P. Cloudy	P. Sunny	Cloudy	Rain	LT. Rain	Cloudy	Sunny
TIME	8:15AM	11:00AM	2:10PM	7:15AM	10:30AM	1:00PM	7:30AM	9:18AM	12:55PM	7:30AM

NORTH CABLE STAY PYLON CABLE MONITORING

	4/3/02	4/3/02	4/4/02	4/4/02	4/4/02	4/5/02	4/5/02	4/8/02	4/8/02	4/8/02
	N10 70%	100% N10	Morning	70% N3	100% N3	70% N11	100% N11	Morning	70% N2	100% N2
WEST N1							37.21	37.21	37.22	37.22
WEST N2			36.99	37.00	37.01		37.02	37.02	37.04	37.04
WEST N3			36.85	36.86	36.86		36.89	36.9	36.9	36.9
WEST N4			36.75	36.76	36.75					
WEST N5										
WEST N6										
WEST N7										
WEST N8										
WEST N9	36.61	36.61								
WEST N10	36.59	36.6			36.62	36.62	36.61			
WEST N11	36.51	36.52			36.53	36.54	36.54			
WEST N12					36.48	36.48	36.48			
CL 1							35.26	35.26	35.27	35.27
CL 2			35.26	35.26	25.26		35.27	35.28	35.29	35.29
CL 3			35.20	35.20	35.2		35.22	35.23	35.23	35.23
CL 4			35.23	35.23	35.23					
CL 5										
CL 6										
CL 7										
CL 8										
CL 9	34.99	34.99								
CL 10	34.88	34.88			34.91	34.9	34.9			
CL 11	34.71	34.72			34.73	34.73	34.72			
CL 12					34.59	34.6	34.59			
EAST N1							37.17	37.18	37.19	37.18
EAST N2			36.99	37.01	37		37.02	37.02	37.04	37.04
EAST N3			36.85	36.87	36.86		36.9	36.91	36.91	36.91
EAST N4			36.75	36.76	36.76					
EAST N5										
EAST N6										
EAST N7										
EAST N8										
EAST N9	36.62	36.63								
EAST N10	36.59	36.6			36.62	36.62	36.61			
EAST N11	36.53	36.53			36.54	36.55	36.55			
EAST N12					36.49	36.49	36.49			
WEST TOP	4028.15	4028.06	4028.06	4028.14	4028.2	4028.08	4028.03	*	*	*
OF WINDOW	-33.66	-33.65	-33.62	-33.62	-33.63	-33.64	-33.62	*	*	*
ELEVATION	120.53	120.45	120.57	120.54	120.51	120.52	120.54	*	*	*
WEST BOTTOM	4023.53	4023.47	4023.46	4023.52	4023.54	4023.5	4023.46	*	4023.54	*
OF WINDOW	-33.72	-33.71	-33.69	-33.69	-33.7	-33.69	-33.69	*	-33.68	*
ELEVATION	94.69	94.7	94.68	94.68	94.68	94.67	94.68	*	94.68	*
EAST TOP	4028.12	4028.05	4028.04	4028.15	4028.19	4028.07	4028.02	*	*	*
OF WINDOW	32.04	32.04	32.04	32.05	32.05	32.03	32.03	*	*	*
ELEVATION	120.44	120.45	120.47	120.45	120.45	120.43	120.45	*	*	*
EAST BOTTOM	4023.54	4023.5	4023.49	4023.55	4023.59	4023.54	4023.5	*	*	*
OF WINDOW	32.1	32.11	32.1	32.1	32.1	32.1	32.1	*	*	*
ELEVATION	94.6	94.61	94.63	94.62	94.59	94.6	94.6	*	*	*
TEMPERATURE	38F	36F	32F	32F	34F	34F	38F	48F	46F	46F
CONDITION	P. Sunny	Cloudy	Cloudy	Cloudy	Cloudy	Sunny	Cloudy	Foggy	Rain Fog	Rain Fog
TIME	11:53AM	3:20PM	7:30AM	8:42AM	11:20AM	9:25AM	11:58AM	7:30AM	12:27PM	2:52PM
		4/3/02	4/4/02	4/4/02	4/4/02	4/5/02	4/5/02	4/8/02	4/8/02	4/8/02
		100% N10	Morning	70% N3	100% N3	70% N11	100% N11	Morning	70% N2	100% N2

* It is too foggy to survey the tower points at this time.

	NORTH CABLE STAY PYLON CABLE MONITORING									
	4/9/02	4/9/02	4/9/02	4/10/02	4/10/02	4/10/02				
	Morning	70% N12	100% N12	Morning	70% N1	100% N1				
WEST N1				37.24	37.23	37.22				
WEST N2				37.09	37.06	37.04				
WEST N3				36.96	36.92	36.88				
WEST N4						36.76				
WEST N5						36.58				
WEST N6						36.28				
WEST N7						36.53				
WEST N8						36.6				
WEST N9						36.66				
WEST N10	36.66	36.65	36.64			36.7				
WEST N11	36.59	36.61	36.59			36.66				
WEST N12	36.5	36.54	36.53			36.58				
CL 1				35.28	35.27	35.26				
CL 2				35.31	35.3	35.28				
CL 3				35.27	35.24	35.22				
CL 4						35.24				
CL 5						35.2				
CL 6						35.15				
CL 7						35.12				
CL 8						35.06				
CL 9						35.02				
CL 10	34.91	34.91	34.91			34.97				
CL 11	34.74	34.74	34.75			34.81				
CL 12	34.6	34.61	34.62			34.65				
EAST N1				37.21	37.19	37.18				
EAST N2				37.09	37.06	37.04				
EAST N3				36.97	36.93	36.89				
EAST N4						36.76				
EAST N5						36.61				
EAST N6						36.3				
EAST N7						36.5				
EAST N8						36.58				
EAST N9						36.67				
EAST N10	36.66	36.64	36.63			36.69				
EAST N11	36.59	36.6	36.59			36.65				
EAST N12	36.5	36.53	36.54			36.58				
WEST TOP	4028.17	4028.09	4028.03	4028.03	4028.15	4028.19				
OF WINDOW	-33.61	-33.61	-33.61	-33.57	-33.62	-33.62				
ELEVATION	120.52	120.53	120.55	120.56	120.51	120.51				
WEST BOTTOM	4023.53	4023.5	4023.47	4023.48	4023.53	4023.56				
OF WINDOW	-33.69	-33.68	-33.69	-33.67	-33.69	-33.69				
ELEVATION	94.68	94.67	94.69	94.68	94.66	94.66				
EAST TOP	4028.16	4028.08	4028.02	4028.03	4028.14	4028.18				
OF WINDOW	32.03	32.03	32.03	32.03	32.01	32.02				
ELEVATION	120.46	120.47	120.48	120.46	120.44	120.44				
EAST BOTTOM	4023.58	4023.53	4023.51	4023.52	4023.58	4023.6				
OF WINDOW	32.09	32.1	32.09	32.09	32.09	32.1				
ELEVATION	94.6	94.63	94.62	94.62	94.61	94.59				
TEMPERATURE	39F	42F	43F	38F	51F	53F				
CONDITION	Cloudy	Cloudy	P. Sunny	Sunny	Sunny	Sunny				
TIME	7:15AM	10:22AM	1:43PM	7:16AM	11:37AM	2:27PM				
	4/9/02	4/9/02	4/9/02	4/10/02	4/10/02	4/10/02				
	Morning	70% N12	100% N12	Morning	70% N1	100% N1				

STAY CABLES STRESSED WITH CONTEN METHOD

DYWIDAG-SYSTEMS INTERNATIONAL

Lift-Off Test

Project: **Sixth Street Cable Stayed Bridge- Milwaukee**

Cable Designation:	S3-EAST
Cable Type:	C31
Number of Strands:	22
Cable Length:	29.963 m
Date of Lift-Off:	6/14/02
Time of Lift-Off:	10:11AM
Ambient Temperature:	63F
Weather Condition:	Pt. Cloudy
Engineer Present:	Jason Samz

Strand No.	Dial readings (Bar)
25	391
20	384
18	382
19	384
9	384
26	390

STAY CABLES STRESSED WITH CONTEN METHOD

DYWIDAG-SYSTEMS INTERNATIONAL

Lift-Off Test

Project: **Sixth Street Cable Stayed Bridge- Milwaukee**

Cable Designation:	S5-WEST
Cable Type:	C31
Number of Strands:	21
Cable Length:	21.942 m
Date of Lift-Off:	6/19/02
Time of Lift-Off:	8:34AM
Ambient Temperature:	70F
Weather Condition:	Pt. Sunny
Engineer Present:	Jason Samz

Strand No.	Dial readings (Bar)
25	375
20	367
18	360
19	370
9	372
11	369

STAY CABLES STRESSED WITH CONTEN METHOD

DYWIDAG-SYSTEMS INTERNATIONAL

Lift-Off Test

Project: **Sixth Street Cable Stayed Bridge- Milwaukee**

Cable Designation:	S9-EAST
Cable Type:	C37
Number of Strands:	29
Cable Length:	36.160 m
Date of Lift-Off:	6/14/02
Time of Lift-Off:	11:24AM
Ambient Temperature:	65 F
Weather Condition:	Pt. Cloudy
Engineer Present:	Jason Samz

Strand No.	Dial readings (Bar)
27	347
30	342
25	345
20	358
9	350
12	340
14	345
5	340
7	334

STAY CABLES STRESSED WITH CONTEN METHOD

DYWIDAG-SYSTEMS INTERNATIONAL

Lift-Off Test

Project: **Sixth Street Cable Stayed Bridge- Milwaukee**

Cable Designation:	S11-WEST
Cable Type:	C37
Number of Strands:	35
Cable Length:	53.226 m
Date of Lift-Off:	6/14/02
Time of Lift-Off:	10:40AM
Ambient Temperature:	63 F
Weather Condition:	Pt. Cloudy
Engineer Present:	Jason Samz

Strand No.	Dial readings (Bar)
25	401
20	415
36	403
37	406
26	402
31	401
23	402
5	405
7	400

STAY CABLES STRESSED WITH CONTEN METHOD

DYWIDAG-SYSTEMS INTERNATIONAL

Lift-Off Test

Project: **Sixth Street Cable Stayed Bridge- Milwaukee**

Cable Designation:	N3-EAST
Cable Type:	C31
Number of Strands:	23
Cable Length:	30.071 m
Date of Lift-Off:	4/15/02
Time of Lift-Off:	9:30AM
Ambient Temperature:	69F
Weather Condition:	P. Sunny
Engineer Present:	Jason Samz

First Operation

Strand No.	Dial readings (Bar)	
	First	Second
25	375	
20	368	
18	362	
19	373	

Second Operation

Strand No.	Dial readings (Bar)	
	First	Second
9	373	
12	371	

STAY CABLES STRESSED WITH CONTEN METHOD

DYWIDAG-SYSTEMS INTERNATIONAL

Lift-Off Test

Project: **Sixth Street Cable Stayed Bridge- Milwaukee**

Cable Designation:	N5-WEST
Cable Type:	C31
Number of Strands:	22
Cable Length:	22.054 m
Date of Lift-Off:	4/12/02
Time of Lift-Off:	10:43AM
Ambient Temperature:	58F
Weather Condition:	Cloudy
Engineer Present:	Jason Samz

First Operation

Strand No.	Dial readings (Bar)	
	First	Second
25	368	
20	355	
18	339	
19	353	

Second Operation

Strand No.	Dial readings (Bar)	
	First	Second
9	350	
26	360	

STAY CABLES STRESSED WITH CONTEN METHOD

DYWIDAG-SYSTEMS INTERNATIONAL

Lift-Off Test

Project: **Sixth Street Cable Stayed Bridge- Milwaukee**

Cable Designation:	N9-EAST
Cable Type:	C37
Number of Strands:	30
Cable Length:	35.763 m
Date of Lift-Off:	4/15/02
Time of Lift-Off:	7:30AM
Ambient Temperature:	66F
Weather Condition:	Cloudy
Engineer Present:	Jason Samz

First Operation

Strand No.	Dial readings (Bar)	
	First	Second
27	360	
30	362	
25	371	
20	360	
9	370	
12	359	

Second Operation

Strand No.	Dial readings (Bar)	
	First	Second
37	359	
5	362	
7	368	

STAY CABLES STRESSED WITH CONTEN METHOD

DYWIDAG-SYSTEMS INTERNATIONAL

Lift-Off Test

Project: **Sixth Street Cable Stayed Bridge- Milwaukee**

Cable Designation:	N11-WEST
Cable Type:	C37
Number of Strands:	35
Cable Length:	52.585 m
Date of Lift-Off:	4/12/02
Time of Lift-Off:	12:59PM
Ambient Temperature:	58F
Weather Condition:	Cloudy
Engineer Present:	Jason Samz

First Operation

Strand No.	Dial readings (Bar)	
	First	Second
25	394	
20	392	
36	391	
37	395	
26	390	
21	411	

Second Operation

Strand No.	Dial readings (Bar)	
	First	Second
23	406	
5	397	
7	390	

APPENDIX - SECTION VI

Load Ratings

SIXTH STREET VIADUCT

LIVE LOAD RATINGS

STRUCTURE NO.	INVENTORY	OPERATING	PERMIT
B-40-413A	HS-24	HS-40	510 KIPS
B-40-414A	HS-32	HS-53	750 KIPS
B40-414C	HS-27	HS-45	780 KIPS

Report of Final Inspection
(To Be Provided)

PHOTO DESCRIPTION	West Sidewalk - North Cable Stay Bridge B-40-414C						
PROJECT NUMBER	2235-00-03/70	PHOTO BY	AJR				
PROJECT NAME	6th St. Viaduct	DATE	2/28/03	DISK#		PHOTO#	1

PHOTO DESCRIPTION	West Sidewalk - North Cable Stay Bridge B-40-414C						
PROJECT NUMBER	2235-00-03/70	PHOTO BY	AJR				
PROJECT NAME	6th St. Viaduct	DATE	2/28/03	DISK #		PHOTO#	2

PHOTO DESCRIPTION	West Sidewalk - North Cable Stay Bridge B-40-414C						
PROJECT NUMBER	2235-00-03/70	PHOTO BY	AJR				
PROJECT NAME	6th St. Viaduct	DATE	2/28/03	DISK#		PHOTO#	3

PHOTO DESCRIPTION	West Sidewalk - North Cable Stay Bridge B-40-414C						
PROJECT NUMBER	2235-00-03/70	PHOTO BY	AJR				
PROJECT NAME	6th St. Viaduct	DATE	2/28/03	DISK #		PHOTO#	4

PHOTO DESCRIPTION	West Sidewalk - North Cable Stay Bridge B-40-414C						
PROJECT NUMBER	2235-00-03/70	PHOTO BY	AJR				
PROJECT NAME	6th St. Viaduct	DATE	2/28/03	DISK#		PHOTO#	5

PHOTO DESCRIPTION	Leakage from sidewalk and paint peeling on abutment at north pier - North Bascule Bridge B-40-414B						
PROJECT NUMBER	2235-00-03/70	PHOTO BY	AJR				
PROJECT NAME	6th St. Viaduct	DATE	2/28/03	DISK#		PHOTO#	6

PHOTO DESCRIPTION	Alligator Cracking - North Cable Stay Deck B-40-414C						
PROJECT NUMBER	2235-00-03/70	PHOTO BY	AJR				
PROJECT NAME	6th St. Viaduct	DATE	2/28/03	DISK #		PHOTO#	7

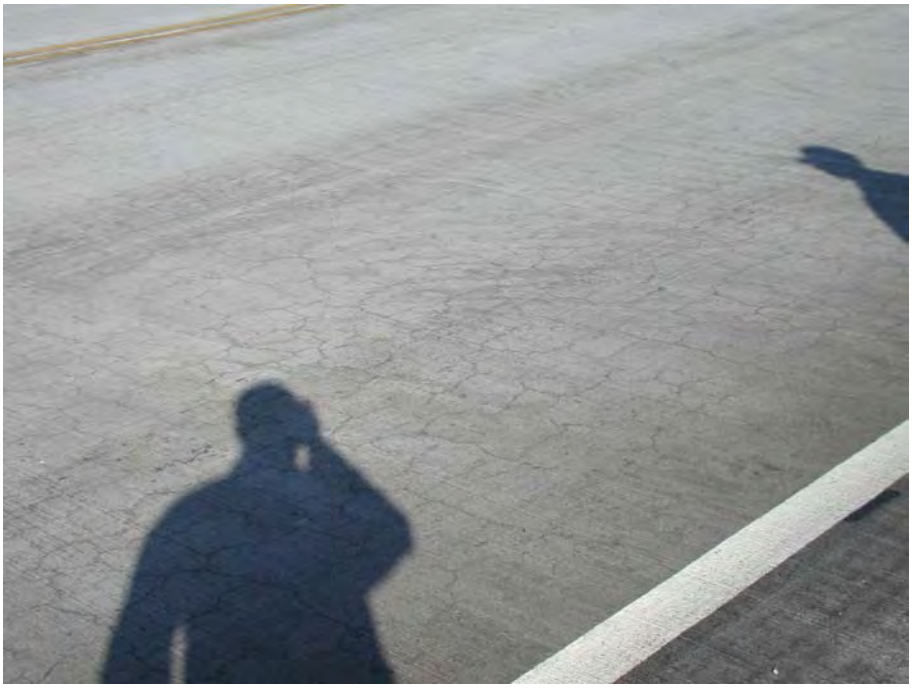

PHOTO DESCRIPTION	Alligator Cracking - North Cable Stay Deck B-40-414C						
PROJECT NUMBER	2235-00-03/70	PHOTO BY	AJR				
PROJECT NAME	6th St. Viaduct	DATE	2/28/03	DISK#		PHOTO#	8

PHOTO DESCRIPTION	East Sidewalk - North Cable Stay Bridge B-40-414C						
PROJECT NUMBER	2235-00-03/70	PHOTO BY	AJR				
PROJECT NAME	6th St. Viaduct	DATE	2/28/03	DISK #		PHOTO#	9

PHOTO DESCRIPTION	East Sidewalk - North Cable Stay Bridge B-40-414C						
PROJECT NUMBER	2235-00-03/70	PHOTO BY	AJR				
PROJECT NAME	6th St. Viaduct	DATE	2/28/03	DISK#		PHOTO#	10

PHOTO DESCRIPTION	East Sidewalk - North Cable Stay Bridge B-40-414C						
PROJECT NUMBER	2235-00-03/70	PHOTO BY	AJR				
PROJECT NAME	6th St. Viaduct	DATE	2/28/03	DISK #		PHOTO#	11

PHOTO DESCRIPTION	East Sidewalk - North Cable Stay Bridge B-40-414C						
PROJECT NUMBER	2235-00-03/70	PHOTO BY	AJR				
PROJECT NAME	6th St. Viaduct	DATE	2/28/03	DISK#		PHOTO#	12

PHOTO DESCRIPTION	East Sidewalk - North Cable Stay Bridge B-40-414C						
PROJECT NUMBER	2235-00-03/70	PHOTO BY	AJR				
PROJECT NAME	6th St. Viaduct	DATE	2/28/03	DISK #		PHOTO#	13

PHOTO DESCRIPTION	East Sidewalk - North Cable Stay Bridge B-40-414C						
PROJECT NUMBER	2235-00-03/70	PHOTO BY	AJR				
PROJECT NAME	6th St. Viaduct	DATE	2/28/03	DISK#		PHOTO#	14

PHOTO DESCRIPTION	Welds showing signs of rust in west bascule girder - North Bascule Bridge B-40-414B						
PROJECT NUMBER	2235-00-03/70	PHOTO BY	AJR				
PROJECT NAME	6th St. Viaduct	DATE	2/28/03	DISK #		PHOTO#	15

PHOTO DESCRIPTION	West Sidewalk - South Cable Stay Bridge B-40-413A						
PROJECT NUMBER	2235-00-03/70	PHOTO BY	AJR				
PROJECT NAME	6th St. Viaduct	DATE	2/28/03	DISK#		PHOTO#	16

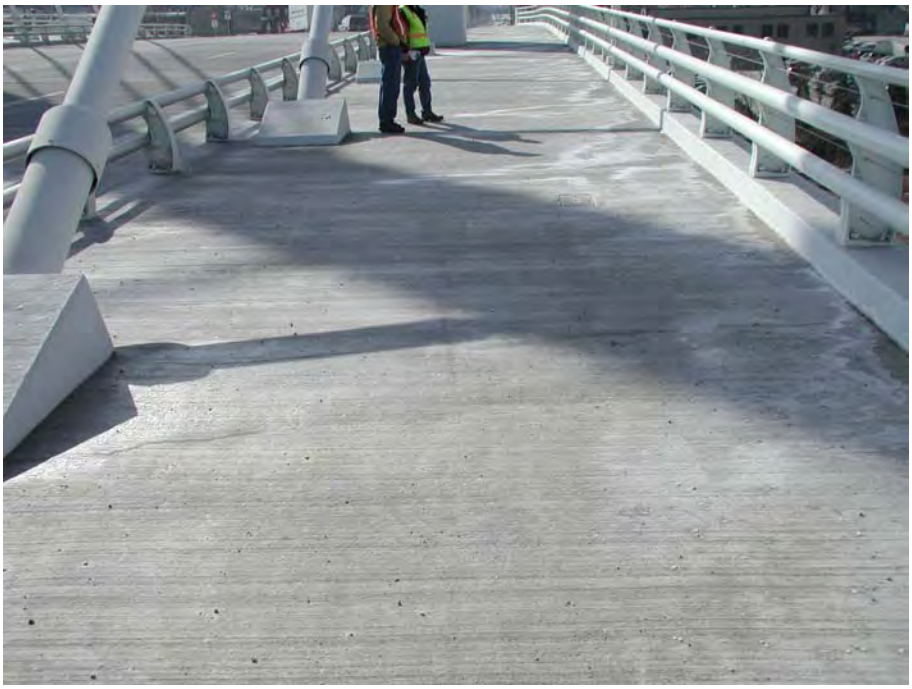

PHOTO DESCRIPTION	West Sidewalk - South Cable Stay Bridge B-40-413A						
PROJECT NUMBER	2235-00-03/70	PHOTO BY	AJR				
PROJECT NAME	6th St. Viaduct	DATE	2/28/03	DISK #		PHOTO#	17

PHOTO DESCRIPTION	West Sidewalk - South Cable Stay Bridge B-40-413A						
PROJECT NUMBER	2235-00-03/70	PHOTO BY	AJR				
PROJECT NAME	6th St. Viaduct	DATE	2/28/03	DISK#		PHOTO#	18

PHOTO DESCRIPTION	West Sidewalk - South Cable Stay Bridge B-40-413A						
PROJECT NUMBER	2235-00-03/70	PHOTO BY	AJR				
PROJECT NAME	6th St. Viaduct	DATE	2/28/03	DISK #		PHOTO#	19

PHOTO DESCRIPTION	West Sidewalk - South Cable Stay Bridge B-40-413A						
PROJECT NUMBER	2235-00-03/70	PHOTO BY	AJR				
PROJECT NAME	6th St. Viaduct	DATE	2/28/03	DISK#		PHOTO#	20

PHOTO DESCRIPTION	Water leakage and paint peeling adjacent to west bearing, north end of deck – South Cable Stay Bridge B-40-413A						
PROJECT NUMBER	2235-00-03/70	PHOTO BY	AJR				
PROJECT NAME	6th St. Viaduct	DATE	2/28/03	DISK #		PHOTO#	21

PHOTO DESCRIPTION	Water leakage and paint peeling adjacent to west bearing, north end of deck – South Cable Stay Bridge B-40-413A						
PROJECT NUMBER	2235-00-03/70	PHOTO BY	AJR				
PROJECT NAME	6th St. Viaduct	DATE	2/28/03	DISK#		PHOTO#	22

PHOTO DESCRIPTION	East Sidewalk - South Cable Stay Bridge B-40-413A						
PROJECT NUMBER	2235-00-03/70	PHOTO BY	AJR				
PROJECT NAME	6th St. Viaduct	DATE	2/28/03	DISK #		PHOTO#	23

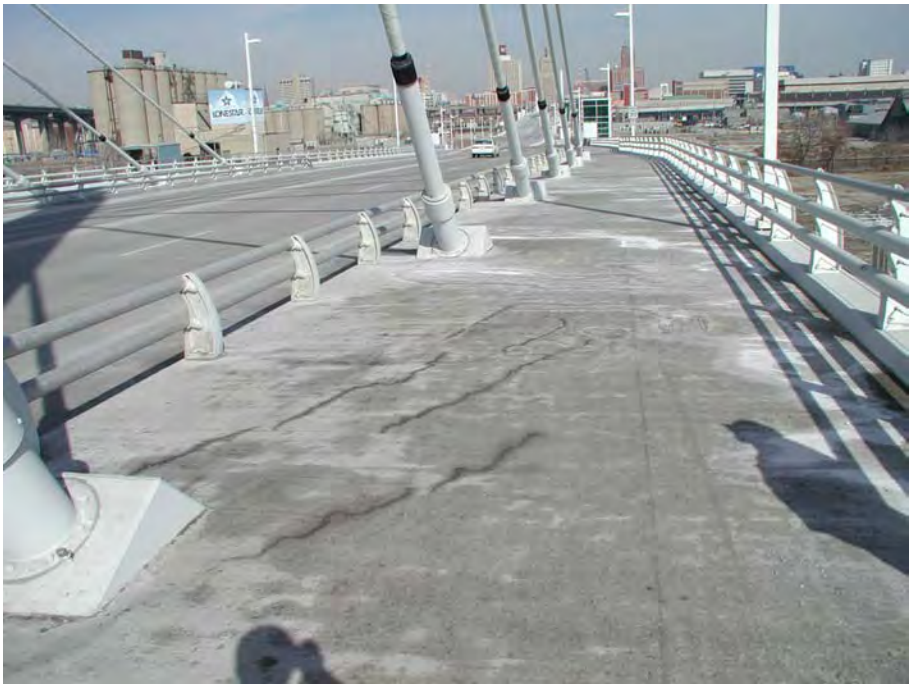

PHOTO DESCRIPTION	East Sidewalk - South Cable Stay Bridge B-40-413A						
PROJECT NUMBER	2235-00-03/70	PHOTO BY	AJR				
PROJECT NAME	6th St. Viaduct	DATE	2/28/03	DISK#		PHOTO#	24

PHOTO DESCRIPTION	East Sidewalk - South Cable Stay Bridge B-40-413A						
PROJECT NUMBER	2235-00-03/70	PHOTO BY	AJR				
PROJECT NAME	6th St. Viaduct	DATE	2/28/03	DISK #		PHOTO#	25

PHOTO DESCRIPTION	East Sidewalk - South Cable Stay Bridge B-40-413A						
PROJECT NUMBER	2235-00-03/70	PHOTO BY	AJR				
PROJECT NAME	6th St. Viaduct	DATE	2/28/03	DISK#		PHOTO#	26

PHOTO DESCRIPTION	Flooding in south pier operator's pit - South Bascule Bridge B-40-413B						
PROJECT NUMBER	2235-00-03/70	PHOTO BY	AJR				
PROJECT NAME	6th St. Viaduct	DATE	2/28/03	DISK #		PHOTO#	27

PHOTO DESCRIPTION	East Sidewalk - South Bascule Bridge B-40-413B						
PROJECT NUMBER	2235-00-03/70	PHOTO BY	AJR				
PROJECT NAME	6th St. Viaduct	DATE	2/28/03	DISK#		PHOTO#	28

PHOTO DESCRIPTION	Flooding in north pier operator's pit – South Bascule Bridge B-40-413B						
PROJECT NUMBER	2235-00-03/70	PHOTO BY	AJR				
PROJECT NAME	6th St. Viaduct	DATE	2/28/03	DISK #		PHOTO#	29

APPENDIX - SECTION VIII

Field Bridge Inspection Report (Form EM 30-0198)

Field Bridge Inspection Report
EM30 - 0198 Section 84.17 Wis. Stats.

Wisconsin Dept. of Transportation

Feature On: SOUTH 6TH STREET		Maintainer: CITY OF MILWAUKEE	Structure Number: B-40-414C
Feature Under: CP RR, HINMAN ST., ST. PAUL AVE		Sect/Twn/Rng: 29 / 07 N / 22 E	
Location: W VIRGINIA TO W CLYBOURN		County: MILWAUKEE	Municipality: CITY OF MILWAUKEE
Inv Rating: HS 22	Rdwy Width: 58.0'	Deck Width: 67.7' - 80.6'	Existing Posting: / Suff Rating:
Oper Rating: HS 30	Total Length: 669.9'	Deck Area: 49647	Recom Posting: / Rate Score:
Overburden (in): 0	Date:	Section Loss %:	ADT On: 17750 Year: 2000 / ADT Under: / Year:

Bridge Element — Quantity in Condition State

#	Description	Env	Unit	Tot Qty	1	2	3	4	5	Comments
448	CONCRETE SLAB W/ COATED BARS	4	EA	49647	49647					POST-TENSIONED W/ 2" CONCRETE OVERLAY
146	CABLE	4	EA	24	24					EACH MAIN CABLE IS MADE FROM A VARIABLE NO. OF SMALLER CABLES
205	REINFORCED CONC. COLUMNS	4	EA	8	8					
215	REINFORCED CONC. ABUTMENT	4	LF	65	65					
300	STRIP SEAL EXPANSION JOINT	4	LF	200	200					
310	ELASTOMERIC BEARING	4	EA	4	4					
321	REINFORCED CONC. APPROACH SLAB	4	EA	1	1					
334	COATED METAL BRIDGE RAILING	4	LF	2036	2036					2-LINE & 3-LINE RAIL
358	DECK CRACKING	4	EA	1	1					OVERLAY HAS MODERATE ALLIGATOR CRACKING THROUGHOUT - ALL HAIR LINE
359	UNDER-SURFACE OF CONCRETE SLAB	4	EA	1	1					
400	WINGWALLS	3	EA	2	2					
405	DRAINAGE	2	EA	10	10					
410	CURB	4	LF	1261	1261					
415	SIDEWALK	4	LF	1261	1261					CRACKS IN SIDEWALK - HAVE BEEN SEALED IN AREA OF CABLE ANCHORS (318 LF - WEST & 321 LF - EAST)

Structure Notes:

NBI RATINGS	Old	New		Old	New		Old	New		Old	New
	Deck		9	Superstructure		9	Substructure		9	Culvert		

Field Bridge Inspection Report
EM30 - 0198 Section 84.17 Wis. Stats.

Wisconsin Dept. of Transportation

Should structure be re-rated for load carrying capacity? (yes/no) N

Structure Number: B-40-414C

Other Items	Rating Old	Rating New	Comments
Approach Alignment	9		
Channel Condition	N		
Waterway Adequacy	N		
Construction Joints	9		
Utilities	N		

Marking/Signing	Rating Old	Rating New	Comments
Bridge Markers	N		
Narrow Bridge	N		
One Lane Bridge	N		
Vertical Clear.	N		
Weight Limit Post	N		

Cardinal=N. or E.

Clearance	File Measurement(ft)	Date	New Measurement(ft)
Min Vert. Clear. Under (Cardinal)	23.0; 16.75, 16.75		
Min Vert. Clear Under (Non Cardinal)			
Min Vert. Clear. Over			
Measured By:			

EXPANSION JOINTS

Location	In.	Temp	Type
A. BASCULE PIER	1 3/4"	45°	STRIP SEAL
B. POST OFFICE TIE	2"	45°	STRIP SEAL
C. NORTH ABUTMENT	1 7/8"	45°	STRIP SEAL
D.			
E.			
F.			

STRUCTURE TYPE

Material	Configuration	# Spans	Length
CONT. CONCRETE	PT HAUNCH SLAB	6	670.6

Inspection/Maintenance Notes

REINFORCED CONCRETE PYLON (2 EA) - INSPECT AND NOTE CONDITION
- NO PROBLEMS NOTED (2/28/03)
PYLON ANCHOR BOXES (2 EA) - INSPECT AND NOTE CONDITION
- NO PROBLEMS NOTED (DEC. 02) - INSPECTED BY TED ZOLI (HNTB)

Recommendations	Estimated Cost	Year. of Estimate	Program Year

CONSTRUCTION HISTORY

Year	Work Performed	Cost($)	Year	Work Performed	Cost($)
2002	NEW STRUCTURE	$9,926,600			

Routine			Fracture Critical			Underwater-Visual/Probing			Other Special		
Last Insp	Next Insp	Freq (mo)	Last Insp	Next Insp	Freq (mo)	Last Insp	Next Insp	Freq (mo)	Last Insp	Next Insp	Freq (mo)
	2004	24									
						Diving					
						Profiles/Sounding/Sonar					

Equipment Needs

Inspector: Dave Beck | Date: 2/28/03 | Inspection Agency: EMCS, INC.

Field Bridge Inspection Report
EM30 - 0198 Section 84.17 Wis. Stats.

Wisconsin Dept. of Transportation

Feature On: SOUTH 6TH STREET	Maintainer: CITY OF MILWAUKEE		Structure Number: B-40-414 B
Feature Under: MENOMONEE RIVER	Sect/Twn/Rng: 29 / 07 N / 22 E		
Location: W. VIRGINIA TO W. CLYBOURN	County: MILWAUKEE	Municipality: CITY OF MILWAUKEE	
Inv Rating: HS 22 / Rdwy Width: 56.0'	Deck Width: 58.0'	Existing Posting:	Suff Rating:
Oper Rating: HS 30 / Total Length: 190.0'	Deck Area: 11020 SF	Recom Posting:	Rate Score:
Overburden (in): 0 / Date:	Section Loss %:	ADT On: 17750 Year: 2000	ADT Under: Year:

Bridge Element — Quantity in Condition State

#	Description	Env	Unit	Tot Qty	1	2	3	4	5	Comments
26	CONCRETE DECK W/ COATED BARS	4	EA	5830	5830					
28	STEEL DECK OPEN GRID	4	EA	5054	5054					
107	PAINTED STEEL OPEN GIRDER	2	LF	419	419					BASCULE & LOADING GIRDERS *
113	PAINTED STEEL STRINGER	2	LF	2348	113					
152	PAINTED STEEL FLOOR BEAM	2	LF	1062	1062					
172	PAINTED STEEL DIAPHRAGM	2	EA	56	56					
175	PAINTED STEEL LATERAL BRACING	2	EA	86	86					
202	PAINTED STEEL COLUMN	2	EA	20	20					
210	REINFORCED CONC. PIER WALLS	3	LF	520	520					BASCULE EQUIPMENT HOUSES
302	COMPRESSION JOINT SEAL	4	LF	162	162					NORTH PIER - LEAKAGE FROM SIDEWALK PLATE (WEST) PAINT PEELING ON ABUTMENT
304	OPEN EXPANSION JOINT	4	LF	81	81					
310	ELASTOMERIC BEARINGS	4	EA	20	20					
334	COATED METAL BRIDGE RAILING	4	LF	380	380					
358	DECK CRACKING	4	EA	1	1					
359	UNDER-SURFACE OF CONC. DECK	4	EA	1	1					
410	CURB	4	LF	380	380					
415	SIDEWALK	4	LF	380	380					

Structure Notes:

* SOUTH PIER - WELDS ARE SHOWING SIGNS OF RUST ON WEST BASCULE GIRDER ON WEST FACE NEAR PINION

NBI RATINGS	Old	New		Old	New		Old	New		Old	New
	Deck		9	Superstructure		9	Substructure		9	Culvert		

Field Bridge Inspection Report
EM30 - 0198 Section 84.17 Wis. Stats.

Wisconsin Dept. of Transportation

Should structure be re-rated for load carrying capacity? (yes/no) N

Structure Number: B-40-414B

Other Items	Rating Old	Rating New	Comments
Approach Alignment	9		
Channel Condition	9		
Waterway Adequacy	9		
Construction Joints	9		
Utilities	N		

Marking/Signing	Rating Old	Rating New	Comments
Bridge Markers	N		
Narrow Bridge	N		
One Lane Bridge	N		
Vertical Clear.	N		
Weight Limit Post	N		

Cardinal=N, or E.

Clearance	File Measurement(ft)	Date	New Measurement(ft)
Min Vert. Clear. Under (Cardinal)			
Min Vert. Clear Under (Non Cardinal)			
Min Vert. Clear. Over			
Measured By:			

EXPANSION JOINTS

Location	In.	Temp	Type
A NORTH ROADBREAK	1"	45°	COMPRESSION SEAL
B CENTER OF SPAN	2"	45°	OPEN EXPANSION
C SOUTH ROADBREAK	1"	45°	COMPRESSION SEAL
D.			
E.			
F.			

STRUCTURE TYPE

Material	Configuration	# Spans	Length
STEEL	DECK GIRDER	3	190

Inspection/Maintenance Notes

Recommendations	Estimated Cost	Year. of Estimate	Program Year

CONSTRUCTION HISTORY

Year	Work Performed	Cost($)	Year	Work Performed	Cost($)
2002	NEW STRUCTURE	$13,460,000			

Routine			Fracture Critical			Underwater-Visual/Probing			Other Special		
Last Insp	Next Insp	Freq (mo)	Last Insp	Next Insp	Freq (mo)	Last Insp	Next Insp	Freq (mo)	Last Insp	Next Insp	Freq (mo)
	2004	24		2004	24		2004	24			
						Diving					
						Profiles/Sounding/Sonar					

Equipment Needs

Inspector: Dave Bruce | Date: 2/28/03 | Inspection Agency: EMCS, INC.

Field Bridge Inspection Report
EM30 - 0198 Section 84.17 Wis. Stats.

Wisconsin Dept. of Transportation

Feature On: SOUTH 6TH STREET		Maintainer: CITY OF MILWAUKEE		Structure Number: B-40-414 A	
Feature Under:		Sect/Twn/Rng: 29 / 07 N / 22 E			
Location: W. VIRGINIA TO W. CLYBOURN		County: MILWAUKEE	Municipality: CITY OF MILWAUKEE		
Inv Rating: HS 22	Rdwy Width: 58.0' - 61.2'	Deck Width: 67.7' - 70.9'	Existing Posting:		Suff Rating:
Oper Rating: HS 30	Total Length: 271.0'	Deck Area: 18449 SF	Recom Posting:		Rate Score:
Overburden (in): 0	Date:	Section Loss %:	ADT On: 17750 Year: 2000	ADT Under:	Year:

Bridge Element #	Description	Env	Unit	Tot Qty	Quantity in Condition State 1	2	3	4	5	Comments
448	CONCRETE SLAB W/ COATED BARS	4	EA	18449	18449					POST-TENSIONED W/ 2" CONCRETE OVERLAY
205	REINFORCED CONCRETE COLUMN	2	EA	6	6					
215	REINFORCED CONCRETE ABUTMENT	3	LF	59	59					
300	STRIP SEAL EXPANSION JOINT	4	LF	159	159					
310	ELASTOMERIC BEARING	4	EA	4	4					
321	REINFORCED CONC. APPROACH SLAB	4	EA	1	1					
334	COATED METAL BRIDGE RAILING	4	LF	542	542					
358	DECK CRACKING	4	EA	1	1					
359	UNDER-SURFACE OF CONCRETE SLAB	4	EA	1	1					
400	CONCRETE WINGS	3	EA	2	2					
405	DRAINAGE	2	EA	2	2					
410	CURB	4	LF	542	542					
415	SIDEWALK	4	LF	542	542					

Structure Notes:

NBI RATINGS	Deck	Old	New	Superstructure	Old	New	Substructure	Old	New	Culvert	Old	New
			9			9			9			

Field Bridge Inspection Report
EM30 - 0198 Section 84.17 Wis. Stats.

Wisconsin Dept. of Transportation

Should structure be re-rated for load carrying capacity? (yes/no) N

Structure Number: B-40-414A

Other Items	Rating Old	Rating New	Comments
Approach Alignment	9		
Channel Condition	N		
Waterway Adequacy	N		
Construction Joints	9		
Utilities	N		

Marking/Signing	Rating Old	Rating New	Comments
Bridge Markers	N		
Narrow Bridge	N		
One Lane Bridge	N		
Vertical Clear.	N		
Weight Limit Post	N		

Cardinal=N. or E.

Clearance	File Measurement(ft)	Date	New Measurement(ft)
Min Vert. Clear. Under (Cardinal)			
Min Vert. Clear Under (Non Cardinal)			
Min Vert. Clear. Over			
Measured By:			

EXPANSION JOINTS

Location	In.	Temp	Type
A. SOUTH ABUTMENT	1 5/8	45°	STRIP SEAL
B. BASCULE PIER	1 3/4	45°	STRIP SEAL
C.			
D.			
E.			
F.			

STRUCTURE TYPE

Material	Configuration	# Spans	Length
CONT. CONCRETE	PT HAUNCH SLAB	4	273

Inspection/Maintenance Notes

Recommendations	Estimated Cost	Year. of Estimate	Program Year

CONSTRUCTION HISTORY

Year	Work Performed	Cost($)	Year	Work Performed	Cost($)
2002	NEW STRUCTURE	$1,036,000			

Routine			Fracture Critical			Underwater-Visual/Probing			Other Special		
Last Insp	Next Insp	Freq (mo)	Last Insp	Next Insp	Freq (mo)	Last Insp	Next Insp	Freq (mo)	Last Insp	Next Insp	Freq (mo)
	2004	24									
					Diving						
					Profiles/Sounding/Sonar						

Equipment Needs

Inspector: Dave Beze | Date: 2/28/03 | Inspection Agency: EMCS, INC.

Field Bridge Inspection Report
EM30 - 0198 Section 84.17 Wis. Stats.

Wisconsin Dept. of Transportation

Feature On: SOUTH 6TH STREET		Maintainer: CITY OF MILWAUKEE		Structure Number: B-40-413 B	
Feature Under: SOUTH MENOMONEE CANAL		Sect/Twn/Rng: 32 / 07 N / 22 E			
Location: W. VIRGINIA TO W. CLYBOURN		County: MILWAUKEE	Municipality: CITY OF MILWAUKEE		
Inv Rating: HS 22	Rdwy Width: 58.0'	Deck Width: 58.0'	Existing Posting:		Suff Rating:
Oper Rating: HS 30	Total Length: 190.0'	Deck Area: 11020 SF	Recom Posting:		Rate Score:
Overburden (in): 0	Date:	Section Loss %:	ADT On: 17750 Year: 2000	ADT Under:	Year:

Bridge Element #	Description	Env	Unit	Tot Qty	Quantity in Condition State 1	2	3	4	5	Comments
26	CONCRETE DECK W/ COATED BARS	4	EA	5830	5830					
28	STEEL DECK OPEN GRID	4	EA	5054	5054					
107	PAINTED STEEL OPEN GIRDER	2	LF	419	419					BASCULE & LOADING GIRDERS
113	PAINTED STEEL STRINGER	2	LF	2348	2348					
152	PAINTED STEEL FLOOR BEAM	2	LF	1052	1052					
172	PAINTED STEEL DIAPHRAGM	2	EA	56	56					
175	PAINTED STEEL LATERAL BRACING	2	EA	86	86					
202	PAINTED STEEL COLUMN	2	EA	20	20					
210	REINFORCED CONC. PIER WALLS	3	LF	520	520					BASCULE EQUIPMENT HOUSES
302	COMPRESSION JOINT SEAL	4	LF	162	162					
304	OPEN EXPANSION JOINT	4	LF	81	81					
310	ELASTOMERIC BEARINGS	4	EA	20	20					
334	COATED METAL BRIDGE RAILING	4	LF	380	380					
358	DECK CRACKING	4	EA	1	1					
359	UNDER-SURFACE OF CONCRETE DECK	4	EA	1	1					
410	CURB	4	LF	380	380					
415	SIDEWALK	4	LF	380	380					

Structure Notes:

(2-28-02) 1. MODERATE ICE BUILD UP ON PIT FLOORS OF NORTH & SOUTH PIERS. 1" 4" THICK. SUMP PUMPS ARE ENCASED IN ICE. WATER SEEPAGE FROM FLOOR CRACKS

2. SOUTH PIER - FLOOR DRAIN ICED OVER BY AIR CONDITIONER. DRAIN TUBE FROM HEATER

3. SOUTH PIER - WEST UPLIFT BEARING HAS SURFACE RUSTING

NBI RATINGS		Old	New		Old	New		Old	New		Old	New
	Deck		9	Superstructure		9	Substructure		9	Culvert		

Field Bridge Inspection Report
EM30 - 0198 Section 84.17 Wis. Stats.

Wisconsin Dept. of Transportation

Should structure be re-rated for load carrying capacity? (yes/no) N

Structure Number: B-40-4133

Other Items	Rating Old	Rating New	Comments
Approach Alignment	9		
Channel Condition	9		
Waterway Adequacy	9		
Construction Joints	9		
Utilities	N		

Marking/Signing	Rating Old	Rating New	Comments
Bridge Markers	N		
Narrow Bridge	N		
One Lane Bridge	N		
Vertical Clear.	N		
Weight Limit Post	N		

Cardinal=N. or E.

Clearance	File Measurement(ft)	Date	New Measurement(ft)
Min Vert. Clear. Under (Cardinal)			
Min Vert. Clear Under (Non Cardinal)			
Min Vert. Clear. Over			
Measured By:			

EXPANSION JOINTS

Location	In.	Temp	Type
A NORTH ROADBREAK	1 3/8	45°	COMPRESSION SEAL
B CENTER OF SPAN	2"	45°	OPEN EXPANSION
C SOUTH ROADBREAK	7/8"	45°	COMPRESSION SEAL
D.			
E.			
F.			

STRUCTURE TYPE

Material	Configuration	# Spans	Length
STEEL	DECK GIRDER	3	190

Inspection/Maintenance Notes

Recommendations	Estimated Cost	Year. of Estimate	Program Year

CONSTRUCTION HISTORY

Year	Work Performed	Cost($)	Year	Work Performed	Cost($)
2002	NEW STRUCTURE	$11,755,000			

Routine			Fracture Critical			Underwater-Visual/Probing			Other Special		
Last Insp	Next Insp	Freq (mo)	Last Insp	Next Insp	Freq (mo)	Last Insp	Next Insp	Freq (mo)	Last Insp	Next Insp	Freq (mo)
	2004	24		2004	24		2004	24			
						Diving					
						Profiles/Sounding/Sonar					

Equipment Needs

Inspector: Dave Bruze

Date: 2/28/03

Inspection Agency: EMCS, INC.

Field Bridge Inspection Report
EM30 - 0198 Section 84.17 Wis. Stats.

Wisconsin Dept. of Transportation

Feature On: SOUTH 6TH STREET		Maintainer: CITY OF MILWAUKEE		Structure Number: B-40-413A	
Feature Under: CP RAILROAD		Sect/Twn/Rng: 32 / 07N / 22E			
Location: W. VIRGINIA TO W. CLYBOURN		County: MILWAUKEE	Municipality: CITY OF MILWAUKEE		
Inv Rating: HS 22	Rdwy Width: 58.0'	Deck Width: 67.7'-80.6'	Existing Posting:		Suff Rating:
Oper Rating: HS 30	Total Length: 575.0'	Deck Area: 42842 SF	Recom Posting:		Rate Score:
Overburden (in): 0	Date:	Section Loss %:	ADT On: 17750	Year: 2000	ADT Under: Year:

Bridge Element — Quantity in Condition State

#	Description	Env	Unit	Tot Qty	1	2	3	4	5	Comments
448	CONCRETE SLAB W/ COATED BARS	4	EA	42842	42842					POST-TENSIONED W/ 2" CONCRETE OVERLAY
146	CABLE	4	EA	24	24					EACH MAIN CABLE IS MADE FROM A VARIABLE NO. OF SMALLER CABLES
205	REINFORCED CONCRETE COLUMNS	3	EA	8	8					
215	REINFORCED CONC. ABUTMENT	3	LF	91	91					
300	STRIP SEAL EXPANSION JOINT	4	LF	174	174					
310	ELASTOMERIC BEARING	4	EA	6	6					
321	REIFORCED CONC. APPROACH SLAB	4	EA	1	1					
334	COATED METAL BRIDGE RAILING	4	LF	1762	1762					2-LINE & 3-LINE
341	ASPHALTIC SLOPE PROTECTION	2	EA	1	1					
358	DECK CRACKING	4	EA	1	1					
359	UNDER-SURFACE OF CONCRETE SLAB	4	EA	1	1					
400	WINGWALLS	3	EA	2	2					
405	DRAINAGE	2	EA	6	6					
410	CURB	4	LF	1116	1116					
415	SIDEWALK	4	LF	1116	1116					CRACKS IN SIDEWALK - HAVE BEEN SEALED IN AREA OF CABLE ANCHORS (314 LF - WEST & 294 LF - EAST)

Structure Notes:

WATER LEAKAGE - PAINT PEELING ADJACENT TO WEST BEARING - NORTH END OF DECK

NBI RATINGS	Old	New		Old	New		Old	New		Old	New
	Deck		9	Superstructure		9	Substructure		9	Culvert		

Field Bridge Inspection Report
EM30 - 0198 Section 84.17 Wis. Stats.

Wisconsin Dept. of Transportation

Should structure be re-rated for load carrying capacity? (yes/no) N

Structure Number: B-40-413A

Other Items	Rating Old	Rating New	Comments
Approach Alignment	9		
Channel Condition	N		
Waterway Adequacy	N		
Construction Joints	9		
Utilities	N		

Marking/Signing	Rating Old	Rating New	Comments
Bridge Markers	N		
Narrow Bridge	N		
One Lane Bridge	N		
Vertical Clear.	N		
Weight Limit Post	N		

Cardinal=N. or E.

Clearance	File Measurement(ft)	Date	New Measurement(ft)
Min Vert. Clear. Under (Cardinal)	24.0		
Min Vert. Clear Under (Non Cardinal)			
Min Vert. Clear. Over			
Measured By:			

EXPANSION JOINTS

Location	In.	Temp	Type
A. NORTH ABUTMENT	1 5/8	45°	STRIP SEAL
B. SOUTH ABUTMENT	2 1/4	45°	STRIP SEAL
C.			
D.			
E.			
F.			

STRUCTURE TYPE

Material	Configuration	# Spans	Length
CONT. CONCRETE	PT. HAUNCH SLAB	6	581

Inspection/Maintenance Notes

REINFORCED CONCRETE PYLON (2 EA) - INSPECT AND NOTE CONDITION
- NO PROBLEMS NOTED (2/28/03)
PYLON ANCHOR BOXES (2 EA) - INSPECT AND NOTE CONDITION
- NO PROBLEMS NOTED (DEC. 02) - INSPECTED BY TED ZOLI (HNTB)

Recommendations	Estimated Cost	Year. of Estimate	Program Year

CONSTRUCTION HISTORY

Year	Work Performed	Cost($)	Year	Work Performed	Cost($)
2002	NEW STRUCTURE	$4,705,000			

Routine			Fracture Critical			Underwater-Visual/Probing			Other Special		
Last Insp	Next Insp	Freq (mo)	Last Insp	Next Insp	Freq (mo)	Last Insp	Next Insp	Freq (mo)	Last Insp	Next Insp	Freq (mo)
	2004	24									
					Diving						
					Profiles/Sounding/Sonar						

Equipment Needs

Inspector: Dave Bose Date: 2/28/03 Inspection Agency: EMCS, INC.

APPENDIX - SECTION IX

Structural Inventory Data Forms

TO: STRUCTURES DEVELOPMENT SECTION (May, 2001)

FROM: EMCS Design Group

SUBJECT: Structure Inventory Data (Complete all data fields applicable) (Complete only changed Data for Rehab.)

STRUCTURE NO.	Municipality	Section	Town	Range	Maintaining Agency	Owner
B40-413A	City of Milwaukee	32	07 N	22 E	41	41

Replaced Structure No.	Historical Sig.	Latitude	Longitude	10-State 40-Town 42-Vil 30-County 41-City
B-40-283				

02 ABUTMENT DATA

1. Abutment Type
   - ☐ Sill, Rect. (19)
   - ☒ Full Retaining (9)
   - ☐ Sill, Rect, Semi Exp. (20)
   - ☐ Pile Encased (11)
   - ☐ Semi Retaining (1)
   - ☐ Other_____
2. Pile Type
   - ☐ Timber (2) ☐ Steel (4) ☒ Cast in Place (6)
3. Pile Size
   - ☐ 8" (1)
   - ☒ 10" or 10 3/4" (2)
   - ☐ 12" (3) ☐ 14" (4)
   - ☐ Other _____
4. Slope Protection Type
   - ☐ Rip Rap (1)
   - ☐ Heavy Rip Rap (2)
   - ☒ Asphalt over Stone (5)
   - ☐ Concrete (3)
5. Rdwy. Width __58.0_____ft (Face to face of curb or rail)
6. Deck Width _81.0 to 96.0_ft (Outside edge to outside edge of concrete.)
7. Wing Type
   - ☒ Parallel to Rdwy. (1)
   - ☐ Skewed (3)
   - ☒ Perpendicular to Rdwy. (2)

03 PIER DATA

8. Number of Consecutive Pier Types _____5_____
9. Type
   - ☐ Hammerhead (2) ☐ Round Column Bent (9)
   - ☐ Pile Bent (3)
   - ☐ Piles Encased (7)
   - ☒ Other _Series of Single Column Piers__
10. Pile Type
    - ☐ Timber (2) ☐ Steel (4) ☒ Cast in Place (6)
    - ☐ Other _____
11. Pile Size
    - ☐ 8" (1)
    - ☐ 10" or 10 3/4" (2)
    - ☒ 12" (3) ☐ 14" (4)
    - ☐ Other _____

04 SPAN DATA

12.	No. Consecutive	Back	Main	1	2	3	4
13.	Length, ft *	123.0	195.0	67.0	67.0	67.0	54.8
14.	Configuration**	PT/1	PT/1	PT/1	PT/1	PT/1	PT/1
15.	Material***	2	2	2	2	2	2

* CL Bearing to CL Bearing

**Configuration = Haunch Slab (1)
Flat Slab (4)
Deck Girder (10)
Prestressed:
28" (25) 36" (21) 45" (22)
54" (23) 70" (24)
Other__Post Tensioned_

***Material = Concrete (1)
Cont. Conc. (2)
Steel (3)
Cont. Steel (4)
Prest. Conc. (5)
Cont. Prest. (6)
Timber (7)

05 GEOMETRIC DATA

16. Structure Length __581.0___ft (Back to Back Abuts. Along Rdwy. Centerline)
17. No. Lanes On ____4_____
18. L. Sdk. Width On _10.0 to 17.5__ft
19. R. Sdk. Width On _10.0 to 17.5__ft
20. Median Type __N/A_____
21. Median Width _N/A_____ft
22. Skew Angle ___0_____Deg.
23. Direction Skew Angle: ☒ None ☐ Left ☐ Right
24. Horizontal Curve __N/A_____Radius, ft
25. Dir.-Hor. Curve: ☐ Left ☐ Right
26. Girder Spacing ____N/A_____ft
27. Height, Top Pier Footing to Top Deck or Streambed Elev. to Top Deck _____ft
28. NBI Bridge Length Met (Y if over 20') between front faces of abutments along skew ☒ Y ☐ N

06 APPROACH DATA

29. Appr. Pavement Width ___58.0___ft
30. Rt. Shoulder Width ___N/A _____ft
31. Lt. Shoulder Width ___N/A _____ft
32. Total Width (Sum Above) _58.0___ft
33. Guardrail Termination: N/A
34. Guardrail Adequacy: N/A
35. Railing Attachment Type
    - ☐ No. Appr. Grdrl. (11) ☐ 5-7/8" Bolts (12)
    - ☐ Other _____
36. Rail Design Year-__N/A_____
37. Left Railing Type __N/A_____
38. Right Railing Type __N/A_____
    - Conc. LF (91) W Beam (79)
    - Type F (8) Other_____

07 CAPACITY DATA

39. Design HS ___20_____
40. Inventory HS _22_____
41. Operating HS _30_____
42. Max. Veh. Wt. ☒ 250 kips ☐ _____kips
43. Load Rating Basis - Load Factor (4)
44. Load Governing Member
    - ☐ Deck Girder (1) ☒ Slab (6)
    - ☐ Other _____
45. Deck Composition ☒ Concrete (1) ☐ Bituminous (2) ☐ Other _____
46. Deck Membrane ☐ Yes (8) ☒ None (0)
    Deck Surface ☒ Concrete (01) ☐ Bituminous (06)

08 HYDRAULIC DATA

47. Design Flood Frequency _____ yrs.
48. Design Discharge _____ cfs
49. Max. Velocity _____ ft/s
50. Drainage Area _____ sq. mi.
51. High Water Elev. _____ ft
52. Scour Critical Code _____
53. Scour Calculated? ☐ YES ☐ NO

09 EXPANSION JOINT DATA

LOCATION	JOINT TYPE
N. Abutment	STRIP SEAL
S. Abutment	STRIP SEAL

Finger Jt. (STEEL 2) Modular Jt. (MODULAR JT.)
Strip Seal (STRIP SEAL)

10 CARDINAL UNDERCLEARANCE

For North & East Bound Rdwys.
(Specify if Railroad)

54. Minimum Vertical _24.0_____ft (Top of Rdwy. under or Top of Rail to low point on structure.)
55. Left Min. Lateral __38.6_____ft (Outside edge of lane under or C/L Tracks to pier face or toe of slope.)
56. Right Min. Lateral __30.5_____ft (Outside edge of lane under or C/L Tracks to pier face or toe of slope.)
57. Minimum Horizontal __82.2_____ft (Total of lane widths plus lateral widths.)
58. Left Sdwk. Width ____0_____ ft
59. Right Sdwk Width ____0_____ ft
60. Number of lanes under __2 RR Tracks_____

10 NON CARDINAL UNDERCLEARANCE

For South & West Bound Rdwys. (Same as Cardinal for 2 Lane Hwys.)

61. Minimum Vertical _____ ft
62. Left Min. Lateral _____ ft
63. Right Min. Lateral _____ ft
64. Min. Horizontal _____ ft

13 FEATURE ON BRIDGE DATA

65. Enter All Route numbers, or CTH numbers or Town Road Name, and direction or RR:
____South 6th Street_____.

Direction: ☒ North ☐ East
☒ South ☐ West

Designation: ☐ Mainline (1) ☐ Other _____

14 FEATURE UNDER BRIDGE DATA

66. Enter all Route numbers or CTH numbers, or Town Road and direction, or RR or Waterway name.
____Central Pacific RR_____.

Direction: ☐ North ☒ East
☐ South ☒ West

Designation: ☐ Rdwy. (1) ☐ Waterway (2)
☒ RR (5) ☐ Other _____

15 CONSTRUCTION DATA

67. Plans Completed YR _2002_ MO _09_ DAY_03_

68. WORK Performed
☒ New Structure (1) ☐ Other _____

69. Designer
☐ Unit 1 (01W1) ☐ Unit 2 (01W2) ☐ Unit 3 (01W3)
☒ Consultant __HNTB_____

16 APPRAISAL UPDATE

70. Load Capacity - P5
71. Geom. On - 8
72. Geom. Under – N/A
73. Appr. Align. - 8
74. Horiz. Align. - 8
75. Vert. Align. - 8

17 STRUCTURE SERVICE DATA

76. Hwy. On Detour Length _____mi

77. Type Service On
☒ Highway (1) ☐ RR (2)
☐ Other_____

78. Type Service Under
☐ Highway (1) ☒ R.R. (2)
☐ Waterway (5) ☐ Other _____

PLANNING DATA

79. Functional Classification:

☐ Interstate Rural (1) ☐ Interstate-Urban (11)
☐ Other Art-Rural (2) ☒ Other Art.-Urban (14)
☐ Local-Rural (9) ☐ Local Urban (19)

80. ADT _17,750_____
81. ADT-Year ___2000_____
82. Truck ADT % ___2%_____
83. Future ADT ____22,575_____
84. Future ADT-Year ___2020_____

TO: STRUCTURES DEVELOPMENT SECTION (May, 2001)

FROM: EMCS Design Group

SUBJECT: Structure Inventory Data (Complete all data fields applicable) (Complete only changed Data for Rehab.)

STRUCTURE NO.	Municipality	Section	Town	Range	Maintaining Agency	Owner
B-40-414A	City of Milwaukee	29	07 N	22 E	41	41

Replaced Structure No.	Historical Sig.	Latitude	Longitude	10-State 40-Town 42-Vil 30-County 41-City
B-40-283				

02 ABUTMENT DATA

1. Abutment Type
   - ☐ Sill, Rect. (19) ☒ Full Retaining (9)
   - ☐ Sill, Rect, Semi Exp. (20) ☐ Pile Encased (11)
   - ☐ Semi Retaining (1) ☐ Other_____
2. Pile Type
   - ☐ Timber (2) ☐ Steel (4) ☒ Cast in Place (6)
3. Pile Size
   - ☐ 8" (1) ☐ 10" or 10 3/4" (2)
   - ☒ 12" (3) ☐ 14" (4) ☐ Other _____
4. Slope Protection Type
   - ☐ Rip Rap (1) ☐ Heavy Rip Rap (2)
   - ☐ Asphalt over Stone (5) ☐ Concrete (3)
5. Rdwy. Width __58.0 to 61.2_ft (Face to face of curb or rail)
6. Deck Width __81.0 to 84.2_ft (Outside edge to outside edge of concrete.)
7. Wing Type
   - ☒ Parallel to Rdwy. (1) ☐ Skewed (3)
   - ☐ Perpendicular to Rdwy. (2)

03 PIER DATA

8. Number of Consecutive Pier Types _3_____
9. Type
   - ☐ Hammerhead (2) ☐ Round Column Bent (9)
   - ☐ Pile Bent (3) ☐ Piles Encased (7)
   - ☒ Other _Series of Single Column Piers_
10. Pile Type
    - ☐ Timber (2) ☐ Steel (4) ☒ Cast in Place (6)
    - ☐ Other _____
11. Pile Size
    - ☐ 8" (1) ☐ 10" or 10 3/4" (2)
    - ☒ 12" (3) ☐ 14" (4) ☐ Other _____

04 SPAN DATA

12.	No. Consecutive	1	2	3	4
13.	Length, ft *	67	67	67	66
14.	Configuration**	PT/1	PT/1	PT/1	PT/1
15.	Material***	2	2	2	2

* CL Bearing to CL Bearing

**Configuration = Haunch Slab (1)
Flat Slab (4)
Deck Girder (10)
Prestressed:
28" (25) 36" (21) 45" (22)
54" (23) 70" (24)
Other___Post-Tensioned___

***Material = Concrete (1)
Cont. Conc. (2)
Steel (3)
Cont. Steel (4)
Prest. Conc. (5)
Cont. Prest. (6)
Timber (7)

05 GEOMETRIC DATA

16. Structure Length _273.0_____ft (Back to Back Abuts. Along Rdwy. Centerline)
17. No. Lanes On ___4_____
18. L. Sdk. Width On ___10.0____ft
19. R. Sdk. Width On ___10.0____ft
20. Median Type ___N/A_____
21. Median Width __N/A_____ft
22. Skew Angle __0_____Deg.
23. Direction Skew Angle: ☒ None ☐ Left ☐ Right
24. Horizontal Curve ___N/A_____Radius, ft
25. Dir.-Hor. Curve: ☐ Left ☐ Right
26. Girder Spacing ___N/A_____ft
27. Height, Top Pier Footing to Top Deck ___14.46, 17.03, 20.09__ft
28. NBI Bridge Length Met (Y if over 20') between front faces of abutments along skew ☒ Y ☐ N

06 APPROACH DATA

29. Appr. Pavement Width _61.3__ft
30. Rt. Shoulder Width _____N/A_____ft
31. Lt. Shoulder Width _____N/A_____ft
32. Total Width (Sum Above) _61.3__ft
33. Guardrail Termination: N/A
34. Guardrail Adequacy: N/A
35. Railing Attachment Type
    - ☐ No. Appr. Grdrl. (11) ☐ 5-7/8" Bolts (12)
    - ☐ Other _____
36. Rail Design Year-_____N/A_____
37. Left Railing Type _____N/A_____
38. Right Railing Type _____N/A_____
    - Conc. LF (91) W Beam (79)
    - Type F (8) Other_____

07 CAPACITY DATA

39. Design HS _20_____
40. Inventory HS _22_____
41. Operating HS _30_____
42. Max. Veh. Wt. ☒ 250 kips ☐ _____kips
43. Load Rating Basis - Load Factor (4)
44. Load Governing Member
    - ☐ Deck Girder (1) ☒ Slab (6)
    - ☐ Other _____
45. Deck Composition ☒ Concrete (1) ☐ Bituminous (2) ☐ Other _____
46. Deck Membrane ☐ Yes (8) ☒ None (0)
    - Deck Surface ☒ Concrete (01) ☐ Bituminous (06)

08 HYDRAULIC DATA

47. Design Flood Frequency _____ yrs.
48. Design Discharge _____ cfs
49. Max. Velocity _____ ft/s
50. Drainage Area _____ sq. mi.
51. High Water Elev. _____ ft
52. Scour Critical Code _____
53. Scour Calculated? ☐ YES ☐ NO

09 EXPANSION JOINT DATA

LOCATION	JOINT TYPE
N. Approach Abutment	STRIP SEAL
N. Bascule South Pier	STRIP SEAL

Finger Jt. (STEEL 2) Modular Jt. (MODULAR JT.)
Strip Seal (STRIP SEAL)

10 CARDINAL UNDERCLEARANCE

For North & East Bound Rdwys.
(Specify if Railroad)

54. Minimum Vertical _____ft (Top of Rdwy. under or Top of Rail to low point on structure.)
55. Left Min. Lateral _____ft (Outside edge of lane under or C/L Tracks to pier face or toe of slope.)
56. Right Min. Lateral _____ft (Outside edge of lane under or C/L Tracks to pier face or toe of slope.)
57. Minimum Horizontal _____ft (Total of lane widths plus lateral widths.)
58. Left Sdwk. Width _____ ft
59. Right Sdwk Width _____ ft
60. Number of lanes under _____.

10 NON CARDINAL UNDERCLEARANCE

For South & West Bound Rdwys. (Same as Cardinal for 2 Lane Hwys.)

61. Minimum Vertical _____ ft
62. Left Min. Lateral _____ ft
63. Right Min. Lateral _____ ft
64. Min. Horizontal _____ ft

13 FEATURE ON BRIDGE DATA

65. Enter All Route numbers, or CTH numbers or Town Road Name, and direction or RR:
__South 6th Street_____.

Direction: ☒ North ☐ East
☒ South ☐ West

Designation: ☒ Mainline (1) ☐ Other _____

14 FEATURE UNDER BRIDGE DATA

66. Enter all Route numbers or CTH numbers, or Town Road and direction, or RR or Waterway name.
_____N/A_____.

Direction: ☐ North ☐ East
☐ South ☐ West

Designation: ☐ Rdwy. (1) ☐ Waterway (2)
☐ RR (5) ☐ Other _____

15 CONSTRUCTION DATA

67. Plans Completed YR _2002_ MO _09_ DAY_03___

68. WORK Performed
☒ New Structure (1) ☐ Other _____

69. Designer
☐ Unit 1 (01W1) ☐ Unit 2 (01W2) ☐ Unit 3 (01W3)
☒ Consultant ___HNTB_____

16 APPRAISAL UPDATE

70. Load Capacity - P5
71. Geom. On - 8
72. Geom. Under – N/A
73. Appr. Align. - 8
74. Horiz. Align. - 8
75. Vert. Align. - 8

17 STRUCTURE SERVICE DATA

76. Hwy. On Detour Length _____mi

77. Type Service On
☒ Highway (1) ☐ RR (2)
☐ Other_____

78. Type Service Under
☐ Highway (1) ☐ R.R. (2)
☐ Waterway (5) ☐ Other _____

PLANNING DATA

79. Functional Classification:

☐ Interstate Rural (1) ☐ Interstate-Urban (11)
☐ Other Art-Rural (2) ☒ Other Art.-Urban (14)
☐ Local-Rural (9) ☐ Local Urban (19)

80. ADT ___17,750_____
81. ADT-Year __2000_____
82. Truck ADT % __2%_____
83. Future ADT ___22,575_____
84. Future ADT-Year __2020_____

TO: STRUCTURES DEVELOPMENT SECTION (May, 2001)

FROM: EMCS Design Group

SUBJECT: Structure Inventory Data (Complete all data fields applicable) (Complete only changed **Data** for Rehab.)

STRUCTURE NO.	Municipality	Section	Town	Range	Maintaining Agency	Owner
B-40-414C	City of Milwaukee	29	07 N	22 E	41	41

Replaced Structure No.	Historical Sig.	Latitude	Longitude	10-State 40-Town 42-Vil 30-County 41-City
B-40-283				

02 ABUTMENT DATA

1. Abutment Type
   - ☐ Sill, Rect. (19)
   - ☒ Full Retaining (9)
   - ☐ Sill, Rect, Semi Exp. (20)
   - ☐ Pile Encased (11)
   - ☐ Semi Retaining (1)
   - ☐ Other_____
2. Pile Type
   - ☐ Timber (2) ☐ Steel (4) ☒ Cast in Place (6)
3. Pile Size
   - ☐ 8" (1)
   - ☒ 10" or 10 3/4" (2)
   - ☒ 12" (3) ☐ 14" (4)
   - ☐ Other _____
4. Slope Protection Type
   - ☐ Rip Rap (1)
   - ☐ Heavy Rip Rap (2)
   - ☐ Asphalt over Stone (5)
   - ☐ Concrete (3)
5. Rdwy. Width _58.0_____ft (Face to face of curb or rail)
6. Deck Width _81.0 to 96.0_ft (Outside edge to outside edge of concrete.)
7. Wing Type
   - ☒ Parallel to Rdwy. (1)
   - ☐ Skewed (3)
   - ☐ Perpendicular to Rdwy. (2)

03 PIER DATA

8. Number of Consecutive Pier Types __5_____
9. Type
   - ☐ Hammerhead (2) ☐ Round Column Bent (9)
   - ☐ Pile Bent (3)
   - ☐ Piles Encased (7)
   - ☒ Other _Pylon & Series of Single Column Piers_
10. Pile Type
    - ☐ Timber (2) ☐ Steel (4) ☒ Cast in Place (6)
    - ☐ Other _____
11. Pile Size
    - ☐ 8" (1)
    - ☐ 10" or 10 3/4" (2)
    - ☒ 12" (3) ☐ 14" (4)
    - ☐ Other _____

04 SPAN DATA

12. No. Consecutive	1	2	Main	Back	3	4
13. Length, ft *	55.2	67.0	195.0	115.0	120.0	112.1
14. Configuration**	PT/1	PT/1	PT/1	PT/1	PT/1	PT/1
15. Material***	2	2	2	2	2	2

* CL Bearing to CL Bearing

**Configuration = Haunch Slab (1) ***Material = Concrete (1)

Flat Slab (4)	Cont. Conc. (2)
Deck Girder (10)	Steel (3)
Prestressed:	Cont. Steel (4)
28" (25) 36" (21) 45" (22)	Prest. Conc. (5)
54" (23) 70" (24)	Cont. Prest. (6)
Other__Post-Tensioned_	Timber (7)

05 GEOMETRIC DATA

16. Structure Length __670.6_____ft (Back to Back Abuts. Along Rdwy. Centerline)
17. No. Lanes On _4_____
18. L. Sdk. Width On _10.0 to 17.5____ft
19. R. Sdk. Width On _10.0 to 17.5____ft
20. Median Type __N/A_____
21. Median Width __N/A_____ft
22. Skew Angle ____0_____Deg.
23. Direction Skew Angle: ☒ None ☐ Left ☐ Right
24. Horizontal Curve __N/A_____Radius, ft
25. Dir.-Hor. Curve: ☐ Left ☐ Right
26. Girder Spacing _N/A_____ft
27. Height, Top Pier Footing to Top Deck or Streambed Elev. to Top Deck _30.1, 29.6, 21.0 at Pylon, 27.0, 24.4 _ft
28. NBI Bridge Length Met (Y if over 20') between front faces of abutments along skew ☒ Y ☐ N

06 APPROACH DATA

29. Appr. Pavement Width ____58.0____ft
30. Rt. Shoulder Width _____N/A____ft
31. Lt. Shoulder Width _____N/A____ft
32. Total Width (Sum Above) __58.0____ft
33. Guardrail Termination: N/A
34. Guardrail Adequacy: N/A
35. Railing Attachment Type
    - ☐ No. Appr. Grdrl. (11) ☐ 5-7/8" Bolts (12)
    - ☐ Other _____
36. Rail Design Year-___N/A_____
37. Left Railing Type ___N/A_____
38. Right Railing Type __N/A_____

    Conc. LF (91) W Beam (79)
    Type F (8) Other_____

07 CAPACITY DATA

39. Design HS __20_____
40. Inventory HS _22_____
41. Operating HS _30_____
42. Max. Veh. Wt. ☒ 250 kips ☐ _____kips
43. Load Rating Basis - Load Factor (4)
44. Load Governing Member
    - ☐ Deck Girder (1) ☒ Slab (6)
    - ☐ Other _____
45. Deck Composition ☒ Concrete (1) ☐ Bituminous (2) ☐ Other _____
46. Deck Membrane ☐ Yes (8) ☒ None (0)

    Deck Surface ☒ Concrete (01) ☐ Bituminous (06)

08 HYDRAULIC DATA

47. Design Flood Frequency _____ yrs.
48. Design Discharge _____ cfs
49. Max. Velocity _____ ft/s
50. Drainage Area _____ sq. mi.
51. High Water Elev. _____ ft
52. Scour Critical Code _____
53. Scour Calculated? ☐ YES ☐ NO

09 EXPANSION JOINT DATA

LOCATION	JOINT TYPE
N. Bascule N. Pier	STRIP SEAL
Post Office Tie	STRIP SEAL
N. Abut.	STRIP SEAL

Finger Jt. (STEEL 2) Modular Jt. (MODULAR JT.)
Strip Seal (STRIP SEAL)

10 CARDINAL UNDERCLEARANCE

For North & East Bound Rdwys.
(Specify if Railroad)

54. Minimum Vertical _23.0, 16.75, 16.75____ft (Top of Rdwy. under or Top of Rail to low point on structure.)
55. Left Min. Lateral _62.7, 43.1, 7.0_____ft (Outside edge of lane under or C/L Tracks to pier face or toe of slope.)
56. Right Min. Lateral 33.3, 6.5, 7.0_____ft (Outside edge of lane under or C/L Tracks to pier face or toe of slope.)
57. Minimum Horizontal _109.1, 95.7, 37.8__ft (Total of lane widths plus lateral widths.)
58. Left Sdwk. Width ___0_____ ft
59. Right Sdwk Width __0_____ ft
60. Number of lanes under _2 RR Tracks, 4, 2_____

10 NON CARDINAL UNDERCLEARANCE

For South & West Bound Rdwys. (Same as Cardinal for 2 Lane Hwys.)

61. Minimum Vertical _____ ft
62. Left Min. Lateral _____ ft
63. Right Min. Lateral _____ ft
64. Min. Horizontal _____ ft

13 FEATURE ON BRIDGE DATA

65. Enter All Route numbers, or CTH numbers or Town Road Name, and direction or RR:
__South 6th Street_____.

Direction: ☒ North ☐ East
☒ South ☐ West

Designation: ☒ Mainline (1) ☐ Other _____

14 FEATURE UNDER BRIDGE DATA

66. Enter all Route numbers or CTH numbers, or Town Road and direction, or RR or Waterway name.
___Central Pacific RR, St. Paul Ave., Hinman St.,__.

Direction: ☐ North ☒ East
☐ South ☒ West

Designation: ☒ Rdwy. (1) ☐ Waterway (2)
☒ RR (5) ☐ Other _____

15 CONSTRUCTION DATA

67. Plans Completed YR _2000_ MO _09_ DAY__03_

68. WORK Performed
☒ New Structure (1) ☐ Other _____

69. Designer
☐ Unit 1 (01W1) ☐ Unit 2 (01W2) ☐ Unit 3 (01W3)
☒ Consultant ___HNTB_____

16 APPRAISAL UPDATE

70. Load Capacity - P5
71. Geom. On - 8
72. Geom. Under - 8
73. Appr. Align. - 8
74. Horiz. Align. - 8
75. Vert. Align. - 8

17 STRUCTURE SERVICE DATA

76. Hwy. On Detour Length _____mi

77. Type Service On
☒ Highway (1) ☐ RR (2)
☐ Other_____

78. Type Service Under
☒ Highway (1) ☒ R.R. (2)
☐ Waterway (5) ☐ Other _____

PLANNING DATA

79. Functional Classification:

☐ Interstate Rural (1) ☐ Interstate-Urban (11)
☐ Other Art-Rural (2) ☒ Other Art.-Urban (14)
☐ Local-Rural (9) ☐ Local Urban (19)

80. ADT _17,750_____
81. ADT-Year __2000_____
82. Truck ADT % __2%_____
83. Future ADT ___22,575_____
84. Future ADT-Year __2020_____

Contract Plans - Including As-Built and Shop Drawings
(Under Separate Cover)

Design Calculations
(Under Separate Cover)

Special Provisions
(Under Separate Cover, See RFP)

APPENDIX - SECTION XIII

Sidewalk Cracking Photo Documentation
Before/After Repair Photos

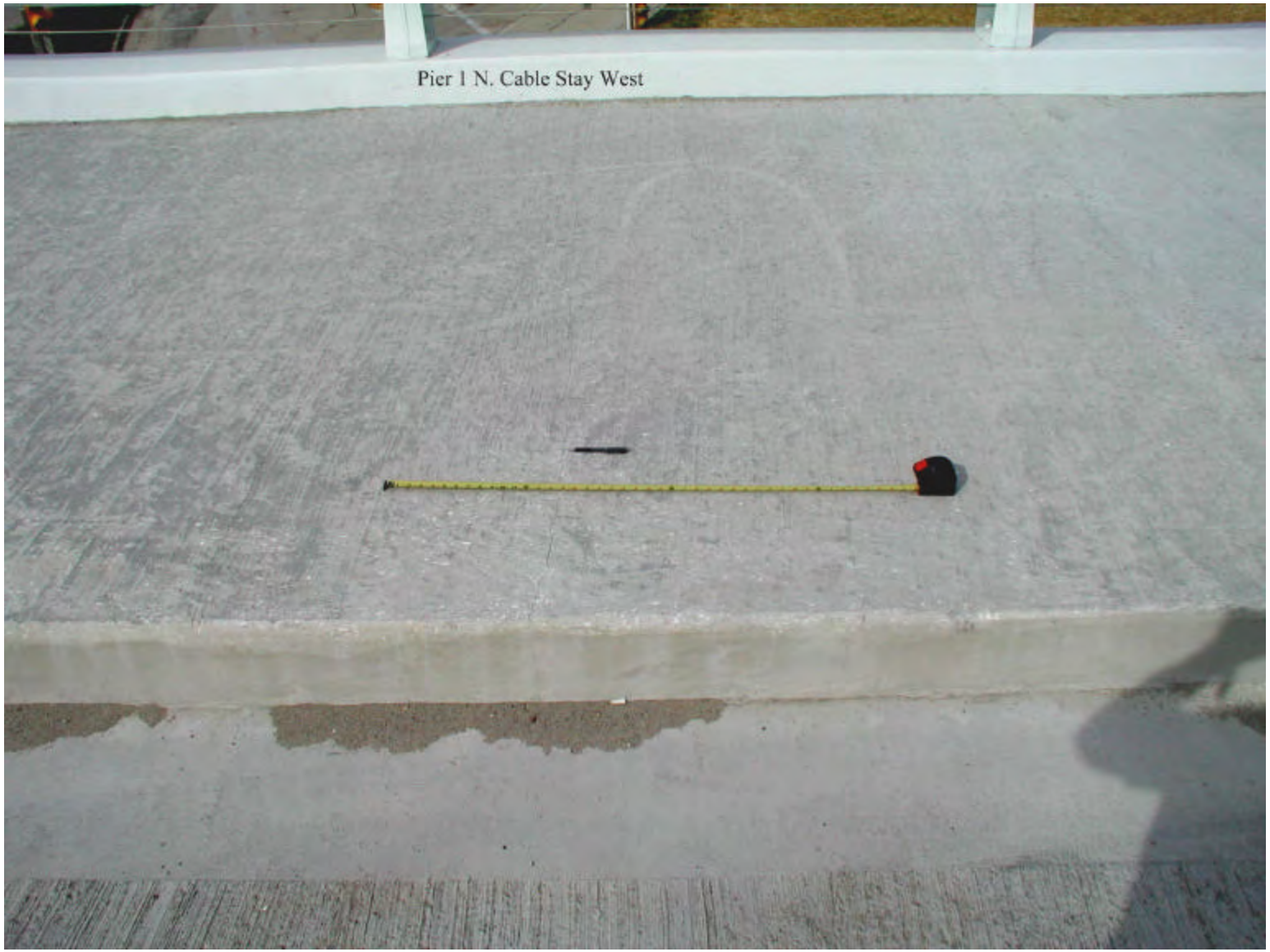
Pier 1 N. Cable Stay West

Pier 1 N. Cable Stay West

Pier 1 N. Cable Stay East

1East N. Cable Stay

2 East N. Cable Stay

2 East N. Cable Stay

3 East N. Cable Stay

4 East N. Cable Stay

5 East N Cable Stay

6 East N. Cable Stay

East Pylon N. Cable Stay N. Side

East Pylon N. Cable Stay S. Side

7 East N. Cable Stay

8 East N. Cable Stay

Midpoint between 8 East and 9 East

9 East N. Cable Stay

10 East N. Cable Stay

10 East N. Cable Stay

11 East N. Cable Stay

12 East N. Cable Stay

12 East N. Cable Stay

12 East N. Cable Stay

1 West N. Cable Stay

2 West N. Cable Stay

3 West N. Cable Stay

4 West N. Cable Stay

5 West N. Cable Stay

6 West N. Cable Stay

West Pylon N. Cable Stay N. Side

West Pylon N. Cable Stay S. Side

7 West N. Cable Stay

West N. Cable Stay

9 West N. Cable Stay

10 West N. Cable Stay

11 West N. Cable Stay

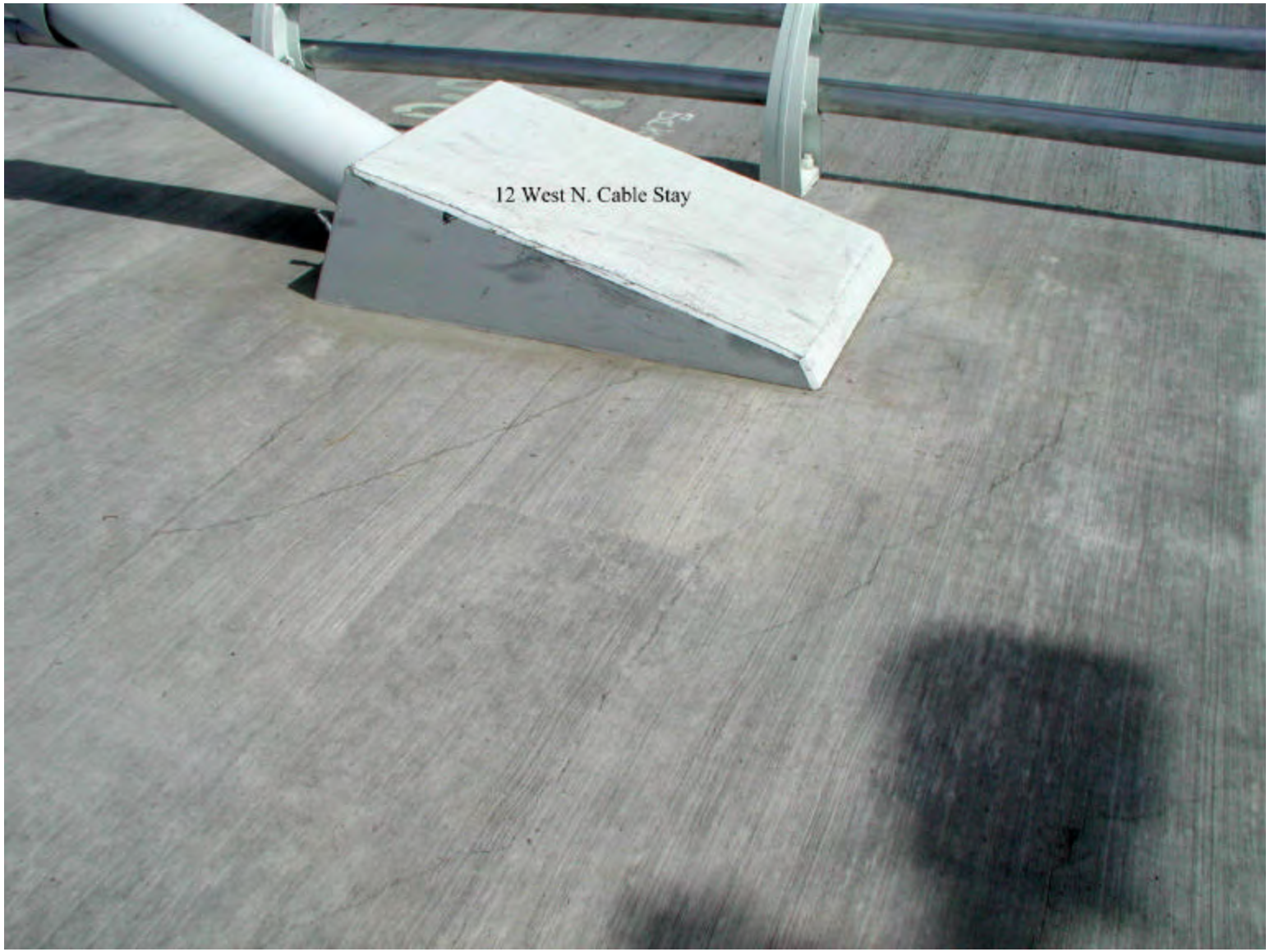
12 West N. Cable Stay

12 West N Cable Stay

12 West N. Cable Stay

South of 12 West N. Cable Stay