RIVERWALK CONNECTOR BETWEEN THE RIVER RENAISSANCE AND MIAD RIVERWALKS

CITY OF MILWAUKEE

MILWAUKEE, WISCONSIN

LIST OF DRAWINGS

1. TITLE SHEET
2. SITE PLAN
3. PLAN & ELEVATION
4. TYPICAL SECTION
5. BRACING DETAILS
6. SECTIONS
7. SECTIONS & DETAILS (GRID LINE A)
8. SECTIONS & DETAILS (GRID LINE B)
9. RAILING (1 OF 2)
10. RAILING (2 OF 2)

PROJECT LOCATION

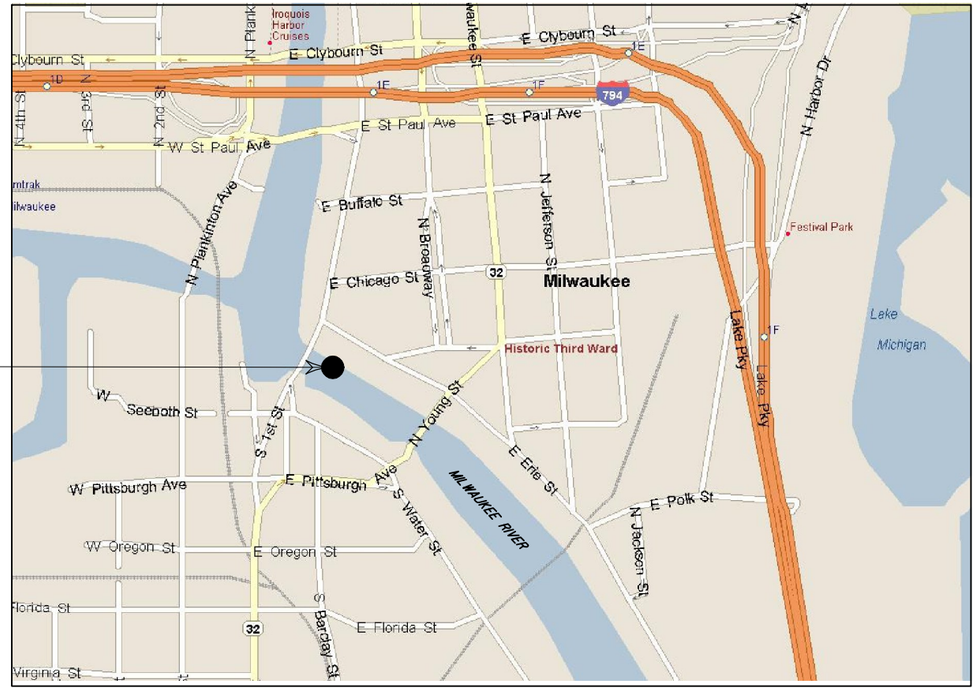

LOCATION MAP

WISCONSIN
STEVEN G. MILLER
E-26710
MILWAUKEE, WI
PROFESSIONAL ENGINEER

4-16-2012

ORIGINAL PLANS PREPARED BY
CH2MHILL
MILWAUKEE, WISCONSIN

City of Milwaukee
Department of Public Works
Infrastructure Services Division

APPROVED BY :
STRUCTURAL DESIGN MANAGER ---------- DATE
CITY ENGINEER & SPECIAL DEPUTY COMMISSIONER OF PUBLIC WORKS ---------- DATE

RIVERWALK CONNECTOR BETWEEN THE RIVER RENAISSANCE AND MIAD RIVERWALKS
TITLE SHEET

REVISIONS

DESIGNED BY SGM
DRAWN BY MHM
CHECKED BY BKS
DATE 04-2012
SCALE NONE
JOB NUMBER TD03484000
SHEET NUMBER 1
OF 10

STRUC\RIVERWALK\ 01-TITle Sheet.dgn
04-16-2012

CONTRACTOR SHALL SUBMIT AN EROSION CONTROL PLAN TO THE CITY AND DNR FOR APPROVAL.

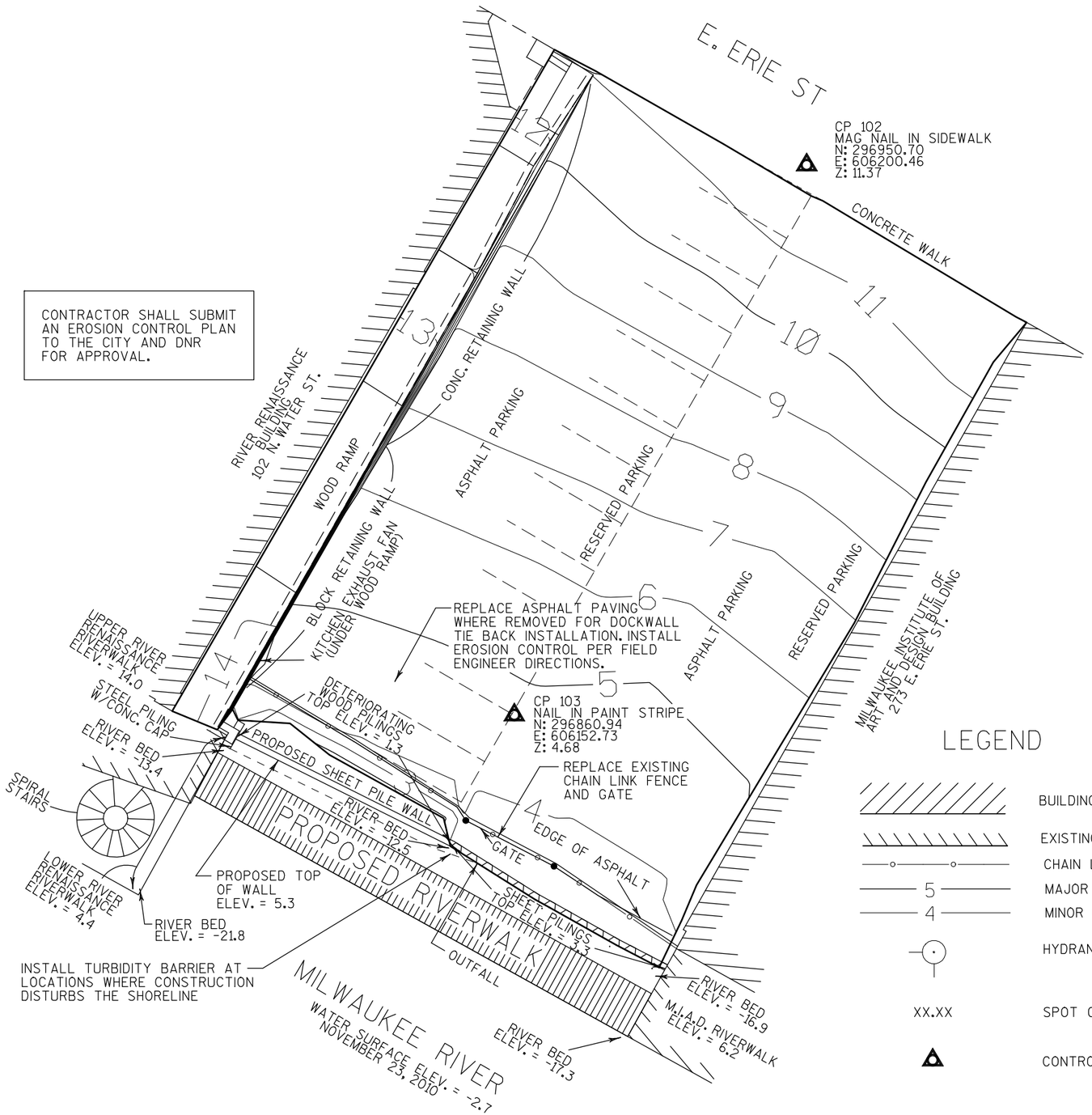

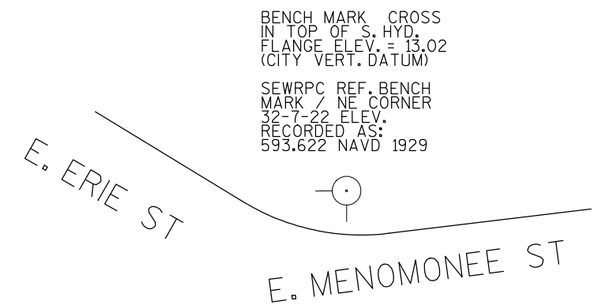

APPROXIMATE LOCATION OF SECTION CORNER OBSCURED BY FENCE

N

SCALE: 1.0" = 20.00'

0 5 10 20

DATUM: HORIZ. WISCONSIN COUNTY COORDINATE SYSTEM, MILWAUKEE ZONE NAD 83/2007
VERT. CITY OF MILWAUKEE, CONVERTED FROM SEWRPC NAVD 1929, (CITY = NAVD -580.603)

Underground utilities shown were located from field survey and schematic diagrams; as-built mapping was not used or provided.
The Surveyor makes no guarantees that underground utilities shown are inclusive of any or all utilities in the area, either active or abandoned.

Nor does The Surveyor warrant the underground utilities shown here on are in the location shown. The Surveyor did locate the utilities shown as accurately as possible from field marks made by agents of the utilities as directed by Diggers Hotline requests of The Surveyor, per the tickets listed below. Actual underground utility features were not located.

Diggers Hotline Ticket # 20104605440

LEGEND

- BUILDING WALL
- EXISTING RIVER WALK DECK
- CHAIN LINK FENCE
- 5 — MAJOR CONTOUR
- 4 — MINOR CONTOUR
- HYDRANT
- XX.XX — SPOT GRADE
- CONTROL POINT

DIGGERS HOTLINE
Call 811 3 Work Days Before You Dig
or Toll Free (800) 242-8511
Hearing Impaired TDD (800) 542-2289
www.DiggersHotline.com

ORIGINAL PLANS PREPARED BY
CH2MHILL
MILWAUKEE, WISCONSIN

City of Milwaukee
Department of Public Works
Infrastructure Services Division

RIVERWALK CONNECTOR BETWEEN THE RIVER RENAISSANCE AND MIAD RIVERWALKS
SITE PLAN

REVISIONS

DESIGNED BY SGM	
DRAWN BY MHM	
CHECKED BY BKS	
DATE 04-2012	SCALE NONE
JOB NUMBER TD03484000	
SHEET NUMBER 2	
OF 10	

STRUC\RIVERWALK\ 02-Site Plan.dgn
04-16-2012

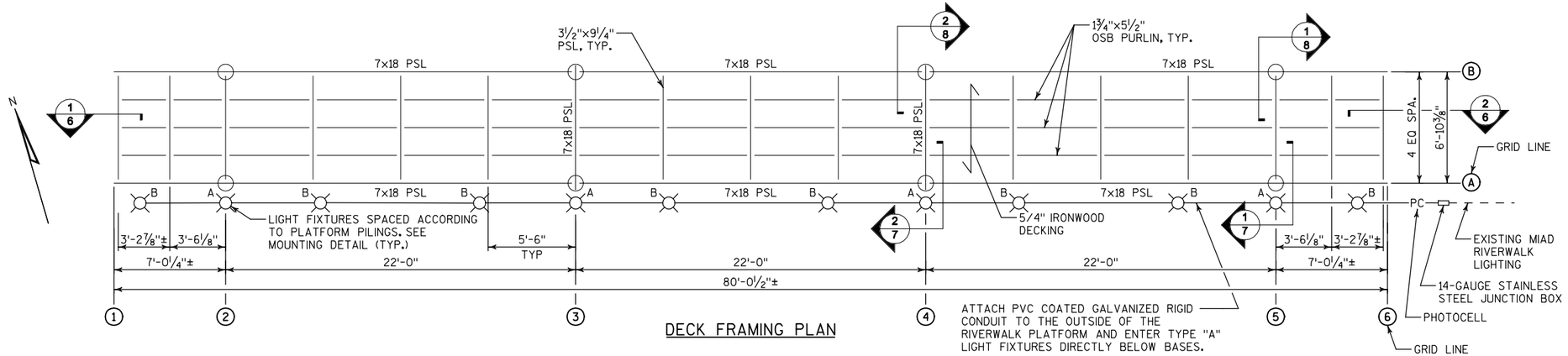

DECK FRAMING PLAN

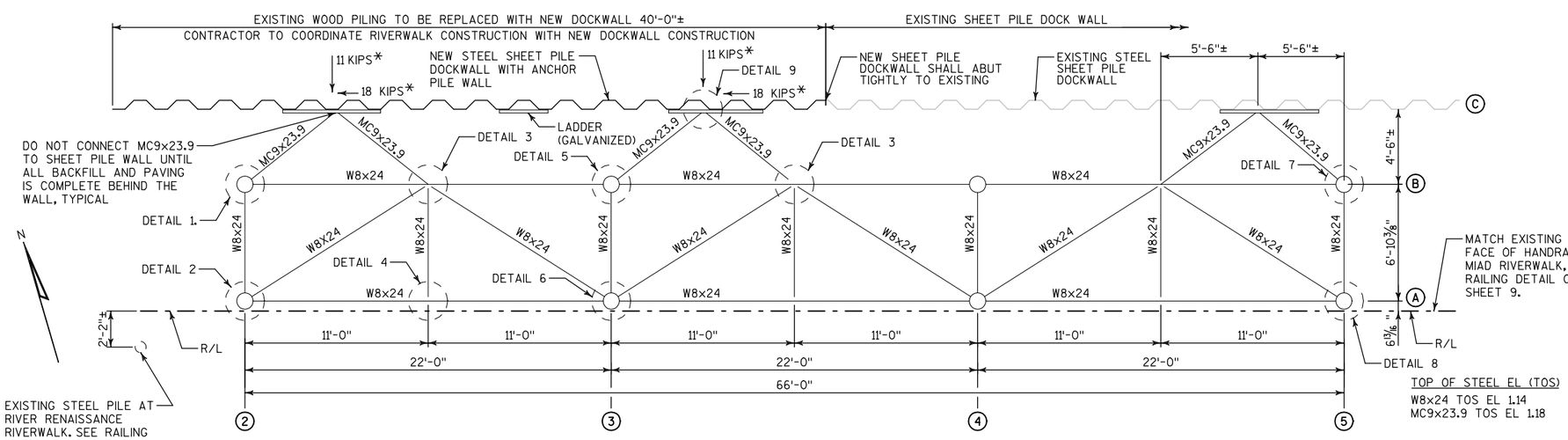

BRACING FRAMING PLAN

SEE SHEET 5 FOR DETAILS

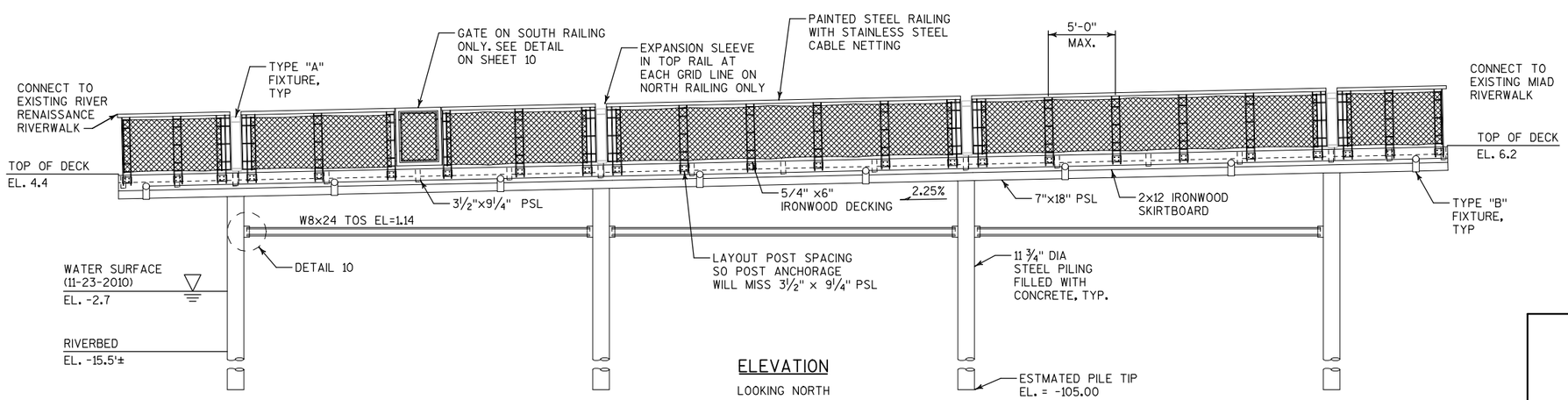

ELEVATION

LOOKING NORTH

GENERAL NOTES

DRAWINGS SHALL NOT BE SCALED.

THE CONTRACTOR SHALL FIELD VERIFY ALL EXISTING DIMENSIONS PRIOR TO CONSTRUCTION.

THE CONTRACTOR SHALL VERIFY THE LOCATION OF ALL EXISTING UTILITIES. ADDITIONAL UTILITIES NOT SHOWN ON THIS PLAN MAY BE PRESENT.

PILE SPLICES SHALL BE MADE BY A CERTIFIED WELDER.

THE CONTRACTOR SHALL PROTECT THE TOP SURFACE OF THE PSL AND OSB WITH A SEALER RECOMMENDED BY THE MANUFACTURER.

PSL = PARALLEL STRAND LUMBER

OSB = ORIENTED STRAND BOARD

DESIGN LOADS

RIVERWALK LIVE LOAD: 100 PSF

*UNFACTORED ICE LOAD REACTIONS FROM RIVERWALK BRACING.

DESIGN NEW DOCKWALL FOR A LIVE LOAD TRAFFIC SURCHARGE OF 240 PSF.

FOUNDATION

THE RIVERWALK SHALL BE SUPPORTED ON 11¾" DIAMETER CONCRETE FILLED STEEL PILING DRIVEN TO A MINIMUM BEARING VALUE OF 30 TONS PER PILE. THE PILES NEED TO RESIST AN UPWARD ICE FORCE OF 7 TONS/PILE. ESTIMATED PILE LENGTH IS 110 FEET.

City of Milwaukee

Department of Public Works

Infrastructure Services Division

RIVERWALK CONNECTOR BETWEEN THE RIVER RENAISSANCE AND MIAD RIVERWALKS PLAN AND ELEVATION

REVISIONS

DESIGNED BY SGM

DRAWN BY MHM

CHECKED BY BKS

DATE 04-2012

SCALE NONE

JOB NUMBER TD03484000

SHEET NUMBER 3

OF 10

ORIGINAL PLANS PREPARED BY

CH2MHILL

MILWAUKEE, WISCONSIN

STRUC\RIVERWALK\ 03-Framing Plan.dgn
04-16-2012

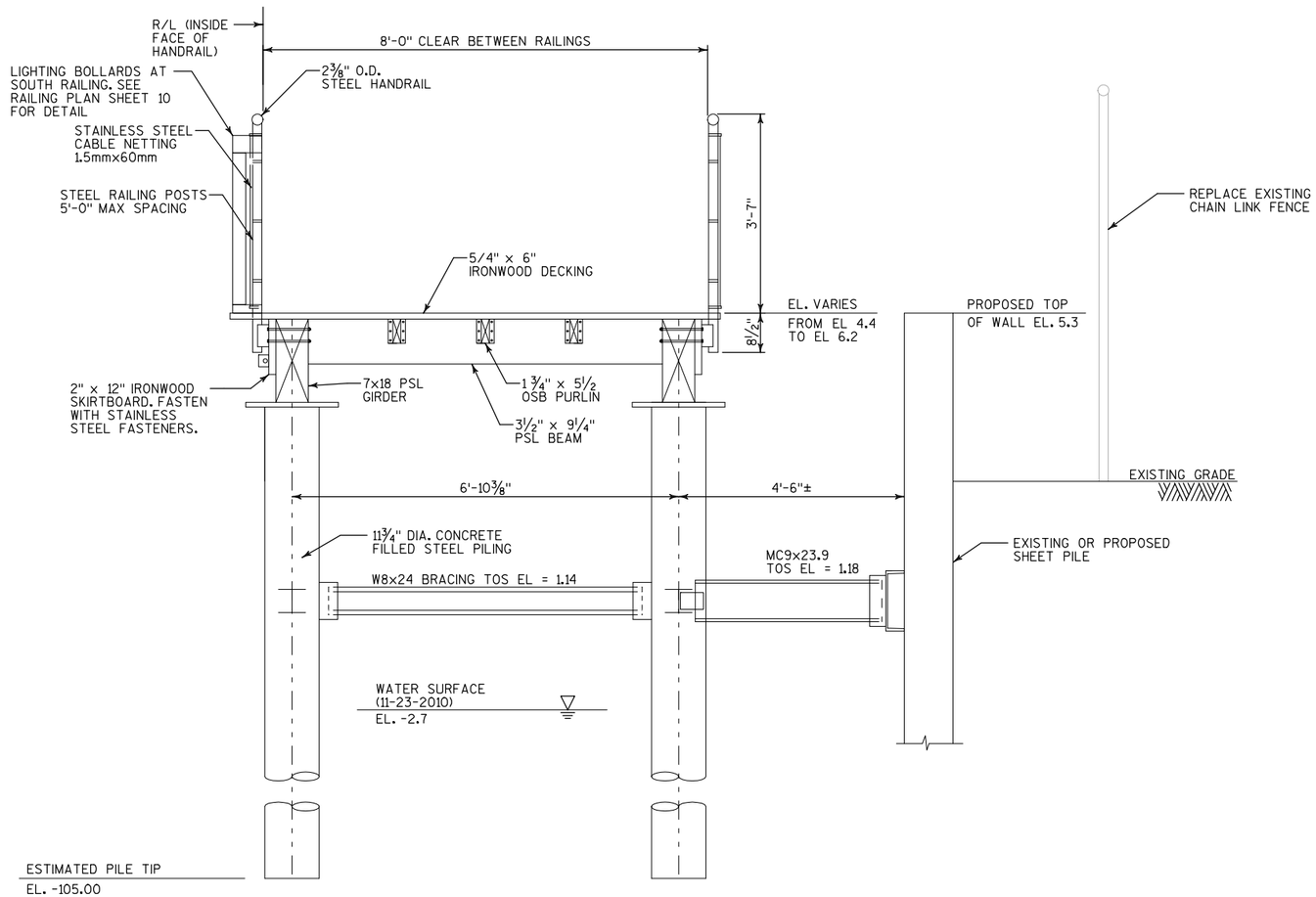

TYPICAL SECTION
LOOKING NORTHWEST

City of Milwaukee

Department of Public Works

Infrastructure Services Division

RIVERWALK CONNECTOR BETWEEN THE RIVER RENAISSANCE AND MIAD RIVERWALKS TYPICAL SECTION

REVISIONS

DESIGNED BY SGM

DRAWN BY MHM

CHECKED BY BKS

DATE 04-2012

SCALE NONE

JOB NUMBER TD03484000

SHEET NUMBER 4

OF 10

ORIGINAL PLANS PREPARED BY
CH2MHILL
MILWAUKEE, WISCONSIN

STRUC\RIVERWALK\ 04-TypicalSection.dgn
04-16-2012

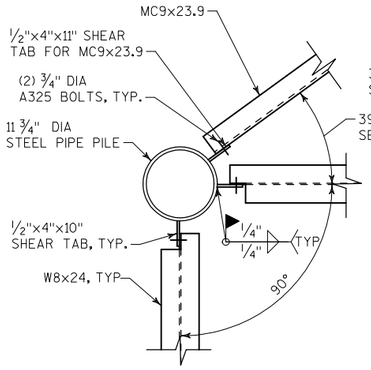

DETAIL 1

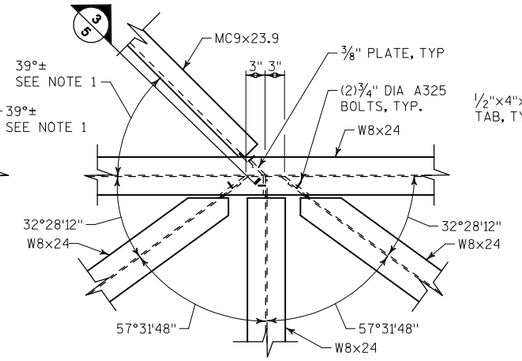

DETAIL 3

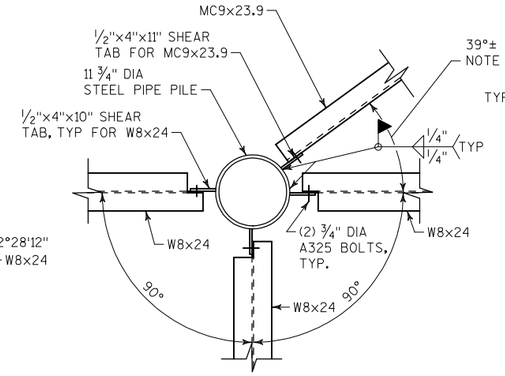

DETAIL 5

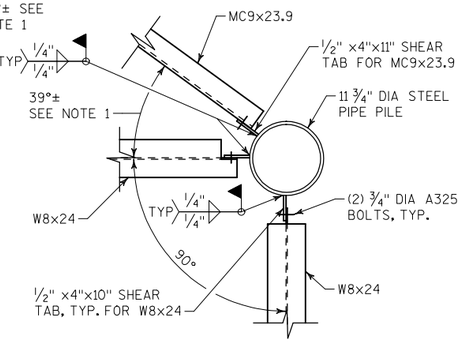

DETAIL 7

NOTES

ALL STRUCTURAL STEEL SHALL BE HOT-DIP GALVANIZED.

STRUCTURAL STEEL SHALL BE ASTM A572 GRADE 50.

ALL BOLT HOLES SHALL BE 13/16" DIAMETER STANDARD HOLES.

ALL BOLTS SHALL BE 3/4" DIAMETER ASTM A325 EXCEPT WHERE NOTED OTHERWISE.

ALL BOLTS SHALL BE HOT-DIP GALVANIZED.

AT LOCATIONS WHERE FIELD WELDING IS PERFORMED, GALVANIZING SHALL BE REMOVED PRIOR TO WELDING. AFTER WELDING IS COMPLETE, THE LOCATIONS SHALL BE GALVANIZED.

NOTE 1: ANGLE VARIES AND WILL BE DETERMINED BY FIELD CONDITIONS. ALIGN CONNECTION TO EXISTING OR PROPOSED SHEET PILE WALL AS SHOWN IN DETAIL 9.

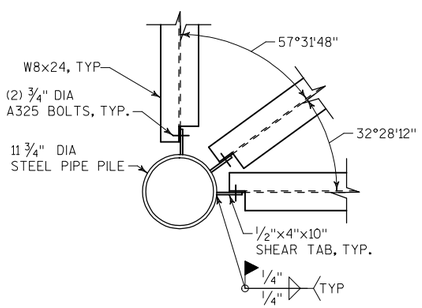

DETAIL 2

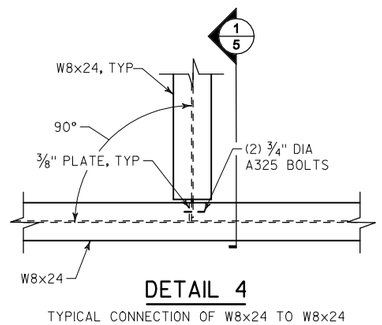

DETAIL 4

TYPICAL CONNECTION OF W8x24 TO W8x24

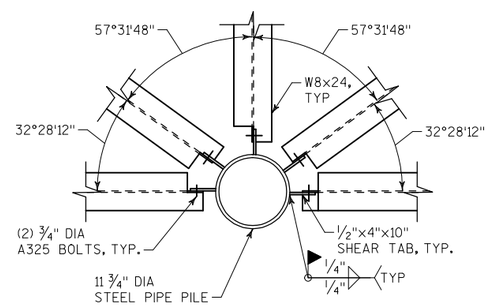

DETAIL 6

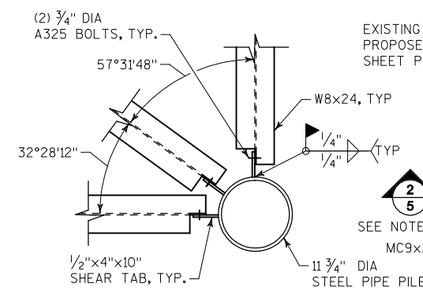

DETAIL 8

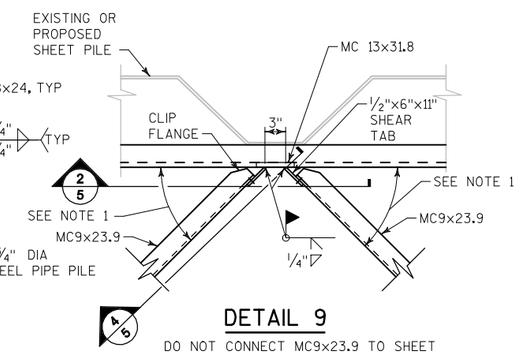

DETAIL 9

DO NOT CONNECT MC9x23.9 TO SHEET PILE UNTIL ALL BACKFILL AND PAVING IS COMPLETE BEHIND THE WALL

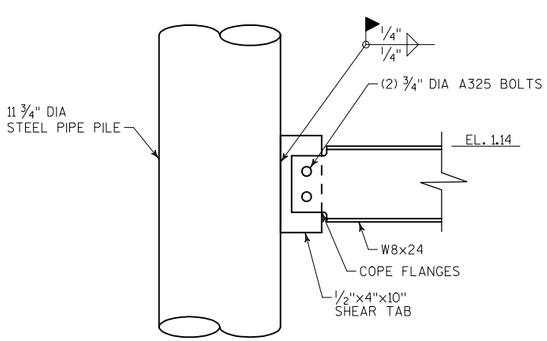

DETAIL 10

TYPICAL CONNECTION OF W8x24 TO PIPE PILE

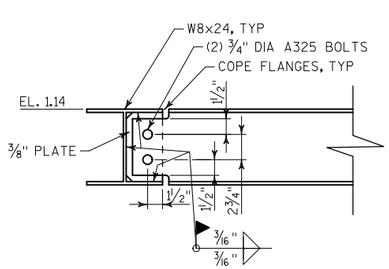

1/5 SECTION

TYPICAL CONNECTION OF W8x24 TO W8x24

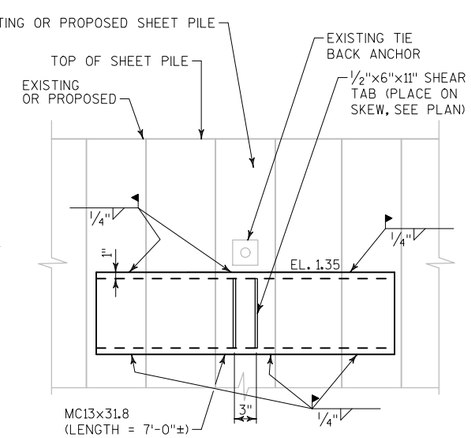

2/5 SECTION

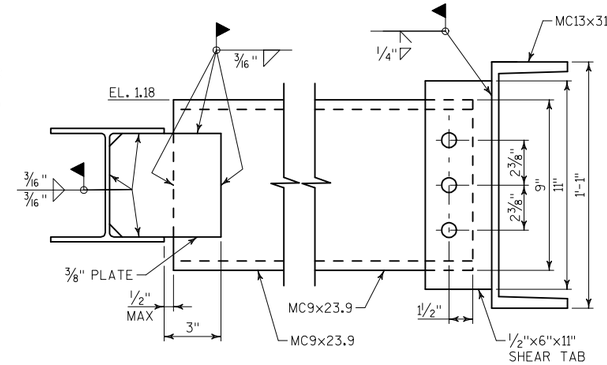

3/5 SECTION

4/5 SECTION

City of Milwaukee

Department of Public Works

Infrastructure Services Division

RIVERWALK CONNECTOR BETWEEN THE RIVER RENAISSANCE AND MIAD RIVERWALKS BRACING DETAILS

REVISIONS

DESIGNED BY SGM

DRAWN BY MHM

CHECKED BY BKS

DATE 04-2012

SCALE NONE

JOB NUMBER TD03484000

SHEET NUMBER 5

OF 10

ORIGINAL PLANS PREPARED BY

CH2MHILL

MILWAUKEE, WISCONSIN

STRUC\RIVERWALK\ 05-Bracing Details.dgn
04-16-2012

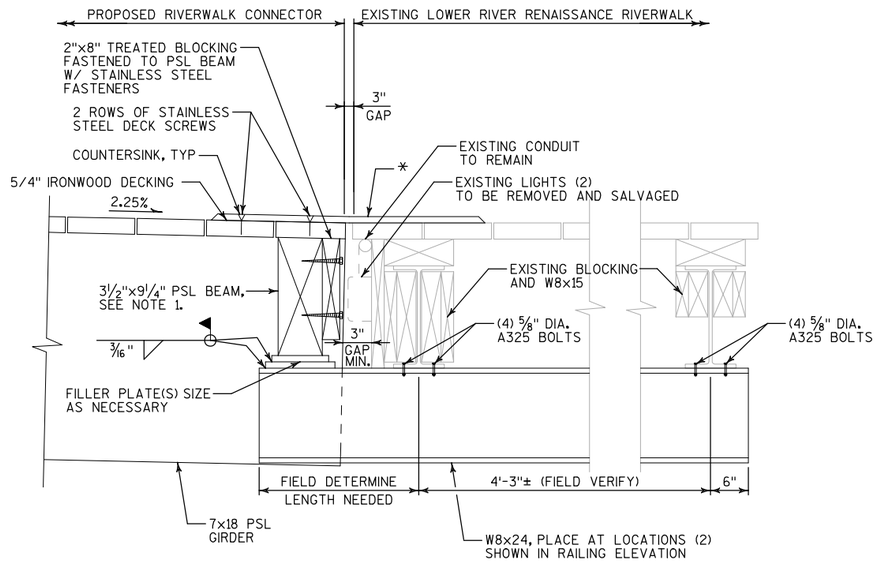

1/6 SECTION AT LOWER RIVER RENAISSANCE RIVERWALK

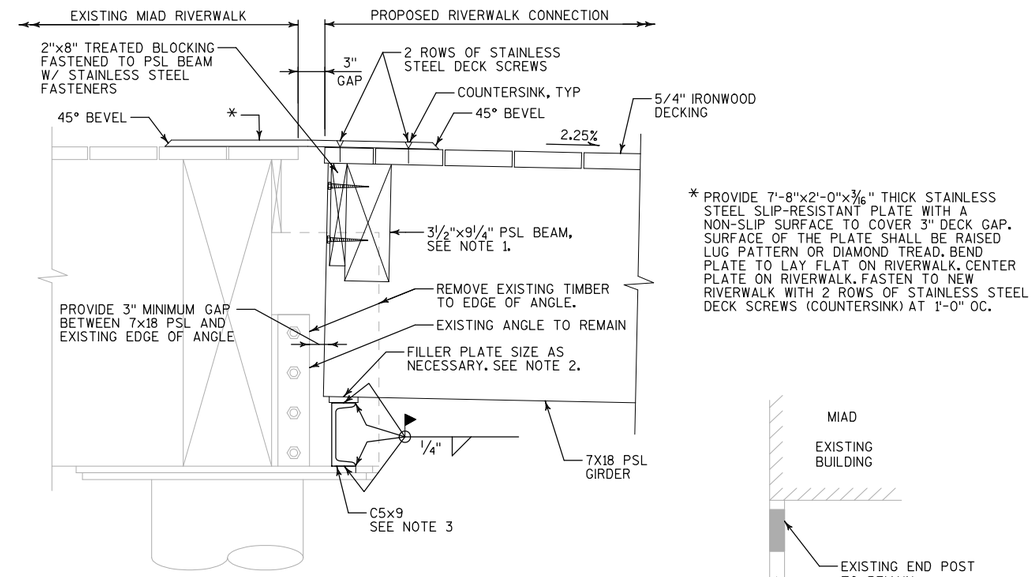

* PROVIDE 7'-8"x2'-0"x3/16" THICK STAINLESS STEEL SLIP-RESISTANT PLATE WITH A NON-SLIP SURFACE TO COVER 3" DECK GAP. SURFACE OF THE PLATE SHALL BE RAISED LUG PATTERN OR DIAMOND TREAD. BEND PLATE TO LAY FLAT ON RIVERWALK. CENTER PLATE ON RIVERWALK. FASTEN TO NEW RIVERWALK WITH 2 ROWS OF STAINLESS STEEL DECK SCREWS (COUNTERSINK) AT 1'-0" OC.

2/6 SECTION AT MIAD RIVERWALK

NOTES

ALL STRUCTURAL STEEL SHALL BE HOT-DIP GALVANIZED.

STRUCTURAL STEEL SHALL BE A572 GRADE 50.

ALL BOLT HOLES SHALL BE STANDARD HOLES.

ALL BOLTS SHALL BE HOT-DIP GALVANIZED.

NOTE 1: LOCATE 3½"x9¼" PSL AS CLOSE TO END OF 7x18 PSL GIRDER. ALLOW CLEARANCE FOR FASTENER.

NOTE 2: PROVIDE FILLER PLATE WELDED TO C5x9. FIELD MEASURE REQUIRED THICKNESS OF PLATE.

NOTE 3: PROVIDE C5x9 (OR OTHER EQUIVALENT STRUCTURAL SHAPE) FROM OUTSIDE TO OUTSIDE OF 7x18 PSL GIRDER.

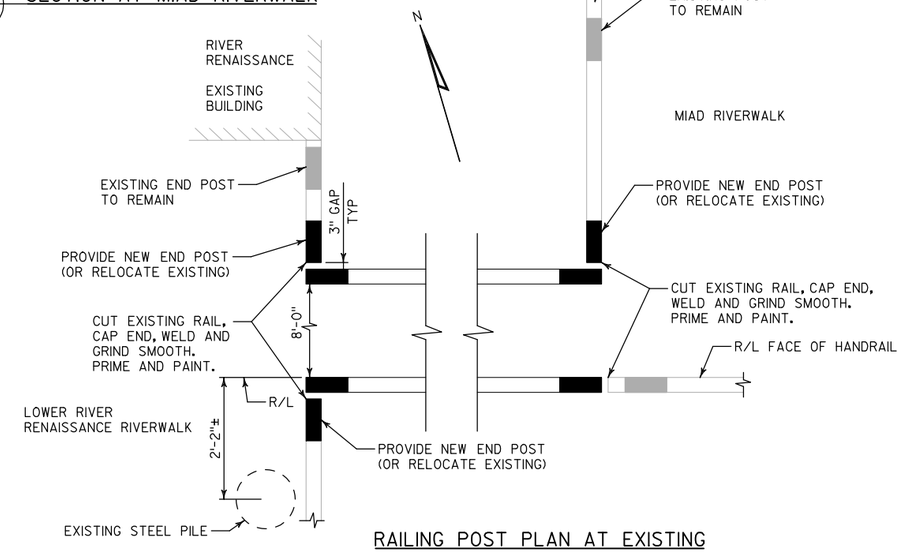

RAILING POST PLAN AT EXISTING

LIGHT FIXTURES

TYPE "A": FIXTURE SHALL BE THE BEGA BOLLARD 8659 LED WITH 13W LED LAMP. FIXTURE SHALL BE 120V AND BLACK IN COLOR.

TYPE "B": FIXTURE SHALL BE THE PHOENIX VPW18CFL120GHB. FIXTURE SHALL BE WALL MOUNTED WITH AN 18 WATT CFL LAMP, BE SUITABLE FOR 120V AND HAVE A BLUE HEAT TREATED GLASS GLOBE. PROVIDE LAMP.

LIGHTING NOTES

PHOTOCELL SHALL BE THE TORK PHOTOTIMER PLUS 5737TZ, 120V. PHOTOCELL RECEPTACLE BRACKET SHALL BE THE TORK RECEPTACLE WITH PLASTIC HOUSING AND MOUNTING BRACKET, MODEL 2421.

MOUNT AND AIM PHOTOCELL SWITCH ACCORDING TO MANUFACTURER'S RECOMMENDATIONS.

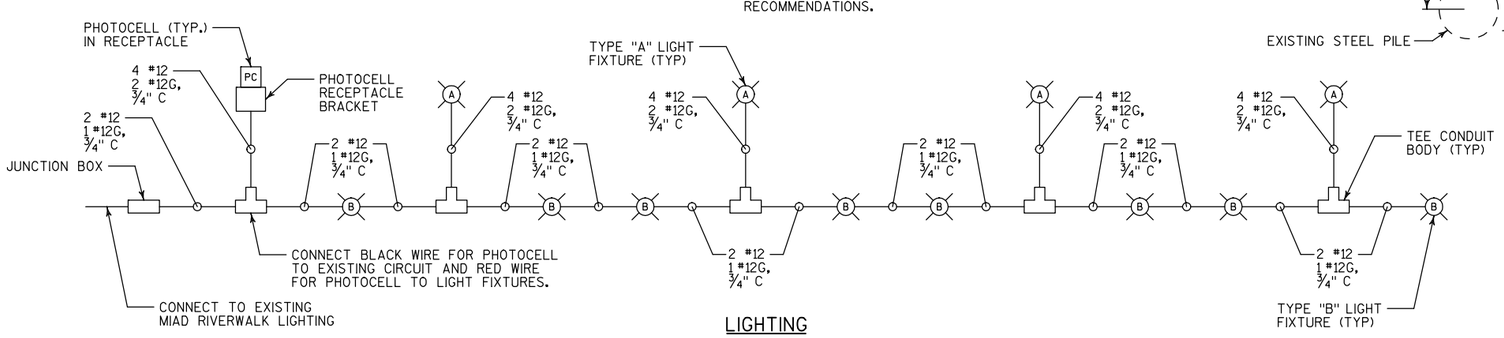

LIGHTING
ONE LINE DIAGRAM

City of Milwaukee

Department of Public Works

Infrastructure Services Division

RIVERWALK CONNECTOR BETWEEN THE RIVER RENAISSANCE AND MIAD RIVERWALKS SECTIONS

REVISIONS

DESIGNED BY SGM

DRAWN BY MHM

CHECKED BY BKS

DATE 04-2012

SCALE NONE

JOB NUMBER TD03484000

SHEET NUMBER 6

OF 10

ORIGINAL PLANS PREPARED BY
CH2MHILL
MILWAUKEE, WISCONSIN

STRUC\RIVERWALK\ 06-Sections.dgn
04-09-2012

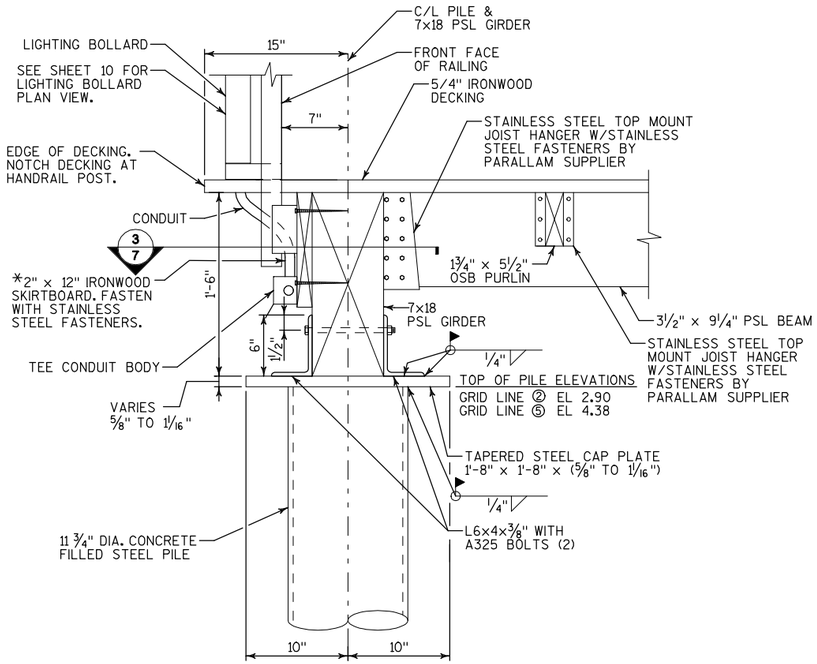

1/7 SECTION AT GRID LINES 2 & 5
GRID LINE A

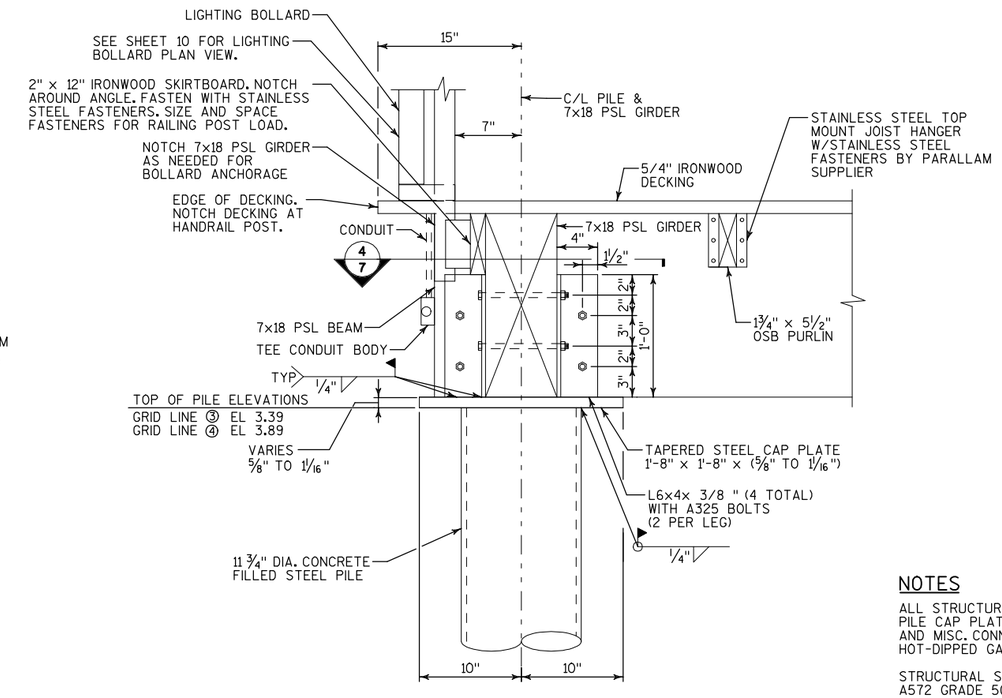

2/7 SECTION AT GRID LINES 3 & 4
GRID LINE A

NOTES

ALL STRUCTURAL STEEL (INCLUDING PILE CAP PLATES, ANGLES, STIFFENERS, AND MISC. CONN. PLATES) SHALL BE HOT-DIPPED GALVANIZED.

STRUCTURAL STEEL SHALL BE A572 GRADE 50.

ALL BOLT HOLES SHALL BE 13/16" DIAMETER STANDARD HOLES.

ALL BOLTS SHALL BE ¾" DIAMETER A325 EXCEPT WHERE NOTED OTHERWISE.

ALL BOLTS, NUTS, AND WASHERS SHALL BE HOT-DIP GALVANIZED.

AT LOCATIONS WHERE FIELD WELDING IS PERFORMED, GALVANIZING SHALL BE REMOVED PRIOR TO WELDING. AFTER WELDING IS COMPLETE, THE LOCATIONS SHALL BE GALVANIZED.

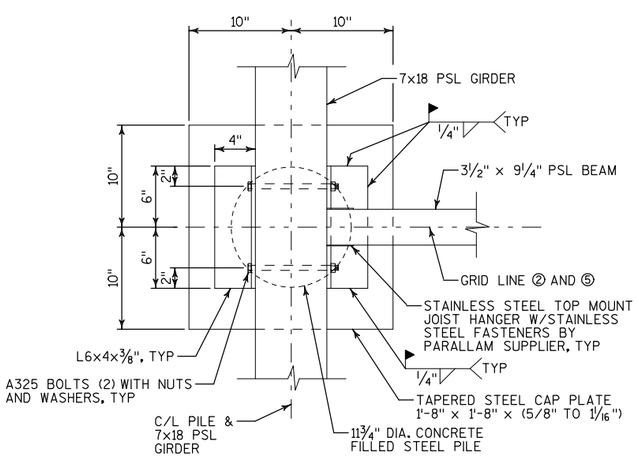

3/7 DETAIL AT GRID LINES 2 & 5
GRID LINE A

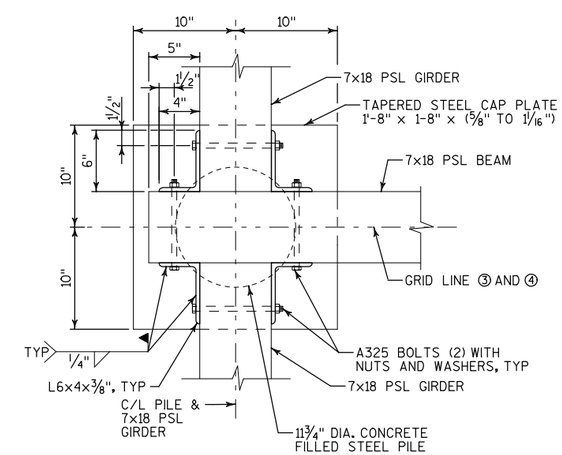

4/7 DETAIL AT GRID LINES 3 & 4
GRID LINE A

ORIGINAL PLANS PREPARED BY
CH2MHILL
MILWAUKEE, WISCONSIN

City of Milwaukee
Department of Public Works
Infrastructure Services Division

RIVERWALK CONNECTOR BETWEEN THE RIVER RENAISSANCE AND MIAD RIVERWALKS
SECTIONS & DETAILS (GRID LINE A)

REVISIONS

DESIGNED BY SGM	
DRAWN BY MHM	
CHECKED BY BKS	
DATE 04-2012	SCALE NONE
JOB NUMBER TD03484000	
SHEET NUMBER 7	
OF 10	

STRUC\RIVERWALK\ 07-Sections.dgn
04-10-2012

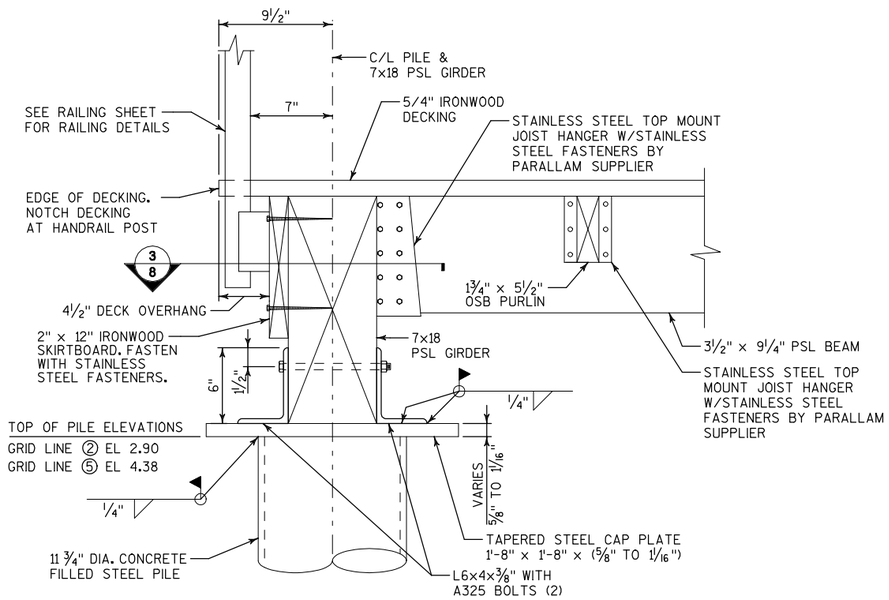

1/8 SECTION AT GRID LINES 2 & 5
GRID LINE B SHOWN

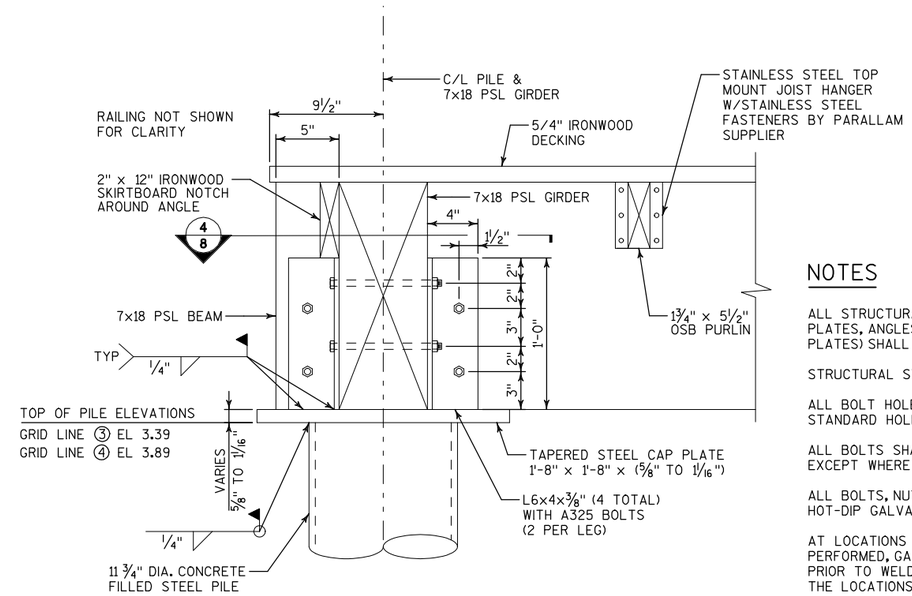

2/8 SECTION AT GRID LINES 3 & 4
GRID LINE B

NOTES

ALL STRUCTURAL STEEL (INCLUDING PILE CAP PLATES, ANGLES, STIFFENERS AND MISC. CONN. PLATES) SHALL BE HOT-DIPPED GALVANIZED.

STRUCTURAL STEEL SHALL BE A572 GRADE 50.

ALL BOLT HOLES SHALL BE 13/16" DIAMETER STANDARD HOLES.

ALL BOLTS SHALL BE ¾" DIAMETER A325 EXCEPT WHERE NOTED OTHERWISE.

ALL BOLTS, NUTS, AND WASHERS SHALL BE HOT-DIP GALVANIZED.

AT LOCATIONS WHERE FIELD WELDING IS PERFORMED, GALVANIZING SHALL BE REMOVED PRIOR TO WELDING. AFTER WELDING IS COMPLETE, THE LOCATIONS SHALL BE GALVANIZED.

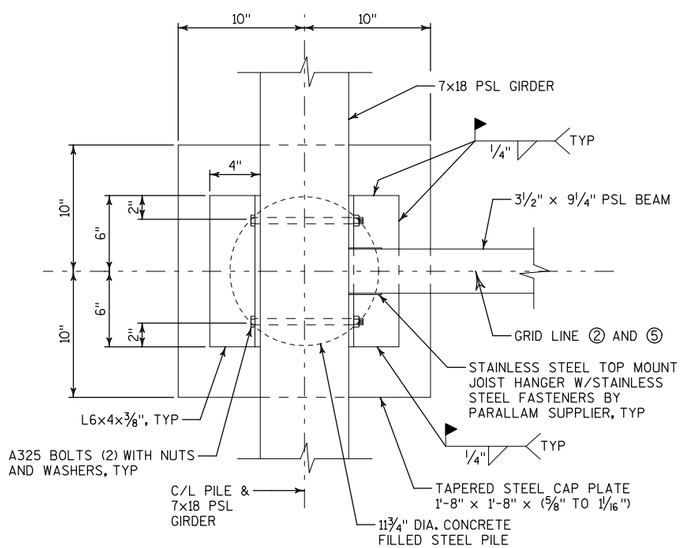

3/8 DETAIL AT GRID LINES 2 & 5
GRID LINE B

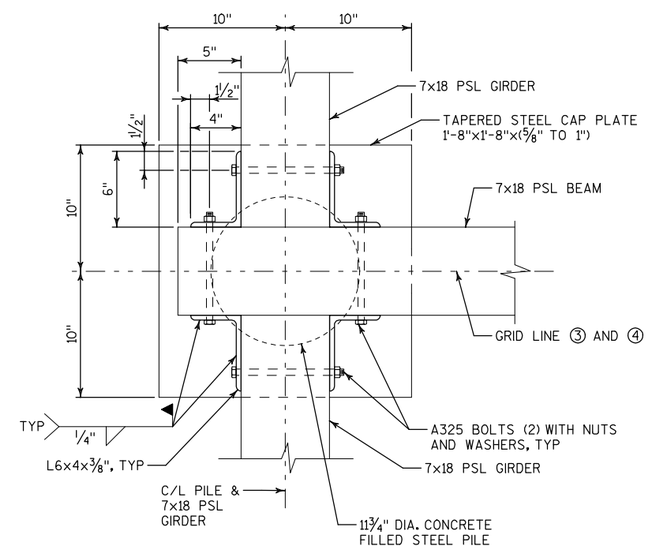

4/8 DETAIL AT GRID LINES 3 & 4
GRID LINE B

ORIGINAL PLANS PREPARED BY
CH2MHILL
MILWAUKEE, WISCONSIN

City of Milwaukee
Department of Public Works
Infrastructure Services Division

RIVERWALK CONNECTOR
BETWEEN THE RIVER RENAISSANCE
AND MIAD RIVERWALKS
SECTIONS & DETAILS (GRID LINE B)

REVISIONS

DESIGNED BY SGM
DRAWN BY MHM
CHECKED BY BKS
DATE 04-2012
SCALE NONE
JOB NUMBER TD03484000
SHEET NUMBER 8
OF 10

STRUC\RIVERWALK\ 08-Sections.dgn
04-16-2012

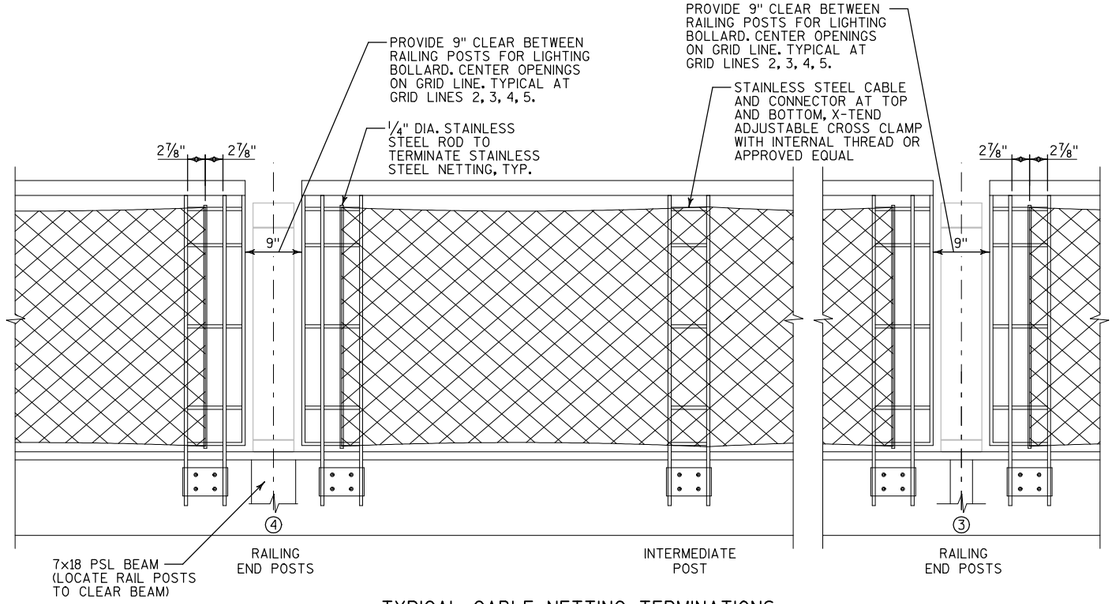

TYPICAL CABLE NETTING TERMINATIONS
SOUTH RAILING

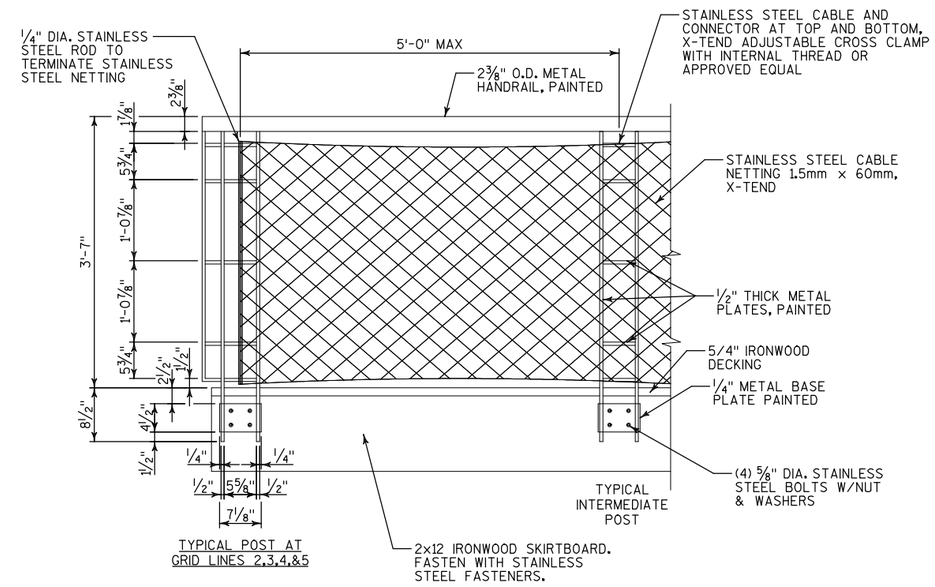

TYPICAL RAILING PANEL ELEVATION
SOUTH RAILING

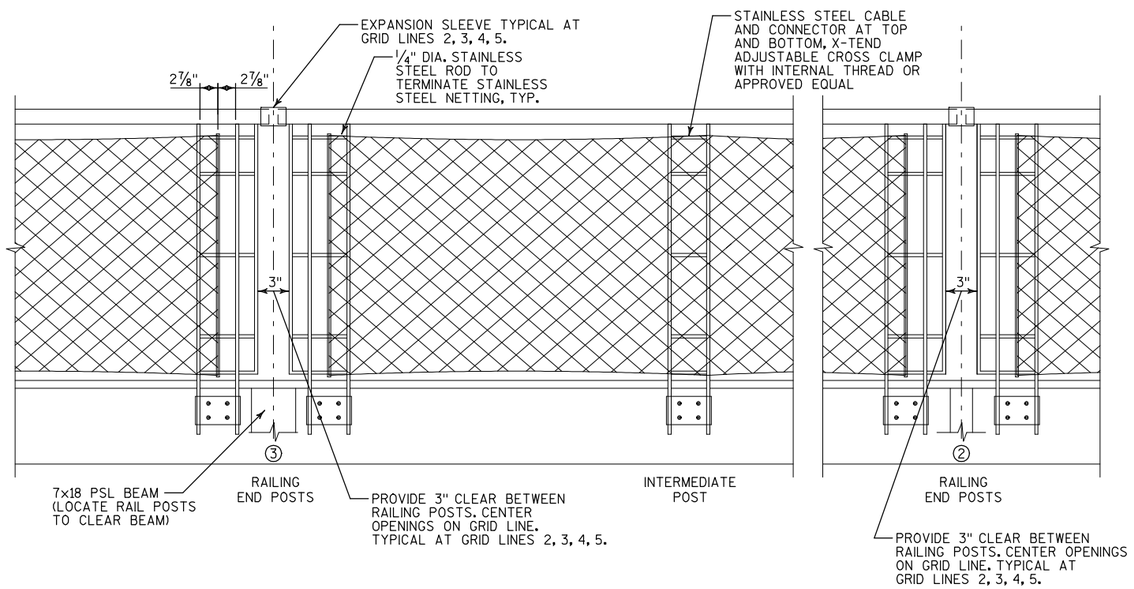

TYPICAL CABLE NETTING TERMINATIONS
NORTH RAILING

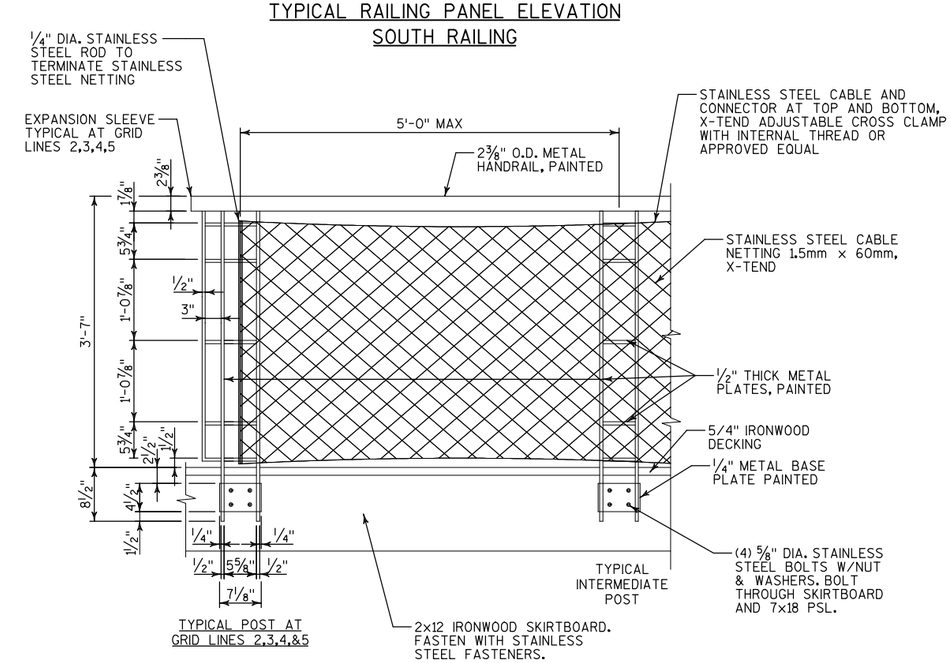

TYPICAL RAILING PANEL ELEVATION
NORTH RAILING

ORIGINAL PLANS PREPARED BY
CH2MHILL
MILWAUKEE, WISCONSIN

City of Milwaukee
Department of Public Works
Infrastructure Services Division

RIVERWALK CONNECTOR BETWEEN THE RIVER RENAISSANCE AND MIAD RIVERWALKS
RAILING (1 OF 2)

REVISIONS

DESIGNED BY SGM
DRAWN BY MHM
CHECKED BY BKS
DATE 04-2012
SCALE NONE
JOB NUMBER TD03484000
SHEET NUMBER 9
OF 10

STRUC\RIVERWALK\ 08-Sections.dgn
04-16-2012

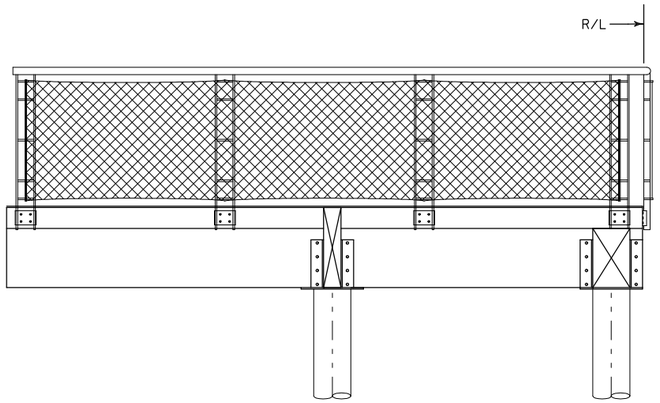

EXISTING WEST EDGE OF MIAD RIVERWALK

(LOOKING EAST)

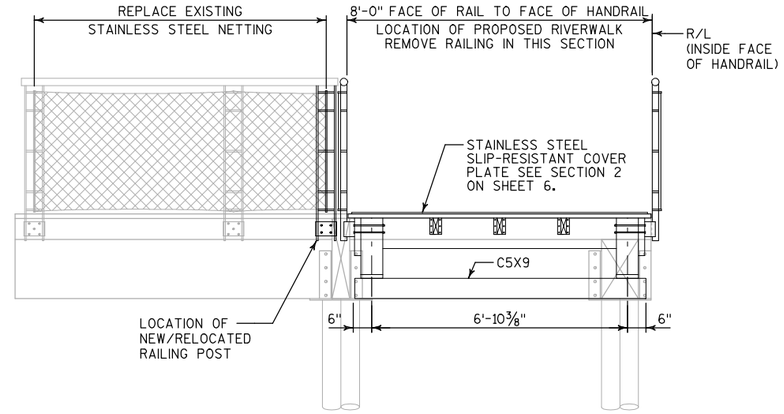

PROPOSED WEST EDGE OF MIAD RIVERWALK

(LOOKING EAST)

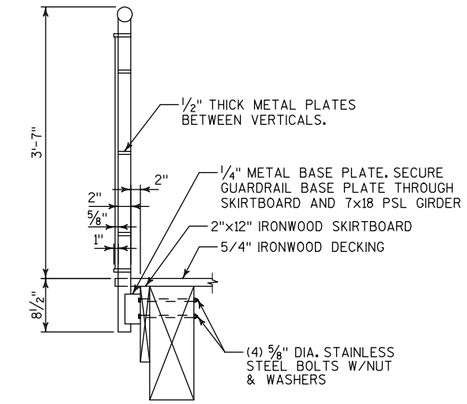

TYPICAL SECTION THRU RAILING POST

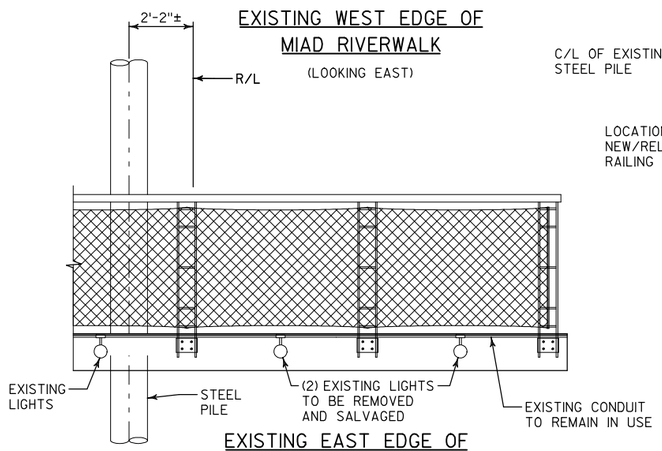

EXISTING EAST EDGE OF LOWER RIVER RENAISSANCE RIVERWALK

(LOOKING WEST)

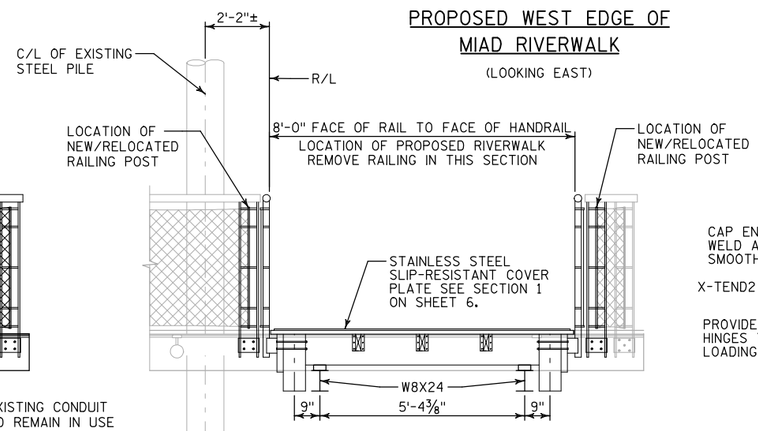

PROPOSED EAST EDGE OF LOWER RIVER RENAISSANCE RIVERWALK

(LOOKING WEST)

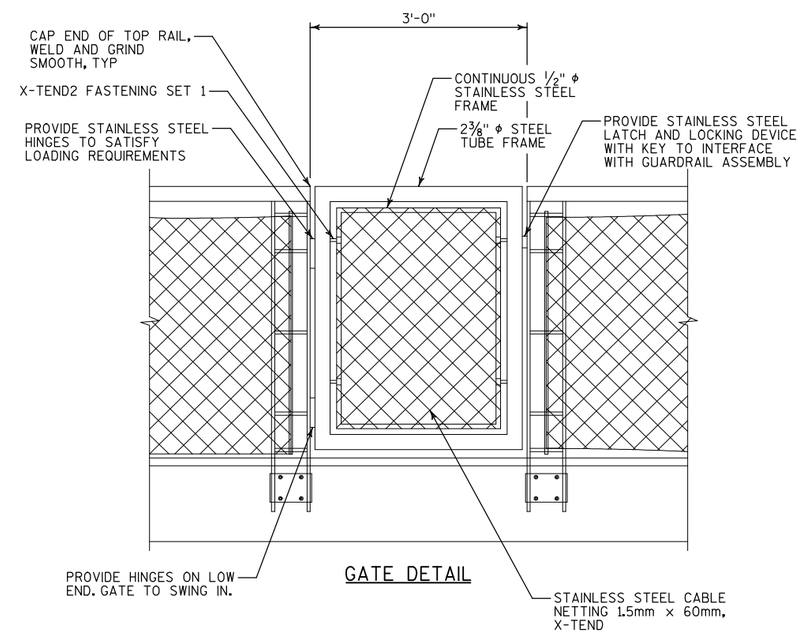

GATE DETAIL

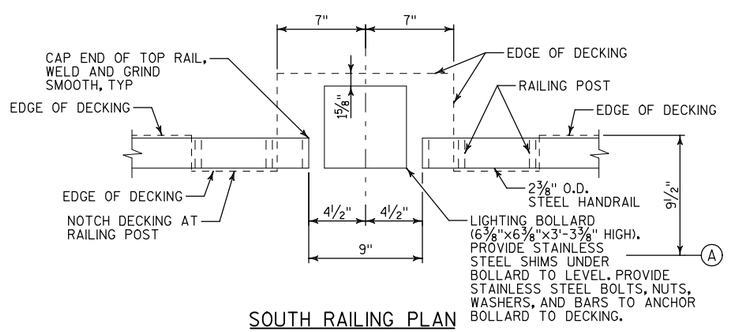

SOUTH RAILING PLAN
TYPICAL @ LIGHTING BOLLARDS
AT GRID LINES 2,3,4, & 5

City of Milwaukee

Department of Public Works

Infrastructure Services Division

RIVERWALK CONNECTOR
BETWEEN THE RIVER RENAISSANCE
AND MIAD RIVERWALKS
RAILING (2 OF 2)

REVISIONS

DESIGNED BY SGM

DRAWN BY MHM

CHECKED BY BKS

DATE 04-2012

SCALE NONE

JOB NUMBER TD03484000

SHEET NUMBER 10

OF 10

ORIGINAL PLANS PREPARED BY
CH2MHILL
MILWAUKEE, WISCONSIN

STRUC\RIVERWALK\ 09-Railings.dgn
04-16-2012