**City Of Milwaukee**
Department of Public Works
Room 501 – Frank P. Zeidler Municipal Building
841 North Broadway
Milwaukee, Wisconsin 53202-3684

INVITATION TO BID

Commissioner of Public Works
Phone: 414-286-3314

OFFICIAL NOTICE NO. 67
Project No. 1

Sealed bids for the work, material, labor, and services hereinafter described will be received at the Department of Public Works **Contract Office**, Room 506, Frank P. Zeidler Municipal Building, 841 North Broadway, Milwaukee, Wisconsin 53202-3684, no later than Wednesday, May 6, 2015, at 10:30 A.M.

---

## IMPORTANT

This bid is your offer to perform or supply the subject matter under "DESCRIPTION" below according to the terms and conditions set forth in this Invitation to Bid, Specific Official Notice No.67 General Specifications, Detailed Specifications, Special Provisions, Plans of this particular project, the proposed contract and Special Conditions when applicable.

Your bid must meet the Detailed Specifications and the Plans for this particular project.

You must agree to comply with all applicable requirements of the Americans with Disabilities Act of 1990, 42 U.S.C. Section 12101, et seq.

The bid must be signed as set forth in the General Specifications and must comply with all the requirements therein set forth, or it will not be considered. If submitted by a corporation, the bid proposal must bear the corporate seal.

Bid security hereinafter specified must be submitted with your bid. If a bid bond is used, it must be sealed by the bonding company and be accompanied by an affidavit of no interest and a copy of a power of attorney. Bonding agents must be licensed to do business in the State of Wisconsin.

Bids received after the date and the time above specified will not be opened and read and will be deemed rejected.

**NOTE:** Also read the General Official Notice to Contractors, General and Detailed Specifications, Special Provisions, and Special Conditions when applicable pertaining to this bid.

---

BLANK

CITY OF MILWAUKEE
SPECIFIC OFFICIAL NOTICE NO. 67

Sealed bids will be opened on Wednesday, May 6, 2015 at 10:30 A.M. for **PAVING WORK,** in the following location:

**CONSTRUCTION OF VARIABLE THICKNESS ASPHALTIC CONCRETE PAVEMENT, CUTTING, ASPHALT BINDER, FLY ASH STABILIZATION, ETC,** located at (ST211100132) W. County Line Rd. – N. 68th St. to N. Swan / N. 91st St. (Portions in the City of Mequon)

Bid Security Required: Bond (either Electronic thru Bid Express or Paper), Certified Check, Cashier's Check or Cash to accompany bid: 10% of the Contractor's Base Bid. For those bids being submitted through BID EXPRESS and using a Paper Bond, the contractor may fax a signed/executed copy of the bid bond to the Department of Public Works Contract Office at 414-286-8110. **HOWEVER, THE FAXED COPY OF THE BOND MUST BE RECEIVED BY NO LATER THAN 10:30 A.M. ON THE SAME DATE THAT THE BIDS ARE DUE FOR THAT SPECIFIC OFFICIAL NOTICE, or the bid will be considered non-responsive.** *The original bid bond document will then need to be submitted by the contractor to the Department of Public Works Contract Office, Rm. 506, Municipal Building, immediately upon being notified that they are the apparent low bidder*

Time for Completion: 55 contract workdays. All work on this contract shall be completed by October 16, 2015.

Liquidated Damages, per diem: $1,000.00

The residency requirement for this project is 40% of all hours worked on the project.

The SBE requirement for this project is 25% of the contract base bid.
For a complete listing of City of Milwaukee certified SBE firms, see the Office of Small Business Development's (OSBD) website at http://city.milwaukee.gov/Directory/OSBD. If there are any questions regarding SBE firms, please contact the OSBD office at 414-286-5553.

The apprenticeship requirements for this project are: N/A

The contractor shall specifically note the SBE, residency, and apprenticeship forms for this project. If the forms are not filled out properly, it will be cause for rejection of the bid.

When the project is part of the Local Road Improvement Program, the contractor is still required to pay not less than the prevailing wage rate as established by the City of Milwaukee.

**IMPORTANT NOTICE**: The Invitation to Bid, all bid documents and the Plans and Specifications for the listed project(s) are all available electronically on the DPW website AS WELL AS **on the Bid Express Website**. At this time, Bids can be submitted using either Bid Express OR by purchasing and submitting paper bids in the usual manner. However, Bidders are strongly encouraged to utilize the electronic and/or Bid Express methods of obtaining bid documents and Bid Express for submitting bids, as in the near future the Department of Public Works intends to have bid documents available only electronically and through Bid Express, *and to accept bid submittals only via Bid Express.* Electronic documents can be obtained via http://mpw.milwaukee.gov/bids/docs/67-2015. The Bid Express website is located at

bidexpress.com. Any required addenda or response related to listed projects will be posted on both the DPW and Bid Express websites. At this time there are still a limited number of hard copies of the bid documents available at the address listed below. IF YOU ONLY PRINT THE DOCUMENTS FROM THE DPW WEBSITE PLEASE CALL 414-286-3314 TO HAVE YOUR COMPANY'S NAME AND CONTACT INFORMATION PLACED ON THE PLAN HOLDER'S LIST.

**PAYMENT MONITORING REQUIREMENTS:** All Contractors awarded a contract valued at $25,000.00 or more are required to participate in training on the City of Milwaukee's B2GNow contract compliance software. Contractors must complete the training no later than 30 days after the date of contract award. Throughout the contract term, Contractors are required to regularly provide timely payment information in the City's contract compliance software.

*Please contact the Office of Small Business Development (OSBD) at 414-286-5553 should you have any questions or concerns regarding the training* or *reporting process.*

**PAYROLL MONITORING REQUIREMENTS:** The Prime Contractor awarded this project is required to participate in training on the City of Milwaukee's LCP Tracker Labor Compliance Software after the date of contract award. Throughout the contract term, Contractors are required to regularly provide timely payroll information via LCP Tracker.

***Please contact the DPW Contracts Office at 414-286-3314 should you have any questions or concerns regarding the training* or *reporting process.***

Plans and project manual will be furnished to the prospective bidders upon payment of a $10.00 non-refundable fee in room 506, Frank P. Zeidler Municipal Building, 841 North Broadway, Milwaukee, Wisconsin 53202. For general questions call 414-286-3314.

A $10.00 per set additional non-refundable fee is required to obtain bid documents by mail. Plans are sent via U.S. mail unless other arrangements are made by the contractor.

Contractor must comply with all provisions of the CITY OF MILWAUKEE GENERAL OFFICIAL NOTICE TO CONTRACTORS published herein and at:
http://mpw.milwaukee.gov/services/bids_home

Signed:

_____
GHASSAN KORBAN
Commissioner of Public Works

PUBLISH TWO (2) TIMES INSERTION WITHOUT FAIL, Wednesday, April 22, 2015

**ORM DPW-125** (REV. 01/26/05) OFFICIAL NOTICE NO. 67

Project No. 1

# B I D

**City of Milwaukee**
Department of Public Works
Room 501 - Frank P. Zeidler Municipal Building
841 North Broadway
Milwaukee, Wisconsin 53202

Bids Close:10:30 A.M. Wednesday, May6, 2015

Submit bids to: City of Milwaukee
Department of Public Works **Contract Office**
Room 506, 841 North Broadway
Milwaukee, Wisconsin 53202.

The undersigned _____
(A Corporation) (A Partnership) (An Individual)
(use one)

of _____
Street City Zip Code Telephone Number

hereby proposes to furnish work, material, labor and services as set forth in the description in the Invitation to Bid at and for the prices hereinafter named according to the provisions in the Official Notice and the Invitation to Bid, Detail Specifications, Special Provisions, Addenda's, if any, and Plans for this particular project on file in the office of the Commissioner of Public Works, and if successful, hereby agrees to enter into a contract with the City of Milwaukee with such sureties as required and set forth in the aforesaid documents for the performance of said contract (said contract form being on file in the office of the Commissioner of Public Works), and in accordance with the terms and conditions set forth in the contract documents, to-wit: written agreement, official notice, invitation to bid, bid, instructions to bidders, detail specifications, special provisions, special conditions when applicable, plans, schedule of fixed prices, supplemental agreements and all addenda.

In case of obtaining the award, the undersigned bidder plans to use, subject to the approval of the said Commissioner, the following subcontractors, with the class of work to be performed by each, which list shall not be added to nor altered without the written consent of the Commissioner:

| Name of Proposed Subcontractors | Class of Work | Amount | Check Box If EBE |
|---|---|---|---|
| | | | |
| | | | |
| | | | |
| | | | |
| | | | |
| | | | |
| | | | |

BLANK

# OFFICIAL NOTICE NO. 67-1-2015

## For

## (ST211100132)

## W. County Line Rd. - N. 68th St. to N. Swan/N. 91st St. (Portions in the City of Mequon)(ST214150101)

### 9th Aldermanic District

### ALL BIDS MUST BE TYPED OR PRINTED

| | | | |
|---|---|---|---|
| 30500 | **MOBILIZATION** | 1 | Lump Sum |
| (Bid in figures) | $ _____ | | Lump Sum |
| (Bid in words) | $ _____ | | Lump Sum |
| 30501 | **FINISHING ROADWAY** | 1 | Lump Sum |
| (Bid in figures) | $ _____ | | Lump Sum |
| (Bid in words) | $ _____ | | Lump Sum |
| 30606 | **BARRICADING AND SIGNING** | 1 | Lump Sum |
| (Bid in figures) | $ _____ | | Lump Sum |
| (Bid in words) | $ _____ | | Lump Sum |
| 40121 | **CUTTING** | 9,198.00 | cu. yd. |
| (Bid in figures) | $ _____ | | per cu. yd. |
| (Bid in words) | $ _____ | | per cu. yd. |
| 40262 | **SAWING** | 292.00 | lin. ft. |
| (Bid in figures) | $ _____ | | per lin. ft. |
| (Bid in words) | $ _____ | | per lin. ft. |
| 40411 | **TREES CLEARING** | 4,152.00 | in. dia. |
| (Bid in figures) | $ _____ | | per in. dia. |
| (Bid in words) | $ _____ | | per in. dia. |

## OFFICIAL NOTICE NO. 67-1-2015

| | | | |
|---|---|---|---|
| 40412 | **TREES GRUBBING** | 5,025.00 | in. dia. |
| (Bid in figures) | $ _____ | | per in. dia. |
| (Bid in words) | $ _____ | | per in. dia. |
| 60103 | **TACK COAT** | 2,152.00 | gallon |
| (Bid in figures) | $ _____ | | per gallon |
| (Bid in words) | $ _____ | | per gallon |
| 60105 | **BASE PREPARATION FOR ASPHALT SURFACE** | 1 | Lump Sum |
| (Bid in figures) | $ _____ | | Lump Sum |
| (Bid in words) | $ _____ | | Lump Sum |
| 60120 | **VARIABLE THICKNESS ASPHALT BINDER (3/4 INCH MAXIMUM)** | 4,632.00 | ton |
| (Bid in figures) | $ _____ | | per ton |
| (Bid in words) | $ _____ | | per ton |
| 60130 | **VARIABLE THICKNESS ASPHALT CONCRETE PAVEMENT (1/2 INCH MAXIMUM)** | 2,410.00 | ton |
| (Bid in figures) | $ _____ | | per ton |
| (Bid in words) | $ _____ | | per ton |
| 70118 | **1 1/4-INCH BASE AGGREGATE DENSE** | 6,020.00 | ton |
| (Bid in figures) | $ _____ | | per ton |
| (Bid in words) | $ _____ | | per ton |
| 70120 | **VARIABLE THICKNESS 2&1/2 INCH (ASTM #2) CRUSHED STONE BASE** | 14,871.00 | ton |
| (Bid in figures) | $ _____ | | per ton |
| (Bid in words) | $ _____ | | per ton |
| 70406 | **6 INCH CRUSHED STONE SHOULDER** | 3,289.00 | sq. yd. |
| (Bid in figures) | $ _____ | | per sq. yd. |
| (Bid in words) | $ _____ | | per sq. yd. |

## OFFICIAL NOTICE NO. 67-1-2015

| | | | |
|---|---|---|---|
| 81202 | **STEEL PLATE BEAM GUARD TYPE II** | 101.00 | lin. ft. |
| (Bid in figures) | $ _____ | | per lin. ft. |
| (Bid in words) | $ _____ | | per lin. ft. |
| 82104 | **SEEDING (4 INCH TOPSOIL)** | 17,224.00 | sq. yd. |
| (Bid in figures) | $ _____ | | per sq. yd. |
| (Bid in words) | $ _____ | | per sq. yd. |
| 83100 | **FABRIC MEMBRANE** | 19,368.00 | sq. yd. |
| (Bid in figures) | $ _____ | | per sq. yd. |
| (Bid in words) | $ _____ | | per sq. yd. |
| 83306 | **PAVEMENT MARKING, 4" WHITE, COLD PLASTIC FURNISH AND INSTALL** | 15,328.00 | lin. ft. |
| (Bid in figures) | $ _____ | | per lin. ft. |
| (Bid in words) | $ _____ | | per lin. ft. |
| 83311 | **PAVEMENT MARKING, 4" YELLOW,COLD PLASTIC FURNISH AND INSTALL** | 6,650.00 | lin. ft. |
| (Bid in figures) | $ _____ | | per lin. ft. |
| (Bid in words) | $ _____ | | per lin. ft. |
| 83563 | **FLY ASH FOR SUBGRADE STABILIZATION FURNISH** | 3,057.00 | TON |
| (Bid in figures) | $ _____ | | per TON |
| (Bid in words) | $ _____ | | per TON |
| 83564 | **FLY ASH SUBGRADE STABILIZATION** | 30,571.00 | sq. yd. |
| (Bid in figures) | $ _____ | | per sq. yd. |
| (Bid in words) | $ _____ | | per sq. yd. |
| 83565 | **PULVERIZE** | 19,740.00 | sq. yd. |
| (Bid in figures) | $ _____ | | per sq. yd. |
| (Bid in words) | $ _____ | | per sq. yd. |

## OFFICIAL NOTICE NO. 67-1-2015

| | | | |
|---|---|---|---|
| 84262 | **CULVERT PIPE CLASS IV 12-INCH** | 59.00 | lin. ft. |
| (Bid in figures) | $ _____ | | per lin. ft. |
| (Bid in words) | $ _____ | | per lin. ft. |
| 84266 | **ELLIPTICAL CULVERT PIPE CLASS LV 15-INCH** | 175.00 | lin. ft. |
| (Bid in figures) | $ _____ | | per lin. ft. |
| (Bid in words) | $ _____ | | per lin. ft. |
| 84269 | **ELLIPTICAL CULVERT PIPE CLASS LV 18-INCH** | 550.00 | lin. ft. |
| (Bid in figures) | $ _____ | | per lin. ft. |
| (Bid in words) | $ _____ | | per lin. ft. |
| 84275 | **ELLIPTICAL CULVERT PIPE CLASS LV 24-INCH** | 238.00 | lin. ft. |
| (Bid in figures) | $ _____ | | per lin. ft. |
| (Bid in words) | $ _____ | | per lin. ft. |
| 90001 | **LANDMARK REFERENCE MONUMENT** | 3.00 | each |
| (Bid in figures) | $ _____ | | per each |
| (Bid in words) | $ _____ | | per each |
| 90050 | **CULVERT REMOVAL** | 385.00 | L.F. |
| (Bid in figures) | $ _____ | | per L.F. |
| (Bid in words) | $ _____ | | per L.F. |
| 97148 | **4 FOOT DIAMETER STORM MANHOLE** | 1.00 | each |
| (Bid in figures) | $ _____ | | per each |
| (Bid in words) | $ _____ | | per each |
| 97153 | **5 FOOT DIAMETER STORM MANHOLE** | 1.00 | each |
| (Bid in figures) | $ _____ | | per each |
| (Bid in words) | $ _____ | | per each |

## OFFICIAL NOTICE NO. 67-1-2015

97181 **MANHOLE FRAME AND COVER TYPE 58A** 2.00 each

(Bid in figures) $ _____ per each

(Bid in words) $ _____ per each

97895 **EROSION MAT** 17,224.00 sq. yd.

(Bid in figures) $ _____ per sq. yd.

(Bid in words) $ _____ per sq. yd.

97900 **EROSION CONTROL** 1 Lump Sum

(Bid in figures) $ _____ Lump Sum

(Bid in words) $ _____ Lump Sum

97920 **CHECK DAM** 2.00 each

(Bid in figures) $ _____ per each

(Bid in words) $ _____ per each

**TOTAL ESTIMATE:**

(Bid in figures) $ _____

(Bid in words) $ _____

BLANK

# IMPORTANT NOTICE

ALL BID PRICES MUST BE ENTERED IN WORDS AND IN NUMERALS. IN CASE OF VARIATION BETWEEN THE TWO, THE WORDS WILL PREVAIL.

IN ADDITION, IF THERE IS A DISCREPANCY BETWEEN THE TOTAL INDICATED IN THE PROPOSAL AND THE AMOUNT OBTAINED BY ADDING THE PRODUCTS OF THE QUANTITIES TIMES THE UNIT PRICES, THE LATTER SHALL GOVERN. ANY ERRORS FOUND IN THE TOTAL INDICATED SHALL BE CORRECTED AND THE CONTRACT AWARD SHALL BE MADE TO THE LOWEST RESPONSIBLE BIDDER BASED ON THE CORRECTED TOTAL.

IF DOUBT EXISTS AS TO WHAT IS BID, THE BID WILL BE REJECTED.

# ACKNOWLEDGEMENTS PAGE

**Official Notice No. 67**
**Project No. 1**

SMALL BUSINESS ENTERPRISE PROGRAM, RESIDENT PREFERENCE AND APPRENTICESHIP PROGRAM REQUIREMENTS

In submitting this bid, the bidder acknowledges, understands and agrees that submission of a bid shall commit the bidder to comply with the City's requirements as outlined in the SMALL BUSINESS ENTERPRISE PROGRAM (SBE), the Resident Preference Program and the Apprenticeship Program provisions. The bidder also agrees to comply with the specific requirements as follows:

The bidder's commitment for SBE participation on this project is 25 %

The bidder's commitment for Resident Preference Program Participation on the project is 40 %

The bidder's commitment for Apprenticeship Program participation on this project is:
Apprentice(s) from 0 of the following trade(s) are to be employed.

In submitting this bid, the bidder understands that the Commissioner of Public Works reserves the right to reject any and all bids. If written notice of the acceptance of the bid is mailed, telegraphed, or delivered to the undersigned within forty-five (45) days after the opening thereof, the undersigned agrees to execute and deliver the contract in the prescribed form (contract form on file in the office of the Commissioner of Public Works) and furnish the required performance and payment bonds, and to meet such insurance requirements as may be required, within ten days after the receipt of the official notice of award.

This bidder understands that if they are the successful bidder and the contract is awarded, that pursuant to Sec. 7.14, Milwaukee City Charter, 1971 Compilation, as amended, failure to execute and to deliver the contract or to furnish the required insurance and the required security within ten (10) days after receipt of the official notice of award or such extension thereto as the Commissioner only may deem reasonable, the City, in addition to any other legal or equitable remedy which it may have, may annul the award and notice of award, and the bid security of this bidder will be forfeited.

Attached hereto is an affidavit in proof that the undersigned has not colluded with any person in respect to this bid or any other bid for the contract for which this bid is submitted.

We acknowledge the receipt of Addenda _____to _____inclusive.

Bidder assures the City and acknowledges that the Official Notice, Special Provisions, if any, Special Conditions where applicable, Invitation to Bid and Bid, Detail Specifications, Addenda, if any, and Plans of this particular project have been read and has a full understanding of the provisions therein.

**NON-COLLUSION AFFIDAVIT**

State of _____)
) ss.
County of _____)

_____, being first duly sworn, deposes and says that:

(1) He is _____
of (owner, partner, officer, representative, or agent)

_____, the Bidder that has submitted the attached Bid;

(2) He is fully informed respecting the preparation and contents of the attached Bid and of all pertinent circumstances respecting such Bid;

(3) Such Bid is genuine and is not a collusive or sham Bid;

(4) Neither the said Bidder nor any of its officers, partners, owners, agents, representatives, employees, or parties in interest, including this affiant, has in any way colluded, conspired, connived, or agreed, directly or indirectly with any other Bidder, firm, or person to submit a collusive or sham Bid in connection with the Contract for which the attached Bid has been submitted or to refrain from bidding in connection with such Contract, or has in any manner, directly or indirectly, sought by agreement or collusion or communication or conference with any other Bidder, firm, or person to fix the price or prices in the attached Bid or of any other Bidder, or to fix any overhead, profit, or cost element of the Bid price or the Bid price of any other Bidder, or to secure through any collusion, conspiracy, connivance, or unlawful agreement any advantage against the Commissioner of Public Works or any person interested in the proposed Contract; and

(5) The price or prices quoted in the attached Bid are fair and proper and are not tainted by any collusion, conspiracy, connivance, or unlawful agreement on the part of the Bidder or any of its agents, representatives, owners, employees, or parties in interest, including this affiant.

*(Check One)* _____
Signature of :

_____ Bidder if the bidder is an individual;

_____ Partner if the bidder is a partnership;

_____ Officer if the bidder is a corporation.

Subscribed and sworn to before me this

_____ day of _____, 20_____.

_____
Notary Signature

My commission expires _____, 20_____.

**SIGNATURE PAGE – IMPORTANT – THREE(3) SIGNATURES ARE REQUIRED OR BID WILL BE CONSIDERED NONRESPONSIVE.**

Rev. 2/2012

Official Notice No. _____

Project No. _____

In signing and submitting this bid, the bidder assures the City of Milwaukee that the Official Notice, Notice to Bidders, Special Conditions where applicable, Invitation to Bid and Bid, Detail Specifications, Special Provisions, schedule of fixed prices, Addenda, and Plans of this particular project have been read and understood and that the furnishing of the subject work, material, labor and services is under bidder's control. If the bidder's performance is contingent upon the acts of another party, the bidder assures that they have the necessary commitments to complete the contract which may be awarded.

Submitted by _____
Name of Bidder (person, firm or corporation)

Telephone No. _____
Fax No. _____

Address _____

_____
(City, State, Zip Code)

**Signed** per _____
(Manual **signature required**)

Official Capacity _____

BID DATED _____ SBE Contractor: Yes _____ No _____

---

If a Corporation, answer the following:

Incorporated under laws of what state? _____

If a foreign corporation, are you licensed to do business in Wisconsin? _____

---

SWORN STATEMENT OF BIDDER
AS REQUIRED BY
SECTION 66.0901 (7) WISCONSIN STATUTES

I, being first duly sworn at _____
(City, State)

on oath state on behalf of said bidder, that I have examined and carefully prepared this proposal from the plans, specifications, and the other contract documents and have checked the same in detail before submitting this proposal; and this sworn statement is hereby made a part of the foregoing proposal.

**Signature** _____

_____
(Title, if any)

Subscribed and sworn to before me this

_____ day of _____, 20___

_____
(**Notary Signature**)

Notary Public, _____ County

State of _____

My commission expires _____

State of Wisconsin
Department of Workforce Development
Equal Rights Division
Labor Standards Bureau

# Disclosure of Ownership

**Notice required under Section 15.04(1)(m), Wisconsin Statutes.** The statutory authority for the use of this form is prescribed in Sections 66.0903(12)(d) and 103.49(7)(d), Wisconsin Statutes. The use of this form is mandatory. The penalty for failing to complete this form is prescribed in Section 103.005(12), Wisconsin Statutes. Personal information you provide may be used for secondary purposes

(1) On the date a contractor submits a bid to or completes negotiations with a state agency or local governmental unit, on a project subject to Section 66.0903 or 103.49, Wisconsin Statutes, the contractor shall disclose to such state agency or local governmental unit the name of any "other construction business", which the contractor, or a shareholder, officer or partner of the contractor, owns or has owned within the preceding three (3) years.

(2) The term "other construction business" means any business engaged in the erection, construction, remodeling, repairing, demolition, altering or painting and decorating of buildings, structures or facilities. It also means any business engaged in supplying mineral aggregate, or hauling excavated material or spoil as provided by Sections 66.0903(3), 103.49(2) and 103.50(2), Wisconsin Statutes.

(3) This form must ONLY be filed, with the state agency or local governmental unit that will be awarding the contract, if **both (A) and (B) are met**.

(A) The contractor, or a shareholder, officer or partner of the contractor:

(1) Owns at least a 25% interest in the "other construction business", indicated below, on the date the contractor submits a bid or completes negotiations.

(2) Or has owned at least a 25% interest in the "other construction business" at any time within the preceding three (3) years.

(B) The Wisconsin Department of Workforce Development (DWD) has determined that the "other construction business" has failed to pay the prevailing wage rate or time and one-half the required hourly basic rate of pay, for hours worked in excess of the prevailing hours of labor, to any employee at any time within the preceding three (3) years.

## Other Construction Business

| Name of Business | | | |
|---|---|---|---|
| Street Address or P O Box | City | State | Zip Code |
| Name of Business | | | |
| Street Address or P O Box | City | State | Zip Code |
| Name of Business | | | |
| Street Address or P O Box | City | State | Zip Code |
| Name of Business | | | |
| Street Address or P O Box | City | State | Zip Code |

**I hereby state under penalty of perjury that the information, contained in this document, is true and accurate according to my knowledge and belief.**

| Print the Name of Authorized Officer | | | |
|---|---|---|---|
| Signature of Authorized Officer | Date Signed | | |
| Name of Corporation, Partnership or Sole Proprietorship | | | |
| Street Address | City | State | Zip Code |

**If you have any questions call (608) 266-0028**

(Rev. 05/ 2013)

**FORM A - COMPLIANCE PLAN - CITY OF MILWAUKEE – DEPARTMENT OF PUBLIC WORKS**
**SBE PARTICIPATION FOR SUBCONTRACTORS AND/OR MATERIAL SUPPLIERS**

PRIME CONTRACTOR'S NAME:_____ OFFICIAL NOTICE NUMBER: _____

DATE:_____ TOTAL BID AMOUNT:_____ TOTAL SBE AMOUNT:_____

This Form A must be completed in its entirety and is a **required** submission in conjunction with a Bid or Request for Proposal. Submit either with the bid or within **3** days of being notified as the apparent low bidder. List all proposed SBE subcontractor(s) and/or material supplier(s) for this project. **NOTE:** To receive full credit, SBE's must perform commercially useful work at the job site. ONLY up to twenty percent (20%) credit may be given under certain circumstances to SBE suppliers or other SBE contractors who assist in management of the project. I/We propose to utilize the following SBE subcontractor(s) and/or material supplier(s):

**Fill in BID REQUIREMENTS**: _____%**SBE**

| SBE FIRM(S) NAME ADDRESS/CONTACT PERSON AND PHONE NUMBER | **LIST DESIGNATION: WHETHER SUPPLIER OR CONSTRUCTION LABOR** | PERCENT OF BID | AMOUNT | EXPLAIN WORK TO BE PERFORMED/MATERIAL SUPPLIED | AUTHORIZED SBE(S) OWNER/REPRESENTATIVE SIGNATURE OF ACKNOWLEDGEMENT |
|---|---|---|---|---|---|
| 1. | | | | | |
| | | | | | |
| | | | | | |
| 2. | | | | | |
| | | | | | |
| | | | | | |
| 3. | | | | | |
| | | | | | |
| | | | | | |
| 4. | | | | | |
| | | | | | |
| | | | | | |
| 5. | | | | | |
| | | | | | |
| | | | | | |

I certify that the information included on this Form A is true and complete to the best of my knowledge. I further understand and agree that this Form A is a condition of my Bid/RFP responsiveness. Failure to submit this form and/or meet the specified SBE requirements may render the Bid/RFP nonresponsive.

CONTRACTOR: _____ DATE: _____/_____/_____
(SIGNATURE & TITLE REQUIRED)

REVIEWED BY OSBD ANALYST: _____ DATE: _____/_____/_____

DEPARTMENT OF PUBLIC WORKS: _____ DATE: _____/_____/_____

**AFFIDAVIT OF COMPLIANCE**
**WITH WISCONSIN STATUTE 103.503**
**SUBSTANCE ABUSE PREVENTION REQUIREMENTS**

STATE OF _____ ) PROJECT NAME _____
) ss.
_____ COUNTY) DPW Contract No._____

I, _____, being first duly sworn state that:
(Print name)

1. I am the _____ of _____, a _____.
(Title) (Company Name) (State)

Corporation, partnership, or individual of _____, _____,
(City, Village, Township) (State)

and make this affidavit pursuant to the provisions of Wis. Stat. § 103.503.

2. I have entered into City of Milwaukee, Department of Public Works' Contract No. _____, to which the provisions of Wis. Stat. 66.0903 apply.

3. I have in place a substance abuse prevention program that meets the requirements of Wis. Stat. 103.503, and I will fully comply in all respects with the requirements of Wis. Stat. 103.503 during the performance of this Contract.

4. I will include in each subcontract covering work performed under this Contract to which the provisions of Wis. Stat. 66.0903 apply, a provision similar to that in Paragraph 3 above, together with a clause requiring such insertion in further subcontracts that may in turn be made.

| Title | Officer Name | Address |
|---|---|---|
| President | _____ | _____ |
| Vice President | _____ | _____ |
| Secretary/Treasurer | _____ | _____ |

Subscribed and sworn before me this _____

day of _____, 20___.

_____ _____
Notary Signature Contractor Signature

Notary Public, State of _____

My Commission Expires: _____

1121-2004-1516/96897(04/2007)

**To ensure DPW is in compliance with any federal procurement requirements regarding suspension and debarment, CONTRACTOR must sign this "Suspension/Debarment Certification Form".**

Please complete and sign below and return this form to:

Department of Public Works Contract Office
Room **506**, Municipal Building
841 North Broadway
Milwaukee, WI 53202

***Submittal required prior to start of work on this project.***

## CERTIFICATION REGARDING SUSPENSION AND DEBARMENT

The CONTRACTOR certifies that all potential sub-recipients, contractors, and any and all of their principals are not debarred, suspended or proposed for debarment for federal assistance (e.g., General Services Administration's List of Parties Excluded from Federal Procurement and Non-Procurement Programs), and that throughout the term of its federally-funded contracts with the City of Milwaukee, the CONTRACTOR will not enter into any transactions with any sub-recipients, contractors, or any of their principals who are debarred, suspended or proposed for debarment.

_____ _____
Signature/Authorized Official Date

_____ ___C_____
Printed Name Contract Number

_____
Title

_____
Name of Company

04/15/2015
10:28:42 AM

# PROJECT BREAKDOWN
# OFFICIAL NOTICE # 67-1

## PROJECT TITLES

PROJECT 870-0956 PROJECT/GRANT ST211100132 ESTIMATE 28912

W. County Line Rd. - N. 68th St. to N. Swan/N. 91st St. (Portions in the City of Mequon)(ST214150101)

# PROJECT BREAKDOWN
# OFFICIAL NOTICE # 67-1

| | | | |
|---|---|---|---|
| Project Number | | 870-0956 | TOTAL |
| | | 28912 | |
| Plans Per Project | | 10 | |
| Roadway Width | FT. | 30' | |
| Approximate Length | FT. | 7821' | |

| ITEM # | ITEM DESCRIPTION | UNIT | | |
|---|---|---|---|---|
| 30500 | Mobilization | Lump Sum | * | 1 |
| 30501 | Finishing Roadway | Lump Sum | * | 1 |
| 30606 | Barricading and Signing | Lump Sum | * | 1 |
| 40121 | Cutting | cu. yd. | 9198 | 9198 |
| 40262 | Sawing | lin. ft. | 292 | 292 |
| 40411 | Trees Clearing | in. dia. | 4152 | 4152 |
| 40412 | Trees Grubbing | in. dia. | 5025 | 5025 |
| 60103 | Tack Coat | gallons | 2152 | 2152 |
| 60105 | Base Preparation for Asphalt Surface | Lump Sum | * | 1 |
| 60120 | Variable Thickness Asphalt Binder (3/4 inch maximum) | tons | 4632 | 4632 |
| 60130 | Variable Thickness Asphalt Concrete Pavement (1/2 | tons | 2410 | 2410 |
| 70118 | 1 1/4-inch Base Aggregate Dense | tons | 6020 | 6020 |
| 70120 | Variable Thickness 2&1/2 Inch (ASTM #2) Crushed | tons | 14871 | 14871 |
| 70406 | 6 inch Crushed Stone Shoulder | sq. yd. | 3289 | 3289 |
| 81202 | Steel Plate Beam Guard Type II | lin. ft. | 101 | 101 |
| 82104 | Seeding (4 inch Topsoil) | sq. yd. | 17224 | 17224 |
| 83100 | Fabric Membrane | sq. yd. | 19368 | 19368 |
| 83306 | Pavement Marking, 4" White, Cold Plastic Furnish and | lin. ft. | 15328 | 15328 |
| 83311 | Pavement Marking, 4" Yellow,Cold Plastic Furnish and | lin. ft. | 6650 | 6650 |
| 83563 | Fly Ash For Subgrade Stabilization Furnish | TON | 3057 | 3057 |
| 83564 | Fly Ash Subgrade Stabilization | sq. yd. | 30571 | 30571 |
| 83565 | Pulverize | sq. yd. | 19740 | 19740 |
| 84262 | Culvert Pipe Class IV 12-inch | lin. ft. | 59 | 59 |
| 84266 | Elliptical Culvert Pipe Class IV 15-Inch | lin. ft. | 175 | 175 |
| 84269 | Elliptical Culvert Pipe Class IV 18-Inch | lin. ft. | 550 | 550 |
| 84275 | Elliptical Culvert Pipe Class IV 24-Inch | lin. ft. | 238 | 238 |
| 90001 | Landmark Reference Monument | each | 3 | 3 |
| 90050 | Culvert Removal | L.F. | 385 | 385 |
| 97148 | 4 foot Diameter Storm Manhole | each | 1 | 1 |
| 97153 | 5 Foot Diameter Storm Manhole | each | 1 | 1 |
| 97181 | Manhole Frame and Cover Type 58A | each | 2 | 2 |
| 97895 | Erosion Mat | sq. yd. | 17224 | 17224 |
| 97900 | Erosion Control | Lump Sum | * | 1 |
| 97920 | Check Dam | each | 2 | 2 |

* Combined under one lump sum.

1. The work on this contract is governed by the *City of Milwaukee Street Construction Specifications,* dated July 1, 1992.

   Note: Digital design file information/existing surface area, including design surface DTM's and/or coordinate system GPS information will not be available for this project

2. Award of contract is contingent to approval of bids by the City of Mequon

3. The contractor shall be responsible for obtaining all necessary permits, (with the exception of the DNR Permit and Army Corp Permit), to complete this contract. All costs for permits shall be included in the unit price bid for mobilization.

   The Army Corp Permit and DNR Permit have been applied for by the City of Milwaukee/City of Mequon and have conditional approval. No work may begin on this contract prior to DNR and Army Corp permit approval. Contractor will be provided a copy of approved permits and must comply with any/all requirements. Note that final DNR permit approval is conditional to the contractor submitting an approved erosion control plan to the DNR.

   Note: USACE permit requires that fill material must be from a licensed commercial facility OR contractor must notify USACE a minimum of five (5) days prior to start of work.

4. All work on this contract shall be completed by October 16, 2015.

5. Some delay may be experienced due to utility installations. Such delay, the result of third party operations, shall not change the requirements of this contract or give rise to claim for scheduling problems.

   It is anticipated that WE Energies may require site access and coordination with contract operations to move power poles and AT&T for adjusting manholes.

6. The contractor shall be required to coordinate construction activities so that all work on an individual project is complete as per *Section 305.6.2 of the Specifications* within the following time limitations:

   ***Project No.* ST211100132** **Fifty Five (55) Project Workdays**
   W. County Line Rd –
   N. 68th St.
   N. Swan / N. 91st St. (Portions in the City of Mequon)

   All contract work shall be complete within fifty five (55) contract workdays as per *Section 305.6.1 of the Specifications*.

7. This special provision is a substitute for Section 305.7 of the *Street Construction Specifications*, dated 1992. The amount of the per diem charge for inspection as referred to in part two (2) shall be **$325.00**. The contractor should be aware that work on each project is governed by the project workdays, and a per diem inspectional charge of **$325.00** per day will be assessed for each workday after the allotted number. Inspectional charges will be assessed against each project,

which exceeds its allotted number of workdays. An inspectional charge, in addition to the project workday charge, will be assessed if the number of workdays for the overall contract exceeds the amount allotted.

8. Within ten (10) business days of the award of this contract, the contractor shall mail a notice of the project to the City of Milwaukee Construction Section at 841 N. Broadway, Room 710, Milwaukee, WI 53202 for review and approval. Within five (5) business days of approval, the contractor shall mail the project notice to all affected area residents and businesses. It shall be the sole responsibility of the contractor to ensure that all notices are conveyed to the public regarding this project. A sample notice is included in the contract documents. The entire cost of this work shall be included in the unit price bid for mobilization. Contract work shall not start prior to completing the notice requirment. Any delay in contract completion as a result of non-compliance shall be the responsibility of the contractor.

9. The contractor shall post City of Milwaukee Project Identification ("BLUE") signs as directed on each project in this contract. The City will provide blank signs for the contractor to fill in contact information and post. The entire cost of this work shall be included in the unit price bid for mobilization.

10. The contractor shall provide a portable toilet or portable toilet service on each project location in the contract for use by construction and City personnel. Facilities shall be promptly removed upon completion of each individual project. Facilities shall be locked and secured during non-working hours. (Location shall be as directed). The entire cost of this work shall be included in the unit price bid for mobilization.

11. Vehicular traffic shall be maintained at all times to residences and businesses. Contractor shall coordinate with the businesses to ensure uninterrupted access to trucking operations during both roadway and driveway construction. Contractor shall allow for garbage collection and mail delivery, including providing temporary mailbox's if necessary. All costs to maintain vehicular access, inclusive of special staging and/or temporary roadway shoulders shall be incidental to the contract.

12. Vehicular cross-traffic shall be maintained at the following intersection(s) at all times:

- N. 76th St.
- N. 91st St.

13. The contractor shall furnish and install frame-to-chimney seals on all sanitary manholes within the limits of this contract. The seals shall be as specified in the *Standard Specification for Sewer and Water Construction in Wisconsin (Sixth Edition with addendum) Chapter 8.42.0*.

    A sanitary manhole that contains an existing frame-to-chimney seal that is not altered or disturbed shall be deleted from the contract.

    A sanitary manhole that contains an existing frame-to-chimney seal that is disturbed due to contractor's negligence shall be re-sealed or be replaced with a new internal seal as directed by the Engineer. This corrective work shall be at contractor's expense.

14. The following sequence of operations shall occur for these bid items:

    a. Excavation and Roadway Widening, including VT stone over No. 2 stone.
    b. Existing Roadway Pulverization & Proof Rolling
    c. Fly Ash Soil Stabilization as required
    d. Finish Grading

15. The erosion control item on this contract shall include an Erosion Control Implementation Plan (ECIP). The ECIP shall be submitted to the City Engineer and City of Mequon, at least ten (10) working days prior to the scheduled start of work on the contract. The City Engineer shall review the ECIP for meeting technical standards and notify the contractor if the plan meets the standard within seven (7) working days. Work shall not start until the ECIP meets technical standards. The contractor shall be required to have a copy of the ECIP on the job site for the entire duration of the contract. The ECIP shall include, but not be limited to:

    - A plan showing all locations of erosion control devices and other *Best Management Practices (BMP's)*.
    - A written description of all erosion control devices and *BMP*'s to be used.
    - A written schedule of installing erosion control devices.
    - A written schedule of construction operations related to implementing erosion control devices and *BMP's*.
    - A written maintenance schedule for all erosion control devices and *BMP's*.

    All costs associated with implementing the erosion control plan, such as furnishing, installing, maintaining, and removal of erosion control devices shall be included in the unit price bid for erosion control. There shall be no additional compensation for revising the ECIP or utilizing additional *BMP's* in order to comply with *Chapter 290* of the *City of Milwaukee Code of Ordinances*. If the contractor is found not in compliance with the ECIP, the contractor will be subject to the penalties included in *Chapter 290*.

    Note: Silt fence will be required along limits of wetlands. Wetland limits are shown on the plans.

16. Landmark Reference Monument installation is required on this contract. Locate and install the monument(s) at the discretion of the City of Milwaukee Field Engineers. Contact Mr. Bob Viktora at (414) 708-2523 prior to removal of the existing monument and to coordinate installation of the new monument.

    Use monuments provided by the Southeast Wisconsin Regional Planning Commission (SEWRPC) that consists of precast concrete with a brass cap. Contact John Washburn of the SEWRPC at least one (1) week prior to needing the monuments at (262) 547-6721 to arrange coordination and delivery of the monuments to the project in coordination with City of Milwaukee Field Engineers. Provide at the discretion of the engineer, a two (2) foot diameter by three (3) feet deep hole (box-out) backfilled with base aggregate dense at the location of the monument until after paving is complete at which time the monument can be reset and the surrounding pavement can be placed.

Place the monuments so that the top elevation of the monuments shall be approximately one (1) inch (25mm) below the finished pavement surface or flush with the ground surface in unpaved area. Place the monuments so that the caps are oriented in the cardinal direction (read from due South). Place the monuments so that the actual point of reference is centered on the location marks on the cap.

Payment is full compensation for complete installation of the monument including all excavating, removals, placing the precast monument, placing and compacting backfill material, pavement, and the required coordination with SEWRPC and City of Milwaukee Field Engineers.

17. The filter fabric for control of surface water, specified in *Section 905.18.1* shall be a filtration *Geotextile*® meeting the following properties in lieu of the properties specified in the above-noted section.

| | | |
|---|---|---|
| Grab Tensile Strength | 200lb | ASTM D-4632 |
| Mullen-Burst Strength | 200lb | ASTM D-3786 |
| Equivalent Sieve Size | U.S. No 30 Max | ASTM D-4751 |
| Water Flow Rate | 140 gpm/ft$^2$ | ASTM D-4491 |
| Permittivity | 1.9 sec$^1$ | ASTM D-4491 |
| Permeability | 0.14 cm/sec | ASTM D-4491 |

18. The pavement type shall consist of one and one-half inches (1½") of asphaltic concrete pavement, one-half inch (½") maximum, on three inches (3") of asphalt binder, three-quarter inch (¾") maximum, on variable thickness one and one-half inch (1½") or one and one-quarter (1¼") graded, crushed, stone base course material on the prepared base.

See the attached specifications (in item no. 37) for:
A. Excavation for Roadway Widening
B. Pulverized and Re-Laid Pavement
C. Fly Ash Stabilized Recycled Asphalt Base

19. The sub-grade shall be prepared by the contractor and then checked and accepted by the City before placing and spreading operations start with the crushed stone base. Six-inch (6") maximum lifts of one and one-half inch (1½") or one and one-quarter (1¼") graded, crushed stone or recycled, crushed, pavement shall be spread uniformly on the prepared sub-grade to avoid segregation.

Immediately upon the completion of the spreading operations, the crushed aggregate shall be thoroughly compacted. The number, type, and weight of rollers shall be sufficient to compact the material to the required ninety-five (95) percent compaction density as determined by *ASTM D2922*. The moisture content of the material during placement operations shall not be below nor more than three and one-half (3½) percentage points above the optimum moisture content as determined by ASTM Designation 698.

20. All proposed Culvert pipe shall be concrete class IV.

21. All proposed erosion matt shall be Class 1 Type A.

22. Proposed fabric membrane to be Geotextile Fabric Type SAS conforming to Section 645 of the State of Wisconsin Standard Specification for Highway and Structure Construction, 2011 Edition.

23. Note that the proposed storm sewer manholes at Sta 130+36 and 130+95 are not standard size, and may require field construction to match the proposed culvert design.

24. All pavement-marking materials shall be pre-approved by the City of Milwaukee. There are two (2) pre-approved materials at this time, and they are:

| MANUFACTURER | COLOR | NUMBER |
|---|---|---|
| 3M® | White | 5730 |
| 3M® | Yellow | 5731 |

All material must be installed per the manufacturers' specifications.

If a centerline is required, an offset asphalt joint is required. Pavement markings shall be placed at the center of the roadway a minimum of one (1') foot from the asphaltic joint. Placement of lane lines may also require a minimum one (1') foot adjustment of the asphalt joint.

If the final asphaltic surface is not installed immediately following the installation of the binder course, temporary centerline pavement markings shall be installed prior to the roadway being open to traffic. The spacing of the four-inch by forty-eight-inch (4" x 48") temporary pavement marking tape must be forty-six-feet (46'). The cost of such work shall be included in the unit bid price of *Plastic Lane Markings.*

When pavement marking layouts are needed, the contractor shall contact Mr. Jim Brown at (414) 286-3276, a minimum of <u>five (5) working days</u> before they are needed.

25. The adjustments of all City manholes (Sewer, CUC, Water, etc.) shall be part of this contract. Contractor shall note Sewer and CUC special provisions, tables, and drawings.

26. The contractor shall furnish and install detectable warning plates as detailed on the attached curb and sidewalk ramp details, at all curb and sidewalk ramps, within the project limits. The detectable warning plates shall be a *Neenah Foundry R-4984,* or an approved equal. The plates shall be unpainted. The installation of the detectable warning plates shall follow the manufacturers' suggested procedures. The installed detectable warning plates shall be measured on a per square foot unit basis, and paid under the item, *50330 Detectable Warning Field.*

27. Contractor shall be aware of **design revisions** made to ***Concrete Driveways***, *(Figures 21A, 21C, 23A, 23B and 26A)***.** **Design changes** were also made to ***Curb Ramps***, *(Figures 16A, 17A and 18A)*. These **changes** are effective immediately and shall be implemented under this contract. *(See attached revised drawings)*.

28. **Sewer Special Provisions include:**

A. The sewer work on this contract is governed by the *Standard Specifications for Sewer & Water Construction in Wisconsin,* Sixth Edition dated December 22, 2003, and all Subsequent Addendums.

B. The contractor shall be responsible to keep all castings safe and free from damage as part of this paving contract during removal and replacement. Any damaged castings shall be brought to the attention of the construction engineer prior to removal. Any damage to the castings caused by the contractor as a result of removal and replacement shall be the responsibility of the contractor and replaced at the contractor's expense.

C. The contractor shall furnish new castings on all new manholes and inlets constructed as part of this contract and on existing manholes and inlets as required in the plans. New sewer manhole frames and lids shall be of type MS21 and MS58A, respectively. New inlet frames and grates shall be of type MS51 and MS57, respectively. New alley inlet frames and grates shall be of type MS8A and MS55, respectively. Castings shall be of types supplied by Neenah Foundry or approved equal. The cost of furnishing new castings shall be included in the unit price bid for the respective casting. Salvaged castings shall become the property of the contractor.

D. Manhole/Inlet Adjustment shall be in accordance with Section 810 of the *City of Milwaukee Street Construction Specifications,* dated July 1, 1992. Section **810.6 Measurement for Payment** shall be revised as follows: the unit of measurement for Manhole/Inlet Adjustment shall be: Each. Note: Manhole/Inlet Adjustment shall include up to twelve (12) inches of Manhole/Inlet Repair as noted in the Sewer Drainage Table or as determined in the field.

E. Manhole/Inlet Repair shall be the removal and replacement of portions of existing manholes and inlets as required in the plans. Additional manhole/inlet repair may be added to any existing manhole/inlet once construction begins at the discretion of the construction engineer. The cost of removals and furnishing and installing all materials shall be included in the price bid for Manhole/Inlet Repair. The unit of measurement for Manhole/Inlet Repair shall be: Vertical Foot. Note: The first twelve (12) inches of Manhole/Inlet Repair is included in the bid item for Manhole/Inlet Adjustment.

F. The cost of removing any existing manhole/inlet necessary to construct any new manhole/inlet as required in the plans shall be included in the appropriate manhole/inlet bid item.

G. The cost of all materials, including pipe, used to reconnect existing connections to new manholes constructed as part of this contract shall be included in the appropriate manhole bid item.

H. Inlet Type 45A's shall include up to eighteen (18) inches of additional pre-cast riser structure, for a total structure height of up to sixty (60) inches below the top slab, while maintaining a minimum of eight (8) inches of rectangular precast chimney. If the inlet installation requires more than an additional eighteen (18) inches of riser structure over the standard detail forty-two (42) inch tall structure, the additional shall be paid as vertical feet under the Manhole / Inlet Repair bid item.

I. All sewers constructed on this contract shall be PVC, smooth wall, and shall conform to ASTM D 3034 SDR 35.

J. Precast concrete adjusting rings shall be of the type supplied by Concrete Specialties Company, Kenosha, Wisconsin or approved equal.

29. **CUC/Communication Manhole Adjustment**

**A. Description**

This special provision describes adjusting the existing chimney of the block, pre-cast, or brick round manholes; and furnishing, installing, and removing protection of the cables in the manholes during adjustment and paving operations. Perform work in accordance with the standard specifications, per *Standard Specifications for Sewer & Water Construction in Wisconsin*, as shown on the attached sketch, and as hereinafter specified.

**B. Material**

Furnish and install materials that conform to the requirements of *Standard Specifications for Sewer & Water Construction in Wisconsin.* Salvage and re-install existing covers on the manholes. For manhole covers designated for replacement the city will supply the covers. Contact Rico Lopez, Inventory Clerk, at (414) 286-6123 prior to obtaining the frames and lids from the DPW Field Headquarters at 3850 North 35th Street. Contractor must have the "Castings Requisitions Form" which shall be supplied by the city to obtain the covers.

**C. Construction**

Report any pre-existing problems to Ms. Karen Rogney, Conduit Section, at (414) 286-3243 three working days in advance of any construction on manholes.

Before removing the pavement around the manhole, place a ¾" plywood cover or equal over existing active Street Lighting, Traffic Control, Communication or private vendor electrical cables. This cover shall be properly supported to/at the manhole floor. Contractor must place a steel cover plate over the manhole which must remain in place during construction activities until the frame and cover are placed on the manhole.

Remove existing chimney to surface of concrete roof slab. If manhole does not have an existing concrete roof slab, remove sufficient chimney as to provide adequate corbel to fit new larger cast iron frame and cover.

Break out and remove pavement around manhole. Remove existing covers, storing and securing them properly. Any damaged, lost, or stolen covers shall be the responsibility of the contractor and shall be replaced at the contractor's expense.

Adjust manhole cover to proposed grade using brick or concrete rings as necessary. After paving is complete, remove all wedges and shims. Fill voids with grout. Do not back plaster inside walls. After completion of all paving operations, remove the temporary ¾" plywood cover or equal which was placed over the existing electrical cables in the manhole as mentioned above. Remove all construction debris from the manhole.

**D. Measurement for Payment**

The unit of measurement for CUC manhole adjustment shall be each.
Note: CUC Manhole Adjustment shall include up to twelve (12) inches of Adjustment. Payment shall be full compensation for furnishing all required materials, exclusive of

frames, grates, or lids available and designated for adjusting; for removing, re-installing and adjusting the covers; and for furnishing all labor, tools, equipment, and incidentals necessary for adjusting each cover, complete in accordance to the requirements of the plans and contract. Covers to be adjusted and which were rendered unfit for use by the contractor, through the contractor's operations will be replaced by the contractor in kind at the contractor's own cost and expense.

30. Approx. six hundred (600) trees are to be removed (4,152") and eight hundred seventy (870) stumps to be grubbed (5,025") on Project No. ST211100132.

Trees and stumps to be removed are essentially all that fall within the roadway right of way with some notable exceptions of significant trees near the Mequon Nature Preserve. Trees and stumps must be marked and verified prior to clearing and grubbing operation. Contractor must allow several additional notice days prior to starting the contract to allow time for marking, and must contact both the City of Milwaukee Forester Mr. Jim Kringer (414) 708-2428 and City of Mequon Forester Mr. Ken Baker (414) 803-3076 to verify marks prior to starting the operation.

Costs for clearing and grubbing all trees and brush three (3) inches in diameter or less shall be incidental to the bid item for Cutting.

Note that there are areas of downed trees, previously cut and left on the site, some noted as log barricades on the plans. Costs for clearing the previously downed trees/log barricades within the project limits shall be incidental to the bid item for Grubbing.

**Emerald Ash Borer Quarantine:** The quarantine means that ash wood products may not be transported out of the quarantined area.

Clearing and grubbing includes all ash trees that are to be removed from within the Project footprint. If ash trees have been identified within clearing and grubbing limits of the Project, the following measures are required for disposal:

1. May be trucked to a licensed landfill within the quarantined zone with prior approval of the City Engineer.
2. Burning is optional if in compliance with section 201.3 of the standard specifications.

**Ash logs, branches, and roots must be disposed of immediately and may not be stockpiled.**

**Anyone moving firewood or ash products from Milwaukee County is subject to state and federal fines up to $1,000.00. All fines are the responsibility of the contractor.**

31. The City has retained a consultant for doing line and grade staking on paving contracts. The City needs the project staked five (5) working days before construction starts so the removals can be measured by City field crews. As a result, the contractor must contact the City eight (8) working days in advance so that the City can give the consultant three (3) working days to stake the project. The City will make the initial consultant contact at the time the contractor calls for a start. If the contractor wants the stakeout done in a special way to accommodate a special piece of equipment or a new procedure, it is up to the contractor to communicate this to the consultant. The consultant is required to stake each stage of work one (1) time. The contractor is required to check that the stakes and grades are acceptable to use before construction starts. Any staking required because

the contractor failed to protect the stakes or failed to transfer the grades would be at the contractor's expense. If there are design changes, the consultant will be paid an *extra* for stakeout. Stakes needing replacement due to alleged third party actions will require Construction Supervisor approval if a cost is involved.

32. The contractor shall protect, adjust and maintain accessibility to all Milwaukee Water Works (MWW) facilities (manholes and access boxes which house water appurtenances such as valves, curb stops, air vents and blow offs) within the limits of and for the duration of the paving project. The Contractor shall preserve the location markings of all water facilities by maintaining blue paint markings and installing temporary stakes as necessary. All MWW facilities shall be maintained in clean, properly adjusted and aligned and undamaged condition throughout the paving project and upon completion. Cost for adjustments shall be per each as listed in the bid item quantities.

Prior to the start of the contract start date, MWW will locate, mark, inspect and repair all water manholes and access boxes within the limits of the project to ensure that they are all properly adjusted and aligned for access to the appurtenance below ground. In addition, MWW will ensure that all appurtenances (valve, curb stop, air vent and blow off) are in proper operable condition. Upon completion of the pre-inspection but before construction commences, the MWW will walk through the project with a representative from Infrastructure Services Construction Section to document the condition of the project and ensure all are knowledgeable about the condition of the project prior to the commencement of work by the contractor. The paving contractor will be invited to attend this walk through. Not attending the walk through will not release the contractor from their required obligations and responsibilities.

The contractor will be provided with information identifying the water facilities. The contractor is responsible throughout the duration of the project, to ensure all water facilities are located, identified by maintaining the blue paint markings, accessible for operation and free from damage at ALL times. All appurtenances shall be operable so as to control a leak in the event of water emergency or to accommodate a customer's request for a water shut off. Any water appurtenance identified during the duration of the project that cannot be located or operated, must be corrected by the contractor immediately. If the MWW requires the location and/or operation of the appurtenances during the course of the project, and it is not identifiable and/or accessible, the MWW will make the necessary repairs and the cost of those repairs and any associated costs as a result of the delayed shut-off will be billed to the contractor as well as any costs of claims due to an impeded shut-off response. The contractor shall remit payment of the invoice to MWW within 30 days of the invoice date. In addition the bid item(s) payment owed to the contractor for affected items will be disallowed on the contract.

All materials used for the adjustment and or repairs of MWW manholes and access boxes must meet MWW specifications and will be provided by *City of Milwaukee, Milwaukee Water Works' Inventory, 3850 North 35th Street Milwaukee, WI 53216, (414) 286-2827,* or by *contacting Mr. Jesse Hernandez at (414) 286-6306 or (414) 708-2670. Milwaukee Water Works Distribution General Contact Number is (414) 286-3710*. If materials that have been provided by MWW are damaged by the contractor the replaced MWW Specified materials will be charged to the contractor. If existing access boxes are damaged by the contractor or subcontractors, they can only be replaced with MWW specified materials and will be charged to the contractor. If additional MWW materials are needed they will be provided by the City of Milwaukee, MWW Inventory and may be charged to the contractor depending on the circumstances as determined by the MWW. All

MWW materials furnished but not used on the project shall be returned and delivered to the City of Milwaukee, MWW Inventory. The Inspector will provide the contractor a Surplus Material form as well as provide a copy of the form to the City of Milwaukee, MWW Inventory. Materials not returned will be charged and billed to the contractor with payment of the invoice due to the MWW within 30 days of the invoice date.

Infrastructure Services Construction Section will notify MWW of the completion of the paving work and MWW will then inspect all water manholes and access boxes within the project limits to ensure the manholes and boxes are clean, properly adjusted and aligned and the appurtenances are accessible and operable. The contractor will be notified of any defects by the City. The contractor will have fifteen (15) working days from the date of notification to complete corrections. After 15 working days the MWW will re-inspect the identified facilities and appurtenances noted as having defects. Any remaining defects will be corrected by the MWW, and billed to the contractor for immediate payment to the MWW.

33. The contractor shall keep the *Street Lighting Construction Supervisors* informed of the status of the roadway construction. Contact:

Mr. George Berdine (414) 286-5943 / office (414) 708-4245 / cell
Mr. Dennis Miller (414) 286-5942 / office (414) 708-4251 / cell
Mr. Thomas Hughes (414) 286-3457 / office (414) 708-3175 / cell

***Note:*** *If Mr. Berdine, Mr. Miller, or Mr. Hughes is not available, then contact our dispatcher at (414) 286-5944. For damages occurring after hours (not between 7:00 AM to 3:00 PM on holidays and weekends) please use our 24 hour number, (414) 286-3015.*

The contractor must keep the area behind the curb free from over pour and other debris. He will be held responsible for costs incurred by *Street Lighting Forces* for cleaning debris from behind the curb.
If the contractor requests the relocation of any street lighting facilities, *permanent or temporary*, for his convenience, he will be responsible for all costs incurred by *Street Lighting* personnel fulfilling his request.
Any questions regarding the design of the lighting system are to be directed to *Street Lighting Engineering*. Contact Mr. Tom Manzke at (414) 286-3265.

34. Two (2) check dams will be constructed in the ditch flow lines. See detail sketch included with contract documents for locations. (STA 179+00 South, and STA 183+00 South) Payment will be each to furnish and install all materials necessary to construct the check dams after roadway grading and prior to final landscaping.

35. The Bid item for linear feet of Steel Plate Beam Guard Type II shall include furnishing and installing one (1) SKT 350 energy absorbing end terminal on the incoming traffic end, guardrail, and one (1) Type II end terminals on outgoing traffic end. See plans for beam guard locations and specifications for typical end details. (Approx. STA 143)

36. ***Forestry***

**Forestry Special Provisions include:**

*When tree roots are encountered, the following shall apply:*

1. ***Sidewalk Construction*:**

   A. Sidewalks are to be removed, and roots cut, by use of **hand implements only.**

2. ***Curb, Gutter and Road Construction***:

   A. Exposed tree roots shall be covered with mulch and watered from a period immediately following curb and gutter removal until the area is backfilled following construction.

3. ***General Requirements***:

   A. All cutting for the removal of sod and soil in order to establish a finished grade within four feet (4') of existing trees must be done manually if necessary.

   B. No construction equipment, cars, trucks or materials shall be parked or stored on any median or tree border on this project or adjacent roadways.

   C. Root foundations must remain adequate to withstand heavy windstorms.

   D Root systems of street trees **shall not be cut** for the installation of any type of cable by the contractor or City Department. Contact **the Forestry Division at (414) 708-2428** for directional boring specifications.

   E. Caution should be used during the construction process to avoid damage to the roots, trunks, and branches of all street trees. Damage caused to any street tree or irrigation system will be **repaired by the Forestry Division** and the costs of repair, rejuvenation, and/or value lost will be billed to the contractor or credited against the contract at the option of the City.

   F. At locations where the contractor has not complied with the Forestry Special Requirements stated in the Special Provisions above, and the maximum clearance was exceeded, or a thin form was not used, a minimum credit to the City of **fifty dollars ($50.00)** per location will be taken. The credit will increase in proportion to the excess distance beyond clearance allowed. The credit will be (**$50.00)** for each two-inch (2") increment, or part thereof, in excess of the initial clearance allowed. Any damage to the tree's structure totaling fifteen (15%) percent of the tree's value will be billed on a prorata basis. If, in the opinion of the Forestry Division, the tree has been damaged to the point that it warrants removal, the credit that will be taken will be equal to **one-hundred dollars ($100.00)** per inch diameter of the tree. A field measurement will be taken to determine the tree size.

37. Specification references in special provision no. 18 above:

**A. Excavation for Roadway Widening**

**Summary**

This section includes Excavation for Roadway Widening.

This work shall consist of supplying all the necessary materials, labor and equipment to excavate along the existing roadway in preparation for placement of dense graded base for widening of the existing roadway to the proposed width indicated in the project specifications, plans, or as directed by the engineer.

The locations of Excavation for Roadway Widening are shown on the plans.

**Construction**

Roadway excavation shall consist of the excavation and disposal of all material taken along the edge of the existing roadway so as to provide a stable sub-grade on which to place the prepared base material that will serve as the base for the widened roadway. It is the Contractor's responsibility to excavate to the depth necessary to provide for a stable sub-grade.

Density Requirement – Sub-grade shall be rolled and compacted to meet a ninety-five percent (95) modified proctor density.

**Measurement and Payment**

Unit Prices: Measurement and payment for Excavation and Roadway Widening shall be according to the unit price for Cutting and quantity measured in the field.

**B. Pulverized and Re-Laid Pavement**

**Summary**
This section includes Pulverized Re-Laid Pavement

This work shall consist of supplying all the necessary materials, labor and equipment to perform full depth in-place pulverizing of the existing asphaltic pavement along with a portion of the underlying base and relaying the pulverized material to construct a new base as indicated in the project specifications, plans as directed by the City Engineer.

The location of Pulverized and Re-Laid Pavement are shown on the plans.

**Execution**

1. Preparation

a. Offsetting centerline and structures – The areas of Pulverized and Re-Laid Pavement will be marked in the field by the City. Prior to pulverizing, the Contractor shall locate the existing centerline and any existing structures including, but not limited to, sanitary sewer manholes, water valves, gas valves, telephone manholes, and section corners. The Contractor shall place offset stakes along the side of the roadway perpendicular to these locations. The Contractor shall measure and record the offset distances from the stakes to these locations to be used to re-establish the centerline and to protect from damage all existing structures during the pulverizing and grading process. The Contractor is responsible for damage to said structures during construction.

2. Materials

a. Graduation – The Pulverized and Re-Laid Pavement shall conform to the following graduation requirements: One-hundred (100) percent of the pulverized material shall pass a one and a half (1½) inch sieve and ninety-five (95) percent shall pass a one (1) inch sieve. Should the material not meet these requirements after one pass of the pulverizing equipment, additional passes shall be made as necessary and at no additional cost to the CITY, until the graduation requirements are met. The Contractor shall, at his/her cost, remove from the site any material that cannot be reduced to less than one and a half (1½) inch diameter.

b. Density – The Pulverized and Re-Laid Pavement shall be compacted to a uniform density of not less than ninety-five (95) percent of modified proctor for the material on that roadway. The CITY reserves the right to perform random density tests. Should area be found that does not meet the minimum density requirements, the boundaries of these areas will be determined by taking additional density tests at one-hundred (100) feet intervals until acceptable densities are obtained. These areas shall be reworked and re-compacted at no additional cost, until acceptable densities are achieved.

3. Construction

a. General – Pulverize the pavement to its full depth including the specified depth of base material and grade the pulverized pavement and base material to the specified width **to be paved.** The Contractor shall distribute the pulverized material to provide the required widths **to be paved** shown in the contract as well as provide a smooth profile to a two (2) percent cross slope to provide the proper crown or super-elevation, or to raise or lower the base elevation as directed by the City Engineer. Grading operation shall include redistribution of material as necessary over the project limits to meet plan grades.

b. Excess Pulverized Material Left in Windrow for Shouldering – The existing street has aggregate shoulders, excess pulverized base material is expected to be available based on existing pavement and base thicknesses, a windrow of pulverized material approximately eight (8) inches high along each side of the roadway in the shoulder area shall be left to be used at a later time for fly ash stabilization and / or shouldering. The windrow shall be incidental to the item “Pulverized and Re-Laid Pavement.”

c. Unsuitable Sub-Base – If during the grading and compaction of the pulverized material, the Contractor encounters areas of unstable or soft sub-base material which prevents him from constructing and compacting a stable pavement base, the Contractor shall contact the City Engineer so that alternate measures can be proposed, agreed to, and implemented to fix the problem areas.

d. Proof Roll – After final compaction and prior to asphaltic paving, the Contractor shall conduct a proof roll of the Pulverized and Re-Laid Pavement to determine whether the new base is acceptable for asphaltic paving. The Contractor shall provide one full day notice of the City Engineer when requesting and scheduling a proof roll and the proof roll must be witnessed by a representative of the City Engineer. The Contractor shall provide a fully loaded water truck, tri-axle or quad-axle truck of proof rolling. The proof roll shall be conducted for the entire length of each street in each traffic lane. If any areas of the roadway base deflect more than one-half (½) inch, the Contractor shall rework, re-compact, and perform another proof roll on these areas. If it is mutually determined by the City and the Contractor that these areas cannot pass the proof roll due to an unstable or soft sub-base, alternate measures can be proposed, agreed to, and implemented to fix the problem.

e. Time Requirement – Once a street is pulverized, the Contractor shall grade and compact the pulverized material, obtain the required density, pass a proof roll, and place the asphaltic lower layer on the street within five (5) working days.

**Measurement and Payment**

Unit Prices – Measurement and payment for Pulverized and Re-Laid Pavement shall be according to the unit prices specified on the bid form, and quantities measured in the field using length and width of the existing pavement.

## C. Fly Ash Stabilized Recycled Asphalt Base

**Summary**

This section includes: Fly Ash Stabilized Recycled Asphalt Base

**References:**

- WisDOT – Standard Specifications for Highway and Structure Construction – Section 325
- ASTM C-618 – Standard Specification for Coal Fly Ash and Raw or Calcined Natural Pozzolan for Use as a Mineral Admixture in Concrete
- ASTM D-698 – Test Method for laboratory Compaction Characteristics for Soil Using Standard Effort
- ASTM D-5239 – Standard Practice for Characterizing Fly Ash for Use in Soil Stabilization
- ASTM C-593 – Compaction Testing
- ASTM D-1557 – Moisture Density

This work shall consist of supplying all the necessary materials, labor and equipment to stabilize the recycled pavement and base with class C fly ash as indicated in the project specifications, plans, or as directed by the engineer. Note that based on initial proof roll, the engineer will have the option to reduce or eliminate the area of fly ash stabilization.

The locations of Fly Ash Stabilized Recycled Asphalt Base are as shown on the plans.

**Submittals**

Submittals shall be sent to the City for the following:

- Fly Ash Test Results
- Mix Proportion Test Results

**Materials**

1. Fly Ash – The fly ash shall be self-cementing and meet the physical requirements of ASTM D-5239 6/4 maintaining a minimum compressive strength of 500 psi at seven (7) days, and the chemical requirements of ASTM Specifications C-618, table 1, for Class "C" fly ash. Self-cementing fly ash not meeting the above requirements can be used, provided the sulfur trioxide content does not exceed ten (10) percent and the self-cementing properties have been demonstrated to provide the required degree of stabilization. The source of the ash shall be identified and approved by the City in advance of stabilization operations. All laboratory test results on the fly ash must be submitted prior to commencement of the work.

2. Water – The water used in the stabilized mixture shall be clean, clear, and free of sewage, vegetable matter, oil, acid and alkali. Water known to be potable may be used without testing. All other sources shall be tested in accordance with AASHTO T-26 or approved by the engineer.

**Construction**

1. Equipment – The machinery, tools and equipment necessary for the proper execution of the work shall be approved by the engineer prior to beginning any work.

2. Testing – Samples of pulverized material shall be taken from at least three (3) separate areas to be stabilized every one thousand (1,000) feet. The samples should be combined into a single sample for each area and screened through a one (1) inch sieve, and the portion passing the sieve used for testing. Use proctor-size molds for all test samples. Add fly ash to the aggregate in five (5) different proportions, starting at the lower limit ten (10) percent and proceed in convenient increments to the upper limit twenty (20) percent. Mold one test specimen at each fly ash proportion in accordance with ASTM C-593 compaction procedures at estimated optimum moisture content. Determine the molded dry density of each aggregate-fly ash blend. Plot the test results to identify a peak value or maximum dry density. Select optimum matrix content at least two (2) percent above the matrix content found at maximum dry density. Then determine the optimum moisture content and maximum dry density for that blend. This testing shall be the responsibility of the Contractor and cost shall be incidental to the work of fly ash stabilized recycled base.

3. Fly Ash – The fly ash shall be spread over the entire area to be stabilized to a thickness determined from testing to produce the proper proportions when remixing with twelve (12) inches of pulverized base. The Contractor shall re-pulverize the base incorporating the necessary portions of the existing shoulder to allow for the stabilization. Water shall be added in careful measured rates to obtain the optimum moisture content. Compact to achieve desired density as quickly as possible and finish grade the stabilized material.

4. Proof Roll – After final compaction and prior to paving the Contractor shall conduct a proof roll of the Fly Ash Stabilized Recycled Asphalt Base to determine whether the new base is acceptable for paving. The Contract shall provide a one (1) day notice to the engineer when requesting and scheduling a proof roll and the proof roll must be witnessed by a representative of the City. The Contractor shall provide a fully loaded water truck, tri-axle or quad-axle truck for proof rolling. The proof roll shall be conducted for the entire length of each area in each traffic lane. If any areas of the roadway deflect more than one half (½) inch, alternate measures can be proposed, agreed to, and implemented to fix the problem.

5. Time Requirement – Once the stabilizing process has begun, the Contractor shall stabilize, grade, and compact the pulverized material, obtain the required density, pass a proof roll, and place the asphaltic lower layer on the street within five (5) working days.

**Measurement and Payment**

Unit Prices: Fly ash shall be measured by the ton placed (provided weight tickets) and Fly Ash Stabilization shall be measured by the square yard in place.

W. County Line Rd. - N. 68th St. to N. Swan /N. 91st St

| DRAINAGE STRUCTURES | | | | | | | PVC PIPE, STORM SEWER | | | | | | REPAIR | REMARKS |
|---|---|---|---|---|---|---|---|---|---|---|---|---|---|---|
| TYPE OF STRUCTURE | STATION | CENTERLINE OFFSET | COVER ELEV. | NEW STRUCTURE | REPLACEMENT STRUCTURE | FRAME & LID | CONNECTION STRUCTURE | SIZE (IN) | LENGTH (FT) | INVERT ELEV. INLET | INVERT ELEV. OUTLET | PIPE SLOPE | VERTICAL INCHES | |
| | | | | | | | | | | | | | | Official Notice 67-1 |
| | | | | | | | | | | | | | | 28912 |
| Sto MH | 130+36 | 18' L | 123.25 | 5' Dia. MH | - | 58A | culverts 3@24" | - | - | 120.00 | - | - | - | See special provisions |
| Sto MH | 130+95 | 18' L | 121.95 | 4' Dia. MH | - | 58A | culverts 2@24" | - | - | 119.70 | - | - | - | See special provisions |
| | | | Structure | 4' Dia. MH | 5' Dia. MH | Frame & Lid 58A | Frame & Lid 57 | Check Dam | 45A | Abandon | Repair (in.) | | | |
| | | | Total | 1 | 1 | 2 | 0 | 2 | 0 | 0 | 0 | | | |

## OUTLET DETAIL

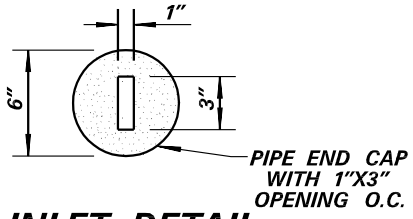


## INLET DETAIL

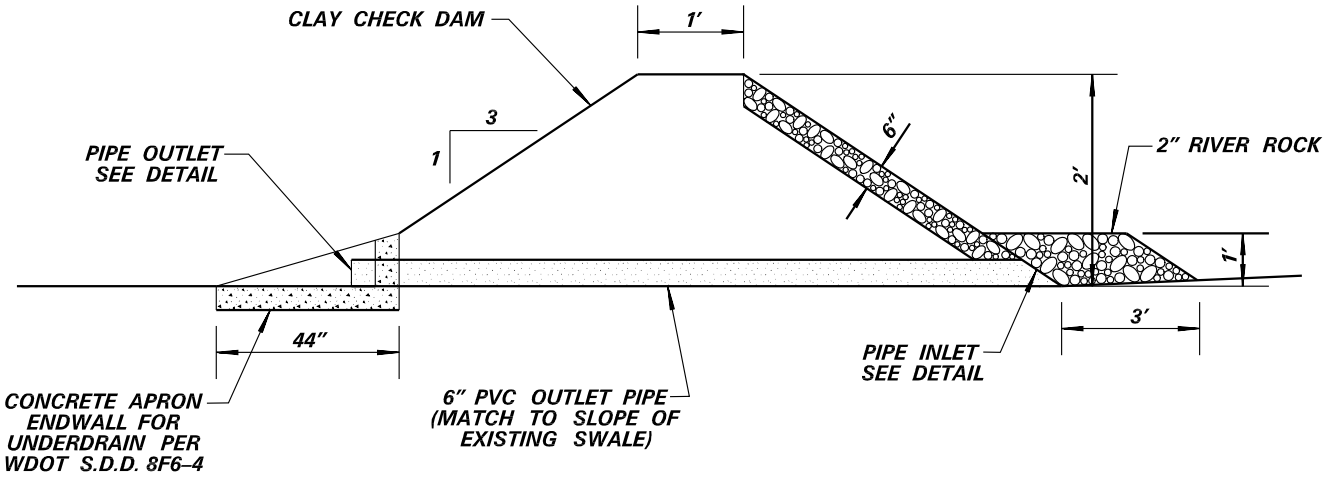


## CROSS SECTION

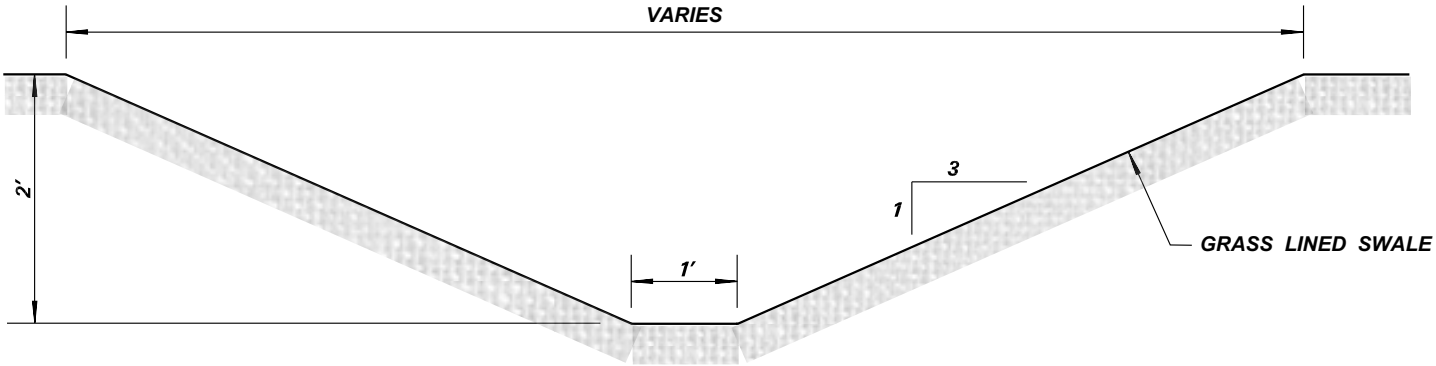


## PROFILE

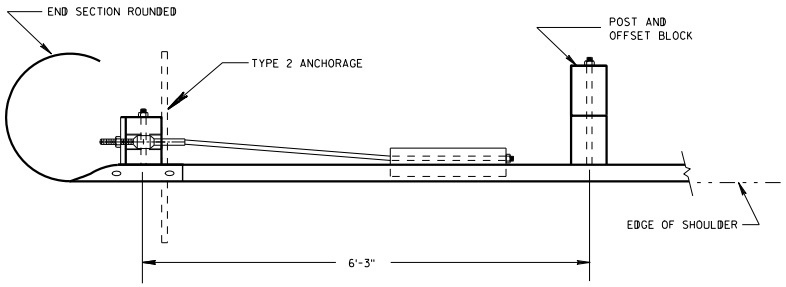


**PLAN VIEW**

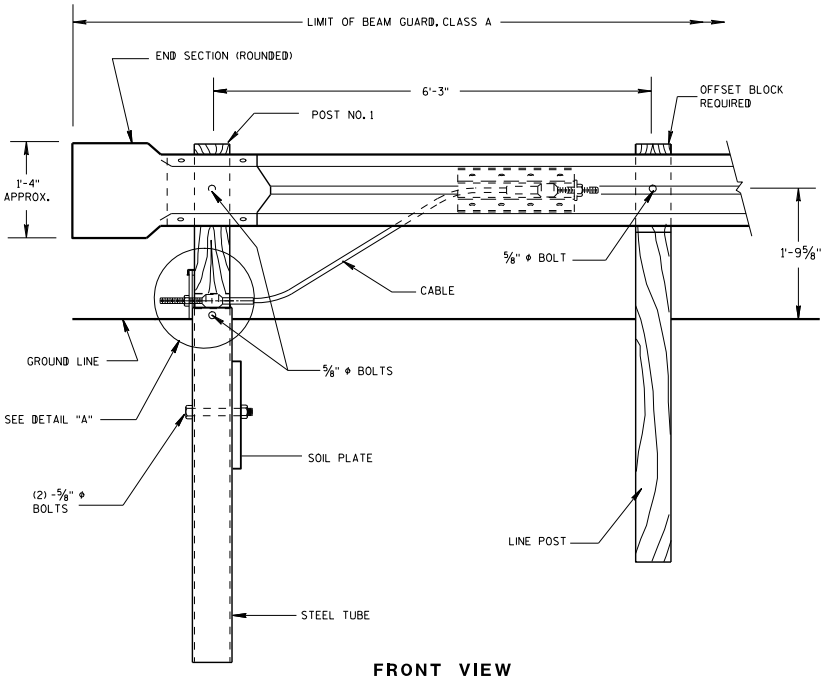


**FRONT VIEW**

## END TREATMENT WITH TYPE 2 ANCHORAGE

(USE ON ONE-WAY ROADWAYS ONLY - DEPARTING END)

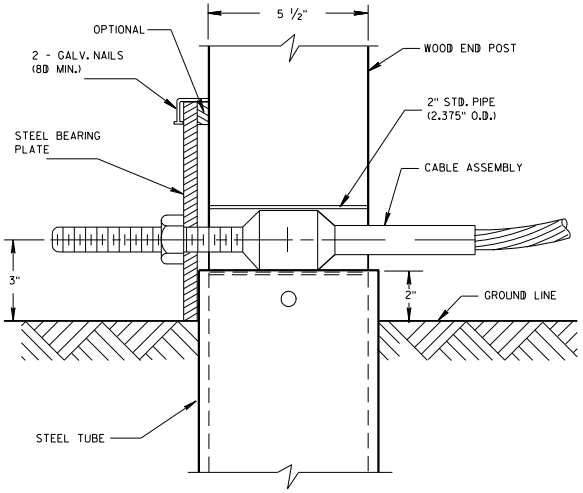


**DETAIL "A"**

POST NO. 1

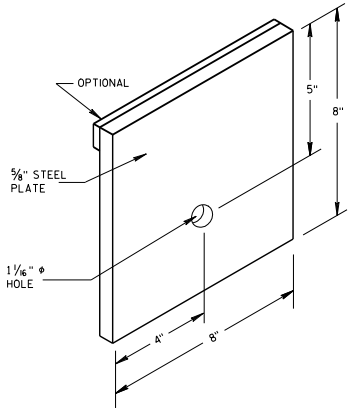


## STEEL BEARING PLATE

| ANCHORAGE FOR STEEL PLATE BEAM GUARD TYPE 2 |
|---|
| STATE OF WISCONSIN<br>DEPARTMENT OF TRANSPORTATION |

6

6

S.D.D. 14 B 16-4a

S.D.D. 14 B 16-4a

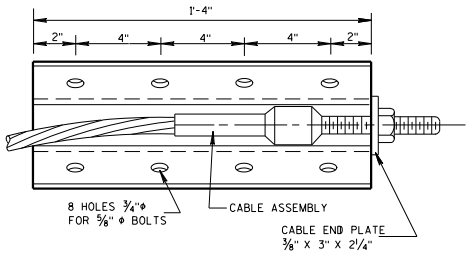


FRONT VIEW

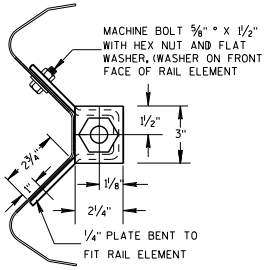


END VIEW

ANCHOR PLATE DETAIL

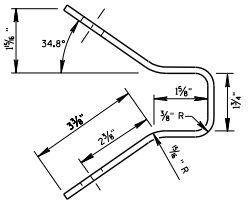


END VIEW OF BRACKET

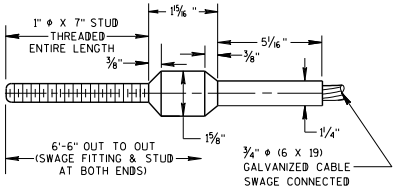


CABLE ASSEMBLY

CABLE, SWAGE FITTING, STUD AND NUT SHALL DEVELOP
A MINIMUM BREAKING STRENGTH OF 40,000 LB
(TIGHTEN UNTIL TAUT)

## GENERAL NOTES

DETAILS OF CONSTRUCTION, MATERIALS AND WORKMANSHIP NOT SHOWN ON THIS DRAWING SHALL CONFORM TO THE PERTINENT REQUIREMENTS OF THW STANDARD SPECIFICATIONS AND THE APPLICABLE SPECIAL PROVISIONS.

STRUCTURAL TUBING SHALL CONFORM TO THE REQUIREMENTS OF ASTM A-500 GRADE B OR ASTM A-501.

POST NO. 1 SHALL BE WOOD BREAKAWAY POST INSERTED AND BOLTED INTO STEEL TUBE.

TYPE 2 ANCHORAGE SHALL CONSIST OF A STEEL TUBE, SOIL PLATE WOOD BREAKAWAY POST, BEARING PLATE, ANCHOR PLATE, CABLE ASSEMBLY AND ALL ASSOCIATED HARDWARE. ALL STEEL PARTS SHALL BE GALVANIZED.

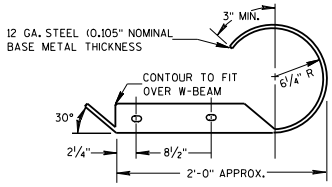


PLAN VIEW

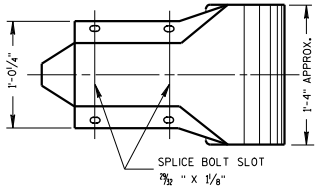


FRONT VIEW
W BEAM END SECTION ROUNDED

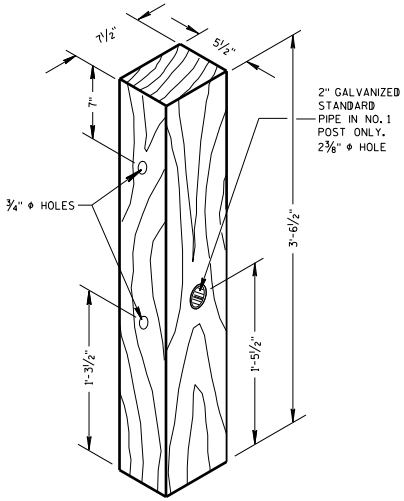


WOOD BREAKAWAY POST

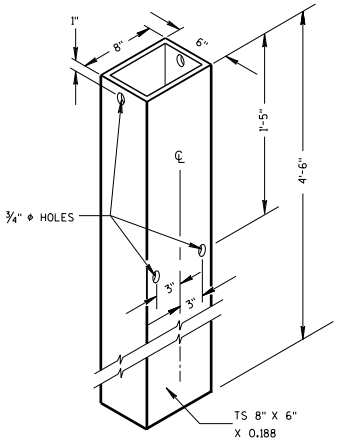


STEEL TUBE

STEEL TUBE SHALL CONFORM TO
REQUIREMENTS OF ASTM A500

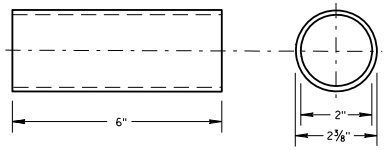


BREAKAWAY TERMINAL POST SLEEVE

GALVANIZED STANDARD STRENGTH STEEL PIPE, ASTM 53 GRADE "B"

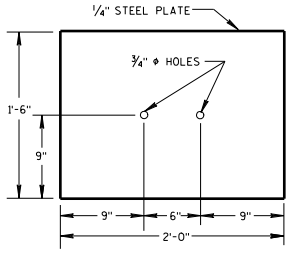


SOIL PLATE

| ANCHORAGE FOR STEEL PLATE BEAM GUARD TYPE 2 | |
|---|---|
| STATE OF WISCONSIN DEPARTMENT OF TRANSPORTATION | |
| APPROVED 8/21/2007 DATE | /S/ Jerry H. Zogg ROADWAY STANDARDS DEVELOPMENT ENGINEER |
| FHWA | |

6

6

S.D.D. 14 B 16-4b

S.D.D. 14 B 16-4b

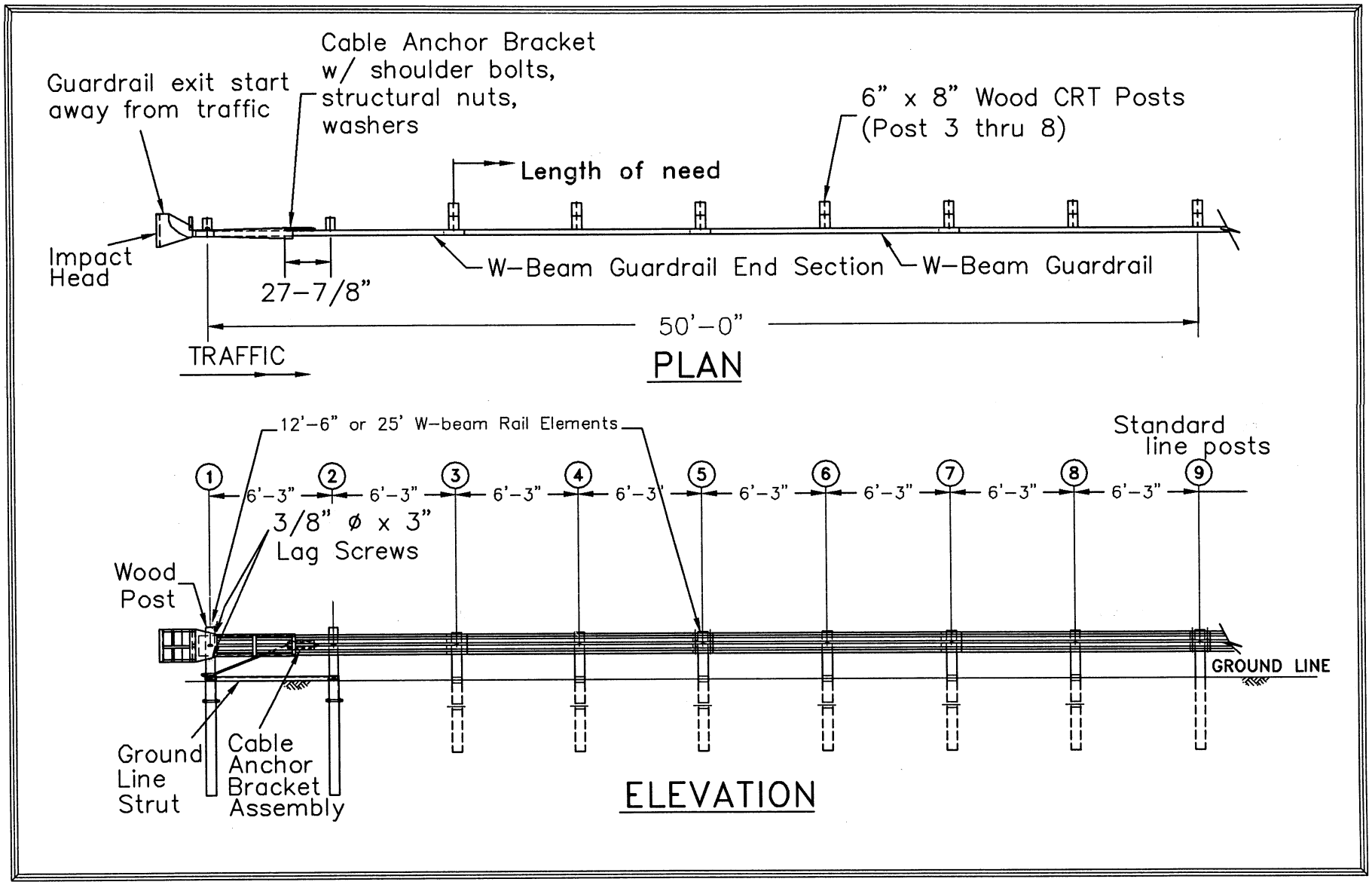


**Figure 2. Plan and Elevation Views of *SKT 350.***
**(<u>TWO</u> Foundation Tube Option)**

## GENERAL NOTES

DETAILS OF CONSTRUCTION, MATERIALS AND WORKMANSHIP NOT SHOWN ON THIS DRAWING SHALL CONFORM TO THE PERTINENT REQUIREMENTS OF THE STANDARD SPECIFICATIONS, AND THE APPLICABLE SPECIAL PROVISIONS.

(1) W6 X 9 OR W6 X 8.5 STEEL POSTS AND NOTCHED PLASTIC BLOCKOUTS ARE ACCEPTABLE ALTERNATIVES FOR 6" X 8" WOOD POSTS WITH WOOD OR PLASTIC BLOCKOUTS. USE APPROVED NOTCHED PLASTIC BLOCKOUTS WITH STEEL POSTS. APPROVED PLASTIC BLOCKOUT DESIGNS MAY VARY FROM THIS TYPICAL DETAIL WHEN USED IN CONJUNCTION WITH STEEL POSTS.

DO NOT MIX STEEL POSTS AND WOOD POSTS IN A SINGLE INSTALLATION.

(2) USE STRUCTURAL STEEL POSTS CONFORMING TO ASTM A 36. GALVANIZED POSTS ACCORDING TO AASHTO M 111. EITHER SET THE POSTS IN DRILLED HOLES OR DRIVE TO GRADE. REMOVE MUSHROOMING CAUSED BY DRIVING AND REPAIR DAMAGED SPELTER COATING ON GALVANIZED POSTS.

(3) INSTALL STEEL POSTS WITH HOLES ON APPROACHING TRAFFIC SIDE.

(4) USE EITHER WOOD OR APPROVED PLASTIC BLOCKOUTS ON WOOD POSTS.

(5) IF THE DISTANCE FROM BACK OF POST TO SHOULDER HINGE POINT IS LESS THAN 2 FEET INSTALL LONGER POST AT HALF POST SPACING, W BEAM (LHW).

(6) IF ROCK IS ENCOUNTERED DURING EXCAVATION, THE ENGINEER MAY APPROVE USING A 12 INCH DIAMETER POST HOLE EXTENDING 20 INCHES DEEP INTO THE ROCK. PLACE GRANULAR MATERIAL IN THE BOTTOM OF THE HOLE APPROXIMATELY 2½ INCHES DEEP. CUT THE POSTS TO LENGTH AND PLACE IN YHE HOLE. BACKFILL WITH MATERIAL EXCAVATED FROM THE HOLE AND COMPACT ADEQUATEY.

(7) WHEN USING STEEL POSTS AND WOOD BLOCKOUTS INSTALL FOUR 16D GALVANIZED NAILS. INSTALL NAILS AT THE BACK CORNERS OF THE BLOCK AND BEND THE NAILS OVER THE FLANGE OF THE STEEL POST.

INSTALL BEAM GUARD SECTIONS AND ALL NECESSARY HARDWARE ACCORDING TO THE APPLICABLE PLAN AND CURRENT STANDARD AND SUPPLEMENTAL SPECIFICATIONS.

ALL DIMENSIONS ARE SUBJECT TO MANUFACTURER'S TOLERANCES EXCEPT WHERE ALLOWABLE TOLERANCES ARE SHOWN.

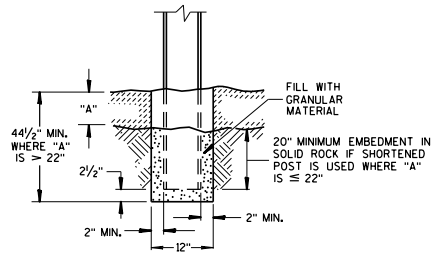


END VIEW
SETTING STEEL OR WOOD POST IN ROCK (6)

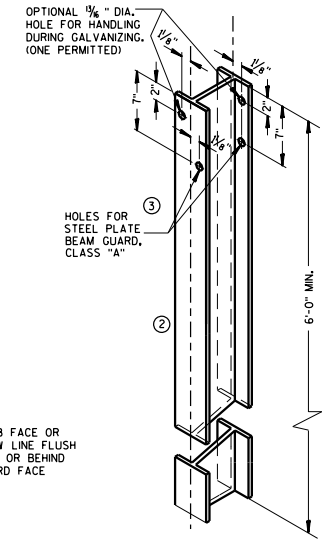


STEEL POST &
HOLE PUNCHING DETAIL
(W6 X 9) (1)

ALL HOLES 13/16" DIAMETER EXCEPT AS NOTED

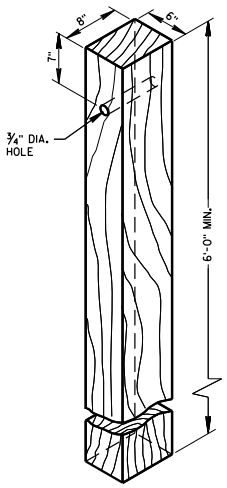


WOOD POST
(6"X8") NOMINAL

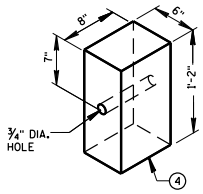


WOOD OR PLASTIC
BLOCKOUT FOR
WOOD POSTS

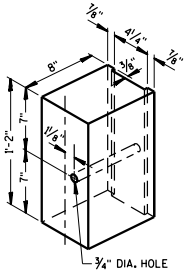


TYPICAL NOTCHED (1)
PLASTIC BLOCKOUT
FOR STEEL POSTS

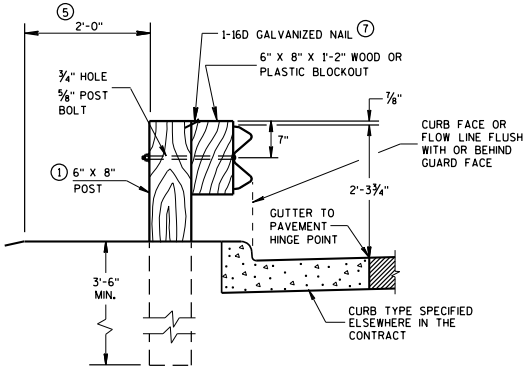


END VIEW
LOCATED ALONG A CURBED ROADWAY

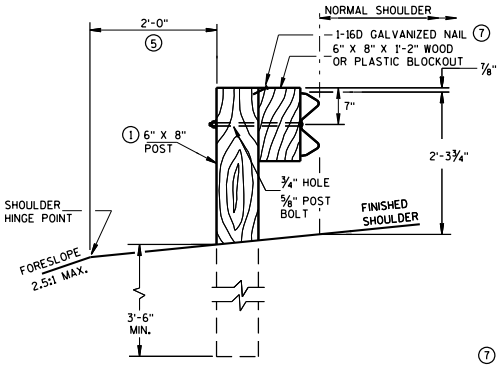


END VIEW
LOCATED ALONG A ROADWAY SHOULDER
STANDARD INSTALLATION

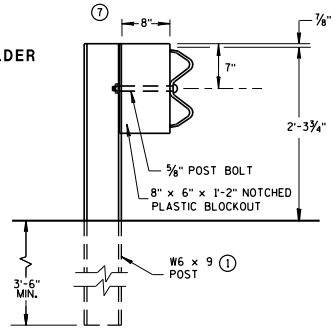


END VIEW
STEEL POST & NOTCHED
PLASTIC BLOCKOUT ALTERNATIVE
STANDARD INSTALLATION

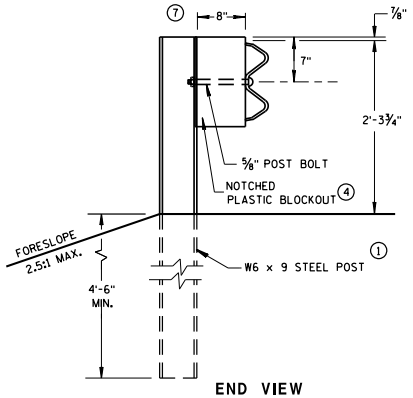


END VIEW
LONGER POST AT HALF
POST SPACING W BEAM
(LHW)

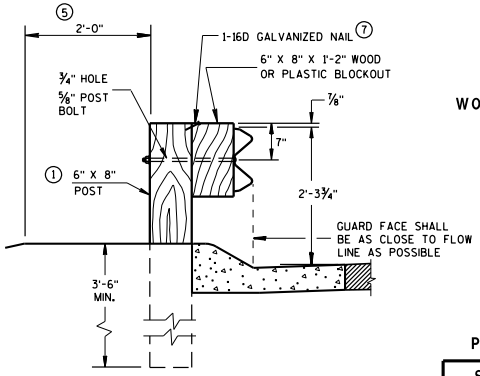


END VIEW
LOCATED ALONG A
MOUNTABLE CURBED ROADWAY

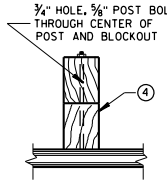


PLAN VIEW
WOOD POST, BLOCKOUT & BEAM

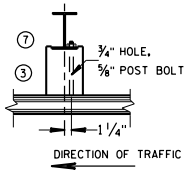


PLAN VIEW
STEEL POST, NOTCHED
PLASTIC BLOCKOUT & BEAM

TYPICAL INSTALLATION OF STEEL PLATE BEAM GUARD

STEEL PLATE BEAM GUARD, CLASS "A"
INSTALLATION & ELEMENTS

STATE OF WISCONSIN
DEPARTMENT OF TRANSPORTATION

6

6

S.D.D. 14 B 15-8a

S.D.D. 14 B 15-8a

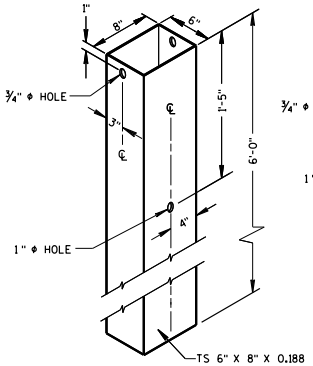


② 72" STEEL TUBE
(POSTS NO. 1-4

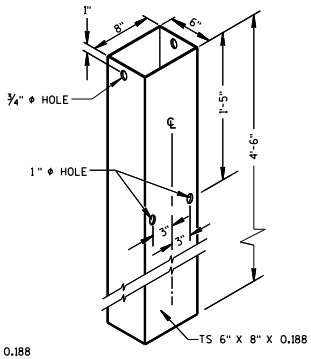


② 54" STEEL TUBE
(POSTS NO. 1-4

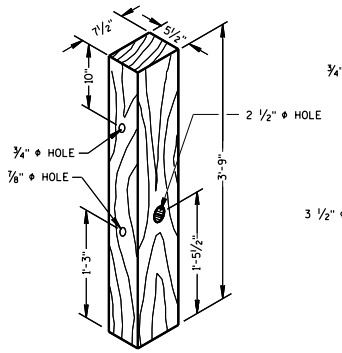


① TERMINAL POST
(POSTS NO. 1-4

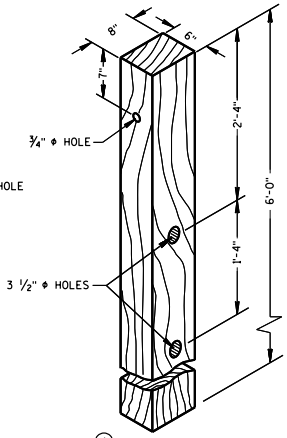


④ CRT POST
(POSTS NO'S 5-8

WOOD BREAKAWAY POSTS

## GENERAL NOTES

WHEN ROCK IS ENCOUNTERED DURING EXCAVATION, A 12 INCH DIA. POST HOLE EXTENDING 20 INCHES DEEP INTO THE ROCK MAY BE USED IF APPROVED BY THE ENGINEER. GRANULAR MATERIAL SHALL BE PLACED IN THE BOTTOM OF THE HOLE APPROXIMATELY 2 1/2" INCHES DEEP TO PROVIDE DRAINAGE. THE SOIL TUBES SHALL BE FIELD CUT TO LENGTH, PLACED IN THE HOLE AND BACKFILLED WITH ADEQUATELY COMPACTED MATERIAL EXCAVATED FROM THE HOLE.

SEE APPROVED PRODUCTS LIST FOR ACCEPTABLE E. A. T. MARKER POST.

Ⓖ 1/2" DIA. X 3" LAG BOLT WITH WASHER.

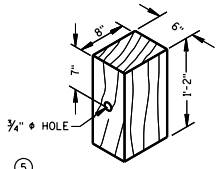


⑤ WOOD OFFSET BLOCK
REQ'D. AT ALL POSTS EXCEPT POST NO'S 1 & 2

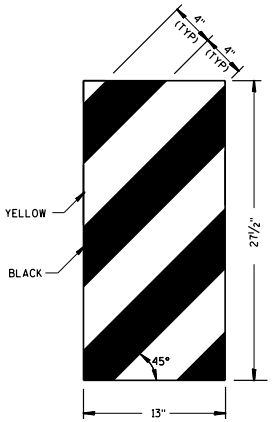


ET-2000 PLUS ONLY

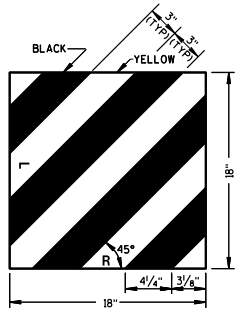


ET-2000 AND SKT-350

⑭ REFLECTIVE SHEETING DETAILS

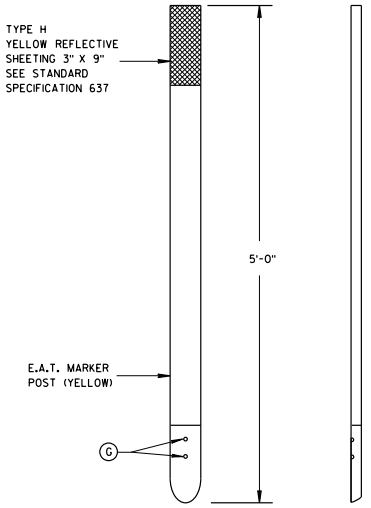


FRONT VIEW SIDE VIEW

⑮ E.A.T. MARKER POST

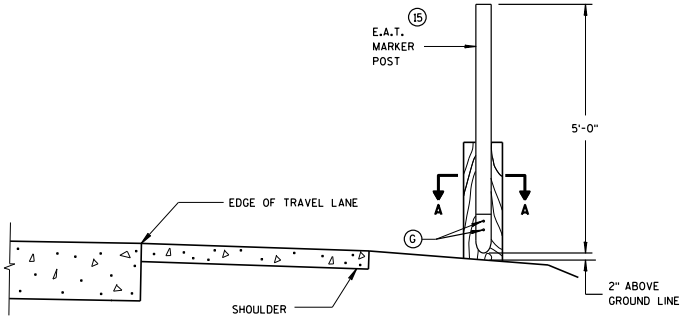


TYPICAL INSTALLATION OF E.A.T.
MARKER POST BACKSIDE OF POST NO. 1
(E.A.T. AND RAIL REMOVED FOR CLARITY)

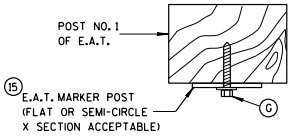


SECTION A-A

STEEL PLATE BEAM GUARD
ENERGY ABSORBING TERMINAL

STATE OF WISCONSIN
DEPARTMENT OF TRANSPORTATION

APPROVED
June 2014 — DATE
/S/ Jerry H. Zogg — ROADWAY STANDARDS DEVELOPMENT ENGINEER
FHWA

6

6

S.D.D. 14 B 24-8c

S.D.D. 14 B 24-8c

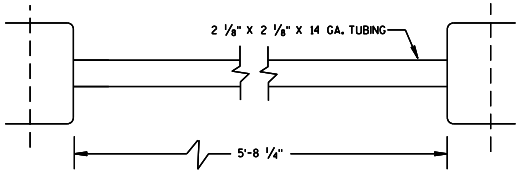


⑩ STRUT DETAIL (SKT-350)

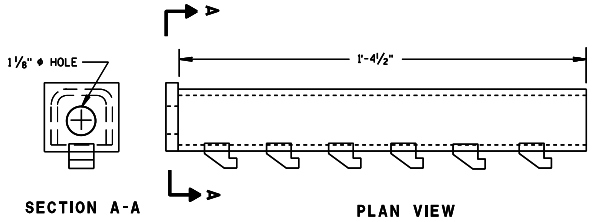


⑨ CABLE ANCHOR BOX (ET-2000/ET-2000 PLUS)

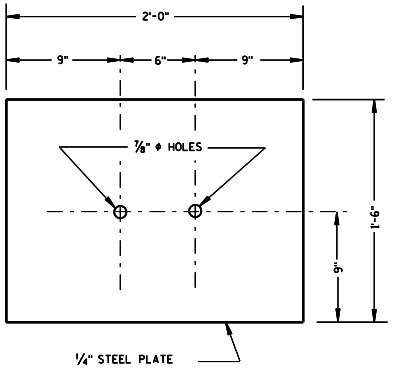


③ SOIL PLATE

(SKT-350, ET-2000/ET-2000 PLUS)

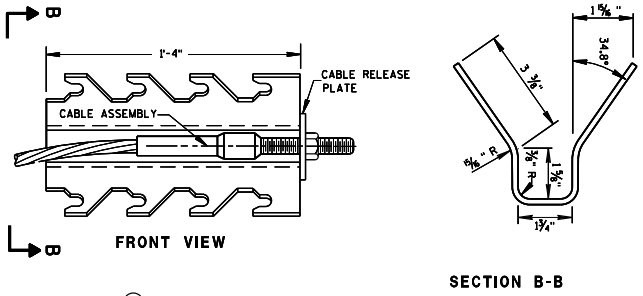


⑨ CABLE ANCHOR BOX (SKT-350)

(SKT-350)

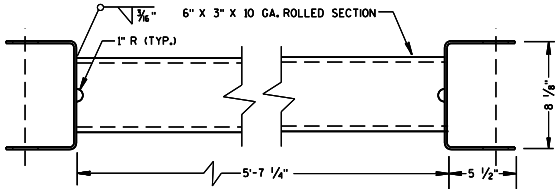


⑩ STRUT DETAIL (ET-2000/ET-2000 PLUS)

(ET-2000/ET-2000 PLUS)

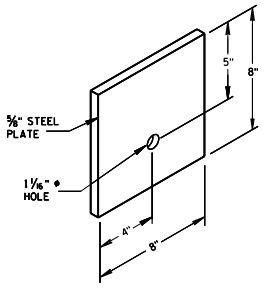


⑦ STEEL BEARING PLATE

(SKT-350, ET-2000/ET-2000 PLUS)

STEEL PLATE BEAM GUARD
ENERGY ABSORBING TERMINAL

STATE OF WISCONSIN
DEPARTMENT OF TRANSPORTATION


6
S.D.D. 14 B 24-8b

**DEPARTMENT OF THE ARMY**
**ST. PAUL DISTRICT, CORPS OF ENGINEERS**
**180 FIFTH STREET EAST, SUITE 700**
**ST. PAUL MN 55101-1678**

REPLY TO
ATTENTION OF

March 25, 2015

Operations
Regulatory (2011-03071-ADJ)

City of Mequon
Attn: Nathan Check
11333 North Cedarburg Rd.
Mequon, Wisconsin 53092

Dear Mr. Check:

We have reviewed the permit application submitted by the City of Mequon for the permanent discharge of dredged or fill material into 0.45 acre of wetland (0.03 acre of wet meadow wetland, 0.28 acre of shallow marsh, and 0.14 acre of floodplain forest) and temporary impacts within 0.13 acre (1,100 linear feet) of an unnamed tributary during reconstruction on 1.5 miles of County Line Road, from N. 91st Street (Swan Boulevard) to N. 68th Street in the Cities of Mequon and Milwaukee. The project site is located in Sections 33 and 34, T. 9N., R. 21E., Milwaukee and Ozaukee County, Wisconsin.

This work is authorized **PROVIDED YOU OBTAIN CONFIRMATION THAT SECTION 401 WATER QUALITY CERTIFICATION HAS BEEN GRANTED OR WAIVED FOR THE PROJECT** from the Wisconsin Department of Natural Resources. This authorization is issued under the provisions of LOP-06-WI. Water quality certification conditions (including applicable wetland permit conditions) are enforceable conditions of this authorization.

The authorized work is shown on the enclosed drawings labeled 2011-03071-ADJ, Pages 1 of 11 through Page 11 of 11 and are hereby incorporated as part of this **Letter of Permission**.

The following special condition is part of this authorization:

1. To offset the unavoidable loss of 0.03 acre of wet meadow, 0.28 acre of shallow marsh, 0.14 acre of floodplain forest wetland, and for unavoidable impacts to 0.13 acre (1,100 linear feet) of an unnamed tributary, the permittee shall purchase 0.34 shrub scrub wetland credit and 0.56 wet meadow wetland credit from the Lake Superior Wetland Mitigation Bank, Site 1 in Douglas County, Wisconsin. The Corps has received the Affidavit of Bank Credit Purchase documenting that the required credit transaction has occurred.

If your project will require off-site fill material that is **not** obtained from a licensed commercial facility, you must notify us at least five working days before start of work. A cultural resources survey may be required if a licensed commercial facility is not used.

This action is based upon the recommendation of the Chief of Engineers and under the provisions of Section 404 of the Clean Water Act (33 U.S.C. 1344). The authorization is subject to the enclosed General and Standard Conditions. The time limit for completing this authorized work ends three years from the date of this letter. This Federal authorization does not obviate the need to obtain other Federal, state or local authorizations required by law.

This letter contains an initial proffered permit for your project. Also enclosed is a Notification of Administrative Appeal Options and Process (NAP) fact sheet and Request for Appeal (RFA) form for information regarding your right to object to these determinations.

If you object to the terms and/or conditions of this initial proffered permit, please see Section I-A. You must complete Section II of the RFA and submit it to the **District Engineer** in accordance with 33 C.F.R. Part 331. Your objections to the initial proffered permit must be received by the **St. Paul District Office** within 60 days of the date of the NAP or you will forfeit your right to appeal the permit.

Before accepting the RFA, the Corps must determine that it is complete, that it meets the criteria for appeal under 33 C.F.R. § 331.5, and that it has been received by the District or Division Office within 60 days of the date of the NAP. It is not necessary to submit an RFA form to the Corps District or Division Office if you do not object to the initial proffered permit enclosed with this letter.

A signed preliminary jurisdictional determination for the site of your project was received on June 22, 2012. The preliminary JD prepared for the site described above is not appealable. If you wish to receive an approved jurisdictional determination, please see Section I-E.

If you have any other questions concerning your application for a DA permit, please contact Anthony Jernigan in our Waukesha office at (651) 290-5729. In any correspondence or inquiries, please refer to the Regulatory number shown above.

Sincerely,

Todd Vesper

Daniel C. Koprowski
for Colonel, Corps of Engineers
District Engineer

Enclosures

Copy furnished to (email):
Carol McCoy, Stantec
Kristina Betzold, WDNR

**State of Wisconsin**
DEPARTMENT OF NATURAL RESOURCES
Southeast Region Headquarters
2300 N. Dr. Martin Luther King, Jr. Drive
Milwaukee, WI 53212-3128

Scott Walker, Governor
Cathy Stepp, Secretary
Telephone 608-266-2621
Toll Free 1-888-936-7463
TTY Access via relay - 711

February 2, 2015 IP-SE-2014-46-T03850

City of Mequon
Aaron Jahncke
11333 N. Cedarburg Road
Mequon, WI 53092

Dear Mr. Jahncke:

The Department of Natural Resources has completed its review of your application for a permit to discharge dredged or fill material into wetlands adjacent to the Little Menomonee River, and the Milwaukee River in the City of Mequon, Ozaukee County. You will be pleased to know your application is approved with a few limitations.

I am attaching a copy of your permit, which lists the conditions that must be followed. A copy of the permit must be posted for reference at the project site. Please read your permit conditions carefully so that you are fully aware of what is expected of you.

Please note you are required to submit photographs of the completed project within 7 days after you've finished construction. This helps both of us to document the completion of the project and compliance with the permit conditions.

Your next step will be to notify me of the date on which you plan to start construction and again after your project is complete.

If you have any questions about your permit, please call me at (414) 263-8517 or email Kristina.Betzold@wisconsin.gov.

Sincerely,

Kristina Betzold

Kristina Betzold
Environmental Analysis and Review Specialist
cc: Anthony Jernigan, Project Manager, U.S. Army Corps of Engineers
Carol McCoy, Stantec

***Quality Customer Service is Important to Us. Tell Us How We Are Doing.***
**Water Division Customer Service Survey**
https://www.surveymonkey.com/s/WDNRWater

**STATE OF WISCONSIN**
**DEPARTMENT OF NATURAL RESOURCES**

**Wetland Individual Permit PERMIT**
**IP-SE-2014-46-T03850**

Aaron Jahncke is hereby granted under Section 281.36, 401 CWA, Wisconsin Statutes, a permit to discharge dredged or fill material into wetlands adjacent to the Milwaukee River and the Little Menomonee River, in the City of Mequon, Ozaukee County, also described as Section 33, Township 9 North, Range 21 East, subject to the following conditions:

PERMIT

1. You must notify Kristina Betzold at phone (414) 263-8517 or email Kristina.Betzold@wisconsin.gov before starting construction and again not more than 5 days after the project is complete.

2. You must complete the project as described on or before February 2, 2019. If you will not complete the project by this date, you must submit a written request for an extension prior to expiration of the initial time limit specified in the permit. Your request must identify the requested extension date. The Department shall extend the time limit for an individual permit or contract for no longer than an additional 5 years if you request the extension before the initial time limit expires. You may not begin or continue construction after the original permit expiration date unless the Department extends the permit in writing or grants a new permit.

3. This permit does not authorize any work other than what you specifically describe in your application and plans, and as modified by the conditions of this permit. If you wish to alter the project or permit conditions, you must first obtain written approval of the Department.

4. Before you start your project, you must first obtain any permit or approval that may be required for your project by local zoning ordinances and by the U.S. Army Corps of Engineers. You are responsible for contacting these local and federal authorities to determine if they require permits or approvals for your project. These local and federal authorities are responsible for determining if your project complies with their requirements.

5. Upon reasonable notice, you shall allow access to your project site during reasonable hours to any Department employee who is investigating the project's construction, operation, maintenance or permit compliance.

6. The Department may modify or revoke this permit for good cause, including if the project is not completed according to the terms of the permit or if the Department determines the activity is detrimental to the public interest.

7. You must post a copy of this permit at a conspicuous location on the project site, visible from the waterway, for at least five days prior to construction, and remaining

at least five days after construction. You must also have a copy of the permit and approved plan available at the project site at all times until the project is complete.

8. Your acceptance of this permit and efforts to begin work on this project signify that you have read, understood and agreed to follow all conditions of this permit.

9. You must submit a series of photographs to the Department, within one week of completing work on the site. The photographs must be taken from different vantage points and depict all work authorized by this permit.

10. You, your agent, and any involved contractors or consultants may be considered a party to the violation pursuant to Section 30.292, Wis. Stats., for any violations of Chapter 30, Wisconsin Statutes, or this permit.

11. Construction shall be accomplished in such a manner as to minimize erosion and siltation into surface waters. Erosion control measures (such as silt fence and straw bales) must meet or exceed the technical standards of ch. NR 151, Wis. Adm. Code. The technical standards are found at: http://dnr.wi.gov/topic/stormwater/standards/const_standards.html .

12. All equipment used for the project including but not limited to tracked vehicles, barges, boats, hoses, sheet pile and pumps shall be de-contaminated for invasive and exotic viruses and species prior to use and after use.

    The following steps must be taken *every time* you move your equipment to avoid transporting invasive and exotic viruses and species. To the extent practicable, equipment and gear used on infested waters shall not be used on other non-infested waters.

    1. **Inspect and remove** aquatic plants, animals, and mud from your equipment.

    2. **Drain all water** from your equipment that comes in contact with infested waters, including but not limited to tracked vehicles, barges, boats, hoses, sheet pile and pumps.

    3. **Dispose** of aquatic plants, animals in the trash. Never release or transfer aquatic plants, animals or water from one waterbody to another.

    4. **Wash your equipment** with hot (>140° F) and/or high pressure water,

       - OR -

       Allow your equipment to **dry thoroughly for 5 days**.

## Wetland

1. Final site stabilization requires the re-establishment of native vegetation and must not contain any exotic species.

2. No other portion of the wetland may be disturbed beyond the area designated in the plans dated.

3. The wetland must be restored to its original topographic elevations. No mounding or excess fill is allowed unless specified in this permit.

4. You are not allowed to temporarily or permanently stockpile excavated or fill material in the wetland.

5. You must use tracking mats that are completely removed when construction is finished.

FINDINGS OF FACT

Aaron Jahncke has filed an application for a permit to discharge dredged or fill material into Little Menomonee River and the Milwaukee River , in the City of Mequon, Ozaukee County, also described as S33, T9N, R21E for the purpose of the reconstruction of County Line Road, Phase 3 - 91st Street (Swan Blvd.) to 68th Street.

The Department has completed an investigation of the project site and has evaluated the project as described in the application and plans and has made the following determinations:

1. The Little Menomonee River is a navigable water (and no bulkhead exists at the project site.) The Milwaukee River is a navigable water (and no bulkhead exists at the project site.)

2. The proposed project, if constructed in accordance with this permit will not adversely affect water quality, will not increase water pollution in surface waters and will not cause environmental pollution as defined in s. 283.01(6m), Wis. Stats.

3. The proposed project will impact wetlands if constructed in accordance with this permit.

4. The Department of Natural Resources has determined that the agency's review of the proposed project constitutes an equivalent analysis action under s. NR 150.20(2), Wis. Adm. Code. The Department has considered the impacts on the human environment, alternatives to the proposed projects and has provided opportunities for public disclosure and comment. The Department has completed all procedural requirements of s. 1.11(2)(c), Wis. Stats., and NR 150, Wis. Adm. Code for this project.

5. The Department of Natural Resources and the applicant have completed all procedural requirements and the project as permitted will comply with all applicable requirements of Sections 281.36, 401 CWA, Wisconsin Statutes and Chapters NR 102, 103, of the Wisconsin Administrative Code.

6. Connected Enlargement: The proposal complies with all of the laws relating to platting of land and sanitation.

7. Dredging/Ponds/Enlargements: No material injury will result to the riparian rights of any riparian owners of real property that abuts any water body that is affected by the activity.

## CONCLUSIONS OF LAW

1. The Department has authority under the above indicated Statutes and Administrative Codes, to issue a permit for the construction and maintenance of this project.

## NOTICE OF APPEAL RIGHTS

If you believe that you have a right to challenge this decision, you should know that the Wisconsin statutes and administrative rules establish time periods within which requests to review Department decisions shall be filed. For judicial review of a decision pursuant to sections 227.52 and 227.53, Wis. Stats., you have 30 days after the decision is mailed, or otherwise served by the Department, to file your petition with the appropriate circuit court and serve the petition on the Department. Such a petition for judicial review shall name the Department of Natural Resources as the respondent.

To request a contested case hearing of any individual permit decision pursuant to section 30.209, Wis. Stats., you have 30 days after the decision is mailed, or otherwise served by the Department, to serve a petition for hearing on the Secretary of the Department of Natural Resources, P.O. Box 7921, Madison, WI, 53707-7921. The petition shall be in writing, shall be dated and signed by the petitioner, and shall include as an attachment a copy of the decision for which administrative review is sought. If you are not the applicant, you must simultaneously provide a copy of the petition to the applicant. If you wish to request a stay of the project, you must provide information, as outlined below, to show that a stay is necessary to prevent significant adverse impacts or irreversible harm to the environment. If you are not the permit applicant, you must provide a copy of the petition to the permit applicant at the same time that you serve the petition on the Department.

**The filing of a request for a contested case hearing is not a prerequisite for judicial review and does not extend the 30 day period for filing a petition for judicial review.**

A request for contested case hearing must meet the requirements of section 30.209, Wis. Stats., and sections NR 2.03, 2.05, and 310.18, Wis. Admin. Code, and if the petitioner is not the applicant the petition must include the following information:

1. A description of the objection that is sufficiently specific to allow the department to determine which provisions of this section may be violated if the proposed permit or contract is allowed to proceed.
2. A description of the facts supporting the petition that is sufficiently specific to determine how the petitioner believes the project, as proposed, may result in a violation of Chapter 30, Wis. Stats;.
3. A commitment by the petitioner to appear at the administrative hearing and present information supporting the petitioner's objection.

If the petition contains a request for a stay of the project, the petition must also include information showing that a stay is necessary to prevent significant adverse impacts or irreversible harm to the environment.

Dated at Southeast Region Headquarters, Wisconsin on February 2, 2015.

STATE OF WISCONSIN DEPARTMENT OF NATURAL RESOURCES
For the Secretary

By Kristina Betzold

Kristina Betzold
Water Management Specialist

***Example Post Contract Award Letter – Resurfacing***

***[Fill in Contact Information]***
***Contractor***
***Name***
***Phone Number***
***Address***

**City of Milwaukee**
**Street Resurfacing Project**
***[Fill in Project Information]***
***Project Locations***

The City of Milwaukee has recently awarded our firm a paving contract which includes the above projects. The City will provide you with another notice prior to work starting on your block.

This work will include resurfacing the roadway with a layer of asphalt. In preparation for the new asphalt surface, there may be removal and replacement of defective curb and gutter, sidewalk and driveway approaches, as well as adjustments and repairs to manholes and storm water inlets.

You will experience some disruption of your daily traffic patterns due to the project, but we will do our best to minimize them. Access to driveways may be interrupted due to the replacement of the concrete driveway approaches or sidewalks. We expect there to be no closures of the street, however there will be special parking restrictions.

The work being performed is to be funded by both the City of Milwaukee general fund and by special assessments. Property owners will have received separate notice of proposed special assessments.

BLANK

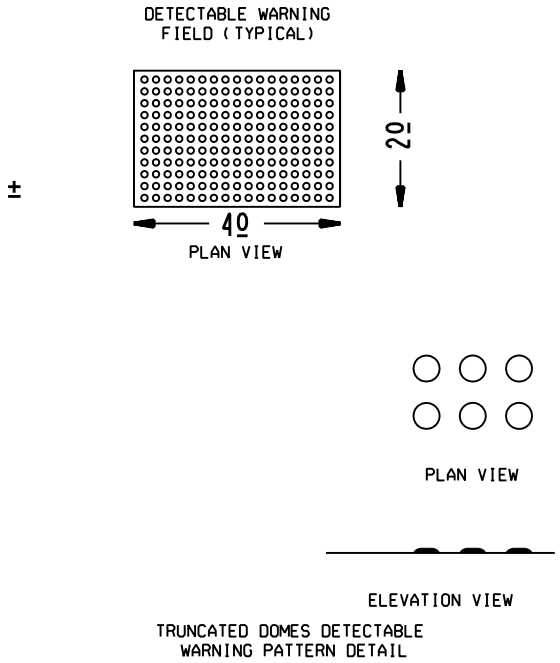


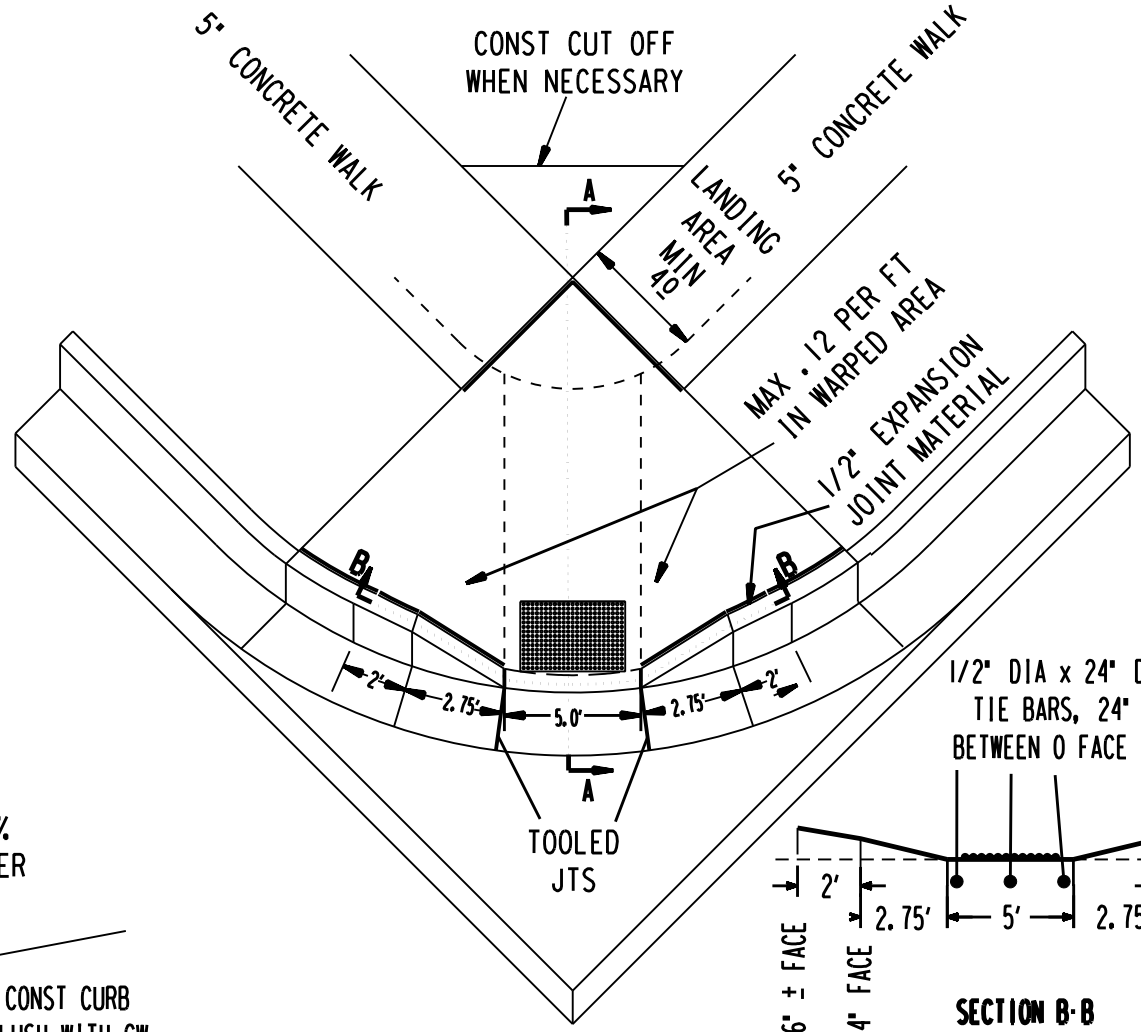


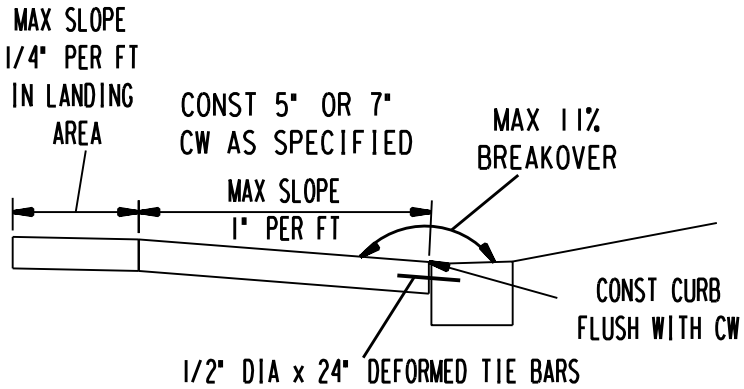


**SECTION A-A**

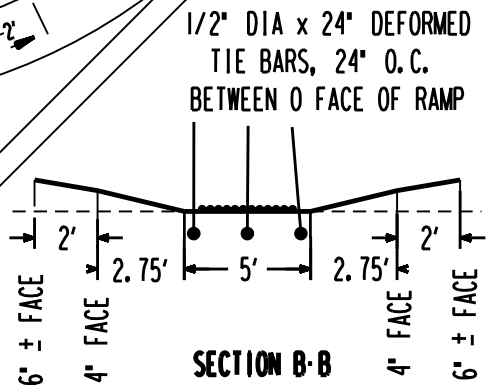


**SECTION B-B**

## CURB AND SIDEWALK RAMP TYPE I

## FIGURE - 16 A

| CONSTRUCTION SECTION<br>DEPARTMENT OF PUBLIC WORKS<br>MILWAUKEE, WISCONSIN | |
|---|---|
| Thomas Rach<br>APPROVED BY | SUSAN CULL<br>DRAWN BY |
| Dale Myjak<br>APPROVED BY | SCOTT STEIN<br>CHECKED BY |
| APPROVED CITY ENGINEER | JANUARY 10, 2007<br>DATE |

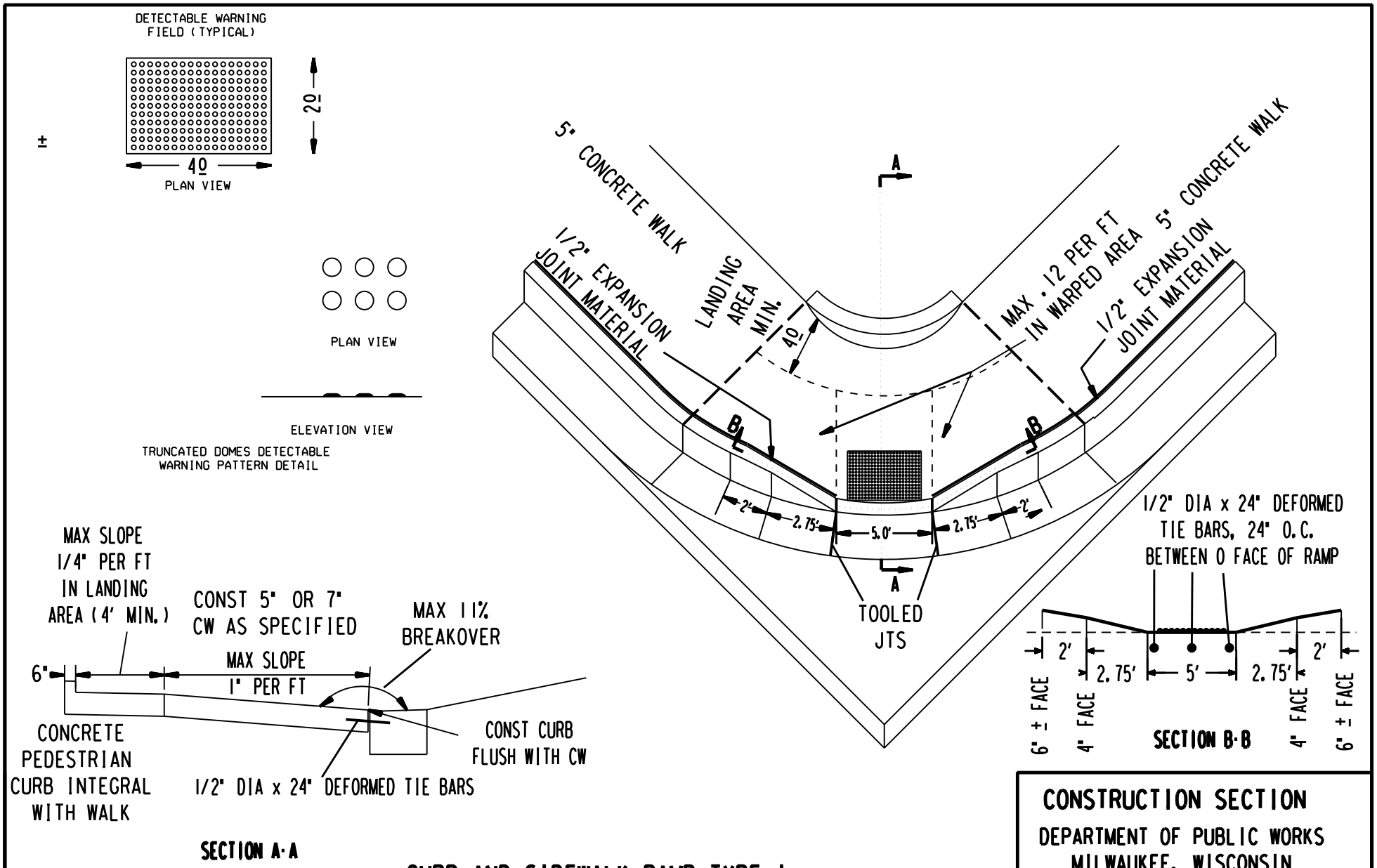


# CURB AND SIDEWALK RAMP TYPE I WITH PEDESTRIAN CURB

## FIGURE - 16B

**CONSTRUCTION SECTION**

**DEPARTMENT OF PUBLIC WORKS**
**MILWAUKEE, WISCONSIN**

| | |
|---|---|
| Thomas Rach APPROVED BY | SUSAN CULL DRAWN BY |
| Dale Myjak APPROVED BY | SCOTT STEIN CHECKED BY |
| APPROVED CITY ENGINEER | JANUARY 10, 2007 DATE |

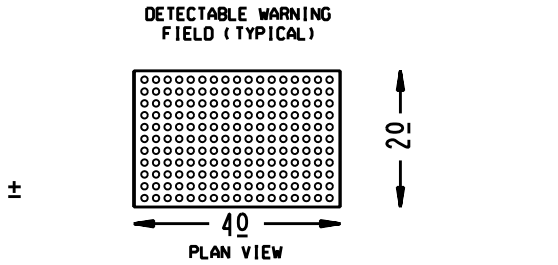


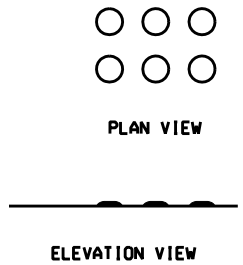


TRUNCATED DOMES DETECTABLE WARNING PATTERN DETAIL

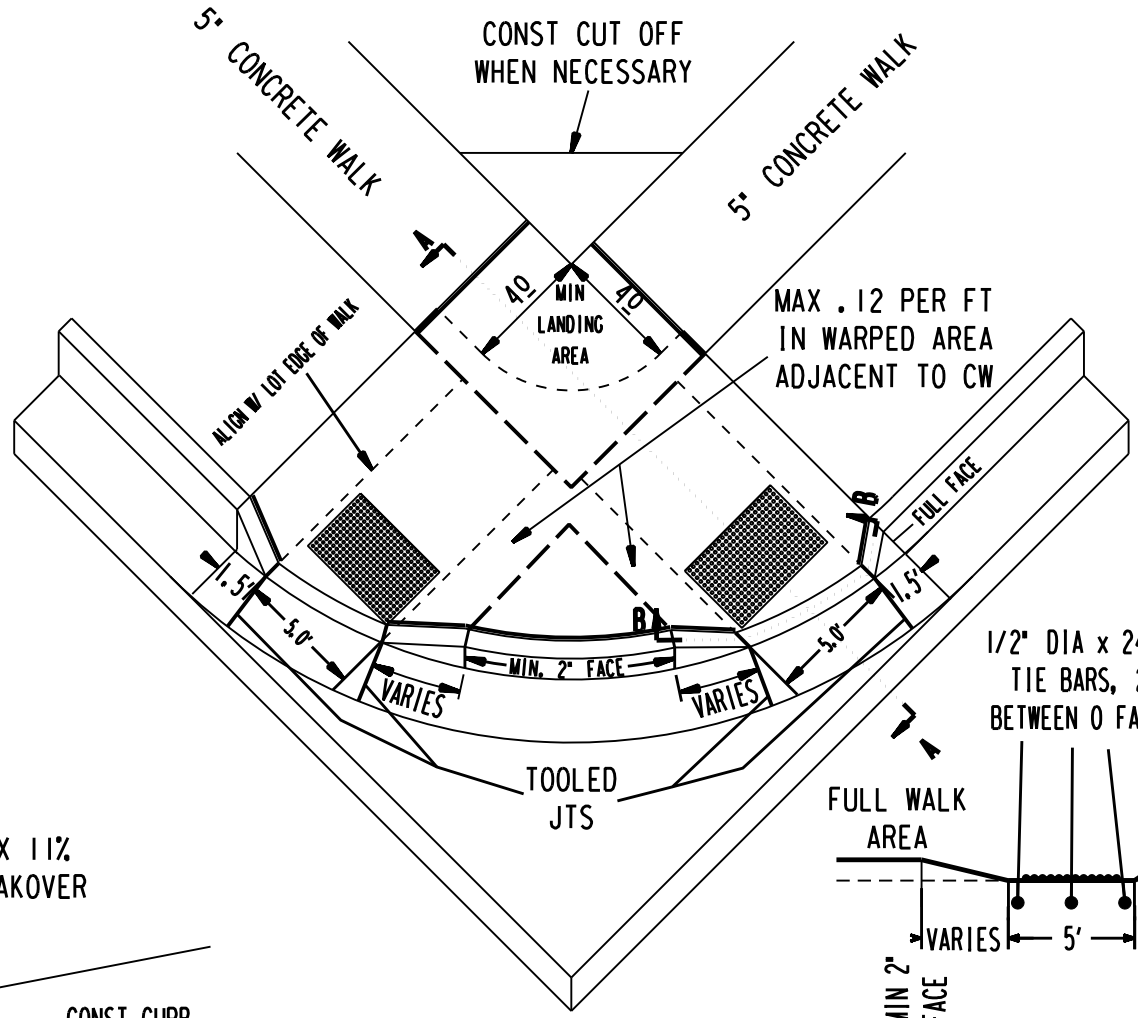


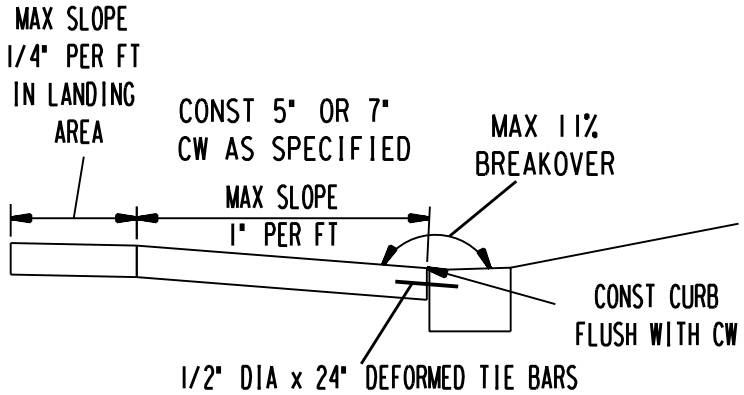


SECTION A-A

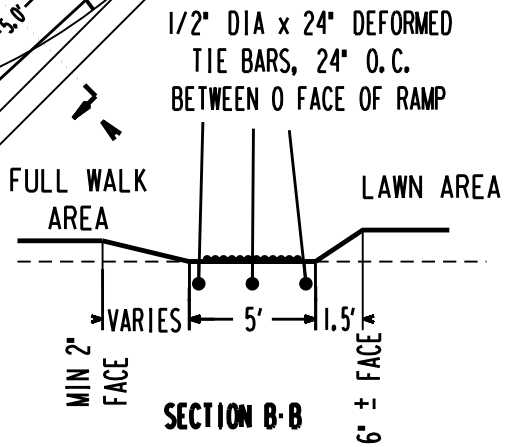


SECTION B-B

# CURB AND SIDEWALK RAMP TYPE II

## FIGURE - 17 A

| CONSTRUCTION SECTION<br>DEPARTMENT OF PUBLIC WORKS<br>MILWAUKEE, WISCONSIN | |
|---|---|
| Thomas Rach<br>APPROVED BY | SUSAN CULL<br>DRAWN BY |
| Dale Myjak<br>APPROVED BY | SCOTT STEIN<br>CHECKED BY |
| APPROVED CITY ENGINEER | JANUARY 10, 2007<br>DATE |

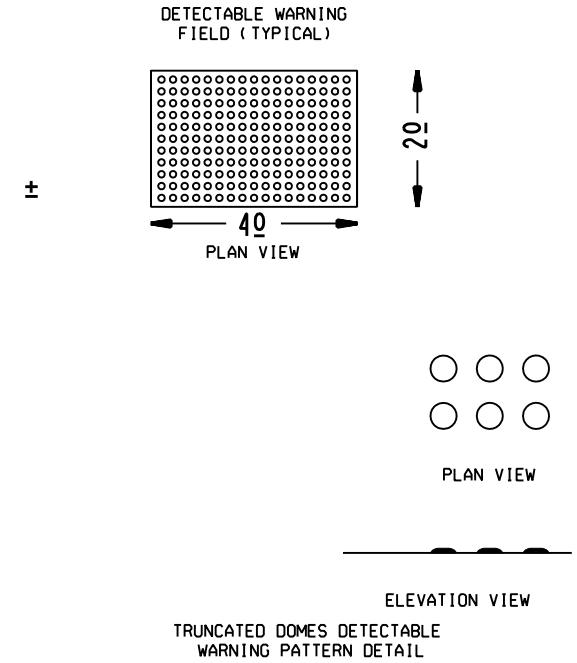


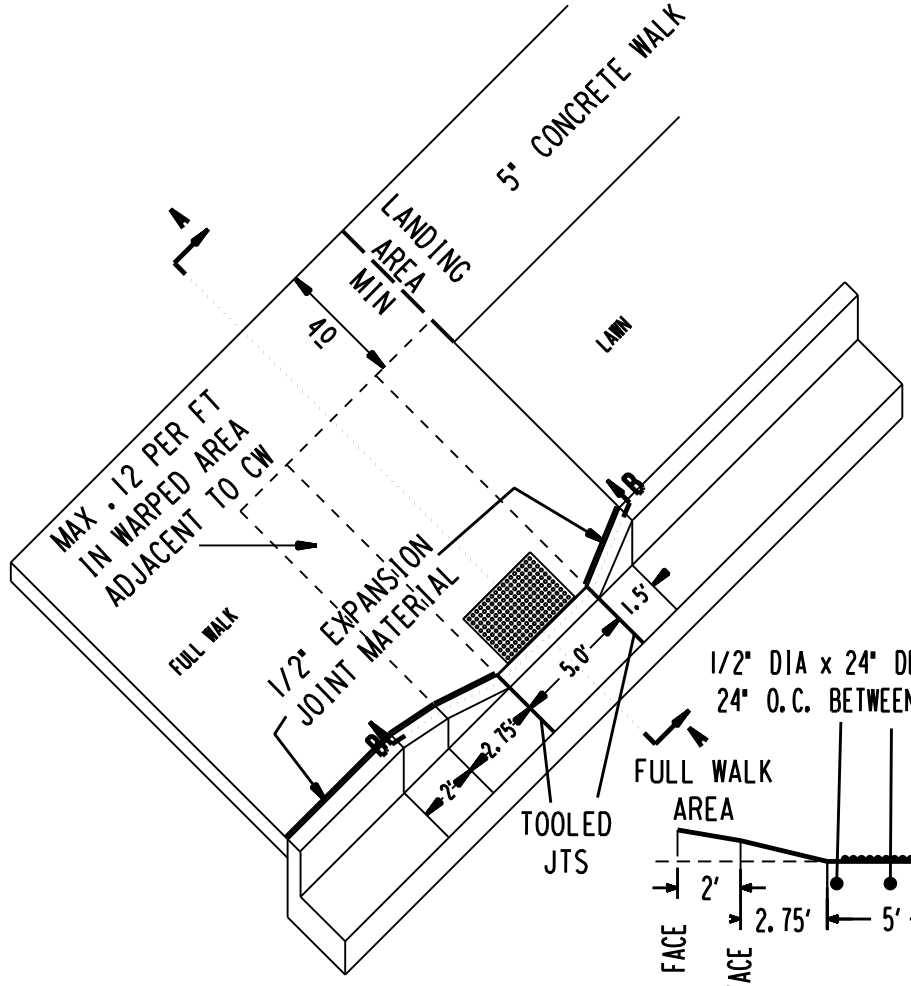


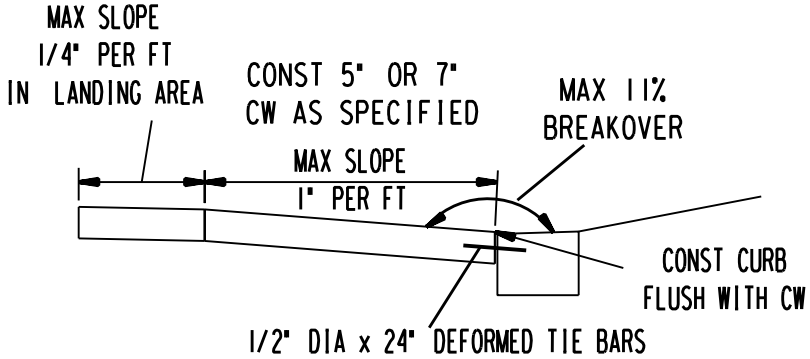


SECTION A-A

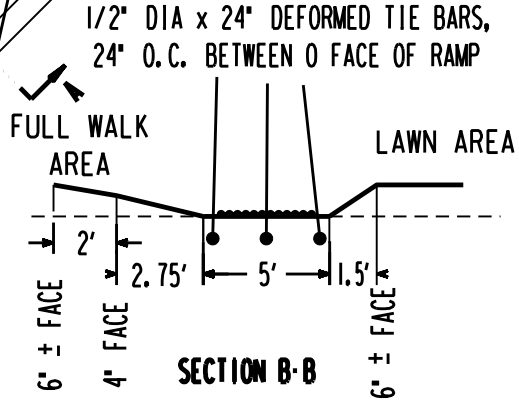


SECTION B-B

# CURB AND SIDEWALK RAMP TYPE III

## FIGURE - 18 A

| CONSTRUCTION SECTION<br>DEPARTMENT OF PUBLIC WORKS<br>MILWAUKEE, WISCONSIN | |
|---|---|
| Thomas Rach<br>APPROVED BY | SUSAN CULL<br>DRAWN BY |
| Dale Myjak<br>APPROVED BY | SCOTT STEIN<br>CHECKED BY |
| APPROVED CITY ENGINEER | JANUARY 10, 2007<br>DATE |

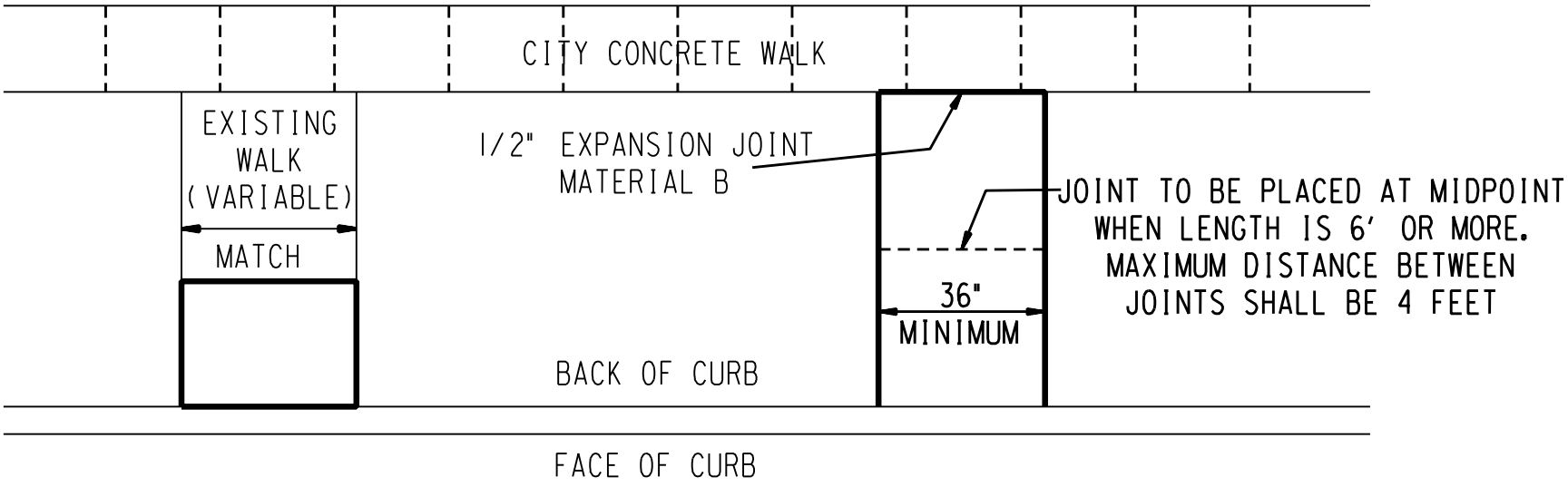


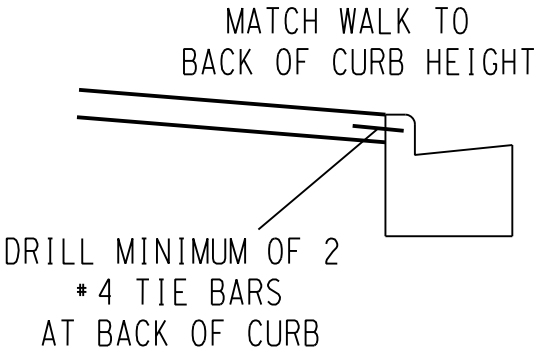


ON RECONSTRUCTION OR CURB AND GUTTER REPLACEMENT PROJECTS, THE WIDTH OF THE CARRIAGE WALK SHALL BE DETERMINED AS FOLLOWS:

(1) IF A CARRIAGE WALK IS TO BE COMPLETELY REMOVED, AND IS 36" WIDE OR LESS - REPLACE WITH 36" WIDE.
(2) IF A CARRIAGE WALK IS TO BE COMPLETELY REMOVED, AND IS WIDER THAN 36" - REPLACE WITH ORIGINAL WIDTH.
(3) IF A CARRIAGE WALK IS ONLY PARTIALLY REMOVED - MATCH EXISTING WIDTH

WIDTH INDICATED MAY CHANGE AS PROPERTY OWNERS REQUEST.
NOTE: THE CONSTRUCTION OF CARRIAGE WALK WHERE NONE EXISTED MAY BE REQUIRED IF REQUESTED BY THE PROPERTY OWNER.

**CONCRETE CARRIAGE WALK**
**FIGURE- 20**

**CONSTRUCTION SECTION**
**DEPARTMENT OF PUBLIC WORKS**
**MILWAUKEE, WISCONSIN**

| | |
|---|---|
| APPROVED BY | SUSAN CULL<br>DRAWN BY |
| APPROVED BY | SCOTT STEIN<br>CHECKED BY |
| APPROVED: CITY ENGINEER | FEBRUARY 16, 2006<br>DATE |

5" CONCRETE WALK

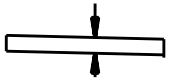

SLOPE ACROSS WALK
NOT TO EXCEED 1/4" PER FT

## SECTION A-A

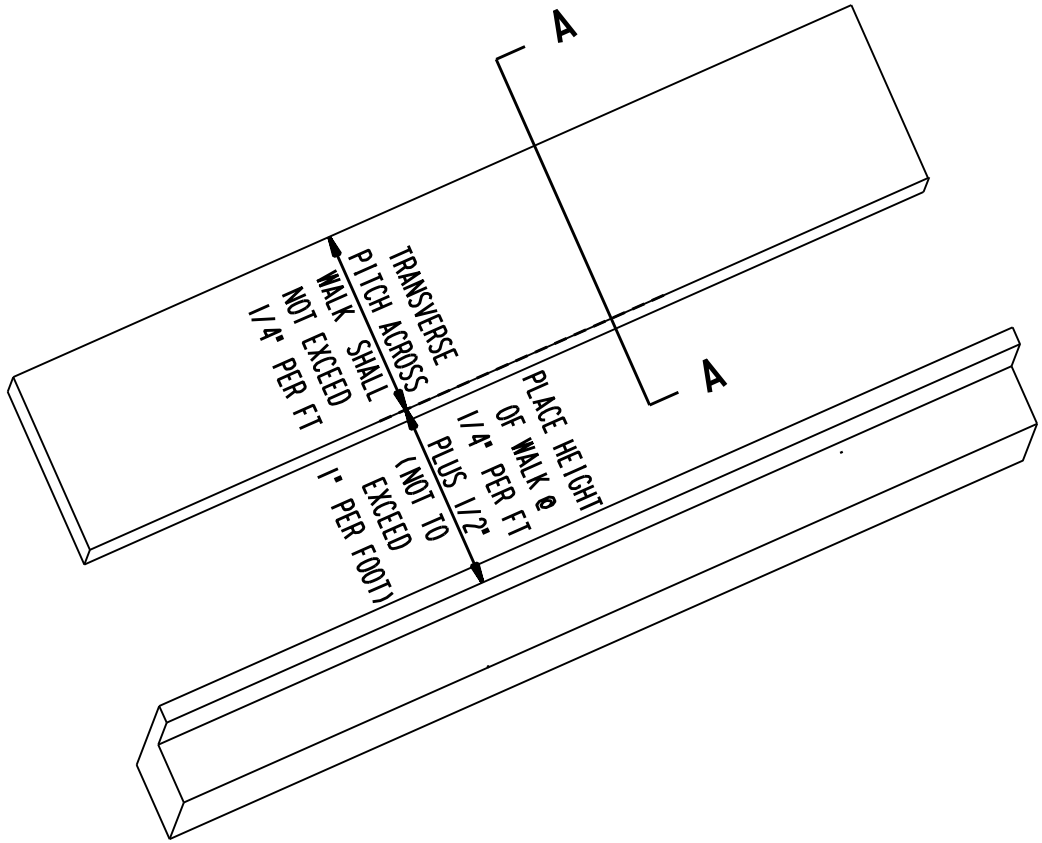


**CONCRETE WALK**

**FIGURE- 20A**

| CONSTRUCTION SECTION<br>DEPARTMENT OF PUBLIC WORKS<br>MILWAUKEE, WISCONSIN | |
|---|---|
| APPROVED BY | SUSAN CULL<br>DRAWN BY |
| APPROVED BY | SCOTT STEIN<br>CHECKED BY |
| APPROVED: CITY ENGINEER | JANUARY 10, 2007<br>DATE |

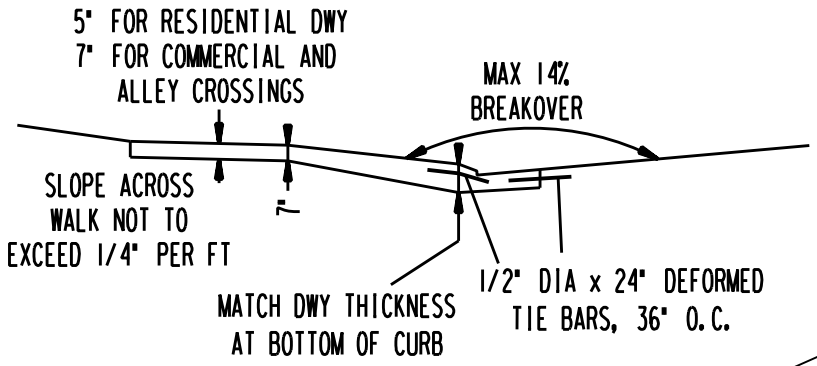


SECTION A-A

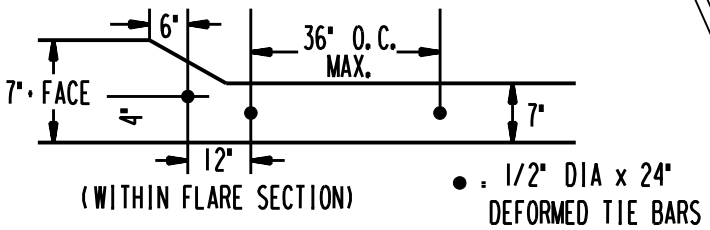


SECTION B-B

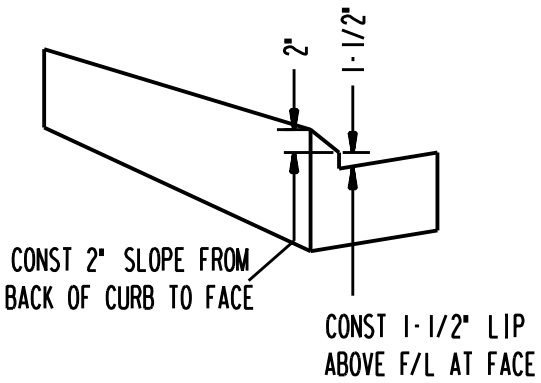


SPECIAL CURB SECTION

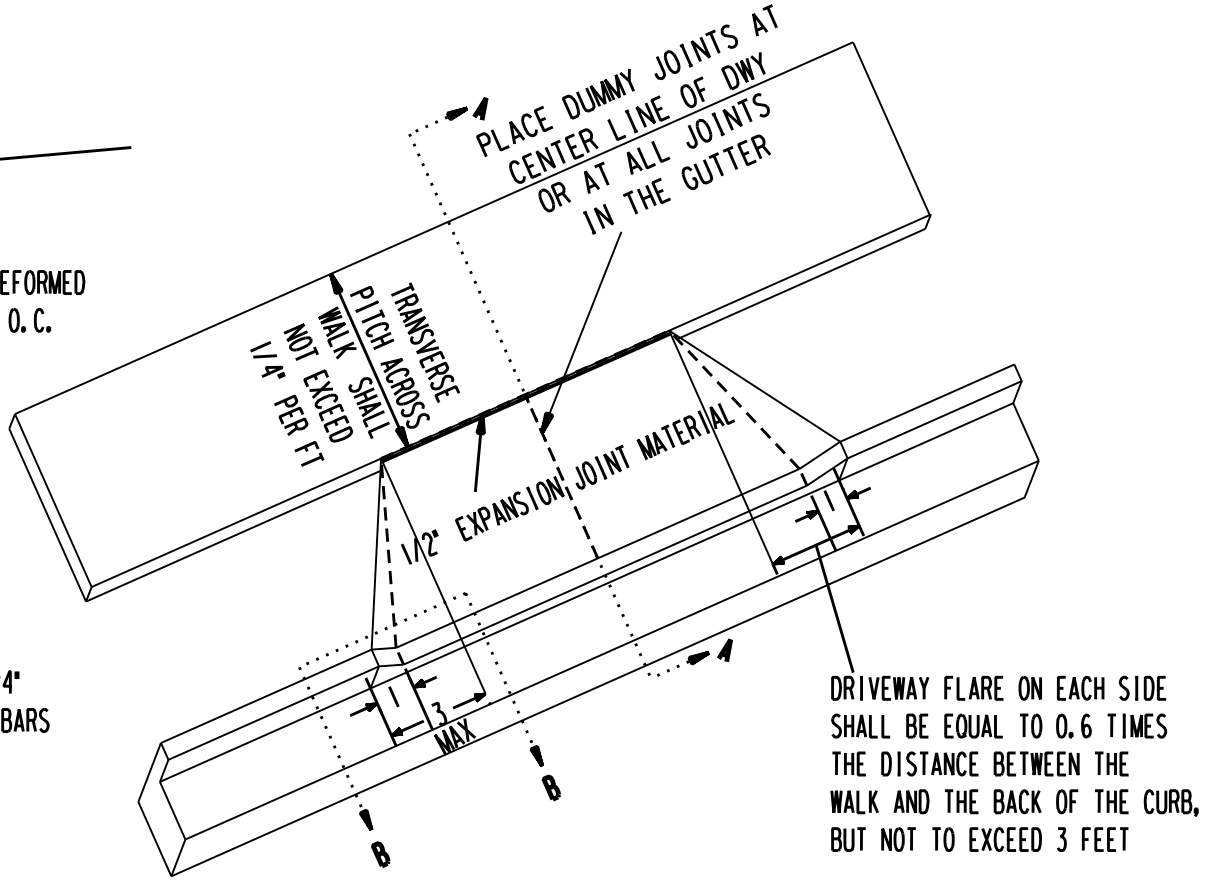


**CONCRETE DRIVEWAY TYPE I**
**(WITH CONCRETE WALK)**

**FIGURE - 21 A**
**(SPECIAL CURB SECTION)**

| CONSTRUCTION SECTION<br>DEPARTMENT OF PUBLIC WORKS<br>MILWAUKEE, WISCONSIN | |
|---|---|
| Thomas Rock<br>APPROVED BY | SUSAN CULL<br>DRAWN BY |
| Dale Myjak<br>APPROVED BY | SCOTT STEIN<br>CHECKED BY |
| APPROVED CITY ENGINEER | JANUARY 10, 2007<br>DATE |

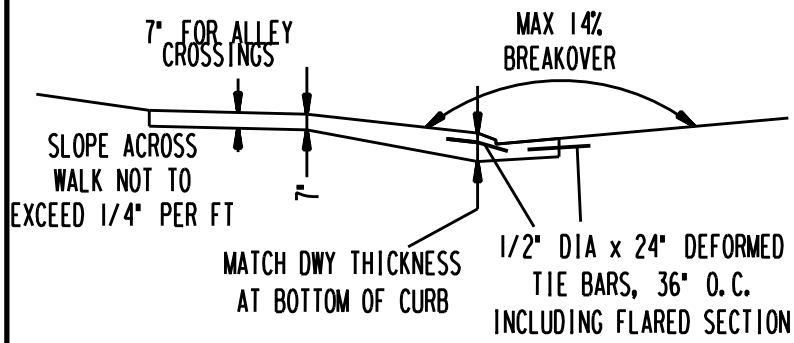


SECTION A-A

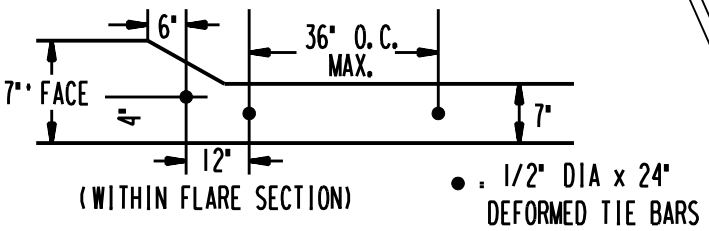


SECTION B-B

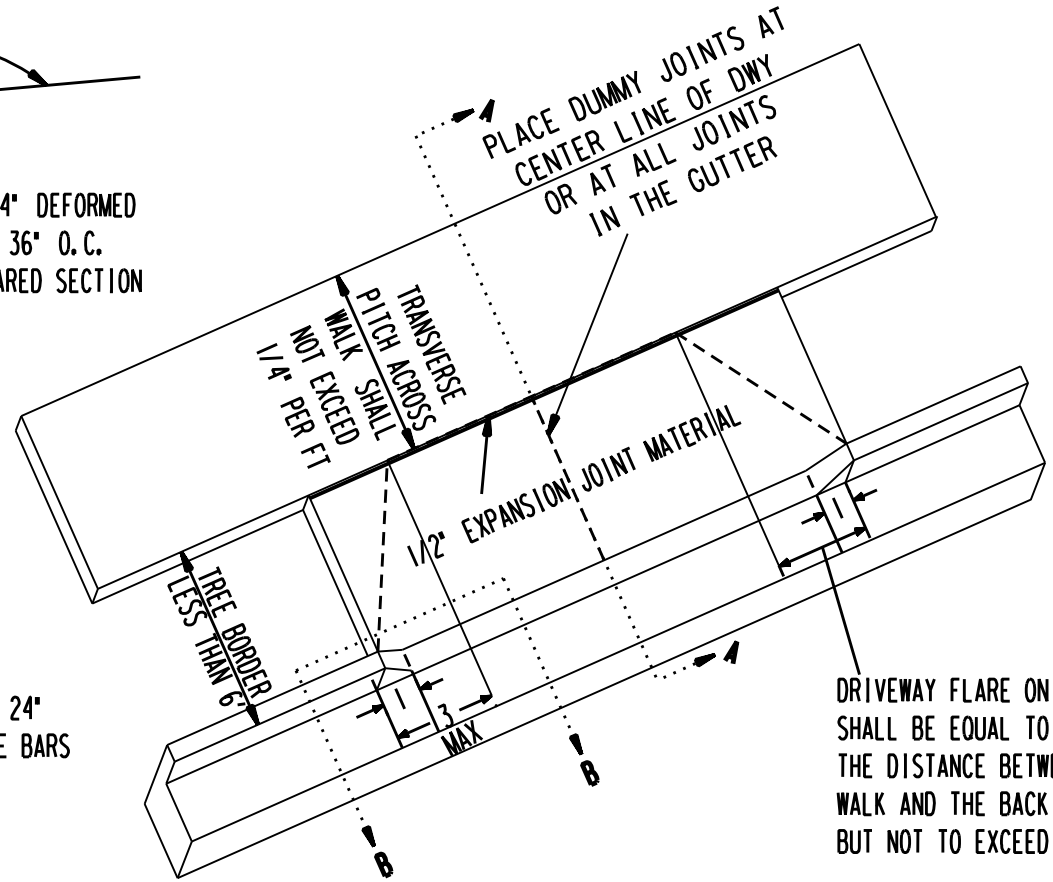


**DRIVEWAY APPROACH AT ALLEY WHEN TREE BORDER IS LESS THAN 6' WIDE**

**FIGURE - 21 B**

| CONSTRUCTION SECTION<br>DEPARTMENT OF PUBLIC WORKS<br>MILWAUKEE, WISCONSIN | |
|---|---|
| Thomas Rock<br>APPROVED BY | SUSAN CULL<br>DRAWN BY |
| Dale Myjak<br>APPROVED BY | SCOTT STEIN<br>CHECKED BY |
| APPROVED CITY ENGINEER | JANUARY 10, 2007<br>DATE |

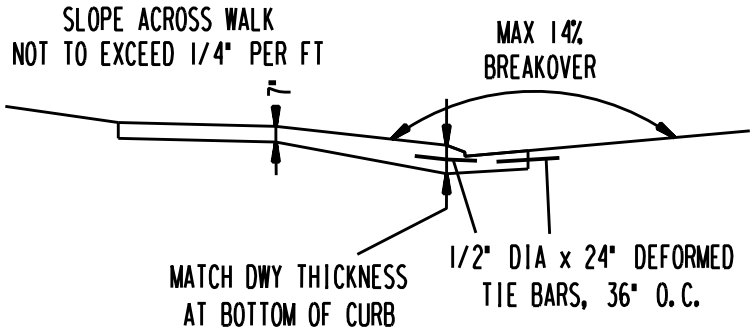


SECTION A-A

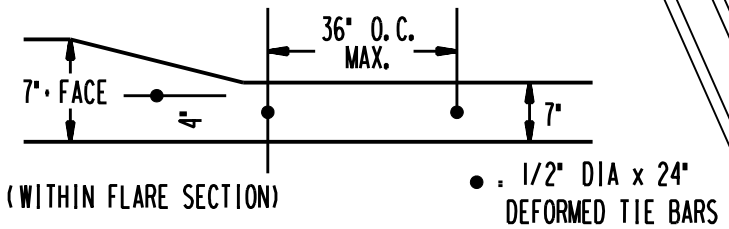


SECTION B-B

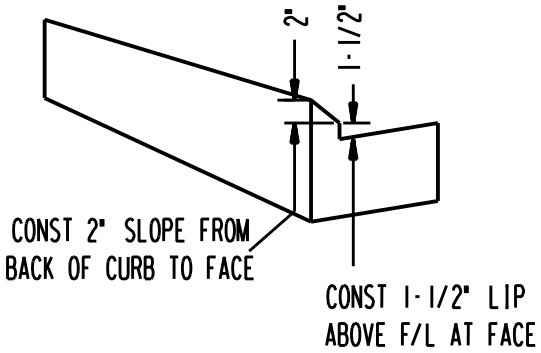


SPECIAL CURB SECTION

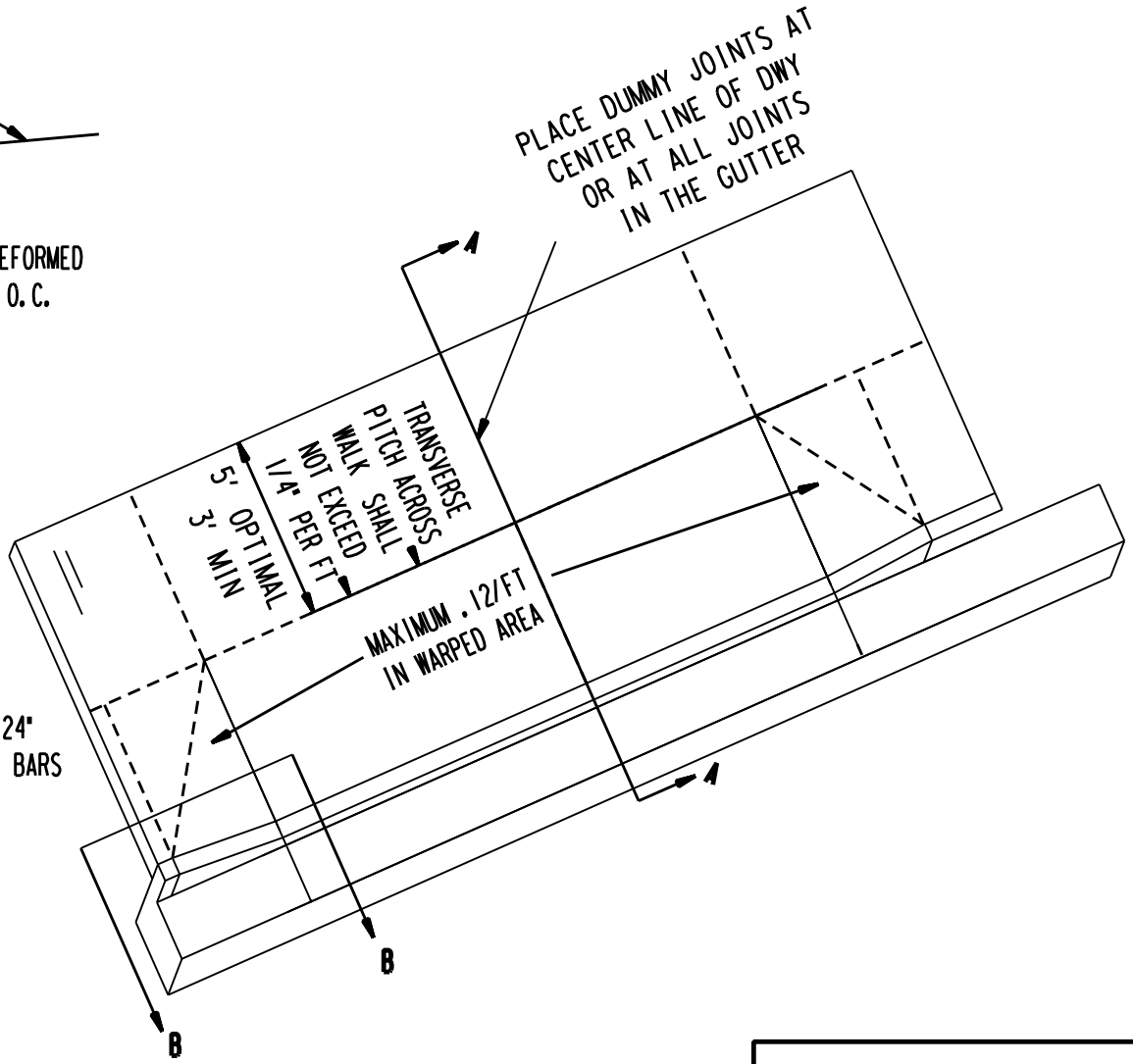


**CONCRETE DRIVEWAY TYPE II**
**(MODIFIED DEPRESSED)**

**FIGURE - 23 A**
**(SPECIAL CURB SECTION)**

| CONSTRUCTION SECTION<br>DEPARTMENT OF PUBLIC WORKS<br>MILWAUKEE, WISCONSIN | |
|---|---|
| Thomas Rock<br>APPROVED BY | SUSAN CULL<br>DRAWN BY |
| Dale Myjak<br>APPROVED BY | SCOTT STEIN<br>CHECKED BY |
| APPROVED CITY ENGINEER | JANUARY 10, 2007<br>DATE |

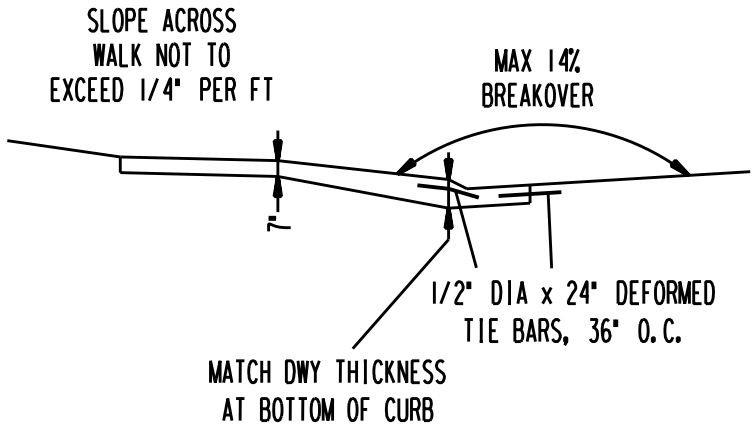


SECTION A-A

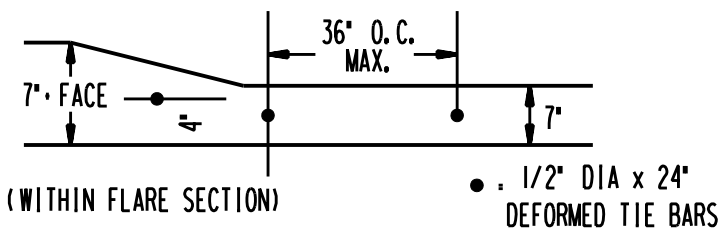


SECTION B-B

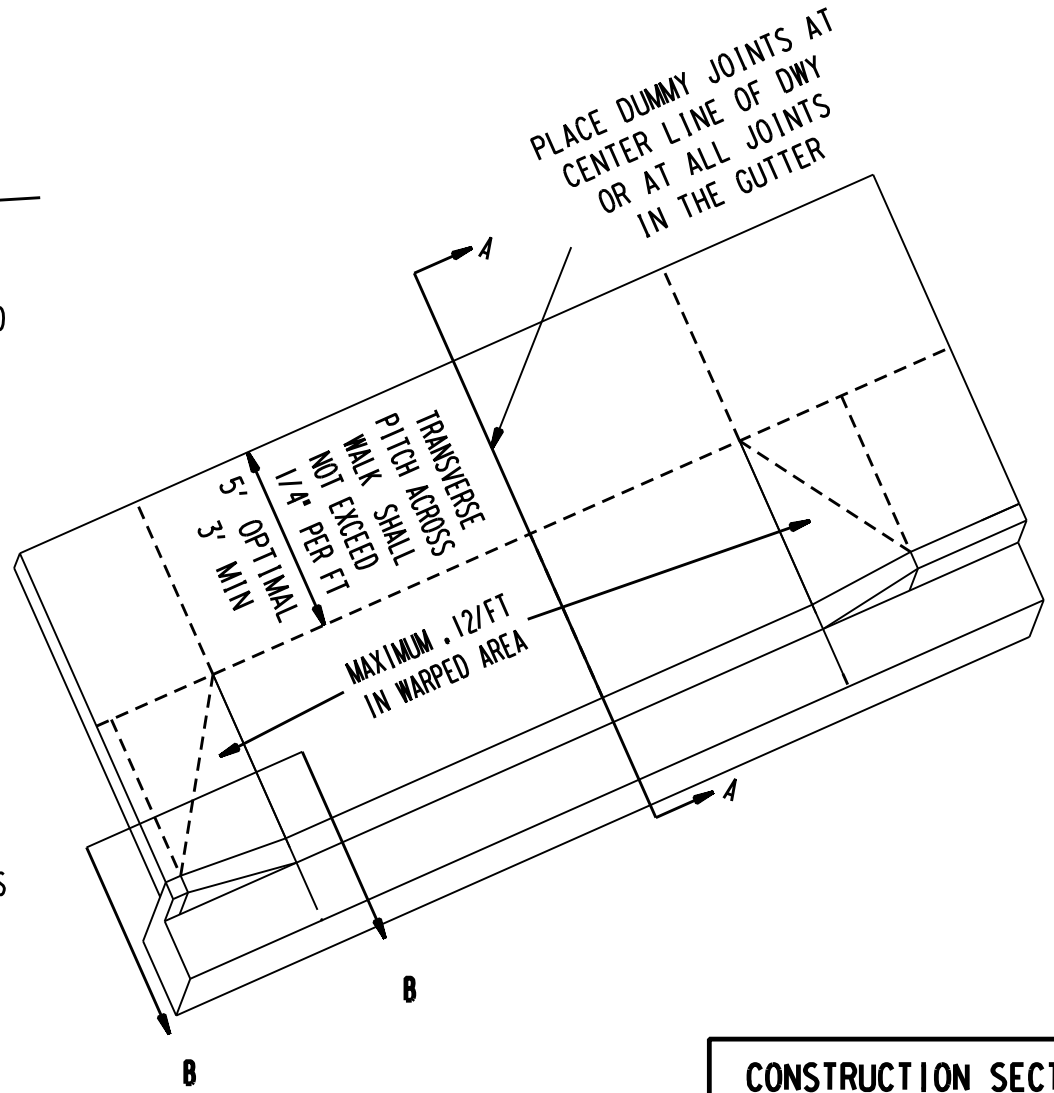


CONCRETE DRIVEWAY TYPE II
(MODIFIED DEPRESSED)

FIGURE - 23 B

| CONSTRUCTION SECTION<br>DEPARTMENT OF PUBLIC WORKS<br>MILWAUKEE, WISCONSIN | |
|---|---|
| Thomas Rock<br>APPROVED BY | SUSAN CULL<br>DRAWN BY |
| Dale Myjak<br>APPROVED BY | SCOTT STEIN<br>CHECKED BY |
| APPROVED CITY ENGINEER | JANUARY 10, 2007<br>DATE |

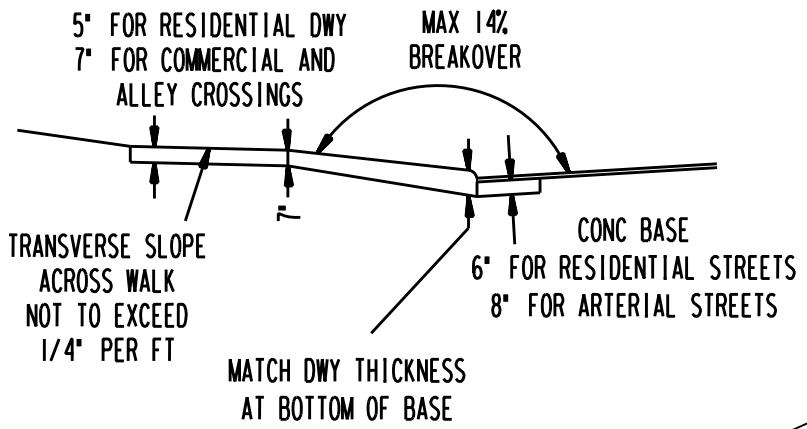


SECTION A-A

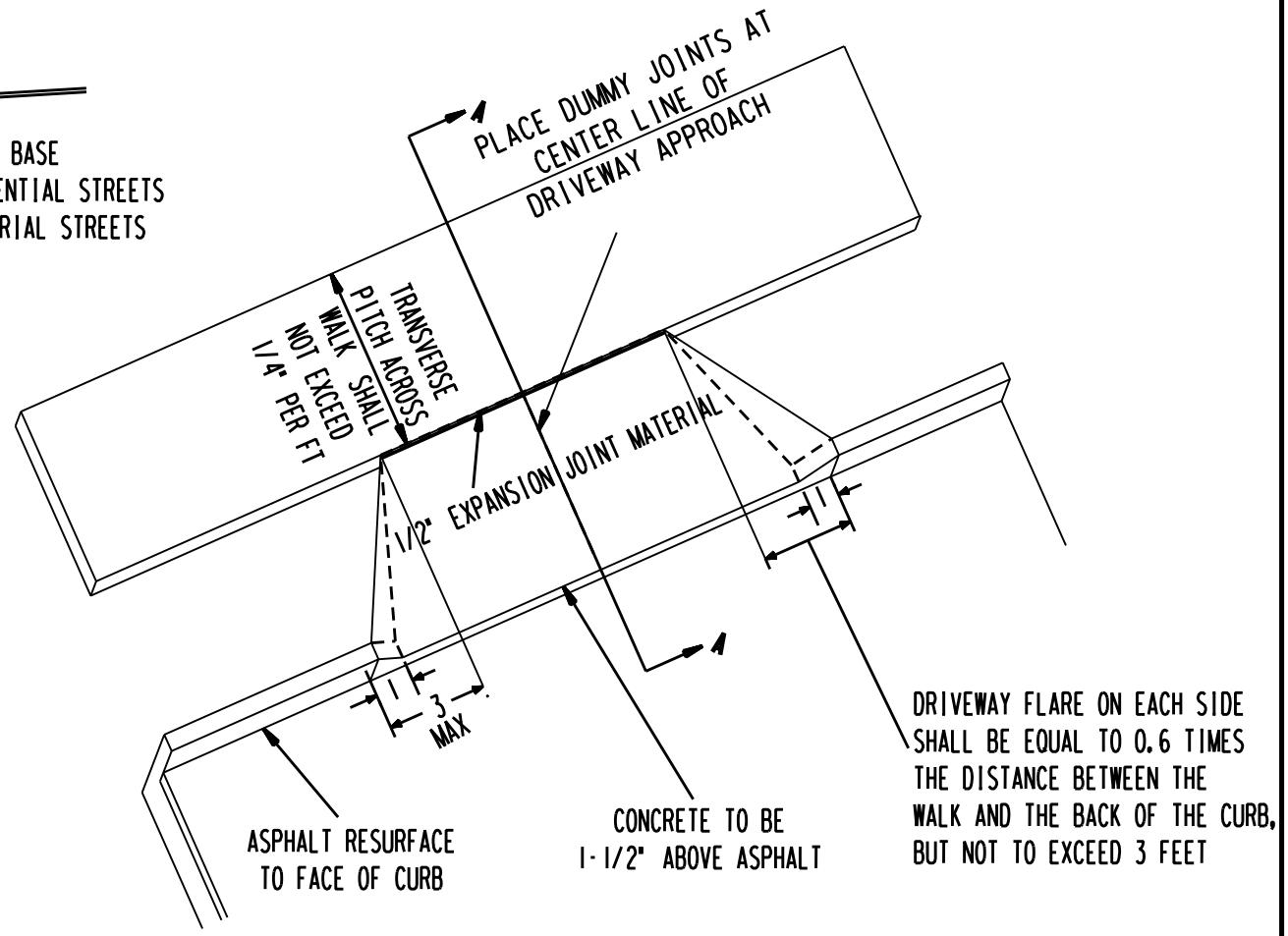


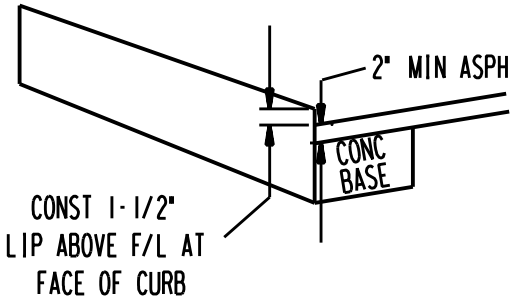


# SPECIAL CURB SECTION

**CONCRETE DRIVEWAY APPROACH REPLACEMENT**
**ASPHALT RESURFACE PROJECT**

**FIGURE - 26 A**
**(SPECIAL CURB SECTION)**

| CONSTRUCTION SECTION<br>DEPARTMENT OF PUBLIC WORKS<br>MILWAUKEE, WISCONSIN | |
|---|---|
| Thomas Rock<br>APPROVED BY | SUSAN CULL<br>DRAWN BY |
| Dale Myjak<br>APPROVED BY | SCOTT STEIN<br>CHECKED BY |
| APPROVED CITY ENGINEER | JANUARY 10, 2007<br>DATE |

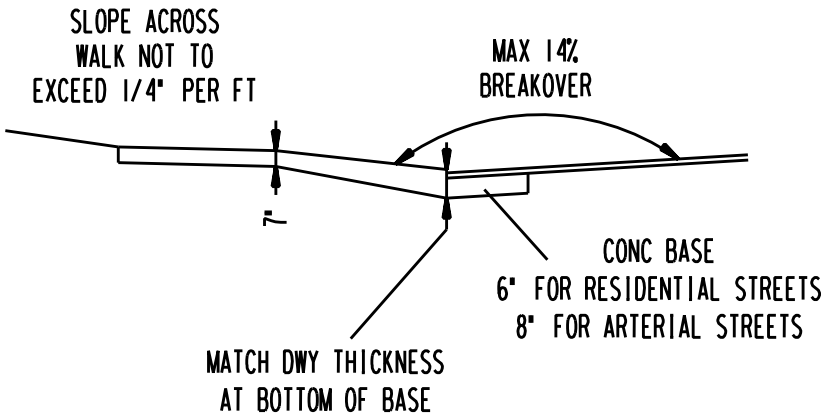


SECTION A-A

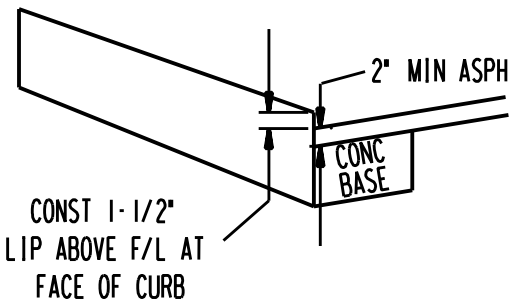


SPECIAL CURB SECTION

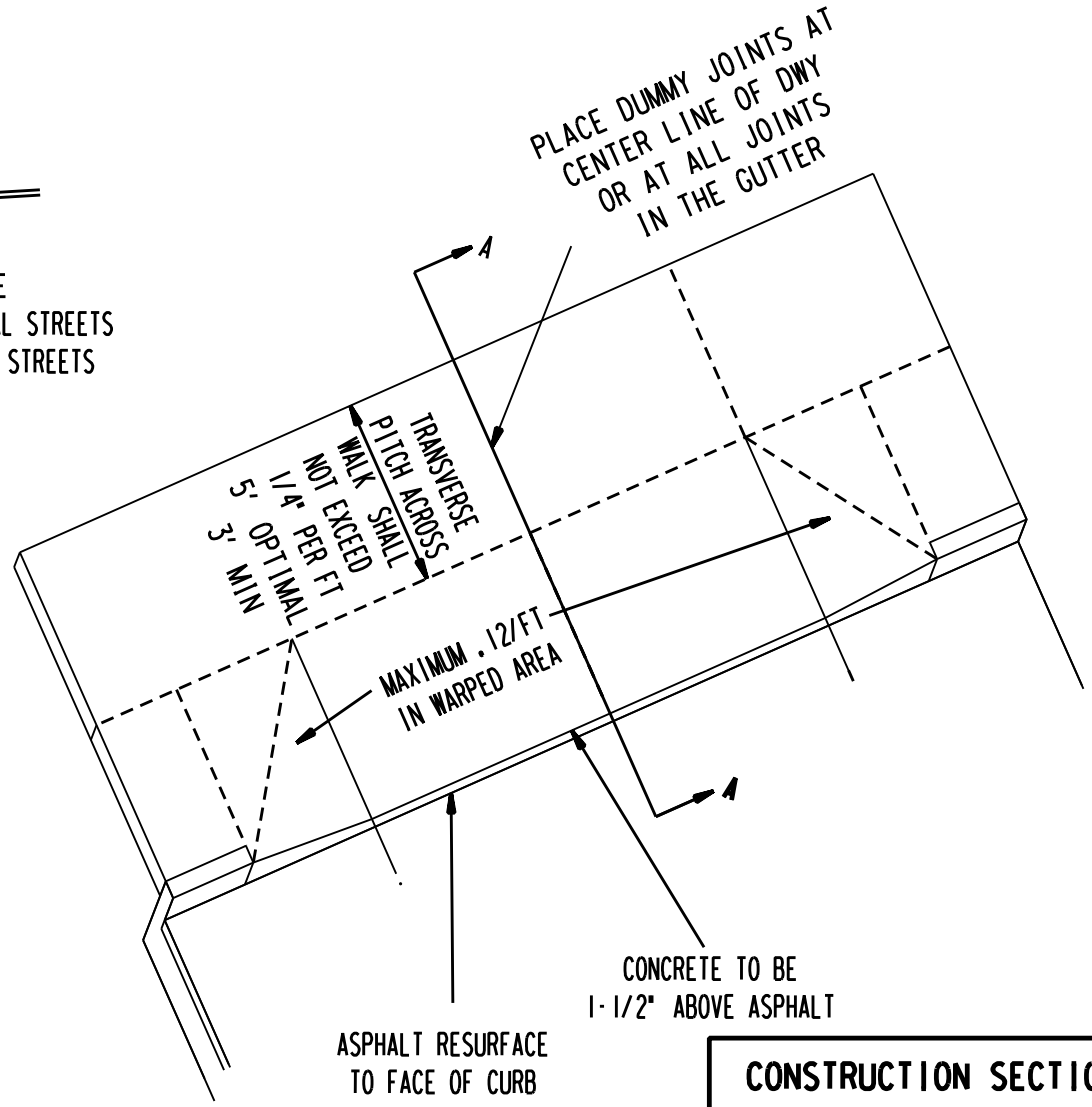


**CONCRETE DRIVEWAY TYPE II**
**(MODIFIED DEPRESSED)**
**ASPHALT RESURFACE PROJECT**

**FIGURE - 26B**

| | |
|---|---|
| **CONSTRUCTION SECTION**<br>**DEPARTMENT OF PUBLIC WORKS**<br>**MILWAUKEE, WISCONSIN** | |
| Thomas Rock<br>APPROVED BY | SUSAN CULL<br>DRAWN BY |
| Dale Myjak<br>APPROVED BY | SCOTT STEIN<br>CHECKED BY |
| APPROVED CITY ENGINEER | JANUARY 10, 2007<br>DATE |

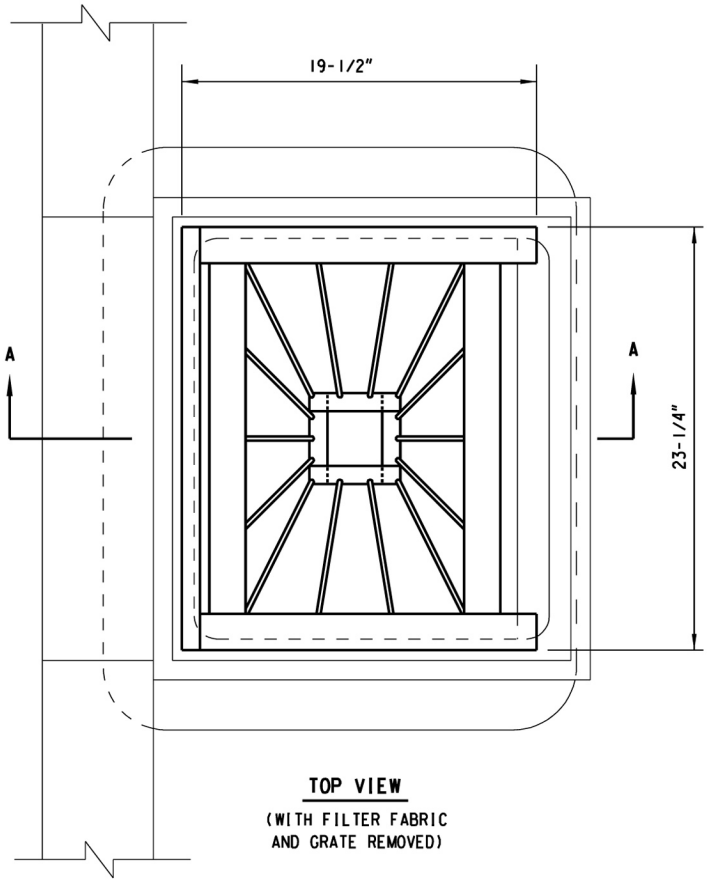


**TOP VIEW**

(WITH FILTER FABRIC
AND GRATE REMOVED)

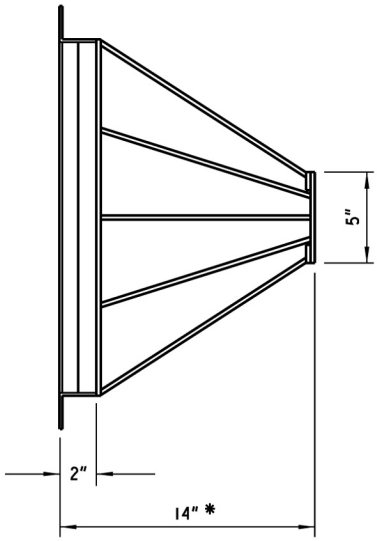


**FRONT VIEW**

(BASKET ONLY)

* MAY BE DECREASED IF INLET
IS OF INSUFFICIENT DEPTH

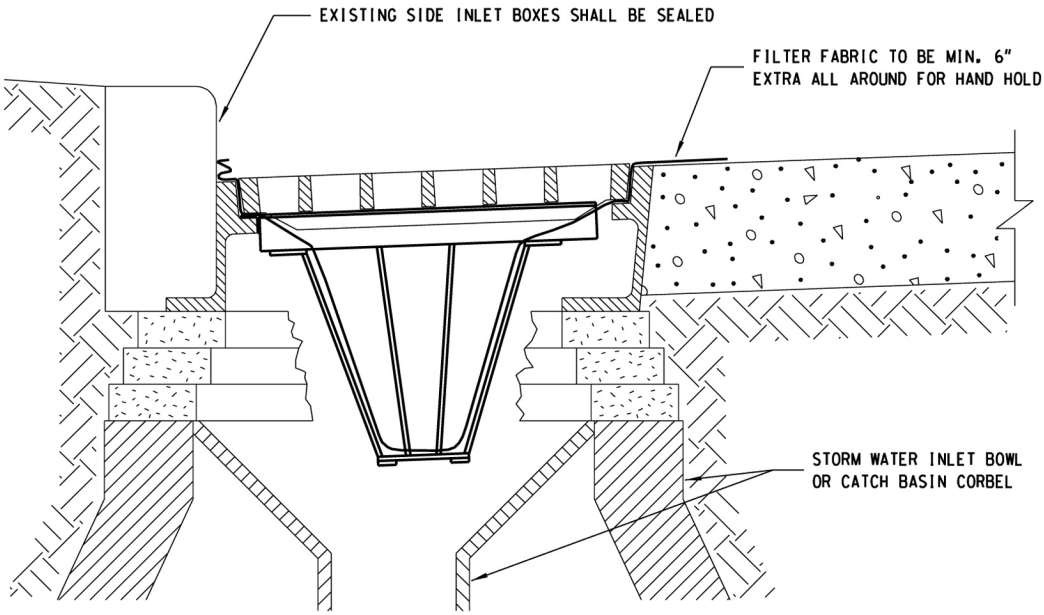


**SECTION A-A**

# TYPE M
# INLET / CATCH BASIN BASKET

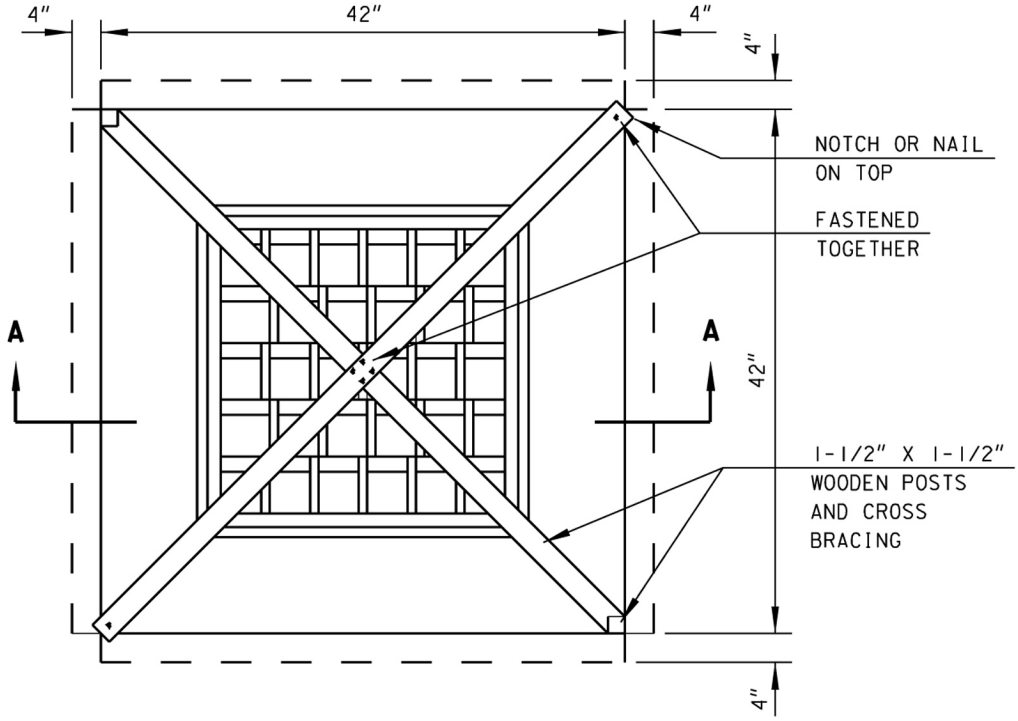


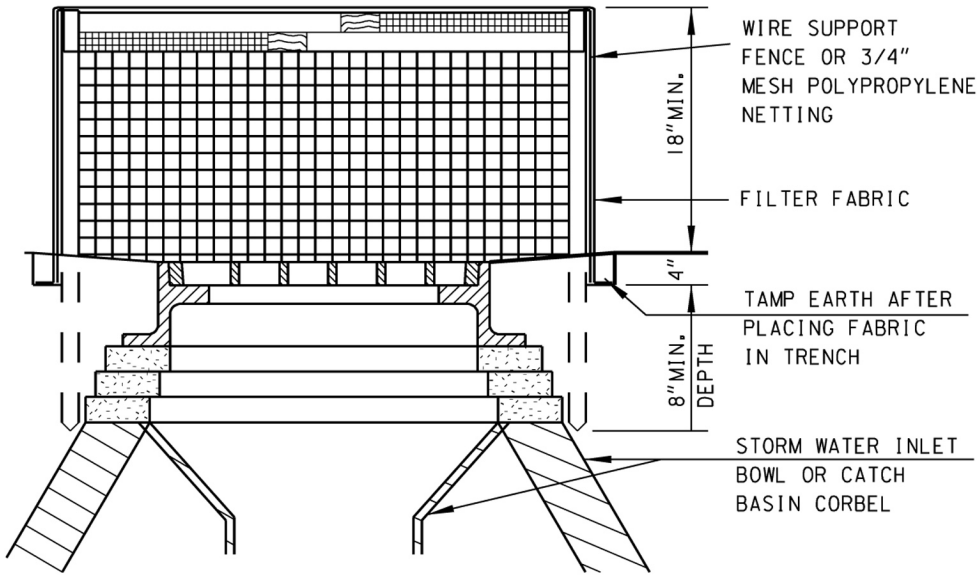


SECTION A-A

# INLET SCREEN

## (NOT PAVED) (TYPE R)

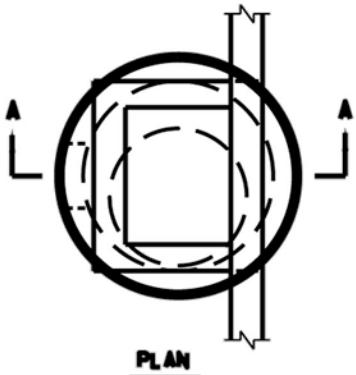


PLAN

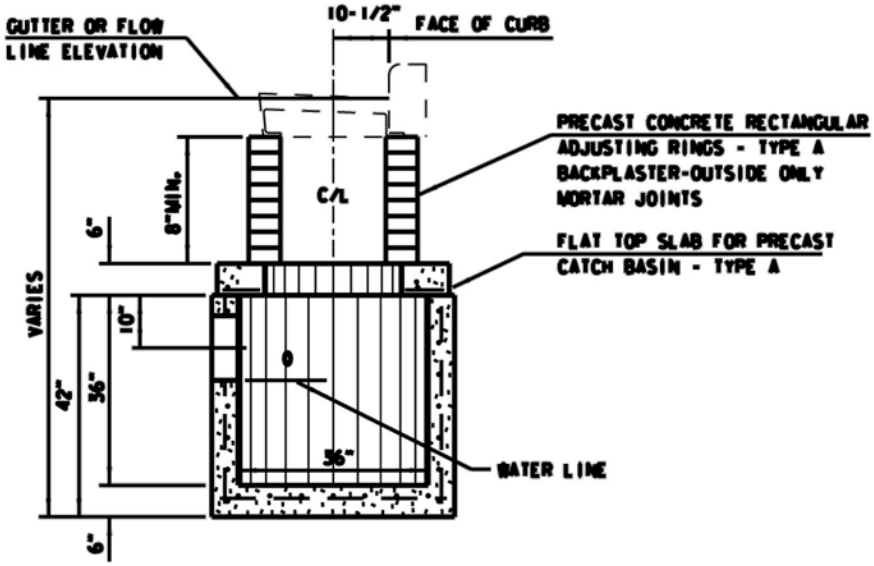


SECTION A-A

# CATCH BASIN -TYPE 45A

**GENERAL NOTES**

**1.** PRECAST INLET UNITS AND BASES SHALL CONFORM TO THE PERTINENT REQUIREMENTS OF AASHTO DESIGANTION M199 AND ASTM DESIGNATION C-478 AND THESE DETAILED REQUIREMENTS WHICH SHALL GOVERN WHERE THEY ALTER THE AASHTO AND ASTM STANDARDS.

**2.** ALL REINFORCEMENT STEEL SHALL BE GRADE 60 OR GREATER AND EMBEDDED AT LEAST 1" CLEAR.

**3.** PRECAST REINFORCED BASES SHALL BE PLACED ON A BED OF MATERIAL AT LEAST 4" DEPTH WHICH MEETS REQUIREMENTS FOR GRANULAR BACKFILL. THIS BEDDING SHALL BE COMPACTED AND PROVIDE UNIFORM SUPPORT FOR THE ENTIRE AREA OF THE BASE.

**4.** SET FRAME ELEVATION 0.03 FEET LOWER THAN ELEVATION INDICATED ON THE PLAN.

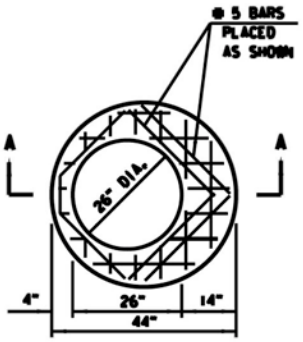


PLAN

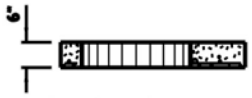


SECTION A-A

FLAT TOP SLAB SHALL BE 6" THICK REINFORCED WITH ONE LAYER OF STEEL WITH A MINIMUM OF 0.32 SQ.IN. PER LINEAL FOOT IN BOTH DIRECTIONS, PLACED NEAR THE BOTTOM OF THE SLAB WITH 1" CLEAR COVER.

ADDITIONALLY, NO. 5 BARS SHALL BE PLACED AROUND THE TOP SLAB OPENING AS SHOWN.

REINFORCEMENT SHALL BE TIED OR WELDED TOGETHER.

THE MINIMUM COMPRESSIVE STRENGTH OF THE CONCRETE SHALL BE 4000 PSI.

## TOP SLAB - TYPE A

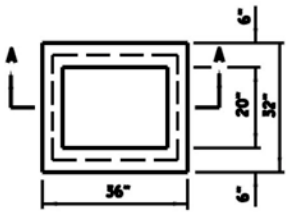


PLAN

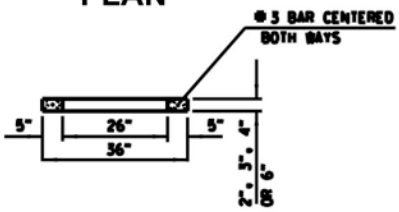


SECTION A-A

THE ADJUSTING RINGS SHALL BE 2", 3", 4" OR 6" IN HEIGHT.

THE MINIMUM COMPRESSIVE STRENGTH OF THE CONCRETE SHALL BE 3500 PSI.

## RECTANGULAR ADJUSTING RING TYPE A

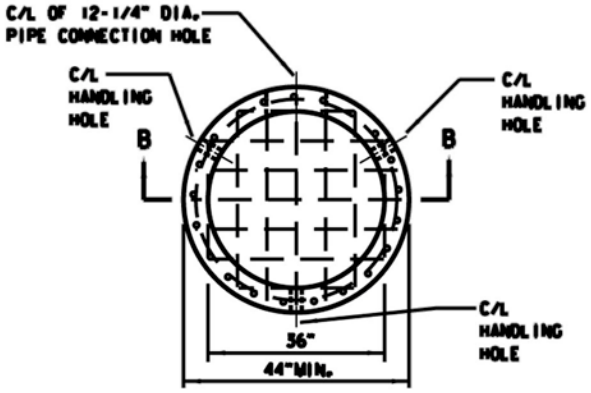


## RISER SECTION WITH INTEGRAL BASE PLAN

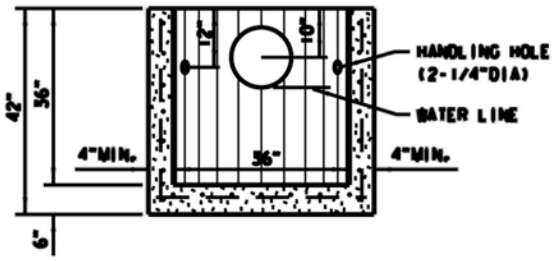


SECTION B-B

CIRCUMFERENTIAL AND LONGITUDINAL REINFORCEMENT SHALL EACH CONSIST OF ONE LAYER OF STEEL NOT LESS THAN 0.12 SQ. IN. PER FOOT AND SHALL BE PLACED IN THE CENTER THIRD OF THE WALL.

THE BASE SLAB SHALL BE REINFORCED WITH ONE LAYER OF STEEL WITH A MINIMUM AREA OF 0.32 SQ. IN. PER FOOT IN BOTH DIRECTIONS, PLACED ABOVE THE MIDPOINT OF THE SLAB.

RISER SECTION AND BASE SLAB REINFORCEMENT SHALL BE TIED OR WELDED TOGETHER.

TWO TO THREE HANDLING HOLES 2-1/4" IN DIAMETER AND A PIPE CONNECTION HOLE 12-1/4" SHALL BE CAST OR CORED IN THE RISER SECTION AT THE LOCATIONS SHOWN. LIFTING DEVICES MAY BE SUBSTITUTED FOR HANDLING HOLES.

NO JOINTS OR HOLES SHALL BE BELOW THE WATERLINE.

THE MINIMUM COMPRESSIVE STRENGTH OF THE CONCRETE SHALL BE 4000 PSI.

RISER SECTION MAY TAPER TO A 33" INTERNAL DIAMETER AT ITS BOTTOM PROVIDED A 44" MINIMUM DISTANCE IS MAINTAINED.

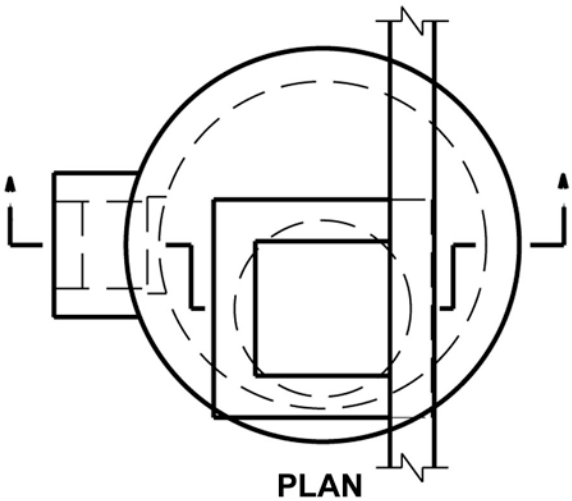


PLAN

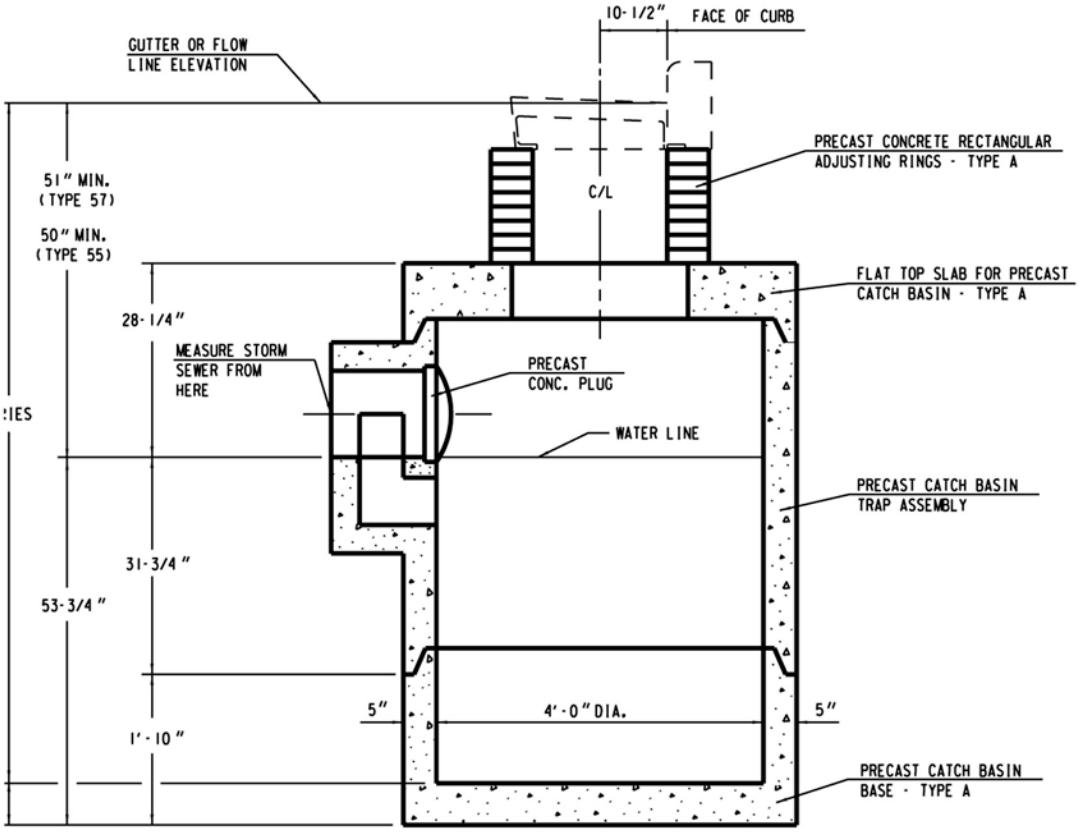


SECTION A-A

# CATCH BASIN - TYPE 44A

1. REINFORCEMENT FOR 5" PRECAST REINFORCED CONCRETE SHALL BE 6" X 6" W16 X W16 WELDED STEEL WIRE FABRIC AND SHALL BE EMBEDDED 2" CLEAR.
2. PRECAST INLET UNITS AND BASES SHALL CONFORM TO THE PERTINENT REQUIREMENTS OF AASHTO DESIGNATION M199.
3. PRECAST REINFORCED BASES SHALL BE PLACED ON A BED OF MATERIAL AT LEAST 4" IN DEPTH WHICH MEETS REQUIREMENTS FOR GRANULAR BACKFILL. THIS BEDDING SHALL BE COMPACTED AND PROVIDE UNIFORM SUPPORT FOR THE ENTIRE AREA OF THE BASE.
4. SET FRAME ELEVATION 0.03 FT. LOWER THAN ELEVATION INDICATED ON PLAN.
5. A PRECAST CONCRETE PLUG SHALL BE CEMENTED INTO THE OPENING AT THE INNER FACE OF THE CATCH BASIN TRAP ASSEMBLY.

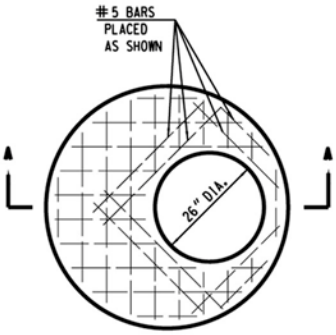


PLAN

FLAT TOP SLAB SHALL BE 8" THICK REINFORCED WITH ONE LAYER OF STEEL WITH A MINIMUM AREA OF 0.12 SQ. IN. PER LINEAL FOOT IN BOTH DIRECTIONS, PLACED IN THE CENTER THIRD OF THE SECTION AS SHOWN.

REINFORCEMENT SHALL BE TIED OR WELDED TOGETHER.

THE MINIMUM COMPRESSIVE STRENGTH OF THE CONCRETE SHALL BE 3300 P.S.I.

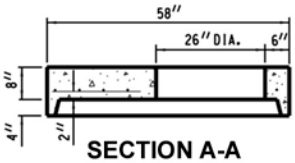


SECTION A-A

## TOP SLAB - TYPE A

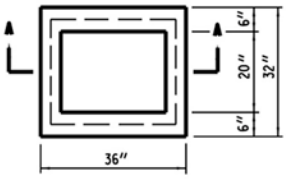


PLAN

THE ADJUSTING RINGS SHALL BE 2", 3", 4" OR 6" IN HEIGHT.

THE MINIMUM COMPRESSIVE STRENGTH OF THE CONCRETE SHALL BE 3300 P.S.I.

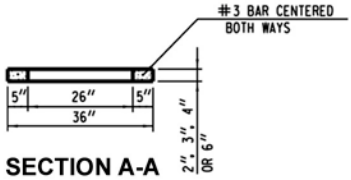


SECTION A-A

## RECTANGULAR ADJUSTING RING TYPE A

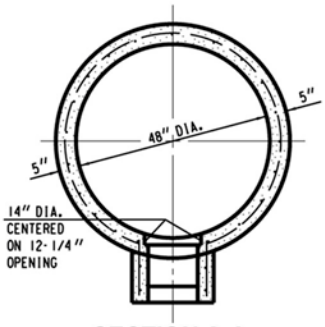


SECTION A-A

CIRCUMFERENTIAL REINFORCEMENT SHALL CONSIST OF ONE LINE OF STEEL NOT LESS THAN 0.12 SQ. IN. PER LINEAL FOOT, AND SHALL BE PLACED IN THE CENTER THIRD OF THE WALL.

TRAP ASSEMBLY SHALL BE REINFORCED WITH ONE LAYER OF STEEL WITH A MINIMUM AREA OF 0.12 SQ. IN. PER LINEAL FOOT IN BOTH DIRECTIONS, PLACED IN THE CENTER THIRD OF THE SECTION AS SHOWN.

CIRCUMFERENTIAL AND TRAP ASSEMBLY REINFORCEMENT SHALL BE TIED OR WELDED TOGETHER.

THE MINIMUM COMPRESSIVE STRENGTH OF THE CONCRETE SHALL BE 3300 P.S.I.

TWO HANDLING HOLES 2 1/4 INCHES IN DIAMETER SHALL BE CAST OR DRILLED IN THE WALL.

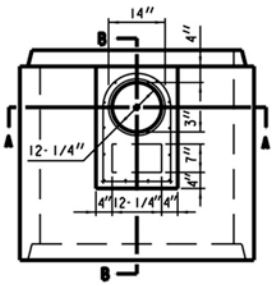


PLAN

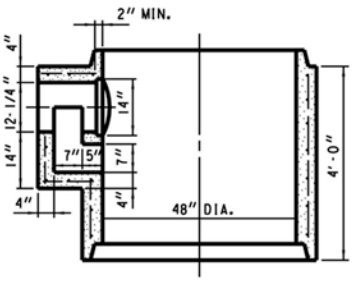


SECTION B-B

## TRAP ASSEMBLY

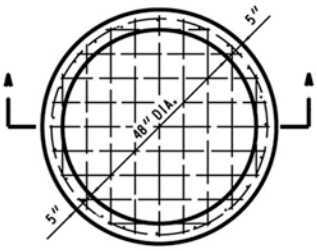


PLAN

CIRCUMFERENTIAL REINFORCEMENT SHALL CONSIST OF ONE LINE OF STEEL NOT LESS THAN 0.12 SQ. IN. PER LINEAL FOOT, AND SHALL BE PLACED IN THE CENTER THIRD OF THE WALL.

BOTTOM SLAB SHALL BE REINFORCED WITH ONE LAYER OF STEEL WITH A MINIMUM AREA OF 0.12 SQ. IN. PER LINEAL FOOT IN BOTH DIRECTIONS, PLACED IN THE CENTER THIRD OF THE SLAB.

CIRCUMFERENTIAL AND BOTTOM SLAB REINFORCEMENT SHALL BE TIED OR WELDED TOGETHER.

THE MINIMUM COMPRESSIVE STRENGTH OF THE CONCRETE SHALL BE 3300 P.S.I.

TWO HANDLING HOLES 2 1/4 INCHES IN DIAMETER SHALL BE CAST OR DRILLED IN THE WALL.

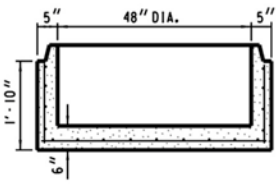


SECTION A-A

## BASE - TYPE A

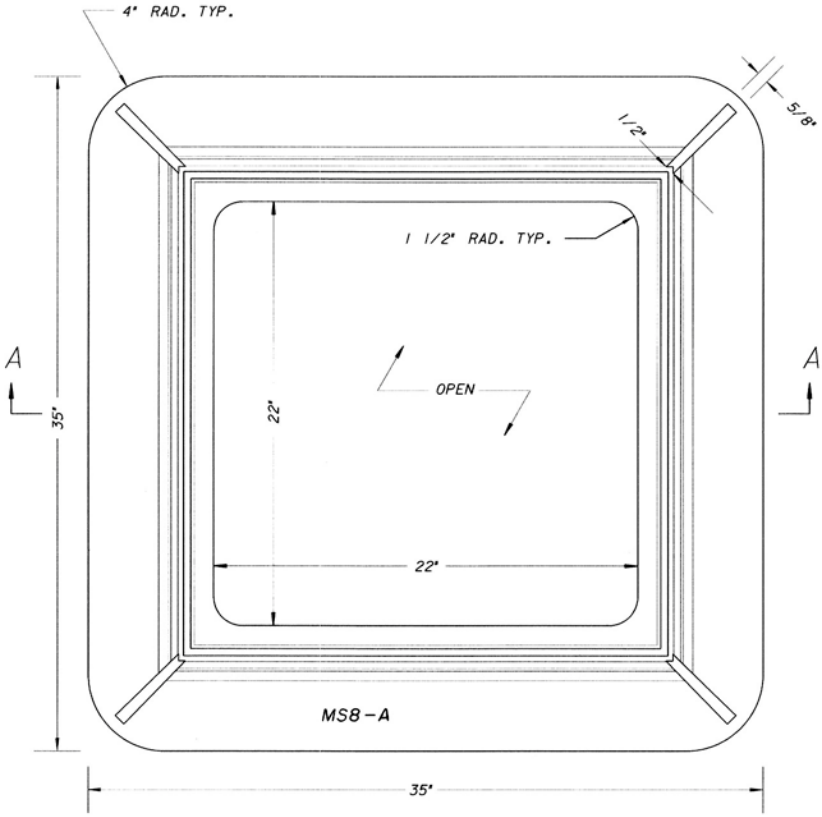


TOP VIEW

SCALE N.T.S.

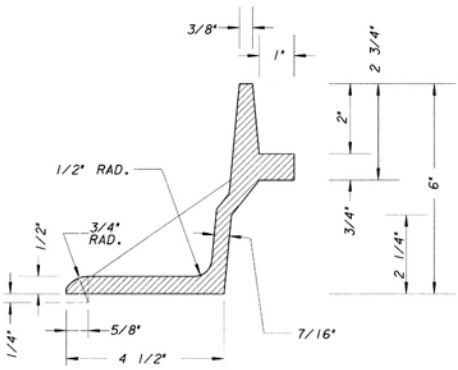


FRAME DETAIL

SCALE N.T.S.

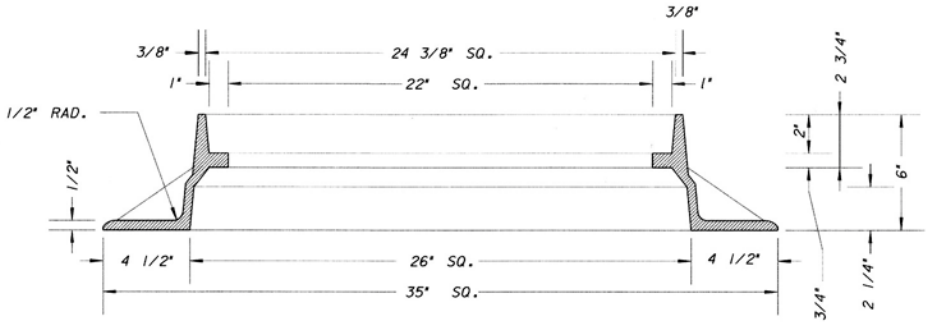


SECTION A-A

SCALE N.T.S.

# M.S. 8A
# ALLEY INLET FRAME

SCALE N.T.S.

NOTES:

THIS CATCH BASIN FRAME IS AN ACCEPTABLE ALTERNATIVE DESIGN TO CATCH BASIN FRAME M.S. 8 - P.F.# 171-58.

MUST FIT M.S. 55 INLET GRATE.(SEE P.F.# MS-55)

ALL DIMENSIONS ARE SHOWN IN ENGLISH

MATERIAL - CAST GRAY IRON ASTM A-48, CLASS 35B MINIMUM

WEIGHT: APPROX. 165 lbs

ALL CASTINGS SHALL BEAR THE FOLLOWING IDENTIFICATION MARKS IN THE FORM OF LEGIBLE LETTERS OR NUMBERS RAISED 1/8" AND HAVING A DIGIT OR LETTER HEIGHT OF ONE INCH ON THE UPPER FACE OF THE FRAME FLANGE:

1. THE INITIALS OR MONOGRAM OF THE FOUNDRY.
2. THE CONTRACT NUMBER AND YEAR MADE.
3. THE CASTING INDENTIFICATION NUMBER. (MS8-A)
4. THE SERIAL NUMBER OF THE INDIVIDUAL CASTING.

ALL EXTERIOR EDGES SHALL BE GROUND.

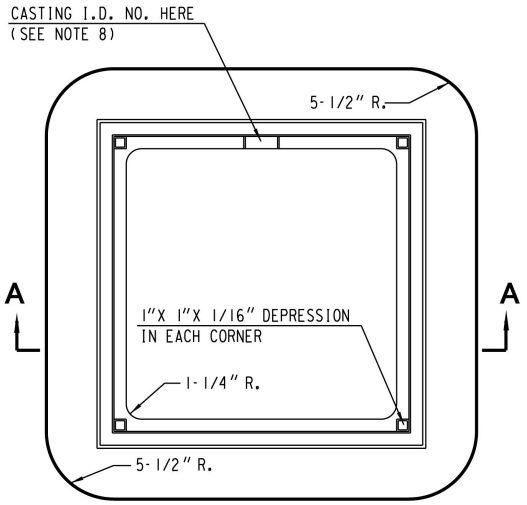


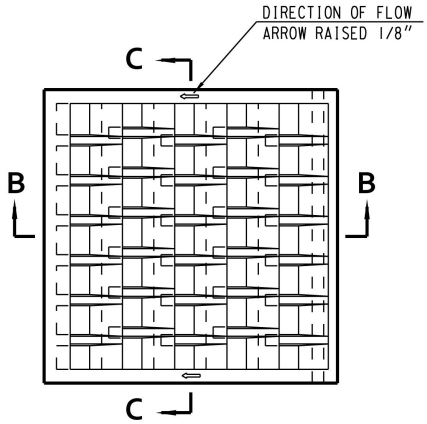


GRATE

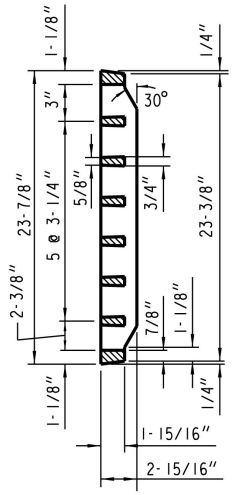


SECTION C-C

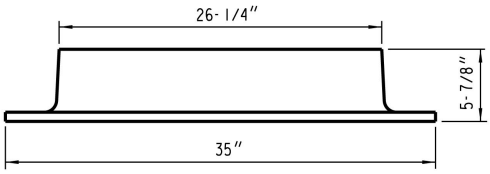


FRAME

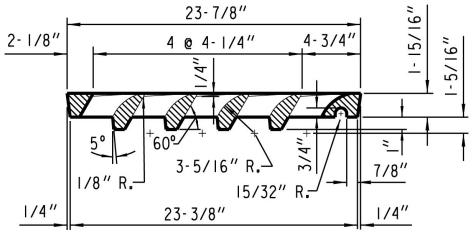


SECTION B-B

# INLET COVER TYPE 55

LID-180 LBS., FRAME-315 LBS.

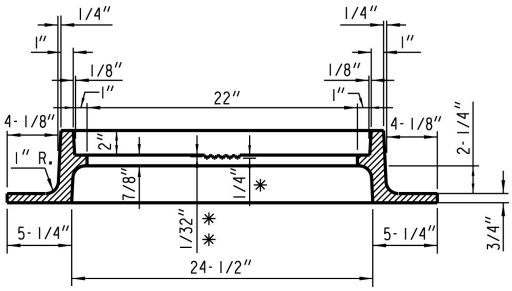


✱ DEPRESSION FOR LETTERS

✱✱ CLEARANCE FROM TOP OF LETTERS TO FACE OF SEAT

SECTION A-A

## GENERAL NOTES

ALL EDGES ARE TO BE GROUND.

ALL CASTINGS SHALL BEAR THE FOLLOWING IDENTIFICATION MARKS IN THE FORM OF LEGIBLE LETTERS OR NUMERALS RAISED 1/8 INCH

## ON THE FRAME

1. ON THE UPPER FACE OF THE FLANGE IN 1 INCH HIGH LETTERS THE INITIALS OR MONOGRAM OF THE FOUNDRY, THE YEAR MADE AND THE SERIAL NUMBER OF THE INDIVIDUAL CASTING.

2. ON THE SEAT OF THE FRAME IN 3/4 INCH HIGH LETTERS, THE CASTING IDENTIFICATION NUMBER (8).

## ON THE GRATE

1. ON THE UPPER SIDE OF THE GRATE IN 1 INCH HIGH LETTERS, THE INITIALS OR MONOGRAM OF THE FOUNDRY, THE YEAR MADE, THE CASTING IDENTIFICATION NUMBER (55) AND THE SERIAL NUMBER OF THE INDIVIDUAL CASTING.

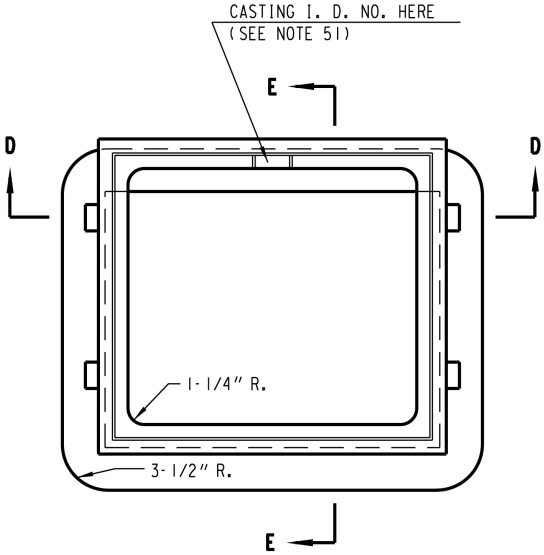


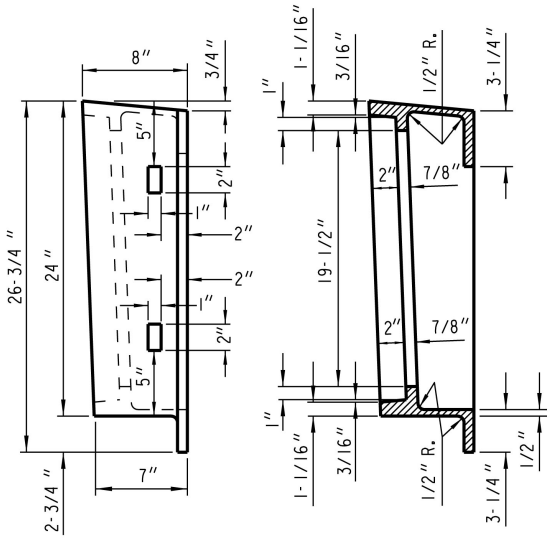


## SECTION E-E

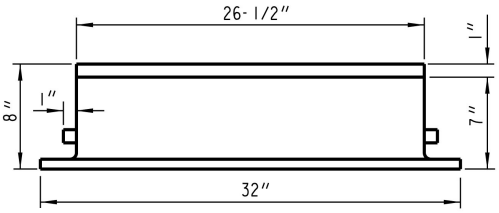


## FRAME

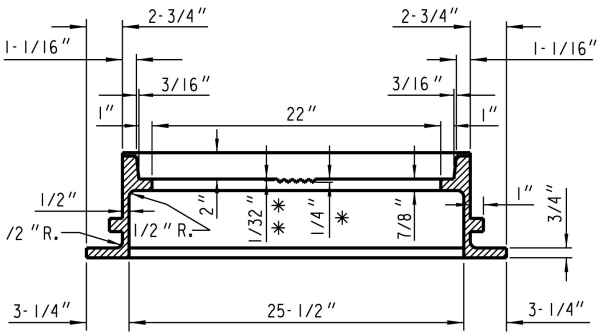


## SECTION D-D

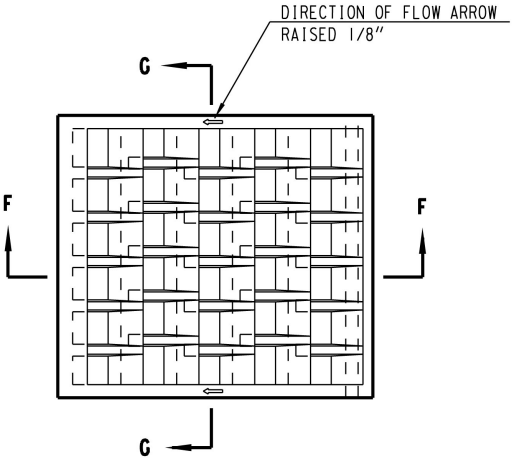


## GRATE

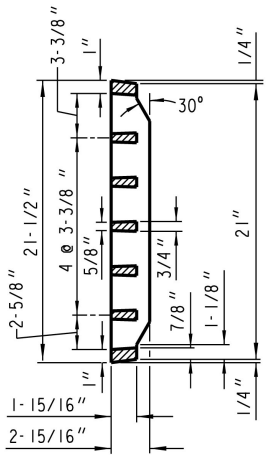


## SECTION G-G

✱ DEPRESSION FOR LETTERS

✱ ✱ CLEARANCE FROM TOP OF LETTERS TO FACE OF SEAT

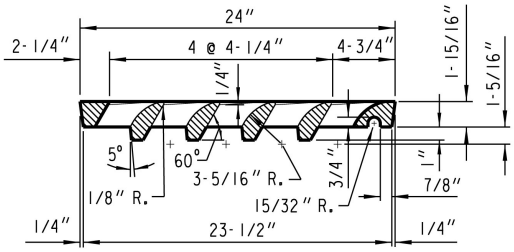


## SECTION F-F

## GENERAL NOTES

ALL EDGES ARE TO BE GROUND.

ALL CASTINGS SHALL BEAR THE FOLLOWING IDENTIFICATION MARKS IN THE FORM OF LEGIBLE LETTERS OR NUMERALS RAISED 1/8 INCH

## ON THE FRAME

1. ON THE UPPER FACE OF THE FLANGE IN 1 INCH HIGH LETTERS THE INITIALS OR MONOGRAM OF THE FOUNDRY, THE YEAR MADE AND THE SERIAL NUMBER OF THE INDIVIDUAL CASTING.

2. ON THE SEAT OF THE FRAME IN 3/4 INCH HIGH LETTERS, THE CASTING IDENTIFICATION NUMBER (51).

## ON THE GRATE

1. ON THE UPPER SIDE OF THE GRATE IN 1 INCH HIGH LETTERS, THE INITIALS OR MONOGRAM OF THE FOUNDRY, THE YEAR MADE, THE CASTING IDENTIFICATION NUMBER (55) AND THE SERIAL NUMBER OF THE INDIVIDUAL CASTING.

# INLET COVER TYPE 57

LID-145 LBS., FRAME-204 LBS.

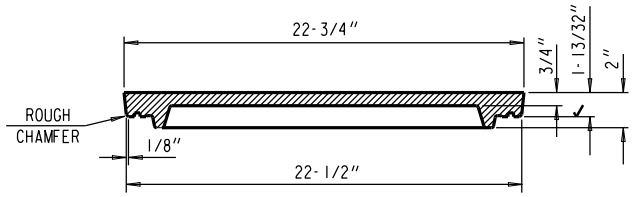


**SECTION A-A**

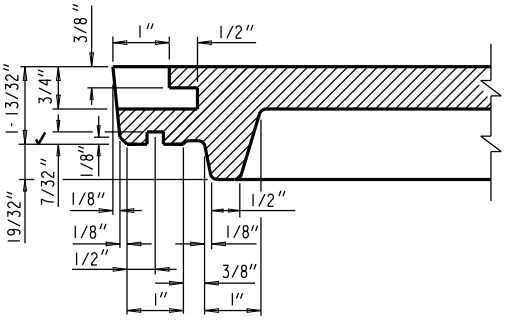


**SECTION B-B**

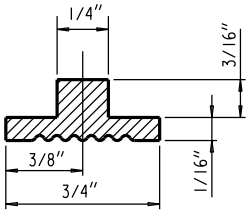


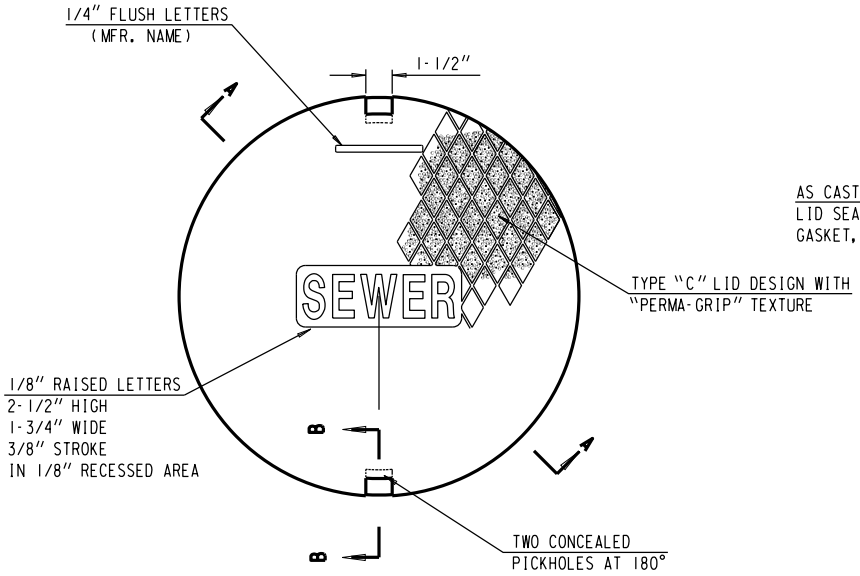


**TOP VIEW**

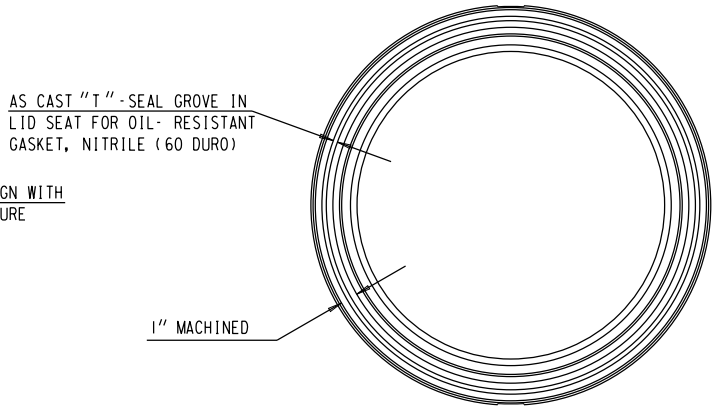


**BOTTOM VIEW**

## MANHOLE COVER - TYPE 58-A

**LID - 107 LBS.**

**NOTE:**

ALL CASTINGS SHALL BEAR THE FOLLOWING IDENTIFICATION MARKS IN THE FORM OF LEGIBLE LETTERS OR NUMERALS RAISED 1/8" HAVING A DIGIT OR LETTER HEIGHT OF ONE INCH ON LOWER FACE OF LID:

1. THE INITIALS OR MONOGRAM OF THE FOUNDRY.
2. THE CONTRACT NUMBER AND YEAR MADE.
3. THE CASTING IDENTIFICATION NUMBER.
4. THE SERIAL NUMBER OF THE INDIVIDUAL CASTING.

NOTE: ALL EXTERIOR EDGES SHALL BE GROUND.

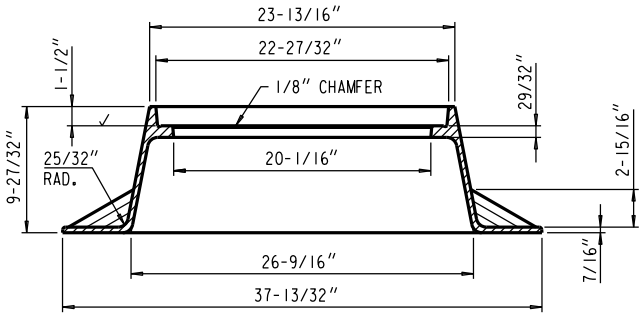


## MANHOLE FRAME - TYPE MS21

**FRAME - 182 LBS.**

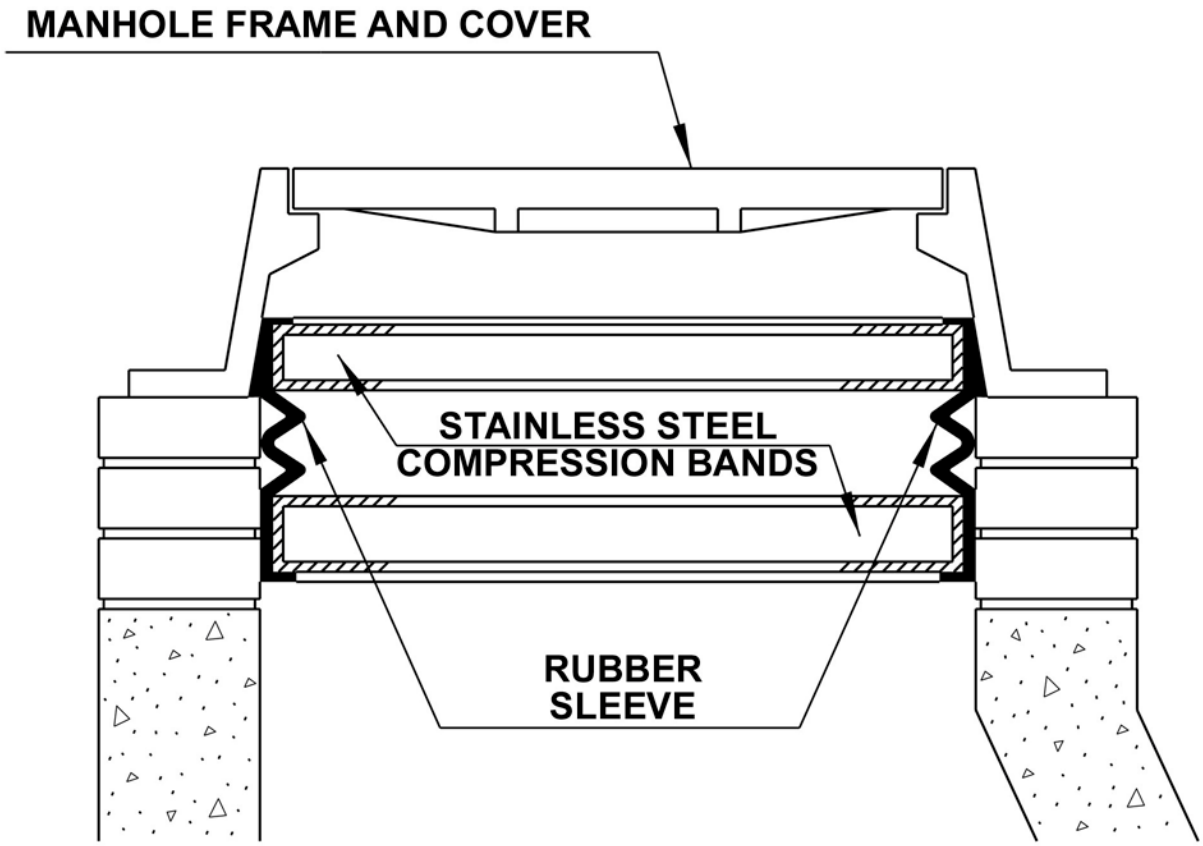


**INTERNAL SANITARY MANHOLE SEAL**

# Pivoted Turnbuckle Manhole Riser

## Manhole Riser

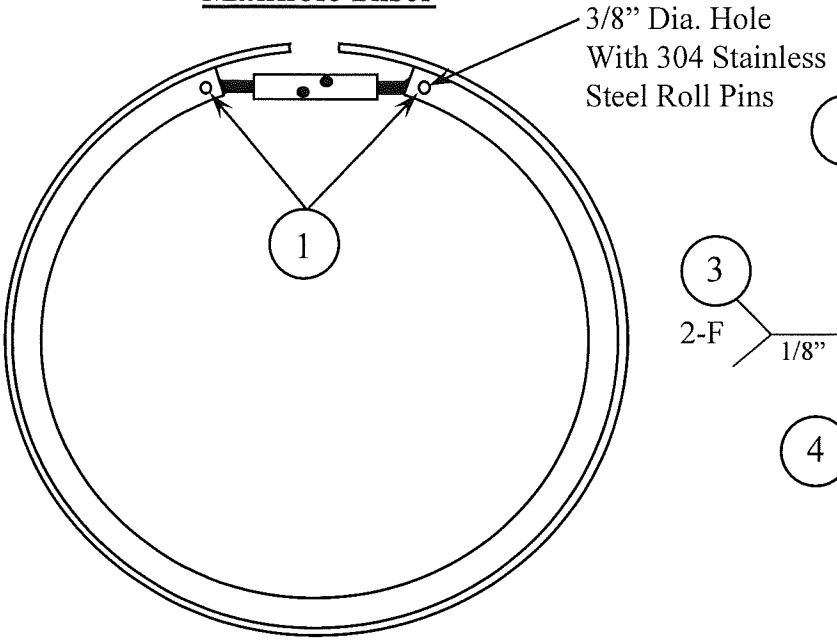


## Cross Section view

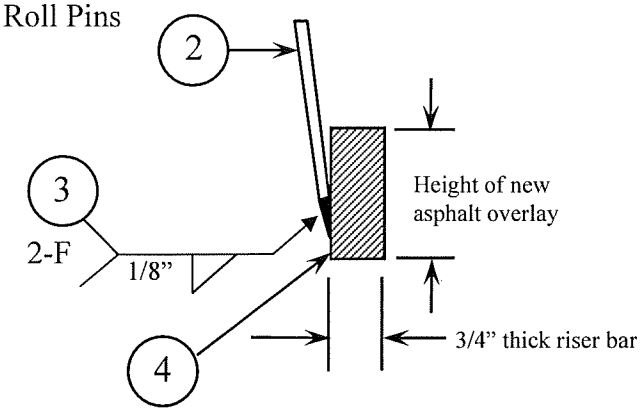


## Pivoted Turnbuckle Expanding Linkage

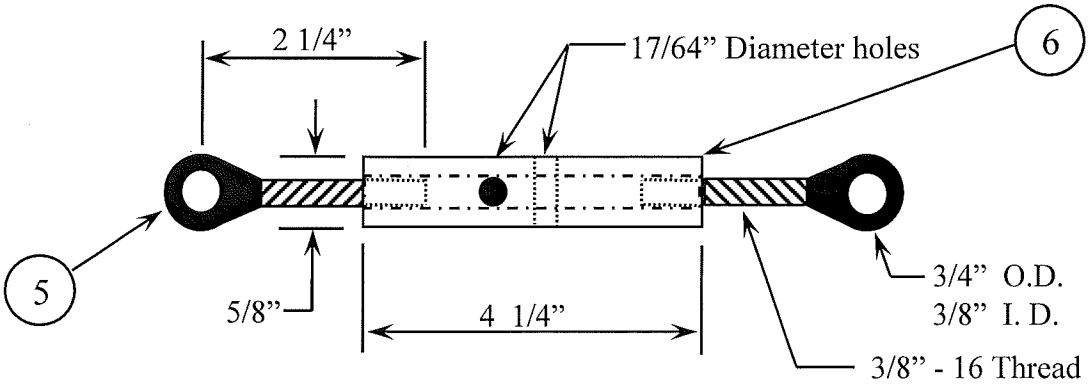


| Item Number | Item Description | Material Description | Tensile Yield | Tensile Ultimate |
|---|---|---|---|---|
| 1 | 3/8" Roll Pins | 304 Stainless Steel (14,000 LB Double Sheer Strength) | | |
| 2 | Steel Skirt | 12 or 10 gage A.I.S.I. 1020 Steel (A-36)<br>G-90 Galvanized | 33,000 P.S.I. | 60,000 P.S.I. |
| 3 | Weld | Full circumference welded except on clamp area<br>Lincoln Electric .045 71M Elite Outer Shield Flux Cored | 75,000 P.S.I. | 85,000 P.S.I. |
| 4 | 3/4" wide Riser Bar | Hot Rolled Steel A.I.S.I. 1020 (A-36) | 33,000 P.S.I. | 60,000 P.S.I. |
| 5 | Rod Ends | Forging A.I.S.I. C-1030 Steel Heat Treated BHN 240<br>Zinc Plated with Dichromate Finish | 70,000 P.S.I. | 92,000 P.S.I. |
| 6 | Turnbuckle | A.I.S.I. 12L14 Steel Cold Drawn<br>Zinc Plated with Yellow Dichromate Finish<br>dipped in Linebacker rust inhibitor | 60,200 P.S.I. | 78,300 P.S.I. |

| Fixed Extra Unit Prices for Paving | | |
|---|---|---|
| 2014 Program Year | | |
| | | |
| Item | Unit | Amount |
| **Removals** | | |
| Concrete Walk &/or Driveway Removal (100 sq. ft. or less) | sq. ft. | $ 1.00 |
| Concrete Curb &/or Gutter Removal (25 lin. ft. or less) | lin. ft. | $ 6.00 |
| Sawing 150 LF and LESS | lin. ft. | $ 3.50 |
| Sawing OVER 150 LF | lin. ft. | $ 2.00 |
| Sawing Full Depth 140 LF and LESS | lin. ft. | $ 4.00 |
| Sawing Full Depth OVER 140 LF | lin. ft. | $ 2.20 |
| Surface Removal (10 sq. yds.or less) | sq. yd. | $ 8.00 |
| Step Removal | lin. ft. | $ 11.50 |
| Tree Clearing (1 tree or 12 in. dia. or less) | in. dia. | $ 47.00 |
| Tree Grubbing (1 stump or 12 in. dia. or less) | in. dia. | $ 60.00 |
| Wall &/or Footing Removal (one cu. yd. minimum) | cu. yd. | $ 150.00 |
| Masonry Brick or Block | cu. yd. | $ 200.00 |
| Monolithic Concrete | cu yd.. | $ 230.00 |
| Reinforced Monolithic Concrete | cu. yd. | $ 250.00 |
| | | |
| **New Work** | | |
| Gravel Filling (20 tons or less) | ton | $ 16.50 |
| Crushed Stone (20 tons or less) | ton | $ 16.50 |
| VT Crushed Stone Driveway | ton | $ 29.00 |
| Topsoil | cu. Yd. | $ 35.00 |
| VT Concrete Base (less than 4 cu. yds.) | cu. yd. | $ 200.00 |
| Concrete Traffic Island | sq. ft. | $ 10.00 |
| Concrete Curb & Gutter (25 lin. ft. or less) | lin. ft. | $ 35.00 |
| VT Concrete Walk &/or Driveway | cu. yd. | $ 220.00 |
| 5" Concrete Walk (100 sq. ft. or less) | sq. ft. | $ 4.50 |
| 7" Concrete Driveway | sq. ft. | $ 5.25 |
| 8" Concrete Driveway | | 120% X BID |
| High Early Strength | | 110% X BID |
| Pavement Dowels | each | $ 10.00 |
| | | |
| **Miscellaneous** | | |
| Water Service Box Adjustment | each | $ 50.00 |
| Water Valve Box Adjustment | each | $ 60.00 |
| Cold Weather Protection - Pavement | sq. yd. | $ 1.50 |
| Cold Weather Protection - Curb | lin. ft. | $ 1.00 |
| Cold Weather Protection - Walk &/or Driveway | sq. ft. | $ 0.50 |

# PAYMENT MONITORING REQUIREMENTS

All Contractors awarded a contract valued at $25,000.00 or more are required to participate in training on the City of Milwaukee's B2GNow contract compliance software. Contractors must complete the training no later than 30 days after the date of contract award. Throughout the contract term, Contractors are required to regularly provide timely payment information in the City's contract compliance software.

*Please contact the Office of Small Business Development (OSBD) at 414-286-5553 should you have any questions or concerns regarding the training* or *reporting process.*

# CITY OF MILWAUKEE

# DEPARTMENT OF PUBLIC WORKS

## Erosion Control Implementation Plan (ECIP)

The Erosion Control Implementation Plan (ECIP) is an effort to conform to Chapter 290 of the Code of Ordinances. The ECIP shall be submitted to the City Engineer at least ten (10) working days prior to the start of any construction activity. NO construction activity may begin without an ECIP approved by the Department of Public Works.

| *FOR OFFICE USE ONLY* | | Application No._____ |
|---|---|---|
| Meets Technical Standards ☐<br>Date Application Received: _____<br>Fee Paid ☐ | Does Not Meet<br>Technical Standards ☐<br>Date All Information Received: _____<br>Check No. _____ | Reviewed by: _____ |

| | **Applicant (Contractor)** | | | **Erosion Control Consultant/Engineer** | | |
|---|---|---|---|---|---|---|
| **Name:** | | | | | | |
| **Address:** | | | | | | |
| **City/State/Zip:** | | | | | | |
| **Phone:** | | | | | | |
| **Relationship to Project:** | | | | | | |

| **Principal Contact Responsible for Installation, Maintenance and Removal of Erosion Control Measures:** | | | |
|---|---|---|---|
| **Name:** | | | |
| **Phone:** | | Fax: | |
| **Type of Construction:** | | | |
| **Proposed Construction Start Date:** | | | |

## ECIP REQUIREMENTS:

- Attach a description of Erosion Control devices and other Best Management Practices to be utilized on the project(s). The description should include, but not be limited to: type of products (i.e. *Geotex Fabric*), manufacturer's names and types of equipment (i.e. self-contained power broom).
- Attach the intended timetable and sequence of construction activities.
- Attach the intended timetable and sequence of Best Management Practices and devices to be implemented for erosion control.
- Attach a site plan showing approximate location(s) of erosion control devices. The site plan shall be at a scale of no less than 1"=100'. The plan shall also indicate the direction of runoff flow, the construction limits, temporary stockpiles and any other significant information.

Upon receipt of all required information, the ECIP will be reviewed within ten (10) working days and all involved parties will be notified as to whether or not the plan meets technical standards.

**Applicant's Signature:** _____ **Date:** _____

BLANK

**CITY OF MILWAUKEE**

**DEPARTMENT OF PUBLIC WORKS**

# EROSION CONTROL-SIMPLIFIED CHECKLIST

## SITE CHARACTERISTICS

The Contractor may utilize the City of Milwaukee plan set for this contract or provide a site diagram. The following information shall be included:

- The scale of the drawing (not less than 1”=100’)
- A north arrow (towards the top or to the right of the plan)
- The name of all project streets and streets abutting the project
- Approximate location of all existing and proposed drainage structures
- The direction of water runoff (flow arrows)
- The limits of construction
- The approximate location of all erosion control devices
- Areas where vegetation will be disturbed and re-established
- For non right-of-way projects, locate watershed areas of overland and concentrated flow. Include area sizes in acres and representative soil type of disturbed areas.

**Erosion Control Practices**

- Stormwater inlet protection:
  1. Any structure that is connected to the drainage system shall be protected from sediment entering the system.
  2. All stormwater inlets adjacent to and on the project site shall have type M inlet protection.
  3. If the frame of any stormwater inlet is removed or openings are in the masonry and stormwater may enter, the protection device should be changed to a type R.
  4. Any manholes that the frame is removed or openings are in the masonry and stormwater may enter shall have a type R erosion control.

- Temporary storage piles:
  1. Storage of erodable materials (i.e. gravel) should not be closer than 25 feet from a roadway or drainage way. If placed in the right-of-way, the stockpiles shall not be placed closer than 100 feet of an unprotected storm drain. Covering or surrounding with straw bales, silt fence or other measures, shall control erosion from stockpiles existing less than ten (10) days. Stockpiles existing longer than ten (10) days shall be seeded and mulched.

- Tracking:
  1. The project and surrounding roadways shall be kept free from materials that may enter the drainage system. Tracked roadways shall be cleaned immediately by means other than flushing with water.
  2. Tracking pads at ingress and egress points may be used to help control tracking of sediment onto roadway surfaces. The pads shall be constructed with a minimum of 2-inch size stone, 8-feet wide and a minimum of 50-feet long.
  3. The project roadways should be cleaned on a daily basis. Cleaning shall be done by means other than flushing with water.

- Location of sediment controls (i.e. silt fence, straw bales, waddles and other planned practices) that minimize the amount of sediment from leaving the site:
  1. The *"Wisconsin Construction Site Best Management Practices Handbook"* should be consulted.

- Dewatering:
  1. Water containing particles of 100 microns or greater shall be treated by use of temporary sediment basins or other devices designed to remove particles of 100 microns or greater.

- Vegetation:
  1. The construction activity should be staged as to limit the amount of time vegetation is stripped and re-established.

- Maintenance:
  1. A schedule for maintaining all erosion control devices is necessary to maximize the effort of limiting sediment from entering the drainage system.
  2. All devices should be checked and maintained after a rainfall event that totals 0.50 inches.
  3. All devices should be checked and maintained at least once a week.

# NOTICE TO CONTRACTORS

Effective immediately, the City of Milwaukee has adopted an ordinance relative to Prompt Payment as follows:

2.9.16.b) It is the City's policy to pay all invoices within 30 days. If the City does not make payment within 45 days after receipt of properly completed supporting payment and other required contract documentation, the City shall pay simple interest beginning with the 31st calendar day at the rate of one percent per month (unless the amount due is subject to a good-faith dispute and, before the 45th day of receipt, notice of the dispute is sent to the contractor by first-class mail, personally delivered, or sent in accordance with the notice provisions in the contract). If there are subcontractors, consistent with s.66.0135(3), Wis. Stats., the prime contractor must pay the subcontractors for satisfactory work within seven days of the contractor's receipt of payment from the City of Milwaukee, or seven days from receipt of a properly submitted and approved invoice from the subcontractor, whichever is later. If the contractor fails to make timely payment to a subcontractor, the contractor shall pay interest at the rate of 12 percent per year, compounded monthly, beginning with the 8th calendar day. Reference Common Council File No. 101137 adopted January 2011.

**City Of Milwaukee**

**Department Of Public Works**

**Small Business Enterprise (SBE) Provisions**

I. General

A. In accordance with Chapter 370 of the Milwaukee Code of Ordinances, Small Business Enterprise (SBE) participation is required in all contracting activities of the Department of Public Works. The ordinance requires that certified SBEs be utilized for 25% of the total dollars annually expended through prime contracts or subcontracts for Construction and the purchase of Goods and Services. For the purchase of Professional Services the requirement is 18%. To that end, the Commissioner of Public Works, as a contracting officer for the City, requires all bidders to utilize SBEs as subcontractors and material suppliers on all contracts. For this contract, bidders are required to achieve the minimum percent of SBE participation listed in the Acknowledgements page/section and/or the Official Notice document.

B. The prime contractor shall prepare and submit accurate and timely SBE utilization forms and reports to the Department of Public Works. The reports shall include, but not be limited to, Compliance Plan (Form A), monthly utilization (Form D), and SBE subcontractor payment certification (Form E) forms as directed. Failure to submit the required forms and reports to the Department of Public Works may result in disqualification of future bids, delay of payments, or other appropriate sanctions. Final contract payments will not be made until final SBE utilization reports and SBE subcontractor payment certification forms are on file with the Department of Public Works.

C. During the performance of this contract, the Department of Public Works reserves the right to conduct compliance reviews. If the contractor is not in compliance with the specifications, the Commissioner of Public Works will notify the contractor in writing of the corrective action that will bring the contractor into compliance. If the contractor fails or refuses to take corrective action as directed, the Department of Public Works may take one or more of the actions listed below:

1. Terminate or cancel the contract, in whole or in part.

2. Consider possible debarment of the prime contractor from bidding.

3. Withhold payments on the contract.

4. Any other remedy available to the City at law or in equity.

II. Definitions

A. "SMALL BUSINESS ENTERPRISE" (SBE) means a small business concern that is 51% owned, operated and controlled by one or more individuals who are a minority, woman and/or a small business owner (who is at an “economic disadvantage”). The individuals must have day-to-day operational and managerial control and interest in capital, financial risks and earnings commensurate with the percentage of their ownership.

B. "OWNED, OPERATED AND CONTROLLED" means a business which is one of the following:

1. A sole proprietorship legitimately owned and operated and controlled by a minority, women or an individual at a disadvantage as defined in Chapter 370.

2. A partnership or joint venture legitimately owned, operated and controlled by individuals who are minorities, women or individuals who are at a disadvantage and who own at least 51% of the beneficial ownership interests in the enterprise and who hold at least 51% of the voting interests of the enterprise eligible as defined in Chapter 370.

3. A corporation legitimately owned, operated and controlled by one or more individuals who are a minority, woman or individual at a disadvantage and who own at least 51% of the outstanding shares and who hold at least 51% of the voting interests of the corporation eligible as defined in Chapter 370.

III. SBE Utilization Requirements

A. Each prime contractor shall utilize SBE to the minimum percent listed in the Acknowledgements section/page and or Official Notice Document for this contract. Note that the prime contractors shall be required to attain SBE participation on their base bid excluding specified allowances, alternatives, and change orders. SBE commitments relative to contract award shall be based upon the approved SBE Compliance Plan (Form A).

B. The determination of SBE utilization shall be based on the following criteria:

1. The firms identified as SBE by the prime contractor on the SBE Compliance Plan (Form A) must be certified by the Office of Small Business Development prior to bid opening.

2. The prime contractor shall be credited for the entire expenditure to SBE firms only if all of the identified scope of work is performed directly by the certified SBE firm.

3. The prime contractor shall be credited for the entire expenditure to SBE manufacturer only if the manufacturer produces goods from raw materials or substantially alters them for resale. Only 20% of the SBE goals may be expended for SBE suppliers that do not manufacture products they supply.

4. The prime contractor shall count toward the SBE requirement only those payments to SBEs who perform a commercially-useful function in the actual performance of the contract. While that generally means an SBE should be engaged in direct contract work, a "commercially-useful function" may also include management of a third tier subcontractor. For example, while an SBE trucking subcontractor is always expected to perform some direct work on the project, in some cases it may become necessary to subcontract work out to one or more third tier subcontractors. If a third tier subcontractor is also an SBE, the full amount of the work performed by that third tier SBE can be counted toward SBE participation. However, if the third party subcontractor is not an SBE, the prime contractor may only count 20% of the amount being subcontracted to the third tier non-SBE subcontractor. SBEs are required to notify the Department of Public Works if they subcontract out work so that the Department can determine how much, if any, of the subcontracted work can be counted toward the SBE requirement. The Commissioner of Public Works will make the final determination and evaluation of whether the SBE is performing a commercially-useful function.

C. The contractor, by signing and submitting a bid, certifies that the contractor understands the provisions of Chapter 370 and knows of and intends to comply with them. The completed SBE Compliance Plan (Form A) must be submitted by the apparent low bid contractor within three (3) working days after the identification of the "low bidder."

1. Information on Form A shall include, but not be limited to:

a. The names, addresses, telephone numbers, SBE Certification designation and contact person names for the certified SBE contractors that will participate on the project as subcontractors or suppliers;

b. A description of the scope of work to be performed by the SBE on this project; and

c. The SBE contractor dollar value(s) and corresponding percentages that the dollar values represent of the total contract amount.

2. Listing an SBE on the Compliance Plan (Form A) shall constitute a representation that the contractor has communicated directly with the SBEs listed. If awarded the contract, the bidder will enter into a subcontract with the firm for the portion of the work listed.

3. SBE participation is an element of bid responsiveness. Failure to meet the specified SBE requirements will render the bid unresponsive. The contract may then be awarded to the next apparent low bidder. Under certain circumstances, failure to meet specified SBE requirements after submission of an apparent low bid may result in surrender of the bidder's bid bond.

4. Only SBEs that have been certified by the Office of Small Business Development may be listed on the SBE Compliance Plan (Form A) and counted towards the percentage requirements on this project. A listing of the currently City certified SBE firms is maintained at:

Office of Small Business Development
200 East Wells Street
City Hall, Room 606
Milwaukee, Wisconsin 53202
Phone: (414) 286-5553
FAX: (414) 286-8752
www.milwaukee.gov/osbd

D. After execution of the contract, if for any reason an SBE cannot perform, the prime contractor shall contact the Commissioner of Public Works for approval to substitute another certified SBE firm. The prime contractor must submit a written request for substitution which specifies the reasons for the request. Approval must be obtained prior to making substitutions. Any difference in the cost occasioned by such substitution shall be borne by the prime contractor. If the prime contractor cannot find another certified firm to do the work at a comparable price, a non-SBE firm may be substituted with the approval of the Commissioner of Public Works.

E. If the prime contractor has a problem in meeting the SBE requirements or if any other problems relative to SBE(s) arise during the completion of this project, the prime contractor shall immediately contact the Commissioner of Public Works.

F. Certification from programs other than the Office of Small Business Development is neither accepted by the City of Milwaukee nor do they have any bearing whatsoever on the eligibility criteria established by the City of Milwaukee.

G. Right to Appeal.

All contracts awarded under ss.7-14-2 and 7-22 of the City Charter shall be awarded by the Commissioner of Public Works to the lowest responsible bidder determined in accordance with applicable City ordinances for participation of the Office of Small Business Development. Following the opening of any bid involving a determination under applicable City ordinances for participation of SBE, the Commissioner of Public Works shall make a written recommendation as to the lowest responsible bidder and notify all bidders by publication in an official City newspaper as to the content of the written recommendation. Any bidder who objects to the recommendation on grounds of determinations made under applicable City ordinances for participation of SBE may appeal the recommendation on such grounds by filing a written appeal with the Commissioner of Public Works within five (5) working days of the date of publication. The appeal shall state the specific objection to the recommendation, include supporting documentation and specify an alternative recommendation. The Commissioner of Public Works shall schedule a hearing before an appeals committee consisting of the Chair of the Economic Development Committee or the Chair's designee, a member of the Economic Development Committee selected by the Chair and the Director of the Office of Small Business Development to be held within five (5) days of receipt of the appeal. The Committee shall have authority by majority vote to affirm or set aside the recommendation of the Commissioner of Public Works and its decision in this regard shall be final. In the event a timely appeal, meeting the requirements above is not filed, or the Committee affirms

the Commissioner's recommendation following a timely appeal, meeting the requirements above, the Commissioner shall make an award in accordance with the recommendation.

H. **Percentage of Required SBE Participation**

Construction 25%
The Purchase of Goods and Services 25%
The Purchase of Professional Services 18%

BLANK

**Form D**
**(Rev. 5/2013)**

**DEPARTMENT OF PUBLIC WORKS**
**SMALL BUSINESS ENTERPRISE PROGRAM**

## Form D –SBE MONTHLY REPORT

**(1) Report for the Month of _____20_____ (Final: yes ___ no ___ )**

(2)Prime Contractor/Firm_____

(3)Full Address & Phone Number:_____

(4)Description of work/service performed and/or material supplied_____

(5) DPW Contract No. **C**_____ (6) Official Notice No. / Project Number _____

7) Start Date: _____ (8) Prime Contractor's Total $: _____

(9) Completion Date: _____ (10) Prime Contractor paid to date $: _____

(11) Small Business %_____ and Small Business $ amount _____

List all SBE subcontractor firm(s) utilized in connection with the above contract, either as service performed and/or supplier for the month. This form shall be signed and returned. **If this represents the final report, be sure to attach SBE Payment Certification Form (Form E) for each sub listed.**

| NAME OF SBE FIRM(s) | WORK/SERVICE PERFORMED or MATERIAL SUPPLIED | AMOUNT PAID FOR THE MONTH | TOTAL $ PAID TO DATE |
|---|---|---|---|
| | | | |
| | | | |
| | | | |
| | | | |
| | | | |
| | | | |
| **TOTAL PAID TO SBE(s)** | | | |

I/we hereby certify that I/we have read the above and approved this information to be precise and confirmed.

(12) Report Prepared By: _____
(Name) (Title) (Phone Number)

(13) Authorized Signature : _____
(Name) (Title)

(14) Date_____

Note: This form should be submitted no later than the **20th of every month** to **DEPARTMENT of PUBLIC WORKS CONTRACT ADMINISTRATION, Room 506, Municipal Building, 841 North Broadway, Milwaukee, WI 53202.**

# DIRECTIONS FOR SBE MONTHLY REPORT (FORM D)

1. List the month and year that the report is being submitted for. **Note: If this is the final report, check yes and submit Form E Subcontractor Payment Certification Form.**
2. Prime contractor's or firm's registered company name.
3. List full registered business address to include city/state, zip code and telephone number.
4. Brief description service performed and/or material supplied on this contract.
5. List the DPW Contract Number, as represented on the contract document.
6. List the official notice & project number as represented on the front page of the contract.
7. List the start date of the project.
8. List the total dollars awarded to the prime contractor.
9. List the completion date of the project.
10. Total dollars paid to Prime contractor to date.
11. List SBE percentage **REQUIRED** on this project and the SBE dollar amount.
12. List the name, title and phone number of the individual who prepared the report.
13. Provide the authorized signature and title of the individual who approves the report.
14. List the date that the report is completed.

**THIS REPORT IS DUE THE 20TH OF EVERY MONTH FOR THE PREVIOUS MONTH'S ACTIVITY. FAILURE TO RETURN THIS FORM BY THE SPECIFIED TIME MAY CAUSE A DELAY IN PAYMENTS.**

**FORM E**
(Rev.05/2013)

# City Of Milwaukee

# Department Of Public Works

## Small Business Enterprise Program (SBE)
## Subcontractor Payment Certification

(This form must be completed by the SBE subcontractor and attached to the Prime Contractor's Final SBE Form D Report)

**-PRIME CONTRACTOR & SUBCONTRACTOR EXECUTE-**

**Section A** - **SBE** Company Officer & Prime Contractor Complete **For Payment That Has Been Received**

**SBE** Subcontractor Name : _____

Official Notice No.: _____Project No. _____ **DPW Contract No**. **C**_____

I hereby certify that I have received $ _____ for subcontract work on the above project.

Dated: _____Signature of **SBE** Subcontractor: _____

Printed Name & Title of **Certified SBE** Subcontractor:

_____

Acknowledged by **Prime** Contractor Signature: _____

Printed name & Title of **Prime** Contractor: _____

**********

**-PRIME CONTRACTOR & SUBCONTRACTOR EXECUTE-**

**Section B** – Prime contractor and SBE Company Officers Complete if **Full Payment Has Not Been Made to the SBE Subcontractor and a balance remains to be paid.**

**Prime** Contractor: _____

**SBE** Subcontractor: _____

Official Notice No.: _____Project No. _____ **DPW Contract No**. **C**_____

I hereby certify that I will pay $_____ to _____
for subcontract work on the above project. (Name of SBE Firm)

Dated: _____ Signature of **Prime** Contractor: _____

Printed Name & Title of **Prime** Contractor: _____

Acknowledged by: **SBE** Subcontractor Signature: _____

Printed name & Title of **SBE** Subcontractor: _____

**City of Milwaukee**
**Department of Public Works**

## Residents Preference Program Provisions

I. General

A. In accordance with Chapter 309 of the Milwaukee Code of Ordinances, residents preference hiring is required for all construction contracting activities of the Department of Public Works. The ordinance requires that 40% of WORKER HOURS worked on a DPW contract be performed by UNEMPLOYED or UNDEREMPLOYED RESIDENTS of the City, except in special cases where the Commissioner of Public Works determines there is sufficient reason to impose lesser levels of participation. Further, the Commissioner of Public Works may increase the percentage of RESIDENT worker participation to more than 40% on specific contracts. For this contract, bidders are required to show that the minimum percent of WORKER HOURS, as listed in the acknowledgements section/page and/or the Official Notice document will be performed by UNEMPLOYED or UNDEREMPLOYED RESIDENTS of the City. Up to one-third of required worker hours may be achieved by documenting the use of UNEMPLOYED or UNDEREMPLOYED RESIDENTS on projects undertaken by the contractor where such compliance is not required, or by hiring UNEMPLOYED or UNDEREMPLOYED RESIDENTS on a full-time permanent basis for non-construction job categories connected to the project. Such adjustments must be proposed in an affidavit on a form provided by the department setting forth the facts upon which the request for adjustment is based.

B. The contractor, prior to commencing work, shall submit an affidavit (Form I) for proof of residency for all employees utilized by the contractor and subcontractors to meet the Residents Preference Program requirements, stating that each employee is either UNEMPLOYED or UNDEREMPLOYED and is a RESIDENT of the City. The contractor shall prepare and submit accurate and timely resident utilization forms and reports to the Department of Public Works. Time Reports shall be submitted within ten (10) days following completion of work, or every three months, whichever comes first. The reports shall identify the name, address, race, gender, work classification, wage rates and hours worked of all employees utilized on the contract by the contractor and all subcontractors. Failure to submit the required forms and reports to the Department of Public Works may result in disqualification of future bids, delay of payments, or other appropriate sanctions. Final contract payments will not be made until the summary of hours worked on the back of the Prime Contractor's Affidavit of Compliance is completed and on file with the Department of Public Works. Forms shall be submitted to DPW, Room 506, Municipal Building, 841 North Broadway, Milwaukee, WI 53202.

C. During the performance of this contract the Department of Public Works reserves the right to conduct compliance reviews. If the contractor is not in compliance with the specifications, the Commissioner of Public Works will notify the contractor in writing of the corrective action that will bring the contractor into compliance. If the contractor fails or refuses to take corrective action as directed, or if the contractor, prime or sub, submits any documents which contain any false, misleading, or fraudulent information, or if the contractor or subcontractor fail to comply with this ordinance, the Department of Public Works may take one or more of the actions listed below.

1. Withhold payments on the contract.

2. Terminate or cancel the contract, in whole or in part.

3. Consider possible debarment of the contractor from bidding for a period of up to two years.
4. Any other remedy available to the City at law or in equity.

D. The penalty for any person, firm, or corporation knowingly engaging in fraud, misrepresentation, or in any attempt directly or indirectly, to evade the provisions of this ordinance by providing false, misleading, or fraudulent information shall, upon conviction, forfeit not less than $1,000 or more than $5,000 together with the costs of prosecution and, upon default of payment, shall be imprisoned in the county jail or house of correction not to exceed 90 days, or until the forfeiture costs are paid.

II. Definitions

A. RESIDENT – A person who maintains his or her place of permanent abode in the City of Milwaukee. Domiciliary intent is required to establish that a person is maintaining his or her place of permanent

abode in the City. Mere ownership of real property is not sufficient to establish domiciliary intent. Evidence of domiciliary intent includes, without limitations, the location where a person votes, pays personal income taxes, or obtains a driver's license.

B. UNEMPLOYED or UNDEREMPLOYED – a RESIDENT that has worked less than 1,200 hours in the preceding 12 months or has not worked in the preceding 30 days or, regardless of employment status, has household income at or below the federal poverty guidelines as adjusted by the Wisconsin Department of Public Instruction to define eligibility for reduced lunch in public schools. A RESIDENT will continue to qualify as unemployed or underemployed for five (5) years from the date he or she first participates in a contract under Chapter 309. If a RESIDENT becomes an apprentice for a contractor or becomes a participant in an on-the-job training program as determined by the City immediately after or in the course of performing on a particular construction contract, he or she shall continue to qualify as unemployed or underemployed for a period not exceeding 5 years from the date the person became an apprentice or participant in such on-the-job training program.

C. WORKER HOURS – means the total hours worked on a construction contract by skilled and unskilled construction trade workers, whether those workers are employed by the contractor or any subcontractor. In determining the total worker hours to be furnished at a construction site, the number of hours devoted to all tasks customarily performed on a construction site shall be included, whether or not such tasks are performed on the construction site. "Worker hours" includes work performed by persons filling apprenticeships and participating in on-the-job training programs and excludes the number of hours of work performed by all non-Wisconsin residents.

III. Residency Utilization Requirements

A. The contractor shall utilize UNEMPLOYED or UNDEREMPLOYED RESIDENTS of the City in a minimum amount equal to the percentage of the WORKER HOURS as stated in paragraph IA above.

B. The contractor, by signing and submitting a bid, certifies that it understands the provisions of Chapter 309 and knows of and intends to comply with them, and shall ensure that all subcontractors are also informed.

C. The contractor shall maintain, and shall ensure that all subcontractors maintain, personnel records listing the name, address, race and gender of all employees utilized for this contract and any records demonstrating that the employees utilized by the contractor in meeting the residency requirements are actual residents of the City. These records shall be maintained for seven (7) years after the contractor has received final payment under the contract and shall be made available to the Commissioner of Public Works upon reasonable notice.

D. Compliance with these residency requirements is an element of bid responsiveness. Failure to meet the specified residency requirements will render the bid unresponsive, and the Commissioner of Public Works may then recommend the award to the next apparent low bidder.

E. The City recognizes the following organization which can be contacted for access to trained or qualified workers from the City. Other organizations or sources of qualified RESIDENTS can be used at the bidder's discretion.

Big Step, located at 3841 West Wisconsin Avenue, Milwaukee, WI 53208. Telephone 414-342-9787, fax number 414-342-3546.

F. If the prime contractor has problems in meeting the residency requirements or if any other problems relative to residency participation arise during the completion of this project, the prime contractor shall immediately contact the Commissioner of Public Works.

G. Right to Appeal – All contracts awarded under ss. 7-14-2 and 7-22 of the City Charter shall be awarded by the Commissioner of Public Works to the lowest responsible bidder determined in accordance with any applicable City ordinances relating to the participation of Small Business Enterprise Programs or requiring participation of City RESIDENTS. Following the opening of any bid where the Commissioner has considered compliance with such City ordinances, the Commissioner shall publish in an official City newspaper his or her determination as to the lowest responsible bidder. Any bidder who objects to the determination based on the consideration of such City Ordinances, may appeal the recommendation by filing a written appeal with the Commissioner within five (5) working days of the date of publication. The appeal shall state the specific objection to the determination, including supporting documentation, and specify an alternative determination. Any appeals that do not conform to this section shall not be

considered. The Commissioner shall schedule a hearing before the Public Works Contract Appeals Committee which shall be comprised of the chair of the Economic Development Committee or his or her designee and a member of the Economic Development Committee selected by the chair and the Director of Administration or his or her designee to be held within five days of receipt of the appeal. The Public Works Contract Appeals Committee shall have the authority by majority vote to affirm or set aside the determination of the Commissioner and their decision in this regard shall be final. In the event that a timely appeal meeting the requirements of this paragraph is not filed, or the Committee affirms the Commissioner's determination following a timely appeal, the Commissioner shall make an award in accordance with his or her determination.

**FORM I (Rev.2015)**

_____
Contractor Name

_____
DPW Contract No.

# Employee Affidavit

## Residents Preference Program

I certify that I maintain my permanent residence in the City of Milwaukee and that I vote, pay personal income tax, obtain my driver's license, etc. at _____,Milwaukee, WI _____
(Address) (Zip Code)

**Residency status:**

To verify my resident status, attached please find the following (check ***two***)

_____ Copy of my voter's certification form.
_____ Copy of my last year's Form 1040.
_____ Copy of my current Wisconsin Driver's License or State ID.
_____ Copy of Other (i.e., Utility bill, Lease, etc.)

## AND

**Unemployment status:**

I certify that I have been unemployed as follows: (Check those that apply)

_____ I have worked less than 1,200 hours in the preceding 12 months.
_____ I have not worked in the preceding 30 days.

## OR

**Underemployed status:**

_____I certify that based on the attached chart (Income Eligibility Guidelines), I am underemployed.

.

_____
Print Name

_____
Sign Name

_____
Social Security Number

_____
Home Telephone Number

Subscribed and sworn to me this _____day

Of _____, _____ A.D.

My Commission Expires _____.

_____
Notary Public Milwaukee County

please return completed form and required attachments to:
Barbara Trible | DPW Contracts Office | 841 N Broadway – Room 506 | Milwaukee, WI 53202

## Income Eligibility Guidelines
## July 1, 2014 to June 30, 2015

Eligibility determination is based on household size and income.
Total income must be *at* or *below* the amounts in this table.

| Household Size | Yearly | Monthly | Twice per month | Every 2 weeks | Weekly |
|---|---|---|---|---|---|
| 1 | **21,590** | **1,800** | **900** | **831** | **416** |
| 2 | **29,101** | **2,426** | **1,213** | **1,120** | **560** |
| 3 | **36,612** | **3,051** | **1,526** | **1,409** | **705** |
| 4 | **44,123** | **3,677** | **1,839** | **1,698** | **849** |
| 5 | **51,634** | **4,303** | **2,152** | **1,986** | **993** |
| 6 | **59,145** | **4,929** | **2,465** | **2,275** | **1,138** |
| 7 | **66,656** | **5,555** | **2,778** | **2,564** | **1,282** |
| 8 | **74,167** | **6,181** | **3,091** | **2,853** | **1,427** |
| 9 | **81,678** | **6,807** | **3,404** | **3,142** | **1,572** |
| 10 | **89,189** | **7,433** | **3,717** | **3,431** | **1,717** |
| 11 | **96,700** | **8,059** | **4,030** | **3,720** | **1,862** |
| 12 | **104,211** | **8,685** | **4,343** | **4,009** | **2,007** |
| For Each Additional Household Member Add | **7,511** | **626** | **313** | **289** | **145** |

Source: Wisconsin Department of Public Instruction

**City of Milwaukee**

**Department of Public Works**

**Apprenticeship Provisions**

I. General:

A. In accordance with Section 309-38 of the Milwaukee Code of Ordinances, apprenticeship requirements will be specified on all Department of Public Works construction contracts, where appropriate, which are in excess of $100,000. The ordinance requires that a contractor employ apprentices in the performance of the contract and of all subcontracts entered into by the contractor in accordance with the maximum ratio of apprentices to journeymen as established by the Wisconsin Department of Industry, Labor, and Human Relations. Fair consideration must be given to minorities and women. For this contract, bidders are required to utilize apprentice(s) from _____ of the following trade(s):

(See "Ratio of Apprentices to Journeymen").

B. The contractor shall prepare and submit an accurate and timely Apprenticeship Utilization Form (Form F) and other reports to the Department of Public Works. The Apprenticeship Utilization Form shall be returned with the executed contract and shall specifically identify the apprentice(s) that will work on the project. The Contractor Time Report shall be submitted within ten (10) days following completion of work or every three (3) months, whichever comes first. Failure to submit the required forms and reports to the Department of Public Works may result in disqualification of future bids, delay of payments, or other appropriate sanctions. Final contract payments will not be made until all apprenticeship related reports are on file with the Department of Public Works.

C. During the performance of this contract the Department of Public Works reserves the right to conduct compliance reviews. If the contractor is not in compliance with the specifications, the Commissioner of Public Works will notify the contractor in writing of the corrective action that will bring the contractor into compliance. If the contractor fails or refuses to take corrective action as directed, or if the contractor, prime or sub, submits any documents which contain any false, misleading, or fraudulent information, or if the contractor or subcontractor fail to comply with this ordinance, the Department of Public Works may take one or more of the actions listed below:

1. Withhold payments on the contract.

2. Terminate, suspend, or cancel the contract, in whole or in part.

3. After due process, consider debarment of the contractor from bidding for a two-year period.

4. Any other remedy available to the City at law or in equity.

II. Definitions:

A. Apprentice - a person, 16 years of age or over, who shall enter into a written contract of service where he or she is to receive from or through his or her employer in consideration for his or her services, in whole or in part, instruction in any trade, craft, or business. Apprenticeship agreements shall be governed by Ch. 106, Wis. Stats.

B. Construction - Means either new construction work or repair work on any roads, bridges, sewers, streets, alleys, buildings, or any other public works.

III. Apprenticeship Utilization Requirements:

A. The contractor shall utilize apprentices in a minimum amount equal to that stated in paragraph I-A above.

B. The contractor, by signing and submitting a bid, certifies that the contractor understands the provisions of Chapter 309 and knows of and intends to comply with them.

C. The contractor shall maintain personnel records listing the names and addresses of its employees utilized for this contract in meeting apprenticeship requirements. These records shall be maintained for three (3) years after the contractor has received final payment under the contract and shall be made available to the Commissioner of Public Works upon reasonable notice.

D. Compliance with these apprenticeship requirements is an element of bid responsiveness. Failure to meet the specified apprenticeship requirements will render the bid unresponsive, and the Commissioner of Public Works may then recommend award to the next apparent low bidder.

E. If the prime contractor has problems in meeting the apprenticeship requirements or if any other problems relative to apprenticeship participation arise during the completion of this project, the prime contractor shall immediately contact the Commissioner of Public Works.

**FORM F**

## PROPOSED RESIDENT/APPRENTICE UTILIZATION FORM

This is a preliminary statement of proposed workforce needs where known

Official Notice # _____ Project # _____ Contract # _____

Contractor_____

| JOB CATEGORY | PROPOSED # OF HOURS ON THIS PROJECT | PROPOSED # OF HOURS FOR SPECIAL IMPACT AREA RESIDENTS | PROPOSED # OF HOURS FOR ALL OTHER WORKERS |
|---|---|---|---|
| **TRUCK DRIVERS:** | | ( %) | ( %) |
| **OPERATING ENGINEERS:** | | | |
| *Journeymen* | | ( %) | ( %) |
| *Apprentices* | | ( %) | ( %) |
| **SKILLED TRADES: (Specify)** | | | |
| *Journeymen* | | ( %) | ( %) |
| *Apprentices* | | ( %) | ( %) |
| *Trainees* | | ( %) | ( %) |
| **LABORERS: (Specify type)** | | | |
| | | ( %) | ( %) |
| | | ( %) | ( %) |
| | | ( %) | ( %) |
| | | ( %) | ( %) |
| | | ( %) | ( %) |

NAME and ADDRESS of Target Area Residents:

_____ _____
_____ _____
_____ _____

_____ _____ _____
_____ _____ _____
_____ _____ _____

_____ _____ _____
_____ _____ _____
_____ _____ _____

NAME and ADDRESS of Apprentices:

_____ _____
_____ _____
_____ _____

_____ _____ _____
_____ _____ _____
_____ _____ _____

(REV. 10/16/02)

# PREVAILING WAGE NOTICE

**ALL PREVAILING WAGE CONTRACTS AWARDED BY THE DEPARTMENT OF PUBLIC WORKS AFTER THE FIRST OF ANY CALENDAR YEAR ARE SUBJECT TO THE NEW PREVAILING WAGE SCHEDULE THAT GOES INTO EFFECT ON JANUARY 2ND. THE PREVAILING WAGE SCHEDULE INCLUDED IN BID PACKAGES ISSUED LATE IN THE PRECEDING YEAR MAY NOT BE TOTALLY ACCURATE FOR CONTRACTS OFFICIALLY AWARDED AFTER THE TURN OF THE YEAR. THE NEW PREVAILING WAGE WILL BE INCORPORATED INTO THE CONTRACT WHEN AWARDED.**

**BIDDERS ARE REQUIRED TO UTILIZE THE WISCONSIN DEPARTMENT OF WORKFORCE DEVELOPMENT'S "DICTIONARY OF OCCUPATIONAL CLASSIFICATIONS AND WORK DESCRIPTIONS" TO DETERMINE THE APPROPRIATE JOB CLASSIFICATIONS AND WAGE RATES FOR THEIR EMPLOYEES PRIOR TO BIDDING. THIS DOCUMENT CAN BE FOUND ON THEIR WEBSITE AT DWD.WISCONSIN.GOV; TYPE "DICTIONARY" IN THE SEARCH BOX.**

**Rev. 06/07**

**PREVAILING WAGE RATE DETERMINATION**
Issued by the State of Wisconsin
Department of Workforce Development
Pursuant to s. 66.0903, Wis. Stats.
Issued On: 01/07/2015
Last Amended On: 01/29/2015

| | |
|---|---|
| **DETERMINATION NUMBER:** | 201500024 |
| **EXPIRATION DATE:** | Prime Contracts MUST Be Awarded or Negotiated On Or Before 12/31/2015. If NOT, You MUST Reapply. |
| **PROJECT NAME:** | ALL PUBLIC WORKS PROJECTS UNDER SEC. 66.0903, STATS-CITY OF MILWAUKEE |
| **PROJECT LOCATION:** | MILWAUKEE CITY, MILWAUKEE COUNTY, WI |
| **CONTRACTING AGENCY:** | CITY OF MILWAUKEE-DEPT OF PUBLIC WORKS |

| | |
|---|---|
| **CLASSIFICATION:** | Contractors are responsible for correctly classifying their workers. Either call the Department of Workforce Development (DWD) with trade or classification questions or consult DWD's Dictionary of Occupational Classifications & Work Descriptions on the DWD website at: dwd.wisconsin.gov/er/prevailing_wage_rate/Dictionary/dictionary_main.htm. |
| **OVERTIME:** | Time and one-half must be paid for all hours worked:<br>- over 10 hours per day on prevailing wage projects<br>- over 40 hours per calendar week<br>- Saturday and Sunday<br>- on all of the following holidays: January 1; the last Monday in May; July 4; the 1st Monday in September; the 4th Thursday in November; December 25;<br>- The day before if January 1, July 4 or December 25 falls on a Saturday;<br>- The day following if January 1, July 4 or December 25 falls on a Sunday.<br>Apply the time and one-half overtime calculation to whichever is higher between the Hourly Basic Rate listed on this project determination or the employee's regular hourly rate of pay. Add any applicable Premium or DOT Premium to the Hourly Basic Rate before calculating overtime.<br><br>A DOT Premium (discussed below) may supersede this time and one-half requirement. |
| **FUTURE INCREASE:** | When a specific trade or occupation requires a future increase, you MUST add the full hourly increase to the "TOTAL" on the effective date(s) indicated for the specific trade or occupation. |
| **PREMIUM PAY:** | If indicated for a specific trade or occupation, the full amount of such pay MUST be added to the "HOURLY BASIC RATE OF PAY" indicated for such trade or occupation, whevenever such pay is applicable. |
| **DOT PREMIUM:** | This premium only applies to highway and bridge projects owned by the Wisconsin Department of Transportation and to the project type heading "Airport Pavement or State Highway Construction." DO NOT apply the premium calculation under any other project type on this determination. |
| **APPRENTICES:** | Pay apprentices a percentage of the applicable journeyperson's hourly basic rate of pay and hourly fringe benefit contributions specified in this determination. Obtain the appropriate percentage from each apprentice's contract or indenture. |
| **SUBJOURNEY:** | Subjourney wage rates may be available for some of the trades or occupations indicated below with the exception of laborers, truck drivers and heavy equipment operators. Any employer interested in using a subjourney classification on this project MUST complete Form ERD-10880 and request the applicable wage rate from the Department of Workforce Development PRIOR to using the subjourney worker on this project. |

This document **MUST BE POSTED** by the **CONTRACTING AGENCY** in at least one conspicuous and easily accessible place **on the site of the project** . A local governmental unit may post this document at the place normally used to post public notices if there is no common site on the project. This document **MUST** remain posted during the entire time any worker is employed on the project and **MUST** be physically incorporated into the specifications and all contracts and subcontracts. If you have any questions, please write to the Equal Rights Division, Labor Standards Bureau, P.O. Box 8928, Madison, Wisconsin 53708 or call (608) 266-6861.

---

**The following statutory provisions apply to local governmental unit projects of public works and are set forth below pursuant to the requirements of s. 66.0903(8), Stats.**

**s. 66.0903 (1) (f) & s. 103.49 (1) (c) "PREVAILING HOURS OF LABOR"** for any trade or occupation in any area means 10 hours per day and 40 hours per week and may not include any hours worked on a Saturday or Sunday or on any of the following holidays:

1. January 1.
2. The last Monday in May.
3. July 4.
4. The first Monday in September.
5. The 4th Thursday in November.
6. December 25.
7. The day before if January 1, July 4 or December 25 falls on a Saturday.
8. The day following if January 1, July 4 or December 25 falls on a Sunday.

**s. 66.0903 (10) RECORDS; INSPECTION; ENFORCEMENT.**
(a) Each contractor, subcontractor, or contractor's or subcontractor's agent performing work on a project of public works that is subject to this section shall keep full and accurate records clearly indicating the name and trade or occupation of every person performing the work described in sub. (4) and an accurate record of the number of hours worked by each of those persons and the actual wages paid for the hours worked.

**s. 66.0903 (11) LIABILITY AND PENALTIES.**
(a) 1. Any contractor, subcontractor, or contractor's or subcontractor's agent who fails to pay the prevailing wage rate determined by the department under sub. (3) or who pays less than 1.5 times the hourly basic rate of pay for all hours worked in excess of the prevailing hours of labor is liable to any affected employee in the amount of his or her unpaid wages or his or her unpaid overtime compensation and in an additional amount as liquidated damages as provided under subd. 2., 3., whichever is applicable.
2. If the department determines upon inspection under sub. (10) (b) or (c) that a contractor, subcontractor, or contractor's or subcontractor's agent has failed to pay the prevailing wage rate determined by the department under sub. (3) or has paid less than 1.5 times the hourly basic rate of pay for all hours worked in excess of the prevailing hours of labor, the department shall order the contractor to pay to any affected employee the amount of his or her unpaid wages or his or her unpaid overtime compensation and an additional amount equal to 100 percent of the amount of those unpaid wages or that unpaid overtime compensation as liquidated damages within a period specified by the department in the order.
3. In addition to or in lieu of recovering the liability specified in subd. 1. as provided in subd. 2., any employee for and in behalf of that employee and other employees similarly situated may commence an action to recover that liability in any court of competent jurisdiction. If the court finds that a contractor, subcontractor, or contractor's or subcontractor's agent has failed to pay the prevailing wage rate determined by the department under sub. (3) or has paid less than 1.5 times the hourly basic rate of pay for all hours worked in excess of the prevailing hours of labor, the court shall order the contractor, subcontractor, or agent to pay to any affected employee the amount of his or her unpaid wages or his or her unpaid overtime compensation and an additional amount equal to 100 percent of the amount of those unpaid wages or that unpaid overtime compensation as liquidated damages.
5. No employee may be a party plaintiff to an action under subd. 3. unless the employee consents in writing to become a party and the consent is filed in the court in which the action is brought. Notwithstanding s. 814.04 (1), the court shall, in addition to any judgment awarded to the plaintiff, allow reasonable attorney fees and costs to be paid by the defendant.

## BUILDING OR HEAVY CONSTRUCTION

**Includes sheltered enclosures with walk-in access for the purpose of housing persons, employees, machinery, equipment or supplies and non-sheltered work such as canals, dams, dikes, reservoirs, storage tanks, etc. A sheltered enclosure need not be "habitable" in order to be considered a building. The installation of machinery and/or equipment, both above and below grade level, does not change a project's character as a building. On-site grading, utility work and landscaping are included within this definition. Residential buildings of four (4) stories or less, agricultural buildings, parking lots and driveways are NOT included within this definition.**

### SKILLED TRADES

**Fringe Benefits Must Be Paid On All Hours Worked**

| CODE | TRADE OR OCCUPATION | HOURLY BASIC RATE OF PAY $ | HOURLY FRINGE BENEFITS $ | TOTAL $ |
|---|---|---|---|---|
| 101 | Acoustic Ceiling Tile Installer<br>Future Increase(s):<br>Add $1.50/hr on 6/1/2015; Add $1.65/hr on 6/1/2016.<br>Premium Increase(s):<br>DOT PREMIUM: Pay two times the hourly basic rate on Sunday, New Year's Day, Memorial Day, Independence Day, Labor Day, Thanksgiving Day & Christmas Day. | 34.13 | 20.61 | 54.74 |
| 102 | Boilermaker<br>Future Increase(s):<br>Add $1.50/hr. on 01/01/2016 | 33.35 | 28.24 | 61.59 |
| 103 | Bricklayer, Blocklayer or Stonemason<br>Future Increase(s):<br>Add $1.35on 06/01/2015; Add $1.45 on 06/06/2016<br>Premium Increase(s):<br>DOT PREMIUM: Pay two times the hourly basic rate on Sunday, New Year’s Day, Memorial Day, Independence Day, Labor Day, Thanksgiving Day & Christmas Day. | 35.89 | 18.64 | 54.53 |
| 104 | Cabinet Installer<br>Future Increase(s):<br>Add $1.42/hr on 6/1/2015; Add $1.42/hr on 6/1/2016. | 32.72 | 16.00 | 48.72 |
| 105 | Carpenter<br>Future Increase(s):<br>Add $1.50/hr on 6/1/2015; Add $1.65/hr on 6/1/2016.<br>Premium Increase(s):<br>DOT PREMIUM: Pay two times the hourly basic rate on Sunday, New Year's Day, Memorial Day, Independence Day, Labor Day, Thanksgiving Day & Christmas Day. | 34.13 | 20.61 | 54.74 |
| 106 | Carpet Layer or Soft Floor Coverer | 33.68 | 19.98 | 53.66 |
| 107 | Cement Finisher<br>Future Increase(s):<br>Add $1.30 on 06/01/2015; Add $1.40 on 06/06/2016 | 32.09 | 19.21 | 51.30 |
| 108 | Drywall Taper or Finisher<br>Future Increase(s):<br>Add $.90/hr eff. 06/01/2015; Add $1.00/hr eff. 06/01/2016; Add $1.05/hr eff. 06/01/2017 | 29.97 | 20.74 | 50.71 |

| CODE | Fringe Benefits Must Be Paid On All Hours Worked<br>TRADE OR OCCUPATION | HOURLY BASIC RATE OF PAY<br>$ | HOURLY FRINGE BENEFITS<br>$ | TOTAL<br>$ |
|---|---|---|---|---|
| 109 | Electrician<br>Premium Increase(s):<br>DOT PREMIUM: Pay two times the hourly basic rate on Sunday, New Year's Day, Memorial Day, Independence Day, Labor Day, Thanksgiving Day & Christmas Day. | 33.93 | 22.77 | 56.70 |
| 110 | Elevator Constructor | 43.84 | 27.09 | 70.93 |
| 111 | Fence Erector | 23.73 | 19.09 | 42.82 |
| 112 | Fire Sprinkler Fitter | 39.10 | 19.94 | 59.04 |
| 113 | Glazier<br>Future Increase(s):<br>Add $.75/hr eff. 06/01/2015; Add $.90/hr eff. 06/01/2016 | 34.19 | 18.50 | 52.69 |
| 114 | Heat or Frost Insulator | 33.43 | 25.81 | 59.24 |
| 115 | Insulator (Batt or Blown)<br>Future Increase(s):<br>Add $1.42/hr on 6/1/2015; Add $1.42/hr on 6/1/2016. | 32.72 | 16.00 | 48.72 |
| 116 | Ironworker<br>Premium Increase(s):<br>DOT PREMIUM: Pay two times the hourly basic rate on Sunday, New Year's Day, Memorial Day, Independence Day, Labor Day, Thanksgiving Day & Christmas Day. | 30.77 | 23.97 | 54.74 |
| 117 | Lather | 33.68 | 19.81 | 53.49 |
| 118 | Line Constructor (Electrical) | 37.43 | 18.19 | 55.62 |
| 119 | Marble Finisher | 20.00 | 0.52 | 20.52 |
| 120 | Marble Mason | 35.37 | 17.99 | 53.36 |
| 121 | Metal Building Erector | 22.05 | 8.08 | 30.13 |
| 122 | Millwright | 28.53 | 25.19 | 53.72 |
| 123 | Overhead Door Installer | 20.00 | 6.10 | 26.10 |
| 124 | Painter<br>Future Increase(s):<br>Add $.90/hr on 06/01/2015; Add $1.00/hr on 06/01/2016; Add $1.05/hr on 06/01/2017<br>Premium Increase(s):<br>Add $.20/hr for paperhanging; Add $.35/hr for bridge, iron and drywall; Add $.75/hr for spraying and sandblasting; Add $.60/hr for EIFS work; Add $1.00/hr for lead based paint removal. | 29.62 | 20.74 | 50.36 |
| 125 | Pavement Marking Operator | 30.10 | 18.08 | 48.18 |

| CODE | Fringe Benefits Must Be Paid On All Hours Worked<br>TRADE OR OCCUPATION | HOURLY BASIC RATE OF PAY<br>$ | HOURLY FRINGE BENEFITS<br>$ | TOTAL<br>$ |
|---|---|---|---|---|
| 126 | Piledriver<br>Future Increase(s):<br>Add $1.50/hr on 6/1/2015; Add $1.60/hr on 6/1/2016.<br>Premium Increase(s):<br>Add $.65/hr for Piledriver Loftsman; Add $.75/hr for Sheet Piling Loftsman. DOT PREMIUM: Pay two times the hourly basic rate on Sunday, New Year's Day, Memorial Day, Independence Day, Labor Day, Thanksgiving Day & Christmas Day. | 30.11 | 26.51 | 56.62 |
| 127 | Pipeline Fuser or Welder (Gas or Utility) | 31.88 | 20.89 | 52.77 |
| 129 | Plasterer<br>Premium Increase(s):<br>Add $.40/hr for swing stage work. | 31.21 | 19.93 | 51.14 |
| 130 | Plumber | 38.37 | 19.55 | 57.92 |
| 132 | Refrigeration Mechanic<br>Future Increase(s):<br>Add $1.70 on 6/1/15 | 41.01 | 21.54 | 62.55 |
| 133 | Roofer or Waterproofer<br>Future Increase(s):<br>Add $1.25/hr eff. 06/01/2015; Add $1.25/hr eff. 06/01/2016 | 29.65 | 18.15 | 47.80 |
| 134 | Sheet Metal Worker | 36.94 | 20.22 | 57.16 |
| 135 | Steamfitter | 41.01 | 21.54 | 62.55 |
| 137 | Teledata Technician or Installer<br>Future Increase(s):<br>Add $.86/hr on 6/1/2015.<br>Premium Increase(s):<br>DOT PREMIUM: Pay two times the hourly basic rate on Sunday, New Year’s Day, Memorial Day, Independence Day, Labor Day, Thanksgiving Day & Christmas Day. | 25.63 | 17.25 | 42.88 |
| 138 | Temperature Control Installer | 39.76 | 21.09 | 60.85 |
| 139 | Terrazzo Finisher | 20.00 | 0.52 | 20.52 |
| 140 | Terrazzo Mechanic | 31.18 | 17.35 | 48.53 |
| 141 | Tile Finisher<br>Future Increase(s):<br>Add $.20/hr on 1/ 5/2015 | 24.24 | 17.54 | 41.78 |
| 142 | Tile Setter | 30.38 | 17.33 | 47.71 |
| 143 | Tuckpointer, Caulker or Cleaner<br>Future Increase(s):<br>Add $1.35on 06/01/2015; Add $1.45 on 06/01/2016<br>Premium Increase(s):<br>DOT PREMIUM: Pay two times the hourly basic rate on Sunday, New Year’s Day, Memorial Day, Independence Day, Labor Day, Thanksgiving Day & Christmas Day. | 34.28 | 18.48 | 52.76 |

| CODE | Fringe Benefits Must Be Paid On All Hours Worked<br>TRADE OR OCCUPATION | HOURLY BASIC RATE OF PAY $ | HOURLY FRINGE BENEFITS $ | TOTAL $ |
|---|---|---|---|---|
| 144 | Underwater Diver (Except on Great Lakes) | 35.40 | 15.90 | 51.30 |
| 146 | Well Driller or Pump Installer | 25.32 | 15.65 | 40.97 |
| 147 | Siding Installer | 36.17 | 19.44 | 55.61 |
| 150 | Heavy Equipment Operator - ELECTRICAL LINE CONSTRUCTION ONLY | 30.16 | 15.11 | 45.27 |
| 151 | Light Equipment Operator -ELECTRICAL LINE CONSTRUCTION ONLY | 31.60 | 15.71 | 47.31 |
| 152 | Heavy Truck Driver - ELECTRICAL LINE CONSTRUCTION ONLY | 27.65 | 14.49 | 42.14 |
| 153 | Light Truck Driver - ELECTRICAL LINE CONSTRUCTION ONLY | 27.83 | 15.01 | 42.84 |
| 154 | Groundman - ELECTRICAL LINE CONSTRUCTION ONLY | 24.00 | 11.57 | 35.57 |

## TRUCK DRIVERS

| CODE | Fringe Benefits Must Be Paid On All Hours Worked<br>TRADE OR OCCUPATION | HOURLY BASIC RATE OF PAY $ | HOURLY FRINGE BENEFITS $ | TOTAL $ |
|---|---|---|---|---|
| 201 | Single Axle or Two Axle | 34.07 | 18.10 | 52.17 |
| 203 | Three or More Axle | 23.49 | 12.02 | 35.51 |
| 204 | Articulated, Euclid, Dumptor, Off Road Material Hauler<br>Future Increase(s):<br>Add $1.60/hr on 5/30/2016. | 33.02 | 18.70 | 51.72 |
| 205 | Pavement Marking Vehicle | 20.85 | 11.02 | 31.87 |
| 207 | Truck Mechanic | 23.49 | 12.02 | 35.51 |

## LABORERS

| CODE | Fringe Benefits Must Be Paid On All Hours Worked<br>TRADE OR OCCUPATION | HOURLY BASIC RATE OF PAY $ | HOURLY FRINGE BENEFITS $ | TOTAL $ |
|---|---|---|---|---|
| 301 | General Laborer<br>Future Increase(s):<br>Add $1.35/hr eff. 06/01/2015; Add $1.25/hr eff. 06/06/2016<br>Premium Increase(s):<br>Add $.11 for mortar mixer, fork lift operator, air and electric equipment and power buggy operators; Add $.22 for jackhammer operator, certified welder, gunite machineman. | 29.01 | 17.22 | 46.23 |
| 302 | Asbestos Abatement Worker | 22.05 | 19.16 | 41.21 |
| 303 | Landscaper | 15.44 | 11.20 | 26.64 |

| CODE | Fringe Benefits Must Be Paid On All Hours Worked<br>TRADE OR OCCUPATION | HOURLY BASIC RATE OF PAY<br>$ | HOURLY FRINGE BENEFITS<br>$ | TOTAL<br>$ |
|---|---|---|---|---|
| 310 | Gas or Utility Pipeline Laborer (Other Than Sewer and Water) | 20.13 | 17.79 | 37.92 |
| 311 | Fiber Optic Laborer (Outside, Other Than Concrete Encased)<br>Premium Increase(s):<br>DOT PREMIUMS: Pay two times the hourly basic rate on New Year's Day, Memorial Day, Independence Day, Labor Day, Thanksgiving Day & Christmas Day. | 18.06 | 16.76 | 34.82 |
| 314 | Railroad Track Laborer | 14.50 | 4.39 | 18.89 |
| 315 | Final Construction Clean-Up Worker | 28.31 | 12.30 | 40.61 |

**HEAVY EQUIPMENT OPERATORS**
**SITE PREPARATION, UTILITY OR LANDSCAPING WORK ONLY**

| CODE | Fringe Benefits Must Be Paid On All Hours Worked<br>TRADE OR OCCUPATION | HOURLY BASIC RATE OF PAY<br>$ | HOURLY FRINGE BENEFITS<br>$ | TOTAL<br>$ |
|---|---|---|---|---|
| 501 | Air Track, Rotary or Percussion Drilling Machine &/or Hammers, Blaster; Asphalt Milling Machine; Boring Machine (Directional, Horizontal or Vertical); Backhoe (Track Type) Having a Mfgr's Rated Capacity of 130,000 Lbs. or Over; Backhoe (Track Type) Having a Mfgr's Rated Capacity of Under 130,000 Lbs., Backhoe (Mini, 15,000 Lbs. & Under); Bulldozer or Endloader (Over 40 hp); Compactor (Self-Propelled 85 Ft Total Drum Width & Over, or Tractor Mounted, Towed & Light Equipment); Concrete Batch Plant, Batch Hopper; Concrete Breaker (Large, Auto, Vibratory/Sonic, Manual or Remote); Crane, Shovel, Dragline, Clamshells; Forklift (Machinery Moving or Steel Erection, 25 Ft & Over); Gradall (Cruz-Aire Type); Grader or Motor Patrol; Master Mechanic; Mechanic or Welder; Robotic Tool Carrier (With or Without Attachments); Scraper (Self Propelled or Tractor Drawn) 5 cu yds or More Capacity; Tractor or Truck Mounted Hydraulic Backhoe; Tractor or Truck Mounted Hydraulic Crane (10 Tons or Under); Tractor (Scraper, Dozer, Pusher, Loader); Trencher (Wheel Type or Chain Type Having Over 8 Inch Bucket).<br>Future Increase(s):<br>Add $1.50/hr on 6/1/2015; Add $1.60/hr on 5/30/2016. | 34.47 | 18.70 | 53.17 |
| 502 | Backfiller; Broom or Sweeper; Bulldozer or Endloader (Under 40 hp); Environmental Burner; Forestry Equipment, Timbco, Tree Shear, Tub Grinder, Processor; Jeep Digger; Screed (Milling Machine); Skid Rig; Straddle Carrier or Travel Lift; Stump Chipper; Trencher (Wheel Type or Chain Type Having 8 Inch Bucket & Under).<br>Future Increase(s):<br>Add $1.50/hr on 6/1/2015; Add $1.60/hr on 5/30/2016. | 34.17 | 18.70 | 52.87 |

| CODE | Fringe Benefits Must Be Paid On All Hours Worked<br>TRADE OR OCCUPATION | HOURLY BASIC RATE OF PAY<br>$ | HOURLY FRINGE BENEFITS<br>$ | TOTAL<br>$ |
|---|---|---|---|---|
| 503 | Air Compressor (&/or 400 CFM or Over); Augers (Vertical & Horizontal); Compactor (Self-Propelled 84 Ft Total Drum Width & Under, or Tractor Mounted, Towed & Light Equipment); Crusher, Screening or Wash Plant; Farm or Industrial Type Tractor; Forklift; Generator (&/or 150 KW or Over); Greaser; High Pressure Utility Locating Machine (Daylighting Machine); Mulcher; Oiler; Post Hole Digger or Driver; Pump (3 Inch or Over) or Well Points; Refrigeration Plant or Freeze Machine; Rock, Stone Breaker; Skid Steer Loader (With or Without Attachments); Vibratory Hammer or Extractor, Power Pack.<br>Future Increase(s):<br>Add $1.50/hr on 6/1/2015; Add $1.60/hr on 5/30/2016. | 34.17 | 18.70 | 52.87 |
| 504 | Work Performed on the Great Lakes Including Diver; Wet Tender or Hydraulic Dredge Engineer. | 41.65 | 21.71 | 63.36 |
| 505 | Work Performed on the Great Lakes Including Crane or Backhoe Operator; Assistant Hydraulic Dredge Engineer; Hydraulic Dredge Leverman or Diver's Tender; Mechanic or Welder; 70 Ton & Over Tug Operator.<br>Premium Increase(s):<br>Add $.50/hr for Friction Crane, Lattice Boom or Crane Certification (CCO). | 41.65 | 21.71 | 63.36 |
| 506 | Work Performed on the Great Lakes Including Deck Equipment Operator or Machineryman (Maintains Cranes Over 50 Tons or Backhoes 115,000 Lbs. or More); Tug, Launch or Loader, Dozer or Like Equipment When Operated on a Barge, Breakwater Wall, Slip, Dock or Scow, Deck Machinery. | 35.72 | 17.85 | 53.57 |
| 507 | Work Performed on the Great Lakes Including Deck Equipment Operator, Machineryman or Fireman (Operates 4 Units or More or Maintains Cranes 50 Tons or Under or Backhoes 115,000 Lbs. or Under); Deck Hand, Deck Engineer or Assistant Tug Operator; Off Road Trucks - Great Lakes ONLY. | 35.46 | 20.40 | 55.86 |

## HEAVY EQUIPMENT OPERATORS
## EXCLUDING SITE PREPARATION, UTILITY, PAVING LANDSCAPING WORK

| CODE | Fringe Benefits Must Be Paid On All Hours Worked<br>TRADE OR OCCUPATION | HOURLY BASIC RATE OF PAY<br>$ | HOURLY FRINGE BENEFITS<br>$ | TOTAL<br>$ |
|---|---|---|---|---|
| 508 | Boring Machine (Directional); Crane, Tower Crane, Pedestal Tower or Derrick, With or Without Attachments, With a Lifting Capacity of Over 100 Tons, Self-Erecting Tower Crane With a Lifting Capacity of Over 4,000 Lbs., Crane With Boom Dollies; Crane, Tower Crane, Pedestal Tower or Derrick, With Boom, Leads &/or Jib Lengths Measuring 176 Ft or Over; Master Mechanic.<br>Future Increase(s):<br>Add $1.55/hr on 6/1/2015.<br>Premium Increase(s):<br>Crane Operators with CCO certification add $.50/hr. Cranes with boom length over 200 ft. not exceeding 300 ft. OR lifting capacity over 200 ton not exceeding 300 ton add $.50/hr. Over 300 ton OR 300 ft. add $.01/hr. per foot OR ton whichever is greater. | 40.61 | 20.15 | 60.76 |

| CODE | Fringe Benefits Must Be Paid On All Hours Worked<br>TRADE OR OCCUPATION | HOURLY BASIC RATE OF PAY<br>$ | HOURLY FRINGE BENEFITS<br>$ | TOTAL<br>$ |
|---|---|---|---|---|
| 509 | Backhoe (Track Type) Having a Mfgr's Rated Capacity of 130,000 Lbs. or Over; Boring Machine (Horizontal or Vertical); Caisson Rig; Crane, Tower Crane, Portable Tower, Pedestal Tower or Derrick, With or Without Attachments, With a Lifting Capacity of 100 Tons or Under, Self-Erecting Tower Crane With A Lifting Capacity Of 4,000 Lbs. & Under; Crane, Tower Crane, Portable Tower, Pedestal Tower or Derrick, With Boom, Leads &/or Jib Lengths Measuring 175 Ft or Under; Pile Driver; Versi Lifts, Tri-Lifts & Gantrys (20,000 Lbs. & Over).<br>Future Increase(s):<br>Add $1.55/hr on 6/1/2015.<br>Premium Increase(s):<br>Crane Operators with CCO certification add $.50/hr. | 40.11 | 20.15 | 60.26 |
| 510 | Backhoe (Track Type) Having a Mfgr.'s Rated Capacity of Under 130,000 Lbs., Backhoe (Mini, 15,000 Lbs. & Under); Concrete Bump Cutter, Grinder, Planing or Grooving Machine; Concrete Laser/Screed; Concrete Paver (Slipform); Concrete Pump (Over 46 Meter), Concrete Conveyor (Rotec or Bidwell Type); Concrete Slipform Placer Curb & Gutter Machine; Concrete Spreader & Distributor; Dredge (NOT Performing Work on the Great Lakes); Forklift (Machinery Moving or Steel Erection, 25 Ft & Over); Gradall (Cruz-Aire Type); Hydro-Blaster (10,000 PSI or Over); Milling Machine; Skid Rig; Traveling Crane (Bridge Type).<br>Future Increase(s):<br>Add $1.55/hr on 6/1/2015.<br>Premium Increase(s):<br>Crane Operators with CCO certification add $.50/hr. | 39.61 | 20.15 | 59.76 |
| 511 | Air, Track, Rotary or Percussion Drilling Machine &/or Hammers, Blaster; Bulldozer or Endloader (Over 40 hp); Compactor (Self-Propelled 85 Ft Total Drum Width & Over, or Tractor Mounted, Towed & Light Equipment); Concrete Pump (46 Meter & Under), Concrete Conveyor (Rotec or Bidwell Type); Crane (Carry Deck, Mini) or Truck Mounted Hydraulic Crane (10 Tons or Under); Environmental Burner; Gantrys (Under 20,000 Lbs.); Grader or Motor Patrol; High Pressure Utility Locating Machine (Daylighting Machine); Manhoist; Material or Stack Hoist; Mechanic or Welder; Railroad Track Rail Leveling Machine, Tie Placer, Extractor, Tamper, Stone Leveler or Rehabilitation Equipment; Roller (Over 5 Ton); Scraper (Self Propelled or Tractor Drawn) 5 cu yd or More Capacity; Screed (Milling Machine); Sideboom; Straddle Carrier or Travel Lift; Tining or Curing Machine; Tractor (Scraper, Dozer, Pusher, Loader); Tractor or Truck Mounted Hydraulic Backhoe; Tractor or Truck Mounted Hydraulic Crane (10 Tons or Under); Trencher (Wheel Type or Chain Type Having Over 8-Inch Bucket).<br>Future Increase(s):<br>Add $1.55/hr on 6/1/2015. | 38.92 | 20.15 | 59.07 |

| CODE | Fringe Benefits Must Be Paid On All Hours Worked<br>TRADE OR OCCUPATION | HOURLY BASIC RATE OF PAY<br>$ | HOURLY FRINGE BENEFITS<br>$ | TOTAL<br>$ |
|---|---|---|---|---|
| 512 | Backfiller; Broom or Sweeper; Bulldozer or Endloader (Under 40 hp); Compactor (Self-Propelled 84 Ft Total Drum Width & Under, or Tractor Mounted, Towed & Light Equipment); Concrete Batch Plant, Batch Hopper; Concrete Breaker (Large, Auto, Vibratory/Sonic, Manual or Remote); Concrete Conveyor System; Concrete Finishing Machine (Road Type); Fireman (Pile Driver & Derrick NOT Performing Work on the Great Lakes); Grout Pump; Hoist (Tugger, Automatic); Industrial Locomotives; Jeep Digger; Lift Slab Machine; Mulcher; Roller (Rubber Tire, 5 Ton or Under); Screw or Gypsum Pumps; Stabilizing or Concrete Mixer (Self-Propelled or 14S or Over); Stump Chipper; Trencher (Wheel Type or Chain Type Having 8-Inch Bucket & Under); Winches & A-Frames.<br>Future Increase(s):<br>Add $1.55/hr on 6/1/2015. | 37.04 | 20.15 | 57.19 |
| 513 | Air Compressor (&/or 400 CFM or Over); Air, Electric or Hydraulic Jacking System; Augers (Vertical & Horizontal); Boatmen (NOT Performing Work on the Great Lakes); Boiler (Temporary Heat); Crusher, Screening or Wash Plant; Elevator; Farm or Industrial Type Tractor; Fireman (Asphalt Plant NOT Performing Work on the Great Lakes); Forklift; Generator (&/or 150 KW or Over); Greaser; Heaters (Mechanical); Loading Machine (Conveyor); Oiler; Post Hole Digger or Driver; Prestress Machine; Pump (3 Inch or Over) or Well Points; Refrigeration Plant or Freeze Machine; Robotic Tool Carrier (With or Without Attachments); Rock, Stone Breaker; Skid Steer Loader (With or Without Attachments); Vibratory Hammer or Extractor, Power Pack.<br>Future Increase(s):<br>Add $1.55/hr on 6/1/2015. | 31.89 | 20.15 | 52.04 |
| 514 | Gas or Utility Pipeline, Except Sewer & Water (Primary Equipment).<br>Future Increase(s):<br>Add $1/hr on 6/1/2015; Add $1/hr on 5/30/2016. | 36.34 | 22.14 | 58.48 |
| 515 | Gas or Utility Pipeline, Except Sewer & Water (Secondary Equipment).<br>Future Increase(s):<br>Add $1.65/hr on 6/1/2015. | 34.06 | 19.35 | 53.41 |
| 516 | Fiber Optic Cable Equipment | 28.89 | 17.95 | 46.84 |

## SEWER, WATER OR TUNNEL CONSTRUCTION

**Includes those projects that primarily involve public sewer or water distribution, transmission or collection systems and related tunnel work (excluding buildings).**

### SKILLED TRADES

| CODE | Fringe Benefits Must Be Paid On All Hours Worked<br>TRADE OR OCCUPATION | HOURLY BASIC RATE OF PAY $ | HOURLY FRINGE BENEFITS $ | TOTAL $ |
|---|---|---|---|---|
| 103 | Bricklayer, Blocklayer or Stonemason | 35.37 | 17.99 | 53.36 |
| 105 | Carpenter<br>Future Increase(s):<br>Add $1.50/hr on 6/1/2015; Add $1.65/hr on 6/1/2016.<br>Premium Increase(s):<br>DOT PREMIUM: Pay two times the hourly basic rate on Sunday, New Year's Day, Memorial Day, Independence Day, Labor Day, Thanksgiving Day & Christmas Day. | 34.13 | 20.61 | 54.74 |
| 107 | Cement Finisher<br>Future Increase(s):<br>Add $1.87 on 6/1/15; Add $1.75 on 6/1/16.<br>Premium Increase(s):<br>DOT PREMIUMS: 1) Pay two times the hourly basic rate on Sunday, New Year's Day, Memorial Day, Independence Day, Labor Day, Thanksgiving Day & Christmas Day. 2) Add $1.40/hr when the Wisconsin Department of Transportation or responsible governing agency requires that work be performed at night under artificial illumination with traffic control and the work is completed after sunset and before sunrise. | 35.18 | 16.78 | 51.96 |
| 109 | Electrician | 47.76 | 0.00 | 47.76 |
| 111 | Fence Erector | 23.73 | 19.09 | 42.82 |
| 116 | Ironworker | 31.50 | 20.01 | 51.51 |
| 118 | Line Constructor (Electrical) | 37.43 | 18.19 | 55.62 |
| 125 | Pavement Marking Operator | 30.10 | 18.08 | 48.18 |
| 126 | Piledriver | 29.56 | 25.71 | 55.27 |
| 130 | Plumber | 21.50 | 0.00 | 21.50 |
| 135 | Steamfitter | 39.76 | 21.09 | 60.85 |
| 137 | Teledata Technician or Installer | 24.89 | 17.15 | 42.04 |
| 143 | Tuckpointer, Caulker or Cleaner | 33.76 | 17.82 | 51.58 |
| 144 | Underwater Diver (Except on Great Lakes) | 35.40 | 15.90 | 51.30 |
| 146 | Well Driller or Pump Installer | 25.32 | 15.65 | 40.97 |
| 150 | Heavy Equipment Operator - ELECTRICAL LINE CONSTRUCTION ONLY | 35.55 | 15.57 | 51.12 |

| CODE | Fringe Benefits Must Be Paid On All Hours Worked<br>TRADE OR OCCUPATION | HOURLY BASIC RATE OF PAY $ | HOURLY FRINGE BENEFITS $ | TOTAL $ |
|---|---|---|---|---|
| 151 | Light Equipment Operator -ELECTRICAL LINE CONSTRUCTION ONLY | 31.60 | 15.19 | 46.79 |
| 152 | Heavy Truck Driver - ELECTRICAL LINE CONSTRUCTION ONLY | 27.65 | 13.44 | 41.09 |
| 153 | Light Truck Driver - ELECTRICAL LINE CONSTRUCTION ONLY | 25.68 | 13.28 | 38.96 |
| 154 | Groundman - ELECTRICAL LINE CONSTRUCTION ONLY | 21.75 | 12.97 | 34.72 |

## TRUCK DRIVERS

| CODE | Fringe Benefits Must Be Paid On All Hours Worked<br>TRADE OR OCCUPATION | HOURLY BASIC RATE OF PAY $ | HOURLY FRINGE BENEFITS $ | TOTAL $ |
|---|---|---|---|---|
| 201 | Single Axle or Two Axle<br>Future Increase(s):<br>Add $1.15/hr on 6/1/2015.<br>Premium Increase(s):<br>DOT PREMIUM: Pay two times the hourly basic rate on Sunday, New Year's Day, Memorial Day, Independence Day, Labor Day, Thanksgiving Day & Christmas Day. | 25.18 | 18.31 | 43.49 |
| 203 | Three or More Axle | 18.00 | 0.00 | 18.00 |
| 204 | Articulated, Euclid, Dumptor, Off Road Material Hauler | 32.89 | 18.96 | 51.85 |
| 205 | Pavement Marking Vehicle | 20.85 | 11.02 | 31.87 |
| 207 | Truck Mechanic | 18.00 | 0.00 | 18.00 |

## LABORERS

| CODE | Fringe Benefits Must Be Paid On All Hours Worked<br>TRADE OR OCCUPATION | HOURLY BASIC RATE OF PAY $ | HOURLY FRINGE BENEFITS $ | TOTAL $ |
|---|---|---|---|---|
| 301 | General Laborer<br>Future Increase(s):<br>Add $1.35/hr eff. 06/01/2015; Add $1.25/hr eff. 06/06/2016<br>Premium Increase(s):<br>Add $2.29 for bottomman; Add $2.15 for concrete manhole builder, bracer, jointman, or pipelayer; Add $5.44 for blaster. Add $2.00 for all tunnel work under 15 lbs. compressed air; Add $2.00 for 0-30 lbs. compressed air; Add $3.00 for over 30 lbs. compressed air. | 29.16 | 17.72 | 46.88 |
| 303 | Landscaper | 39.43 | 0.00 | 39.43 |
| 304 | Flagperson or Traffic Control Person | 31.95 | 0.00 | 31.95 |
| 311 | Fiber Optic Laborer (Outside, Other Than Concrete Encased) | 17.71 | 16.01 | 33.72 |

| | | | | |
|---|---|---|---|---|
| 314 | Railroad Track Laborer | 14.50 | 4.39 | 18.89 |

**HEAVY EQUIPMENT OPERATORS**
**SEWER, WATER OR TUNNEL WORK**

**Fringe Benefits Must Be Paid On All Hours Worked**

| CODE | TRADE OR OCCUPATION | HOURLY BASIC RATE OF PAY $ | HOURLY FRINGE BENEFITS $ | TOTAL $ |
|---|---|---|---|---|
| 521 | Backhoe (Track Type) Having a Mfgr.'s Rated Capacity of 130,000 Lbs. or Over; Caisson Rig; Crane, Tower Crane, Pedestal Tower or Derrick, With Boom, Leads &/or Jib Lengths Measuring 176 Ft or Over; Crane, Tower Crane, Pedestal Tower or Derrick, With or Without Attachments, With a Lifting Capacity of Over 100 Tons, Self-Erecting Tower Crane With a Lifting Capacity Of Over 4,000 Lbs., Crane With Boom Dollies; Master Mechanic; Pile Driver.<br>Future Increase(s):<br>Add $1.55/hr on 6/1/2015.<br>Premium Increase(s):<br>Add $.25/hr for operating tower crane. | 37.24 | 20.10 | 57.34 |
| 522 | Backhoe (Track Type) Having a Mfgr.'s Rated Capacity of Under 130,000 Lbs., Backhoe (Mini, 15,000 Lbs. & Under); Boring Machine (Directional); Concrete Bump Cutter, Grinder, Planing or Grooving Machine; Concrete Laser/Screed; Concrete Paver (Slipform); Concrete Pump (Over 46 Meter), Concrete Conveyor (Rotec or Bidwell Type); Concrete Spreader & Distributor; Crane, Tower Crane, Portable Tower, Pedestal Tower or Derrick, With Boom, Leads &/or Jib Lengths Measuring 175 Ft or Under; Crane, Tower Crane, Portable Tower, Pedestal Tower or Derrick, With or Without Attachments, With a Lifting Capacity of 100 Tons or Under, Self-Erecting Tower Crane With a Lifting Capacity of 4,000 Lbs. & Under; Dredge (NOT Performing Work on the Great Lakes); Milling Machine; Skid Rig; Telehandler; Traveling Crane (Bridge Type).<br>Future Increase(s):<br>Add $1.55/hr on 6/1/2015.<br>Premium Increase(s):<br>Add $.25/hr for operating tower crane. | 36.46 | 20.10 | 56.56 |
| 523 | Air Track, Rotary or Percussion Drilling Machine &/or Hammers, Blaster; Boring Machine (Horizontal or Vertical); Bulldozer or Endloader (Over 40 hp); Crane (Carry Deck, Mini) or Truck Mounted Hydraulic Crane (10 Tons or Under); Concrete Pump (46 Meter & Under), Concrete Conveyor (Rotec or Bidwell Type); Concrete Slipform Placer Curb & Gutter Machine; Gradall (Cruz-Aire Type); Grader or Motor Patrol; Hydro-Blaster (10,000 PSI or Over); Manhoist; Material or Stack Hoist; Mechanic or Welder; Roller (Over 5 Ton); Scraper (Self Propelled or Tractor Drawn) 5 cu yd or More Capacity; Screed (Milling Machine); Sideboom; Straddle Carrier or Travel Lift; Tractor (Scraper, Dozer, Pusher, Loader); Tractor or Truck Mounted Hydraulic Backhoe; Tractor or Truck Mounted Hydraulic Crane (10 Tons or Under); Trencher (Wheel Type or Chain Type Having Over 8-Inch Bucket).<br>Future Increase(s):<br>Add $1.55/hr on 6/1/2015.<br>Premium Increase(s):<br>Add $.25/hr for operating tower crane. | 35.51 | 20.10 | 55.61 |

| CODE | Fringe Benefits Must Be Paid On All Hours Worked<br>TRADE OR OCCUPATION | HOURLY BASIC RATE OF PAY<br>$ | HOURLY FRINGE BENEFITS<br>$ | TOTAL<br>$ |
|---|---|---|---|---|
| 524 | Backfiller; Broom or Sweeper; Bulldozer or Endloader (Under 40 hp); Compactor (Self-Propelled 85 Ft Total Drum Width & Over, or Tractor Mounted, Towed & Light Equipment); Concrete Batch Plant, Batch Hopper; Concrete Breaker (Large, Auto, Vibratory/Sonic, Manual or Remote); Concrete Conveyor System; Concrete Finishing Machine (Road Type); Environmental Burner; Fireman (Pile Driver & Derrick NOT Performing Work on the Great Lakes); Forestry Equipment, Timbco, Tree Shear, Tub Grinder, Processor; Hoist (Tugger, Automatic); Grout Pump; Jeep Digger; Lift Slab Machine; Mulcher; Power Subgrader; Pump (3 Inch or Over) or Well Points; Robotic Tool Carrier (With or Without Attachments); Roller (Rubber Tire, 5 Ton or Under); Screw or Gypsum Pumps; Stabilizing or Concrete Mixer (Self-Propelled or 14S or Over); Stump Chipper; Tining or Curing Machine; Trencher (Wheel Type or Chain Type Having 8-Inch Bucket & Under); Winches & A-Frames. | 36.79 | 19.15 | 55.94 |
| 525 | Air Compressor (&/or 400 CFM or Over); Air, Electric or Hydraulic Jacking System; Augers (Vertical & Horizontal); Compactor (Self-Propelled 84 Ft Total Drum Width & Under, or Tractor Mounted, Towed & Light Equipment); Crusher, Screening or Wash Plant; Farm or Industrial Type Tractor; Fireman (Asphalt Plant NOT Performing Work on the Great Lakes); Generator (&/or 150 KW or Over); Heaters (Mechanical); High Pressure Utility Locating Machine (Daylighting Machine); Loading Machine (Conveyor); Post Hole Digger or Driver; Refrigeration Plant or Freeze Machine; Rock, Stone Breaker; Skid Steer Loader (With or Without Attachments); Vibratory Hammer or Extractor, Power Pack. | 50.50 | 0.42 | 50.92 |
| 526 | Boiler (Temporary Heat); Forklift; Greaser; Oiler. | 31.64 | 19.15 | 50.79 |
| 527 | Work Performed on the Great Lakes Including Diver; Wet Tender or Hydraulic Dredge Engineer. | 41.65 | 21.71 | 63.36 |
| 528 | Work Performed on the Great Lakes Including 70 Ton & Over Tug Operator; Assistant Hydraulic Dredge Engineer; Crane or Backhoe Operator; Hydraulic Dredge Leverman or Diver's Tender; Mechanic or Welder. | 41.65 | 21.71 | 63.36 |
| 529 | Work Performed on the Great Lakes Including Deck Equipment Operator or Machineryman (Maintains Cranes Over 50 Tons or Backhoes 115,000 Lbs. or More); Tug, Launch or Loader, Dozer or Like Equipment When Operated on a Barge, Breakwater Wall, Slip, Dock or Scow, Deck Machinery. | 35.72 | 17.85 | 53.57 |
| 530 | Work Performed on the Great Lakes Including Deck Equipment Operator; Machineryman or Fireman (Operates 4 Units or More or Maintains Cranes 50 Tons or Under or Backhoes 115,000 Lbs. or Under), Deck Hand, Deck Engineer or Assistant Tug Operator; Off Road Trucks - Great Lakes ONLY. | 35.46 | 20.40 | 55.86 |

## AIRPORT PAVEMENT OR STATE HIGHWAY CONSTRUCTION

**Includes all airport projects (excluding buildings) and all projects awarded by the Wisconsin Department of Transportation (excluding buildings).**

### SKILLED TRADES

| CODE | Fringe Benefits Must Be Paid On All Hours Worked<br>TRADE OR OCCUPATION | HOURLY BASIC RATE OF PAY $ | HOURLY FRINGE BENEFITS $ | TOTAL $ |
|---|---|---|---|---|
| 103 | Bricklayer, Blocklayer or Stonemason | 35.37 | 17.99 | 53.36 |
| 105 | Carpenter | 33.68 | 19.99 | 53.67 |
| 107 | Cement Finisher<br>Future Increase(s):<br>Add $1.87 on 6/1/15; Add $1.75 on 6/1/16.<br>Premium Increase(s):<br>DOT PREMIUMS: 1) Pay two times the hourly basic rate on Sunday, New Year's Day, Memorial Day, Independence Day, Labor Day, Thanksgiving Day & Christmas Day. 2) Add $1.40/hr when the Wisconsin Department of Transportation or responsible governing agency requires that work be performed at night under artificial illumination with traffic control and the work is completed after sunset and before sunrise. | 32.75 | 19.21 | 51.96 |
| 109 | Electrician<br>Premium Increase(s):<br>DOT PREMIUM: Pay two times the hourly basic rate on Sunday, New Year’s Day, Memorial Day, Independence Day, Labor Day, Thanksgiving Day & Christmas Day. | 33.93 | 22.77 | 56.70 |
| 111 | Fence Erector | 23.73 | 19.09 | 42.82 |
| 116 | Ironworker<br>Premium Increase(s):<br>DOT PREMIUM: Pay two times the hourly basic rate on Sunday, New Year's Day, Memorial Day, Independence Day, Labor Day, Thanksgiving Day & Christmas Day. | 30.77 | 23.97 | 54.74 |
| 118 | Line Constructor (Electrical) | 37.43 | 18.19 | 55.62 |
| 124 | Painter | 29.22 | 16.69 | 45.91 |
| 125 | Pavement Marking Operator | 30.27 | 18.79 | 49.06 |
| 126 | Piledriver<br>Future Increase(s):<br>Add $1.50/hr on 6/1/2015; Add $1.60/hr on 6/1/2016.<br>Premium Increase(s):<br>Add $.65/hr for Piledriver Loftsman; Add $.75/hr for Sheet Piling Loftsman. DOT PREMIUM: Pay two times the hourly basic rate on Sunday, New Year's Day, Memorial Day, Independence Day, Labor Day, Thanksgiving Day & Christmas Day. | 30.11 | 26.51 | 56.62 |
| 133 | Roofer or Waterproofer | 29.40 | 17.05 | 46.45 |

| CODE | Fringe Benefits Must Be Paid On All Hours Worked<br>TRADE OR OCCUPATION | HOURLY BASIC RATE OF PAY $ | HOURLY FRINGE BENEFITS $ | TOTAL $ |
|---|---|---|---|---|
| 137 | Teledata Technician or Installer | 24.89 | 17.15 | 42.04 |
| 143 | Tuckpointer, Caulker or Cleaner | 33.76 | 17.82 | 51.58 |
| 144 | Underwater Diver (Except on Great Lakes) | 35.40 | 15.90 | 51.30 |
| 150 | Heavy Equipment Operator - ELECTRICAL LINE CONSTRUCTION ONLY | 35.55 | 15.57 | 51.12 |
| 151 | Light Equipment Operator -ELECTRICAL LINE CONSTRUCTION ONLY | 31.60 | 14.64 | 46.24 |
| 152 | Heavy Truck Driver - ELECTRICAL LINE CONSTRUCTION ONLY | 27.65 | 13.44 | 41.09 |
| 153 | Light Truck Driver - ELECTRICAL LINE CONSTRUCTION ONLY | 25.68 | 12.83 | 38.51 |
| 154 | Groundman - ELECTRICAL LINE CONSTRUCTION ONLY | 21.75 | 11.63 | 33.38 |

## TRUCK DRIVERS

| CODE | Fringe Benefits Must Be Paid On All Hours Worked<br>TRADE OR OCCUPATION | HOURLY BASIC RATE OF PAY $ | HOURLY FRINGE BENEFITS $ | TOTAL $ |
|---|---|---|---|---|
| 201 | Single Axle or Two Axle<br>Future Increase(s):<br>Add $1.15/hr on 6/1/2015.<br>Premium Increase(s):<br>DOT PREMIUM: Pay two times the hourly basic rate on Sunday, New Year's Day, Memorial Day, Independence Day, Labor Day, Thanksgiving Day & Christmas Day. | 25.18 | 18.31 | 43.49 |
| 203 | Three or More Axle<br>Future Increase(s):<br>Add $1.15/hr on 6/1/2015.<br>Premium Increase(s):<br>DOT PREMIUM: Pay two times the hourly basic rate on Sunday, New Year's Day, Memorial Day, Independence Day, Labor Day, Thanksgiving Day & Christmas Day. | 25.28 | 18.31 | 43.59 |
| 204 | Articulated, Euclid, Dumptor, Off Road Material Hauler<br>Future Increase(s):<br>Add $1.25/hr on 6/1/2015; Add $1.30/hr on 6/1/2016; Add $1.25/hr on 6/1/2017.<br>Premium Increase(s):<br>DOT PREMIUMS: 1) Pay two times the hourly basic rate on Sunday, New Year's Day, Memorial Day, Independence Day, Labor Day, Thanksgiving Day & Christmas Day. 2) Add $1.50/hr night work premium. See DOT'S website for details about the applicability of this night work premium at: http://www.dot.wi.gov/business/civilrights/laborwages/pwc.htm. | 30.27 | 21.15 | 51.42 |
| 205 | Pavement Marking Vehicle | 23.16 | 17.13 | 40.29 |
| 206 | Shadow or Pilot Vehicle | 24.37 | 17.77 | 42.14 |

| | | | | |
|---|---|---|---|---|
| 207 | Truck Mechanic | 24.52 | 17.77 | 42.29 |

## LABORERS

**Fringe Benefits Must Be Paid On All Hours Worked**

| CODE | TRADE OR OCCUPATION | HOURLY BASIC RATE OF PAY $ | HOURLY FRINGE BENEFITS $ | TOTAL $ |
|---|---|---|---|---|
| 301 | General Laborer<br>Future Increase(s):<br>Add $1.05/hr eff. 06/01/2015; Add $1.00/hr eff. 06/01/2016; Add $1.00/hr eff. 06/01/2017<br>Premium Increase(s):<br>Add $.15/hr for air tool operator, joint sawer and filler (pavement), vibrator or tamper operator (mechanical hand operated), chain saw operator and demolition burning torch laborer; Add $.35/hr for bituminous worker (raker and luteman), formsetter (curb, sidewalk and pavement) and strike off man; Add $.50/hr for line and grade specialist; Add $.65/hr for blaster and powderman; Add $2.01/hr for topman; Add $2.46/hr for bottomman; Add $3.23/hr for pipelayer. / DOT PREMIUMS: 1) Pay two times the hourly basic rate on Sunday, New Year's Day, Memorial Day, Independence Day, Labor Day, Thanksgiving Day & Christmas Day. 2) Add $1.25/hr for work on projects involving temporary traffic control setup, for lane and shoulder closures, when work under artificial illumination conditions is necessary as required by the project provisions (including prep time prior to and/or cleanup after such time period). | 27.06 | 20.03 | 47.09 |
| 302 | Asbestos Abatement Worker | 22.05 | 18.41 | 40.46 |
| 303 | Landscaper<br>Future Increase(s):<br>Add $1.05/hr eff. 06/01/2015; Add $1.00/hr eff. 06/01/2016; Add $1.00/hr eff. 06/01/2017<br>Premium Increase(s):<br>DOT PREMIUMS: 1) Pay two times the hourly basic rate on Sunday, New Year's Day, Memorial Day, Independence Day, Labor Day, Thanksgiving Day & Christmas Day. 2) Add $1.25/hr for work on projects involving temporary traffic control setup, for lane and shoulder closures, when work under artificial illumination conditions is necessary as required by the project provisions (including prep time prior to and/or cleanup after such time period). | 27.06 | 20.03 | 47.09 |
| 304 | Flagperson or Traffic Control Person | 22.55 | 19.37 | 41.92 |
| 311 | Fiber Optic Laborer (Outside, Other Than Concrete Encased) | 17.71 | 16.01 | 33.72 |
| 314 | Railroad Track Laborer | 14.50 | 4.39 | 18.89 |

## HEAVY EQUIPMENT OPERATORS
## AIRPORT PAVEMENT OR STATE HIGHWAY CONSTRUCTION

| CODE | Fringe Benefits Must Be Paid On All Hours Worked<br>TRADE OR OCCUPATION | HOURLY BASIC RATE OF PAY<br>$ | HOURLY FRINGE BENEFITS<br>$ | TOTAL<br>$ |
|---|---|---|---|---|
| 531 | Crane, Tower Crane, Pedestal Tower or Derrick, With Boom, Leads &/or Jib Lengths Measuring 176 Ft or Over; Crane, Tower Crane, Pedestal Tower or Derrick, With or Without Attachments, With a Lifting Capacity of Over 100 Tons, Self-Erecting Tower Crane With a Lifting Capacity Of Over 4,000 Lbs., Crane With Boom Dollies; Traveling Crane (Bridge Type).<br>Future Increase(s):<br>Add $1.25/hr on 6/1/2015; Add $1.30/hr on 6/1/2016; Add $1.25/hr on 6/1/2017.<br>Premium Increase(s):<br>DOT PREMIUMS: 1) Pay two times the hourly basic rate on Sunday, New Year's Day, Memorial Day, Independence Day, Labor Day, Thanksgiving Day & Christmas Day. 2) Add $1.50/hr night work premium. See DOT'S website for details about the applicability of this night work premium at: http://www.dot.wi.gov/business/civilrights/laborwages/pwc.htm. | 37.72 | 21.15 | 58.87 |
| 532 | Backhoe (Track Type) Having a Mfgr.'s Rated Capacity of 130,000 Lbs. or Over; Caisson Rig; Crane, Tower Crane, Portable Tower, Pedestal Tower or Derrick, With Boom, Leads &/or Jib Lengths Measuring 175 Ft or Under; Crane, Tower Crane, Portable Tower, Pedestal Tower or Derrick, With or Without Attachments, With a Lifting Capacity of 100 Tons or Under, Self-Erecting Tower Crane With A Lifting Capacity Of 4,000 Lbs., & Under; Dredge (NOT Performing Work on the Great Lakes); Licensed Boat Pilot (NOT Performing Work on the Great Lakes); Pile Driver.<br>Future Increase(s):<br>Add $1.25/hr on 6/1/2015; Add $1.30/hr on 6/1/2016; Add $1.25/hr on 6/1/2017.<br>Premium Increase(s):<br>DOT PREMIUMS: 1) Pay two times the hourly basic rate on Sunday, New Year's Day, Memorial Day, Independence Day, Labor Day, Thanksgiving Day & Christmas Day. 2) Add $1.50/hr night work premium. See DOT'S website for details about the applicability of this night work premium at: http://www.dot.wi.gov/business/civilrights/laborwages/pwc.htm. | 37.22 | 21.15 | 58.37 |

| CODE | Fringe Benefits Must Be Paid On All Hours Worked<br>TRADE OR OCCUPATION | HOURLY BASIC RATE OF PAY<br>$ | HOURLY FRINGE BENEFITS<br>$ | TOTAL<br>$ |
|---|---|---|---|---|
| 533 | Air Track, Rotary or Percussion Drilling Machine &/or Hammers, Blaster; Asphalt Heater, Planer & Scarifier; Asphalt Milling Machine; Asphalt Screed; Automatic Subgrader (Concrete); Backhoe (Track Type) Having a Mfgr.'s Rated Capacity of Under 130,000 Lbs., Backhoe (Mini, 15,000 Lbs. & Under); Bituminous (Asphalt) Plant & Paver, Screed; Boatmen (NOT Performing Work on the Great Lakes); Boring Machine (Directional, Horizontal or Vertical); Bridge (Bidwell) Paver; Bulldozer or Endloader; Concrete Batch Plant, Batch Hopper; Concrete Breaker (Large, Auto, VIbratory/Sonic, Manual or Remote); Concrete Bump Cutter, Grinder, Planing or Grooving Machine; Concrete Conveyor System; Concrete Laser/Screed; Concrete Paver (Slipform); Concrete Pump, Concrete Conveyor (Rotec or Bidwell Type); Concrete Slipform Placer Curb & Gutter Machine; Concrete Spreader & Distributor; Crane (Carry Deck, Mini) or Truck Mounted Hydraulic Crane (10 Tons or Under); Crane WIth a Lifting Capacity of 25 Tons or Under; Forestry Equipment, Timbco, Tree Shear, Tub Grinder, Processor; Gradall (Cruz-Aire Type); Grader or Motor Patrol; Grout Pump; Hydro-Blaster (10,000 PSI or Over); Loading Machine (Conveyor); Material or Stack Hoist; Mechanic or Welder; Milling Machine; Post Hole Digger or Driver; Roller (Over 5 Ton); Scraper (Self Propelled or Tractor Drawn) 5 cu yds or More Capacity; Shoulder Widener; Sideboom; Skid Rig; Stabilizing or Concrete Mixer (Self-Propelled or 14S or Over); Straddle Carrier or Travel Lift; Tractor (Scraper, Dozer, Pusher, Loader); Tractor or Truck Mounted Hydraulic Backhoe; Trencher (Wheel Type or Chain Type); Tube Finisher; Tugger (NOT Performing Work on the Great Lakes); Winches & A-Frames.<br>Future Increase(s):<br>Add $1.25/hr on 6/1/2015; Add $1.30/hr on 6/1/2016; Add $1.25/hr on 6/1/2017.<br>Premium Increase(s):<br>DOT PREMIUMS: 1) Pay two times the hourly basic rate on Sunday, New Year's Day, Memorial Day, Independence Day, Labor Day, Thanksgiving Day & Christmas Day. 2) Add $1.50/hr night work premium. See DOT'S website for details about the applicability of this night work premium at: http://www.dot.wi.gov/business/civilrights/laborwages/pwc.htm. | 36.72 | 21.15 | 57.87 |

| CODE | Fringe Benefits Must Be Paid On All Hours Worked<br>TRADE OR OCCUPATION | HOURLY BASIC RATE OF PAY<br>$ | HOURLY FRINGE BENEFITS<br>$ | TOTAL<br>$ |
|---|---|---|---|---|
| 534 | Belting, Burlap, Texturing Machine; Broom or Sweeper; Compactor (Self-Propelled or Tractor Mounted, Towed & Light Equipment); Concrete Finishing Machine (Road Type); Environmental Burner; Farm or Industrial Type Tractor; Fireman (Asphalt Plant, Pile Driver & Derrick NOT Performing Work on the Great Lakes); Forklift; Greaser; Hoist (Tugger, Automatic); Jeep Digger; Joint Sawer (Multiple Blade); Launch (NOT Performing Work on the Great Lakes); Lift Slab Machine; Mechanical Float; Mulcher; Power Subgrader; Robotic Tool Carrier (With or Without Attachments); Roller (Rubber Tire, 5 Ton or Under); Self Propelled Chip Spreader; Shouldering Machine; Skid Steer Loader (With or WIthout Attachments); Telehandler; Tining or Curing Machine.<br>Future Increase(s):<br>Add $1.25/hr on 6/1/2015; Add $1.30/hr on 6/1/2016; Add $1.25/hr on 6/1/2017.<br>Premium Increase(s):<br>DOT PREMIUMS: 1) Pay two times the hourly basic rate on Sunday, New Year's Day, Memorial Day, Independence Day, Labor Day, Thanksgiving Day & Christmas Day. 2) Add $1.50/hr night work premium. See DOT'S website for details about the applicability of this night work premium at: http://www.dot.wi.gov/business/civilrights/laborwages/pwc.htm. | 36.46 | 21.15 | 57.61 |
| 535 | Air Compressor (&/or 400 CFM or Over); Air, Electric or Hydraulic Jacking System; Augers (Vertical & Horizontal); Automatic Belt Conveyor & Surge Bin; Boiler (Temporary Heat); Concrete Proportioning Plant; Crusher, Screening or Wash Plant; Generator (&/or 150 KW or Over); Heaters (Mechanical); High Pressure Utility Locating Machine (Daylighting Machine); Mudjack; Oiler; Prestress Machine; Pug Mill; Pump (3 Inch or Over) or Well Points; Rock, Stone Breaker; Screed (Milling Machine); Stump Chipper; Tank Car Heaters; Vibratory Hammer or Extractor, Power Pack.<br>Future Increase(s):<br>Add $1.25/hr on 6/1/2015; Add $1.30/hr on 6/1/2016; Add $1.25/hr on 6/1/2017.<br>Premium Increase(s):<br>DOT PREMIUMS: 1) Pay two times the hourly basic rate on Sunday, New Year's Day, Memorial Day, Independence Day, Labor Day, Thanksgiving Day & Christmas Day. 2) Add $1.50/hr night work premium. See DOT'S website for details about the applicability of this night work premium at: http://www.dot.wi.gov/business/civilrights/laborwages/pwc.htm. | 36.17 | 21.15 | 57.32 |
| 536 | Fiber Optic Cable Equipment. | 28.89 | 17.95 | 46.84 |
| 537 | Work Performed on the Great Lakes Including Diver; Wet Tender or Hydraulic Dredge Engineer. | 41.65 | 21.71 | 63.36 |
| 538 | Work Performed on the Great Lakes Including 70 Ton & Over Tug Operator; Assistant Hydraulic Dredge Engineer; Crane or Backhoe Operator; Hydraulic Dredge Leverman or Diver's Tender; Mechanic or Welder. | 41.65 | 21.71 | 63.36 |

| CODE | Fringe Benefits Must Be Paid On All Hours Worked<br>TRADE OR OCCUPATION | HOURLY BASIC RATE OF PAY<br>$ | HOURLY FRINGE BENEFITS<br>$ | TOTAL<br>$ |
|---|---|---|---|---|
| 539 | Work Performed on the Great Lakes Including Deck Equipment Operator or Machineryman (Maintains Cranes Over 50 Tons or Backhoes 115,000 Lbs. or More); Tug, Launch or Loader, Dozer or Like Equipment When Operated on a Barge, Breakwater Wall, Slip, Dock or Scow, Deck Machinery. | 35.72 | 17.85 | 53.57 |
| 540 | Work Performed on the Great Lakes Including Deck Equipment Operator, Machineryman or Fireman (Operates 4 Units or More or Maintains Cranes 50 Tons or Under or Backhoes 115,000 Lbs. or Under); Deck Hand, Deck Engineer or Assistant Tug Operator; Off Road Trucks-Great Lakes ONLY. | 35.46 | 20.40 | 55.86 |

## LOCAL STREET OR MISCELLANEOUS PAVING CONSTRUCTION

**Includes roads, streets, alleys, trails, bridges, paths, racetracks, parking lots and driveways (except residential or agricultural), public sidewalks or other similar projects (excluding projects awarded by the Wisconsin Department of Transportation).**

### SKILLED TRADES

| CODE | Fringe Benefits Must Be Paid On All Hours Worked<br>TRADE OR OCCUPATION | HOURLY BASIC RATE OF PAY $ | HOURLY FRINGE BENEFITS $ | TOTAL $ |
|---|---|---|---|---|
| 103 | Bricklayer, Blocklayer or Stonemason | 35.37 | 17.99 | 53.36 |
| 105 | Carpenter<br>Future Increase(s):<br>Add $1.42/hr on 6/1/2015; Add $1.42/hr on 6/1/2016.<br>Premium Increase(s):<br>DOT PREMIUM: Pay two times the hourly basic rate on Sunday, New Year's Day, Memorial Day, Independence Day, Labor Day, Thanksgiving Day & Christmas Day. | 32.72 | 16.00 | 48.72 |
| 107 | Cement Finisher | 30.96 | 18.53 | 49.49 |
| 109 | Electrician<br>Premium Increase(s):<br>DOT PREMIUM: Pay two times the hourly basic rate on Sunday, New Year’s Day, Memorial Day, Independence Day, Labor Day, Thanksgiving Day & Christmas Day. | 33.93 | 22.77 | 56.70 |
| 111 | Fence Erector | 23.73 | 19.09 | 42.82 |
| 116 | Ironworker | 30.52 | 23.47 | 53.99 |
| 118 | Line Constructor (Electrical) | 37.43 | 18.19 | 55.62 |
| 124 | Painter | 29.52 | 19.99 | 49.51 |
| 125 | Pavement Marking Operator | 30.10 | 18.08 | 48.18 |
| 126 | Piledriver | 29.56 | 25.71 | 55.27 |
| 133 | Roofer or Waterproofer | 29.40 | 17.05 | 46.45 |
| 137 | Teledata Technician or Installer | 24.89 | 17.15 | 42.04 |
| 143 | Tuckpointer, Caulker or Cleaner | 33.76 | 17.82 | 51.58 |
| 144 | Underwater Diver (Except on Great Lakes) | 35.40 | 15.90 | 51.30 |
| 150 | Heavy Equipment Operator - ELECTRICAL LINE CONSTRUCTION ONLY | 35.55 | 15.57 | 51.12 |
| 151 | Light Equipment Operator -ELECTRICAL LINE CONSTRUCTION ONLY | 31.60 | 15.19 | 46.79 |
| 152 | Heavy Truck Driver - ELECTRICAL LINE CONSTRUCTION ONLY | 27.65 | 13.44 | 41.09 |
| 153 | Light Truck Driver - ELECTRICAL LINE CONSTRUCTION ONLY | 25.68 | 13.28 | 38.96 |
| 154 | Groundman - ELECTRICAL LINE CONSTRUCTION ONLY | 21.75 | 12.97 | 34.72 |

## TRUCK DRIVERS

**Fringe Benefits Must Be Paid On All Hours Worked**

| CODE | TRADE OR OCCUPATION | HOURLY BASIC RATE OF PAY $ | HOURLY FRINGE BENEFITS $ | TOTAL $ |
|---|---|---|---|---|
| 201 | Single Axle or Two Axle<br>Future Increase(s):<br>Add $1.15/hr on 6/1/2015.<br>Premium Increase(s):<br>DOT PREMIUM: Pay two times the hourly basic rate on Sunday, New Year's Day, Memorial Day, Independence Day, Labor Day, Thanksgiving Day & Christmas Day. | 25.18 | 18.31 | 43.49 |
| 203 | Three or More Axle | 18.00 | 0.00 | 18.00 |
| 204 | Articulated, Euclid, Dumptor, Off Road Material Hauler<br>Future Increase(s):<br>Add $1.60/hr on 6/2/2015; Add $1.60/hr on 6/3/2016. | 33.69 | 19.78 | 53.47 |
| 205 | Pavement Marking Vehicle | 20.85 | 11.02 | 31.87 |
| 206 | Shadow or Pilot Vehicle | 24.37 | 17.77 | 42.14 |
| 207 | Truck Mechanic | 18.00 | 0.00 | 18.00 |

## LABORERS

**Fringe Benefits Must Be Paid On All Hours Worked**

| CODE | TRADE OR OCCUPATION | HOURLY BASIC RATE OF PAY $ | HOURLY FRINGE BENEFITS $ | TOTAL $ |
|---|---|---|---|---|
| 301 | General Laborer | 24.75 | 19.69 | 44.44 |
| 303 | Landscaper<br>Future Increase(s):<br>Add $1.05/hr eff. 06/01/2015; Add $1.00/hr eff. 06/01/2016; Add $1.00/hr eff. 06/01/2017<br>Premium Increase(s):<br>DOT PREMIUMS: 1) Pay two times the hourly basic rate on Sunday, New Year's Day, Memorial Day, Independence Day, Labor Day, Thanksgiving Day & Christmas Day. 2) Add $1.25/hr for work on projects involving temporary traffic control setup, for lane and shoulder closures, when work under artificial illumination conditions is necessary as required by the project provisions (including prep time prior to and/or cleanup after such time period). | 27.06 | 20.03 | 47.09 |
| 304 | Flagperson or Traffic Control Person | 25.67 | 12.66 | 38.33 |
| 311 | Fiber Optic Laborer (Outside, Other Than Concrete Encased) | 17.71 | 16.01 | 33.72 |
| 314 | Railroad Track Laborer | 14.50 | 4.39 | 18.89 |

## HEAVY EQUIPMENT OPERATORS
## CONCRETE PAVEMENT OR BRIDGE WORK

| CODE | Fringe Benefits Must Be Paid On All Hours Worked<br>TRADE OR OCCUPATION | HOURLY BASIC RATE OF PAY $ | HOURLY FRINGE BENEFITS $ | TOTAL $ |
|---|---|---|---|---|
| 541 | Crane, Tower Crane, Pedestal Tower or Derrick, With or Without Attachments, With a Lifting Capacity of Over 100 Tons, Self-Erecting Tower Crane With a Lifting Capacity Of Over 4,000 Lbs., Crane With Boom Dollies; Crane, Tower Crane, Pedestal Tower or Derrick, With Boom, Leads &/or Jib Lengths Measuring 176 Ft or Over; Master Mechanic.<br>Future Increase(s):<br>Add $1.25/hr on 6/1/2015; Add $1.30/hr on 6/1/2016; Add $1.25/hr on 6/1/2017.<br>Premium Increase(s):<br>DOT PREMIUMS: 1) Pay two times the hourly basic rate on Sunday, New Year's Day, Memorial Day, Independence Day, Labor Day, Thanksgiving Day & Christmas Day. 2) Add $1.50/hr night work premium. See DOT'S website for details about the applicability of this night work premium at: http://www.dot.wi.gov/business/civilrights/laborwages/pwc.htm. | 37.72 | 21.15 | 58.87 |
| 542 | Backhoe (Track Type) Having a Mfgr.'s Rated Capacity of 130,000 Lbs. or Over; Caisson Rig; Crane, Tower Crane, Portable Tower, Pedestal Tower or Derrick, With or Without Attachments, With a Lifting Capacity of 100 Tons or Under, Self-Erecting Tower Crane With a Lifting Capacity of 4,000 Lbs. & Under; Crane, Tower Crane Portable Tower, Pedestal Tower or Derrick, With Boom, Leads &/or Jib Lengths Measuring 175 Ft or Under; Dredge (NOT Performing Work on the Great Lakes); Licensed Boat Pilot (NOT Performing Work on the Great Lakes); Pile Driver.<br>Future Increase(s):<br>Add $1.25/hr on 6/1/2015; Add $1.30/hr on 6/1/2016; Add $1.25/hr on 6/1/2017.<br>Premium Increase(s):<br>DOT PREMIUMS: 1) Pay two times the hourly basic rate on Sunday, New Year's Day, Memorial Day, Independence Day, Labor Day, Thanksgiving Day & Christmas Day. 2) Add $1.50/hr night work premium. See DOT'S website for details about the applicability of this night work premium at: http://www.dot.wi.gov/business/civilrights/laborwages/pwc.htm. | 37.22 | 21.15 | 58.37 |

| CODE | Fringe Benefits Must Be Paid On All Hours Worked<br>TRADE OR OCCUPATION | HOURLY BASIC RATE OF PAY<br>$ | HOURLY FRINGE BENEFITS<br>$ | TOTAL<br>$ |
|---|---|---|---|---|
| 543 | Air Track, Rotary or Percussion Drilling Machine &/or Hammers, Blaster; Automatic Subgrader (Concrete); Backhoe (Track Type) Having a Mfgr.'s Rated Capacity of Under 130,000 Lbs., Backhoe (Mini, 15,000 Lbs. & Under); Boring Machine (Directional, Horizontal or Vertical); Bridge (Bidwell) Paver; Bulldozer or Endloader; Concrete Batch Plant, Batch Hopper; Concrete Breaker (Large, Auto, Vibratory/Sonic, Manual or Remote); Concrete Bump Cutter, Grinder, Planing or Grooving Machine; Concrete Conveyor System; Concrete Laser/Screed; Concrete Paver (Slipform); Concrete Pump, Concrete Conveyor (Rotec or Bidwell Type); Concrete Slipform Placer Curb & Gutter Machine; Concrete Spreader & Distributor; Crane (Carry Deck, Mini) or Truck Mounted Hydraulic Crane (10 Tons or Under); Crane With a Lifting Capacity of 25 Tons or Under; Forestry Equipment, Timbco, Tree Shear, Tub Grinder, Processor; Gradall (Cruz-Aire Type); Grader or Motor Patrol; Grout Pump; Hydro-Blaster (10,000 PSI or Over); Loading Machine (Conveyor); Manhoist; Material or Stack Hoist; Mechanic or Welder; Milling Machine; Post Hole Digger or Driver; Scraper (Self Propelled or Tractor Drawn) 5 cu yds or More Capacity; Shoulder Widener; Sideboom; Skid Rig; Stabilizing or Concrete Mixer (Self-Propelled or 14S or Over); Straddle Carrier or Travel Lift; Tractor (Scraper, Dozer, Pusher, Loader); Tractor or Truck Mounted Hydraulic Backhoe; Trencher (Wheel Type or Chain Type); Tube Finisher; Tugger (NOT Performing Work on the Great Lakes); Winches & A-Frames. | 35.72 | 17.85 | 53.57 |
| 544 | Backfiller; Belting, Burlap, Texturing Machine; Broom or Sweeper; Compactor (Self-Propelled or Tractor Mounted, Towed & Light Equipment); Concrete Finishing Machine (Road Type); Environmental Burner; Farm or Industrial Type Tractor; Fireman (Pile Driver & Derrick NOT Performing Work on the Great Lakes); Forklift; Greaser; Jeep Digger; Joint Sawer (Multiple Blade); Launch (NOT Performing Work on the Great Lakes); Lift Slab Machine; Mechanical Float; Mulcher; Power Subgrader; Robotic Tool Carrier (WIth or Without Attachments); Self Propelled Chip Spreader; Shouldering Machine; Skid Steer Loader (With or Without Attachments); Telehandler; Tining or Curing Machine.<br>Future Increase(s):<br>Add $1.25/hr on 6/1/2015; Add $1.30/hr on 6/1/2016; Add $1.25/hr on 6/1/2017.<br>Premium Increase(s):<br>DOT PREMIUMS: 1) Pay two times the hourly basic rate on Sunday, New Year's Day, Memorial Day, Independence Day, Labor Day, Thanksgiving Day & Christmas Day. 2) Add $1.50/hr night work premium. See DOT'S website for details about the applicability of this night work premium at: http://www.dot.wi.gov/business/civilrights/laborwages/pwc.htm. | 36.46 | 21.15 | 57.61 |
| 545 | Air Compressor (&/or 400 CFM or Over); Air, Electric or Hydraulic Jacking System; Automatic Belt Conveyor & Surge Bin; Boiler (Temporary Heat); Concrete Proportioning Plant; Crusher, Screening or Wash Plant; Generator (&/or 150 KW or Over); Heaters (Mechanical); High Pressure Utility Locating Machine (Daylighting Machine); Mudjack; Oiler; Prestress Machine; Pug Mill; Pump (3 Inch or Over) or Well Points; Rock, Stone Breaker; Screed (Milling Machine); Stump Chipper; Tank Car Heaters; Vibratory Hammer or Extractor, Power Pack. | 35.17 | 20.40 | 55.57 |
| 546 | Fiber Optic Cable Equipment. | 28.89 | 17.95 | 46.84 |

| CODE | Fringe Benefits Must Be Paid On All Hours Worked<br>TRADE OR OCCUPATION | HOURLY BASIC RATE OF PAY<br>$ | HOURLY FRINGE BENEFITS<br>$ | TOTAL<br>$ |
|---|---|---|---|---|
| 547 | Work Performed on the Great Lakes Including Diver; Wet Tender or Hydraulic Dredge Engineer. | 41.65 | 21.71 | 63.36 |
| 548 | Work Performed on the Great Lakes Including 70 Ton & Over Tug Operator; Assistant Hydraulic Dredge Engineer; Crane or Backhoe Operator; Hydraulic Dredge Leverman or Diver's Tender; Mechanic or Welder. | 41.65 | 21.71 | 63.36 |
| 549 | Work Performed on the Great Lakes Including Deck Equipment Operator or Machineryman (Maintains Cranes Over 50 Tons or Backhoes 115,000 Lbs. or more); Tug, Launch or Loader, Dozer or Like Equipment When Operated on a Barge, Breakwater Wall, Slip, Dock or Scow, Deck Machinery. | 35.72 | 17.85 | 53.57 |
| 550 | Work Performed on the Great Lakes Including Deck Equipment Operator; Machineryman or Fireman (Operates 4 Units or More or Maintains Cranes 50 Tons or Under or Backhoes 115,000 Lbs. or Under); Deck Hand, Deck Engineer or Assistant Tug Operator; Off Road Trucks - Great Lakes ONLY. | 35.46 | 20.40 | 55.86 |

## HEAVY EQUIPMENT OPERATORS
## ASPHALT PAVEMENT OR OTHER WORK

| CODE | Fringe Benefits Must Be Paid On All Hours Worked<br>TRADE OR OCCUPATION | HOURLY BASIC RATE OF PAY<br>$ | HOURLY FRINGE BENEFITS<br>$ | TOTAL<br>$ |
|---|---|---|---|---|
| 551 | Crane, Tower Crane, Pedestal Tower or Derrick, With or Without Attachments, With a Lifting Capacity of Over 100 Tons, Self Erecting Tower Crane With a Lifting Capacity of Over 4,000 Lbs., Crane With Boom Dollies; Crane, Tower Crane, Pedestal Tower or Derrick, With Boom, Leads and/or Jib Lengths Measuring 176 Ft or Over; Master Mechanic. | 36.72 | 20.40 | 57.12 |
| 552 | Backhoe (Track Type) Having a Mfgr.'s Rated Capacity of 130,000 Lbs. or Over; Caisson Rig; Crane, Tower Crane, Portable Tower, Pedestal Tower or Derrick, With or Without Attachments, With a Lifting Capacity of 100 Tons or Under, Self-Erecting Tower Crane With a Lifting Capacity Of 4,000 Lbs. & Under; Crane, Tower Crane, Portable Tower, Pedestal Tower or Derrick, With Boom, Leads &/or Jib Lengths Measuring 175 Ft or Under; Dredge (NOT Performing Work on the Great Lakes); Licensed Boat Pilot (NOT Performing Work on the Great Lakes); Pile Driver.<br>Future Increase(s):<br>Add $1.25/hr on 6/1/2015; Add $1.30/hr on 6/1/2016; Add $1.25/hr on 6/1/2017.<br>Premium Increase(s):<br>DOT PREMIUMS: 1) Pay two times the hourly basic rate on Sunday, New Year's Day, Memorial Day, Independence Day, Labor Day, Thanksgiving Day & Christmas Day. 2) Add $1.50/hr night work premium. See DOT'S website for details about the applicability of this night work premium at: http://www.dot.wi.gov/business/civilrights/laborwages/pwc.htm. | 37.22 | 21.15 | 58.37 |

| CODE | Fringe Benefits Must Be Paid On All Hours Worked<br>TRADE OR OCCUPATION | HOURLY BASIC RATE OF PAY<br>$ | HOURLY FRINGE BENEFITS<br>$ | TOTAL<br>$ |
|---|---|---|---|---|
| 553 | Air, Track, Rotary or Percussion Drilling Machine &/or Hammers, Blaster; Asphalt Heater, Planer & Scarifier; Asphalt Milling Machine; Asphalt Screed; Backhoe (Track Type) Having a Mfgr.'s Rated Capacity of Under 130,000 Lbs., Backhoe (Mini, 15,000 Lbs. & Under); Bituminous (Asphalt) Plant & Paver, Screed; Boring Machine (Directional, Horizontal or Vertical); Bulldozer or Endloader; Concrete Breaker (Large, Auto, Vibratory/Sonic, Manual or Remote); Concrete Conveyor System; Concrete Laser/Screed; Concrete Slipform Placer Curb & Gutter Machine; Crane (Carry Deck, Mini) or Truck Mounted Hydraulic Crane (10 Tons or Under); Crane With a Lifting Capacity of 25 Tons or Under; Forestry Equipment, Timbco, Tree Shear, Tub Grinder, Processor; Gradall (Cruz-Aire Type); Grader or Motor Patrol; Hydro-Blaster (10,000 PSI or Over); Loading Machine (Conveyor); Manhoist; Material or Stack Hoist; Mechanic or Welder; Milling Machine; Post Hole Digger or Driver; Railroad Track Rail Leveling Machine, Tie Placer, Extractor, Tamper, Stone Leveler or Rehabilitation Equipment; Roller (Over 5 Ton); Scraper (Self Propelled or Tractor Drawn) 5 cu yds or More Capacity; Shoulder Widener; Sideboom; Skid Rig; Stabilizing or Concrete Mixer (Self-Propelled or 14S or Over); Tractor (Scraper, Dozer, Pusher, Loader); Tractor or Truck Mounted Hydraulic Backhoe; Trencher (Wheel Type or Chain Type); Tube Finisher; Tugger (NOT Performing Work on the Great Lakes); Winches & A-Frames.<br>Future Increase(s):<br>Add $1.25/hr on 6/1/2015; Add $1.30/hr on 6/1/2016;<br>Add $1.25/hr on 6/1/2017. | 36.17 | 20.80 | 56.97 |
| 554 | Backfiller; Broom or Sweeper; Compactor (Self-Propelled or Tractor Mounted, Towed & Light Equipment); Concrete Finishing Machine (Road Type); Environmental Burner; Farm or Industrial Type Tractor; Fireman (Asphalt Plant, Pile Driver & Derrick NOT Performing Work on the Great Lakes); Forklift; Greaser; Hoist (Tugger, Automatic); Jeep Digger; Joint Sawer (Multiple Blade); Launch (NOT Performing Work on the Great Lakes); Lift Slab Machine; Mechanical Float; Mulcher; Power Subgrader; Robotic Tool Carrier (With or Without Attachments); Roller (Rubber Tire, 5 Ton or Under); Self-Propelled Chip Spreader; Shouldering Machine; Skid Steer Loader (With or Without Attachments); Telehandler.<br>Future Increase(s):<br>Add $1.25/hr on 6/1/2015; Add $1.30/hr on 6/1/2016;<br>Add $1.25/hr on 6/1/2017. | 36.17 | 20.80 | 56.97 |

| CODE | Fringe Benefits Must Be Paid On All Hours Worked<br>TRADE OR OCCUPATION | HOURLY BASIC RATE OF PAY<br>$ | HOURLY FRINGE BENEFITS<br>$ | TOTAL<br>$ |
|---|---|---|---|---|
| 555 | Air Compressor (&/or 400 CFM or Over); Air, Electric or Hydraulic Jacking System; Augers (Vertical & Horizontal); Automatic Belt Conveyor & Surge Bin; Boiler (Temporary Heat); Crusher, Screening or Wash Plant; Generator (&/or 150 KW or Over); Heaters (Mechanical); High Pressure Utility Locating Machine (Daylighting Machine); Mudjack; Oiler; Prestress Machine; Pug Mill; Pump (3 Inch or Over) or Well Points; Rock, Stone Breaker; Screed (Milling Machine); Stump Chipper; Tank Car Heaters; Vibratory Hammer or Extractor, Power Pack.<br>Future Increase(s):<br>Add $1.25/hr on 6/1/2015; Add $1.30/hr on 6/1/2016; Add $1.25/hr on 6/1/2017.<br>Premium Increase(s):<br>DOT PREMIUMS: 1) Pay two times the hourly basic rate on Sunday, New Year's Day, Memorial Day, Independence Day, Labor Day, Thanksgiving Day & Christmas Day. 2) Add $1.50/hr night work premium. See DOT'S website for details about the applicability of this night work premium at: http://www.dot.wi.gov/business/civilrights/laborwages/pwc.htm. | 36.17 | 21.15 | 57.32 |
| 556 | Fiber Optic Cable Equipment. | 27.89 | 17.20 | 45.09 |

## RESIDENTIAL OR AGRICULTURAL CONSTRUCTION

**Includes single family houses or apartment buildings of no more than four (4) stories in height and all buildings, structures or facilities that are primarily used for agricultural or farming purposes, excluding commercial buildings. For classification purposes, the exterior height of a residential building, in terms of stories, is the primary consideration. All incidental items such as site work, driveways, parking lots, private sidewalks, private septic systems or sewer and water laterals connected to a public system and swimming pools are included within this definition. Residential buildings of five (5) stories and above are NOT included within this definition.**

### SKILLED TRADES

**Fringe Benefits Must Be Paid On All Hours Worked**

| CODE | TRADE OR OCCUPATION | HOURLY BASIC RATE OF PAY $ | HOURLY FRINGE BENEFITS $ | TOTAL $ |
|---|---|---|---|---|
| 101 | Acoustic Ceiling Tile Installer | 33.07 | 16.07 | 49.14 |
| 102 | Boilermaker | 32.05 | 28.04 | 60.09 |
| 103 | Bricklayer, Blocklayer or Stonemason | 23.89 | 4.78 | 28.67 |
| 104 | Cabinet Installer | 18.00 | 0.00 | 18.00 |
| 105 | Carpenter | 25.00 | 6.52 | 31.52 |
| 106 | Carpet Layer or Soft Floor Coverer | 30.00 | 0.00 | 30.00 |
| 107 | Cement Finisher | 26.60 | 3.99 | 30.59 |
| 108 | Drywall Taper or Finisher | 18.00 | 5.75 | 23.75 |
| 109 | Electrician<br>Premium Increase(s):<br>DOT PREMIUM: Pay two times the hourly basic rate on Sunday, New Year's Day, Memorial Day, Independence Day, Labor Day, Thanksgiving Day & Christmas Day. | 33.93 | 22.77 | 56.70 |
| 110 | Elevator Constructor | 23.26 | 0.00 | 23.26 |
| 111 | Fence Erector | 19.00 | 1.34 | 20.34 |
| 112 | Fire Sprinkler Fitter | 39.00 | 18.00 | 57.00 |
| 113 | Glazier<br>Future Increase(s):<br>Add $.75/hr eff. 06/01/2015; Add $.90/hr eff. 06/01/2016 | 37.07 | 14.42 | 51.49 |
| 114 | Heat or Frost Insulator | 33.43 | 25.81 | 59.24 |
| 115 | Insulator (Batt or Blown) | 20.00 | 0.00 | 20.00 |
| 116 | Ironworker | 31.50 | 11.33 | 42.83 |
| 117 | Lather | 25.00 | 6.52 | 31.52 |
| 119 | Marble Finisher | 20.00 | 0.52 | 20.52 |
| 120 | Marble Mason | 23.89 | 4.78 | 28.67 |
| 121 | Metal Building Erector | 18.00 | 5.88 | 23.88 |

| CODE | Fringe Benefits Must Be Paid On All Hours Worked<br>TRADE OR OCCUPATION | HOURLY BASIC RATE OF PAY<br>$ | HOURLY FRINGE BENEFITS<br>$ | TOTAL<br>$ |
|---|---|---|---|---|
| 123 | Overhead Door Installer | 28.00 | 1.61 | 29.61 |
| 124 | Painter | 18.00 | 4.50 | 22.50 |
| 125 | Pavement Marking Operator | 18.75 | 2.47 | 21.22 |
| 129 | Plasterer | 22.00 | 0.00 | 22.00 |
| 130 | Plumber | 36.47 | 20.47 | 56.94 |
| 132 | Refrigeration Mechanic | 17.00 | 13.52 | 30.52 |
| 133 | Roofer or Waterproofer<br>Future Increase(s):<br>Add $1.25/hr eff. 06/01/2015; Add $1.25/hr eff. 06/01/2016 | 29.65 | 18.15 | 47.80 |
| 134 | Sheet Metal Worker | 26.13 | 20.22 | 46.35 |
| 135 | Steamfitter | 23.62 | 16.12 | 39.74 |
| 137 | Teledata Technician or Installer | 18.00 | 28.48 | 46.48 |
| 138 | Temperature Control Installer | 22.00 | 2.45 | 24.45 |
| 139 | Terrazzo Finisher | 20.00 | 0.52 | 20.52 |
| 140 | Terrazzo Mechanic | 30.71 | 16.52 | 47.23 |
| 141 | Tile Finisher | 23.77 | 16.52 | 40.29 |
| 142 | Tile Setter | 30.50 | 0.68 | 31.18 |
| 143 | Tuckpointer, Caulker or Cleaner | 14.00 | 8.75 | 22.75 |
| 146 | Well Driller or Pump Installer | 29.00 | 0.00 | 29.00 |
| 147 | Siding Installer | 17.00 | 0.65 | 17.65 |

**TRUCK DRIVERS**

| CODE | Fringe Benefits Must Be Paid On All Hours Worked<br>TRADE OR OCCUPATION | HOURLY BASIC RATE OF PAY<br>$ | HOURLY FRINGE BENEFITS<br>$ | TOTAL<br>$ |
|---|---|---|---|---|
| 201 | Single Axle or Two Axle | 17.25 | 5.70 | 22.95 |
| 203 | Three or More Axle | 23.49 | 14.07 | 37.56 |
| 205 | Pavement Marking Vehicle | 20.85 | 11.02 | 31.87 |
| 207 | Truck Mechanic | 23.49 | 14.07 | 37.56 |

## LABORERS

| CODE | Fringe Benefits Must Be Paid On All Hours Worked<br>TRADE OR OCCUPATION | HOURLY BASIC RATE OF PAY<br>$ | HOURLY FRINGE BENEFITS<br>$ | TOTAL<br>$ |
|---|---|---|---|---|
| 301 | General Laborer | 15.00 | 10.33 | 25.33 |
| 302 | Asbestos Abatement Worker | 16.50 | 8.21 | 24.71 |
| 303 | Landscaper | 12.00 | 0.00 | 12.00 |
| 311 | Fiber Optic Laborer (Outside, Other Than Concrete Encased) | 17.71 | 16.01 | 33.72 |
| 315 | Final Construction Clean-Up Worker | 10.00 | 2.21 | 12.21 |

## HEAVY EQUIPMENT OPERATORS RESIDENTIAL OR AGRICULTURAL CONSTRUCTION

| CODE | Fringe Benefits Must Be Paid On All Hours Worked<br>TRADE OR OCCUPATION | HOURLY BASIC RATE OF PAY<br>$ | HOURLY FRINGE BENEFITS<br>$ | TOTAL<br>$ |
|---|---|---|---|---|
| 557 | Asphalt Heater, Planer & Scarifier; Asphalt Milling Machine; Asphalt Screed; Backhoe (Track Type); Backhoe (Mini, 15,000 Lbs. & Under); Bituminous (Asphalt) Plant & Paver, Screed; Boring Machine (Directional, Horizontal or Vertical); Bulldozer or Endloader; Concrete Breaker (Large, Auto, VIbratory/Sonic, Manual or Remote); Concrete Bump Cutter, Grinder, Planing or Grooving Machine; Concrete Conveyor System; Concrete Laser/Screed; Concrete Paver (Slipform); Concrete Pump, Concrete Conveyor (Rotec or Bidwell Type); Concrete Slipform Placer Curb & Gutter Machine; Concrete Spreader & DIstributor; Crane (Carry Deck, Mini) or Truck Mounted Hydraulic Crane (10 Tons or Under); Crane With a Lifting Capacity of 25 Tons or Under; Crane, Shovel, Dragline, Clamshells; Forestry Equipment, TImbco, Tree Shear, Tub Grinder, Processor; Grader or Motor Patrol; Grout Pump; Hydro-Blaster (10,000 PSI or Over); Loading Machine (Conveyor); Manhoist; Material or Stack Hoist; Mechanic or Welder; Milling Machine; Roller (Over 5 Ton); Scraper (Self Propelled or Tractor Drawn) 5 cu yds or More Capacity; Shoulder Widener; Skid Rig; Stabilizing or Concrete Mixer (Self-Propelled or 14S or Over); Tractor (Scraper, Dozer, Pusher, Loader); Tractor or Truck Mounted Hydraulic Backhoe; Tractor or Truck Mounted Hydraulic Crane (10 Tons or Under); Trencher (Wheel Type or Chain Type); WInches & A-Frames. | 36.06 | 19.02 | 55.08 |

| | | | | |
|---|---|---|---|---|
| 558 | Air Compressor (&/or 400 CFM or Over); Air, Electric or Hydraulic Jacking System; Backfiller; Belting, Burlap, Texturing Machine; Boiler (Temporary Heat); Broom or Sweeper; Compactor (Self-Propelled or Tractor Mounted, Towed & LIght Equipment); Concrete Finishing Machine (Road Type); Farm or Industrial Type Tractor; Forklift; Generator (&/or 150 KW or Over); Heaters (Mechanical); High Pressure Utility Locating Machine (Daylighting Machine); Jeep Digger; Lift Slab Machine; Mulcher; Oiler; Post Hole Digger or Driver; Power Subgrader; Pump (3 Inch or Over) or Well Points; Robotic Tool Carrier (With or Without Attachments); Rock, Stone Breaker; Roller (Rubber Tire, 5 Tons or Under); Screed (Milling Machine); Self Propelled Chip Spreader; Shouldering Machine; Skid Steer Loader (With or Without Attachments); Stump Chipper; Telehandler; Vibratory Hammer or Extractor, Power Pack. | 36.79 | 18.81 | 55.60 |

********** END OF RATES **********

DEPARTMENT OF ADMINISTRATION
BUSINESS OPERATIONS DIVISION
PROCUREMENT SERVICES SECTION

# Affidavit of Compliance
# Disclosure of Participation in or Profits Derived from Slavery by Contractors

Company Name: _____

Address: _____

City: _____ State: _____ Zip: _____

This affidavit of compliance will be the contractor's sworn statement that publicly discloses any slavery policies sold by any companies, or profits from slavery by industries or their predecessors who are doing business with the City of Milwaukee as defined in the Milwaukee Code of Ordinances 310-14. **NOTE: Effective May 13, 2014, Contractors whose company was established during the slavery era, whether or not subject to competitive bidding, shall complete this Affidavit prior to entering into a contract.**

Please check one:

☐ This business **was** in existence during or prior to the slavery era (1865). I have searched any and all records for records of investments or profits from slavery, and have found no such records.

☐ This business **was** in existence during or prior to the slavery era (1865). I have searched any and all records for records of investments or profits from slavery, and am disclosing the findings below.

Findings being disclosed (please attach additional pages, if necessary):

I hereby declare that all statements are true, accurate and complete as of the date furnished to the City of Milwaukee.

Authorized Signature: _____

Printed Name: _____ Date: _____

---

Subscribed to before me on this _____ day of _____, 20 _____, at

_____ County, _____ State.

_____
Notary Public Signature

_____
Printed Name

My commission expires: _____

(SEAL)

**Please Return to:**
DOA-BOD-Procurement Services
200 E. Wells Street, Room 601
Milwaukee, WI 53202

procurement.services@milwaukee.gov

**CITY OF MILWAUKEE**
**PRIME CONTRACTOR AFFIDAVIT OF COMPLIANCE**
**WITH MINIMUM WAGE SCALE AND SPECIAL AREA WORKER HOURS PROVISIONS**

STATE OF_____) Project Name_____
) SS.
_____County) DPW Contract No._____

I,_____, being duly sworn, state that:

1. I am the _____ of _____, a _____
(State)
Corporation, partnership, or individual of _____, _____,
(City, Village, Township) (State)
and make this affidavit pursuant to the provisions of § 66.0903 (9), Wisconsin Statutes, and Wisconsin Administrative Code section §DWD 290.14 regarding wage and fringe benefit rates for municipal contracts for construction of public works and pursuant to Section 309-41 of the Milwaukee Code of Ordinances.

2. I have recently completed the work required under the terms of the contract dated _____, With the City of Milwaukee, Department of Public Works for the construction of all or part of the above-named public works project and make this affidavit in order to obtain my final payment.

3. I have fully complied with the wage and hour requirements as set forth in the above-referenced contract and paid overtime rates (1-1/2 times) for any work over ten (10) hours per day or forty (40) hours per week.

4. I have received similar evidence of compliance with the contract wage rates and special impact area worker hour requirements in the form of completed affidavits from each of my agents and subcontractors who worked on this project and have listed their names on the reverse side of this affidavit along with numbers and percentages of worker hours.

5. I have full and accurate records which clearly show the name, trade or occupation, and home address of every laborer, worker, or mechanic that I employed in connection with the work on this project, as well as the hours worked and actual wage and fringe benefits paid to such employees. These records will be kept at _____ in the custody of _____, whose address and telephone number are _____ _____. These payroll records and evidence of compliance set in Paragraph 4 will be retained and made available for inspection for a period of at least **seven (7)** years following the completion of the project and will not be removed without prior notification to the commissioner of Public Works.

| Title | Officer Name | Address |
|---|---|---|
| President | _____ | _____ |
| Vice President | _____ | _____ |
| Secretary-Treasurer | _____ | _____ |

Subscribed and sworn to before me this_____
Day of _____, 20_____

_____
(Notary Signature)

Notary Public, State of _____ _____
(Contractor Signature)

My commission Expires: _____

**____O V E R ___**

## SUMMARY OF HOURS WORKED

## (TARGET RESIDENCY VS TOTAL HOURS)

| Name | No. of Hours of Special Impact Area Workers | % of Total Hours | No. of Hours of All Other Workers | % of Total Hours | Total of All Worker Hours |
|---|---|---|---|---|---|
| **Prime Contractor:** | | | | | |
| | | | | | |
| **Subcontractors:** | | | | | |
| | | | | | |
| | | | | | |
| | | | | | |
| | | | | | |
| | | | | | |
| | | | | | |
| | | | | | |
| | | | | | |
| | | | | | |
| | | | | | |
| | | | | | |
| | | | | | |
| | | | | | |
| | | | | | |
| GRAND TOTAL | | | | | |

**CITY OF MILWAUKEE**
**SUBCONTRACTOR AFFIDAVIT OF COMPLIANCE**
**WITH MINIMUM WAGE SCALE AND SPECIAL AREA WORKER HOURS PROVISIONS**

STATE OF_____) Project Name_____
) SS.
_____County) DPW Contract No._____

I,_____, being duly sworn, state that:

1. I am the _____ of _____, a _____
(State)
Corporation, partnership, or individual of _____, _____,
(City, Village, Township) (State)
and make this affidavit pursuant to the provisions of § 66.0903 (9), Wisconsin Statutes, and Wisconsin Administrative Code section § DWD 290.13 regarding wage and fringe benefit rates for municipal contracts for construction of public works and pursuant to Section 309-41 of the Milwaukee Code of Ordinances.

2. I have recently completed the work required under the terms of the contract dated _____, With the City of Milwaukee, Department of Public Works and _____
for the construction of all or part of the above-named public works (Name of Prime Contractor)
project and make this affidavit in order to obtain my final payment.

3. I have fully complied with the wage and hour requirements as set forth in the above-referenced contract and paid overtime rates (1-1/2 times) for any work over ten (10) hours per day or forty (40) hours per week.

4. I have full and accurate records which clearly show the name, trade or occupation, and home address of every laborer, worker, or mechanic that I employed in connection with the work on this project, as well as the hours worked and actual wage and fringe benefits paid to such employees. These records will be kept at _____ in the custody of _____, whose address and telephone number are _____ _____. These payroll records and evidence of compliance set in Paragraph 4 will be retained and made available for inspection for a period of at least **seven (7)** years following the completion of the project and will not be removed without prior notification to the commissioner of Public Works.

5. I certify that _____ were the total number of hours worked on this project with _____ hours being worked by residents of the special impact area and _____ hours being worked by all other workers.

| Title | Officer Name | Address |
|---|---|---|
| President_____ | _____ | _____ |
| Vice President__ | _____ | _____ |
| Secretary-Treasurer | _____ | _____ |

Subscribed and sworn to before me this_____
Day of _____, 20_____

_____
(Notary Signature)

Notary Public, State of _____ _____
(Contractor Signature)

My commission Expires: _____

Form DPW-6(02/07)

# CITY OF MILWAUKEE
## CONTRACTORS TIME REPORT

**Contractor**_____ **Contract No. C**_____ **Complete and return to Rm. 506, Dept. of Public Works**
**Sub-Contractor**_____ **Period Starting**_____ **within 10 days following the completion of work on a**
**Work Location**_____ **Period Ending**_____ **contract, or every three months, whichever occurs first.**

| NAME/ ADDRESS | Job Class. | Appren | RESIDENCY | | | GENDER | RACE | REGULAR HOURS | | OVERTIME HRS. | | HOURLY CONTRIBUTIONS TO BE MADE | | | |
|---|---|---|---|---|---|---|---|---|---|---|---|---|---|---|---|
| | | | Target Milw. | Non-Target Milw. | Non-Resident Milw. | | | Total Hours Worked | Hourly Rate* | Total Hours Worked | Hourly Rate* | Welfare Fund | Vacation Fund | Pension Fund | Other |
| | | | | | | | | | | | | | | | |
| | | | | | | | | | | | | | | | |
| | | | | | | | | | | | | | | | |
| | | | | | | | | | | | | | | | |
| | | | | | | | | | | | | | | | |
| | | | | | | | | | | | | | | | |
| | | | | | | | | | | | | | | | |
| | | | | | | | | | | | | | | | |
| | | | | | | | | | | | | | | | |
| | | | | | | | | | | | | | | | |
| | | | | | | | | | | | | | | | |
| | | | | | | | | | | | | | | | |
| | | | | | | | | | | | | | | | |
| | | | | | | | | | | | | | | | |
| | | | | | | | | | | | | | | | |
| | | | | | | | | | | | | | | | |
| | | | | | | | | | | | | | | | |

***Exclude Welfare, Vacation, Pension Fund and Other Contributions unless they are paid as wages.**

State of Wisconsin ) ss.
County of Milwaukee )

This is to certify that each and every employee was employed by me during the above period on the contract covered by this report as listed above and has been paid in full without rebate the amounts indicated, and that we have conformed with the requirements of Section 309-21 thru 309-37, Milwaukee Code of Ordinances, relating to Minimum Wage Scale, and any amendments thereto.

Subscribed and sworn to before me this _____ day of _____A.D. _____
Company Officer's Signature

My commission Expires_____ _____ _____
Notary Public Milwaukee County Type or Print Officer's Name & Title