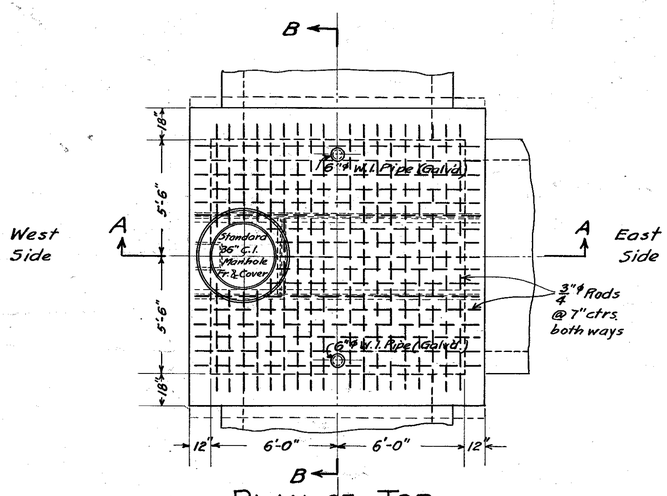


PLAN OF TOP.

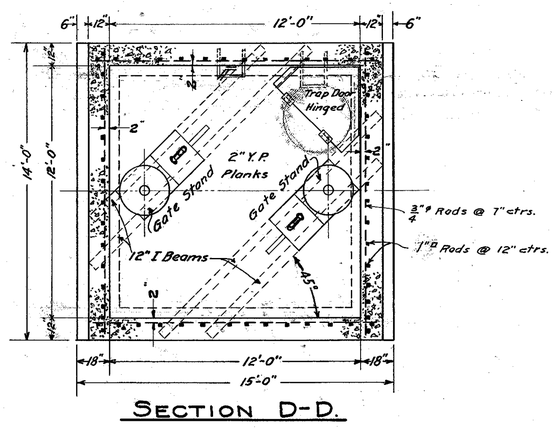


SECTION D-D.

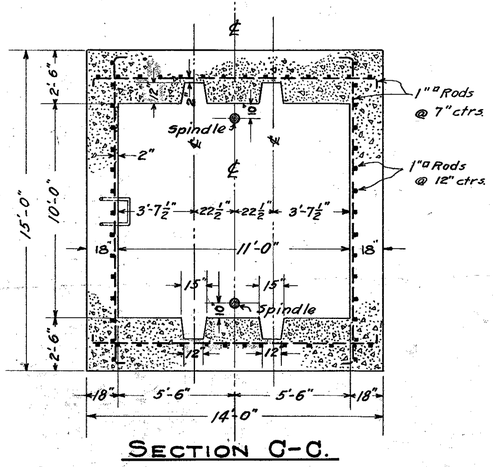


SECTION C-C.

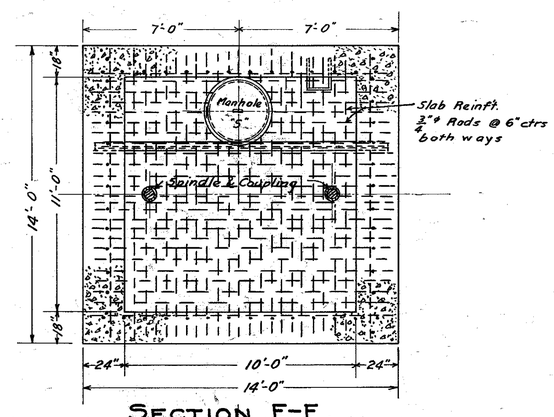


SECTION E-E.

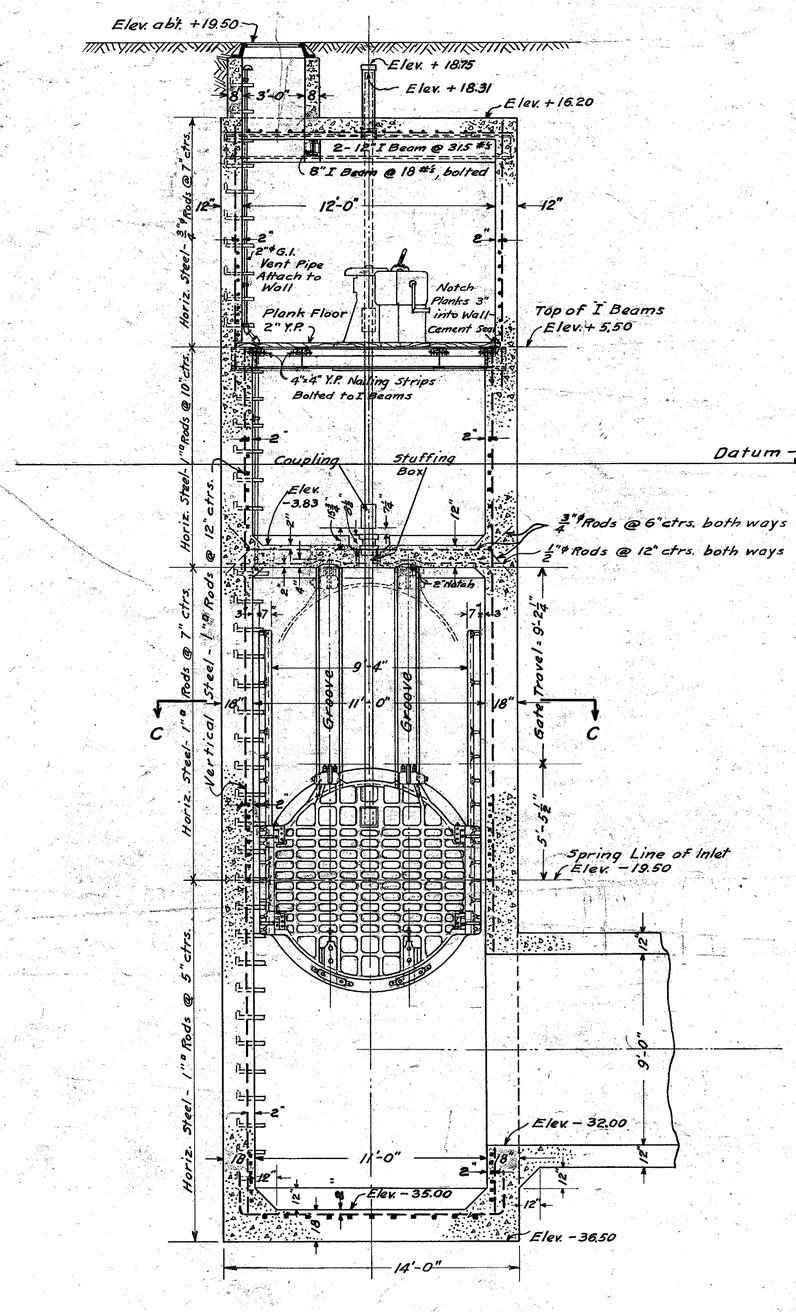


SECTION A-A

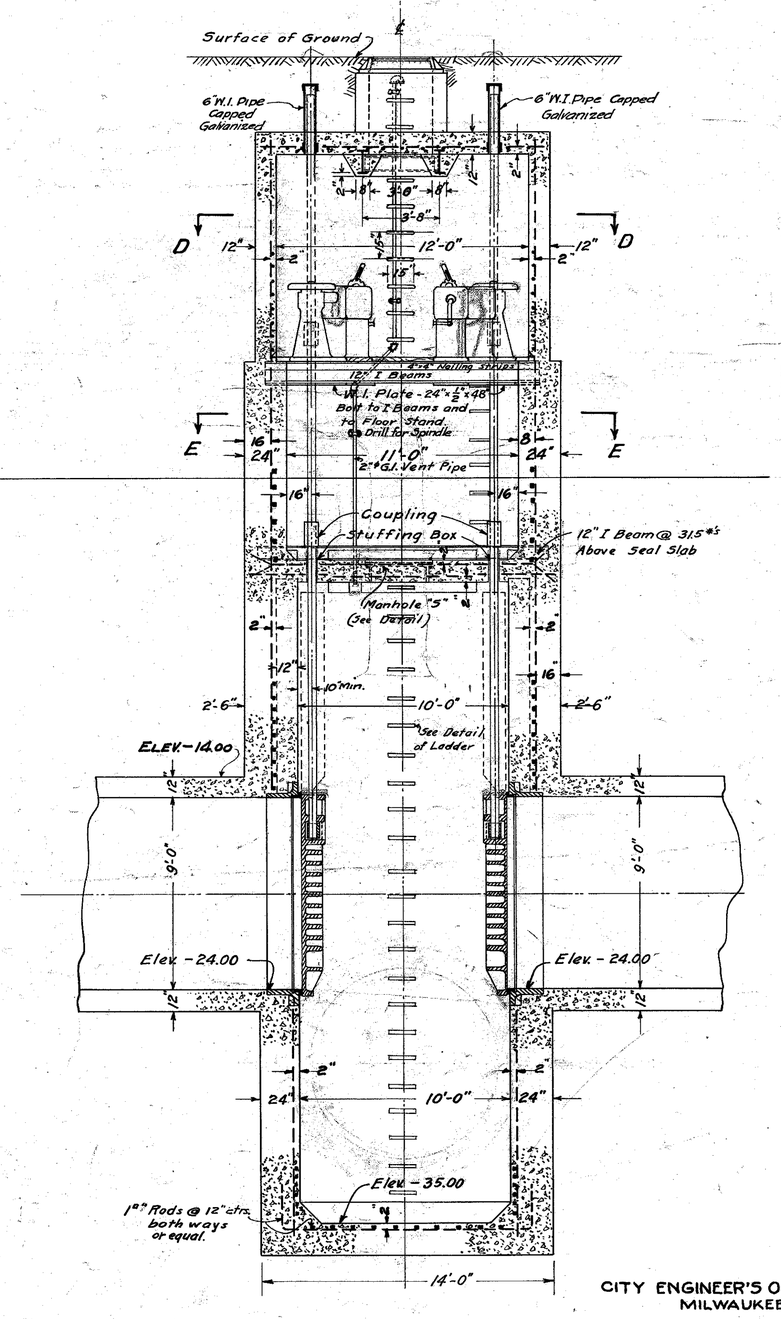


SECTION B-B.

CITY ENGINEER'S OFFICE, MILWAUKEE, WIS.
MILWAUKEE WATER WORKS

# PROPOSED CHANGE IN PLAN OF GATE WELL AT RIVERSIDE PUMPING STATION

TERMINAL OF

## LINWOOD AVENUE TUNNEL

DRAWN BY C.S.G. DATE, FEB. 7TH, 1921.
CHECKED BY A.H.B. SCALE: 1/4" = 1'0"
O.K'd BY E.L.K.

APPROVED: Geo. F. Stout
CITY ENGINEER.

MICROFILMED 7-21-71

File with Tunnel T-38-5

T-38-5

FILE 4-5-27 ~~FILE T-4-28~~