SHEET NO.	SHEET NAME
G000	COVER SHEET
G001	GENERAL INFORMATION
G002	ABBREVIATIONS
G003	LIFE SAFETY PLAN - SHOP LEVEL
G004	LIFE SAFETY PLAN - PLATFORM LEVEL
C000	EXISTING SITE PLAN
C100	SITE LAYOUT PLAN
C200	UTILITY LAYOUT PLAN
C210	STORM SEWER PROFILES
C211	STORM SEWER PROFILES
C220	STORM SEWER DETAILS
C300	GRADING AND EROSION CONTROL PLAN
C400	SITE NOTES AND DETAILS
C410	PAVEMENT NOTES AND DETAIL
C411	PAVEMENT JOINTING NOTES AND DETAILS
C412	PAVEMENT JOINTING PLAN
C500	STORM SEWER RELOCATION PLAN
C510	STORM SEWER RELOCATION PROFILES
C520	STORM SEWER RELOCATION NOTES AND DETAILS
A050	ARCHITECTURAL SITE PLAN
A100	SHOP LEVEL OVERALL PLAN
A101	PLATFORM AND ROOF OVERALL PLAN
A110	SHOP LEVEL FLOOR PLAN SECTOR A
A111	SHOP LEVEL FLOOR PLAN SECTOR B
A112	PLATFORM LEVEL FLOOR PLAN SECTOR A
A113	PLATFORM LEVEL FLOOR PLAN SECTOR B
A120	ROOF PLAN SECTOR A
A121	ROOF PLAN SECTOR B
A150	MAIN LEVEL REFLECTED CEILING PLAN
A151	UPPER LEVEL REFLECTED CEILING PLAN
A200	EAST/WEST ELEVATIONS
A201	NORTH/SOUTH ELEVATIONS
A250	BUILDING SECTIONS
A251	BUILDING SECTIONS
A300	WALL SECTIONS
A301	WALL SECTIONS
A302	WALL SECTIONS
A303	WALL SECTIONS
A500	ENLARGED RESTROOM PLANS AND ELEVATIONS
A501	ENLARGED PLANS AND ELEVATIONS
A502	CASEWORK DETAILS
A505	STAIR PLANS AND SECTIONS
A506	GUARD RAIL AND PLATFORM DETAILS
A600	DETAILS
A601	DETAILS
A610	DETAILS
A620	DETAILS
A621	DETAILS
A622	DETAILS
A800	DOOR SCHEDULE AND TYPES

SHEET NO.	SHEET NAME
A801	WINDOWS AND BORROWED LITES
A802	STANDARD PARTITION AND WALL DETAIL TYPES
A803	PIT AND PAD DETAILS
A804	WASHBAY PIT SECTION AND DETAILS
I001	FINISH SCHEDULE AND DETAILS
I101	SHOP LEVEL FINISH PLAN SECTOR A
I102	SHOP LEVEL FINISH PLAN SECTOR B
I103	PLATFORM LEVEL FINISH PLAN SECTOR A
I104	PLATFORM LEVEL FINISH PLAN SECTOR B
IF101	SHOP LEVEL FURNITURE PLAN SECTOR A
S001	STRUCTURAL GENERAL NOTES
S002	STRUCTURAL GENERAL NOTES
S003	LEGENDS AND ABBREVIATIONS
S004	STRUCTURAL TESTS AND INSPECTIONS
S010	CONCRETE AND FOUNDATION TYPICAL DETAILS
S011	CONCRETE AND FOUNDATION TYPICAL DETAILS
S012	CONCRETE AND FOUNDATION TYPICAL DETAILS
S013	CONCRETE SECTIONS AND DETAILS
S014	CONCRETE SECTIONS AND DETAILS
S015	CONCRETE SECTIONS AND DETAILS
S020	MASONRY TYPICAL DETAILS
S021	MASONRY TYPICAL DETAILS
S022	MASONRY TYPICAL DETAILS
S030	STEEL TYPICAL DETAILS
S031	STEEL TYPICAL DETAILS
S032	STEEL TYPICAL DETAILS
S033	STEEL TYPICAL DETAILS
S034	STEEL TYPICAL DETAILS
S100	COMPOSITE FOUNDATION PLAN
S101	PARTIAL FOUNDATION PLAN - SECTOR A
S102	PARTIAL FOUNDATION PLAN - SECTOR B
S110	COMPOSITE FIRST FLOOR SLAB PLAN
S111	PARTIAL FIRST FLOOR SLAB PLAN - SECTOR A
S112	PARTIAL FIRST FLOOR SLAB PLAN - SECTOR B
S120	COMPOSITE MEZZANINE / LOW ROOF FRAMING PLAN
S121	PARTIAL MEZZANINE / LOW ROOF FRRAMING PLAN - SECTOR A
S122	PARTIAL MEZZANINE / LOW ROOF FRRAMING PLAN - SECTOR B
S123	COMPOSITE MEZZANINE FLOOR SLAB PLAN
S124	PARTIAL MEZZ. FLOOR SLAB PLAN - SECTOR A
S125	PARTIAL MEZZ. FLOOR SLAB PLAN - SECTOR B
S130	COMPOSITE HIGH ROOF FRAMING
S131	PARTIAL HIGH ROOF FRAMING - SECTOR A
S132	PARTIAL HIGH ROOF FRAMING - SECTOR B
S140	7.5 TON BRIDGE CRANE FRAMING PLAN
S201	NORTH AND SOUTH FRAMING ELEVATIONS
S202	EAST AND WEST FRAMING ELEVATIONS
S203	BRACED FRAM ELEVATIONS
S301	FOOTING AND STEEL COLUMN SCHEDULES
S401	BUILDING SECTIONS
S402	BUILDING SECTIONS
S403	BUILDING SECTIONS
S404	BUILDING SECTIONS
S405	BUILDING SECTIONS

SHEET NO.	SHEET NAME
S501	CONCRETE SECTIONS AND DETAILS
S502	CONCRETE SECTIONS AND DETAILS
S503	STEEL DETAILS
S504	STEEL DETAILS
M000	COVER SHEET
M001	SYMBOLS & ABBREVIATIONS CONTINUED
M101	SHOP LEVEL FLOOR PLAN SECTOR A - HVAC
M102	SHOP LEVEL FLOOR PLAN SECTOR B - HVAC
M103	PLATFORM LEVEL FLOOR PLAN SECTOR A - HVAC
M104	PLATFORM LEVEL FLOOR PLAN SECTOR B - HVAC
M300	HVAC SCHEDULES
M301	HVAC DETAILS CONTINUED
M400	HVAC DETAILS
E000	ELECTRICAL SYMBOLS AND ELEVATIONS
E050	ELECTRICAL SITE POWER & LIGHTING PLAN
E100	SHOP LEVEL FLOOR PLAN SECTOR A - POWER , IT / SECURITY
E101	SHOP LEVEL FLOOR PLAN SECTOR B - POWER , IT / SECURITY
E102	PLATFORM LEVEL FLOOR PLAN SECTOR A - POWER , IT / SECURITY
E103	PLATFORM LEVEL FLOOR PLAN SECTOR B - POWER , IT / SECURITY
E110	SHOP LEVEL FLOOR PLAN SECTOR A - LIGHTING / FIRE ALARM
E111	SHOP LEVEL FLOOR PLAN SECTOR B - LIGHTING / FIRE ALARM
E112	PLATFORM LEVEL FLOOR PLAN SECTOR A - LIGHTING / FIRE ALARM
E113	PLATFORM LEVEL FLOOR PLAN SECTOR B - LIGHTING / FIRE
E400	SINGLE LINE DIAGRAMS
E500	DETAILS
E501	DETAILS
E601	ELECTRICAL SCHEDULES
E602	ELECTRICAL SCHEDULES
E603	ELECTRICAL SCHEDULES
E604	LIGHTING SCHEDULES
P000	COVER SHEET - PLUMBING
P001	NOTES - PLUMBING
P002	SCHEDULES - PLUMBING
P100	FOUNDATION PLAN - PLUMBING
P110	SHOP LEVEL FLOOR PLAN SECTOR A - PLUMBING
P111	SHOP LEVEL FLOOR PLAN SECTOR B - PLUMBING
P120	PLATFORM - PLUMBING
P130	ROOF - PLUMBING
P131	HIGH ROOF - PLUMBING
P300	DETAILS - PLUMBING
P400	WATER ISOMETRIC - PLUMBING
P500	DRAIN WASTE AND VENT ISOMETRIC - PLUMBING
F000	COVER SHEET - FIRE PROTECTION
F001	NOTES - FIRE PROTECTION
F002	SCHEDULES - FIRE PROTECTION
F110	SHOP LEVEL FLOOR PLAN SECTOR A - FIRE PROTECTION
F111	SHOP LEVEL FLOOR PLAN SECTOR B - FIRE PROTECTION

SHEET NO.	SHEET NAME
F112	SHOP LEVEL CEILING - FIRE PROTECTION
F113	SHOP LEVEL PLATFORM - FIRE PROTECTION
F200	DETAILS - FIRE PROTECTION
Q001	EQUIPMENT NOTES AND SCHEDULE
Q100	SHOP LEVEL OVERALL EQUIPMENT LAYOUT PLAN
Q101	OVERALL EQUIPMENT LAYOUT PLAN
Q102	OVERALL EQUIPMENT LAYOUT PLAN
Q110	SHOP LEVEL EQUIPMENT LAYOUT PLAN SECTOR A
Q111	PIT LEVEL EQPM PLAN SECTOR B
Q112	SHOP LEVEL EQPM PLAN SECTOR A
Q113	SHOP LEVEL EQPM PLAN SECTOR B
Q114	PLATFORM LEVEL EQPM PLAN SECTOR A
Q115	PLATFORM LEVEL EQPM PLAN SECTOR B
Q500	EQPM DETAILS AND SECTIONS
QG001	SIGNAGE AND STRIPING NOTES AND SCHEDULE
QG100	SHOP LEVEL SIGNAGE AND STRIPING LAYOUT PLAN
QG101	PIT LEVEL SIGNAGE AND STRIPING PLAN
QG102	SHOP LEVEL SIGNAGE AND STRIPING PLAN
QG103	PLATFROM LEVE SIGNAGE AND STRIPING PLAN
QS001	SERVICE EQUIPMENT SCHEDULE AND NOTES
QS002	SERVICE EQUIPMENT SCHEDULE AND NOTES
QS100	SHOP LEVEL OVERALL SERVICE EQUIPMENT FLOOR PLAN
QS101	OVERALL SERVICE EQPM PLANS
QS102	OVERALL SERVICE EQPM PLANS
QS110	SHOP LEVEL S ERVICE EQUIPMENT LAYOUT PLAN SECTOR A
QS111	PIT LEVEL SERVICE EQPMS PLAN SECTOR B
QS112	SHOP LEVEL SERVICE EQPM PLANS SECTOR A
QS113	SHOP LEVEL SERVICE EQPM PLANS SECTOR B
QS114	PLATFROM LEVEL SERVICE EQPM PLAN SECTOR A
QS115	PLATFROM LEVEL SERVICE EQPM PLAN SECTOR B
QS500	SERVICE EQUIPMENT DETAILS
QS501	SERVICE EQUIPMENT DETAILS
QS502	SERVICE EQUIPMENT SECTIONS AND DETAILS

HDR

NOT FOR CONSTRUCTION

NO.	DATE	REVISION	BY

ORIGINAL PLANS PREPARED BY

HNTB

11414 W. PARK PLACE
MILWAUKEE, WI 53224
(414) 359-2300

PLANS PREPARED FOR

CITY OF MILWAULKEE
DEPARTMENT OF
PUBLIC WORKS

MILWAUKEE STREETCAR OPERATIONS
AND MAINTENANCE FACILITY

95% SUBMISSION | 29 FEB . 2016

DESIGNED BY EK | DESIGN CK'D EK | DRAWN BY EK | PLANS CK'D PA

COVER SHEET

G000

NOT FOR CONSTRUCTION

TOILET ACCESSORY LEGEND

- GB — GRAB BAR
- MBH — MOP AND BROOM HOLDER W/ UTILITY SHELF
- MI — MIRROR
- MIS — MIRROR/SHELF COMBINATION
- PTD — PAPER TOWEL DISPENSER - FURNISHED BY OWNER/INSTALLED BY CONTRACTOR
- SCD — TOILET SEAT COVER DISPENSER
- SD — SOAP DISPENSER
- SND — SANITARY NAPKIN DISPOSAL
- SNV — SANITARY NAPKIN VEDOR
- TPD — TOILET PAPER DISPENSER
- WH — WALL HOOK

NOTES:

1. REFER TO SPECIFICATION 102800 FOR TOILET ACCESSORY MFG. & MODEL NO.S
2. INSULATE DRAIN & HOT WATER PIPES @ ALL LAVATORIES.
3. DIMENSION IS TO BOTTOM OF REFLECTIVE SURFACE
4. ALL DIMENSIONS FOR ACCESSORIES ARE TO OPERATION CONTROL OR DISPENSING POINT.
5. DIMENSION IS TO TOP OF DRINKING FOUNTAIN BUBBLER
6. DIMENSION IS TO CENTER OF DRINKING FOUNTAIN BUBBLER
7. DIMENSION IS TO TOP OF TOILET SEAT.

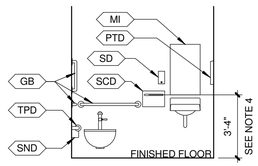

SINGLE WATER CLOSET

ELEVATION -
SINGLE ACCESSIBLE RESTROOM

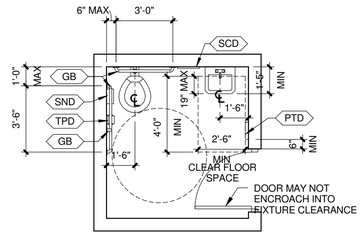

SINGLE RESTROOM FIXTURE MOUNTING LOCATIONS

PLAN - SINGLE ACCESSIBLE RESTROOM

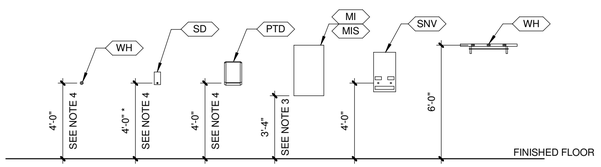

ELEVATION - RESTROOM EQUIPMENT MOUNTING HEIGHTS

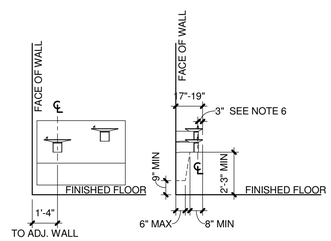

DRINKING FOUNTAIN/ELECTRIC WATER COOLER

TYP. TOILET RM FIXTURES

1/4" = 1'-0"

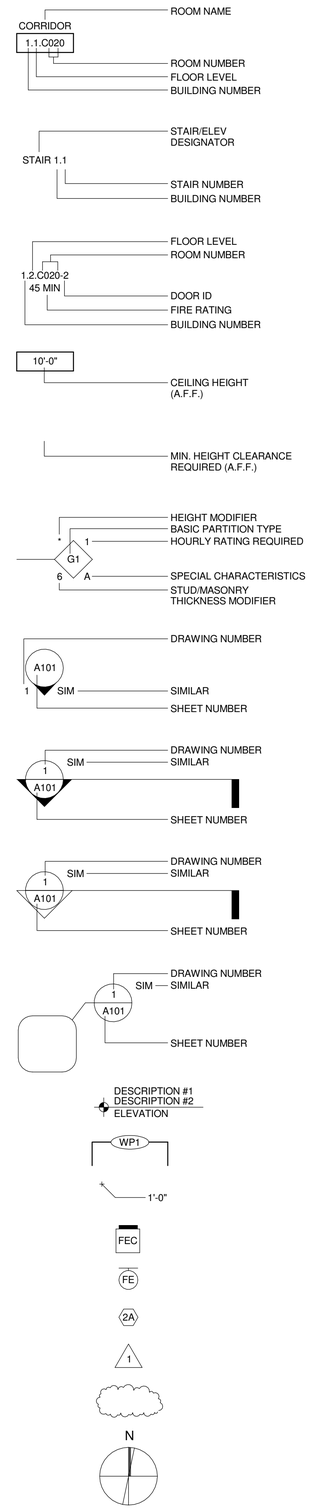

LEGEND-ARCHITECTURAL SYMBOLS

12" = 1'-0"

GENERAL NOTES

1. LOCATIONS AND SIZE OF CEILING AND WALL ACCESS PANELS SHALL BE DETERMINED BY POSITION OF VALVES AND OTHER MECHANICAL AND ELECTRICAL ITEMS WHICH REQUIRE ACCESS. THE CONTRACTOR SHALL COORDINATE WITH ALL TRADES. THE ARCHITECT SHALL REVIEW AND APPROVE ALL FINAL LOCATIONS OF ACCESS PANELS PRIOR TO INSTALLATION.
2. THE CONTRACTOR IS RESPONSIBLE FOR PRODUCING WEATHER TIGHT CONSTRUCTION.
3. CONTRACTOR SHALL INVESTIGATE, VERIFY, AND COORDINATE NEW WORK WITH EXISTING CONDITIONS AND NEW DIMENSIONS OF THE PROJECT AND CONFIRM SUCH TO BE APPROPRIATE AND COMPATIBLE WITH NEW CONSTRUCTION. THE CONTRACTOR SHALL NOTIFY THE ARCHITECT OF ANY DISCREPANCY FOR CLARIFICATION OR ABOUT ANY CONDITION REQUIRING MODIFICATION OR CHANGE BEFORE PROCEEDING WITH THE WORK.
4. ALL FINISH COLORS, TEXTURE, AND PATTERNS TO BE SELECTED BY THE ARCHITECT AND APPROVED PRIOR TO INSTALLATION.
5. DIMENSIONS NOTED ARE FROM GRIDS TO FINISHED FACE OF MATERIAL UNLESS OTHERWISE NOTED. GENERALLY, MASONRY, STD. STEEL PIPE, AND LUMBER ARE INDICATED AS NOMINAL DIMENSIONS.
6. ANY PIPE OR CONDUIT PENETRATION THRU EXTERIOR CONSTRUCTION SHALL BE SEALED AT BOTH SIDES FOR A WATERTIGHT CONDITION. FIRE STOP ASSEMBLIES REQUIRED THROUGH RATED WALLS.
7. ALL WORKMANSHIP AND MATERIALS SHALL CONFORM TO THE REQUIREMENTS OF THE LATEST EDITION OF THE "LOCAL BUILDING CODE" (UNLESS MORE STRINGENT REQUIREMENTS ARE REQUIRED).
8. HIERARCHY FOR CONFLICTS SHALL BE SPECIFICATIONS, LARGER TO SMALLER SCALE DRAWINGS. NOTIFY ARCHITECT IN WRITING OF ANY PERCEIVED CONFLICTS BEFORE COMMENCING WITH THE WORK.
9. WATERPROOFING AND SEALANT INSTALLERS TO VERIFY IN WRITING COMPATIBILITY OF RESPECTIVE PRODUCTS TO BE INSTALLED WITH ADJACENT PRODUCTS.
10. ALL NOTATIONS REFERRING TO FINISH FLOOR ARE TAKEN FROM THE FINAL FINISH FLOOR MATERIAL NOT FROM THE STRUCTURAL SLAB.
11. PATCH ALL EXIST'G PIPE/CONDUIT PENETRATIONS W/ CONST. TO MATCH ADJACENT SLABS.
12. ALL GUARDRAIL HEIGHTS TO BE 3'-6" MIN. A.F.F. - EXCEPT IN ASSEMBLY AREAS OR UNLESS NOTED OTHERWISE.
    ASSEMBLY RAILINGS: FASCIA CONDITIONS ABOVE ADJACENT FLOOR REQUIRE MINIMUM 26 INCH HIGH GUARDS AT BOXES, GALLERIES, AND BALCONIES.
    BOTTOM OF STEPPED AISLES: 36 INCHES HIGH FOR THE FULL WIDTH OF THE AISLE AND MINIMUM 42 INCHES BETWEEN TOP OF RAIL AND NOSING OF NEAREST TREAD.
    BOTTOM OF RAMPED AISLES: 36 INCHES FOR THE FULL WIDTH OF THE AISLE.
    ALONG CROSS AISLES: 26 INCH HIGH GUARD REQUIRED UNLESS SEAT BACKS EXTEND 24 INCHES ABOVE CROSS AISLE.
13. ALL EXTERIOR MISC. METALS TO BE GALVANIZED AND PAINTED.
14. ALL SPRINKLER HEAD LOCATIONS/LAYOUTS SHALL BE SUBMITTED AND APPROVED BY ARCHITECT BEFORE HYDRAULIC CALCULATIONS ARE SUBMITTED FOR APPROVAL. ARCHITECT WILL REVIEW LOCATIONS AND ADD FIREPROOFING TYPES AND MAY MAKE AESTHETIC ADJUSTMENTS AS REQUIRED.

HDR

NOT FOR CONSTRUCTION

NO.	DATE	REVISION	BY

ORIGINAL PLANS PREPARED BY

HNTB
11414 W. PARK PLACE
MILWAUKEE, WI 53224
(414) 359-2300

PLANS PREPARED FOR

CITY OF MILWAUKEE
DEPARTMENT OF
PUBLIC WORKS

MILWAUKEE STREETCAR OPERATIONS
AND MAINTENANCE FACILITY

95% SUBMISSION		29 FEB . 2016	
DESIGNED BY EK	DESIGN CK'D Checked	DRAWN BY EK	PLANS CK'D PA

GENERAL INFORMATION

G001

NOT FOR CONSTRUCTION

ABBREVIATIONS

A	
AFC	Above finished counter
AFF	Above finished floor
AFG	Above finished grade
AFS	Above finished slab
ASC	Above suspended ceiling
ACS DR	Access door
AFL	Access flooring
ACS PNL	Access panel
ACST	Acoustic
ACT	Acoustical ceiling tile
APC	Acoustical panel ceiling
ATC	Acoustical tile ceiling
AWT	Acoustical wall treatment
ADDM	Addendum
ADDL	Additional
ADH	Adhesive
ADJ	Adjacent
ADJ	Adjustable
ADMIN	Administration
AGGR	Aggregate
AHU	Air handling unit
ALM	Alarm
ALNMT	Alignment
ALLOW	Allowance
ALT	Alternate
ALT NO	Alternate number
ALUM	Aluminum
AIA	American Institute of Architects
AISC	American Institute of Steel Construction
ANSI	American National Standards Institute
APA	American Plywood Association
ASTM	American Society for Testing and Materials
ADA	Americans with Disabilities Act
AMT	Amount
AHR	Anchor
ANG BM	Angle beam
ANOD	Anodize
APPD	Approved
APPROX	Approximate
ARCH	Architect, Architectural
AW	Architectural woodwork
AWI	Architectural Woodworking Institute
ASI	Architect's Supplemental Instruction
AD	Area drain
AR	As required
ASPH	Asphalt
ASC	Asphalt surface course
ASMD	Assembled
ASSY	Assembly
ASSN	Association
AV	Audio visual
AUTO	Automatic
ATM	Automatic teller machine
ATS	Automatic transfer switch
AUX	Auxiliary
AVE	Avenue
AVG	Average
B	
BC	Back of curb
B/B	Back to back
BKBD	Backboard
BR	Backer rod
BKGD	Background
BKG	Backing
BAF	Baffle
BAG	Baggage
BALC	Balcony
BBR	Base board radiator
BB	Baseboard
BSMT	Basement
BAT	Batten
BM	Beam
BRG	Bearing
BRG PL	Bearing plate
BLW	Below
BLW CLG	Below ceiling
BFF	Below finish floor
BM	Benchmark
BTWN	Between
BEV	Bevel
BYD	Beyond
BITUM	Bituminous
BLKT	Blanket
BLK	Block
BLKG	Blocking
BD	Board
BNDG	Bonding
BLT	Borrowed light
BF	Both faces
BS	Both sides
BTM	Bottom
BC	Bottom chord
B/C	Bottom of curb
BOS	Bottom of steel
BLVD	Boulevard
BDRY	Boundary
BRCG	Bracing
BRKT	Bracket
BEJ	Brick expansion joint
BIA	Brick Institute of America
BRDG	Bridging
Btu	British thermal unit
BtuH	British thermal unit per hour

ABBREVIATIONS

BRZ	Bronze
BLDG	Building
BAS	Building automation system
BOCA	Building Officials and Code Administrators Association International
BP	Building paper
BLT	Built
BLT IN	Built-in
BU	Built-up
BUR	Built-up roofing
BLKHD	Bulkhead
BB	Bulletin board
BPRF	Bulletproof (bullet-resistant)
BN	Bullnose
B LABEL	Class B door
C	
CAB	Cabinet
CAP	Capacity
CPT	Carpet
CI	Cast iron
CIP	Cast-in-place
CAT	Catalog
CB	Catch basin
CLG	Ceiling
CEM	Cement; cementitious
CT	Ceramic tile
CO	Cleanout
CLR	Clear(ance)
CLOS	Closet
CW	Cold Water
CWR	Cold Water Return
COL	Column
CONC	Concrete
CMU	Concrete Masonry Unit
COND	Conden(ate,er,ing,ation)
COND	Condition
CONDT	Conduit
CONF	Conference
CONN	Connect(ion)
CONST	Construction
CONT	Continue, continuous
CLL	Contract limit line
CONTR	Contractor
CJ	Control joint
COORD	Coordinate
CORR	Corridor
CRS	Course
CF	Cubic Foot
CY	Cubic Yard
D	
DPC	Dampproof course
DL	Dead load
DEMO	Demolition
DEPT	Department
DET	Detail
DIAG	Diagonal
DIA	Diameter
DIM	Dimension
DISCH	Discharge
DISC	Disconnect
DW	Dishwasher
DISP	Dispenser
DIST	Distance
DIV	Division
DOM	Domestic
DR	Door
DO	Door Opening
DBL	Double
DN	Down
DS	Downspout
DWG	Drawing
DF	Drinking fountain
DI	Drop inlet
E	
EA	Each
EW	Each Way
E	East
ELEC	Electric
EWC	Electric Water Cooler
EPB	Electrical Panel Board
EL	Elevation
ELEV	Elevator
EMER	Emergency
ENCL	Enclosure, enclose(d)
EQ	Equal
EQPT	Equipment
EST	Estimate
EPDM	Ethylene propylene diene monomer
EVAP	Evaporat(e,ing,ed,or)
EXH	Exhaust
EF	Exhaust Fan
EXIST	Existing
ETR	Existing To Remain
EXP	Expansion
EJ	Expansion joint
EXT	Exterior
F	

ABBREVIATIONS

FOB	Face of Brick
FOC	Face of Concrete
FT	Feet, Foot
FV	Field Verify
FIN	Finish
FF	Finish face
FA	Fire Alarm
FE	Fire extinguisher
FEC	Fire extinguisher cabinet
FH	Fire hydrant
FRT	Fire resistant, retardant, treat(ed,ment)
FIXT	Fixture
FL	Floor
FD	Floor drain
FLUOR	Fluorescent
FB	Foil backed
FDN	Foundation
FAI	Fresh air inlet (intake)
G	
GAL	Gallon
GALV	Galvanized
GA	Gauge
GL	Glass, Glazing
GND	Ground
GYP	Gypsum
GWB	Gypsum Wall Board
H	
HDW	Hardware
HDWD	Hardwood
HDR	Header
HTR	Heater
HTG	Heating
HVAC	Heating Ventilating and Air Conditioning
HT	Height
H	High
HP	Highpoint
HC	Hollow core
HM	Hollow metal
HOR	Horizontal
HB	Hose bibb
HW	Hot water
HWR	Hot water return
HWS	Hot water supply
HR	Hour
HSKPG	Housekeeping
I	
INCAN	Incandescent
IN	Inch, inches
ID	Inside diameter
INSUL	Insulation
INT	Interior
INV	Invert
I.E.	That Is
J	
JOH	Jamb Opening Height
JOW	Jamb Opening Width
JAN	Janitor
JT	Joint
JST	Joist
JB	Junction box
L	
LAB	Laboratory
LAM	Laminate(d)
LRG	Large
LAV	Lavatory
LYR	Layer
LYT	Layout
L	Length, Long
LT	Light
LT FIXT	Light Fixture
LT GA	Light gage
LTG	Lighting
LTG PNL	Lighting panel
LTNG	Lightning
LT WT	Lightweight
LTD	Limited
LD	Linear diffuser
LF	Linear feet (foot)
LL	Live load
LD BRG	Load-bearing
LVR	Louver
LVDR	Louver door
LVD	Louvered
LP	Low Point
LPT	Low point
LV	Low voltage
LS	Lump sum
LBS	Pounds (LB=Pound)
M	
m^3	Cubic meter

ABBREVIATIONS

MH	Manhole
MFR	Manufacturer
MATL	Material
MAX	Maximum
MFL	Maximum Forseeable Loss
MECH	Mechanical
MEMB	Membrane
MTL	Metal
m	Meter
MIN	Minimum
MIR	Mirror
MISC	Miscellaneous
m^2	Square meter
N	
NOM	Nominal
N	North
NIC	Not in contract
NTS	Not to scale
NO	Number
O	
OC	On center
OPG	Opening
OPP	Opposite
OPH	Opposite hand
OA	Outside air
OD	Outside diameter
OH	Overhead
P	
PTD	Painted
PNL	Panel
PTN	Partition
PH	Phase
PIL	Pilaster
PLAS	Plaster
PLAM	Plastic laminate
PL	Plate
PLMB	Plumbing
PLYWD	Plywood
PVC	Polyvinyl Chloride
PSF	Pounds per square foot
PSI	Pounds per square inch
PWR	Power
P/F	Pre-Finished
PC	Precast concrete
PT	Pressure treated
PB	Pull Box
Q	
QTY	Quantity
QT	Quarry tile
R	
RAD	Radius
RL	Rain leader
REC	Receptacle
REF	Refer/Reference
RCP	Reflected ceiling plan
REFG	Refrigerator
REINF	Reinforce
REQD	Required
R	Riser
RD	Roof drain
RTU	Roof top unit
RO	Rough opening
S	
SG	Safety glass
SCHED	Schedule
SEAL	Sealant
SECT	Section
SHT	Sheet
SIM	Similar
SGL	Single
SOG	Slab on grade
SC	Solid core
STC	Sound transmission class
SPEC	Specification
SQ	Square
SF	Square foot (feet)
SS	Stainless steel
STD	Standard
STL	Steel
STOR	Storage
ST	Storm Sewer
STR	Straight, stair, stringer
STRB	Strobe
STRUC	Structural
SP	Sump Pump
SUSP	Suspended
SW	Switch
SWGR	Switchgear
T	
TEL	Telephone
TV	Television

ABBREVIATIONS

TEMP	Temporary
TERM	Termination
TC	Terne Coated
TERR	Terrazzo
THK	Thickness, thick
THD	Thread(ed)
THR	Threshold
THRU	Through
T&G	Tongue and groove
T&B	Top and Bottom
T/C	Top of Curb
T/F	Top of Frame
T/S	Top of Steel
TOW	Top of wall
T	Tread
TS	Tube steel
TYP	Typical
U	
UC	Undercut
UG	Underground
UL	Underwriters Laboratories
UH	Unit heater
UNO	Unless noted otherwise
UR	Urinal
UTIL	Utility
V	
VB	Vinyl base
VCT	Vinyl composition tile
W	
WC	Water closet
WH	Water heater
WP	Waterproofing
WWF	Welded wire fabric
WWM	Welded wire mesh
W/	With
W/O	Without
WD	Wood
X	
XFMR	Transformer

NOT FOR CONSTRUCTION

NO.	DATE	REVISION	BY

ORIGINAL PLANS PREPARED BY

HNTB

11414 W. PARK PLACE
MILWAUKEE, WI 53224
(414) 359-2300

PLANS PREPARED FOR

CITY OF MILWAULKEE
DEPARTMENT OF
PUBLIC WORKS

MILWAUKEE STREETCAR OPERATIONS
AND MAINTENANCE FACILITY

95% SUBMISSION | 29 FEB . 2016

DESIGNED BY	EK	DESIGN CK'D	Checker	DRAWN BY	EK	PLANS CK'D	PA

ABBREVIATIONS

G002

NOT FOR CONSTRUCTION

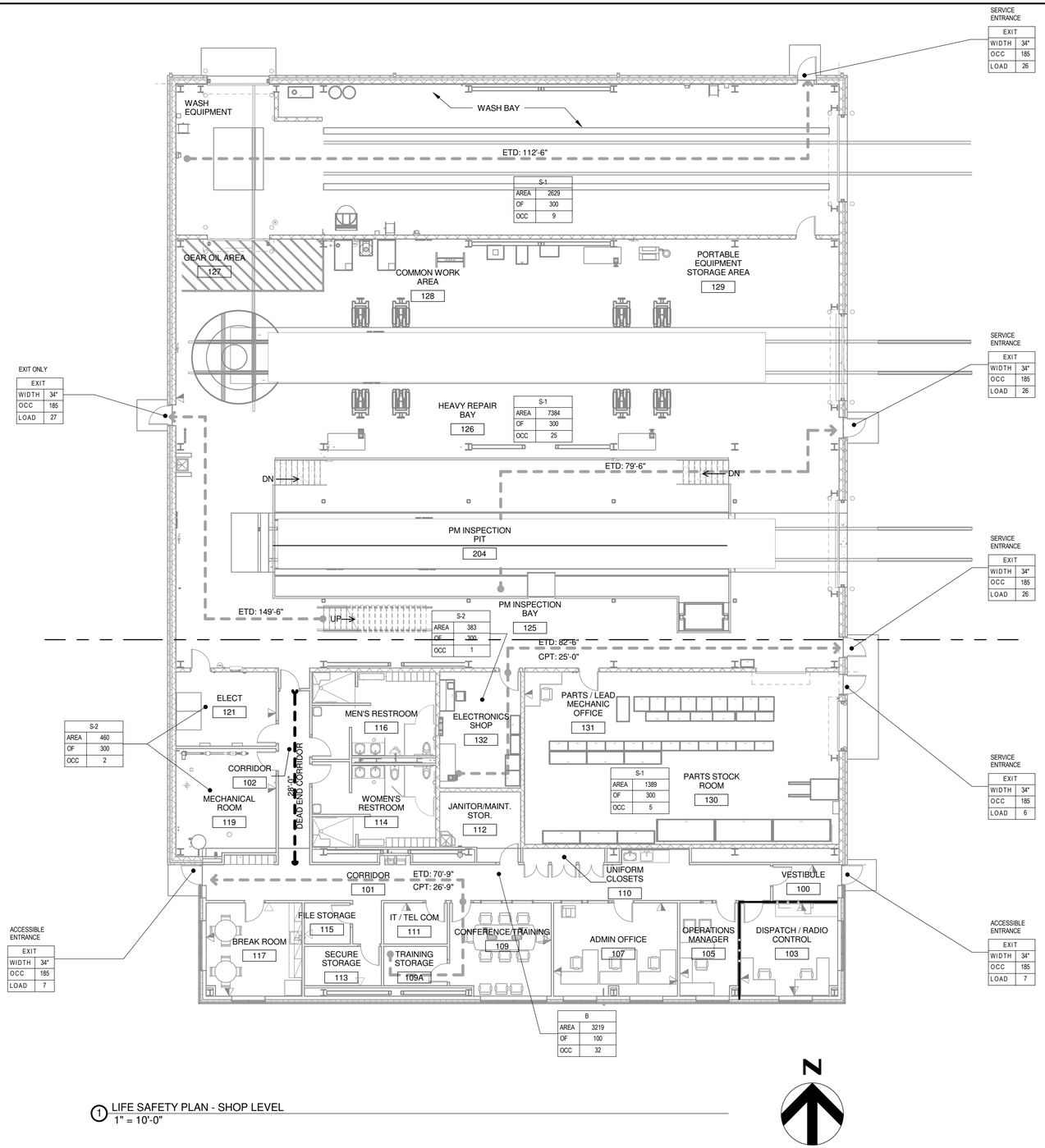

1 LIFE SAFETY PLAN - SHOP LEVEL
1" = 10'-0"

REFER TO SHEET G004 FOR LIFE SAFETY CODE NOTES & CODE INFORMATION

LIFE SAFETY PLAN LEGEND

- S-1 / AREA / OF / OCC — CLEAR WIDTH; EGREES PATH CAPACITY; NUMBER OF OCCUPANTS SERVED
- FIRE RATING 1 HOUR
- FIRE RATING 2 HOUR
- FIRE RATING SMOKE
- FH — FIRE HYDRANT
- AOR — AREA OF REFUGE (PER OWNER REQUEST)
- FE — FIRE EXTINGUISHER
- EXIT CORRIDOR X — EXIT PATH START
- CPT: X'-X" / EXIT CORRIDOR X — COMMON PATH OF TRAVEL
- ETD: X'-X" / EXIT CORRIDOR X — EXIT TRAVEL DISTANCE
- EXIT CORRIDOR X — EXIT PATH END
- EXIT / WIDTH 00" / OCC # / LOAD # — CLEAR WIDTH; EGREES PATH CAPACITY; NUMBER OF OCCUPANTS SERVED

HDR

NOT FOR CONSTRUCTION

NO.	DATE	REVISION	BY

ORIGINAL PLANS PREPARED BY

HNTB
11414 W. PARK PLACE
MILWAUKEE, WI 53224
(414) 359-2300

PLANS PREPARED FOR

CITY OF MILWAULKEE
DEPARTMENT OF
PUBLIC WORKS

MILWAUKEE STREETCAR OPERATIONS AND MAINTENANCE FACILITY

95% SUBMISSION | 29 FEB . 2016

DESIGNED BY NE | DESIGN CK'D Checker | DRAWN BY NE | PLANS CK'D PA

LIFE SAFETY PLAN - SHOP LEVEL

G003

NOT FOR CONSTRUCTION

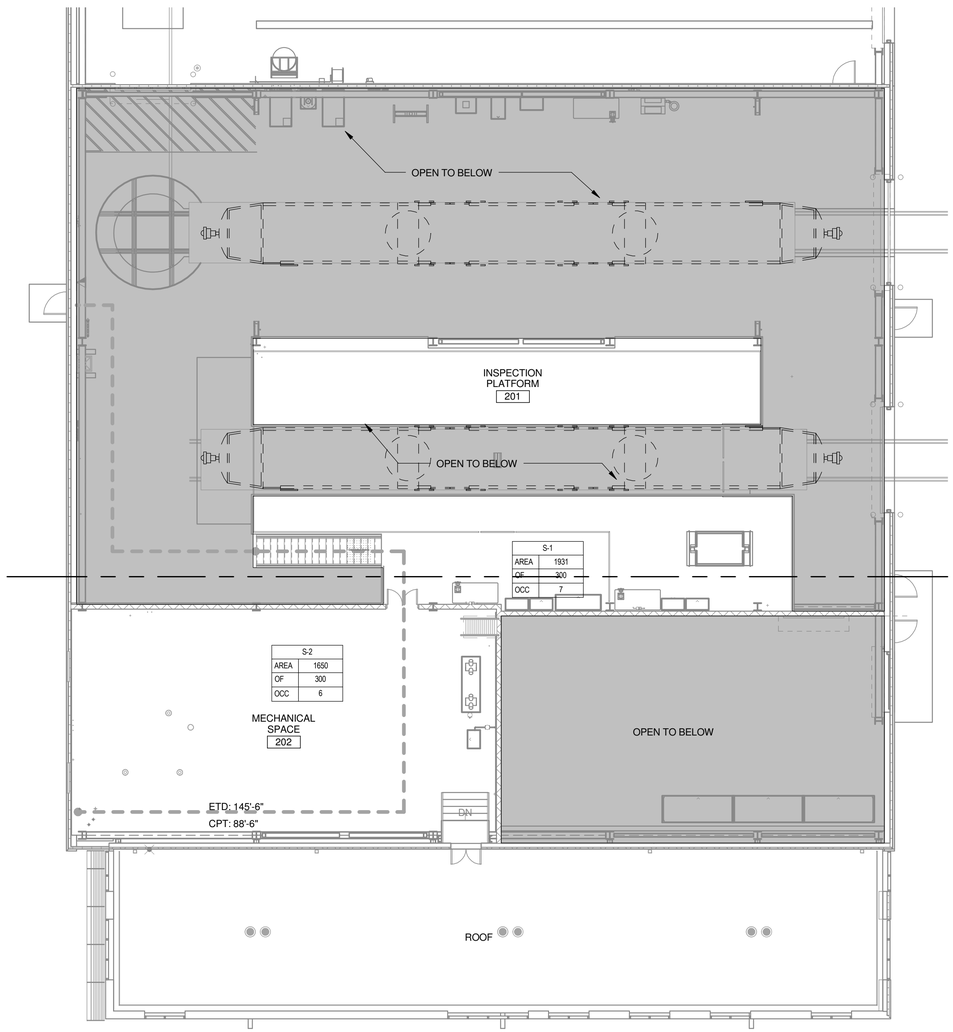

1 LIFE SAFETY PLAN - PLATFORM LEVEL
1" = 10'-0"

N

LIFE SAFETY CODE NOTES

1. Summary: The building is a 1 story mixed use, non-separated occupancy building of Type II-B construction. As shown in the tables, all occupancies are within the allowable height, stories and area per story after frontage and sprinkler increases are taken. No fire protection of bearing walls, floors, roofs or framing is required. The fire protection sprinklers throughout the building shall be designed to comply with an S-1 occupancy.
2. Platform Level: The Mechanical room is an "equipment platform" in IBC code definitions. The inspection platforms is a "mezzanine" in IBC code definitions. Neither are required to be accessible. The single stair is allowable for egress since the common path of travel is less than 100' including the slope of the stair. The stair is not part of an accessible means of egress but does meet IBC 1009 non accessible egress stair requirements: 7" max riser, 11" min tread; 12' vertical rise allowed without a landing; open risers are permitted. Guard rail openings need only prevent passage of a 21" sphere.
3. Fire separations: No rated fire barriers are required between differing occupancies. Corridor walls are also not required to be rated since the building is sprinkler protected. The Dispatch/Radio Control Room is separated from the rest of the building in compliance with NFPA 130 standards for an Operations Control Center (OCC).
4. Exterior walls: Fire separation distances are over 20' in all directions. Opening size and opening protection is unlimited with fire separations over 20'.
5. Translucent panels: Per Chapter 26, fiberglass type panels allow unlimited area since the building is less than 40' tall.
6. Energy: Use 2009 IECC, climate zone 6. ComCheck compliance approach is used.

CODE INFORMATION - MKE Street Car Operations & Maintenance Facility

General Code Information

ITEM	INFORMATION	REMARKS
Design Codes:	Wisconsin Commercial Building Code 2009 International Building Code NFPA 130: Standard for Fixed Guideway Transit & Passenger Rail Systems	
Occupancy Type:	Mixed Nonseparated: S-1, S-2, B	
Construction Type:	Type II-B	
Fully Sprinkled?	Yes	Per 903.2.9

BUILDING AREA

Occupancy Type	First Floor	Second Floor	Total by Occupancy	Mezzanine*
S-1	8,773	N/A	8,773	1,931
S-2	843	N/A	843	1,650
B	3,219	N/A	3,219	-
Area Total by Story	12,835		12,835	3,581

Notes:
*Mezzanine areas are shown for information only and do not count as a part of the building area regulated by IBC 503.1 (IBC 505.1)
All areas listed are in square feet and are per IBC definition of building area.

Allowable Area, Height and No. of Stories

	ALLOWABLE				ACTUAL/REMARKS	
	Tabular	Frontage Increase	Sprinkler Increase	Total Allowable		
Building Height	55	0	20	75		
Number of Stories	2	0	1	3	1	
S-1	17,500	11,229	52,500	81,229	8,773	most limiting
S-2	26,000	16,683	78,000	120,683	843	
B	23,000	14,758	69,000	106,758	3,219	

	North	East	South	West	Total	
Frontage Increase						
Public Way Width (ft)	20	30	20	30		(only 20' - 30' counted)
Length of building perimeter (ft)	117	153	117	153	540	
25% on 20' Public Way (y/n)	Yes					
Sprinkler Increase (0, 2 or 3)	3					
H-2 or H-3 areas excluded (sf)	0					
Building Height & No. of Stories:	55 feet, 2 stories					S-1 is most limiting

Separation of Occupancies	REQUIRED			ACTUAL/REMARKS
Occupancies	B/S-1	B/S-2	S-1/S-2	No separations required;
Fire rating (table 508.4)	0	0	0	Mixed Nonseparated classification

Fire Protection

Fire Resistance for Building Elements (Table 601 and 602)	Struc. Frame	Bearing Walls Interior	Bearing Walls Exterior	Nonbearing Walls Exterior	Nonbearing Walls Interior	Floor Construction	Roof Construction
Minimum Required Fire Rating (hrs.)	0	0	0	0	0	0	0
Actual Provided Fire Rating (hrs.)	0	0	0	0	0	0	0

	North	East	South	West	
Fire Separation Distance	20'+	30'+	20'+	30'+	
Exterior Wall rating	0	0	0	0	
Max. Area of Exterior Wall Openings	No limit	No limit	No limit	No limit	(Table 705.8 & relevant footnotes)

Egress

ITEM	REQUIRED/REMARKS	PROVIDED/REMARKS
Number of Exits	2 min.	
Maximum Exit Access Travel Distance	Group S-1: 250 ft - sprinklered Group B: 300 ft - sprinklered Group S-2: 400 ft - sprinklered	
Maximum Common Path of Travel	100 ft. - sprinklered	
Corridor Fire Rating	Group B or S: 0 hr - sprinklered	
Vertical Exit Enclosure Rating	N/A	
Minimum Egress Width		
Stairways	0.3 in./occupant 44" min; 36" min if less than 50 occ.	
Other Egress Components	0.2 in./occupant, 44" min.	
Corridors	44" min; 36" min if less than 50 occ.	
Doors	32 in. min @ doors	

Accessibility

ITEM	REQUIRED/REMARKS	PROVIDED/REMARKS
Accessible Site Route	1	
Parking & Passenger Loading		
Accessible Entrances	60%	
Accessible Levels/Areas	1	
Accessible Means of Egress	All code required exits	
Elevator	None	
Toilet & Bathing Facilities	Yes	All Accessible

LIFE SAFETY PLAN LEGEND

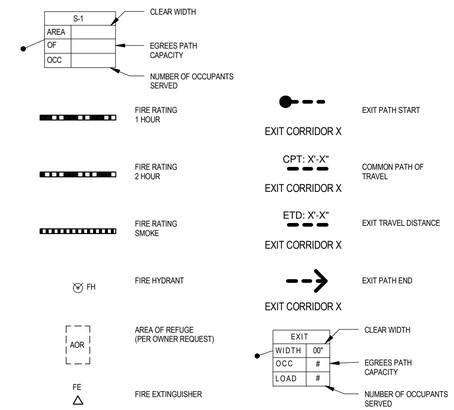

NOT FOR CONSTRUCTION

NO.	DATE	REVISION	BY

ORIGINAL PLANS PREPARED BY

HNTB
11414 W. PARK PLACE
MILWAUKEE, WI 53224
(414) 359-2300

PLANS PREPARED FOR

CITY OF MILWAULKEE
DEPARTMENT OF
PUBLIC WORKS

MILWAUKEE STREETCAR OPERATIONS
AND MAINTENANCE FACILITY

95% SUBMISSION | 29 FEB . 2016

DESIGNED BY NE | DESIGN CK'D Checker | DRAWN BY NE | PLANS CK'D PA

LIFE SAFETY PLAN - PLATFORM LEVEL

G004

NOT FOR CONSTRUCTION

EXISTING UTILITY LEGEND:

SAN	SANITARY SEWER	FO	FIBER OPTIC	G	GAS
SS	STORM SEWER	AT&T	AT&T	DOT	WISCONSIN DEPT. OF TRANSPORTATION
SSS	COMBINED SEWER	TES	LIGHTING CONDUIT	138 KV	AMERICAN TRANSMISSION COMPANY
MMSD	MMSD SEWER	E	ELECTRIC	MH	EX. MANHOLE
C	CITY COMMUNICATION DUCT BANK	W	WATER		EX. STORM INLET
TDS	TDS METROCOM	X W X	WATER ABANDONED		EX. PARKING METER
PAE	PAETEC DUCT BANKS	PIPL	WE ENERGIES STEAM		EX. SIGN

I-794 OVERPASS PIER AND FOUNDATION, TO REMAIN. SIZE AND LOCATION IS BASED ON OVERPASS DESIGN DRAWINGS.

BURIED FOUNDATIONS FOR FORMER OVERPASS – LOCATION IS APPROXIMATE

SAWCUT AND REMOVE SIDEWALK AND CURB AND GUTTER

SAWCUT AND REMOVE EXISTING ASPHALT PAVEMENT

MAINTENANCE FACILITY SITE CONSTRUCTION LIMITS.

GENERAL NOTES:

THESE IMPROVEMENTS SHALL COMPLY WITH THE LATEST EDITION OF THE WISDOT STANDARD SPECIFICATIONS

KEY NOTES:

1. EX. ELECTRIC, TO BE RELOCATED BY OTHERS
2. EX. WALK, TO BE REPLACED BY OTHERS
3. REMOVE FENCE
4. REMOVE STORM STRUCTURE
5. REMOVE STORM SEWER
6. FIBER OPTIC LINE, TO BE RELOCATED BY OTHERS
7. REMOVE AND SALVAGE PARKING METER
8. FILL SEAL AND ABANDON STORM SEWER
9. PARTIALLY REMOVE ABANDONED FOUNDATION WHERE INTERFERING WITH PROPOSED IMPROVEMENTS
10. UTILITY BOX, TO REMAIN

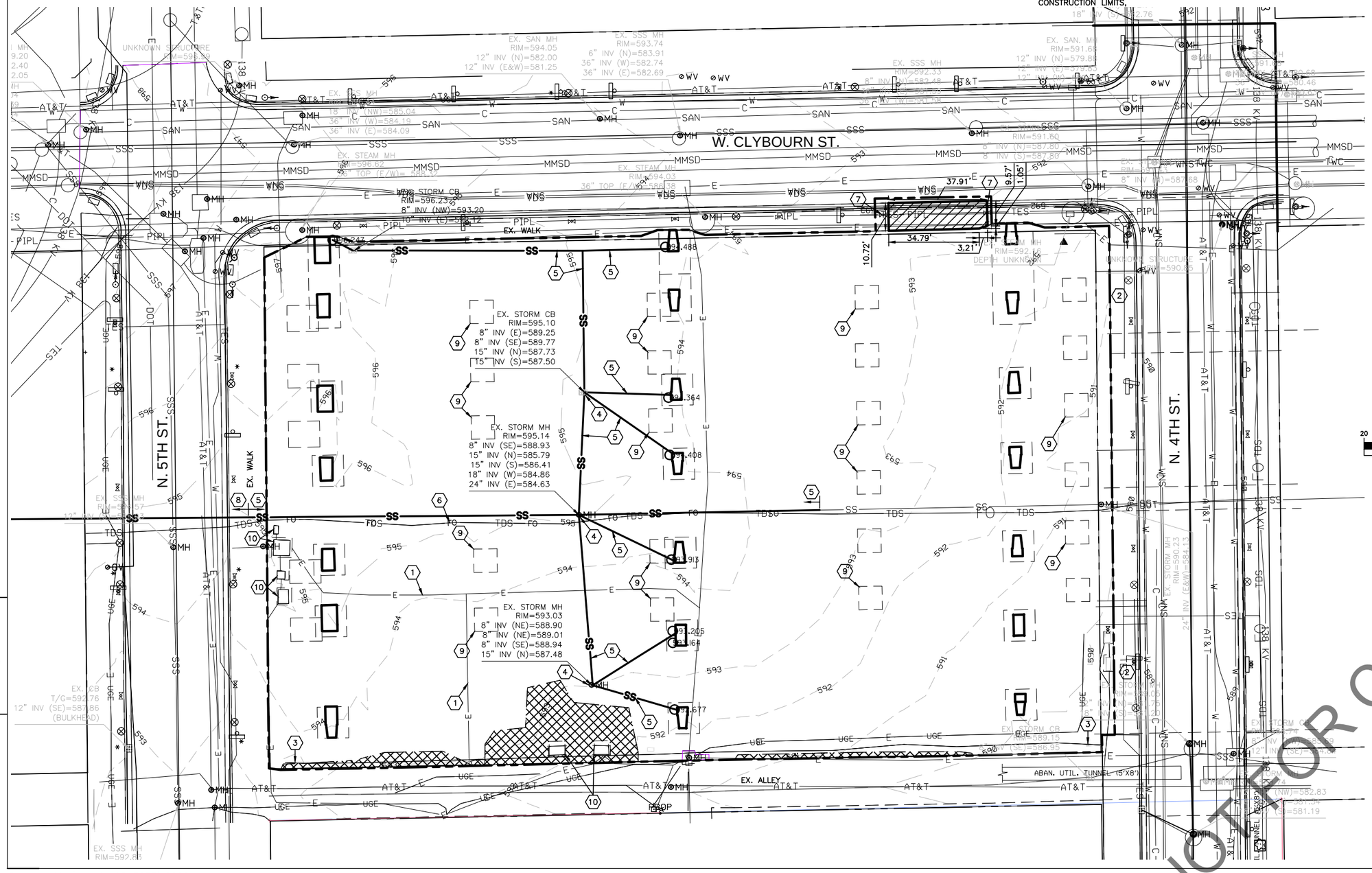

GRAPHIC SCALE

20 0 10 20 40

(IN FEET)
1 inch = 20 ft.

NOT FOR CONSTRUCTION

NO.	DATE	REVISION	BY

ORIGINAL PLANS PREPARED BY

HNTB

11414 W. PARK PLACE
MILWAUKEE, WI 53224
(414) 359-2300

PLANS PREPARED FOR

CITY OF MILWAUKEE
DEPARTMENT OF
PUBLIC WORKS

MILWAUKEE STREETCAR

MAINTENANCE FACILITY

95% SUBMISSION | DATE 2/29/2016

DESIGNED BY	SKR	DESIGN CK'D	.	DRAWN BY	SKR	PLANS CK'D	DCJ

EXISTING SITE AND REMOVALS PLAN

C000

NOT FOR CONSTRUCTION

8

8

C:\pwworking\oma\d1813853\C000.dwg
2/26/2016 10:39 AM

SITE LAYOUT NOTES:

1. ALL PAVING, STRUCTURES, UTILITIES AND OTHER EXISTING FACILITIES NOT DESIGNATED FOR REMOVAL/DEMOLITION DURING CONSTRUCTION OF THE NEW FACILITIES SHALL BE PROTECTED IN-PLACE, OR REPLACED IN KIND AT COMPLETION OF CONSTRUCTION AT NO ADDITIONAL COST.

2. SEE ARCHITECTURAL PLANS FOR EXACT BUILDING DIMENSIONS, ACCESS LOCATIONS, AND DETAILS. SEE TRACK PLANS FOR EXACT DIMENSIONS, LOCATIONS AND DETAILS OF ALL TRACK WORK.

3. ALL DIMENSIONS ARE TO EDGE OF PAVEMENT UNLESS OTHERWISE NOTED. ALL FACE OF CURB RADII ARE 5' UNLESS OTHERWISE NOTED.

4. PARKING LOT STRIPING SHALL BE 4" WIDE, WHITE UNLESS OTHERWISE NOTED.

5. WALKS AND CONCRETE PAVING TO RECEIVE BROOM FINISH, CURBS TO RECEIVE RUBBED FINISH.

6. DIMENSIONS FROM BUILDING FACE TO EXISTING BRIDGE PIERS ARE PROVIDED FOR REFERENCE ONLY. DIMENSIONS ARE NOT TO BE USED FOR SETTING THE LOCATION OF THE BUILDING ON THE SITE.

I-794 OVERPASS PIER AND FOUNDATION. FOUNDATION SIZE AND LOCATION IS BASED ON OVERPASS DESIGN DRAWINGS.

BURIED FOUNDATIONS FOR FORMER OVERPASS – LOCATION IS APPROXIMATE

PROPOSED DECORATIVE METAL FENCE

EXISTING RIGHT OF WAY LINE

MAINTENANCE FACILITY SITE CONSTRUCTION LIMITS

HATCH LEGEND:

PROPOSED CONCRETE PAVEMENT, SEE DETAIL SHEET C410

PROPOSED ASPHALT PAVEMENT, SEE DETAIL SHEET C410

PROPOSED 5" CONCRETE SIDEWALK

PROPOSED GRAVEL PAVEMENT, SEE DETAIL SHEET C410 (COVER ALL BARE AREAS WITHIN THE SITE)

PROPOSED 7" CONCRETE DRIVE APRON IN ACCORDANCE WITH CITY STANDARDS

KEY NOTES:

1. CONCRETE DRIVE APRON, SEE DETAIL SHEET C400
2. ROLLING GATE – 36' WIDE OPENING
3. ROLLING GATE – 24' WIDE OPENING
4. ROLLING GATE – 12' WIDE OPENING
5. DUMPSTER ENCLOSURE
6. STRUCTURAL STOOP, SEE SHEET S013
7. WISDOT DRIVEWAY ENTRANCE CURB (WISDOT S.D.D 8D1-18)
8. SEE ROADWAY PLANS FOR CURB AND SIDEWALK REPLACEMENT
9. HANDICAP PARKING PAVEMENT MARKING AND SIGNAGE
10. STREETCAR TRACK (NOT IN CONTRACT; WORK PERFORMED BY MAINLINE CONTRACTOR)
11. TRACTION POWER SUB-STATION SITE LIMITS, (NOT IN CONTRACT; SEE SECTION 2, SHEET TP001 IN MAINLINE PLANS)
12. CONCRETE BUMPER BLOCK, SEE DETAIL SHEET C400
13. WISDOT CONCRETE CURB TYPE D (WISDOT S.D.D 8D1-18)
14. 10" CONCRETE CURB, SEE DETAIL, SHEET C410

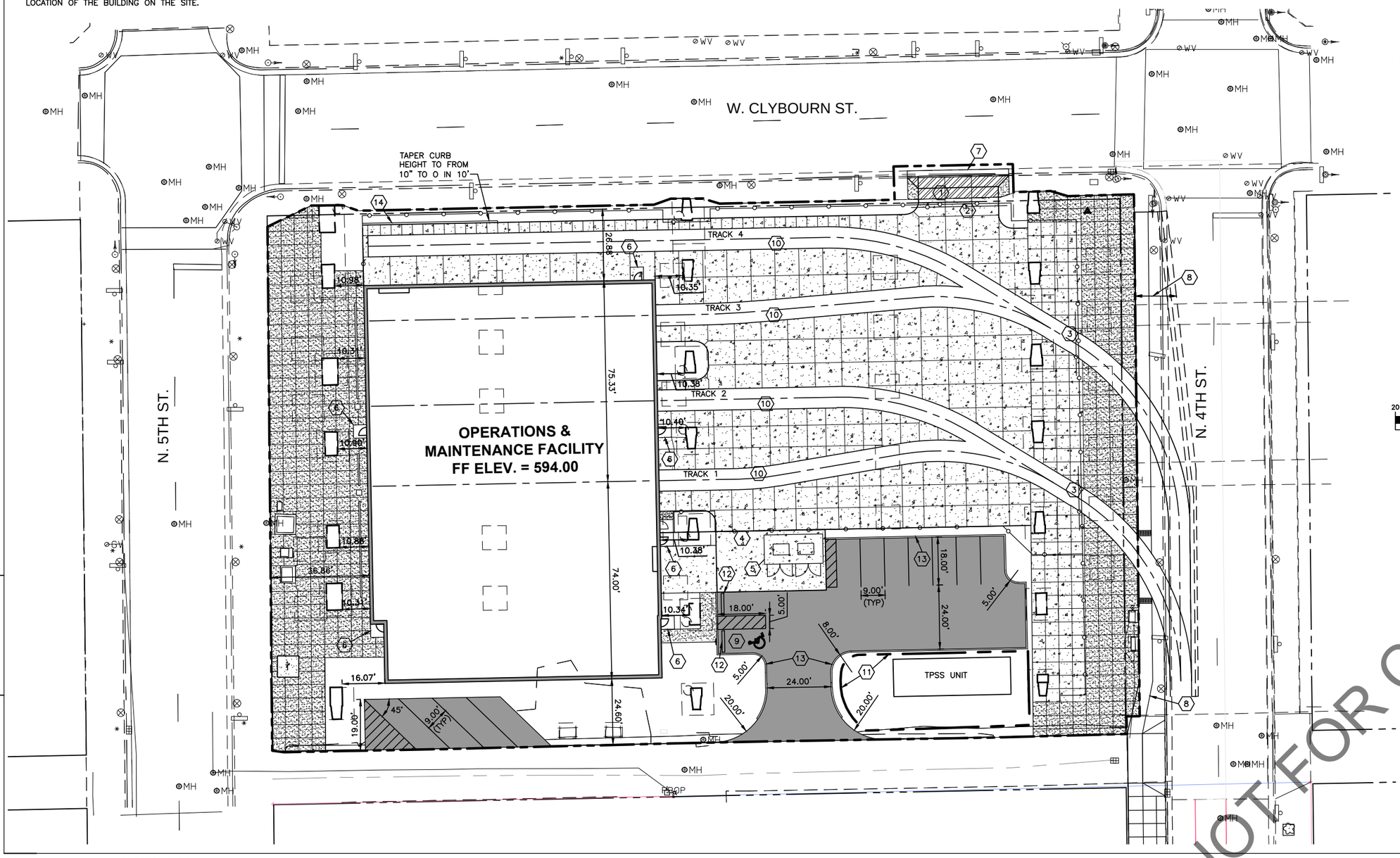

GRAPHIC SCALE

20 0 10 20 40

(IN FEET)
1 inch = 20 ft.

NOT FOR CONSTRUCTION

NO.	DATE	REVISION	BY

ORIGINAL PLANS PREPARED BY

HNTB

11414 W. PARK PLACE
MILWAUKEE, WI 53224
(414) 359-2300

PLANS PREPARED FOR

CITY OF MILWAUKEE
DEPARTMENT OF
PUBLIC WORKS

MILWAUKEE STREETCAR

MAINTENANCE FACILITY

95% SUBMISSION | DATE 2/29/2016

DESIGNED BY SKR | DESIGN CK'D . | DRAWN BY SKR | PLANS CK'D DCJ

SITE LAYOUT PLAN

C100

NOT FOR CONSTRUCTION

8

8

C:\pwworking\oma\d1813853\C100.dwg
2/26/2016 10:36 AM

UTILITY LEGEND:

MH	PROPOSED STORM MANHOLE
I	PROPOSED STORM INLET
TD	PROPOSED TRENCH DRAIN
12" STORM	PROPOSED STORM SEWER
8" W.S.	PROPOSED WATER SERVICE LATERAL
6" SAN.	PROPOSED SANITARY SEWER LATERAL
⊕	PROPOSED OCS POLE, SEE OCS PLANS
	PROPOSED TELEPHONE/CABLE SERVICE

UTILITY NOTES:

1. FOUNDATION DRAINS SHALL BE CONNECTED TO STORM SEWER

2. SEE MECHANICAL, ELECTRICAL AND PLUMBING PLANS FOR EXACT LOCATIONS OF ALL UTILITY SERVICE LOCATIONS AT THE BUILDING.

3. PROPOSED STORM SEWER PIPE TYPES AND STRUCTURE TYPES REFERENCE 2016 WISDOT STANDARD SPECIFICATIONS AND STANDARD DETAIL DRAWINGS.

4. ALL WORK ASSOCIATED WITH THE WATER AND SANITARY SEWER TO THE BUILDING SHALL COMPLY WITH THE STANDARD SPECIFICATIONS FOR SEWER AND WATER CONSTRUCTION IN WISCONSIN, INCLUDING BUT NOT LIMITED TO BEDDING, BACKFILLING, AND STREET REPAIR.

5. ALL WORK ASSOCIATED WITH STORM SEWER SHALL COMPLY WITH WISDOT STANDARDS AND SPECIFICATIONS. THE STANDARD SPECIFICATION FOR SEWER AND WATER CONSTRUCTION IN WISCONSIN SHALL APPLY FOR STREET REPAIR WITHIN THE PUBLIC R/W.

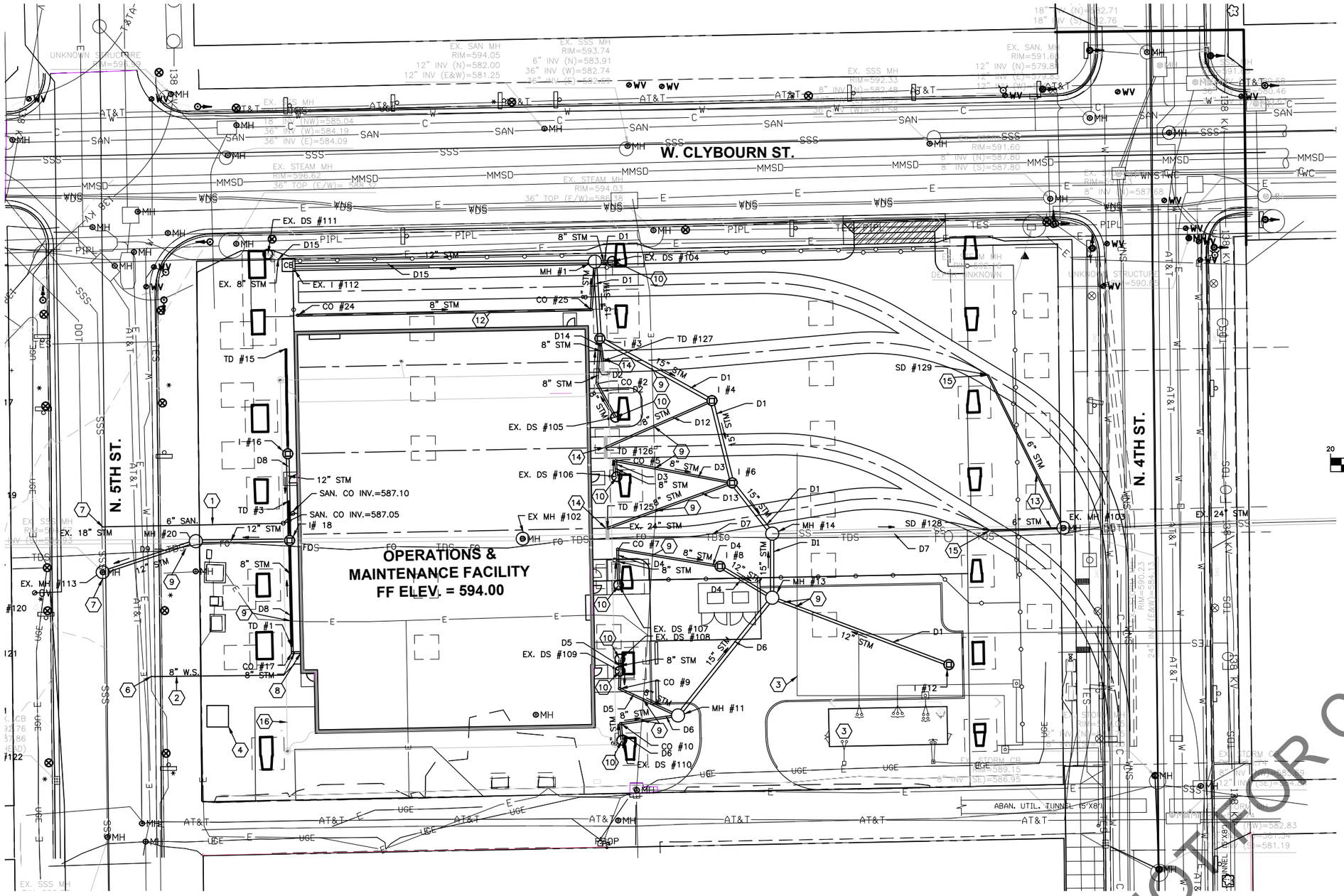

KEYNOTES:

1. 6" SANITARY SEWER SERVICE @ 1.0%, SEE PLUMBING DRAWINGS FOR CONTINUATION INTO BUILDING
2. 8" WATER SERVICE, SEE PLUMBING DRAWINGS FOR CONTINUATION INTO BUILDING
3. TRACTION POWER SUB-STATION AND CONNECTIONS, SEE SECTION 2, SHEET TP001 FOR DETAILS
4. 8'X8' TRANSFORMER PAD
5. TELEPHONE / CABLE SERVICE
6. CONNECT TO EXISTING WATER MAIN
7. CONNECT TO EXISTING COMBINED SEWER, 6" INV.=586.37
8. CONNECT TO ROOF DRAINAGE SYSTEM, SEE PLUMBING DRAWINGS FOR CONTINUATION INTO BUILDING.
9. MAINTAIN 18" VERTICAL CLEARANCE MINIMUM AT UTILITY CROSSING
10. CONNECT 8" STORM TO EXISTING OVERPASS DRAINAGE
11. NOT USED
12. 8" DOWNSPOUT LEADER CONNECT TO STORM STRUCTURE (2% MINIMUM)
13. 6" SWITCH DRAIN OUTLET CONNECT TO STORM STRUCTURE (2% MINIMUM)
14. TRACK DRAIN (NOT IN CONTRACT; BY MAINLINE CONTRACTOR)
15. SWITCH DRAIN (NOT IN CONTRACT; BY MAINLINE CONTRACTOR)
16. ELECTRICAL SERVICE, SEE ELECTRICAL PLANS

D# – DRAINAGE PROFILE REFERENCE NUMBER. SEE SHEETS C210 AND C211

N

GRAPHIC SCALE

20 0 10 20 40

(IN FEET)
1 inch = 20 ft.

NOT FOR CONSTRUCTION

NO.	DATE	REVISION	BY

ORIGINAL PLANS PREPARED BY

HNTB
11414 W. PARK PLACE
MILWAUKEE, WI 53224
(414) 359-2300

PLANS PREPARED FOR

CITY OF MILWAUKEE
DEPARTMENT OF
PUBLIC WORKS

MILWAUKEE STREETCAR

MAINTENANCE FACILITY

95% SUBMISSION | DATE 2/29/2016

DESIGNED BY SKR | DESIGN CK'D . | DRAWN BY SKR | PLANS CK'D DCJ

UTILITY LAYOUT PLAN

C200

NOT FOR CONSTRUCTION

C:\pwworking\oma\d1813853\C200.dwg
2/26/2016 10:41 AM

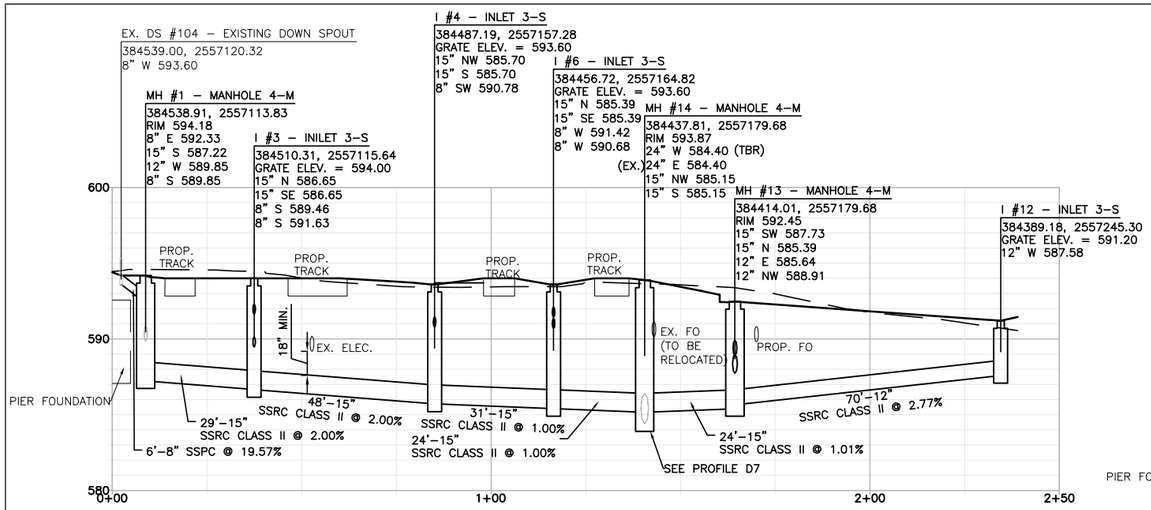

D1

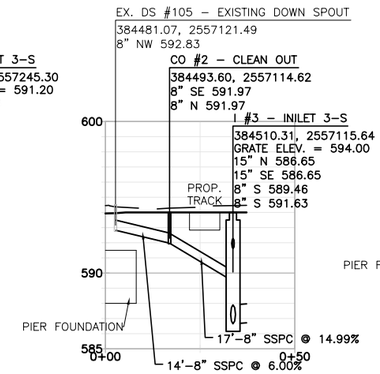

D2

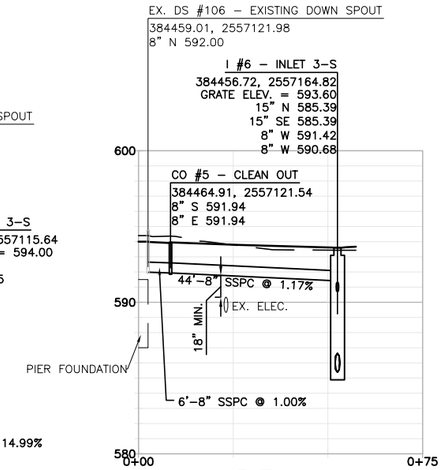

D3

LEGEND

TBR–TO BE REMOVED
FSA– FILL, SEAL & ABANDON

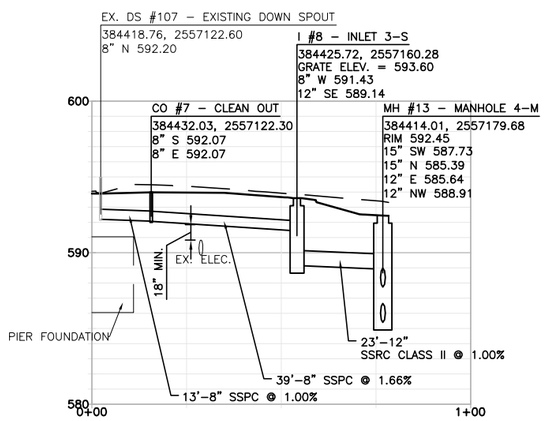

D4

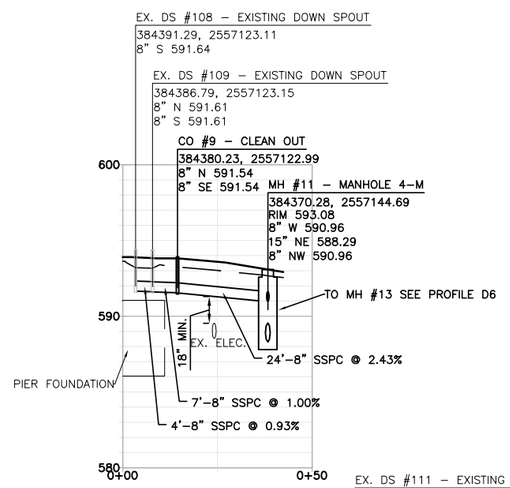

D5

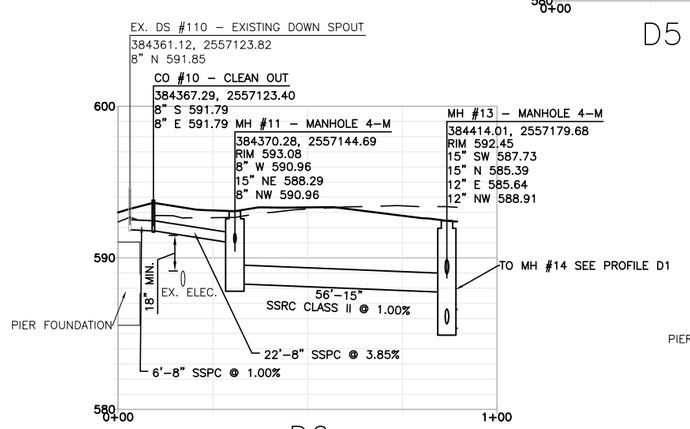

D6

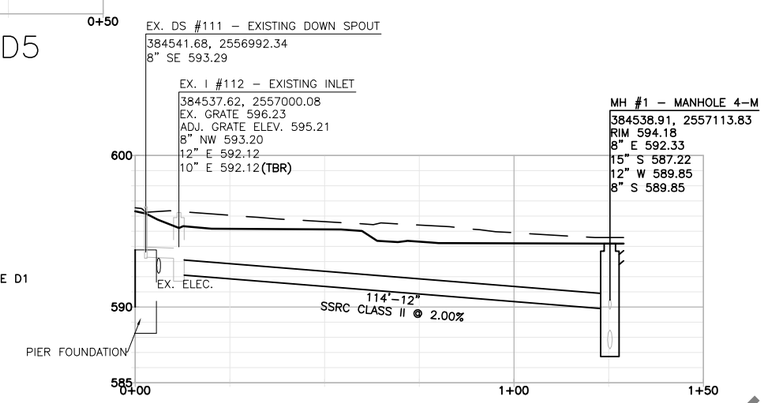

D15

GRAPHIC SCALE

20 0 10 20 40

(IN FEET)
1 inch = 20 ft.
VERTICAL SCALE: 1 inch = 5 ft

NOT FOR CONSTRUCTION

NO.	DATE	REVISION	BY

ORIGINAL PLANS PREPARED BY

HNTB

11414 W. PARK PLACE
MILWAUKEE, WI 53224
(414) 359-2300

PLANS PREPARED FOR

CITY OF MILWAUKEE
DEPARTMENT OF
PUBLIC WORKS

MILWAUKEE STREETCAR

MAINTENANCE FACILITY

95% SUBMISSION | DATE 2/29/2016

DESIGNED BY JAC | DESIGN CK'D SKR | DRAWN BY JAC | PLANS CK'D DCJ

STORM SEWER PROFILES

C210

8

8

NOT FOR CONSTRUCTION

C:\pwworking\oma\d1813853\C210.dwg
2/26/2016 10:42 AM

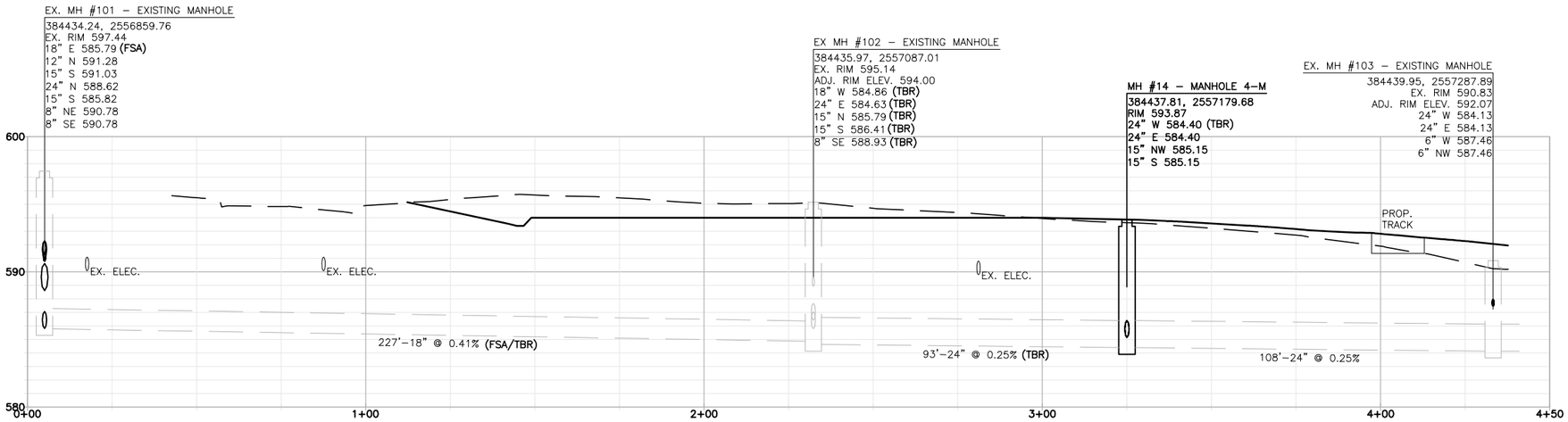

D7

LEGEND

TBR–TO BE REMOVED
FSA– FILL, SEAL & ABANDON

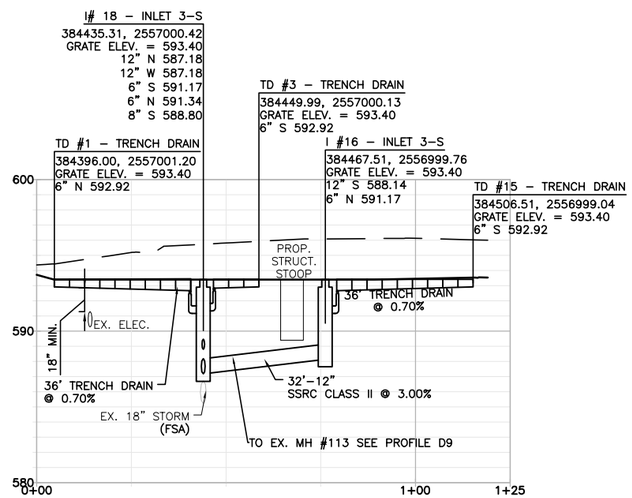

D8

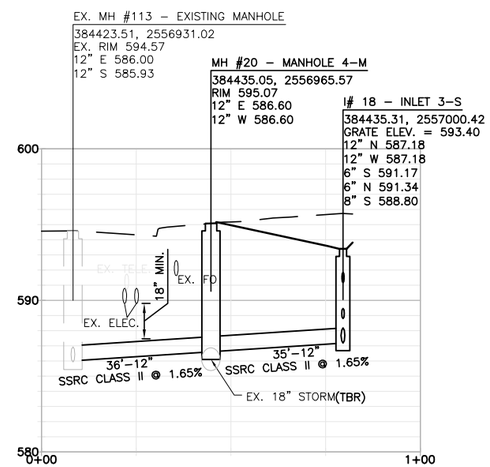

D9

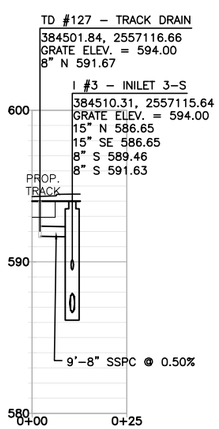

D14

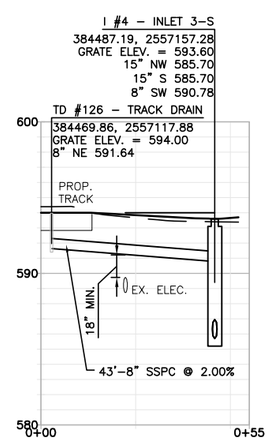

D12

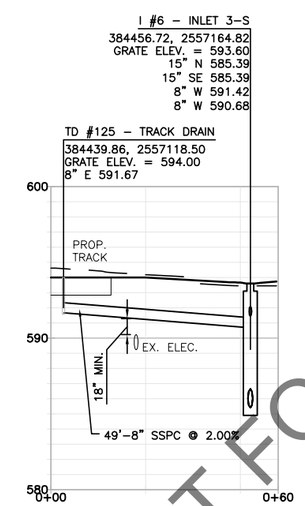

D13

GRAPHIC SCALE
20 0 10 20 40
(IN FEET)
1 inch = 20 ft.
VERTICAL SCALE: 1 inch = 5 ft

NOT FOR CONSTRUCTION

NO.	DATE	REVISION	BY

ORIGINAL PLANS PREPARED BY

HNTB
11414 W. PARK PLACE
MILWAUKEE, WI 53224
(414) 359-2300

PLANS PREPARED FOR

CITY OF MILWAUKEE
DEPARTMENT OF
PUBLIC WORKS

MILWAUKEE STREETCAR

MAINTENANCE FACILITY

95% SUBMISSION | DATE 2/29/2016

DESIGNED BY JAC | DESIGN CK'D SKR | DRAWN BY JAC | PLANS CK'D DCJ

STORM SEWER PROFILES

C211

8

8

NOT FOR CONSTRUCTION

C:\pwworking\oma\d1813853\C210.dwg
2/26/2016 1:06 PM

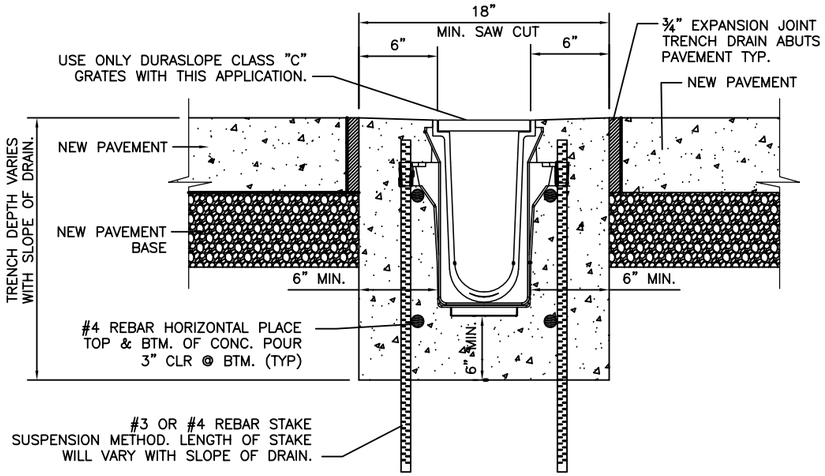

SITE TRENCH DRAIN DETAIL

NTS

NOTE: TRENCH DRAINS SHALL BE DURA SLOPE TRENCH DRAIN SYSTEM AS MANUFACTURED BY NDS INC. OR AN APPROVED EQUAL. INSTALL A CLASS "C", ADA COMPLIANT DURA SLOPE GRATE OR APPROVED EQUAL.

ALL TRENCH DRAIN PVC PIPE CONNECTIONS TO STORM OR SANITARY STRUCTURES MUST BE INSTALLED WITH A WATER TIGHT BOOT CONNECTION. PROVIDE G3 BOOT SYSTEM AS MANUFACTURED BY A.LOK PRODUCTS, INC., OR APPROVED EQUAL. THE CONNECTION SHALL PROVIDE A WATERTIGHT SEAL BETWEEN THE PIPE AND THE STRUCTURE

CHANNELS TO BE INSTALLED WITH BLANK GRATE. GRATE TO BE PROTECTED FROM CONCRETE POUR (COVER HOLES WITH TAPE).

SET TRENCH DRAIN IN CHANNEL SURROUNDED BY 6" OF CONCRETE OR THICKNESS OF THE CONCRETE SLAB WITH A MINIMUM OF 3,500 P.S.I. AVOID FULL LOAD TRAFFIC FOR 28 DAYS OR UNTIL CONCRETE HAS COMPLETELY HARDENED.

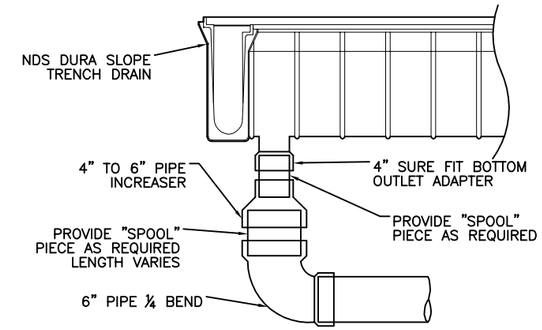

TRENCH DRAIN BOTTOM OUTLET
(TRENCH DRAINS – TD#1, TD#2, TD#3)

N.T.S.

NOTE:

ALL TRENCH DRAIN PVC PIPE CONNECTIONS TO STORM OR SANITARY STRUCTURES MUST BE INSTALLED WITH A WATERTIGHT BOOT CONNECTION. PROVIDE THE G3 BOOT SYSTEM AS MANUFACTURED BY A.LOK PRODUCTS, INC., OR APPROVED EQUAL. THE CONNECTION SHALL PROVIDE A WATERTIGHT SEAL BETWEEN THE PIPE AND THE STRUCTURE.

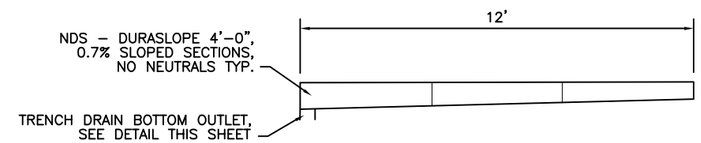

TRENCH DRAIN WITH OUTLET AT END OF DRAIN
(TRENCH DRAINS – TD#1, TD#2, TD#3)

N.T.S.

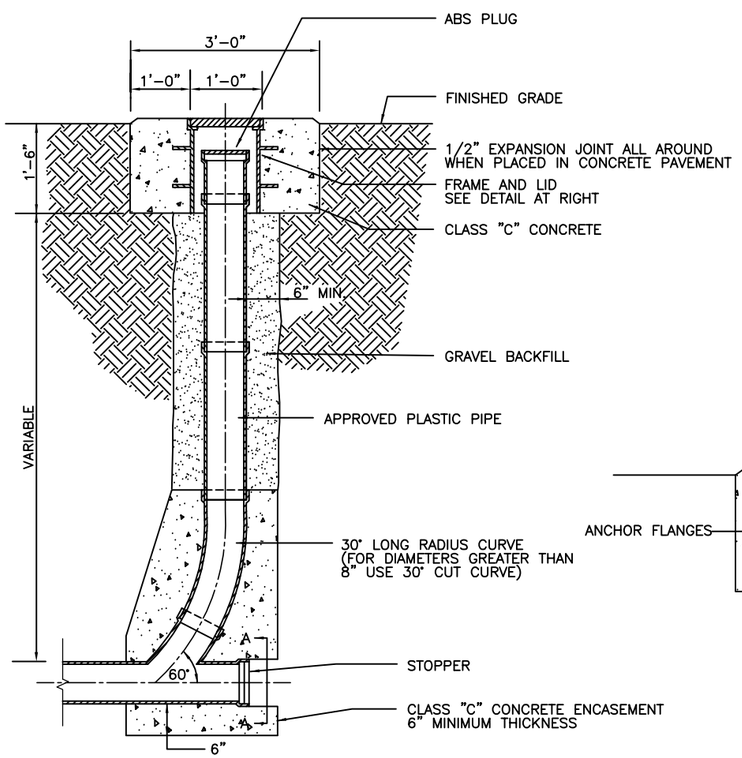

CLEANOUT DETAIL

N.T.S.

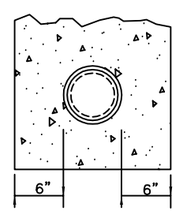

SECTION A–A

NTS

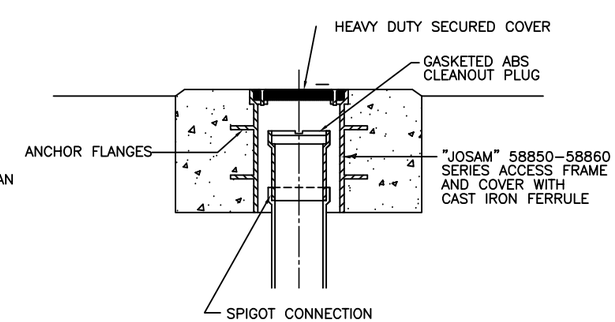

DETAIL 1

NTS

NOT FOR CONSTRUCTION

NO.	DATE	REVISION	BY

ORIGINAL PLANS PREPARED BY

HNTB 11414 W. PARK PLACE MILWAUKEE, WI 53224 (414) 359-2300

PLANS PREPARED FOR

CITY OF MILWAUKEE
DEPARTMENT OF
PUBLIC WORKS

MILWAUKEE STREETCAR

MAINTENANCE FACILITY

95% SUBMISSION | DATE 2/29/2016

DESIGNED BY JAC | DESIGN CK'D SKR | DRAWN BY JAC | PLANS CK'D DCJ

STORM SEWER DETAILS

C220

NOT FOR CONSTRUCTION

8

8

C:\pwworking\oma\d1813853\C210.dwg
2/26/2016 1:07 PM

GRADING & EROSION CONTROL LEGEND:

- EXISTING CONTOUR, MINOR
- EXISTING CONTOUR, MAJOR
- PROPOSED CONTOUR, MINOR
- PROPOSED CONTOUR, MAJOR
- (IP) INLET PROTECTION (WISDOT S.D.D. 8E10-2)
- SILT FENCE (WISDOT S.D.D. 8E9-6)
- STONE TRACKING PAD (WISDOT S.D.D. 8E14-1)

CONSTRUCTION SEQUENCE:

1. CLEARING AND GRUBBING OF AREAS NECESSARY FOR THE INSTALLATION OF EROSION AND SEDIMENT PERIMETER CONTROL MEASURES.
2. INSTALL EROSION AND SEDIMENT CONTROL MEASURES.
3. GRADING AND STRIPPING OF THE REMAINING AREAS OF THE DEVELOPMENT SITE OR PROJECT AREA.
4. INSTALL STORM SEWER SYSTEMS.
5. TEMPORARY STABILIZATION OF EROSION AND SEDIMENT CONTROL MEASURES.
6. GRADING OF ROADS, STREETS, OR PAVING AREAS, ETC.
7. INSTALLATION OF UTILITIES.
8. SITE CONSTRUCTION.
9. FINAL GRADING AND SOIL STABILIZATION.
10. REMOVAL OF EROSION AND SEDIMENT CONTROL MEASURES.

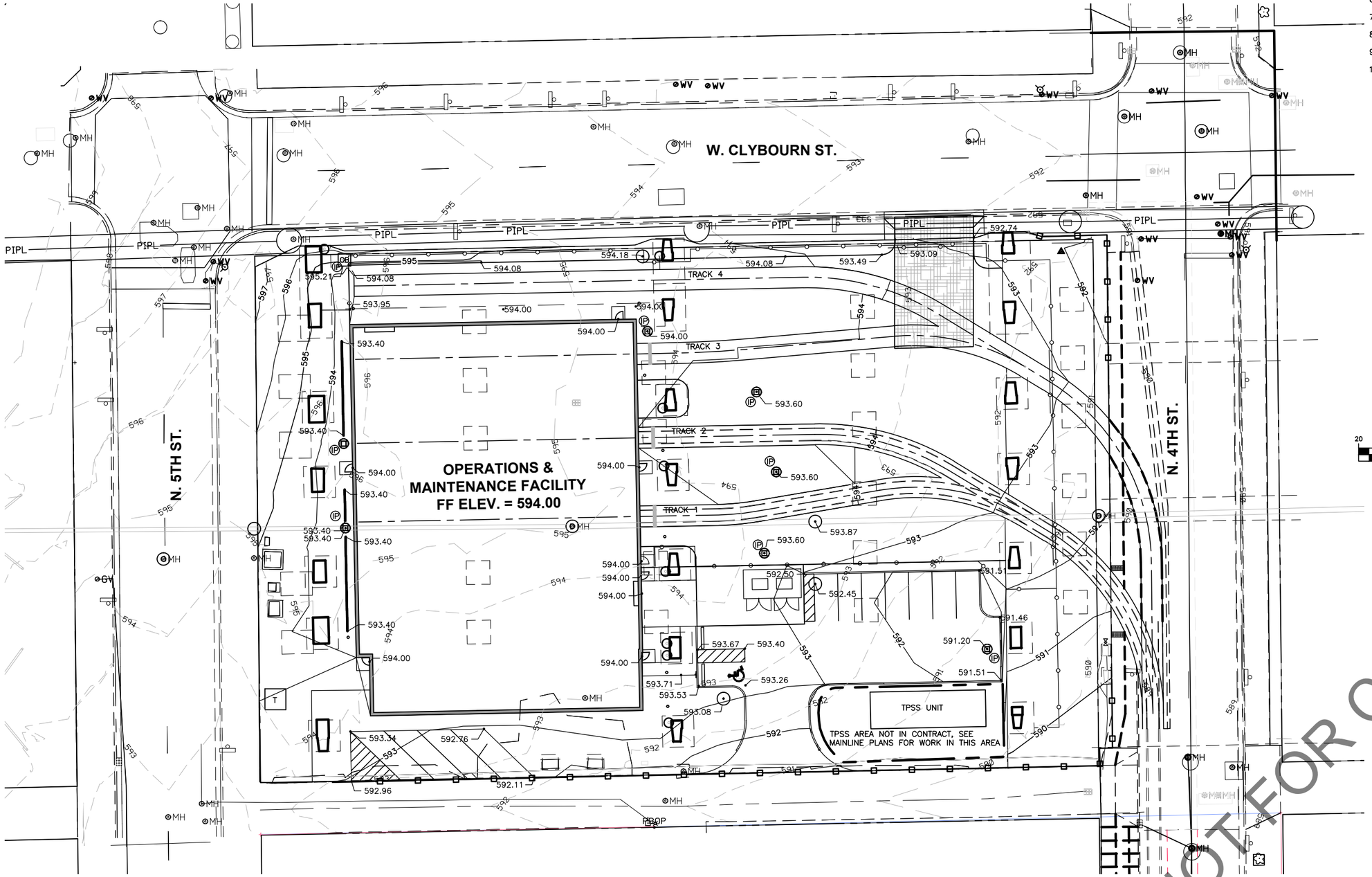

GRAPHIC SCALE

20 0 10 20 40

(IN FEET)
1 inch = 20 ft.

NOT FOR CONSTRUCTION

NO.	DATE	REVISION	BY

ORIGINAL PLANS PREPARED BY

HNTB

11414 W. PARK PLACE
MILWAUKEE, WI 53224
(414) 359-2300

PLANS PREPARED FOR

CITY OF MILWAUKEE
DEPARTMENT OF
PUBLIC WORKS

MILWAUKEE STREETCAR

MAINTENANCE FACILITY

95% SUBMISSION | DATE 2/29/2016

DESIGNED BY SKR | DESIGN CK'D . | DRAWN BY SKR | PLANS CK'D DCJ

GRADING AND EROSION CONTROL PLAN

C300

NOT FOR CONSTRUCTION

C:\pwworking\oma\d1813853\C300 .dwg
2/26/2016 10:46 AM

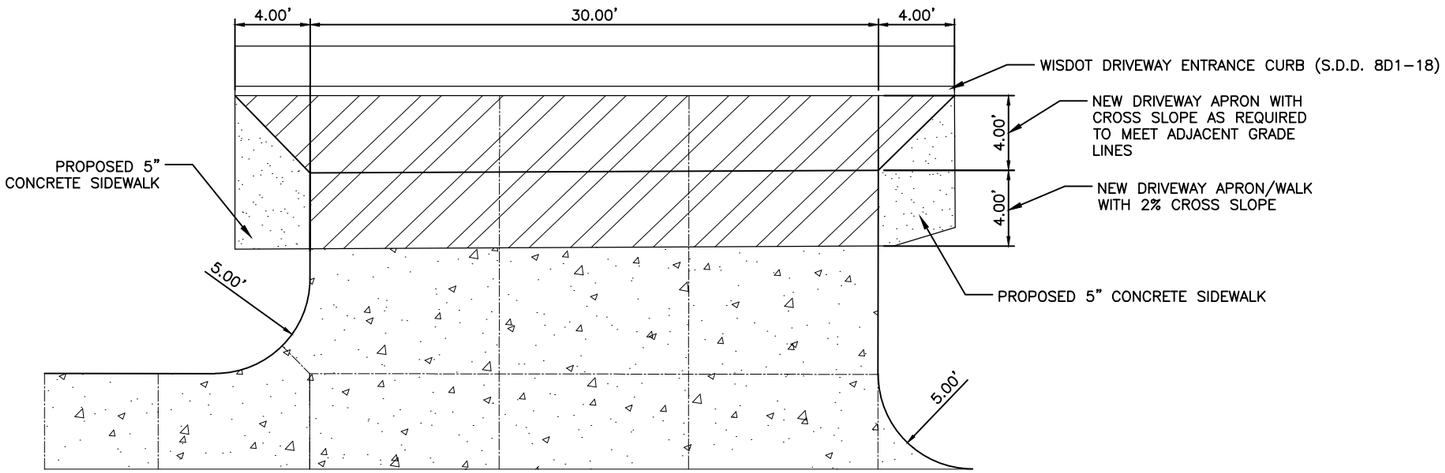

NORTH COMMERCIAL DRIVE DETAIL
NTS

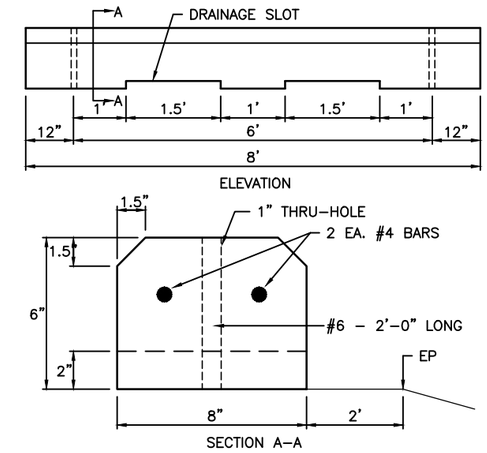

BUMPER BLOCK DETAIL
NTS

* LIGHT/DARK CONTRST OF 70% WITH ADJACENT SIDEWLK

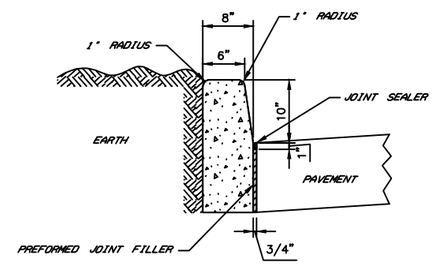

10" CONCRETE CURB
NTS

* CURB TO FOLLOW WSDOT SPECIFICATION 601 EXCEPT AS MODIFIED ABOVE

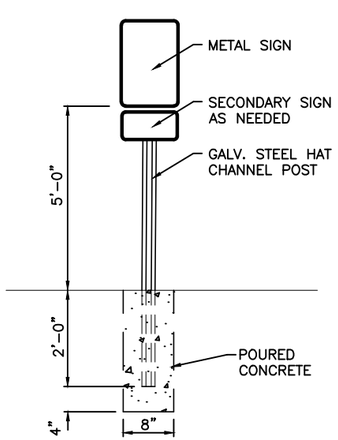

SIGN POST DETAIL
NTS

HANDICAP PARKING SIGN

SIGN DETAILS
NTS

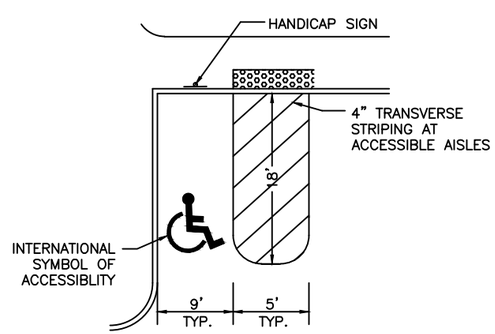

HANDICAP SIGN AND PAVEMENT MARKING DETAIL
NTS

DIGGERS HOTLINE
Call 811 3 Work Days Before You Dig
or Toll Free (800) 242-8511
Hearing Impaired TDD (800) 542-2289
www.DiggersHotline.com

NOT FOR CONSTRUCTION

NO.	DATE	REVISION	BY

ORIGINAL PLANS PREPARED BY
HNTB
11414 W. PARK PLACE
MILWAUKEE, WI 53224
(414) 359-2300

PLANS PREPARED FOR
CITY OF MILWAUKEE
DEPARTMENT OF
PUBLIC WORKS

MILWAUKEE STREETCAR
MAINTENANCE FACILITY

95% SUBMISSION | DATE 2/29/2016

DESIGNED BY SKR | DESIGN CK'D . | DRAWN BY SKR | PLANS CK'D DCJ

SITE NOTES AND DETAILS | C400

NOT FOR CONSTRUCTION

8

C:\pwworking\oma\d1813853\C400.dwg
2/26/2016 10:47 AM

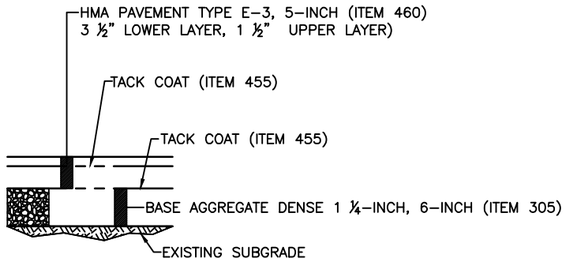

ASPHALT PAVEMENT DESIGN
NTS

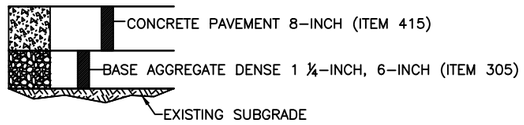

CONCRETE PAVEMENT DESIGN
NTS

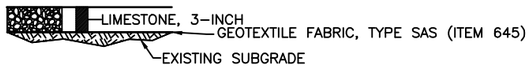

GRAVEL PAVEMENT DESIGN
NTS

NOT FOR CONSTRUCTION

NO.	DATE	REVISION	BY

ORIGINAL PLANS PREPARED BY

HNTB

11414 W. PARK PLACE
MILWAUKEE, WI 53224
(414) 359-2300

PLANS PREPARED FOR

CITY OF MILWAULKEE
DEPARTMENT OF
PUBLIC WORKS

MILWAUKEE STREETCAR

MAINTENANCE FACILITY

95% SUBMISSION | DATE 2/29/2016

DESIGNED BY SKR | DESIGN CK'D . | DRAWN BY SKR | PLANS CK'D DCJ

PAVEMENT NOTES AND DETAILS

C410

NOT FOR CONSTRUCTION

8

8

C:\pwworking\oma\d1813853\C410.dwg
2/26/2016 10:47 AM

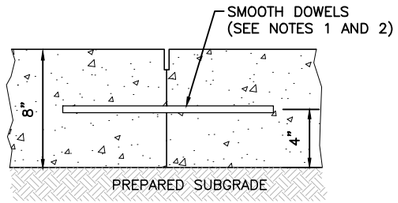

1 TRANSVERSE CONTRACTION/ LONGITUDINAL CONSTRUCTION JOINT DETAIL
NTS

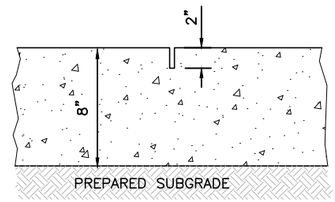

2 TRANSVERSE CONTRACTION/ LONGITUDINAL JOINT DETAIL
NTS

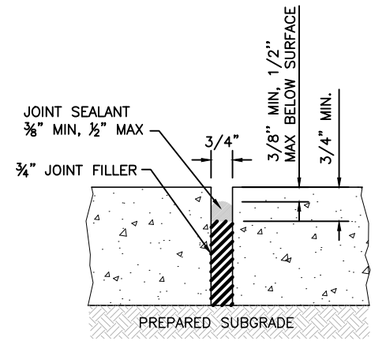

3 EXPANSION JOINT DETAIL
NTS

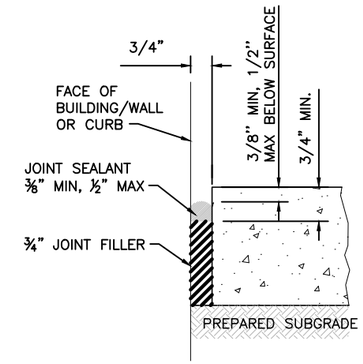

4 EXPANSION JOINT DETAIL AT FACE OF BUILDING/WALL DETAIL
NTS

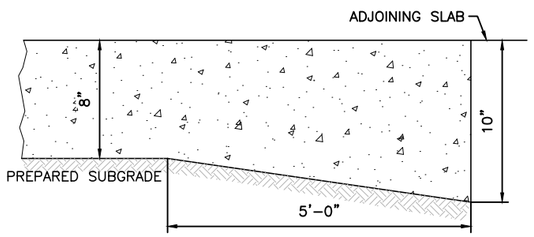

5 THICKENED EDGE DETAIL
NTS

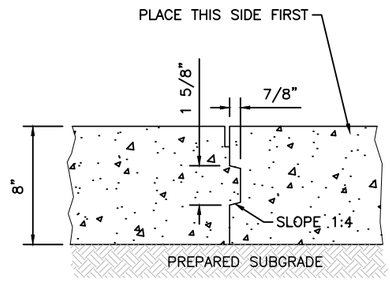

6 KEYED CONSTRUCTION JOINT DETAIL
NTS

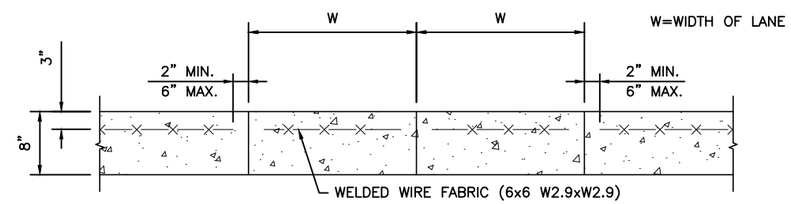

7 TRANSVERSE CROSS SECTION OF CONSTRUCTION LANES @ ODD SHAPED SLABS REQUIRING REINFORCEMENT DETAIL
NTS

NOTES:

1. PLACE TIE BAR AND SMOOTH DOWELS ON 12" CENTER TO CENTER SPACING FOR 8" PAVEMENT SECTION.
2. SMOOTH DOWELS SHALL BE 1" DIAMETER AND 16" LENGTH IN 8" THICK PAVEMENT SECTION.
3. SMOOTH DOWEL BARS SHALL BE DRILLED AND EPOXIED INTO EXISTING/PREVIOUSLY PLACED CONSTRUCTION LANES. PROVIDE SNUG/TIGHT FIT.
4. COAT OTHER END OF SMOOTH DOWEL BARS WITH APPROVED MATERIAL TO BREAK BOND BETWEEN STEEL AND CONCRETE.
5. SEALANT SHALL MEET THE REQUIREMENTS OF ASTM D5893.
6. BACKER ROD MATERIAL SHALL BE COMPATIBLE WITH THE TYPE OF LIQUID SEALANT USED.

NOTE: SEE SHEETS 00C-51 AND 00C-52 FOR LAYOUT OF CONCRETE PAVEMENT JOINTS.

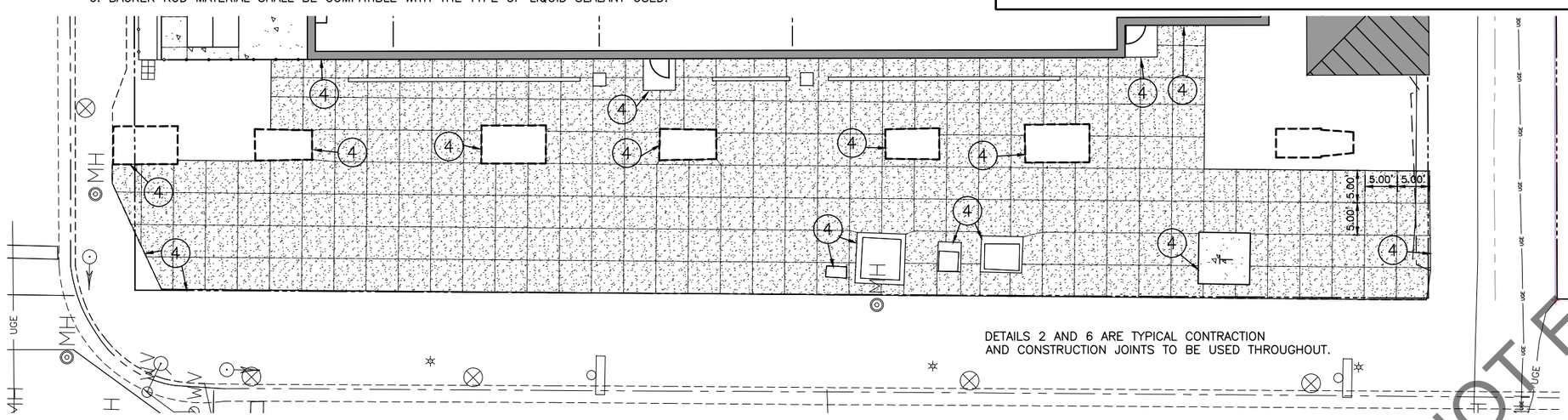

DETAILS 2 AND 6 ARE TYPICAL CONTRACTION AND CONSTRUCTION JOINTS TO BE USED THROUGHOUT.

NOT FOR CONSTRUCTION

NO.	DATE	REVISION	BY

ORIGINAL PLANS PREPARED BY

HNTB
11414 W. PARK PLACE
MILWAUKEE, WI 53224
(414) 359-2300

PLANS PREPARED FOR

CITY OF MILWAUKEE
DEPARTMENT OF
PUBLIC WORKS

MILWAUKEE STREETCAR

MAINTENANCE FACILITY

95% SUBMISSION		DATE 2/29/2016	
DESIGNED BY SKR	DESIGN CK'D .	DRAWN BY SKR	PLANS CK'D DCJ

PAVEMENT JOINTING NOTES AND DETAILS

C411

NOT FOR CONSTRUCTION

C:\pwworking\oma\d1813853\C410.dwg
2/26/2016 1:08 PM

SEE SHEET C411 FOR JOINT DETAILS.

DETAILS 2 AND 6 ARE TYPICAL CONTRACTION AND CONSTRUCTION JOINTS TO BE USED THROUGHOUT.

ODD SHAPED CONCRETE SLAB, SEE SHEET, DETAIL 7

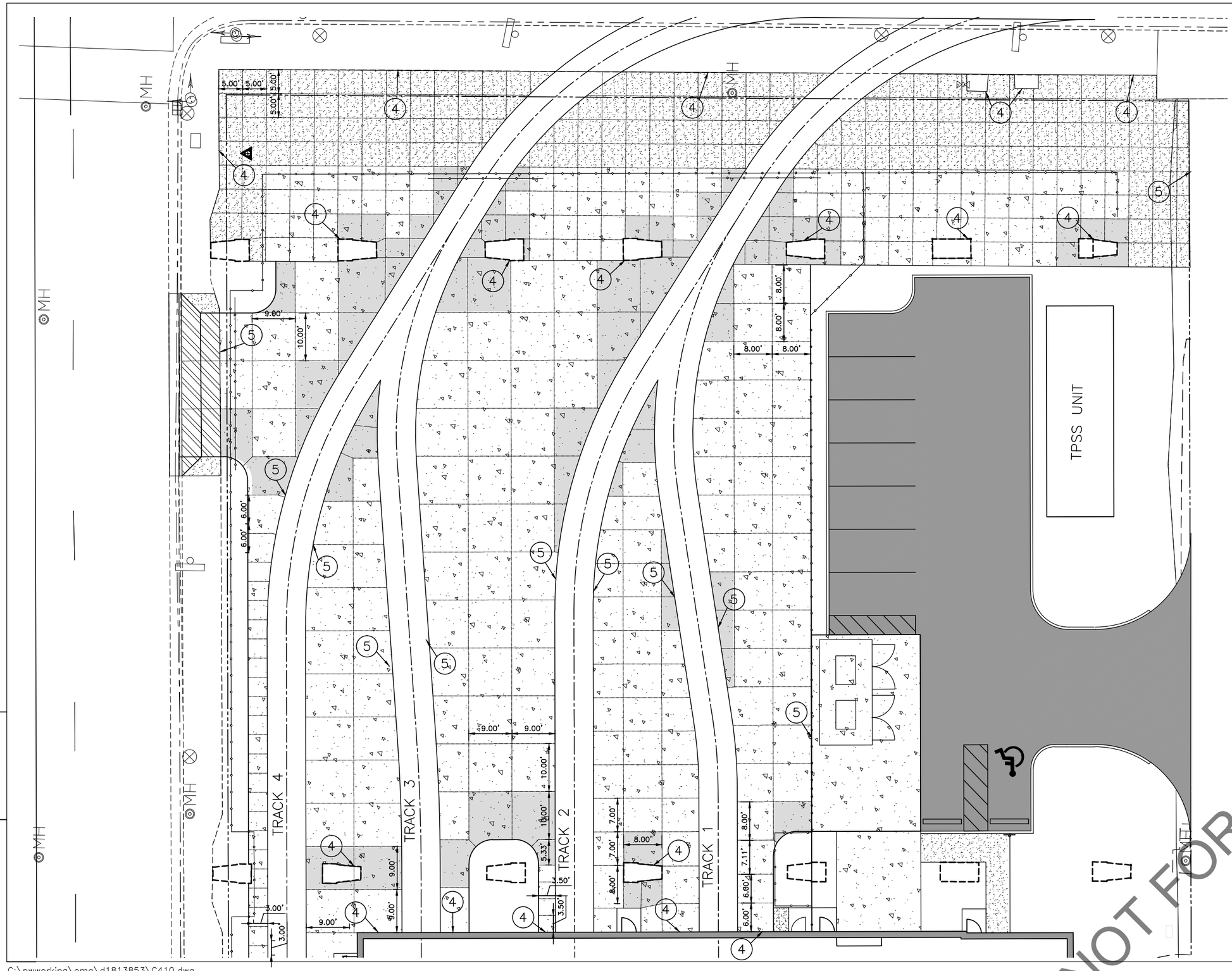

GRAPHIC SCALE

10 0 5 10 20

(IN FEET)
1 inch = 10 ft.

NOT FOR CONSTRUCTION

NO.	DATE	REVISION	BY

ORIGINAL PLANS PREPARED BY

HNTB

11414 W. PARK PLACE
MILWAUKEE, WI 53224
(414) 359-2300

PLANS PREPARED FOR

CITY OF MILWAUKEE
DEPARTMENT OF
PUBLIC WORKS

MILWAUKEE STREETCAR

MAINTENANCE FACILITY

95% SUBMISSION		DATE 2/29/2016	
DESIGNED BY SKR	DESIGN CK'D .	DRAWN BY SKR	PLANS CK'D DCJ

PAVEMENT JOINTING PLAN

C412

NOT FOR CONSTRUCTION

8

8

C:\pwworking\oma\d1813853\C410.dwg
2/26/2016 1:12 PM

UTILITY LEGEND:

MH — PROPOSED STORM MANHOLE

I — PROPOSED STORM INLET

12" STORM

FSA–FILL, SEAL & ABANDON

UTILITY NOTES:

1. PROPOSED STORM SEWER PIPE TYPES AND STRUCTURE TYPES REFERENCE 2016 WISDOT STANDARD SPECIFICATIONS AND STANDARD DETAIL DRAWINGS.

2. ALL WORK ASSOCIATED WITH STORM SEWER SHALL COMPLY WITH WISDOT STANDARDS AND SPECIFICATIONS. THE STANDARD SPECIFICATION FOR SEWER AND WATER CONSTRUCTION IN WISCONSIN SHALL APPLY FOR STREET REPAIR WITHIN THE PUBLIC R/W.

D# – DRAINAGE PROFILE REFERENCE NUMBER. SEE SHEET C510

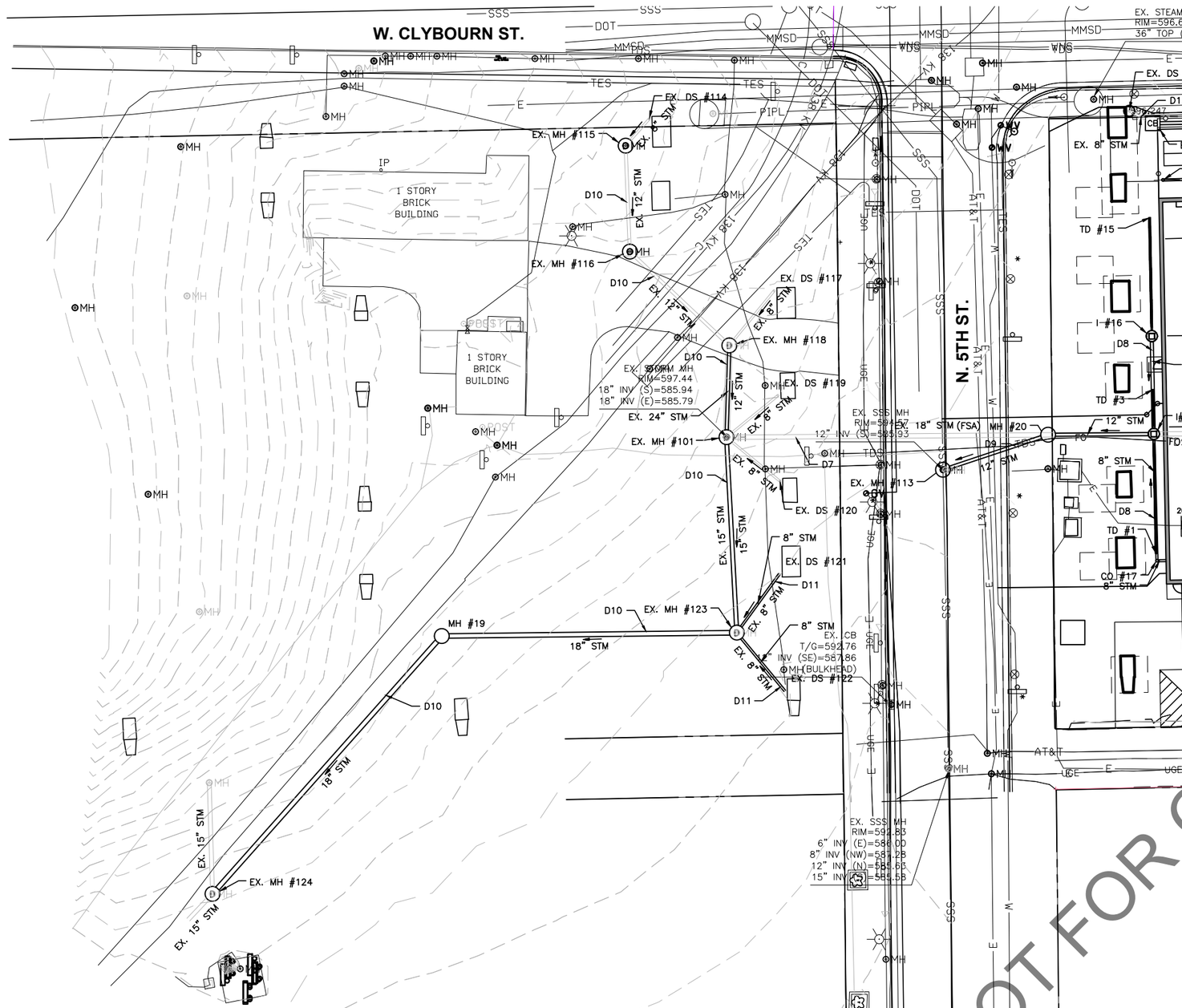

NOT FOR CONSTRUCTION

NO.	DATE	REVISION	BY

ORIGINAL PLANS PREPARED BY

HNTB
11414 W. PARK PLACE
MILWAUKEE, WI 53224
(414) 359-2300

PLANS PREPARED FOR

CITY OF MILWAUKEE
DEPARTMENT OF
PUBLIC WORKS

MILWAUKEE STREETCAR

MAINTENANCE FACILITY

95% SUBMISSION | DATE 2/29/2016

DESIGNED BY SKR | DESIGN CK'D . | DRAWN BY SKR | PLANS CK'D DCJ

STORM SEWER RELOCATION PLAN

C500

NOT FOR CONSTRUCTION

C:\pwworking\oma\d1813853\C500.dwg
2/26/2016 10:50 AM

LEGEND

TBR–TO BE REMOVED
FSA– FILL, SEAL & ABANDON

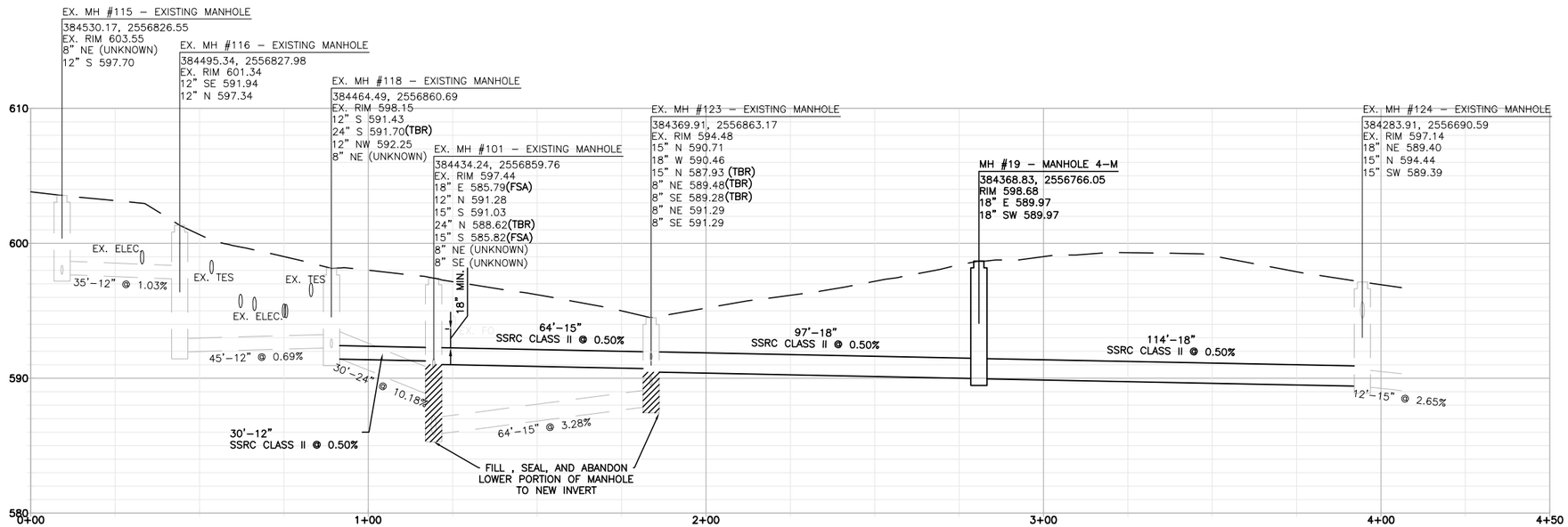

D10

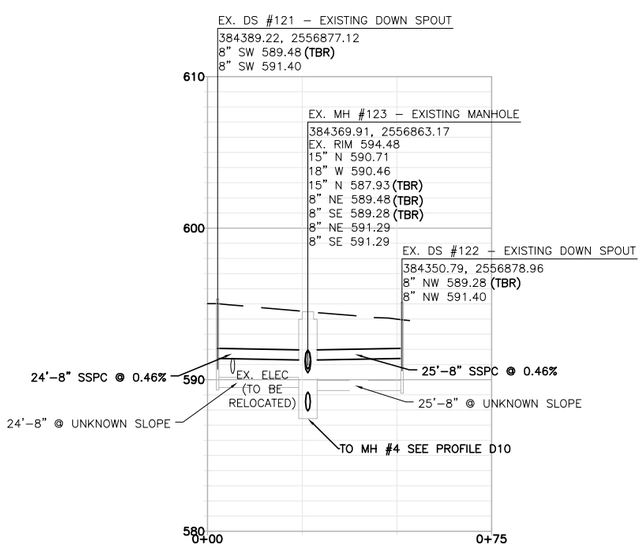

D11

GRAPHIC SCALE

20 0 10 20 40

(IN FEET)
1 inch = 20 ft.
VERTICAL SCALE: 1 inch = 5 ft

NOT FOR CONSTRUCTION

NO.	DATE	REVISION	BY

ORIGINAL PLANS PREPARED BY

HNTB

11414 W. PARK PLACE
MILWAUKEE, WI 53224
(414) 359-2300

PLANS PREPARED FOR

CITY OF MILWAUKEE
DEPARTMENT OF
PUBLIC WORKS

MILWAUKEE STREETCAR

MAINTENANCE FACILITY

95% SUBMISSION | DATE 2/29/2016

DESIGNED BY JAC | DESIGN CK'D SKR | DRAWN BY JAC | PLANS CK'D .

STORM SEWER RELOCATION PROFILES

C510

NOT FOR CONSTRUCTION

8

8

C:\pwworking\oma\d1813853\C510.dwg
2/26/2016 10:50 AM

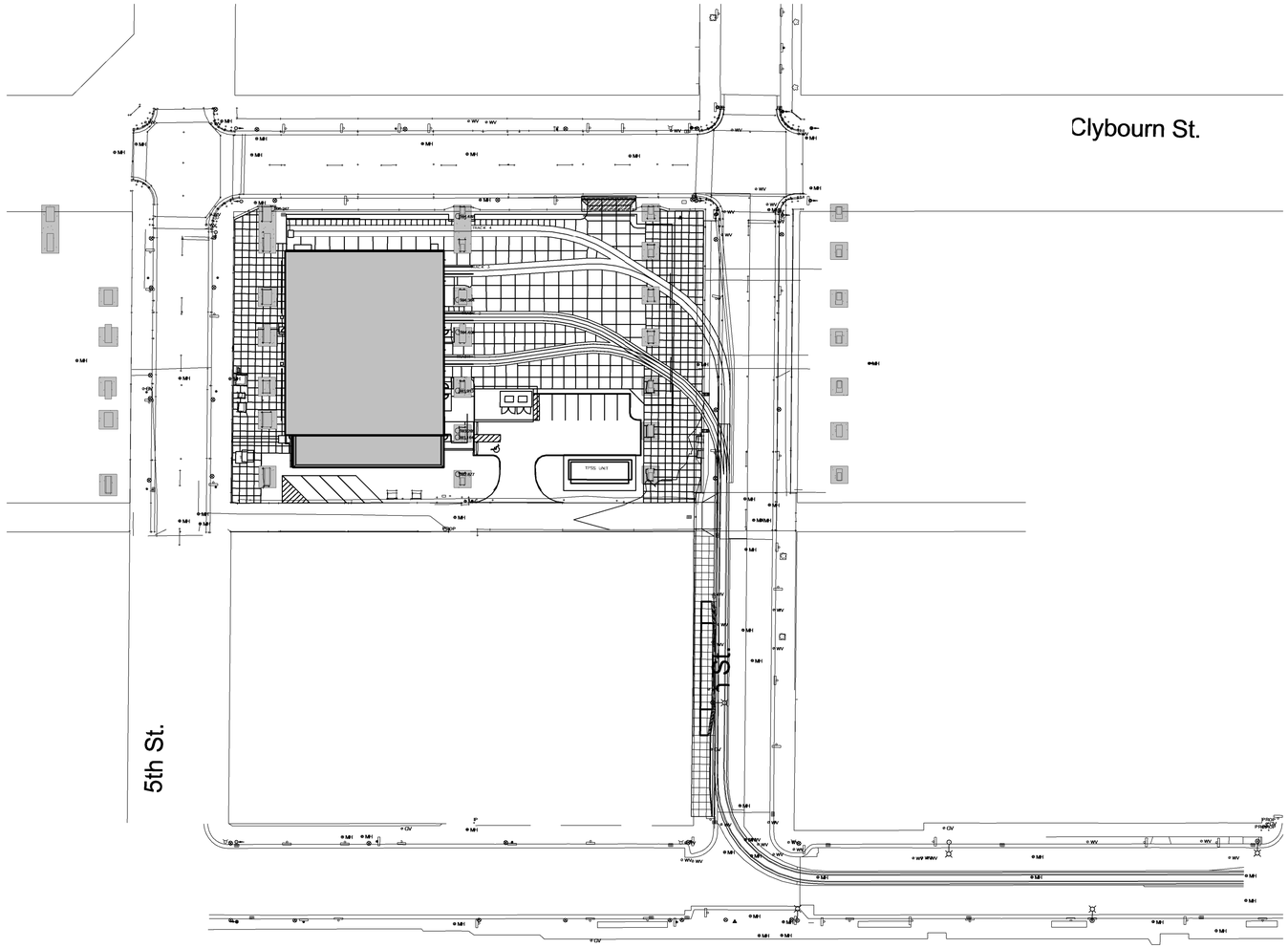

N

ARCHITECTURAL SITE PLAN
1" = 50'-0"

HDR

NOT FOR CONSTRUCTION

NO.	DATE	REVISION	BY

ORIGINAL PLANS PREPARED BY

HNTB
11414 W. PARK PLACE
MILWAUKEE, WI 53224
(414) 359-2300

PLANS PREPARED FOR

CITY OF MILWAULKEE
DEPARTMENT OF
PUBLIC WORKS

MILWAUKEE STREETCAR OPERATIONS
AND MAINTENANCE FACILITY

95% SUBMISSION		29 FEB . 2016	
DESIGNED BY EK	DESIGN CK'D SP	DRAWN BY EK	PLANS CK'D PA

ARCHITECTURAL SITE PLAN

A050

NOT FOR CONSTRUCTION

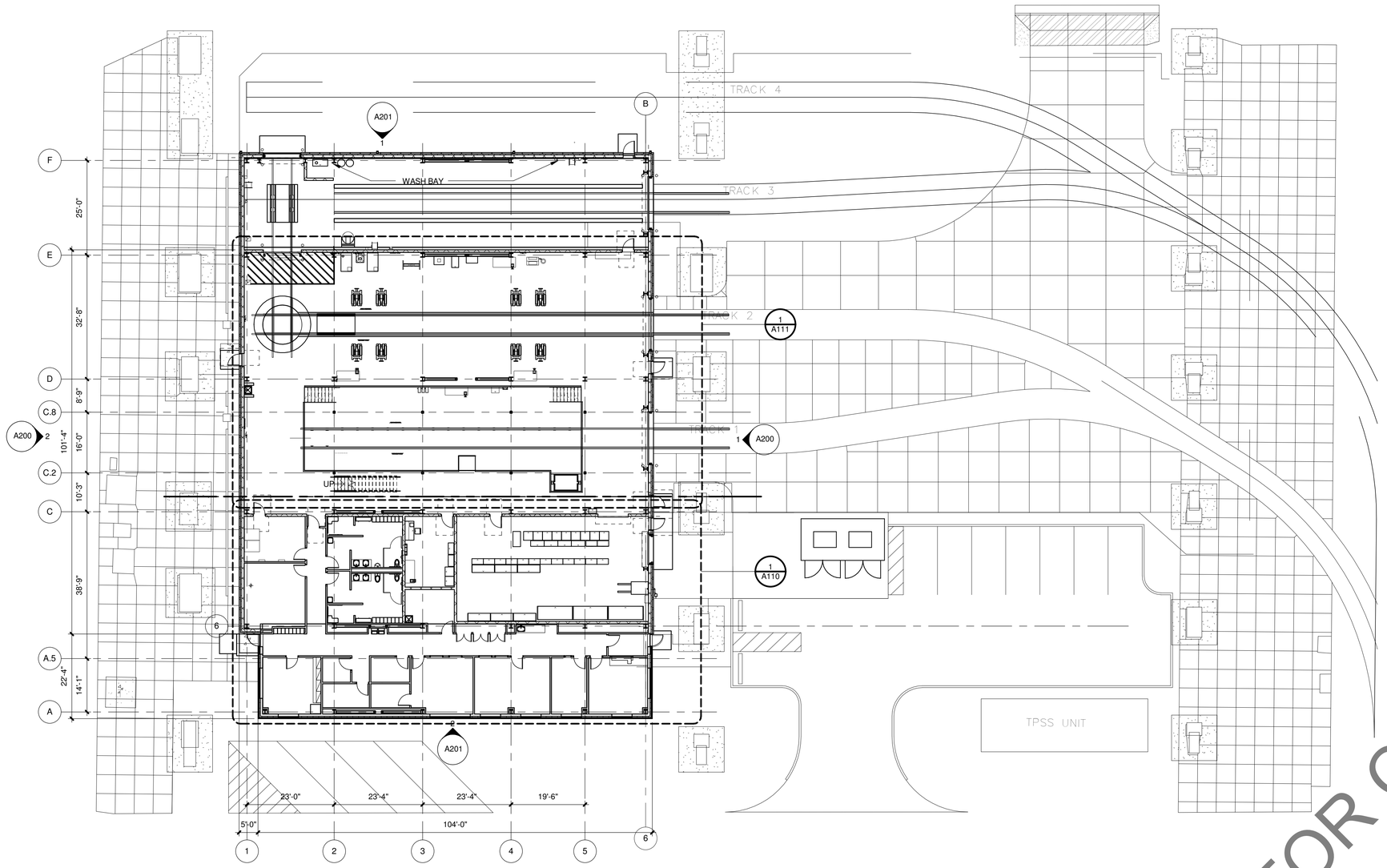

SHOP LEVEL OVERALL PLAN

1/16" = 1'-0"

N

NOT FOR CONSTRUCTION

NO.	DATE	REVISION	BY

ORIGINAL PLANS PREPARED BY

HNTB

11414 W. PARK PLACE
MILWAUKEE, WI 53224
(414) 359-2300

PLANS PREPARED FOR

CITY OF MILWAULKEE
DEPARTMENT OF
PUBLIC WORKS

MILWAUKEE STREETCAR OPERATIONS
AND MAINTENANCE FACILITY

95% SUBMISSION		29 FEB . 2016	
DESIGNED BY EK	DESIGN CK'D SP	DRAWN BY EK	PLANS CK'D EK

SHOP LEVEL OVERALL PLAN

A100

NOT FOR CONSTRUCTION

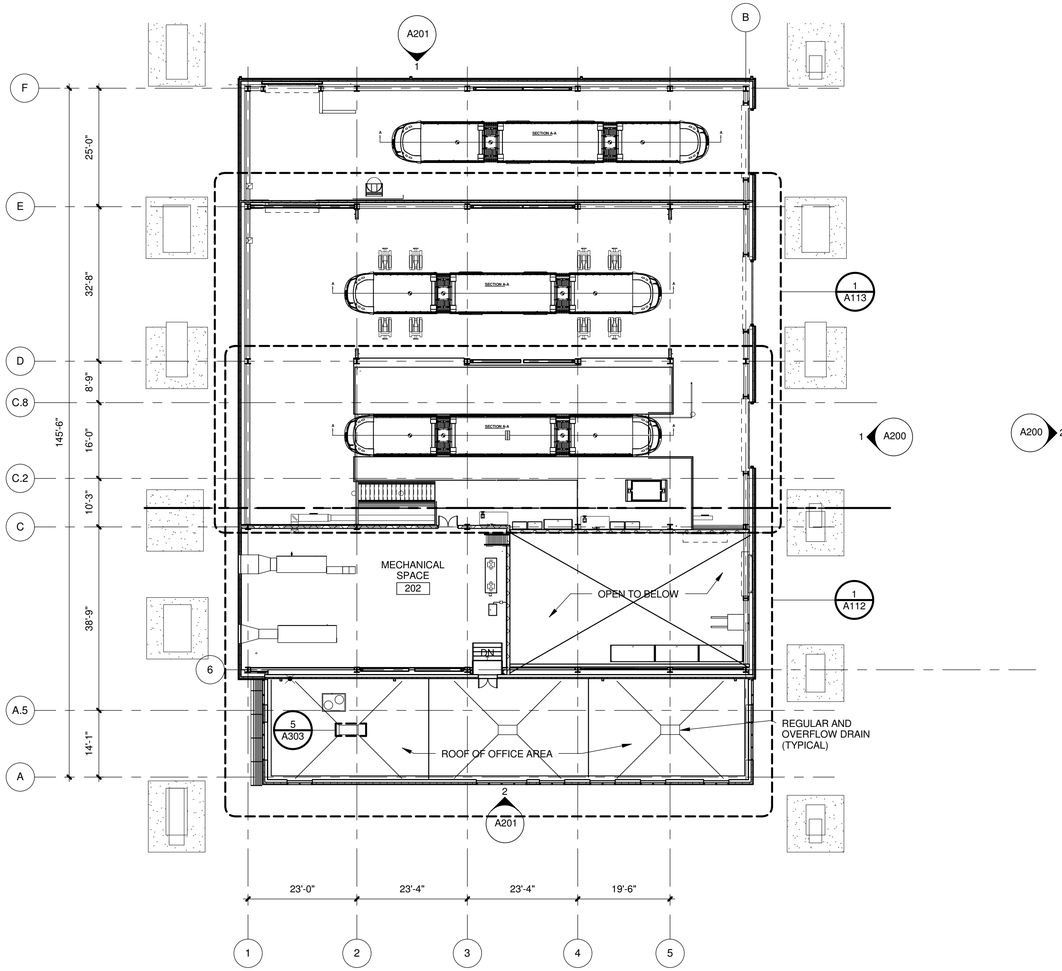

PLATFORM LEVEL OVERALL PLAN

1/16" = 1'-0"

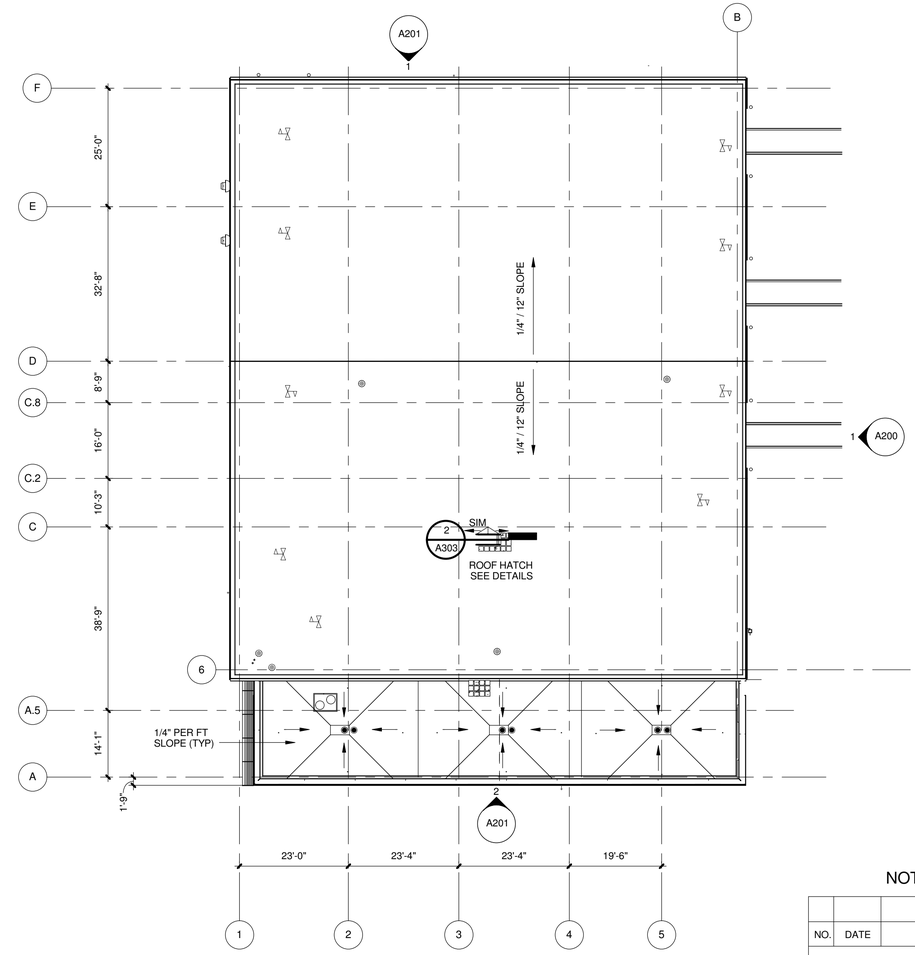

ROOF PLAN

1/16" = 1'-0"

NOT FOR CONSTRUCTION

NO.	DATE	REVISION	BY

ORIGINAL PLANS PREPARED BY

HNTB

11414 W. PARK PLACE
MILWAUKEE, WI 53224
(414) 359-2300

PLANS PREPARED FOR

CITY OF MILWAUKEE
DEPARTMENT OF
PUBLIC WORKS

MILWAUKEE STREETCAR OPERATIONS
AND MAINTENANCE FACILITY

95% SUBMISSION		29 FEB . 2016	
DESIGNED BY TC	DESIGN CK'D SP	DRAWN BY EK	PLANS CK'D PA

PLATFORM AND ROOF OVERALL PLAN

A101

NOT FOR CONSTRUCTION

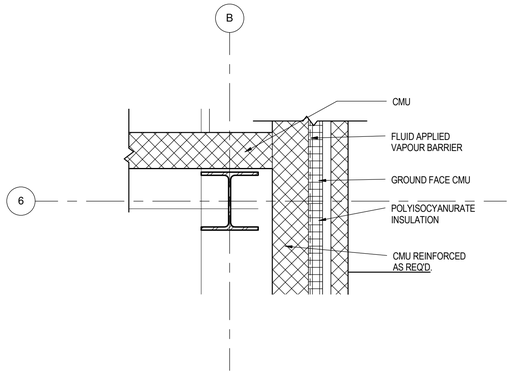

2 DETAIL @ COLUMN SHOP CORNER, TYP.
3/4" = 1'-0"

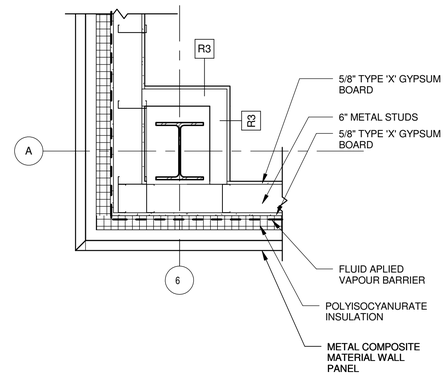

3 DETAIL @ MTL PNL AND COLUMN
3/4" = 1'-0"

8
A501

ARCHITECTURAL KEYED NOTES

101	STRUCTURAL COLUMN (TYP)
102	BOLLARD, SEE STUCTURAL
103	STREETCAR RAILS
104	EMERGENCY EYE WASH STATION
105	GUARDRAIL
106	GUARDRAIL SWINGING GATE
107	HOUSEKEEPING PAD
108	SERVICE SINK
109	TURNTABLE, BY ALTERNATE #1.
110	DRINKING FOUNTAIN, SEE DETAIL ON SHEET G-001 AND MECHANICAL DWGS
111	MEP EQUIPMENT
112	MOP SINK
113	SEE EQUIPMENT PLANS FOR FURTHER INFORMATION
114	PARTS LIFT
115	FLOOR DRAIN
116	TRENCH DRAIN
117	12" WIDE X 18" DEEP X 72" HIGH METAL LOCKERS
118	90 MIN. RATED FIRE SHUTTER AT TRANSACTION WINDOW.
119	SHIPS LADDER TO ROOF
120	GUARDRAIL GATE WITH MAGNETIC LATCH INTERLOCKED WITH PROXIMITY SENSORS SO THAT GATE WILL ONLY OPEN WHEN STREETCAR IS IN PLACE. SEE ELECTRICAL.
121	DOWNSPOUT
122	ACCESS PLATFORM, SEE STRUCTURAL. VERIFY LOCATION WITH RESPECT TO STREETCAR DOORS PRIOR TO PLACING PLATFORM.

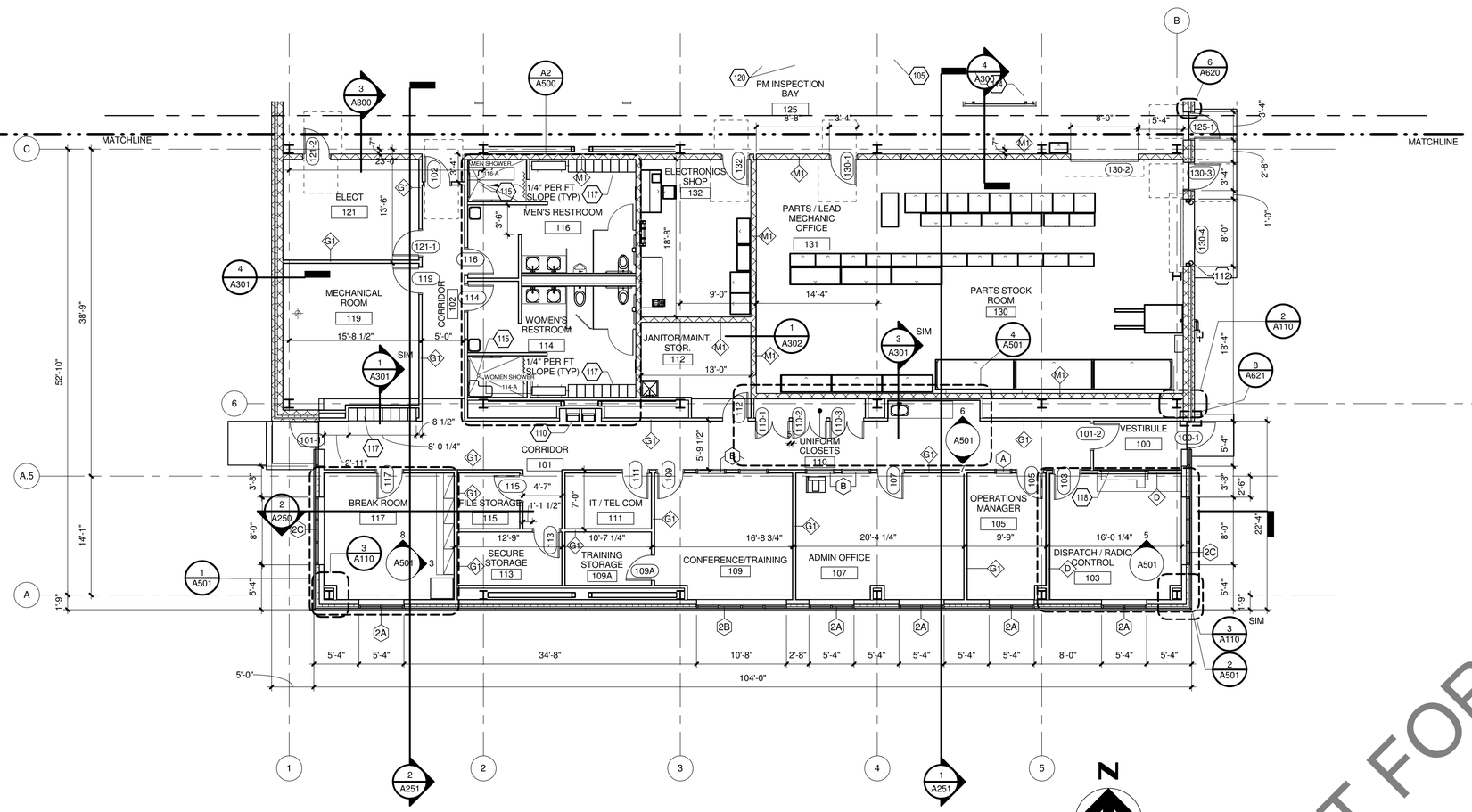

SHOP LEVEL SECTOR A
1/8" = 1'-0"

NOT FOR CONSTRUCTION

NO.	DATE	REVISION	BY

ORIGINAL PLANS PREPARED BY

HNTB
11414 W. PARK PLACE
MILWAUKEE, WI 53224
(414) 359-2300

PLANS PREPARED FOR

CITY OF MILWAUKEE
DEPARTMENT OF
PUBLIC WORKS

MILWAUKEE STREETCAR OPERATIONS
AND MAINTENANCE FACILITY

95% SUBMISSION | 29 FEB . 2016

DESIGNED BY EK | DESIGN CK'D SP | DRAWN BY EK | PLANS CK'D EK

SHOP LEVEL FLOOR PLAN SECTOR A

A110

NOT FOR CONSTRUCTION

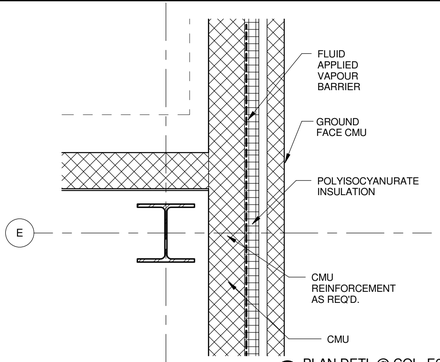

3 PLAN DETL @ COL. E6
3/4" = 1'-0"

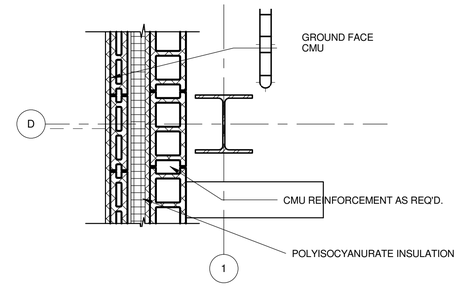

4 COL. DETL @ CMU WALL
3/4" = 1'-0"

ARCHITECTURAL KEYED NOTES

101	STRUCTURAL COLUMN (TYP)
102	BOLLARD, SEE STUCTURAL
103	STREETCAR RAILS
104	EMERGENCY EYE WASH STATION
105	GUARDRAIL
106	GUARDRAIL SWINGING GATE
107	HOUSEKEEPING PAD
108	SERVICE SINK
109	TURNTABLE, BY ALTERNATE #1.
110	DRINKING FOUNTAIN, SEE DETAIL ON SHEET G-001 AND MECHANICAL DWGS
111	MEP EQUIPMENT
112	MOP SINK
113	SEE EQUIPMENT PLANS FOR FURTHER INFORMATION
114	PARTS LIFT
115	FLOOR DRAIN
116	TRENCH DRAIN
117	12" WIDE X 18" DEEP X 72" HIGH METAL LOCKERS
118	90 MIN. RATED FIRE SHUTTER AT TRANSACTION WINDOW.
119	SHIPS LADDER TO ROOF
120	GUARDRAIL GATE WITH MAGNETIC LATCH INTERLOCKED WITH PROXIMITY SENSORS SO THAT GATE WILL ONLY OPEN WHEN STREETCAR IS IN PLACE. SEE ELECTRICAL.
121	DOWNSPOUT
122	ACCESS PLATFORM, SEE STRUCTURAL. VERIFY LOCATION WITH RESPECT TO STREETCAR DOORS PRIOR TO PLACING PLATFORM.

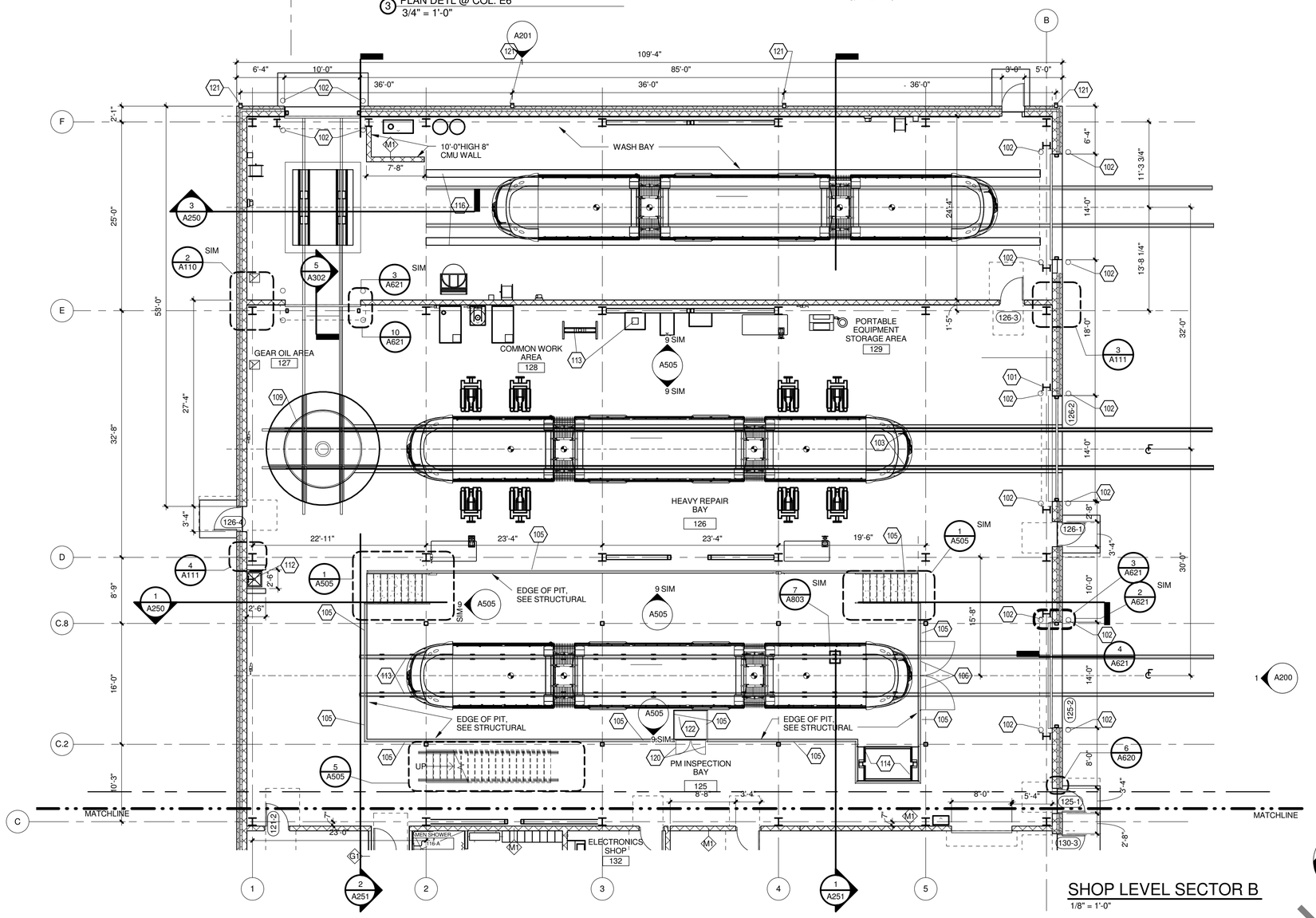

SHOP LEVEL SECTOR B
1/8" = 1'-0"

HDR

NOT FOR CONSTRUCTION

NO.	DATE	REVISION	BY

ORIGINAL PLANS PREPARED BY

HNTB
11414 W. PARK PLACE
MILWAUKEE, WI 53224
(414) 359-2300

PLANS PREPARED FOR

CITY OF MILWAUKEE
DEPARTMENT OF
PUBLIC WORKS

MILWAUKEE STREETCAR OPERATIONS AND MAINTENANCE FACILITY

95% SUBMISSION | 29 FEB . 2016

DESIGNED BY EK | DESIGN CK'D SP | DRAWN BY EK | PLANS CK'D PA

SHOP LEVEL FLOOR PLAN SECTOR B

A111

NOT FOR CONSTRUCTION

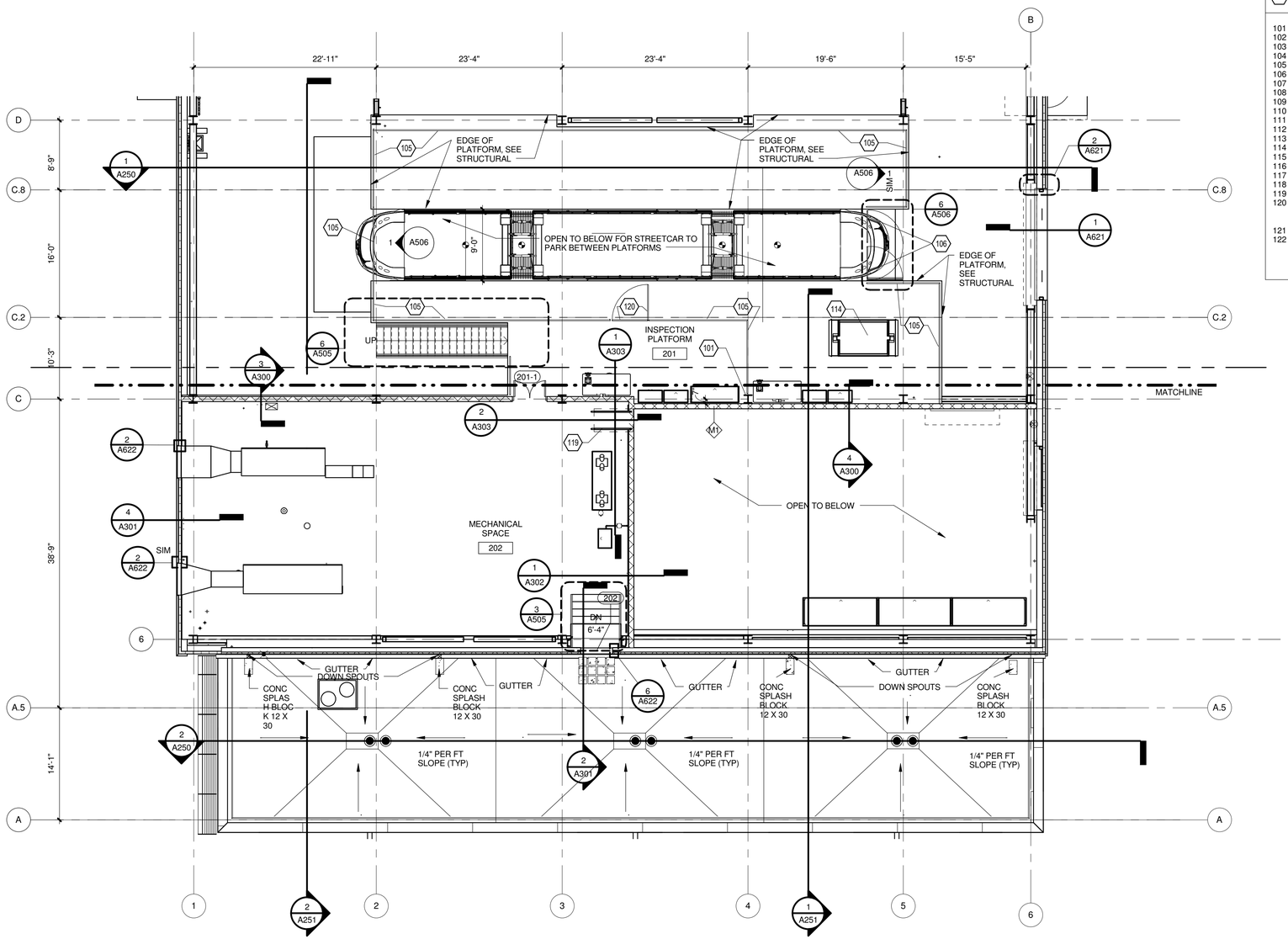

PLATFORM LEVEL FLOOR PLAN

1/8" = 1'-0"

ARCHITECTURAL KEYED NOTES

101	STRUCTURAL COLUMN (TYP)
102	BOLLARD, SEE STUCTURAL
103	STREETCAR RAILS
104	EMERGENCY EYE WASH STATION
105	GUARDRAIL
106	GUARDRAIL SWINGING GATE
107	HOUSEKEEPING PAD
108	SERVICE SINK
109	TURNTABLE, BY ALTERNATE #1.
110	DRINKING FOUNTAIN, SEE DETAIL ON SHEET G-001 AND MECHANICAL DWGS
111	MEP EQUIPMENT
112	MOP SINK
113	SEE EQUIPMENT PLANS FOR FURTHER INFORMATION
114	PARTS LIFT
115	FLOOR DRAIN
116	TRENCH DRAIN
117	12" WIDE X 18" DEEP X 72" HIGH METAL LOCKERS
118	90 MIN. RATED FIRE SHUTTER AT TRANSACTION WINDOW.
119	SHIPS LADDER TO ROOF
120	GUARDRAIL GATE WITH MAGNETIC LATCH INTERLOCKED WITH PROXIMITY SENSORS SO THAT GATE WILL ONLY OPEN WHEN STREETCAR IS IN PLACE. SEE ELECTRICAL.
121	DOWNSPOUT
122	ACCESS PLATFORM, SEE STRUCTURAL. VERIFY LOCATION WITH RESPECT TO STREETCAR DOORS PRIOR TO PLACING PLATFORM.

NOT FOR CONSTRUCTION

NO.	DATE	REVISION	BY

ORIGINAL PLANS PREPARED BY

HNTB

11414 W. PARK PLACE
MILWAUKEE, WI 53224
(414) 359-2300

PLANS PREPARED FOR

CITY OF MILWAULKEE
DEPARTMENT OF
PUBLIC WORKS

MILWAUKEE STREETCAR OPERATIONS
AND MAINTENANCE FACILITY

95% SUBMISSION | 29 FEB . 2016

DESIGNED BY EK | DESIGN CK'D SP | DRAWN BY EK | PLANS CK'D PA

PLATFORM LEVEL FLOOR PLAN SECTOR A

A112

NOT FOR CONSTRUCTION

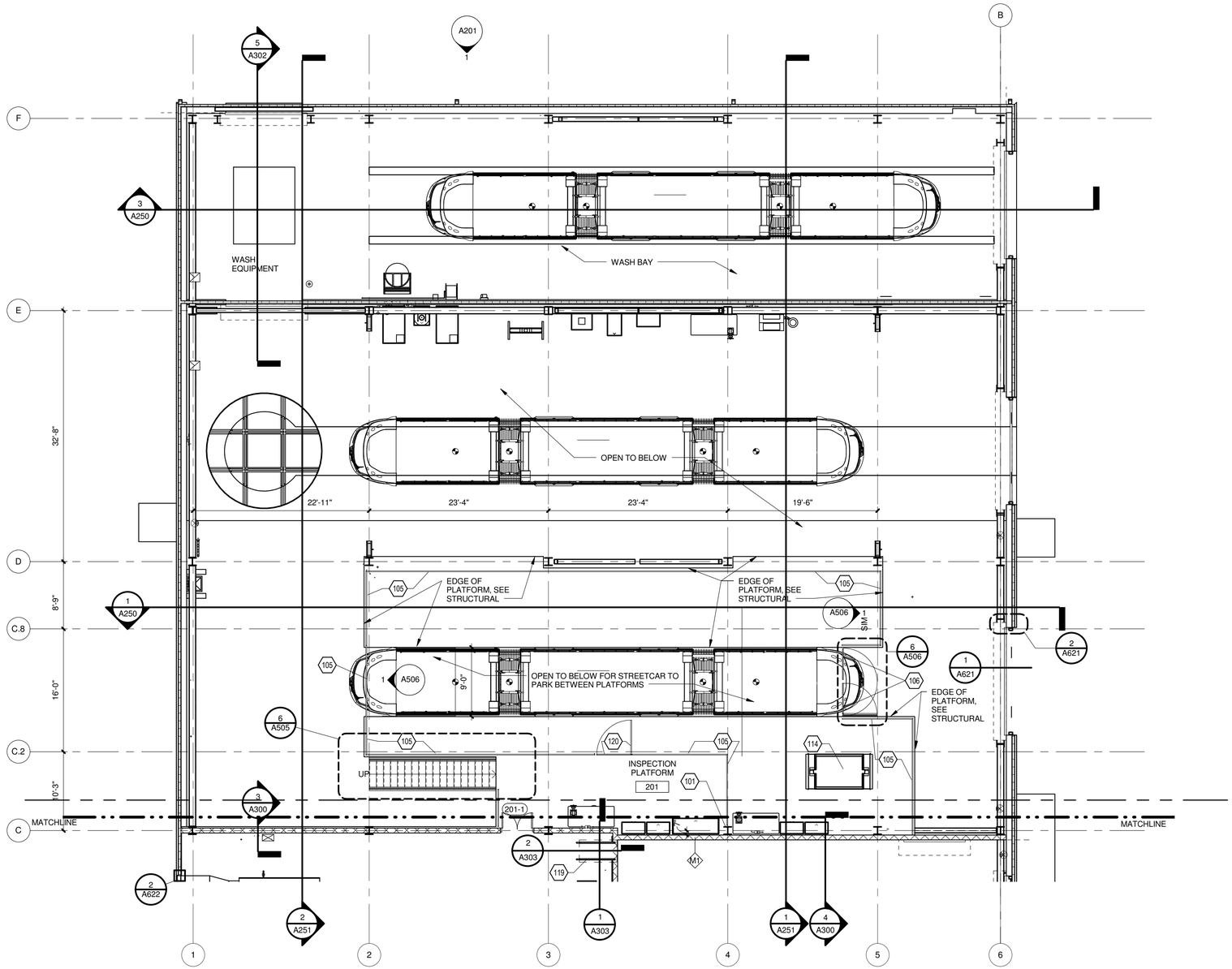

PLATFORM LEVEL SECTOR B

1/8" = 1'-0"

ARCHITECTURAL KEYED NOTES

101	STRUCTURAL COLUMN (TYP)
102	BOLLARD, SEE STUCTURAL
103	STREETCAR RAILS
104	EMERGENCY EYE WASH STATION
105	GUARDRAIL
106	GUARDRAIL SWINGING GATE
107	HOUSEKEEPING PAD
108	SERVICE SINK
109	TURNTABLE, BY ALTERNATE #1.
110	DRINKING FOUNTAIN, SEE DETAIL ON SHEET G-001 AND MECHANICAL DWGS
111	MEP EQUIPMENT
112	MOP SINK
113	SEE EQUIPMENT PLANS FOR FURTHER INFORMATION
114	PARTS LIFT
115	FLOOR DRAIN
116	TRENCH DRAIN
117	12" WIDE X 18" DEEP X 72" HIGH METAL LOCKERS
118	90 MIN. RATED FIRE SHUTTER AT TRANSACTION WINDOW.
119	SHIPS LADDER TO ROOF
120	GUARDRAIL GATE WITH MAGNETIC LATCH INTERLOCKED WITH PROXIMITY SENSORS SO THAT GATE WILL ONLY OPEN WHEN STREETCAR IS IN PLACE. SEE ELECTRICAL.
121	DOWNSPOUT
122	ACCESS PLATFORM, SEE STRUCTURAL. VERIFY LOCATION WITH RESPECT TO STREETCAR DOORS PRIOR TO PLACING PLATFORM.

HDR

NOT FOR CONSTRUCTION

NO.	DATE	REVISION	BY

ORIGINAL PLANS PREPARED BY

HNTB

11414 W. PARK PLACE
MILWAUKEE, WI 53224
(414) 359-2300

PLANS PREPARED FOR

CITY OF MILWAUKEE
DEPARTMENT OF
PUBLIC WORKS

MILWAUKEE STREETCAR OPERATIONS
AND MAINTENANCE FACILITY

95% SUBMISSION	29 FEB . 2016

DESIGNED BY EK	DESIGN CK'D SP	DRAWN BY EK	PLANS CK'D PA

PLATFORM LEVEL
FLOOR PLAN
SECTOR B

A113

NOT FOR CONSTRUCTION

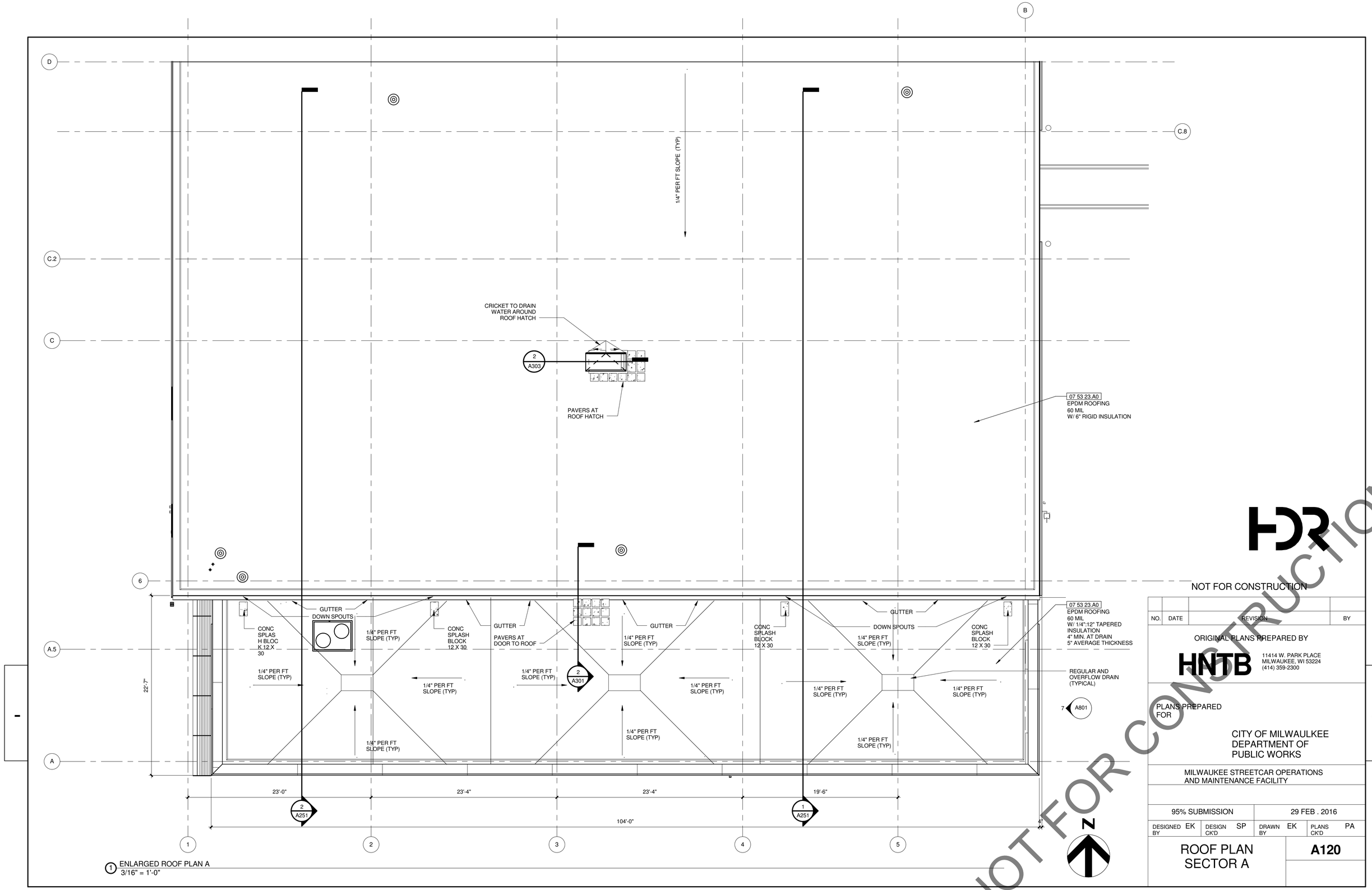

1 ENLARGED ROOF PLAN A
3/16" = 1'-0"

NOT FOR CONSTRUCTION

NO.	DATE	REVISION	BY

ORIGINAL PLANS PREPARED BY

HNTB
11414 W. PARK PLACE
MILWAUKEE, WI 53224
(414) 359-2300

PLANS PREPARED FOR

CITY OF MILWAULKEE
DEPARTMENT OF
PUBLIC WORKS

MILWAUKEE STREETCAR OPERATIONS
AND MAINTENANCE FACILITY

95% SUBMISSION		29 FEB . 2016	
DESIGNED BY EK	DESIGN CK'D SP	DRAWN BY EK	PLANS CK'D PA

ROOF PLAN
SECTOR A

A120

NOT FOR CONSTRUCTION

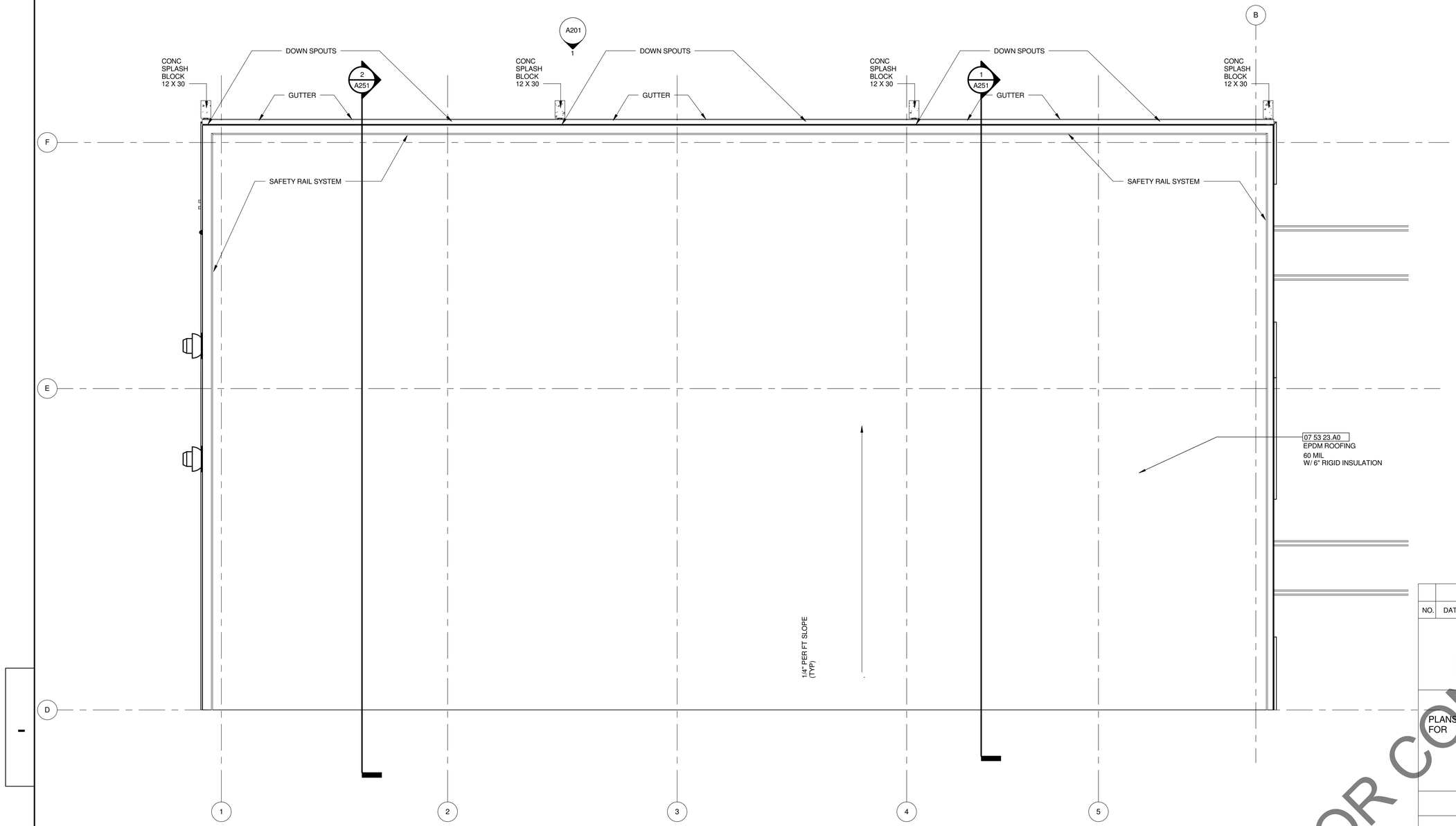

1 ENLARGED ROOF PLAN B
3/16" = 1'-0"

NOT FOR CONSTRUCTION

NO.	DATE	REVISION	BY

ORIGINAL PLANS PREPARED BY

HNTB
11414 W. PARK PLACE
MILWAUKEE, WI 53224
(414) 359-2300

PLANS PREPARED FOR

CITY OF MILWAULKEE
DEPARTMENT OF
PUBLIC WORKS

MILWAUKEE STREETCAR OPERATIONS
AND MAINTENANCE FACILITY

95% SUBMISSION | 29 FEB . 2016

DESIGNED BY Designer | DESIGN CK'D Checker | DRAWN BY Author | PLANS CK'D Approver

ROOF PLAN
SECTOR B

A121

NOT FOR CONSTRUCTION

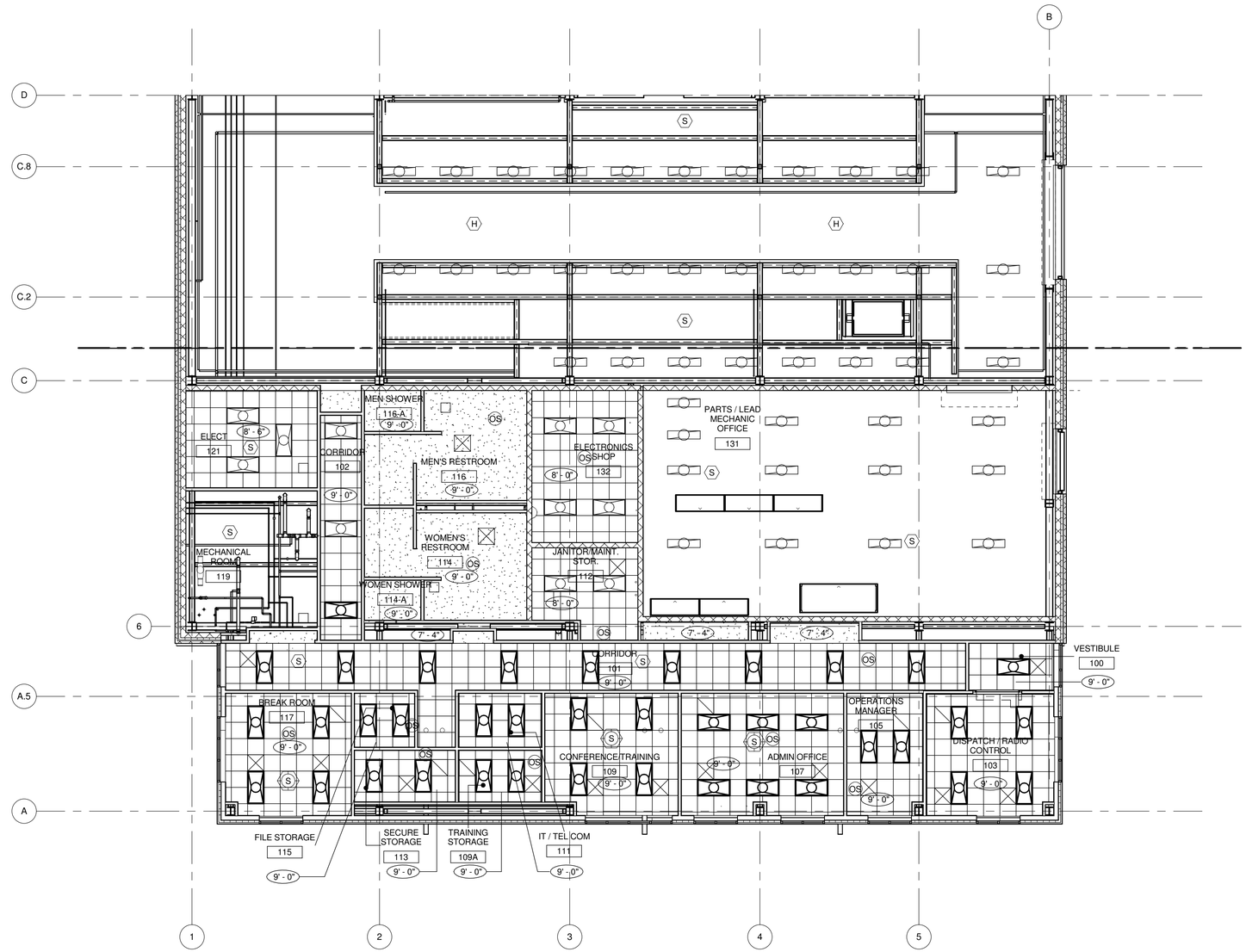

1 MAIN LEVEL REFLECTED CEILING PLAN
1/8" = 1'-0"

OS OCCUPANCY SENSOR
SUPPLY DIFFUSSER
SUPPLY DIFFUSSER
PENDANT CONCEALED SPRINKLER
4' x 4' LIGHT FIXTURE
RECESSED CAN
METAL HALIDE PENDANT LIGHT
S INTELLIGENT PHOTOELECTRIC SMOKE DETECTOR
S FIRE ALARM SPEAKER /STROBE
H INTELLIGENT TEMPERATURE FIXED & RATE OF RISE HEAT DETECTOR
DS INTELLIGENT PHOTOELECTRIC DUCT SMOKE DETECTOR
4' COMPANT FLORESCENT
GYPSUM BOARD CEILING
ACT CEILING SYSTEM

CEILING LEGEND
1/8" = 1'-0"

HDR

NOT FOR CONSTRUCTION

NO.	DATE	REVISION	BY

ORIGINAL PLANS PREPARED BY

HNTB
11414 W. PARK PLACE
MILWAUKEE, WI 53224
(414) 359-2300

PLANS PREPARED FOR

CITY OF MILWAULKEE
DEPARTMENT OF
PUBLIC WORKS

MILWAUKEE STREETCAR OPERATIONS
AND MAINTENANCE FACILITY

95% SUBMISSION | 29 FEB . 2016

DESIGNED BY Designer | DESIGN CK'D Checker | DRAWN BY RG | PLANS CK'D Approver

MAIN LEVEL REFLECTED CEILING PLAN

A150

NOT FOR CONSTRUCTION

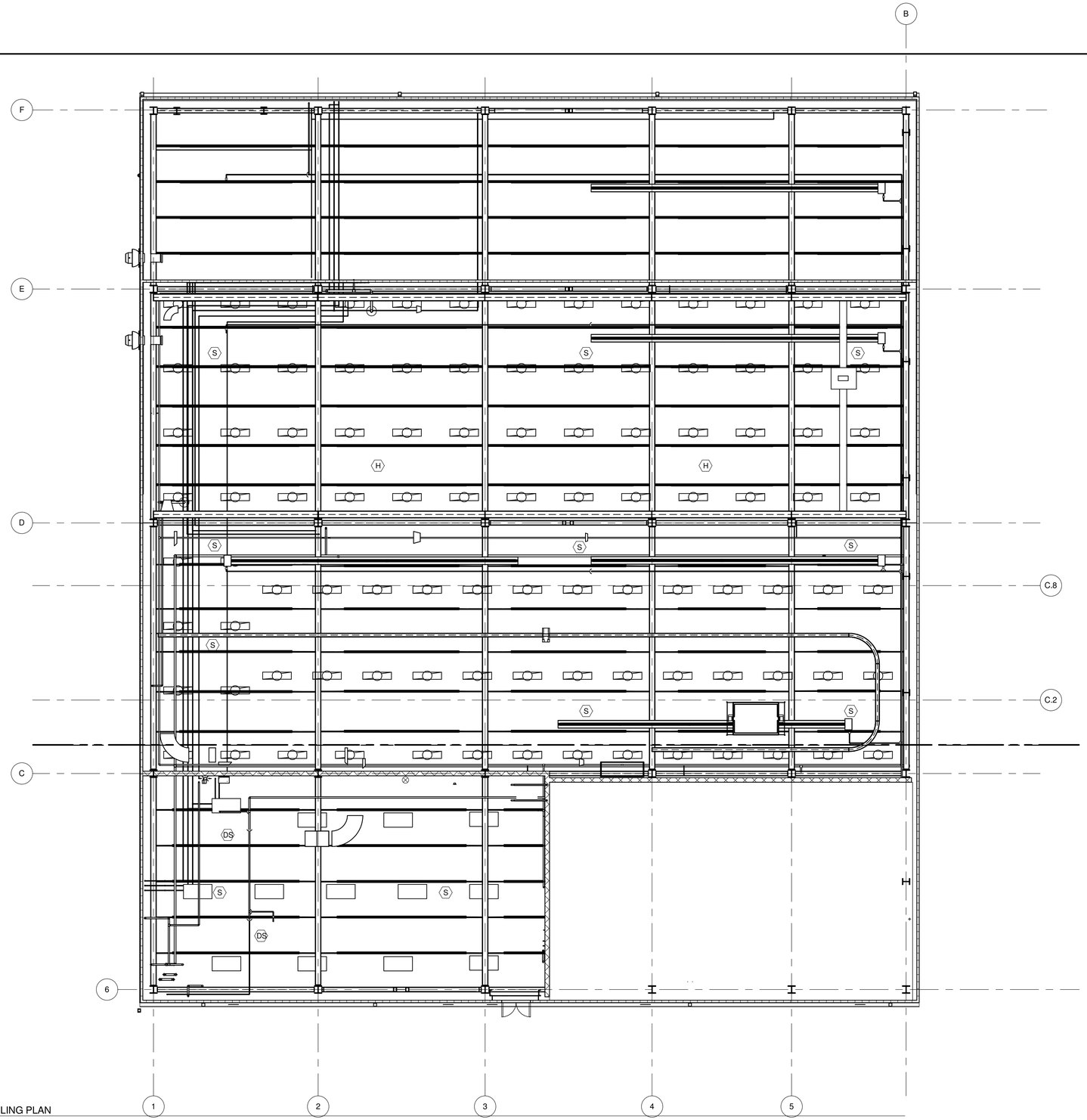

② UPPER_LEVEL REFLECTED CEILING PLAN
1/8" = 1'-0"

OCCUPANCY SENSOR
SUPPLY DIFFUSSER
SUPPLY DIFFUSSER
PENDANT CONCEALED SPRINKLER
4' x 4' LIGHT FIXTURE
RECESSED CAN
METAL HALIDE PENDANT LIGHT
INTELLIGENT PHOTOELECTRIC SMOKE DETECTOR
FIRE ALARM SPEAKER /STROBE
INTELLIGENT TEMPERATURE FIXED & RATE OF RISE HEAT DETECTOR
INTELLIGENT PHOTOELECTRIC DUCT SMOKE DETECTOR
4' COMPANT FLORESCENT
GYPSUM BOARD CEILING
ACT CEILING SYSTEM

CEILING LEGEND
1/8" = 1'-0"

HDR

NOT FOR CONSTRUCTION

NO.	DATE	REVISION	BY

ORIGINAL PLANS PREPARED BY

HNTB
11414 W. PARK PLACE
MILWAUKEE, WI 53224
(414) 359-2300

PLANS PREPARED FOR

CITY OF MILWAULKEE
DEPARTMENT OF
PUBLIC WORKS

MILWAUKEE STREETCAR OPERATIONS
AND MAINTENANCE FACILITY

95% SUBMISSION | 29 FEB . 2016

DESIGNED BY	TC	DESIGN CK'D	SP	DRAWN BY	TC	PLANS CK'D	PA

UPPER LEVEL
REFLECTED
CEILING PLAN

A151

NOT FOR CONSTRUCTION

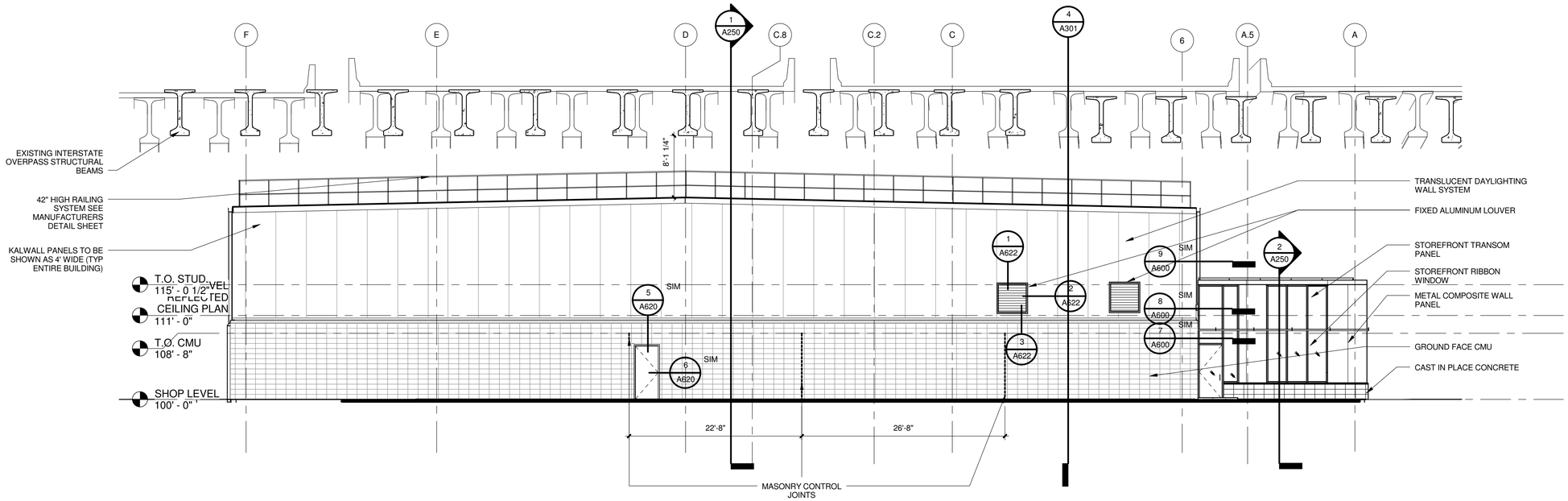

2 A200 WEST ELEVATION
1/8" = 1'-0"

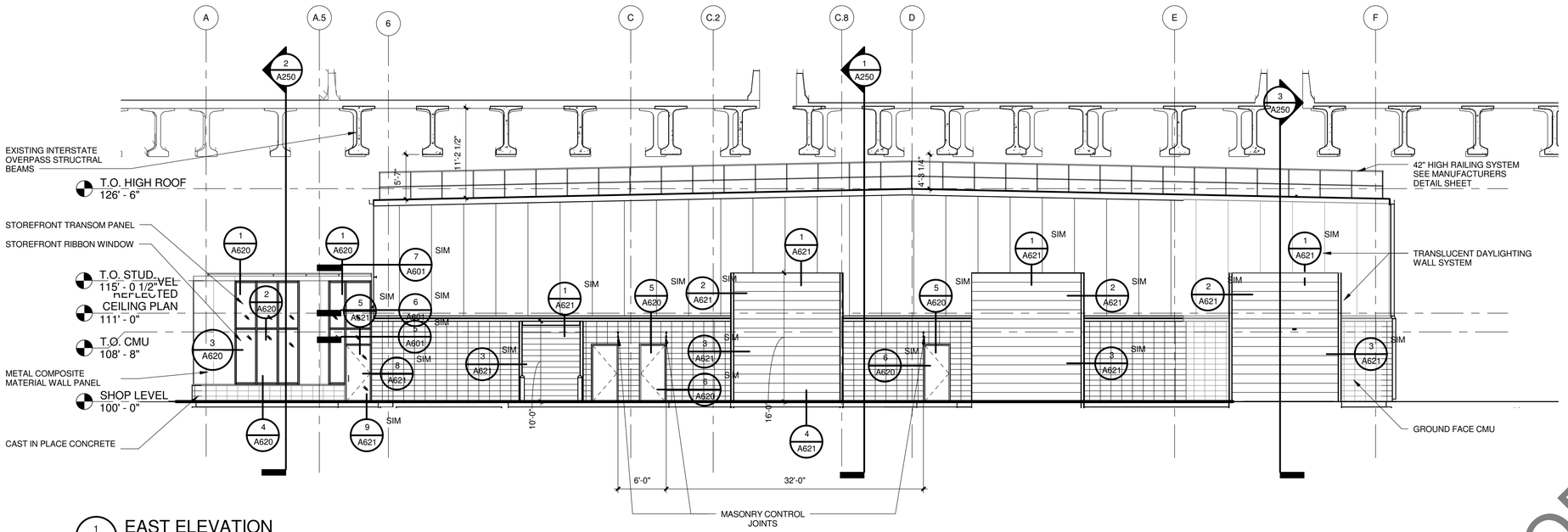

1 A200 EAST ELEVATION
1/8" = 1'-0"

HDR

NOT FOR CONSTRUCTION

NO.	DATE	REVISION	BY

ORIGINAL PLANS PREPARED BY

HNTB
11414 W. PARK PLACE
MILWAUKEE, WI 53224
(414) 359-2300

PLANS PREPARED FOR

CITY OF MILWAUKEE
DEPARTMENT OF
PUBLIC WORKS

MILWAUKEE STREETCAR OPERATIONS AND MAINTENANCE FACILITY

95% SUBMISSION | 29 FEB . 2016

DESIGNED BY	DESIGN CK'D	DRAWN BY	PLANS CK'D
TC	SP	TC	PA

EAST/WEST ELEVATIONS

A200

NOT FOR CONSTRUCTION

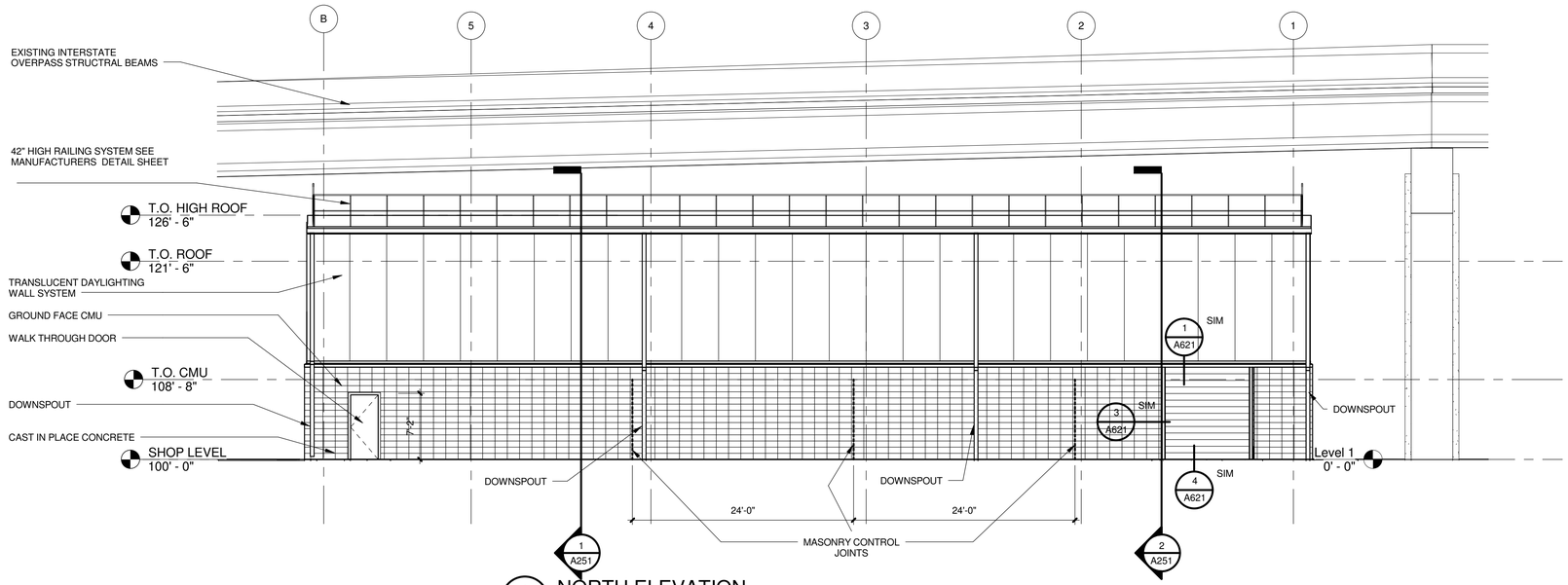

1 A201 NORTH ELEVATION
1/8" = 1'-0"

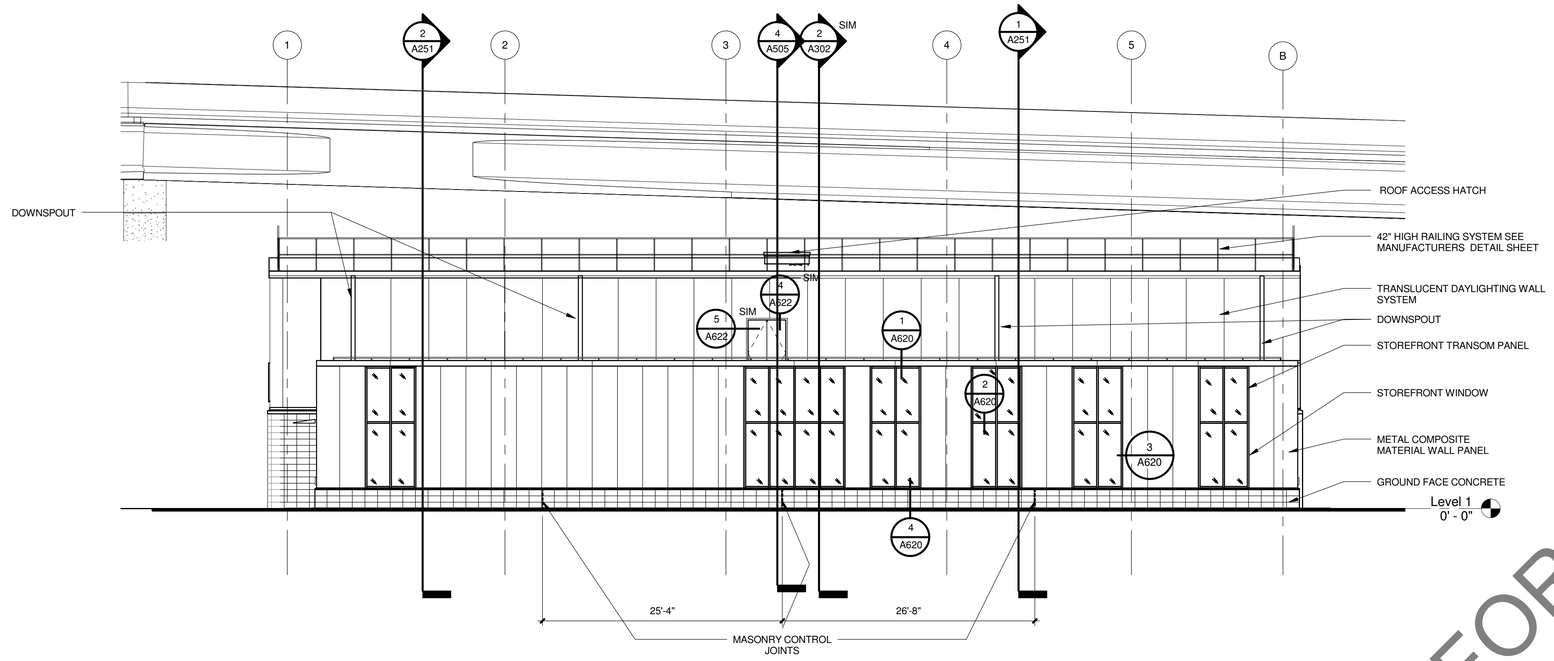

2 A201 SOUTH ELEVATION
1/8" = 1'-0"

HDR

NOT FOR CONSTRUCTION

NO.	DATE	REVISION	BY

ORIGINAL PLANS PREPARED BY

HNTB
11414 W. PARK PLACE
MILWAUKEE, WI 53224
(414) 359-2300

PLANS PREPARED FOR

CITY OF MILWAUKEE
DEPARTMENT OF
PUBLIC WORKS

MILWAUKEE STREETCAR OPERATIONS AND MAINTENANCE FACILITY

95% SUBMISSION | 29 FEB . 2016

DESIGNED BY	DESIGN CK'D	DRAWN BY	PLANS CK'D
TC	SP	TC	PA

NORTH/SOUTH ELEVATIONS

A201

NOT FOR CONSTRUCTION

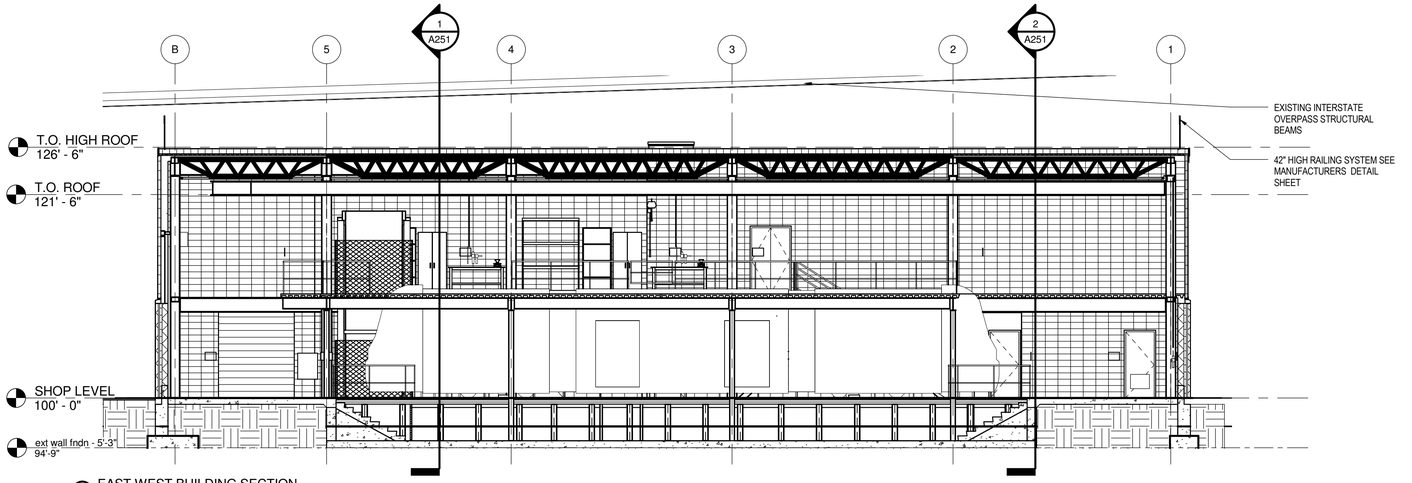

1 EAST WEST BUILDING SECTION
1/8" = 1'-0"

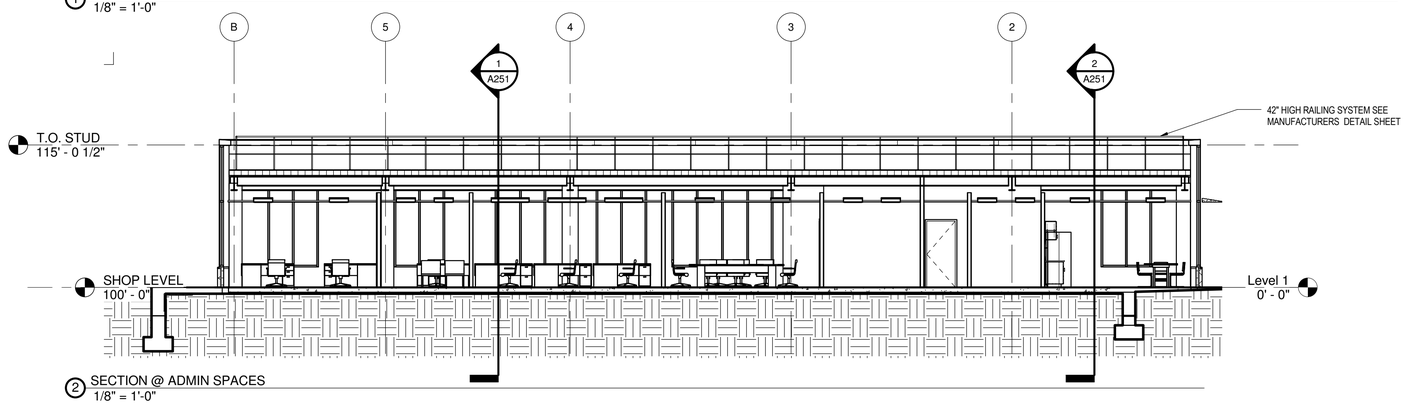

2 SECTION @ ADMIN SPACES
1/8" = 1'-0"

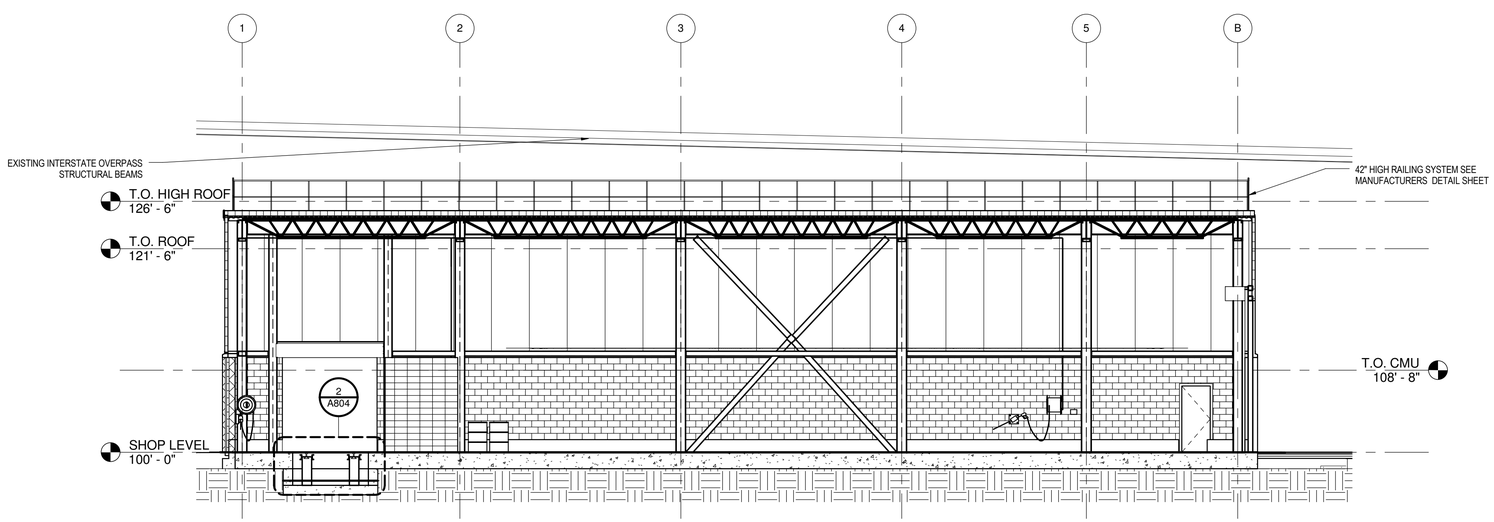

3 SECTION @ WASHBAY
1/8" = 1'-0"

HDR

NOT FOR CONSTRUCTION

NO.	DATE	REVISION	BY

ORIGINAL PLANS PREPARED BY

HNTB
11414 W. PARK PLACE
MILWAUKEE, WI 53224
(414) 359-2300

PLANS PREPARED FOR

CITY OF MILWAUKEE
DEPARTMENT OF
PUBLIC WORKS

MILWAUKEE STREETCAR OPERATIONS
AND MAINTENANCE FACILITY

95% SUBMISSION		29 FEB . 2016	
DESIGNED BY TC	DESIGN CK'D SP	DRAWN BY TC	PLANS CK'D PA

BUILDING SECTIONS

A250

NOT FOR CONSTRUCTION

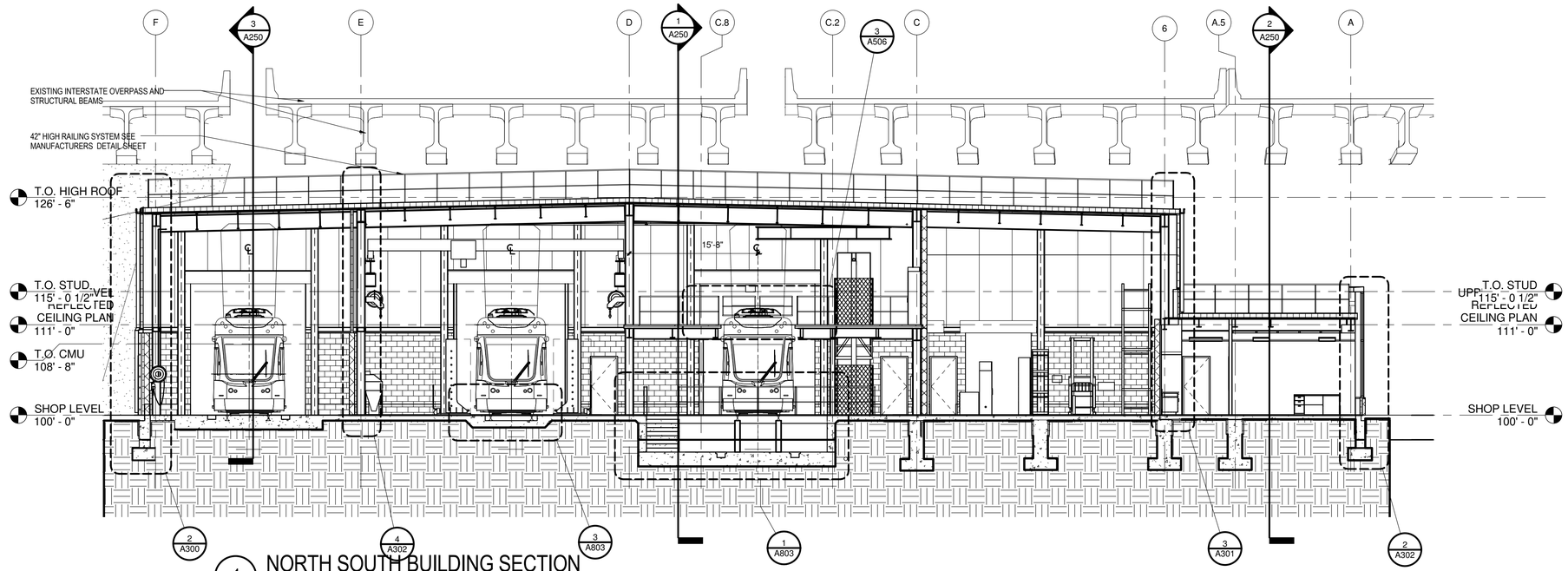

1 NORTH SOUTH BUILDING SECTION
1/8" = 1'-0"

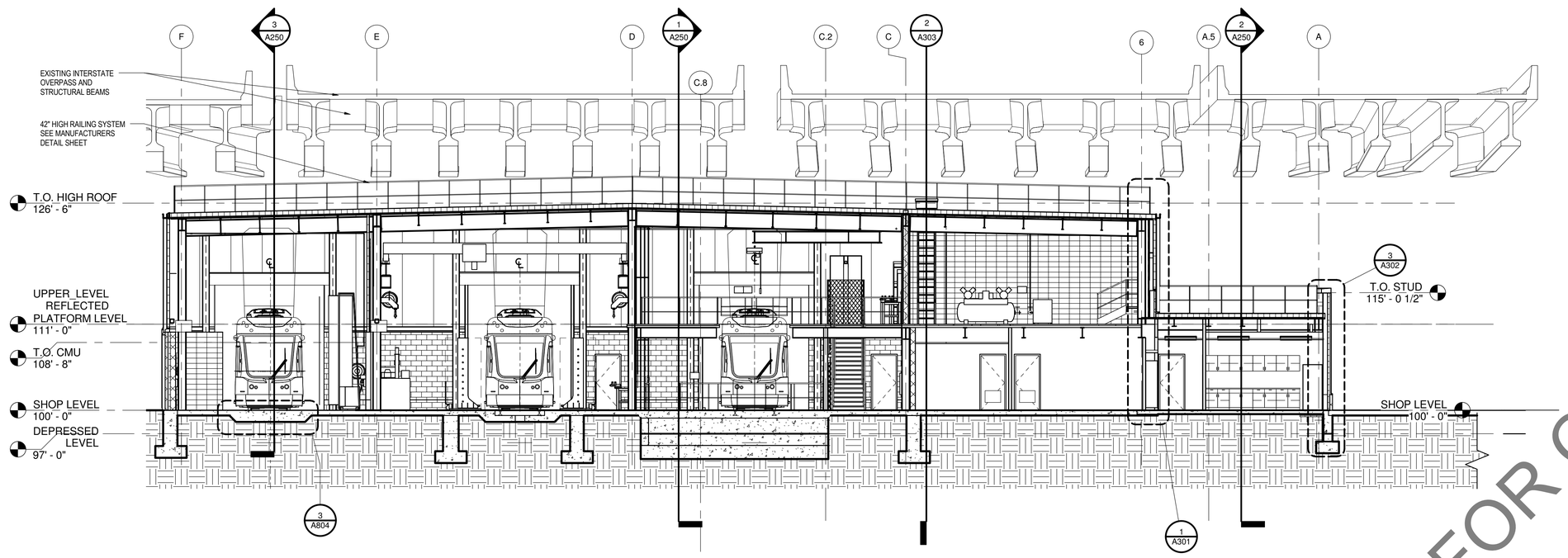

2 NORTH SOUTH BUILDING SECTION @ MECH ROOM
1/8" = 1'-0"

HDR

NOT FOR CONSTRUCTION

NO.	DATE	REVISION	BY

ORIGINAL PLANS PREPARED BY

HNTB
11414 W. PARK PLACE
MILWAUKEE, WI 53224
(414) 359-2300

PLANS PREPARED FOR

CITY OF MILWAUKEE
DEPARTMENT OF
PUBLIC WORKS

MILWAUKEE STREETCAR OPERATIONS
AND MAINTENANCE FACILITY

95% SUBMISSION | 29 FEB . 2016

DESIGNED BY	TC	DESIGN CK'D	SP	DRAWN BY	TC	PLANS CK'D	PA

BUILDING SECTIONS | A251

NOT FOR CONSTRUCTION

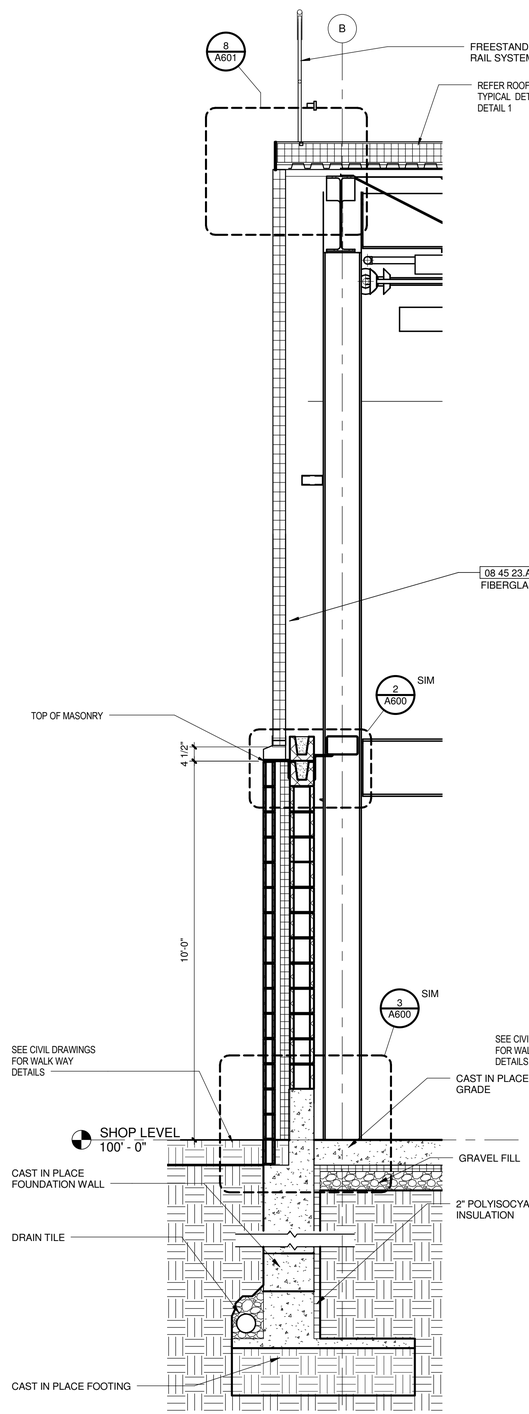

1 WALL SECTION AT EAST WALL (WEST SIM.)
1/2" = 1'-0"

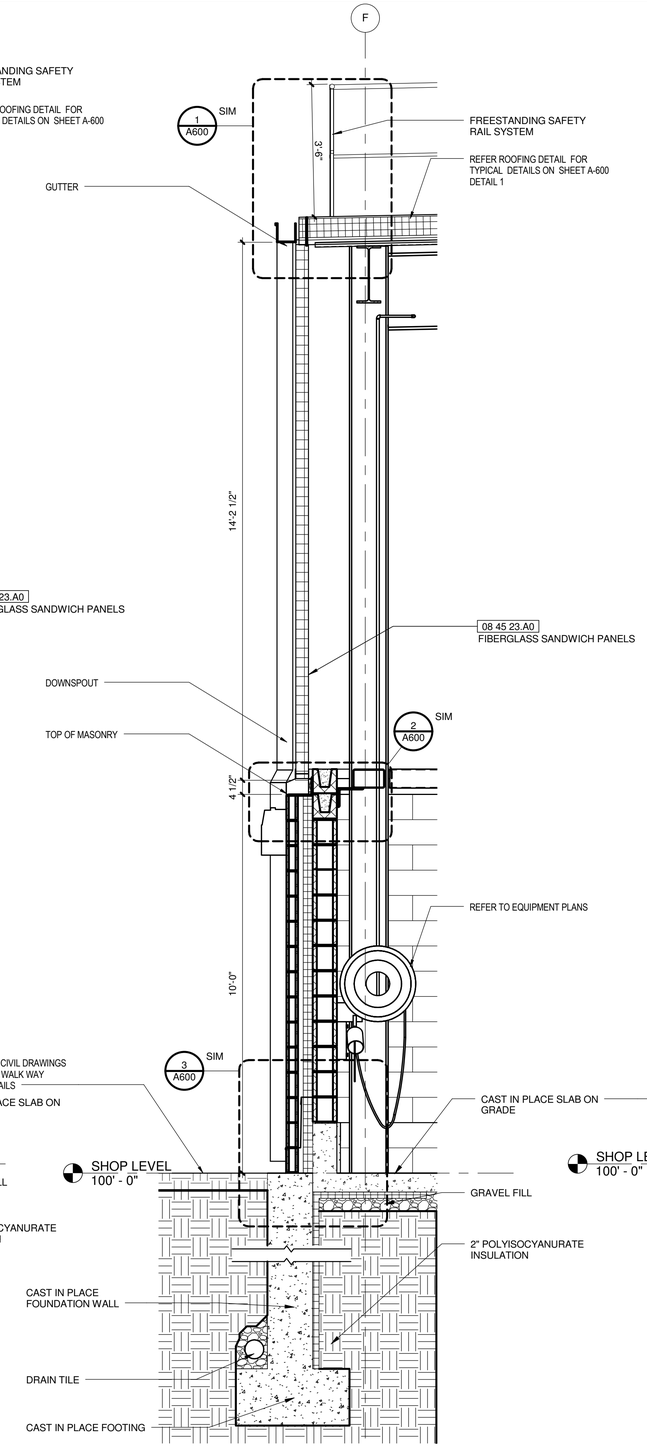

2 SECTION AT NORTH WALL (TYP.)
1/2" = 1'-0"

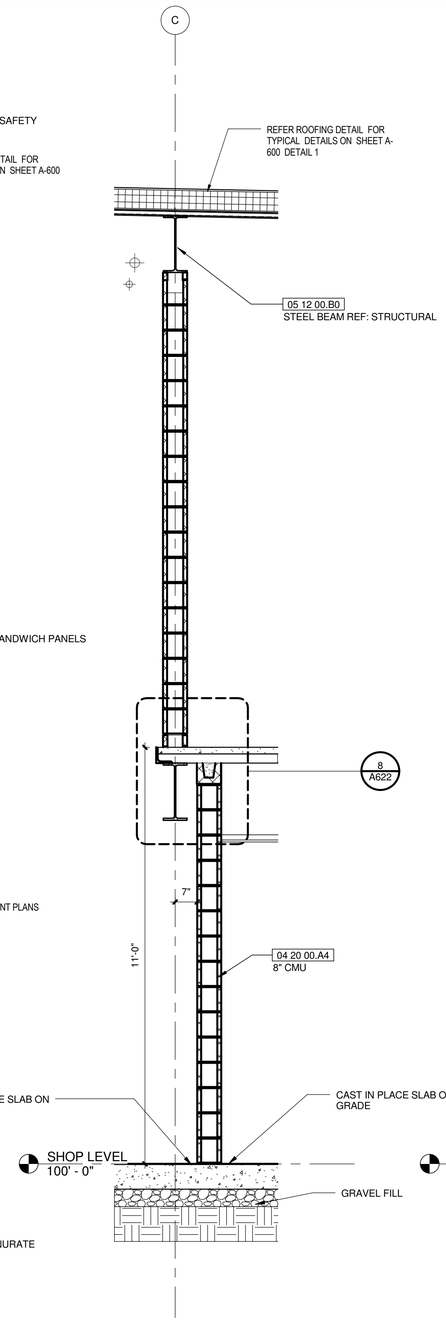

3 SOUTH WALL OF REPAIR BAY AT MECHANICAL ROOM
1/2" = 1'-0"

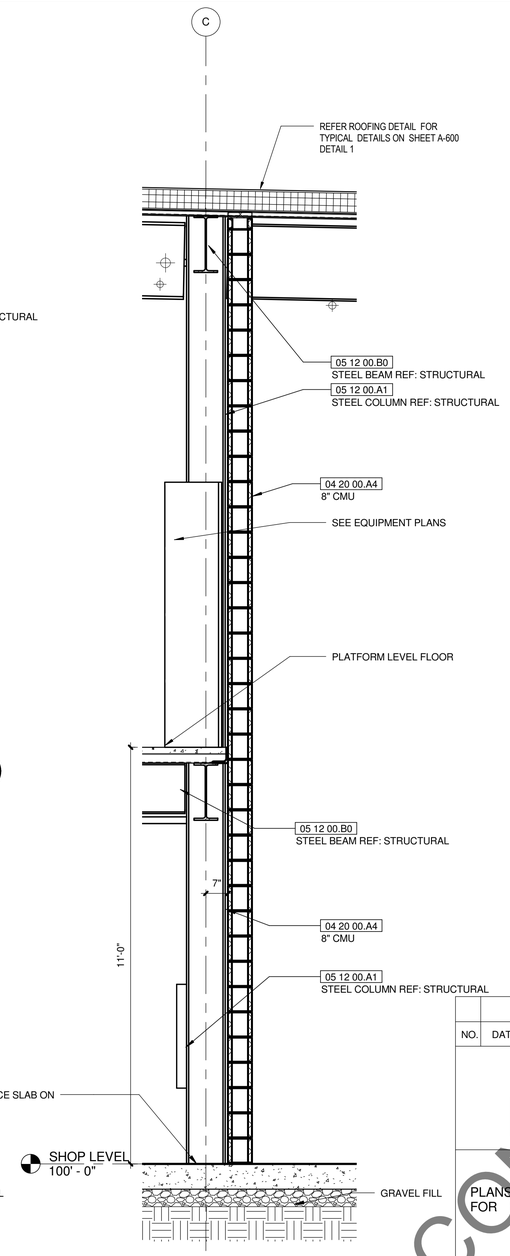

4 SOUTH WALL OF REPAIR BAY AT PARTS ROOM
1/2" = 1'-0"

HDR

NOT FOR CONSTRUCTION

NO.	DATE	REVISION	BY

ORIGINAL PLANS PREPARED BY

HNTB
11414 W. PARK PLACE
MILWAUKEE, WI 53224
(414) 359-2300

PLANS PREPARED FOR

CITY OF MILWAUKEE
DEPARTMENT OF
PUBLIC WORKS

MILWAUKEE STREETCAR OPERATIONS
AND MAINTENANCE FACILITY

95% SUBMISSION | 29 FEB . 2016

DESIGNED BY	TC	DESIGN CK'D	SP	DRAWN BY	TC	PLANS CK'D	PA

WALL SECTIONS

A300

NOT FOR CONSTRUCTION

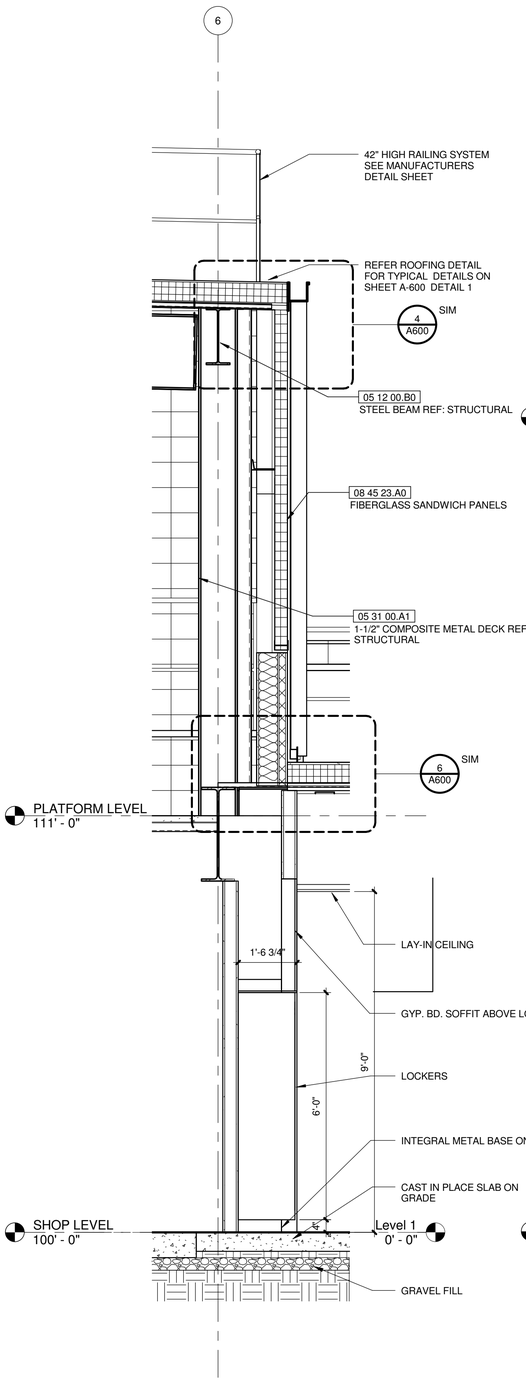

1 WALL SECTION AT MECHANICAL ROOM
1/2" = 1'-0"

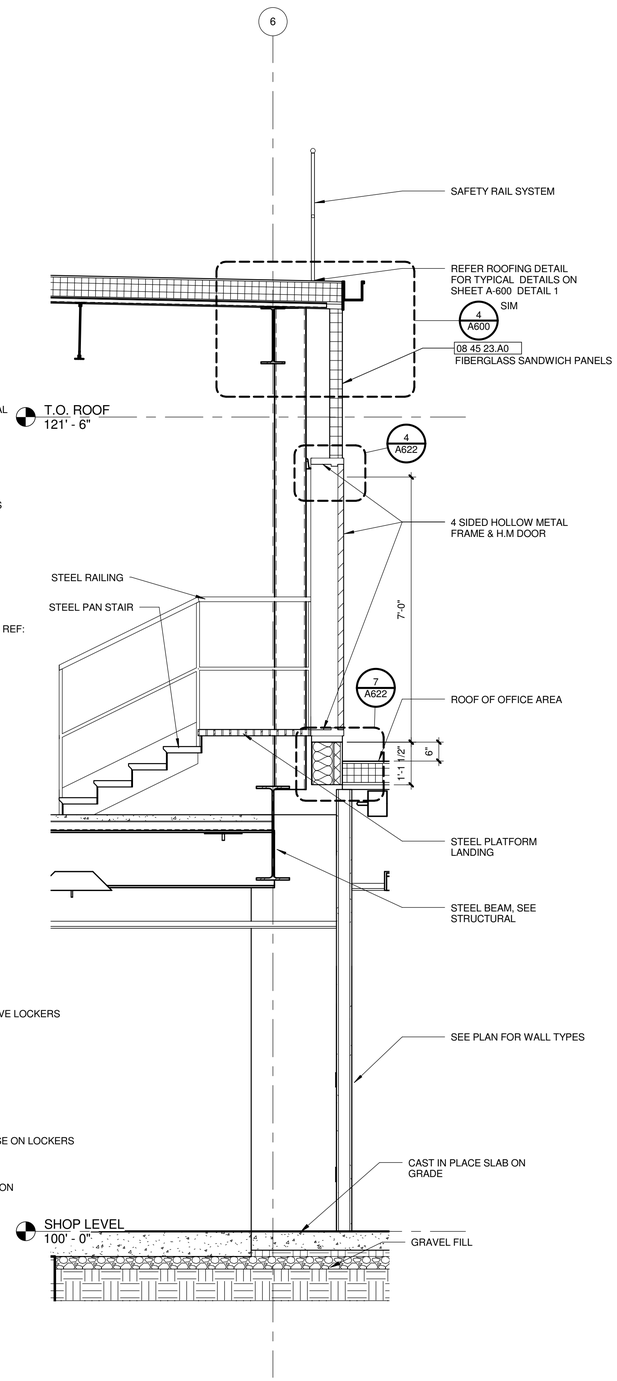

2 WALL SECTION AT MECHANICAL ROOM W/ DOOR
1/2" = 1'-0"

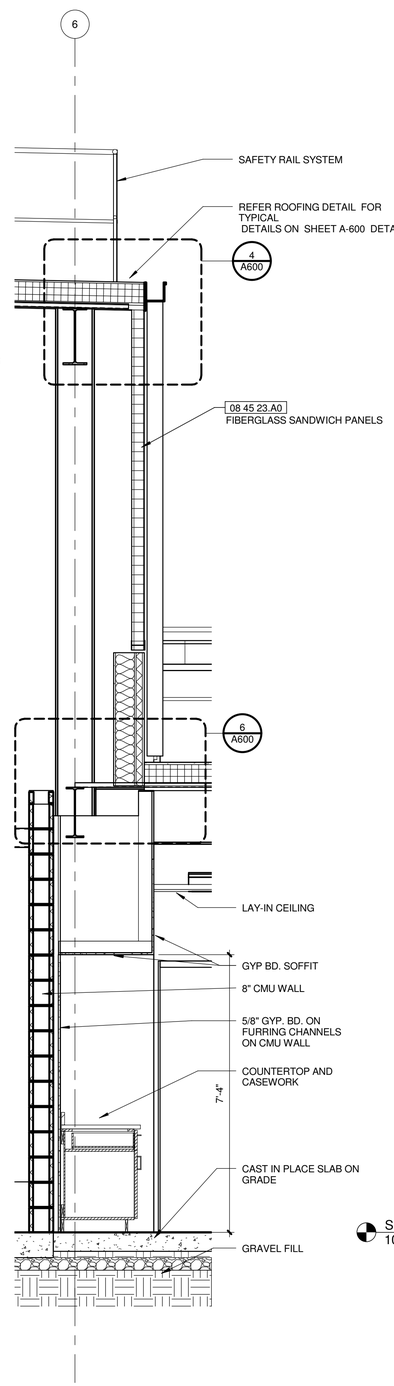

3 SECTION AT PARTS STOCK ROOM
1/2" = 1'-0"

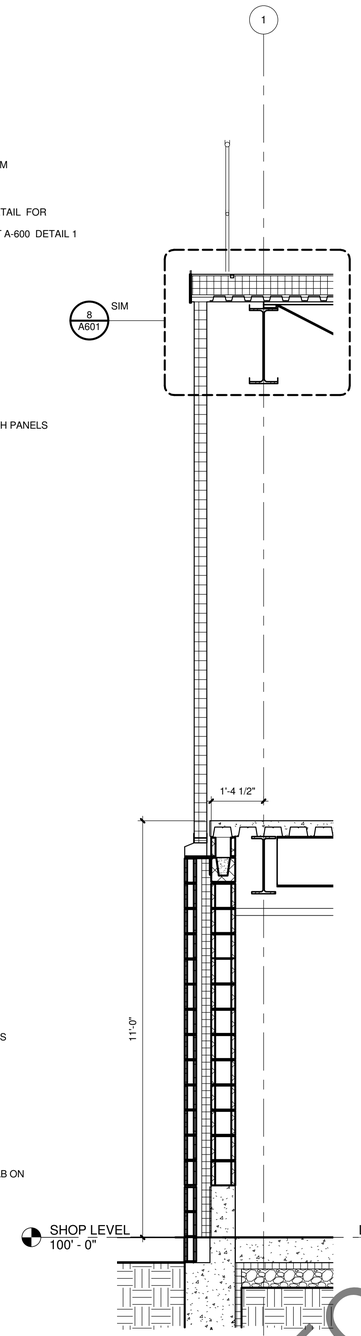

4 Detail 26
1/2" = 1'-0"

NOT FOR CONSTRUCTION

NO.	DATE	REVISION	BY

ORIGINAL PLANS PREPARED BY

HNTB
11414 W. PARK PLACE
MILWAUKEE, WI 53224
(414) 359-2300

PLANS PREPARED FOR

CITY OF MILWAULKEE
DEPARTMENT OF
PUBLIC WORKS

MILWAUKEE STREETCAR OPERATIONS
AND MAINTENANCE FACILITY

95% SUBMISSION | 29 FEB . 2016

DESIGNED BY TC | DESIGN CK'D SP | DRAWN BY TC | PLANS CK'D PA

WALL SECTIONS

A301

NOT FOR CONSTRUCTION

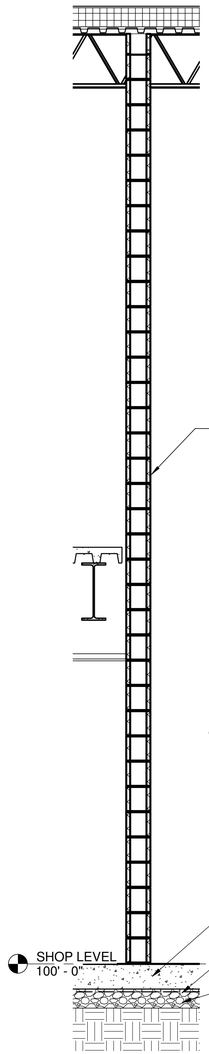

1 INTERIOR WALL SECTION
1/2" = 1'-0"

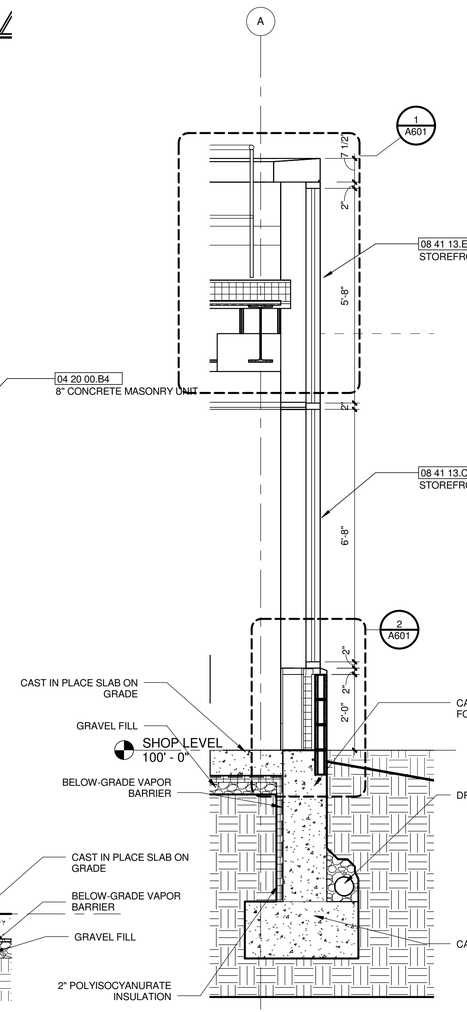

2 WALL SECTION
1/2" = 1'-0"

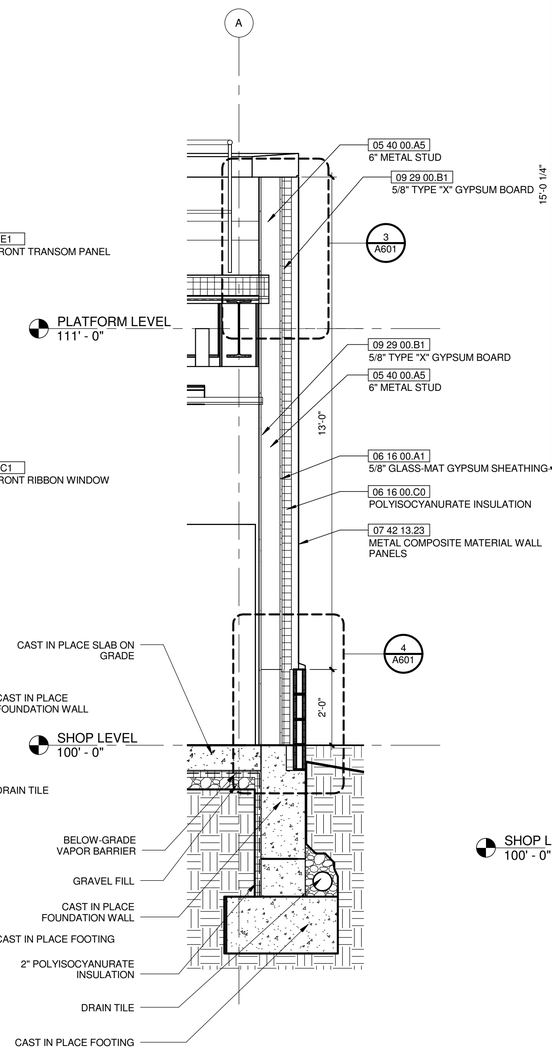

3 WALL SECTION
1/2" = 1'-0"

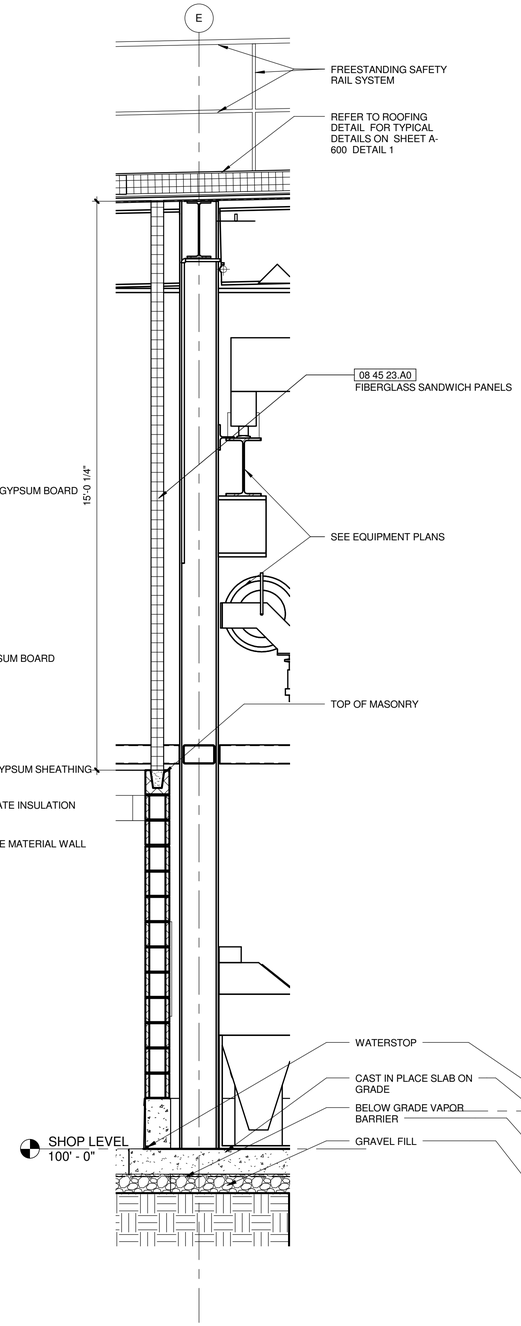

4 SECTION AT NORTH INTERIOR WALL OF WASH BAY (TYP.)
1/2" = 1'-0"

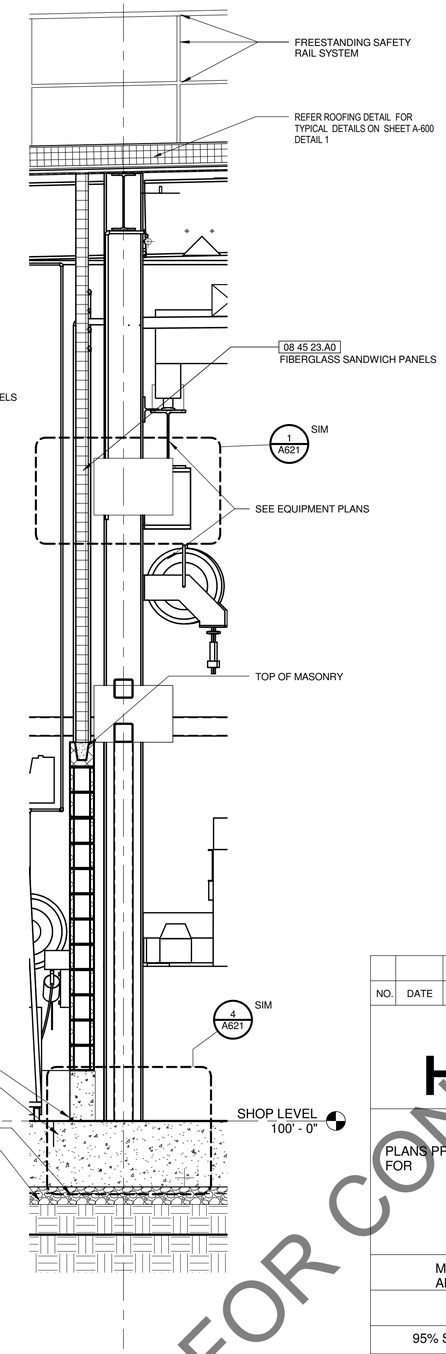

5 SECTION AT NORTH WALL OVERHEAD DOOR WASH BAY
1/2" = 1'-0"

HDR

NOT FOR CONSTRUCTION

NO.	DATE	REVISION	BY

ORIGINAL PLANS PREPARED BY

HNTB
11414 W. PARK PLACE
MILWAUKEE, WI 53224
(414) 359-2300

PLANS PREPARED FOR

CITY OF MILWAUKEE
DEPARTMENT OF
PUBLIC WORKS

MILWAUKEE STREETCAR OPERATIONS
AND MAINTENANCE FACILITY

95% SUBMISSION		29 FEB . 2016	
DESIGNED BY EK	DESIGN CK'D PA	DRAWN BY EK	PLANS CK'D MH

WALL SECTIONS

A302

NOT FOR CONSTRUCTION

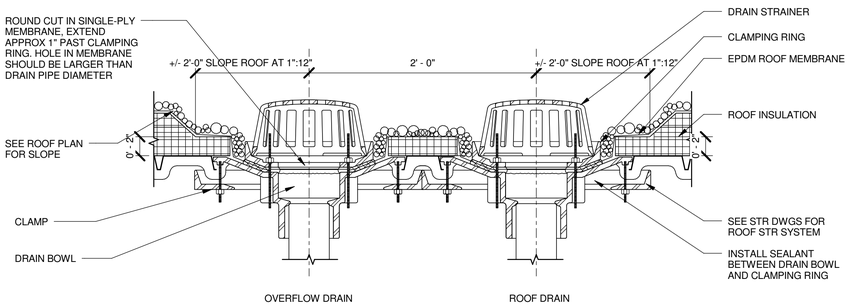

4 ROOF DRAIN AND OVERFLOW SECTION
1 1/2" = 1'-0"

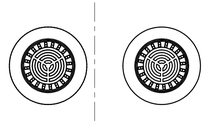

5 ROOF DRAIN AND OVERFLOW
3/4" = 1'-0"

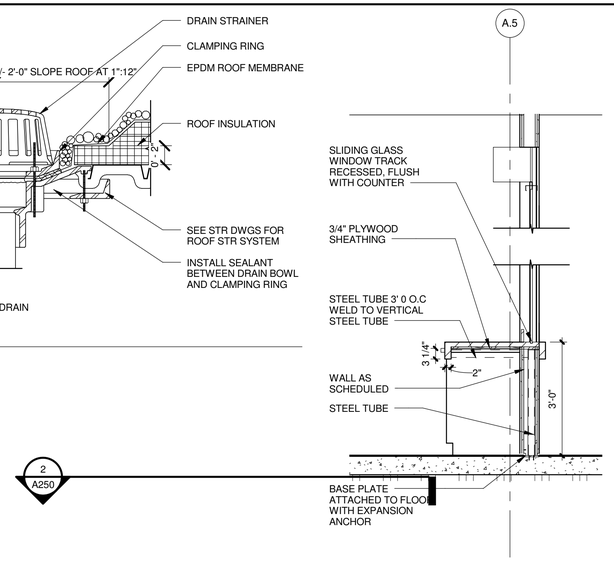

3 DISPATCH WINDOW SECTION AND DETAILS
1/2" = 1'-0"

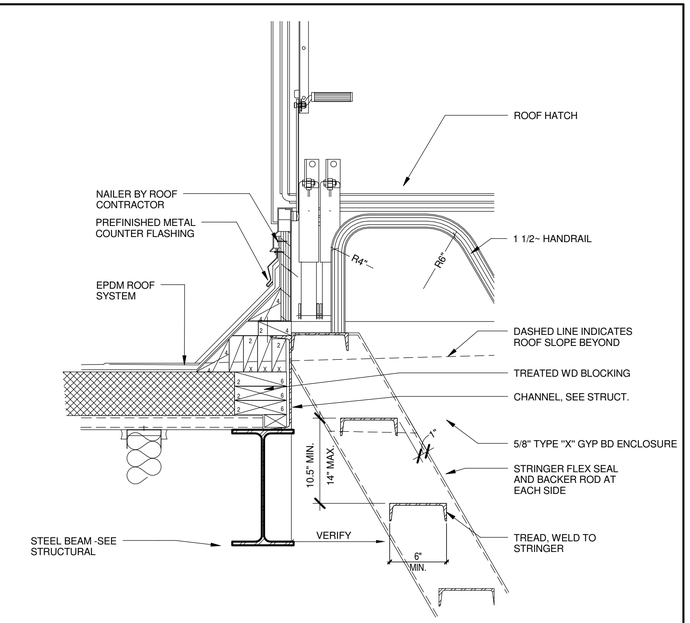

6 SHIPS LADDER DETAIL
1 1/2" = 1'-0"

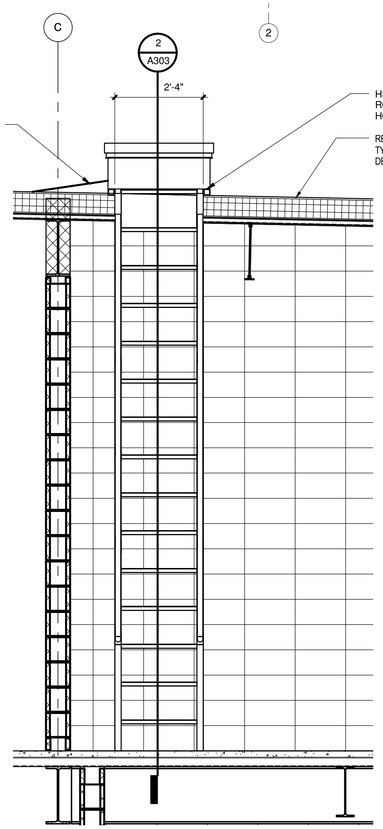

1 SHIPS LADER AND ROOF ACCESS HATCH EAST
1/2" = 1'-0"

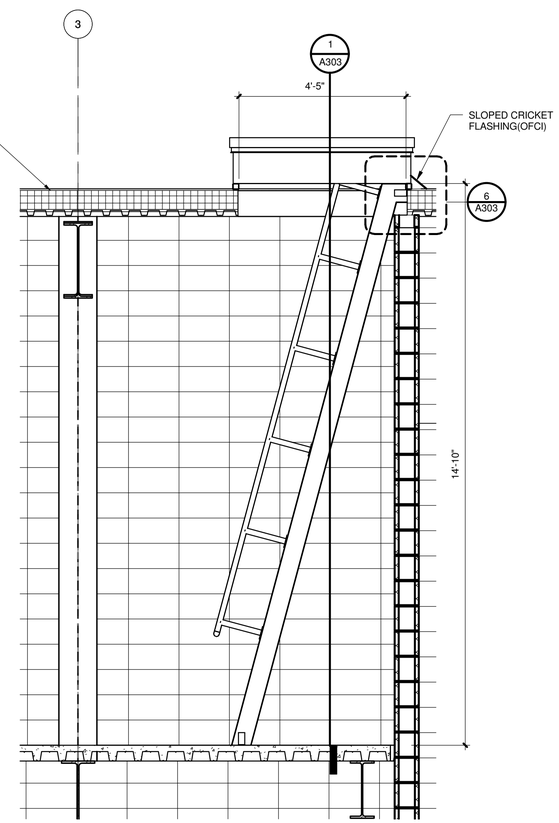

2 SHIPS LADER AND ROOF ACCESS HATCH NORTH
1/2" = 1'-0"

HDR

NOT FOR CONSTRUCTION

NO.	DATE	REVISION	BY

ORIGINAL PLANS PREPARED BY

HNTB
11414 W. PARK PLACE
MILWAUKEE, WI 53224
(414) 359-2300

PLANS PREPARED FOR

CITY OF MILWAULKEE
DEPARTMENT OF
PUBLIC WORKS

MILWAUKEE STREETCAR OPERATIONS
AND MAINTENANCE FACILITY

95% SUBMISSION		29 FEB . 2016			
DESIGNED BY Designer	DESIGN CK'D Checker	DRAWN BY Author	PLANS CK'D Approver		

WALL SECTIONS

A303

NOT FOR CONSTRUCTION

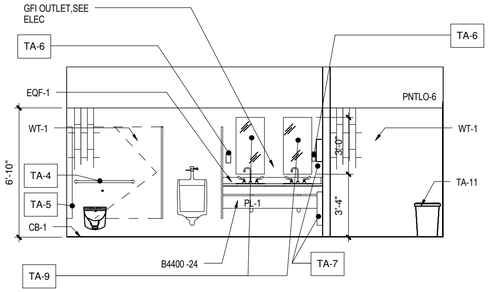

1 MEN'S RESTROOM NORTH ELEV.
1/4" = 1'-0"

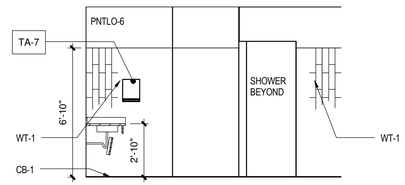

2 MENS RESTROOM WEST ELEV.
1/4" = 1'-0"

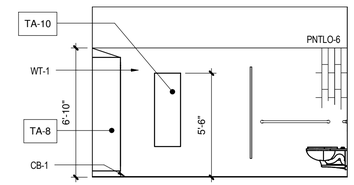

3 MEN'S RESTROOM EAST ELEV.
1/4" = 1'-0"

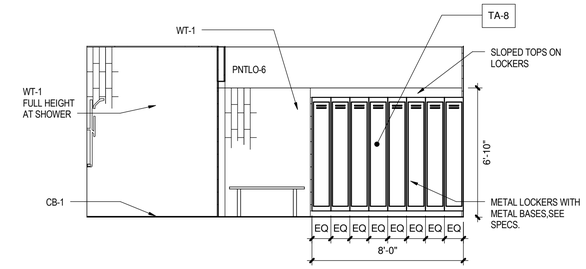

4 MENS RESTROOM SOUTH ELEV.
1/4" = 1'-0"

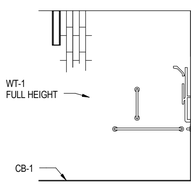

5 N. SHOWER ELEV.
1/4" = 1'-0"

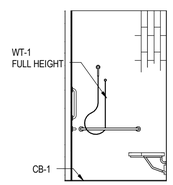

6 W. SHOWER ELEV
1/4" = 1'-0"

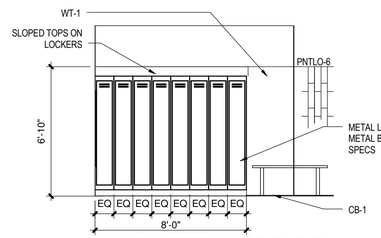

7 WOMEN'S RESTROOM SOUTH ELEV
1/4" = 1'-0"

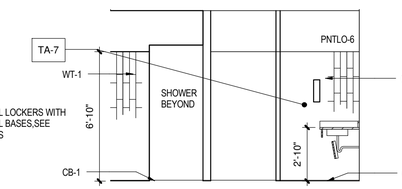

8 WOMEN'S RESTROOM WEST ELEV.
1/4" = 1'-0"

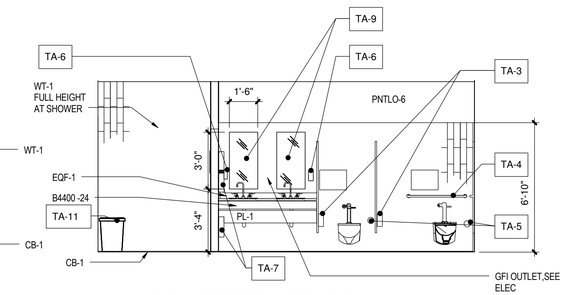

9 WOMENS RESTROOM NORTH ELEV.
1/4" = 1'-0"

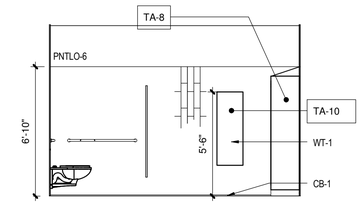

10 WOMEN'S RESTROOM EAST ELEV.
1/4" = 1'-0"

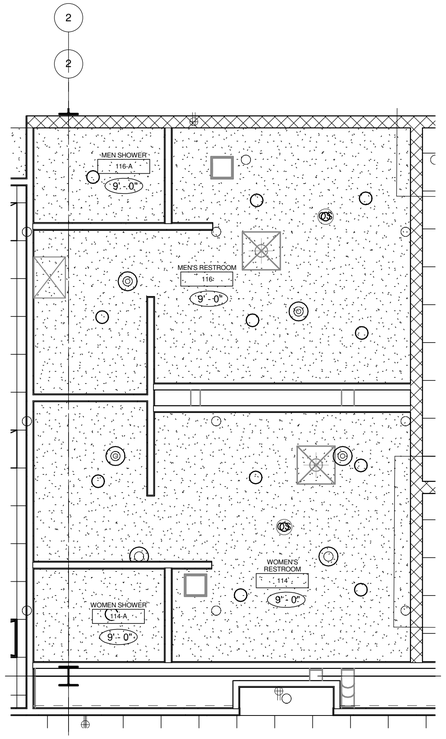

A1 ENLARGED RESTROOMS RCP
1/4" = 1'-0"

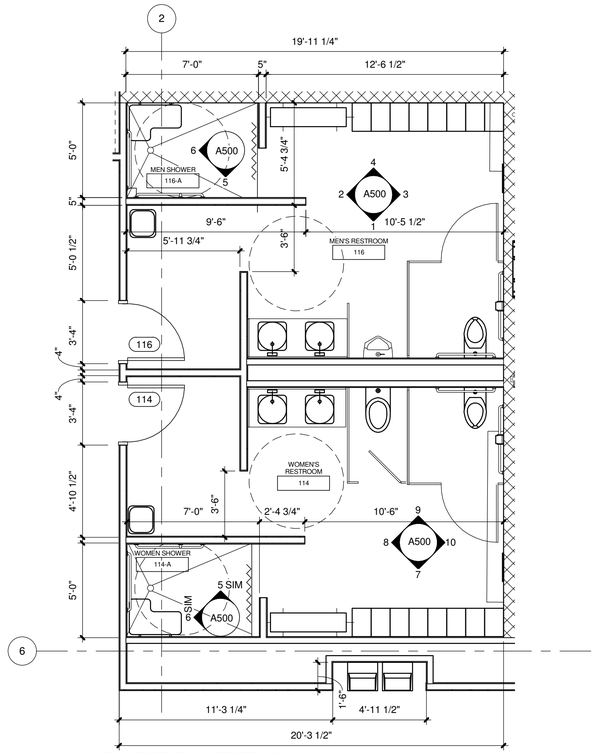

A2 ENLARGED PLAN RESTROOMS
1/4" = 1'-0"

TOILET ACCESSORIES LEGEND

TA-1	COAT HOOK (48" AFF)
TA-2	SEAT COVER DISPENSER
TA-3	SANITARY NAPKIN DISPOSAL
TA-4	GRAB BAR
TA-5	TOILET PAPER DISPENSER
TA-6	SOAP DISPENSER
TA-7	PAPER TOWEL DISPENSER
TA-8	LOCKERS
TA-9	MIRROR
TA-10	FULL HEIGHT MIRROR 18"x48"

NOTE:
NOT ALL ACCESSORIES SHOWN ON THIS SHEET.
REFER TO SPECIFICATIONS

- OCCUPANCY SENSOR
- SUPPLY DIFFUSSER
- SUPPLY DIFFUSSER
- PENDANT CONCEALED SPRINKLER
- 4' x 4' LIGHT FIXTURE
- RECESSED CAN
- METAL HALIDE PENDANT LIGHT
- INTELLIGENT PHOTOELECTRIC SMOKE DETECTOR
- FIRE ALARM SPEAKER /STROBE
- INTELLIGENT TEMPERATURE FIXED & RATE OF RISE HEAT DETECTOR
- INTELLIGENT PHOTOELECTRIC DUCT SMOKE DETECTOR
- 4' COMPANT FLORESCENT
- GYPSUM BOARD CEILING
- ACT CEILING SYSTEM

HDR

NOT FOR CONSTRUCTION

NO.	DATE	REVISION	BY

ORIGINAL PLANS PREPARED BY

HNTB
11414 W. PARK PLACE
MILWAUKEE, WI 53224
(414) 359-2300

PLANS PREPARED FOR

CITY OF MILWAULKEE
DEPARTMENT OF
PUBLIC WORKS

MILWAUKEE STREETCAR OPERATIONS
AND MAINTENANCE FACILITY

95% SUBMISSION | 29 FEB . 2016

DESIGNED BY	TC	DESIGN CK'D	SP	DRAWN BY	TC	PLANS CK'D	EK

ENLARGED RESTROOM PLANS AND ELEVATIONS

A500

NOT FOR CONSTRUCTION

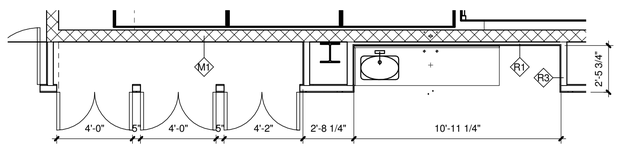

4 UNIFORM CLOSETS
1/4" = 1'-0"

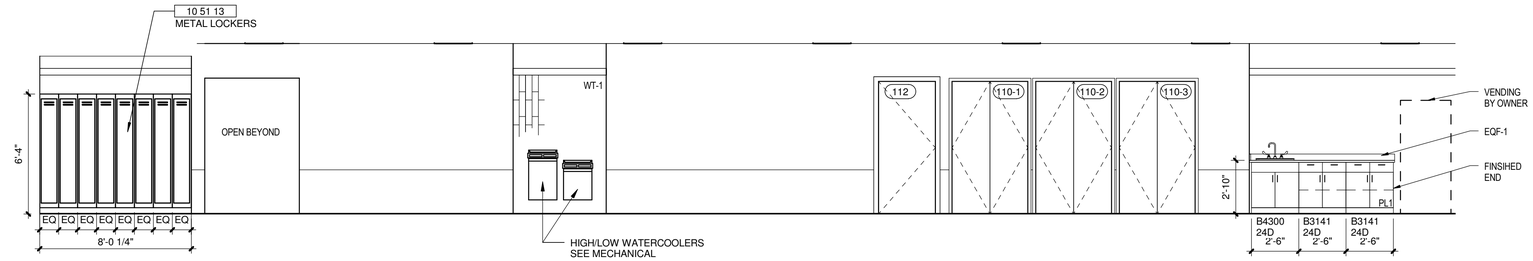

6 NORTH CORRIDOR NORTH WAELEV
1/4" = 1'-0"

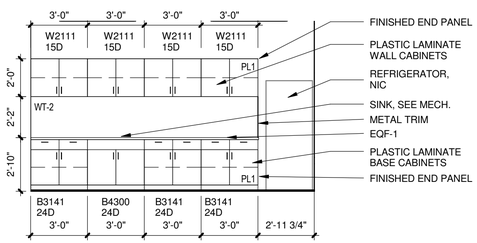

3 BREAK ROOM 112 EAST ELEV
1/4" = 1'-0"

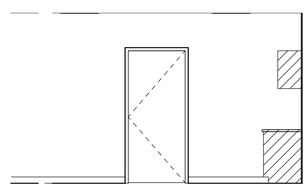

8 BREAK ROOM 112 NORTH ELEV
1/4" = 1'-0"

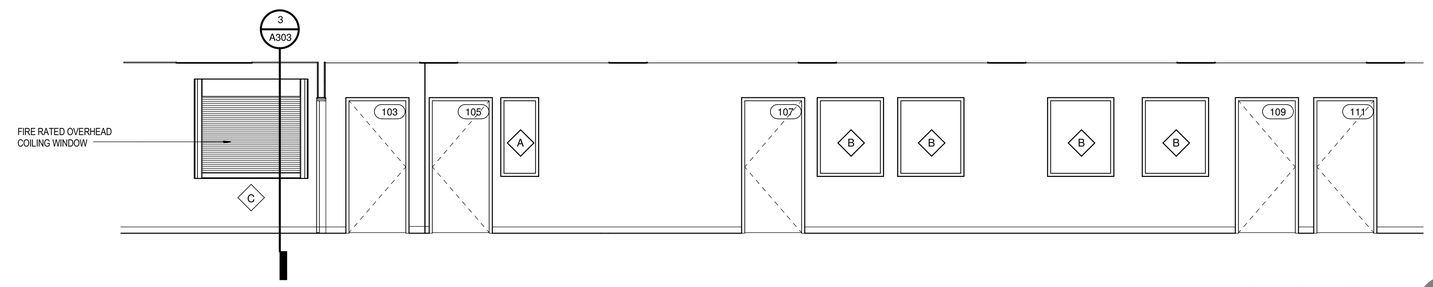

7 NORTH CORRIDOR SOUTH WALL ELEV
1/4" = 1'-0"

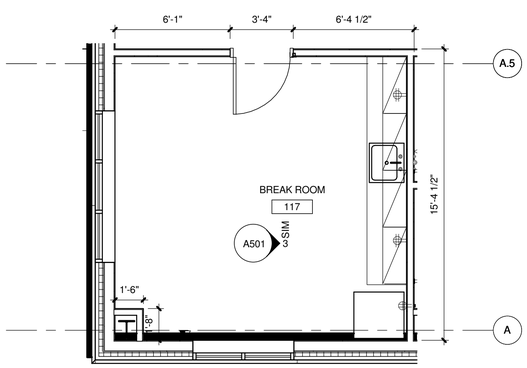

1 BREAK ROOM 117
1/4" = 1'-0"

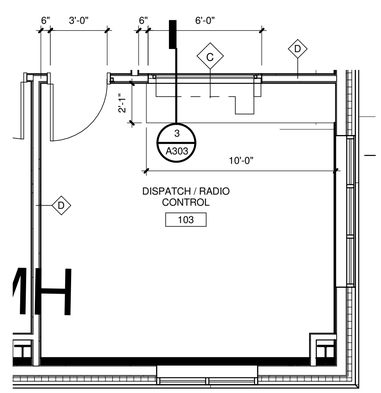

2 DISPATCH AND RADIO CONTROL CENTER 103
1/4" = 1'-0"

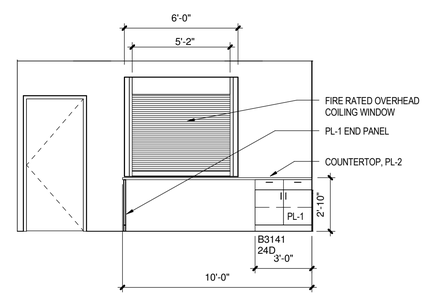

5 DISPATCH AND RADIO CONTROL CENTER 103 NORTH ELEV
1/4" = 1'-0"

HDR

NOT FOR CONSTRUCTION

NO.	DATE	REVISION	BY

ORIGINAL PLANS PREPARED BY

HNTB
11414 W. PARK PLACE
MILWAUKEE, WI 53224
(414) 359-2300

PLANS PREPARED FOR

CITY OF MILWAULKEE
DEPARTMENT OF
PUBLIC WORKS

MILWAUKEE STREETCAR OPERATIONS
AND MAINTENANCE FACILITY

95% SUBMISSION | 29 FEB . 2016

DESIGNED BY Designer | DESIGN CK'D Checker | DRAWN BY RG | PLANS CK'D Approver

ENLARGED PLANS
AND ELEVATIONS

A501

NOT FOR CONSTRUCTION

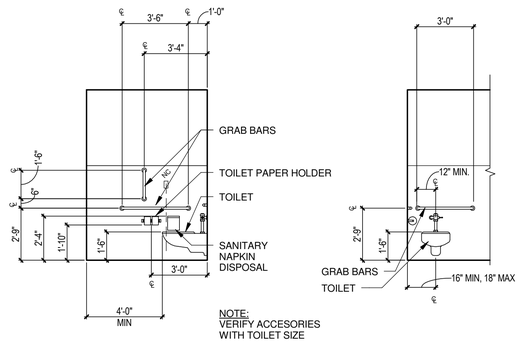

TYPICAL TOILET MOUNTING HEIGHTS & DIMENSIONS

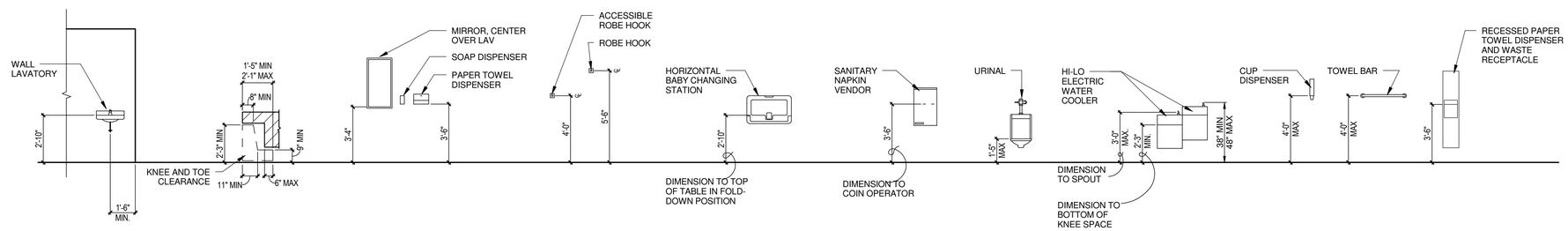

TYPICAL PLUMBING FIXTURE AND TOILET ROOM ACCESSORIES MOUNTING HEIGHTS

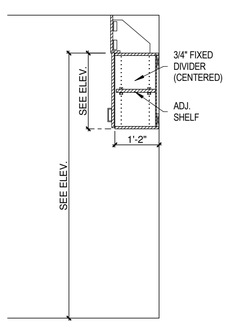

W2111-15D

① W2111-15D
1/2" = 1'-0"

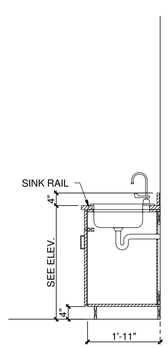

B4300

② B4300-24D
1/2" = 1'-0"

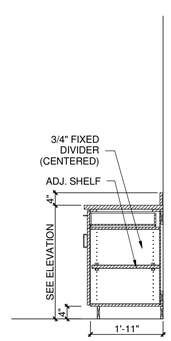

B3151-24D

③ B3151-24D
1/2" = 1'-0"

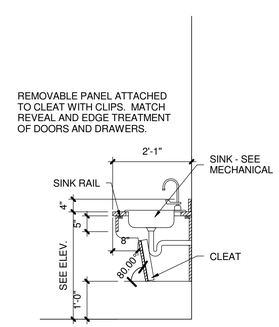

B4400-24D

④ B4400-24D
1/2" = 1'-0"

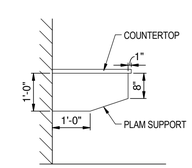

⑤ PLAM SUPPORT AT OPEN-ENDED COUNTERTOP
1/2" = 1'-0"

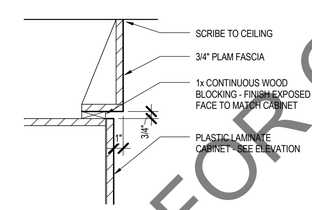

⑧ TYP. PLAM FASCIA DETAIL
1 1/2" = 1'-0"

NOT FOR CONSTRUCTION

NO.	DATE	REVISION	BY

ORIGINAL PLANS PREPARED BY

HNTB

11414 W. PARK PLACE
MILWAUKEE, WI 53224
(414) 359-2300

PLANS PREPARED FOR

CITY OF MILWAULKEE
DEPARTMENT OF
PUBLIC WORKS

MILWAUKEE STREETCAR OPERATIONS AND MAINTENANCE FACILITY

95% SUBMISSION | 29 FEB . 2016

DESIGNED BY Designer | DESIGN CK'D Checker | DRAWN BY RG | PLANS CK'D Approver

CASEWORK DETAILS

A502

NOT FOR CONSTRUCTION

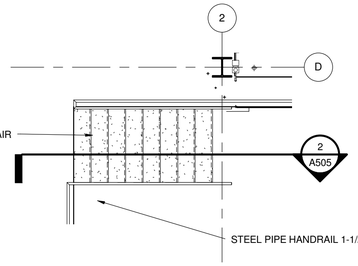

1 STAIR PLAN @ INSPECT. BAY
1/4" = 1'-0"

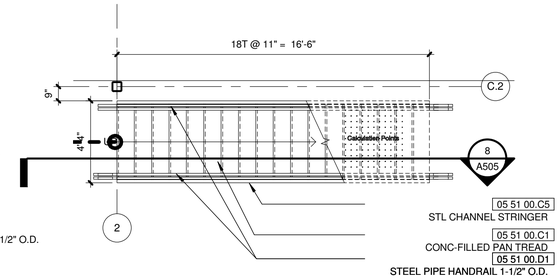

5 STAIR PLAN AT INSPECTION PLATFORM - SHOP LEVEL
1/4" = 1'-0"

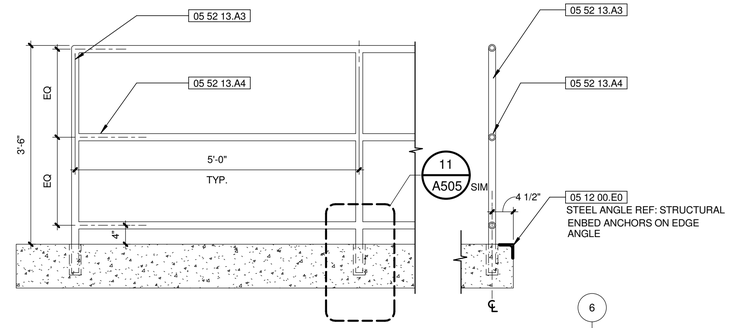

9 TYP. GUARDRAIL DETL.
3/4" = 1'-0"

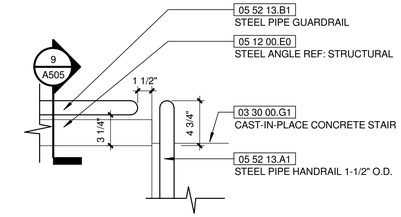

7 GUARDRAIL TO STAIR RAIL PLAN DETL
1 1/2" = 1'-0"

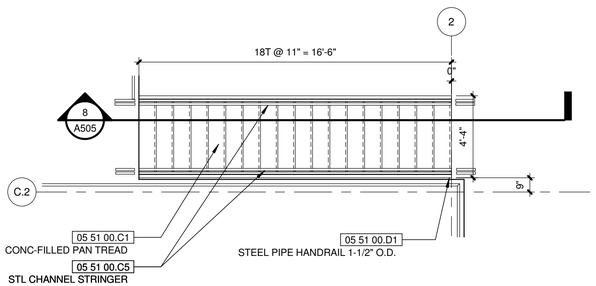

6 STAIR PLAN AT INSPECTION PLATFORM - PLATFORM LEVEL
1/4" = 1'-0"

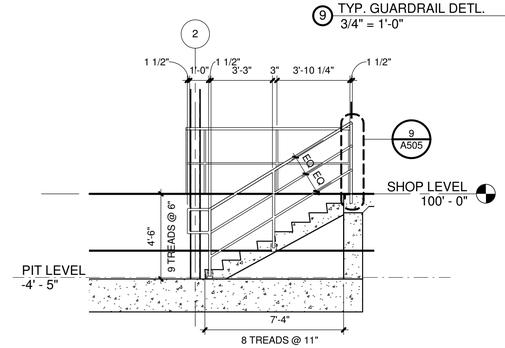

2 STAIR SECTION @ INSPECTION BAY
1/4" = 1'-0"

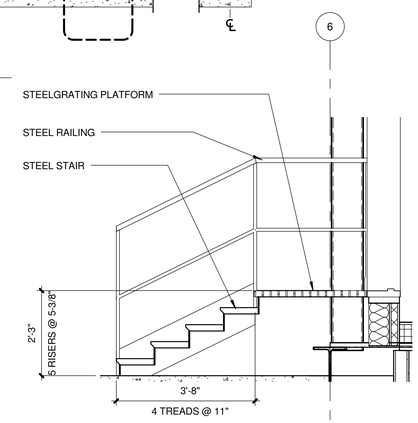

4 SECTION AT MECHANICAL ROOM OFFICE ROOF ACCESS STAIRCASE
1/2" = 1'-0"

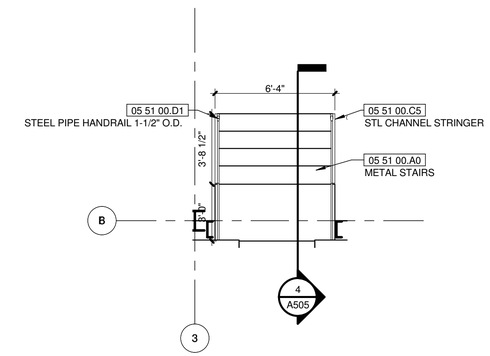

3 PLAN VIEW OF THE MECHANICAL ROOM OFFICE ROOF ACCESS STAIRCASE
1/4" = 1'-0"

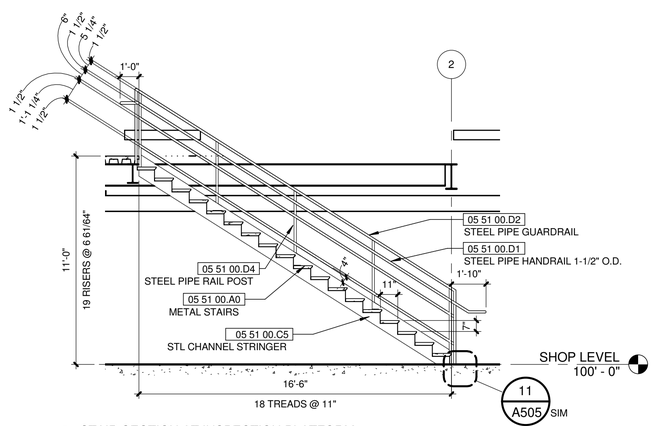

8 STAIR SECTION AT INSPECTION PLATFORM
1/4" = 1'-0"

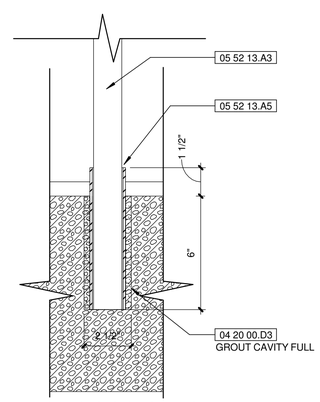

NOTE: DO NOT GROUT SLEEVE @ REMOVABLE RAILINGS

11 RAILING SLEEVE @ SHOP LEVEL
3" = 1'-0"

HDR

NOT FOR CONSTRUCTION

NO.	DATE	REVISION	BY

ORIGINAL PLANS PREPARED BY

HNTB
11414 W. PARK PLACE
MILWAUKEE, WI 53224
(414) 359-2300

PLANS PREPARED FOR

CITY OF MILWAULKEE
DEPARTMENT OF
PUBLIC WORKS

MILWAUKEE STREETCAR OPERATIONS
AND MAINTENANCE FACILITY

95% SUBMISSION | 29 FEB . 2016

DESIGNED BY	DESIGN CK'D	DRAWN BY	PLANS CK'D
EK	SP	EK	PA

STAIR PLANS AND SECTIONS

A505

NOT FOR CONSTRUCTION

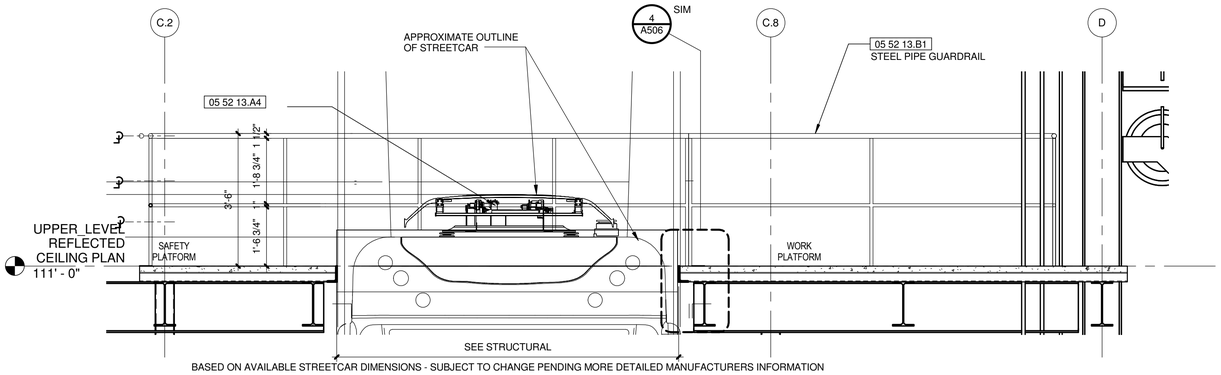

1 GUARDRAIL WESTERN ELEVATION @PLATFORM
1/2" = 1'-0"

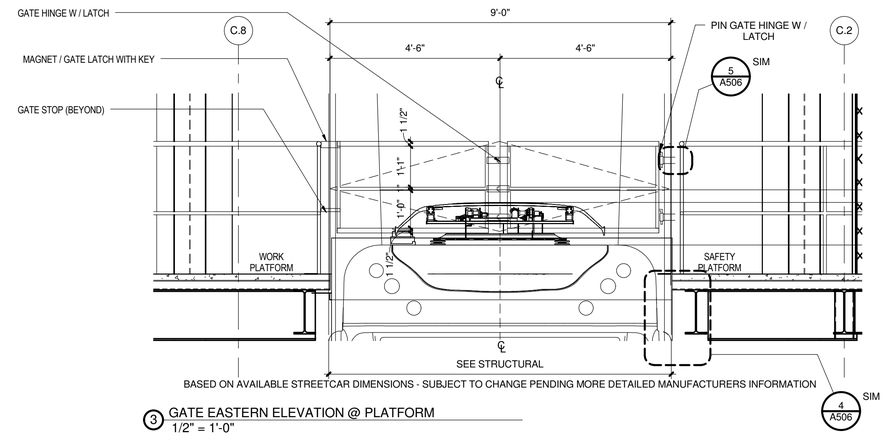

3 GATE EASTERN ELEVATION @ PLATFORM
1/2" = 1'-0"

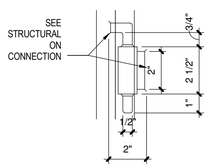

5 DETAIL OF PIN HINGE AND GATE CONNECTION
3" = 1'-0"

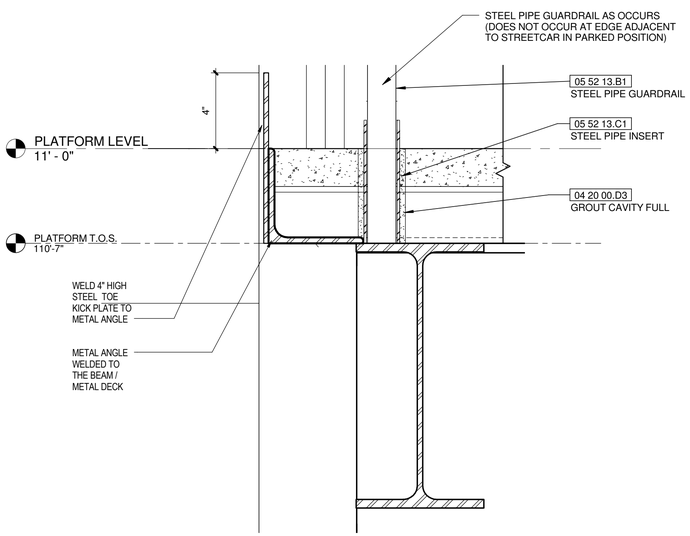

4 GUARDRAIL CONNECTION TO PLATFORM
3" = 1'-0"

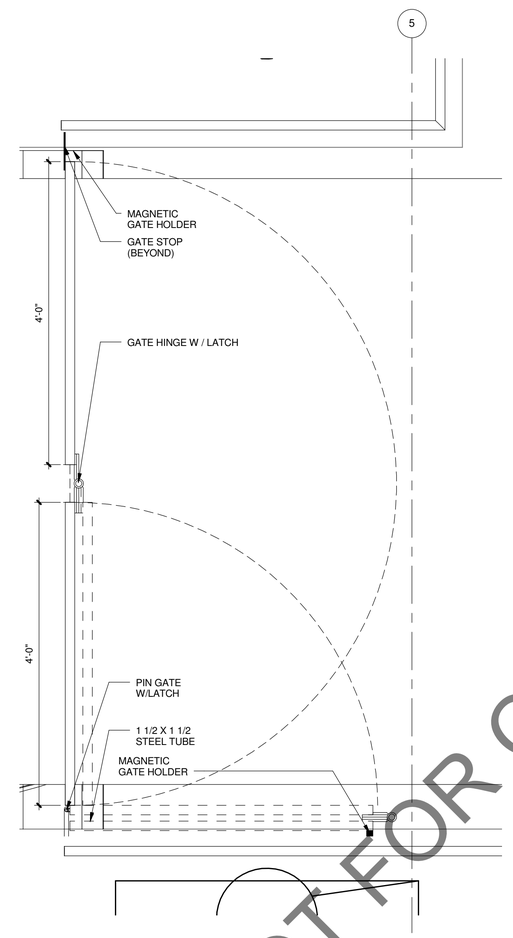

6 TRAIN SAFETY GUARDRAIL
1" = 1'-0"

HDR

NOT FOR CONSTRUCTION

NO.	DATE	REVISION	BY

ORIGINAL PLANS PREPARED BY

HNTB
11414 W. PARK PLACE
MILWAUKEE, WI 53224
(414) 359-2300

PLANS PREPARED FOR

CITY OF MILWAULKEE
DEPARTMENT OF
PUBLIC WORKS

MILWAUKEE STREETCAR OPERATIONS
AND MAINTENANCE FACILITY

95% SUBMISSION	29 FEB . 2016

DESIGNED BY	Designer	DESIGN CK'D	Checker	DRAWN BY	Author	PLANS CK'D	Approver

GUARD RAIL AND PLATFORM DETAILS

A506

NOT FOR CONSTRUCTION

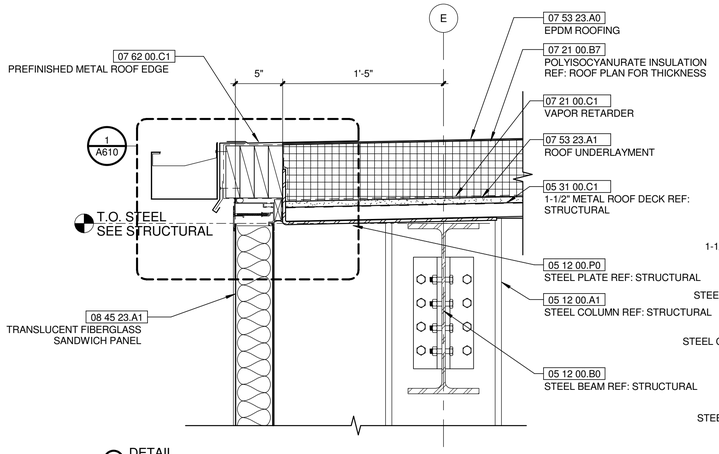

1 DETAIL
1 1/2" = 1'-0"

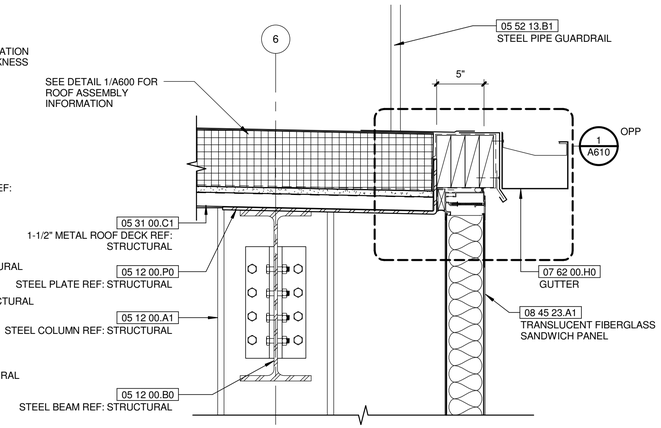

4 DETAIL
1 1/2" = 1'-0"

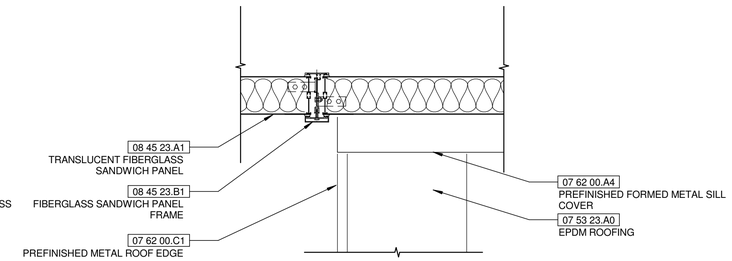

9 DETAIL
1 1/2" = 1'-0"

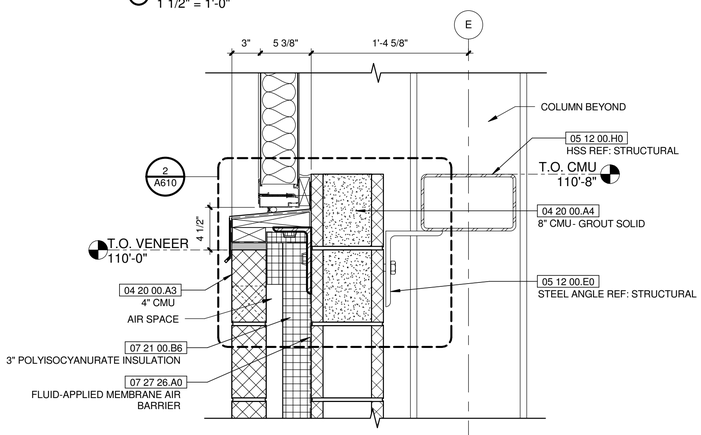

2 DETAIL
1 1/2" = 1'-0"

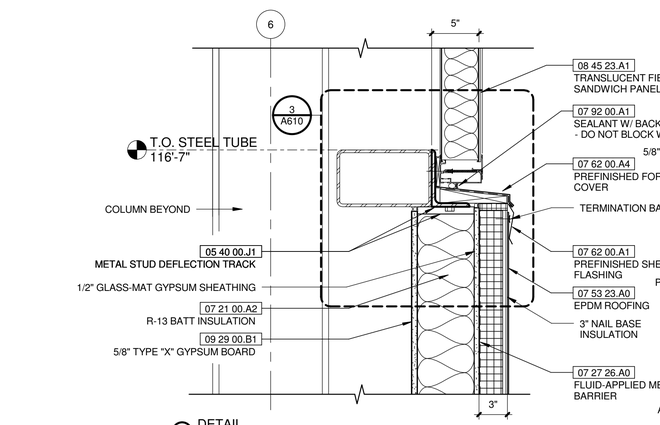

5 DETAIL
1 1/2" = 1'-0"

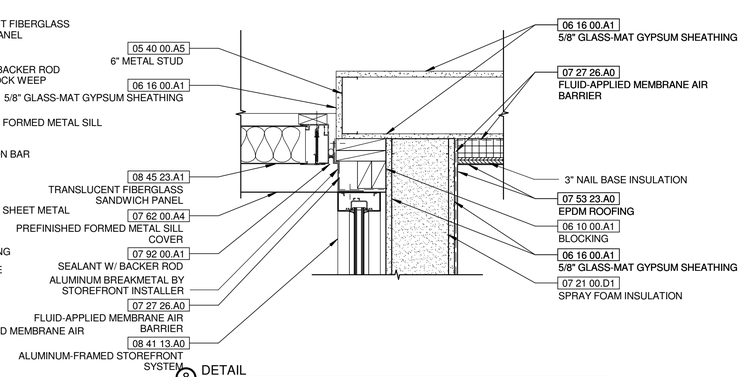

8 DETAIL
1 1/2" = 1'-0"

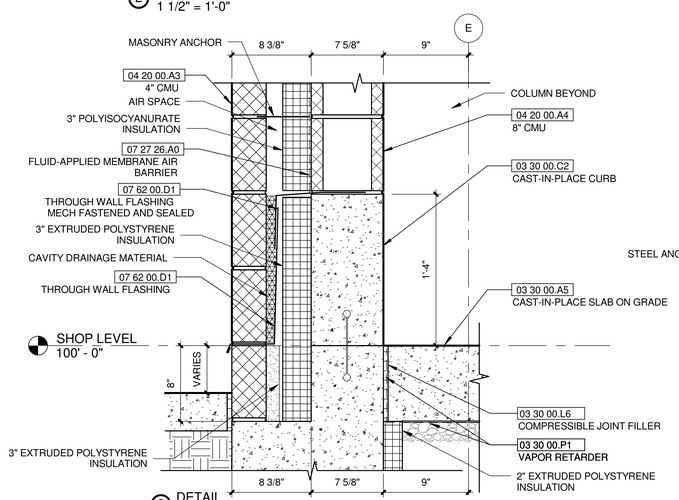

3 DETAIL
1 1/2" = 1'-0"

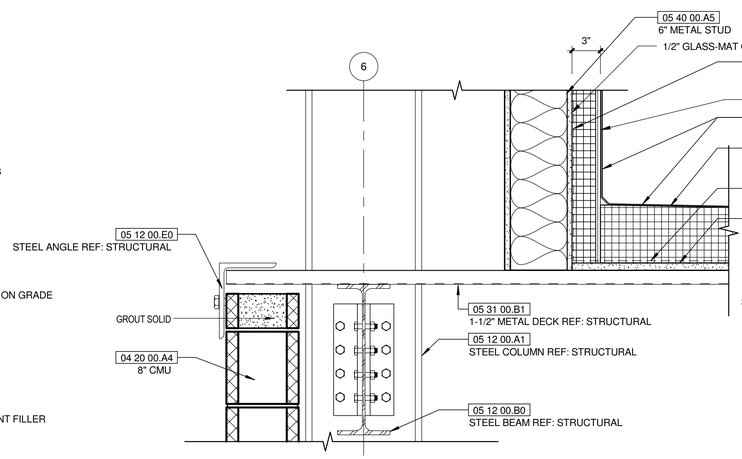

6 DETAIL
1 1/2" = 1'-0"

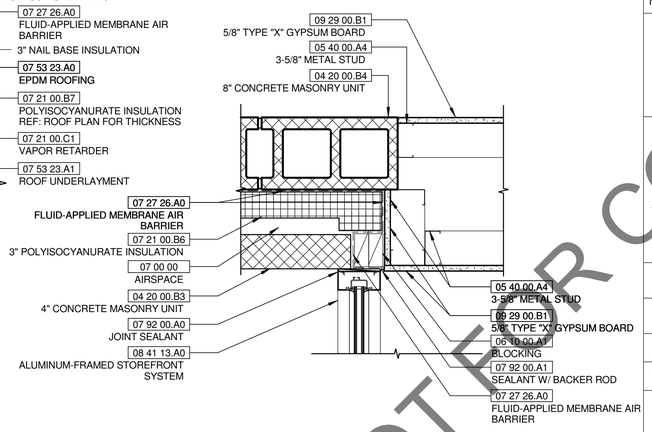

7 DETAIL
1 1/2" = 1'-0"

NOT FOR CONSTRUCTION

NO.	DATE	REVISION	BY

ORIGINAL PLANS PREPARED BY

HNTB

11414 W. PARK PLACE
MILWAUKEE, WI 53224
(414) 359-2300

PLANS PREPARED FOR

CITY OF MILWAUKEE
DEPARTMENT OF
PUBLIC WORKS

MILWAUKEE STREETCAR OPERATIONS
AND MAINTENANCE FACILITY

95% SUBMISSION		29 FEB . 2016	
DESIGNED BY NE	DESIGN CK'D SP	DRAWN BY NE	PLANS CK'D PA

DETAILS

A600

NOT FOR CONSTRUCTION

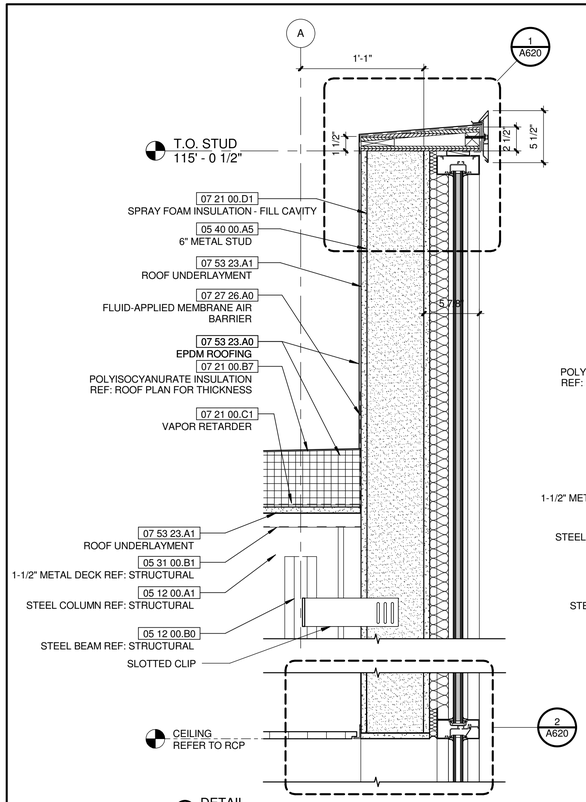

1 DETAIL
1 1/2" = 1'-0"

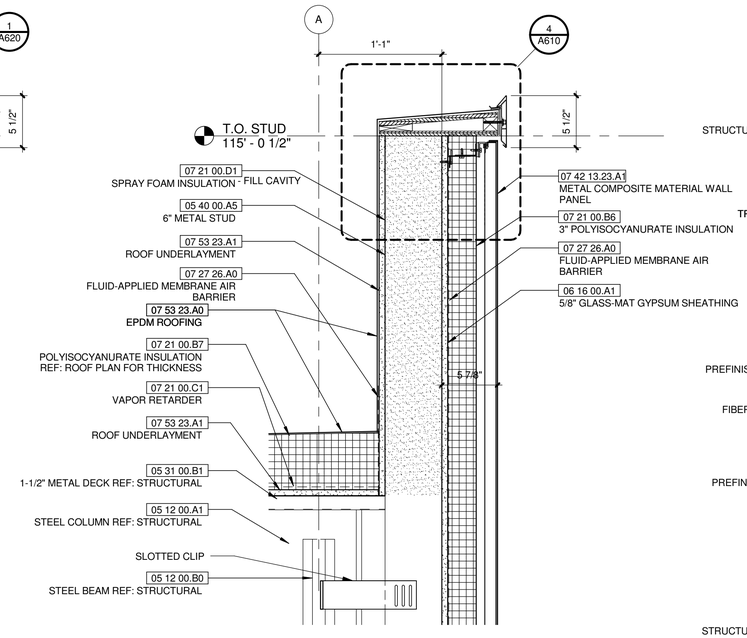

3 DETAIL
1 1/2" = 1'-0"

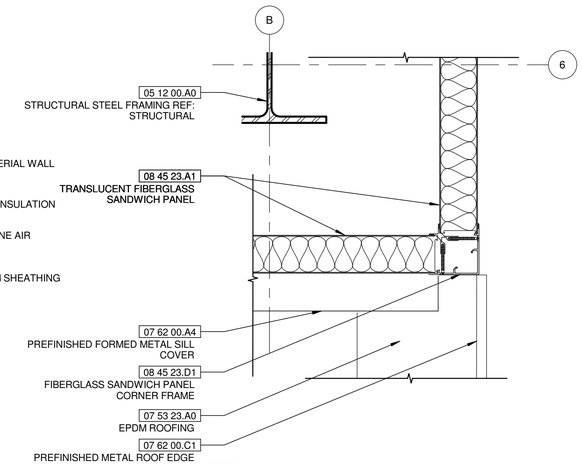

7 DETAIL
1 1/2" = 1'-0"

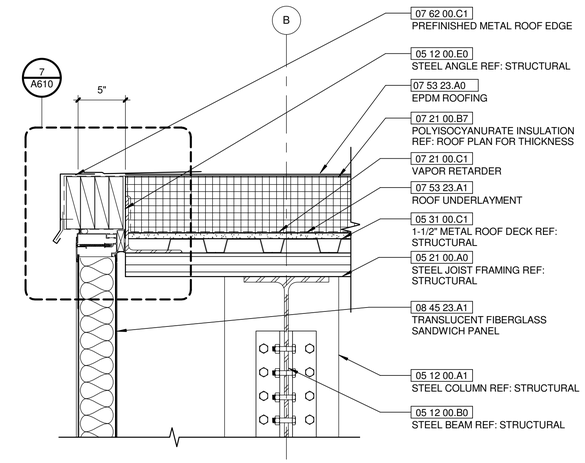

8 DETAIL
1 1/2" = 1'-0"

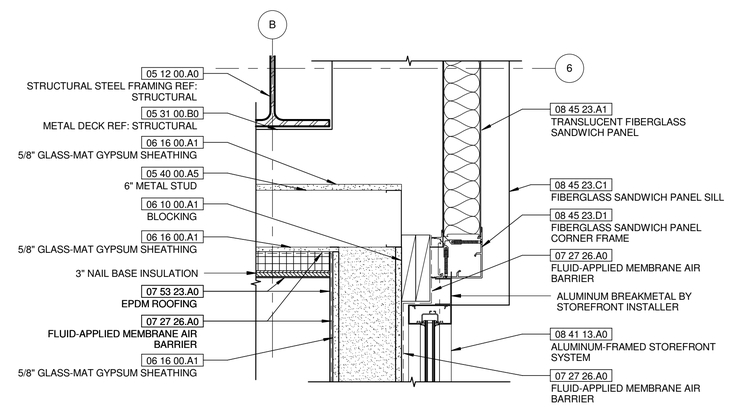

6 DETAIL
1 1/2" = 1'-0"

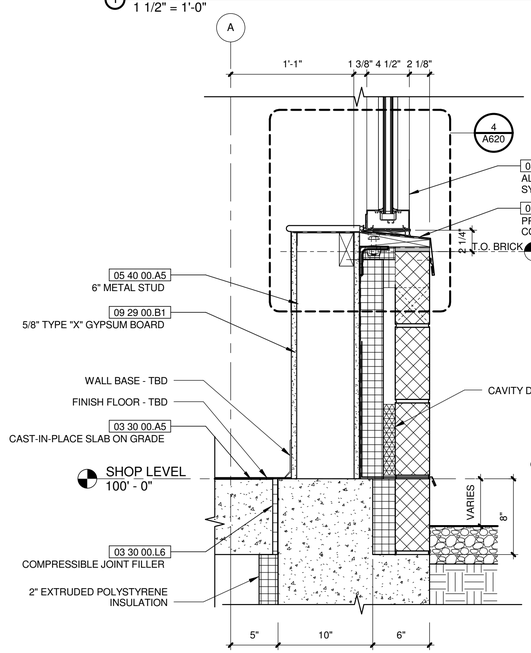

2 DETAIL
1 1/2" = 1'-0"

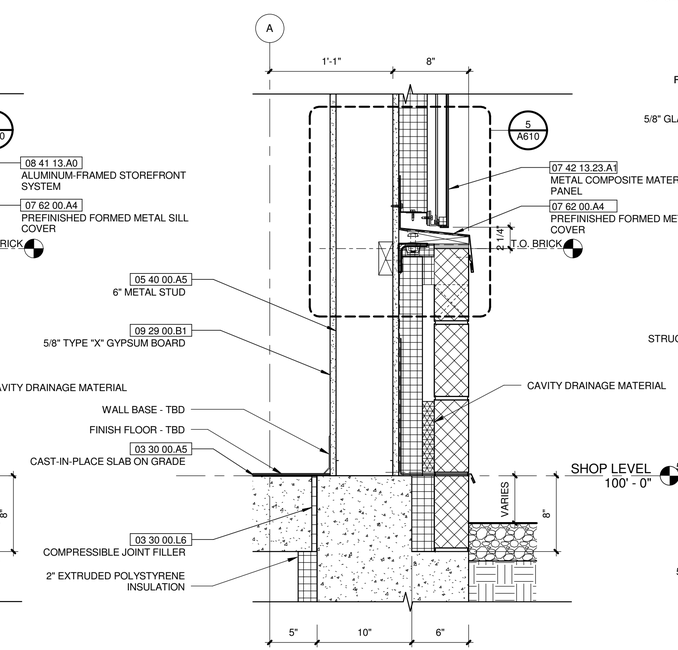

4 DETAIL
1 1/2" = 1'-0"

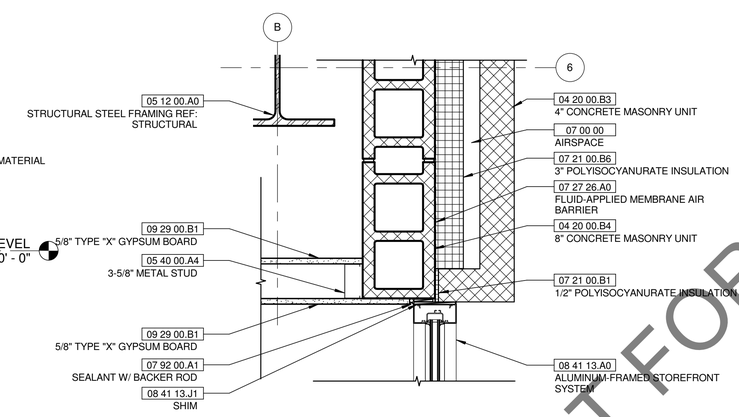

5 DETAIL
1 1/2" = 1'-0"

HDR

NOT FOR CONSTRUCTION

NO.	DATE	REVISION	BY

ORIGINAL PLANS PREPARED BY

HNTB
11414 W. PARK PLACE
MILWAUKEE, WI 53224
(414) 359-2300

PLANS PREPARED FOR

CITY OF MILWAUKEE
DEPARTMENT OF
PUBLIC WORKS

MILWAUKEE STREETCAR OPERATIONS
AND MAINTENANCE FACILITY

95% SUBMISSION | 29 FEB . 2016

DESIGNED BY Designer | DESIGN CK'D Checker | DRAWN BY Author | PLANS CK'D Approver

DETAILS

A601

NOT FOR CONSTRUCTION

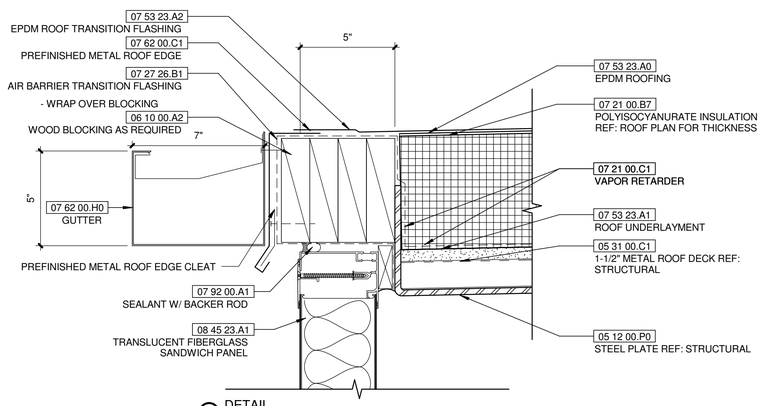

1 DETAIL
3" = 1'-0"

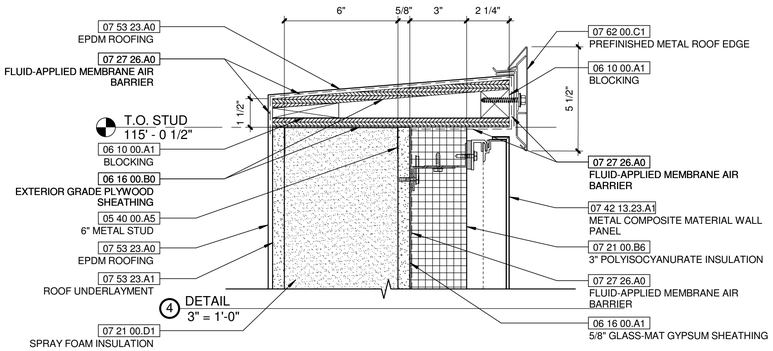

4 DETAIL
3" = 1'-0"

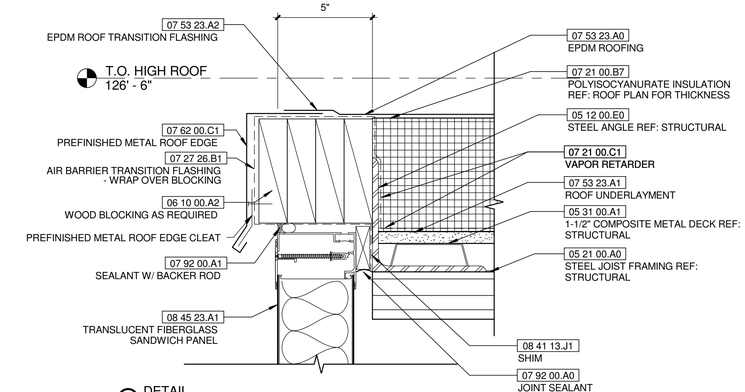

7 DETAIL
3" = 1'-0"

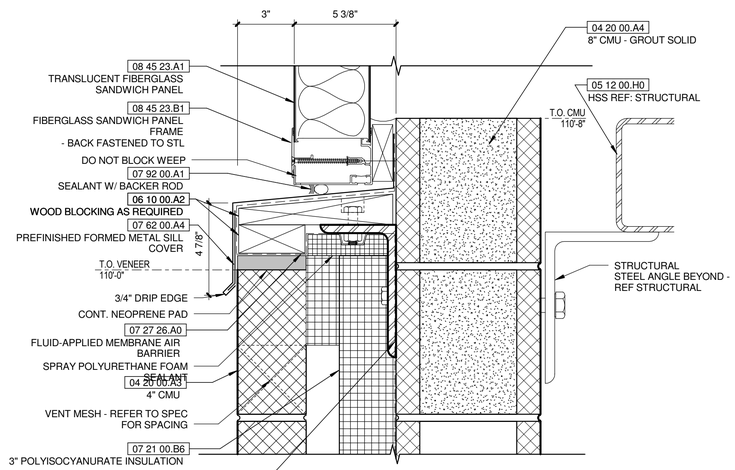

2 DETAIL
3" = 1'-0"

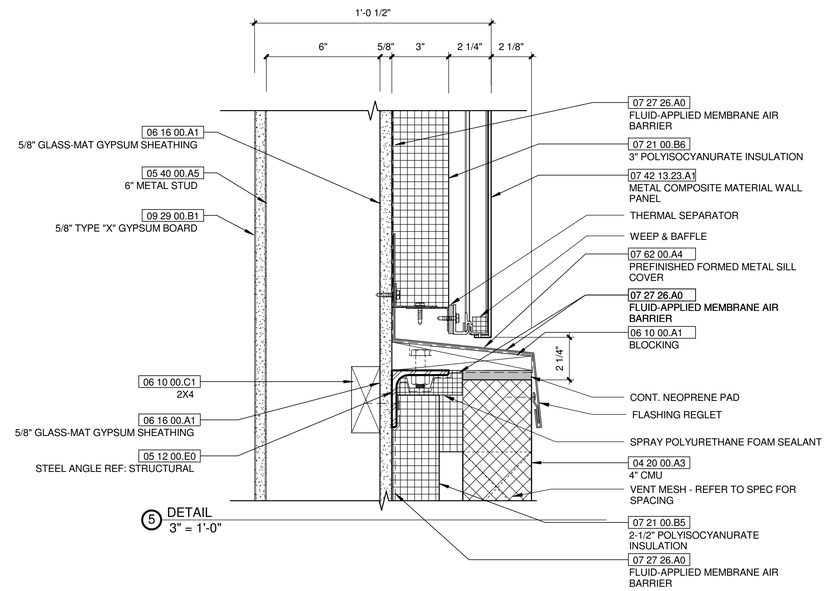

5 DETAIL
3" = 1'-0"

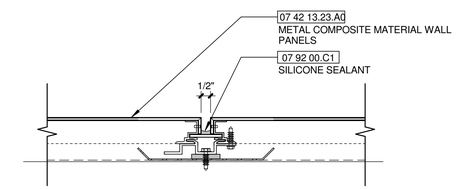

8 SECTION DETAIL @ PARAPET COPING JOINT
3" = 1'-0"

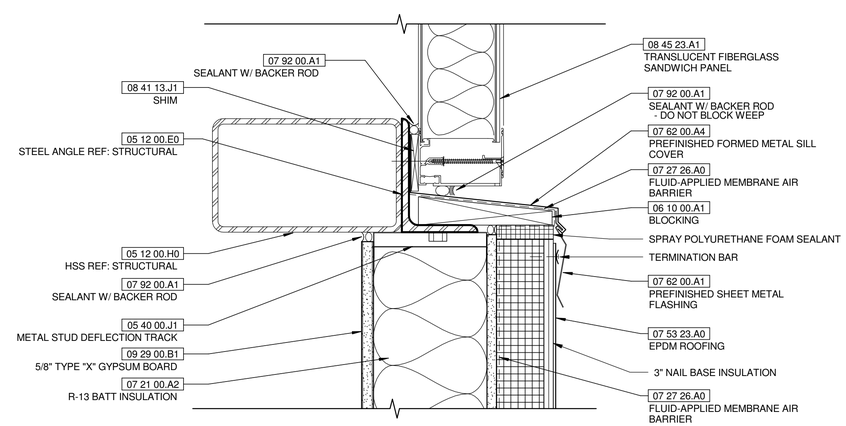

3 DETAIL
3" = 1'-0"

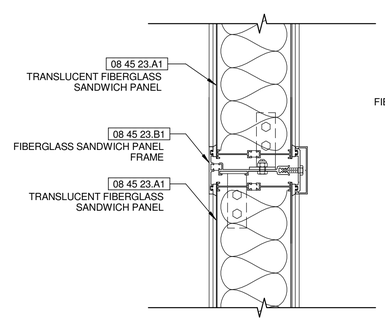

6 TYP. TRANSLUCENT PNL MULLION
3" = 1'-0"

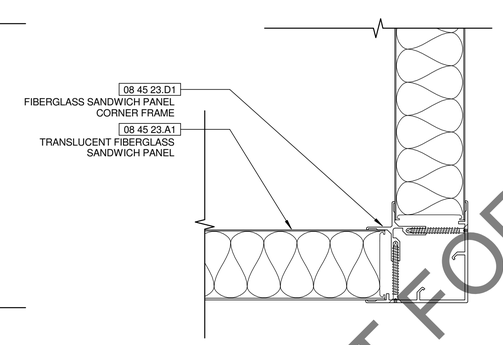

9 TYP. TRANSLUCENT PNL CORNER
3" = 1'-0"

NOT FOR CONSTRUCTION

NO.	DATE	REVISION	BY

ORIGINAL PLANS PREPARED BY

HNTB
11414 W. PARK PLACE
MILWAUKEE, WI 53224
(414) 359-2300

PLANS PREPARED FOR

CITY OF MILWAUKEE
DEPARTMENT OF
PUBLIC WORKS

MILWAUKEE STREETCAR OPERATIONS
AND MAINTENANCE FACILITY

95% SUBMISSION | 29 FEB . 2016

DESIGNED BY NE | DESIGN CK'D SP | DRAWN BY NE | PLANS CK'D PA

DETAILS

A610

NOT FOR CONSTRUCTION

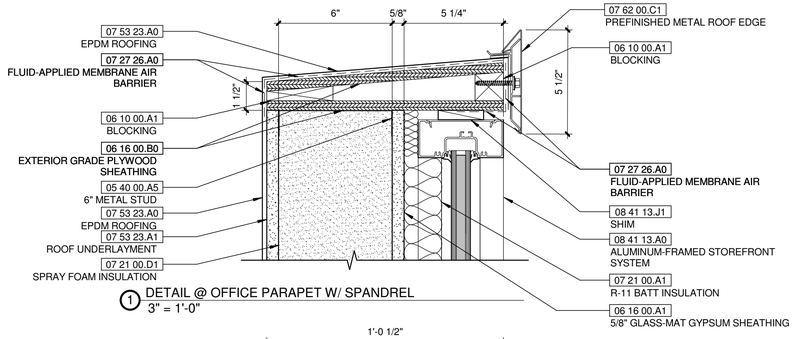

1 DETAIL @ OFFICE PARAPET W/ SPANDREL
3" = 1'-0"

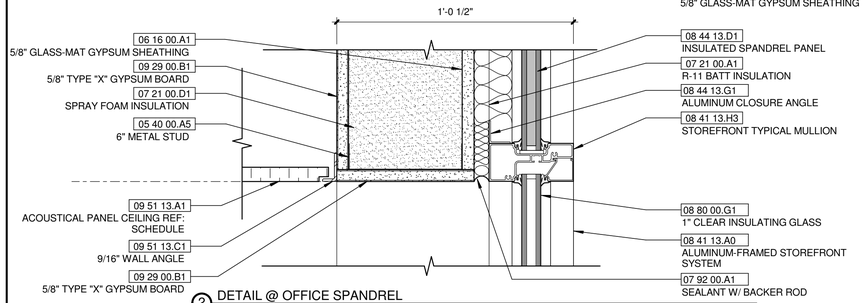

2 DETAIL @ OFFICE SPANDREL
3" = 1'-0"

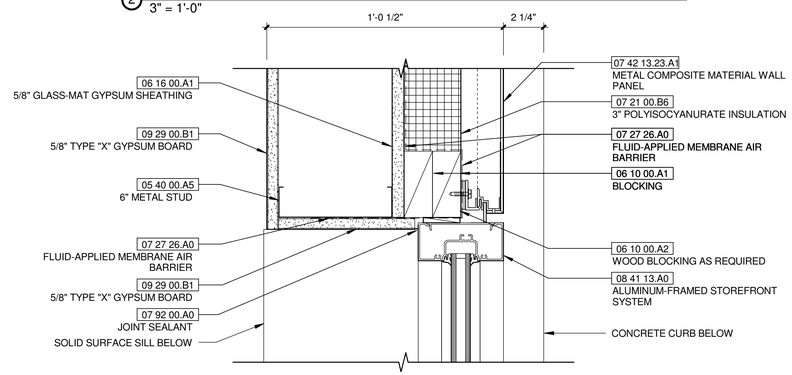

3 DETAIL @ OFFICE WINDOW JAMB
3" = 1'-0"

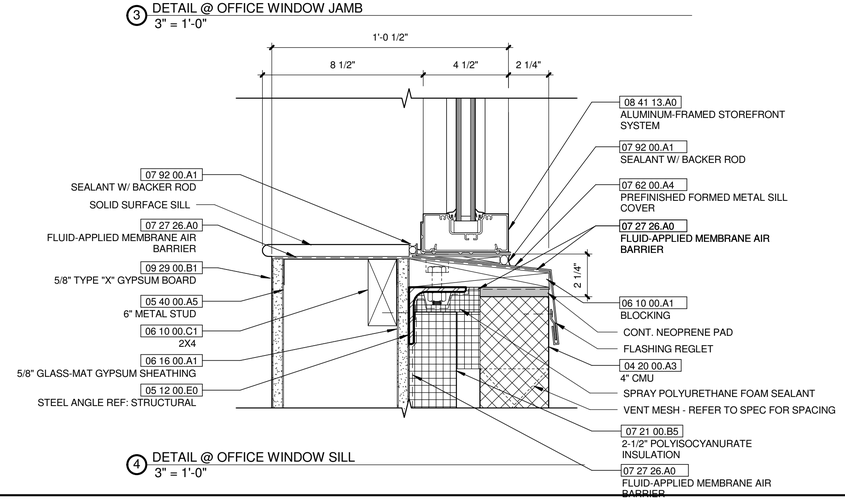

4 DETAIL @ OFFICE WINDOW SILL
3" = 1'-0"

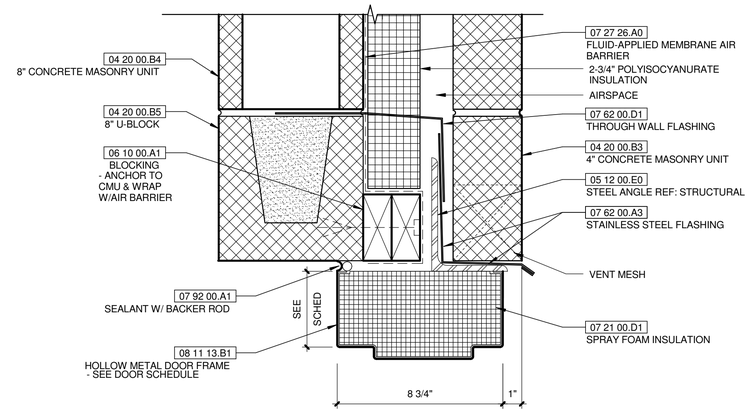

5 TYP. CMU DOOR HEAD
3" = 1'-0"

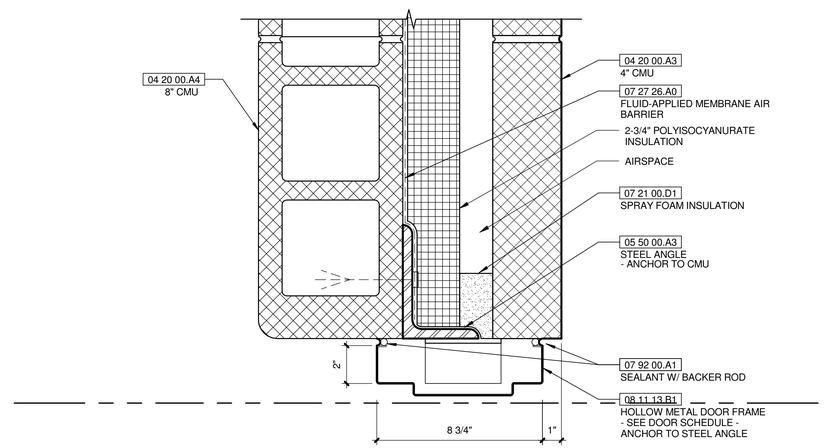

6 TYP. CMU DOOR JAMB
3" = 1'-0"

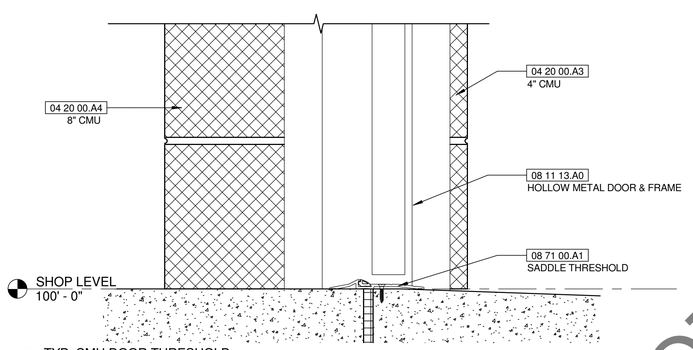

7 TYP. CMU DOOR THRESHOLD
3" = 1'-0"

HDR

NOT FOR CONSTRUCTION

NO.	DATE	REVISION	BY

ORIGINAL PLANS PREPARED BY

HNTB
11414 W. PARK PLACE
MILWAUKEE, WI 53224
(414) 359-2300

PLANS PREPARED FOR

CITY OF MILWAULKEE
DEPARTMENT OF
PUBLIC WORKS

MILWAUKEE STREETCAR OPERATIONS
AND MAINTENANCE FACILITY

95% SUBMISSION | 29 FEB . 2016

DESIGNED BY NE | DESIGN CK'D SP | DRAWN BY NE | PLANS CK'D PA

DETAILS | A620

NOT FOR CONSTRUCTION

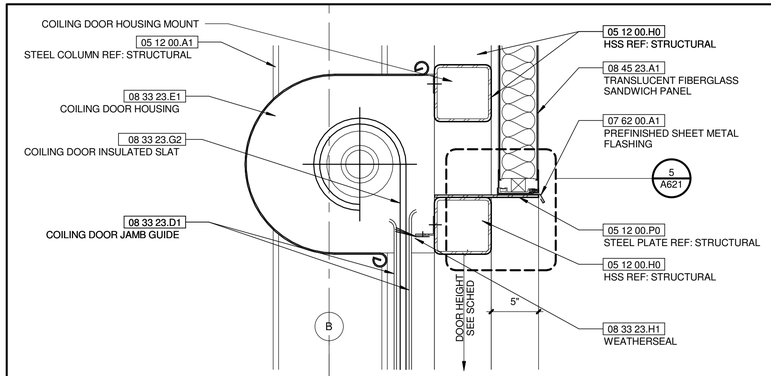

1 OVERHEAD DOOR HEAD
1 1/2" = 1'-0"

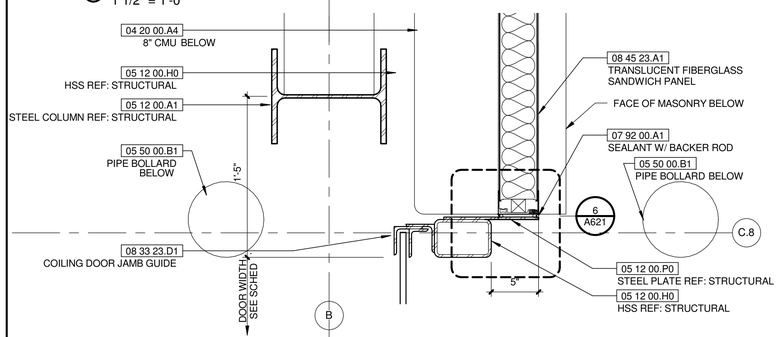

2 OVERHEAD DOOR JAMB @ TRANSLUCENT WALL PANEL
1 1/2" = 1'-0"

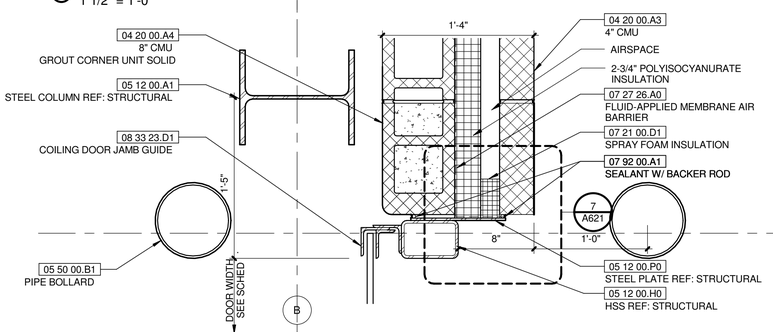

3 OVERHEAD DOOR JAMB @ CMU
1 1/2" = 1'-0"

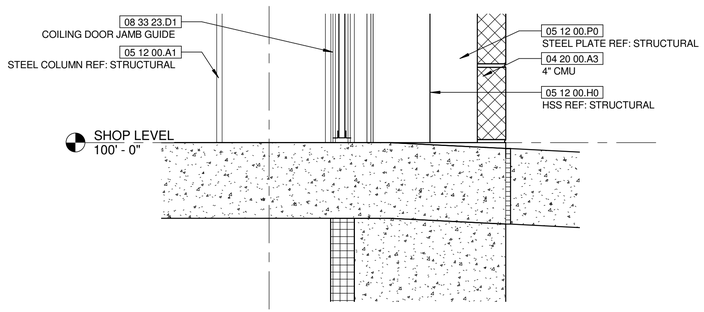

4 OVERHEAD DOOR THRESHOLD
1 1/2" = 1'-0"

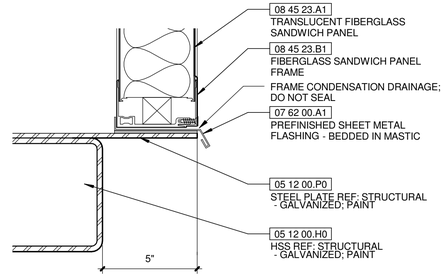

5 ENLARGED HEAD DETAIL
3" = 1'-0"

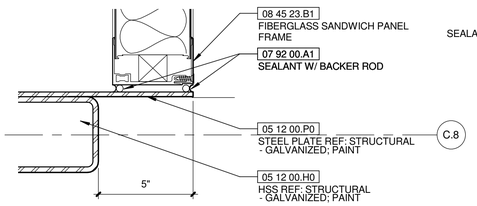

6 ENLARGED JAMB DETAIL @ PANEL
3" = 1'-0"

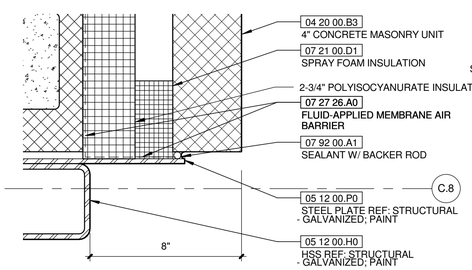

7 ENLARGED JAMB DETAIL @ CMU
3" = 1'-0"

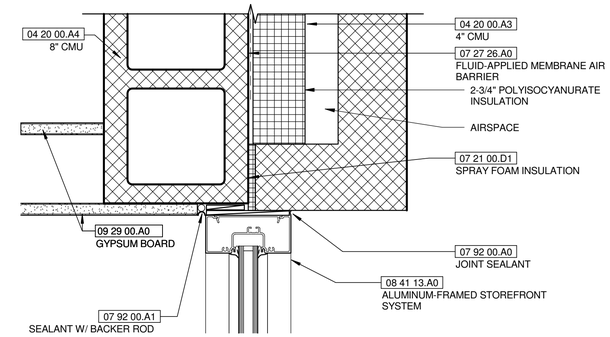

8 OFFICE ENTRY DOOR JAMB DETAIL @ CMU
3" = 1'-0"

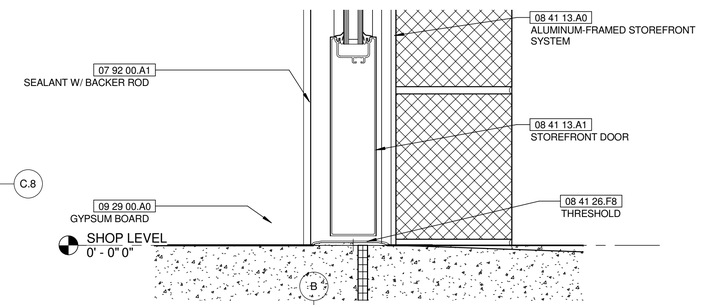

9 OFFICE ENTRY DOOR THRESHOLD DETAIL
3" = 1'-0"

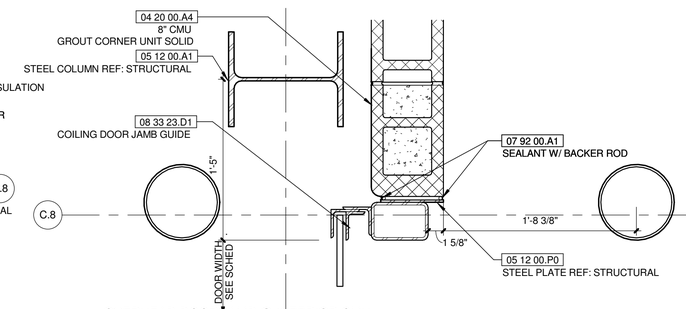

10 OVERHEAD DOOR JAMB @ INTERIOR CMU
1 1/2" = 1'-0"

NOT FOR CONSTRUCTION

NO.	DATE	REVISION	BY

ORIGINAL PLANS PREPARED BY

HNTB
11414 W. PARK PLACE
MILWAUKEE, WI 53224
(414) 359-2300

PLANS PREPARED FOR

CITY OF MILWAUKEE
DEPARTMENT OF
PUBLIC WORKS

MILWAUKEE STREETCAR OPERATIONS
AND MAINTENANCE FACILITY

95% SUBMISSION | 29 FEB . 2016

DESIGNED BY NE | DESIGN CK'D SP | DRAWN BY NE | PLANS CK'D PA

DETAILS

A621

NOT FOR CONSTRUCTION

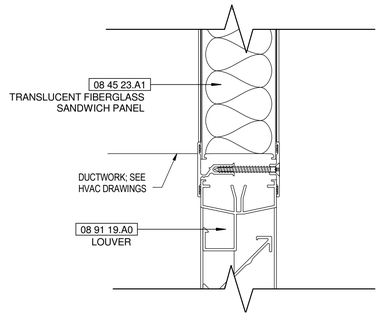

1 DETAIL - LOUVER HEAD
3" = 1'-0"

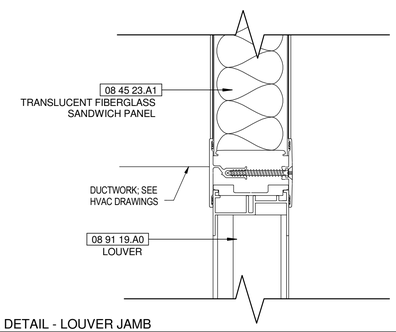

2 DETAIL - LOUVER JAMB
3" = 1'-0"

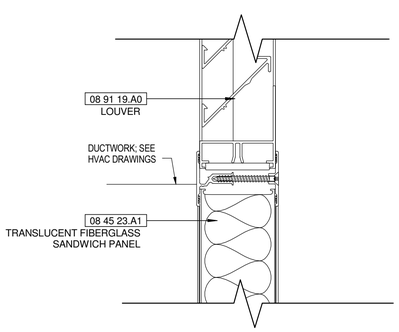

3 DETAIL - LOUVER SILL
3" = 1'-0"

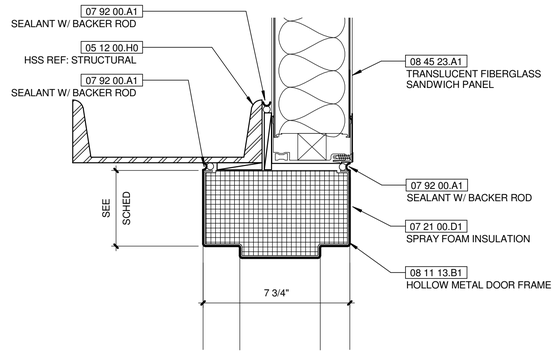

4 DETAIL - ROOF ACCESS DOOR HEAD
3" = 1'-0"

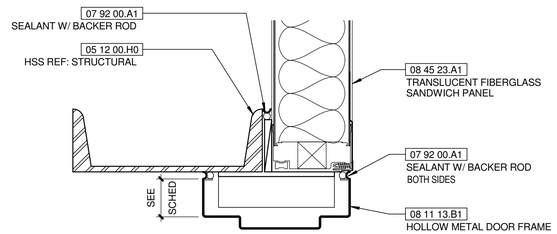

5 DETAIL - ROOF ACCESS DOOR JAMB @ TRANSLUCENT WALL PNL
3" = 1'-0"

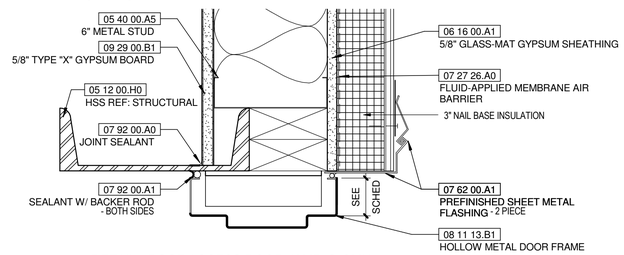

6 DETAIL - ROOF ACCESS DOOR JAMB @ CMU
3" = 1'-0"

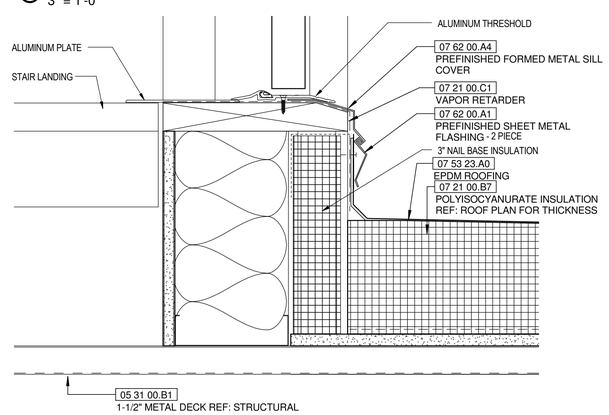

7 DETAIL - ROOF ACCESS DOOR THRESHOLD
3" = 1'-0"

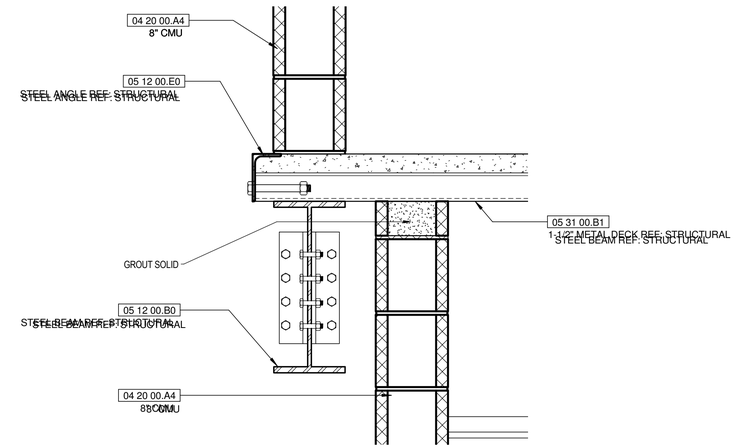

8 DETAIL @ SOUTH WALL OF REPAIR BAY AT MECHANICAL ROOM
1 1/2" = 1'-0"

HDR

NOT FOR CONSTRUCTION

NO.	DATE	REVISION	BY

ORIGINAL PLANS PREPARED BY

HNTB
11414 W. PARK PLACE
MILWAUKEE, WI 53224
(414) 359-2300

PLANS PREPARED FOR

CITY OF MILWAUKEE
DEPARTMENT OF
PUBLIC WORKS

MILWAUKEE STREETCAR OPERATIONS
AND MAINTENANCE FACILITY

95% SUBMISSION | 29 FEB . 2016

DESIGNED BY Designer | DESIGN CK'D Checker | DRAWN BY RG | PLANS CK'D Approver

DETAILS | A622

NOT FOR CONSTRUCTION

DOOR SCHEDULE

DOOR #	DOOR TYPE	DOOR HEIGHT	DOOR Width	DOOR THICKNESS	DOOR GLAZING	DOOR FINISH	FRAME FRAME	FRAME HEAD	FRAME JAMB	FRAME SILL	FRAME FINISH	FIRE RATING	STC RATING	HARDWARE	PANIC HARDWARE	NOTES
100-1	C	7' - 0"	3' - 0"					1/A620	8/A621	9/A621				01		
101-1	C	7' - 2"	3' - 0"					1/A620	8/A621	9/A621				02		
101-2	K	7' - 0"	3' - 0"	0' - 1 3/4"			1					otb parameter - do not use		03		
102	I	7' - 0"	3' - 0"	0' - 1 3/4"								otb parameter - do not use		14		
103	K	7' - 0"	3' - 0"	0' - 1 3/4"								otb parameter - do not use		09		90 min rated
105	K	7' - 0"	3' - 0"	0' - 1 3/4"								otb parameter - do not use		20		
107	K	7' - 0"	3' - 0"	0' - 1 3/4"								otb parameter - do not use		21		
109	K	7' - 0"	3' - 0"	0' - 1 3/4"								otb parameter - do not use		23		
109A	A	7' - 0"	3' - 0"	0' - 1 3/4"								-		22		
110-1	E	7' - 0"	4' - 0"	0' - 2"								-		18		
110-2	E	7' - 0"	4' - 0"	0' - 2"								-		18		
110-3	E	7' - 0"	4' - 0"	0' - 2"								-		18		
111	K	7' - 0"	3' - 0"	0' - 1 3/4"			1		4/A800			otb parameter - do not use		19		
112	A	7' - 0"	3' - 0"	0' - 1 3/4"								-		19		
113	K	7' - 0"	3' - 0"	0' - 1 3/4"								otb parameter - do not use		10		
114	K	7' - 0"	3' - 0"	0' - 1 3/4"			1		4/A800			otb parameter - do not use		16		
115	K	7' - 0"	3' - 0"	0' - 1 3/4"								otb parameter - do not use		10		
116	K	7' - 0"	3' - 0"	0' - 1 3/4"			1		4/A800			otb parameter - do not use		16		
117	K	7' - 0"	3' - 0"	0' - 1 3/4"			1		4/A800			otb parameter - do not use		23		
119	M	7' - 0"	3' - 0"	0' - 1 3/4"			1		4/A800			otb parameter - do not use		10		
121-1	M	7' - 0"	3' - 0"	0' - 1 3/4"			1		4/A800			otb parameter - do not use		11		
121-2	J	7' - 0"	3' - 0"	0' - 1 3/4"			1	5/A620	6/A620	7/A620		otb parameter - do not use		08		
125-1	I	7' - 0"	3' - 0"	0' - 1 3/4"			1	5/A620	6/A620	7/A620		otb parameter - do not use		04		
125-2	F	16' - 0"	14' - 0"	0' - 2"				1/A621	2/A621 & 3/A621	4/A621		-		24		
126-1	I	7' - 0"	3' - 0"	0' - 1 3/4"			1	5/A620	6/A620	7/A620		otb parameter - do not use		04		
126-2	F	16' - 0"	14' - 0"	0' - 2"				1/A621	2/A621 & 3/A621	4/A621		-		24		
126-3	J	7' - 0"	3' - 0"	0' - 1 3/4"			1	5/A620	6/A620	7/A620		otb parameter - do not use		15		
126-4	I	7' - 0"	3' - 0"	0' - 1 3/4"			1	5/A620	6/A620	7/A620		otb parameter - do not use		04		
130-1	I	7' - 0"	3' - 0"	0' - 1 3/4"			1	5/A620	6/A620	7/A620		otb parameter - do not use		13		
130-2	F	10' - 0"	8' - 0"	0' - 2"					4/A800			-		24		
130-3	I	7' - 0"	3' - 0"	0' - 1 3/4"				5/A620	6/A620	7/A620		otb parameter - do not use		06		
130-4	F	10' - 0"	8' - 0"	0' - 2"				1/A621	3/A621	4/A621		-		24		
132	I	7' - 0"	3' - 0"	0' - 1 3/4"			1	5/A620	6/A620	7/A620		otb parameter - do not use		12		
201-1	S	7' - 0"	2' - 0"	0' - 1 3/4"			2					otb parameter - do not use		17		
202	E	7' - 0"	4' - 0"	0' - 2"				4/A622	5/A622 & 6/A622	7/A622		-		07		
F	V	10' - 0"	10' - 0"	0' - 2"				1/A621	10/A621			-				
H	A	7' - 0"	3' - 0"	0' - 1 3/4"				5/A620	6/A620	7/A620		-		05		
I	F	16' - 0"	14' - 0"	0' - 2"				1/A621	2/A621 & 3/A621	4/A621		-		24		
J	V	10' - 0"	10' - 0"	0' - 2"				1/A621	3/A621	4/A621		-		24		

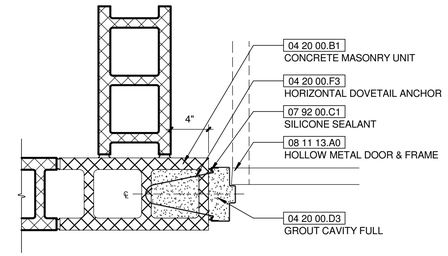

4 / A800 DOOR JAMB, CMU
1 1/2" = 1'-0"

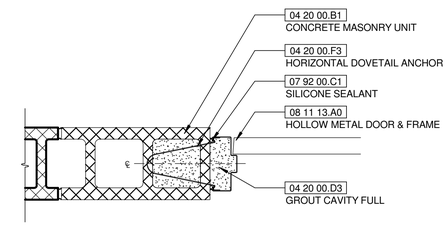

5 / A800 DOOR STRIKE, CMU
1 1/2" = 1'-0"

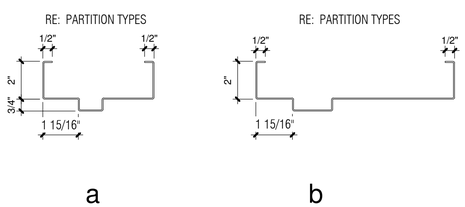

2 / A800 FRAME PROFILES
3" = 1'-0"

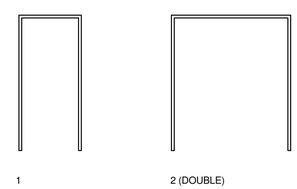

3 / A800 FRAME TYPES
1/4" = 1'-0"

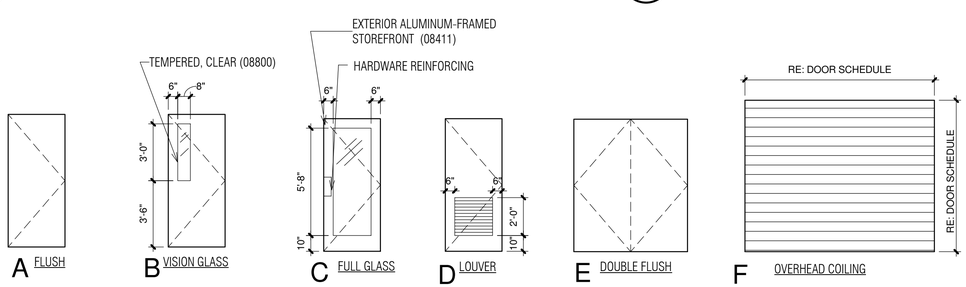

1 / A800 DOOR TYPES
1/4" = 1'-0"

NOT FOR CONSTRUCTION

NO.	DATE	REVISION	BY

ORIGINAL PLANS PREPARED BY

HNTB
11414 W. PARK PLACE
MILWAUKEE, WI 53224
(414) 359-2300

PLANS PREPARED FOR

CITY OF MILWAUKEE
DEPARTMENT OF
PUBLIC WORKS

MILWAUKEE STREETCAR OPERATIONS
AND MAINTENANCE FACILITY

95% SUBMISSION | 29 FEB . 2016

DESIGNED BY EK | DESIGN CK'D SP | DRAWN BY NE | PLANS CK'D PA

DOOR SCHEDULE AND TYPES

A800

NOT FOR CONSTRUCTION

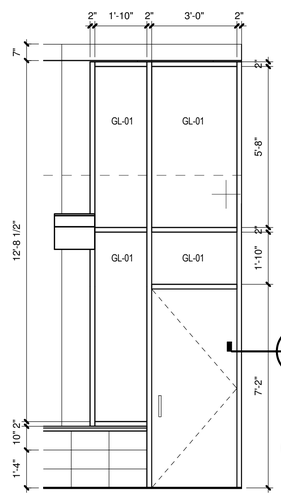

1 EAST ENTRY ELEV.
3/8" = 1'-0"

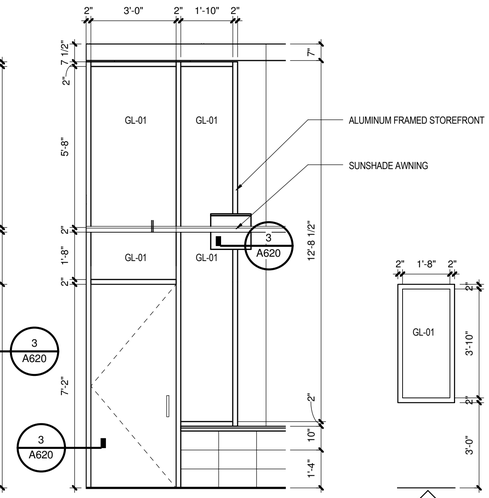

2 WEST ENTRY ELEV.
3/8" = 1'-0"

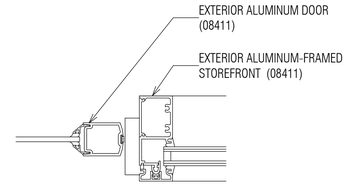

9 TYP. DOOR JAMB @ STOREFRONT
3" = 1'-0"

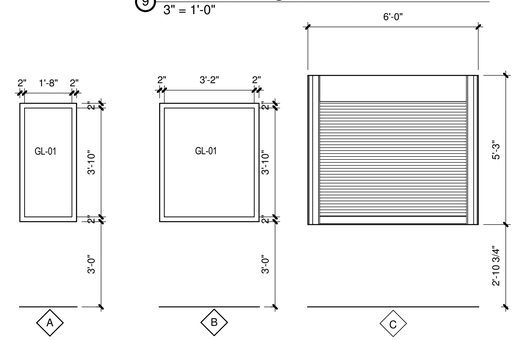

3 INTERIOR WINDOW FRAMES
3/8" = 1'-0"

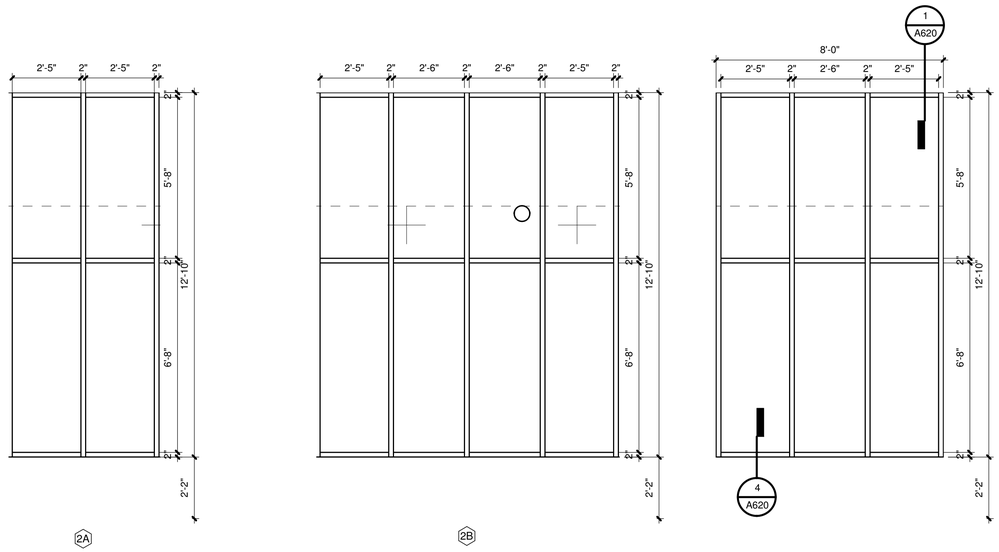

6 ALUMINUM FRAMED STOREFRONT WINDOWS
3/8" = 1'-0"

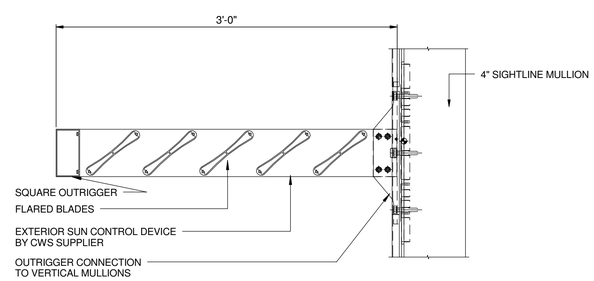

10 SUNSHADE DETAIL
1 1/2" = 1'-0"

Window Schedule

Type Mark	R.O. Width	R.O. Height	Type	Manufacturer	Model	Material	Finish	Head	Jamb	Sill	Glazing Thickness	Glazing Type	Head Height	Comments
A	2' - 0"	4' - 2"	arc-brwd lite-wrapped										7' - 2"	
B	3' - 6"	4' - 2"	arc-brwd lite-wrapped										7' - 2"	
B	3' - 6"	4' - 2"	arc-brwd lite-wrapped										7' - 2"	
B	3' - 6"	4' - 2"	arc-brwd lite-wrapped										7' - 2"	
B	3' - 6"	4' - 2"	arc-brwd lite-wrapped										7' - 2"	

COILING SHUTTER

TYPE MARK#	DOOR TYPE	DOOR HEIGHT	DOOR Width	DOOR GLAZING	DOOR FINISH	FRAME FRAME	FRAME HEAD	FRAME JAMB	FRAME SILL	FRAME FINISH	FIRE RATING	STC RATING	HARDWARE	NOTES
C	U	4' - 0"	6' - 0"											

HDR

NOT FOR CONSTRUCTION

NO.	DATE	REVISION	BY

ORIGINAL PLANS PREPARED BY

HNTB
11414 W. PARK PLACE
MILWAUKEE, WI 53224
(414) 359-2300

PLANS PREPARED FOR

CITY OF MILWAULKEE
DEPARTMENT OF
PUBLIC WORKS

MILWAUKEE STREETCAR OPERATIONS
AND MAINTENANCE FACILITY

95% SUBMISSION | 29 FEB . 2016

DESIGNED BY Designer | DESIGN CK'D Checker | DRAWN BY RG | PLANS CK'D Approver

WINDOWS AND BORROWED LITES

A801

NOT FOR CONSTRUCTION

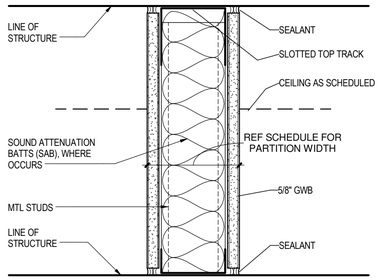

(TYPE G1) TYPICAL PARTITION

*NOTE: FIRE RESISTANCE TEST FOR ONE HOUR RATED WALLS: U465

MARK	STUD WIDTH	PRTN WIDTH	SOUND ATTENUATION (STC)			
			W/ SAB	TEST	TEST	NO SAB
A1		4 7/8"				

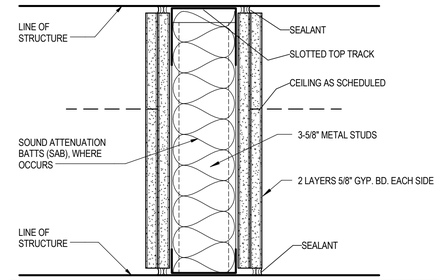

(TYPE D) 2 HOUR TYPICAL PARTITION

*NOTE: FIRE RESISTANCE TEST FOR TWO HOUR RATED SHAFTWALLS: V473.

MARK	STUD WIDTH	PRTN WIDTH	SOUIND ATTENUATION (STC)			
			W/ SAB	TEST	No SAB	TEST
D		6 1/8"				

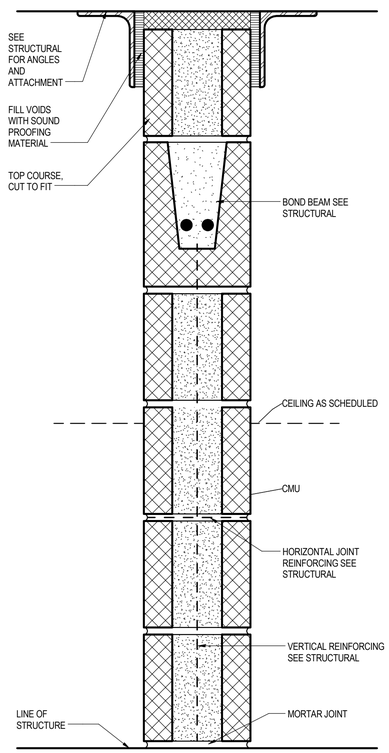

TYPE M1 PARTITION

*NOTE: FIRE RESISTANCE TEST FOR ONE AND TWO HOUR RATED...

MARK	CMU WIDTH	PRTN WIDTH	SOUND ATTENUATION (STC)	
			W/ SAB	TEST

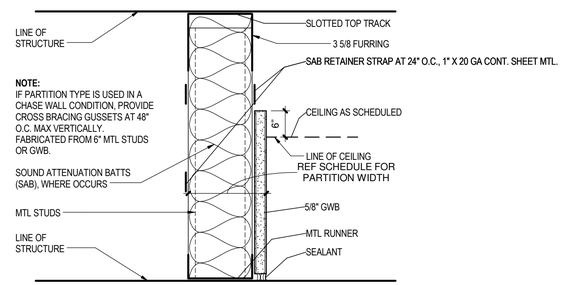

(TYPE R3) NON-RATED PARTITION

MARK	STUD WIDTH	PRTN WIDTH	SOUND ATTENUATION (STC)			
			W/ SAB	TEST	NO SAB	TEST

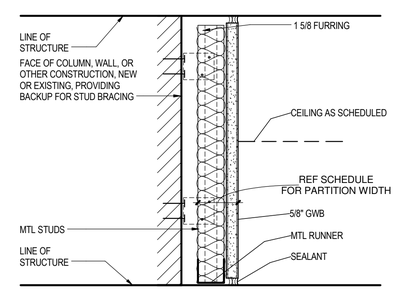

(TYPE R1) FURRING PARTITION

MARK	STUD WIDTH	PRTN WIDTH	SOUND ATTENUATION (STC)			
			W/ SAB	TEST	NO SAB	TEST

NOT FOR CONSTRUCTION

NO.	DATE	REVISION	BY

ORIGINAL PLANS PREPARED BY

HNTB
11414 W. PARK PLACE
MILWAUKEE, WI 53224
(414) 359-2300

PLANS PREPARED FOR

CITY OF MILWAULKEE
DEPARTMENT OF
PUBLIC WORKS

MILWAUKEE STREETCAR OPERATIONS
AND MAINTENANCE FACILITY

95% SUBMISSION | 29 FEB . 2016

DESIGNED BY Designer | DESIGN CK'D Checker | DRAWN BY RG | PLANS CK'D Approver

STANDARD PARTITION AND WALL DETAIL TYPES

A802

NOT FOR CONSTRUCTION

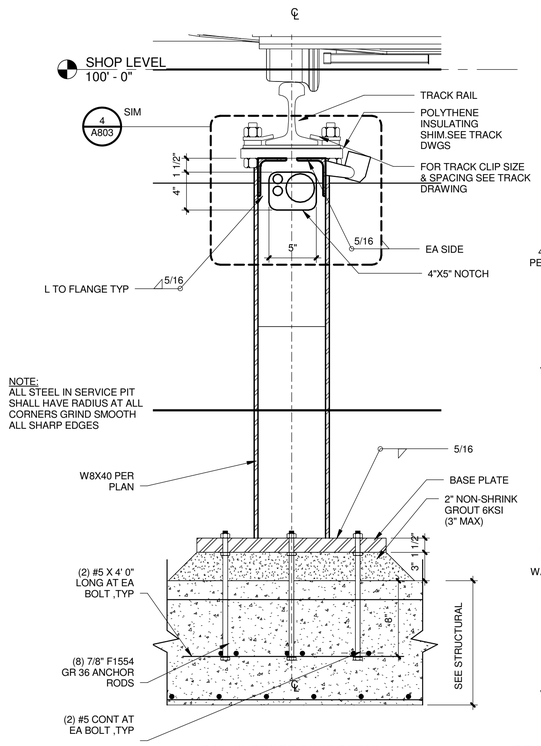

6 RAIL SUPPORT POST DETAIL
1 1/2" = 1'-0"

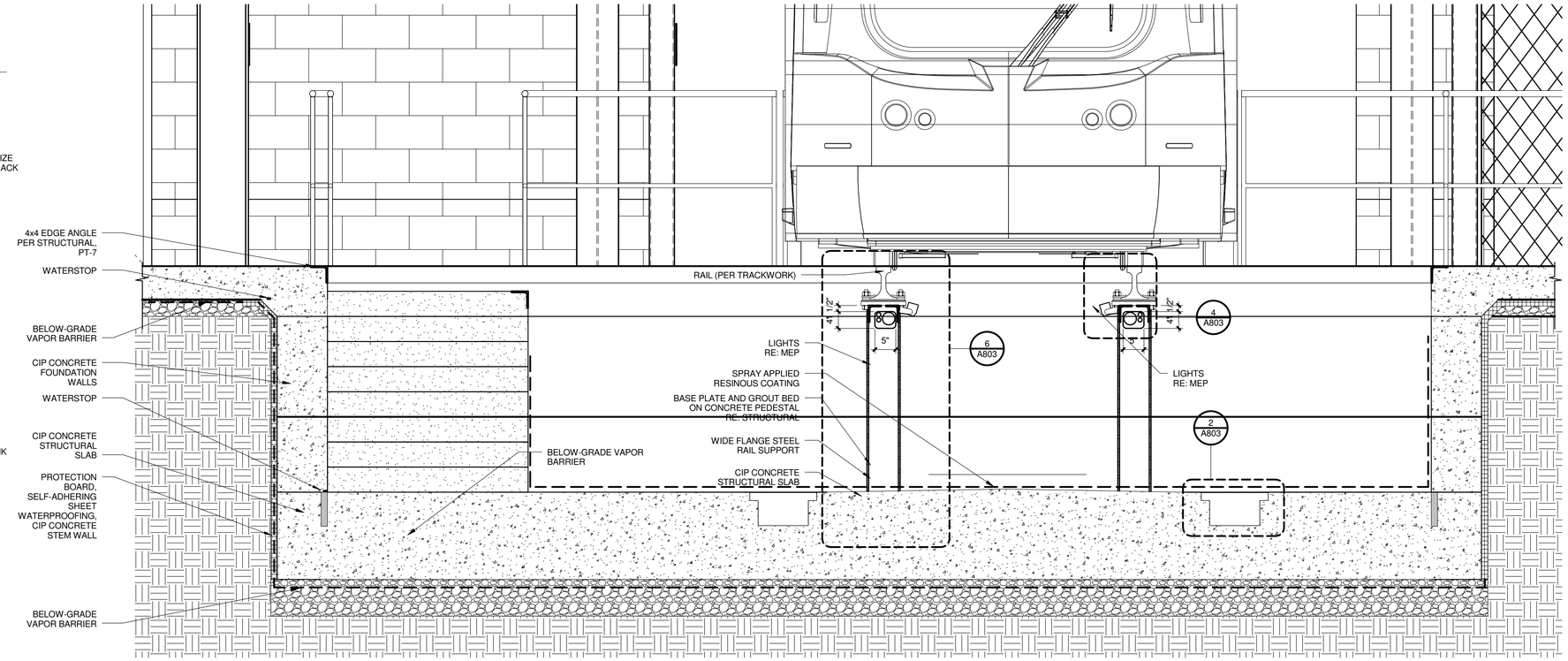

1 PIT DETAILS
3/4" = 1'-0"

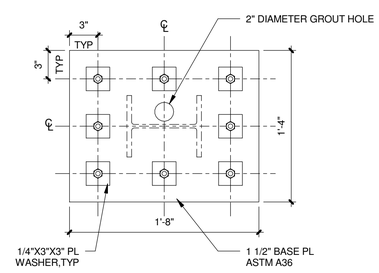

7 RAIL POST BASE PLATE PLAN DETAIL
1 1/2" = 1'-0"

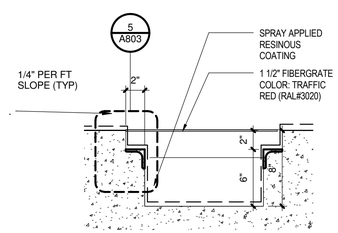

2 DRAIN TRENCH DETAIL
1 1/2" = 1'-0"

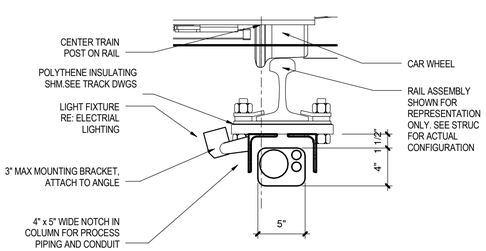

4 STEEL RAIL SUPPORT
1 1/2" = 1'-0"

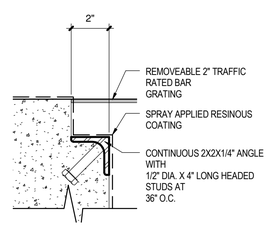

5 GRATING AT WASH BAY
3" = 1'-0"

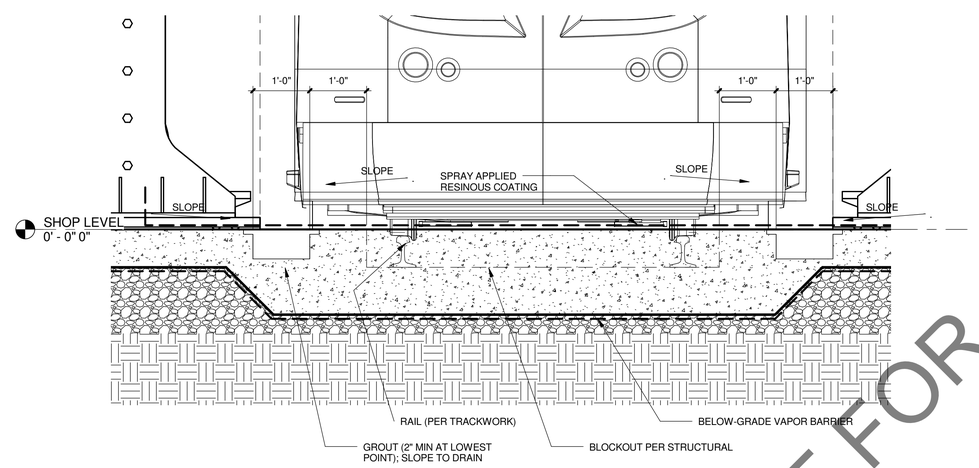

3 SOUTHERN BAY
3/4" = 1'-0"

HDR

NOT FOR CONSTRUCTION

NO.	DATE	REVISION	BY

ORIGINAL PLANS PREPARED BY

HNTB
11414 W. PARK PLACE
MILWAUKEE, WI 53224
(414) 359-2300

PLANS PREPARED FOR

CITY OF MILWAULKEE
DEPARTMENT OF
PUBLIC WORKS

MILWAUKEE STREETCAR OPERATIONS
AND MAINTENANCE FACILITY

95% SUBMISSION | 29 FEB . 2016

DESIGNED BY Designer | DESIGN CK'D Checker | DRAWN BY RG | PLANS CK'D Approver

PIT AND PAD DETAILS

A803

NOT FOR CONSTRUCTION

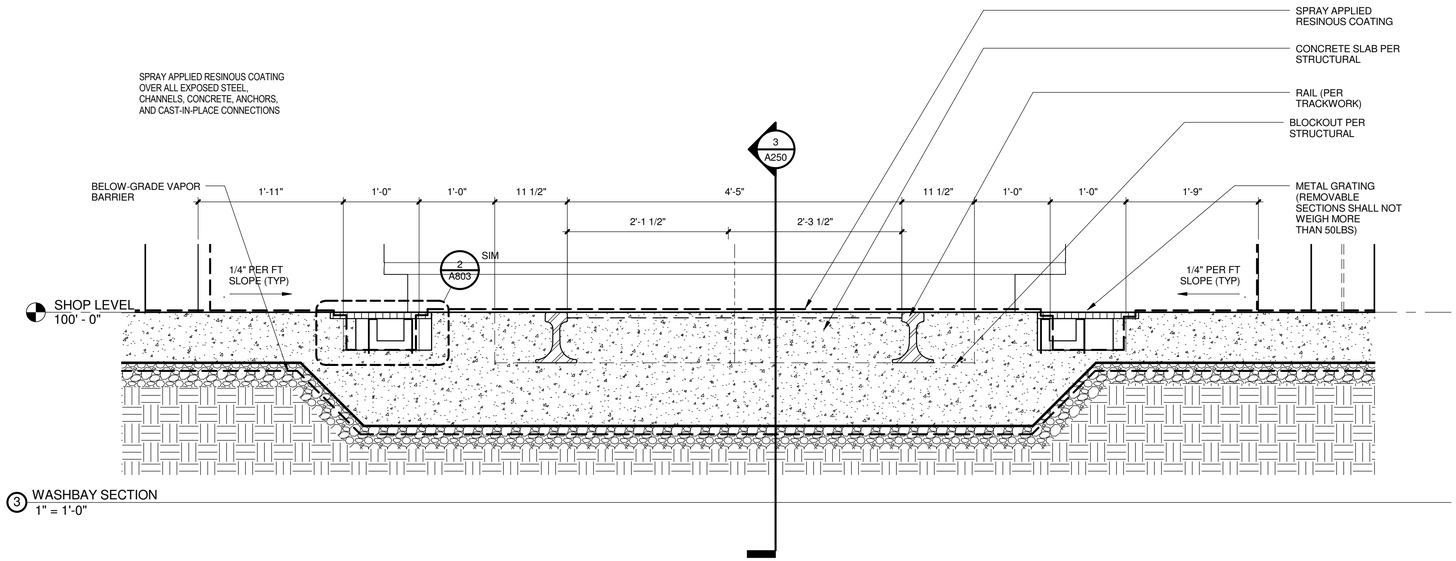

3 WASHBAY SECTION
1" = 1'-0"

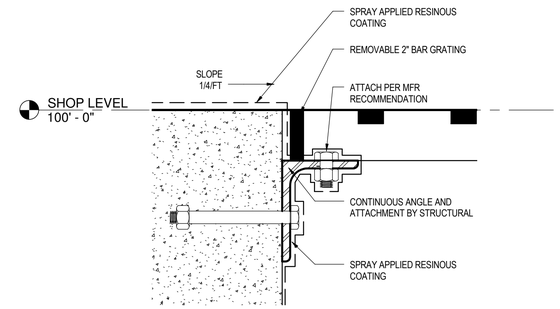

4 GRATING DETAIL AT COMPONENT WASH
1 : 3

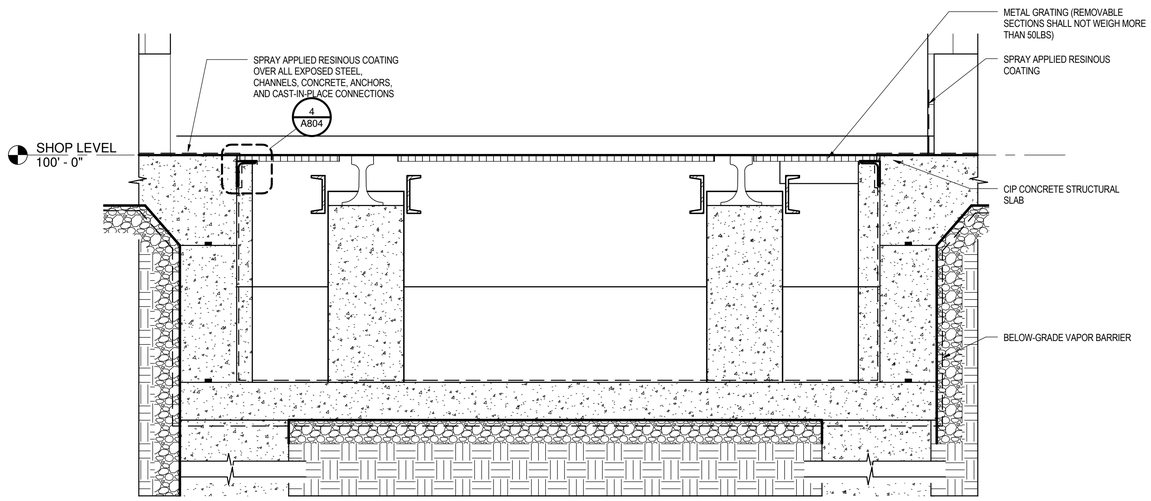

2 COMPONENT WASH SECTION
1" = 1'-0"

NOT FOR CONSTRUCTION

NO.	DATE	REVISION	BY

ORIGINAL PLANS PREPARED BY

HNTB
11414 W. PARK PLACE
MILWAUKEE, WI 53224
(414) 359-2300

PLANS PREPARED FOR

CITY OF MILWAULKEE
DEPARTMENT OF
PUBLIC WORKS

MILWAUKEE STREETCAR OPERATIONS
AND MAINTENANCE FACILITY

95% SUBMISSION | 29 FEB . 2016

DESIGNED BY	Designer	DESIGN CK'D	Checker	DRAWN BY	RG	PLANS CK'D	Approver

WASHBAY PIT SECTION AND DETAILS

A804

NOT FOR CONSTRUCTION

FINISH CODE	KEYNOTE	MANUFACTURE	DESCRIPTION	COMMENTS
ACOUSTICAL MATERIAL				
AM-1	09 51 00	ARMSTRONG	"ULTIMA", WHITE, SQUARE LAY-IN, #1910, 24X24, WITH PRELUDE 15/16" SUSPENSION SYSTEM	
CARPET TILE				
CPTT-1	09 68 13	TANDUS | CENTIVA	CODE, #04628, COLOR: SHARD #62106, SIZE: 24"X24", INSTALL: HORIZONTAL ASHLAR	GREY
CPTT-2	09 68 13	TANDUS | CENTIVA	CODE TRANSITION, #04629, COLOR: SHARD/DEEPBLUE #60612, SIZE: 24"X24", INSTALL: HORIZONTAL ASHLAR	TRANSITION
CPTT-3	09 68 13	TANDUS | CENTIVA	CODE, #04628, COLOR:DEEP BLUE #62112, SIZE: 24"X24", INSTALL: HORIZONTAL ASHLAR	BLUE
CONCRETE FLOOR SEALER				
CFS-ND-1	09 91 00	SEE SPEC		
ENGINEERED QUARTZ FABRICATION				
EQF-1	12 36 65	CEASARSTONE	FROSTY CARRINA, #5141	COUNTERTOPS
NYLON ENTRANCE TILE				
NET-1	09 68 13	INTERFACE	SUPER FLOR, COLOR: GREY # 609008, INSTALL: QUARTER-TURN	
PAINT - EPOXY				
PNTE-1	09 91 00	SHERWIN WILLIAMS	ORIGAMI WHITE, #SW7636	DOOR FRAMES
PAINT - LOW ODOR				
PNTLO-1	09 91 00	SHERWIN WILLIAMS	ORIGAMI WHITE, #SW7636	FIELD AT OFFICES
PNTLO-2	09 91 00	SHERWIN WILLIAMS	USEFUL GRAY, #SW7050	MEDIUM GRAY ACCENT
PNTLO-3	09 91 00	SHERWIN WILLIAMS	GRIZZLE GRAY, #SW7068	DARK GRAY ACCENT
PNTLO-4	09 91 00	SHERWIN WILLIAMS	DIGNITY BLUE, #SW6804	BLUE ACCENT
PNTLO-5	09 91 00	SHERWIN WILLIAMS	FUNKY YELLOW, #SW6913	YELLOW ACCENT
PNTLO-6	09 91 00	SHERWIN WILLIAMS	BLACK MAGIC, #6991	BLACK ACCENT, BATHROOM
PLASTIC LAMINATE				
PL-1	06 41 16	FORMICA	BLACK RIFTWOOD, #6414-NG, FINISH: NATURAL GRAIN	
PL-2	06 41 16	FORMICA	COLORCORE2, COLOR: NEW WHITE, #7223C-58, FINISH: MATTE	
PL-3	06 41 16	NEVAMAR	WROUGHT IRON, #S6054, FINISH: TBD	
RESILIENT TILE				
RT-1	09 65 19	MANNINGTON COMMERICAL	PROGRESSIONS VCT, COLOR: PEWTER, #55112, SIZE: 12"X12"	
RT-2	09 65 19	MANNINGTON COMMERICAL	TELES RUBBER TILE, COLOR: DEW DROP, #850TPK, SIZE: 5.8"X35"	LIGHT GRAY
RT-3	09 65 19	MANNINGTON COMMERICAL	TELES RUBBER TILE, COLOR: COASTAL FOG, #851TPK, SIZE: 5.8"X35"	DARK GRAY
RT-4	09 65 19	MANNINGTON COMMERICAL	TELES RUBBER TILE, COLOR: DEEPWATER BLUE, #905TPK, SIZE: 5.8"X35"	BLUE GRAY
RESILIENT BASE				
RB-1	09 65 19	JOHNSONITE	COLOR: BURNT UMBER 6"H COVED VINYL BASE, ROLL GOODS	
ROLLER SHADE				
RS-1	12 24 13	MECHO SHADE	MECHO/5, EUROVEIL BASKET WEAVE 5300 SERIES (5% OPEN), COLOR: TBD	
SOLID SURFACE FABRICATION				
SSF-1	12 36 65	CORIAN	COLOR: TBD	
TILE				
CB-1	09 30 00	SCHLUTER	DILEX-AHK, COLOR: ANODIZED ALUMINUM	
FT-1	09 30 00	KATE-LO TILE & STONE	IMOLA CERAMICA, CREATIVE CONCRETE, COLOR: DG #CREACON 36DG, SIZE: 12X24, INSTALL: 1/2 BRICK	BATHROOM FLOOR
FT-2	09 30 00	KATE-LO TILE & STONE	OLYMPIA TILE+STONE, QUEBEC, 2"X2" HEXAGON, COLOR: STERLING GREY, #0D.QC.STR.02.HEX	SHOWER FLOOR
FT-3	09 30 00	KATE-LO TILE & STONE	OLYMPIA TILE+STONE, CROWN WOOD, COLOR: BROWN, #QT-CW-BWN- 0635, INSTALL: MONOLITHIC	BREAK ROOM FLOOR
WT-1	09 30 00	KATE-LO TILE & STONE	VICTORIA WHITE LIGHT GREY, #QT.VC.WLG.0416	BATHROOM WALL
WT-2	09 30 00	KATE-LO TILE & STONE	OLYMPIA TILE+STONE, DIAMOND CUBE SILVER MOSAICS, #LW.AL.SIL.DIA.CUB.BD	BREAK ROOM BACK SPLASH
WALL PROTECTION				
CG-1	10 26 00	ACROVYN	SSM-20N 2" CORNER GUARD, FULL HEIGHT, COLOR: MISSION WHITE #933	
WG-1	10 26 00	ACROVYN	.060" RIGID SHEET, 4'-0"X8'-0", COLOR: MISSION WHITE #933	
WOOD				
STN-1	06 41 16		MAPLE STAINED TO MATCH PL-1	DOOR STAIN

GENERAL FINISH NOTES:

1. REFER TO ARCHITECTURAL ELEVATIONS AND FINISH PLANS.
2. REFER TO ARCHITECTURAL FLOOR PLANS.
3. HOLLOW METAL FRAME FINISH:
   NEW HOLLOW METAL FRAMES TO RECEIVE PNTE-1;
4. EXIST = EXISTING, NT=NOTE, NA=NOT APPLICABLE - NO FINISH NEEDED
5. FIELD VERIFY EXISTING CONDITIONS AT TRANSITIONS BETWEEN EXISTING AND NEW CONSTRUCTION.
6. PROVIDE CORNER GUARDS, CG; AND WALL PROTECTION, WG, AS INDICATED ON FINISH PLANS, ROOM FINISH SCHEDULE. REFER TO ARCHITECTURAL DRAWINGS FOR DETAILS OF MOUNTING HEIGHTS OF CHAIR RAILS. INSTALL CORNER GUARDS OVER EDGES OF VINYL WALL COVERING AND/OR RIGID WALL COVERING TO PREVENT EXPOSED EDGES.
7. UNLESS NOTED OTHERWISE, MISCELLANEOUS EXPOSED SHELVES TO RECEIVE PL-1.
8. UNLESS NOTED OTHERWISE, CASEWORK TO BE PL-1 AT VERTICAL SURFACES, PL-2 AT COUNTERTOPS AND SSF-1 AT COUNTERTOPS WITH SINKS, INCLUDING BACKSPLASHES U.N.O. REFER TO ELEVATIONS FOR MILLWORK FINISH LOCATIONS.
9. PROVIDE CONTROL JOINTS AT TRANSITION BETWEEN WALL AND GYP BOARD SOFFIT, AS REQUIRED BETWEEN LINE OF WALLCOVERING AND PAINT.
10. PAINT THE FOLLOWING TO MATCH WALL ON WHICH THEY OCCUR: MISCELLANEOUS METALS, FIRE EXTINGUISHER CABINETS, CABINET UNIT HEATERS, ELECTRICAL PANELS, ACCESS PANELS LOCATED IN GYP BOARD CEILINGS.
11. PROVIDE A THIN, CLEAR, SILICONE BEAD (1/8") AT PERIMETER OF ALL DOOR FRAMES AND BORROWED GLASS LITES AFTER INSTALLATION OF SCHEDULED WALL COVERINGS. DOOR FRAMES ON PAINTED WALLS SHOULD RECEIVE THIN, PAINTABLE SILICONE BEAD (1/8") AT PERIMETER PRIOR TO PAINTING, ONLY WHERE THE FRAME DOES NOT MEET THE WALL.
12. AT NEW WALLS AND AT AREAS OF NEW CONSTRUCTION, PATCH PLASTER AND/OR GYP BOARD WALLS TO MATCH EXISTING.
13. PATCH INTERIOR FINISH MATERIALS AND COLORS (I.E. PAINT, WALL BASE, FLOOR FINISH) TO MATCH EXG IN AREAS OF MINOR CONSTRUCTION WORK.
14. SEE FINISH PLAN FOR TRANSITION AND BASE DETAILS.
15. MISCELLANEOUS BULKHEADS AND HEADERS TO RECEIVE FINISH, AS SCHEDULED AT ADJACENT WALLS.
16. WINDOW SILLS TO RECEIVE SOLID SURFACING, SSF-1.
17. AT ROOMS WITH NEW OR EXISTING EXPOSED CEILING, PAINT WALLS TO UNDERSIDE OF STRUCTURE ABOVE.
18. AT GYPSUM BOARD CEILINGS, FACTORY FINISH CONCEALED SPRINKLER HEAD COVERS TO MATCH COLOR OF ADJACENT CEILING FINISH, AS SCHEDULED.
19. SEE REFLECTED CEILING PLAN FOR GYP. BOARD SOFFIT LOCATIONS AND COLORS.
20. ALL INTERIOR FINISHES MUST BE INSTALLED BY A CERTIFIED INSTALLER/SUBCONTRACTOR PER MANUFACTURER'S INSTRUCTIONS. USE MANUFACTURER'S APPROVED ADHESIVES AND SEAM SEALERS.
21. ALL FLOORING TRANSITIONS OCCUR UNDER THE CENTER OF THE DOOR UNLESS OTHERWISE NOTED.
22. TUCK WALL COVERING BEHIND ALL CASEWORK (BACK SPLASHES, COUNTERS) AS REQUIRED. WALL COVERING AT WALL OPENINGS IS TO BE CONTINUOUS TO COVER THE ENTIRE UNDERSIDE OF LINTEL AND CUT WITH A NEW BLADE AT OPPOSITE SIDE. ABSOLUTELY NO FRAYED EDGES WILL BE ACCEPTED.

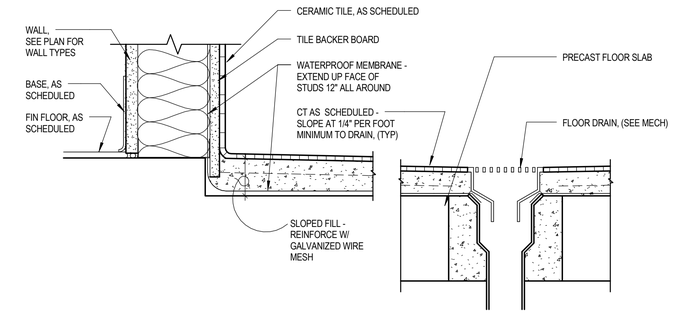

2 TYPICAL DETAIL AT SHOWER
3" = 1'-0"

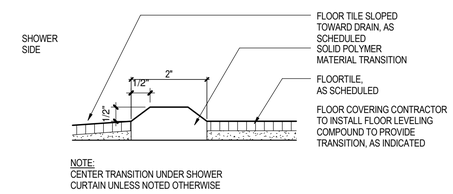

4 FLOOR TRANSITION DETAIL AT SHOWER
6" = 1'-0"

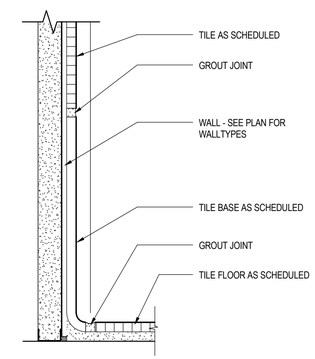

7 TILE BASE DETAIL
6" = 1'-0"

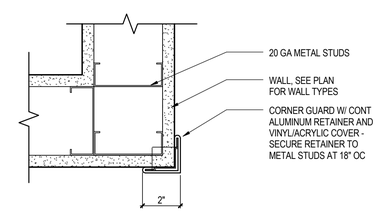

5 TYPICAL CORNER GUARD DETAIL (CG-1)
3" = 1'-0"

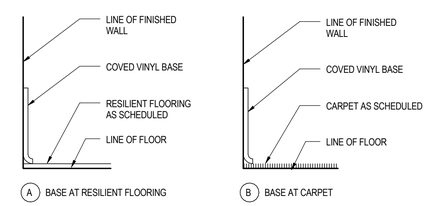

1 VINYL BASE DETAILS
3" = 1'-0"

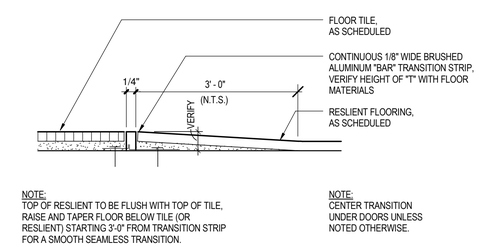

6 TILE TO RESLIENT FLOOR TRANSITION DETAIL
1:1

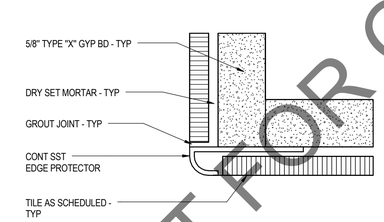

3 TYPICAL EDGE DETAIL AT CT CORNER
3" = 1'-0"

HDR

NOT FOR CONSTRUCTION

NO.	DATE	REVISION	BY

ORIGINAL PLANS PREPARED BY

HNTB
11414 W. PARK PLACE
MILWAUKEE, WI 53224
(414) 359-2300

PLANS PREPARED FOR

CITY OF MILWAULKEE
DEPARTMENT OF
PUBLIC WORKS

MILWAUKEE STREETCAR OPERATIONS
AND MAINTENANCE FACILITY

95% SUBMISSION | 29 FEB . 2016

DESIGNED BY AC | DESIGN CK'D Checker | DRAWN BY AC | PLANS CK'D Approver

FINISH SCHEDULE AND DETAILS

I001

NOT FOR CONSTRUCTION

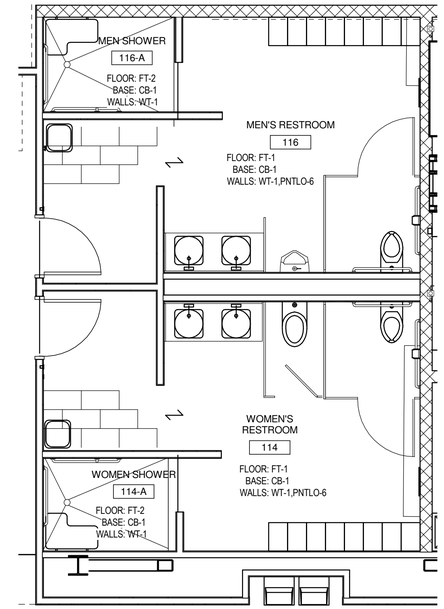

2 ENLARGED RESTROOM INTERIOR FINISH PLAN
1/4" = 1'-0"

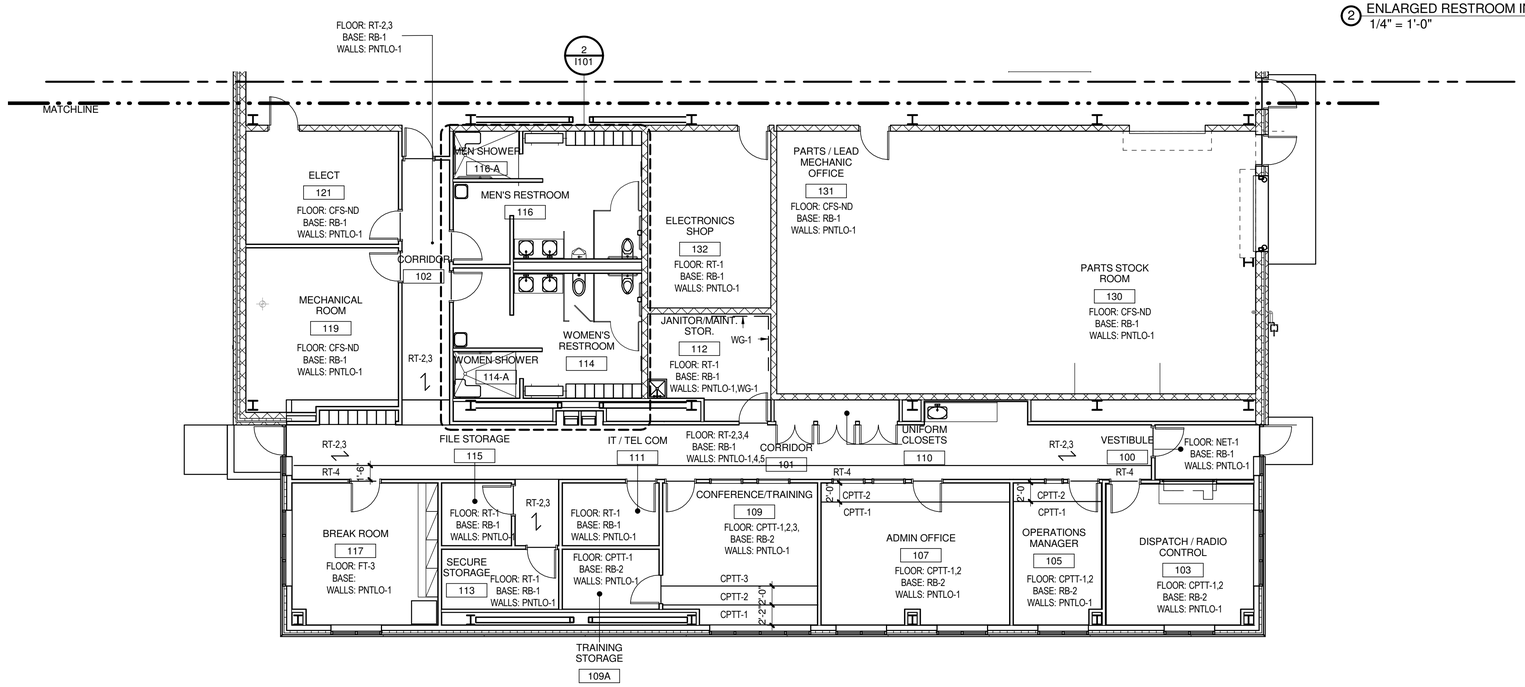

1 SHOP LEVEL INTERIOR FINISH PLAN SECTOR A
1/8" = 1'-0"

NOT FOR CONSTRUCTION

NO.	DATE	REVISION	BY

ORIGINAL PLANS PREPARED BY

HNTB
11414 W. PARK PLACE
MILWAUKEE, WI 53224
(414) 359-2300

PLANS PREPARED FOR

CITY OF MILWAULKEE
DEPARTMENT OF
PUBLIC WORKS

MILWAUKEE STREETCAR OPERATIONS
AND MAINTENANCE FACILITY

95% SUBMISSION | 29 FEB . 2016

DESIGNED BY AC | DESIGN CK'D Checker | DRAWN BY AC | PLANS CK'D Approver

SHOP LEVEL FINISH PLAN SECTOR A

I101

NOT FOR CONSTRUCTION

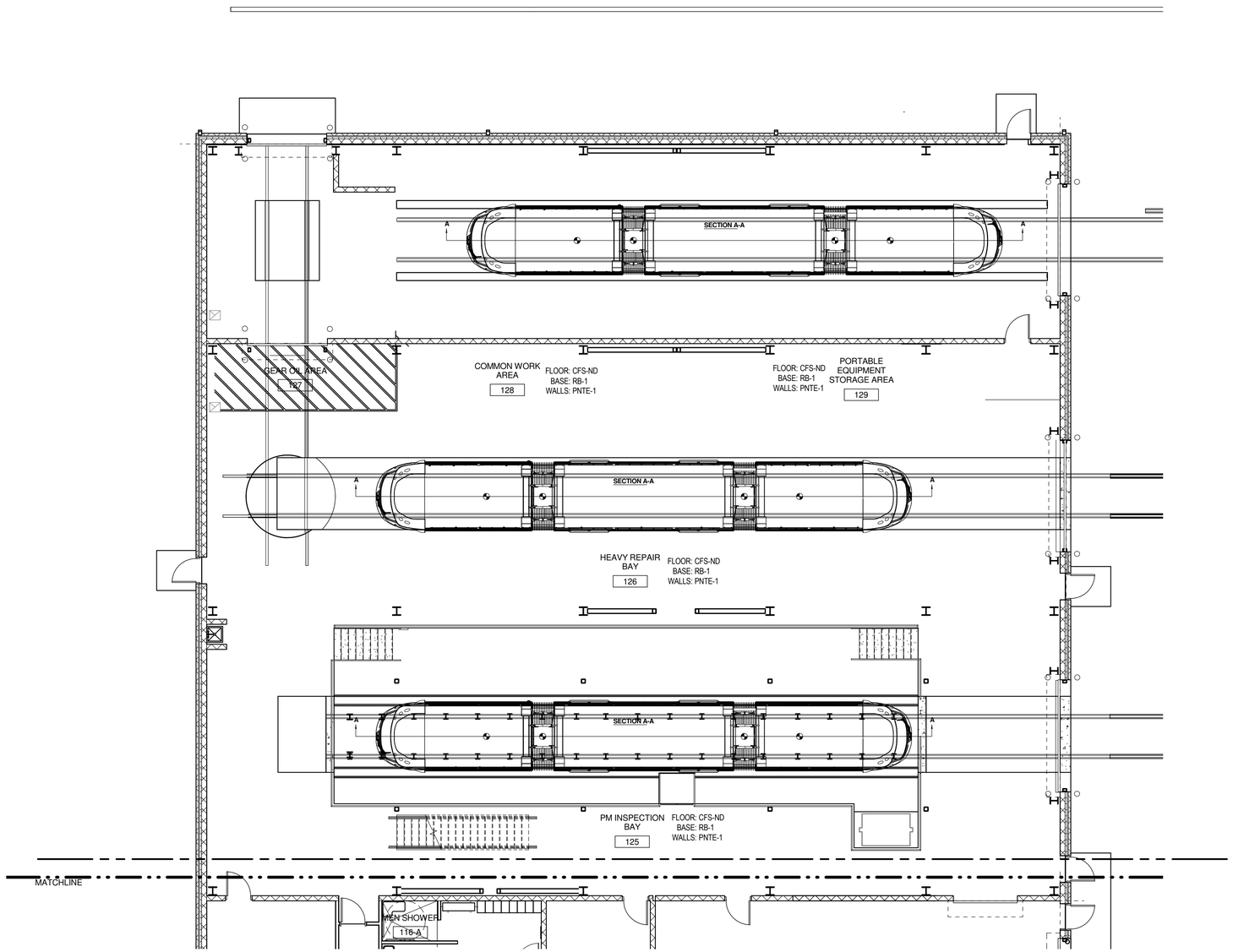

1 SHOP LEVEL INTERIOR FINISH PLAN SECTOR B
1/8" = 1'-0"

HDR

NOT FOR CONSTRUCTION

NO.	DATE	REVISION	BY

ORIGINAL PLANS PREPARED BY

HNTB
11414 W. PARK PLACE
MILWAUKEE, WI 53224
(414) 359-2300

PLANS PREPARED FOR

CITY OF MILWAULKEE
DEPARTMENT OF
PUBLIC WORKS

MILWAUKEE STREETCAR OPERATIONS
AND MAINTENANCE FACILITY

95% SUBMISSION | 29 FEB . 2016

DESIGNED BY AC | DESIGN CK'D Checker | DRAWN BY AC | PLANS CK'D Approver

SHOP LEVEL FINISH PLAN SECTOR B

I102

NOT FOR CONSTRUCTION

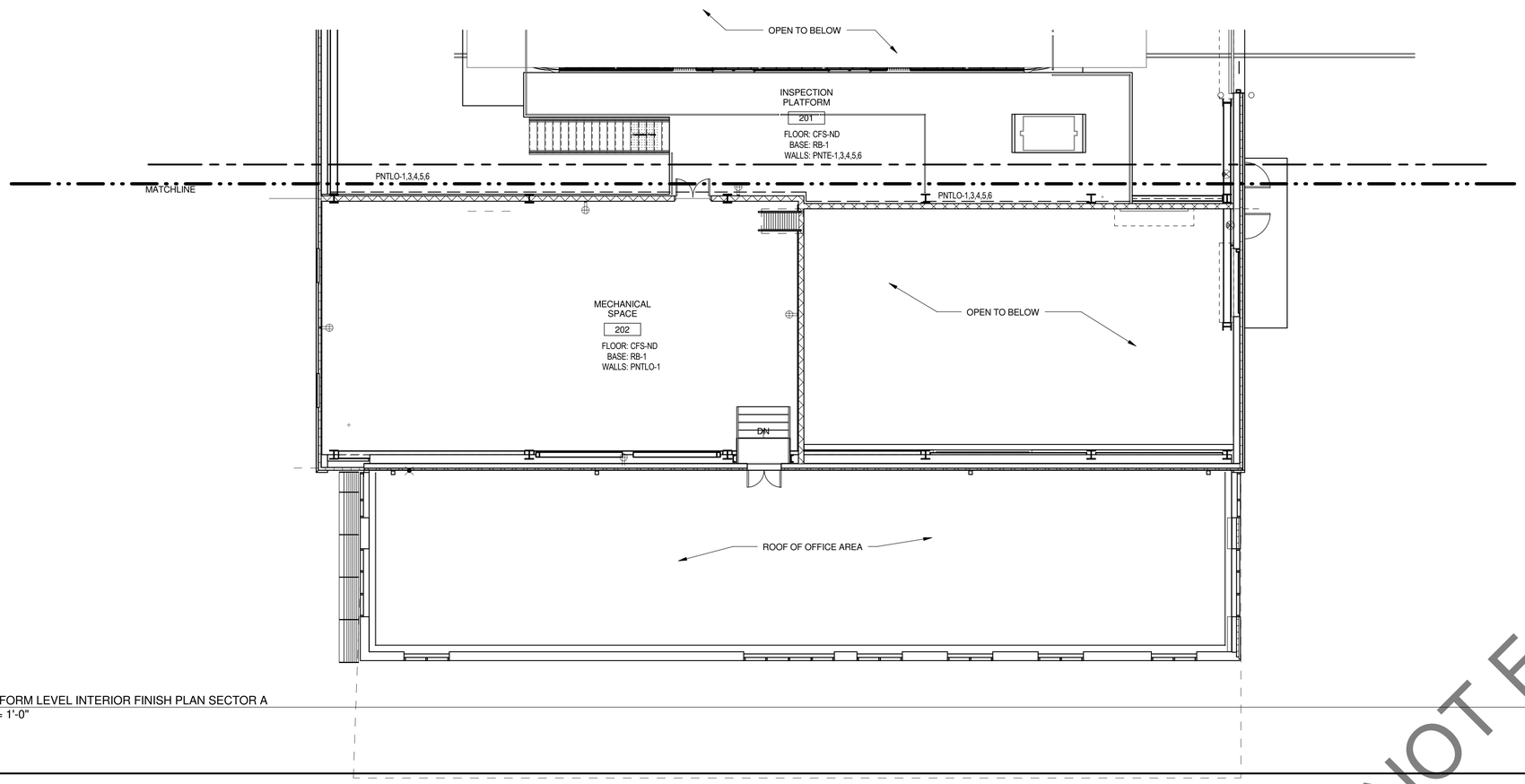

1 PLATFORM LEVEL INTERIOR FINISH PLAN SECTOR A
1/8" = 1'-0"

NOT FOR CONSTRUCTION

NO.	DATE	REVISION	BY

ORIGINAL PLANS PREPARED BY

HNTB
11414 W. PARK PLACE
MILWAUKEE, WI 53224
(414) 359-2300

PLANS PREPARED FOR

CITY OF MILWAUKEE
DEPARTMENT OF
PUBLIC WORKS

MILWAUKEE STREETCAR OPERATIONS
AND MAINTENANCE FACILITY

95% SUBMISSION | 29 FEB . 2016

DESIGNED BY	AC	DESIGN CK'D	Checker	DRAWN BY	AC	PLANS CK'D	Approver

PLATFORM LEVEL FINISH PLAN SECTOR A

I103

NOT FOR CONSTRUCTION

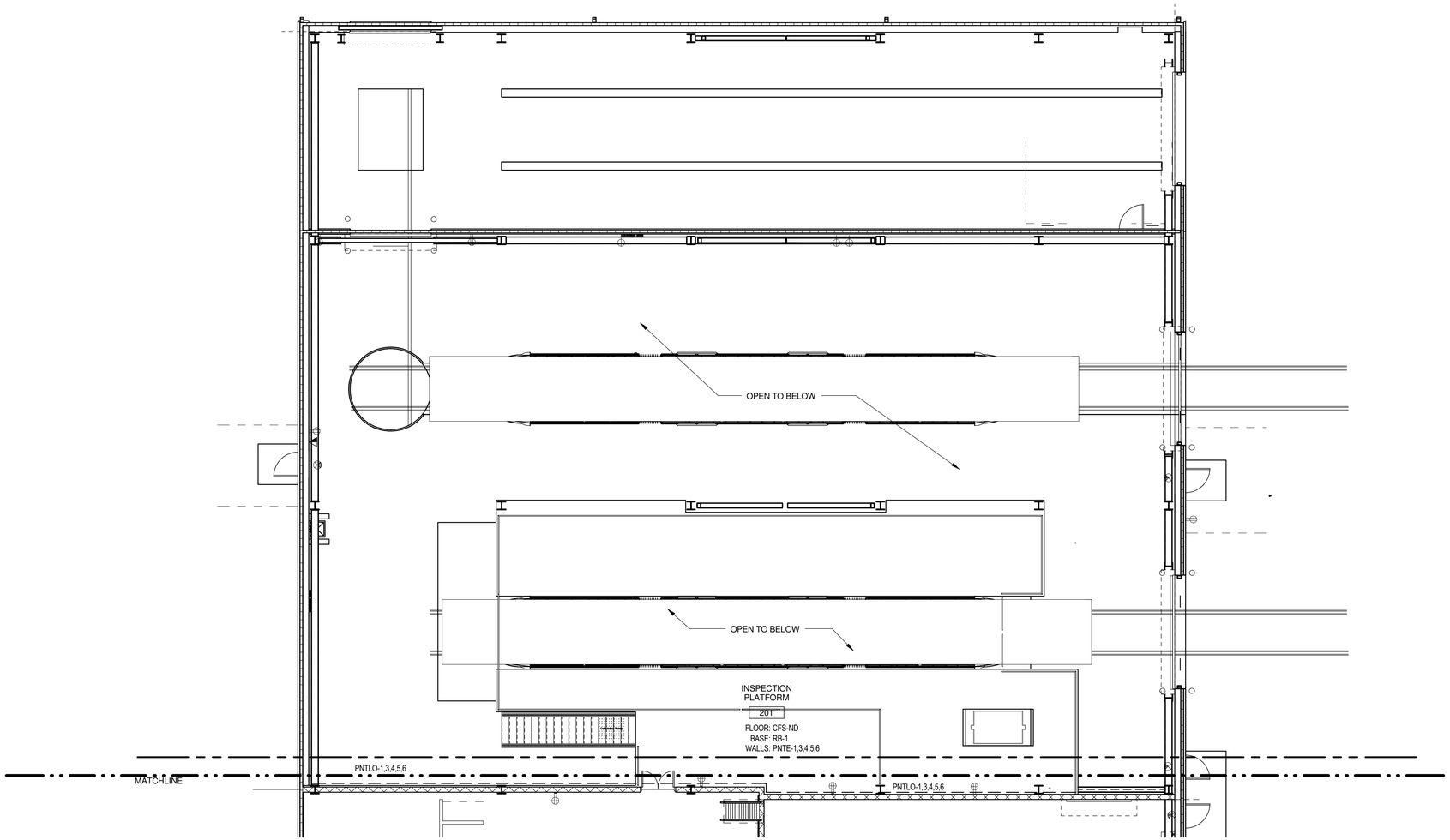

1 PLATFORM LEVEL INTERIOR FINISH PLAN SECTOR B
1/8" = 1'-0"

NOT FOR CONSTRUCTION

NO.	DATE	REVISION	BY

ORIGINAL PLANS PREPARED BY

HNTB
11414 W. PARK PLACE
MILWAUKEE, WI 53224
(414) 359-2300

PLANS PREPARED FOR

CITY OF MILWAUKEE
DEPARTMENT OF
PUBLIC WORKS

MILWAUKEE STREETCAR OPERATIONS
AND MAINTENANCE FACILITY

95% SUBMISSION | 29 FEB . 2016

DESIGNED BY AC | DESIGN CK'D Checker | DRAWN BY AC | PLANS CK'D Approver

PLATFORM LEVEL
FINISH PLAN
SECTOR B

I104

NOT FOR CONSTRUCTION

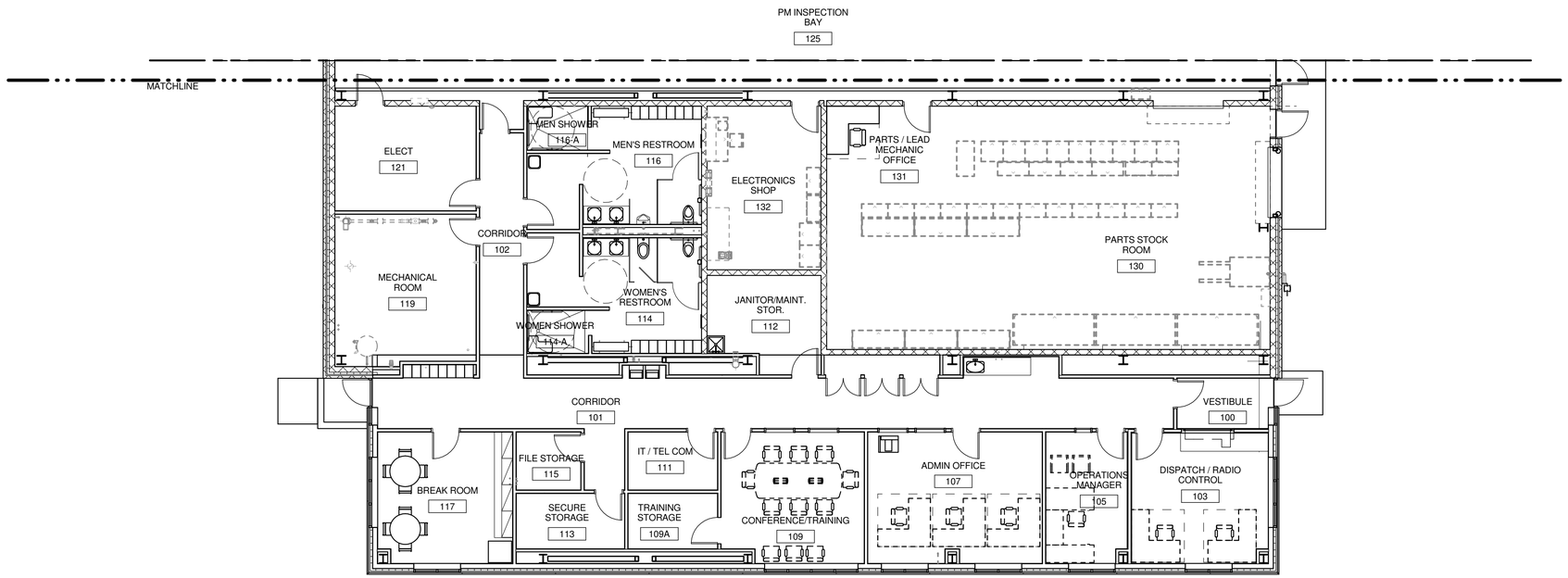

1 SHOP LEVEL FURNITURE PLAN SECTOR A
1/8" = 1'-0"

HDR

NOT FOR CONSTRUCTION

NO.	DATE	REVISION	BY

ORIGINAL PLANS PREPARED BY

HNTB
11414 W. PARK PLACE
MILWAUKEE, WI 53224
(414) 359-2300

PLANS PREPARED FOR

CITY OF MILWAULKEE
DEPARTMENT OF
PUBLIC WORKS

MILWAUKEE STREETCAR OPERATIONS
AND MAINTENANCE FACILITY

95% SUBMISSION | 29 FEB . 2016

DESIGNED BY AC | DESIGN CK'D Checker | DRAWN BY AC | PLANS CK'D Approver

SHOP LEVEL FURNITURE PLAN SECTOR A

IF101

NOT FOR CONSTRUCTION

A. GENERAL STRUCTURAL NOTES:

1. ALL WORK SHALL BE PERFORMED IN STRICT COMPLIANCE WITH APPLICABLE FEDERAL, STATE, AND LOCAL CODES AND REGULATIONS.

2. THESE STRUCTURAL CONTRACT DRAWINGS SHALL BE USED IN CONJUNCTION WITH THE PROJECT ARCHITECTURAL, MECHANICAL, AND ELECTRICAL DRAWINGS FOR LOCATION AND SIZE OF PIPES, BLOCK OUTS, EQUIPMENT, DIMENSIONS, OPENINGS IN WALLS, ROOF AND FLOOR SYSTEMS, ETC. THAT ARE NOT INCLUDED IN THIS STRUCTURAL DRAWING SET.

3. CONTRACTOR SHALL VERIFY THE SIZES, LOCATIONS, ELEVATIONS, AND DETAILS OF THE EXISTING CONDITIONS THAT AFFECT THE WORK AND INFORM THE OWNER AND ENGINEER OF ANY DISCREPANCIES IN DIMENSIONS, SIZES, LOCATIONS, AND CONDITIONS BEFORE PROCEEDING WITH THE WORK.

4. THESE STRUCTURAL CONTRACT DRAWINGS DELINEATE THE REQUIREMENTS FOR A STABLE STRUCTURE ONLY WHEN THE PROJECT IS COMPLETED. PROJECT COMPLETION IS ONLY WHEN ALL BRACING, CONNECTIONS, AND STRUCTURAL COMPONENTS ARE IN PLACE, ALL MATERIAL DESIGN STRENGTHS HAVE BEEN ACHIEVED, AGENCY APPROVALS HAVE BEEN OBTAINED, COMPLETE AND SATISFACTORY MATERIAL AND PROJECT TESTING IS COMPLETE, AND THE OWNER HAS PROVIDED WRITTEN ACCEPTANCE OF THE PROJECT.

5. THE CONTRACTOR IS SOLELY RESPONSIBLE FOR ALL TEMPORARY SUPPORTS AND BRACING, AND SHALL MAINTAIN THE INTEGRITY AND STABILITY OF EXISTING AND NEW CONSTRUCTION FOR THE DURATION OF ALL CONSTRUCTION UNTIL PROJECT COMPLETION IS ACHIEVED. PROVIDE SHORING, BRACING, UNDERPINNING AND ANY OTHER MEANS REQUIRED TO PROTECT THE SAFETY, INTEGRITY, AND STABILITY OF ALL NEW AND EXISTING CONSTRUCTION.

6. THE CONTRACTOR SHALL FAMILIARIZE HIMSELF WITH THE EXISTING CONDITIONS AT THE SITE INCLUDING UTILITIES, SERVICES, ETC., AND SHALL BE RESPONSIBLE FOR ANY DAMAGE TO THE PROPERTY, NEW AND EXISTING CONSTRUCTION, AND FOR UNAUTHORIZED DISRUPTIONS TO THE OWNER'S OPERATION, UTILITIES, AND SERVICES.

7. EQUIPMENT INSTALLATION DETAILS, REQUIREMENTS, AND DIMENSIONS ARE SUBJECT TO CHANGE UNTIL EQUIPMENT IS PURCHASED AND FINAL APPROVED CERTIFIED SHOP DRAWINGS AND TEMPLATES ARE AVAILABLE. CONTRACTOR IS RESPONSIBLE FOR OBTAINING FINAL (I.E. APPROVED AND CERTIFIED) MANUFACTURERS' SHOP DRAWINGS FOR ALL EQUIPMENT AND SHALL INSTALL THE EQUIPMENT IN STRICT ACCORDANCE WITH THE MANUFACTURER'S WRITTEN REQUIREMENTS. THIS INCLUDES, BUT IS NOT LIMITED TO, FINAL ANCHOR ROD SIZE, SPACING, DETAILS, AND INSTALLATION, EQUIPMENT INSTALLATION METHODS AND REQUIREMENTS, PROPER LEVELING, GROUTING, AND ANCHORAGE, AND TEMPORARY SUPPORT AND PROTECTIVE MEASURES DURING CONSTRUCTION. CONTRACTOR IS RESPONSIBLE FOR PROVIDING ALL INCIDENTAL MATERIALS, TOOLS, AND SUPERVISION NECESSARY TO PROVIDE A COMPLETE AND CORRECT INSTALLATION THAT IS ABLE TO OBTAIN CERTIFICATION BY THE EQUIPMENT MANUFACTURER. DISCREPANCIES OR PROBLEMS SHALL BE REPORTED TO THE OWNER'S REPRESENTATIVE FOR DIRECTION BEFORE PROCEEDING WITH INSTALLATION OF ANY EQUIPMENT COMPONENTS. CONTRACTOR SHALL BE SOLELY RESPONSIBLE FOR CORRECTING NON-CONFORMING EQUIPMENT INSTALLATION.

8. THE CONTRACTOR SHALL CHECK AND COORDINATE SIZES AND LOCATIONS OF ALL BLOCK-OUTS, CONDUITS, PIPE SLEEVES, EMBEDDED ITEMS, ETC. WITH MECHANICAL AND ELECTRICAL CONTRACTORS. NOTIFY THE ENGINEER IMMEDIATELY OF ANY DISCREPANCIES OR CONFLICTS BETWEEN THESE TRADES AND THE DESIGN AND DETAILS INDICATED BY THESE DRAWINGS.

9. NO PIPES, CONDUITS, SLEEVES, ETC. SHALL PASS THROUGH FOUNDATIONS, BEAMS, COLUMNS, OR STRUCTURAL WALLS UNLESS CLEARLY INDICATED ON STRUCTURAL PLANS OR UNLESS WRITTEN AUTHORIZATION IS OBTAINED FROM THE ENGINEER.

10. TYPICAL DETAILS ARE SHOWN ON SHEETS GENERICALLY INDICATED SXXX. THE GENERAL DETAILS INCLUDED MAY OR MAY NOT BE CUT ON PLANS OR SECTIONS, BUT THESE GENERAL DETAILS ARE TO BE USED FOR THE APPLICABLE CONDITIONS NOTED.

11. DETAILS NOT SPECIFICALLY INDICATED SHALL BE SIMILAR TO DETAILS SHOWN FOR SIMILAR CONDITIONS.

12. VERIFY ALL DIMENSIONS AND ELEVATIONS WITH ARCHITECT'S PLANS.

13. CONSTRUCTION DISCOVERED TO BE NON-COMPLIANT WITH THE CONTRACT DOCUMENTS SHALL BE CORRECTED BY THE CONTRACTOR. PRIOR TO BEGINNING ANY REMEDIAL WORK OR FABRICATION THE CONTRACTOR SHALL SUBMIT REPAIR PROCEDURES, REPAIR DETAILS, SUPPORTING PRODUCT INFORMATION AND SUPPORTING CALCULATIONS FOR REVIEW. THE CONTRACTOR SHALL NOT BEGIN ANY REPAIRS UNTIL THEY RECEIVE WRITTEN APPROVAL.

B. APPLICABLE CODES AND STANDARDS:

1. THE FOLLOWING CODES WERE IN FORCE AS OF JULY 1, 2015 AND GOVERN THE WORK OF THIS PROJECT:

A. 2009 INTERNATIONAL BUILDING CODE (IBC) AS MODIFIED BY THE FOLLOWING:
- a. CITY OF MILWAUKEE CODE OF ORDINANCES (VOLUME 2: BUILDING AND ZONING CODE),
- b. THE WISCONSIN COMMERCIAL BUILDING CODE (ADMINISTRATIVE CODE SPS 361 & 362).

B. AMERICAN CONCRETE INSTITUTE (ACI)
- a. BUILDING CODE REQUIREMENTS FOR STRUCTURAL CONCRETE (ACI 318),
- b. GUIDE FOR CONRETE FLOOR AND SLAB CONSTRUCTION (ACI 302),
- c. RECOMMENDED PRACTICE FOR CONCRETE FORM WORKS (ACI 347),

C. AMERICAN INSTITUTE OF STEEL CONSTRUCTION (AISC)
- a. CODE OF STANDARD PRACTICE FOR STEEL BUILDINGS AND BRIDGES (AISC 303-05)
- b. SPECIFICATION FOR STRUCTURAL STEEL BUILDINGS (AISC 360-05)

D. AMERICAN SOCIETY OF CIVIL ENGINEERS (ASCE)
- a. MINIMUM DESIGN LOADS FOR BUILDINGS AND OTHER STRUCTURES (ASCE 7-05)

E. AMERICAN WELDING SOCIETY STANDARDS AND SPECIFICATIONS (AWS)

F. BUILDING CODE REQUIREMENTS FOR CONCRETE MASONRY (ACI 530)

G. OSHA CFR 29, PART 1910

H. RESEARCH COUNCIL ON STRUCTURAL CONNECTIONS (RCSC)
- a. SPECIFICATION FOR STRUCTURAL JOINTS USING ASTM A325 OR A490 BOLTS (2004)

I. SPECIFICATIONS, LOAD TABLES, AND WEIGHT TABLES FOR STEEL JOISTS (SJI)

J. SPECIFICATIONS FOR CONCRETE MASONRY CONSTRUCTION (ACI 530.1)

K. SPECIFICATIONS FOR CONCRETE MASONRY CONSTRUCTION (ACI 530.1)

L. STEEL DECK INSTITUTE DESIGN MANUAL FOR FLOOR DECKS AND ROOF DECKS (SDI)

M. WHEN THE PROVISIONS OF THE ABOVE CODES AND STANDARDS CONFLICT WITH THE IBC BUILDING CODE REGULATIONS OR WITH EACH OTHER, USE THE MOST STRINGENT OF THE REQUIREMENTS.

C. DESIGN CRITERIA:

1. THE FOLLOWING DESIGN LOADS AND CRITERIA APPLY TO ALL COMPONENTS OF THIS STRUCTURE UNLESS NOTED OTHERWISE.

OCCUPANCY CATEGORY	II
SNOW:	
GROUND SNOW LOAD (Pg)	30 PSF
FLAT-ROOF SNOW LOAD (P1)	25 PSF UNIFORM
DRIFT ON ROOF SNOW LOAD	57 PSF + 25 PSF BALANCE
ROOF SNOW LOAD UNDER GAPS BETWEEN BRIDGES	108 PSF x 6 FEET WIDE
IMPORTANCE FACTOR (I)	1.0
EXPOSURE FACTOR (CE)	1.0
THERMAL FACTOR (CT)	1.0
WIND:	
BASIC WIND SPEED (3 SEC. GUST)	90 MPH
IMPORTANCE FACTOR	1.0
EXPOSURE CATEGORY	B
INTERNAL PRESS COEFF.	±0.55
WIND PRESSURE ON COMPONENTS AND CLADDING	
WALLS	±15 PSF
ROOF ZONE 1	-23 PSF
ROOF ZONE 2	-34 PSF
ROOF ZONE 3	-34 PSF
SEISMIC:	
SPECTRAL RESPONSE (SS)	0.107
SPECTRAL RESPONSE (S1)	0.044
SEISMIC DESIGN CATEGORY	B
DESIGN SPECTRAL RESPONSE (SDS)	0.114
DESIGN SPECTRAL RESPONSE (SD1)	0.071
SITE CLASS	D
BASIC SEISMIC RESISTING SYSTEM	SYSTEM NOT DETAILED FOR SEISMIC
SEISMIC RESPONSE COEFFICIENT, C5	0.03
DESIGN BASE SHEAR (V)	35 KIPS
LATERAL FORCE RESISTING SYSTEM	ORDINARY MOMENT FRAME (N-S) BRACED FRAME (E-W)
RESPONSE MODIFIER (R)	3.0
DEFLECTION AMPLIFIER (CD)	3.0
ANALYSIS PROCEDURE	EQUIVALENT LATERAL FORCE PROCEDURE
LIVE LOADS:	
ROOF LIVE LOAD:	50 PSF
STAIRWAYS	100 PSF (UNREDUCED)
MAINTENANCE BAY (GENERAL)	150 PSF (UNREDUCED)
MAINTENANCE BAY (AT DOORWAYS)	AASHTO HS-20
MAINTENANCE PLATFORMS	150 PSF (UNREDUCED)
OFFICE	50 PSF + 15 PSF PARTITION
STORAGE	150 PSF
MECH/ELEC ROOMS	150 PSF + HEAVY EQUIPMENT
MONORAIL CRANE (INSPECTION BAY):	2 TON WITH 1.25 IMPACT FACTOR
OVERHEAD BRIDGE CRANE (HEAVY REPAIR BAY):	7.5 TON CMAA SERVICE CLASS B
STREET CAR LOADING:	SEE DIAGRAM TO THE RIGHT

2. THE STRUCTURE HAS BEEN DESIGNED FOR ADDITIONAL LOADS AS INDICATED ON THE DRAWINGS.

3. ASSUMED DESIGN TEMPERATURE DIFFERENTIAL FOR EXPOSED PORTIONS OF THE STRUCTURE SHALL BE ±70 DEGREES.

4. GUARDRAILS SHALL MEET REQUIREMENTS OF THE WISCONSIN COMMERCIAL CODE (IBC BUILDING CODE WITH AMENDMENTS).

D. EARTHWORK:

1. REFERENCE GEOTECHNICAL EXPLORATION REPORT PREPARED BY HNTB CORPORATION DATED JULY 2015. THE CONTRACTOR SHALL OBTAIN A COPY OF THIS REPORT AND REVIEW THE INFORMATION CONTAINED THEREIN AND APPLY ALL REQUIREMENTS FOR THIS WORK.

2. CONTINUOUS WALL FOOTINGS, ISOLATED SPREAD FOOTINGS FOR COLUMNS, AND MAT FOUNDATIONS HAVE BEEN DESIGNED TO BEAR ON COMPACTED ENGINEERED FILL CAPABLE OF SUPPORTING A 3,500 PSF NET ALLOWABLE BEARING PRESSURE.

3. FOOTINGS SHALL BEAR ON MINIMUM 3'-0" OF COMPACTED STRUCTURAL FILL, AND SLABS SHALL BEAR ON MINIMUM 2'-0" OF COMPACTED STRUCTURAL FILL, REFERENCE GEOTECHNICAL REPORT FOR DETAILS.

4. A TESTING LABORATORY SHALL BE RETAINED BY THE OWNER TO PERFORM SOIL COMPACTION INSPECTION AND TESTING, TO IDENTIFY EXISTING FILL AND SOFT MATERIALS TO BE REMOVED IN FOUNDATION OR SLAB AREAS, AND TO IDENTIFY PROPER BEARING STRATA BASED ON TESTING PROTOCOL IDENTIFIED BELOW AND ACTUAL FIELD OBSERVATIONS.

5. REMOVAL OF SURFICIAL TOPSOIL, SURFACE VEGETATION, AND ORGANIC MATTER IS REQUIRED IN AREAS THAT WILL RECEIVE FILL. THE ACTUAL REMOVAL DEPTHS SHALL BE DETERMINED BY THE GEOTECHNICAL ENGINEER BASED ON THE MATERIALS' ORGANIC CONTENT AND STABILITY AND NOT BASED SOLELY ON SOIL COLORATION.

6. PRIOR TO COMMENCING EARTHWORK OPERATIONS FOR THE PROPOSED NEW CONSTRUCTION, ANY REMNANTS OF EXISTING CONSTRUCTION THAT ARE IN THE NEW BUILDING SPACE SHALL BE REMOVED, INCLUDING ALL FOUNDATIONS, FLOOR SLABS, AND UTILITIES, REFERENCE GEOTECHNICAL REPORT FOR DETAILS.
- a. REMOVED MATERIAL SHALL BE PROPERLY DISPOSED OFF SITE WHERE THESE ITEMS CONFLICT WITH NEW CONSTRUCTION.
- b. ALL EXCAVATIONS SHALL BE BACKFILLED WITH COMPACTED STRUCTURAL FILL PER PROJECT SPECIFICATIONS.
- c. PREVIOUS STRUCTURE FOUNDATIONS AND BELOW GRADE FLOOR SLABS (IF ANY) MAY REMAIN IN-PLACE OUTSIDE THE PROPOSED NEW FOUNDATION AREAS AND BELOW GRADE PIT AREAS PROVIDED STEM WALLS ARE CUT OFF AT LEAST TWO FEET BELOW FINAL SUBGRADE AND FLOOR SLABS ARE BROKEN UP AND PERFORATED TO ALLOW WATER TO DRAIN THROUGH THE BELOW GRADE SLABS.
- d. A 12-INCH LAYER OF OPEN GRADED GRAVEL SHALL BE PLACED ON TOP OF THE PERFORATED SLABS THAT REMAIN IN PLACE TO FACILITATE DRAINAGE.
- e. IT SHOULD BE NOTED THAT ANY BELOW GRADE STRUCTURES THAT REMAIN IN-PLACE MAY CAUSE EXCAVATION DIFFICULTIES FOR FUTURE UTILITY INSTALLATION.
- f. IF DEEP FOUNDATIONS ARE PRESENT IN THE AREA OF NEW FOUNDATIONS, THE DEEP FOUNDATIONS SHALL BE CUT OFF AT LEAST 4 FEET BELOW THE BOTTOM OF NEW FOUNDATIONS.

7. AFTER OVEREXCAVATION AND PRIOR TO PLACING FILL, THE FLOOR SLAB SUBGRADE AND AREAS UNDER PAVING SHALL BE PROOFROLLED WITH A FULLY LOADED TANDEM AXLE DUMP TRUCK. ANY AREAS EXHIBITING PUMPING, EXCESSIVE YIELDING, OR DEFLECTION GREATER THAN 1 INCH SHALL BE REMOVED TO A SUITABLE BEARING GRADE AND REPLACED WITH STRUCTURAL COMPACTED FILL.

8. TESTING OF THE FOUNDATION AND FLOOR SLAB STRUCTURAL COMPACTED FILL SUBGRADE IS REQUIRED. THE SOIL AT THE BASE OF THE FOUNDATION OVEREXCAVATION SHALL HAVE AT LEAST A STIFF COMPARATIVE CONSISTENCY (AVERAGE UNCONFINED COMPRESSIVE STRENGTH OF AT LEAST 1.0 TON PER SQUARE FOOT) FOR COHESIVE SOIL AND AT LEAST A MEDIUM DENSE RELATIVE DENSITY (AVERAGE CORRECTED N-VALUE OF 10) FOR GRANULAR SOIL. THE SOIL AT THE BASE OF THE OVEREXCAVATION SHALL BE TESTED TO A MINIMUM DEPTH OF 5 FEET BELOW THE SURFACE BY THE GEOTECHNICAL ENGINEER OR REPRESENTATIVE.

9. ONCE CLEARING ACTIVITIES HAVE BEEN COMPLETED AND ALL REQUIRED CUTS HAVE BEEN MADE, THE EXPOSED SUB-GRADE SOILS SHALL BE SCARIFIED AND COMPACTED TO AT LEAST NINETY-TWO PERCENT (92%) OF THE SOILS MODIFIED PROCTOR (ASTM D-1557) MAXIMUM DRY DENSITY. THE SOIL SHALL BE COMPACTED AT A WATER CONTENT THAT IS WITHIN MINUS ONE TO PLUS 3 PERCENT OF OPTIMUM WATER CONTENT DETERMINED BY THE MODIFIED PROCTOR TEST.

10. FILL SHALL BE PLACED IN LIFTS NOT EXCEEDING 8 INCHES OF DEPTH, AND SHALL BE COMPACTED TO A MINIMUM OF 95 PERCENT OF THE MAXIMUM DRY DENSITY DETERMINED IN ACCORDANCE WITH ASTM D 1557, MODIFIED PROCTOR. IN AREAS SUPPORTING CONCRETE FLOOR SLABS, EXTERIOR CONCRETE WALKWAYS, CONCRETE STEPS THE FILL SOIL SHALL BE COMPACTED AT A WATER CONTENT THAT IS WITHIN MINUS TWO TO PLUS TWO PERCENT OF OPTIMUM WATER CONTENT.

11. MINIMUM FROST DEPTH ASSUMED IS 4'-0" BELOW THE LOWEST ADJACENT GRADES. DEEPEN FOOTINGS AS REQUIRED TO PROVIDE THIS MINIMUM BOTTOM OF FOOTING.

12. AT STEPPED FOOTINGS, THE LOWER FOOTING SHALL BE PLACED FIRST.

13. HEAVY COMPACTION EQUIPMENT SHALL NOT BE USED WITHIN FIVE FEET OF WALLS TO AVOID CREATING EXCESSIVE LATERAL EARTH PRESSURES.

14. LATERAL EARTH PRESSURES USED FOR DESIGN ARE AS FOLLOWS:
- a. ACTIVE PRESSURE = 40 PCF
- b. AT REST PRESSURE = 50 PCF
- c. PASSIVE PRESSURE IN COMPACTED GRANULAR SOIL = 375 PCF (UPPER 1'-0" OF SOIL FROM GRADE IS DISCOUNTED)
- d. ALLOWABLE COEFFICIENT OF SLIDING RESISTANCE BETWEEN CONCRETE AND SOIL = 0.35

15. FOUNDATION WALL BACKFILL SHALL NOT BE UNBALANCED BY MORE THAN TWO (2) FEET ON EITHER SIDE AT ANY TIME. BASEMENT WALL AND RETAINING WALL BACKFILL SHALL NOT BE PLACED BEFORE THE INTERIOR FLOOR SLAB IS PLACED, UNLESS THE WALL IS ADEQUATELY BRACED. PIT WALL BACKFILL MATERIAL SHALL BE FREE DRAINING GRANULAR FILL ACCEPTABLE TO THE GEOTECHNICAL ENGINEER.

16. WALL DRAINAGE SHALL BE INSTALLED TO REDUCE THE RISK OF WATER PRESSURE DEVELOPING BEHIND THE PIT WALLS. BACKFILL PLACED WITHIN 2 FEET OF THE BACK FACE OF THE WALL SHOULD CONSIST OF DRAINAGE FILL. WITHIN A ZONE DEFINED BY A 30 DEGREE ANGLE WITH THE VERTICAL, EXTENDING UP FROM THE BASE OF THE WALL, THE REMAINING BACKFILL SHOULD CONSIST OF GRANULAR ON-SITE FILL. IF THE FINES CONTENT (MATERIAL PASSING THE NO. 200 SIEVE SIZE) OF THE GRANULAR ON-SITE FILL EXCEEDS 10 PERCENT, AS MAY BE THE CASE TO FACILITATE MATERIAL RE-USE ON SITE, A SUITABLE NON-WOVEN GEOTEXTILE FILTER FABRIC SUCH AS MIRAFI 140N SHALL BE PROVIDED BETWEEN THE GRANULAR ON-SITE FILL AND DRAINAGE FILL.

17. THE WALL DRAIN SHALL CONSIST OF PERFORATED DRAIN PIPE, MINIMUM 4 INCH DIAMETER, INSTALLED AT THE TOP OF THE FOUNDATION. THE PIPES SHALL BE SLOPED TO DRAIN AND DISCHARGE INTO THE STORM SEWER SYSTEM.

18. COURSE GRAINED MATERIAL, WITH A GRAIN SIZE DISTRIBUTION COMPATIBLE WITH THE DRAIN PIPE SLOTS OR PERFORATIONS AND THE SURROUNDING SOIL TO BE RETAINED SHALL BE PLACED DIRECTLY AGAINST THE PIPES, SURROUNDING THE PIPES FOR A MINIMUM OF 6 INCHES ON ALL SIDES OF THE PIPE. THE COURSE GRAINED MATERIAL AND DRAIN PIPE SHALL BE WRAPPED IN NON-WOVEN GEOTEXTILE, SUCH AS MIRAFI 140N, TO REDUCE THE RISK OF SOIL FINES MIGRATING INTO THE DRAINAGE SYSTEM.

19. PIT WALLS SHALL USE GRANULAR BACKFILL AT THE TOP OF THE WALL.

E. CAST IN PLACE CONCRETE:

1. CONCRETE USED IN THE WORK SHALL HAVE THE FOLLOWING MINIMUM COMPRESSIVE STRENGTH AT 28 DAYS:

a. MAINTENANCE BAY AREA	
i. SLAB ON GRADE	5,000 PSI
ii. INSPECTION PIT AND WALLS	5,000 PSI
iii. EXTERIOR PAVING	5,000 PSI
b. MAINTENANCE BAY INSPECTION PLATFORMS	4,500 PSI
c. ALL OTHER CONCRETE	4,500 PSI

2. AGGREGATES IN FOOTINGS, WALLS, SLABS EXPOSED TO WEATHER, AND EXTERIOR EXPOSED CONCRETES SHALL NOT CONTAIN ANY MATERIALS THAT ARE DELETERIOUSLY REACTIVE WITH THE ALKALIS IN THE CEMENT IN AN AMOUNT SUFFICIENT TO CAUSE EXCESSIVE EXPANSION OF MORTAR OR CONCRETE.

3. INTERIOR GRADE SLABS SHALL BE PLACED ON 2-0" MINIMUM OF COMPACTED ENGINEERED FILL THAT IS COVERED BY A 15 MIL VAPOR BARRIER. ENGINEERED FILL SHALL BE CONTINUOUS UNDER THICKENED SLABS.

4. NO ALUMINUM SHALL BE PLACED IN CONCRETE.

5. CONTROL JOINTS IN SLABS ON GRADE SHALL BE PLACED AS SHOWN ON PLANS. WHERE NOT SHOWN, JOINTS SHALL BE SPACED TO DIVIDE THE SLAB INTO PANELS NOT TO EXCEED 250 SQUARE FEET. THE LONGER DIMENSION OF EACH PANEL SHALL NOT EXCEED THE SHORTER DIMENSION BY MORE THAN 20%. JOINTS SHALL BE HAND TOOLED, CAST IN, OR SAW CUT USING A SOFT SAW.

6. PLACE SLAB ON GRADE CONSTRUCTION JOINTS AT LOCATIONS SHOWN ON PLAN. INDIVIDUAL SLAB POURS SHALL BE BOUNDED BY DESIGNATED CONSTRUCTION JOINTS AND SHALL NOT EXCEED 5,000 SQUARE FEET.

7. IN WALLS, THE HORIZONTAL LENGTH OF PLACEMENT SHALL NOT EXCEED 60 FEET (I.E. BETWEEN CONSTRUCTION/CONTROL JOINTS) WITH INTERMEDIATE CONTROL JOINTS SPACED AT 15'-0" CENTERS MAXIMUM FOR WALLS EXPOSED TO VIEW IN THE FINISHED WORK. INTERMEDIATE CONTROL JOINTS SHALL BE SPACED AT 30'-0" O.C. MAXIMUM FOR PIT AND FOUNDATION WALLS, UNLESS NOTED OTHERWISE.

8. WHERE CONSTRUCTION JOINTS ARE INDICATED BY A JAGGED LINE AT THE INTERFACE OF THE TWO POURS, THE INTERFACE SHALL BE ROUGHENED TO A FULL AMPLITUDE OF APPROXIMATELY 1/4". CONSTRUCTION JOINTS THAT ARE NOT SHOWN SHALL BE LOCATED BY THE CONTRACTOR AND APPROVED BY THE ENGINEER BEFORE THE CONCRETE IS POURED IN PLACE.

9. ALL EXPOSED CORNERS SHALL HAVE 3/4" CHAMFER, UNLESS NOTED OTHERWISE.

10. NO CALCIUM CHLORIDE SHALL BE USED IN CONCRETE.

11. MAINTENANCE BAY FLOOR SLABS AND ALL EXTERIOR CONCRETE SHALL HAVE 5% TO 8% ENTRAINED AIR.

12. NO WATER SHALL BE ADDED AT THE PROJECT SITE WITHOUT THE ENGINEER'S PERMISSION.

13. THE CONTRACTOR SHALL REJECT ANY CONCRETE THAT EXCEEDS THE SLUMP LIMITS, TOTAL ALLOWABLE MIXING TIME OR THE ALLOWABLE RANGE OF AIR-ENTRAINMENT NOTED IN THE SPECIFICATION.

14. FOUNDATION CONTRACTOR SHALL COORDINATE EMBEDS AND ANCHORAGES FOR OTHER WORK TO BE ATTACHED OR ANCHORED TO CAST IN PLACE FOUNDATIONS WITH APPROPRIATE CONTRACTORS.

15. WHERE NEW CONCRETE IS DEPOSITED AGAINST CONCRETE THAT IS GREATER THAN 28 DAYS OLD, ROUGHEN TO 1/4" AMPLITUDE, THOROUGHLY CLEAN EXISTING SURFACE OF LAITANCE AND FOREIGN MATERIAL, AND COAT WITH BONDING AGENT. ALL STANDING WATER SHALL BE REMOVED PRIOR TO PLACEMENT OF NEW CONCRETE.

16. CORING OF STRUCTURAL CONCRETE SLABS AND SLABS ON METAL DECK MAY BE PERMITTED FOR CORE DIAMETERS OF 4 INCHES OR LESS. SPACE CORES A MINIMUM OF 1'-6". ALL SUCH CORING WILL NOT BE PERMITTED UNLESS SPECIFICALLY REQUESTED BY CONTRACTOR AND APPROVED IN ADVANCE BY THE ENGINEER.

17. EVERY EFFORT SHALL BE EXERCISED TO AVOID CRACKS IN CONCRETE WORK. IN THE EVENT SHRINKAGE CRACKS, ETC. DO OCCUR, CRACKS OVER 0.06" SHALL BE REPAIRED BY MEANS OF A STRUCTURAL EPOXY GROUT. COST OF SUCH REPAIR IF REQUIRED SHALL BE BORNE BY THE CONTRACTOR.

18. ALL CONCRETE IS REINFORCED UNLESS SPECIFICALLY NOTED AS UNREINFORCED.

F. MASONRY:

1. MASONRY BLOCK CELLS MAY BE GROUTED USING LOW LIFT METHODS, CONFORMING TO THE REQUIREMENTS OF ACI 530. 1/ASCE 6/TMS 602, INCLUDING MINIMUM GROUT SPACE, CONSOLIDATION TECHNIQUES AND CLEAN OUTS, WITH A MAXIMUM POUR HEIGHT OF 60 INCHES, OR TABLE 7, THE LESSER OF THESE TWO VALUES.

2. MASONRY BLOCK CELLS MAY BE GROUTED USING HIGH LIFT METHODS, CONFORMING TO THE REQUIREMENTS OF ACI 530. 1/ASCE 6/TMS 602, INCLUDING MINIMUM GROUT SPACE, MASONRY ASSEMBLY ATTAINS STRENGTH TO SUPPORT THE GROUT, THE REQUIRED USE OF SELF CONSOLIDATING GROUT, NO INTERMEDIATE REINFORCED BOND BEAMS ARE PLACED WITHIN THE TOP AND BOTTOM OF THE POUR HEIGHT AND CLEAN OUTS, WITH A MAXIMUM POUR HEIGHT OF 152 INCHES (12'-8"), OR TABLE 7, THE LESSER OF THESE TWO VALUES.

3. PARTIALLY GROUTED OR UNGROUTED ASSEMBLIES SHALL BE CONSTRUCTED TO MEET OR EXCEED A 28 DAY COMPRESSIVE STRESS (FM) OF 1500 PSI (MIN) PER UNIT STRENGTH METHOD OF ACI 530.1/ASCE 6/TMS 602.

4. CONCRETE BLOCK SHALL MEET OR EXCEED ASTM C90 SPECIFICATIONS A 28 DAY COMPRESSIVE STRESS OF 2150 PSI (AVERAGE OF THREE UNITS) PER ASTM C90 (NET AREA).

5. MORTAR SHALL BE TYPE "N" FOR ALL MASONRY WALLS. GROUT CELLS BELOW GRADE SOLID AND USE "S" TYPE MORTAR.

6. GROUT MIX FOR MASONRY SHALL BE DESIGNED EMPLOYING ASTM C404 AGGREGATE AND SPECIFIED COMPRESSIVE STRENGTH PER ASTM C476 (COURSE) TO PROVIDE A MINIMUM 28 DAY STRENGTH OF 2000 PSI, IN ACCORDANCE WITH ASTM C 1019.

7. GROUT ALL BLOCK CORES CONTAINING VERTICAL BARS, HORIZONTAL BOND BEAMS AND/OR ANCHOR BOLTS.

8. PROVIDE STANDARD LADDER TYPE HORIZONTAL MASONRY REINFORCEMENT AT ALTERNATE COURSES (16" O.C.) TYPICAL ALL MASONRY WALLS, UNLESS NOTED OTHERWISE.

9. VERTICAL CONTROL JOINTS SHALL BE 3/8 INCH WIDE OR AS SPECIFIED ON THE DRAWINGS AND FULL HEIGHT OF WALL AT LOCATIONS SHOWN ON THE ARCHITECTURAL DRAWINGS. WHERE NOT OTHERWISE SHOWN, JOINTS SHALL BE SPACED AT A MAXIMUM OF 24'-0" APART, ONE JOINT SHALL BE PLACED AT A MAXIMUM OF 4'-0" FROM INTERIOR/EXTERIOR CORNER. OTHER JOINTS ARE GENERALLY LOCATED AT EDGES OF OPENINGS, AND COORDINATED WITH THE ARCHITECT. HORIZONTAL REINFORCEMENT AT TOPS OF WALLS, AND AT EACH FLOOR OR ROOF FRAMING LEVEL, SHALL BE CONTINUOUS ACROSS CONTROL JOINTS. OTHER REMAINING HORIZONTAL JOINT REINFORCING SHALL BE DISCONTINUOUS AT MASONRY CONTROL JOINTS.

10. CONCRETE BLOCK AND BRICK VENEER WALLS: PROVIDE JOINT REINFORCING IN CMU WALLS WITH "HOOK AND EYE" TIES TO THE BRICK VENEER AT 16" O.C. IN EACH DIRECTION.

11. SHORE ALL BOND BEAM MASONRY LINTELS UNTIL GROUT HAS REACHED THE MINIMUM SPECIFIED 28 DAY STRENGTH.

12. REINFORCING BAR POSITIONERS SHALL BE COMMERCIAL, POSITIONERS THAT PREVENT DISPLACEMENT OF THE REINFORCING BARS DURING CONSTRUCTION, INSTALLED AT INTERVALS NOT TO EXCEED 8 FEET.

13. ALL REINFORCEMENT WITHIN THE MASONRY WALL SYSTEM SHALL HAVE THE FOLLOWING DEVELOPMENT STRENGTHS, UNLESS NOTED OTHERWISE:

G. REINFORCING STEEL:

1. REINFORCING STEEL SHALL BE IN ACCORDANCE WITH ASTM A615 SPECIFICATIONS, GRADE 60.

2. REINFORCING STEEL BE DETAILED ACCORDING TO THE ACI DETAILING MANUAL, AND UNDER THE SUPERVISION OF A LICENSED PROFESSIONAL ENGINEER REGISTERED IN THE STATE OF WISCONSIN.

3. ALL CONTINUOUS REINFORCING SHALL BE LAP SPLICED WITH A CLASS "B" TENSION LAP.

4. FOR ALL VERTICAL BARS PROVIDE MATCHING DOWELS IN FOUNDATION WITH STANDARD HOOKS (PER ACI) AND LAP A MINIMUM CLASS "B" TENSION LAP SLICE WITH THOSE VERTICAL BARS, UNLESS SPECIFICALLY SHOWN OTHERWISE.

5. LAP BARS AND SPLICE BARS ONLY AT LOCATIONS SHOWN ON THE DRAWINGS, OR AS APPROVED IN ADVANCE BY THE ENGINEER,

6. WELDED WIRE FABRIC REINFORCED SHALL BE IN ACCORDANCE WITH ASTM A185. FLAT SHEETS ONLY. LAP ENDS AND EDGES OF SHEET MINIMUM OF 6 INCHES. ALL REINFORCEMENT IN TOPPING SLABS SHALL BE EPOXY COATED.

7. SLABS ON GRADE AND CONCRETE SLABS ON METAL DECK SHALL BE REINFORCED AS INDICATED IN DOCUMENTS.

8. AT ALL INTERIOR SLAB CORNERS, UNLESS SUCH CORNER IS RELIEVED BY A CONSTRUCTION JOINT, TWO #5 X 6'-0" SHALL BE PLACED DIAGONALLY AT THE MID-DEPTH OF THE SLAB.

9. FIELD WELDING, CUTTING OR BENDING OF REINFORCEMENT SHALL NOT BE ALLOWED UNLESS NOTED OTHERWISE OR UNLESS PRIOR APPROVAL IS OBTAINED FROM THE ENGINEER.

10. COLUMN DOWELS AND ANCHOR RODS SHALL BE ACCURATELY LOCATED, SET WITH TEMPLATES, AND SHALL BE PROTECTED FROM CONSTRUCTION ACTIVITY UNTIL THE STRUCTURE ABOVE IS IN PLACE. INSERTING DOWELS OR ANCHORS INTO PARTIALLY HARDENED CONCRETE IS PROHIBITED.

11. PROVIDE CORNER BARS TO LAP WITH AND TO MATCH SIZE AND SPACING OF ALL HORIZONTAL BARS (INCLUDING, BUT NOT LIMITED TO: WALLS, BEAMS, GRADE BEAMS, BOND BEAMS, FOOTINGS, ETC.) UNLESS OTHERWISE NOTED.

12. PROVIDE 3 INCH SBP (CONT. BOTTOM PLATE) AT 48 INCH MAXIMUM CENTERS FOR POSITIONING ALL FOOTING BARS AND GRADE BEAM BOTTOM BARS, UNLESS OTHERWISE NOTED.

13. COVER ON REINFORCING SHALL BE AS FOLLOWS, UNLESS OTHERWISE NOTED ON DRAWINGS. REINFORCEMENT SHALL BE ASSUMED EXPOSED TO WEATHER IN ALL CASES.

3"	PLACED DIRECTLY AGAINST EARTH.
2"	CONCRETE CAST AGAINST FORMS TO BE EXPOSED TO EARTH OR WEATHER.
2"	CLEAR TO TOP REINFORCEMENT FOR ELEMENTS EXPOSED TO WEATHER.
2"	BEAMS, COLUMNS, AND PILASTERS (TO TIES OR STIRRUPS)
1-1/2"	COLUMNS AND PILASTERS (TO TIES)
1-1/2"	WALLS.
1"	CLEAR TO BOTTOM REINFORCEMENT FOR FORMED SLABS.

14. FAN MAIN REINFORCING AROUND OPENINGS IN STRUCTURAL SLABS. DO NOT FIELD CUT BARS UNLESS ENGINEER APPROVES THIS METHOD.

15. PROVIDE ADEQUATE BAR SUPPORTS FOR ALL REINFORCEMENT IN BEAMS, SLABS ON GRADE, SLABS ON FORM DECK, CAPS, ETC., TO MAINTAIN PROPER BAR OR MESH POSITION DURING PLACEMENT OF CONCRETE.

16. PROVIDE 2 TONS OF ADDITIONAL REINFORCEMENT, OVER AND ABOVE REQUIREMENTS SHOWN ON PLANS OR CONTAINED IN SPECIFICATIONS. THIS EXTRA REINFORCEMENT SHALL BE INSTALLED DURING THE COURSE OF CONSTRUCTION AT LOCATIONS AND IN FABRICATED SHAPES AND SIZES AS DIRECTED BY THE ENGINEER.

17. IF CONCRETE REINFORCEMENT IS NOT INDICATED BY STAIR FABRICATOR CONCRETE FILL AT THE STAIR LANDINGS SHALL BE REINFORCED AS INDICATED FOR CONCRETE SLABS ON METAL DECK. CONCRETE FILL IN STAIR PANS SHALL BE REINFORCED WITH FIBERS AS INDICATED IN SPECIFICATIONS. IF FIBER REINFORCING IS NOT INDICATED IN SPECIFICATIONS REINFORCE STAIRS PANS WITH 6X6-W1.4XW1.4WWF.

STREETCAR LOADING:

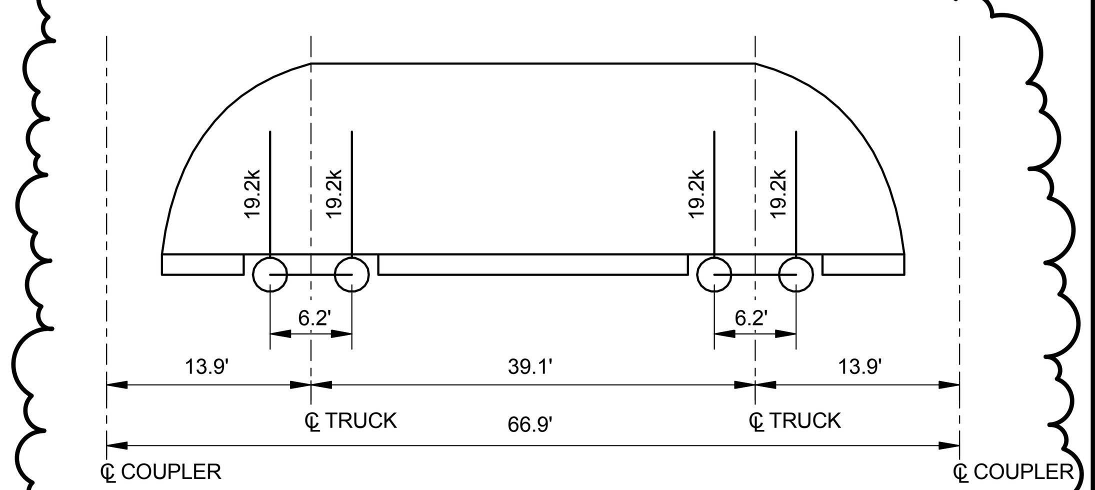

ASSUMED STREETCAR AW0 (DEAD WEIGHT) LOADING

NOTE:

1. 19.2k = 19,200 lbs PER AXLE.
2. FINAL WEIGHTS AND DIMENSIONS TO BE COORDINATED WITH RAIL CAR MANUFACTURER.

LOADS NOT FINAL

	INITIALS	DATE
DESIGNER		
CHECKER/ REVIEWER		
BACK CHECKER		
CORRECTOR		
VERIFIER		

HDR

NOT FOR CONSTRUCTION

NO.	DATE	REVISION	BY

ORIGINAL PLANS PREPARED BY

HNTB

11414 W. PARK PLACE
MILWAUKEE, WI 53224
(414) 359-2300

PLANS PREPARED FOR

CITY OF MILWAUKEE
DEPARTMENT OF
PUBLIC WORKS

MILWAUKEE STREETCAR

MAINTENANCE FACILITY

95% SUBMISSION — 29 FEB. 2016

DESIGNED BY	DESIGN CK'D	DRAWN BY	PLANS CK'D
JF	SMG	TH	MH

STRUCTURAL GENERAL NOTES

S001

NOT FOR CONSTRUCTION

H. ANCHORAGE TO CONCRETE AND MASONRY:

1. HEADED ANCHOR STUDS (HAS) SHALL BE MADE FROM COLD DRAWN STEEL GRADES C-1010 THROUGH C-1020 PER ASTM A-108 AND SHALL BE WELDED PER MANUFACTURER'S RECOMMENDATIONS. A MINIMUM OF TWENTY PERCENT OF THE STUDS SHALL BE TESTED BY BENDING PER AWS D.1.1.

2. HOLES FOR ADHESIVE ANCHORS OR EXPANSION ANCHORS SHALL BE DRILLED INTO CONCRETE OR MASONRY AND NOT CORED. IF REINFORCING IS ENCOUNTERED DURING DRILLING THE HOLE SHALL BE MOVED TO AVOID DAMAGING REINFORCING. UNLESS NOTED OTHERWISE, MINIMUM BOLT EMBEDMENT SHALL BE 2" LESS THAN THE LENGTH OF THE BOLT.

3. THREADED RODS SHALL BE F1554 GR A36 STEEL. FOLLOW ALL MANUFACTURER'S RECOMMENDATIONS INCLUDING THOSE FOR PROPER DRILL SIZE AND ANCHORS SHALL BE SLIGHTLY INCLINED TO ENCOURAGE FLOW OF ADHESIVE. ADHESIVE ANCHORS SHALL NOT BE USED FOR OVERHEAD CONDITIONS.

4. ALL INSERTS AND PLATES EMBEDDED IN CONCRETE OR MASONRY AND PERMANENTLY EXPOSED TO THE ELEMENTS, OR AS NOTED ON DRAWINGS TO BE GALVANIZED SHALL BE HOT-DIPPED GALVANIZED AFTER FABRICATION, UNLESS NOTED OTHERWISE.

5. ALL ITEMS NOTED TO BE GALVANIZED SHALL MEET ASTM A 525 G90 OR SHALL BE ELECTROPLATED AND MEET ASTM B633 SC-3. STAINLESS STEEL ITEMS SHALL MEET ASTM A304.

6. ALL GALVANIZED ITEMS THAT ARE FIELD WELDED OR SCRATCHED SHALL BE CLEANED AND THOROUGHLY COATED WITH 2 COATS OF "BRUSH ON" ZINC ENRICHED PAINT AFTER THE CONNECTIONS ARE COMPLETED.

I. STRUCTURAL STEEL:

1. IT IS THE INTENT OF THOSE DOCUMENTS TO SHOW THE DESIGN OF THE STEEL STRUCTURE AND THEIR CONNECTIONS. CONNECTION DESIGN IS EITHER SHOWN IN SPECIFIC DETAILS, IT IS TO BE SELECTED BY THE FABRICATOR FROM TABLES IN THESE DOCUMENTS OR DESIGNED BY THE FABRICATOR'S WISCONSIN P.E. IF THE TABLES OR DRAWINGS DO NOT SHOW ENOUGH INFORMATION. WHERE THE FABRICATOR FEELS A SPECIFIC CONNECTION IS NOT SHOWN OR IS UNCLEAR, A SIMILAR CONNECTION TYPE SHALL BE ASSUMED FOR BIDDING, BUT THAT CONNECTION SHALL BE BROUGHT TO THE ATTENTION OF THE ENGINEER FOR REVIEW PRIOR TO DETAILING THE SHOP DRAWINGS.

2. CONNECTION SHALL BE DESIGNED BY FABRICATOR'S ENGINEER FOR AXIAL FORCE OR TRANSFER FORCE, IN CONJUNCTION WITH VERTICAL REACTION, WHERE SHOWN ON DRAWINGS OR NOTED. AND SHALL BE SYMETRICAL ABOUT ALL THE CENTERLINES OF THE BEAM OR COLUMN.

3. ALL REPORTED LOADS ARE ALLOWABLE STRENGTH DESIGN (ASD) FACTORED LOADS INLESS NOTED OTHERWISE.

A. SHEAR CONNECTIONS: 15k INDICATES SHEAR IN KIPS THAT MUST BE RESISTED AT DESIGNATED END OF FRAMING MEMBER. WHERE SHEAR IS NOT INDICATED SIZE BEAM CONNECTION TO SUPPORT ONE-HALF OF TOTAL UNIFORM LOAD CAPACITY TABULATED IN AISC TABLES FOR UNIFORM LOAD CONSTRAINTS FOR BEAMS LATERALLY SUPPORTED FOR GIVEN SHAPE, SPAN AND STEEL MATERIAL SPECIFIED OR 50% OF THE SHEAR STRENGTH OF THE MEMBER WHICH EVER IS GREATER. CONNECTIONS SHALL ALSO BE DESIGNED TO RESIST AXIAL TRANSFER FORCES WHERE SHOWN OR SPECIFIED. IN NO CASE SHALL CONNECTIONS BE LESS THAN THE MINIMUM SPECIFIED IN NOTE 2.

B. MOMENT CONNECTIONS:

1-K / 120 INDICATES MOMENT IN FOOT-KIPS THAT MUST BE RESISTED BY MOMENT CONECTIONS AT EACH END OF FRAMING MEMBER DESIGNATED OR AT END DESIGNATED BY ARROW.

C. DIAGONAL BRACING AXIAL FORCES: (__k) INDICATES AXIAL TENSION OR COMPRESSION FORCE TO BE RESISTED. WHERE FORCE IS NOT INDICATED ON THE DRAWINGS, DESIGN CONNECTION TO RESIST FULL STRENGTH OF BRACING MEMBER IN TENSION.

D. BEAM AXIAL FORCES: (__k) INDICATES AXIAL TENSION OR COMPRESSION FORCE TO BE RESISTED AT EACH END OF FRAMING MEMBER IN COMBINATION WITH REQUIRED VERTICALSHEAR FORCES.

E. WHERE FORCES ARE NOT SHOWN BEAM TO COLUMN CONNECTIONS SHALL DEVELOP A MINIMUM OF 10 KIPS AXIAL TENSION FORCE. BEAM TO COLUMN CONNECTIONS SHALL HAVE 1/2" MINIMUM THICKNESS WEB CLIP ANGLES OR END PLATES. ECCENTRIC CONNECTIONS ON MEMBERS CARRYING DIRECT STRESS ARE NOT PERMITTED.

F. TRANSFER FORCES (TF) ACT IN THE DIRECTION INDICATED AND MAY BE EITHER TENSION OR COMPRESSION UNLESS OTHERWISE NOTED. DESIGN CONNECTIONS FOR TRANSFER FORCE PLUS REQUIRED BEAM REACTION. TRANSFER FORCE IS DEFINED AS THE FORCE THAT MUST BE TRANSFERED ACROSS AN INTERCEPTING MEMBER TO THE MEMBER ON THE OTHER SIDE.

4. ALL STRUCTURAL STEEL SHALL MEET ASTM A992, GRADE 50, EXCEPT ANGLES AND PLATES SHALL MEET ASTM A36, UNLESS NOTED OTHERWISE. STRUCTURAL TUBING SHALL MEET ASTM A500, GRADE B FY= 46 KSI. STRUCTURAL PIPE SHALL MEET ASTM A501 OR ASTM 53, TYPE E OR S, GRADE B. STAINLESS STEEL SHALL MEET ASTM A276, TYPE 304, CLASS A.

5. ALL BOLTED BEAM AND COLUMN CONNECTIONS SHALL BE MADE WITH A325 BOLTS AND ACCESSORIES, AND ASSUMED TO BE TYPE N, UNLESS OTHERWISE NOTED.

6. UNLESS NOTED AS SLIP-CRITICAL, ALL BOLTS SHALL BE TIGHTENED TO A SNUG TIGHT CONDITION SO THAT ALL PLIES ARE FIRMLY IN CONTACT, AND SHALL BE VISUALLY INSPECTED BY A TESTING AGENCY FOR CONFORMANCE.

7. ALL BOLTS INDICATED AS SLIP CRITICAL (SC) SHALL BE FURNISHED WITH THE APPROPRIATE ASTM HARDWARE AND INSTALLED PER THE AISC AND RCSC.

8. ALL BOLTS SET IN CONCRETE SHALL BE FURNISHED WITH DOUBLE NUTS AND SHALL BE SET WITH A TEMPLATE. BOLTS INDICATED AS ANCHORS ROD (AR) SHALL CONFORM TO ASTM F1554, GRADE 36, UNLESS NOTE OTHERWISE. THREADED RODS SHALL BE ASTM A36.

9. ALL WELDING SHALL BE IN ACCORDANCE WITH THE LATEST STRUCTURAL WELDING CODE AWS D1.1.

10. SEE ARCHITECTURAL DRAWINGS FOR STAIR FRAMING AND LOCATIONS OF STAIR SUPPORT AND DESIGN INTENT. THE ARCHITECT SHALL BE NOTIFIED OF ANY DEVIATIONS FROM THE DESIGN INTENT. ALL ADDITIONAL COSTS FOR DEVIATIONS OF STAIR FRAMING CALCULATIONS ALONG WITH STAIR SHOP DRAWINGS FOR REVIEW. CALCULATIONS SHALL BE SEALED BY A LICENSED PROFESSIONAL ENGINEER, REGISTERED IN WISCONSIN.

11. SEE ARCHITECTURAL PLANS FOR FIRE PROOFING REQUIREMENTS.

12. WHERE LONG SLOTTED HOLES ARE NOTED ON DRAWINGS, PROVIDED PLATE WASHERS PER AISC SPECIFICATION J3.2.E

13. E70XX ELECTRODES SHALL BE USED FOR ALL WELDING, ELECTRODES USED FOR FULL PENETRATION WELDED MOMENT CONNECTIONS SHALL MEET CVN TOUGHNESS CRITERIA OF 20 FOOT POUNDS AT -20° F.

14. NO COLUMN OR BEAM SPLICE, UNLESS CLEARLY INDICATED ON STRUCTURAL DRAWINGS, WILL BE ALLOWED WITHOUT WRITTEN APPROVAL OF STRUCTURAL ENGINEER.

15. ALL STEEL NOT PROTECTED FROM WEATHER AND WHOLLY WITHIN A CONDITIONED SPACE (INCLUDING ALL MASONRY LINTELS) SHALL BE HOT DIPPED GALVANIZED PER ASTM A123.

16. STRUCTURAL STEEL EXPOSED WITHIN THE HEAVY REPAIR BAY SHALL HAVE A HIGH PERFORMANCE COATING AS INDICATED IN THE ARCHITECTURAL DRAWINGS AND SPECIFICATIONS.

I. STRUCTURAL STEEL (CONT'D.):

17. FOR WELDING GALVANIZED STEEL, AWS APPROVED PROCEDURES FOR WELDING GALVANIZED STEEL MUST BE ADHERED TO, INCLUDING REMOVAL OF GALVANIZED COATING ON SURFACES TO BE WELDED OR FIELD CERTIFICATION OF PROCEDURES TO WELD THROUGH GALVANIC COATING.

18. REPAIR SURFACE WHERE GALVANIC COATING HAS BEEN DAMAGED WITH 2 COATS OF "BRUSH ON" ZINC ENRICHED PAIN PER ASTM A780.

19. STEEL JOISTS SHALL CONFORM TO THE CURRENT SPECIFICATION AND BE MANUFACTURED BY A MEMBER OF THE STEEL JOIST INSTITUTE. ALL BAR JOISTS SHALL BE INSTALLED WITH HORIZONTAL AND/OR "X" BRIDGING IN ADDITION TO HORIZONTAL BRIDGING WHERE HORIZONTAL BRIDGING IS DISCONTINUOUS. REFER TO THE PLANS FOR OTHER LOCATIONS OF "X" BRIDGING. STEEL JOIST MANUFACTURER HALL DESIGN, DETAIL AND PROVIDE BRIDGING AS REQUIRED BY THE STEEL JOIST INSTITUTE FOR THIS PROJECT FOR ALL LOADS IMPOSED INCLUDING REQUIRED UPLIFT LOADS.

20. BOLT OR WELD ALL JOISTS TO STEEL BEARING PER SJI GUIDELINES, WHERE SUCH BEARING OCCURS, UNLESS NOTED OTHERWISE.

21. WHERE CONCENTRATED LOADS OCCUR ON STEEL JOISTS BETWEEN PANEL POINTS, REINFORCEMENT OF JOISTS SHALL BE PROVIDED IN ACCORDANCE WITH THE STRUCTURAL DETAILS.

22. GROUT UNDER COLUMN BASE PLATES WITH 1 1/2" MINIMUM NON-SHRINK GROUT, UNLESS OTHERWISE NOTED.

23. HORIZONTAL FORCES ALONG WITH VERTICAL FORCES SHOWN ON THE CONTRACT DRAWINGS SHALL BE CONSIDERED IN THE SELECTION OF THE CONNECTION BETWEEN BEAMS AND COLUMNS.

J. METAL DECK:

1. METAL FLOOR DECKING:
COMPOSITE METAL FLOOR DECK SHALL BE 2", 20 GAGE GALVANIZED VULCRAFT TYPE "VL" (OR EQUAL) CONTINUOUS OVER 2 SPANS. METAL DECK IS DESIGNED FOR DIAPHRAGM ACTION AND SHALL BE FASTENED AS INDICATED ON THE DRAWINGS.

MINIMUM YIELD STRENGTH:	50 KSI
SECTION MODULUS:	0.346 IN 3
DESIGN THICKNESS:	0.0358 IN
MOMENT OF INERTIA:	0.409 IN 4

2. METAL ROOF DECK:
METAL ROOF DECK SHALL BE 1 1/2" , WIDE RIB, 19 GAGE METAL DECK CONTINUOUS OVER 3 OR MORE SPANS. FURNISH IN SINGLE SHEETS. ALL ROOF DECK SHALL BE GALVANIZED PER ASTM A653, G60. METAL ROOF IS DESIGNED FOR DIAPHRAGM ACTION SHALL BE FASTENED AS INDICATED IN THE DRAWINGS.

MINIMUM YIELD STRENGTH:	33 KSI
SECTION MODULUS:	0.289 IN 3
DESIGN THICKNESS:	0.0418 IN
MOMENT OF INERTIA:	0.260 IN 4

3. NO HUNG OR SUSPENDED TYPE OF ATTACHMENT TO THE METAL ROOF DECK WILL BE ALLOWED, INCLUDING BUT NOT LIMITED TO ELECTRICAL CONDUIT, LUMINAIRE SUPPORTS, PLUMBING/DRAIN PIPING, HVAC DUCTS OR UNITS AND SUSPENDED TYPE CEILING. THESE ITEMS SHALL BE SUPPORTED FROM THE STRUCTURAL STEEL FRAMING.

K. STEEL JOISTS:

1. ALL JOISTS SHALL BE DESIGNED, FABRICATED AND ERECTED IN ACCORDANCE WITH THE SJI SPECIFICATIONS.

2. JOIST ENDS SHALL BE SECURED AND BRIDGING SHALL BE INSTALLED PRIOR TO APPLICATION OF ANY LOADS.

3. END SUPPORT

A. MINIMUM BEARING REQUIREMENTS SHALL BE IN ACCORDANCE WITH THE SJI SPECIFICATION.

B. JOISTS SHALL BE WELDED TO SUPPORTS AS FOLLOWS UNO:
K SERIES: 1/8" FILLET WELDS, ONE EACH SIDE, 2" LONG
LH SERIES: 1/4" FILLET WELDS, ONE EACH SIDE, 3" LONG

C. BOLT JOISTS AS INDICATED BELOW TO STRUCTURAL STEEL SUPPORTS AT COLUMN CENTERLINES OR BOLT CONNECTIONS FOR EACH JOIST ADJACENT TO CENTERLINE.
K SERIES: (2) 1/2" DIAMETER BOLTS (MINIMUM)
LH SERIES: (2) 3/4" DIAMETER BOLTS

4. JOIST BRIDGING

A. SHALL BE PLACED PER THE SJI SPECIFICATION UNO AND SHALL BE:
K SERIES: HORIZONTAL RODS OR ANGLES AT TOP AND BOTTOM CHORDS
LH SERIES: HORIZONTAL ANGLES AT TOP AND BOTTOM CHORDS, WITH DIAGONAL CROSS BRIDGING ANGLES AS REQUIRED BY SJI.

B. BRIDGING THAT TERMINATES AT OR IS INTERUPTED BY STRUCTURAL STEEL MEMBERS, SHALL BE WELDED OR BOLTED THERETO. PROVIDE DIAGONAL ("X") BRIDGING FOR ENDS OF BRIDGING LINES TERMINATING AT WALLS/ BEAMS.

C. WHERE "OPEN-WEB" JOIST LENGTHS ARE 40 FEET AND LONGER, INSTALL A CENTER ROW OF BOLTED DIAGONAL ("X") BRIDGING TO PROVIDE LATERAL STABILITY BEFORE SLACKENING OF HOISTING LINES.

5. SPECIAL JOISTS

A. JOISTS MARKED "XXKCSX" (DEPTH = "XX" AS SHOWN ON PLAN) INDICATE STEEL JOISTS SUPPORTING CONCENTRATED LOADS AND/OR VARYING UNIFORM LOADS (SUCH AS IN THE CASE OF MONORAIL BEAM). JOIST SUPPLIER SHALL DESIGN AND INDICATE THESE JOISTS AND LOADS ON THE JOIST SHOP DRAWINGS SUBMITTED FOR REVIEW.

B. CONTRACTOR SHALL VERIFY THAT MONORAIL BEAM FURNISHED IS PLACED ONLY UNDER DESIGNATED JOISTS (XXKCSX) SUCH THAT THE DISTRIBUTION OF WEIGHT DOES NOT EXCEED THE DESIGN LOADS GIVEN IN PLAN.

6. SUBMITTALS

JOIST MANUFACTURER SHALL SUBMIT REGISTERED P.E. SEALED SHOP DRAWINGS INCLUDING BILLS OF MATERIAL FOR REVIEW AND ACCEPTANCE BY THE GOVERNMENT. SUBMIT CALCULATIONS FOR SPECIAL "KCS" JOISTS INDICATING SUPPLIER'S CONFORMANCE WITH SPECIFIED DESIGN CRITERIA. ALL SHOP DRAWINGS SUBMITTED SHALL BEAR THE EMBLEM OF MEMBERSHIP OF THE STEEL JOIST INSTITUTE INDICATING SUPPLIER'S COMPLIANCE WITH SJI SPECIFICATIONS. SHOP DRAWINGS SUBMITTED FOR JOISTS FROM NON-SJI MEMBERS ARE NOT ACCEPTABLE AND WILL BE REJECTED.

L. MISCELLANEOUS MECHANICAL ANCHORAGES / ELECTRICAL CONDUITS:

1. ELECTRICAL CONDUIT OR PLUMBING SHALL BE INSTALLED BELOW THE CONCRETE FLOOR STRUCTURE AND SHALL NOT BE EMBEDDED IN CONCRETE SLABS. WHERE CONDUIT OR PLUMBING MUST PENETRATE THE CONCRETE STRUCTURE, THE FOLLOWING GUIDELINES MUST BE FOLLOWING GUIDELINES MUST BE FOLLOWED:

A. CONDUIT LOCATION AND PLACEMENT SHALL BE APPROVED BY THE ARCHITECT/ENGINEER PRIOR TO PLACING CONCRETE.

B. WHERE CONDUIT PASSES THROUGH CONCRETE, USE GALVANIZED PIPE SLEEVES AT LEAST 1/2" DIAMETER LARGER THAN THE CONDUIT EMBEDDED IN THE CONCRETE.

C. CONDUIT SHALL ONLY PENETRATE SLAB VERTICALLY.

D. CONDUIT GROUPS SHALL NOT BE LARGER THAN 10" PERPENDICULAR TO THE FLUTES OF THE DECK UNLESS THE DECK OPENING IS STRUCTURALLY FRAMED.

2. THE STRUCTURE IS DESIGNED TO SUPPORT THE WEIGHT OF ELECTRICAL, PLUMBING AND MECHANICAL UNITS SHOWN. IT IS THE RESPONSIBILITY OF THE ELECTRICAL OR ELECTRICAL AND MECHANICAL CONTRACTOR TO DESIGN, ENGINEER, AND SUPPLY ALL ITEMS USED TO SUPPORT THE MECHANICAL EQUIPMENT FROM OR ON THE STRUCTURE, INCLUDING SEISMIC BRACING REQUIRED FOR EQUIPMENT AND PIPING.

3. WHERE ITEMS SUPPORTED BY JOIST AND JOIST GIRDERS ARE NOT LOCATED AT THE PANEL POINT THE JOIST OR JOIST GIRDER SHALL BE REINFORCED PER THE TYPICAL DETAIL.

M. SUBMITTALS:

1. ENGINEER WILL REVIEW SHOP DRAWINGS AND RELATED SUBMITTALS (AS INDICATED BELOW) WITH RESPECT TO THE ABILITY OF THE DETAILED WORK TO PROPERLY FUNCTION AS AN INTEGRAL ELEMENT OF THE OVERALL STRUCTURAL SYSTEM DETAILED ON THESE DRAWINGS. THIS REVIEW WILL NOT RELIEVE THE CONTRACTOR FROM THE RESPONSIBILITIES FOR ERRORS, CORRECTNESS OF DETAILS, OR CONFORMANCE WITH THE CONTRACT. THE CONTRACTOR SHALL ALLOW 10 WORKING DAYS AFTER RECEIPT AT ENGINEER'S OFFICE FOR REVIEW OF ALL STRUCTURAL SUBMITTALS.

2. PRIOR TO SUBMITTAL OF A SHOP DRAWING OR RELATED SUBMITTAL THE GENERAL CONTRACTOR SHALL:

A. REVIEW EACH SUBMISSION FOR COMPLIANCE WITH THE CONTRACT DOCUMENTS.

B. REVIEW EACH SUBMISSION FOR CONFORMANCE WITH THE MEANS, METHODS, TECHNIQUES, SEQUENCES, AND OPERATIONS OF CONSTRUCTION; AND SAFETY PRECAUTIONS AND PROGRAMS INCIDENTAL THERETO, ALL OF WHICH ARE THE SOLE RESPONSIBILITY OF THE GENERAL CONTRACTOR.

C. IDENTIFY ANY VARIATION FROM THE CONTRACTOR DOCUMENTS.

D. REVIEW AND APPROVE EACH COMPLIANT SUBMISSION AND REJECT ALL NON COMPLIANT SUBMISSIONS.

E. THE CONTRACTOR SHALL CLEARLY INDICATE THE SPECIFIC USE(S) FOR EACH SUBMITTAL.

3. THE FOLLOWING IS A PARTIAL LIST OF REQUIRED STRUCTURAL SHOP DRAWINGS AND RELATED SUBMITTALS. THE GENERAL CONTRACTOR SHALL REFER TO THE SPECIFICATIONS FOR MORE INFORMATION AND A COMPLETE LIST OF REQUIRED SUBMITTALS.

A. ANCHOR ROD LAYOUT DRAWINGS

B. CONCRETE MIX DESIGNS, TEST AND MATERIAL CERTIFICATIONS.

C. CONCRETE REINFORCED SHOP DRAWINGS, REINFORCING MATERIAL CERTIFICATION.

D. CMU AND BRICK MATERIAL CERTIFICATIONS, GROUT MIX DESIGN AND MORTAR MIX DESIGN.

E. STRUCTURAL STEEL FABRICATION DRAWINGS, CONNECTION CALCULATIONS & STRUCTURAL STEEL MILL CERTIFICATES.

F. WELD PROCEDURES & WELDERS CERTIFICATES.

G. STEEL JOIST AND DECK SHOP DRAWINGS.

N. TESTING AND INSPECTIONS:

1. TESTING AND INSPECTIONS ARE TO BE PERFORMED BY QUALIFIED FIRMS OR PERSONNEL AS IDENTIFIED WITHIN THE CONTRACT DOCUMENTS. THE INSPECTORS SHALL MAINTAIN RECORDS OF ALL INSPECTIONS PERTAINING TO THE PORTIONS OF WORK THEY ARE TO INSPECT. PROVIDE COPIES OF REPORTS TO THE OWNERS AND ENGINEER PERIODICALLY AND AS REQUIRED FOR ADEQUATE COMMUNICATION AS WORK PROGRESSES.

2. THE INSPECTOR SHALL MAINTAIN A CURRENT "ERROR LOG" WHICH SHALL TRACK ALL WORK NOT IN COMPLIANCE WITH THE CONTRACT DOCUMENTS, SHALL TRACK WHEN WORK ITEMS NOT IN COMPLIANCE HAVE BEEN CORRECTED OR WHEN ITEMS HAVE BEEN ACCEPTED, IN WRITING, AS CONSTRUCTED BY THE ENGINEER OF RECORD.

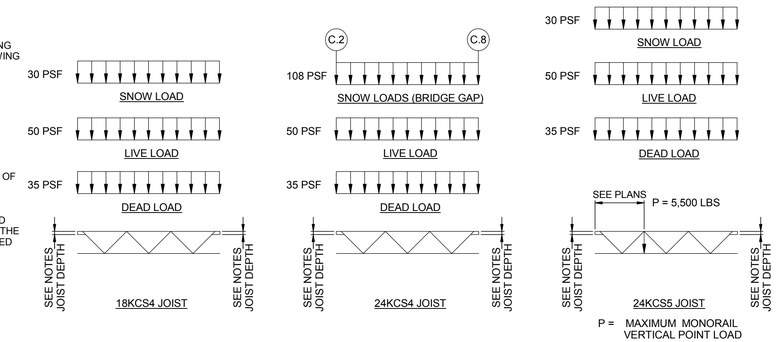

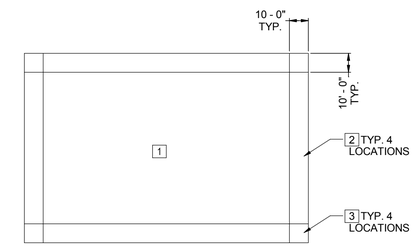

KEY

1 21 PSF NET UPLIFT

2 30 PSF NET UPLIFT

3 30 PSF NET UPLIFT

JOIST UPLIFT LOAD DIAGRAM

NOTE: ALL REPORTED JOIST LOADS ARE UNFACTORED PER ASCE 7-05.

NOT FOR CONSTRUCTION

NO.	DATE	REVISION	BY

ORIGINAL PLANS PREPARED BY

HNTB
11414 W. PARK PLACE
MILWAUKEE, WI 53224
(414) 359-2300

PLANS PREPARED FOR

CITY OF MILWAUKEE
DEPARTMENT OF
PUBLIC WORKS

MILWAUKEE STREETCAR

MAINTENANCE FACILITY

95% SUBMISSION | 29 FEB. 2016

DESIGNED BY JF | DESIGN CK'D SMG | DRAWN BY TH | PLANS CK'D MH

	INITIALS	DATE
DESIGNER		
CHECKER/ REVIEWER		
BACK CHECKER		
CORRECTOR		
VERIFIER		

STRUCTURAL GENERAL NOTES

S002

NOT FOR CONSTRUCTION

O. STRUCTURAL ABBREVIATIONS:

@	AT
AB	ANCHOR BOLTS
ADDL	ADDITIONAL
AFF	ABOVE FINISH FLOOR
AFG	ABOVE FINISH GRADE
ARCH	ARCHITECTURAL
BKT	BRACKET
BL	BASE LINE
BM	BEAM
BN	BOUNDARY NAILING
BOF	BOTTOM OF FOOTING
BOT	BOTTOM
BP	BASE PLATE
BRG	BEARING
BSMT	BASEMENT
BTWN	BETWEEN
CANT	CANTILEVER
CIP	CAST IN PLACE
CJ	CONSTRUCTION OR CONTROL JOINT
CL	CENTER LINE, CLEARANCE, OR CLEAR
CMU	CONCRETE MASONRY UNIT
COL	COLUMN
CONC	CONCRETE
CONN	CONNECTION
CONST	CONSTRUCTION
CONT	CONTINOUS OR CONTINUED
CP	COMPLETE PENETRATION
CTR	CENTER
C TO C	CENTER TO CENTER
DIA	DIAMETER
DBA	DEFORMED BAR ANCHOR
DBL	DOUBLE
DET	DETAIL
DIA	DIAMETER
DIAG	DIAGONAL
DIM	DIMENSION
D	DEAD LOAD
DO	DITTO
DWG	DRAWING
DWL	DOWEL
E	EARTHQUAKE LOAD
EA	EACH
EE	EACH END
EF	EACH FACE
EJ	EXPANSION JOINT
EL	ELEVATION
ELEC	ELECTRICAL
EOD	EDGE OF DECK
EMB	EMBEDMENT, EMBEDDED
EN	END NAILING
EOS	EDGE OF SLAB
EQ	EQUAL
ES	EACH SIDE
EW	EACH WAY
EXP	EXPANSION
EXIST	EXISTING
EXT	EXTERIOR
FD	FLOOR DRAIN
FDN	FOUNDATION
FL	FLOOR
FN	FACE NAILING
FP	FULL PENETRATION
FS	FAR SIDE
FT	FEET
FTG	FOOTING
FUT	FUTURE
FV	FIELD VERIFY
GA	GAGE OR GAUGE
GALV	GALVANIZED
GC	GENERAL CONTRACTOR
GR	GRADE
HK	HOOK
HORIZ	HORIZONTAL
HS	HEADED STUD
HSB	HIGH STRENGTH BOLT
HSS	HOLLOW STRUCTURAL SECTION
ID	INSIDE DIAMETER
IF	INSIDE FACE
IN	INCHES
INFO	INFORMATION
INT	INTERIOR
JT	JOINT
K	KIPS
KSF	KIPS PER SQUARE FOOT
L	LIVE LOAD
LE	LEFT END
LF	LINEAR FEET
LLH	LONG LEG HORIZ
LLV	LONG LEG VERT
LOC	LOCATION
LONG	LONGITUDINAL
LR	ROOF LIVE LOAD
LWT	LIGHTWEIGHT
MAX	MAXIMUM
MEP	MECHANICAL, ELECTRICAL, PLUMBING
MECH	MECHANICAL
MFR	MANUFACTURER
MIN	MINIMUM
MISC	MISCELLANEOUS
MO	MASONRY OPENING
MTG	MOUNTING
MTL	MATERIAL
NOM	NOMINAL
NS	NEAR SIDE
NTS	NOT TO SCALE
NWT	NORMALWEIGHT
OCBF	ORDINARY CONCENTRICALLY BRACED FRAME
OD	OUTSIDE DIAMETER
OF	OUTSIDE FACE
OLS	OUTSTANDING LEG
OMF	ORDINARY MOMENT FRAME
OPNG	OPENING
OPP	OPPOSITE
ORMS	ORDINARY REINFORCED MASONRY SHEAR WALL
PL	PLATE
PLBG	PLUMBING
PR	PAIR
PRL	PARALLEL
PSF	POUNDS PER SQUARE FOOT
PSI	POUNDS PER SQUARE INCH
PVMT	PAVEMENT
R	RADIUS
RD	ROOF DRAIN
RE	RIGHT END
REF	REFER TO
REV	REVISION
REINF	REINFORCEMENT
REQD	REQUIRED
RO	ROUGH OPENING
S	SNOW LOAD
SCH	SCHEDULE
SECT	SECTION
SEPN	SEPARATION
SEOR	STRUCTURAL ENGINEER OF RECORD
SF	SQUARE FEET
SIM	SIMILAR
SOG	SLAB ON GRADE
SPA	SPACING
SPEC	SPECIFICATION
SQ	SQUARE UNITS
SSL	SHORT SLOTTED HOLES
STD	STANDARD
STIFF	STIFFENER
STR	STRUCTURAL
SYM	SYMMETRICAL
TOC	TOP OF CONCRETE
TOP	TOP OF PARAPET
TOW	TOP OF WALL
T & B	TOP AND BOTTOM
TEMP	TEMPERATURE
TOC	TOP OF CONCRETE
TOF	TOP OF FOOTING
TOP	TOP OF PARAPET
TOS	TOP OF STEEL
TYP	TYPICAL
UNO	UNLESS NOTED OTHERWISE
VERT	VERTICAL
VIF	VERIFY IN FIELD
W/	WITH
W	WIND LOAD
WLD	WELDED
W/O	WITHOUT
WT	WEIGHT
WWF	WELDED WIRE FABRIC

FOUNDATION SYMBOL LEGEND

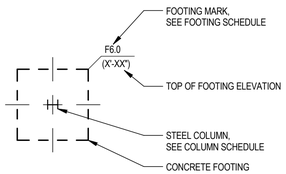

SPREAD FOOTING LEGEND

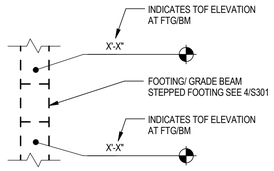

STEPPED FOOTING LEGEND

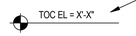

INDICATES TOP OF CONCRETE OR STEEL ELEVATION. SEE PLANS.

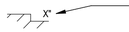

INDICATES FLOOR DEPRESSION. SEE PLAN FOR DIMENSION AND DETAILS

STEEL FRAMING SYMBOL LEGEND

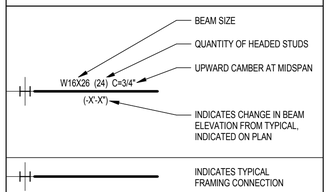

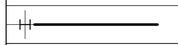

INDICATES TYPICAL FRAMING CONNECTION

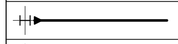

INDICATES MOMENT CONNECTION

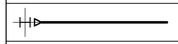

INDICATES CANTILEVER CONNECTION

INDICATES BOLTED BEAM SPLICE

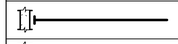

INDICATES BEAM TO CONCRETE WALL CONNECTION

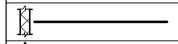

INDICATES BEAM TO MASONRY WALL CONNECTION

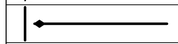

INDICATES FULL DEPTH CONNECTION PLATE

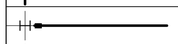

INDICATES BOLTED DRAG CONNECTION

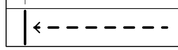

INDICATES BRACE TO BEAM BOTTOM FLANGE

METAL DECK LEGEND

INDICATES TYPICAL MECHANICAL/PLUMBING FLOOR PENETRATION

DENOTES CONCRETE COMPOSITE DECK (2 SPAN MIN). SEE SHEET S033 TO S034 FOR DETAILS

DENOTES GALVANIZED BARE METAL DECK (2 SPAN MIN). SEE SHEET S034 FOR DETAILS

WALL LEGEND

INDICATES STRUCTURAL CMU LOAD BEARING/SHEAR WALLS. SEE ARCHITECTURAL DRAWINGS FOR SIZES. SEE CMU GENERAL NOTES FOR REINFORCEMENT UNO ON PLANS.

INDICATES CAST-IN-PLACE CONCRETE WALL. SEE PLANS FOR SIZE, LOCATIONS, AND DETAILS.

INDICATES NON-BEARING CMU PARTITION WALLS. SEE ARCHITECTURAL DRAWINGS FOR LOCATIONS, TYPES, AND SIZES. SEE CMU GENERAL NOTES FOR REINFORCEMENT UNO ON PLANS.

HDR

NOT FOR CONSTRUCTION

NO.	DATE	REVISION	BY

ORIGINAL PLANS PREPARED BY

HNTB

11414 W. PARK PLACE
MILWAUKEE, WI 53224
(414) 359-2300

PLANS PREPARED FOR

CITY OF MILWAUKEE
DEPARTMENT OF
PUBLIC WORKS

MILWAUKEE STREETCAR

MAINTENANCE FACILITY

95% SUBMISSION	29 FEB. 2016

DESIGNED BY	JF	DESIGN CK'D	SMG	DRAWN BY	TH	PLANS CK'D	MH

	INITIALS	DATE
DESIGNER		
CHECKER/ REVIEWER		
BACK CHECKER		
CORRECTOR		
VERIFIER		

LEGENDS AND ABBREVIATIONS

S003

NOT FOR CONSTRUCTION

SCHEDULE OF SPECIAL INSPECTION SERVICES

INSPECTION ITEM REQUIRED	FREQUENCY		SPECIFICATION SECTION REFERENCE	REFERENCE CODE AND STANDARDS	REMARKS
	CONTINUOUS	PERIODIC			
GENERAL					
CONDUCT WEEKLY VISUAL OBSERVATIONS OF THE STRUCTURAL SYSTEMS FOR GENERAL CONFORMANCE TO THE CONSTRUCTION DOCUMENTS AND PREPARE WEEKLY REPORTS OF OBSERVATIONS DESCRIBING WORK PROGRESS AND NON-CONFORMING ITEMS		●			WEEKLY REPORTS ARE TO BE SUBMITTED TO THE CONTRACTOR, ENGINEER OF RECORD, BUILDING OFFICIAL AND OWNER
EARTHWORK					
VERIFY EXCAVATIONS ARE EXTENDED TO PROPER DEPTH AND HAVE REACHED PROPER MATERIAL	●		SEC. 31 23 00	IBC 1705.6	ALL FOOTING EXCAVATIONS SHALL BE OBSERVED AND APPROVED PRIOR TO CONCRETE PLACEMENT
OBSERVE PROOF ROLLING OF SUBGRADE PRIOR TO FILL PLACEMENT	●			IBC 1705.6	
PERFORM CLASSIFICATION AND TESTING OF CONTROLLED FILL MATERIAL		●		IBC 1705.6	TEST EACH SOURCE
TESTING AND EVALUATION OF IN-PLACE DENSITY OF COMPACTED FILL AS WORK PROGRESSES		●		IBC 1705.6	ONE DENSITY TEST FOR EACH LIFT, DAYS OPERATION, OR 5000 SQ. FT. OF FILL AREA
INSPECT VAPOR RETARDER FOR CONFORMANCE WITH MANUFACTURER'S WRITTEN INSTALLATION INSTRUCTIONS		●	SEC. 03 31 10		
CONCRETE AND REINFORCING STEEL					
INSPECT CONCRETE FORMWORK FOR SHAPE, LOCATION, AND DIMENSIONS OF THE CONCRETE MEMBER BEING FORMED		●		AC1 318 6.1.1	
OBSERVE PLACEMENT OF REINFORCING STEEL PRIOR TO CLOSING OF THE FORMS AND ARRIVAL OF CONCRETE TO THE JOBSITE		●	SECT. 03 08 16	IBC 1910.4 ACI 318 3.5, 7.1-7.7	
OBSERVE WELDING OF STEEL REINFORCEMENT	●			AWS D1.4 ACI 318 3.5.2	
VERIFY CORRECT MATERIAL USED, INCLUDING THE USE OF A706 IN WELDED SPLICES, IF ANY		●		AWS D1.4, ACI 318 3.5.2 IBC 1903.5.2	
OBSERVE AND VERIFY PLACEMENT OF BOLTS AND RODS PRIOR TO CONCRETE PLACEMENT	●			IBC 1908.5, 1909.1, ACI 318 3.8.6	VISUAL INSPECTION OF ALL BOLTS
OBSERVE AND VERIFY CORRECT PLACEMENT AND INSTALLATION OF ANCHORS POST-INSTALLED IN HARDENED CONCRETE	●			IBC 1909.1, ACI 318 3.8.6, 8.1.3, 21.1.8	
VERIFY USE OF CORRECT CONCRETE MIX DESIGN AND REVIEW DELIVERY TICKETS		●		IBC 1904.2, 1910.2, 1910.3, ACI 3184, 5.2-5.4	
SAMPLE FRESH CONCRETE AND MEASURE SLUMP, AIR CONTENT, AND TEMPERATURE DURING CONCRETE DELIVERY	●		SEC. 03 08 16	IBC 1910.10, ASTM C172 ASTM C31 ACI 318 5.6, 5.8	ADDITIONAL CYLINDERS SHALL BE MADE FOR EARLY FORM REMOVAL. NOTE: TWO 6X12 OR THREE 4X8 CYLINDERS ARE REQUIRED FOR AN ACCEPTABLE TEST
SAMPLE CONCRETE SPECIMENS FOR STRENGTH TESTS TO BE PERFORMED IN LAB. A MINIMUM OF FOUR (4) CYLINDERS SHALL BE MADE. TEST ONE AT 7 DAYS AND TWO AT 28 DAYS. THE 4TH CYLINDER SHALL BE HELD IN RESERVE	●				
PERFORM CONCRETE STRENGTH TESTING		●	SEC. 03 08 16		
MAINTAIN A SPREADSHEET SHOWING DATE, SEQUENTIAL ORDER OF STRENGTH TEST RESULTS, AND INDICATE RUNNING AVERAGE	●			ACI 318 PAR. 6.2	
OBSERVE CONCRETE PLACEMENT	●			IBC 1910.6, 1910.7, 1910.8 ACI 318 5.9, 5.10	
OBSERVE FOR PROPER CURING TEMPERATURE AND TECHNIQUES		●		IBC 1910.9 ACI 318 5.11-5.13	

SCHEDULE OF SPECIAL INSPECTION SERVICES

INSPECTION ITEM REQUIRED	FREQUENCY		SPECIFICATION SECTION REFERENCE	REFERENCE CODE AND STANDARDS	REMARKS
	CONTINUOUS	PERIODIC			
STRUCTURAL STEEL AND METAL DECK					
VERIFY FABRICATOR CERTIFICATION		●	SEC. 05 12 10 PAR. 1.2	IBC 1704.2.5	
VISIT FABRICATION SHOP TO OBSERVE FABRICATION PROCEDURES		●			ONLY ONE INSPECTION IS REQUIRED UNLESS ON-SITE EVENTS INDICATE FURTHER INSPECTIONS ARE NECESSARY
VERIFY CORRECT STRUCTURAL STEEL MATERIAL DELIVERED TO JOB SITE		●	SEC. 05 12 10	IBC 1708.4	
INSPECT STEEL FRAME JOINT DETAILS FOR COMPLIANCE WITH APPROVED CONTRACT DOCUMENTS		●		IBC 1704.3.2	
VERIFY JOINT WELD PROCEDURES ARE BEING USED IN ACCORDANCE WITH AWS		●	SEC. 05 12 10 PAR. 3.1 B	IBC 1705.2 AISC 360 N5 AWS D1.1	
VERIFY CONTRACTOR'S RECEIPT OF WELDERS CERTIFICATE		●	SEC. 05 12 10 PAR. 3.1 B	AWS D1.1	
VERIFY CORRECT FILLER MATERIAL USED IN WELDS		●	SEC. 05 12 10	IBC 1705.2 AISC 360 N5 AWS D1.1	
VISUALLY INSPECT ALL WELDS, PROVIDE CONTINUOUS INSPECTION ON ALL FULL OR PARTIAL PENETRATION WELDS AND FILLET WELDS GREATER THAN 5/16"				IBC 1705.2 AISC 360 N5 TABLE N5.4-1 TABLE N5.4-2 TABLE N5.4-3 AWS D1.1/D1.1M	PER ASIC 360: DESIGNATED INSPECTION TASKS TO BE COMPLETED BY INSPECTION AND TESTING AGENCY FOR WELDING OBSERVATION
PERFORM ULTRASONIC TESTING OR RADIOGRAPHIC TESTING ON ALL FULL PENETRATION WELDS	●			IBC 1705.2 AISC 360 N5.5b AWS D1.1/D1.1M	
PERFORM MAGNETIC PARTICLE TESTING ON 20% OF ALL PARTIAL PENETRATION AND FILLET WELDS GREATER THAN 5/16"	●				
THERMALLY CUT ACCESS HOLES SHALL BE TESTED BY MAGNETIC PARTICLE TESTING OR PENETRANT TESTING WHEN THE FLANGE OR WEB THICKNESS EXCEEDS 2 IN. ANY CRACK SHALL BE DEEMED UNACCEPTABLE REGARDLESS OF SIZE OR LOCATION	●			IBC 1705.2 AISC 360 N5.5c	
OBSERVE INSTALLATION OF FASTENERS FOR SNUG-TIGHT JOINTS		●		IBC 1705.2 AISC 360 N5.6 TABLE N5.6-1 TABLE N5.6-3	PER ASIC 360: DESIGNATED INSPECTION TASKS TO BE COMPLETED BY INSPECTION AND TESTING AGENCY FOR BOLTING OBSERVATION
OBSERVE INSTALLATION OF FASTENERS FOR PRE-TENSIONED JOINTS AND SLIP-CRITICAL JOINTS WHEN THE INSTALLER IS USING TURN OF THE NUT METHOD WITH MATCHMARKING TECHNIQUES. THE DIRECT-TENSION INDICATOR METHOD, OR THE TWIST-OFF TYPE TENSION CONTROL BOLT METHOD		●		IBC 1705.2 AISC 360 N5.6 TABLE N5.6-1 TABLE N5.6-2 TABLE N5.6-3	
OBSERVE INSTALLATION OF BOLTS FOR PRE-TENSIONED AND SLIP CRITICAL JOINTS WHEN THE INSTALLER IS USING CALIBRATED WRENCH METHOD OR THE TURN OF THE NUT METHOD WITHOUT MATCHMARKING TECHNIQUES	●			IBC 1705.2 AISC 360 N5.6 TABLE N5.6-1 TABLE N5.6-2 TABLE N5.6-3	
VISUALLY INSPECT ALL FLOOR AND ROOF DECK WELDS, SCREWS, OR OTHER APPROVED FASTENERS FOR COMPLIANCE WITH CONTRACT DOCUMENTS		●		IBC 1705.2 AISC 360 N5.6	

SCHEDULE OF SPECIAL INSPECTION SERVICES

INSPECTION ITEM REQUIRED	FREQUENCY		SPECIFICATION SECTION REFERENCE	REFERENCE CODE AND STANDARDS	REMARKS
	CONTINUOUS	PERIODIC			
CONCRETE MASONRY					
VERIFY APPROVED MORTAR AND GROUT PROPORTIONS ARE USED ON SITE		●	SEC. 04 22 00	ACI 530.1 ART. 2.1, 2.6A, 2.6B	
INSPECT PLACEMENT OF MASONRY UNITS AND CONFIRM PROPER CONSTRUCTION OF MORTAR JOINTS		●		ACI 530.1 ART. 3.3B	
INSPECT PROPER SIZE, LOCATION AND GRADE OF REINFORCEMENT AND CONNECTORS		●		ACI 530 SEC. 1.16, ACI 530.1 ART. 2.4, 3.2E, 3.2	
INSPECT TYPE, SIZE, AND LOCATION OF ANCHORS, INCLUDING ANCHORAGE OF MASONRY TO STRUCTURAL STEEL MEMBERS, FRAMES OR OTHER CONSTRUCTION		●		ACI 530 SEC. 1.16.4.3, 1.17.1	
VERIFY PROPER PROTECTION OF MASONRY DURING COLD WEATHER (BELOW 40° F) OR HOT WEATHER (ABOVE 90° F)		●		ACI 530.1 ART. 1.8C, 1.8D	
INSPECTION OF GROUT SPACE AND OBSERVATION OF GROUT PLACEMENT	●			ACI 530.1 ART. 3.2D, .3.2F, 3.5, 3.6C	
SAMPLE AND TEST CONCRETE MASONRY UNITS, MORTAR AND GROUT, VERIFY f'm IS AS SPECIFIED FROM TESTING		●		ASTM C-140 & ASTM C-1019 OR ASTM 1314 ACI 530.1 ART.1.4B	RANDOMLY SAMPLE AND TEST PRIOR TO CONSTRUCTION AND ONCE FOR EACH 5000 SF OF MASONRY WALL CONSTRUCTED
SIZE AND LOCATION OF STRUCTURAL ELEMENTS		●		ACI 530.1 ART. 3.3F	
WELDING OF REINFORCEMENT	●			ACI 530 SEC. 2.1.7.7.2, 3.3.3.4 (c)	
VERIFY SLUMP FLOW AND VISUAL STABILITY INDEX (VSI) AS DELIVERED TO THE PROJECT SITE FOR SELF-CONSOLIDATING GROUT		●		ASTM C-1611, ACI 530.1 ART. 1.5B.1.B.3	
COLD-FORMED STEEL FRAMING					
OBSERVE AND VERIFY USE OF CORRECT MEMBER SIZES, MATERIAL THICKNESS, FASTENERS, AND WELDING		●			

HDR

NOT FOR CONSTRUCTION

NO.	DATE	REVISION	BY

ORIGINAL PLANS PREPARED BY

HNTB

11414 W. PARK PLACE
MILWAUKEE, WI 53224
(414) 359-2300

PLANS PREPARED FOR

CITY OF MILWAUKEE
DEPARTMENT OF
PUBLIC WORKS

MILWAUKEE STREETCAR

MAINTENANCE FACILITY

95% SUBMISSION | 29 FEB. 2016

DESIGNED BY JF | DESIGN CK'D SMG | DRAWN BY TH | PLANS CK'D MH

	INITIALS	DATE
DESIGNER		
CHECKER/ REVIEWER		
BACK CHECKER		
CORRECTOR		
VERIFIER		

STRUCTURAL TESTS AND INSPECTIONS

S004

NOT FOR CONSTRUCTION

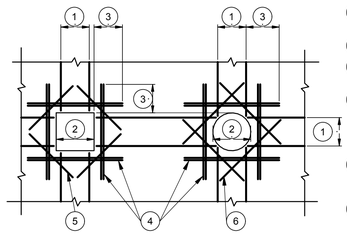

1. REINFORCEMENT INTERRUPTED BY OPENING.
2. OPENING AS REQUIRED.
3. CLASS B MIN LAP SPLICE LENGTH, RE: SCHEDULE
4. PROVIDE BARS WITH AREA EQUAL TO INTERRUPTED REINFORCEMENT. PLACE 1/2 ON EACH SIDE OF OPENING AT 3" MAXIMUM SPACING.
5. PROVIDE (1) #5 x 5'-0" x 4'-0" DIAGONAL BAR AT EACH LAYER OF REINFORCEMENT.
6. PROVIDE (1) #5 x 5'-0" DIAGONAL BAR ON 4 SIDES FOR EACH LAYER OF REINFORCEMENT. OMIT FOR OPENING DIAMETER < 12" AT ROUND OPENINGS ONLY.

7 OPENING REINF IN WALLS & ELEVATED SLAB

12" = 1'-0"

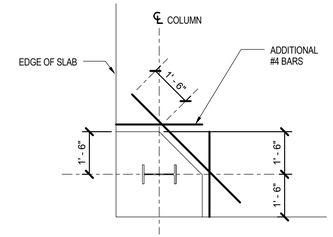

NOTE:
CONTRACTOR TO COORDINATE LOCATION AND SIZE OF BLOCK OUT AS REQUIRED FOR PLACEMENT OF STRUCTURAL STEEL.

A - CORNER COLUMN BLOCKOUT

8 CORNER COLUMN BLOCKOUT

3/8" = 1'-0"

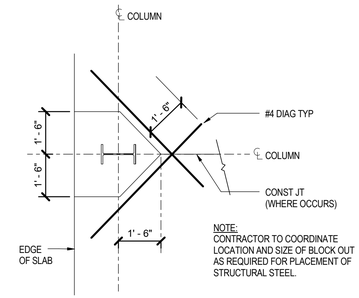

NOTE:
CONTRACTOR TO COORDINATE LOCATION AND SIZE OF BLOCK OUT AS REQUIRED FOR PLACEMENT OF STRUCTURAL STEEL.

B - EDGE COLUMN BLOCKOUT

9 COLUMN BLOCKOUT DETAILS

3/8" = 1'-0"

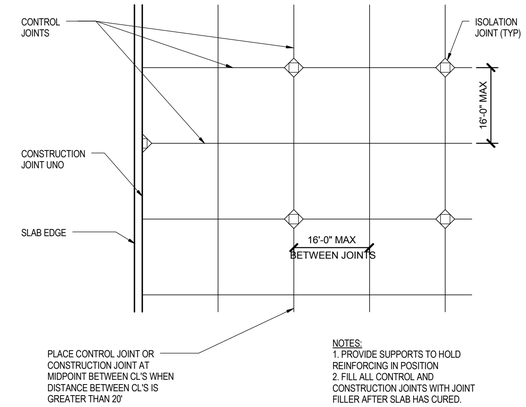

NOTES:
1. PROVIDE SUPPORTS TO HOLD REINFORCING IN POSITION
2. FILL ALL CONTROL AND CONSTRUCTION JOINTS WITH JOINT FILLER AFTER SLAB HAS CURED.

10 TYPICAL INTERIOR SLAB ON GRADE JOINT LAYOUT

3/4" = 1'-0"

1. CENTERLINE OF CONSTRUCTION JOINT.
2. CONTINUE SUB GRADE MATERIAL BELOW THICKENED SLAB.
3. REFERENCE PLAN FOR SLAB THICKNESS.
4. SEE GENERAL NOTES AND SPECIFICATIONS FOR UNDERSLAB REQUIREMENTS.
5. REINFORCING BARS EACH WAY, RE: PLAN.

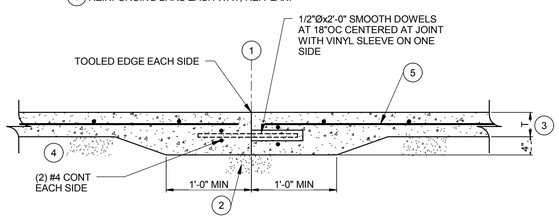

TYPICAL AT SLAB TO SLAB CONSTRUCTION, UNO

4 SLAB CONSTR/CONTROL JOINT DTL

12" = 1'-0"

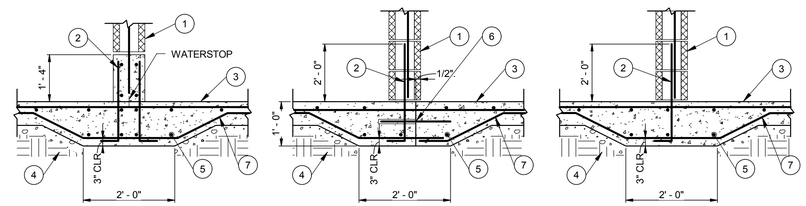

THICKENED SLAB AT NON-BEARING CMU WALL ON GRID "E"

THICKENED SLAB AT CONSTRUCTION JOINTS

THICKENED SLAB AT NON-BEARING CMU WALL

1. CMU WALL, SEE ARCH. PLANS FOR LOCATIONS.
2. #4 DOWELS TO MATCH CMU WALL VERTICAL REINFORCEMENT SPACING. PROVIDE 90° STANDARD HOOK.
3. SLAB AND REINFORCEMENT, RE: PLAN.
4. SEE GENERAL NOTES AND SPECIFICATIONS FOR UNDERSLAB REQUIREMENTS.
5. (3) #4 CONTINUOUS BOTTOM.
6. TYPICAL SLAB CONSTRUCTION JOINTS, SEE PLAN FOR LOCATIONS.
7. #4 SPACED AT 18"OC.

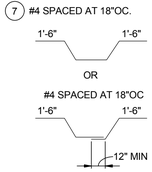

5 THICKENED SLAB @ CMU WALL

12" = 1'-0"

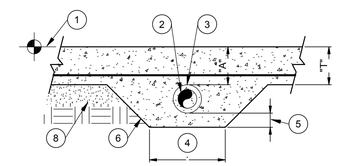

WHERE "T" ≤ "A" ≤2 "T"

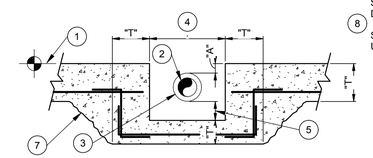

WHERE "A" < "T"

1. TOP OF FOOTING ELEVATION, SEE PLAN.
2. PIPE.
3. SLEEVE, STEEL OR PVC PIPE.
4. SLEEVE DIAMETER PLUS 1'-0".
5. 6" MINIMUM.
6. THICKEN FOOTING AS SHOWN.
7. STEP FOOTING DOWN AS SHOWN. SEE STEP FOOTING DETAIL.
8. SEE GENERAL NOTES FOR UNDERSLAB REQUIREMENTS.

6 FOOTING STEP FOR PIPE PENETRATION

12" = 1'-0"

1. COLUMN, RE: PLAN & SCHED.
2. SLAB CONTROL JOINT OR CONSTRUCTION JOINT.
3. 1/4" PREFORMED JOINT FILLER. FILL JOINT W/ SEALANT.
4. SLAB ON GRADE.
5. PLACE INFILL AFTER SLAB HAS COMPLETELY CURED (14 DAYS MIN.).
6. FOUNDATION OR RETAINING WALL
7. VERIFY BLOCKOUT SIZE PROVIDES CLEARANCE FOR BASE PLATE.
8. PROVIDE SONOTUBE BLOCKOUT WHEN SLAB CONTROL OR CONSTRUCTION JOINT DOES NOT EXTEND FROM ALL CORNERS.
9. BASE PLATE TO BE EMBEDDED IN INFILL

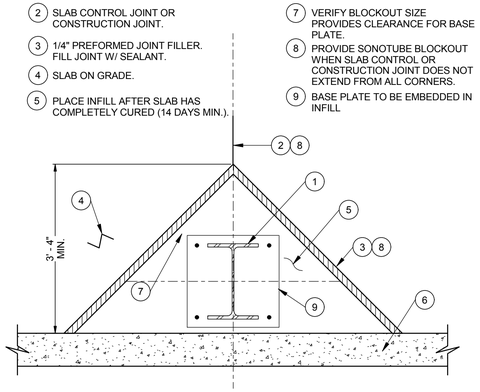

1 CONTROL JOINTS @ EXTERIOR COLS

12" = 1'-0"

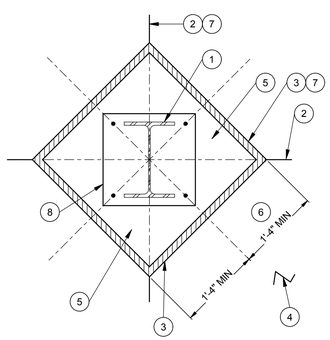

1. COLUMN RE: PLAN & SCHED.
2. SLAB CONTROL JOINT OR CONSTRUCTION JOINT.
3. 1/4" PREFORMED JOINT FILLER.
4. SLAB ON GRADE.
5. PLACE INFILL AFTER SLAB HAS COMPLETELY CURED (14 DAYS MIN).
6. VERIFY BLOCKOUT SIZE PROVIDES CLEARANCE FOR BASE PLATE.
7. PROVIDE SONOTUBE BLOCKOUT WHEN SLAB CONTROL OR CONSTRUCTION JOINT DOES NOT EXTEND FROM ALL CORNERS.
8. BASE PLATE TO BE EMBEDDED IN INFILL

2 CONTROL JOINTS @ INTERIOR COLS

12" = 1'-0"

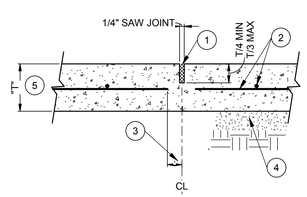

1. 1/4" SAW JOINT, FILL WITH SEALANT WHERE EXPOSED.
2. REINFORCING BARS EACH WAY, RE: PLAN.
3. CUT ALTERNATE WIRES OR REINFORCING BARS 2" CLEAR AT JOINT CENTER LINE.
4. SEE GENERAL NOTES & SPECIFICATIONS FOR UNDERSLAB REQUIREMENTS.
5. REFERENCE PLANS FOR SLAB THICKNESS, "T".

NOTE:
SAW CUT SHALL BE MADE AS SOON AS SLAB CAN SUPPORT EQUIPMENT AND NO LATER THAN 3 HOURS AFTER PLACEMENT.

3 SLAB CONTROL JOINT DETAIL

12" = 1'-0"

	INITIALS	DATE
DESIGNER		
CHECKER/ REVIEWER		
BACK CHECKER		
CORRECTOR		
VERIFIER		

NOT FOR CONSTRUCTION

NO.	DATE	REVISION	BY

ORIGINAL PLANS PREPARED BY

HNTB
11414 W. PARK PLACE
MILWAUKEE, WI 53224
(414) 359-2300

PLANS PREPARED FOR

CITY OF MILWAUKEE
DEPARTMENT OF
PUBLIC WORKS

MILWAUKEE STREETCAR

MAINTENANCE FACILITY

95% SUBMISSION | 29 FEB. 2016

DESIGNED BY JF | DESIGN CK'D SMG | DRAWN BY TH | PLANS CK'D MH

CONCRETE AND FOUNDATION TYPICAL DETAILS

S010

NOT FOR CONSTRUCTION

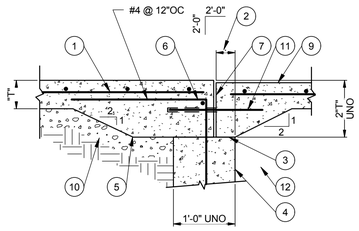

SECTION A

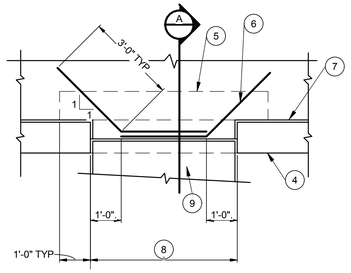

PLAN

NOTES:
T = SLAB THICKNESS, SEE PLANS.

1. REINFORCING.
2. OFFSET DISTANCE, RE: ARCH DRAWINGS.
3. 15# FELT.
4. FOUNDATION WALL OR GRADE BEAM.
5. THICKENED SLAB.
6. (1) #4 AT EACH DOOR OPENING.
7. PREMOLDED JOINT FILLER (TYP). SEE 9/A621.
8. DOOR OPENING.
9. SIDEWALK OR EXTERIOR SLAB.
10. SEE GENERAL NOTES & SPECIFICATIONS FOR UNDERSLAB REQUIREMENTS.
11. 1/2"Øx2'-0" SMOOTH DOWELS AT 12"OC W/ VINYL SLEEVE ONE SIDE OF JOINT.
12. RE: S100 FOR EXTERIOR STOOP. RE: PLAN FOR LOCATION.

4 REINF @ TYPICAL DOOR SILL

12" = 1'-0"

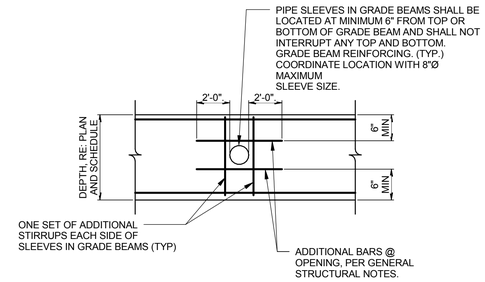

5 TYPICAL SLEEVE THRU GRADE BEAM

12" = 1'-0"

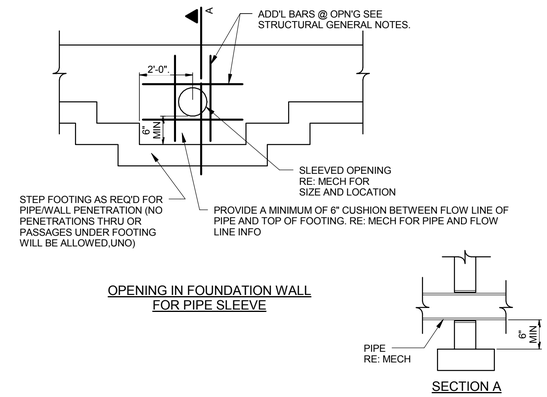

OPENING IN FOUNDATION WALL FOR PIPE SLEEVE

SECTION A

6 FOOTING STEPS @ PIPE

12" = 1'-0"

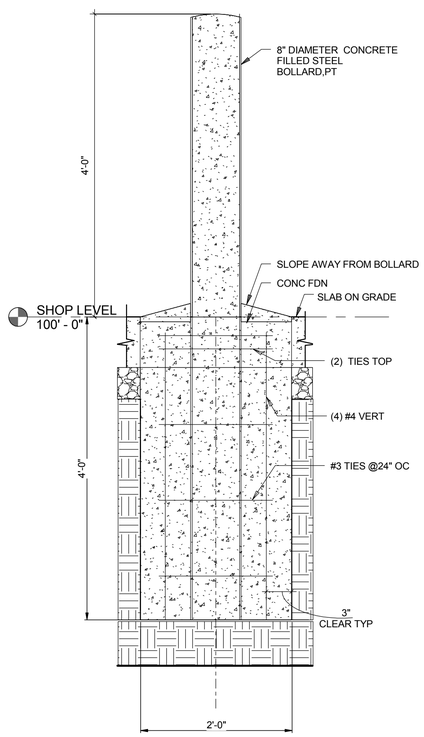

1 BOLLARD

1" = 1'-0"

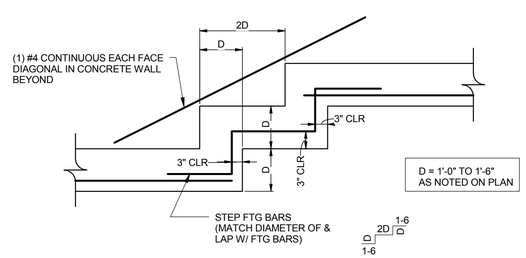

2 FOOTING STEP DETAIL

12" = 1'-0"

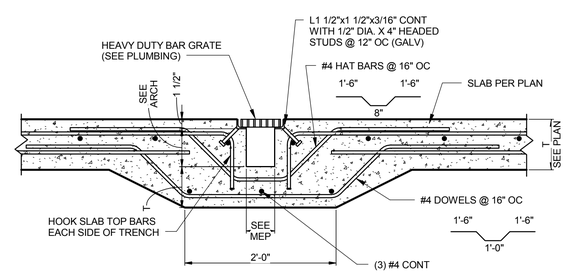

3 TRENCH DRAIN DETAIL

1" = 1'-0"

	INITIALS	DATE
DESIGNER		
CHECKER/ REVIEWER		
BACK CHECKER		
CORRECTOR		
VERIFIER		

HDR

NOT FOR CONSTRUCTION

NO.	DATE	REVISION	BY

ORIGINAL PLANS PREPARED BY

HNTB
11414 W. PARK PLACE
MILWAUKEE, WI 53224
(414) 359-2300

PLANS PREPARED FOR

CITY OF MILWAUKEE
DEPARTMENT OF
PUBLIC WORKS

MILWAUKEE STREETCAR

MAINTENANCE FACILITY

95% SUBMISSION | 29 FEB. 2016

DESIGNED BY JF | DESIGN CK'D SMG | DRAWN BY TH | PLANS CK'D MH

CONCRETE AND FOUNDATION TYPICAL DETAILS

S011

NOT FOR CONSTRUCTION

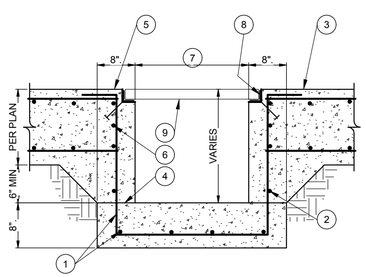

1. (4) #4 EA. WAY W/STD HOOKS.
2. #4
3. PIT SLAB THICKNESS, RE: PLAN.
4. CONSTRUCTION JOINT.
5. SEE PLAN FOR ELEVATION.
6. (4) #8x8'-0" AT FOUR SIDES OF SUMP.
7. REFERENCE M/E/P AND ARCHITECTURAL DRAWINGS FOR BLOCKOUTS.
8. L2x2x3/16 AT FOUR CORNERS W/ 1/2"Øx4" STUDS AT 12"OC, GALV.
9. GRATE.

SEE PLANS FOR LOCATIONS

1 SUMP PUMP PIT DETAIL

12" = 1'-0"

NOT FOR CONSTRUCTION

NO.	DATE	REVISION	BY

ORIGINAL PLANS PREPARED BY

HNTB

11414 W. PARK PLACE
MILWAUKEE, WI 53224
(414) 359-2300

PLANS PREPARED FOR

CITY OF MILWAUKEE
DEPARTMENT OF
PUBLIC WORKS

MILWAUKEE STREETCAR

MAINTENANCE FACILITY

95% SUBMISSION | 29 FEB. 2016

	INITIALS	DATE
DESIGNER		
CHECKER/ REVIEWER		
BACK CHECKER		
CORRECTOR		
VERIFIER		

DESIGNED BY	DESIGN CK'D	DRAWN BY	PLANS CK'D
JF	SMG	TH	MH

CONCRETE AND FOUNDATION TYPICAL DETAILS

S012

NOT FOR CONSTRUCTION

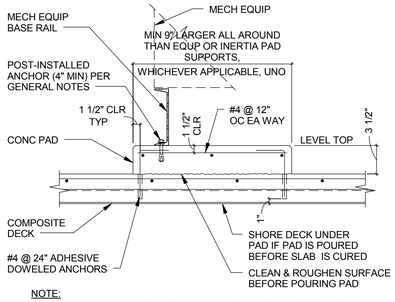

NOTE:
1. WHEN SIZING PADS, PROVIDE MINIMUM 12 BOLT DIAMETERS EDGE DISTANCE FROM CENTER LINE OF EQUIPMENT ANCHOR BOLT TO EDGE OF PAD, UNO.
2. #4 ADHESIVE DOWEL ANCHOR SHALL BE LOCATED IN LOWER FLUTE OF METAL DECK.

7 TYPICAL PAD ON COMPOSITE DECK DETAIL
3/4" = 1'-0"

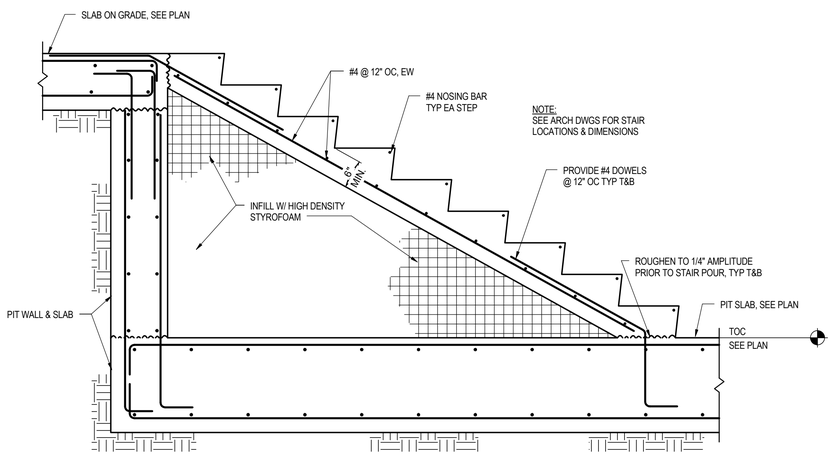

4 TYPICAL STAIR DETAIL AT INSPECTION PIT
3/4" = 1'-0"

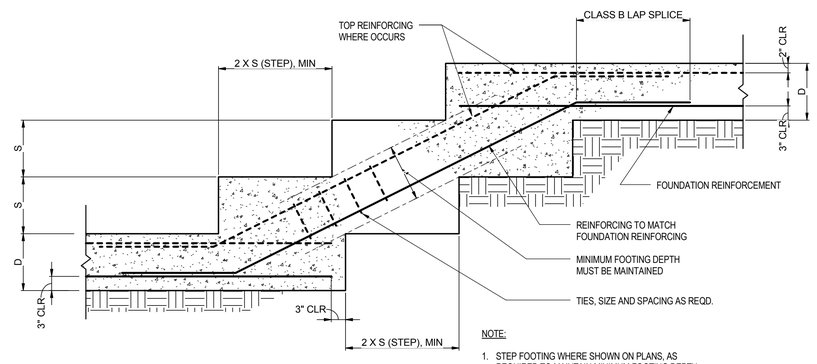

NOTE:
1. STEP FOOTING WHERE SHOWN ON PLANS, AS REQUIRED TO MAINTAIN MINIMUM FOOTING DEPTH BELOW GRADE AND AS REQUIRED TO ACCOMMODATE PIPES PER TYPICAL TRENCH DETAIL.
2. S (STEP) MAX OF 2'-0", TYP

5 TYPICAL STEPPED FOOTING DETAIL
3/4" = 1'-0"

NOTES: SEE MEP DRAWINGS FOR THE FOLLOWING:

1. LOCATION AND DIMENSIONS OF PADS.
2. LOCATION, SIZE & EMBEDMENT OF ANCHOR RODS OR POST-INSTALLED ANCHORS THAT ATTACH EQUIPMENT TO CONCRETE PAD.
3. DETAILS OF SUPPORTS, ISOLATORS, ETC.

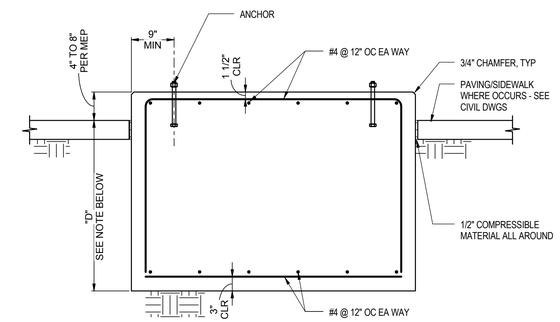

NOTE:
"D" = 12" FOR PADS INSIDE OF BUILDING (NOT EXPOSED TO WEATHER CONDITIONS).
"D" = 3'-0" FOR PADS OUTSIDE OF BUILDING (EXPOSED TO WEATHER CONDITIONS) DUE TO FROST LINE DEPTH.

6 ISOLATED CONCRETE PAD DETAIL
3/4" = 1'-0"

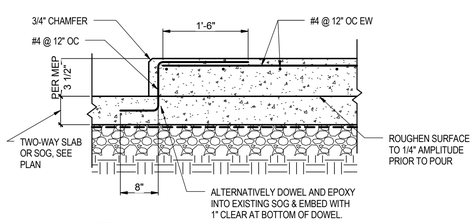

NOTES:
1. CONTRACTOR SHALL OBTAIN EXACT SIZES, LOCATIONS, HEIGHTS AND ANY SPECIAL DETAILS FROM THE EQUIPMENT MANUFACTURER. PADS SHALL BE INSTALLED TO CONFORM TO THE MANUFACTURER'S STANDARD FOR THE EQUIPMENT.
2. CONTRACTOR SHALL VERIFY THAT ALL REQUIRED ITEMS THAT ARE TO BE EMBEDDED INTO PADS ARE PLACED BEFORE PADS ARE POURED. THE EMBEDDED ITEMS SHALL BE OBTAINED BY THE CONTRACTOR FROM THE EQUIPMENT MFR.

1 TYPICAL CONCRETE PAD DETAIL
3/4" = 1'-0"

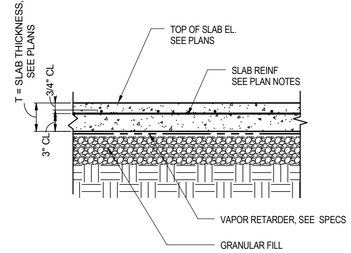

2 SLAB ON GRADE TYPICAL SECTION
3/4" = 1'-0"

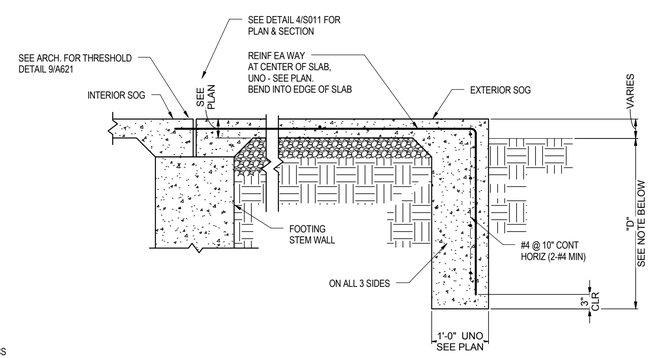

NOTE:
"D" = 1'-0" FOR SLABS INSIDE OF BUILDING (NOT EXPOSED TO WEATHER CONDITIONS).
"D" = 4'-0" FOR SLABS OUTSIDE OF BUILDING (EXPOSED TO WEATHER CONDITIONS) DUE TO FROST LINE DEPTH.

3 TYPICAL EXTERIOR STOOP DETAIL
3/4" = 1'-0"

	INITIALS	DATE
DESIGNER		
CHECKER/ REVIEWER		
BACK CHECKER		
CORRECTOR		
VERIFIER		

HDR

NOT FOR CONSTRUCTION

NO.	DATE	REVISION	BY

ORIGINAL PLANS PREPARED BY

HNTB
11414 W. PARK PLACE
MILWAUKEE, WI 53224
(414) 359-2300

PLANS PREPARED FOR

CITY OF MILWAUKEE
DEPARTMENT OF
PUBLIC WORKS

MILWAUKEE STREETCAR

MAINTENANCE FACILITY

95% SUBMISSION | 29 FEB. 2016

DESIGNED BY JF | DESIGN CK'D SMG | DRAWN BY TH | PLANS CK'D MH

CONCRETE SECTIONS AND DETAILS

S013

NOT FOR CONSTRUCTION

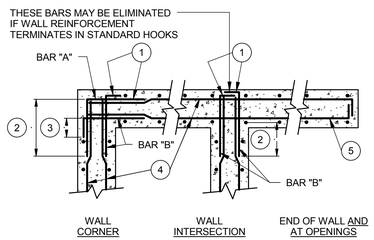

1. BARS "A" AND "B" SHALL MATCH SIZE AND SPACING OF TYPICAL HORIZONTAL WALL REINFORCEMENT, UNLESS SPECIFICALLY INDICATED ON PLANS.
2. SPLICE LENGTH ON "A" AND "B" BARS SHALL BE AS INDICATED ON SCHEDULE, OR A MINIMUM OF A CLASS B LAP AS DEFINED BY ACI 318. TYPICAL HORIZONTAL BARS ARE DEFINED AS TOP BARS.
3. BAR "B" SHALL HAVE A STANDARD HOOK AS DEFINED BY ACI 318.
4. TYPICAL HORIZONTAL WALL REINFORCEMENT.
5. END BAR WITH STANDARD HOOK OR U-BARS.

4 DOUBLE LAYER WALL REINF
12" = 1'-0"

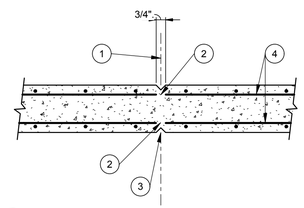

1. CENTERLINE CONTROL JOINT. RE: GENERAL NOTES FOR MAXIMUM SPACING.
2. CUT EVERY OTHER HORIZONTAL BAR AT JOINT CENTERLINE. BOTH FACES, AND CENTERED REINFORCING.
3. RUSTICATION JOINT AT EACH FACE. COORDINATE LOCATION.
4. HORIZONTAL REINFORCING BARS.

NOTE: THIS DETAIL WILL NOT BE CONSIDERED A CONTROL JOINT UNLESS HORIZONTAL BARS ARE CUT AS INDICATED ABOVE.

5 TYP CONC WALL CONTROL JOINT
12" = 1'-0"

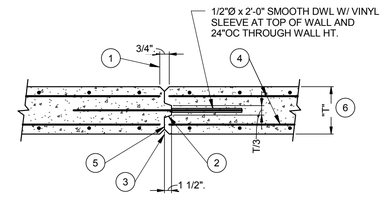

DOUBLE LAYER REINFORCEMENT

1. CENTERLINE CONSTRUCTION JOINT.
2. CONTINUOUS KEYWAY.
3. RUSTICATION JOINT, AT CONSTRUCTION COORDINATE LOCATION.
4. STOP REINF 3" CLEAR OF JOINT. DISCONTINUE ALL REINFORCEMENT BARS AT JOINT.
5. COAT WITH BOND BREAKER.
6. RE: PLAN FOR WALL THICKNESS "T".

6 TYP CONC WALL CONSTRUCTION JOINT
12" = 1'-0"

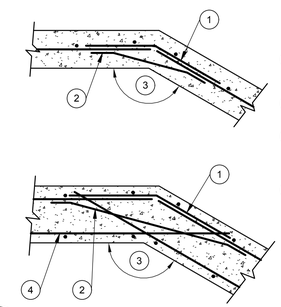

1. MATCH SIZE AND SPACING OF HORIZ. REINF., USE CLASS "B" LAP OR 24" (MIN.)
2. MATCH SIZE AND SPACING OF HORIZ. REINF., 3'-0" LONG (MIN.)
3. DETAIL APPLIES WHEN ANGLE IS GREATER THAN OR EQUAL TO 120°. FOR SMALLER ANGLES SEE DETAILS FOR 90° ANGLES.
4. EXTEND BARS TO 3" CLEAR FROM OPPOSITE FACE. EXTENSION NEED NOT EXCEED 30 BAR DIAMETERS.

7 CORNER REINF @ NON-90° CORNER
12" = 1'-0"

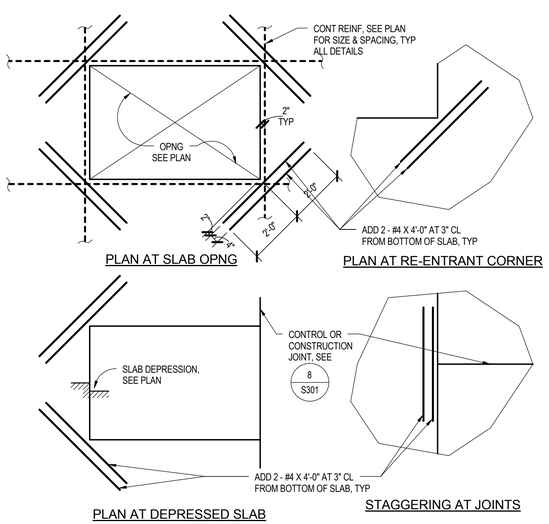

1 REINFORCING AT OPENINGS & DEPRESSIONS IN SOG
3/8" = 1'-0"

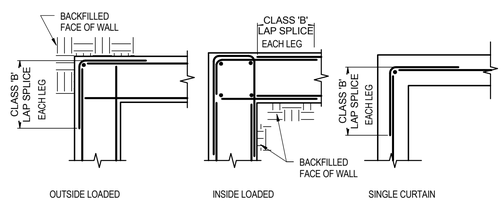

TYPICAL CORNER DETAILS

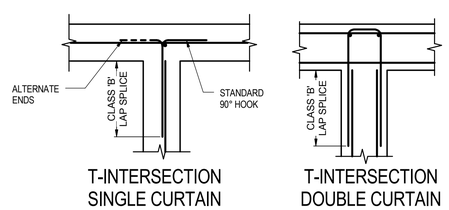

NOTE:
WHERE WALLS ARE BACKFILLED ON BOTH SIDES, PROVIDE DETAIL SUITABLE FOR SIDE WITH GREATEST HEIGHT OF BACKFILL. WHERE HEIGHT OF BACKFILL IS THE SAME ON BOTH SIDES OR WALL WITHOUT BACKFILL, USE OUTSIDE LOADED DETAIL.

2 PLAN-TYP WALL CORNER AND T-INTERSECTION REINFORCING
3/4" = 1'-0"

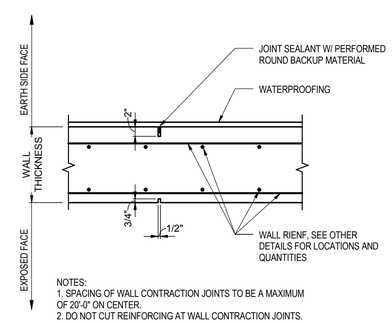

NOTES:
1. SPACING OF WALL CONTRACTION JOINTS TO BE A MAXIMUM OF 20'-0" ON CENTER.
2. DO NOT CUT REINFORCING AT WALL CONTRACTION JOINTS.

3 TYPICAL WALL CONTRACTION JOINT DETAIL
3/4" = 1'-0"

	INITIALS	DATE
DESIGNER		
CHECKER/ REVIEWER		
BACK CHECKER		
CORRECTOR		
VERIFIER		

HDR

NOT FOR CONSTRUCTION

NO.	DATE	REVISION	BY

ORIGINAL PLANS PREPARED BY

HNTB
11414 W. PARK PLACE
MILWAUKEE, WI 53224
(414) 359-2300

PLANS PREPARED FOR

CITY OF MILWAUKEE
DEPARTMENT OF
PUBLIC WORKS

MILWAUKEE STREETCAR

MAINTENANCE FACILITY

95% SUBMISSION | 29 FEB. 2016

DESIGNED BY JF | DESIGN CK'D SMG | DRAWN BY TH | PLANS CK'D MH

CONCRETE SECTIONS AND DETAILS

S014

NOT FOR CONSTRUCTION

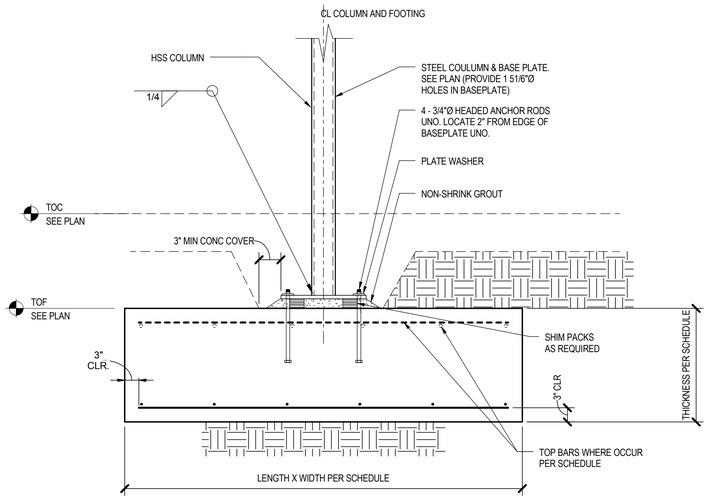

3 TYPICAL PAD FOOTING AT HSS

3/4" = 1'-0"

ENGINEER NOTE: VERIFY FOOTING DEPTH & WIDTH MEETS MIN'S BELOW. PROVIDE TOP HOOKS IN PILASTERS

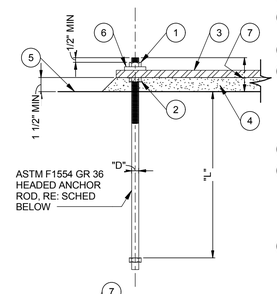

1. HEAVY HEX A563 NUT.
2. HEAVY HEX A563 LEVELING NUT.
3. BASE PLATE, RE: SCHEDULE FOR SIZE.
4. GROUT SOLID BELOW BASE PLATE WITH NON-SHRINK GROUT.
5. TOP OF CONCRETE.
6. STANDARD PLATE WASHER, USE 3/8"x2 1/2"x2 1/2" A36 STEEL PLATE WASHERS W/ STANDARD SIZE BOLT HOLES. USE 1/2"x3"x3" WASHER FOR RODS 1" DIA AND LARGER. WELD PLATE WASHER TO BASE PLATE AFTER COLUMN ERECTION. PROVIDE 1/4" FILLET WELD 2" LONG EACH SIDE (MIN.).
7. PROJECTION PER TABLE BELOW.
8. FOR ANCHOR RODS PLACED IN FOOTINGS OR PILE CAPS, VERIFY EDGE DISTANCE FROM CENTER OF ROD. WHERE EDGE DISTANCE IS LESS THAN VALUE IN TABLE, LENGTHEN ROD PER NOTE 9 AND PROVIDE REINFORCING PER DOCUMENTS.
9. ANCHOR ROD LENGTH "L" PLACED IN REINFORCED PILASTER. VERTICAL PILASTER REINFORCING MUST BE HOOKED AT TOP OF PILASTER.

ROD DIA "D"	(7) ROD PROJECTION	LENGTH "L" IN FOOTINGS	(8) EDGE DISTANCE IN FOOTINGS	(9) LENGTH "L" IN PILASTERS
3/4" DIA	6"	12"	14"	22"
7/8" DIA	6"	16"	18"	26"
1" DIA	7"	20"	22"	30"
1 1/8" DIA	7"	24"	25"	34"

4 STANDARD ANCHOR ROD DETAIL

12" = 1'-0"

CLASS A SPLICE LENGTHS (DEVELOPMENT LENGTHS)								
TYPE	LOCN/SIZE	#3	#4	#5	#6	#7	#8	#9
NW CONC	TOP BAR	28	37	46	56	81	93	104
f'c=4,000 psi	OTHER BAR	21	28	36	43	62	71	80

CLASS B SPLICE LENGTHS								
TYPE	LOCN/SIZE	#3	#4	#5	#6	#7	#8	#9
NW CONC	TOP BAR	36	48	60	72	105	120	135
f'c=4,000 psi	OTHER BAR	28	37	46	55	81	92	104

NOTES:
1. ALL LENGTHS ARE IN INCHES.
2. TOP BARS ARE HORIZONTAL BARS WITH MORE THAN 12" OF CONCRETE BELOW THEM.
3. WALL BARS ARE NOT CONSIDERED TOP BARS.
4. USE CLASS B SPLICE LENGTHS TYPICALLY, UNO.
5. REFER TO ACI 318, SECTION 12.2 & 12.15 FOR ADDITIONAL REQUIREMENTS.

1 TYPICAL CONCRETE REINF SCHEDULE

12" = 1'-0"

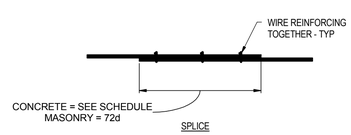

SPLICE

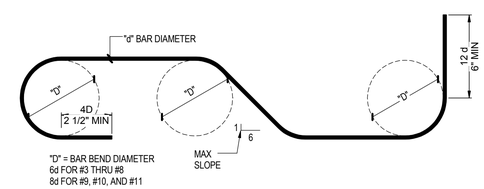

HOOKS AND BENDS

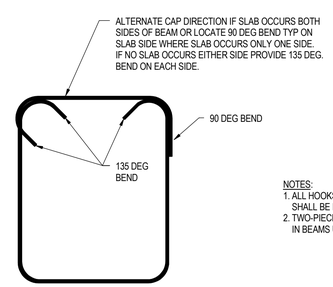

TWO-PIECE STIRRUP

NOTES:
1. ALL HOOKS, BENDS, AND LAP SLICES SHALL BE INDICATED UNO.
2. TWO-PIECE STIRRUPS MAY BE USED IN BEAMS UNO.

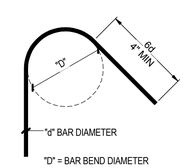

135 DEG BEND

2 TYPICAL REINFORCING DETAILS

1/2" = 1'-0"

NOT FOR CONSTRUCTION

NO.	DATE	REVISION	BY

ORIGINAL PLANS PREPARED BY

HNTB
11414 W. PARK PLACE
MILWAUKEE, WI 53224
(414) 359-2300

PLANS PREPARED FOR

CITY OF MILWAUKEE
DEPARTMENT OF
PUBLIC WORKS

MILWAUKEE STREETCAR

MAINTENANCE FACILITY

95% SUBMISSION | 29 FEB. 2016

DESIGNED BY JF | DESIGN CK'D SMG | DRAWN BY TH | PLANS CK'D MH

	INITIALS	DATE
DESIGNER		
CHECKER/ REVIEWER		
BACK CHECKER		
CORRECTOR		
VERIFIER		

CONCRETE SECTIONS AND DETAILS

S015

NOT FOR CONSTRUCTION

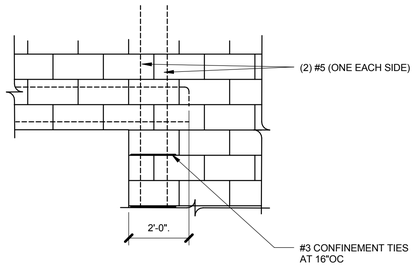

6 ELEVATION @ 8" MASONRY LINTEL BRG
1/2" = 1'-0"

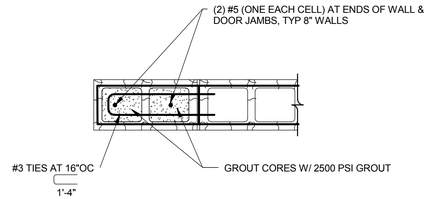

PROVIDE #5 DOWELS IN FOUNDATION MATCHING LOCATION OF VERTICAL BARS SHOWN

7 8" WALL END OR OPENING DETAIL
1" = 1'-0"

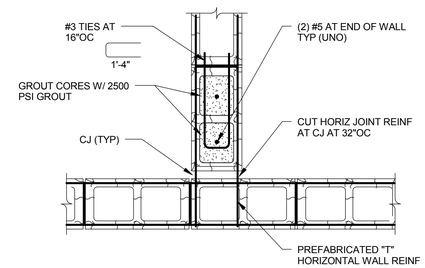

PROVIDE #5 DOWELS IN FOUNDATION MATCHING LOCATION OF VERTICAL BARS SHOWN

8 INTERIOR/EXTERIOR 8" WALL INTERSECTION
1" = 1'-0"

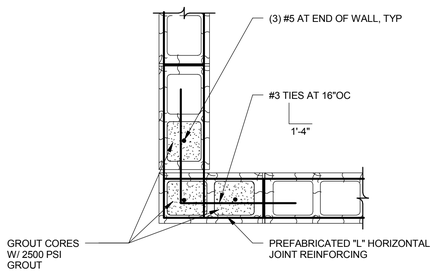

PROVIDE #5 DOWELS IN FOUNDATION MATCHING LOCATION OF VERTICAL BARS SHOWN

3 MASONRY WALL CORNER DETAIL
1" = 1'-0"

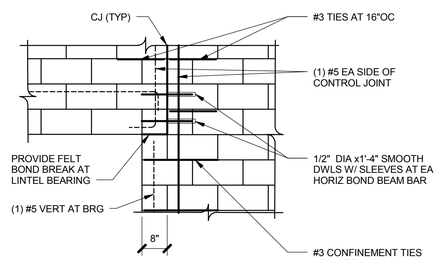

ELEVATION AT LINTEL BEARING AT CONTROL JOINT

4 ELEVATION @ 8" MASONRY LINTEL BRG
1/2" = 1'-0"

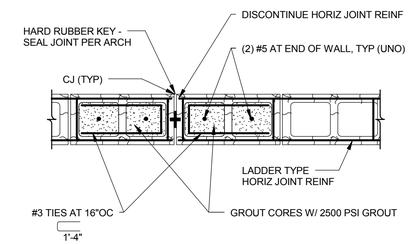

PROVIDE #5 DOWELS IN FOUNDATION MATCHING LOCATION OF VERTICAL BARS SHOWN

5 EXTERIOR 8" WALL CONTROL JOINT
1" = 1'-0"

REFERENCE ARCHITECTURAL ELEVATIONS FOR INTERIOR AND EXTERIOR WALL CONTROL JOINT LOCATIONS. HORIZONTAL SPACING OF CONTROL JOINTS SHALL NOT EXCEED 25'.

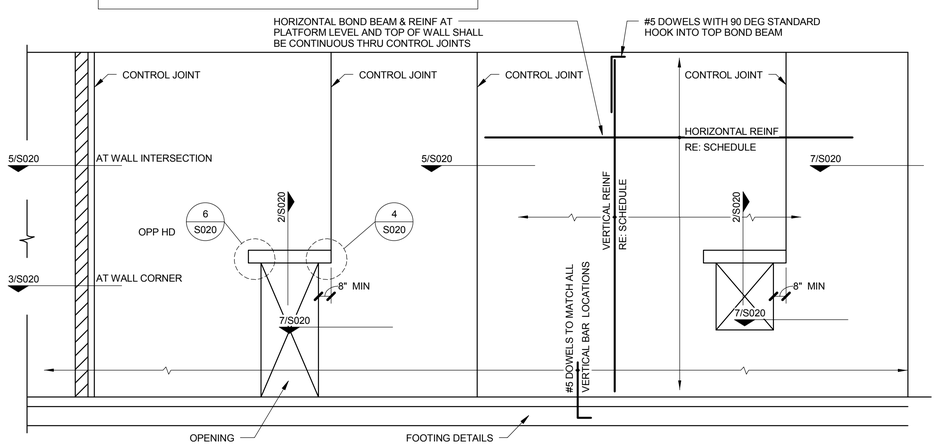

1 MASONRY WALL ELEVATION
1/4" = 1'-0"

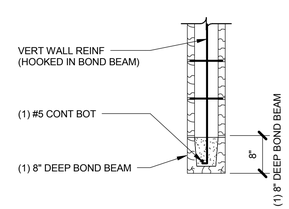

A NON-BEARING WALLS AT OPENINGS UP TO 4'-0"

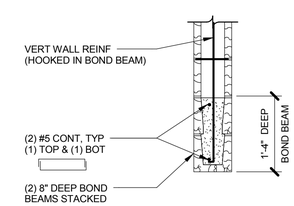

B NON-BEARING WALLS AT OPENINGS GREATER THAN 4'-0" UP TO 8'-0"

8" MASONRY LINTELS (UNO)

2 8" TYPICAL MASONRY LINTEL DETAILS
3/4" = 1'-0"

	INITIALS	DATE
DESIGNER		
CHECKER/ REVIEWER		
BACK CHECKER		
CORRECTOR		
VERIFIER		

HDR

NOT FOR CONSTRUCTION

NO.	DATE	REVISION	BY

ORIGINAL PLANS PREPARED BY

HNTB
11414 W. PARK PLACE
MILWAUKEE, WI 53224
(414) 359-2300

PLANS PREPARED FOR

CITY OF MILWAUKEE
DEPARTMENT OF
PUBLIC WORKS

MILWAUKEE STREETCAR

MAINTENANCE FACILITY

95% SUBMISSION | 29 FEB. 2016

DESIGNED BY JF | DESIGN CK'D SMG | DRAWN BY TH | PLANS CK'D MH

MASONRY TYPICAL DETAILS

S020

NOT FOR CONSTRUCTION

NOTE:
SINGLE LAYER REINF SHOWN, DOUBLE IS SIMILAR

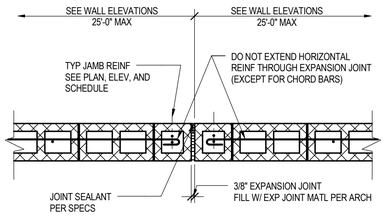

PLAN

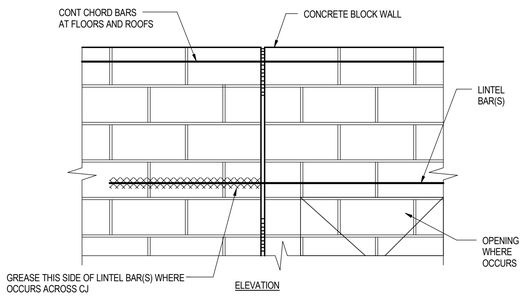

ELEVATION

7 TYPICAL CONTROL JOINT IN CMU WALL

3/4" = 1'-0"

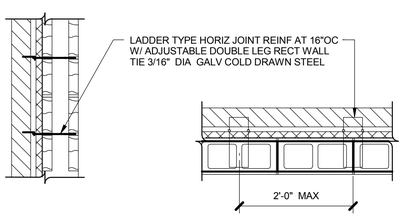

4 TYPICAL MASONRY DETAIL

3/4" = 1'-0"

TYPE	REINFORCING LOCATION	8" WALL THK
VERTS	VERTICAL BARS	# 5 @ 16" OC SINGLE CENTERED
	JAMBS/ENDS/MCJ	2 - #5
	CORNERS/INTERSECTIONS	1 - #5
HORIZ	TOP OF WALL BOND BEAM	2 - #5
	INTERMEDIATE BOND BEAMS	#5 @ 48" O.C.
	HORIZ JOINT REINF	9 GAGE WIRE, TRUSS TYPE JOINT REINF @ 16" OC BETWEEN BOND BEAMS
	BELOW OPENINGS	2 - #5
	LINTELS	SEE CMU REINFORCEMENT ELEVATION

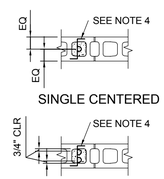

NOTES:

1. PROVIDE THE ABOVE SCHEDULED MINIMUM WALL REINFORCING IN ALL CMU, UNO. SEE CMU WALL REINFORCEMENT DETAIL.
2. GROUT ONLY THE CELLS WITH REINFORCING.
3. MAINTAIN MINIMUM 3" X 3" CONTINUOUS VERTICAL CELL AT EACH REBAR. PLACE WALLS TO MAXIMUM 4'-0" HEIGHT BEFORE GROUTING.
4. PROVIDE WIRE REBAR POSITIONERS TO HOLD BARS IN PLACE.
5. STOP GROUT POUR 1/2" BELOW TOP OF COURSE AT EACH GROUT LIFT.

5 CMU REINFORCING SCHEDULE

1/2" = 1'-0"

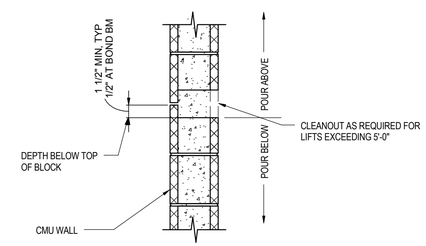

SECTION

NOTE:
TYPICAL REINFORCING NOT SHOWN FOR CLARITY.

6 CMU WALL HORIZONTAL POUR JOINT

1" = 1'-0"

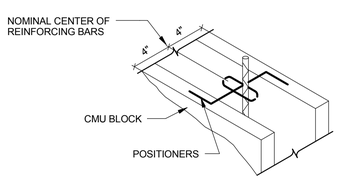

8" CMU BLOCK

ALL REINFORCEMENT SHALL BE SUPPORTED BY 9 GAUGE WIRE BAR POSITIONERS PLACED AT FIRST COURSE, ONE COURSE BELOW TOP OF WALL AT EACH POUR.

1 REBAR POSITIONER DETAIL

1" = 1'-0"

LOOSE LINTEL SCHEDULE		
OPENING SIZE	LINTEL SIZE	BEARING LENGTH
UP TO 3'-8"	4" x 4" x 1/4" ANGLE	8"
3'-9" TO 5'-4"	6" x 4" x 5/16" ANGLE	8"

1. REFERENCE DETAIL 6/S021 FOR LINTEL SECTION AND ADDITIONAL REQUIREMENTS.
2. LINTELS SPECIFICALLY CALLED OUT ON DRAWINGS SHALL GOVERN OVER THIS SCHEDULE.
3. ALL STEEL ANGLE LINTELS SHALL BE POSITIONED WITH 4" LEG HORIZONTAL.

2 LOOSE LINTEL SCHEDULE

12" = 1'-0"

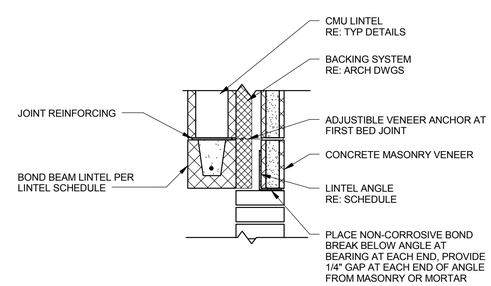

OPENINGS 5'-4" AND LESS

3 TYPICAL VENEER LINTEL DETAIL

1" = 1'-0"

	INITIALS	DATE
DESIGNER		
CHECKER/ REVIEWER		
BACK CHECKER		
CORRECTOR		
VERIFIER		

HDR

NOT FOR CONSTRUCTION

NO.	DATE	REVISION	BY

ORIGINAL PLANS PREPARED BY

HNTB

11414 W. PARK PLACE
MILWAUKEE, WI 53224
(414) 359-2300

PLANS PREPARED FOR

CITY OF MILWAUKEE
DEPARTMENT OF
PUBLIC WORKS

MILWAUKEE STREETCAR

MAINTENANCE FACILITY

95% SUBMISSION | 29 FEB. 2016

DESIGNED BY JF | DESIGN CK'D SMG | DRAWN BY TH | PLANS CK'D MH

MASONRY TYPICAL DETAILS

S021

NOT FOR CONSTRUCTION

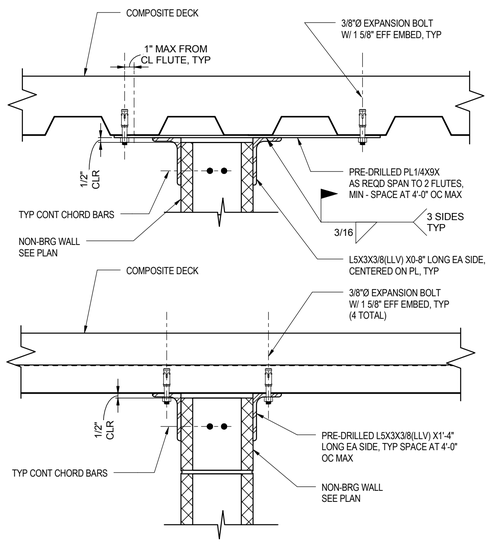

4 NON-BEARING CMU WALL TO COMPOSITE DECK
1 1/2" = 1'-0"

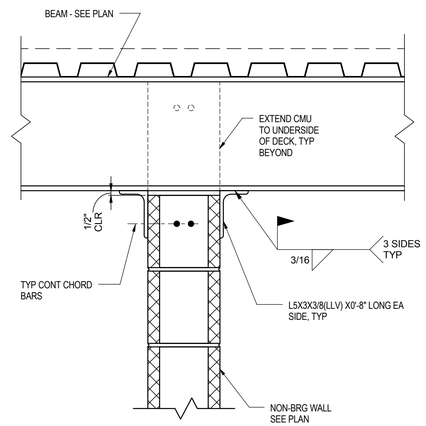

5 NON-BEARING CMU TO BEAM
1 1/2" = 1'-0"

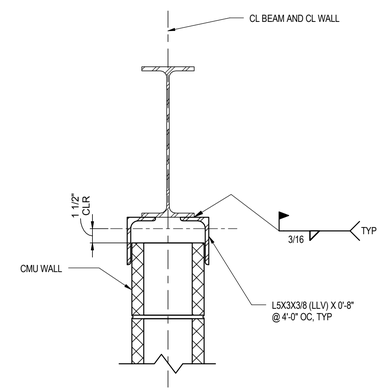

6 NON-BEARING CMU CONN TO STEEL BEAM
1 1/2" = 1'-0"

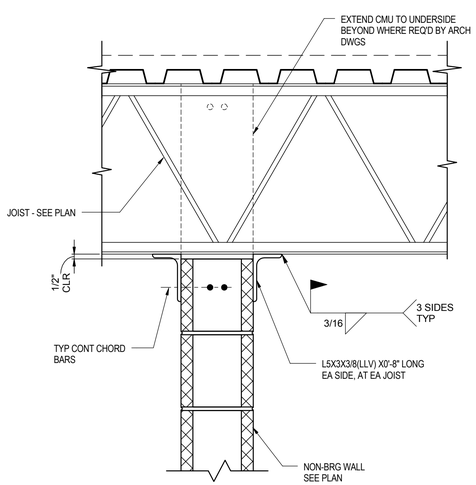

1 NON-BEARING CMU TO JOIST
1 1/2" = 1'-0"

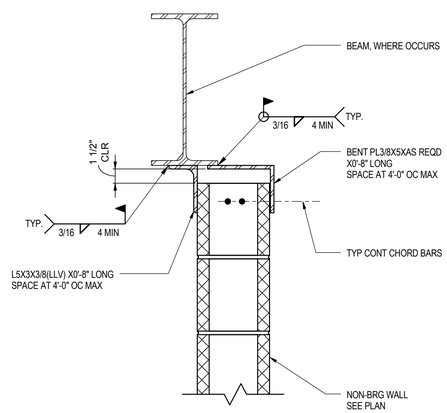

2 NON-BEARING CMU TO PARALLEL BEAM
1 1/2" = 1'-0"

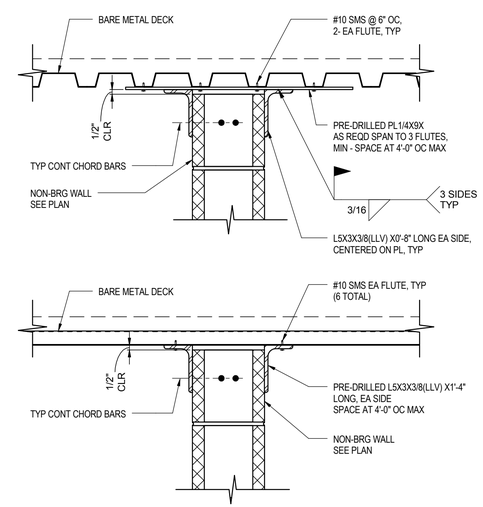

3 NON-BEARING CMU WALL TO BARE DECK
1 1/2" = 1'-0"

	INITIALS	DATE
DESIGNER		
CHECKER/ REVIEWER		
BACK CHECKER		
CORRECTOR		
VERIFIER		

HDR

NOT FOR CONSTRUCTION

NO.	DATE	REVISION	BY

ORIGINAL PLANS PREPARED BY

HNTB
11414 W. PARK PLACE
MILWAUKEE, WI 53224
(414) 359-2300

PLANS PREPARED FOR

CITY OF MILWAUKEE
DEPARTMENT OF
PUBLIC WORKS

MILWAUKEE STREETCAR

MAINTENANCE FACILITY

95% SUBMISSION | 29 FEB. 2016

DESIGNED BY JF | DESIGN CK'D SMG | DRAWN BY TH | PLANS CK'D MH

MASONRY TYPICAL DETAILS

S022

NOT FOR CONSTRUCTION

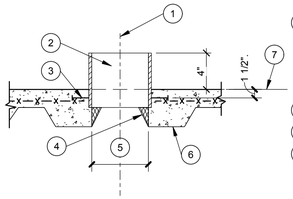

1. CENTERLINE OF FLOOR SLEEVE.
2. STANDARD WEIGHT PIPE SLEEVE OR 1/4" PLATE.
3. 1/2" Ø x 0'-4" HEADED STUD ANCHORS (4 STUDS MINIMUM).
4. BLOCKOUT CONCRETE WITHIN SLEEVE WITH STYROFOAM OR OTHER APPROVED MATERIAL AND SEAL WITH DUCT TAPE. CUT DECK TO MATCH INSIDE DIMENSION OF SLEEVE AFTER CONCRETE HAS SET FOR 7 DAYS.
5. SIZE OF SLEEVE, RE: PLAN.
6. METAL FLOOR DECK, RE: PLAN.
7. FOR TOC ELEVATION, RE: PLAN.

6 FLOOR SLAB SLEEVE OPENING DTL

12" = 1'-0"

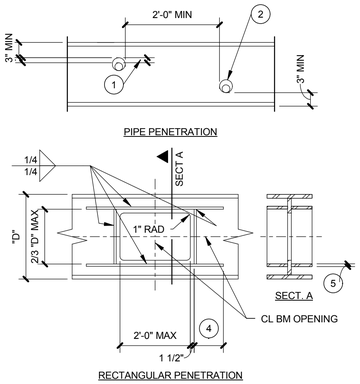

1. PROVIDE 1" CLEAR WHERE BEAM IS EXPECTED TO DEFLECT DOWNWARD.
2. MAXIMUM HOLE SIZE = 3" DIA. HOLES LARGER THAN OR EQUAL TO 2" SHALL BE CUT IN SHOP. SMALLER HOLES SHALL BE CAREFULLY FLAME CUT IN FIELD.
3. PLATE WIDTH TO BE MINIMUM ONE-HALF FLANGE WIDTH.
4. LENGTH = 3 TIMES CROSS SECTIONAL AREA OF PLATE IN SQUARE INCHES.
5. PLATE THICKNESS TO MATCH OR BE THICKER THAN FLANGE THICKNESS.

NOTE:
OPENING LOCATION SUBJECT TO REVIEW AND APPROVAL OF ENGINEER.

7 STEEL BEAM PENETRATIONS

1" = 1'-0"

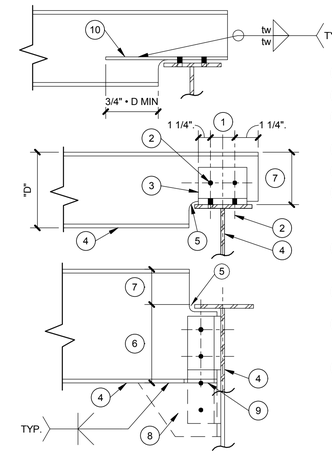

1. STD BM GAGE OF SUPPORT BEAM.
2. (2) 3/4" DIA A325 BOLTS UNO
3. L4x3x1/4x AS REQ'D. EACH SIDE OF WEB.
4. BEAM SIZE, SEE PLAN.
5. COPE AS REQUIRED.
6. SEE TYPICAL BOLTED CONNECTION DETAIL NUMBER OF BOLTS AND ROWS TO FIT LOWER DIMENSION OF CONNECTING BEAM.
7. DEPTH TO MATCH ADJACENT JOIST SEAT DEPTH, OR RE: PLAN FOR DIMENSION.
8. PLATE SHALL MATCH THICKNESS OF WEB.
9. COPE FLANGE / FLANGES AS REQUIRED. DOUBLE ANGLE, SINGLE ANGLE, OR TAB PLATE.
10. PLATE SHALL MATCH OF THICKNESS OF FLANGE.

8 FRAMING CONNECTION

12" = 1'-0"

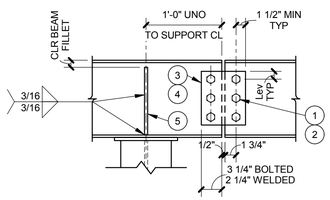

1. 3/4" Ø A325N BOLTS AT 3"OC (UnO).
2. HORIZONTAL SHORT SLOTS ALLOWED IN ONE BEAM.
3. 3/8" SPLICE PLATE, A36 STL(UnO), Lev = 1 1/4".
4. OPTIONAL WELD TO ONE BEAM, 1/4" FILLET, 3 SIDES OF PLATE.
5. 3/8" A36 STIFFENER PL EACH SIDE.
6. SEE DETAIL A1 ON THIS SHEET FOR MAX/ MIN "N" ROWS OF BOLTS PER BEAM DEPTH.
7. CONNECTION STRENGTH "R1" FOR SPLICE PLATE ON ONE SIDE OF BEAM WEBS, BOLTED TO BOTH BEAMS.
8. CONNECTION STRENGTH "R2" FOR SPLICE PLATE ON ONE SIDE OF BEAM WEBS, WELDED TO ONE BEAM.
9. CONNECTION STRENGTH "R3" FOR SPLICE PLATE ON BOTH SIDES OF BEAM WEBS, BOLTED TO BOTH BEAMS.

CONNECTION STRENGTH TABLE (UNFACTORED) SEE DETAIL A1 ON THIS SHEET FOR ADD'L NOTES

N (6) BOLTS	R1 (7) KIPS	R2 (8) KIPS	R3 (9) KIPS
2	13	14	16
3	24	32	30
4	35	42	49
5	47	53	77
6	58	64	112
7	69	74	137
8	80	85	159
9	90	95	181
10	101	106	202
11	111	117	223

3 BEAM SPLICE CONNECTION

1" = 1'-0"

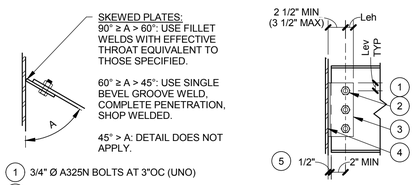

1. 3/4" Ø A325N BOLTS AT 3"OC (UNO)
2. STANDARD BOLT HOLES OR HORIZONTAL SHORT SLOTS.
3. 3/8" TAB PL A36 STL (UnO), Lev = 1 1/4", Leh = 1 1/2".
4. WELD TO SUPPORT, 1/4" FILLET, EACH SIDE OF PLATE.
5. MAX 1" BEAM SETBACK ALLOWED AT EMBED CONNECTIONS AND COLUMNS.
6. SEE DETAIL A1 ON THIS SHEET FOR MAX/ MIN "N" ROWS OF BOLTS PER BEAM DEPTH.
7. CONNECTION STRENGTH "R1" FOR UNCOPED BEAMS.
8. CONNECTION STRENGTH "R2" FOR BEAMS COPED AT TOP FLANGE ONLY (MAX 6 1/2" LONG x 2 1/2" DEEP).
9. CONNECTION STRENGTH "R3" FOR BEAMS COPED AT TOP FLANGE ONLY (MAX 8" LONG x 5" DEEP) AND FOR BEAMS COPED AT THE TOP AND BOTTOM FLANGE AND FRAMING INTO AN EQUAL DEPTH GIRDER OR BEAM.

CONNECTION STRENGTH TABLE (UNFACTORED) SEE DETAIL A1 ON THIS SHEET FOR ADD'L NOTES

N (6) BOLTS	R1 (7) KIPS	R2 (8) KIPS	R3 (9) KIPS
2	21	15	8
3	32	24	15
4	42	42	30
5	53	53	53
6	64	64	64
7	74	74	74
8	85	85	85
9	95	95	95
10	103	103	103
11	111	111	111

4 SINGLE SHEAR PLATE CONNECTION

1" = 1'-0"

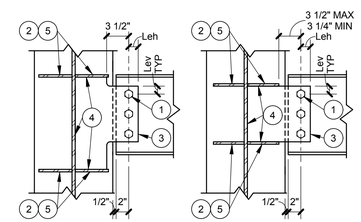

1. 3/4" Ø A325N BOLTS AT 3"OC (UNO).
2. 3/8" A36 PL FULL DEPTH STIFFENERS, TOP AND BOTTOM OF TAB PLATE, EACH SIDE OF WEB, TYP.
3. 3/8" TAB PL A36 STL (UnO), Lev = 1 1/4", Leh = 1 1/2".
4. WELD TAB PL TO COLUMN WEB AND STIFFENERS, 5/16" FILLET, EACH SIDE OF PLATE.
5. WELD STIFFENERS TO COLUMN WEB AND INSIDE OF FLANGES WITH 5/16" FILLET WELDS, EACH SIDE.
6. SEE DETAIL 1 ON THIS SHEET FOR MAX/ MIN "N" ROWS OF BOLTS PER BEAM DEPTH.
7. SEE SINGLE SHEAR PLATE CONNECTION FOR CONNECTION STRENGTHS (USE R1 VALUES).

5 BEAM TO COLUMN WEB CONNECTION

1" = 1'-0"

BEAM SIZE	MAX N (TYPE A)	MAX N (TYPE B)	MIN N (TYPE A & B)
W10	2	2	2
W12	3	3	2
W14	3	3	2
W16	4	4	3
W18	5	4	3
W21	6	5	4

BEAM SIZE	MAX N (TYPE A)	MAX N (TYPE B)	MIN N (TYPE A & B)
W24	7	6	4
W27	8	7	5
W30	9	8	5
W33	10	9	6
W36	10	10	6
W40	11	11	6

TYPE A : UNCOPED BEAMS OR COPE ≤ 1 1/2"
TYPE B : COPE ≤ 2 3/4" DEEP OR DOUBLE ANGLE CONNECTIONS WITH STAGGERED BOLTS TO BEAM

BEAM END CONNECTION GENERAL NOTES :

1. VALUES IN TABLES ARE THE MAXIMUM UNFACTORED VERTICAL REACTIONS THE CONNECTION CAN ADEQUATELY RESIST. FOR FACTORED STRENGTH VALUES (LRFD), MULTIPLY UNFACTORED STRENGTHS BY 1.5. RE: AISC 2005 STEEL CONSTRUCTION MANUAL.
2. STRENGTH VALUES ARE PROVIDED FOR GENERAL FLOOR FRAMING CONNECTION DESIGN, ASSUMING LOWER BOUND BEAM SECTION PROPERTIES THAT MAY CONTROL STRENGTH VALUES. ACTUAL STRENGTH VALUES FOR INDIVIDUAL BEAMS LOCATIONS AND CONDITIONS MAY BE HIGHER. DETAILER TO PROVIDE ADDITIONAL CALCULATIONS IF HIGHER STRENGTHS ARE DESIRED.
3. STRENGTH VALUES ONLY APPLY TO ASTM A992 WIDE FLANGE SHAPES, W10 OR DEEPER.
4. R2 VALUES ARE RESTRICTED BY THE COPE DEPTH VALUES SPECIFIED ON CONNECTION DETAILS. TABULATED STRENGTH VALUES SHALL BE REDUCED BY AN ADDITIONAL FACTOR OF 0.75 FOR THE FOLLOWING SHAPES: W10x12, W10x15, W12x14, W12x16.
5. FOR BEAMS WITHOUT REACTIONS SHOWN ON THE PLAN, OR FOR BEAMS WITH LARGER COPES THAN SPECIFIED IN CONNECTION DETAILS, IF NO OTHER DETAIL IS SHOWN IN THESE CONTRACT DRAWINGS,THE DETAILER SHALL ASSUME THE MAXIMUM NUMBER OF BOLTS FOR THE BEAM CONNECTION.
6. FOR BEAMS WITH LARGER COPES THAN SPECIFIED IN THE CONNECTION TABLES, BEAM WEBS SHALL BE REINFORCED WITH A 1/4" A572 GRADE 50 DOUBLER PLATE.

1 BEAM END CONNECTION NOTES

12" = 1'-0"

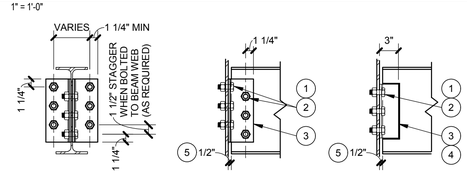

1. 3/4" Ø A325N BOLTS AT 3"OC (UNO)
2. STANDARD BOLT HOLES OR HORIZONTAL SHORT SLOTS.
3. LL4x3 1/2x5/16 SLBB A36 STL (L4x3x5/16 SLBB IF WELDED).
4. OPTIONAL WELD IN LIEU OF BOLTS TO BEAM, 3/16" FILLET, 3 SIDES OF ANGLE (EACH ANGLE).
5. MAX 1" BEAM SETBACK ALLOWED AT EMBED CONNECTIONS AND COLUMNS.
6. SEE DETAIL A1 ON THIS SHEET FOR MAX/ MIN "N" ROWS OF BOLTS PER BEAM DEPTH.
7. CONNECTION STRENGTH "R1" FOR UNCOPED BEAMS.
8. CONNECTION STRENGTH "R2" FOR BEAMS COPED AT TOP FLANGE ONLY (MAX 6 1/2" LONG x 2 1/2" DEEP).
9. CONNECTION STRENGTH "R3" FOR BEAMS COPED AT TOP FLANGE ONLY (MAX 8" LONG x 5" DEEP) AND FOR BEAMS COPED AT THE TOP AND BOTTOM FLANGE AND FRAMING INTO AN EQUAL DEPTH GIRDER OR BEAM.

CONNECTION STRENGTH TABLE (UNFACTORED) SEE DETAIL A1 ON THIS SHEET FOR ADD'L NOTES

N (6) BOLTS	R1 (7) KIPS	R2 (8) KIPS	R3 (9) KIPS
2	27	15	8
3	39	24	15
4	58	43	30
5	86	64	53
6	104	89	83
7	121	116	98
8	138	138	138
9	155	155	155
10	173	173	173
11	190	190	190

2 DOUBLE ANGLE CONNECTION

1" = 1'-0"

	INITIALS	DATE
DESIGNER		
CHECKER/ REVIEWER		
BACK CHECKER		
CORRECTOR		
VERIFIER		

HDR

NOT FOR CONSTRUCTION

NO.	DATE	REVISION	BY

ORIGINAL PLANS PREPARED BY

HNTB
11414 W. PARK PLACE
MILWAUKEE, WI 53224
(414) 359-2300

PLANS PREPARED FOR

CITY OF MILWAUKEE
DEPARTMENT OF
PUBLIC WORKS

MILWAUKEE STREETCAR

MAINTENANCE FACILITY

95% SUBMISSION | 29 FEB. 2016

DESIGNED BY JF | DESIGN CK'D SMG | DRAWN BY TH | PLANS CK'D MH

STEEL TYPICAL DETAILS

S030

NOT FOR CONSTRUCTION

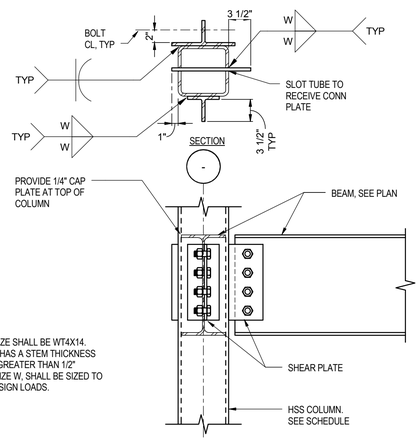

NOTES:

1. MINIMUM WT SIZE SHALL BE WT4X14.
2. USE TEE THAT HAS A STEM THICKNESS EQUAL TO OR GREATER THAN 1/2"
3. FILLET WELD SIZE W, SHALL BE SIZED TO RESIST ALL DESIGN LOADS.

4 BEAM CORNER CONN TO HSS COLUMN

1" = 1'-0"

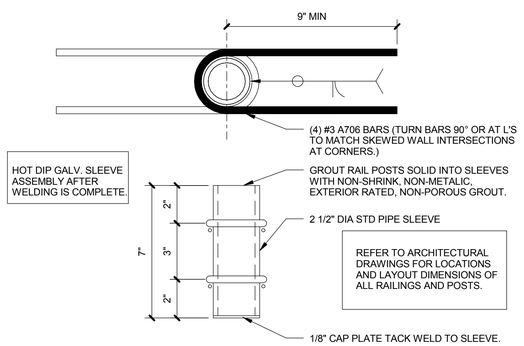

1 TYP POST SLEEVE EMBED FOR CIP CONC

3" = 1'-0"

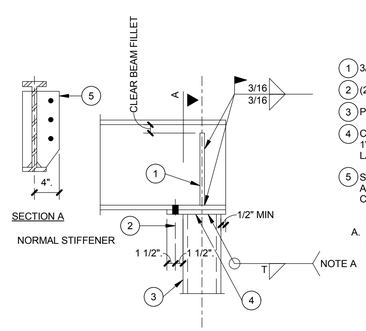

1. 3/8" STIFFENER PLATE EACH SIDE.
2. (2) 3/4" DIA A325 BOLTS UNO
3. PIPE OR HSS COLUMN, SEE PLAN.
4. CAP PLATE 1/2" x COLUMN SIZE PLUS 1" OR BEAM FLANGE (WHICH EVER IS LARGER).
5. STIFFENER WHERE BEAM FRAMES IN AT COLUMN CENTERLINE. RE: FRAMING CONNECTION SINGLE SHEAR PLATE.

NOTE:

A. T = THICKNESS OF TUBE, NEED NOT EXCEED 5/16".

2 BEAM TO HSS COLUMN CONNECTION

12" = 1'-0"

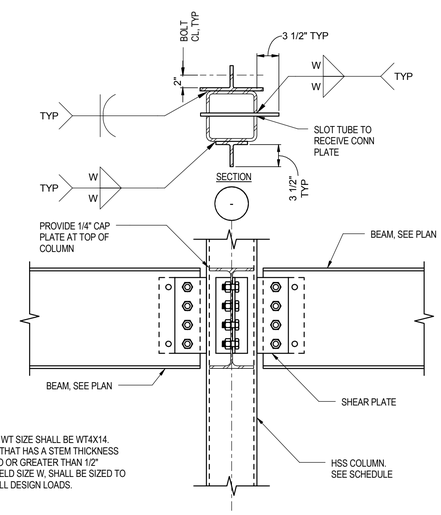

NOTES:

1. MINIMUM WT SIZE SHALL BE WT4X14.
2. USE TEE THAT HAS A STEM THICKNESS EQUAL TO OR GREATER THAN 1/2"
3. FILLET WELD SIZE W, SHALL BE SIZED TO RESIST ALL DESIGN LOADS.

3 BEAM INTERIOR CONN TO HSS COLUMN

1" = 1'-0"

	INITIALS	DATE
DESIGNER		
CHECKER/ REVIEWER		
BACK CHECKER		
CORRECTOR		
VERIFIER		

HDR

NOT FOR CONSTRUCTION

NO.	DATE	REVISION	BY

ORIGINAL PLANS PREPARED BY

HNTB

11414 W. PARK PLACE
MILWAUKEE, WI 53224
(414) 359-2300

PLANS PREPARED FOR

CITY OF MILWAUKEE
DEPARTMENT OF
PUBLIC WORKS

MILWAUKEE STREETCAR

MAINTENANCE FACILITY

95% SUBMISSION | 29 FEB. 2016

DESIGNED BY JF | DESIGN CK'D SMG | DRAWN BY TH | PLANS CK'D MH

STEEL TYPICAL DETAILS

S031

NOT FOR CONSTRUCTION

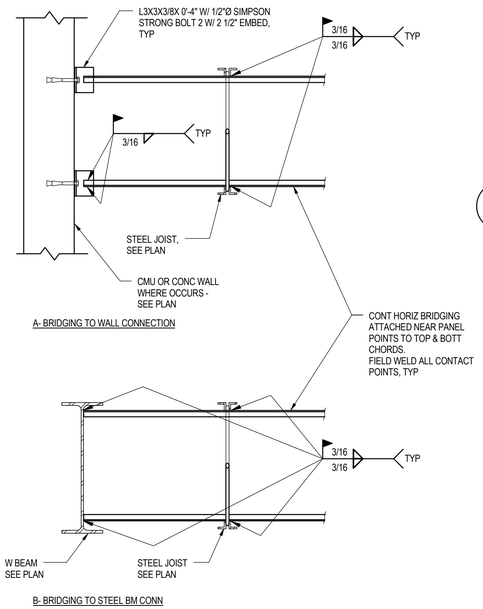

4 TYPICAL HORIZONTAL BRIDGING TO WALL OR BEAM
1" = 1'-0"

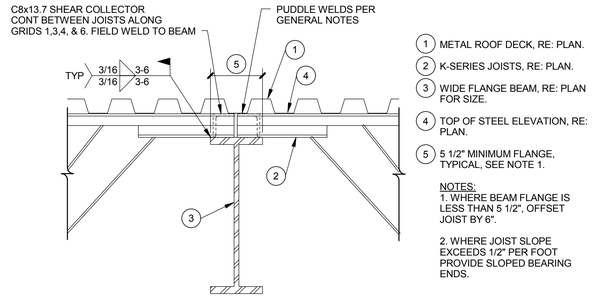

1 METAL ROOF DECK, RE: PLAN.

2 K-SERIES JOISTS, RE: PLAN.

3 WIDE FLANGE BEAM, RE: PLAN FOR SIZE.

4 TOP OF STEEL ELEVATION, RE: PLAN.

5 5 1/2" MINIMUM FLANGE, TYPICAL, SEE NOTE 1.

NOTES:
1. WHERE BEAM FLANGE IS LESS THAN 5 1/2", OFFSET JOIST BY 6".

2. WHERE JOIST SLOPE EXCEEDS 1/2" PER FOOT PROVIDE SLOPED BEARING ENDS.

7 JOIST ON STEEL BEAM
1/2" = 1'-0"

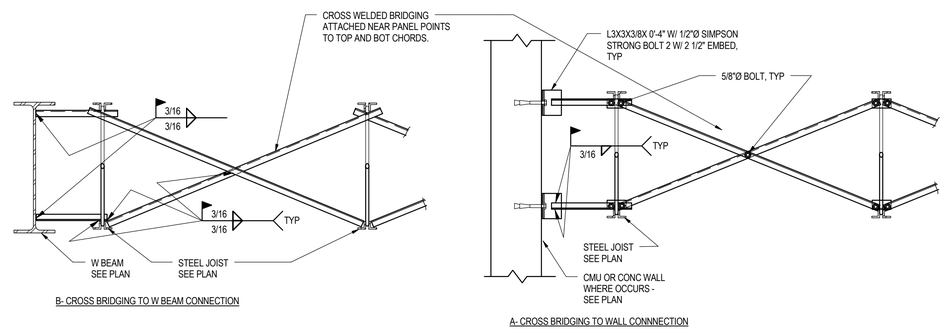

5 TYPICAL CROSS BRIDGING TO WALL OR BEAM
1" = 1'-0"

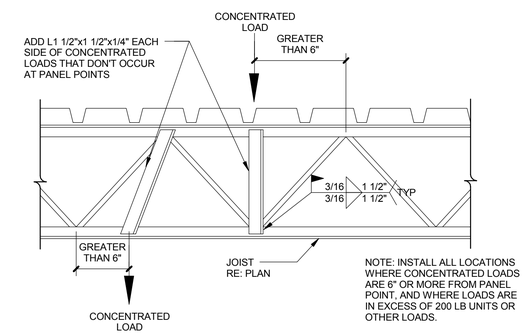

6 CONCENTRATED LOADS DETAIL
12" = 1'-0"

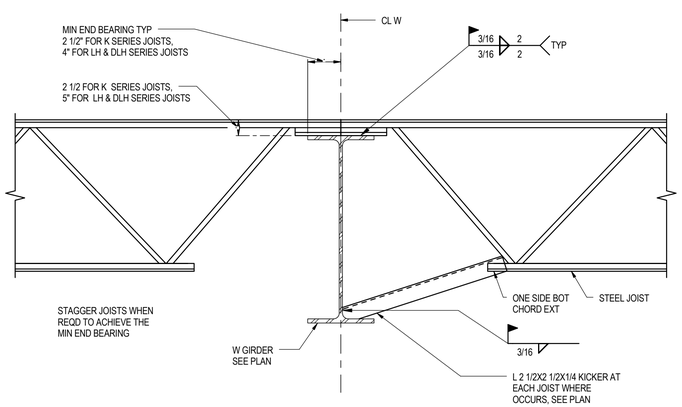

1 JOIST BEARING ON BOTH SIDES OF BEAM
1" = 1'-0"

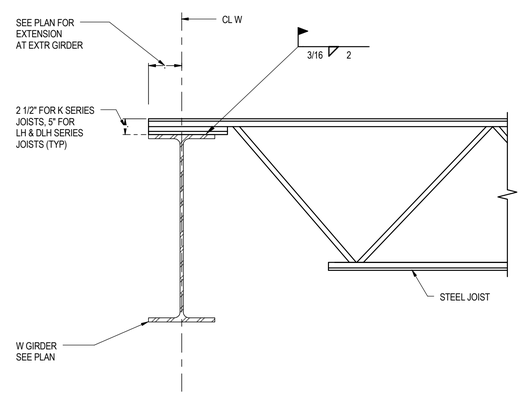

2 JOIST BEARING ON ONE SIDE OF BEAM
1" = 1'-0"

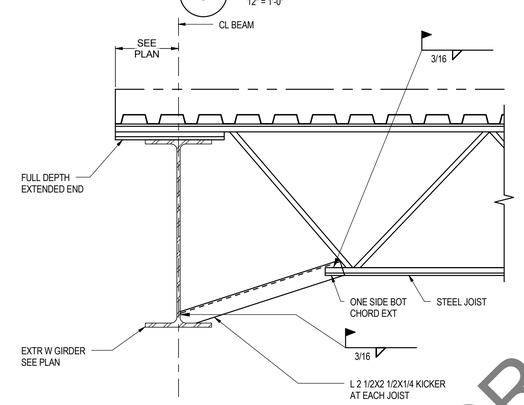

3 TYPICAL KICKER AT EXTR GIRDER
1" = 1'-0"

	INITIALS	DATE
DESIGNER		
CHECKER/ REVIEWER		
BACK CHECKER		
CORRECTOR		
VERIFIER		

NOT FOR CONSTRUCTION

NO.	DATE	REVISION	BY

ORIGINAL PLANS PREPARED BY

HNTB
11414 W. PARK PLACE
MILWAUKEE, WI 53224
(414) 359-2300

PLANS PREPARED FOR

CITY OF MILWAUKEE
DEPARTMENT OF
PUBLIC WORKS

MILWAUKEE STREETCAR

MAINTENANCE FACILITY

95% SUBMISSION | 29 FEB. 2016

DESIGNED BY JF | DESIGN CK'D SMG | DRAWN BY TH | PLANS CK'D MH

STEEL TYPICAL DETAILS

S032

NOT FOR CONSTRUCTION

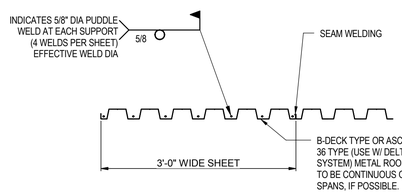

TYPICAL TYPE "HSB" METAL DECK DETAIL

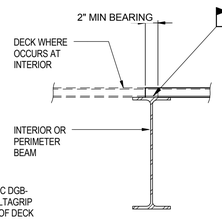

CONNECTION PERPENDICULAR TO FLUTES DETAIL

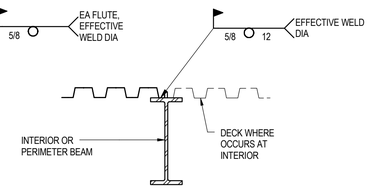

CONNECTION PARALLEL TO FLUTES DETAIL

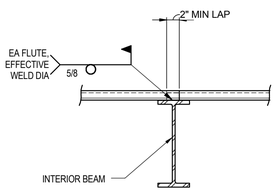

TYPICAL DECK LAP DETAIL

5 TYPICAL ROOF DECK DETAIL

1" = 1'-0"

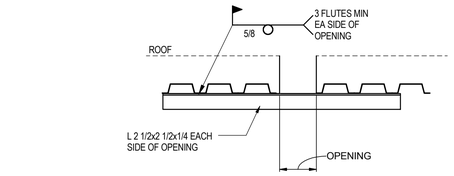

NOTE:

1. PROVIDE THIS DETAIL FOR OPENINGS 4" TO 12" MAX DIMENSION WHERE NO CURB IS REQUIRED AND NO EQUIPMENT IS SUPPORTED.
2. FOR OPENING LOCATION AND SIZE SEE PLAN, ARCH'L, MECH'L OR ELECT'L.
3. FOR LARGER OPENINGS THAN INDICATED, WHERE EQUIPMENT IS SUPPORTED, OR WHERE CURB IS REQUIRED, PROVIDE FRAMING PER 4/S033 UNO SIM
4. ALL OPENINGS SHALL BE AS SHOWN ON THE STRUCTURAL DRAWINGS, OR APPROVED BY THE STRUCTURAL ENGINEER.

6 12" MAX ROOF DECK OPENING DETAIL

1" = 1'-0"

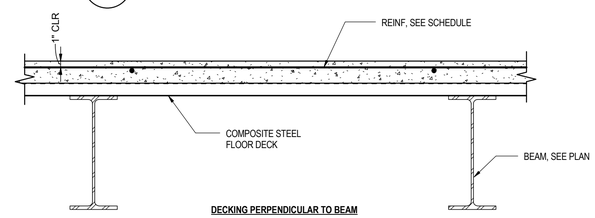

DECKING PERPENDICULAR TO BEAM

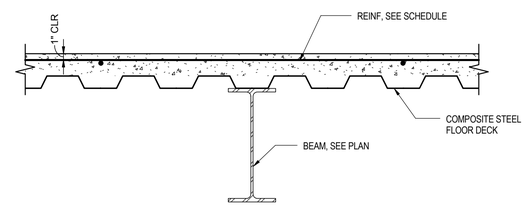

DECKING PARALLEL TO BEAM

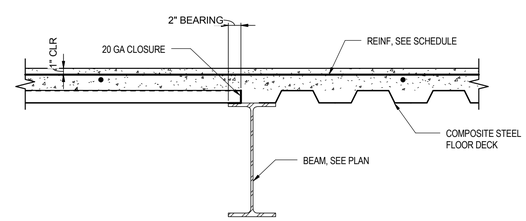

WHERE DECKING CHANGES DIRECTION AT FLANGE WIDTH > 5"

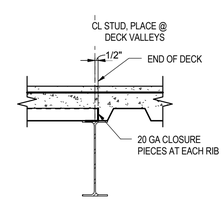

AT FLANGE WIDTH < 5"

3 TYPICAL COMPOSITE SLAB REINFORCING

1" = 1'-0"

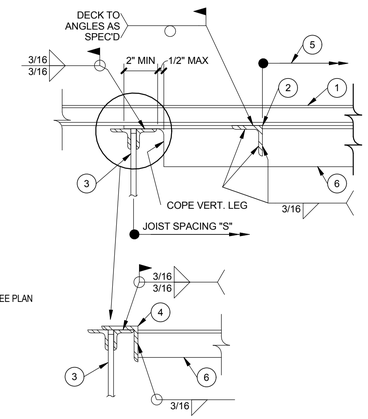

OPTIONAL END CONDITION

1. METAL ROOF DECK, RE: PLAN.
2. L3x3x1/4 FRAMING, SHORT DIRECTION.
3. STEEL JOIST SHOWN, WF BEAM SIM, RE: PLAN.
4. L5x3x3/8x0'-4".
5. OPENING SIZE, SEE PLAN AND THICKNESS x 0'-3" WIDE.
6. FRAME ANGLE (LLV)

"S"	ANGLE SIZE
0' TO 4'	L 4x3x3/8 LLV
4' TO 6'	L 5x3x3/8 LLV
6' TO 8'	L 6x4x3/8 LLV

NOTE:
JOISTS SHALL BE REINFORCED PER 2/S032 WHERE FRAME ANGLE DOES NOT BEAR AT JOIST PANEL POINT.

7. ROOF TOP UNIT CURB AND ANCHORAGE PER MECHANICAL.

4 >12" ROOF DECK OPENING DETAIL

1/2" = 1'-0"

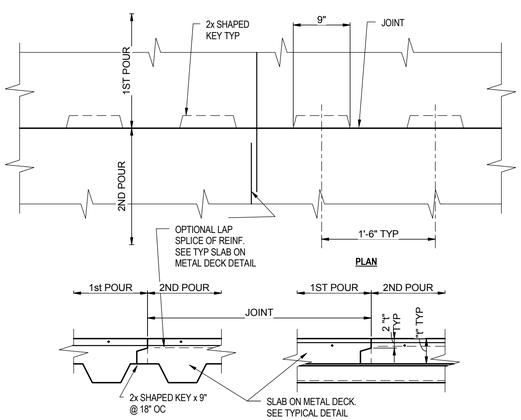

DETAIL PARALLEL TO DECK SPAN

DETAIL PERPENDICULAR TO DECK SPAN

NOTE: LOCATE JOINT WITHIN MIDDLE 1/3 OF BAY.

NOTE: LOCATE JOINT WITHIN MIDDLE 1/3 OF DECK SPAN.

1 TYPICAL COMPOSITE SLAB JOINT DETAIL

1" = 1'-0"

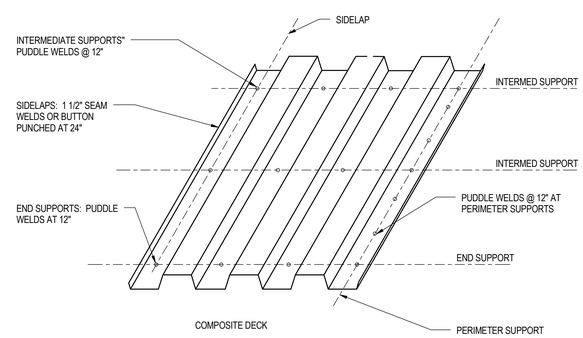

NOTES:

1. DECK SHALL HAVE A MINIMUM OF 2" BEARING AT ALL SUPPORTING MEMBERS PERPENDICULAR TO DECK SPAN AND 1 1/2" AT ALL MEMBERS PARALLEL TO DECK SPAN.
2. PUDDLE WELDS SHALL BE 5/8" DIAMETER EFFECTIVE FUSION WELDS. ELECTRODES SHALL BE E60 OR E70.

2 TYPICAL COMPOSITE DECK ATTACHMENT

3/4" = 1'-0"

NOT FOR CONSTRUCTION

NO.	DATE	REVISION	BY

ORIGINAL PLANS PREPARED BY

HNTB
11414 W. PARK PLACE
MILWAUKEE, WI 53224
(414) 359-2300

PLANS PREPARED FOR

CITY OF MILWAUKEE
DEPARTMENT OF
PUBLIC WORKS

MILWAUKEE STREETCAR

MAINTENANCE FACILITY

95% SUBMISSION | 29 FEB. 2016

DESIGNED BY JF | DESIGN CK'D SMG | DRAWN BY TH | PLANS CK'D MH

	INITIALS	DATE
DESIGNER		
CHECKER/ REVIEWER		
BACK CHECKER		
CORRECTOR		
VERIFIER		

STEEL TYPICAL DETAILS

S033

NOT FOR CONSTRUCTION

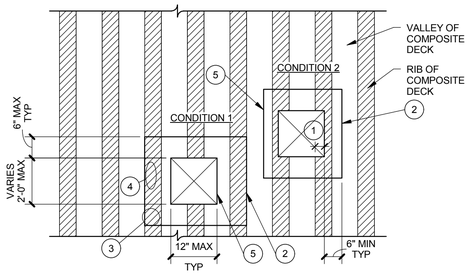

NOTES:
FOR THIS DETAIL, DECK OPENINGS MAY BE CUT PRIOR TO PLACING CONCRETE.

CONDITION 1 SHALL APPLY IN MOST SITUATIONS. CONDITION 2 MAY BE USED ONLY WHEN OPENING WIDTH IS 12" OR LESS AND CENTERED ON A VALLEY.

NO REINFORCING PLATE IS REQUIRED WHEN OPENING IS LESS THAN 6" SQUARE.

CONTRACTOR SHALL COORDINATE SIZE AND LOCATION OF MECHANICAL AND ELECTRICAL OPENINGS. NOT ALL OPENINGS SHOWN ON STRUCTURAL DRAWINGS.

CONTRACTOR TO ENSURE THAT CONCRETE FILLS THE SPACE UNDER THE PLATE.

1. HALF OF RIB WIDTH OR LESS (TYP).
2. 14 GA GALV REINFORCING PL ON TOP OF DECK (PL YIELD STRENGTH SHALL BE GREATER THAN OR EQUAL TO DECK YIELD STRENGTH).
3. (4) #10 TEK SCREWS AT EACH FLUTE (TYP).
4. #10 TEK SCREWS AT 12"OC MAX ALONG LENGTH OF OPENING.
5. PROVIDE LIGHT GA CLOSURE PL AROUND PERIMETER OF OPENING.

4 12" MAX UNFRAMED COMPOSITE FLOOR OPENINGS
12" = 1'-0"

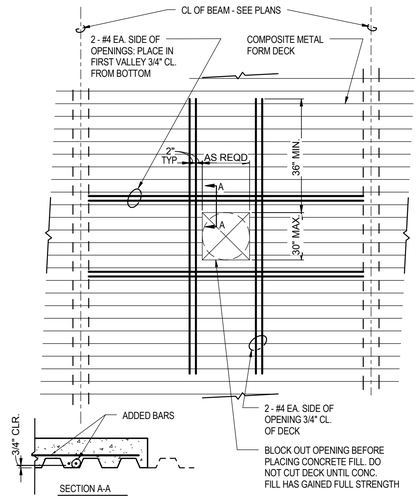

NOTES:
1. MULTIPLE OPENINGS WITH A CLEAR DISTANCE LESS THAN 3 TIMES THE SIZE OF THE LARGER OPENING SHALL BE TREATED AS A SINGLE OPENING. WHEN DIMENSIONAL SIZE LIMITATIONS ARE EXCEEDED, PROVIDE SUPPORT BEAMS ON ALL SIDES OF OPENING. SEE TYPICAL SUPPLEMENTAL FRAMING AT COMPOSITE SLAB OPENING DETAIL.
2. NOTIFY ENGINEER WHEN BAR EXTENSION IS LIMITED.
3. DETAIL IS TYPICAL FOR ALL OPENINGS UNLESS NOTED OTHERWISE ON PLANS.
4. CONTRACTOR SHALL COORDINATE EXACT SIZE AND LOCATION OF OPENING WITH APPLICABLE DISCIPLINE(S). NOT ALL OPENINGS ARE SHOWN ON STRUCTURAL DRAWINGS.

5 12" TO 30" UNFRAMED COMPOSITE FLOOR OPENINGS
1/2" = 1'-0"

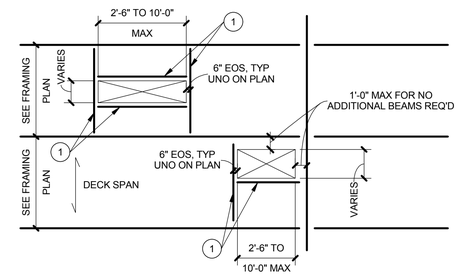

NOTES:
CONTRACTOR SHALL COORDINATE SIZE AND LOCATION OF MECHANICAL AND ELECTRICAL OPENINGS. NOT ALL OPENINGS SHOWN ON STRUCTURAL DRAWINGS.

RE: TYPICAL SLAB EDGE DETAILS FOR OPENING EDGES.

1. W14x34 UNO ON PLAN.

6 30" TO 10 FT MAX (FRAMED) COMPOSITE FLOOR OPENINGS
12" = 1'-0"

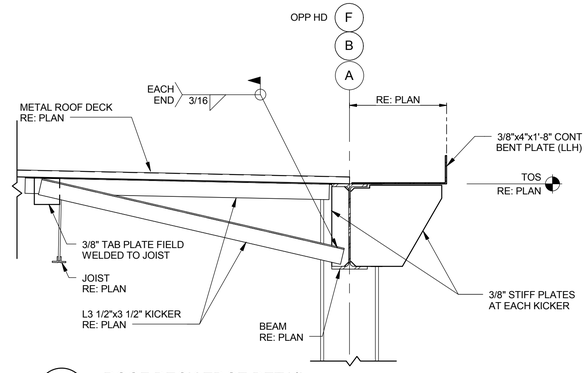

8 ROOF DECK EDGE DETAIL
3/4" = 1'-0"

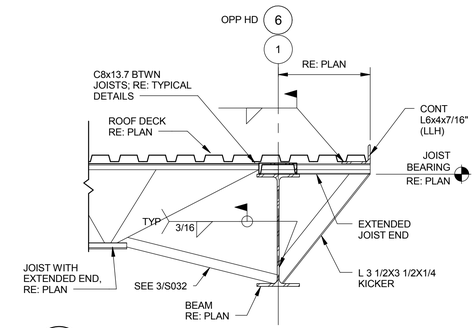

7 ROOF DECK EDGE DETAIL
3/4" = 1'-0"

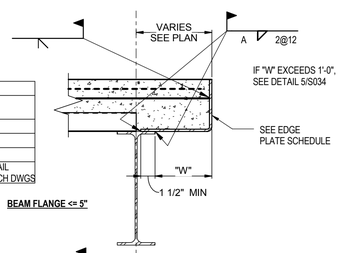

EDGE PLATE SCHEDULE			
W	PLATE THICKNESS	WELD 'A'	NOTES
0" TO 4"	12 GAGE	1/8"	—
OVER 4" TO 8"	10 GAGE	1/8"	—
OVER 8" TO 12"	PL 3/16	3/16"	—
0" TO 12"	PL 3/16	3/16"	WHERE GUARDRAIL OCCURS PER ARCH DWGS

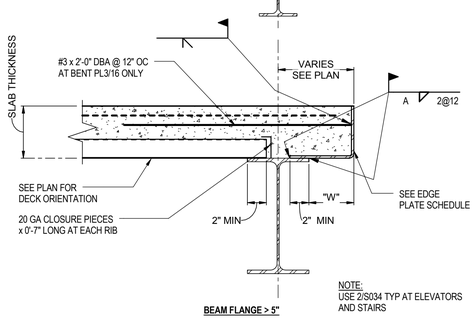

NOTE:
USE 2/S034 TYP AT ELEVATORS AND STAIRS

1 ≤12" SLAB EDGE DETAIL
1 1/2" = 1'-0"

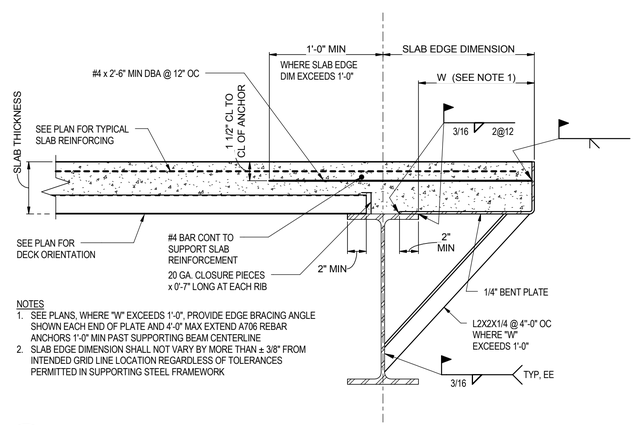

NOTES
1. SEE PLANS, WHERE "W" EXCEEDS 1'-0", PROVIDE EDGE BRACING ANGLE SHOWN EACH END OF PLATE AND 4'-0" MAX EXTEND A706 REBAR ANCHORS 1'-0" MIN PAST SUPPORTING BEAM CENTERLINE
2. SLAB EDGE DIMENSION SHALL NOT VARY BY MORE THAN ± 3/8" FROM INTENDED GRID LINE LOCATION REGARDLESS OF TOLERANCES PERMITTED IN SUPPORTING STEEL FRAMEWORK

2 >12" SLAB EDGE DETAIL
1 1/2" = 1'-0"

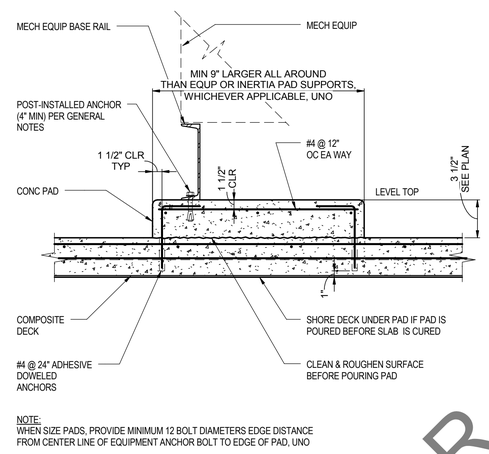

NOTE:
WHEN SIZE PADS, PROVIDE MINIMUM 12 BOLT DIAMETERS EDGE DISTANCE FROM CENTER LINE OF EQUIPMENT ANCHOR BOLT TO EDGE OF PAD, UNO

3 CONCRETE PAD ON COMPOSITE METAL DECK
1" = 1'-0"

	INITIALS	DATE
DESIGNER		
CHECKER/ REVIEWER		
BACK CHECKER		
CORRECTOR		
VERIFIER		

HDR

NOT FOR CONSTRUCTION

NO.	DATE	REVISION	BY

ORIGINAL PLANS PREPARED BY

HNTB
11414 W. PARK PLACE
MILWAUKEE, WI 53224
(414) 359-2300

PLANS PREPARED FOR

CITY OF MILWAUKEE
DEPARTMENT OF
PUBLIC WORKS

MILWAUKEE STREETCAR

MAINTENANCE FACILITY

95% SUBMISSION | 29 FEB. 2016

DESIGNED BY JF | DESIGN CK'D SMG | DRAWN BY TH | PLANS CK'D MH

STEEL TYPICAL DETAILS

S034

NOT FOR CONSTRUCTION

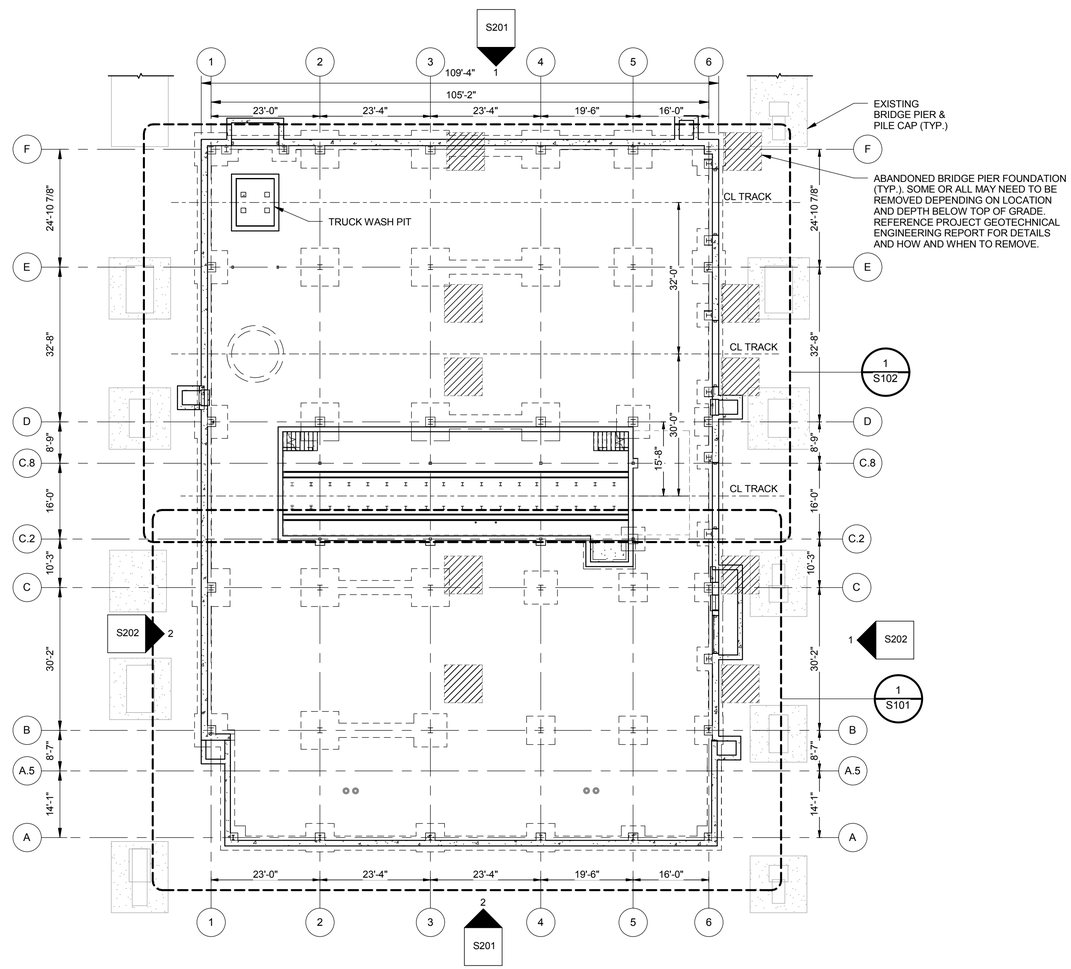

COMPOSITE FOUNDATION PLAN

1/16" = 1'-0"

N

SHEET NOTES - FOUNDATION PLAN

1. REFERENCE SHEETS S001 THROUGH S002 FOR STRUCTURAL GENERAL NOTES.
2. REFERENCE SHEETS S010 THROUGH S032 FOR TYPICAL DETAILS.
3. REFERENCE SHEETS S301AND S302 FOR FOOTING, PEDESTAL, COLUMN AND ANCHOR BOLT SCHEDULES.
4. NON-LOAD BEARING / NON-STRUCTURAL MASONRY WALLS AND PARTITIONS ARE DENOTED "MW-x" ON PLANS. UNLESS NOTED OTHERWISE ON PLANS, ALL SUCH WALLS SHALL BE REINFORCED WITH #5 @ 32"OC VERTICAL REINFORCING AND LADDER TYPE HORIZONTAL JOINT REINFORCING @ 16"OC. BRACE TOPS OF ALL SUCH WALLS PER TYPICAL DETAILS ON SHEETS S020 AND S021. PROVIDE A FOOTING OR THICKENED SLAB BELOW ALL SUCH WALLS PER TYPICAL DETAIL 10/S010, UNLESS NOTED OTHERWISE. REFERENCE ARCHITECTURAL DRAWINGS FOR LOCATIONS OF ALL SUCH MASONRY WALLS.
5. CONTRACTOR SHALL PROVIDE CONTROL AND CONSTRUCTION JOINTS IN SLAB-ON-GRADE PER STRUCTURAL GENERAL NOTES AND TYPICAL DETAILS. COORDINATE JOINT LOCATIONS WITH ARCHITECT/ENGINEER. ISOLATE SLABS FROM COLUMNS PER TYPICAL DETAIL ON 1&2/S010.
6. SLOPE CONCRETE SLAB TO AREA DRAINS AND TO SHEET DRAIN. REFERENCE ARCHITECTURAL AND UTILITY DRAWINGS FOR LOCATIONS. LOCATIONS SHOWN HEREIN ARE APPROXIMATE.
7. REFERENCE ARCHITECTURAL DRAWINGS FOR OVERALL COLUMN GRID LAYOUT GEOMETERY AND ALL DIMENSIONS. CONTACT THE ARCHITECT IMMEDIATELY TO RESOLVE ANY CONFLICTS SHOWN BETWEEN THE ARCHITECTURAL AND STRUCTURAL DRAWINGS.
8. STEEL BRACED FRAMES ARE DENOTED "BF-x" ON PLANS. REFERENCE SHEET S203 FOR BRACE FRAME ELEVATIONS.
9. WHERE ADJACENT FOOTINGS "TOUCH", CONTRACTOR HAS THE OPTION TO PLACE ALL ADJACENT FOOTINGS TO THE DEPTH OF THE THICKEST FOOTING.
10. TOP OF INTERIOR FLOOR SLAB ELEVATION = 100'-0", TYPICAL UNLESS NOTED OTHERWISE (100'-0" PER ARCHITECTURAL AND STRUCTURAL DRAWINGS = DATUM ELEVATION 593.84' PER CIVIL).
11. PIT WALLS ARE DESIGNED TO BE BRACED AT THE TOP AND BOTTOM OF WALLS. DO NOT BACKFILL WALLS UNTIL FLOOR SLABS OR TEMPORARY BRACING AND SHORING IS COMPLETE.
12. PROVIDE EMBEDS FOR ALL HANDRAIL AND GUARDRAIL POSTS PER DETAIL 3/S030.
13. STEEL COLUMNS ARE REFERENCED FIRST BY GRID LOCATION. OTHER MISCELLANEOUS COLUMNS NOT LOCATED ON A GRID ARE DENOTED "Cx". REFERENCE STEEL COLUMN SCHEDULES ON SHEET S302.
14. EXTEND CONTINUOUS WALL FOOTING REINFORCING THROUGH PEDESTALS.
15. ALL EXTERIOR STOOPS SHALL BE 6" PAD W/ #4 @ 12" E.W. SEE 3/S013.

LEGEND

DEMO OF TOP OF EXISTING BRIDGE PIERS

NOT FOR CONSTRUCTION

NO.	DATE	REVISION	BY

ORIGINAL PLANS PREPARED BY

HNTB
11414 W. PARK PLACE
MILWAUKEE, WI 53224
(414) 359-2300

PLANS PREPARED FOR

CITY OF MILWAUKEE
DEPARTMENT OF
PUBLIC WORKS

MILWAUKEE STREETCAR

MAINTENANCE FACILITY

95% SUBMISSION | 29 FEB. 2016

DESIGNED BY JF | DESIGN CK'D SMG | DRAWN BY TH | PLANS CK'D MH

	INITIALS	DATE
DESIGNER		
CHECKER/ REVIEWER		
BACK CHECKER		
CORRECTOR		
VERIFIER		

COMPOSITE FOUNDATION PLAN

S100

NOT FOR CONSTRUCTION

REFERENCE S100 FOR SHEET NOTES.

PLAN NOTES - FOUNDATION PLAN

1. FOOTING STEPS, SEE 6/S011.
2. PROVIDE 2" COMPRESSIBLE FOAM MATERIAL BETWEEN NEW FOOTINGS & EXISTING PILE CAPS, FULL DEPTH.
3. REFERENCE ARCHITECTURE FOR STAIR DETAILS.
4. T.O.F. = 93'-6". PROVIDE VOID FORM BETWEEN T.O.F. AND BOTTOM OF 20 7/8" PIT SLAB.
5. ADD ALTERNATE #1 - TURNTABLE. REFERENCE 2/S501 FOR DETAILS.

LEGEND - FOUNDATION PLAN

1	PLAN NOTE
P1	PEDESTAL TYPE
F1	FOOTING TYPE
96'-6"	TOP OF FOOTING ELEVATION
	BRACED FRAME

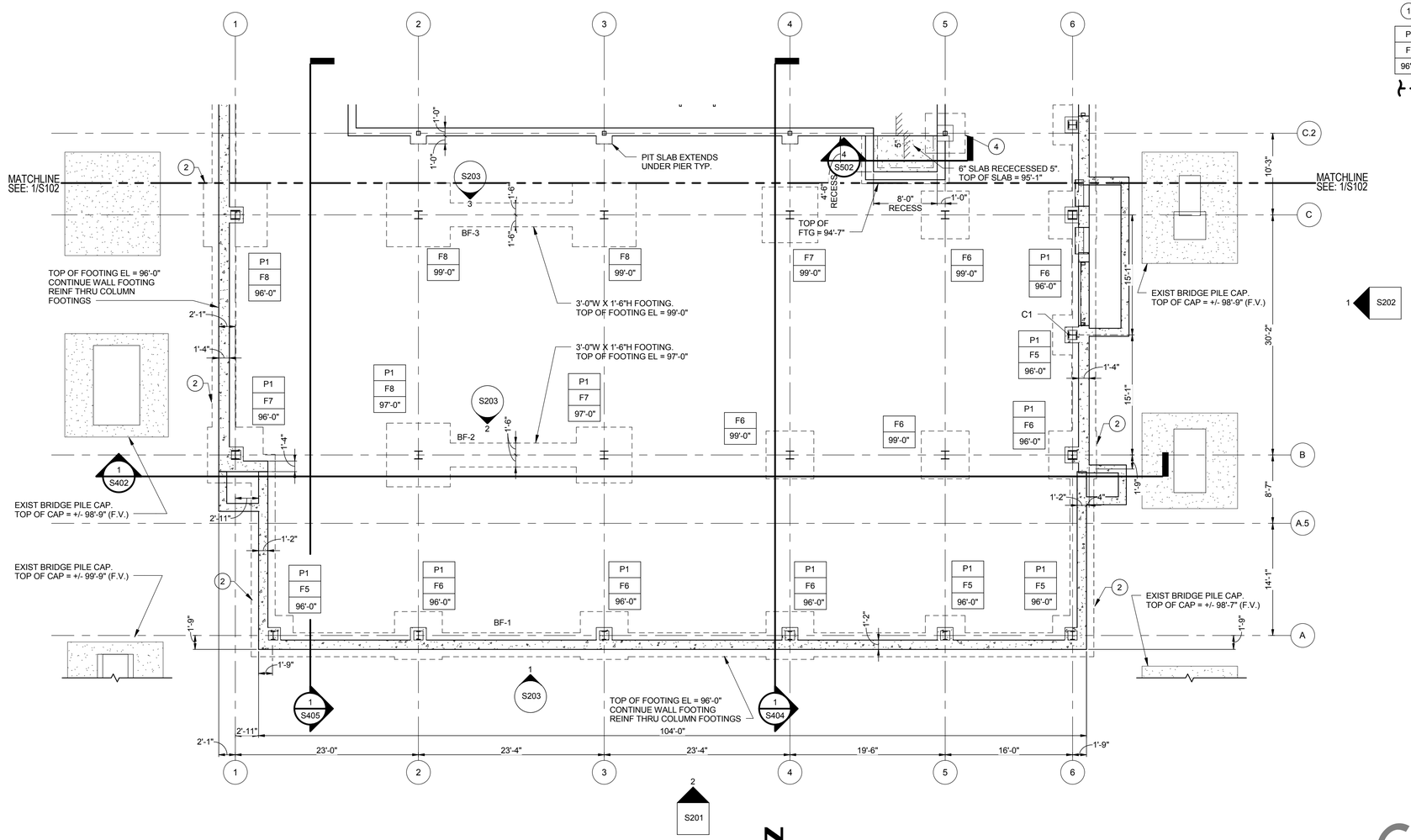

FOUNDATION PLAN - SECTOR A

1/8" = 1'-0"

NOT FOR CONSTRUCTION

NO.	DATE	REVISION	BY

ORIGINAL PLANS PREPARED BY

HNTB
11414 W. PARK PLACE
MILWAUKEE, WI 53224
(414) 359-2300

PLANS PREPARED FOR

CITY OF MILWAUKEE
DEPARTMENT OF
PUBLIC WORKS

MILWAUKEE STREETCAR

MAINTENANCE FACILITY

95% SUBMISSION | 29 FEB. 2016

DESIGNED BY JF | DESIGN CK'D SMG | DRAWN BY TH | PLANS CK'D MH

	INITIALS	DATE
DESIGNER		
CHECKER/ REVIEWER		
BACK CHECKER		
CORRECTOR		
VERIFIER		

PARTIAL FOUNDATION PLAN - SECTOR A

S101

NOT FOR CONSTRUCTION

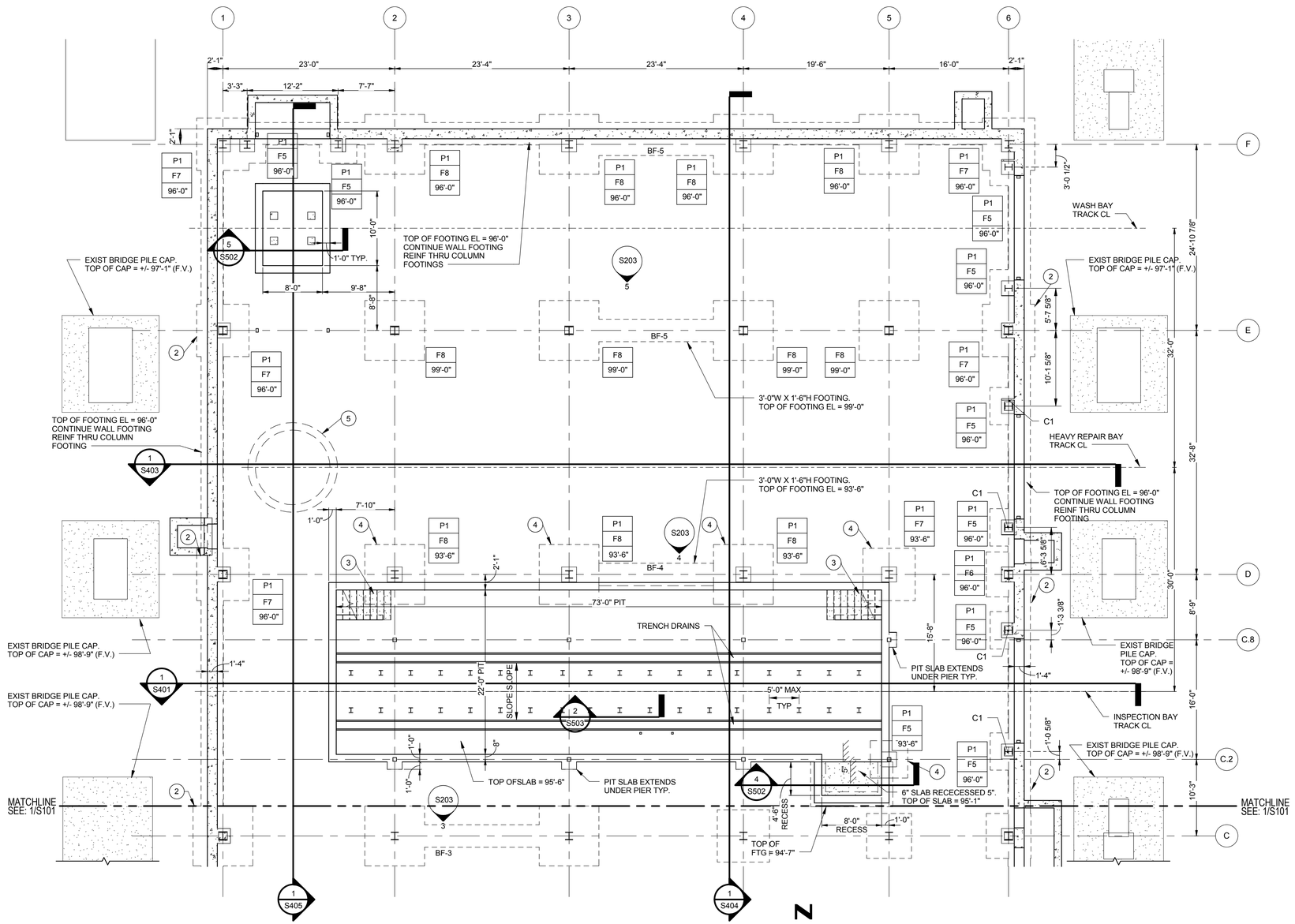

FOUNDATION PLAN - SECTOR B

1/8" = 1'-0"

REFERENCE S100 FOR SHEET NOTES.

PLAN NOTES - FOUNDATION PLAN

1. FOOTING STEPS, SEE 6/S011.
2. PROVIDE 2" COMPRESSIBLE FOAM MATERIAL BETWEEN NEW FOOTINGS & EXISTING PILE CAPS, FULL DEPTH.
3. REFERENCE ARCHITECTURE FOR STAIR DETAILS.
4. T.O.F. = 93'-6". PROVIDE VOID FORM BETWEEN T.O.F. AND BOTTOM OF 20 7/8" PIT SLAB.
5. ADD ALTERNATE #1 - TURNTABLE. REFERENCE 2/S501 FOR DETAILS.

LEGEND - FOUNDATION PLAN

1	PLAN NOTE
P1	PEDESTAL TYPE
F1	FOOTING TYPE
96'-6"	TOP OF FOOTING ELEVATION
	BRACED FRAME

NOT FOR CONSTRUCTION

NO.	DATE	REVISION	BY

ORIGINAL PLANS PREPARED BY

HNTB
11414 W. PARK PLACE
MILWAUKEE, WI 53224
(414) 359-2300

PLANS PREPARED FOR

CITY OF MILWAUKEE
DEPARTMENT OF
PUBLIC WORKS

MILWAUKEE STREETCAR

MAINTENANCE FACILITY

95% SUBMISSION | 29 FEB. 2016

	INITIALS	DATE
DESIGNER		
CHECKER/ REVIEWER		
BACK CHECKER		
CORRECTOR		
VERIFIER		

DESIGNED BY	DESIGN CK'D	DRAWN BY	PLANS CK'D
JF	SMG	TH	MH

PARTIAL FOUNDATION PLAN - SECTOR B

S102

NOT FOR CONSTRUCTION

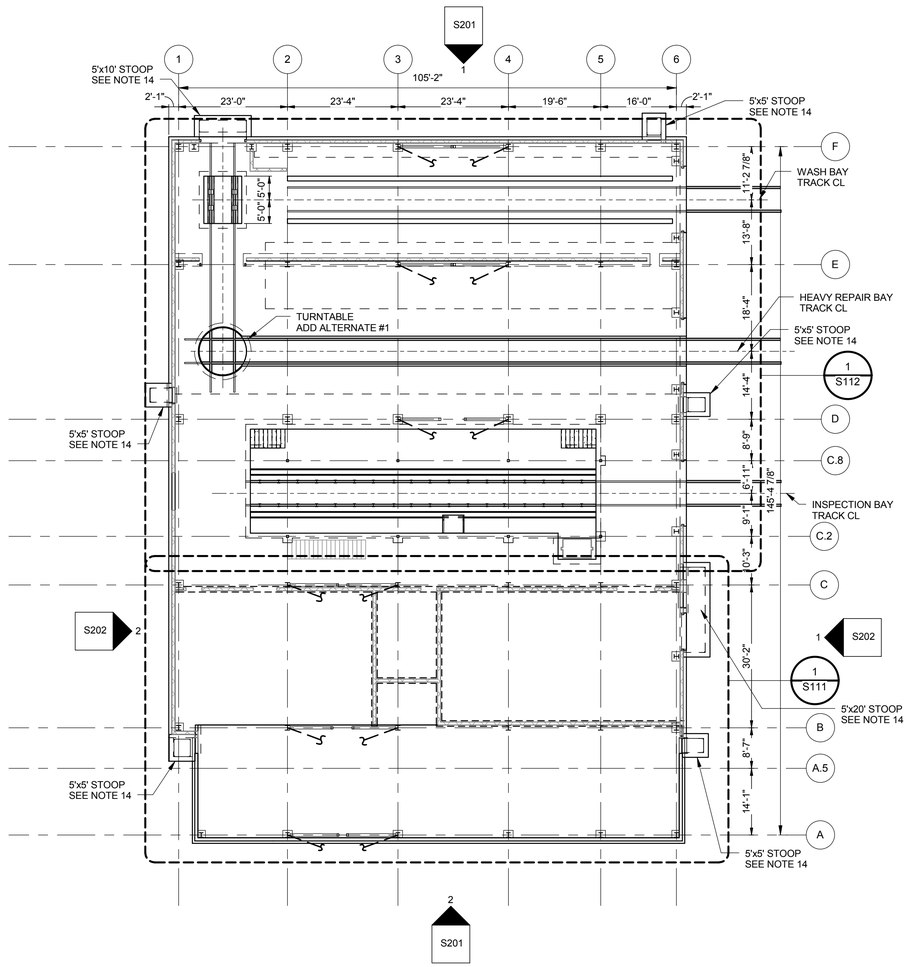

COMPOSITE FIRST FLOOR SLAB PLAN

1/16" = 1'-0"

SHEET NOTES - FIRST FLOOR SLAB PLAN

1. REFERENCE SHEETS S001 THROUGH S002 FOR STRUCTURAL GENERAL NOTES.
2. REFERENCE SHEETS S010 THROUGH S034 FOR TYPICAL DETAILS.
3. REFERENCE SHEETS S301 AND S302 FOR FOOTING, PEDESTAL, COLUMN, AND ANCHOR BOLT SCHEDULE.
4. NON-LOAD BEARING / NON-STRUCTURAL MASONRY WALLS AND PARTITIONS ARE DENOTED "MW-x" ON PLANS. UNLESS NOTED OTHERWISE ON PLANS, ALL SUCH WALLS SHALL BE REINFORCED PER WITH #5 @ 32"OC VERTICAL REINFORCING AND LADDER TYPE HORIZONTAL JOINT REINFORCING @ 16"OC. BRACE TOPS OF ALL SUCH WALLS PER TYPICAL DETAILS ON SHEETS S020 AND S021 TO S022. PROVIDE A FOOTING OR THICKENED SLAB BELOW ALL SUCH WALLS PER TYPICAL DETAIL 5/S010, UNLESS NOTED OTHERWISE. REFERENCE ARCHITECTURAL DRAWINGS FOR LOCATIONS OF ALL SUCH MASONRY WALLS.
5. CONTRACTOR SHALL PROVIDE CONTROL AND CONSTRUCTION JOINTS IN SLAB-ON-GRADE PER STRUCTURAL GENERAL NOTES AND TYPICAL DETAILS. COORDINATE JOINT LOCATIONS WITH ARCHITECT/ENGINEER. ISOLATE SLABS FROM COLUMNS PER TYPICAL DETAIL ON 2/S010.
6. SLOPE CONCRETE SLAB TO AREA DRAINS AND TO SHEET DRAIN. REFERENCE ARCHITECTURAL AND UTILITY DRAWINGS FOR LOCATIONS. LOCATIONS SHOWN HEREIN ARE APPROXIMATE.
7. REFERENCE ARCHITECTURAL DRAWINGS FOR OVERALL COLUMN GRID LAYOUT GEOMETERY AND ALL DIMENSIONS. CONTACT THE ARCHITECT IMMEDIATELY TO RESOLVE ANY CONFLICTS SHOWN BETWEEN THE ARCHITECTURAL AND STRUCTURAL DRAWINGS.
8. STEEL BRACED FRAMES ARE DENOTED "BF-x" ON PLANS. REFERENCE SHEET S203 FOR BRACE FRAME ELEVATIONS.
9. TOP OF INTERIOR FLOOR SLAB ELEVATION = 100'-0", TYPICAL UNLESS NOTED OTHERWISE (100'-0" PER ARCHITECTURAL AND STRUCTURAL DRAWINGS = DATUM ELEVATION 593.84' PER CIVIL).
10. TOP OF PIT FLOOR ELEVATION - AS NOTED ON PLANS
11. PIT WALLS ARE DESIGNED TO BE BRACED AT THE TOP AND BOTTOM OF WALLS. DO NOT BACKFILL WALLS UNTIL FLOOR SLABS OR TEMPORARY BRACING AND SHORING IS COMPLETE.
12. PROVIDE EMBEDS FOR ALL HANDRAIL AND GUARDRAIL POSTS PER DETAIL 3/S030.
13. STEEL COLUMNS ARE REFERENCED FIRST BY GRID LOCATION. OTHER MISCELLANEOUS COLUMNS NOT LOCATED ON A GRID ARE DENOTED "Cx". REFERENCE STEEL COLUMN SCHEDULES ON SHEET S301.
14. ALL EXTERIOR STOOPS SHALL BE 6" PAD W/ #4 @ 12" O.C. E.W. SEE 3/S013.

NOT FOR CONSTRUCTION

NO.	DATE	REVISION	BY

ORIGINAL PLANS PREPARED BY

HNTB

11414 W. PARK PLACE
MILWAUKEE, WI 53224
(414) 359-2300

PLANS PREPARED FOR

CITY OF MILWAUKEE
DEPARTMENT OF
PUBLIC WORKS

MILWAUKEE STREETCAR

MAINTENANCE FACILITY

95% SUBMISSION | 29 FEB. 2016

DESIGNED BY JF | DESIGN CK'D SMG | DRAWN BY TH | PLANS CK'D MH

	INITIALS	DATE
DESIGNER		
CHECKER/ REVIEWER		
BACK CHECKER		
CORRECTOR		
VERIFIER		

COMPOSITE FIRST FLOOR SLAB PLAN

S110

NOT FOR CONSTRUCTION

REFERENCE S110 FOR SHEET NOTES.

PLAN NOTES - FIRST FLOOR SLAB PLAN

1. 6" SLAB ON GRADE REINFORCE WITH #5@12"OC EACH WAY CENTERED.
2. 8" SLAB ON GRADE REINFORCE WITH #6@12"OC EACH WAY CENTERED.
3. 20 7/8" THICK TRACK SLAB, REINFORCE WITH #6@6"OC TOP AND BOTTOM TRANSVERSE (OUTER LAYER) AND #6@12"OC TOP AND BOTTOM LONGITUDINAL (INNER LAYER).
4. TOP OF CONCRETE ELEVATION = 95'-6".
5. STEEL STAIRS. SEE ARCHITECTURE SHEETS.

LEGEND - FIRST FLOOR SLAB PLAN

- (1) PLAN NOTE.
- INDICATES BRACE FRAME.
- MOMENT CONNECTION.
- SPAN DIRECTION.
- MASONRY WALL
- I.J. SLAB ISOLATION JOINT, RE: 9/S011

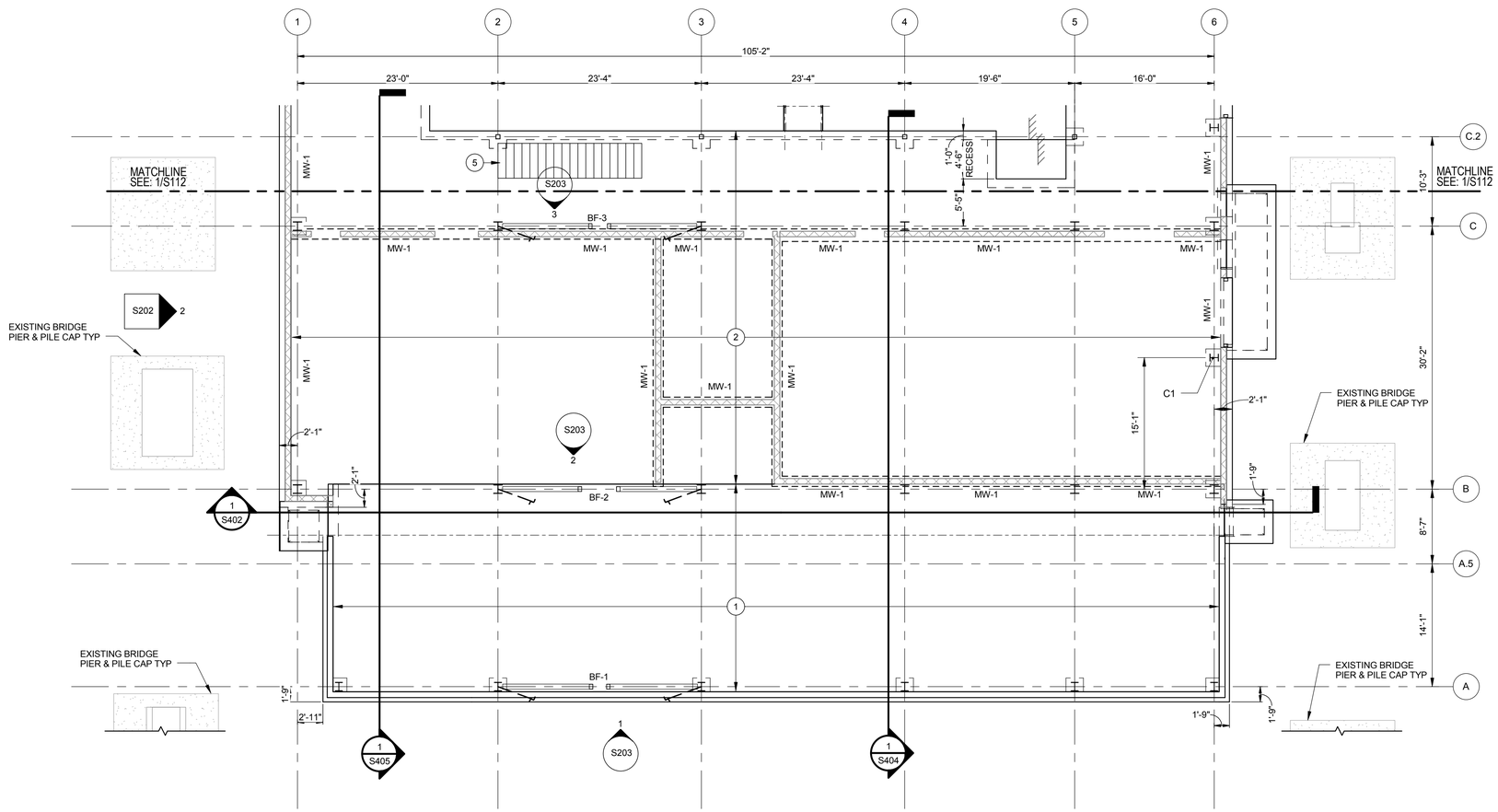

FIRST FLOOR SLAB PLAN - SECTOR A

1/8" = 1'-0"

N

NOT FOR CONSTRUCTION

NO.	DATE	REVISION	BY

ORIGINAL PLANS PREPARED BY

HNTB
11414 W. PARK PLACE
MILWAUKEE, WI 53224
(414) 359-2300

PLANS PREPARED FOR

CITY OF MILWAUKEE
DEPARTMENT OF
PUBLIC WORKS

MILWAUKEE STREETCAR

MAINTENANCE FACILITY

95% SUBMISSION | 29 FEB. 2016

DESIGNED BY JF | DESIGN CK'D SMG | DRAWN BY TH | PLANS CK'D MH

	INITIALS	DATE
DESIGNER		
CHECKER/ REVIEWER		
BACK CHECKER		
CORRECTOR		
VERIFIER		

PARTIAL FIRST FLOOR SLAB PLAN - SECTOR A

S111

NOT FOR CONSTRUCTION

REFERENCE S110 FOR SHEET NOTES.

PLAN NOTES - FIRST FLOOR SLAB PLAN

1. 6" SLAB ON GRADE REINFORCE WITH #5@12"OC EACH WAY CENTERED.
2. 8" SLAB ON GRADE REINFORCE WITH #6@12"OC EACH WAY CENTERED.
3. 20 7/8" THICK TRACK SLAB, REINFORCE WITH #6@6"OC TOP AND BOTTOM TRANSVERSE (OUTER LAYER) AND #6@12"OC TOP AND BOTTOM LONGITUDINAL (INNER LAYER).
4. TOP OF CONCRETE ELEVATION = 95'-6".
5. STEEL STAIRS. SEE ARCHITECTURE SHEETS.

LEGEND - FIRST FLOOR SLAB PLAN

- (1) PLAN NOTE.
- INDICATES BRACE FRAME.
- MOMENT CONNECTION.
- SPAN DIRECTION.
- MASONRY WALL
- I.J. SLAB ISOLATION JOINT, RE: 9/S011

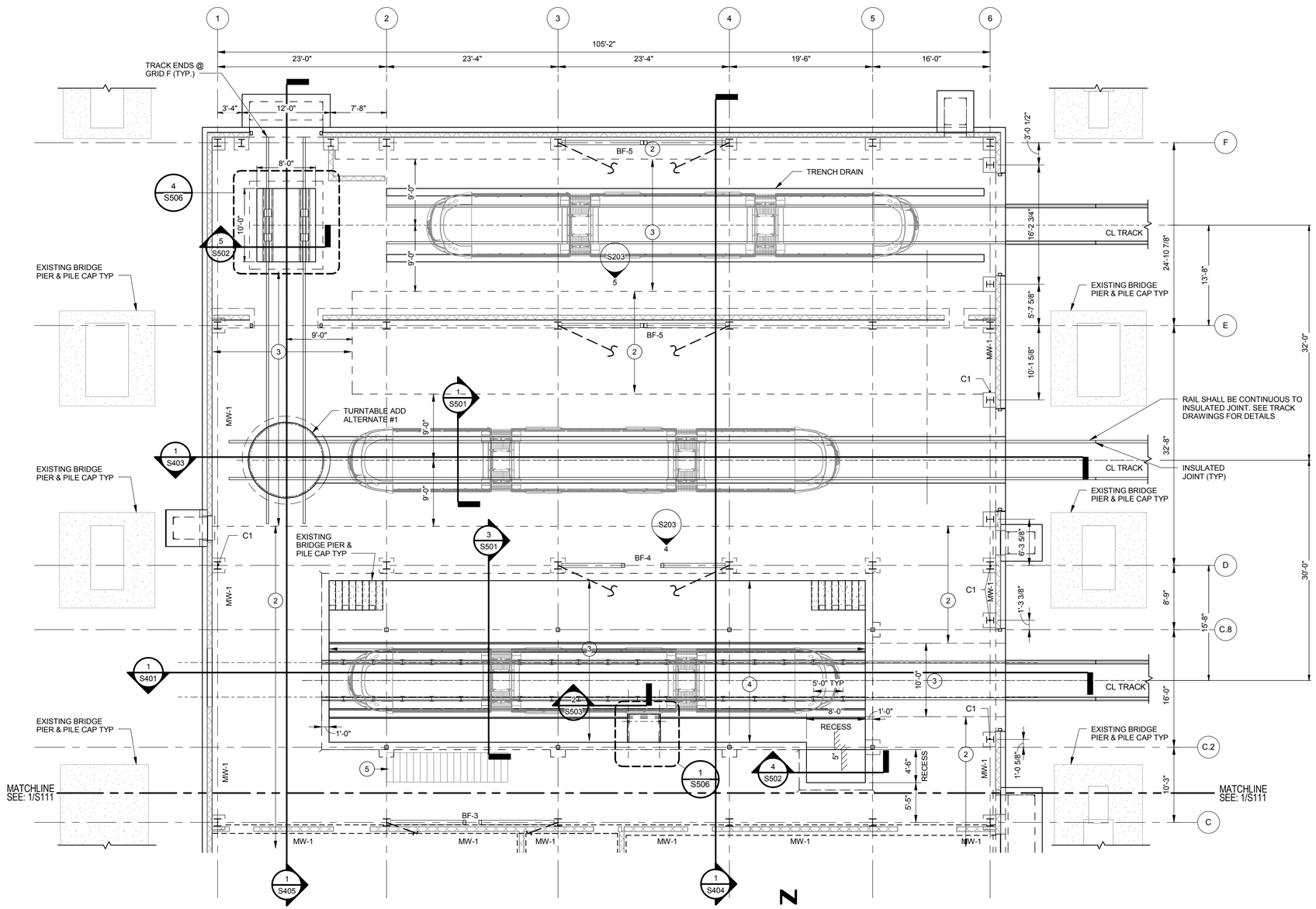

FIRST FLOOR SLAB PLAN - SECTOR B

1/8" = 1'-0"

N

NOT FOR CONSTRUCTION

NO.	DATE	REVISION	BY

ORIGINAL PLANS PREPARED BY

HNTB
11414 W. PARK PLACE
MILWAUKEE, WI 53224
(414) 359-2300

PLANS PREPARED FOR

CITY OF MILWAUKEE
DEPARTMENT OF
PUBLIC WORKS

MILWAUKEE STREETCAR

MAINTENANCE FACILITY

95% SUBMISSION | 29 FEB. 2016

	INITIALS	DATE
DESIGNER		
CHECKER/ REVIEWER		
BACK CHECKER		
CORRECTOR		
VERIFIER		

DESIGNED BY JF | DESIGN CK'D SMG | DRAWN BY TH | PLANS CK'D MH

PARTIAL FIRST FLOOR SLAB PLAN - SECTOR B

S112

NOT FOR CONSTRUCTION

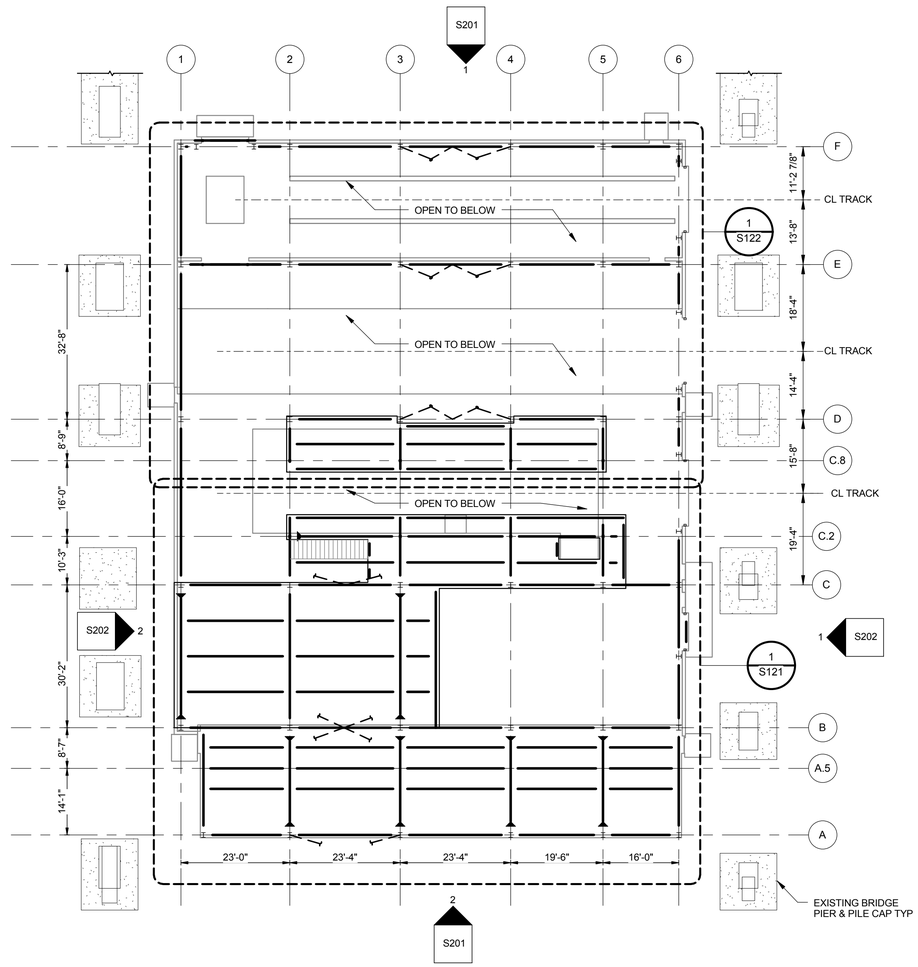

COMPOSITE PLATFORM/LOW ROOF FRAMING PLAN

1/16" = 1'-0"

N

SHEET NOTES - PLATFORM/LOW ROOF FRAMING PLAN

1. REFERENCE SHEETS S001 THROUGH S002 FOR STRUCTURAL GENERAL NOTES.
2. REFERENCE SHEETS S010 THROUGH S034 FOR TYPICAL DETAILS.
3. REFERENCE SHEETS S030 THROUGH S034 FOR STANDARD STEEL DETAILS AND CONNECTIONS. ANY BEAM REACTIONS SHOWN ON PLAN ARE UNFACTORED LOADS.
4. REFERENCE SHEET S301 FOR COLUMN SCHEDULE.
5. NON-LOAD BEARING / NON-STRUCTURAL MASONRY WALLS AND PARTITIONS ARE DENOTED "MW-x" ON PLANS. UNLESS NOTED OTHERWISE ON PLANS, ALL SUCH WALLS SHALL BE REINFORCED WITH #5 @ 32"OC VERTICAL REINFORCING AND LADDER TYPE HORIZONTAL JOINT REINFORCING @ 16"OC. BRACE TOPS OF ALL SUCH WALLS PER TYPICAL DETAILS ON SHEETS S020 TO S022. PROVIDE A FOOTING OR THICKENED SLAB BELOW ALL SUCH WALLS PER TYPICAL DETAIL 10/S010, UNLESS NOTED OTHERWISE. REFERENCE ARCHITECTURAL DRAWINGS FOR LOCATIONS OF ALL SUCH MASONRY WALLS.
6. REFERENCE ARCHITECTURAL DRAWINGS FOR OVERALL COLUMN GRID LAYOUT GEOMETERY AND ALL DIMENSIONS. CONTACT THE ARCHITECT IMMEDIATELY TO RESOLVE ANY CONFLICTS SHOWN BETWEEN THE ARCHITECTURAL AND STRUCTURAL DRAWINGS.
7. STEEL BRACED FRAMES ARE DENOTED "BF-x" ON PLANS. REFERENCE SHEET S203 FOR BRACE FRAME ELEVATIONS.
8. TOP OF STEEL ELEVATIONS:
   PLATFORM/LOW ROOF LEVEL = 110'-6" (UNO)
   HIGH ROOF FRAMING - AS NOTED ON PLANS
9. TOP OF CONCRETE SLAB ELEVATIONS:
   PLATFORM/LOW ROOF LEVEL = 111'-0" (UNO)
10. STEEL COLUMNS ARE REFERENCED FIRST BY GRID LOCATION. OTHER MISCELLANEOUS COLUMNS NOT LOCATED ON A GRID ARE DENOTED REFERENCE STEEL COLUMN SCHEDULES ON SHEET S301.
11. COORDINATE THE FINAL LOCATION AND WEIGHTS OF EACH MECHANICAL UNIT SUPPORTED FROM FRAMING WITH THE MECHANICAL CONTRACTOR AND JOIST MANUFACTURER. WEIGHTS OF EQUIPMENT SELECTED SHALL NOT EXCEED THOSE SHOWN WITHOUT AN APPROPRIATE INCREASE IN THE SIZE OF THE JOIST / FRAMING MEMBERS INDICATED. THE WEIGHT OF THE MECHANICAL UNITS SHALL BE DISTRIBUTED TO THE SUPPORTING FRAMES WITH CURBS SUPPLIED BY THE MECHANICAL CONTRACTOR, AND SCREWED, WELDED, OR OTHERWISE ANCHORED TO THE SUPPORT FRAME. THE CONTRACTOR SHALL COORDINATE ALL ROOF OPENING LOCATIONS AND SIZE WITH THE FINAL ROOF TOP EQUIPMENT . LOCATIONS SHOWN HEREIN ARE FOR PRICING PURPOSES ONLY. PROVIDE SUPPORT FRAME FOR ALL ROOF TOP UNITS PER TYPICAL DETAIL 1/S032.
12. PROVIDE ANGLE SUPPORT FRAME CONSISITING OF L3x3x1/4 AROUND ALL ROOF AND FLOOR DRAINS AND BELOW ALL EXHAUST FANS, PER TYPICAL DETAIL 1/S032. REINFORCE ROOF DECK AT ALL OTHER PENETRATIONS SUCH AS VENT STACKS, PIPING, ETC. WITH COLD-FORMED LIGHT GAGE ZEE MEMBERS, PLATES, OR ANGLES PER SDI AND MANUFACTURER'S RECOMMENDATIONS.
13. ALL OPENINGS IN MASONRY WALLS REQUIRE A LINTEL. PROVIDE A BOND BEAM LINTEL PER TYPICAL DETAILS ON 2/S020, UNLESS NOTED OTHERWISE ON THE STRUCTURAL DRAWINGS.
14. INTERIOR FLOOR MEMBERS HAVE BEEN DESIGNED TO LIMIT LIVE LOAD DEFLECTION TO NO MORE THAN THE SPAN LENGTH / 360 AND INTERIOR ROOF MEMBERS TO NO MORE THAN SPAN / 240. PERIMETER MEMBERS HAVE BEEN DESIGNED FOR THE SAME DEFLECTION LIMITS AND ADDITIONALLY LIMITS LIVE LOAD DEFLECTION TO NO MORE THAN 3/4".
15. ALL FLOOR EDGE ANGLES AND ROOF EDGE ANGLES NOT BOLTING OR ATTACHING TO MASONRY WALLS SHALL BE MADE CONTINUOUS BY A 3/16" PARTIAL-PENTRATION BUTT-WELD AT SPLICES. LOCATE SPLICES AT FRAMING MEMBERS.

HDR

NOT FOR CONSTRUCTION

NO.	DATE	REVISION	BY

ORIGINAL PLANS PREPARED BY

HNTB
11414 W. PARK PLACE
MILWAUKEE, WI 53224
(414) 359-2300

PLANS PREPARED FOR

CITY OF MILWAUKEE
DEPARTMENT OF
PUBLIC WORKS

MILWAUKEE STREETCAR

MAINTENANCE FACILITY

95% SUBMISSION | 29 FEB. 2016

DESIGNED BY JF | DESIGN CK'D SMG | DRAWN BY TH | PLANS CK'D MH

	INITIALS	DATE
DESIGNER		
CHECKER/ REVIEWER		
BACK CHECKER		
CORRECTOR		
VERIFIER		

COMPOSITE MEZZ/LOW ROOF FRAMING PLAN

S120

NOT FOR CONSTRUCTION

REFERENCE S120 FOR SHEET NOTES.

PLAN NOTES - PLATFORM/LOW ROOF FRAMING PLAN

1. 3" NORMAL WEIGHT CONCRETE ON 2" x 20 GA VLI METAL DECK (5" TOTAL THICKNESS). CONTINUOUS OVER 2 OR MORE SPANS. WELD DECK TO EACH SUPPORT WITH 5/8" DIA PUDDLE WELDS SPACED AT 12" OC, PLACE A MINIMUM OF 12" SPACED WELDED SIDE LAP FASTENERS BETWEEN EACH SUPPORT. REINFORCE WITH #4 BARS AT 18" OC EACH WAY SUPPORTED ON CHAIRS AND CENTERED IN 3" SLAB.
2. 1 1/2" x 19 GA TYPE B "WIDE RIB" GALVANIZED METAL ROOF DECK. CONTINUOUS OVER 3 SPANS OR MORE. ROOF DECK SHALL BE FASTENED WITH 5/8" PUDDLE WELDS TO ALL SUPPORTS PER STEEL DECK INSTITUTE 36/4 PATTERN. SIDE LAPS SHALL BE #10 SCREW FASTENERS SPACED EVENLY BETWEEN SUPPORTS WITH A MAXIMUM SPACING OF 12" OC.
3. STEEL STAIRS (DELEGATED DESIGN) WITH STEEL GRATING.

LEGEND - MEZZ/ LOW ROOF FRAMING PLAN

- (1) PLAN NOTE.
- INDICATES BRACE FRAME.
- MOMENT CONNECTION.
- SPAN DIRECTION.
- AXIAL CONNECTION.

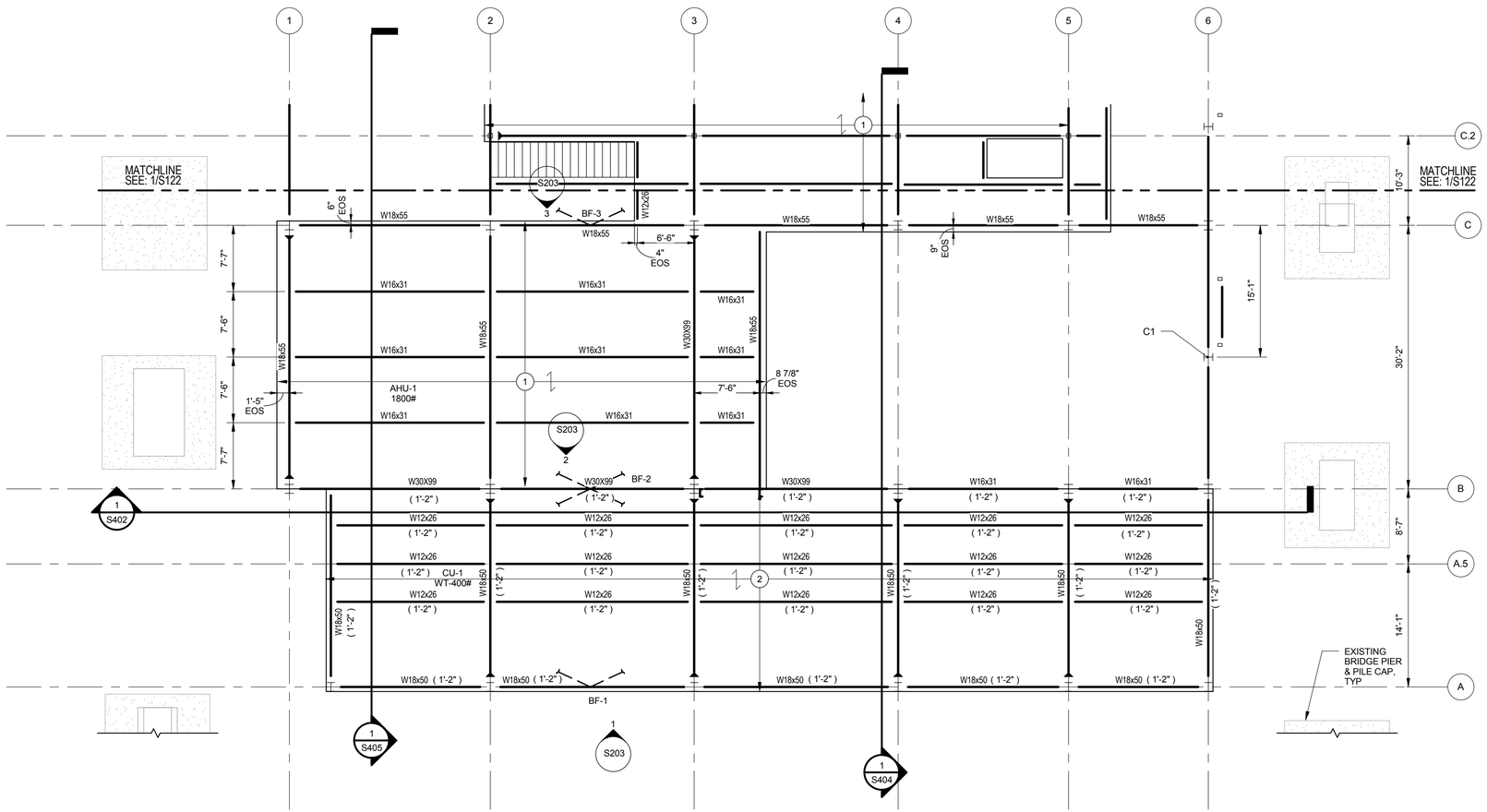

PLATFORM/LOW ROOF FRAMING PLAN - SECTOR A

1/8" = 1'-0"

N

NOT FOR CONSTRUCTION

NO.	DATE	REVISION	BY

ORIGINAL PLANS PREPARED BY

HNTB

11414 W. PARK PLACE
MILWAUKEE, WI 53224
(414) 359-2300

PLANS PREPARED FOR

CITY OF MILWAUKEE
DEPARTMENT OF
PUBLIC WORKS

MILWAUKEE STREETCAR

MAINTENANCE FACILITY

95% SUBMISSION | 29 FEB. 2016

DESIGNED BY JF | DESIGN CK'D SMG | DRAWN BY TH | PLANS CK'D MH

	INITIALS	DATE
DESIGNER		
CHECKER/ REVIEWER		
BACK CHECKER		
CORRECTOR		
VERIFIER		

PARTIAL MEZZ/LOW ROOF FRAMING PLAN - SECTOR A

S121

NOT FOR CONSTRUCTION

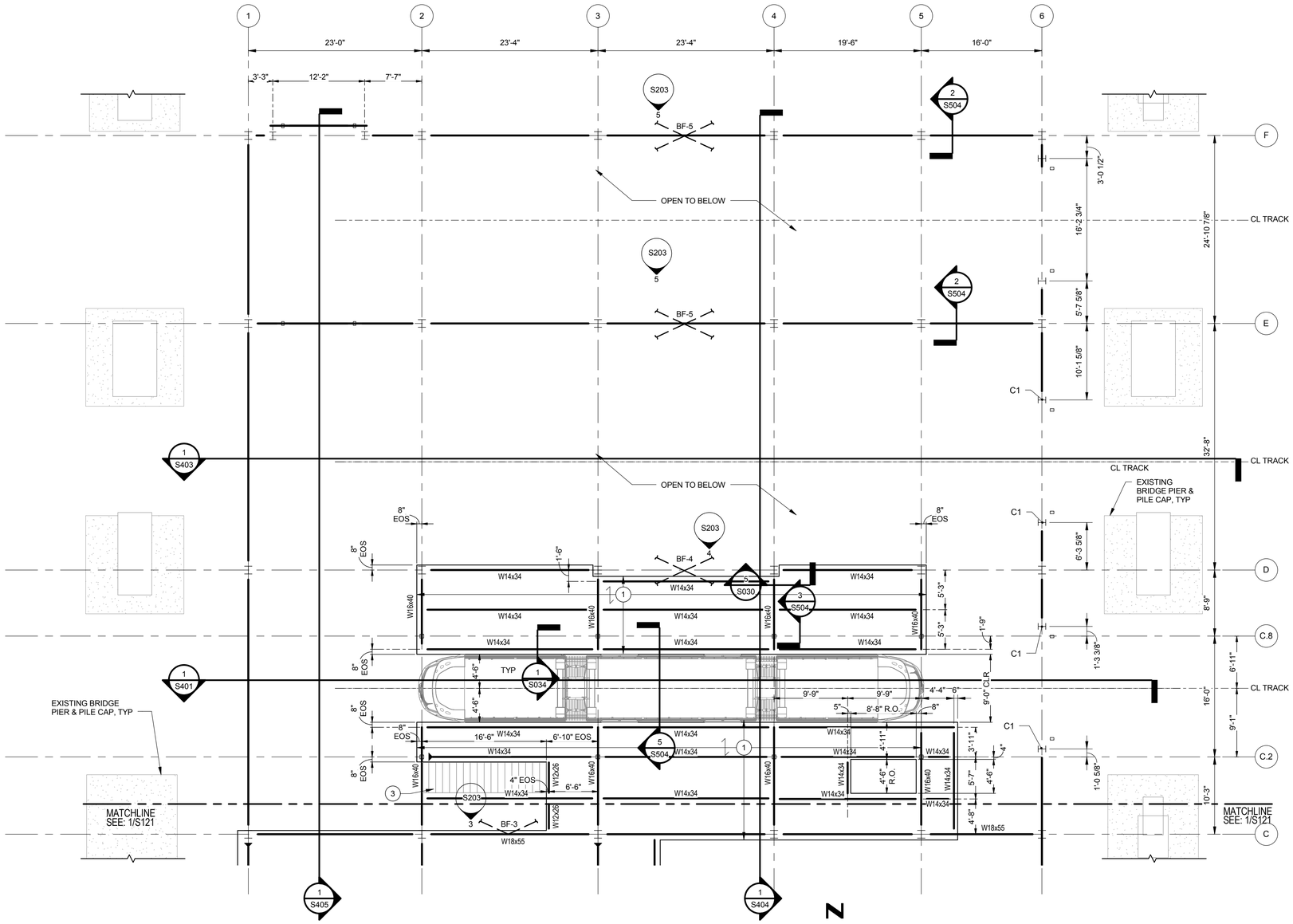

PLATFORM/LOW ROOF FRAMING PLAN - SECTOR B

1/8" = 1'-0"

REFERENCE S120 FOR SHEET NOTES.

PLAN NOTES - PLATFORM/LOW ROOF FRAMING PLAN

1. 3" NORMAL WEIGHT CONCRETE ON 2" x 20 GA VLI METAL DECK (5" TOTAL THICKNESS). CONTINUOUS OVER 2 OR MORE SPANS. WELD DECK TO EACH SUPPORT WITH 5/8" DIA PUDDLE WELDS SPACED AT 12" OC, PLACE A MINIMUM OF 12" SPACED WELDED SIDE LAP FASTENERS BETWEEN EACH SUPPORT. REINFORCE WITH #4 BARS AT 18" OC EACH WAY SUPPORTED ON CHAIRS AND CENTERED IN 3" SLAB.
2. 1 1/2" x 19 GA TYPE B "WIDE RIB" GALVANIZED METAL ROOF DECK. CONTINUOUS OVER 3 SPANS OR MORE. ROOF DECK SHALL BE FASTENED WITH 5/8" PUDDLE WELDS TO ALL SUPPORTS PER STEEL DECK INSTITUTE 36/4 PATTERN. SIDE LAPS SHALL BE #10 SCREW FASTENERS SPACED EVENLY BETWEEN SUPPORTS WITH A MAXIMUM SPACING OF 12" OC.
3. STEEL STAIRS (DELEGATED DESIGN) WITH STEEL GRATING.

LEGEND - MEZZ/ LOW ROOF FRAMING PLAN

- (1) PLAN NOTE.
- INDICATES BRACE FRAME.
- MOMENT CONNECTION.
- SPAN DIRECTION.
- AXIAL CONNECTION.

NOT FOR CONSTRUCTION

NO.	DATE	REVISION	BY

ORIGINAL PLANS PREPARED BY

HNTB
11414 W. PARK PLACE
MILWAUKEE, WI 53224
(414) 359-2300

PLANS PREPARED FOR

CITY OF MILWAUKEE
DEPARTMENT OF
PUBLIC WORKS

MILWAUKEE STREETCAR

MAINTENANCE FACILITY

95% SUBMISSION | 29 FEB. 2016

	INITIALS	DATE
DESIGNER		
CHECKER/ REVIEWER		
BACK CHECKER		
CORRECTOR		
VERIFIER		

DESIGNED BY JF | DESIGN CK'D SMG | DRAWN BY TH | PLANS CK'D MH

PARTIAL MEZZ/LOW ROOF FRAMING PLAN - SECTOR B

S122

NOT FOR CONSTRUCTION

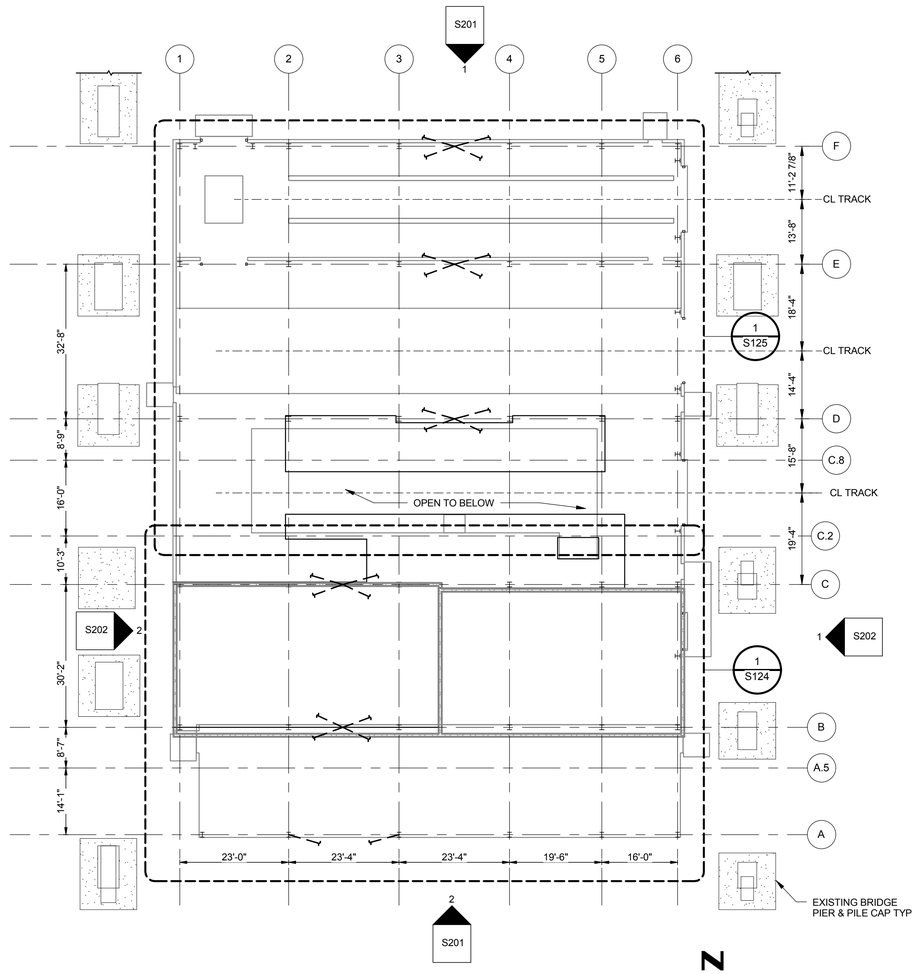

COMPOSITE MEZZANINE FLOOR SLAB PLAN

1/16" = 1'-0"

SHEET NOTES - PLATFORM/LOW ROOF FRAMING PLAN

1. REFERENCE SHEETS S001 THROUGH S002 FOR STRUCTURAL GENERAL NOTES.
2. REFERENCE SHEETS S010 THROUGH S032 FOR TYPICAL DETAILS.
3. REFERENCE SHEETS S030 THROUGH S032 FOR STANDARD STEEL DETAILS AND CONNECTIONS. ANY BEAM REACTIONS SHOWN ON PLAN ARE UNFACTORED LOADS.
4. REFERENCE SHEET S301 FOR COLUMN SCHEDULE.
5. NON-LOAD BEARING / NON-STRUCTURAL MASONRY WALLS AND PARTITIONS ARE DENOTED "MW-x" ON PLANS. UNLESS NOTED OTHERWISE ON PLANS, ALL SUCH WALLS SHALL BE REINFORCED WITH #5 @ 32"OC VERTICAL REINFORCING AND LADDER TYPE HORIZONTAL JOINT REINFORCING @ 16"OC. BRACE TOPS OF ALL SUCH WALLS PER TYPICAL DETAILS ON SHEETS S020 AND S021. PROVIDE A FOOTING OR THICKENED SLAB BELOW ALL SUCH WALLS PER TYPICAL DETAIL 10/S010, UNLESS NOTED OTHERWISE. REFERENCE ARCHITECTURAL DRAWINGS FOR LOCATIONS OF ALL SUCH MASONRY WALLS.
6. REFERENCE ARCHITECTURAL DRAWINGS FOR OVERALL COLUMN GRID LAYOUT GEOMETERY AND ALL DIMENSIONS. CONTACT THE ARCHITECT IMMEDIATELY TO RESOLVE ANY CONFLICTS SHOWN BETWEEN THE ARCHITECTURAL AND STRUCTURAL DRAWINGS.
7. STEEL BRACED FRAMES ARE DENOTED "BF-x" ON PLANS. REFERENCE SHEET S203 FOR BRACE FRAME ELEVATIONS.
8. TOP OF STEEL ELEVATIONS:
   PLATFORM/LOW ROOF LEVEL = 110'-6" (UNO)
   HIGH ROOF FRAMING - AS NOTED ON PLANS
9. TOP OF CONCRETE SLAB ELEVATIONS:
   PLATFORM/LOW ROOF LEVEL = 111'-0" (UNO)
10. STEEL COLUMNS ARE REFERENCED FIRST BY GRID LOCATION. OTHER MISCELLANEOUS COLUMNS NOT LOCATED ON A GRID ARE DENOTED REFERENCE STEEL COLUMN SCHEDULES ON SHEET S302.
11. COORDINATE THE FINAL LOCATION AND WEIGHTS OF EACH MECHANICAL UNIT SUPPORTED FROM FRAMING WITH THE MECHANICAL CONTRACTOR AND JOIST MANUFACTURER. WEIGHTS OF EQUIPMENT SELECTED SHALL NOT EXCEED THOSE SHOWN WITHOUT AN APPROPRIATE INCREASE IN THE SIZE OF THE JOIST / FRAMING MEMBERS INDICATED. THE WEIGHT OF THE MECHANICAL UNITS SHALL BE DISTRIBUTED TO THE SUPPORTING FRAMES WITH CURBS SUPPLIED BY THE MECHANICAL CONTRACTOR, AND SCREWED, WELDED, OR OTHERWISE ANCHORED TO THE SUPPORT FRAME. THE CONTRACTOR SHALL COORDINATE ALL ROOF OPENING LOCATIONS AND SIZE WITH THE FINAL ROOF TOP EQUIPMENT. LOCATIONS SHOWN HEREIN ARE FOR PRICING PURPOSES ONLY. PROVIDE SUPPORT FRAME FOR ALL ROOF TOP UNITS PER TYPICAL DETAIL 1/S032.
12. PROVIDE ANGLE SUPPORT FRAME CONSISITING OF L3x3x1/4 AROUND ALL ROOF AND FLOOR DRAINS AND BELOW ALL EXHAUST FANS, PER TYPICAL DETAIL 1/S032. REINFORCE ROOF DECK AT ALL OTHER PENETRATIONS SUCH AS VENT STACKS, PIPING, ETC. WITH COLD-FORMED LIGHT GAGE ZEE MEMBERS, PLATES, OR ANGLES PER SDI AND MANUFACTURER'S RECOMMENDATIONS.
13. ALL OPENINGS IN MASONRY WALLS REQUIRE A LINTEL. PROVIDE A BOND BEAM LINTEL PER TYPICAL DETAILS ON 2/S020, UNLESS NOTED OTHERWISE ON THE STRUCTURAL DRAWINGS.
14. INTERIOR FLOOR MEMBERS HAVE BEEN DESIGNED TO LIMIT LIVE LOAD DEFLECTION TO NO MORE THAN THE SPAN LENGTH / 360 AND INTERIOR ROOF MEMBERS TO NO MORE THAN SPAN / 240. PERIMETER MEMBERS HAVE BEEN DESIGNED FOR THE SAME DEFLECTION LIMITS AND ADDITIONALLY LIMITS LIVE LOAD DEFLECTION TO NO MORE THAN 3/4".
15. ALL FLOOR EDGE ANGLES AND ROOF EDGE ANGLES NOT BOLTING OR ATTACHING TO MASONRY WALLS SHALL BE MADE CONTINUOUS BY A 3/16" PARTIAL-PENTRATION BUTT-WELD AT SPLICES. LOCATE SPLICES AT FRAMING MEMBERS.

HDR

NOT FOR CONSTRUCTION

NO.	DATE	REVISION	BY

ORIGINAL PLANS PREPARED BY

HNTB
11414 W. PARK PLACE
MILWAUKEE, WI 53224
(414) 359-2300

PLANS PREPARED FOR

CITY OF MILWAUKEE
DEPARTMENT OF
PUBLIC WORKS

MILWAUKEE STREETCAR

MAINTENANCE FACILITY

95% SUBMISSION | 29 FEB. 2016

DESIGNED BY JF | DESIGN CK'D SMG | DRAWN BY TH | PLANS CK'D MH

	INITIALS	DATE
DESIGNER		
CHECKER/ REVIEWER		
BACK CHECKER		
CORRECTOR		
VERIFIER		

COMPOSITE MEZZANINE FLOOR SLAB PLAN

S123

NOT FOR CONSTRUCTION

REFERENCE S120 FOR SHEET NOTES.

PLAN NOTES - PLATFORM/LOW ROOF FRAMING PLAN

1. 3" NORMAL WEIGHT CONCRETE ON 2" x 20 GA VLI METAL DECK (5" TOTAL THICKNESS). CONTINUOUS OVER 2 OR MORE SPANS. WELD DECK TO EACH SUPPORT WITH 5/8" DIA PUDDLE WELDS SPACED AT 12" OC, PLACE A MINIMUM OF 12" SPACED WELDED SIDE LAP FASTENERS BETWEEN EACH SUPPORT. REINFORCE WITH #4 BARS AT 18" OC EACH WAY SUPPORTED ON CHAIRS AND CENTERED IN 3" SLAB.
2. 1 1/2" x 19 GA TYPE B "WIDE RIB" GALVANIZED METAL ROOF DECK. CONTINUOUS OVER 3 SPANS OR MORE. ROOF DECK SHALL BE FASTENED WITH 5/8" PUDDLE WELDS TO ALL SUPPORTS PER STEEL DECK INSTITUTE 36/4 PATTERN. SIDE LAPS SHALL BE #10 SCREW FASTENERS SPACED EVENLY BETWEEN SUPPORTS WITH A MAXIMUM SPACING OF 12" OC.
3. STEEL STAIRS (DELEGATED DESIGN) WITH STEEL GRATING.

LEGEND - MEZZ FLOOR SLAB PLAN

- (1) PLAN NOTE.
- INDICATES BRACE FRAME.
- MOMENT CONNECTION.
- SPAN DIRECTION.
- AXIAL CONNECTION.

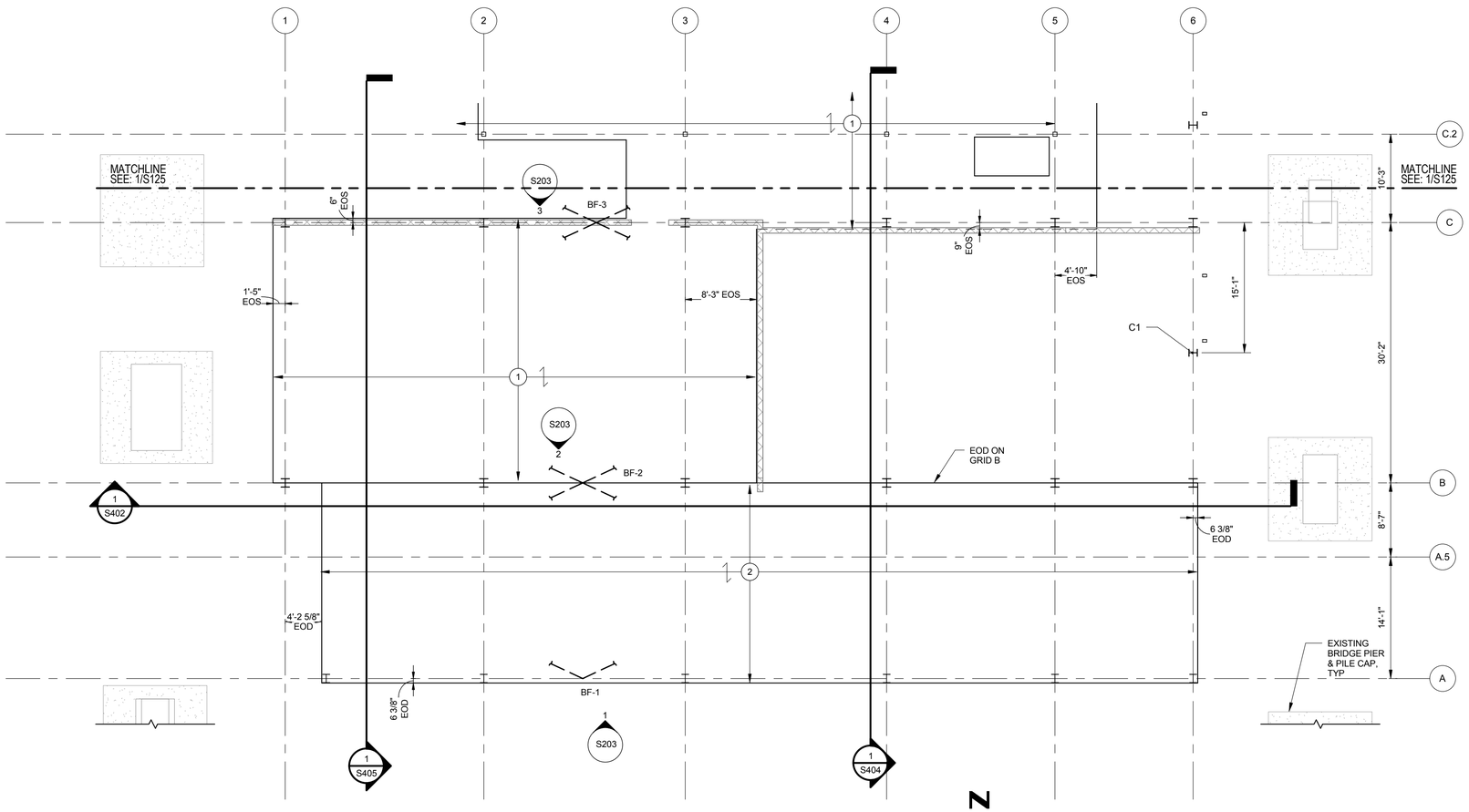

PARTIAL MEZZANINE FLOOR SLAB PLAN - SECTOR A

1/8" = 1'-0"

N

NOT FOR CONSTRUCTION

NO.	DATE	REVISION	BY

ORIGINAL PLANS PREPARED BY

HNTB

11414 W. PARK PLACE
MILWAUKEE, WI 53224
(414) 359-2300

PLANS PREPARED FOR

CITY OF MILWAUKEE
DEPARTMENT OF
PUBLIC WORKS

MILWAUKEE STREETCAR

MAINTENANCE FACILITY

95% SUBMISSION | 29 FEB. 2016

DESIGNED BY JF | DESIGN CK'D SMG | DRAWN BY TH | PLANS CK'D MH

	INITIALS	DATE
DESIGNER		
CHECKER/ REVIEWER		
BACK CHECKER		
CORRECTOR		
VERIFIER		

PARTIAL MEZZ. FLOOR SLAB PLAN - SECTOR A

S124

NOT FOR CONSTRUCTION

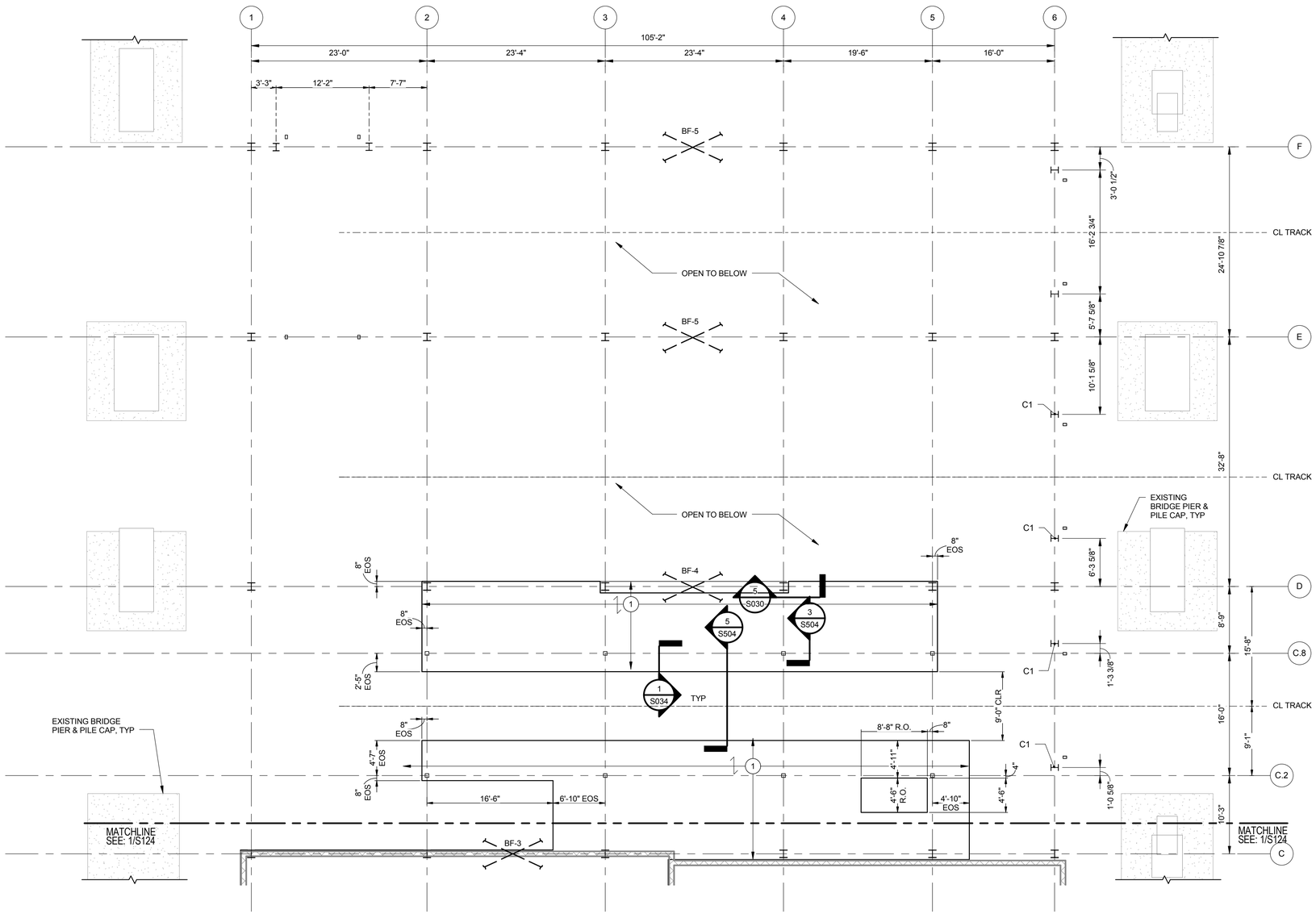

PARTIAL MEZZANINE FLOOR SLAB PLAN - SECTOR B

1/8" = 1'-0"

N

REFERENCE S120 FOR SHEET NOTES.

PLAN NOTES - PLATFORM/LOW ROOF FRAMING PLAN

1. 3" NORMAL WEIGHT CONCRETE ON 2" x 20 GA VLI METAL DECK (5" TOTAL THICKNESS). CONTINUOUS OVER 2 OR MORE SPANS. WELD DECK TO EACH SUPPORT WITH 5/8" DIA PUDDLE WELDS SPACED AT 12" OC, PLACE A MINIMUM OF 12" SPACED WELDED SIDE LAP FASTENERS BETWEEN EACH SUPPORT. REINFORCE WITH #4 BARS AT 18" OC EACH WAY SUPPORTED ON CHAIRS AND CENTERED IN 3" SLAB.
2. 1 1/2" x 19 GA TYPE B "WIDE RIB" GALVANIZED METAL ROOF DECK. CONTINUOUS OVER 3 SPANS OR MORE. ROOF DECK SHALL BE FASTENED WITH 5/8" PUDDLE WELDS TO ALL SUPPORTS PER STEEL DECK INSTITUTE 36/4 PATTERN. SIDE LAPS SHALL BE #10 SCREW FASTENERS SPACED EVENLY BETWEEN SUPPORTS WITH A MAXIMUM SPACING OF 12" OC.
3. STEEL STAIRS (DELEGATED DESIGN) WITH STEEL GRATING.

LEGEND - MEZZ FLOOR SLAB PLAN

- (1) PLAN NOTE.
- INDICATES BRACE FRAME.
- MOMENT CONNECTION.
- SPAN DIRECTION.
- AXIAL CONNECTION.

	INITIALS	DATE
DESIGNER		
CHECKER/ REVIEWER		
BACK CHECKER		
CORRECTOR		
VERIFIER		

HDR

NOT FOR CONSTRUCTION

NO.	DATE	REVISION	BY

ORIGINAL PLANS PREPARED BY

HNTB
11414 W. PARK PLACE
MILWAUKEE, WI 53224
(414) 359-2300

PLANS PREPARED FOR

CITY OF MILWAUKEE
DEPARTMENT OF
PUBLIC WORKS

MILWAUKEE STREETCAR

MAINTENANCE FACILITY

95% SUBMISSION | 29 FEB. 2016

DESIGNED BY JF | DESIGN CK'D SMG | DRAWN BY TH | PLANS CK'D MH

PARTIAL MEZZ. FLOOR SLAB PLAN - SECTOR B

S125

NOT FOR CONSTRUCTION

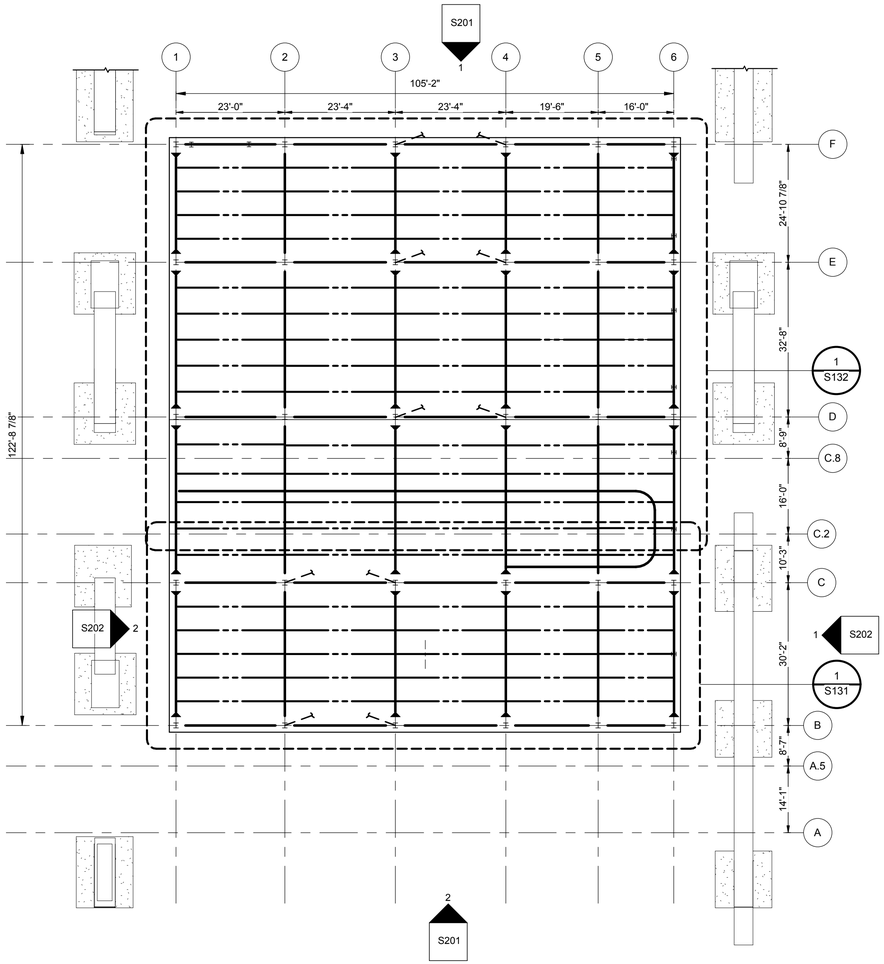

COMPOSITE HIGH ROOF FRAMING PLAN

1/16" = 1'-0"

N

SHEET NOTES - HIGH ROOF FRAMING PLAN

1. REFERENCE SHEETS S001 THROUGH S002 FOR STRUCTURAL GENERAL NOTES.
2. REFERENCE SHEETS S010 THROUGH S032 FOR TYPICAL DETAILS.
3. REFERENCE SHEETS S030 THROUGH S032 FOR STANDARD STEEL DETAILS AND CONNECTIONS. ANY BEAM REACTIONS SHOWN ON PLAN ARE UNFACTORED LOADS.
4. REFERENCE SHEET S301 FOR COLUMN SCHEDULE.
5. NOT USED
6. REFERENCE ARCHITECTURAL DRAWINGS FOR OVERALL COLUMN GRID LAYOUT GEOMETERY AND ALL DIMENSIONS. CONTACT THE ARCHITECT IMMEDIATELY TO RESOLVE ANY CONFLICTS SHOWN BETWEEN THE ARCHITECTURAL AND STRUCTURAL DRAWINGS.
7. STEEL BRACED FRAMES ARE DENOTED "BF-x" ON PLANS. REFERENCE SHEET S203 FOR BRACE FRAME ELEVATIONS.
8. TOP OF STEEL ELEVATIONS:
   PLATFORM/LOW ROOF LEVEL = 110'-6" (UNO)
   HIGH ROOF FRAMING - AS NOTED ON PLANS

   TOP OF CONCRETE SLAB ELEVATIONS:
   PLATFORM/LOW ROOF LEVEL = 111'-0" (UNO)
9. STEEL COLUMNS ARE REFERENCED FIRST BY GRID LOCATION. OTHER MISCELLANEOUS COLUMNS NOT LOCATED ON A GRID ARE DENOTED "Cx". REFERENCE STEEL COLUMN SCHEDULES ON SHEET S302.
10. COORDINATE THE FINAL LOCATION AND WEIGHTS OF EACH MECHANICAL UNIT SUPPORTED FROM FRAMING WITH THE MECHANICAL CONTRACTOR AND JOIST MANUFACTURER. WEIGHTS OF EQUIPMENT SELECTED SHALL NOT EXCEED THOSE SHOWN WITHOUT AN APPROPRIATE INCREASE IN THE SIZE OF THE JOIST / FRAMING MEMBERS INDICATED. THE WEIGHT OF THE MECHANICAL UNITS SHALL BE DISTRIBUTED TO THE SUPPORTING FRAMES WITH CURBS SUPPLIED BY THE MECHANICAL CONTRACTOR, AND SCREWED, WELDED, OR OTHERWISE ANCHORED TO THE SUPPORT FRAME. THE CONTRACTOR SHALL COORDINATE ALL ROOF OPENING LOCATIONS AND SIZE WITH THE FINAL ROOF TOP EQUIPMENT. LOCATIONS SHOWN HEREIN ARE FOR BID PURPOSES ONLY. PROVIDE SUPPORT FRAME FOR ALL ROOF TOP UNITS PER TYPICAL DETAIL 1/S032.
11. PROVIDE ANGLE SUPPORT FRAME CONSISITING OF L3x3x1/4 AROUND ALL ROOF AND FLOOR DRAINS AND BELOW ALL EXHAUST FANS, PER TYPICAL DETAIL 1/S032. REINFORCE ROOF DECK AT ALL OTHER PENETRATIONS SUCH AS VENT STACKS, PIPING, ETC. WITH COLD-FORMED LIGHT GAGE ZEE MEMBERS, PLATES, OR ANGLES PER SDI AND MANUFACTURER'S RECOMMENDATIONS.
12. INTERIOR FLOOR MEMBERS HAVE BEEN DESIGNED TO LIMIT LIVE LOAD DEFLECTION TO NO MORE THAN THE SPAN LENGTH / 360 AND INTERIOR ROOF MEMBERS TO NO MORE THAN SPAN / 240. PERIMETER MEMBERS HAVE BEEN DESIGNED FOR THE SAME DEFLECTION LIMITS AND ADDITIONALLY LIMITS LIVE LOAD DEFLECTION TO NO MORE THAN 3/4".
13. ALL FLOOR EDGE ANGLES AND ROOF EDGE ANGLES NOT BOLTING OR ATTACHING TO MASONRY WALLS SHALL BE MADE CONTINUOUS BY A 3/16" PARTIAL-PENTRATION BUTT-WELD AT SPLICES. LOCATE SPLICES AT FRAMING MEMBERS.

	INITIALS	DATE
DESIGNER		
CHECKER/ REVIEWER		
BACK CHECKER		
CORRECTOR		
VERIFIER		

HDR

NOT FOR CONSTRUCTION

NO.	DATE	REVISION	BY

ORIGINAL PLANS PREPARED BY

HNTB

11414 W. PARK PLACE
MILWAUKEE, WI 53224
(414) 359-2300

PLANS PREPARED FOR

CITY OF MILWAUKEE
DEPARTMENT OF
PUBLIC WORKS

MILWAUKEE STREETCAR

MAINTENANCE FACILITY

95% SUBMISSION | 29 FEB. 2016

DESIGNED BY JF | DESIGN CK'D SMG | DRAWN BY TH | PLANS CK'D MH

COMPOSITE HIGH ROOF FRAMING

S130

NOT FOR CONSTRUCTION

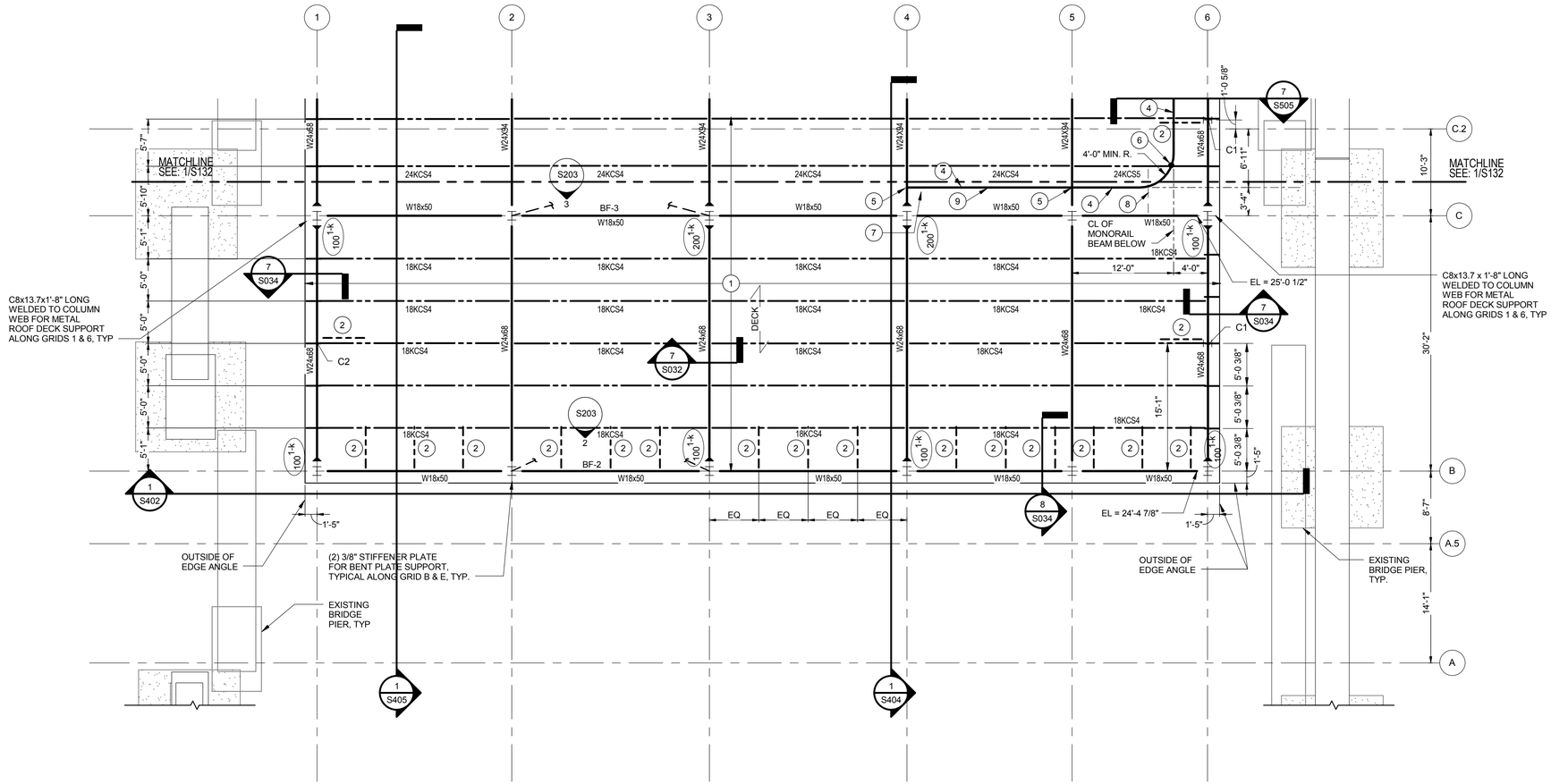

HIGH ROOF FRAMING PLAN - AREA A

1/8" = 1'-0"

REFERENCE S130 FOR SHEET NOTES.

PLAN NOTES - HIGH ROOF FRAMING PLAN

1. 1 1/2" x 19 GA TYPE B "WIDE RIB" GALVANIZED METAL ROOF DECK. CONTINUOUS OVER 3 SPANS OR MORE. ROOF DECK SHALL BE FASTENED WITH 5/8" PUDDLE WELDS TO ALL SUPPORTS PER STEEL DECK INSTITUTE 36/4 PATTERN. SIDE LAPS SHALL BE #10 SCREW FASTENERS SPACED EVENLY BETWEEN SUPPORTS WITH A MAXIMUM SPACING OF 12" OC.
2. L3-1/2x3-1/2x1/4 KICKER
3. BOTTOM OF STEEL ELEVATION = 122'-0"
4. 2 TON MONORAIL BEAM= S18x54.7. SEE SHEET Q113 FOR HOIST DETAILS.
5. MONORAIL BEAM SHALL BE BOLTED TO BOTTOM FLANGE OF W24 ROOF GIRDER. SEE DETAIL 1/S505.
6. MONORAIL BEAM SHALL BE SUPPORTED BY ROOF JOIST. SEE DETAIL 2/S505.
7. MONORAIL BEAM SHALL HAVE END STOPS PER DETAIL 3/S505.
8. MONORAIL BEAM SUPPORT BRIDGE. SEE DETAIL 4/S505.
9. STENCIL ON BOTH SIDES OF MONORAIL BEAM MID-WAY BETWEEN COLUMN GRID LINES THE FOLLOWING USING 5 INCH TALL LETTERS: 2 TON

LEGEND - HIGH ROOF FRAMING PLAN

- (1) PLAN NOTE.
- INDICATES BRACE FRAME.
- MOMENT CONNECTION.
- INDICATES AXIAL LOAD CONNECTION.
- SPAN DIRECTION.

HDR

NOT FOR CONSTRUCTION

NO.	DATE	REVISION	BY

ORIGINAL PLANS PREPARED BY

HNTB

11414 W. PARK PLACE
MILWAUKEE, WI 53224
(414) 359-2300

PLANS PREPARED FOR

CITY OF MILWAUKEE
DEPARTMENT OF
PUBLIC WORKS

MILWAUKEE STREETCAR

MAINTENANCE FACILITY

95% SUBMISSION		29 FEB. 2016	
DESIGNED BY JF	DESIGN CK'D SMG	DRAWN BY TH	PLANS CK'D MH

	INITIALS	DATE
DESIGNER		
CHECKER/ REVIEWER		
BACK CHECKER		
CORRECTOR		
VERIFIER		

PARTIAL HIGH ROOF FRAMING - SECTOR A

S131

NOT FOR CONSTRUCTION

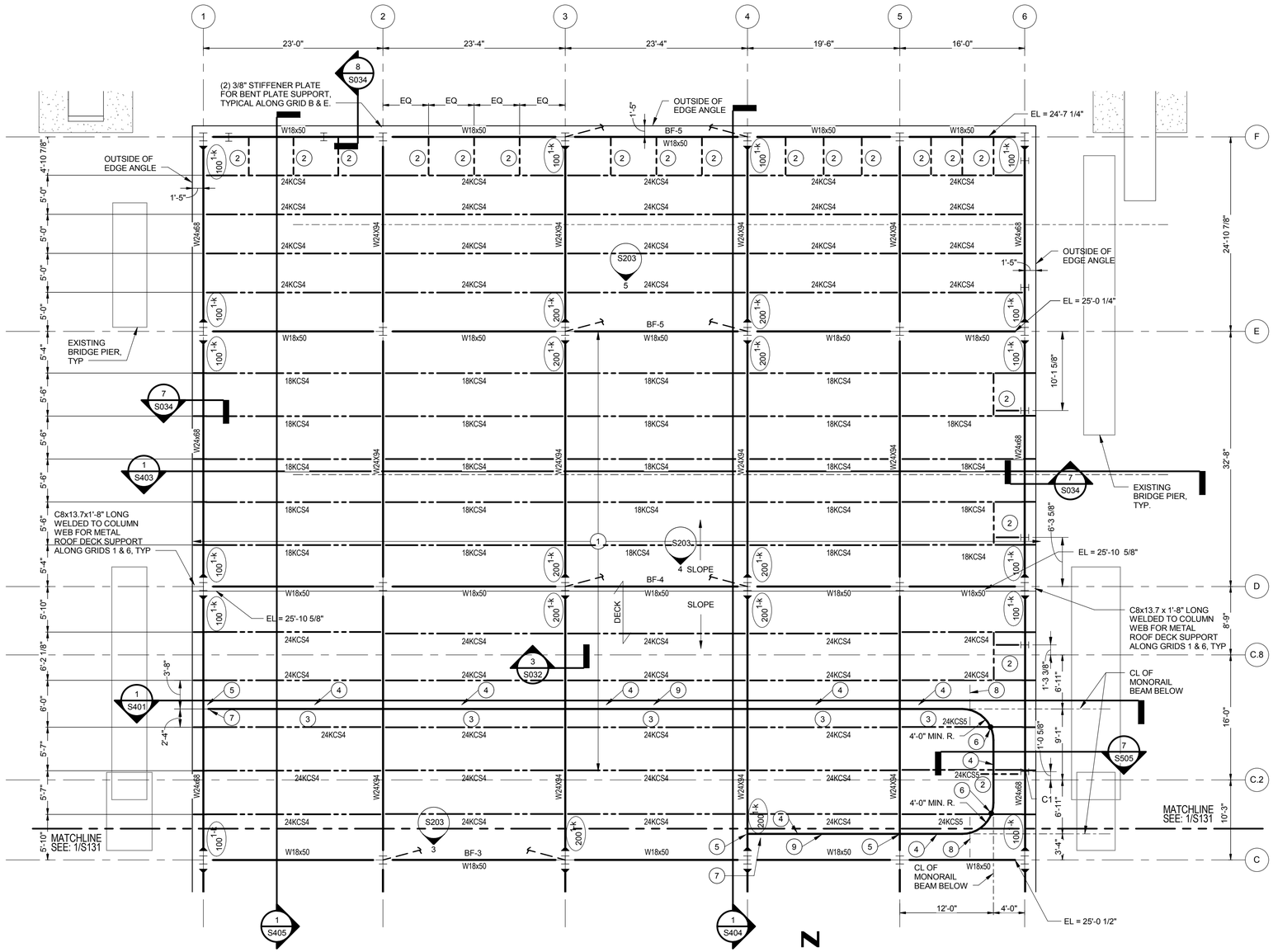

HIGH ROOF FRAMING PLAN - AREA B

1/8" = 1'-0"

REFERENCE S130 FOR SHEET NOTES.

PLAN NOTES - HIGH ROOF FRAMING PLAN

1. 1 1/2" x 19 GA TYPE B "WIDE RIB" GALVANIZED METAL ROOF DECK. CONTINUOUS OVER 3 SPANS OR MORE. ROOF DECK SHALL BE FASTENED WITH 5/8" PUDDLE WELDS TO ALL SUPPORTS PER STEEL DECK INSTITUTE 36/4 PATTERN. SIDE LAPS SHALL BE #10 SCREW FASTENERS SPACED EVENLY BETWEEN SUPPORTS WITH A MAXIMUM SPACING OF 12" OC.
2. L3-1/2x3-1/2x1/4 KICKER
3. BOTTOM OF STEEL ELEVATION = 122'-0"
4. 2 TON MONORAIL BEAM= S18x54.7. SEE SHEET Q113 FOR HOIST DETAILS.
5. MONORAIL BEAM SHALL BE BOLTED TO BOTTOM FLANGE OF W24 ROOF GIRDER. SEE DETAIL 1/S505.
6. MONORAIL BEAM SHALL BE SUPPORTED BY ROOF JOIST. SEE DETAIL 2/S505.
7. MONORAIL BEAM SHALL HAVE END STOPS PER DETAIL 3/S505.
8. MONORAIL BEAM SUPPORT BRIDGE. SEE DETAIL 4/S505.
9. STENCIL ON BOTH SIDES OF MONORAIL BEAM MID-WAY BETWEEN COLUMN GRID LINES THE FOLLOWING USING 5 INCH TALL LETTERS: 2 TON

LEGEND - HIGH ROOF FRAMING PLAN

- (1) PLAN NOTE.
- INDICATES BRACE FRAME.
- MOMENT CONNECTION.
- INDICATES AXIAL LOAD CONNECTION.
- SPAN DIRECTION.

HDR

NOT FOR CONSTRUCTION

NO.	DATE	REVISION	BY

ORIGINAL PLANS PREPARED BY

HNTB
11414 W. PARK PLACE
MILWAUKEE, WI 53224
(414) 359-2300

PLANS PREPARED FOR

CITY OF MILWAUKEE
DEPARTMENT OF
PUBLIC WORKS

MILWAUKEE STREETCAR

MAINTENANCE FACILITY

95% SUBMISSION | 29 FEB. 2016

DESIGNED BY JF | DESIGN CK'D SMG | DRAWN BY TH | PLANS CK'D MH

	INITIALS	DATE
DESIGNER		
CHECKER/ REVIEWER		
BACK CHECKER		
CORRECTOR		
VERIFIER		

PARTIAL HIGH ROOF FRAMING - SECTOR B

S132

NOT FOR CONSTRUCTION

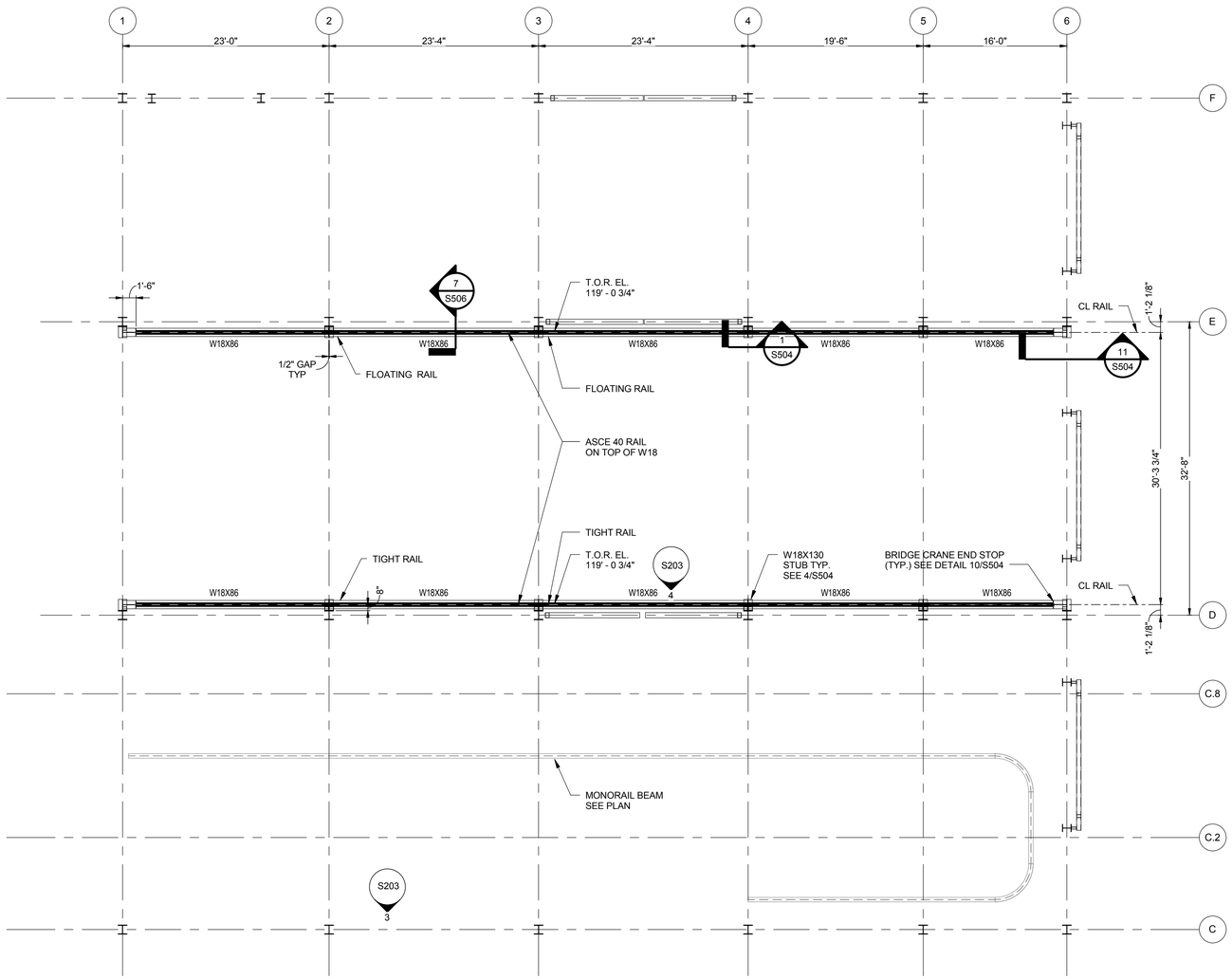

BRIDGE CRANE FRAMING PLAN

1/8" = 1'-0"

N

NOT FOR CONSTRUCTION

NO.	DATE	REVISION	BY

ORIGINAL PLANS PREPARED BY

HNTB

11414 W. PARK PLACE
MILWAUKEE, WI 53224
(414) 359-2300

PLANS PREPARED FOR

CITY OF MILWAUKEE
DEPARTMENT OF
PUBLIC WORKS

MILWAUKEE STREETCAR

MAINTENANCE FACILITY

95% SUBMISSION | 29 FEB. 2016

DESIGNED BY JF | DESIGN CK'D SMG | DRAWN BY TH | PLANS CK'D MH

	INITIALS	DATE
DESIGNER		
CHECKER/ REVIEWER		
BACK CHECKER		
CORRECTOR		
VERIFIER		

7.5 TON BRIDGE CRANE FRAMING PLAN

S140

NOT FOR CONSTRUCTION

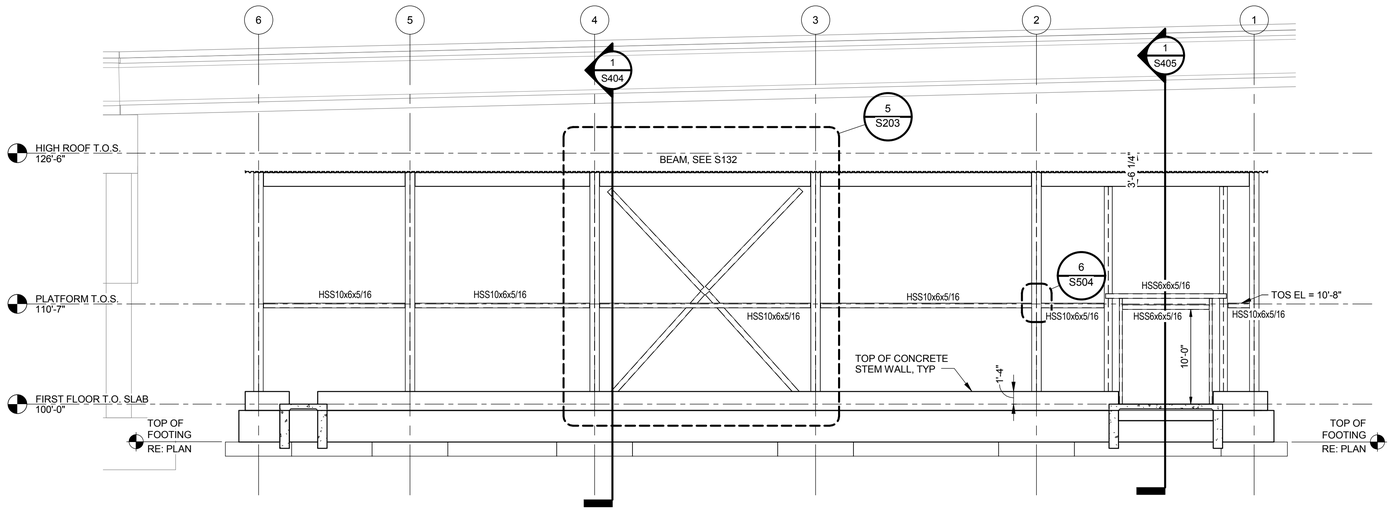

1 S201 NORTH WALL FRAMING ELEVATION
1/8" = 1'-0"

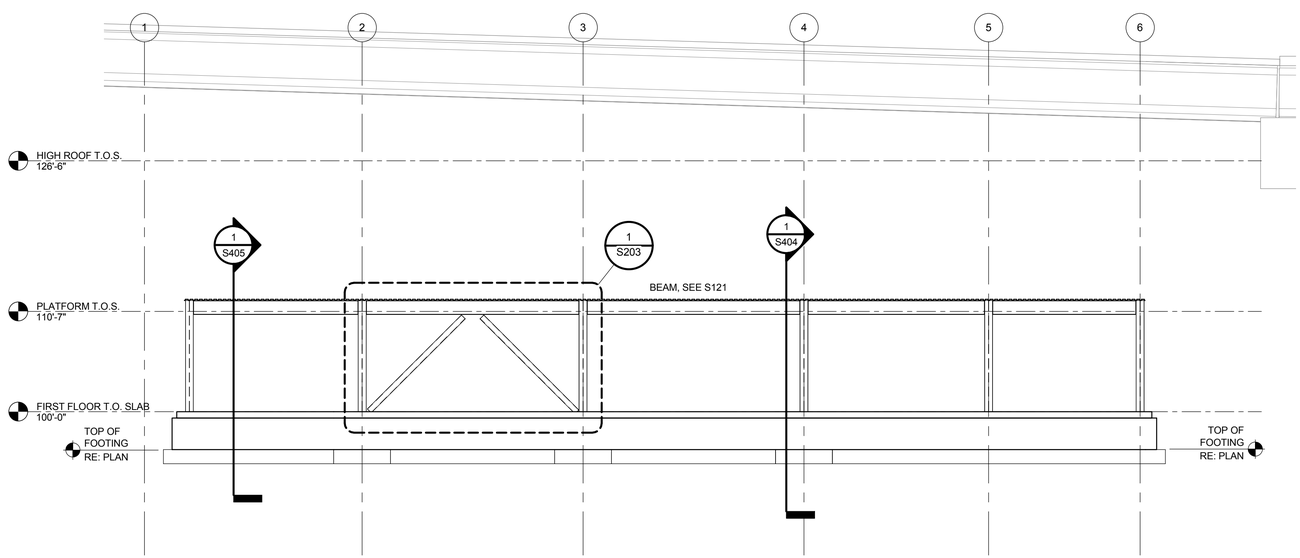

2 S201 SOUTH WALL FRAMING ELEVATION
1/8" = 1'-0"

NOT FOR CONSTRUCTION

NO.	DATE	REVISION	BY

ORIGINAL PLANS PREPARED BY

HNTB
11414 W. PARK PLACE
MILWAUKEE, WI 53224
(414) 359-2300

PLANS PREPARED FOR

CITY OF MILWAUKEE
DEPARTMENT OF
PUBLIC WORKS

MILWAUKEE STREETCAR

MAINTENANCE FACILITY

95% SUBMISSION | 29 FEB. 2016

DESIGNED BY JF | DESIGN CK'D SMG | DRAWN BY TH | PLANS CK'D MH

	INITIALS	DATE
DESIGNER		
CHECKER/ REVIEWER		
BACK CHECKER		
CORRECTOR		
VERIFIER		

NORTH AND SOUTH FRAMING ELEVATIONS

S201

NOT FOR CONSTRUCTION

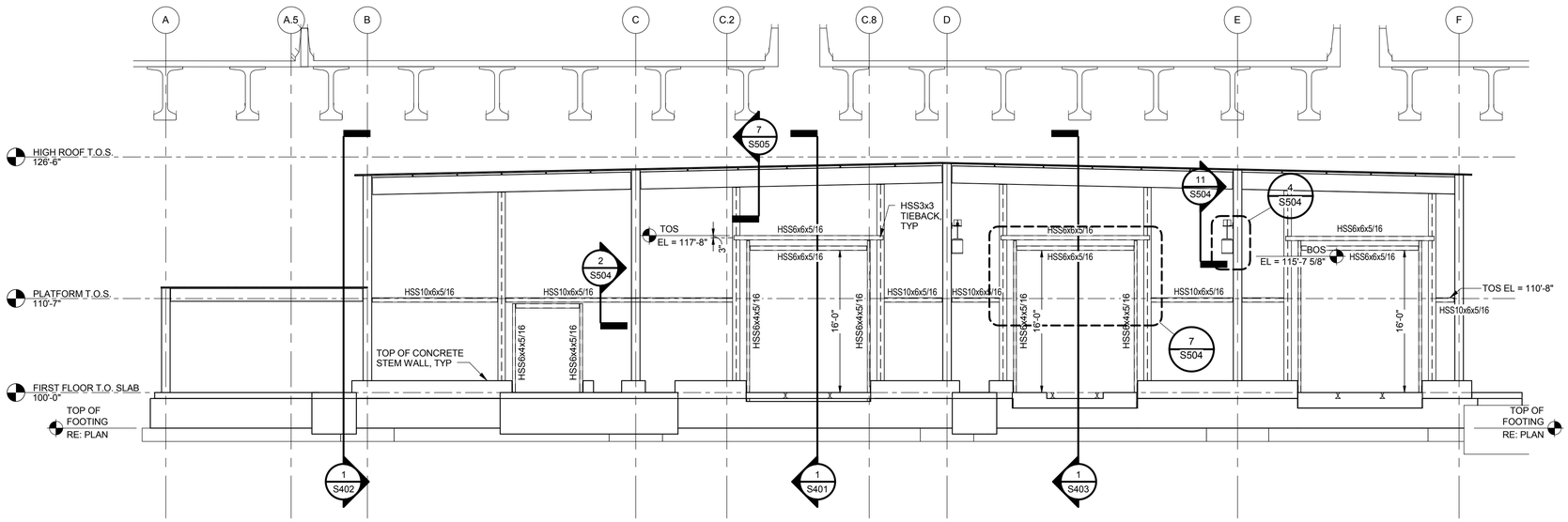

1 S202 EAST WALL FRAMING ELEVATION

1/8" = 1'-0"

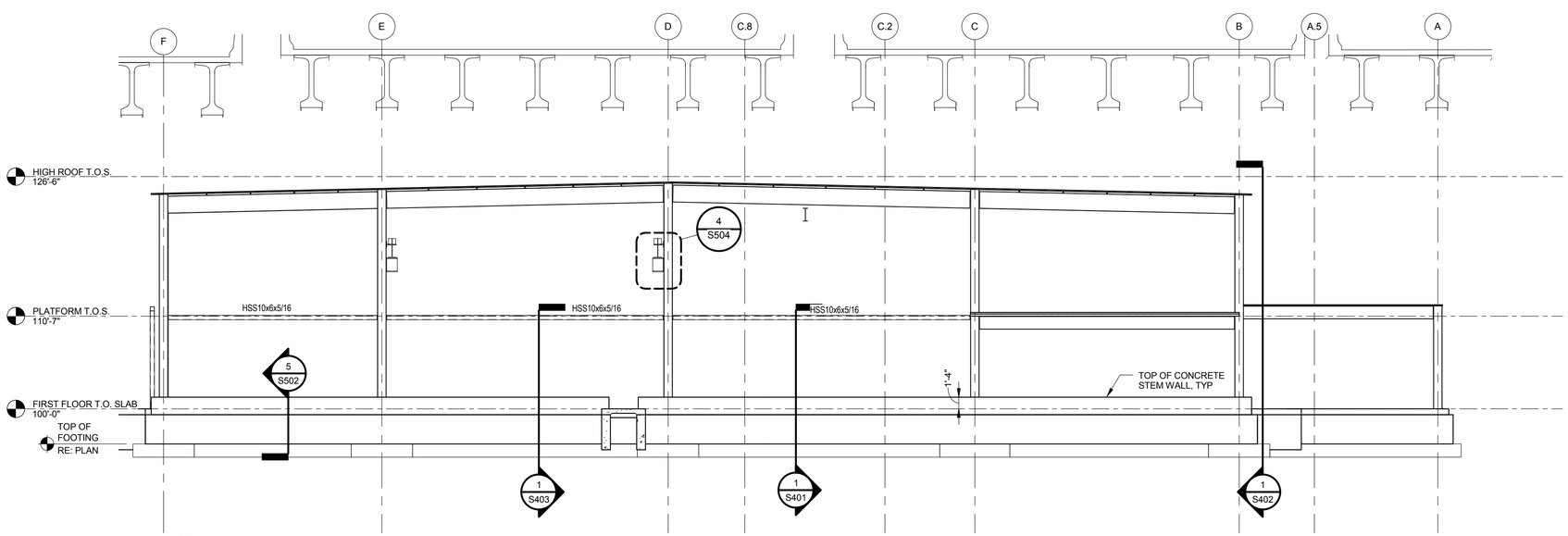

2 S202 WEST WALL FRAMING ELEVATION

1/8" = 1'-0"

NOT FOR CONSTRUCTION

NO.	DATE	REVISION	BY

ORIGINAL PLANS PREPARED BY

HNTB

11414 W. PARK PLACE
MILWAUKEE, WI 53224
(414) 359-2300

PLANS PREPARED FOR

CITY OF MILWAUKEE
DEPARTMENT OF
PUBLIC WORKS

MILWAUKEE STREETCAR

MAINTENANCE FACILITY

95% SUBMISSION | 29 FEB. 2016

	INITIALS	DATE
DESIGNER		
CHECKER/ REVIEWER		
BACK CHECKER		
CORRECTOR		
VERIFIER		

DESIGNED BY	JF	DESIGN CK'D	SMG	DRAWN BY	TH	PLANS CK'D	MH

EAST AND WEST FRAMING ELEVATIONS

S202

NOT FOR CONSTRUCTION

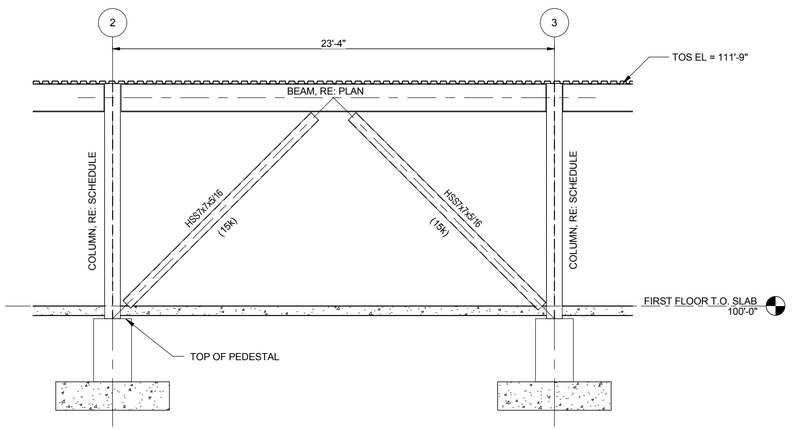

1 S203 BRACED FRAME ELEVATION - GRID A
1/4" = 1'-0"

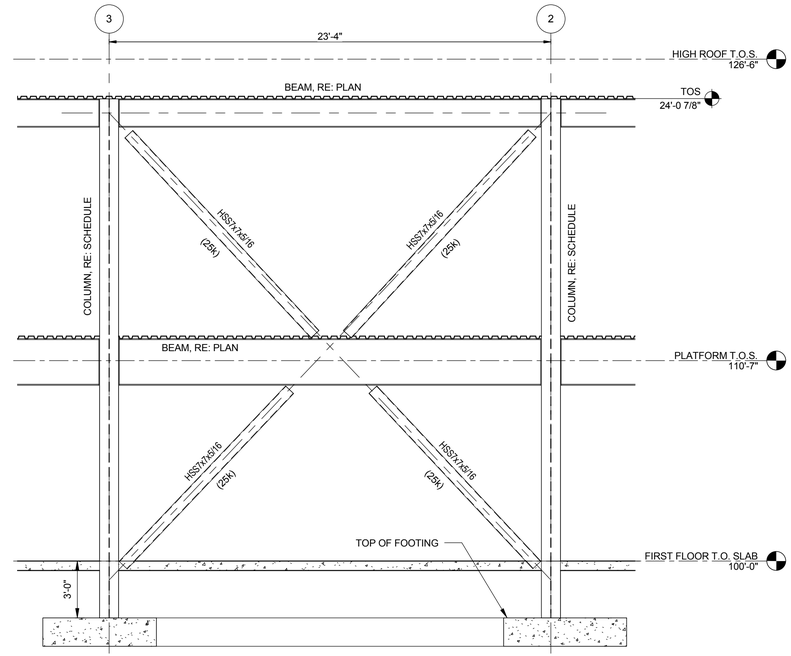

2 S203 BRACED FRAME ELEVATION - GRID B
1/4" = 1'-0"

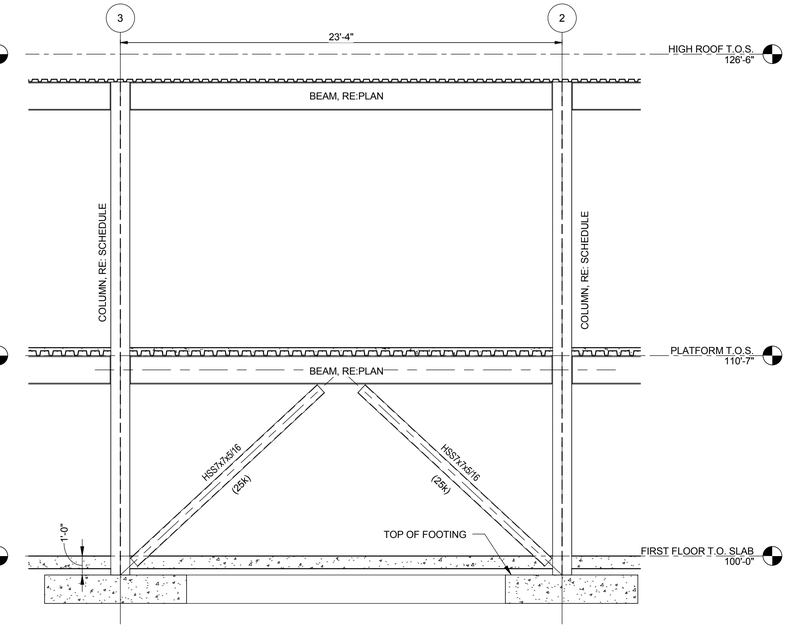

3 S203 BRACED FRAME ELEVATION - GRID C
1/4" = 1'-0"

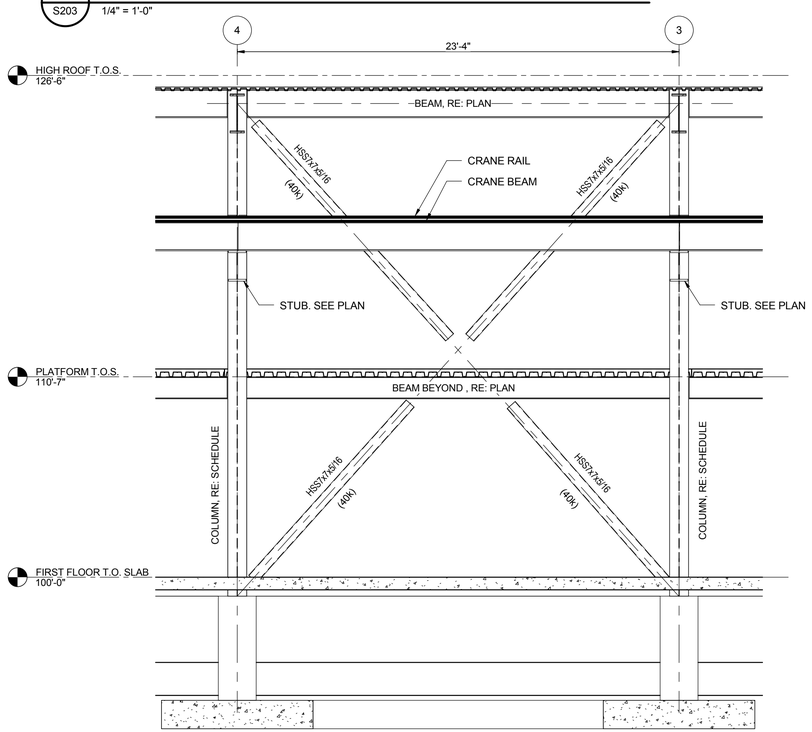

4 S203 BRACED FRAME ELEVATION - GRID D
1/4" = 1'-0"

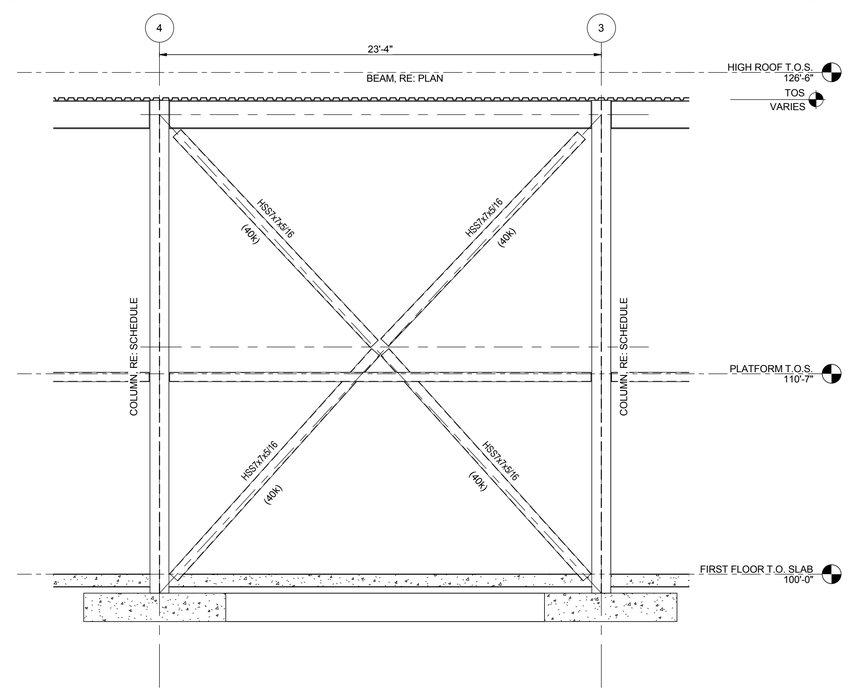

5 S203 BRACED FRAME ELEVATION - GRIDS E & F
1/4" = 1'-0"

HDR

NOT FOR CONSTRUCTION

NO.	DATE	REVISION	BY

ORIGINAL PLANS PREPARED BY

HNTB
11414 W. PARK PLACE
MILWAUKEE, WI 53224
(414) 359-2300

PLANS PREPARED FOR

CITY OF MILWAUKEE
DEPARTMENT OF
PUBLIC WORKS

MILWAUKEE STREETCAR

MAINTENANCE FACILITY

95% SUBMISSION | 29 FEB. 2016

	INITIALS	DATE
DESIGNER		
CHECKER/ REVIEWER		
BACK CHECKER		
CORRECTOR		
VERIFIER		

DESIGNED BY	JF	DESIGN CK'D	SMG	DRAWN BY	TH	PLANS CK'D	MH

BRACED FRAME ELEVATIONS

S203

NOT FOR CONSTRUCTION

COLUMN SCHEDULE

HIGH ROOF T.O.S.												HIGH ROOF T.O.S.
126'-6" PLATFORM T.O.S.												126'-6" PLATFORM T.O.S.
110'-7" FIRST FLOOR T.O. SLAB	HSS6x6x5/16	HSS6x6x5/16	HSS6x4x5/16	W12x53	HSS6x6x5/16	HSS6x4x5/16	W12x72	W12x53	W12x72	W12x72	W12x53	110'-7" FIRST FLOOR T.O. SLAB
100'-0"												100'-0"
	C.8-4, C.8-5	C.8-2, C.8-3	C.2(2'-4 5/8")-6(1'-4"), C.8-6(1'-4"), D(7-7 5/8")-6(1'-4"), E(6'-11 5/8")-6(1'-4"), E(-11'-5 5/8")-6(1'-4"), F(-4'-4 1/2")-6(1'-4")	C.2(1'-0 5/8")-6	C.2-2, C.2-3, C.2-4, C.2-5	C(-6'-1 5/8")-6(1'-4"), C(-13'-8 3/8")-6(1'-4")	C-1, C-2, C-3, C-4, C-5, C-6	B(15'-1")-6	B-2, B-3	B-1, B-4, B-5, B-6	A-1(4'-9"), A-2, A-3, A-4, A-5, A-6	Column Locations

COLUMN SCHEDULE

HIGH ROOF T.O.S.												HIGH ROOF T.O.S.
126'-6" PLATFORM T.O.S.												126'-6" PLATFORM T.O.S.
110'-7" FIRST FLOOR T.O. SLAB	W12x53	W12x53	W12x72	W12x53	W12x53	HSS6x4x5/16	W12x72	W12x53	W12x72	W12x72	W12x53	110'-7" FIRST FLOOR T.O. SLAB
100'-0"												100'-0"
	F(-3'-0 1/2")-6	F-1(3'-3"), F-2(-7'-7")	F-1, F-2, F-3, F-4, F-5, F-6	E(-10'-1 5/8")-6	E(5'-7 5/8")-6	E-1(4'-7"), E-2(-8'-11"), F(1'-3 1/2")-1(4'-7"), F(1'-3 1/2")-2(-8'-11")	E-1, E-2, E-3, E-4, E-5, E-6	D(6'-3 5/8")-6	D-1, D-2, D-3, D-4, D-5, D-6	C.8(1'-3 3/8")-6	Column Locations

CONCRETE WALL SCHEDULE

TYPE	WIDTH	VERT REINF EXTERIOR	HORIZ REINF EXTERIOR	VERT REINF INTERIOR	HORIZ REINF INTERIOR	REMARKS
Exterior - 8" Concrete	8"	#5 @ 12"	#5 @ 12"	--	--	--
Exterior - 12" Concrete	1'-0"	#5 @ 12"	#5 @ 12"	#5 @ 12"	#5 @ 12"	--
Exterior - 14" Concrete	1'-2"	#5 @ 18"	#5 @ 18"	#5 @ 18"	#5 @ 18"	--
Exterior - 16" Concrete	1'-4"	#5 @ 12"	#5 @ 12"	#5 @ 12"	#5 @ 12"	--
Interior - 8" Concrete	8"	#5 @ 12"	#5 @ 12"	--	--	--

SPREAD FOOTING SCHEDULE

TYPE	QUANTITY	SIZE WIDTH	SIZE LENGTH	SIZE THICKNESS	REINFORCING
F5	13	5'-0"	5'-0"	1'-6"	(8) #6 EW BOT
F6	9	6'-0"	6'-0"	1'-6"	(9) #6 EW BOT
F7	9	7'-0"	7'-0"	1'-6"	(10) #6 EW BOT
F8	15	8'-0"	8'-0"	1'-6"	(11) #6 EW BOT

PEDESTAL / PILASTER SCHEDULE

TYPE	QUANTITY	WIDTH	LENGTH	VERTICAL REINF	TIES	REMARKS
12" SQUARE	4	1'-0"	1'-0"			
P1	38	2'-0"	2'-0"	(12) #5	#4 @ 8"	--

	INITIALS	DATE
DESIGNER		
CHECKER/ REVIEWER		
BACK CHECKER		
CORRECTOR		
VERIFIER		

HDR

NOT FOR CONSTRUCTION

NO.	DATE	REVISION	BY

ORIGINAL PLANS PREPARED BY

HNTB
11414 W. PARK PLACE
MILWAUKEE, WI 53224
(414) 359-2300

PLANS PREPARED FOR

CITY OF MILWAUKEE
DEPARTMENT OF
PUBLIC WORKS

MILWAUKEE STREETCAR

MAINTENANCE FACILITY

95% SUBMISSION | 29 FEB. 2016

DESIGNED BY JF | DESIGN CK'D SMG | DRAWN BY TH | PLANS CK'D MH

FOOTING AND STEEL COLUMN SCHEDULES

S301

NOT FOR CONSTRUCTION

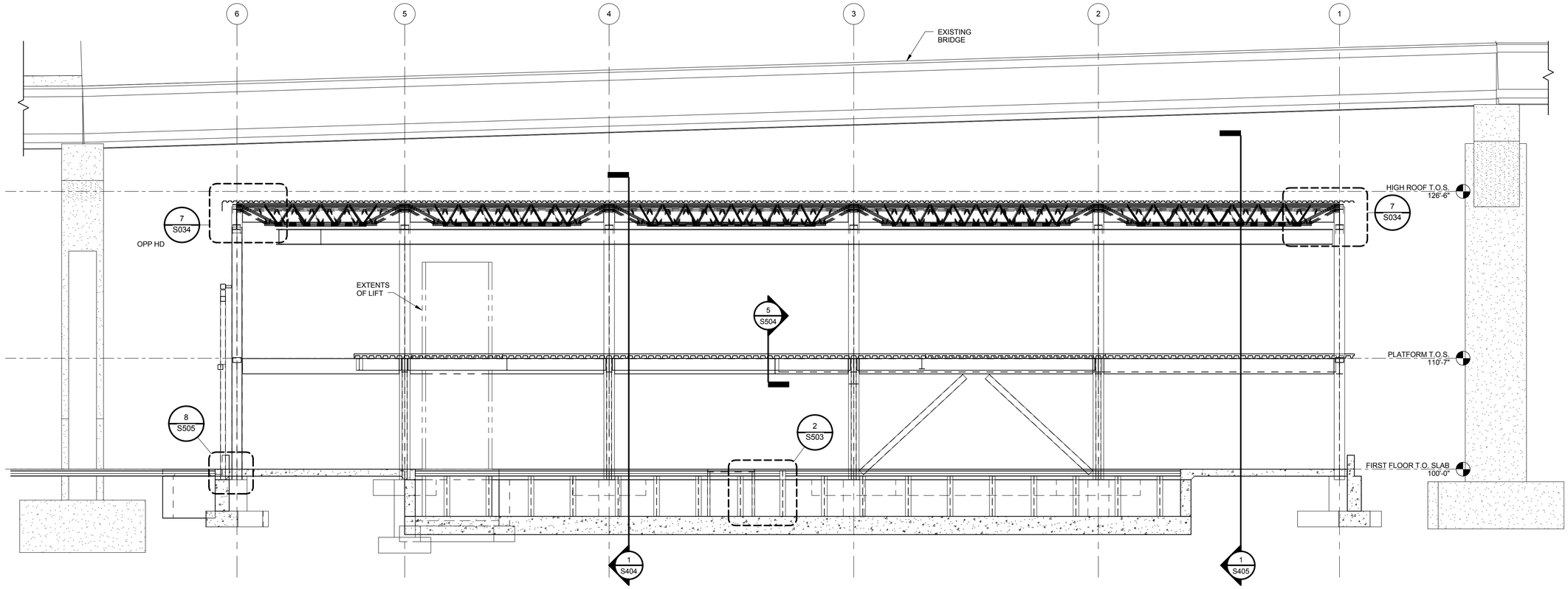

1 S401 BUILDING SECTION
3/16" = 1'-0"

NOT FOR CONSTRUCTION

NO.	DATE	REVISION	BY

ORIGINAL PLANS PREPARED BY

HNTB
11414 W. PARK PLACE
MILWAUKEE, WI 53224
(414) 359-2300

PLANS PREPARED FOR

CITY OF MILWAUKEE
DEPARTMENT OF
PUBLIC WORKS

MILWAUKEE STREETCAR

MAINTENANCE FACILITY

95% SUBMISSION | 29 FEB. 2016

DESIGNED BY JF | DESIGN CK'D SMG | DRAWN BY TH | PLANS CK'D MH

	INITIALS	DATE
DESIGNER		
CHECKER/ REVIEWER		
BACK CHECKER		
CORRECTOR		
VERIFIER		

BUILDING SECTIONS

S401

NOT FOR CONSTRUCTION

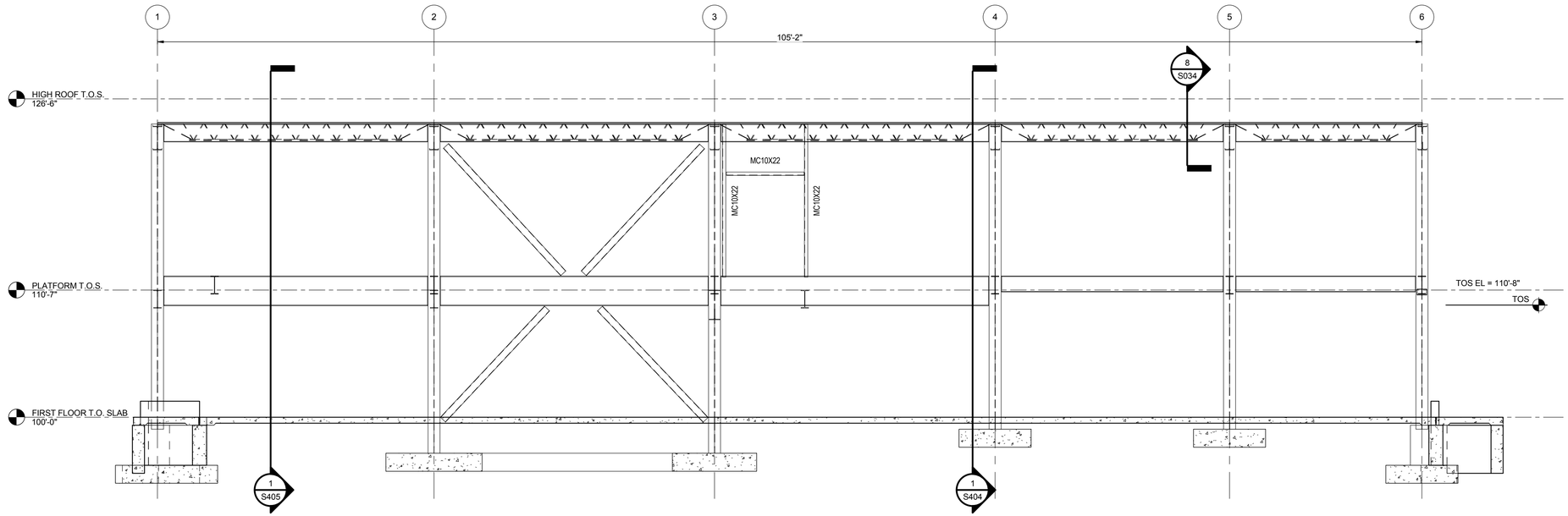

1 S402 BUILDING SECTION
3/16" = 1'-0"

HDR

NOT FOR CONSTRUCTION

NO.	DATE	REVISION	BY

ORIGINAL PLANS PREPARED BY

HNTB
11414 W. PARK PLACE
MILWAUKEE, WI 53224
(414) 359-2300

PLANS PREPARED FOR

CITY OF MILWAUKEE
DEPARTMENT OF
PUBLIC WORKS

MILWAUKEE STREETCAR

MAINTENANCE FACILITY

95% SUBMISSION | 29 FEB. 2016

DESIGNED BY JF | DESIGN CK'D SMG | DRAWN BY TH | PLANS CK'D MH

	INITIALS	DATE
DESIGNER		
CHECKER/ REVIEWER		
BACK CHECKER		
CORRECTOR		
VERIFIER		

BUILDING SECTIONS

S402

NOT FOR CONSTRUCTION

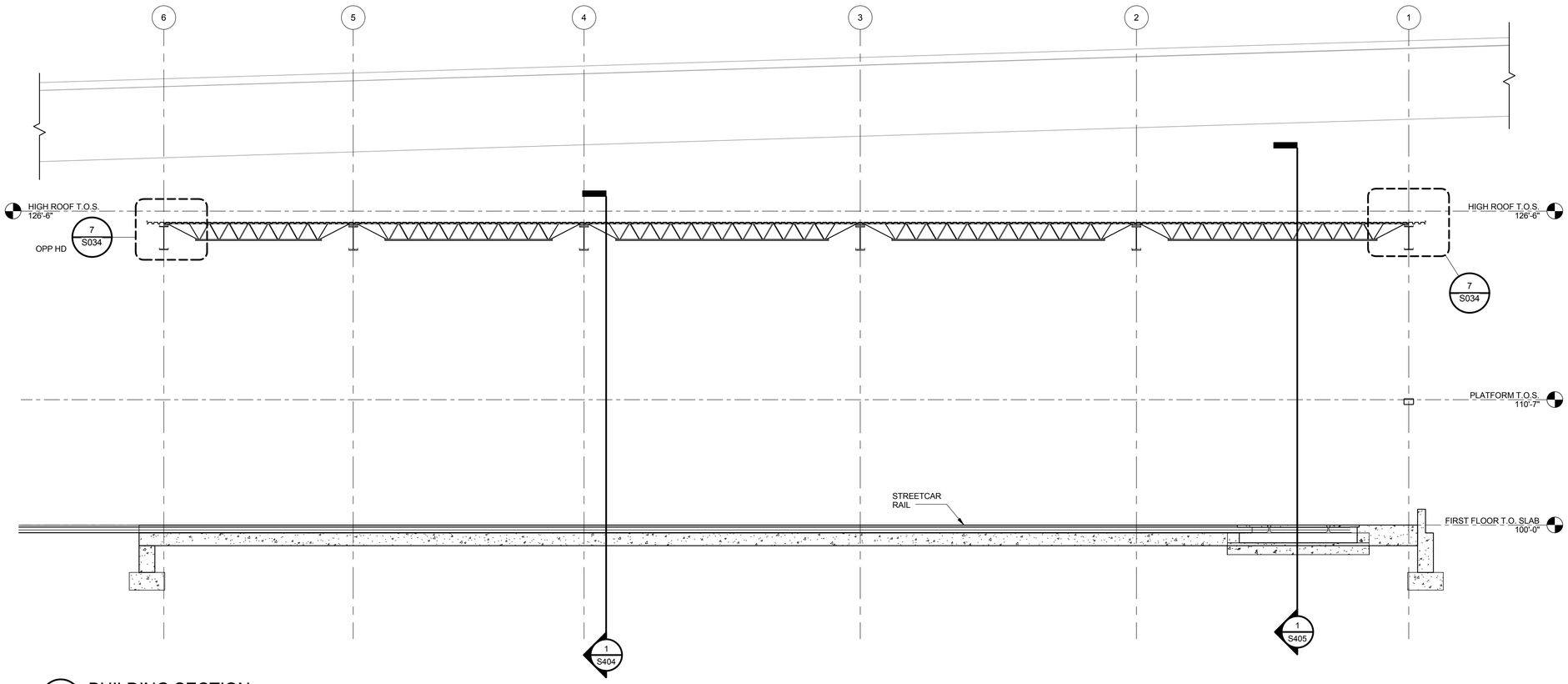

1 S403 BUILDING SECTION
3/16" = 1'-0"

NOT FOR CONSTRUCTION

NO.	DATE	REVISION	BY

ORIGINAL PLANS PREPARED BY

HNTB
11414 W. PARK PLACE
MILWAUKEE, WI 53224
(414) 359-2300

PLANS PREPARED FOR

CITY OF MILWAUKEE
DEPARTMENT OF
PUBLIC WORKS

MILWAUKEE STREETCAR

MAINTENANCE FACILITY

95% SUBMISSION | 29 FEB. 2016

DESIGNED BY JF | DESIGN CK'D SMG | DRAWN BY TH | PLANS CK'D MH

	INITIALS	DATE
DESIGNER		
CHECKER/ REVIEWER		
BACK CHECKER		
CORRECTOR		
VERIFIER		

BUILDING SECTIONS

S403

NOT FOR CONSTRUCTION

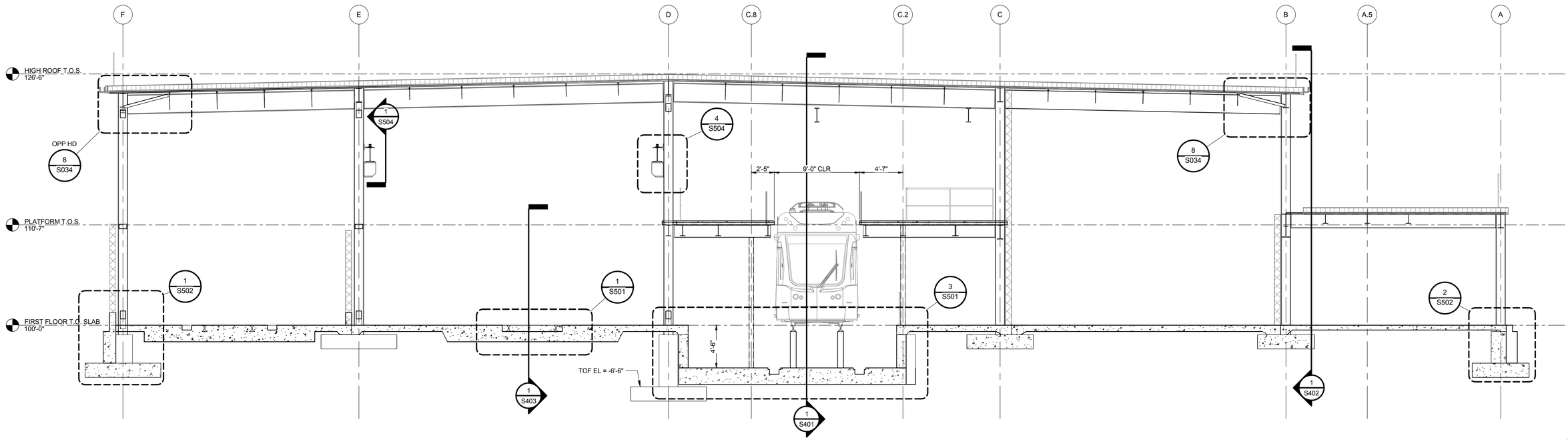

1 S404 BUILDING SECTION
3/16" = 1'-0"

HDR

NOT FOR CONSTRUCTION

NO.	DATE	REVISION	BY

ORIGINAL PLANS PREPARED BY

HNTB
11414 W. PARK PLACE
MILWAUKEE, WI 53224
(414) 359-2300

PLANS PREPARED FOR

CITY OF MILWAUKEE
DEPARTMENT OF
PUBLIC WORKS

MILWAUKEE STREETCAR

MAINTENANCE FACILITY

95% SUBMISSION	29 FEB. 2016

DESIGNED BY JF	DESIGN CK'D SMG	DRAWN BY TH	PLANS CK'D MH

	INITIALS	DATE
DESIGNER		
CHECKER/ REVIEWER		
BACK CHECKER		
CORRECTOR		
VERIFIER		

BUILDING SECTIONS

S404

NOT FOR CONSTRUCTION

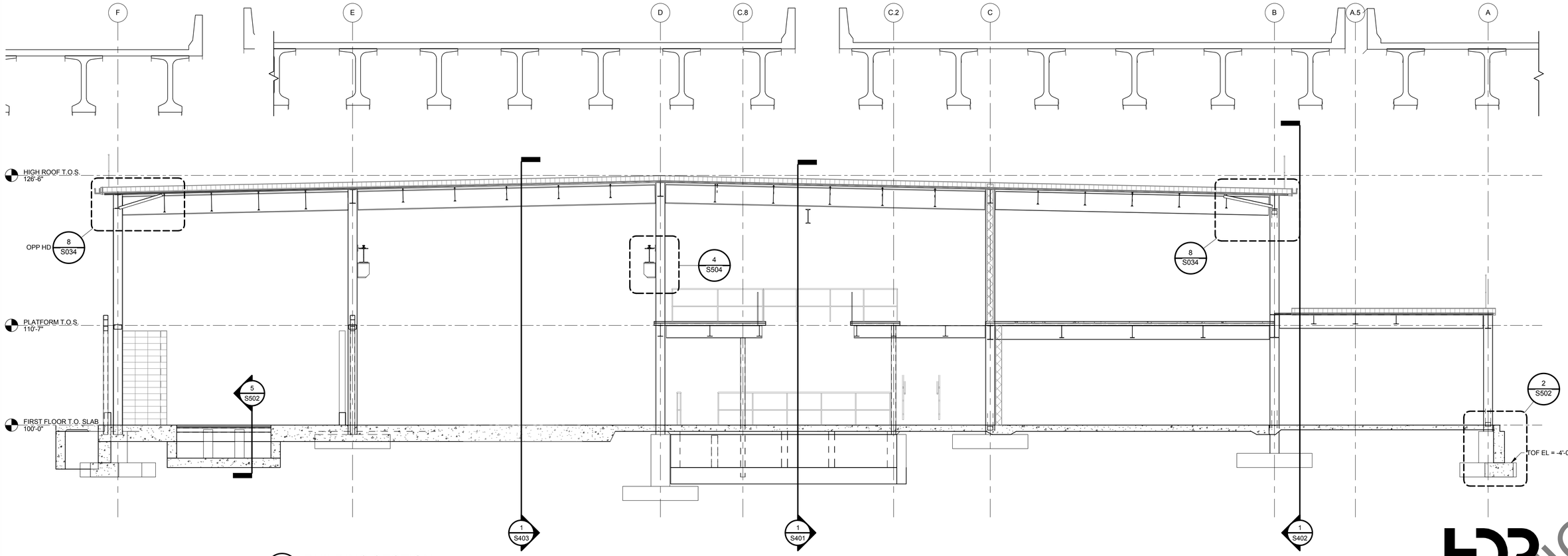

1 S405 BUILDING SECTION
3/16" = 1'-0"

NOT FOR CONSTRUCTION

NO.	DATE	REVISION	BY

ORIGINAL PLANS PREPARED BY

HNTB
11414 W. PARK PLACE
MILWAUKEE, WI 53224
(414) 359-2300

PLANS PREPARED FOR

CITY OF MILWAUKEE
DEPARTMENT OF
PUBLIC WORKS

MILWAUKEE STREETCAR

MAINTENANCE FACILITY

95% SUBMISSION | 29 FEB. 2016

DESIGNED BY JF | DESIGN CK'D SMG | DRAWN BY TH | PLANS CK'D MH

	INITIALS	DATE
DESIGNER		
CHECKER/ REVIEWER		
BACK CHECKER		
CORRECTOR		
VERIFIER		

BUILDING SECTIONS

S405

NOT FOR CONSTRUCTION

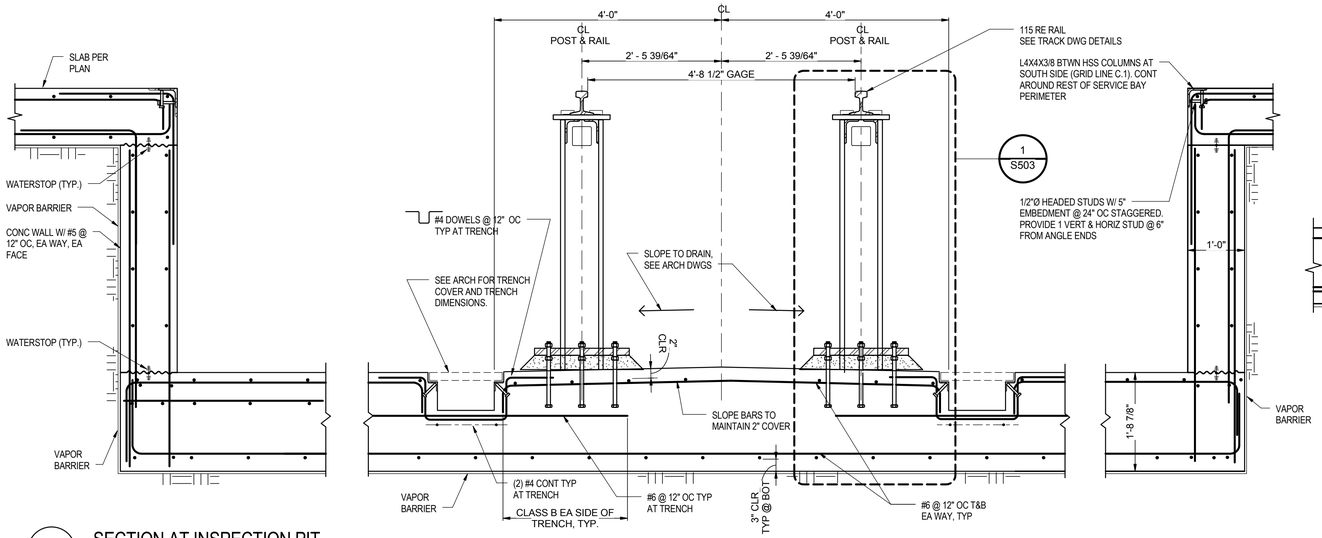

3 SECTION AT INSPECTION PIT

3/4" = 1'-0"

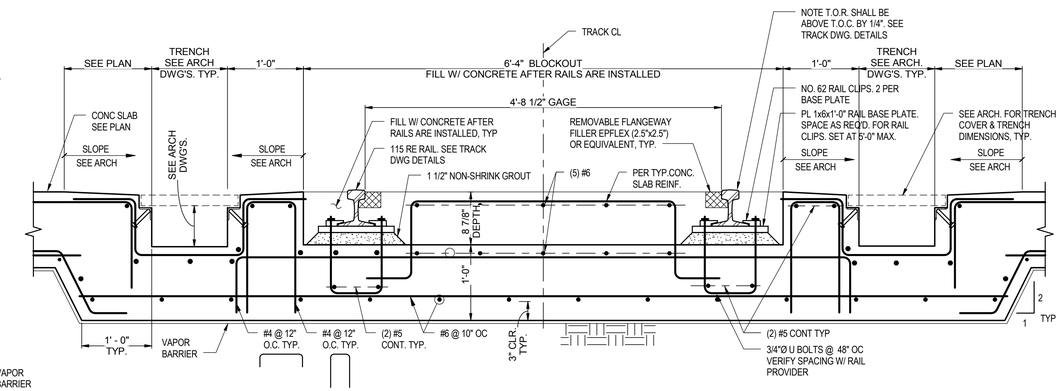

4 SECTION WITH TRENCH DRAINS

1" = 1'-0"

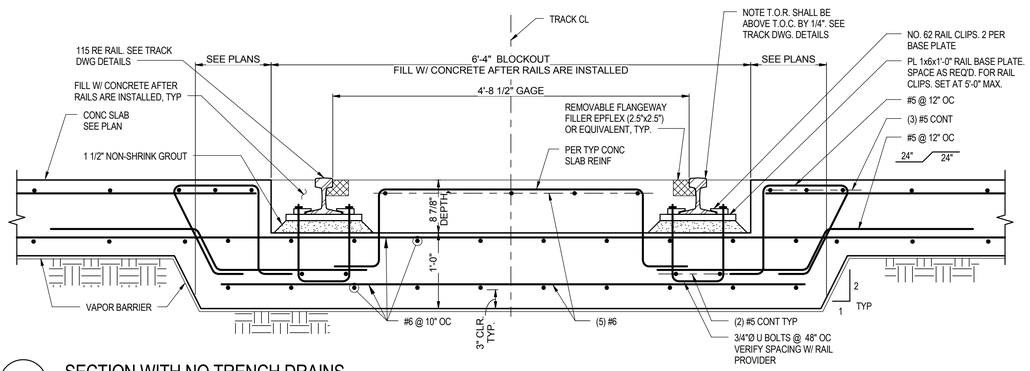

1 SECTION WITH NO TRENCH DRAINS

1" = 1'-0"

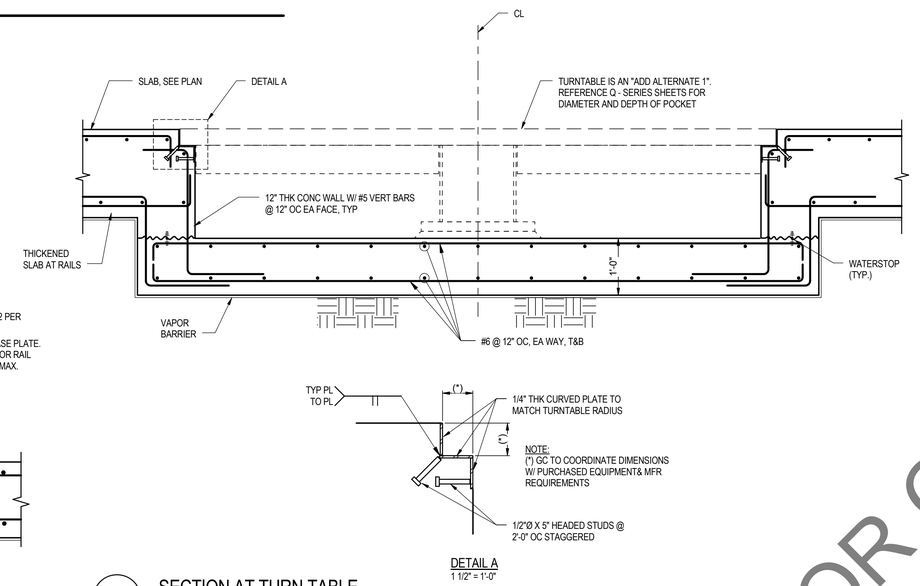

2 SECTION AT TURN TABLE

3/4" = 1'-0"

	INITIALS	DATE
DESIGNER		
CHECKER/ REVIEWER		
BACK CHECKER		
CORRECTOR		
VERIFIER		

HDR

NOT FOR CONSTRUCTION

NO.	DATE	REVISION	BY

ORIGINAL PLANS PREPARED BY

HNTB

11414 W. PARK PLACE
MILWAUKEE, WI 53224
(414) 359-2300

PLANS PREPARED FOR

CITY OF MILWAUKEE
DEPARTMENT OF
PUBLIC WORKS

MILWAUKEE STREETCAR

MAINTENANCE FACILITY

95% SUBMISSION | 29 FEB. 2016

DESIGNED BY JF | DESIGN CK'D SMG | DRAWN BY TH | PLANS CK'D MH

CONCRETE SECTIONS AND DETAILS

S501

NOT FOR CONSTRUCTION

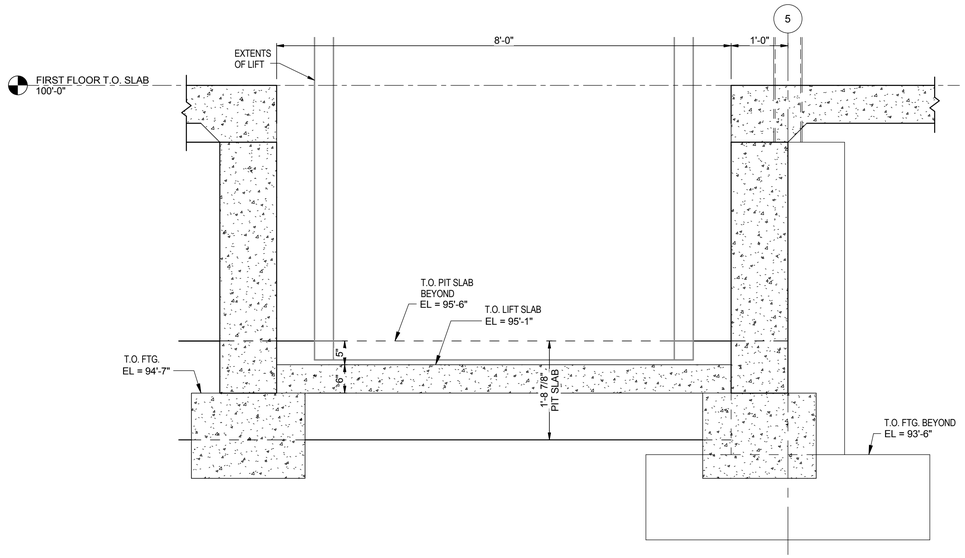

4 SECTION @ LIFT RECESS
3/4" = 1'-0"

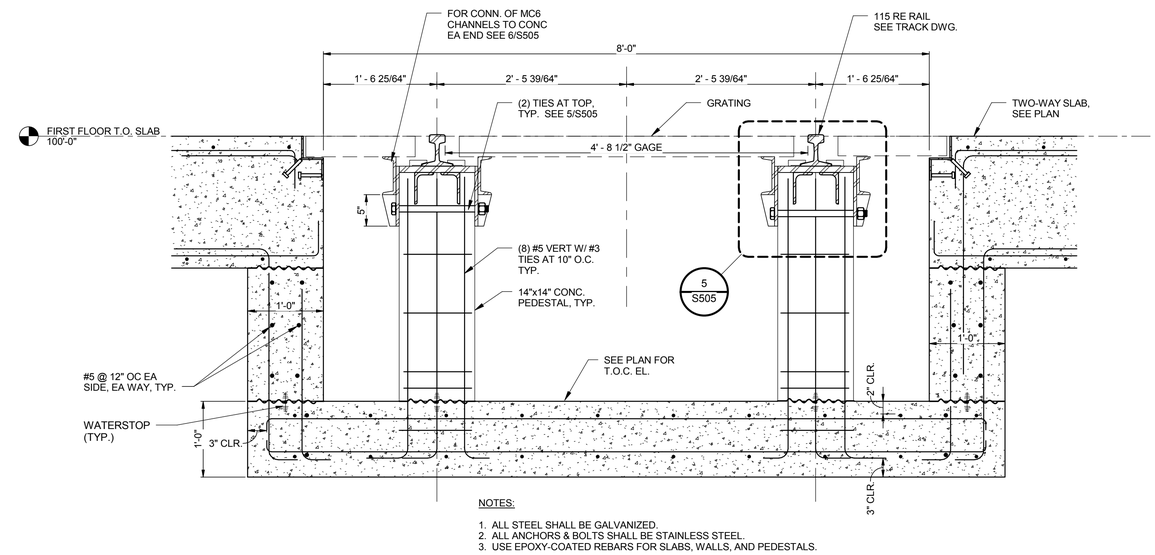

NOTES:

1. ALL STEEL SHALL BE GALVANIZED.
2. ALL ANCHORS & BOLTS SHALL BE STAINLESS STEEL.
3. USE EPOXY-COATED REBARS FOR SLABS, WALLS, AND PEDESTALS.

5 TRUCK WASH PIT SECTION
1" = 1'-0"

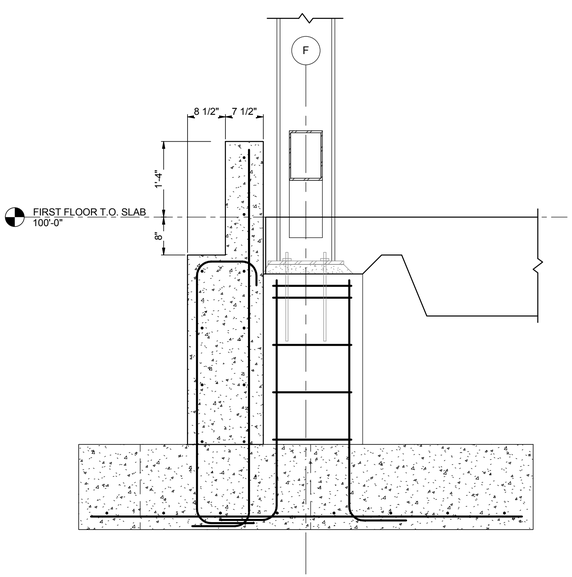

1 COLUMN FOOTING @ EXT. WALL
3/4" = 1'-0"

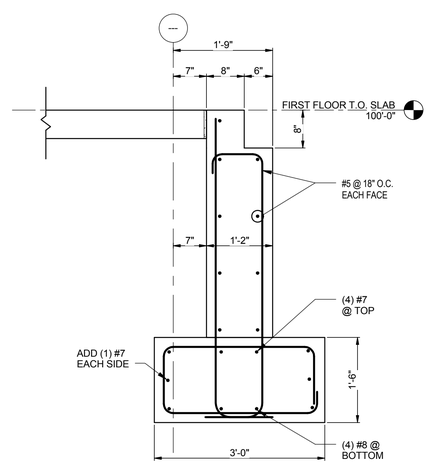

2 WALL FOOTING @ EXT WALL
3/4" = 1'-0"

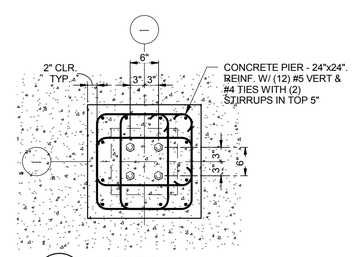

3 SECTION
3/4" = 1'-0"

	INITIALS	DATE
DESIGNER		
CHECKER/ REVIEWER		
BACK CHECKER		
CORRECTOR		
VERIFIER		

HDR

NOT FOR CONSTRUCTION

NO.	DATE	REVISION	BY

ORIGINAL PLANS PREPARED BY

HNTB
11414 W. PARK PLACE
MILWAUKEE, WI 53224
(414) 359-2300

PLANS PREPARED FOR

CITY OF MILWAUKEE
DEPARTMENT OF
PUBLIC WORKS

MILWAUKEE STREETCAR

MAINTENANCE FACILITY

95% SUBMISSION | 29 FEB. 2016

DESIGNED BY JF | DESIGN CK'D SMG | DRAWN BY TH | PLANS CK'D MH

CONCRETE SECTIONS AND DETAILS

S502

NOT FOR CONSTRUCTION

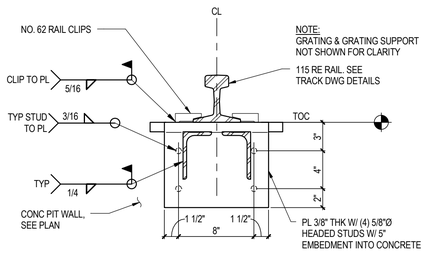

3 RAIL SUPPORT AT CONC WALL & PEDESTALS
1 1/2" = 1'-0"

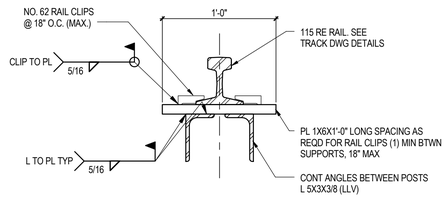

4 SECTION AT RAIL BETWEEN SUPPORTS
1 1/2" = 1'-0"

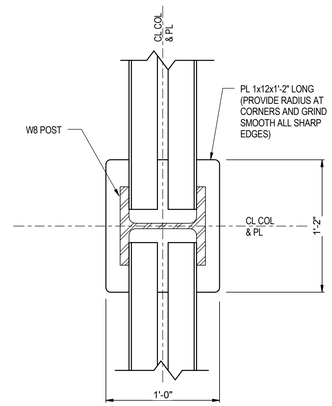

5 PLAN SECTION LOOKING UP AT ANGLES TO PLATE CONN
1 1/2" = 1'-0"

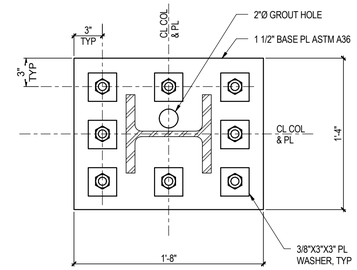

6 RAIL POST BASE PLATE PLAN DETAIL
1 1/2" = 1'-0"

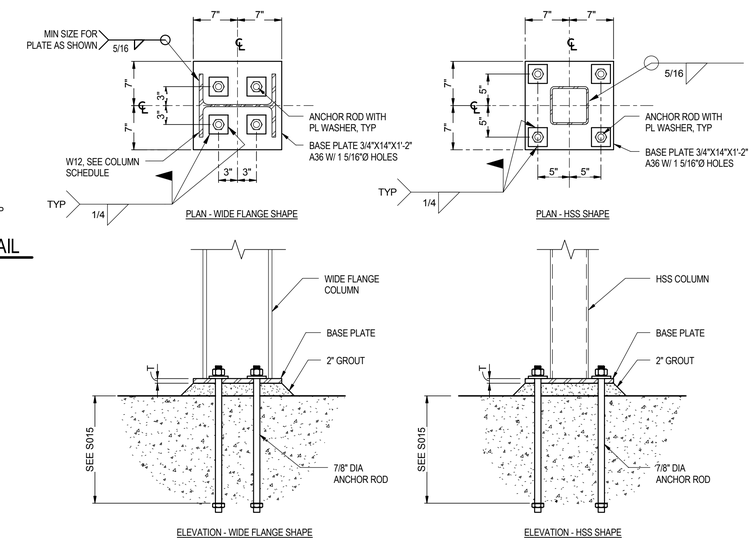

7 COLUMN BASE PLATE DETAILS
1" = 1'-0"

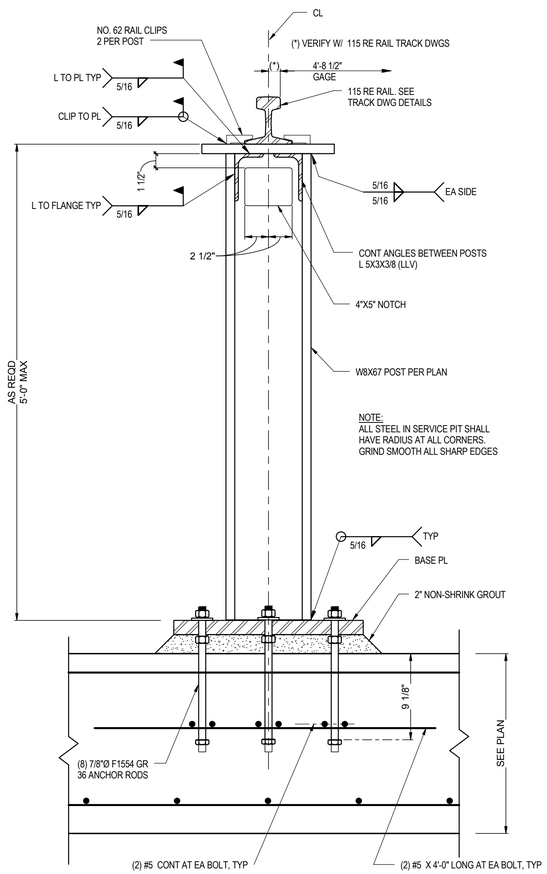

1 RAIL SUPPORT POST DETAIL
1 1/2" = 1'-0"

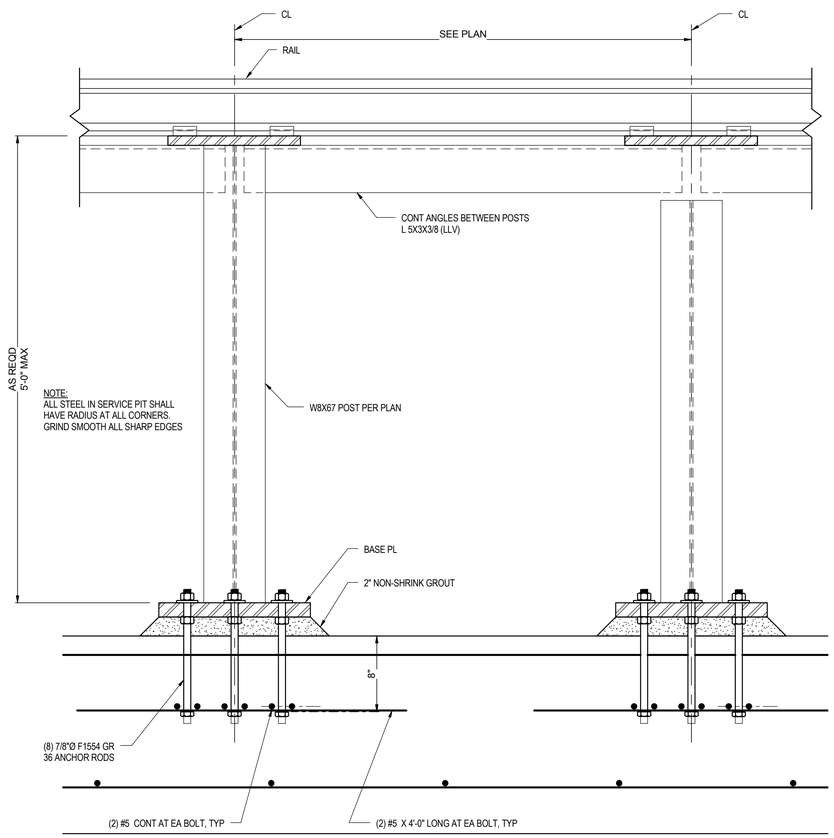

2 RAIL SUPPORT X-BRACE
1 1/2" = 1'-0"

NOT FOR CONSTRUCTION

NO.	DATE	REVISION	BY

ORIGINAL PLANS PREPARED BY

HNTB
11414 W. PARK PLACE
MILWAUKEE, WI 53224
(414) 359-2300

PLANS PREPARED FOR

CITY OF MILWAUKEE
DEPARTMENT OF
PUBLIC WORKS

MILWAUKEE STREETCAR

MAINTENANCE FACILITY

95% SUBMISSION | 29 FEB. 2016

	INITIALS	DATE
DESIGNER		
CHECKER/ REVIEWER		
BACK CHECKER		
CORRECTOR		
VERIFIER		

DESIGNED BY JF | DESIGN CK'D SMG | DRAWN BY TH | PLANS CK'D MH

STEEL DETAILS

S503

NOT FOR CONSTRUCTION

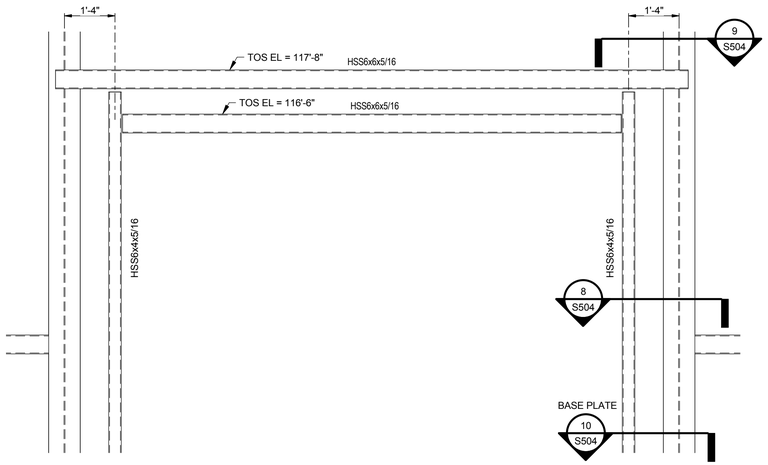

7 TIE-BACK DETAIL
1/2" = 1'-0"

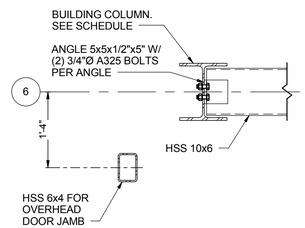

8 PLAN SECTION
3/4" = 1'-0"

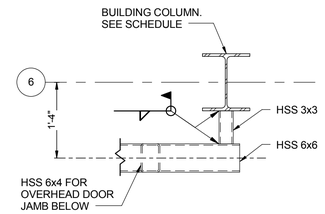

9 PLAN SECTION
3/4" = 1'-0"

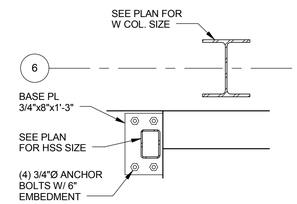

10 BASE PLATE
3/4" = 1'-0"

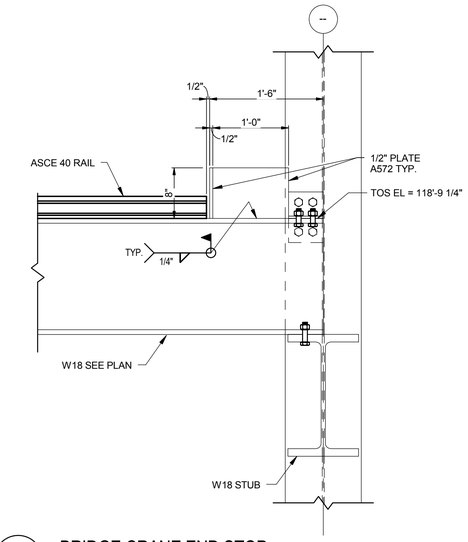

11 BRIDGE CRANE END STOP
1" = 1'-0"

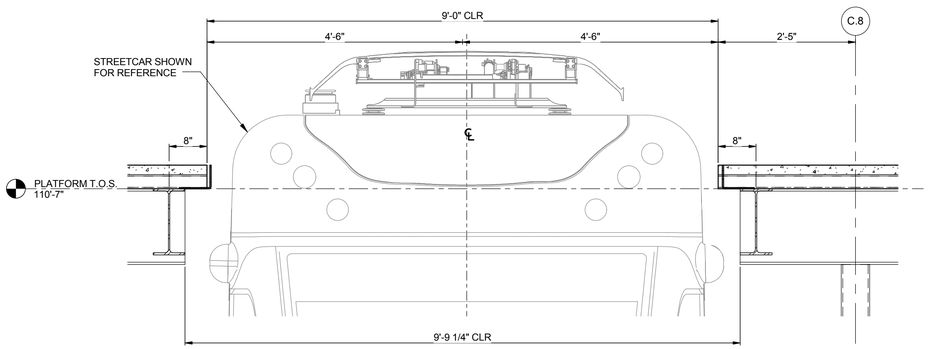

5 SECTION @ TOP OF STREETCAR
3/4" = 1'-0"

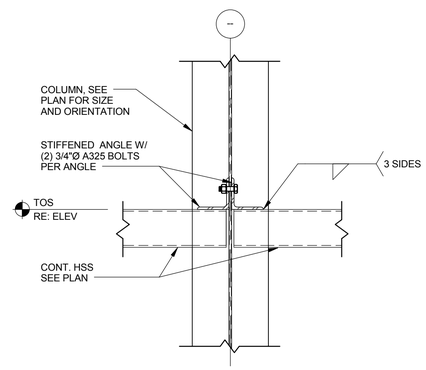

6 HSS CONNECTION
1" = 1'-0"

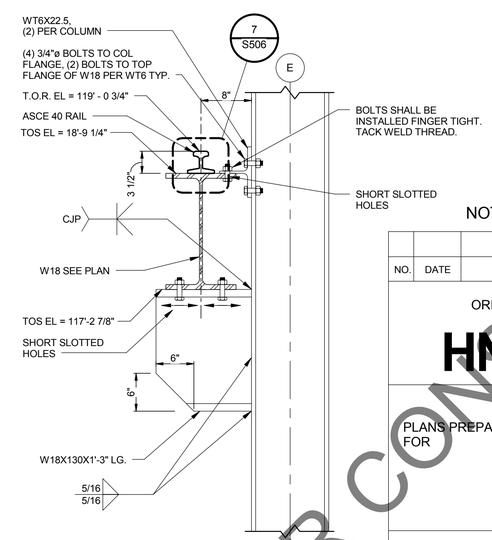

4 DETAIL @ BRIDGE CRANE HAUNCH
1" = 1'-0"

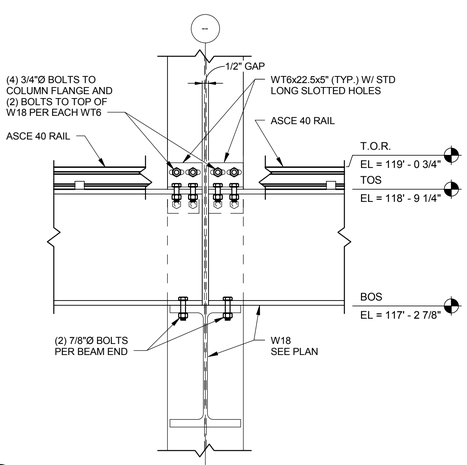

1 TYPICAL BRIDGE CRANE SUPPORT
1" = 1'-0"

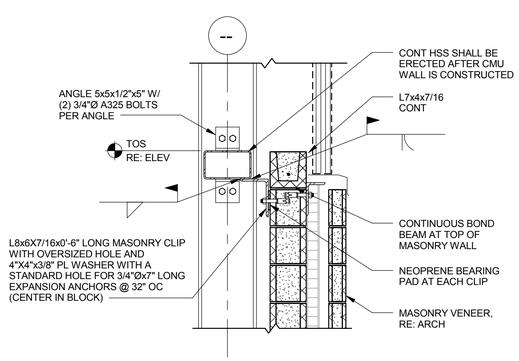

2 FRAMING SECTION
3/4" = 1'-0"

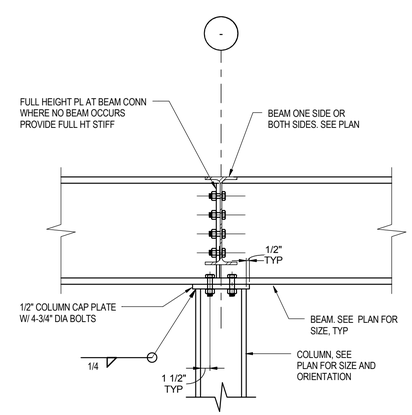

3 TYPICAL CONTINUOUS BEAM AT COLUMN DETAIL
1" = 1'-0"

	INITIALS	DATE
DESIGNER		
CHECKER/ REVIEWER		
BACK CHECKER		
CORRECTOR		
VERIFIER		

HDR

NOT FOR CONSTRUCTION

NO.	DATE	REVISION	BY

ORIGINAL PLANS PREPARED BY

HNTB
11414 W. PARK PLACE
MILWAUKEE, WI 53224
(414) 359-2300

PLANS PREPARED FOR

CITY OF MILWAUKEE
DEPARTMENT OF
PUBLIC WORKS

MILWAUKEE STREETCAR

MAINTENANCE FACILITY

95% SUBMISSION | 29 FEB. 2016

DESIGNED BY JF | DESIGN CK'D SMG | DRAWN BY TH | PLANS CK'D MH

STEEL DETAILS | S504

NOT FOR CONSTRUCTION

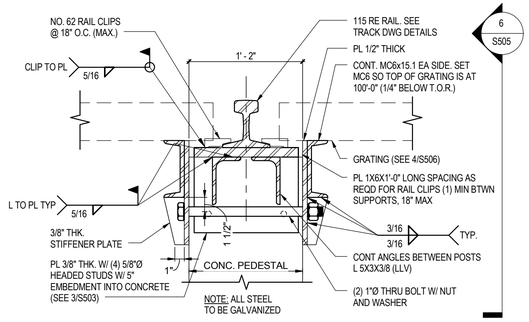

5 GRATING SUPPORT CHANNEL DETAIL

1 1/2" = 1'-0"

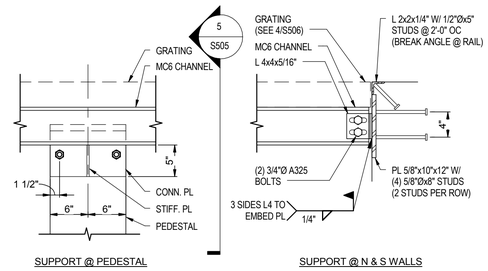

6 GRATING SUPPORT CHANNEL DETAILS

1" = 1'-0"

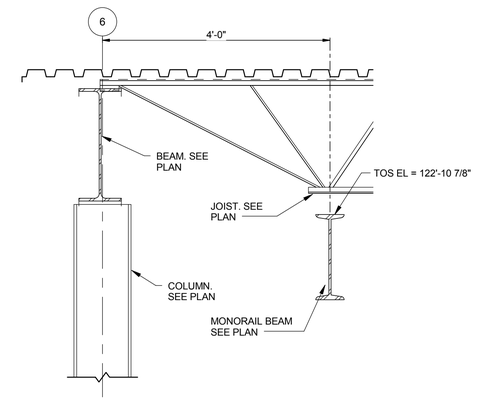

7 MONORAIL BEAM

3/4" = 1'-0"

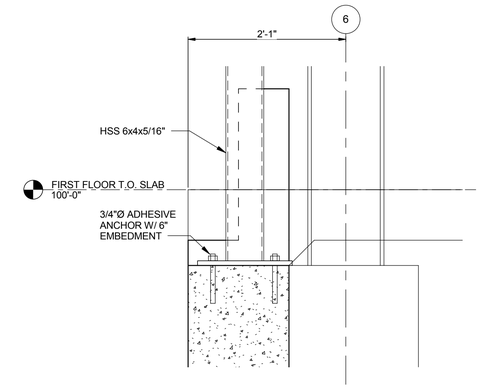

8 SECTION

1" = 1'-0"

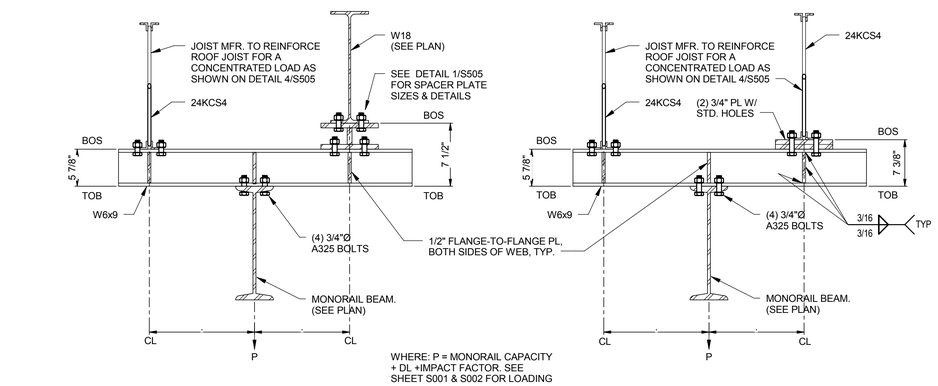

4 TYPICAL MONORAIL BEAM BRIDGE CONNECTIONS

1" = 1'-0"

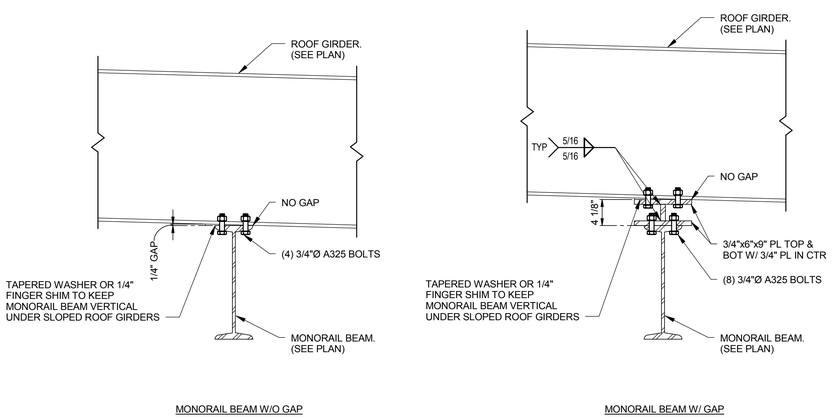

1 TYPICAL MONORAIL BEAM CONNECTION TO ROOF GIRDER

1" = 1'-0"

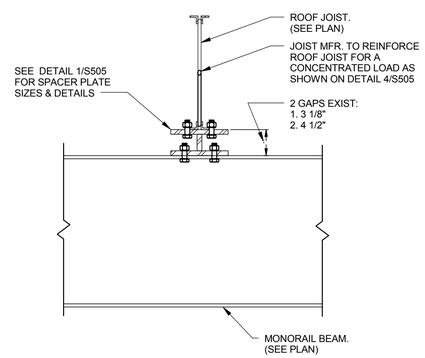

2 TYPICAL MONORAIL BEAM ROOF JOIST CONNECTION

1" = 1'-0"

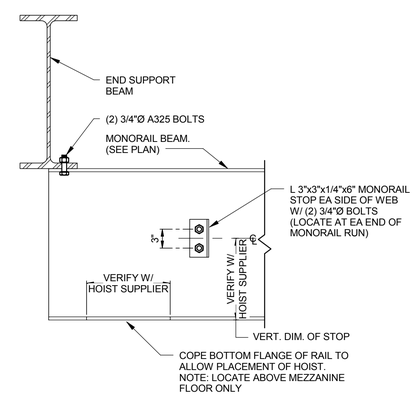

3 TYPICAL MONORAIL END STOP

1" = 1'-0"

	INITIALS	DATE
DESIGNER		
CHECKER/ REVIEWER		
BACK CHECKER		
CORRECTOR		
VERIFIER		

HDR

NOT FOR CONSTRUCTION

NO.	DATE	REVISION	BY

ORIGINAL PLANS PREPARED BY

HNTB

11414 W. PARK PLACE
MILWAUKEE, WI 53224
(414) 359-2300

PLANS PREPARED FOR

CITY OF MILWAUKEE
DEPARTMENT OF
PUBLIC WORKS

MILWAUKEE STREETCAR

MAINTENANCE FACILITY

95% SUBMISSION | 29 FEB. 2016

DESIGNED BY JF | DESIGN CK'D SMG | DRAWN BY TH | PLANS CK'D MH

STEEL DETAILS

S505

NOT FOR CONSTRUCTION

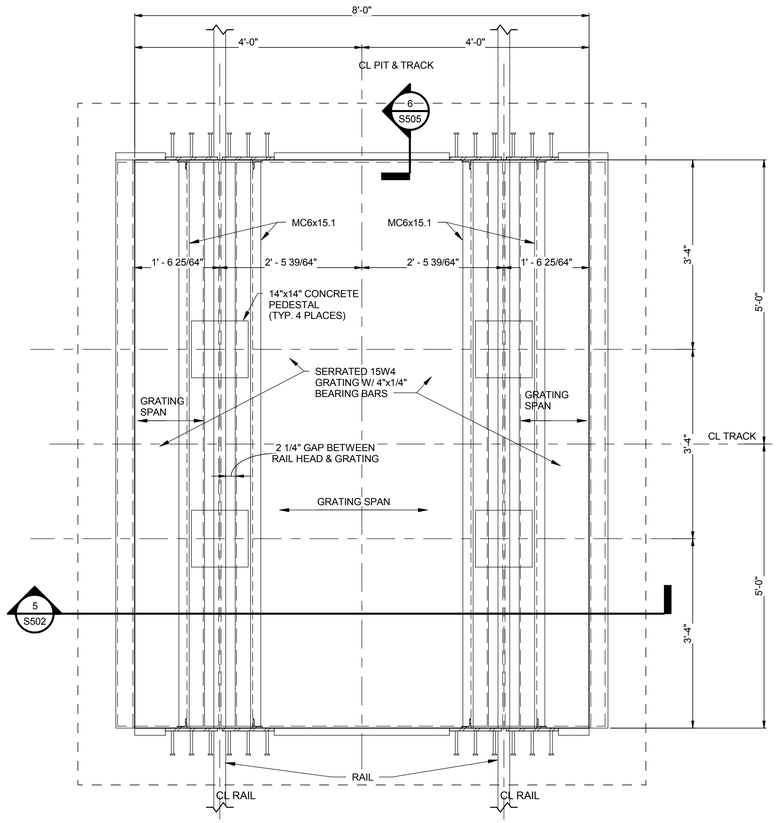

4 PLAN @ TRUCK WASH PIT
3/4" = 1'-0"

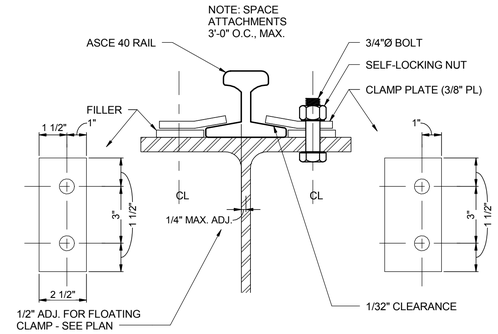

7 BRIDGE CRANE RAIL ATTACHMENT
3" = 1'-0"

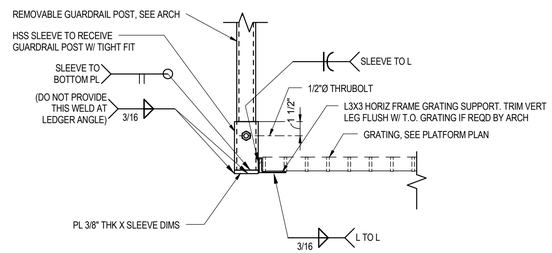

5 SECTION
1 1/2" = 1'-0"

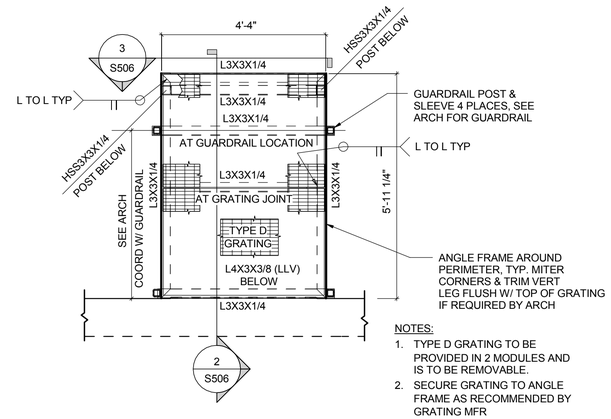

NOTES:
1. TYPE D GRATING TO BE PROVIDED IN 2 MODULES AND IS TO BE REMOVABLE.
2. SECURE GRATING TO ANGLE FRAME AS RECOMMENDED BY GRATING MFR

6 REMOVABLE ACCESS PLATFORM FRAMING DETAIL
1/2" = 1'-0"

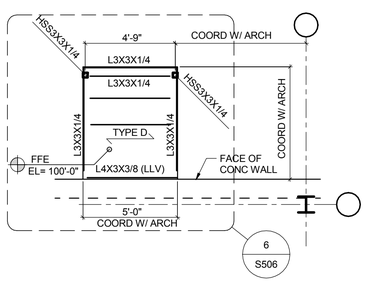

NOTES:
1. ALL STEEL SHALL BE GALVANIZED
2. GENERAL CONTRACTOR TO COORDINATE FINAL LOCATION CENTERED AT TRAIN DOOR
3. TOS= (- 0'-1 1/2")

1 ACCESS PLATFORM
1/4" = 1'-0"

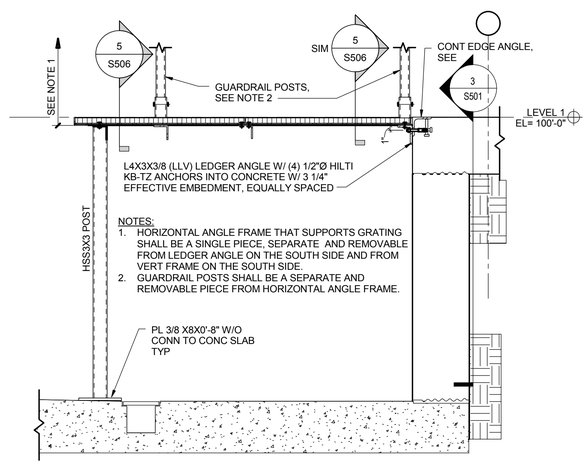

NOTES:
1. HORIZONTAL ANGLE FRAME THAT SUPPORTS GRATING SHALL BE A SINGLE PIECE, SEPARATE AND REMOVABLE FROM LEDGER ANGLE ON THE SOUTH SIDE AND FROM VERT FRAME ON THE SOUTH SIDE.
2. GUARDRAIL POSTS SHALL BE A SEPARATE AND REMOVABLE PIECE FROM HORIZONTAL ANGLE FRAME.

2 TYPICAL SECTION AT REMOVABLE ACCESS PLATFORM
3/4" = 1'-0"

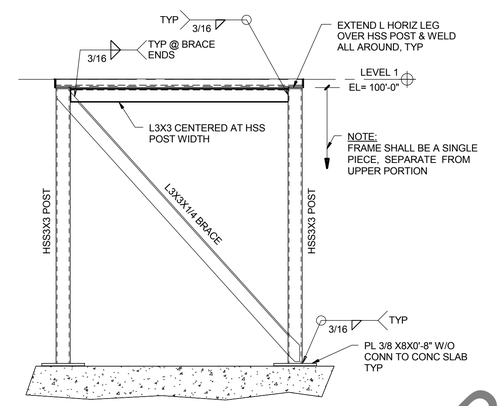

3 REMOVABLE ACCESS PLATFORM BRACE ELEVATION
3/4" = 1'-0"

	INITIALS	DATE
DESIGNER		
CHECKER/ REVIEWER		
BACK CHECKER		
CORRECTOR		
VERIFIER		

HDR

NOT FOR CONSTRUCTION

NO.	DATE	REVISION	BY

ORIGINAL PLANS PREPARED BY

HNTB
11414 W. PARK PLACE
MILWAUKEE, WI 53224
(414) 359-2300

PLANS PREPARED FOR

CITY OF MILWAUKEE
DEPARTMENT OF
PUBLIC WORKS

MILWAUKEE STREETCAR

MAINTENANCE FACILITY

95% SUBMISSION | 29 FEB. 2016

DESIGNED BY JF | DESIGN CK'D SMG | DRAWN BY TH | PLANS CK'D MH

STEEL DETAILS | S506

NOT FOR CONSTRUCTION

HVAC ABBREVIATIONS

°F	DEGREE FAHRENHEIT
AC	AIR CURTAIN
AC	AIR COMPRESSOR
ACC	AIR COOLED CONDENSER
ACCU	AIR COOLED CONDENSING UNIT
ACU	AIR CONDITIONING UNIT
AD	ACCESS DOOR
AFF	ABOVE FINISHED FLOOR
AHU	AIR HANDLING UNIT
AL	ALUMINUM
ALT	ALTERNATE
AMB	AMBIENT
AMS	AIR MEASURING STATION
APD	AIR PRESSURE DROP
APRX	APPROXIMATE
ARCH	ARCHITECT / ARCHITECTURAL
AWT	AVERAGE WATER TEMPERATURE
B	BOILER
B/N	BETWEEN
BC	BOOSTER COIL
BDD	BACKDRAFT DAMPER
BHP	BRAKE HORSEPOWER
BTU	BRITISH THERMAL UNIT
BTUH	BTU PER HOUR
C	CONVECTOR
CAP	CEILING ACCESS PANEL
CAP	CAPACITY
CAV	CONSTANT AIR VOLUME
CB	CHILLED BEAM
CC	COILING COIL
CD	CEILING DIFFUSER
CEF	CEILING EXHAUST FAN
CFH	CUBIC FEET PER HOUR
CFM	CUBIC FEET PER MINUTE
CFR	CONSTANT FLOW REGULATOR
CKTS	CIRCUITS
CMU	CONCRETE MASONRY UNIT
C/MAG	COMBINATION MAGNETIC
COND	CONDENSATE
CONN	CONNECTION
CONT	CONTINUATION
CONTR	CONTRACTOR
COP	COEFFICIENT OF PERFORMANCE
CPU	CENTRAL PROCESSING UNIT
CR	CONDENSER WATER RETURN
CS	CONDENSER WATER SUPPLY
CU FT	CUBIC FEET
CU IN	CUBIC INCHES
CUH	CABINET UNIT HEATER
CWR	CHILLED WATER RETURN
CWS	CHILLED WATER SUPPLY
D	DEHUMIDIFIER
DAP	DUCT ACCESS PANEL
DB	DRY BULB
dB	DECIBEL
DDC	DIRECT DIGITAL CONTROLS
DEC	DIRECT EVAPORATIVE COOLING
DG	DOOR GRILLE
DIA	DIAMETER
DISCH	DISCHARGE
DIV	DIVISION
DIV 21	FIRE PROTECTION WORK
DIV 22	PLUMBING WORK
DIV 23	HVAC WORK
DIV 26	ELECTRICAL WORK
DN	DOWN
DP	DIFFERENTIAL PRESSURE
DR	DRAIN
DS	DUCT SILENCER
EA	EXHAUST AIR
EAT	ENTERING AIR TEMPERATURE
EBB	ELECTRIC BASE BOARD
EC	ELECTRICAL CONTRACTOR
ECH	EACH
EDB	ELECTRIC DUCT HEATER
EER	ENERGY EFFICIENCY RATIO
EF	EXHAUST FAN
EFF	EFFICIENCY
EG	EXHAUST GRILLE
EG	ETHYLENE GLYCOL
EL	ELEVATION
ELEC	ELECTRIC/ELECTRICAL
ENTH	ENTHALPY
EQUIP	EQUIPMENT
ESP	EXTERNAL STATIC PRESSURE
ET	EXPANSION TANK
EUH	ELECTRIC UNIT HEATER
EVAP	EVAPORATIVE
EWH	ELECTRIC WALL HEATER
EWT	ENTERING WATER TEMPERATURE
EXIST	EXISTING
F	FILTER OR FURNACE
FA	FACE AREA
FCU	FAN COIL UNIT
FD	FIRE DAMPER
FLA	FULL LOAD AMPS
FLEX	FLEXIBLE
FOR	FUEL OIL RETURN
FOS	FUEL OIL SUPPLY
FOV	FUEL OIL VENT
FPM	FEET PER MINUTE
FS	FLOW SWITCH
FT	FEET
FTR	FINNED TUBE RADIATION
FV	FACE VELOCITY
GA	GAUGE
GAL	GALLON
GBD	GRAVITY BACKDRAFT DAMPER
GC	GENERAL CONTRACTOR
GPM	GALLONS PER MINUTE
H	HUMIDIFIER
HC	HEATING COIL
HD	HEAD
HF	HEAT FAN
HG	HOT GAS
HGB	HOT GAS BYPASS
H-O-A	HAND-OFF-AUTO
HP	HORSEPOWER
HPC	HIGH PRESSURE CONDENSATE
HPG	HIGH PRESSURE GAS
HPS	HIGH PRESSURE STEAM
HR	HOUR
HVAC	HEATING, VENTILATING, AIR CONDITIONING
HW	HOT WATER
HWC	HOT WATER COIL
HWR	HEATING HOT WATER RETURN
HWS	HEATING HOT WATER SUPPLY
HX	HEAT EXCHANGER
HZ	HERTZ
IAW	IN ACCORDANCE WITH
ID	INSIDE DIAMETER
IDEC	INDIRECT EVAPORATIVE COOLING
IN	INCHES
IN WC	INCHES WATER COLUMN
IRH	INFRARED HEATER
KW	KILOWATT
L	LOUVER
LAT	LEAVING AIR TEMPERATURE
LB	POUND
LD	LINEAR SLOT DIFFUSER
LF	LINEAR FEET
LPC	LOW PRESSURE CONDENSATE
LPG	PROPANE
LPS	LOW PRESSURE STEAM
LRA	LOCKED ROTOR AMPS
LWT	LEAVING WATER TEMPERATURE
MAG	MAGNETIC
MAN	MANUAL
MAU	MAKE-UP AIR UNIT
MAX	MAXIMUM
MBH	THOUSAND BTU PER HOUR
MC	MECHANICAL CONTRACTOR
MCA	MINIMUM CIRCUIT AMPACITY
MERV	MINIMUM EFFICIENCY REPORTING VALUE
MCC	MOTOR CONTROL CENTER
MFR	MANUFACTURER
MFS	MAXIMUM FUSE SIZE
MIN	MINIMUM
MOD	MOTOR OPERATED DAMPER
MOCP	MAXIMUM OVERCURRENT PROTECTION
MPC	MEDIUM PRESSURE CONDENSATE
MPS	MEDIUM PRESSURE STEAM
MU	MAKE UP WATER
MVD	MANUAL VOLUME DAMPER
NC	NORMALLY CLOSED
NC	NOISE CRITERIA
NFPA	NATIONAL FIRE PROTECTION ASSOC.
NG	NATURAL GAS
NO	NORMALLY OPEN
NO	NUMBER
NPSH	NET POSITIVE SUCTION HEAD
OA	OUTSIDE AIR
OD	OUTSIDE DIAMETER
OHP	OVERHEAT PROTECTION
OLP	OVERLOAD PROTECTION
OPR WT	OPERATING WEIGHT
OPNG	OPENING
OZ	OZONE
P	PUMP
PC	PLUMBING CONTRACTOR
PC	PUMPED CONDENSATE
PD	PRESSURE DROP
PH	PHASE
POC	POINT OF CONNECTION
PRESS	PRESSURE
PRV	POWER ROOF VENTILATOR
PRV	PRESSURE REDUCING VALVE
PRLV	PRESSURE RELIEF VALVE
PSI	POUNDS PER SQUARE INCH
PSIG	PSI GAUGE
PTAC	PACKAGED TERMINAL AIR CONDITION UNIT
PVC	POLYVINYLCHLORIDE
QTY	QUANTITY
RA	RETURN AIR
RC	REHEAT COIL
RD	REFRIGERANT DISCHARGE PIPING
REF	RETURN EXHAUST FAN
REQD	REQUIRED
RF	RELIEF FAN
RG	RETURN GRILLE
RH	RELATIVE HUMIDITY
RL	REFRIGERANT LIQUID LINE
RLA	RUNNING LOAD AMPS
RPM	REVOLUTIONS PER MINUTE
RS	REFRIGERANT SUCTION PIPING
RTU	ROOFTOP UNIT
SA	SUPPLY AIR
SAT	SATURATED
SB	SECURITY BARRIER
SCFM	CFM, STANDARD CONDTIONS
SD	SMOKE DAMPER
SEC GR	SECURITY GRILLE
SEER	SEASONAL ENERGY EFFICIENCY RATIO
SF	SUPPLY FAN
SFD	COMBINATION SMOKE/FIRE DAMPER
SG	SUPPLY GRILLE
SP	STATIC PRESSURE
SPEC	SPECIFICATION
SQ FT	SQUARE FEET
SS	STAINLESS STEEL
SST	SATURATED SUCTION TEMPERATURE
START	STARTER
TCP	TEMPERATURE CONTROL PANEL
TEMP	TEMPERATURE
TG	TRANSFER GRILLE
TS	TIP SPEED
TSP	TOTAL STATIC PRESSURE
TURB	TURBULATORS
TYP	TYPICAL
UCD	UNDERCUT DOOR
UH	UNIT HEATER
UM	UNIT MANUFACTURER
UON	UNLESS OTHERWISE NOTED
UV	UNIT VENTILATOR
UV	ULTRA VIOLET
VAV	VARIABLE AIR VOLUME
VEL	VELOCITY
VFD	VARIABLE FREQUENCY DRIVE
VIF	VERIFY IN FIELD
W	WATTS
W/	WITH
W/N	WITHIN
WAC	WINDOW AIR CONDITIONER
WAP	WALL ACCESS PANEL
WB	WET BULB
WC	WATER COLUMN
WG	WATER GAUGE
WPD	WATER PRESSURE DROP

GENERAL NOTES

1. NOT ALL SYMBOLS AND ABBREVIATIONS ARE USED ON THE DRAWINGS.
2. HVAC SYSTEM SHALL CONFORM TO SPECIFICATIONS AND OTHER CONTRACT REQUIREMENTS.
3. PROVIDE ACCESS PANELS IN DUCTWORK, WALLS AND CEILINGS FOR ACCESS TO ALL CONCEALED DAMPERS, SMOKE DETECTORS, CONTROLS, VALVES, AIR VENTS, AIR TERMINALS, EXPANSION COMPENSATING DEVICES, COILS, FILTERS, FANS AND EQUIPMENT.
4. ALL DUCT SIZES ARE NET FREE AREA INSIDE DIMENSIONS.
5. THE CONTRACTOR IS RESPONSIBLE FOR CONFIRMING AND CORRELATING ALL QUANTITIES, SIZES, CAPACITIES, ACCESSORIES, MATERIALS, SPACE REQUIREMENTS, ACCESSIBILITY, CODE CLEARANCES AND PERFORMANCE.
6. THE CONTRACTOR SHALL COORDINATE ALL WORK WITH THAT OF OTHER TRADES.
7. PSJ ENGINEERING, INC. ACCEPTS NO RESPONSIBILITY FOR DESIGN/BUILD CHANGES, EQUIPMENT SUBSTITUTIONS, AND VALUE ENGINEERING CHANGES PERFORMED BY THE CONTRACTOR.
8. THE DRAWINGS ARE SCHEMATIC IN NATURE. ALL REQUIRED DUCTWORK AND PIPING MODIFICATIONS SHALL BE INCLUDED IN THE BASE BID TO ACCOMMODATE ACTUAL FIELD CONDITIONS. FINAL LOCATIONS OF ALL WORK SHALL BE COORDINATED IN THE FIELD AND INSTALLED WHERE DIRECTED BY THE OWNERS REPRESENTATIVE.
9. VERIFY CONDITIONS AND DIMENSIONS ON SITE. DO NOT SCALE DRAWINGS. FIELD VERIFY AND COORDINATE ALL DUCT AND PIPING DIMENSIONS BEFORE FABRICATION.
10. CONTRACTOR IS RESPONSIBLE FOR THE MEANS AND METHODS OF FABRICATION, CONSTRUCTION, AND INSTALLATION OF THE HVAC SYSTEM AS DESIGNED AND SPECIFIED.
11. THE CONTRACTOR SHALL DETERMINE THE EXACT LOCATION OF ALL EXISTING UTILITIES BEFORE COMMENCING WORK. THE CONTRACTOR SHALL PAY FOR AND REPAIR ALL DAMAGES CAUSED BY FAILURE TO EXACTLY LOCATE AND PRESERVE ANY AND ALL UNDERGROUND UTILITIES UNLESS OTHERWISE INDICATED.
12. INSTALL ALL DUCTWORK, PIPING, SUSPENDED EQUIPMENT, ETC. AS HIGH AS POSSIBLE TO PROVIDE MAXIMUM CLEARANCE.
13. COORDINATE ALL EQUIPMENT CONNECTIONS WITH MANUFACTURERS' RECOMMENDATIONS. COORDINATE AND PROVIDE ALL DUCT AND PIPING TRANSITIONS REQUIRED FOR FINAL EQUIPMENT CONNECTIONS TO FURNISHED EQUIPMENT.
14. THE LOCATIONS OF ALL ITEMS SHOWN ON THE DRAWINGS, OR CALLED FOR IN THE SPECIFICATIONS, THAT ARE NOT FIXED BY DIMENSIONS ARE APPROXIMATE ONLY. THE EXACT LOCATIONS NECESSARY TO SECURE THE BEST CONDITIONS AND RESULTS MUST BE DETERMINED BY THE PROJECT SITE CONDITIONS AND SHALL HAVE THE APPROVAL OF THE ENGINEER BEFORE BEING INSTALLED BY THE MECHANICAL CONTRACTOR. DO NOT SCALE DRAWINGS.
15. ALL EQUIPMENT, PIPING, DUCTWORK, ETC., SHALL BE SUPPORTED AS DETAILED, SPECIFIED AND REQUIRED TO PROVIDE A VIBRATION FREE INSTALLATION.

PIPING

1. PIPING WORK SHALL BE COORDINATED WITH ALL TRADES INVOLVED. OFFSETS IN PIPING AROUND OBSTRUCTIONS SHALL BE PROVIDED AT NO ADDITIONAL COST TO THE OWNER. MECHANICAL CONTRACTOR SHALL FIELD VERIFY ALL EXISTING STRUCTURAL CONDITIONS PRIOR TO FABRICATION AND INSTALLATION OF PIPING SYSTEMS.

HVAC/SHEET METAL

1. CERTAIN ITEMS, SUCH AS RISES AND DROPS IN DUCTWORK, ACCESS DOORS, VOLUME DAMPERS, ETC. ARE INDICATED ON THE CONTRACT DOCUMENT DRAWINGS TO HIGHLIGHT SPECIFIC LOCATION REQUIREMENT, AND SHALL NOT BE INTERPRETED AS THE EXTENT OF THE REQUIREMENTS FOR THESE ITEMS.
2. COORDINATE DIFFUSER, REGISTER, AND GRILLE LOCATIONS WITH ARCHITECTURAL REFLECTED CEILING PLANS, LIGHTING, AND OTHER CEILING ITEMS AND MAKE MINOR DUCT MODIFICATIONS TO SUIT. LIGHTING FIXTURE LOCATIONS TAKE PRIORITY OVER DIFFUSER LOCATIONS.
3. LOCATE ALL MECHANICAL EQUIPMENT FOR UNOBSTRUCTED ACCESS TO PANELS, CONTROLS AND VALVING.
4. DUCTWORK SHALL BE COORDINATED WITH ALL TRADES INVOLVED. OFFSETS IN DUCTS, INCLUDING DIVIDED DUCTS AND TRANSITIONS AROUND OBSTRUCTIONS, SHALL BE PROVIDED AT NO ADDITIONAL COST TO THE OWNER. MECHANICAL CONTRACTOR SHALL FIELD VERIFY ALL EXISTING STRUCTURAL CONDITIONS PRIOR TO FABRICATION AND INSTALLATION OF DUCT SYSTEMS.

EQUIPMENT AND SUPPORTS

1. ALL MISCELLANEOUS STEEL REQUIRED TO SUPPORT HVAC EQUIPMENT, PIPING AND DUCTWORK TO ENSURE PROPER INSTALLATION AS DESCRIBED IN THE CONTRACT DOCUMENTS SHALL BE FURNISHED AND INSTALLED BY THE MECHANICAL CONTRACTOR.
2. EQUIPMENT THAT IS SUPPLIED BY THE MECHANICAL CONTRACTOR THAT EXCEEDS THE SCHEDULED WEIGHT OF THE SPECIFIC EQUIPMENT IN THE CONTRACT DOCUMENTS SHALL BE SUBMITTED TO THE STRUCTURAL ENGINEER FOR REVIEW AND COMMENT.
3. MODIFICATIONS AS REQUIRED BY THE STRUCTURAL ENGINEER TO SUPPORT THE ADDITIONAL WEIGHT OF THE MECHANICAL CONTRACTOR'S HVAC EQUIPMENT SHALL BE THE RESPONSIBILITY OF THE MECHANICAL CONTRACTOR.
4. THE MECHANICAL CONTRACTOR SHALL BE RESPONSIBLE FOR THE ACCESSIBILITY AND MAINTENANCE REQUIREMENTS OF HVAC EQUIPMENT THAT VARIES FROM THE FOOT PRINT OR EXCEEDS THE DIMENSIONS SHOWN ON THE CONTRACT DOCUMENTS

SHEET INDEX - HVAC

M000	COVER SHEET - HVAC
M-001	Symbols & Abbreviations - Continued
M-101	SHOP LEVEL FLOOR PLAN SECTOR A - HVAC
M-102	SHOP LEVEL FLOOR PLAN SECTOR B - HVAC
M-103	PLATFORM LEVEL FLOOR PLAN SECTOR A - HVAC
M-104	PLATFORM LEVEL FLOOR PLAN SECTOR B - HVAC
M-300	HVAC Details
M-301	HVAC Details Continued
M-400	HVAC Schedules

THUNDERBIRD
ENGINEERING, INC.
MADISON, WI (608) 223-9040
MILWAUKEE, WI (414) 352-2211
www.THUNDERBIRDENGINEERING.com
14-028

NOT FOR CONSTRUCTION

NO.	DATE	REVISION	BY

ORIGINAL PLANS PREPARED BY

HNTB
11414 W. PARK PLACE
MILWAUKEE, WI 53224
(414) 359-2300

PLANS PREPARED FOR

CITY OF MILWAUKEE
DEPARTMENT OF
PUBLIC WORKS

MILWAUKEE STREETCAR

MAINTENANCE FACILITY

95% SUBMITTAL | 29 FEBRUARY 2016

DESIGNED BY	TBE	DESIGN CK'D	TBE	DRAWN BY	TBE	PLANS CK'D	TBE

COVER SHEET - HVAC

M000

NOT FOR CONSTRUCTION

PIPING SYMBOL SCHEDULE

	GATE VALVE - NON RISING STEM
	GLOBE VALVE, ANGLE
	GLOBE VALVE
	BUTTERFLY VALVE
	BALL VALVE
	BALANCE VALVE, CALIBRATED
	CHECK VALVE
	BALL TYPE DRAIN VALVE WITH 3/4" HOSE CONNECTION, CAP AND CHAIN.
	GAS COCK
	CONTROL VALVE, 2-WAY - MODULATING
	CONTROL VALVE, 3-WAY - MODULATING
	PRESSURE REDUCING VALVE
	RELIEF OR SAFETY VALVE
	RISING STEM GATE VALVE
	AIR VENT, MANUAL
	STRAINER
	PRESSURE/TEMPERATURE PLUG
	EMERGENCY SHUT-OFF VALVE
	FLEXIBLE CONNECTOR
	PIPE GUIDE
	PIPE ANCHOR
	TEE, TOP TAKEOFF
	TEE, BOTTOM TAKEOFF
	ELBOW, UP
	ELBOW, DOWN
R	PIPE RISE(R) OR DROP(D) IN DIRECTION OF FLOW
	PIPE CAP
	PIPE UNION
	PRESSURE GAUGE WITH 1/4" PIPING AND GAUGE COCKS
	THERMOMETER
[P]DP	PRESSURE, DIFF PRESSURE SENSOR
	POINT OF CONNECTION - NEW / DEMO
	CONSTANT FLOW REGULATOR
D	DRAIN PIPING
HWS	HEATING WATER SUPPLY PIPING
HWR	HEATING WATER RETURN PIPING
CWS	CHILLED WATER SUPPLY PIPING
CWR	CHILLED WATER RETURN PIPING
CS	CONDENSER WATER SUPPLY PIPING
CR	CONDENSER WATER RETURN PIPING
HPS	HIGH PRESSURE STEAM PIPING
HPC	HIGH PRESSURE STEAM COND PIPING
LPS	LOW PRESSURE STEAM PIPING
LPC	LOW PRESSURE STEAM COND PIPING
G	GAS PIPING
RD	REFRIGERANT DISCHARGE PIPING
RS	REFRIGERANT SUCTION PIPING
RL	REFRIGERANT LIQUID PIPING
HG	REFRIGERANT HOT GAS PIPING
FOS	FUEL OIL SUPPLY PIPING
FOR	FUEL OIL RETURN PIPING
FOV	FUEL OIL VENT PIPING
PC	PUMPED CONDENSATE PIPING
MU	MAKE-UP WATER PIPING
X—X—X—X—X	PIPING AND PIPE EQUIP TO BE REMOVED
F	VENTURI FLOW METER
	FLOW DIRECTION
	CAP CONNECTION
	STEAM TRAP

DUCTWORK SYMBOL SCHEDULE

	MANUAL VOLUME DAMPER (MVD)
DAP	DUCT ACCESS PANEL (DAP)
	ELBOW WITH HIGH EFFICIENCY TURNING VANES
	FLEXIBLE DUCT CONNECTION
UP DOWN	ROUND DUCT
UP DOWN	SUPPLY/OUTSIDE AIR DUCT
UP DOWN	RETURN DUCT
UP DOWN	EXHAUST/ RELIEF AIR DUCT
R	RISE (R) OR DROP (D) IN DIRECTION OF FLOW
MOD	MOTORIZED CONTROL DAMPER WITH ACCESS DOOR
GBD	GRAVITY BACKDRAFT DAMPER WITH ACCESS DOOR
	CONICAL BELLMOUTH ROUND TAKEOFF WITH MANUAL VOLUME DAMPER.
	45 ENTRY, RECTANGULAR-TO-ROUND TAKEOFF WITH MANUAL VOLUME DAMPER.
	RECTANGULAR-TO-ROUND TRANSITION
	DUCT CAP
AHU 1 / XXX XXX — TYPE / NUMBER	EQUIPMENT TAG
EXAMPLE: CD-1 12" / 300 — TAG SIZE / CFM	GRILLE, REGISTER, OR DIFFUSER TAG
T H	CONTROL: THERMOSTAT, HUMIDISTAT
T H O	SENSOR: TEMPERATURE, HUMIDITY, OCC
SP	DUCT STATIC PRESSURE SENSOR
SD	SMOKE DETECTOR
MC	MOTOR CONTROL/STARTER
	DUCTWORK OR DUCT EQUIP TO BE REMOVED
	NEW DUCTWORK OR EQUIPMENT
	EXISTING DUCTWORK OR EQUIPMENT
FD	VERT MOUNTED FIRE DAMPER (1 1/2 HR) UON
FD	HORIZ MOUNTED FIRE DAMPER (1 1/2 HR) UON
SD	SMOKE DAMPER
SFD	COMBINATION FIRE/SMOKE DAMPER
	DUCT MOUNTED TEMPERATURE SENSOR
	OVAL SIZES
SB	DUCT MOUNTED SECURITY BARRIER
	AIRFLOW DIRECTION
UCD	1" UNDER CUT DOOR (BY DIV 8)
	FLEXIBLE DUCT
	DUCTWORK WITH ACOUSTICAL LINING.

HVAC STAMP

THUNDERBIRD ENGINEERING, INC.
MADISON, WI (608) 223-9040
MILWAUKEE, WI (414) 352-2211
www.THUNDERBIRDENGINEERING.com
14-028

NOT FOR CONSTRUCTION

NO.	DATE	REVISION	BY

ORIGINAL PLANS PREPARED BY

HNTB
11414 W. PARK PLACE
MILWAUKEE, WI 53224
(414) 359-2300

PLANS PREPARED FOR

CITY OF MILWAUKEE
DEPARTMENT OF
PUBLIC WORKS

MILWAUKEE STREETCAR

MAINTENANCE FACILITY

95% SUBMITTAL | 29 FEBRUARY 2016

DESIGNED BY	DESIGN CK'D	DRAWN BY	PLANS CK'D
TBE	TBE	TBE	TBE

Symbols & Abbreviations - Continued

M-001

NOT FOR CONSTRUCTION

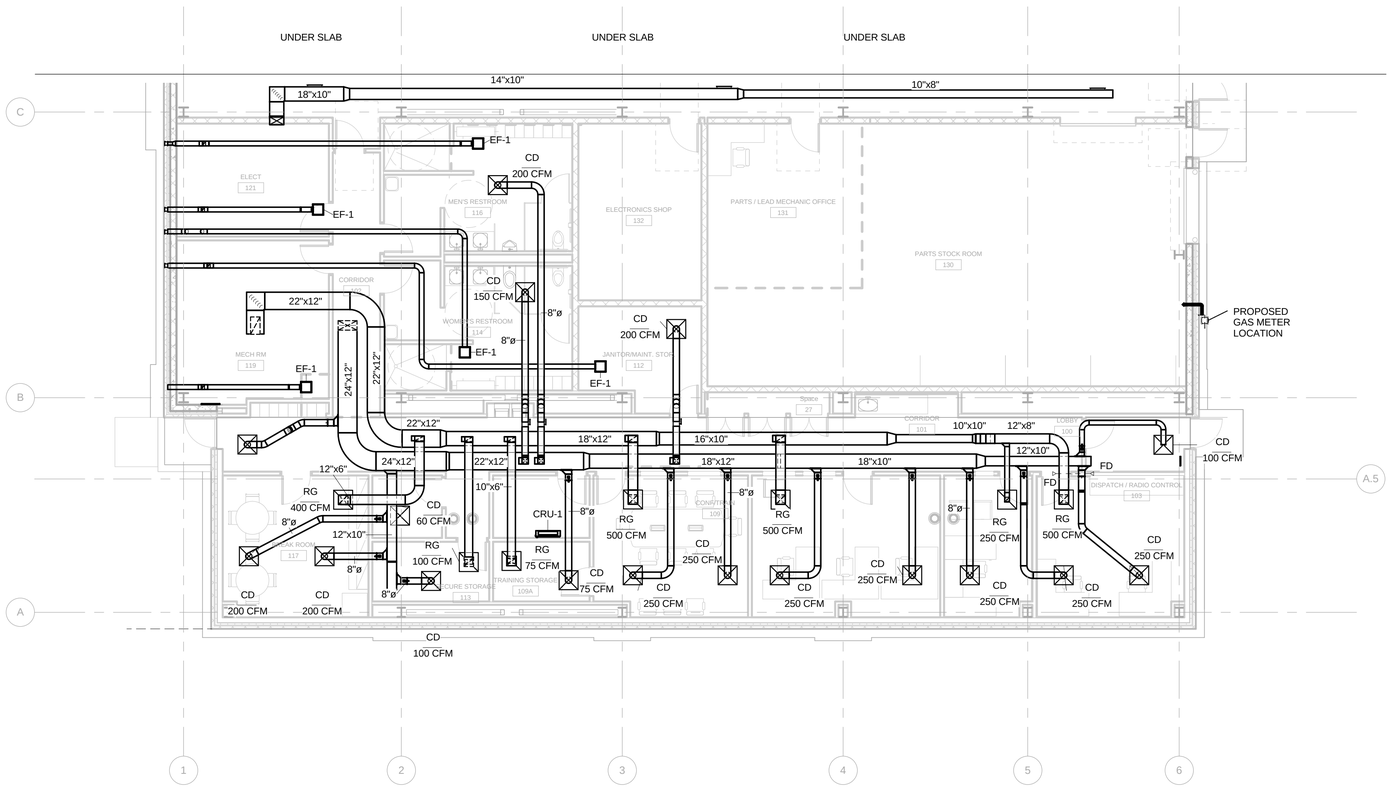

1 Shop Level - Sector A
1/8" = 1'-0"

THUNDERBIRD
ENGINEERING, INC.
MADISON, WI (608) 223-9040
MILWAUKEE, WI (414) 352-2211
www.THUNDERBIRDENGINEERING.com
14-028

NOT FOR CONSTRUCTION

NO.	DATE	REVISION	BY

ORIGINAL PLANS PREPARED BY

HNTB
11414 W. PARK PLACE
MILWAUKEE, WI 53224
(414) 359-2300

PLANS PREPARED FOR

CITY OF MILWAUKEE
DEPARTMENT OF
PUBLIC WORKS

MILWAUKEE STREETCAR

MAINTENANCE FACILITY

95% SUBMITTAL | 29 FEBRUARY 2016

DESIGNED BY	TBE	DESIGN CK'D	TBE	DRAWN BY	TBE	PLANS CK'D	TBE

SHOP LEVEL FLOOR PLAN SECTOR A - HVAC

M-101

NOT FOR CONSTRUCTION

8

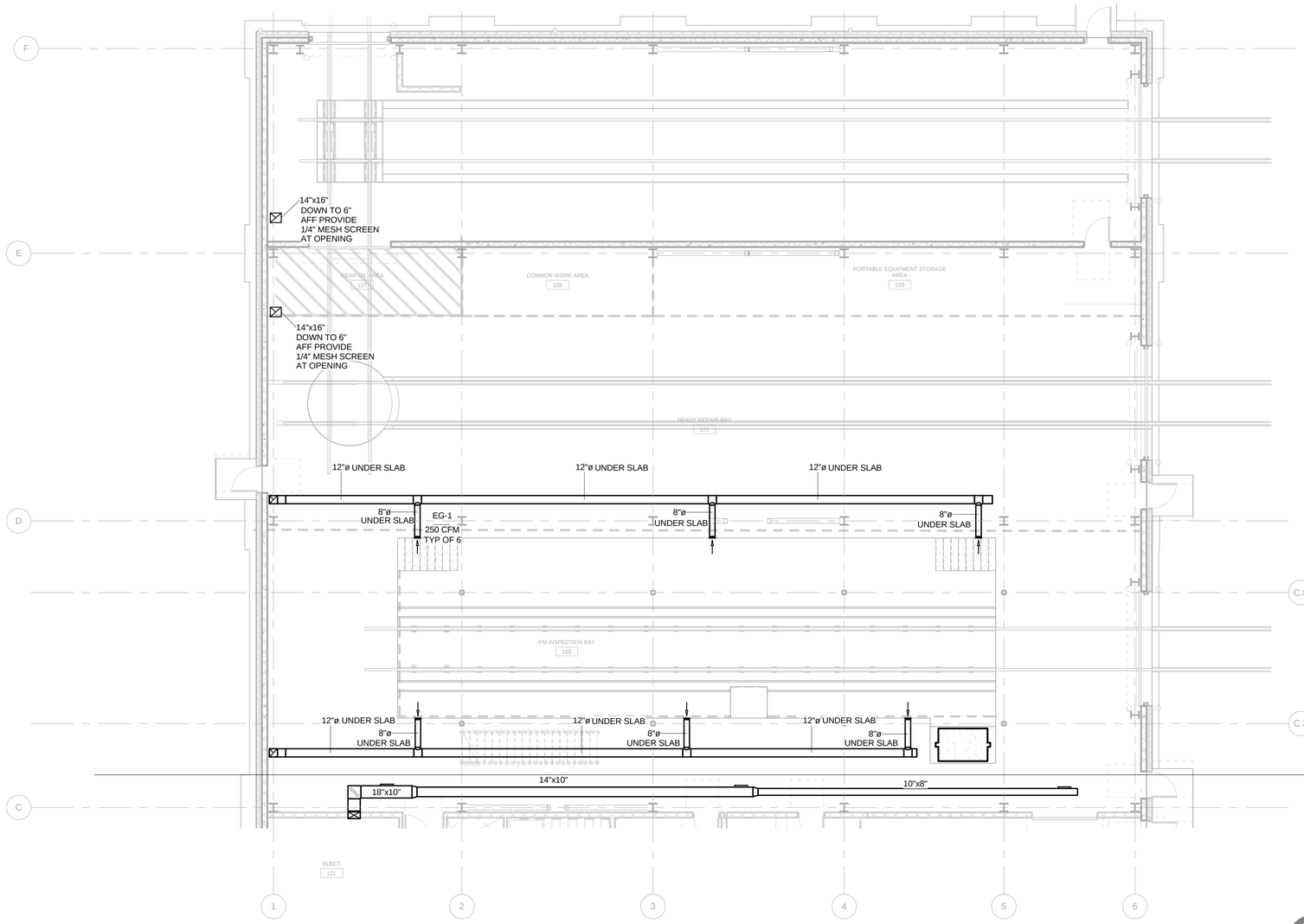

1 Shop Level - Sector B
1/8" = 1'-0"

THUNDERBIRD
ENGINEERING, INC.
MADISON, WI (608) 223-9040
MILWAUKEE, WI (414) 352-2211
www.THUNDERBIRDENGINEERING.com
14-028

NOT FOR CONSTRUCTION

NO.	DATE	REVISION	BY

ORIGINAL PLANS PREPARED BY

HNTB
11414 W. PARK PLACE
MILWAUKEE, WI 53224
(414) 359-2300

PLANS PREPARED FOR

CITY OF MILWAUKEE
DEPARTMENT OF
PUBLIC WORKS

MILWAUKEE STREETCAR

MAINTENANCE FACILITY

95% SUBMITTAL	29 FEBRUARY 2016

DESIGNED BY	TBE	DESIGN CK'D	TBE	DRAWN BY	TBE	PLANS CK'D	TBE

SHOP LEVEL FLOOR PLAN SECTOR B - HVAC

M-102

NOT FOR CONSTRUCTION

8

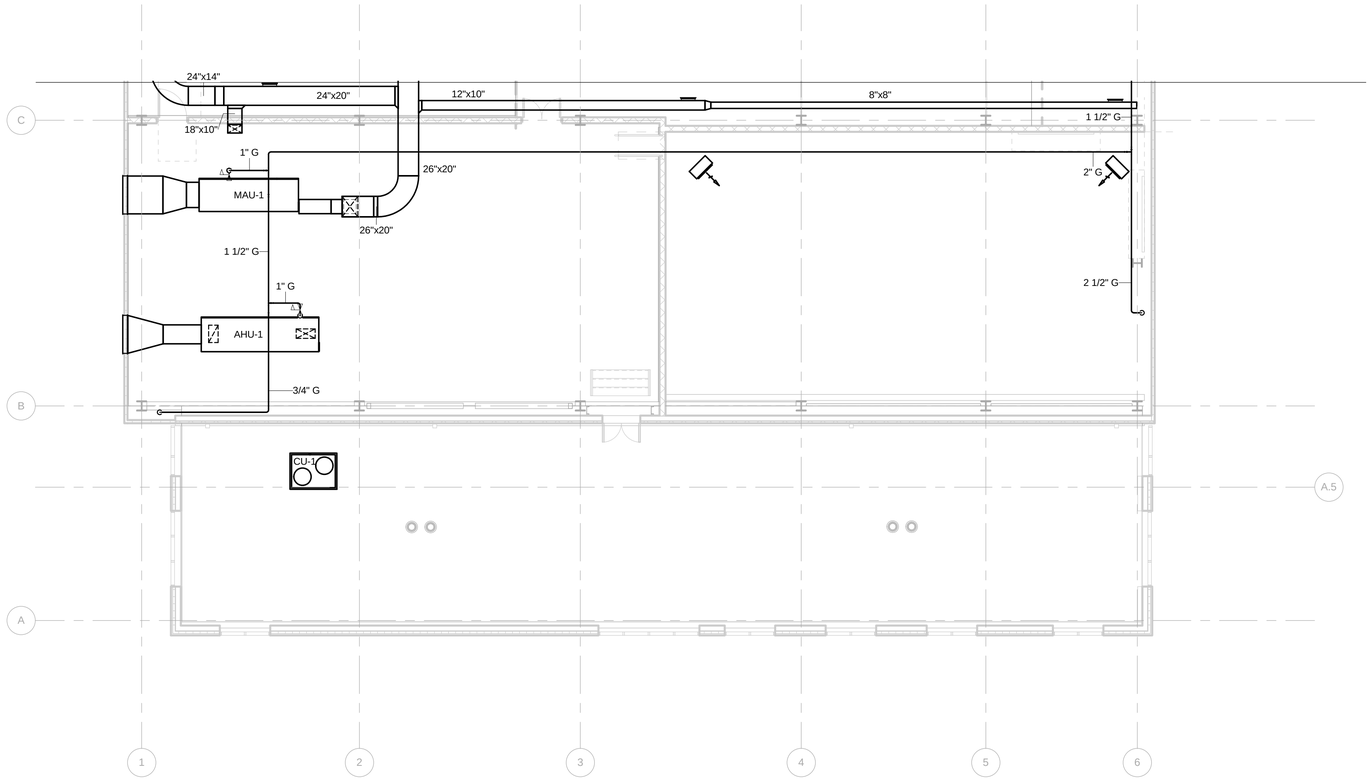

1 PLATFORM - Sector A
1/8" = 1'-0"

THUNDERBIRD
ENGINEERING, INC.
MADISON, WI (608) 223-9040
MILWAUKEE, WI (414) 352-2211
www.THUNDERBIRDENGINEERING.com
14-028

NOT FOR CONSTRUCTION

NO.	DATE	REVISION	BY

ORIGINAL PLANS PREPARED BY

HNTB
11414 W. PARK PLACE
MILWAUKEE, WI 53224
(414) 359-2300

PLANS PREPARED FOR

CITY OF MILWAUKEE
DEPARTMENT OF
PUBLIC WORKS

MILWAUKEE STREETCAR

MAINTENANCE FACILITY

95% SUBMITTAL | 29 FEBRUARY 2016

DESIGNED BY	TBE	DESIGN CK'D	TBE	DRAWN BY	TBE	PLANS CK'D	TBE

PLATFORM LEVEL
FLOOR PLAN
SECTOR A - HVAC

M-103

NOT FOR CONSTRUCTION

8

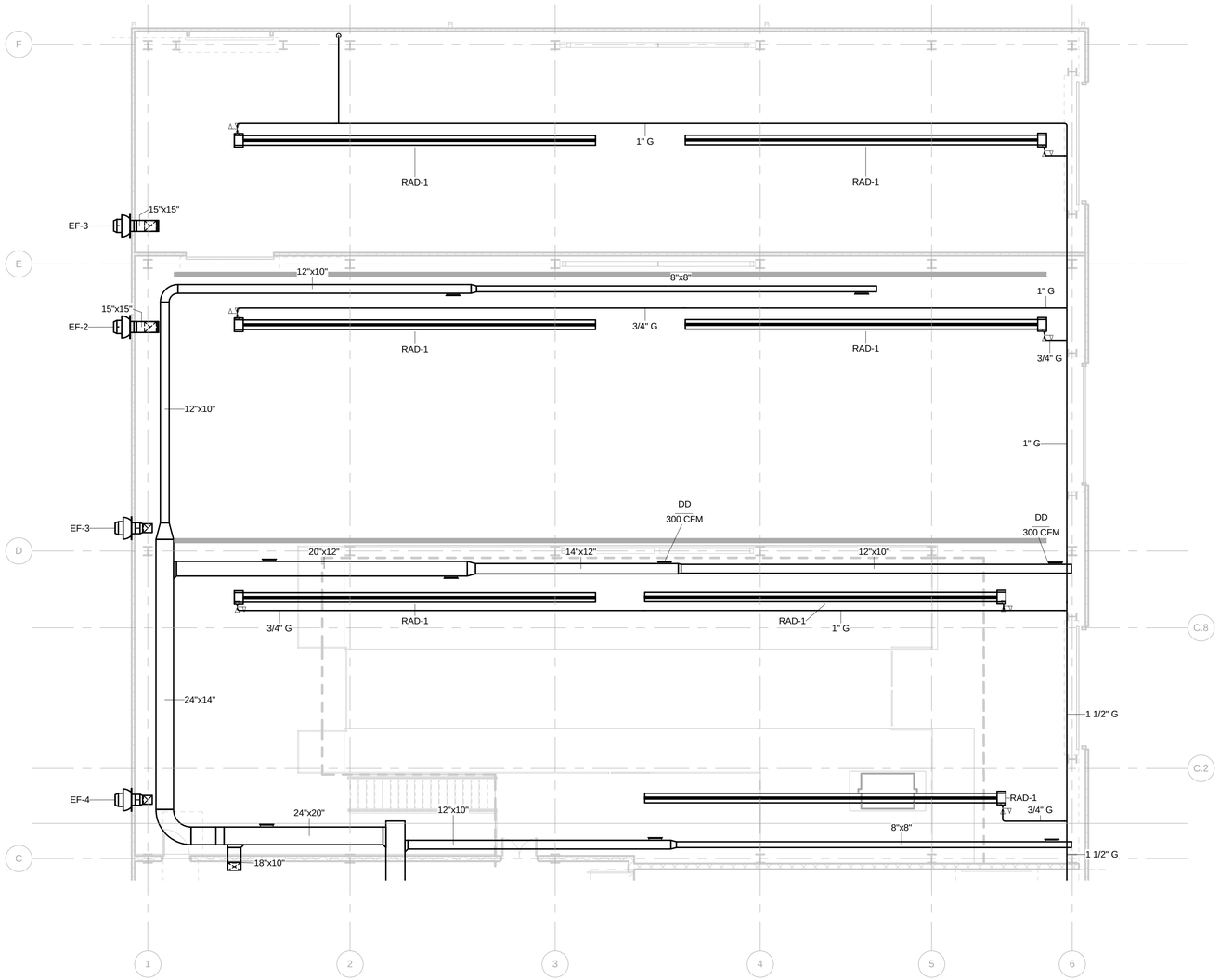

1 PLATFORM - Sector B
1/8" = 1'-0"

THUNDERBIRD
ENGINEERING, INC.
MADISON, WI (608) 223-9040
MILWAUKEE, WI (414) 352-2211
www.THUNDERBIRDENGINEERING.com
14-028

NOT FOR CONSTRUCTION

NO.	DATE	REVISION	BY

ORIGINAL PLANS PREPARED BY

HNTB
11414 W. PARK PLACE
MILWAUKEE, WI 53224
(414) 359-2300

PLANS PREPARED FOR

CITY OF MILWAUKEE
DEPARTMENT OF
PUBLIC WORKS

MILWAUKEE STREETCAR

MAINTENANCE FACILITY

95% SUBMITTAL | 29 FEBRUARY 2016

DESIGNED BY	TBE	DESIGN CK'D	TBE	DRAWN BY	TBE	PLANS CK'D	TBE

PLATFORM LEVEL
FLOOR PLAN
SECTOR B - HVAC

M-104

NOT FOR CONSTRUCTION

8

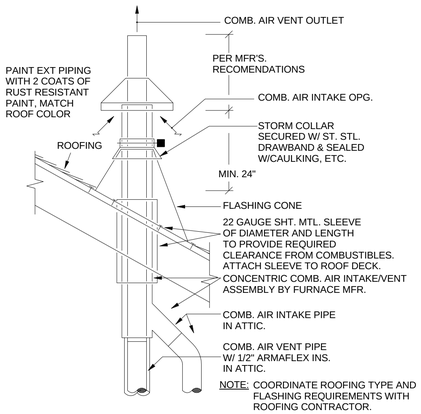

1 DETAIL OF FURNACE COMB. AIR INTAKE/VENT PIPES THRU ROOF

SCALE: NONE

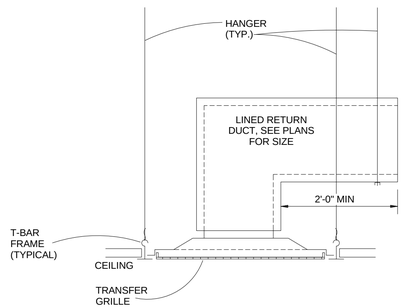

2 LAY-IN CEILING TRANSFER GRILLE (TG) DETAIL

SCALE: NONE

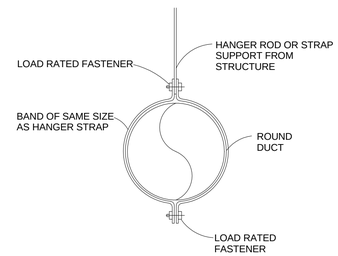

3 ROUND DUCT SUPPORT DETAIL

SCALE: NONE

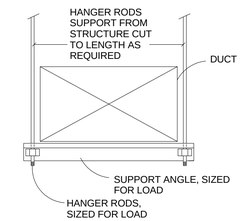

4 RECTANGULAR DUCT SUPPORT DETAIL

SCALE: NONE

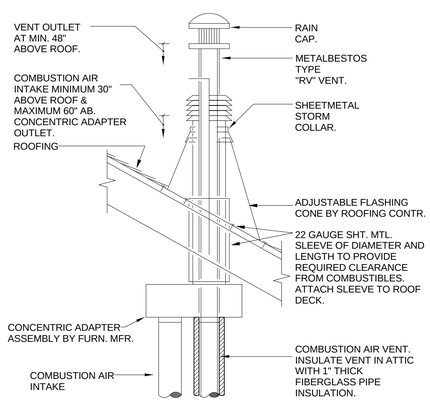

5 DETAIL OF COMB. AIR INTAKE/VENT PIPES THRU ROOF

SCALE: NONE

NOTE: COORDINATE ROOFING TYPE AND FLASHING REQUIREMENTS WITH ROOFING CONTRACTOR.

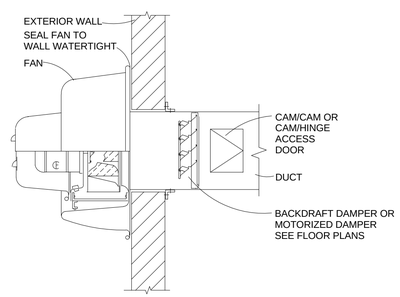

6 WALL MOUNTED EXHAUST FAN DETAIL

SCALE: NONE

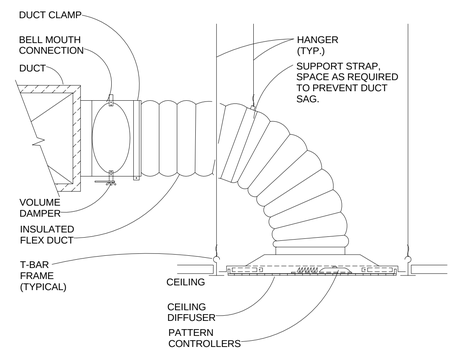

NOTE:
FLEX DUCT TO BE SAME SIZE AS DIFFUSER NECK. MAXIMUM FLEX DUCT LENGTH TO BE 5'-0" IN STRETCHED POSITION. REFER TO SCHEDULE/SPECIFICATIONS FOR DIFFUSER TYPE.

7 LAY-IN CEILING DIFFUSER (CD) DETAIL

SCALE: NONE

THUNDERBIRD ENGINEERING, INC.
MADISON, WI (608) 225-9040
MILWAUKEE, WI (414) 352-2211
www.THUNDERBIRDENGINEERING.com
14-028

NOT FOR CONSTRUCTION

NO.	DATE	REVISION	BY

ORIGINAL PLANS PREPARED BY

HNTB
11414 W. PARK PLACE
MILWAUKEE, WI 53224
(414) 359-2300

PLANS PREPARED FOR

CITY OF MILWAUKEE
DEPARTMENT OF
PUBLIC WORKS

MILWAUKEE STREETCAR

MAINTENANCE FACILITY

95% SUBMITTAL | 29 FEBRUARY 2016

DESIGNED BY	DESIGN CK'D	DRAWN BY	PLANS CK'D
TBE	TBE	TBE	TBE

HVAC Details

M-300

NOT FOR CONSTRUCTION

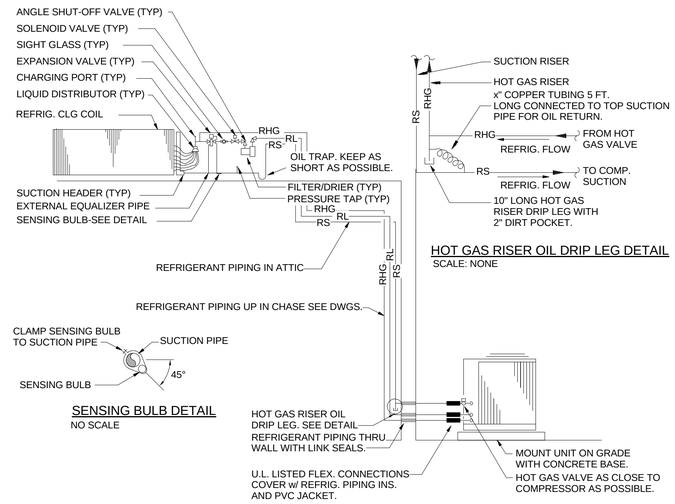

SENSING BULB DETAIL
NO SCALE

HOT GAS RISER OIL DRIP LEG DETAIL
SCALE: NONE

1 F-1 REFRIGERANT PIPING SCHEMATIC
SCALE: NONE

REFRIGERANT PIPING NOTES:

1. PIPING DIAGRAM INDICATES REFRIGERANT PIPING FOR CONDENSING UNIT CIRCUIT#1(LEAD CIRCUIT). PIPING FOR CONDENSING UNIT CIRCUIT#2 IS SIMILAR LESS HOT GAS BYPASS.
2. PITCH HORIZONTAL REFRIGERANT PIPING 1/2" PER 10 FT. IN DIRECTION OF FLOW.
3. PROVIDE U.L. LISTED FLEXIBLE CONNECTIONS AT CONDENSING UNIT. COVER FLEXIBLE CONNECTIONS WITH REFRIGERANT PIPE INSULATION AND PVC JACKET. SEE SPEC.
4. COORDINATE WITH CONDENSING UNIT MANUFACTURER FOR PIPING REQUIREMENTS.
5. PROVIDE REFRIGERANT SPECIALTIES SUCH AS FILTER DRIERS, SOLENOID VALVES, SHUT-OFF VALVES, EXPANSION VALVES, ETC. AS REQUIRED BY UNIT MANUFACTURER.
6. REFRIGERANT PIPE SIZES SCHEDULED ARE FOR BIDDING PURPOSES ONLY. CONDENSING UNIT MANUFACTURER SHALL PROVIDE JOB TAILORED PIPING DIAGRAMS WITH REQUIRED SIZES.
7. DIRECT EXPANSION COOLING COIL SHALL BE PROVIDED WITH (2) TWO INTERTWINED CIRCUITS.
8. PROVIDE UPFEED REFRIGERANT SUCTION RISER ONE SIZE SMALLER THAN HORIZONTAL PIPES TO MAINTAIN MINIMUM REFRIGERANT VELOCITY DURING MINIMUM LOAD CONDITIONS.
9. PROVIDE OIL RETURN LEG AT BASE OF UPFEED HOT GAS RISER ON REFRIGERANT CIRCUIT #1.

THUNDERBIRD
ENGINEERING, INC.
MADISON, WI (608) 223-9040
MILWAUKEE, WI (414) 352-2211
www.THUNDERBIRDENGINEERING.com
14-028

NOT FOR CONSTRUCTION

NO.	DATE	REVISION	BY

ORIGINAL PLANS PREPARED BY

HNTB
11414 W. PARK PLACE
MILWAUKEE, WI 53224
(414) 359-2300

PLANS PREPARED FOR

CITY OF MILWAUKEE
DEPARTMENT OF
PUBLIC WORKS

MILWAUKEE STREETCAR

MAINTENANCE FACILITY

95% SUBMITTAL | 29 FEBRUARY 2016

DESIGNED BY	TBE	DESIGN CK'D	TBE	DRAWN BY	TBE	PLANS CK'D	TBE

HVAC Details Continued

M-301

NOT FOR CONSTRUCTION

8

AIR COOLED CONDENSING UNIT SCHEDULE

MARK	LOCATION	SERVICE	TYPE	NOM. TONS	REFRIG. TYPE	SATURATED SUCTION TEMP. (°F)	CONDENSER E.A.T. (°F)	MIN. O.A. TEMP. (°F)	COMPRESSOR			FANS			OPERATING WEIGHT (LBS.)	MANUFACTURER		REMARKS
							D.B.		NUMBER	KW	EQUIPMENT VOLTS/PH/HZ	NUMBER	RLA	EQUIPMENT VOLTS/PH/HZ		MAKE	MODEL NO.	
CU-1	OFFICE ROOF	AHU-1	SCROLL	7.5	R410A	44	95	30	1	NOTES	460/3/60	2	2	460/3/60	353	CARRIER	38AUZ-08	

AIR FILTER SCHEDULE

MARK	LOCATION	EQUIPMENT SERVED	NUMBER	TYPE	SIZE (INCHES)			EFFICIENCY (%)	INITIAL AIR P.D. INCHES W.C.	FINAL AIR P.D. INCHES W.C.	MANUFACTURER		REMARKS
					WIDTH	HEIGHT	DEPTH				MAKE	MODEL NO.	
F-1	MAU-1	MAU-1	3	DISPOSE	16"	20"	2"	30%	0.1	0.75	MAU MFR	MAU MFR	1
F-2	MAU-1	MAU-1	3	DISPOSE	20"	20"	2"	30%	0.1	0.75	MAU MFR	MAU MFR	1
F-3	AHU-1	AHU-1	3	DISPOSE	20"	20"	2"	30%	0.1	0.75	MAU MFR	MAU MFR	1

NOTES 1. PROVDE 2 SETS OF SPARE FILTERS

DIFFUSER, REGISTER AND GRILLE SCHEDULE

MARK	SERVICE	MAX. A.P.D. INCHES W.C.	NECK SIZE (INCHES)	FACE SIZE (INCHES)	MATERIAL	FINISH	FACE TYPE	PATTERN	THROW (FEET)	ACCESSORIES	MOUNTING	MAX. NC	MANUFACTURER		REMARKS
													MAKE	MODEL NO.	
CD	SUPPLY	0.041	-	24/24	STEEL	WHITE	LOUVER	4-WAY	-	-	T-BAR	12	TITUS	TDC	LOUVERED FACE
EG	EXHAUST	-	8/8	24/24	STEEL	WHITE	EC	-	-	-	DUCT	15	TITUS	350FS	EXHAUST GRILLE
RG	RETURN	-	-	-	STEEL	WHITE	EC	-	-	-	DUCT	15	TITUS	350FS	RETURN GRILLE
DD	SUPPLY	-	18/6	-	STEEL	WHITE	-	-	-	-	DUCT	11	TITUS	DL	DRUM DIFFUSER

NOTES:

LOUVER SCHEDULE

MARK	SERVICE	STYLE	SIZE (INCHES)			CFM	FREE AREA VEL. F.P.M.	GROSS AREA VEL. F.P.M.	MAX. A.P.D. IN. W.C.	MATERIAL	FINISH	BIRD SCREEN	MANUFACTURER		REMARKS
			LENGTH	HEIGHT	DEPTH								MAKE	MODEL NO.	
L-1	INLET	DRAINABLE	48	48	6	4000	550	-	0.042	ALUMINUM	CUSTOM	EXTERIOR	GREENHECK	ESD-603	.
L-2	RELIEF	DRAINABLE	48	48	6	4000	650	-	0.08	ALUMINUM	CUSTOM	EXTERIOR	GREENHECK	ESD-603	.
L-3	INLET	DRAINABLE	42	42	6	3000	500	-	0.04	ALUMINUM	CUSTOM	EXTERIOR	GREENHECK	ESD-603	.

NOTES:

DIRECT EXPANSION COIL SCHEDULE

MARK	LOCATION	SERVICE	REFRIG. TYPE	TOTAL MBH	SENS. MBH	CFM	E.A.T. (°F)		L.A.T. (°F)		MAXIMUM FACE VEL. F.P.M.	AIR P.D.	NUMBER OF CIRCUITS	MANUFACTURER		REMARKS
							D.B.	W.B.	D.B.	W.B.				MAKE	MODEL NO.	
DXC-1	AHU-1	COOLING	R410a	7.5	70.3	3000	80	67	54.4	52.6	431	0.58	1	CARRIER	-	-

NOTES.

MAKE-UP AIR UNIT SCHEDULE (GAS FIRED)

MARK	LOCATION	SERVICE	TYPE	AIRFLOW (CFM)	MIN. O.A. (CFM)	INPUT CAPACITY (BTUH)	OUTPUT CAPACITY (BTUH)	E.S.P. (IN. WC)	GAS INLET PRESSURE MIN/MAX (IN WC)	HP	FLA	EQUIPMENT VOLTS/ PHASE	OPERATING WEIGHT LBS.	MANUFACTURER		REMARKS
														MAKE	MODEL NO.	
MAU-1	STREETCAR	100% MAKE-UP	DIRECT	4000	4000	400	368	1.00	8/14	3	6.3	460/3	679	GREENHECK	DG-112-H20	1

NOTES 1. INTERLOCK TO ASSOCIATED EXHAUST FAN(S).

UNIT HEATER SCHEDULE (NATURAL GAS)

MARK	LOCATION	TYPE	FAN				WEIGHT	FUEL PIPE DIA CONN	HEATING SECTION						MANUFACTURER		REMARKS
			CFM	MOTOR RPM	MOTOR HP	EQUIPMENT VOLTS/PH/HZ			INPUT MBH	OUTPUT MBH	E.A.T.	NG WC PRESSURE	COMB AIR	EXH FLUE	MAKE	MODEL NO.	
UH-1	PARTS RM	HORIZ	961	1550	1/6	208/1	72	1/2"	75	62	60	8"-14"	4"Ø	4"Ø	REZNOR	UDAP-75	1
UH-2	MECH RM	HORIZ	629	1550	1/6	208/1	54	1/2"	45	24	60	8"-14"	4"Ø	4"Ø	REZNOR	UDAP-45	1

NOTES 1. SINGLE STAGE, DIRECT SPARK IGNITION, COMBINATION GAS CONTROL AND AN IGNITION CONTROL, GAS AUTOMATICALLY LIT WITH DIRECT SPARK IGNITER ON CALL FOR HEAT.

EXHAUST FAN SCHEDULE

MARK	LOCATION	SERVICE	FAN DATA			DRIVE	TYPE	WHEEL DIA.	E.S.P.	SONES	MOTOR DATA			OPERATING WEIGHT LBS.	MANUFACTURER		REMARKS
			CFM	RPM	BHP						HP	EQUIPMENT VOLTS/PH/HZ	RPM		MAKE	MODEL NO.	
EF-1	STREETCAR GARAGE	EXHAUST	2200	1100	0.57	BELT	SIDEWALL	-	0.75	12.5	3/4	460/3/60	1725	111	GREENHECK	GB-161-7	.
EF-2	STREETCAR GARAGE	EXHAUST	2200	1100	0.57	BELT	SIDEWALL	-	0.75	12.5	3/4	460/3/60	1725	111	GREENHECK	GB-161-7	.

NOTES:

AIR HANDLING UNIT SCHEDULE

MARK	SERVES	NOMINAL TONS	SUPPLY FAN						RETURN FAN						DX COIL								HEATING COIL (GAS FIRED)										VOLTS/ PHASE/ HERTZ	FILTERS		MINIMUM O.A. CFM	MANUFACTURER		REMARKS
			CFM	TOTAL SP INCHES W.C.	BHP	HP	MCA	MOCP	CFM	EXT. SP INCHES W.C.	BHP	HP	MCA	MOCP	E.A.T. °F		L.A.T. °F		MBH TOTAL	MBH SENS.	GPM	COIL AIR △P FT.	COIL AIR VEL	COIL SQ FT	E.A.T. °F	L.A.T. °F	TOTAL MBH	GPM	COIL WATER △P FT.	EWT °F	LWT °F	COIL AIR △P FT.	COIL AIR VEL	COIL SQ FT		TYPE	EFF. %		MAKE	MODEL NO.	
															D.B.	W.B.	D.B.	W.B.							D.B.	D.B.														
AHU-1	OFFICES	7.5	3000	0.9	1.37	2	11.9	15	-	-	-	-	-	-	80	67	58.4	56.7	98.7	70.3	-	0.58	364	12.15	48.4	59.3	62.6	-	0.20	180	146.8	0.13	718	7.29	460/3/60	2" PLEAT	30%	1350	MCQUAY	CAH012GDAC	1, 2, 3, 4, 5

NOTES: 1 PROVIDE SMOKE DETECTOR IN RETURN AIR STREAM, SEE PLANS FOR MORE INFORMATION AND ELECTRICAL PLANS FOR COORDINATION.
2 UNIT SHALL BE MODULAR.
3 EACH FAN SECTION ACCESS RIGHT SIDE, ECONOMIZER SECTION WITH ACCESS, 2" ANGLED MERV 8 FILTER SECTION DOOR RIGHT SIDE, DX REFRIGERANT LINES AND GAS CONNECTIONS RIGHT SIDE.
4 SEE THE SEQUENCE OF OPERATION AND THE DETAILS FOR MORE INFORMATION.
5 DX COILS ARE 6 ROW COILS, ALUMINUM FINS, 1/2" TUBE, SS DRAIN PANS, 8 FPI SPACING.

THUNDERBIRD ENGINEERING, INC.
MADISON, WI (608) 223-9040
MILWAUKEE, WI (414) 352-2211
www.THUNDERBIRDENGINEERING.com
14-028

NOT FOR CONSTRUCTION

NO.	DATE	REVISION	BY

ORIGINAL PLANS PREPARED BY

HNTB
11414 W. PARK PLACE
MILWAUKEE, WI 53224
(414) 359-2300

PLANS PREPARED FOR

CITY OF MILWAUKEE
DEPARTMENT OF
PUBLIC WORKS

MILWAUKEE STREETCAR

MAINTENANCE FACILITY

95% SUBMITTAL | 29 FEBRUARY 2016

DESIGNED BY TBE | DESIGN CK'D TBE | DRAWN BY TBE | PLANS CK'D TBE

HVAC Schedules | M-400

NOT FOR CONSTRUCTION

GENERAL NOTES

1. CONTRACTOR SHALL BE RESPONSIBLE FOR ALL WORK SHOWN ON THESE PLANS, UNLESS OTHERWISE NOTED.
2. THE COMPLETE INSTALLATION SHALL BE IN ACCORDANCE WITH ADAAG (AMERICANS WITH DISABILITIES ACT ADAAG (AMERICANS WITH DISABILITIES ACT, ALL LOCAL, STATE AND NATIONAL ELECTRICAL CODES
3. ELECTRICAL CONTRACTOR SHALL COORDINATE ELECTRICAL WORK WITH OTHER TRADES AND ARCHITECT DURING ROUGH-IN AND TO VERIFY ALL EQUIPMENT CONNECTION REQUIREMENTS.
4. CONCEAL ALL CONDUIT IN WALLS, PARTITIONS AND ABOVE CEILING. UNLESS OTHERWISE INDICATED ON THE PLANS OR IN THE SPECIFICATIONS. CONDUIT IN MECHANICAL ROOMS AND STORAGE ROOMS WITHOUT CEILINGS MAY BE EXPOSED ON BUILDING STRUCTURE.

FIRE ALARM

MOUNTING AFF TO BOX CENTERLINE
COORDINATE FINAL LOCATION WITH ARCHITECT

- FACP — FIRE ALARM CONTROL PANEL
- FIRE ALARM PULL STATION, MOUNTED 48" AFF
- S # — FIRE ALARM SPEAKER/STROBE, WALL
  #: CANDELA RATING
  MOUNTED 80" AFF
- S # — FIRE ALARM SPEAKER/STROBE, CEILING
  #: CANDELA RATING
- # — FIRE ALARM STROBE
  #: CANDELA RATING
  MOUNTED 80" AFF
- S — INTELLIGENT PHOTOELECTRIC SMOKE DETECTOR
- R — RELAY
- H — INTELLIGENT TEMPERATURE FIXED & RATE OF RISE HEAT DETECTOR
- DS — INTELLIGENT PHOTOELECTRIC DUCT SMOKE DETECTOR
- MM — MONITOR MODULE
- DH — MAGNETIC DOOR HOLDER
- TS — SPRINKLER TAMPER SWITCH
- FS — SPRINKLER FLOW SWITCH

INFORMATION TECHNOLOGY

MOUNTING AFF TO BOX CENTERLINE
COORDINATE FINAL LOCATION WITH ARCHITECT

- DATA OUTLET
  SINGLE DATA PORT
- * TELEPHONE/DATA OUTLET
  * IDENTIFIES NUMBER OF DATA / TELEPHONE PORTS
  EXAMPLE: 3D/3T = 3 DATA / 3 TEL PORTS
- TELEPHONE OUTLET
  SINGLE TELEPHONE PORT
  MOUNTED AT 18" AFF
  W = WALL PHONE MOUNTED AT 48" AFF
- TV — CATV OUTLET, MOUNTED 18" AFF
- W — WIRELESS ACCESS POINT - CEILING MOUNTED. PROPOSED LOCATION INDICATED ON PLANS. SINGLE-GANG SHALLOW BOX, BLANK FACEPLATE, LABEL. PROVIDE (1) CAT6 WITH RJ-45 CONNECTOR AND MIN. 25' COIL.
- FRONT — FRONT OF RACK — FREE STANDING TELECOM RACK VERTICAL JUMPER MANAGERS SHOWN ON EACH SIDE OF RACK
  SEE DIVISION 27 00 00 FOR DESCRIPTION
- TELECOM EQUIPMENT OR PANEL - TYPE INDICATED ON PLAN
- FLOOR TELEPHONE/DATA OUTLET

SHEET SYMBOLS

- # — DETAILS AND SECTIONS DESIGNATION
- EQ # — EQUIPMENT DESIGNATION. TOP DESIGNATES EQUIPMENT ABBREVIATION. BOTTOM DESIGNATES EQUIPMENT NUMBER.
- 1 — REVISION NUMBER DESIGNATION
- # — KEYED NOTE DESIGNATION
- # ### — SECTION REFERENCE. TOP DESIGNATES SECTION NUMBER BOTTOM DESIGNATES ON WHICH SHEET SECTION APPEARS

POWER PLAN

MOUNTING AFF TO BOX CENTERLINE
COORDINATE FINAL LOCATION WITH ARCHITECT

- T — TRANSFORMER
- MH X — MANHOLE
- M — METERING PEDESTAL
- E E — UNDERGROUND ELECTRIC SERVICE
- NONFUSED DISCONNECT SWITCH
- F — FUSED DISCONNECT SWITCH
- B — BREAKER DISCONNECT SWITCH
- MAGNETIC MOTOR STARTER
- COMBINATION MOTOR STARTER
- $M — MANUAL STARTER W/OVERLOAD PROTECTION
- J — JUNCTION BOX
- # — MOTOR
- GROUND BAR
- e XXXX — ELECTRICALLY CONNECTED EQUIPMENT
  XXXX = EQUIPMENT I.D.
- m XXXX — ELECTRICALLY CONNECTED EQUIPMENT
  XXXX = EQUIPMENT I.D.
- M — UTILITY METER CABINET
- TELEPHONE TERMINAL CABINET
- PANEL BOARD - SURFACE MOUNTED
- A,1,3,5 — PANEL AND CIRCUITS; PANEL A, CIRCUITS 1,3,5
- LC — LIGHTING CONTACTOR
- XXXX — DUPLEX RECEPTACLE, MOUNTED AT 18" TO CENTER U.N.O.
  XXXX = EQUIPMENT I.D. (IF INDICATED)
- SIMPLEX RECEPTACLE, MOUNTED AT 18" TO CENTER U.N.O.
- DOUBLE DUPLEX RECEPTACLE, MOUNTED AT 18" TO CENTER U.N.O.
- DUPLEX RECEPTACLE - ABOVE CASEWORK
  OR 2" ABOVE COUNTERTOP BACKSPLASH
- DOUBLE DUPLEX RECEPTACLE - ABOVE CASEWORK
  OR 2" ABOVE COUNTERTOP BACKSPLASH
- FLOOR DOUBLE DUPLEX RECEPTACLE
- X — SPECIAL PURPOSE OUTLET, MOUNTED AT 18" TO CENTER U.N.O.
  X: OUTLET NUMBER
  REFER TO SPECIAL POWER OUTLET SCHEDULE
- WORKING CLEARANCE ABOUT ELECTRICAL EQUIPMENT
- GROUND ROD

LIGHTING

MOUNTING AFF TO BOX CENTERLINE
COORDINATE FINAL LOCATION WITH ARCHITECT

- X — LINEAR FLUORESCENT LUMINAIRE
  X: LUMINAIRE ID. (TYPICAL)
- X — 1 X 4 TROFFER
- X — 2 X 4 TROFFER
- X — RECESSED DOWNLIGHT
- X — WALL LUMINAIRE
- X — PENDANT / SUSPENDED / SURFACE LUMINAIRE
- X — SITE LUMINAIRE
- X — BOLLARD
- EXIT SIGN ,ALIGN TOP OF FIXTURE WITH TOP OF DOOR FRAME
- X # — EMERGENCY BACKUP UNIT
- OC — OCCUPANCY SENSOR
- $* — 15A/20A LIGHT SWITCH, MOUNTED 48" AFF
  * - 3 OR 4 SWITCH
  P - PILOT SWITCH
  D - DIMMER SWITCH

SECURITY

MOUNTING AFF TO BOX CENTERLINE
COORDINATE FINAL LOCATION WITH ARCHITECT

SECURITY SYMBOLS

- CAMERA
- CR — CARD READER STATION

ABBREVIATIONS

#	NUMBER
A	AMPERES
AFF	ABOVE FINSIHED FLOOR
AIC	AMPS INTERRUPTING CAPACITY
AMPS	AMPERES+
APPL	APPLICATION
AWG	AMERICAN WIRE GUAGE
BKR	BREAKER
BLDG	BUILDING
C	CONDUIT
COMP	COMPUTER
ELEC,ELECT	ELECTRICAL
EQUIP	EQUIPMENT
G	GROUND
GFCI	GROUND FAULT CIRCUIT INTERRUPTER
GND	GROUND
IT	INFORMATION TECHNOLOGY
KVA	KILOVOLT-AMPERES
MFR	MAUNFACTURER
MIN	MINIMUM
MSB	MAIN SWITCH BOARD
No.	NUMBER
NTS	NOT TO SCALE
NU	NEAR UNIT
P	POLE
PH	PHASE
PNL	PANEL
RM	ROOM
SM	SMALL
TYP	TYPICAL
UNO	UNLESS NOTED OTHERWISE
V	VOLT
VA	VOLTAMPERES
W	WIRE
W/	WITH
XFMR	TRANSFORMER
Y	WYE

Sheet List

Sheet Number	Sheet Name
E000	ELECTRICAL SYMBOLS, ABBREVIATIONS, AND NOTES
E050	ELECTRICAL SITE POWER & LIGHTING PLAN
E100	SHOP LEVEL FLOOR PLAN SECTOR A - POWER/IT/ SECURITY
E101	SHOP LEVEL FLOOR PLAN SECTOR B - POWER/IT/ SECURITY
E102	PLATFORM LEVEL FLOOR PLAN SECTOR A - POWER/IT/ SECURITY
E103	PLATFORM LEVEL FLOOR PLAN SECTOR B - POWER/IT/ SECURITY
E110	SHOP LEVEL FLOOR PLAN SECTOR A - LIGHTING/FIRE ALARM
E111	SHOP LEVEL FLOOR PLAN SECTOR B - LIGHTING/FIRE ALARM
E112	PLATFORM LEVEL FLOOR PLAN SECTOR A - LIGHTING/FIRE ALARM
E113	PLATFORM LEVEL FLOOR PLAN SECTOR B - LIGHTING/FIRE
E114	PIT LEVEL FLOOR PLAN
E400	SINGLE LINE DIAGRAMS
E500	DETAILS
E501	DETAILS
E502	DETAILS
E601	ELECTRICAL SCHEDULES
E602	ELECTRICAL SCHEDULES
E603	ELECTRICAL SCHEDULES
E604	LIGHTING SCHEDULES

	Initials	Date
Designer		
Checker/ Reviewer		
Back-Checker		
Corrector		
Verifier		

NOT FOR CONSTRUCTION

NO.	DATE	REVISION	BY

ORIGINAL PLANS PREPARED BY

HNTB
11414 W. PARK PLACE
MILWAUKEE, WI 53224
(414) 359-2300

PLANS PREPARED FOR

CITY OF MILWAULKEE
DEPARTMENT OF
PUBLIC WORKS

MILWAUKEE STREETCAR OPERATIONS AND MAINTENANCE FACILITY

90% SUBMISSION | 29 FEB. 2016

DESIGNED BY WM | DESIGN CK'D DW | DRAWN BY KK | PLANS CK'D WM

ELECTRICAL SYMBOLS, ABBREVIATIONS, AND NOTES

E000

DRAFT
NOT FOR CONSTRUCTION

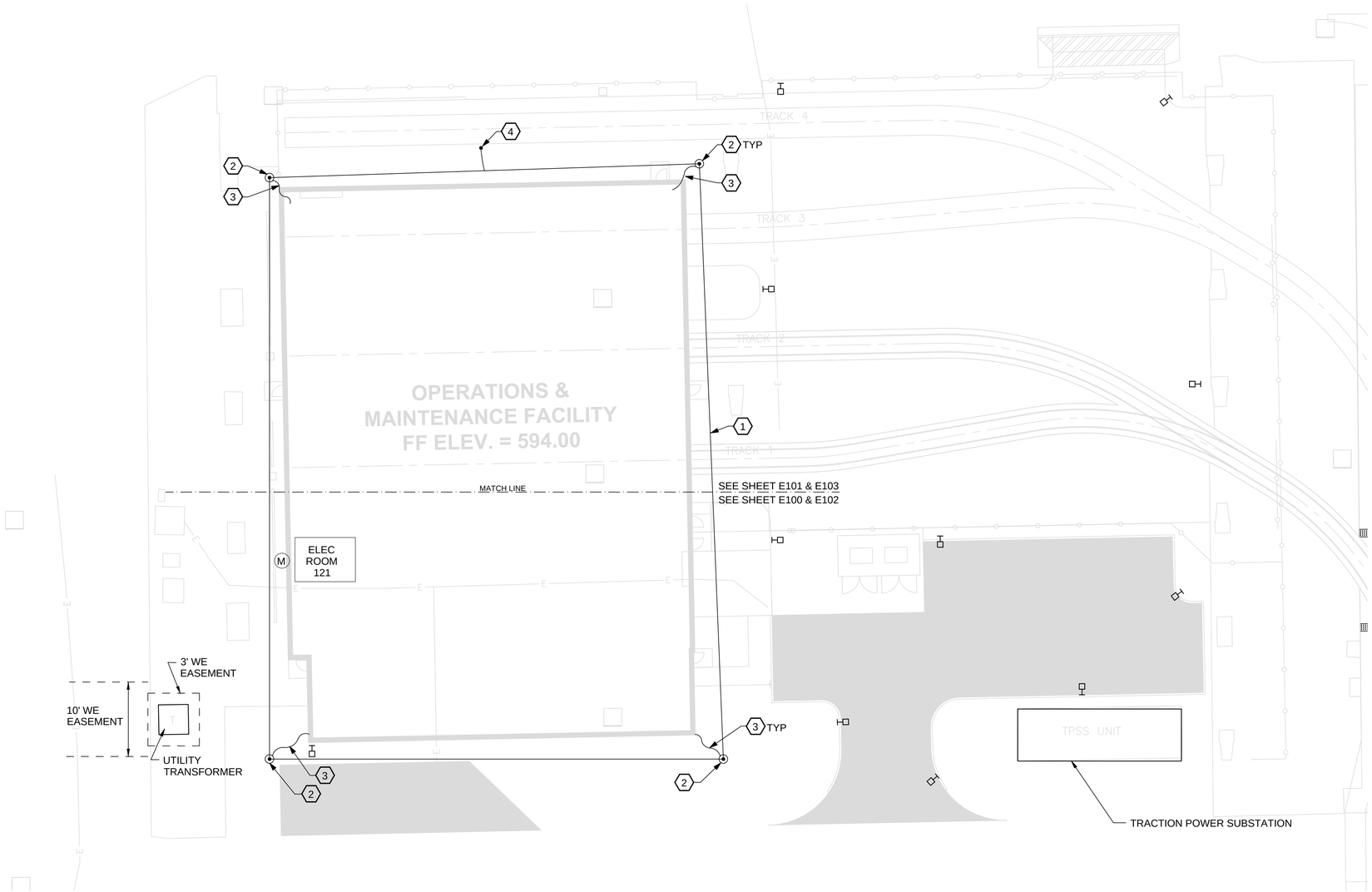

GENERAL NOTES:

1. THE REINFORCING STEEL OF THE MAIN SHOP FLOOR SHALL BE BONDED INTO A GRID PATTERN AND ALL SHOP CONDUCTIVE SURFACES SHALL BE BONDED TO THE GRID.
2. ALL METAL (FERROUS) CONDUIT CROSSING PAST THE PERIMETER GROUND SHALL BE BONDED BY SUITABLE MEANS TO THE PERIMETER GROUND.
3. ALL PERIMETER GROUND WIRES TO BE #2 AWG STRANDED AND ALL BONDING CONDUCTORS TO THE PERIMETER GROUND SHALL BE MINIMUM #2 AWG STRANDED.

KEYED NOTES:

1. PROVIDE BUILDING PERIMETER GROUND AT 5 FEET FROM BLDG WALL. PERIMETER GROUND TO LOOP AROUND ENTIRE BLDG.
2. 5/8" x 10'-0" GROUND ROD. CONNECT TO PERIMETER GND VIA COMPRESSION CONNECTION OR EXOTHERMIC WELD.
3. BOND PERIMETER GROUND TO THE METAL STRUCTURE OF THE BUILDING AND REINFORCING BARS OF THE CONCRETE.
4. BOND PERIMETER GROUND LOOP TO EARTH CONNECTION OF NEW TRANSFORMER - LOCATION TO BE DETERMINED.

SITE POWER PLAN
1/16" = 1'-0"

N

Graphic Scale: 1 inch = 16 feet
0 16' 32' 48' 64'

[redacted]
KEY PLAN

NOT FOR CONSTRUCTION

NO.	DATE	REVISION	BY

ORIGINAL PLANS PREPARED BY

HNTB
11414 W. PARK PLACE
MILWAUKEE, WI 53224
(414) 359-2300

PLANS PREPARED FOR

CITY OF MILWAULKEE
DEPARTMENT OF
PUBLIC WORKS

MILWAUKEE STREETCAR OPERATIONS
AND MAINTENANCE FACILITY

95% SUBMISSION		29 FEB. 2016	
DESIGNED BY WM	DESIGN CK'D DW	DRAWN BY KK	PLANS CK'D WM

ELECTRICAL SITE
POWER & LIGHTING
PLAN

E050

NOT FOR CONSTRUCTION

	Initials	Date
Designer		
Checker/ Reviewer		
Back-Checker		
Corrector		
Verifier		

DRAFT

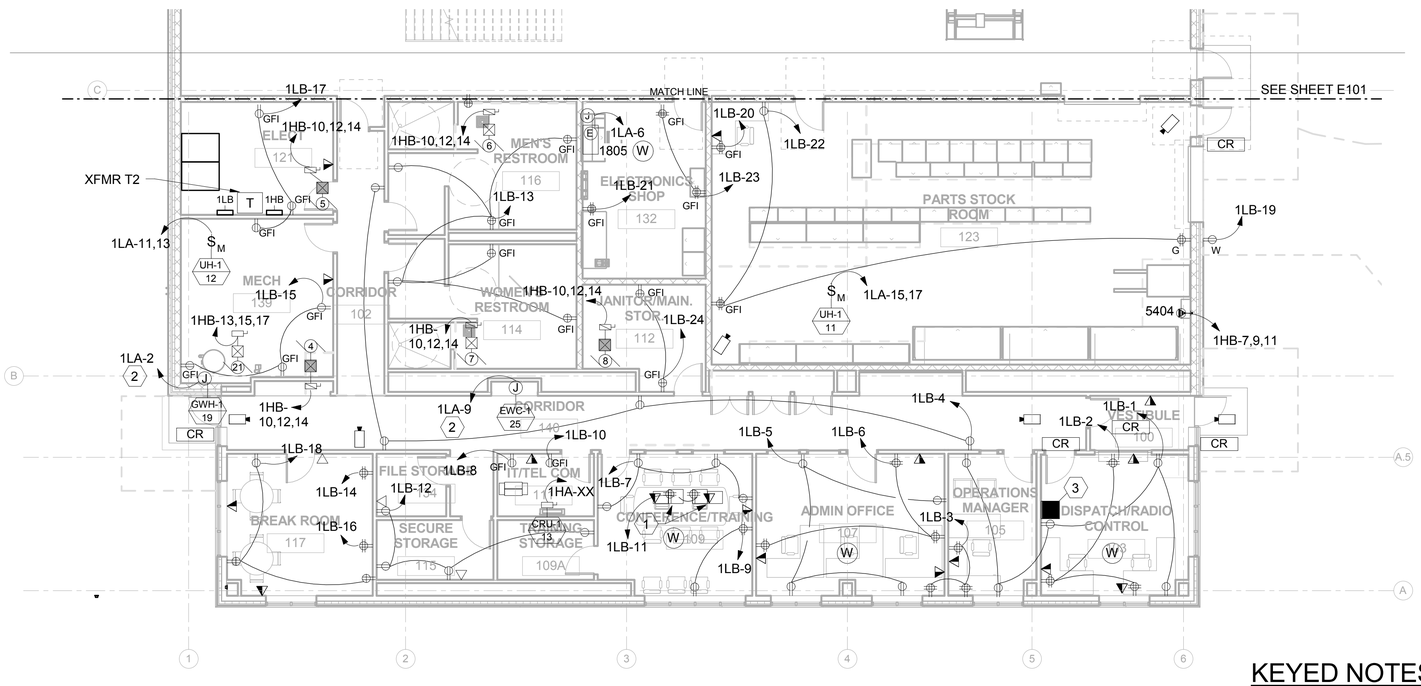

SHOP LEVEL PLAN SECTOR A - POWER/IT

1/8" = 1'-0"

N

POWER GENERAL NOTES:

1. SEE E601 & E602 FOR PANEL AND MOTOR SCHEDULES.
2. A #12 GREEN INSULATED GROUND CONDUCTOR SHALL BE INSTALLED WITH CIRCUIT CONDUCTORS TO ALL RECEPTACLES.
3. CONCREAL ALL CONDUIT IN WALLS, PARTITIONS AND ABOVE CEILING, UNLESS OTHERWISE INDICATED ON THE PLANS. CONDUIT IN MECHANICAL ROOMS, AND STORAGE ROOMS WITHOUT CEILINGS MAY EXPOSED ON BUILDING STRUCTURE.
4. BOXES LOCATED ON OPPOSITE SIDES OF NON-RATED WALLS SHALL BE OFFSET A MINIMUM OF 6" HORIZONTALLY. BOXES ON OPPOSITE SIDES OF FIRE RATED WALLS SHALL BE OFFSET A MINIMUM OF 24" HORZONTALLY. "THRU-THE-WALL" BOXES SHALL NOT BE ALLOWED WITHOUT PRIOR WRITTEN APPROVAL OF THE ARCHITECT/ENGINEER.
5. CONTRACTOR SHALL VERIFY ALL FURNITURE AND EQUIPMENT LOCATIONS WITH ARCHITECTURAL AND EQUIPMENT PLANS, ELEVATIONS AND REVIEWED SHOP DRAWINGS. PRIOR TO MAKING THE ACTUAL ELECTRICAL INSTALLATION THIS CONTRACTOR SHALL ADJUST RECEPTACLES, OUTLETS OR CONNECTION LOCATIONS TO ACCOMMODATE FURNITURE AND/OR EQUIPMENT.
6. CONTRACTOR SHALL BE RESPONSIBLE FOR ALL OPENINGS REQURIED IN WALLS. ALL OPENINGS SHALL BE REPAIRED TO MATCH EXISTING BY A QUALIFIED CONTRACTOR AT THE EXPENSE OF THIS CONTRACTOR. ALL CONDUITS THROUGH WALLS SHALL BE GROUTED OR SEALED INTO OPENINGS.
7. THE REINFORCING STEEL OF THE MAIN SHOP FLOOR SHALL BE BONDED INTO A GRID PATTERN AND ALL SHOP CONDUCTIVE SURFACES SHALL BE BONDED TO THE GRID.

IT GENERAL NOTES:

1. CONTRACTOR SHALL COORDINATE ALL WORK WITH WORK BY OTHER TRADES. VERIFY DEVICE MOUNTING HEIGHTS AND LOCATIONS WITH ARCHITECTURAL PLANS AND ELEVATION.
2. CIRCUITS SERVING FIRE ALARM DEVICES WILL BE SHALL BE RUN IN SEPERATE RACEWAY FROM ALL OTHER CIRCUITS
3. CONCREAL ALL CONDUIT IN WALLS, PARTITIONS, AND ABOVE CEILING UNLESS OTHERWISE INDICATED ON THE PLANS. CONDUIT IN MECHANICAL ROOMS, STORAGE ROOMS, AND WITHIN CEILING MAY BE EXPOSED ON BUILDING STRUCTURE.
4. REFER TO SPECIFICATIONS FOR MATERIALS AND METHODS OF CONSTRUCTION.
5. THESE DRAWINGS DEPICT A PERFORMANCE DESIGN ONLY. PROIVDE COMPLETE DOCUMENTS FOR APPROVAL FROM THE AUTHORITY HAVING JURISDICTION. INCLUDE IN THE DRAWINGS ANY ADDITIONAL EQUIPMENT NECESSARY TO COMPLETE THE INSTALLATION AND COMPLY WITH LOCAL CODES AND AMENDMENTS.

KEYED NOTES:

1. PROVIDE FLOOR BOX MOUNTED OUTLET (POWER OR I.T. AS INDICATED)
2. PROVIDE CIRCUIT BREAKER W/ LOCKOUT PROVISION AT PANEL
3. CCTV MONITOR
4. COORDINATE PLUG REQUIREMENTS WITH EQUIPMENT MANUFACTURER. PROVIDE NEMA TYPE L16-30R RECEPTACLE, 480V, 30A, 3PH, 4W UNLESS OTHERWISE REQUIRED BY EQUIPMENT MANUFACTURER.

Graphic Scale: 1 inch = 8 feet

0 8' 16' 24' 32'

B

A

KEY PLAN

NOT FOR CONSTRUCTION

NO.	DATE	REVISION	BY

ORIGINAL PLANS PREPARED BY

HNTB

11414 W. PARK PLACE
MILWAUKEE, WI 53224
(414) 359-2300

PLANS PREPARED FOR

CITY OF MILWAUKEE
DEPARTMENT OF
PUBLIC WORKS

MILWAUKEE STREETCAR OPERATIONS AND MAINTENANCE FACILITY

90% SUBMISSION		29 FEB. 2016	
DESIGNED BY WM	DESIGN CK'D DW	DRAWN BY KK	PLANS CK'D WM

SHOP LEVEL FLOOR PLAN SECTOR A - POWER/IT/ SECURITY

E100

NOT FOR CONSTRUCTION

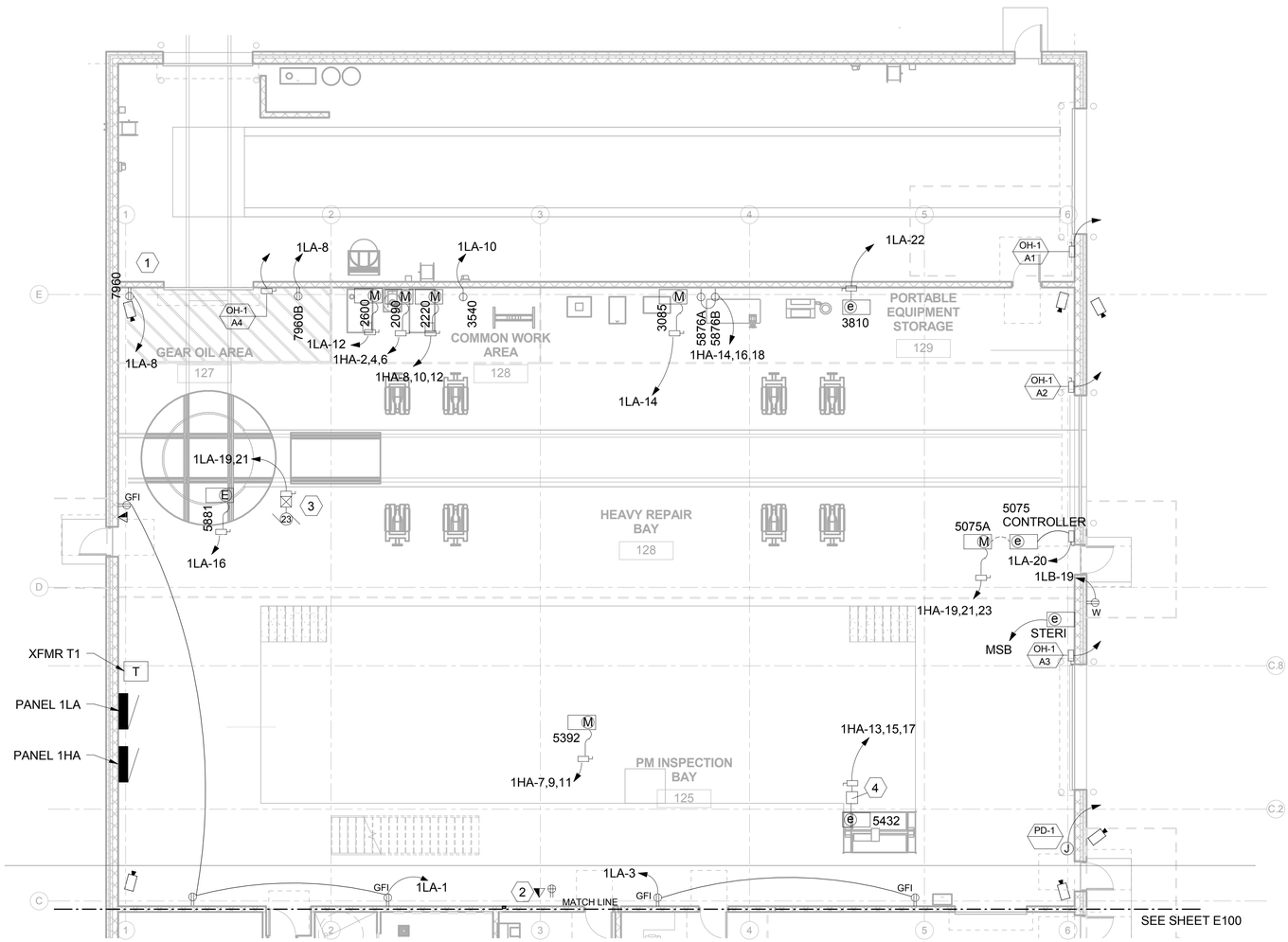

SHOP LEVEL PLAN SECTOR B - POWER/IT

1/8" = 1'-0"

POWER GENERAL NOTES:

1. SEE E601 & E602 FOR PANEL AND MOTOR SCHEDULES.
2. A #12 GREEN INSULATED GROUND CONDUCTOR SHALL BE INSTALLED WITH CIRCUIT CONDUCTORS TO ALL RECEPTACLES.
3. CONCREAL ALL CONDUIT IN WALLS, PARTITIONS AND ABOVE CEILING, UNLESS OTHERWISE INDICATED ON THE PLANS. CONDUIT IN MECHANICAL ROOMS, AND STORAGE ROOMS WITHOUT CEILINGS MAY EXPOSED ON BUILDING STRUCTURE.
4. BOXES LOCATED ON OPPOSITE SIDES OF NON-RATED WALLS SHALL BE OFFSET A MINIMUM OF 6" HORIZONTALLY. BOXES ON OPPOSITE SIDES OF FIRE RATED WALLS SHALL BE OFFSET A MINIMUM OF 24" HORZONTALLY. "THRU-THE-WALL" BOXES SHALL NOT BE ALLOWED WITHOUT PRIOR WRITTEN APPROVAL OF THE ARCHITECT/ENGINEER.
5. CONTRACTOR SHALL VERIFY ALL FURNITURE AND EQUIPMENT LOCATIONS WITH ARCHITECTURAL AND EQUIPMENT PLANS, ELEVATIONS AND REVIEWED SHOP DRAWINGS. PRIOR TO MAKING THE ACTUAL ELECTRICAL INSTALLATION THIS CONTRACTOR SHALL ADJUST RECEPTACLES, OUTLETS OR CONNECTION LOCATIONS TO ACCOMMODATE FURNITURE AND/OR EQUIPMENT.
6. CONTRACTOR SHALL BE RESPONSIBLE FOR ALL OPENINGS REQURIED IN WALLS. ALL OPENINGS SHALL BE REPAIRED TO MATCH EXISTING BY A QUALIFIED CONTRACTOR AT THE EXPENSE OF THIS CONTRACTOR. ALL CONDUITS THROUGH WALLS SHALL BE GROUTED OR SEALED INTO OPENINGS.
7. THE REINFORCING STEEL OF THE MAIN SHOP FLOOR SHALL BE BONDED INTO A GRID PATTERN AND ALL SHOP CONDUCTIVE SURFACES SHALL BE BONDED TO THE GRID.

IT GENERAL NOTES:

1. CONTRACTOR SHALL COORDINATE ALL WORK WITH WORK BY OTHER TRADES. VERIFY DEVICE MOUNTING HEIGHTS AND LOCATIONS WITH ARCHITECTURAL PLANS AND ELEVATION.
2. CIRCUITS SERVING FIRE ALARM DEVICES WILL BE SHALL BE RUN IN SEPERATE RACEWAY FROM ALL OTHER CIRCUITS
3. CONCREAL ALL CONDUIT IN WALLS, PARTITIONS, AND ABOVE CEILING UNLESS OTHERWISE INDICATED ON THE PLANS. CONDUIT IN MECHANICAL ROOMS, STORAGE ROOMS, AND WITHIN CEILING MAY BE EXPOSED ON BUILDING STRUCTURE.
4. REFER TO SPECIFICATIONS FOR MATERIALS AND METHODS OF CONSTRUCTION.
5. THESE DRAWINGS DEPICT A PERFORMANCE DESIGN ONLY. PROIVDE COMPLETE DOCUMENTS FOR APPROVAL FROM THE AUTHORITY HAVING JURISDICTION. INCLUDE IN THE DRAWINGS ANY ADDITIONAL EQUIPMENT NECESSARY TO COMPLETE THE INSTALLATION AND COMPLY WITH LOCAL CODES AND AMENDMENTS.

KEYED NOTES:

1. ACTUAL LOCATION OF THIS RECEPTACLE TO BE AT TANK MONITORING LOCATION.
2. EQUIPMENT LOCATED AT PIT LEVEL
3. PROVIDE SIMPLEX ENCLOSED CONTROLLER
4. MAIN CONTROL PANEL
5. PROVIDE 1" CONDUIT BETWEEN FLUID MONITORING SYSTEM (FOR 7960 A&B) AND SOLENOID VALVE AT CORRESPONDING EXTRACTION PUMP (7540/7541)
6. PROVIDE NEMA RECEPTICLE - REFER TO EQUIPMENT SCHEDULE FOR TYPE

	Initials	Date
Designer		
Checker/ Reviewer		
Back-Checker		
Corrector		
Verifier		

DRAFT

NOT FOR CONSTRUCTION

NO.	DATE	REVISION	BY

ORIGINAL PLANS PREPARED BY

HNTB

11414 W. PARK PLACE
MILWAUKEE, WI 53224
(414) 359-2300

PLANS PREPARED FOR

CITY OF MILWAULKEE
DEPARTMENT OF
PUBLIC WORKS

MILWAUKEE STREETCAR OPERATIONS
AND MAINTENANCE FACILITY

90% SUBMISSION | 29 FEB. 2016

DESIGNED BY WM | DESIGN CK'D DW | DRAWN BY KK | PLANS CK'D WM

SHOP LEVEL FLOOR PLAN SECTOR B - POWER/IT/ SECURITY

E101

Graphic Scale: 1 inch = 8 feet

0 8' 16' 24' 32'

B

A

KEY PLAN

NOT FOR CONSTRUCTION

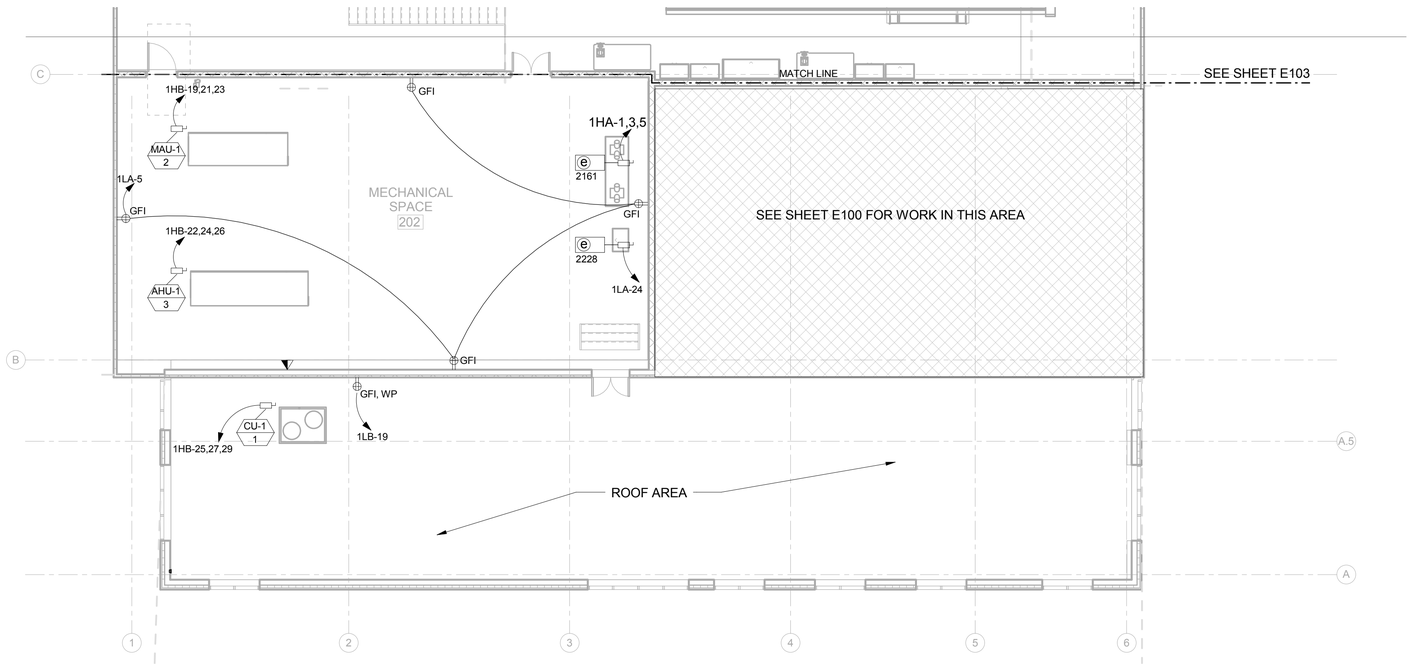

PLATFORM LEVEL PLAN SECTOR A - POWER/IT

1/8" = 1'-0"

N

POWER GENERAL NOTES:

1. SEE E601 & E602 FOR PANEL AND MOTOR SCHEDULES.
2. A #12 GREEN INSULATED GROUND CONDUCTOR SHALL BE INSTALLED WITH CIRCUIT CONDUCTORS TO ALL RECEPTACLES.
3. CONCREAL ALL CONDUIT IN WALLS, PARTITIONS AND ABOVE CEILING, UNLESS OTHERWISE INDICATED ON THE PLANS. CONDUIT IN MECHANICAL ROOMS, AND STORAGE ROOMS WITHOUT CEILINGS MAY EXPOSED ON BUILDING STRUCTURE.
4. BOXES LOCATED ON OPPOSITE SIDES OF NON-RATED WALLS SHALL BE OFFSET A MINIMUM OF 6" HORIZONTALLY. BOXES ON OPPOSITE SIDES OF FIRE RATED WALLS SHALL BE OFFSET A MINIMUM OF 24" HORZONTALLY. "THRU-THE-WALL" BOXES SHALL NOT BE ALLOWED WITHOUT PRIOR WRITTEN APPROVAL OF THE ARCHITECT/ENGINEER.
5. CONTRACTOR SHALL VERIFY ALL FURNITURE AND EQUIPMENT LOCATIONS WITH ARCHITECTURAL AND EQUIPMENT PLANS, ELEVATIONS AND REVIEWED SHOP DRAWINGS. PRIOR TO MAKING THE ACTUAL ELECTRICAL INSTALLATION THIS CONTRACTOR SHALL ADJUST RECEPTACLES, OUTLETS OR CONNECTION LOCATIONS TO ACCOMMODATE FURNITURE AND/OR EQUIPMENT.
6. CONTRACTOR SHALL BE RESPONSIBLE FOR ALL OPENINGS REQURIED IN WALLS. ALL OPENINGS SHALL BE REPAIRED TO MATCH EXISTING BY A QUALIFIED CONTRACTOR AT THE EXPENSE OF THIS CONTRACTOR. ALL CONDUITS THROUGH WALLS SHALL BE GROUTED OR SEALED INTO OPENINGS.
7. THE REINFORCING STEEL OF THE MAIN SHOP FLOOR SHALL BE BONDED INTO A GRID PATTERN AND ALL SHOP CONDUCTIVE SURFACES SHALL BE BONDED TO THE GRID.

IT GENERAL NOTES:

1. CONTRACTOR SHALL COORDINATE ALL WORK WITH WORK BY OTHER TRADES. VERIFY DEVICE MOUNTING HEIGHTS AND LOCATIONS WITH ARCHITECTURAL PLANS AND ELEVATION.
2. CIRCUITS SERVING FIRE ALARM DEVICES WILL BE SHALL BE RUN IN SEPERATE RACEWAY FROM ALL OTHER CIRCUITS
3. CONCREAL ALL CONDUIT IN WALLS, PARTITIONS, AND ABOVE CEILING UNLESS OTHERWISE INDICATED ON THE PLANS. CONDUIT IN MECHANICAL ROOMS, STORAGE ROOMS, AND WITHIN CEILING MAY BE EXPOSED ON BUILDING STRUCTURE.
4. REFER TO SPECIFICATIONS FOR MATERIALS AND METHODS OF CONSTRUCTION.
5. THESE DRAWINGS DEPICT A PERFORMANCE DESIGN ONLY. PROIVDE COMPLETE DOCUMENTS FOR APPROVAL FROM THE AUTHORITY HAVING JURISDICTION. INCLUDE IN THE DRAWINGS ANY ADDITIONAL EQUIPMENT NECESSARY TO COMPLETE THE INSTALLATION AND COMPLY WITH LOCAL CODES AND AMENDMENTS.

NOT FOR CONSTRUCTION

	Initials	Date
Designer		
Checker/ Reviewer		
Back-Checker		
Corrector		
Verifier		

NO.	DATE	REVISION	BY

ORIGINAL PLANS PREPARED BY

HNTB

11414 W. PARK PLACE
MILWAUKEE, WI 53224
(414) 359-2300

PLANS PREPARED FOR

CITY OF MILWAULKEE
DEPARTMENT OF
PUBLIC WORKS

MILWAUKEE STREETCAR OPERATIONS
AND MAINTENANCE FACILITY

90% SUBMISSION | 29 FEB. 2016

DESIGNED BY	WM	DESIGN CK'D	DW	DRAWN BY	KK	PLANS CK'D	WM

PLATFORM LEVEL FLOOR PLAN SECTOR A - POWER/IT/ SECURITY

E102

Graphic Scale: 1 inch = 8 feet

0 8' 16' 24' 32'

B

A

KEY PLAN

DRAFT
NOT FOR CONSTRUCTION

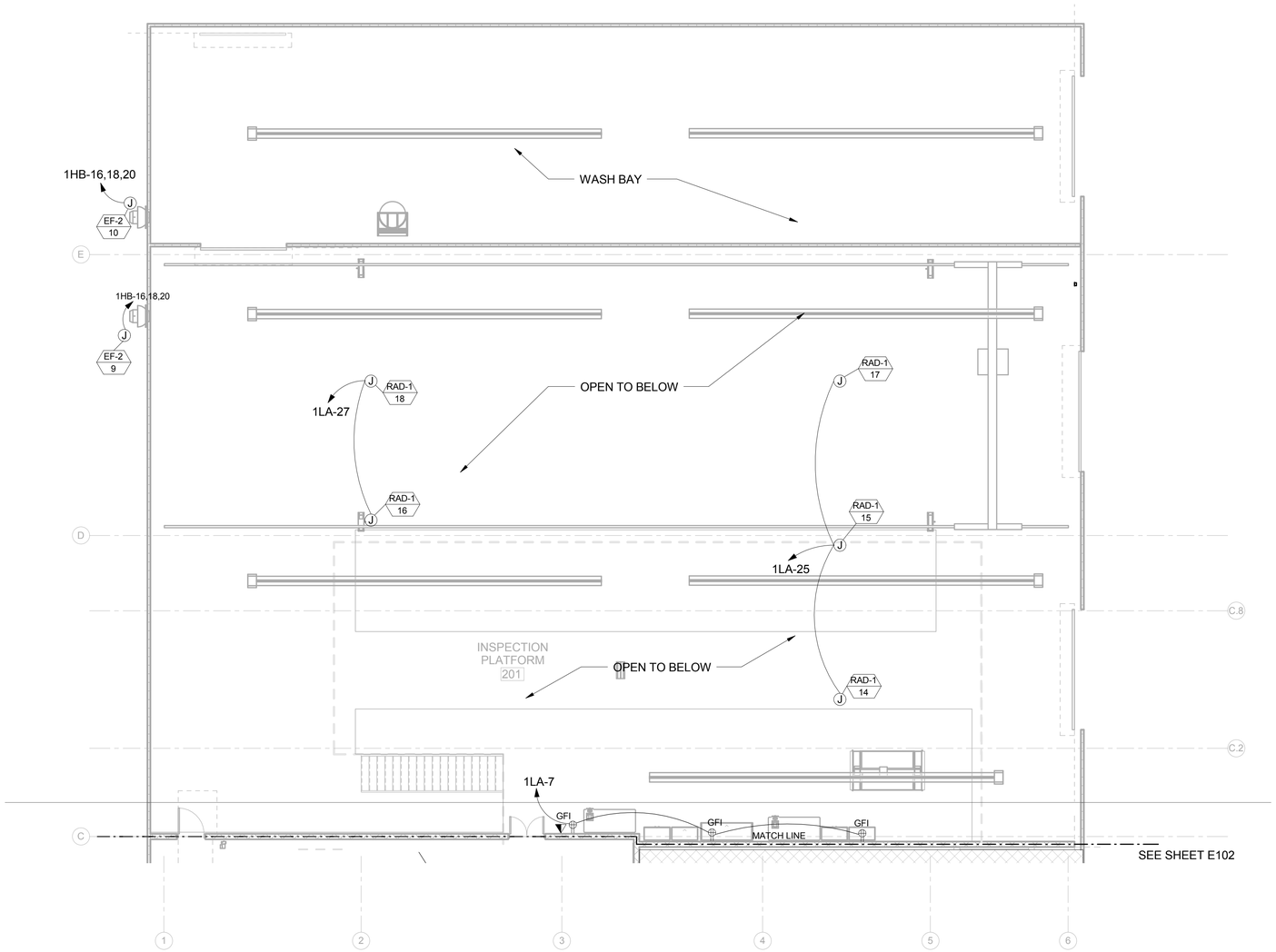

PLATFORM LEVEL PLAN SECTOR B - POWER/IT

1/8" = 1'-0"

N

POWER GENERAL NOTES:

1. SEE E601 & E602 FOR PANEL AND MOTOR SCHEDULES.
2. A #12 GREEN INSULATED GROUND CONDUCTOR SHALL BE INSTALLED WITH CIRCUIT CONDUCTORS TO ALL RECEPTACLES.
3. CONCREAL ALL CONDUIT IN WALLS, PARTITIONS AND ABOVE CEILING, UNLESS OTHERWISE INDICATED ON THE PLANS. CONDUIT IN MECHANICAL ROOMS, AND STORAGE ROOMS WITHOUT CEILINGS MAY EXPOSED ON BUILDING STRUCTURE.
4. BOXES LOCATED ON OPPOSITE SIDES OF NON-RATED WALLS SHALL BE OFFSET A MINIMUM OF 6" HORIZONTALLY. BOXES ON OPPOSITE SIDES OF FIRE RATED WALLS SHALL BE OFFSET A MINIMUM OF 24" HORZONTALLY. "THRU-THE-WALL" BOXES SHALL NOT BE ALLOWED WITHOUT PRIOR WRITTEN APPROVAL OF THE ARCHITECT/ENGINEER.
5. CONTRACTOR SHALL VERIFY ALL FURNITURE AND EQUIPMENT LOCATIONS WITH ARCHITECTURAL AND EQUIPMENT PLANS, ELEVATIONS AND REVIEWED SHOP DRAWINGS. PRIOR TO MAKING THE ACTUAL ELECTRICAL INSTALLATION THIS CONTRACTOR SHALL ADJUST RECEPTACLES, OUTLETS OR CONNECTION LOCATIONS TO ACCOMMODATE FURNITURE AND/OR EQUIPMENT.
6. CONTRACTOR SHALL BE RESPONSIBLE FOR ALL OPENINGS REQURIED IN WALLS. ALL OPENINGS SHALL BE REPAIRED TO MATCH EXISTING BY A QUALIFIED CONTRACTOR AT THE EXPENSE OF THIS CONTRACTOR. ALL CONDUITS THROUGH WALLS SHALL BE GROUTED OR SEALED INTO OPENINGS.
7. THE REINFORCING STEEL OF THE MAIN SHOP FLOOR SHALL BE BONDED INTO A GRID PATTERN AND ALL SHOP CONDUCTIVE SURFACES SHALL BE BONDED TO THE GRID.

IT GENERAL NOTES:

1. CONTRACTOR SHALL COORDINATE ALL WORK WITH WORK BY OTHER TRADES. VERIFY DEVICE MOUNTING HEIGHTS AND LOCATIONS WITH ARCHITECTURAL PLANS AND ELEVATION.
2. CIRCUITS SERVING FIRE ALARM DEVICES WILL BE SHALL BE RUN IN SEPERATE RACEWAY FROM ALL OTHER CIRCUITS
3. CONCREAL ALL CONDUIT IN WALLS, PARTITIONS, AND ABOVE CEILING UNLESS OTHERWISE INDICATED ON THE PLANS. CONDUIT IN MECHANICAL ROOMS, STORAGE ROOMS, AND WITHIN CEILING MAY BE EXPOSED ON BUILDING STRUCTURE.
4. REFER TO SPECIFICATIONS FOR MATERIALS AND METHODS OF CONSTRUCTION.
5. THESE DRAWINGS DEPICT A PERFORMANCE DESIGN ONLY. PROIVDE COMPLETE DOCUMENTS FOR APPROVAL FROM THE AUTHORITY HAVING JURISDICTION. INCLUDE IN THE DRAWINGS ANY ADDITIONAL EQUIPMENT NECESSARY TO COMPLETE THE INSTALLATION AND COMPLY WITH LOCAL CODES AND AMENDMENTS.

NOT FOR CONSTRUCTION

	Initials	Date
Designer		
Checker/ Reviewer		
Back-Checker		
Corrector		
Verifier		

NO.	DATE	REVISION	BY

ORIGINAL PLANS PREPARED BY

HNTB
11414 W. PARK PLACE
MILWAUKEE, WI 53224
(414) 359-2300

PLANS PREPARED FOR

CITY OF MILWAULKEE
DEPARTMENT OF
PUBLIC WORKS

MILWAUKEE STREETCAR OPERATIONS
AND MAINTENANCE FACILITY

90% SUBMISSION		29 FEB. 2016	
DESIGNED BY WM	DESIGN CK'D DW	DRAWN BY KK	PLANS CK'D WM

PLATFORM LEVEL
FLOOR PLAN SECTOR B
- POWER/IT/ SECURITY

E103

Graphic Scale: 1 inch = 8 feet

0 8' 16' 24' 32'

B

A

KEY PLAN

DRAFT
NOT FOR CONSTRUCTION

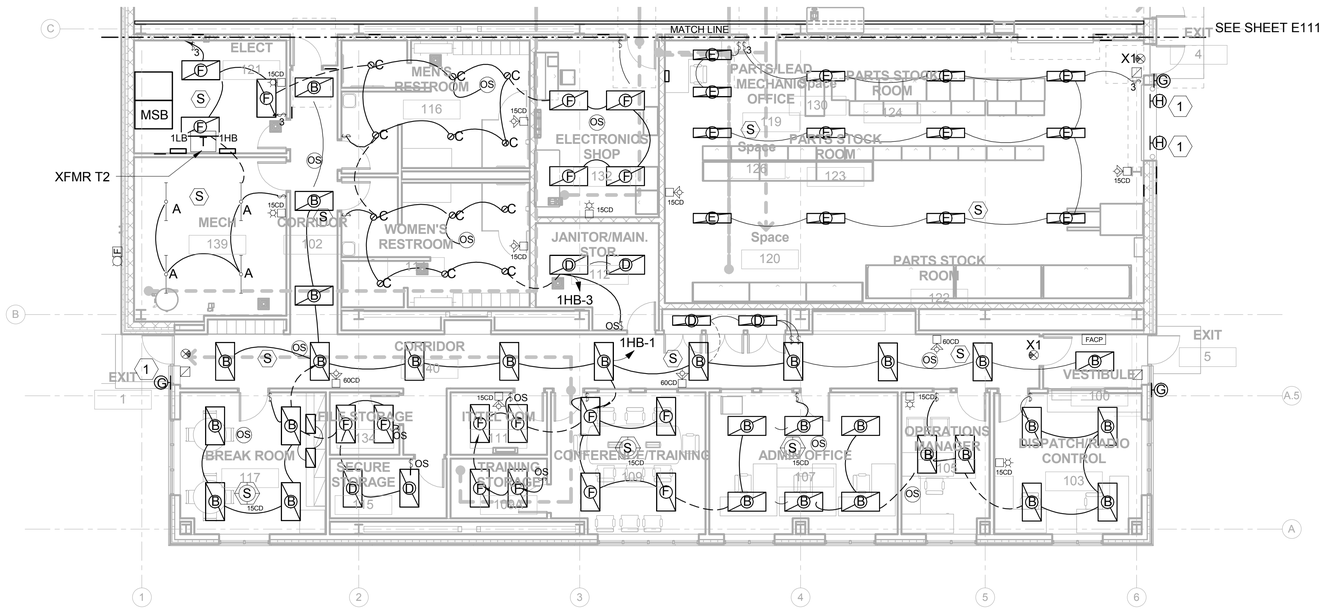

SHOP LEVEL FLOOR PLAN SECTOR A - LIGHTING/FIRE ALARM

1/8" = 1'-0"

LIGHTING GENERAL NOTES:

1. REFER TO E000 FOR ELECTRICAL SYMBOLS, ABBREVIATIONS AND DEVICE MOUNTING HEIGHTS. REFER TO E604 FOR LUMINAIRE HEIGHTS.
2. CONTRACTOR SHALL COORDINATE ALL WORK WITH WORK BY OTHER TRADES. VERIFY MOUNTING HEIGHTS AND LOCATIONS OF ALL LUMINAIRES WITH ARCHITECTURAL PLANS AND ELEVATIONS.
3. CONCREAL ALL CONDUIT IN WALLS, PARTITIONS AND ABOVE CEILINGS. UNLESS OTHERWISE INDICATED ON THE PLANS. CONDUIT IN MECHANICAL ROOMS AND STORAGE ROOMS WITHOUT CEILINGS MAY BE EXPOSED ON BUILDING STRUCTURE.
4. INDUSTRIAL LUMINAIRES IN UNFINISED AREAS, WHICH ARE LOCATED NEAR OBSTRUCTIONS SUCH AS DUCTS AND PIPES SHALL BE SUSPENDED SO THAT BOTTOM OF THE LUMINARE IS HIGHER THAN BOTTOM OF OBSTRUCTION. LUMINAIRES SHALL NOT BE LOCATED UNTIL LOCATION OF OBSTRUCTIONS ARE DETERMINED AND JUNCTION BOXES SHALL BE ACCESSIBLE AFTER INSTALLATION OF OTHER DEVICES.
5. OCCUPANCY SENSOR LAYOUT IS SHOWN FOR INTENT ONLY. CONTRACTOR SHALL INSTALL SENSORS AS RECOMMENDED BY THE SELECTED MANUFACTURER TO ENSURE PROPER COVERAGE. CONTRACTOR IS RESPONSIBLE FOR ADJUSTING LOCATION AND SENSOR SETTINGS, ONCE ALL FURNISHINGS HAVE BEEN INSTALLED, FOR PROPER OPERATION.

FIRE ALARM GENERAL NOTES:

1. CONTRACTOR SHALL COORDINATE ALL WORK WITH WORK BY OTHER TRADES. VERIFY DEVICE MOUNTING HEIGHTS AND LOCATIONS WITH ARCHITECTURAL PLANS AND ELEVATION.
2. CIRCUITS SERVING FIRE ALARM DEVICES WILL BE SHALL BE RUN IN SEPERATE RACEWAY FROM ALL OTHER CIRCUITS
3. CONCREAL ALL CONDUIT IN WALLS, PARTITIONS, AND ABOVE CEILING UNLESS OTHERWISE INDICATED ON THE PLANS. CONDUIT IN MECHANICAL ROOMS, STORAGE ROOMS, AND WITHIN CEILING MAY BE EXPOSED ON BUILDING STRUCTURE.
4. REFER TO SPECIFICATIONS FOR MATERIALS AND METHODS OF CONSTRUCTION.
5. THESE DRAWINGS DEPICT A PERFORMANCE DESIGN ONLY. PROIVDE COMPLETE DOCUMENTS FOR APPROVAL FROM THE AUTHORITY HAVING JURISDICTION. INCLUDE IN THE DRAWINGS ANY ADDITIONAL EQUIPMENT NECESSARY TO COMPLETE THE INSTALLATION AND COMPLY WITH LOCAL CODES AND AMENDMENTS.

KEYED NOTES:

1. MOUNT AT LESS THAN 9'-4" A.F.F.

NOT FOR CONSTRUCTION

	Initials	Date
Designer		
Checker/ Reviewer		
Back-Checker		
Corrector		
Verifier		

Graphic Scale: 1 inch = 8 feet

0 8' 16' 24' 32'

B

A

KEY PLAN

NO.	DATE	REVISION	BY

ORIGINAL PLANS PREPARED BY

HNTB

11414 W. PARK PLACE
MILWAUKEE, WI 53224
(414) 359-2300

PLANS PREPARED FOR

CITY OF MILWAULKEE
DEPARTMENT OF
PUBLIC WORKS

MILWAUKEE STREETCAR OPERATIONS AND MAINTENANCE FACILITY

90% SUBMISSION | 29 FEB. 2016

DESIGNED BY WM | DESIGN CK'D DW | DRAWN BY KK | PLANS CK'D WM

SHOP LEVEL FLOOR PLAN SECTOR A - LIGHTING/FIRE ALARM

E110

DRAFT
NOT FOR CONSTRUCTION

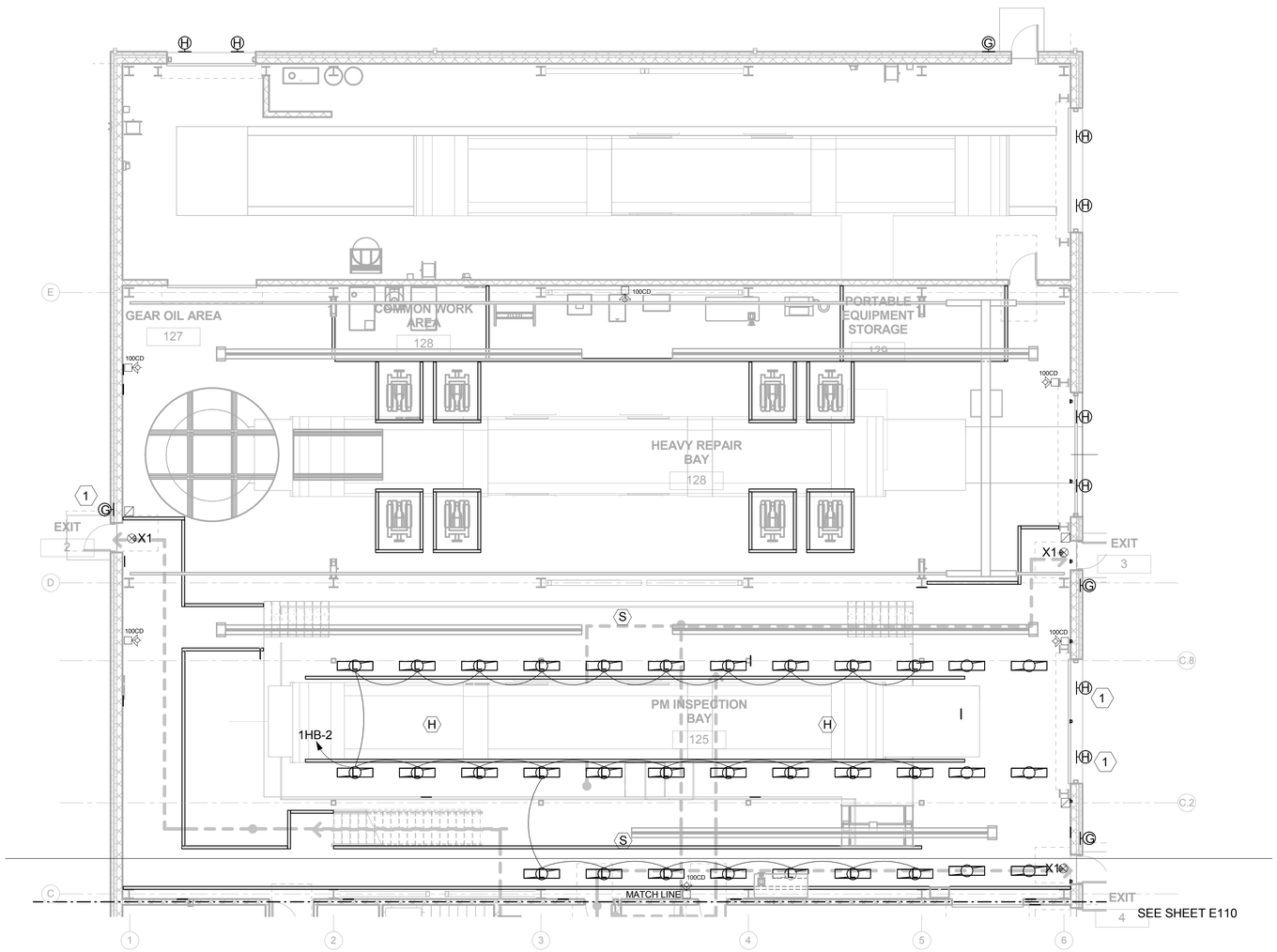

SHOP LEVEL FLOOR PLAN SECTOR B - LIGHTING/FIRE ALARM

1/8" = 1'-0"

N

LIGHTING GENERAL NOTES:

1. REFER TO E000 FOR ELECTRICAL SYMBOLS, ABBREVIATIONS AND DEVICE MOUNTING HEIGHTS. REFER TO E604 FOR LUMINAIRE HEIGHTS.
2. CONTRACTOR SHALL COORDINATE ALL WORK WITH WORK BY OTHER TRADES. VERIFY MOUNTING HEIGHTS AND LOCATIONS OF ALL LUMINAIRES WITH ARCHITECTURAL PLANS AND ELEVATIONS.
3. CONCREAL ALL CONDUIT IN WALLS, PARTITIONS AND ABOVE CEILINGS. UNLESS OTHERWISE INDICATED ON THE PLANS. CONDUIT IN MECHANICAL ROOMS AND STORAGE ROOMS WITHOUT CEILINGS MAY BE EXPOSED ON BUILDING STRUCTURE.
4. INDUSTRIAL LUMINAIRES IN UNFINISED AREAS, WHICH ARE LOCATED NEAR OBSTRUCTIONS SUCH AS DUCTS AND PIPES SHALL BE SUSPENDED SO THAT BOTTOM OF THE LUMINARE IS HIGHER THAN BOTTOM OF OBSTRUCTION. LUMINAIRES SHALL NOT BE LOCATED UNTIL LOCATION OF OBSTRUCTIONS ARE DETERMINED AND JUNCTION BOXES SHALL BE ACCESSIBLE AFTER INSTALLATION OF OTHER DEVICES.
5. OCCUPANCY SENSOR LAYOUT IS SHOWN FOR INTENT ONLY. CONTRACTOR SHALL INSTALL SENSORS AS RECOMMENDED BY THE SELECTED MANUFACTURER TO ENSURE PROPER COVERAGE. CONTRACTOR IS RESPONSIBLE FOR ADJUSTING LOCATION AND SENSOR SETTINGS, ONCE ALL FURNISHINGS HAVE BEEN INSTALLED, FOR PROPER OPERATION.

FIRE ALARM GENERAL NOTES:

1. CONTRACTOR SHALL COORDINATE ALL WORK WITH WORK BY OTHER TRADES. VERIFY DEVICE MOUNTING HEIGHTS AND LOCATIONS WITH ARCHITECTURAL PLANS AND ELEVATION.
2. CIRCUITS SERVING FIRE ALARM DEVICES WILL BE SHALL BE RUN IN SEPERATE RACEWAY FROM ALL OTHER CIRCUITS
3. CONCREAL ALL CONDUIT IN WALLS, PARTITIONS, AND ABOVE CEILING UNLESS OTHERWISE INDICATED ON THE PLANS. CONDUIT IN MECHANICAL ROOMS, STORAGE ROOMS, AND WITHIN CEILING MAY BE EXPOSED ON BUILDING STRUCTURE.
4. REFER TO SPECIFICATIONS FOR MATERIALS AND METHODS OF CONSTRUCTION.
5. THESE DRAWINGS DEPICT A PERFORMANCE DESIGN ONLY. PROIVDE COMPLETE DOCUMENTS FOR APPROVAL FROM THE AUTHORITY HAVING JURISDICTION. INCLUDE IN THE DRAWINGS ANY ADDITIONAL EQUIPMENT NECESSARY TO COMPLETE THE INSTALLATION AND COMPLY WITH LOCAL CODES AND AMENDMENTS.

KEYED NOTES:

1. MOUNT AT LESS THAN 9'-4" A.F.F.

NOT FOR CONSTRUCTION

	Initials	Date
Designer		
Checker/ Reviewer		
Back-Checker		
Corrector		
Verifier		

NO.	DATE	REVISION	BY

ORIGINAL PLANS PREPARED BY

HNTB

11414 W. PARK PLACE
MILWAUKEE, WI 53224
(414) 359-2300

PLANS PREPARED FOR

CITY OF MILWAULKEE
DEPARTMENT OF
PUBLIC WORKS

MILWAUKEE STREETCAR OPERATIONS
AND MAINTENANCE FACILITY

90% SUBMISSION		29 FEB. 2016	
DESIGNED BY WM	DESIGN CK'D DW	DRAWN BY KK	PLANS CK'D WM

SHOP LEVEL FLOOR PLAN SECTOR B - LIGHTING/FIRE ALARM

E111

Graphic Scale: 1 inch = 8 feet

0 8' 16' 24' 32'

B

A

KEY PLAN

DRAFT
NOT FOR CONSTRUCTION

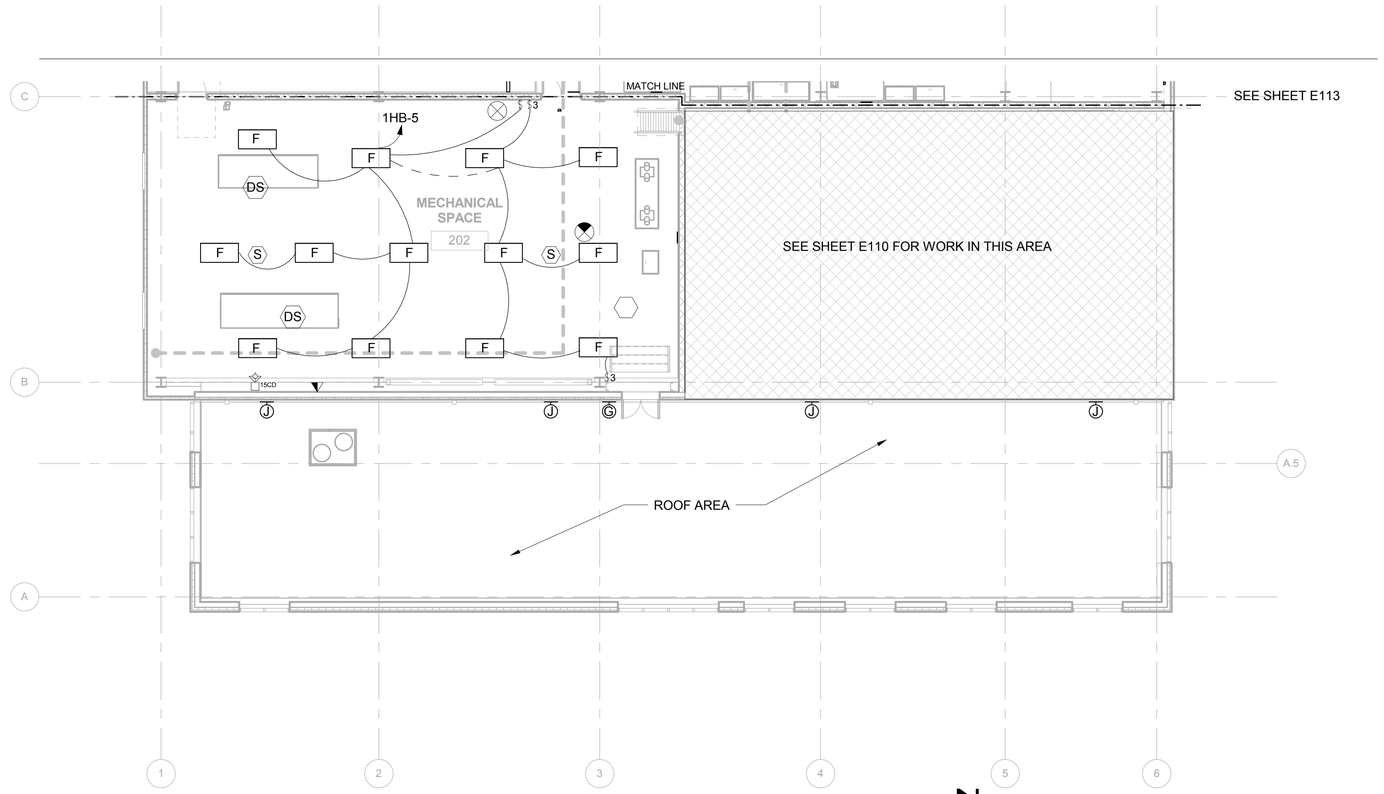

PLATFORM LEVEL FLOOR PLAN SECTOR A - LIGHTING/FIRE ALARM

1/8" = 1'-0"

N

LIGHTING GENERAL NOTES:

1. REFER TO E000 FOR ELECTRICAL SYMBOLS, ABBREVIATIONS AND DEVICE MOUNTING HEIGHTS. REFER TO E604 FOR LUMINAIRE HEIGHTS.
2. CONTRACTOR SHALL COORDINATE ALL WORK WITH WORK BY OTHER TRADES. VERIFY MOUNTING HEIGHTS AND LOCATIONS OF ALL LUMINAIRES WITH ARCHITECTURAL PLANS AND ELEVATIONS.
3. CONCREAL ALL CONDUIT IN WALLS, PARTITIONS AND ABOVE CEILINGS. UNLESS OTHERWISE INDICATED ON THE PLANS. CONDUIT IN MECHANICAL ROOMS AND STORAGE ROOMS WITHOUT CEILINGS MAY BE EXPOSED ON BUILDING STRUCTURE.
4. INDUSTRIAL LUMINAIRES IN UNFINISED AREAS, WHICH ARE LOCATED NEAR OBSTRUCTIONS SUCH AS DUCTS AND PIPES SHALL BE SUSPENDED SO THAT BOTTOM OF THE LUMINARE IS HIGHER THAN BOTTOM OF OBSTRUCTION. LUMINAIRES SHALL NOT BE LOCATED UNTIL LOCATION OF OBSTRUCTIONS ARE DETERMINED AND JUNCTION BOXES SHALL BE ACCESSIBLE AFTER INSTALLATION OF OTHER DEVICES.
5. OCCUPANCY SENSOR LAYOUT IS SHOWN FOR INTENT ONLY. CONTRACTOR SHALL INSTALL SENSORS AS RECOMMENDED BY THE SELECTED MANUFACTURER TO ENSURE PROPER COVERAGE. CONTRACTOR IS RESPONSIBLE FOR ADJUSTING LOCATION AND SENSOR SETTINGS, ONCE ALL FURNISHINGS HAVE BEEN INSTALLED, FOR PROPER OPERATION.

FIRE ALARM GENERAL NOTES:

1. CONTRACTOR SHALL COORDINATE ALL WORK WITH WORK BY OTHER TRADES. VERIFY DEVICE MOUNTING HEIGHTS AND LOCATIONS WITH ARCHITECTURAL PLANS AND ELEVATION.
2. CIRCUITS SERVING FIRE ALARM DEVICES WILL BE SHALL BE RUN IN SEPERATE RACEWAY FROM ALL OTHER CIRCUITS
3. CONCREAL ALL CONDUIT IN WALLS, PARTITIONS, AND ABOVE CEILING UNLESS OTHERWISE INDICATED ON THE PLANS. CONDUIT IN MECHANICAL ROOMS, STORAGE ROOMS, AND WITHIN CEILING MAY BE EXPOSED ON BUILDING STRUCTURE.
4. REFER TO SPECIFICATIONS FOR MATERIALS AND METHODS OF CONSTRUCTION.
5. THESE DRAWINGS DEPICT A PERFORMANCE DESIGN ONLY. PROIVDE COMPLETE DOCUMENTS FOR APPROVAL FROM THE AUTHORITY HAVING JURISDICTION. INCLUDE IN THE DRAWINGS ANY ADDITIONAL EQUIPMENT NECESSARY TO COMPLETE THE INSTALLATION AND COMPLY WITH LOCAL CODES AND AMENDMENTS.

NOT FOR CONSTRUCTION

	Initials	Date
Designer		
Checker/ Reviewer		
Back-Checker		
Corrector		
Verifier		

NO.	DATE	REVISION	BY

ORIGINAL PLANS PREPARED BY

HNTB

11414 W. PARK PLACE
MILWAUKEE, WI 53224
(414) 359-2300

PLANS PREPARED FOR

CITY OF MILWAULKEE
DEPARTMENT OF
PUBLIC WORKS

MILWAUKEE STREETCAR OPERATIONS
AND MAINTENANCE FACILITY

90% SUBMISSION | 29 FEB. 2016

DESIGNED BY	WM	DESIGN CK'D	DW	DRAWN BY	KK	PLANS CK'D	WM

PLATFORM LEVEL FLOOR PLAN SECTOR A - LIGHTING/FIRE ALARM

E112

Graphic Scale: 1 inch = 8 feet

0 8' 16' 24' 32'

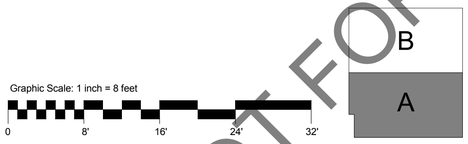

KEY PLAN

DRAFT
NOT FOR CONSTRUCTION

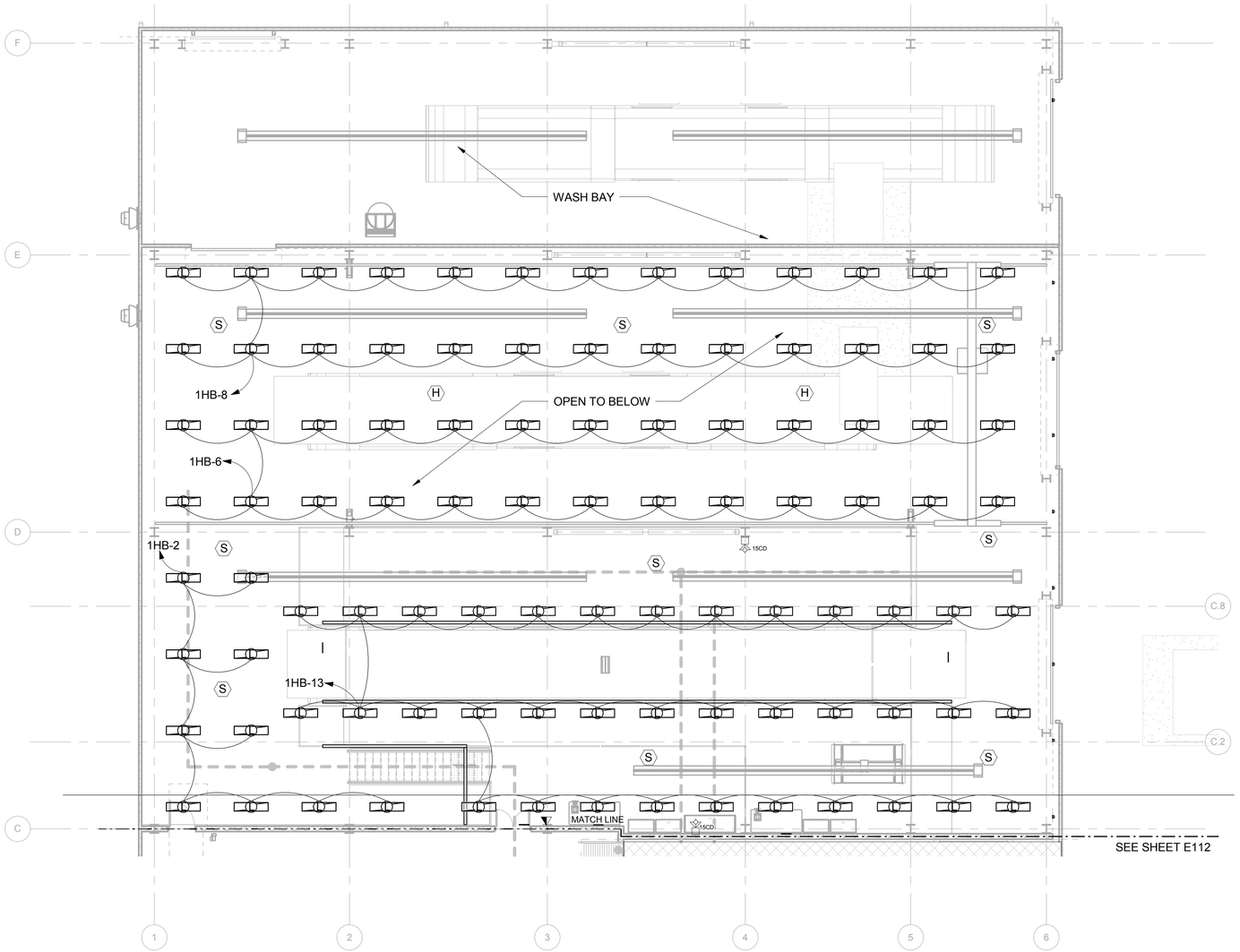

PLATFORM LEVEL FLOOR PLAN SECTOR B - LIGHTING/FIRE ALARM

1/8" = 1'-0"

N

Graphic Scale: 1 inch = 8 feet

0 8' 16' 24' 32'

LIGHTING GENERAL NOTES:

1. REFER TO E000 FOR ELECTRICAL SYMBOLS, ABBREVIATIONS AND DEVICE MOUNTING HEIGHTS. REFER TO E604 FOR LUMINAIRE HEIGHTS.
2. CONTRACTOR SHALL COORDINATE ALL WORK WITH WORK BY OTHER TRADES. VERIFY MOUNTING HEIGHTS AND LOCATIONS OF ALL LUMINAIRES WITH ARCHITECTURAL PLANS AND ELEVATIONS.
3. CONCREAL ALL CONDUIT IN WALLS, PARTITIONS AND ABOVE CEILINGS. UNLESS OTHERWISE INDICATED ON THE PLANS. CONDUIT IN MECHANICAL ROOMS AND STORAGE ROOMS WITHOUT CEILINGS MAY BE EXPOSED ON BUILDING STRUCTURE.
4. INDUSTRIAL LUMINAIRES IN UNFINISED AREAS, WHICH ARE LOCATED NEAR OBSTRUCTIONS SUCH AS DUCTS AND PIPES SHALL BE SUSPENDED SO THAT BOTTOM OF THE LUMINARE IS HIGHER THAN BOTTOM OF OBSTRUCTION. LUMINAIRES SHALL NOT BE LOCATED UNTIL LOCATION OF OBSTRUCTIONS ARE DETERMINED AND JUNCTION BOXES SHALL BE ACCESSIBLE AFTER INSTALLATION OF OTHER DEVICES.
5. OCCUPANCY SENSOR LAYOUT IS SHOWN FOR INTENT ONLY. CONTRACTOR SHALL INSTALL SENSORS AS RECOMMENDED BY THE SELECTED MANUFACTURER TO ENSURE PROPER COVERAGE. CONTRACTOR IS RESPONSIBLE FOR ADJUSTING LOCATION AND SENSOR SETTINGS, ONCE ALL FURNISHINGS HAVE BEEN INSTALLED, FOR PROPER OPERATION.

FIRE ALARM GENERAL NOTES:

1. CONTRACTOR SHALL COORDINATE ALL WORK WITH WORK BY OTHER TRADES. VERIFY DEVICE MOUNTING HEIGHTS AND LOCATIONS WITH ARCHITECTURAL PLANS AND ELEVATION.
2. CIRCUITS SERVING FIRE ALARM DEVICES WILL BE SHALL BE RUN IN SEPERATE RACEWAY FROM ALL OTHER CIRCUITS
3. CONCREAL ALL CONDUIT IN WALLS, PARTITIONS, AND ABOVE CEILING UNLESS OTHERWISE INDICATED ON THE PLANS. CONDUIT IN MECHANICAL ROOMS, STORAGE ROOMS, AND WITHIN CEILING MAY BE EXPOSED ON BUILDING STRUCTURE.
4. REFER TO SPECIFICATIONS FOR MATERIALS AND METHODS OF CONSTRUCTION.
5. THESE DRAWINGS DEPICT A PERFORMANCE DESIGN ONLY. PROIVDE COMPLETE DOCUMENTS FOR APPROVAL FROM THE AUTHORITY HAVING JURISDICTION. INCLUDE IN THE DRAWINGS ANY ADDITIONAL EQUIPMENT NECESSARY TO COMPLETE THE INSTALLATION AND COMPLY WITH LOCAL CODES AND AMENDMENTS.

NOT FOR CONSTRUCTION

	Initials	Date
Designer		
Checker/ Reviewer		
Back-Checker		
Corrector		
Verifier		

NO.	DATE	REVISION	BY

ORIGINAL PLANS PREPARED BY

HNTB

11414 W. PARK PLACE
MILWAUKEE, WI 53224
(414) 359-2300

PLANS PREPARED FOR

CITY OF MILWAULKEE
DEPARTMENT OF
PUBLIC WORKS

MILWAUKEE STREETCAR OPERATIONS
AND MAINTENANCE FACILITY

90% SUBMISSION		29 FEB. 2016	
DESIGNED BY WM	DESIGN CK'D DW	DRAWN BY KK	PLANS CK'D WM

PLATFORM LEVEL FLOOR PLAN SECTOR B - LIGHTING/FIRE

E113

B

A

KEY PLAN

DRAFT
NOT FOR CONSTRUCTION

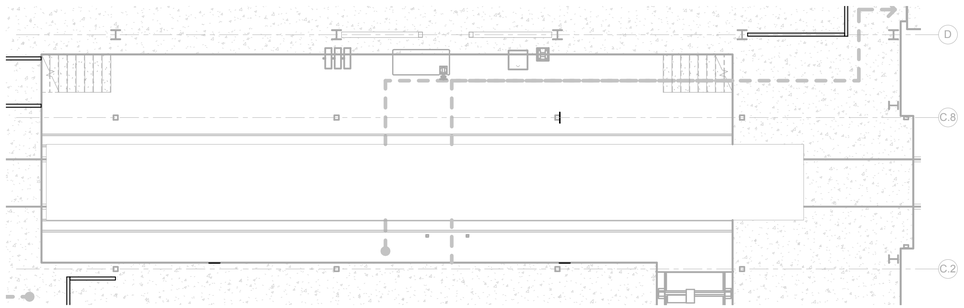

1 PIT LEVEL FLOOR PLAN SECTOR B - LIGHTING/FIRE ALARM
1/8" = 1'-0"

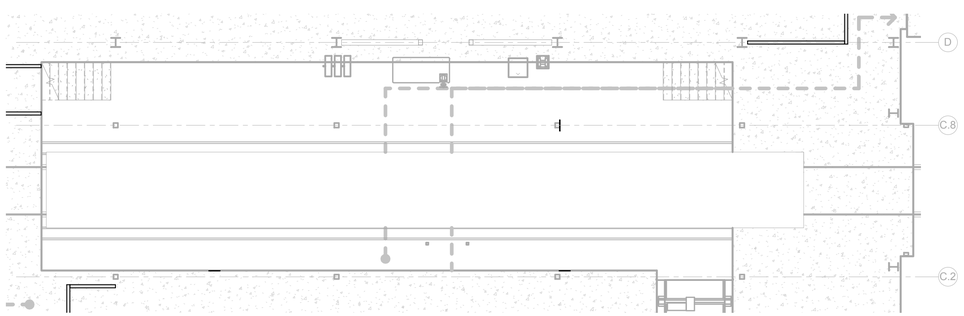

2 PIT LEVEL FLOOR PLAN SECTOR B - POWER
1/8" = 1'-0"

LIGHTING GENERAL NOTES:

1. REFER TO E000 FOR ELECTRICAL SYMBOLS, ABBREVIATIONS AND DEVICE MOUNTING HEIGHTS. REFER TO E604 FOR LUMINAIRE HEIGHTS.
2. CONTRACTOR SHALL COORDINATE ALL WORK WITH WORK BY OTHER TRADES. VERIFY MOUNTING HEIGHTS AND LOCATIONS OF ALL LUMINAIRES WITH ARCHITECTURAL PLANS AND ELEVATIONS.
3. CONCREAL ALL CONDUIT IN WALLS, PARTITIONS AND ABOVE CEILINGS. UNLESS OTHERWISE INDICATED ON THE PLANS. CONDUIT IN MECHANICAL ROOMS AND STORAGE ROOMS WITHOUT CEILINGS MAY BE EXPOSED ON BUILDING STRUCTURE.
4. INDUSTRIAL LUMINAIRES IN UNFINISED AREAS, WHICH ARE LOCATED NEAR OBSTRUCTIONS SUCH AS DUCTS AND PIPES SHALL BE SUSPENDED SO THAT BOTTOM OF THE LUMINARE IS HIGHER THAN BOTTOM OF OBSTRUCTION. LUMINAIRES SHALL NOT BE LOCATED UNTIL LOCATION OF OBSTRUCTIONS ARE DETERMINED AND JUNCTION BOXES SHALL BE ACCESSIBLE AFTER INSTALLATION OF OTHER DEVICES.
5. OCCUPANCY SENSOR LAYOUT IS SHOWN FOR INTENT ONLY. CONTRACTOR SHALL INSTALL SENSORS AS RECOMMENDED BY THE SELECTED MANUFACTURER TO ENSURE PROPER COVERAGE. CONTRACTOR IS RESPONSIBLE FOR ADJUSTING LOCATION AND SENSOR SETTINGS, ONCE ALL FURNISHINGS HAVE BEEN INSTALLED, FOR PROPER OPERATION.

FIRE ALARM GENERAL NOTES:

1. CONTRACTOR SHALL COORDINATE ALL WORK WITH WORK BY OTHER TRADES. VERIFY DEVICE MOUNTING HEIGHTS AND LOCATIONS WITH ARCHITECTURAL PLANS AND ELEVATION.
2. CIRCUITS SERVING FIRE ALARM DEVICES WILL BE SHALL BE RUN IN SEPERATE RACEWAY FROM ALL OTHER CIRCUITS
3. CONCREAL ALL CONDUIT IN WALLS, PARTITIONS, AND ABOVE CEILING UNLESS OTHERWISE INDICATED ON THE PLANS. CONDUIT IN MECHANICAL ROOMS, STORAGE ROOMS, AND WITHIN CEILING MAY BE EXPOSED ON BUILDING STRUCTURE.
4. REFER TO SPECIFICATIONS FOR MATERIALS AND METHODS OF CONSTRUCTION.
5. THESE DRAWINGS DEPICT A PERFORMANCE DESIGN ONLY. PROIVDE COMPLETE DOCUMENTS FOR APPROVAL FROM THE AUTHORITY HAVING JURISDICTION. INCLUDE IN THE DRAWINGS ANY ADDITIONAL EQUIPMENT NECESSARY TO COMPLETE THE INSTALLATION AND COMPLY WITH LOCAL CODES AND AMENDMENTS.

POWER GENERAL NOTES:

1. SEE E601 & E602 FOR PANEL AND MOTOR SCHEDULES.
2. A #12 GREEN INSULATED GROUND CONDUCTOR SHALL BE INSTALLED WITH CIRCUIT CONDUCTORS TO ALL RECEPTACLES.
3. CONCREAL ALL CONDUIT IN WALLS, PARTITIONS AND ABOVE CEILING, UNLESS OTHERWISE INDICATED ON THE PLANS. CONDUIT IN MECHANICAL ROOMS, AND STORAGE ROOMS WITHOUT CEILINGS MAY EXPOSED ON BUILDING STRUCTURE.
4. BOXES LOCATED ON OPPOSITE SIDES OF NON-RATED WALLS SHALL BE OFFSET A MINIMUM OF 6" HORIZONTALLY. BOXES ON OPPOSITE SIDES OF FIRE RATED WALLS SHALL BE OFFSET A MINIMUM OF 24" HORZONTALLY. "THRU-THE-WALL" BOXES SHALL NOT BE ALLOWED WITHOUT PRIOR WRITTEN APPROVAL OF THE ARCHITECT/ENGINEER.
5. CONTRACTOR SHALL VERIFY ALL FURNITURE AND EQUIPMENT LOCATIONS WITH ARCHITECTURAL AND EQUIPMENT PLANS, ELEVATIONS AND REVIEWED SHOP DRAWINGS. PRIOR TO MAKING THE ACTUAL ELECTRICAL INSTALLATION THIS CONTRACTOR SHALL ADJUST RECEPTACLES, OUTLETS OR CONNECTION LOCATIONS TO ACCOMMODATE FURNITURE AND/OR EQUIPMENT.
6. CONTRACTOR SHALL BE RESPONSIBLE FOR ALL OPENINGS REQURIED IN WALLS. ALL OPENINGS SHALL BE REPAIRED TO MATCH EXISTING BY A QUALIFIED CONTRACTOR AT THE EXPENSE OF THIS CONTRACTOR. ALL CONDUITS THROUGH WALLS SHALL BE GROUTED OR SEALED INTO OPENINGS.
7. THE REINFORCING STEEL OF THE MAIN SHOP FLOOR SHALL BE BONDED INTO A GRID PATTERN AND ALL SHOP CONDUCTIVE SURFACES SHALL BE BONDED TO THE GRID.

IT GENERAL NOTES:

1. CONTRACTOR SHALL COORDINATE ALL WORK WITH WORK BY OTHER TRADES. VERIFY DEVICE MOUNTING HEIGHTS AND LOCATIONS WITH ARCHITECTURAL PLANS AND ELEVATION.
2. CIRCUITS SERVING FIRE ALARM DEVICES WILL BE SHALL BE RUN IN SEPERATE RACEWAY FROM ALL OTHER CIRCUITS
3. CONCREAL ALL CONDUIT IN WALLS, PARTITIONS, AND ABOVE CEILING UNLESS OTHERWISE INDICATED ON THE PLANS. CONDUIT IN MECHANICAL ROOMS, STORAGE ROOMS, AND WITHIN CEILING MAY BE EXPOSED ON BUILDING STRUCTURE.
4. REFER TO SPECIFICATIONS FOR MATERIALS AND METHODS OF CONSTRUCTION.
5. THESE DRAWINGS DEPICT A PERFORMANCE DESIGN ONLY. PROIVDE COMPLETE DOCUMENTS FOR APPROVAL FROM THE AUTHORITY HAVING JURISDICTION. INCLUDE IN THE DRAWINGS ANY ADDITIONAL EQUIPMENT NECESSARY TO COMPLETE THE INSTALLATION AND COMPLY WITH LOCAL CODES AND AMENDMENTS.

	Initials	Date
Designer		
Checker/ Reviewer		
Back-Checker		
Corrector		
Verifier		

NOT FOR CONSTRUCTION

NO.	DATE	REVISION	BY

ORIGINAL PLANS PREPARED BY

HNTB
11414 W. PARK PLACE
MILWAUKEE, WI 53224
(414) 359-2300

PLANS PREPARED FOR

CITY OF MILWAULKEE
DEPARTMENT OF
PUBLIC WORKS

MILWAUKEE STREETCAR OPERATIONS
AND MAINTENANCE FACILITY

90% SUBMISSION		29 FEB. 2016	
DESIGNED BY DW	DESIGN CK'D DW	DRAWN BY Author	PLANS CK'D DW

PIT LEVEL FLOOR PLAN

E114

DRAFT
NOT FOR CONSTRUCTION

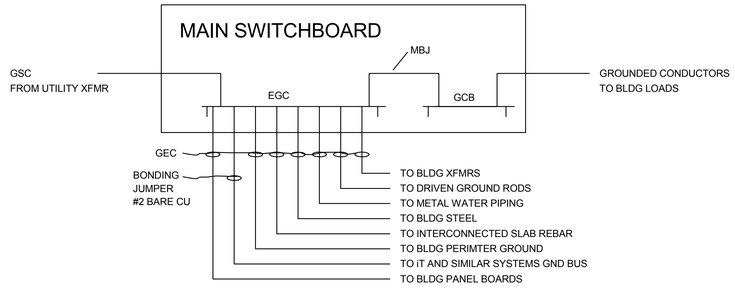

EGC - EQUIPMENT GROUNDING BUS
GCB - GROUNDED CONDUCTOR BUS
GEC - GROUNDING ELECTRODE CONDUCTOR
GSC - GROUNDED SERVICE CONDUCTOR
MBJ - MAIN BONDING JUMPER

6 ONE-LINE GROUNDING DIAGRAM
NOT TO SCALE

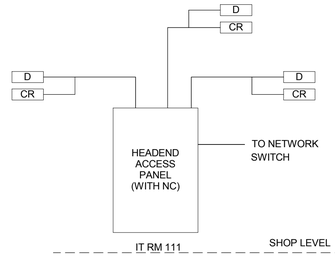

1 BUILDING ACCESS CONTROL RISER DIAGRAM
SCALE: NONE

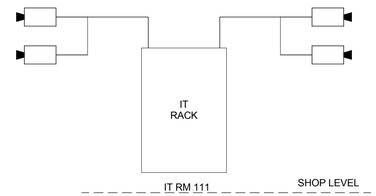

2 BUILDING CAMERA RISER DIAGRAM
SCALE: NONE

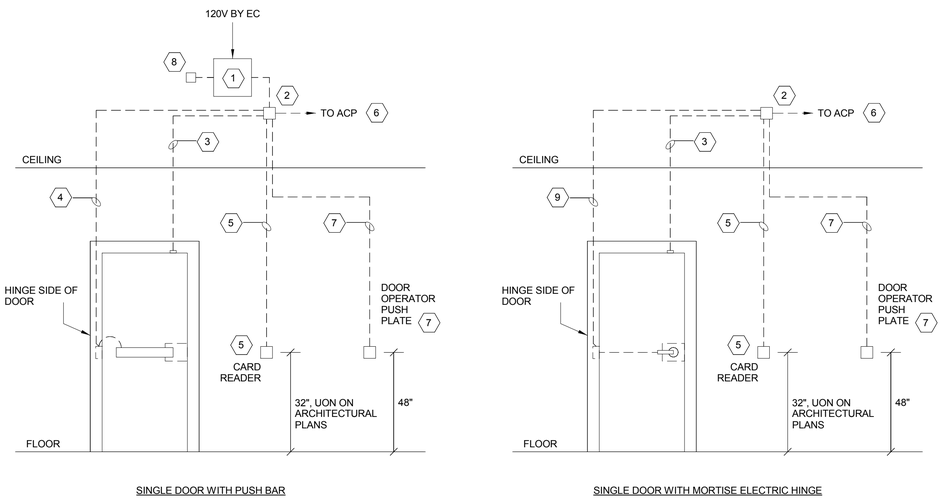

3 CONDUIT CONFIGURATION FOR DOOR ACCESS CONTROL, TYPICAL
SCALE: NONE

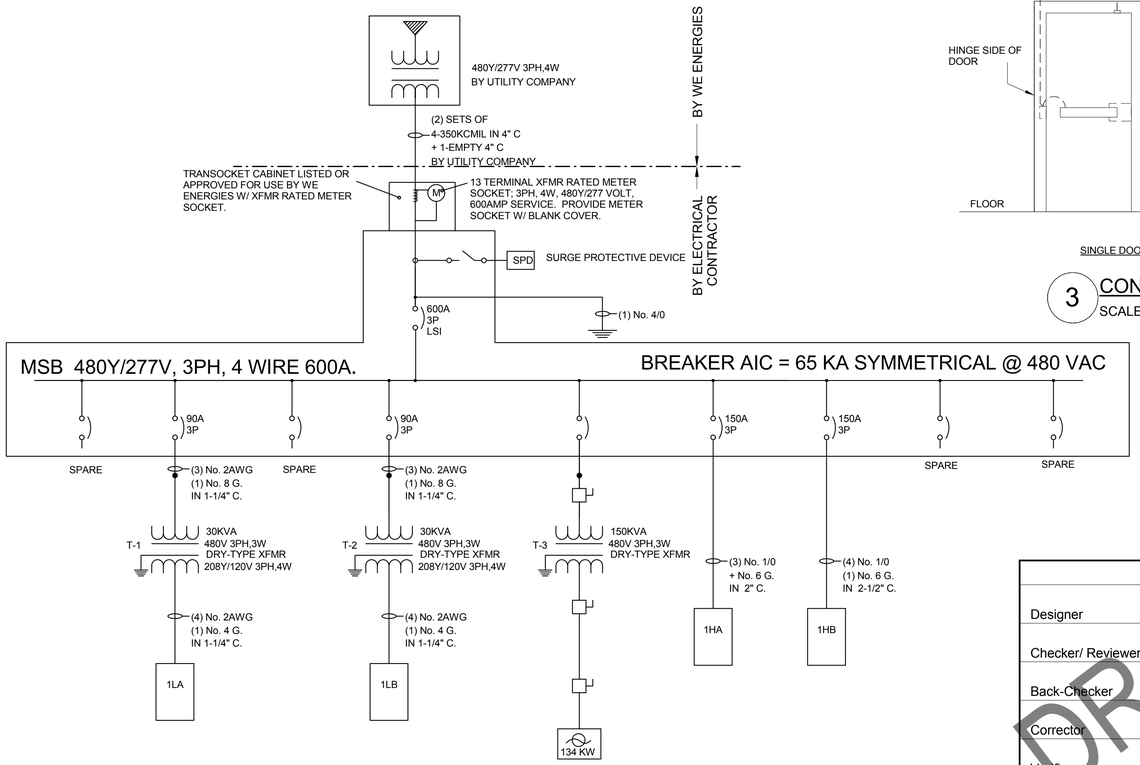

5 ONE-LINE POWER DIAGRAM
NOT TO SCALE

	Initials	Date
Designer		
Checker/ Reviewer		
Back-Checker		
Corrector		
Verifier		

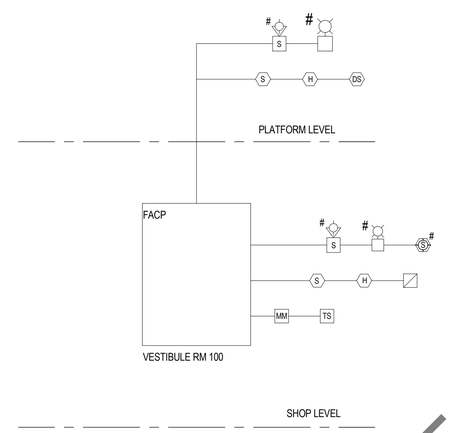

4 BUILDING FIRE ALARM RISER DIAGRAM
SCALE: NONE

DETAIL SHEET GENERAL NOTES

1. COORDINATE ALL WORK WITH ALL DISCIPLINES.
2. SEE Q000 FOR SYMBOLS AND ABBREVIATIONS.
3. ALL TELECOMMUNICATION HORIZONTAL STATION CABLES WITHIN FLETCHER HALL SHALL BE PLENUM RATED.
4. TELECOMMUNICATION CONTRACTOR SHALL MAINTAIN A SEPARATION OF 208/120V WIRING AND TELECOMMUNICATION WIRING IN ACCORDANCE WITH THE NEC AND TIA.
5. REFER TO DETAIL 1 SHEET Q502 FOR INFORMATION TECHNOLOGY RESPONSIBILITY COORDINATION MATRIX.
6. DETAILS SHOWN ON THIS SHEET ARE FOR DIAGRAMATIC PURPOSES. ACTUAL SIZES, TYPES, LOCATIONS, ETC OF EQUIPMENTS AND CONDUITS SHALL BE FIELD VERIFIED BY IT CONTRACTOR AND COORDINATED WITH LEAD CONTRACTOR.

KEYED NOTES (#)

1. LOW VOLTAGE POWER SUPPLY WITH 3/4-INCH CONDUIT TO JUNCTION BOX FOR POWER TO ELECTRIC LOCK. EACH POWER SUPPLY SHALL CONNECT UP TO (4) PANIC DEVICES. MAXIMUM DISTANCE FROM POWER SUPPLY TO PANIC DEVICE NOT TO EXCEED 100-FEET. SHALL BE LOCATED ON SECURE SIDE OF DOOR. COORDINATE FINAL INSTALLATION LOCATION WITH LEAD CONTRACTOR.
2. 4-INCH SQUARE (MIN) SURFACE JUNCTION BOX WITH BLANK COVER OVER DOOR, ABOVE ACCESIBLE CEILING. SHALL BE LOCATED ON SECURE SIDE OF DOOR.
3. 3/4-INCH CONDUIT STUBBED TO DOOR FRAME FOR DOOR POSITION SWITCH.
4. 3/4-INCH CONDUIT TO POWER TRANSFER IN DOOR FRAME FOR WIRING HARNESS (BY DOOR HARDWARE CONTRACTOR). PUSH BAR SHALL HAVE REX AND LATCH BOLT INTERNALLY INSTALED.
5. 4-INCH SQUARE (MIN) JUNCTION BOX ON UNSECURED SIDE OF DOOR FOR CARD READER, WITH 3/4" CONDUIT TO JUNCTION BOX ABOVE ACCESIBLE CEILING, UNLESS NO CARD READER IS REQUIRED AS SHOWN IN DETAIL 1 OF THIS SHEET.
6. 1-INCH CONDUIT (MIN) TO ACP.
7. A SET OF (2) 4-INCH SQUARE (MIN) JUNCTION BOXES FOR AUTOMATIC DOOR OPERATOR PUSH PADDLE. ONE LOCATED ON UNSECURED SIDE OF DOOR AND THE OTHER ON SECURED SIDE OF DOOR, WITH 3/4-INCH CONDUIT TO JUNCTION BOX ABOVE ACCESIBLE CEILING. SEE RISERS IN DETAILS 1 AND 2 OF THIS SHEET FOR DOORS REQUIRING PUSH PADDLES.
8. FIRE ALARM CONTROL MODULE BY DIVISION 26 TO UNLOCK LATCH UPON FIRE ALARM OR BY INPUT FROM FIRE ALARM MANUAL SWITCH IN FIRE COMMAND CENTER. LOCATE ABOVE CEILING ON SECURED SIDE OF DOOR, UNLESS OTHERWISE NOTED. FOR EDS-4,1, EDS-8,1 AND EDS-14,1, FIRE ALARM CONTROL MODULES SHALL BE LOCATED AT THE CONTROL PANEL WHICH FEEDS THESE EDS.
9. 3/4-INCH CONDUIT FROM FEED-THROUGH ELECTRIC HINGE IN DOOR FRAME FOR WIRING HARNESS (BY DOOR HARDWARE CONTRACTOR) TO MORTISE LOCK TO JUNCTION BOX ABOVE ACCESSIBLE CEILING. LOCK HAS INTEGRAL REX AND LATCH BOLT.
10. REFER TO ARCHITECTURAL SHEETS A800 FOR DOOR SCHEDULE.

NOT FOR CONSTRUCTION

NO.	DATE	REVISION	BY

ORIGINAL PLANS PREPARED BY

HNTB
11414 W. PARK PLACE
MILWAUKEE, WI 53224
(414) 359-2300

PLANS PREPARED FOR

CITY OF MILWAUKEE
DEPARTMENT OF
PUBLIC WORKS

MILWAUKEE STREETCAR OPERATIONS
AND MAINTENANCE FACILITY

90% SUBMISSION		29 FEB. 2016	
DESIGNED BY WM/DW	DESIGN CK'D DW	DRAWN BY KK	PLANS CK'D WM

SINGLE LINE DIAGRAMS

E400

DRAFT
NOT FOR CONSTRUCTION

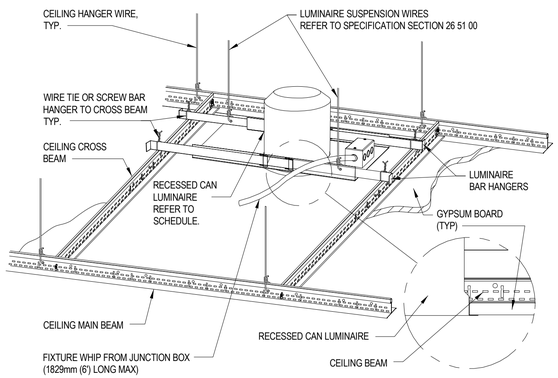

GENERAL NOTE:

1. INSTALL IN ACCORDANCE WITH MANUFACTURER'S MOUNTING INSTRUCTIONS AND USING THE RECOMMENDED MOUNTING HARDWARE.

1 DOWNLIGHT MOUNTING - GYPBOARD CEILING

NTS

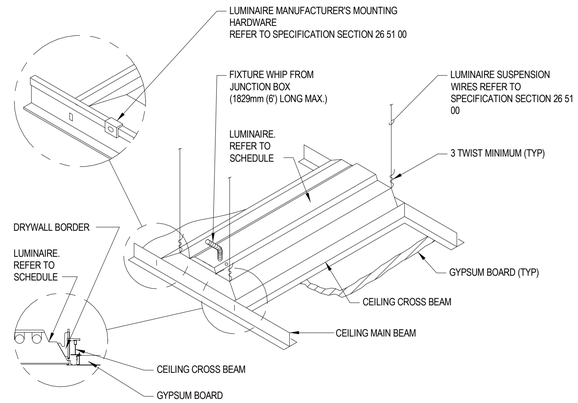

GENERAL NOTE:

1. INSTALL IN ACCORDANCE WITH MANUFACTURER'S MOUNTING INSTRUCTIONS AND USING THE RECOMMENDED MOUNTING HARDWARE.

2 LUMINAIRE MOUNTING - GYPBOARD CEILING

NTS

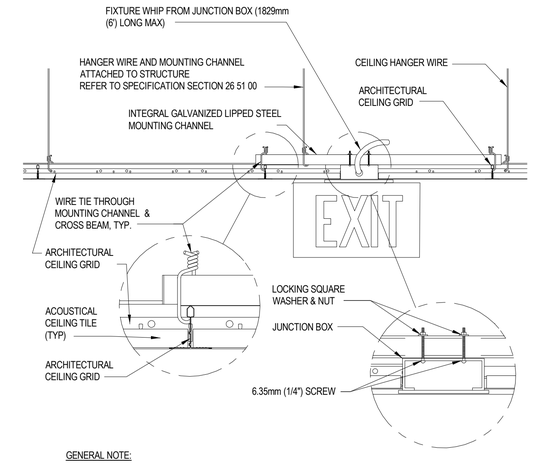

GENERAL NOTE:

1. INSTALL IN ACCORDANCE WITH MANUFACTURER'S MOUNTING INSTRUCTIONS AND USING THE RECOMMENDED MOUNTING HARDWARE.

3 EXIT SIGN MOUNTING - LAY-IN CEILING

NTS

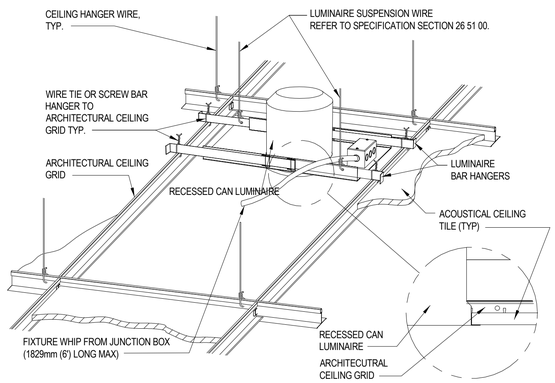

GENERAL NOTE:

1. INSTALL IN ACCORDANCE WITH MANUFACTURER'S MOUNTING INSTRUCTIONS AND USING RECOMMENDED MOUNTING HARDWARE

4 DOWNLIGHT MOUNTING - LAY-IN CEILING

NTS

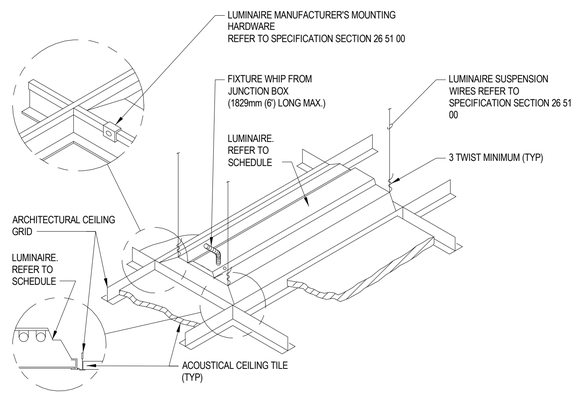

GENERAL NOTE:

1. INSTALL IN ACCORDANCE WITH MANUFACTURER'S MOUNTING INSTRUCTIONS AND USING THE RECOMMENDED MOUNTING HARDWARE.

5 LUMINAIRE MOUNTING - LAY-IN CEILING

NTS

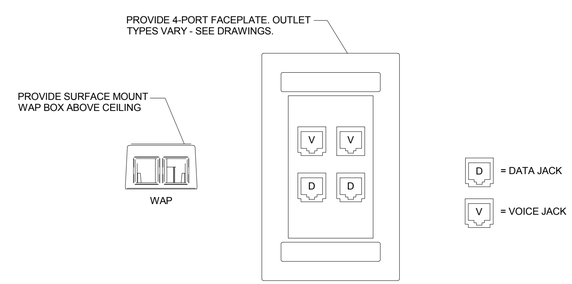

6 TELECOMMUNCIATION OUTLET DETAILS

NTS

	Initials	Date
Designer		
Checker/ Reviewer		
Back-Checker		
Corrector		
Verifier		

DRAFT

NOT FOR CONSTRUCTION

NO.	DATE	REVISION	BY

ORIGINAL PLANS PREPARED BY

HNTB

11414 W. PARK PLACE
MILWAUKEE, WI 53224
(414) 359-2300

PLANS PREPARED FOR

CITY OF MILWAULKEE
DEPARTMENT OF
PUBLIC WORKS

MILWAUKEE STREETCAR OPERATIONS AND MAINTENANCE FACILITY

90% SUBMISSION		29 FEB. 2016	
DESIGNED BY DW	DESIGN CK'D DW	DRAWN BY KK	PLANS CK'D WM

DETAILS

E500

NOT FOR CONSTRUCTION

INFORMATION TECHNOLOGY COORDINATION MATRIX

#	EQUIPMENT DESCRIPTION	CONTRACTOR FURNISHED	CONTRACTOR INSTALLED	CONTRACTOR PULLED	CONTRACTOR TERMINATED	OWNER FURNISHED	OWNER INSTALLED	OWNER PULLED	OWNER TERMINATED
1	IT SUPPORT - LADDER RACK CABLE RUNWAY	YES	YES	-	-	-	-	-	-
2	IT SUPPORT - BRIDAL RING WITH SADDLE	YES	YES	-	-	-	-	-	-
3	-	-	-	-	-	-	-	-	-
4	-	-	-	-	-	-	-	-	-
5	FIBER OPTIC - PATCH PANEL	YES	YES	-	-	-	-	-	-
6	FIBER OPTIC - CABLE AND CONNECTORS	YES	YES	YES	YES	-	-	-	-
7	-	-	-	-	-	-	-	-	-
8	-	-	-	-	-	-	-	-	-
9	DATA - PATCH PANEL	YES	YES	-	-	-	-	-	-
10	DATA - NETWORK / POE SWITCH	-	-	-	-	YES	YES	-	-
11	DATA - WIRELESS ACCESS POINT	-	-	-	-	YES	YES	-	-
12	DATA - UNINTERRUPTIBLE POWER SUPPLY	-	-	-	-	YES	YES	-	-
13	DATA - RISER BACKBONE CABLE	YES	YES	YES	YES	-	-	-	-
14	DATA - HORIZONTAL STATION CABLE	YES	YES	YES	YES	-	-	-	-
15	-	-	-	-	-	-	-	-	-
16	-	-	-	-	-	-	-	-	-
17	DATA - PATCH PANEL	YES	YES	-	-	-	-	-	-
18	DATA - NETWORK / POE SWITCH	-	-	-	-	YES	YES	-	-
19	DATA - RISER BACKBONE CABLE	YES	YES	YES	YES	-	-	-	-
20	DATA - HORIZONTAL STATION CABLE	YES	YES	YES	YES	-	-	-	-
21	-	-	-	-	-	-	-	-	-
22	-	-	-	-	-	-	-	-	-
23	-	-	-	-	-	-	-	-	-
24	CATV - AMPLIFIER / TAP / SPLITTER	YES	YES	-	-	-	-	-	-
25	CATV - MEDIA CONVERTER AND ACCESSORIES	-	-	-	-	YES	YES	-	-
26	CATV - RISER BACKBONE CABLE	YES	YES	YES	YES	-	-	-	-
27	CATV - HORIZONTAL STATION CABLE	YES	YES	YES	YES	-	-	-	-
28	-	-	-	-	-	-	-	-	-
29	-	-	-	-	-	-	-	-	-
30	ACCESS CONTROL - HEAD-END PANEL	-	YES	-	-	YES	-	-	YES
31	ACCESS CONTROL - CARD READER	YES	YES	-	-	-	-	-	-
32	ACCESS CONTROL - DOOR, AUTOMATIC OPERATOR	BY DIV 08	BY DIV 08	-	-	-	-	-	-
34	-	-	-	-	-	-	-	-	-
35	-	-	-	-	-	-	-	-	-
36	CAMERA - HEAD-END EQUIPMENT	-	-	-	-	YES	YES	YES	YES
37	CAMERA - CABLES (BETWEEN CAMERAS AND PATCH PANEL)	YES	YES	YES	YES	-	-	-	-
38	CAMERAS	YES	YES	-	-	YES	-	-	-
39	-	-	-	-	-	-	-	-	-
40	-	-	-	-	-	-	-	-	-

1 INFORMATION TECHNOLOGY COORDINATION MATRIX
SCALE: NONE

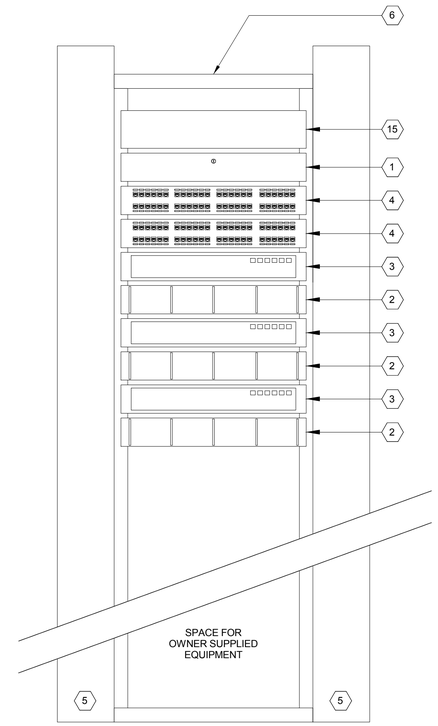

TELECOMMUNICATION RACK GENERAL NOTES

1. SUPPORT RACK PER DIVISION 27 REQUIREMENTS. PROVIDE ADDITIONAL SUPPORT ABOVE WITH LADDER RACK CABLE RUNWAY, PER DIVISION 27.
2. TYPICAL RACK EQUIPMENT SHOWN FOR DIAGRAMATICAL PURPOSES. SEE DIVISIONS 27 AND 28 FOR ACTUAL SPECIFICATION OF EQUIPMENTS. EQUIPMENT QUANTITY SHOWN SHALL VARY.

2 TYPICAL TELECOM RACK ELEVATION
SCALE: NOT TO SCALE

DETAIL SHEET GENERAL NOTES

1. COORDINATE ALL WORK WITH ALL DISCIPLINES.
2. SEE E000 FOR SYMBOLS AND ABBREVIATIONS.
3. ALL TELECOMMUNICATION HORIZONTAL STATION CABLES WITHIN FLETCHER HALL SHALL BE PLENUM RATED.
4. TELECOMMUNICATION CONTRACTOR SHALL MAINTAIN A SEPARATION OF 208/120V WIRING AND TELECOMMUNICATION WIRING IN ACCORDANCE WITH THE NEC AND TIA.
5. REFER TO DETAIL 1 THIS SHEET FOR INFORMATION TECHNOLOGY RESPONSIBILITY COORDINATION MATRIX.
6. DETAILS SHOWN ON THIS SHEET ARE FOR DIAGRAMATIC PURPOSES. ACTUAL SIZES, TYPES, LOCATIONS, ETC OF EQUIPMENTS AND CONDUITS SHALL BE FIELD VERIFIED BY IT CONTRACTOR AND COORDINATED WITH LEAD CONTRACTOR.

KEYNOTES (#)

1. FIBER OPTICS DISTRIBUTION PANEL. ACTUAL SIZE SHALL VARY.
2. HORIZONTAL WIRE MANAGER. ACTUAL SIZE SHALL VARY.
3. POWER OVER ETHERNET NETWORK SWITCH. ACTUAL SIZE SHALL VARY.
4. 48 PORT DATA PATCH PANEL. SIZE PER DIVISION 27.
5. VERTICAL WIRE MANAGER. SIZE PER DIVISION 27.
6. TELECOMMUNICATION RACK.
7. TO ELECTRICAL SERVICE ENTRANCE GROUND IN ELECTRICAL ROOM.
8. MAIN GROUNDING BUSBAR, 24" X 4" X 1/4", UON., MOUNTED WITH INSULATED STAND-OUTS. MOUNT AT 18" AFF.
9. NOT USED.
10. TELECOMMUNICATION RACK.
11. LADDER RACK CABLE RUNWAY.
12. NEW ACCESS CONTROL PANEL.
13. NOT USED.
14. NOT USED.
15. FIBER OPTIC TRANSITION TRAY.

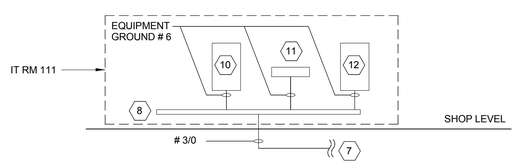

3 TELECOMMUNICATION GROUNDING
SCALE: NONE

	Initials	Date
Designer		
Checker/ Reviewer		
Back-Checker		
Corrector		
Verifier		

DRAFT

NOT FOR CONSTRUCTION

NO.	DATE	REVISION	BY

ORIGINAL PLANS PREPARED BY

HNTB
11414 W. PARK PLACE
MILWAUKEE, WI 53224
(414) 359-2300

PLANS PREPARED FOR

CITY OF MILWAULKEE
DEPARTMENT OF
PUBLIC WORKS

MILWAUKEE STREETCAR OPERATIONS
AND MAINTENANCE FACILITY

90% SUBMISSION | 29 FEB. 2016

DESIGNED BY DW | DESIGN CK'D DW | DRAWN BY KK | PLANS CK'D DW

DETAILS

E501

NOT FOR CONSTRUCTION

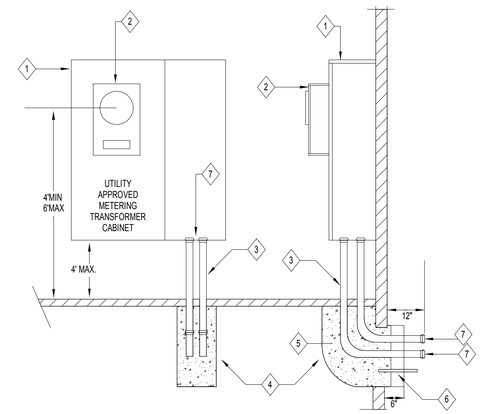

1 UTILITY SERVICE TERMINATION
NTS

THE CONTRACTOR FURNISHES AND INSTALLS:

1. LISTED TRANSOCKET, WE ENERGIES APPROVED
2. XFMR RATED METER SOCKET
3. SERVICE LATERAL CONDUIT.
4. CONTINUOUS CONCRETE ENVELOPE W/ 3" OF CONCRETE ON ALL SIDES..
5. PROVIDE 2-4" I.D. 90 DEG BEND W/ 36" MIN RADIUS; GALVANIZED RIGID OR GALVANIZED INTERMEDIATE CONDUIT WITH THREADED ENDS.
6. STEEL REINFORCING RODS, 5/8" X 2'.
7. INSULATED BUSHING & TEMPORARY WATERTIGHT END CAP.

THE UTILITY COMPANY FURNISHES AND INSTALLS (ITEMS NOT SHOWN):

A. SERVICE LATERAL, CONDUIT, COUPLING, AND CONCRETE ENVELOPE.
B. WATTHOURMETER, CURRENT TRANSFORMERS, AND ASSOCIATED METER WIRING.

NOT FOR CONSTRUCTION

NO.	DATE	REVISION	BY

ORIGINAL PLANS PREPARED BY

HNTB
11414 W. PARK PLACE
MILWAUKEE, WI 53224
(414) 359-2300

PLANS PREPARED FOR

CITY OF MILWAULKEE
DEPARTMENT OF
PUBLIC WORKS

MILWAUKEE STREETCAR OPERATIONS
AND MAINTENANCE FACILITY

90% SUBMISSION		29 FEB. 2016	
DESIGNED BY DW	DESIGN CK'D DW	DRAWN BY KK	PLANS CK'D DW

DETAILS

E502

NOT FOR CONSTRUCTION

OUTLET SCHEDULE - GENERAL

EQUIP ID	EQUIPMENT SERVING	LOC NO	LOC NAME	VOLTS	Φ	HP	FLA	LOAD (VA)	FED FROM PANEL	FED FROM CIRCUIT	FED FROM BRANCH	OCPD TYPE	OCPD SIZE	OCPD POLE	BRANCH WIRING NO	BRANCH WIRING SIZE	BRANCH WIRING GND	BRANCH WIRING COND	MOTOR CONTROLLER FB	MOTOR CONTROLLER IB	MOTOR CONTROLLER WB	MOTOR CONTROLLER LOC	MOTOR CONTROLLER TYPE	MOTOR CONTROLLER O/A	DISCONNECT SWITCH FB	DISCONNECT SWITCH IB	DISCONNECT SWITCH WB	DISCONNECT SWITCH LOC	DISCONNECT SWITCH TYPE	DISCONNECT SWITCH O/A	CONNECTION F/P	CONNECTION TYPE	CONNECTION NEMA	CONNECTION O/A	NOTES
1805	WORKBENCH	132	ELECTRONICS SHOP	120	1		16.0	1,920				CB	20	1	2	12	12	3/4	N/A						EC	EC	EC					HW			
2090	BUFFER / GRINDER	128	COMMON WORK AREA	480	3	1	2.1	1,746				CB	15	3	3	12	12	3/4	EQ	EQ	EQ	IU	MAG	INTEGRAL	EC	EC	EC					HW			
2161	AIR COMPRESSOR	139	MECH	480	3	20	28.0	23,279				CB	45	3	3	6	10	1	EQ	EQ	EQ	IU	MAG	INTEGRAL	EC	EC	EC					HW			1
2220	DRILL PRESS	128	COMMON WORK AREA	480	3	1-1/2	3.0	2,494				CB	15	3	3	12	12	3/4	EQ	EQ	EQ	IU	MAG	INTEGRAL	EC	EC	EC					HW			
2228	DRYER, AIR REFRIGERATED	139	MECH	120	1	1/2	10.3	1,236				CB	25	1	2	10	10	3/4	EQ	EQ	EQ	IU	MAG	INTEGRAL	EC	EC	EC					RECP		5-15R	
2600	PRESS, ELECTRIC/HYDRAULIC	128	COMMON WORK AREA	120	1	1/2	9.8	1,176				CB	25	1	2	10	10	3/4	EQ	EQ	EQ	IU	MAG	INTEGRAL	EC	EC	EC					HW			MCA=12.4, MOCP =20, LRA = 48
3085	CABINET, ABRASIVE BLAST W/DUST COLLECTOR	128	COMMON WORK AREA	120	1	1-1/3	9.0	1,080				CB	25	1	2	10	10	3/4	EQ	EQ	EQ	IU	MAG	INTEGRAL	EC	EC	EC					HW			
3540	TANK, PARTS CLEANING	128	COMMON WORK AREA	120	1	1/5	2.0	240				CB	15	1	2	12	12	3/4	EQ		EQ	IU	MAG	INTEGRAL	EC	EC	EC					RECP		5-20R	GFI
3810	WASHER	129	PORTABLE EQUIPMENT STORAGE	120	1	1-1/4	20.0	2,400				CB	25	1	2	10	10	3/4	EQ	EQ	EC/EQ	IU	MAG	INTEGRAL	EC	EC	EC					RECP			RECEPTACLE TO BE USED FOR CHARGING EQUIPMENT BATTERIES
5075A	CRANE MOTOR / HOIST	128	HEAVY REPAIR BAY	480	3	16	33.0	27,435				CB	50	3	3	6	10	1	EQ		EC/EQ			INTEGRAL	EC	EC	EC					HW			
5075A-C	CRANE MOTOR / HOIST-CONTROL UNIT	128	HEAVY REPAIR BAY	120	1		3.0	360				CB	15	1	2	12	12	3/4	EQ	EC	EC/EQ														PROVIDE ROUND WIRE OR FLAT WIRE TO POWER SYSTEM THROUGH FESTOON. SEE NOTE 6.
5392	HOIST CHAIN, ELECTRIC, MOTORIZED TROLLEY	129	PORTABLE EQUIPMENT STORAGE	480	3	5	7.6	6,318				CB	20	3	3	12	12	3/4	EQ	EQ	EC/EQ			INTEGRAL	EC	EC	EC					HW			
5404	FORKLIST, ELECTRIC, 4,000 LBS, BATTERY CHARGING STATION	129	PORTABLE EQUIPMENT STORAGE	480	3							CB		3	3			3/4	EQ		EC/EQ			INTEGRAL	EC	EC	EC					HW			
5432	LIFT, PARTS, 3,000 LBS	129	PORTABLE EQUIPMENT STORAGE	480	3	7.5	30.0	24,941				CB	40	3	3	8	8		EQ	EQ	EC/EQ	NU	MAG	INTEGRAL	EC	EC	EC					HW			
5876A	JACK, PORTABLE, ELECTRIC	129	PORTABLE EQUIPMENT STORAGE	480	3	12	38.4	31,924				CB	30	3	3	10	10	3/4	EQ	EQ	EQ	IU	MAG	INTEGRAL	EC	EC	EC					RECP		L16-50R	ONE RECP FOR GROUP; SEE NOTE 7
5881	LIFT, TABLE, BOGIE	128	COMMON WORK AREA	120	1	2	24.0	2,880				CB	30	1	2	10	10	3/4	EQ	EQ	EC/EQ			INTEGRAL	EC	EC	EC					HW			2
7960A	TANK, DOUBLE WALL, CUBE, 280 GALLON	127	GEAR OIL AREA	120	1		2.0	240				CB	15	1	2	12	12	3/4	EQ					INTEGRAL	EC	EC	EC					RECP	15-20R		5
7960B	TANK, DOUBLE WALL, CUBE, 280 GALLON	127	GEAR OIL AREA	120	1		2.0	240				CB	15	1	2	12	12	3/4	EQ					INTEGRAL	EC	EC	EC					RECP	15-20R		5

EQUIPMENT SCHEDULE - HVAC

#	EQUIPMENT ABBREV	EQUIPMENT DESCRIPTION	LOCATION NO	LOCATION NAME	VOLTS	Φ	HP	FLA	LOAD (VA)	FED FROM PANEL	FED FROM CIRCUIT	FED FROM BRANCH	OCPD TYPE	OCPD SIZE	OCPD POLE	BRANCH WIRING NO.	BRANCH WIRING SIZE	BRANCH WIRING GND	BRANCH WIRING COND	MOTOR CONTROLLER FB	MOTOR CONTROLLER IB	MOTOR CONTROLLER WB	MOTOR CONTROLLER LOC	MOTOR CONTROLLER TYPE	MOTOR CONTROLLER O/A	DISCONNECT SWITCH FB	DISCONNECT SWITCH IB	DISCONNECT SWITCH WB	DISCONNECT SWITCH LOC	DISCONNECT SWITCH TYPE	DISCONNECT SWITCH O/A	CONNECTION F/P	CONNECTION TYPE	CONNECTION NEMA	CONNECTION O/A	NOTES
1	CU-1	AIR COOLED CONDENSING UNIT 1		OFFICE ROOF	480	3							CB							INT	INT	INT	IU	MAG		INT	INT	EC					HW			4
2	MAU-1	MAKEUP AIR UNIT 1	202	MECHNICAL SPACE	480	3	3	6.3	5,238				CB	15	3	3	12	12	3/4	INT	INT	EC		MAG		INT	INT	EC					HW			
3	AHU-1	AIR HANDLING UNIT 1	202	MECHNICAL SPACE	480	3			9,893				CB	15	3	3	12	12	3/4	INT	INT	EC		MAG		INT	INT	EC	IU				HW			MCA=11.9, MOCP=15; SEE NOTE 4
4	EF-1	EXHAUST FAN 1	119	MECHANICAL ROOM	480	3	3/4	1.6	1,330				CB	15	3	3	12	12	3/4	EC	EC	EC	NU	MAG		EC	EC	EC	NU	F			HW			
5	EF-1	EXHAUST FAN 1	121	ELECTRICAL ROOM	480	3	3/4	1.6	1,330				CB	15	3	3	12	12	3/4	EC	EC	EC	NU	MAG		EC	EC	EC	NU	F			HW			
6	EF-1	EXHAUST FAN 1	113	MENS RESTROOM	480	3	3/4	1.6	1,330				CB	15	3	3	12	12	3/4	EC	EC	EC	NU	MAG		EC	EC	EC	NU	F			HW			
7	EF-1	EXHAUST FAN 1	114	WOMENS RESTROOM	480	3	3/4	1.6	1,330				CB	15	3	3	12	12	3/4	EC	EC	EC	NU	MAG		EC	EC	EC	NU	F			HW			
8	EF-1	EXHAUST FAN 1	112	JANITOR ROOM	480	3	3/4	1.6	1,330				CB	15	3	3	12	12	3/4	EC	EC	EC	NU	MAG		EC	EC	EC	NU	F			HW			
9	EF-2	EXHAUST FAN 2	-	WEST EXTERIOR WALL	480	3	3/4	1.6	1,330				CB	15	3	3	12	12	3/4	INT	INT	EC	IU	INT		INT	INT	EC	PNL	JBOX			HW			2,3,4
10	EF-2	EXHAUST FAN 2	-	EAST EXTERIOR WALL	480	3	3/4	1.6	1,330				CB	15	3	3	12	12	3/4	INT	INT	EC	IU	INT		INT	INT	EC	PNL	JBOX			HW			2,3,4
11	UH-1	UNIT HEATER 1	119	MECHANICAL ROOM	208	1	1/6	2.4	499				CB	15	1	2	12	12	3/4	INT	INT	EC	IU	INT		EC	EC	EC	IU	MAN			HW			
12	UH-2	UNIT HEATER 2	130	PARTS STOCKROOM	208	1	1/6	2.4	499				CB	15	1	2	12	12	3/4	INT	INT	EC	IU	INT		EC	EC	EC	IU	MAN			HW			
13	CRU-1	CRU W/ CONDENSOR	114	IT ROOM																													HW			
14	RAD-1	RADIATOR 1	125	SHOP: SOUTH END																INT	INT	EC	IU	INT		EC	EC	EC	PNL	JBOX			HW			1,3
15	RAD-1	RADIATOR 1	125	SHOP: SOUTH END																INT	INT	EC	IU	INT		EC	EC	EC	PNL	JBOX			HW			1,3
16	RAD-1	RADIATOR 1	125	SHOP: SOUTH END																INT	INT	EC	IU	INT		EC	EC	EC	PNL	JBOX			HW			1,3
17	RAD-1	RADIATOR 1	125	SHOP: NORTH END																INT	INT	EC	IU	INT		EC	EC	EC	PNL	JBOX			HW			1,3
18	RAD-1	RADIATOR 1	125	SHOP: NORTH END																INT	INT	EC	IU	INT		EC	EC	EC	PNL	JBOX			HW			1,3

EQUIPMENT SCHEDULE - PLUMBING

#	EQUIPMENT ABBREV	EQUIPMENT DESCRIPTION	LOCATION NO	LOCATION NAME	VOLTS	Φ	HP	FLA	LOAD (VA)	FED FROM PANEL	FED FROM CIRCUIT	FED FROM BRANCH	OCPD TYPE	OCPD SIZE	OCPD POLE	BRANCH WIRING NO.	BRANCH WIRING SIZE	BRANCH WIRING GND	BRANCH WIRING COND	MOTOR CONTROLLER FB	MOTOR CONTROLLER IB	MOTOR CONTROLLER WB	MOTOR CONTROLLER LOC	MOTOR CONTROLLER TYPE	MOTOR CONTROLLER O/A	DISCONNECT SWITCH FB	DISCONNECT SWITCH IB	DISCONNECT SWITCH WB	DISCONNECT SWITCH LOC	DISCONNECT SWITCH TYPE	DISCONNECT SWITCH O/A	CONNECTION F/P	CONNECTION TYPE	CONNECTION NEMA	CONNECTION O/A	NOTES
19	GWH-1	GAS FIRED WATER HEATER 1	119	MECHANICAL ROOM	120	1		1.0	120				CB	15	1	2	12	12	3/4	INT	EC	EC	IU			EC	EC	EC	PNL	J-BOX			HW			3
20	GWH-1	GAS FIRED WATER HEATER 1	119	MECHANICAL ROOM	120	1		1.0	120				CB	15	1	2	12	12	3/4	INT	EC	EC	IU			EC	EC	EC	PNL	J-BOX			HW			3
21	CP-1	GAS FIRED WATER HEATER CIRC PUMP 1	119	MECHANICAL ROOM	480	3	2	3.4	2,826				CB	15	3	3	12	12	3/4	EC	EC	EC	NU	MAG		EC	EC	EC					HW			
22	CP-1	GAS FIRED WATER HEATER CIRC PUMP 1	119	MECHANICAL ROOM	480	3	2	3.4	2,826				CB	15	3	3	12	12	3/4	EC	EC	EC	NU	MAG		EC	EC	EC					HW			
23	SP-1	SUMP PUMP 1	125	PM INSPECTION BAY	208	1	0.4	5.4	1,123				CB	15	2	2	12	12	3/4	MC	EC	EC	NU	MAG		EC	EC	EC					HW			
24	SP-1	SUMP PUMP 1	125	PM INSPECTION BAY	208	1	0.4	5.4	1,123				CB	15	2	2	12	12	3/4	MC	EC	EC	NU	MAG		EC	EC	EC					HW			
25	EWC-1	ELECTRICA WATER COOLER 1	140	CORRIDOR	120	1		3.1	370				CB	15	1	2	12	12	3/4	INT	INT	EC	IU			EC	EC	EC	PNL	J-BOX			HW			3

GENERAL NOTES:
1. COORDINATE LOCATION OF ALL DISCONNECT SWITCHES WITH INSTALLED LOCATION OF EQUIPMENT.
2. ALL CONDUCTOR INSULATSION TO BE THHN/THWN 90 DEGREES C INSULATION AND SHALL BE LISTED TO ANSI/UL 1685.
3. CONTROL WIRING FOR PLUMBING EQUIPMENT TO BE PROVIDED BY PLUMBING CONTRACTOR UON
4. ALL DEVICES REQUIRED FOR CONTROL OF MOTORS POWERING PLUMBING EQUIPMENT TO BE FB, IB, AND WB EC.

NOTES:
1. EC TO WIRE POWER FOR VACUUM FAN TO BURNER.
2. FACTORY MOUNTED AND WIRED MOTOR, CONTROLLER, DISCONNECT
3. PROVIDE LOCKOUT CAPAPBLE CIRCUIT BREAKER AT PANEL FOR EQUIPMENT DISCONNECTING MEANS.
4. EC TO PROVIDE NF (IN ADDITION TO MFR'S INTERNAL F) AND TO BE MOUNTED EXTERNAL TO THE UNIT
5. PROVIDED POWER IS FOR ASSOCIATED TANK MONITORING SYSTEM (POWER IS NOT FOR THE TANKS)

ABBREVIATIONS:
CB - CIRCUIT BREAKER
COND - CONDUCTOR
DISC - PROVIDE DISCONNECT MEANS FOR HARDWARE CONNECTION OF EQUIPMENT\
EC - ELECTRICAL CONTACTOR
EQ - EQUIPMENT PROVIDED BY INSTALLER
F-FUSED DISCONNECTING MEANS
FB - FURNISHED BY
FLA - FULL LOAD AMPERES
GND - GROUND
HP - HORSE POWER
HW - HARD WIRED
IB - INSTALLED BY
ID - IDENTIFICATION
INT - INTEGRAL TO EQUIPMENT DESIGN INSTALLSTION
IU-INSIDE UNIT OR ON THE UNIT
J-BOX - PROVIDE JUNCTION BOX MEANS FOR HARDWARE CONNECTION OF EQUIPMENT
LOC - LOCATION
LRA - LOCKED ROTOR AMPERE
MAG-MAGNETIC CONTROLLER/STARTER WITH OL PROTECTION
MAN-MANUAL MOTOR STARTER W/ OL PROTECTION
MC - MECHANICAL CONTRACTOR
MCA - MOTOR CIRCUIT AMPERE
MFR-MANUFACTURER
MOCP - MOTOR OVERLOAD CIRCUIT PROTECTOR
NF-NONFUSED DISCONNECTING MEANS
NO - NUMBER
O/A - OPTIONS OR ACCESSORIES
OCPD - OVER CURRENT PROTECTIVE DEVICE
OL- OVERLOAD PROTECTION FOR MOTOR
RECP - PROVIDE DUPLEX RECEPTACLE FOR CONNECTION OF EQUIPMENT; COORDINATE RECEPTACLE TYPE WITH ACTUAL EQUIPMENT REQUIREMENTS
UON-UNLESS OTHERWISE NOTED
WB - WIRED BY

	Initials	Date
Designer		
Checker/ Reviewer		
Back-Checker		
Corrector		
Verifier		

NOT FOR CONSTRUCTION

NO.	DATE	REVISION	BY

ORIGINAL PLANS PREPARED BY

HNTB
11414 W. PARK PLACE
MILWAUKEE, WI 53224
(414) 359-2300

PLANS PREPARED FOR

CITY OF MILWAULKEE
DEPARTMENT OF
PUBLIC WORKS

MILWAUKEE STREETCAR OPERATIONS
AND MAINTENANCE FACILITY

90% SUBMISSION | 29 FEB. 2016

DESIGNED BY WM | DESIGN CK'D DW | DRAWN BY KK | PLANS CK'D WM

ELECTRICAL SCHEDULES

E601

DRAFT
NOT FOR CONSTRUCTION

PANEL BOARD SCHEDULE- BRANCH PANEL: 1LA

LOCATION: RM. 125 INSPECTION BAY
VOLTAGE: 120/208 3PH4W
SOURCE: 1HA VIA XFMR T1
MAINS RATING: 100A

FEEDER SIZE:
GND SIZE:
MOUNTING: SURFACE
MAIN BKR: 100A

AIC RATING:
MFR:
CATALOG NO.

	CT. #	VOLT AMPS A	VOLT AMPS B	VOLT AMPS C	BKR/ POLE	BKR/ POLE	VOLT AMPS A	VOLT AMPS B	VOLT AMPS C	CT. #	
RECP RM 125 WEST AND SOUTH WALLS	1	540			20/1	15/1	120			2	GWH-1 (19)
RECP RM 125 SOUTH WALL	3		360		20/1	20/1				4	SPARE
MECH ROOM, ROOF	5			720	20/1	20/1			1920	6	ELECT WORK BENCH (1805)
PLATFORM SOUTH WALL	7	540			20/1	20/1	240			8	TANK MONITORING SYSTEM (7960A&B)
EWC-1 (#25)	9		370		20/1	15/1		240		10	PARTS CLEANING TANK (3540)
UH-1 (#12)	11			250	15/2	25/1			1176	12	HYDRAULIC PRESS (2600)
	13	250				25/1	1080			14	ABRASIVE BLAST (3085)
UH-1 (#11)	15		250		15/2	30/1		2880		16	BOGIE LIFT TABLE (5881)
	17			250		15/1				18	SPARE
SP-1	19	562			15/2	15/1	360			20	CRANE-MOTOR HOIST CONTROLLER (5075A-C)
	21		562			25/1		2400		22	WASHER (3810)
SPARE	23				20/1	25/1			1236	24	AIR DRYER (2228)
RAD-1 (#14,15,17)	25				20/1	20/1				26	
RAD-1 (#16,18)	27				20/1	20/1				28	
	29				20/1	20/1				30	
	31				20/1	20/1				32	
	33				20/1	20/1				34	
	35				20/1	20/1				36	
	37				20/1	20/1				38	
	39				20/1	20/1				40	
	41				20/1	20/1				42	

Total A Phase	3.7	kVA		
Total B Phase	7.1	kVA		
Total C Phase	5.6	kVA		
Connected	16.3	kVA	=	45.3 A
Demand	17.0	kVA	=	47.26 A

PANEL BOARD SCHEDULE- BRANCH PANEL: 1HA

LOCATION: RM. 125 INSPECTION BAY
VOLTAGE: 277/480 3PH4W
SOURCE: MSB
MAINS RATING: 225A

FEEDER SIZE:
GND SIZE:
MOUNTING: SURFACE
MAIN BKR:

AIC RATING:
MFR:
CATALOG NO.

	CT. #	VOLT AMPS A	VOLT AMPS B	VOLT AMPS C	BKR/ POLE	BKR/ POLE	VOLT AMPS A	VOLT AMPS B	VOLT AMPS C	CT. #	
	1	7760					582			2	
AIR COMPRESSOR (2161)	3		7760		45/3	15/3		582		4	BUFFER GRINDER (2090)
	5			7760					582	6	
	7	2106					832			8	
HOIST CHAIN (5392)	9		2106		20/3	15/3		832		10	DRILL PRESS (2220)
	11			2106					832	12	
	13	8314					2660			14	
PARTS LIFT (5432)	15		8314					2660		16	PORT JACK (5876 A & B)
	17			8314					2660	18	
	19	9145								20	
CRANE-MOTOR HOIST (5075)	21		9145		50/3					22	
	23			9145						24	
	25									26	
	27									28	
	29									30	
	31									32	
	33									34	
	35									36	
	37									38	
	39									40	
	41									42	

Total A Phase	31.4	kVA		
Total B Phase	31.4	kVA		
Total C Phase	31.4	kVA		
Connected	94.2	kVA	=	113.3 A
Demand	96.5	kVA	=	116.1 A

	Initials	Date
Designer		
Checker/ Reviewer		
Back-Checker		
Corrector		
Verifier		

NOT FOR CONSTRUCTION

NO.	DATE	REVISION	BY

ORIGINAL PLANS PREPARED BY

HNTB

11414 W. PARK PLACE
MILWAUKEE, WI 53224
(414) 359-2300

PLANS PREPARED FOR

CITY OF MILWAULKEE
DEPARTMENT OF
PUBLIC WORKS

MILWAUKEE STREETCAR OPERATIONS
AND MAINTENANCE FACILITY

90% SUBMISSION		29 FEB. 2016	
DESIGNED BY WM	DESIGN CK'D DW	DRAWN BY KK	PLANS CK'D WM

ELECTRICAL SCHEDULES

E602

DRAFT
NOT FOR CONSTRUCTION

PANEL BOARD SCHEDULE- BRANCH PANEL: 1LB

LOCATION: RM. 121 ELECT. RM.
VOLTAGE: 120/208 3PH4W
SOURCE: 1HB VIA XFMR T1
MAINS RATING: 100A

FEEDER SIZE:
GND SIZE:
MOUNTING: SURFACE
MAIN BKR:

AIC RATING:
MFR:
CATALOG NO.

	CT. #	VOLT AMPS A	VOLT AMPS B	VOLT AMPS C	BKR/ POLE	BKR/ POLE	VOLT AMPS A	VOLT AMPS B	VOLT AMPS C	CT. #	
RECP RM 103,105	1	900			20/1	15/1	1080			2	**RECP RM 103**
RECP COMP RM 105,107	3		1080		20/1	20/1		720		4	**RECP RM 140, 102**
RECP RM 107	5			720	20/1	20/1			1080	6	**RECP RM 107**
RECP RM 109	7	720			20/1	20/1	180			8	**IT ROOM**
RECP RM 109	9		540		20/1	20/1		180		10	**IT ROOM**
RECP RM 109	11			720	20/1	20/1			720	12	**RECP RM 109A, 116, 114**
RECP RM 114, 116, 112	13	1080			20/1	25/1	1500			14	**RECP RM 117 SM APPL**
RECP RM 139	15		540		20/1	30/1		1500		16	**RECP RM 117 SM APPL**
RECP RM 121, 139	17			540	20/1	15/1			540	18	**RECP RM 117**
BLDG EXTERIOR RECP	19	720			20/1	20/1	360			20	**RECP COMP PARTS ROOM**
RECP RM 132 (ELECT SHOP)	21		360		20/1	20/1		900		22	**RECP PARTS ROOM**
RECP RM 132 (ELECT SHOP)	23			720	20/1	20/1			360	24	**RECP RM 112**
	25				20/1	20/1				26	
	27				20/1	20/1				28	
	29				20/1	20/1				30	
	31				20/1	20/1				32	
	33				20/1	20/1				34	
	35				20/1	20/1				36	
	37				20/1	20/1				38	
	39				20/1	20/1				40	
	41				20/1	20/1				42	

Total A Phase	6.5	kVA		
Total B Phase	5.8	kVA		
Total C Phase	5.4	kVA		
Connected	17.8	kVA	=	49.3 A
Demand	13.9	kVA	=	38.53 A

PANEL BOARD SCHEDULE- BRANCH PANEL: 1HB

LOCATION: RM. 121 ELECT. RM.
VOLTAGE: 277/480 3PH4W
SOURCE: MSB
MAINS RATING: 225A

FEEDER SIZE:
GND SIZE:
MOUNTING: SURFACE
MAIN BKR:

AIC RATING:
MFR:
CATALOG NO.

	CT. #	VOLT AMPS A	VOLT AMPS B	VOLT AMPS C	BKR/ POLE	BKR/ POLE	VOLT AMPS A	VOLT AMPS B	VOLT AMPS C	CT. #	
LIGHTING: CORRIDORS & SOUTH ROOMS	1	3200			20/1	20/1	3700			2	**LIGHTING SHOP (RM 125) UNDER MEZZ & INSP BAY**
LIGHTING: NORTH ROOMS	3		2684		20/1	20/1		3700		4	**LIGHTING SHOP (RM 125) MEZZANINE**
LIGHTING: UPPER LEVELS	5			1300	20/1	20/1			2600	6	**LIGHTING SHOP (RM 125) NORTH SOUTH**
	7	5625				20/1	2600			8	**LIGHTING SHOP (RM 125) NORTH NORTH**
FORK LIFT CHARGER (#5404)	9		5625		25/3			2216		10	
	11			5625		15/3			2216	12	**EF-1 (#4,5,6,7,8)**
	13	942					2216			14	
CP-1 (#21)	15		942		15/3			886		16	
	17			942		15/3			886	18	**EF-1 (#9,10)**
	19	1746					886			20	
MAU-1 (#2)	21		1746		15/3			3296		22	
	23			1746		30/3			3296	24	**AHU-1 (#3)**
	25						3296			26	
CU-1 (#)	27					20/1				28	
	29					20/1				30	
	31				20/1	20/1				32	
	33				20/1	20/1				34	
	35				20/1	20/1				36	
	37				20/1	20/1				38	
	39				20/1	20/1				40	
	41				20/1	20/1				42	

Total A Phase	24.2	kVA		
Total B Phase	21.1	kVA		
Total C Phase	18.6	kVA		
Connected	63.9	kVA	=	177.4 A
Demand	65.3	kVA	=	181.3 A

	Initials	Date
Designer		
Checker/ Reviewer		
Back-Checker		
Corrector		
Verifier		

NOT FOR CONSTRUCTION

NO.	DATE	REVISION	BY

ORIGINAL PLANS PREPARED BY

HNTB
11414 W. PARK PLACE
MILWAUKEE, WI 53224
(414) 359-2300

PLANS PREPARED FOR

CITY OF MILWAULKEE
DEPARTMENT OF
PUBLIC WORKS

MILWAUKEE STREETCAR OPERATIONS
AND MAINTENANCE FACILITY

90% SUBMISSION | 29 FEB. 2016

DESIGNED BY WM | DESIGN CK'D DW | DRAWN BY KK | PLANS CK'D WM

ELECTRICAL SCHEDULES

E603

DRAFT
NOT FOR CONSTRUCTION

LIGHTING FIXTURE SCHEDULE

FIXTURE		LAMPS						BALLASTS		INPUT			CEILING	FIXTURE			SUB	
TYPE	DESCRIPTION	TYPE	NO	DESCRIPTION	WATTS	K	CRI	TYPE	NO	WATTS	VOLT	MOUNT	TYPE	DEPTH	MANUFACTURER & SERIES	OPTIONS	ALLOWED	SEE NOTE
A	INDUSTRIAL STRIP FIXTURE	F	2	F32-T8	32	3500	82	ET	1	60	277	SU			PHILLIPS DAY-BRITE 2F		Y	
B	2X4 RECESSED DIRECT/INDIRECT	F	2	F32-T8	32	3500	82	ET	1	60	277	R	LG		DAYBRITE ARIOSO PERF	PMW SHIELDING	Y	
C	8 INCH DOWNLIGHT	F									277							
D	ACRYLIC WRAP AROUND FIXTURE	F	2	F32T8	32	3500	82	ET	2	60	277	S			COOPER/METALUX WN SERIES		Y	2
E	2X4 LED DIRECT	LED		8000 LUMENS		4000	80	LED	1	82	277				FBX LED HIGH BAY - PHILLIPS	CLEAR PRISMATIC LENS	N	
F	2X4 FLUORESCENT TROFFER	F	3	F32-T8	32	3500	82	ET			277	R	LG		LITHONIA GT SERIES		Y	
G	WALL PACK (Personnel Door)	HPS	1						1		277							1
H	WALL PACK (Rollup Door)	HPS	1						1		277							1
J	WALL PACK (Bldg Perimeter Ltg)	HPS	1	4800 LUMENS	35				1		277							1
K	UNDER CABINET LIGHT	F							1		277							
L	INDUSTRIAL STRIP FIXTURE	F	3	F32-T8	32	3500	82			90	277	SU			PHILLIPS DAY-BRITE 2F			

NOTE: SEE SPECIFICATION SECTION 26 50 00 AND 26 02 37 FOR ADDITIONAL INFORMATION REGARDING LIGHTING FIXTURE AND INSTALLATION REQUIREMENTS. PROVIDE OPTIONS AND ACCESSORIES REFERENCED BY THE COLUMN TITLED "OPTIONS". MANUFACTURERS AS ACCEPTABLE SHALL MEET ALL REQUIREMENTS AND FEATURES INDICATED. ACCEPTABLE MANUFACTURERS MUST MEET THE PHOTOMETRIC PERFORMANCE OF THE LISTED UNIT.

ABBREVIATIONS:

AR	= AS REQUIRED	EM	= END MOUNT	FD10	= FLOURESCENT DIMMING 10-100%	LD	= LED DIMMING	R	= RECESS
CAB	= CABINET	ES	= EXPOSED STRUCTRE	H	= HID	OT	= OTHER	RM	= REMOTE
CL	= CLEAR	ET	= ELECTRONIC	HAL	= HALOGEN	P	= PENDANT	S	= SURFACE
DM	= LED DIMMING 0-10V	F	= FLOURESCENT	HPF	= HIGH POWER FACTOR	PL	= PLASTER	ST	= STANDARD
DR	= LED DRIVER	FD1	= FLOURESCENT DIMMING 1-100%	I	INCANDESCENT	PS	= PULSE START	V	= VARIES
DW	= DRYWALL	FD5	= FLOURESCENT DIMMING 5-100%	LG	= LAY IN GRID	Q	= QUARTZ	W	= WALL MOUNTED
RS	= RAPID START							SU	= SUSPENDED

	Initials	Date
Designer		
Checker/ Reviewer		
Back-Checker		
Corrector		
Verifier		

DRAFT
NOT FOR CONSTRUCTION

NOT FOR CONSTRUCTION

NO.	DATE	REVISION	BY

ORIGINAL PLANS PREPARED BY

HNTB
11414 W. PARK PLACE
MILWAUKEE, WI 53224
(414) 359-2300

PLANS PREPARED FOR

CITY OF MILWAULKEE
DEPARTMENT OF
PUBLIC WORKS

MILWAUKEE STREETCAR OPERATIONS
AND MAINTENANCE FACILITY

90% SUBMISSION | 29 FEB. 2016

DESIGNED BY	DESIGN CK'D	DRAWN BY	PLANS CK'D
WM	DW	KK	WM

LIGHTING SCHEDULES

E604

PLUMBING SYMBOL SCHEDULE

	SE	SEWAGE EJECTOR
	SP	SUMP PUMP
	TT	TEMPERING TANK
	ST	STORAGE TANK
	ET	EXPANSION TANK
	HWX	WATER HEATER STEAM
	GWH	WATER HEATER GAS
	EWH	WATER HEATER ELECTRIC
	WS	WATER SOFTENER
	CP	CIRCULATING PUMP
	TMV	TEMPERATURE MIXING VALVE
	EEW	EMERGENCY EYE WASH
	EEWS	EMERGENCY EYE WASH SHOWER
	FFD	FLUSHING FLOOR DRAIN
	WC	WATER CLOSET
	L	LAVATORY
	UR	URINAL
	S	SINK
	BT	BATHTUB
	SH	SHOWER
	EWC	ELECTRIC WATER COOLER
	DF	DRINKING FOUNTAIN
	WCL	COMBINATION WATER CLOSET LAVATORY
	MB	MOP BASIN
	AWC	WASHING MACHINE WALL BOX
	LT	LAUNDRY TRAY
	DSN	DOWNSPOUT NOZZLE
	DBT	DRAINBACK TANK
	LI	LINT INTERCEPTOR
	FSEC	FOOD SERVICE (DIVISION 11) EQUIPMENT CONTRACTOR
	TYP	TYPICAL
	HPT	HYDRO PNEUMATIC TANK
	IW	INDIRECT WASTE
	RV	RELIEF VENT
	ANB	ACID NEUTRALIZATION BASIN

NOTE: ALL SYMBOLS MAY NOT BE USED FOR THIS PROJECT

PLUMBING SYMBOL SCHEDULE

	FCO	FLOOR CLEANOUT
	CO/WCO	CLEANOUT OR WALL CLEANOUT (AS NOTED)
	WHA	WATER HAMMER ARRESTOR
		PIPE CAP
	PRV	PRESSURE REDUCING VALVE
		BUTTERFLY VALVE
		BALL VALVE
		CHECK VALVE
		CALIBRATED BALANCE VALVE, INLINE FLOW SIGHT INDICATOR & CHECK VALVE
		RISING STEM GATE VALVE
		WATER MAIN VALVE AND BOX
		NATURAL GAS SHUT-OFF VALVE
IE= 000.00	IE	INVERT ELEVATION OF SEWER OR DRAIN
00		DRAINAGE/WATER FIXTURE UNIT TAG
0 / 000		DETAIL AND ISOMETRIC REFERENCE
		FOOD SERVICE EQUIPMENT TAG
FFE=100.00	FFE	FINISHED FLOOR ELEVATION
		NEW PIPE CONNECTION TO EXISTING
		CAP EXISTING PIPE
		EQUIPMENT / FIXTURE DEMOLITION
		PIPE DEMOLITION
	HB/WH	HOSE BIBB OR WALL HYDRANT (AS NOTED)
	BFP/RP BP	BACKFLOW PREVENTER
	FD	FLOOR DRAIN
	FS	FLOOR SINK
	HD	HUB DRAIN
	RD/OD	ROOF DRAIN / OVERFLOW DRAIN
	DD	DECK DRAIN
	AFF	ABOVE FINISHED FLOOR
	AP	ACCESS PANEL
	CLVTR	CLEARWATER VENT THRU ROOF
	COND	STORM / CLEARWATER CONDUCTOR
	SV	STACK VENT
	VS	VENT STACK
	VTR	VENT THRU ROOF
	WS	WASTE STACK
	EXIST	EXISTING
	HS	HAND SINK
	PC	PLUMBING (DIVISION 22) CONTRACTOR

NOTE: ALL SYMBOLS MAY NOT BE USED FOR THIS PROJECT

PLUMBING PIPE TYPES LEGEND

EXISTING	NEW		
AV	AV	AV	ACID VENT ABOVE FLOOR
AV UG	AV UG	AV	ACID VENT BELOW GROUND / FLOOR
AW	AW	AW	ACID WASTE ABOVE FLOOR
AW UG	AW UG	AW	ACID WASTE BELOW GROUND / FLOOR
D	D	D	DRAIN PIPING
GW	GW	GW	GREASE WASTE
GW UG	GW UG	GW	GREASE WASTE BELOW GROUND / FLOOR
PD	PD	PD	PUMP DISCHARGE EFFLUENT / SANITARY
V	V	V	VENT PIPE ABOVE FLOOR
V UG	V UG	V	VENT PIPE BELOW GROUND / FLOOR
W/SAN	W/SAN	W/SAN	WASTE / SANITARY DRAIN ABOVE FLOOR
W UG	W UG	W/SAN	WASTE / SANITARY SEWER OR DRAIN BELOW GROUND / FLOOR
CLV	CLV	CLV	CLEAR WATER VENT ABOVE FLOOR
CLV UG	CLV UG	CLV	CLEAR WATER VENT BELOW GROUND/FLOOR
CLW	CLW	CLW	CLEAR WATER WASTE ABOVE FLOOR
CLW UG	CLW UG	CLW	CLEAR WATER WASTE BELOW GROUND/FLOOR
STM	STM	STM	STORM DRAIN ABOVE FLOOR
STM UG	STM UG	STM	STORM SEWER OR DRAIN BELOW GROUND / PUMP DISCHARGE STORM / CLEARWATER
PD	PD	PD	
DT	DT	DT	DRAINTILE
CSW	CSW	CSW	COLD SOFT WATER PIPING
CW	CW	CW	COLD WATER
140°	140°	140°	140° HOT WATER
HW	HW	HW	HOT WATER
140°	140°	140°	140° HOT WATER RETURN
HWR	HWR	HWR	HOT WATER RETURN
TW	TW	TW	TEMPERED WATER
TWR	TWR	TWR	TEMPERED WATER RETURN
NP	NP	NP	NON-POTABLE WATER
G	G	G	NATURAL GAS
A	A	A	COMPRESSED AIR
SS	SS	SS	SOLAR HEAT TRANSFER FLUID PIPING - SUPPLY
SR	SR	SR	SOLAR HEAT TRANSFER FLUID PIPING - RETURN
	//////////////////////		FOR NON DESIGNATED BELOW SLAB PIPING
	DEMO DEMO	DEMO	DEMOLITION PIPE

NOTE: ALL PIPE TYPES MAY NOT BE USED FOR THIS PROJECT

SPECIALITY PLUMBING PIPE TYPES LEGEND

EXISTING	NEW		
	dc	DC	DBL. CONTAINMENT ACID WASTE ABOVE FLOOR
	(DC)	(DC)	DBL. CONTAINMENT ACID WASTE BLW/GRND./FLR.
RO	RO	RO	REVERSE OSMOSIS
ROR	ROR	ROR	REVERSE OSMOSIS RETURN
CO2	CO2	CO2	CARBON DIOXIDE
LA	LA	A	LAB AIR
LG	LG	G	LAB GAS
LCW	LCW	LCW	LAB COLD WATER
LHW	LHW	LHW	LAB HOT WATER
LHWR	LHWR	LHWR	LAB HOT WATER RETURN
H2	H2	H2	LAB HYDROGEN
He	He	He	LAB HELIUM
N2	N2	N2	LAB NITROGEN
SG	SG	SG	LAB SPECIAL GAS
VAC	VAC	V	LAB VACUUM
N2O	N2O	N2O	LAB NITROUS OXIDE
OX	OX	OX	LAB OXYGEN

NOTE: ALL PIPE TYPES MAY NOT BE USED FOR THIS PROJECT

SHEET INDEX - PLUMBING

P000 COVER SHEET - PLUMBING
P001 NOTES - PLUMBING
P002 SCHEDULES - PLUMBING
P100 FOUNDATION PLAN - PLUMBING
P110 SHOP LEVEL FLOOR PLAN SECTOR A - PLUMBING
P111 SHOP LEVEL FLOOR PLAN SECTOR B - PLUMBING
P120 PLATFORM - PLUMBING
P130 ROOF - PLUMBING
P131 HIGH ROOF - PLUMBING
P300 DETAILS - PLUMBING
P301 DETAILS - PLUMBING
P400 WATER ISOMETRIC - PLUMBING
P500 DRAIN WASTE AND VENT ISOMETRIC - PLUMBING
P501 DRAIN WASTE AND VENT ISOMETRIC - PLUMBING

PLUMBING STAMP

THUNDERBIRD ENGINEERING, INC.
MADISON, WI (608) 223-9040
MILWAUKEE, WI (414) 352-2211
www.THUNDERBIRDENGINEERING.com
14-028

NOT FOR CONSTRUCTION

NO.	DATE	REVISION	BY

ORIGINAL PLANS PREPARED BY

HNTB
11414 W. PARK PLACE
MILWAUKEE, WI 53224
(414) 359-2300

PLANS PREPARED FOR

CITY OF MILWAUKEE
DEPARTMENT OF
PUBLIC WORKS

MILWAUKEE STREETCAR

MAINTENCE FACILITY

95% SUBMISSION | 29 FEBRUARY 2016

DESIGNED BY	DESIGN CK'D	DRAWN BY	PLANS CK'D
TBE	TBE	TBE	TBE

COVER SHEET - PLUMBING

P000

NOT FOR CONSTRUCTION

8

WATER CALCULATION WORKSHEET (CW)

INFORMATION REQUIRED TO CALCULATE WATER SERVICE SIZE

1. DEMAND OF BUILDING IN GALLONS PER MINUTE.	WSFU'S 54 = (GPM)	30
2. DIFFERENCE IN ELEVATION FROM MAIN OR EXTERNAL PRESSURE TANK TO BUILDING CONTROL VALVE	(FEET)	NA
3. SIZE OF WATER METER	(INCHES)	2
4. DEVELOPED LENGTH FROM MAIN OR EXTERNAL PRESSURE TANK TO BUILDING CONTROL VALVE	(FEET)	NA
5. LOW PRESSURE AT MAIN IN STREET OR EXTERNAL PRESSURE TANK	(PSI)	73
CALCULATE WATER SERVICE PRESSURE LOSS		
6. LOW PRESSURE AT MAIN IN STREET OR EXTERNAL PRESSURE TANK. (VALUE OF # 5 ABOVE)		73
7. DETERMINE PRESSURE LOSS DUE TO FRICTION IN 8 INCH DIAMETER WATER SERVICE.	SUBTRACT VALUE OF "7"	NA
WATER SERVICE MATERIAL (DUCTILE IRON)	SUBTOTAL	73
8. DETERMINE PRESSURE LOSS DUE TO ELEVATION, (MULTIPLY THE VALUE OF #2 ABOVE BY .434)	SUBTRACT VALUE OF "8"	NA
9. AVAILABLE PRESSURE AFTER THE BUILDING CONTROL VALVE. (ENTER IN "B" BELOW)	SUBTOTAL	73
CALCULATE THE PRESSURE AVAILABLE FOR UNIFORM LOSS (VALUE OF "A")		
B. AVAILABLE PRESSURE AFTER THE BUILDING CONTROL VALVE. (FROM "9" ABOVE)	VALUE OF "B"	73
C. PRESSURE LOSS OF WATER METER (WHEN METER IS REQUIRED)	SUBTRACT VALUE OF "C"	2
	SUBTOTAL	71
D. (PRESSURE INCREASE DUE TO BOOSTER PUMP)	ADD VALUE OF "D"	NA
	SUBTOTAL	71
E. PRESSURE LOSS DUE TO WATER TREATMENT DEVICES, INSTANTANEOUS WATER HEATERS AND BACKFLOW PREVENTERS WHICH SERVE THE CONTROLLING FIXTURE.	SUBTRACT VALUE OF "E"	NA
(PRESSURE LOSS DUE TO :-	SUBTOTAL	71
F. DIFFERENCE IN ELEVATION BETWEEN THE BUILDING CONTROL VALVE	SUBTRACT VALUE OF "F"	0
AND THE CONTROLLING FIXTURE IN FEET 0 X .434 PSI/FT	SUBTOTAL	71
G. PRESSURE AT CONTROLLING FIXTURE. (CONTROLLING FIXTURE IS MEN'S RESTROOM 113 (SH-1)	(SUBTRACT VALUE OF "G")	20
	SUBTOTAL	51
H. DEVELOPED LENGTH FROM BUILDING CONTROL VALVE TO CONTROLLING	DIVIDE BY VALUE OF "H"	75
FIXTURE IN FEET 50 X 1.5		
WATER DISTRIBUTION MATERIAL TYPE L COPPER	SUBTOTAL	0.68
	MULTIPLY BY	100
A. PRESSURE AVAILABLE FOR UNIFORM LOSS	" A " =	68

Table 82.40-5 - November 2004, No. 587

MAXIMUM ALLOWABLE LOAD FOR COPPER TUBE - TYPE L, ASTM B88 (C=150)

PRESSURE LOSS DUE TO FRICTION (IN LBS. PER 100 FT OF LENGTH)	PIPE DIAMETER (IN INCHES)																										
	1/2"			3/4"			1"			1-1/4"			1-1/2"			2"			2-1/2"			3"			4"		
		WSFU			WSFU			WSFU			WSFU			WSFU			WSFU			WSFU			WSFU			WSFU	
	GPM	FM	FT	GPM	FM	FT	GPM	FM	FT	GPM	FM	FT	GPM	FM	FT	GPM	FM	FT	GPM	FM	FT	GPM	FM	FT	GPM	FM	FT
0.5	0.5	--	0.5	2.0	--	2.0	4.0	--	4.0	7.0	--	9.0	11.0	4.0	15.0	23.0	7.5	37.0	40.0	30.0	86.0	65.0	90.0	200	136	462	561
1	1.0	--	1.0	2.5	--	2.5	5.5	--	6.5	10.0	4.0	13.0	16.0	5.0	23.0	33.0	17.5	63.0	59.0	72.0	170	94.0	211	345	198	909	923
2	1.5	--	1.5	4.0	--	4.0	8.5	--	10.5	14.5	4.5	20.5	23.0	7.5	37.0	48.0	44.0	120	86.0	175	305	137	468	566	288	1694	1694
3	2.0	--	2.0	5.0	--	6.0	10.5	4.0	14.0	18.5	6.0	27.5	29.0	12.5	52.0	60.0	75.0	175	107	283	410	169	698	752	298	1792	1792
4	2.0	--	2.0	6.0	--	7.0	12.0	4.0	16.5	21.5	7.0	33.0	34.0	18.5	66.0	70.0	108	225	119	356	469	NP			NP		
5	2.5	--	2.5	6.5	--	8.0	14.0	4.5	20.0	24.0	8.0	40.0	38.0	26.0	80.0	77.0	136	260	NP								
6	2.5	--	2.5	7.5	--	9.5	15.5	5.0	22.5	26.0	9.0	45.0	42.0	33.0	100	NP											
7	3.0	--	3.0	8.0	--	10.0	16.5	5.5	24.0	29.0	12.5	52.0	44.0	37.0	107												
8	3.0	--	3.0	8.5	--	10.5	18.0	6.0	26.5	31.0	15.0	58.0	NP														
9	3.5	--	3.5	9.5	--	12.5	19.0	6.0	28	NP																	
10	3.5	--	3.5	10.0	4.0	13.0	20.0	6.5	30.0																		
11	4.0	--	4.0	10.5	4.0	14.0	20.5	6.5	31.0																		
12	4.0	--	4.0	11.0	4.0	15.0	NP																				
13	4.0	--	4.0	11.5	4.0	15.5																					
14	4.5	--	5.0	12.0	4.0	16.5																					
15	4.5	--	5.0	NP																							
16	5.0	--	6.0																								
17	5.0	--	6.0																								
18	5.0	--	6.0																								
19	5.0	--	6.0																								
20	5.5	--	6.5																								
	NP																										

NOTES:

WSFU means water supply fixture units.
GPM means gallons per minute.
FM means predominately flushometer type water closets or syphon jet urinals.
FT means predominately flush tank type water closets or wash down urinals.
NP means not permitted, velocities exceed 8 feet per second.

For using this table, round the calculated pressure loss due to friction to the next higher number shown.

Comm 82.40 (7) (f) and (g) specifies minimum sizes for water distribution piping.

GENERAL NOTES

1. VERIFY UTILITY INFORMATION WITH LOCAL UTILITY COMPANIES. VISIT THE BUILDING SITE AND BECOME THOROUGHLY FAMILIAR WITH ALL EXISTING CONDITIONS AFFECTING THE WORK.
2. VERIFY ALL MEASUREMENTS, PIPE SIZES, PIPE LOCATIONS, ELEVATIONS, ETC. AT SITES.
3. DRAWINGS OF ALL OTHER TRADES SHALL BE REVIEWED. COORDINATE THE INSTALLATION AND SCHEDULING OF THE WORK WITH OTHER TRADES TO PREVENT INTERFERENCE WITH THER RESPECTIVE INSTALLATION.
4. INSTALL ALL WORK SUBSTANTIALLY AS SHOWN ON THE DRAWINGS. DEVIATIONS FROM LOCATIONS OF PIPING INDICATED ON THE DRAWINGS MAY HAVE TO BE MADE AT NO ADDITIONAL COST TO THE OWNER IN ORDER TO CLEAR THE WORK OF THE OTHER TRADES. HOWEVER, ALL SUCH DEVIATIONS SHALL BE PREVIOUSLY APPROVED BY THE OWNER'S REPRESENTATIVE.
5. REFER TO ARCHITECTURAL DRAWINGS FOR EXACT LOCATION OF ALL ROOF DRAINS, PLUMBING FIXTURES, STRUCTURAL DIMENSIONS AND LAYOUT.
6. IT IS THE INTENT OF THESE DRAWINGS THAT A COMPLETE WORKING SYSTEM PROPERLY TESTED, WILL BE OPERATIONAL UPON COMPLETION OF INSTALLATION.
7. CONFLICT BETWEEN DRAWINGS AND SPECIFICATIONS SHALL BE BROUGHT TO THE ATTENTION OF THE ENGINEER PRIOR TO BID OPENING. THE ENGINEER RESERVES THE RIGHT TO FINAL DECISION.
8. UNLESS NOTED OTHERWISE ALL PIPING 3" AND LARGER SHALL BE INSTALLED AT A SLOPE OF 1/8" PER FOOT AND PIPING 2" AND SMALLER AT 1/4" PER FOOT.
9. THIS CONTRACTOR SHALL FURNISH AND INSTALL SLEEVES FOR ALL PIPING PASSING THROUGH CONCRETE FOUNDATION WALLS. REFER TO STRUCTURAL DRAWINGS FOR INSTALLATION REQUIREMENTS OF PIPING ROUTED BELOW FOOTINGS. PROVIDE SLEEVE AND CONCRETE FILL FOR PIPING PASSING BENEATH FOOTING.
10. INVERT ELEVATIONS THIS SHEET ARE REFERENCED TO BUILDING FIRST FLOOR DATUM OF 100.00 FEET.
11. TERMINATE WATER, STORM, AND SANITARY LATERALS 5'-0" BEYOND EXTERIOR FACE OF FOUNDATION WALL. CONTINUATION SHALL BE UNDER A SEPARATE CONTRACT. FINAL CONNECTION BY DIV. 22
12. PLUMBING CONTRACTOR SHALL BE RESPONSIBLE FOR ALL CUTTING AND PATCHING OF HOLES AND OPENINGS IN EXISTING WALLS AND FLOORS.
13. THE DRAWINGS ARE SCHEMATIC IN NATURE. ALL REQUIRED OFFSETS, FITTINGS, AND SUPPORTS SHALL BE INCLUDED IN THE BASE BID TO ACCOMMODATE ACTUAL FIELD CONDITIONS. FINAL LOCATIONS OF ALL WORK SHALL BE COORDINATED IN THE FIELD AND INSTALLED WHERE DIRECTED BY THE OWNER'S REPRESENTATIVE.

14 ROUTE ALL PIPES SHOWN ROUTED UP ALONG EXTERIOR WALLS TO BE LOCATED NEAR STRUCTURAL COLUMN.

THUNDERBIRD
ENGINEERING, INC.
MADISON, WI (608) 223-9040
MILWAUKEE, WI (414) 352-2211
www.THUNDERBIRDENGINEERING.com

14-028

NOT FOR CONSTRUCTION

NO.	DATE	REVISION	BY

ORIGINAL PLANS PREPARED BY

HNTB
11414 W. PARK PLACE
MILWAUKEE, WI 53224
(414) 359-2300

PLANS PREPARED FOR

CITY OF MILWAUKEE
DEPARTMENT OF
PUBLIC WORKS

MILWAUKEE STREETCAR

MAINTENCE FACILITY

95% SUBMISSION | 29 FEBRUARY 2016

DESIGNED BY TBE | DESIGN CK'D TBE | DRAWN BY TBE | PLANS CK'D TBE

NOTES - PLUMBING

P001

NOT FOR CONSTRUCTION

INLINE PUMP SCHEDULE

Type Mark	LOCATION	MANUFACTURER	MODEL	SERVICE	FLOW (GPM)	HEAD (FT)	MOTOR (HP)	RPM	EQUIPMENT VOLTAGE/HERTZ/PHASE	REMARKS
CP-2	PM INSPECTION BAY 125	BELL & GOSSETT	ECOCIRC XL B 20-35	TWR	2	10	1/12		115/60/1	
CP-2	MECHANICAL ROOM 119	BELL & GOSSETT	ECOCIRC XL B 20-35	HWR	3	10	1/12		115/60/1	

GAS FIRED WATER HEATER SCHEDULE

TAG	LOCATION	MANUFACTURER	MODEL	VOLUME (GALLONS)	INPUT (BTUH)	RECOVERY (GPH)	TEMPERATURE RISE (F)	INTAKE AND EXHAUST DIA.	REMARKS
GWH-1	MECHANICAL ROOM 119	BRADFORD WHITE	EF-100T 150E-3N(A)	100	150000	250	100	4"	PVC FLUE BY DIV 22

CLEAR WATER SUMP PUMP SCHEDULE

TAG	LOCATION	MANUFACTURER	MODEL	SERVICE	FLOW (GPM)	HEAD (PSI)	DISCHARGE	SOLIDS	MOTOR (HP)	RPM	EQUIPMENT VOLTAGE/HERTZ/PHASE	REMARKS
SP-1	PM INSPECTION BAY 125	HYDROMATIC	SHEF 40	CLW	30	22	1 1/2"	3/4"	4/10	1550	230/60/1	SIMPLEX

SUMP SCHEDULE

TAG	LOCATION	MANUFACTURER	MODEL	SERVICE	VOLUME (GALLONS)	DIAMETER	DEPTH	REMARKS
GCB-1	PM INSPECTION BAY 125	CREST						
GCB-2	SEE DRAWINGS	CREST						

PLUMBING MOTOR LOAD COORDINATION SCHEDULE - REFERENCE ONLY

TAG	EQUIPMENT DESCRIPTION	LOCATION	POWER DATA			DISCONNECT			REMARKS
			Load	EQUIP. VOLTAGE	EMERG. POWER	FURNISHED BY	INSTALLED BY	WIRED BY	
GWH-1	GAS WATER HEATER	MECHANICAL ROOM 119	100W	120	NO	DIV. 26	DIV. 26	DIV. 26	
SP-1	SUMP PUMP - DRAIN TILE	PM INSPECTION BAY 125	4/10 HP	230/60/1	NO	DIV. 22	DIV. 22	DIV. 26	

THUNDERBIRD
ENGINEERING, INC.
MADISON, WI (608) 223-9040
MILWAUKEE, WI (414) 352-2211
www.THUNDERBIRDENGINEERING.com
14-028

NOT FOR CONSTRUCTION

NO.	DATE	REVISION	BY

ORIGINAL PLANS PREPARED BY

HNTB
11414 W. PARK PLACE
MILWAUKEE, WI 53224
(414) 359-2300

PLANS PREPARED FOR

CITY OF MILWAUKEE
DEPARTMENT OF
PUBLIC WORKS

MILWAUKEE STREETCAR

MAINTENCE FACILITY

95% SUBMISSION | 29 FEBRUARY 2016

DESIGNED BY TBE | DESIGN CK'D TBE | DRAWN BY TBE | PLANS CK'D TBE

SCHEDULES - PLUMBING

P002

NOT FOR CONSTRUCTION

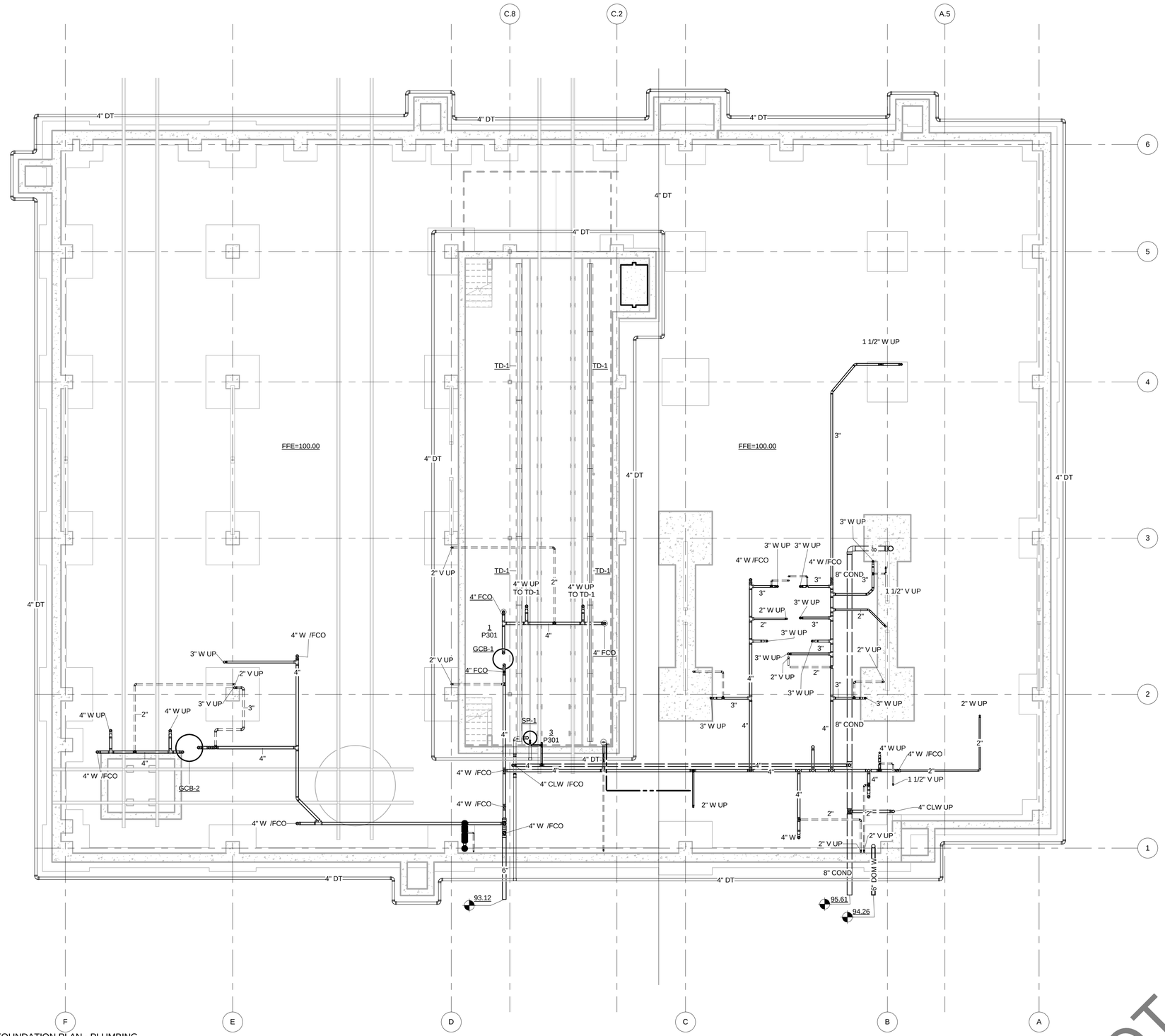

1 FOUNDATION PLAN - PLUMBING
1/8" = 1'-0"

THUNDERBIRD
ENGINEERING, INC.
MADISON, WI (608) 223-9040
MILWAUKEE, WI (414) 352-2211
www.THUNDERBIRDENGINEERING.com
14-028

NOT FOR CONSTRUCTION

NO.	DATE	REVISION	BY

ORIGINAL PLANS PREPARED BY

HNTB
11414 W. PARK PLACE
MILWAUKEE, WI 53224
(414) 359-2300

PLANS PREPARED FOR

CITY OF MILWAUKEE
DEPARTMENT OF
PUBLIC WORKS

MILWAUKEE STREETCAR

MAINTENCE FACILITY

95% SUBMISSION | 29 FEBRUARY 2016

DESIGNED BY	TBE	DESIGN CK'D	TBE	DRAWN BY	TBE	PLANS CK'D	TBE

FOUNDATION PLAN - PLUMBING

P100

NOT FOR CONSTRUCTION

8

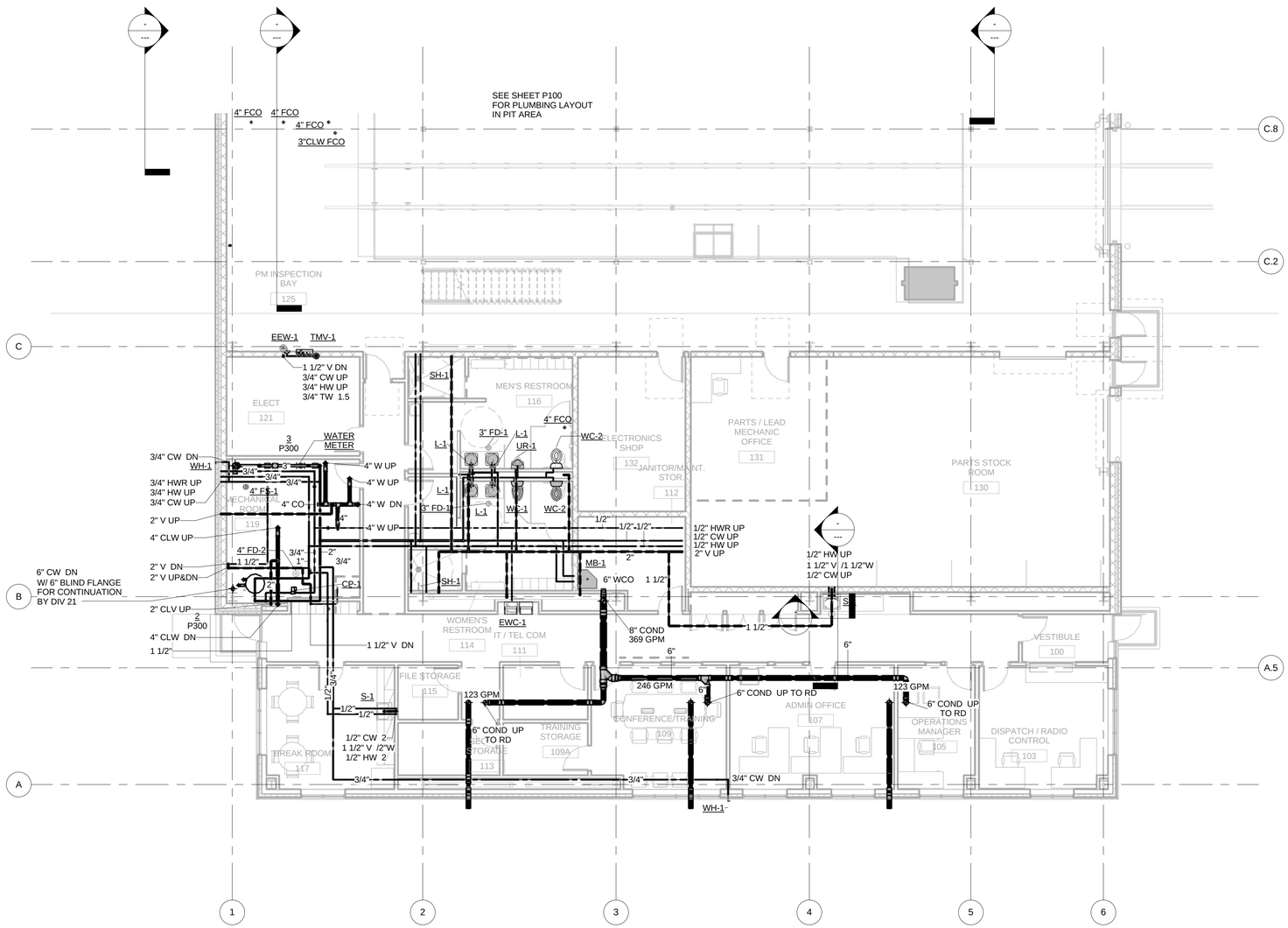

1 SHOP LEVEL FLOOR PLAN SECTOR A
1/8" = 1'-0"

THUNDERBIRD
ENGINEERING, INC.
MADISON, WI (608) 223-9040
MILWAUKEE, WI (414) 352-2211
www.THUNDERBIRDENGINEERING.com
14-028

NOT FOR CONSTRUCTION

NO.	DATE	REVISION	BY

ORIGINAL PLANS PREPARED BY

HNTB
11414 W. PARK PLACE
MILWAUKEE, WI 53224
(414) 359-2300

PLANS PREPARED FOR

CITY OF MILWAUKEE
DEPARTMENT OF
PUBLIC WORKS

MILWAUKEE STREETCAR

MAINTENCE FACILITY

95% SUBMISSION		29 FEBRUARY 2016	
DESIGNED BY TBE	DESIGN CK'D TBE	DRAWN BY TBE	PLANS CK'D TBE

SHOP LEVEL FLOOR PLAN SECTOR A - PLUMBING

P110

NOT FOR CONSTRUCTION

8

8

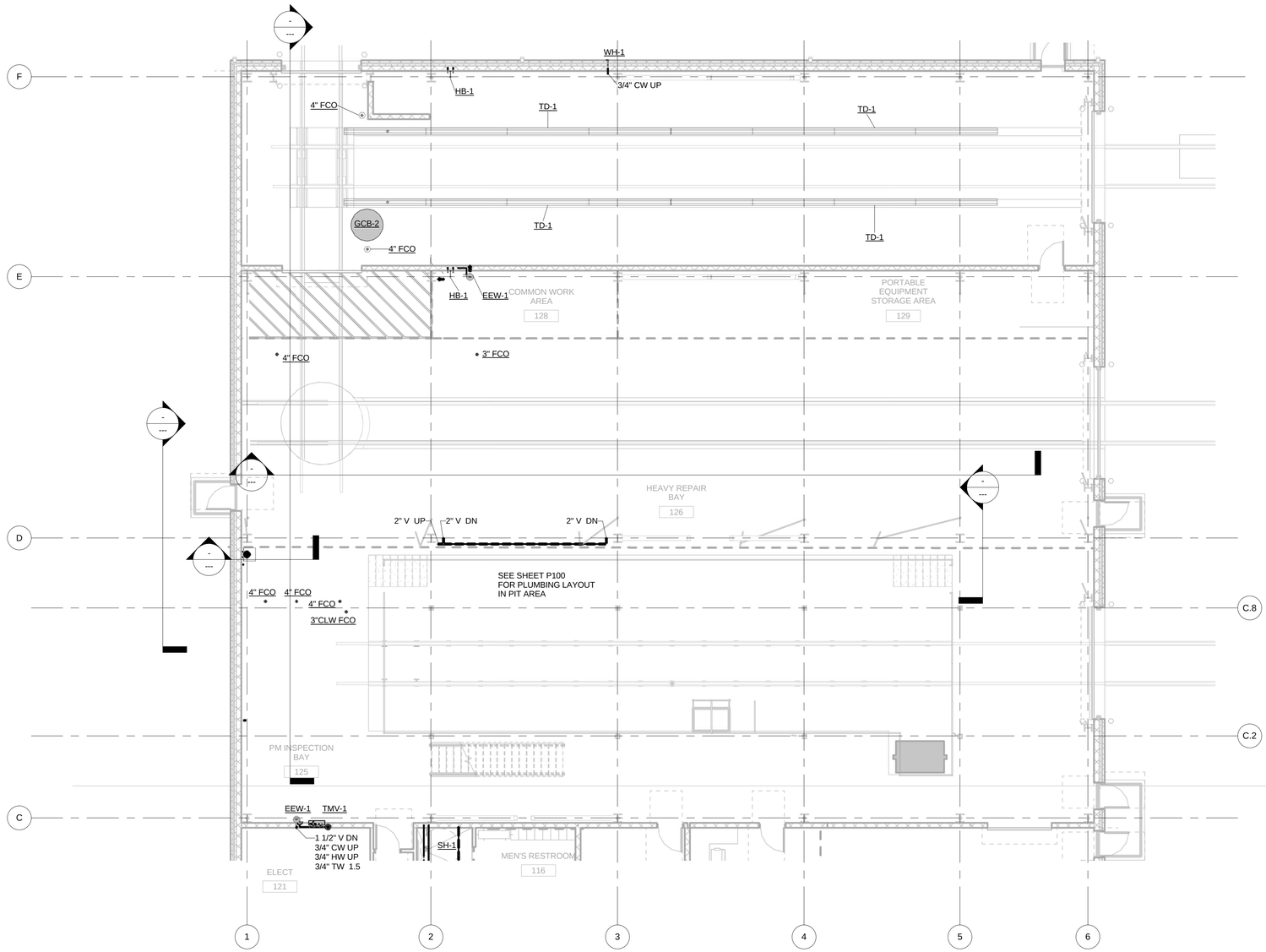

1 SHOP LEVEL FLOOR PLAN SECTOR B
1/8" = 1'-0"

THUNDERBIRD
ENGINEERING, INC.
MADISON, WI (608) 223-9040
MILWAUKEE, WI (414) 352-2211
www.THUNDERBIRDENGINEERING.com
14-028

NOT FOR CONSTRUCTION

NO.	DATE	REVISION	BY

ORIGINAL PLANS PREPARED BY

HNTB
11414 W. PARK PLACE
MILWAUKEE, WI 53224
(414) 359-2300

PLANS PREPARED FOR

CITY OF MILWAUKEE
DEPARTMENT OF
PUBLIC WORKS

MILWAUKEE STREETCAR

MAINTENCE FACILITY

95% SUBMISSION		29 FEBRUARY 2016	
DESIGNED BY TBE	DESIGN CK'D TBE	DRAWN BY TBE	PLANS CK'D TBE

SHOP LEVEL FLOOR PLAN SECTOR B - PLUMBING

P111

NOT FOR CONSTRUCTION

8

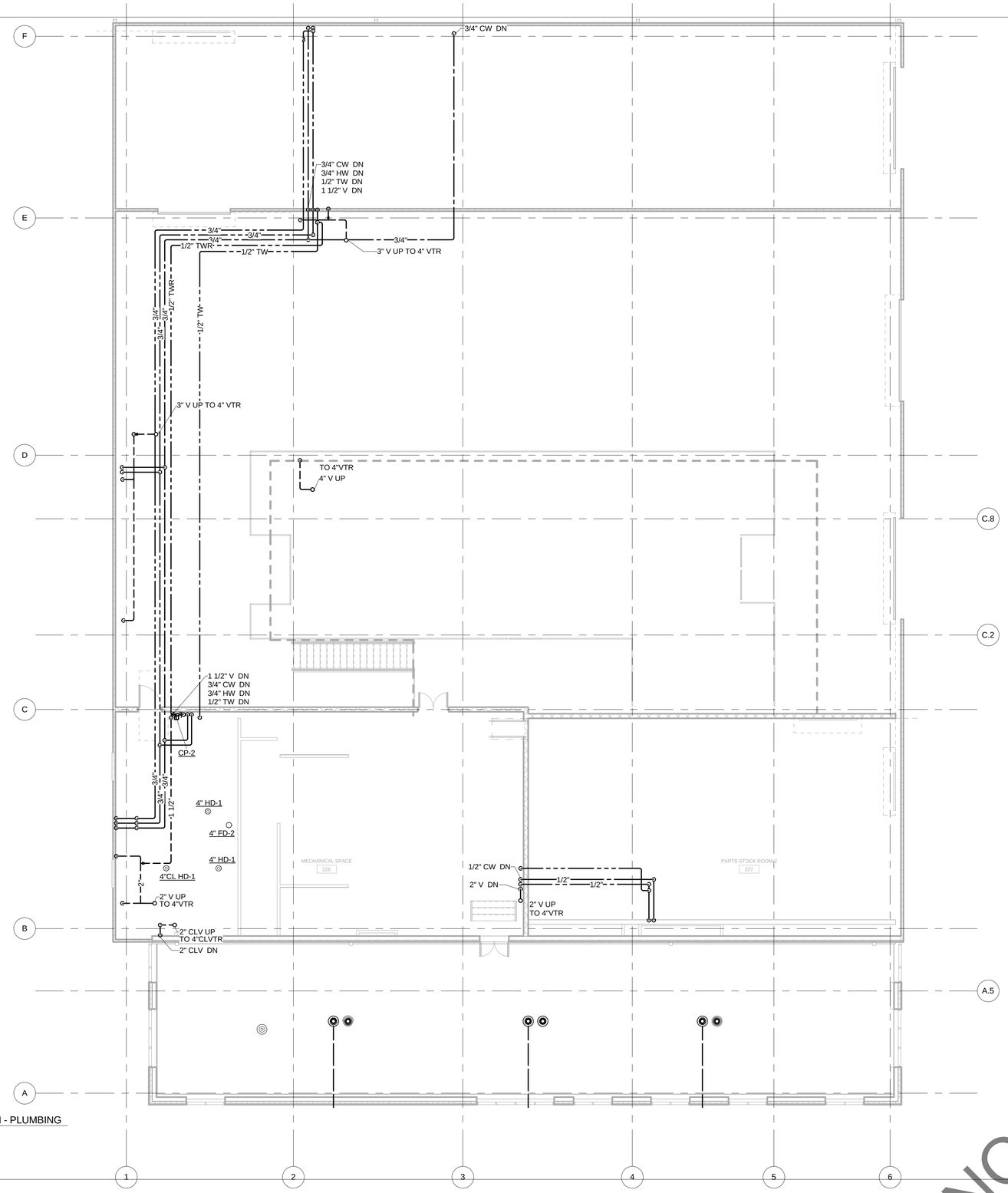

1 PLATFORM - PLUMBING
1/8" = 1'-0"

THUNDERBIRD
ENGINEERING, INC.
MADISON, WI (608) 223-9040
MILWAUKEE, WI (414) 352-2211
www.THUNDERBIRDENGINEERING.com
14-028

NOT FOR CONSTRUCTION

NO.	DATE	REVISION	BY

ORIGINAL PLANS PREPARED BY

HNTB
11414 W. PARK PLACE
MILWAUKEE, WI 53224
(414) 359-2300

PLANS PREPARED FOR

CITY OF MILWAUKEE
DEPARTMENT OF
PUBLIC WORKS

MILWAUKEE STREETCAR

MAINTENCE FACILITY

95% SUBMISSION | 29 FEBRUARY 2016

DESIGNED BY	TBE	DESIGN CK'D	TBE	DRAWN BY	TBE	PLANS CK'D	TBE

PLATFORM - PLUMBING

P120

NOT FOR CONSTRUCTION

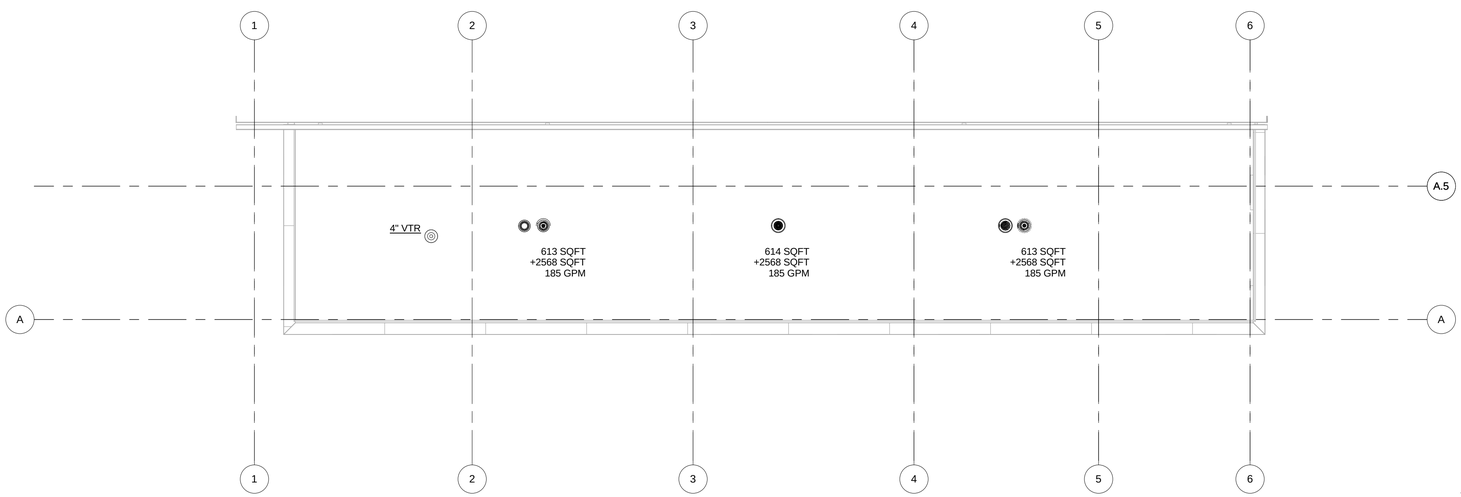

1 T.O. ROOF - PLUMBING
1/8" = 1'-0"

THUNDERBIRD
ENGINEERING, INC.
MADISON, WI (608) 223-9040
MILWAUKEE, WI (414) 352-2211
www.THUNDERBIRDENGINEERING.com
14-028

NOT FOR CONSTRUCTION

NO.	DATE	REVISION	BY

ORIGINAL PLANS PREPARED BY

HNTB
11414 W. PARK PLACE
MILWAUKEE, WI 53224
(414) 359-2300

PLANS PREPARED FOR

CITY OF MILWAUKEE
DEPARTMENT OF
PUBLIC WORKS

MILWAUKEE STREETCAR

MAINTENCE FACILITY

95% SUBMISSION	29 FEBRUARY 2016

DESIGNED BY	TBE	DESIGN CK'D	TBE	DRAWN BY	TBE	PLANS CK'D	TBE

ROOF - PLUMBING

P130

NOT FOR CONSTRUCTION

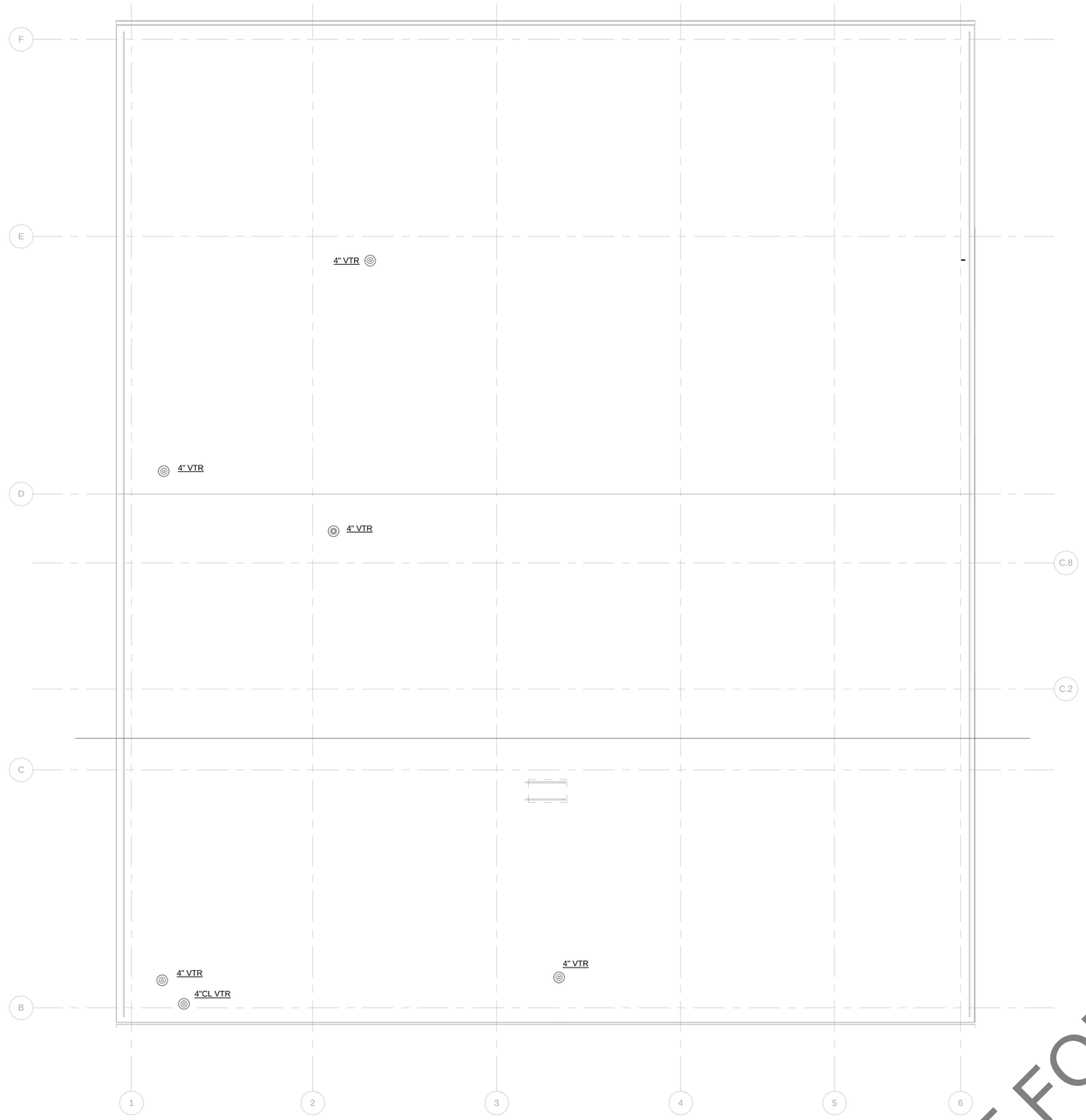

1 T.O. High Roof
1/8" = 1'-0"

THUNDERBIRD
ENGINEERING, INC.
MADISON, WI (608) 223-9040
MILWAUKEE, WI (414) 352-2211
www.THUNDERBIRDENGINEERING.com
14-028

NOT FOR CONSTRUCTION

NO.	DATE	REVISION	BY

ORIGINAL PLANS PREPARED BY

HNTB
11414 W. PARK PLACE
MILWAUKEE, WI 53224
(414) 359-2300

PLANS PREPARED FOR

CITY OF MILWAUKEE
DEPARTMENT OF
PUBLIC WORKS

MILWAUKEE STREETCAR

MAINTENCE FACILITY

95% SUBMISSION | 29 FEBRUARY 2016

DESIGNED BY	TBE	DESIGN CK'D	TBE	DRAWN BY	TBE	PLANS CK'D	TBE

HIGH ROOF - PLUMBING

P131

NOT FOR CONSTRUCTION

8

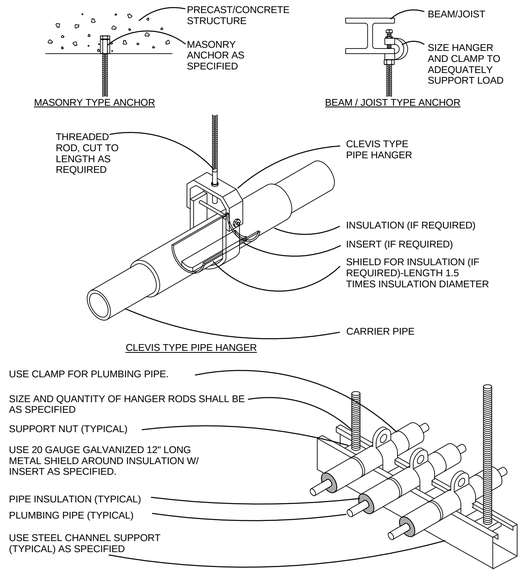

1 PIPE HANGER DETAIL
1/8" = 1'-0"

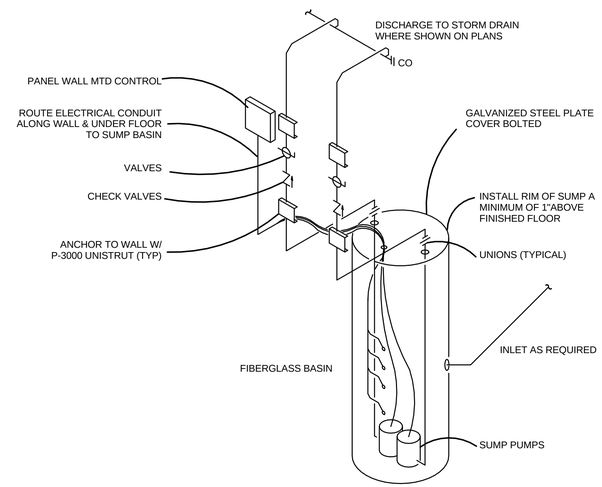

ARRANGEMENT SHOWN IS SCHEMATIC. ADJUST TO SUIT FIELD CONDITIONS. PIT EXCAVATION IS BY PLUMBING CONTRACTOR. ONLY CLEAR WATER WASTE, SUCH AS CONDENSATE, MAY ENTER THIS SUMP. LOCATE FLOATS AT ELEVATIONS RECOMMENDED BY PUMP MANUFACTURER. LOCATE AND ARRANGE SO THAT COVER AND PUMPS CAN BE REMOVED.

2 CLEAR WATER DUPLEX SUMP PUMP DETAIL#1
12" = 1'-0"

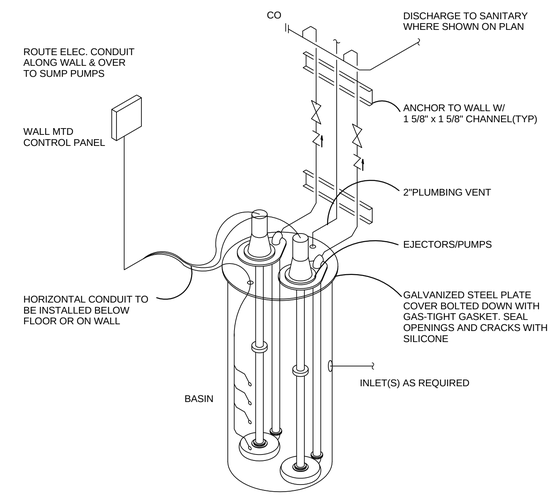

ARRANGEMENT SHOWN IS SCHEMATIC. ADJUST TO SUIT FIELD CONDITIONS. PIT EXCAVATION IS BY PLUMBING CONTRACTOR. LOCATE FLOATS AT ELEVATIONS RECOMMENDED BY PUMP MANUFACTURER. LOCATE AND ARRANGE SO THAT COVER AND PUMPS CAN BE REMOVED

3 DUPLEX SANITARY VERTICAL SUMP PUMP DETAIL
1/8" = 1'-0"

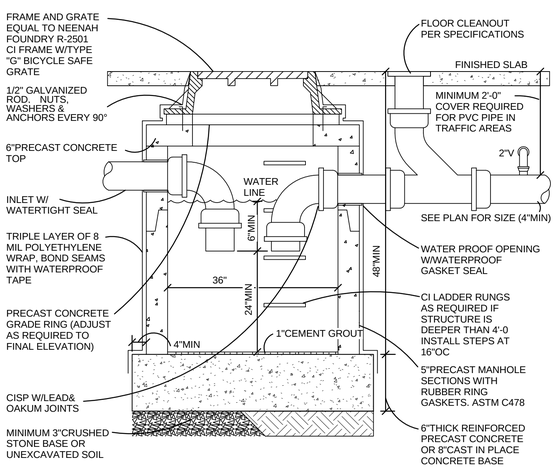

NOTES:
1. ALL SANITARY STRUCTURES TO HAVE A WATERTIGHT GASKET SEAL AT PIPE PENETRATIONS
2. RUNGS TO BE NEENAH R-1982-F OR EQUAL
3. TRIPLE LAYER OF 8MIL POLYETHYLENE WRAP. BOND SEAMS WITH WATERPROOF TAPE
4. SEAL ALL JOINTS WITH 1"BUTYL ROPE
5. 1/2" GALVANIZED THREADED ROD WITH NUTS, WASHERS AND ANCHORS

4 GARAGE CATCH BASIN DETAIL
1/8" = 1'-0"

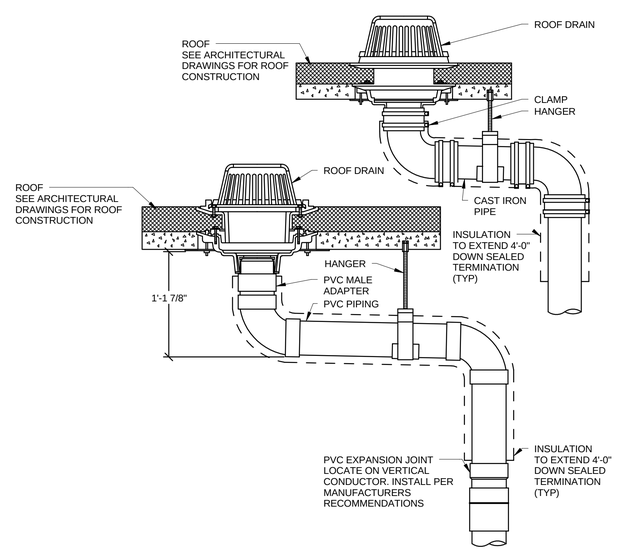

5 ROOF DRAIN DETAIL
1" = 10'-0"

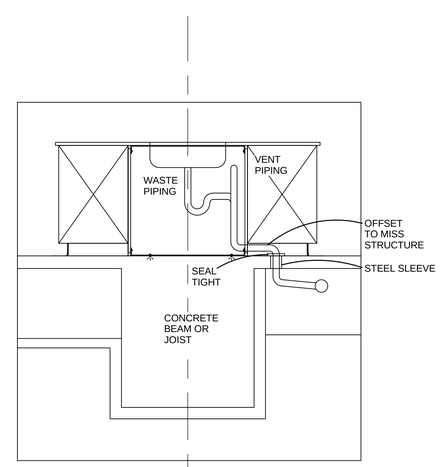

6 PLUMBING OFFSETS AT STRUCTURAL BEAMS OR JOISTS DETAIL
1/8" = 1'-0"

THUNDERBIRD
ENGINEERING, INC.
MADISON, WI (608) 223-9040
MILWAUKEE, WI (414) 352-2211
www.THUNDERBIRDENGINEERING.com
14-028

NOT FOR CONSTRUCTION

NO.	DATE	REVISION	BY

ORIGINAL PLANS PREPARED BY

HNTB
11414 W. PARK PLACE
MILWAUKEE, WI 53224
(414) 359-2300

PLANS PREPARED FOR

CITY OF MILWAUKEE
DEPARTMENT OF
PUBLIC WORKS

MILWAUKEE STREETCAR

MAINTENCE FACILITY

95% SUBMISSION | 29 FEBRUARY 2016

DESIGNED BY	TBE	DESIGN CK'D	TBE	DRAWN BY	TBE	PLANS CK'D	TBE

DETAILS - PLUMBING

P300

NOT FOR CONSTRUCTION

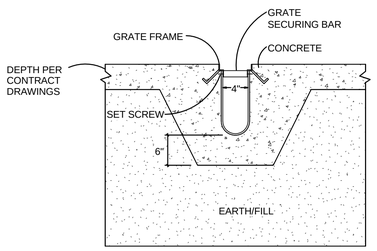

1 TRENCH DRAIN DETAIL
1/8" = 1'-0"

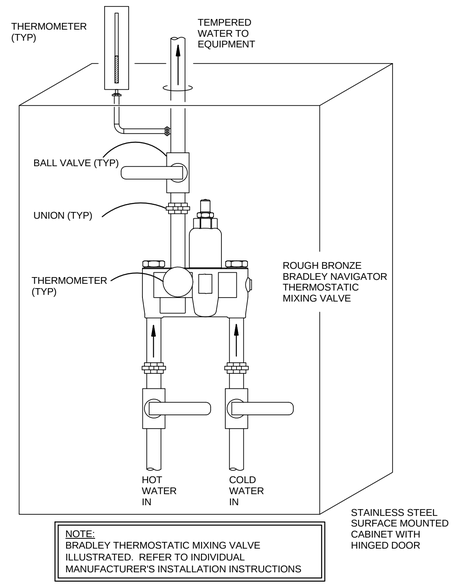

2 EEWS MIXING VALVE DETAIL
1/8" = 1'-0"

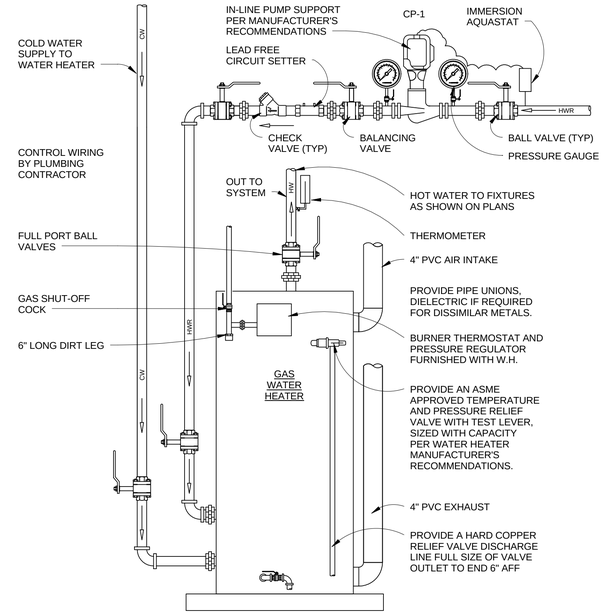

PIPING ARRANGEMENT SHOWN IS SCHEMATIC. ADJUST TO SUIT FIELD CONDITIONS. REFER TO FLOOR PLANS FOR PIPE SIZES. SET HEATER THERMOSTAT AT 120°F. PROVIDE CLEARANCES RECOMMENDED BY MANUFACTURER. PROVIDE ACCESSIBILITY TO, AND REMOVABILITY OF UNIT.

3 GAS WATER HEATER DETAIL
1/8" = 1'-0"

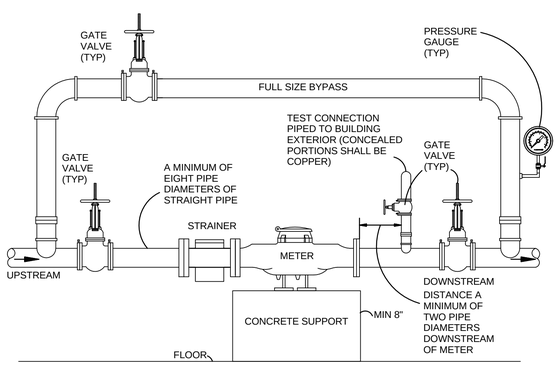

NOTES:
1. INSTALL IN ACCORDANCE WITH THE LOCAL MUNICIPALITY WATER UTILITY'S REQUIREMENTS.
2. WATER METER TO BE INSULATED, SEE SPECIFICATION SECTION 22 07 00.

4 WATER METER DETAIL
1/8" = 1'-0"

THUNDERBIRD
ENGINEERING, INC.
MADISON, WI (608) 223-9040
MILWAUKEE, WI (414) 352-2211
www.THUNDERBIRDENGINEERING.com
14-028

NOT FOR CONSTRUCTION

NO.	DATE	REVISION	BY

ORIGINAL PLANS PREPARED BY

HNTB
11414 W. PARK PLACE
MILWAUKEE, WI 53224
(414) 359-2300

PLANS PREPARED FOR

CITY OF MILWAUKEE
DEPARTMENT OF
PUBLIC WORKS

MILWAUKEE STREETCAR

MAINTENCE FACILITY

95% SUBMISSION | 29 FEBRUARY 2016

DESIGNED BY	TBE	DESIGN CK'D	TBE	DRAWN BY	TBE	PLANS CK'D	TBE

DETAILS - PLUMBING

P301

NOT FOR CONSTRUCTION

8

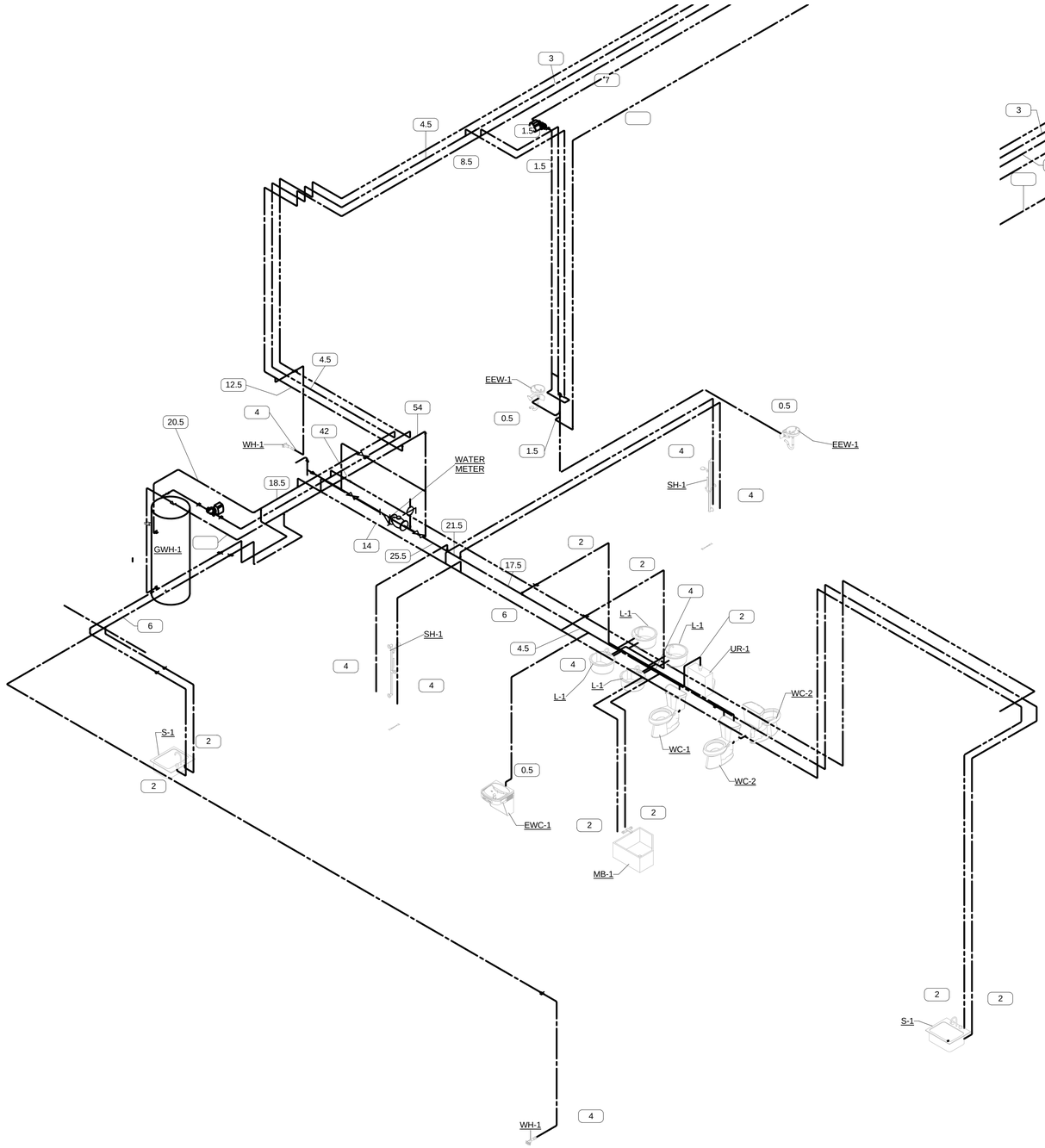

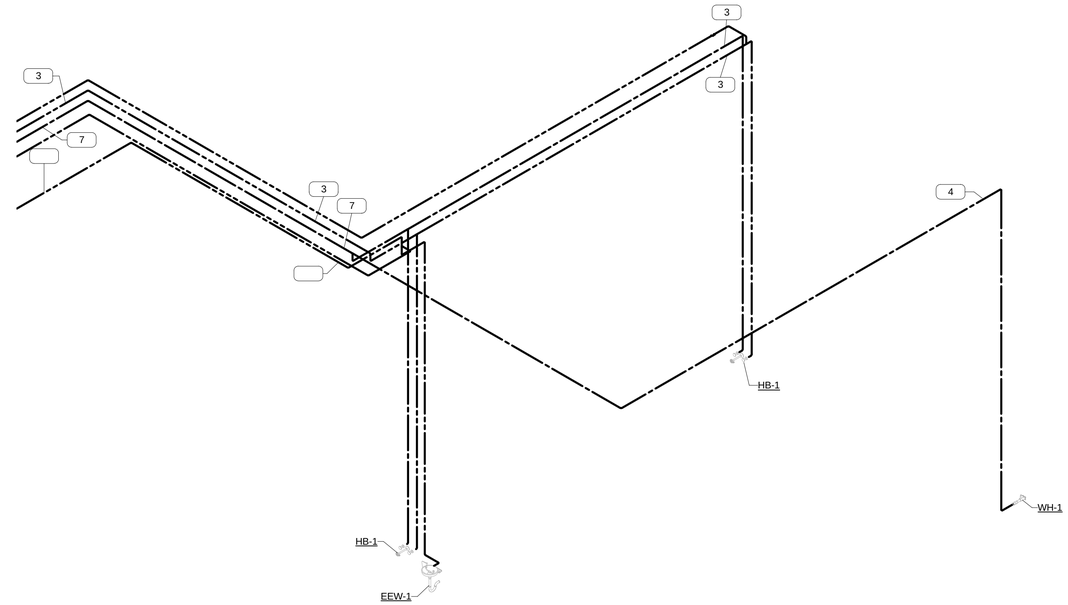

THUNDERBIRD
ENGINEERING, INC.
MADISON, WI (608) 223-9040
MILWAUKEE, WI (414) 352-2211
www.THUNDERBIRDENGINEERING.com
14-028

NOT FOR CONSTRUCTION

NO.	DATE	REVISION	BY

ORIGINAL PLANS PREPARED BY

HNTB
11414 W. PARK PLACE
MILWAUKEE, WI 53224
(414) 359-2300

PLANS PREPARED FOR

CITY OF MILWAUKEE
DEPARTMENT OF
PUBLIC WORKS

MILWAUKEE STREETCAR

MAINTENCE FACILITY

95% SUBMISSION | 29 FEBRUARY 2016

DESIGNED BY	TBE	DESIGN CK'D	TBE	DRAWN BY	TBE	PLANS CK'D	TBE

WATER ISOMETRIC - PLUMBING

P400

NOT FOR CONSTRUCTION

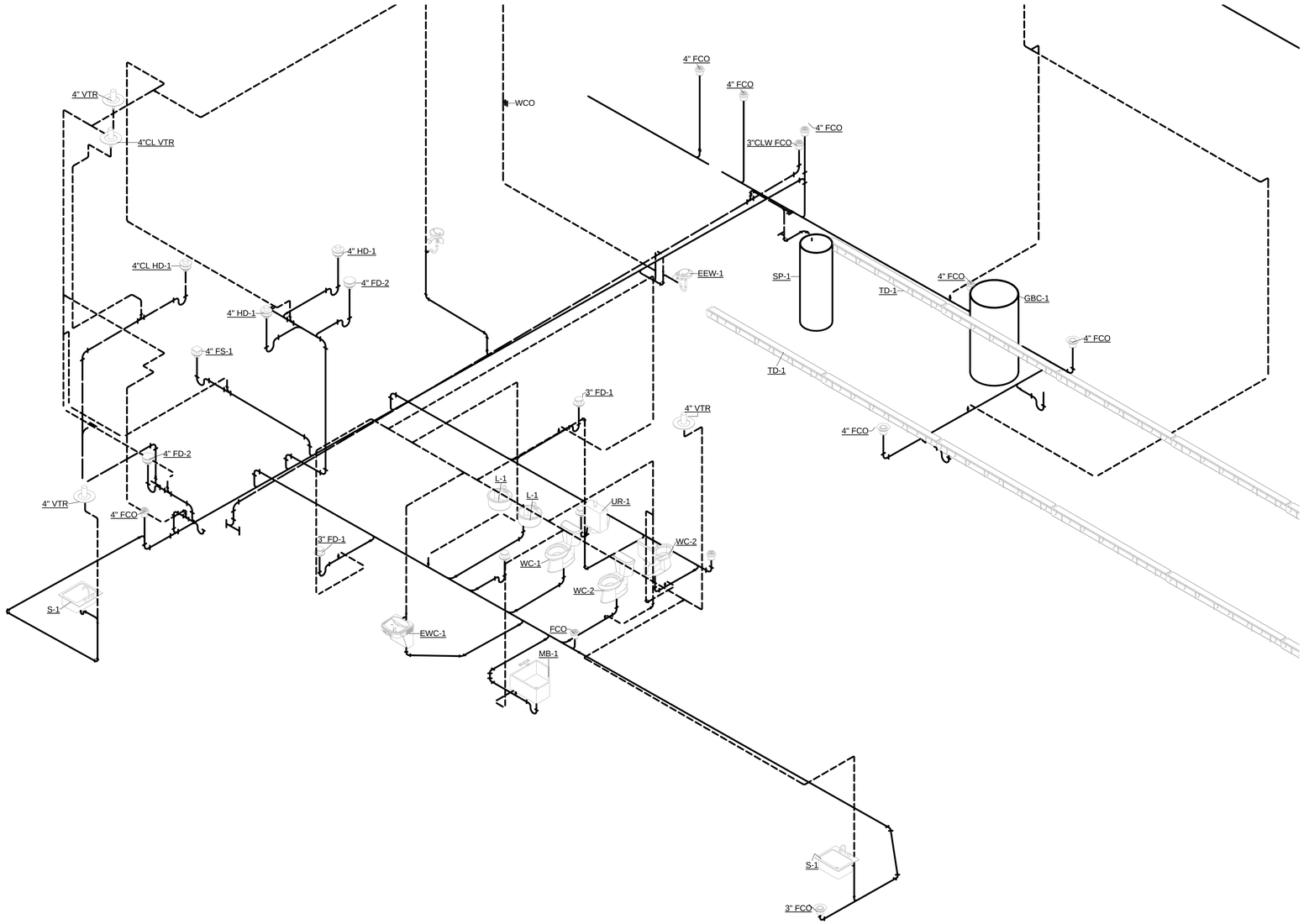

THUNDERBIRD
ENGINEERING, INC.
MADISON, WI (608) 223-9040
MILWAUKEE, WI (414) 352-2211
www.THUNDERBIRDENGINEERING.com
14-028

NOT FOR CONSTRUCTION

NO.	DATE	REVISION	BY

ORIGINAL PLANS PREPARED BY

HNTB
11414 W. PARK PLACE
MILWAUKEE, WI 53224
(414) 359-2300

PLANS PREPARED FOR

CITY OF MILWAUKEE
DEPARTMENT OF
PUBLIC WORKS

MILWAUKEE STREETCAR

MAINTENCE FACILITY

95% SUBMISSION | 29 FEBRUARY 2016

DESIGNED BY	TBE	DESIGN CK'D	TBE	DRAWN BY	TBE	PLANS CK'D	TBE

DRAIN WASTE AND VENT ISOMETRIC - PLUMBING

P500

NOT FOR CONSTRUCTION

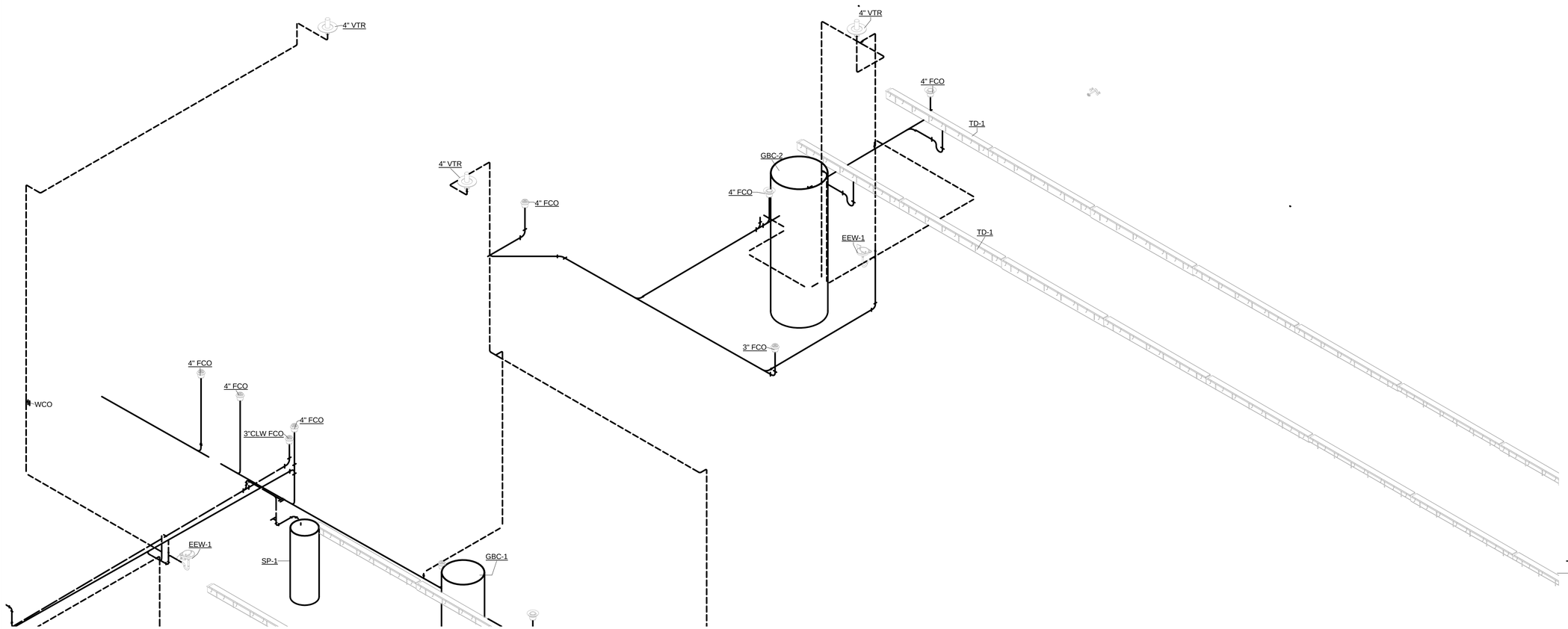

THUNDERBIRD
ENGINEERING, INC.
MADISON, WI (608) 223-9040
MILWAUKEE, WI (414) 352-2211
www.THUNDERBIRDENGINEERING.com
14-028

NOT FOR CONSTRUCTION

NO.	DATE	REVISION	BY

ORIGINAL PLANS PREPARED BY

HNTB
11414 W. PARK PLACE
MILWAUKEE, WI 53224
(414) 359-2300

PLANS PREPARED FOR

CITY OF MILWAUKEE
DEPARTMENT OF
PUBLIC WORKS

MILWAUKEE STREETCAR

MAINTENCE FACILITY

95% SUBMISSION		29 FEBRUARY 2016	
DESIGNED BY TBE	DESIGN CK'D TBE	DRAWN BY TBE	PLANS CK'D TBE

DRAIN WASTE AND VENT ISOMETRIC - PLUMBING

P501

NOT FOR CONSTRUCTION

8

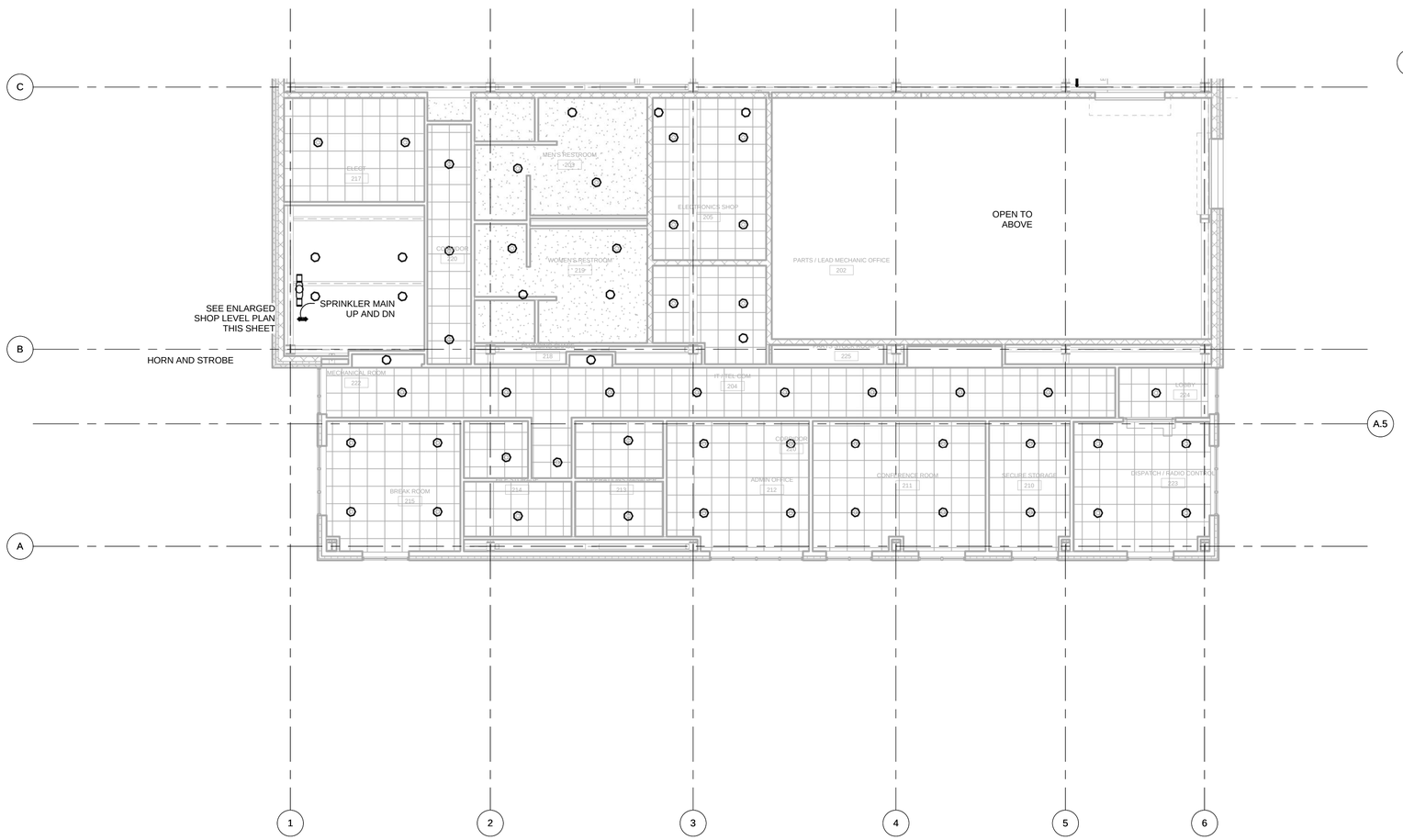

1 OFFICE LEVEL - FIRE PROTECTION
1/8" = 1'-0"

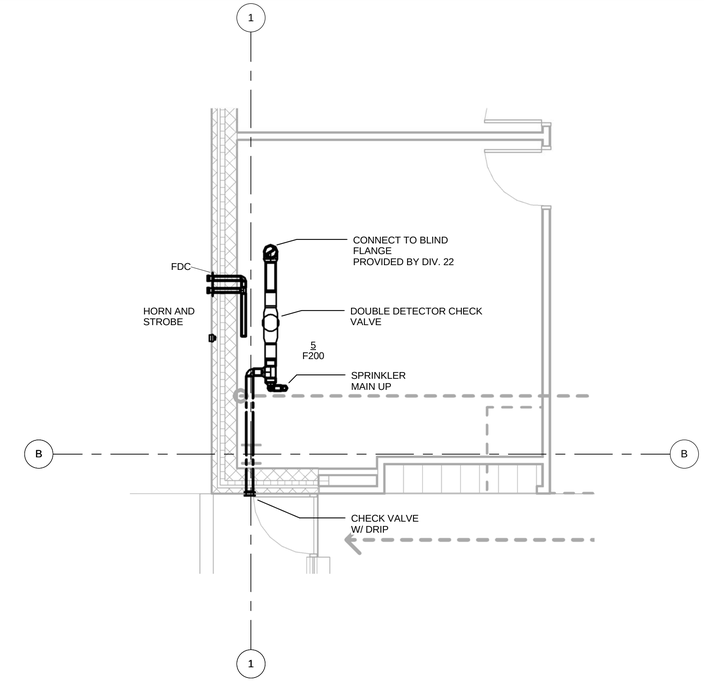

2 ENLARGED SHOP LEVEL FLOOR PLAN
SECTOR A
1/4" = 1'-0"

THUNDERBIRD
ENGINEERING, INC.
MADISON, WI
(608) 223-9040
MILWAUKEE, WI
(414) 352-2211
www.THUNDERBIRDENGINEERING.com
14-028

NOT FOR CONSTRUCTION

NO.	DATE	REVISION	BY

ORIGINAL PLANS PREPARED BY

HNTB
11414 W. PARK PLACE
MILWAUKEE, WI 53224
(414) 359-2300

PLANS PREPARED FOR

CITY OF MILWAUKEE
DEPARTMENT OF
PUBLIC WORKS

MILWAUKEE STREETCAR

MAINTENCE FACILITY

95% SUBMISSION | 29 FEBRUARY 2016

DESIGNED BY	TBE	DESIGN CK'D	TBE	DRAWN BY	TBE	PLANS CK'D	TBE

SHOP LEVEL FLOOR PLAN SECTOR A - FIRE PROTECTION

F110

NOT FOR CONSTRUCTION

8

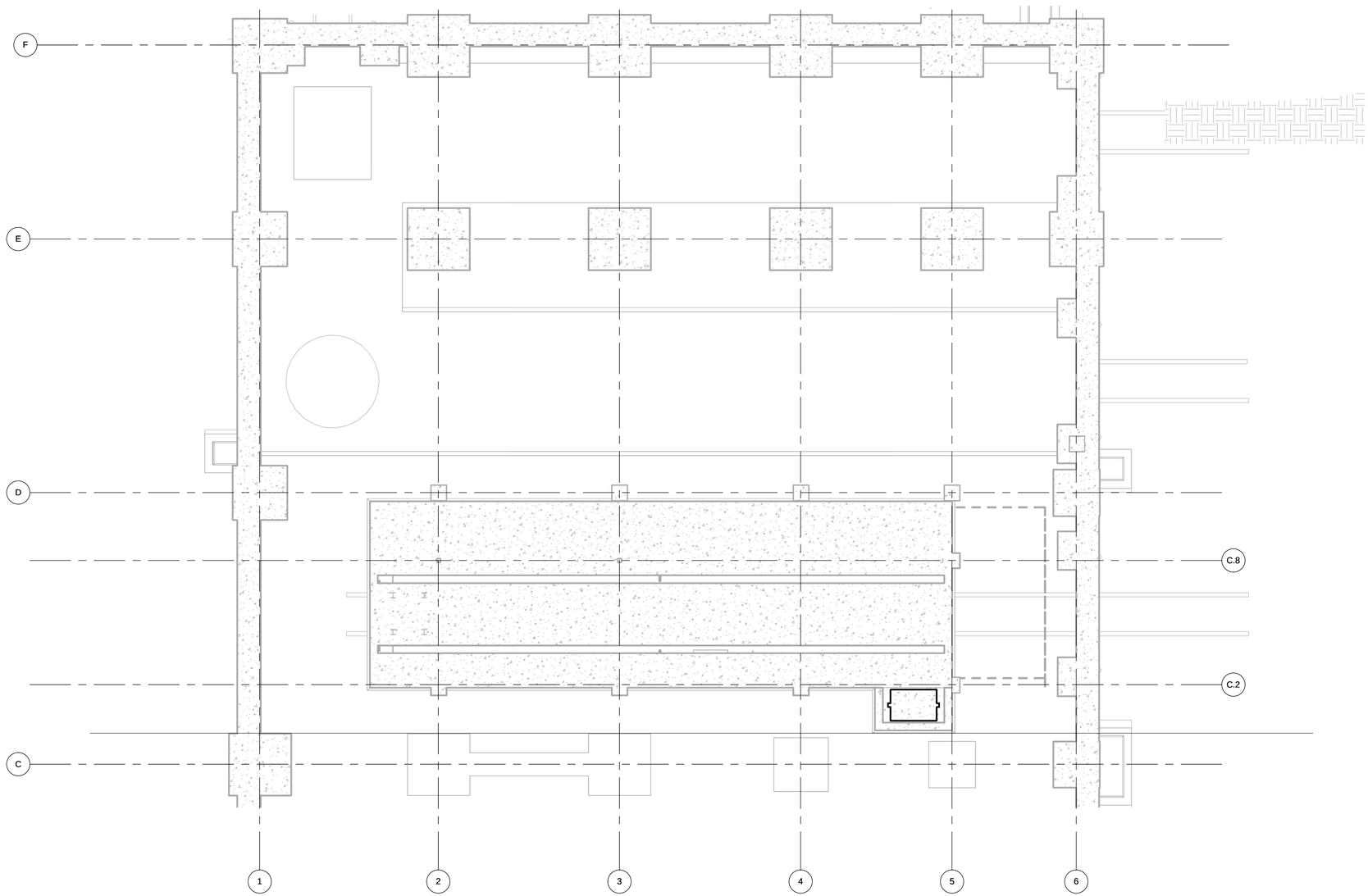

1 SHOP LEVEL TRENCH - FIRE PROTECTION
1/8" = 1'-0"

THUNDERBIRD
ENGINEERING, INC.
MADISON, WI (608) 223-9040
MILWAUKEE, WI (414) 352-2211
www.THUNDERBIRDENGINEERING.com
14-028

NOT FOR CONSTRUCTION

NO.	DATE	REVISION	BY

ORIGINAL PLANS PREPARED BY

HNTB
11414 W. PARK PLACE
MILWAUKEE, WI 53224
(414) 359-2300

PLANS PREPARED FOR

CITY OF MILWAUKEE
DEPARTMENT OF
PUBLIC WORKS

MILWAUKEE STREETCAR

MAINTENCE FACILITY

95% SUBMISSION		29 FEBRUARY 2016	
DESIGNED BY TBE	DESIGN CK'D TBE	DRAWN BY TBE	PLANS CK'D TBE

SHOP LEVEL FLOOR PLAN SECTOR B - FIRE PROTECTION

F111

NOT FOR CONSTRUCTION

8

8

WATER FLOW AND PRESSURE DATA

DATE OF TEST-	May 20 2010
WHO DID THE TEST-	Milwaukee Water Works
HYDRANT LOCATION-	W/S of N 4TH ST, 1ST HYD N/O W ST PAUL AVE
STATIC PRESSURE-	73
RESIDUAL PRESSURE-	67
ELEVATION-	7
HOSE OUTLET-	4.5
GPM-	1990

THIS INFORMATION IS FOR BIDDING ONLY DIV. 21 TO VERIFY ALL TEST INFORMATION BEFORE STATING DESIGN.

GENERAL NOTES

1. VERIFY UTILITY INFORMATION WITH LOCAL UTILITY COMPANIES, VISIT THE BUILDING SITE AND BECOME THOUROUGHLY FAMILIAR WITH ALL EXISTING CONDITIONS AFFECTING THE WORK.
2. VERIFY ALL MEASUREMENTS, PIPE SIZES, PIPE LOCATIONS, ELEVATIONS, ETC. AT ALL SITES.
3. DRAWING OF ALL OTHER TRADES SHALL BE REVIEWED. COORDINATE THE INSTALLATION AND SCHEDULING OF THE WORK WITH OTHER TRADES TO PREVENT INTERFERENCE WITH THEIR RESPECTIVE INSTALLATION.
4. INSTALL ALL WORK SUBSTANTIALLY AS SHOWN ON THE DRAWINGS. DEVIATIONS FROM LOCATIONS OF PIPING INDICATED ON THE DRAWINGS MAY HAVE TO BE MADE AT NO ADDITIONAL COST TO THE OWNER IN ORDER TO CLEAR THE WORK OF THE OTHER TRADES. HOWEVER, ALL SUCH DEVIATIONS SHALL BE PREVIOUSLY APPROVED BY THE OWNERS REPRESENTATIVE.
5. REFER TO STRUCTURAL DRAWINGS FOR EXACT LOCATION OF ALL STRUCTURAL DIMENSIONS AND LAYOUT.
6. IT IS THE INTENT OF THESE DRAWINGS THAT A COMPLETE WORKING SYSTEM PROPERLY TESTED, WILL BE OPERATIONAL UPON COMPLETION OF INSTALLATION.
7. CONFLICT BETWEEN DRAWINGS AND SPECIFICATIONS SHALL BE BROUGHT TO THE ATTENTION OF THE ENGINEER PRIOR TO BID OPENING. THE ENGINEER RESERVES THE RIGHT TO FINAL DECISION.
8. FIRE PROTECTION CONTRACTOR SHALL BE RESPONSIBLE FOR ALL CUTTING AND PATCHING OF HOLES AND OPENINGS IN EXISTING WALLS AND FLOORS.
9. ALL SPRINKLER PIPING SHALL BE LOCATED WITHIN THE JOIST SPACE UNLESS INDICATED OTHERWISE WHERE CONSTRUCTION TYPE IS APPLICABLE.
10. PROVIDE DOUBLE DETECTOR CHECK VALVE METER AND TRIM IF REQUIRED BY LOCAL UTILITY.
11. ALL REQUIRED SPRINKLER HEADS MAY NOT BE SHOWN. SPRINKLERS ARE SHOWN FOR BIDDING PURPOSES ONLY. THE CONTRACTOR IS RESPONSIBLE FOR ANY ADDITIONAL SPRINKLER HEADS WHERE REQUIRED BY THE LATEST EDITION OF NFPA 13.
12. PROVIDE GUARDS/CAGES WHERE MECHANICAL DAMAGE IS LIKELY AND/OR INDICATED ON PLANS.
13. ALL SPRINKLERS IN ACOUSTICAL CEILING TILE SHALL BE LOCATED IN CENTER OF TILE.
14. ALL CONCEALED SPRINKLER PLATES SHALL MATCH THE COLOR OF THE CEILING. CONTRACTOR TO SUBMIT COLOR SAMPLE TO ARCHITECT FOR APPROVAL.
15. ARM-OVERS SHALL BE INSTALLED ON ALL WET PIPE PENDENT STYLE SPRINKLER HEADS REGARDLESS OF WATER SOURCE.

SHEET INDEX - FIRE PROTECTION

F000 COVER SHEET - FIRE PROTECTION
F110 SHOP LEVEL FLOOR PLAN SECTOR A - FIRE PROTECTION
F111 SHOP LEVEL FLOOR PLAN SECTOR B - FIRE PROTECTION
F112 SHOP LEVEL CEILING FIRE PROTECTION
F113 SHOP LEVEL PLATFORM - FIRE PROTECTION
F200 DETAILS - FIRE PROTECTION

THUNDERBIRD
ENGINEERING, INC.
MADISON, WI (608) 223-9040
MILWAUKEE, WI (414) 352-2211
www.THUNDERBIRDENGINEERING.com

14-028

NOT FOR CONSTRUCTION

NO.	DATE	REVISION	BY

ORIGINAL PLANS PREPARED BY

HNTB
11414 W. PARK PLACE
MILWAUKEE, WI 53224
(414) 359-2300

PLANS PREPARED FOR

CITY OF MILWAUKEE
DEPARTMENT OF
PUBLIC WORKS

MILWAUKEE STREETCAR

MAINTENCE FACILITY

95% SUBMISSION		29 FEBRUARY 2016	
DESIGNED BY TBE	DESIGN CK'D TBE	DRAWN BY TBE	PLANS CK'D TBE

COVER SHEET - FIRE PROTECTION

F000

NOT FOR CONSTRUCTION

8

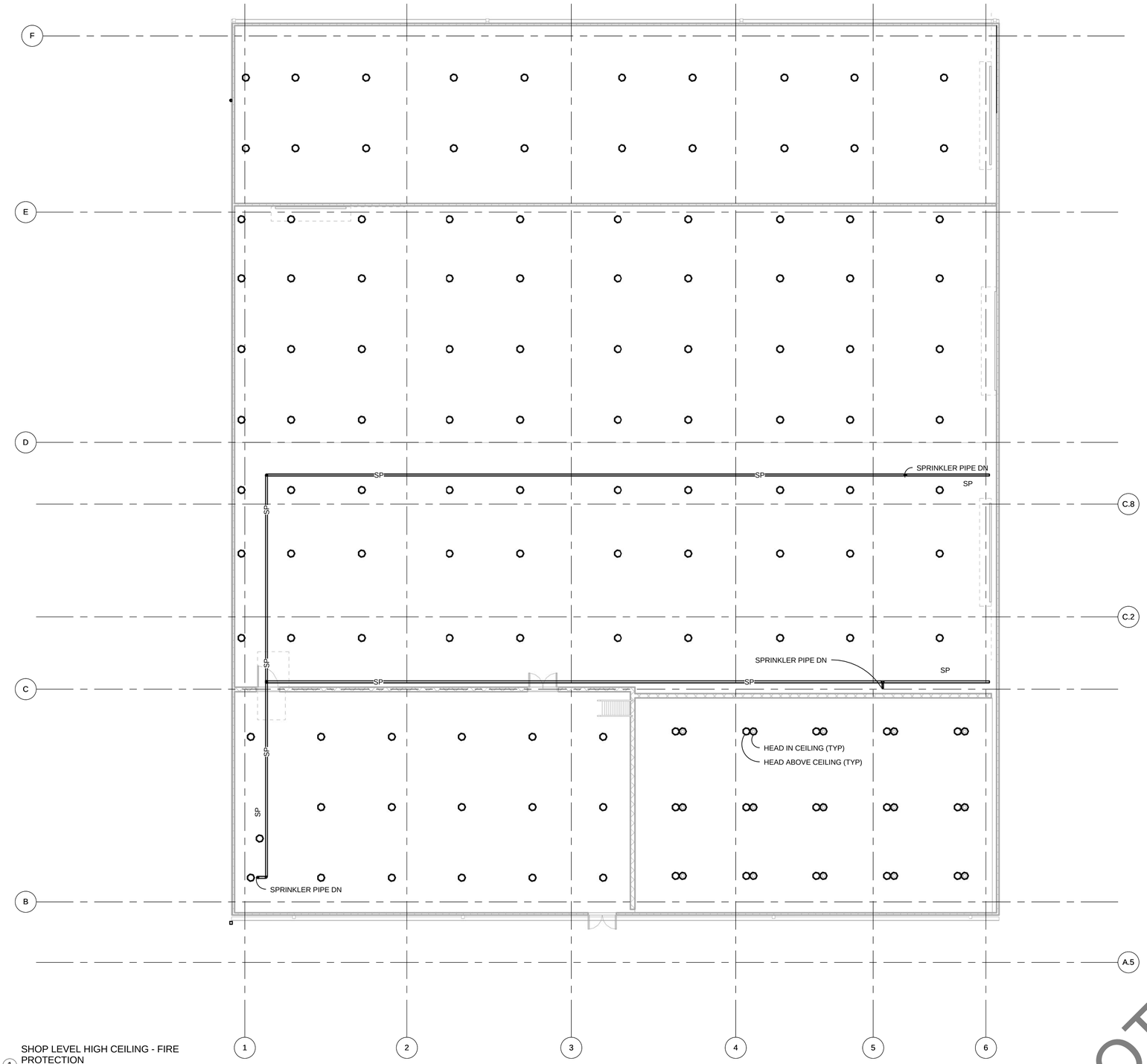

1 SHOP LEVEL HIGH CEILING - FIRE PROTECTION
1/8" = 1'-0"

THUNDERBIRD
ENGINEERING, INC.
MADISON, WI (608) 223-9040
MILWAUKEE, WI (414) 352-2211
www.THUNDERBIRDENGINEERING.com
14-028

NOT FOR CONSTRUCTION

NO.	DATE	REVISION	BY

ORIGINAL PLANS PREPARED BY

HNTB
11414 W. PARK PLACE
MILWAUKEE, WI 53224
(414) 359-2300

PLANS PREPARED FOR

CITY OF MILWAUKEE
DEPARTMENT OF
PUBLIC WORKS

MILWAUKEE STREETCAR

MAINTENCE FACILITY

95% SUBMISSION | 29 FEBRUARY 2016

DESIGNED BY	TBE	DESIGN CK'D	TBE	DRAWN BY	TBE	PLANS CK'D	TBE

SHOP LEVEL CEILING FIRE PROTECTION

F112

NOT FOR CONSTRUCTION

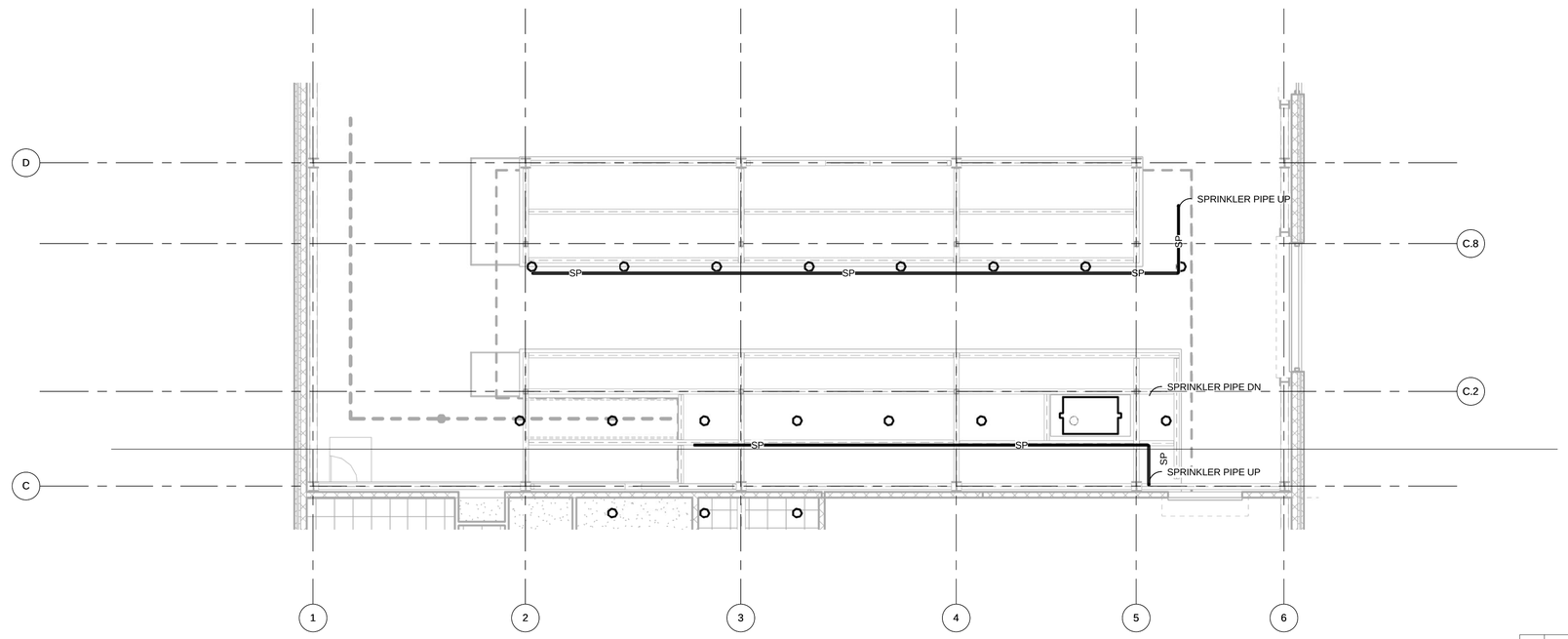

1 SHOP LEVEL UNDER PLATFORM - FIRE PROTECTION
1/8" = 1'-0"

THUNDERBIRD
ENGINEERING, INC.
MADISON, WI (608) 223-9040
MILWAUKEE, WI (414) 352-2211
www.THUNDERBIRDENGINEERING.com
14-028

NOT FOR CONSTRUCTION

NO.	DATE	REVISION	BY

ORIGINAL PLANS PREPARED BY

HNTB
11414 W. PARK PLACE
MILWAUKEE, WI 53224
(414) 359-2300

PLANS PREPARED FOR

CITY OF MILWAUKEE
DEPARTMENT OF
PUBLIC WORKS

MILWAUKEE STREETCAR

MAINTENCE FACILITY

95% SUBMISSION | 29 FEBRUARY 2016

DESIGNED BY	TBE	DESIGN CK'D	TBE	DRAWN BY	TBE	PLANS CK'D	TBE

SHOP LEVEL PLATFORM - FIRE PROTECTION

F113

NOT FOR CONSTRUCTION

8

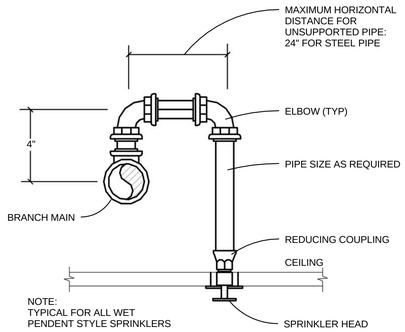

1 ARM OVER DETAIL
1/8" = 1'-0"

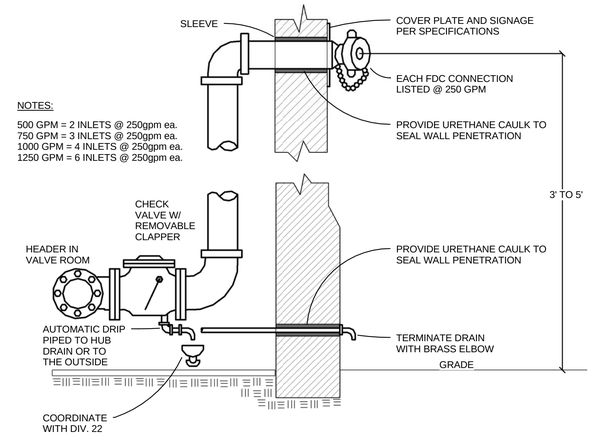

2 FIRE DEPT. CONNECTION AND CHECK VALVE DIAGRAM DETAIL
1/8" = 1'-0"

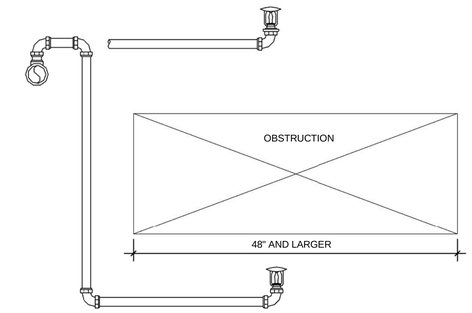

3 SPRINKLER DETAIL AT HVAC OBSTRUCTION
1/8" = 1'-0"

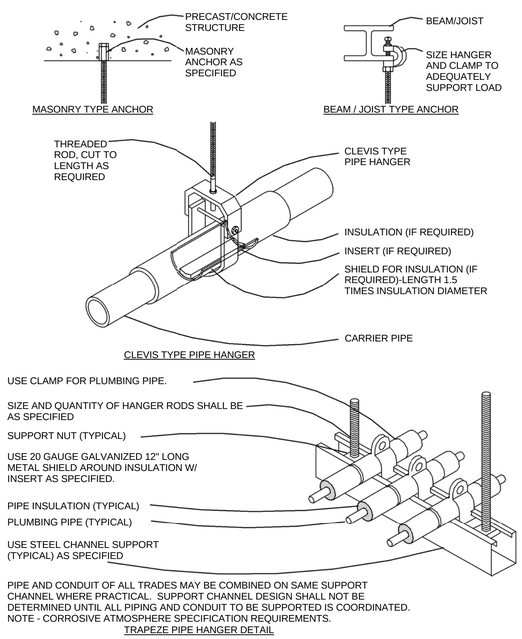

4 PIPE HANGER DETAIL
1/8" = 1'-0"

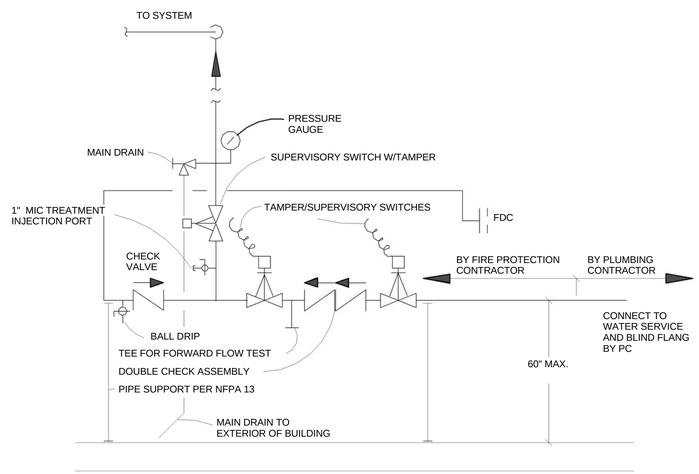

5 FIRE PROTECTION WATER SERVICE DETAIL
1/8" = 1'-0"

THUNDERBIRD ENGINEERING, INC.
MADISON, WI (608) 223-9040
MILWAUKEE, WI (414) 352-2211
www.THUNDERBIRDENGINEERING.com
14-028

NOT FOR CONSTRUCTION

NO.	DATE	REVISION	BY

ORIGINAL PLANS PREPARED BY

HNTB
11414 W. PARK PLACE
MILWAUKEE, WI 53224
(414) 359-2300

PLANS PREPARED FOR

CITY OF MILWAUKEE
DEPARTMENT OF
PUBLIC WORKS

MILWAUKEE STREETCAR

MAINTENCE FACILITY

95% SUBMISSION	29 FEBRUARY 2016

DESIGNED BY	TBE	DESIGN CK'D	TBE	DRAWN BY	TBE	PLANS CK'D	TBE

DETAILS - FIRE PROTECTION

F200

NOT FOR CONSTRUCTION

EQUIPMENT KEYNOTES BY SYMBOL ⟨#⟩

1. EQUIPMENT SHALL BE MOUNTED ON A CONCRETE HOUSEKEEPING PAD. CONTRACTOR SHALL COORDINATE SIZE OF PAD WITH EQUIPMENT PRIOR TO INSTALLATION. REFERENCE ARCHITECTURAL AND STRUCTURAL DRAWINGS FOR DETAILS ON HOUSEKEEPING PAD.
2. CONTRACTOR SHALL COORDINATE CLEARANCES WITH THE 2 TON MONORAIL HOIST EQUIPMENT IDENTIFICATION NUMBER 5392 AND BEAM FOR MONORAIL HOIST. MOUNT THE BEAM TO THE UNDERSIDE OF THE STRUCTURE TO PROVIDE MAXIMUM HOOK CLEARANCE TO THE FINISHED FLOOR. REFERENCE STRUCTURAL DRAWINGS FOR DETAILS ON THE BEAM FOR THE MONORAIL HOIST. CRANE STOPS SHALL BE ADDED ONCE ALL EQUIPMENT IS IN PLACE.
3. PROVIDE CRANE STOPS 6 INCHES FROM END WALLS/COLUMNS. A MINIMUM OF 6 INCHES OF OSHA REQUIRED CLEARANCE SHALL BE PROVIDED BETWEEN ALL BRIDGE CRANE COMPONENTS AND BUILDING STRUCTURE.
4. COORDINATE LOCATION OF EQUIPMENT MOUNTED FROM STRUCTURE SO THAT IT DOES NOT CONFLICT WITH BRIDGE CRANE TRAVEL.
5. CONTRACTOR SHALL COORDINATE INSTALLATION OF TURNTABLE EQUIPMENT IDENTIFICATION NUMBER 5950 LOCATION AND ALL STRUCTURAL WORK WITH THE TRACK AND OVERHEAD DOOR LOCATIONS. REFERENCE ARCHITECTURAL AND STRUCTURAL DRAWINGS FOR ADDITIONAL FOUNDATION DETAILS. REFERENCE PLUMBING DRAWINGS FOR FLOOR DRAIN LOCATIONS.
6. CONTRACTOR SHALL COORDINATE PARTS LIFT EQUIPMENT IDENTIFICATION NUMBER 5432 FOUNDATION, PIT, AND STRUCTURAL SUPPORTS WITH STURCTURAL AND APPROVED MANUFACTURERS SHOP DRAWINGS.
7. MOUNT VISE EQUIPMENT IDENTIFICATION NUMBER 2880 TO BENCH EQUIPMENT IDENTIFICATION NUMBER 1805.
8. STAINLESS STEEL COUNTER TOP MOUNTED ON TOP OF CABINETS IN PARTS STORAGE ROOM. REFERENCE ARCHITECTURAL DRAWINGS FOR DETAILS.
9. MOUNT BOX FOR RF PENDANT FOR MONORAIL HOIST EQUIIPMENT IDENTIFICATION NUMBER ON WALL AT 48 INCHES AFF.
10. MOUNT TOOL PEG BOARDS EQUIPMENT IDENTIFICATION NUMBER 1098 SO THAT THE BOTTOM OF THE PEG BOARD IS 36 INCHES AFF.
11. CONTRACTOR SHALL COORDINATE VENT PIPING, GAS AND WATER CONNECTIONS FOR HIGH PRESSURE WASHER EQUIPMENT ID #3718. REFERENCE PLUMBING AND MECHANICAL DRAWINGS FORCONNECTION AND ROUTING DETAILS .
12. CONTRACTOR SHALL COORDINATE HIGH-PRESSURE PIPING AND CONTROLS WIRING FOR HIGH PRESSURE WASHER EQUIPMENT ID #3718. RERERENCE SERVICE EQUIPMENT DRAWINGS (QS) FOR HIGH PRESSURE PIPING AND CONTROL WIRING ROUTING BETWEEN HIGH PRESSUE WASHER AND WASH WAND LOCATIONS. RERERENCE SPECIFICATION FOR HIGH PRESSURE WASHER FOR ADDITIONAL DETAILS ON HIGH PRESSURE PIPING.

EQUIPMENT LINE TYPE LEGEND

CF/CI
OF/CI
OF/OI

GENERAL EQUIPMENT NOTES

1. ALL CONTRACTOR FURNISHED (CF) EQUIPMENT SHOWN ON THESE DRAWINGS WITH A FOUR DIGIT IDENTIFICATION NUMBER IS BASED ON A SPECIFIED MANUFACTURER. ANY MODIFICATION AND/OR SUBSTITUTION OF SAID EQUIPMENT IS SUBJECT TO COMPLETE COORDINATION BY THE CONTRACTOR OF ALL CONNECTIONS SERVICES, OPENING SIZE AND ANY OTHER CONSTRUCTION RELATED REQUIREMENTS.
2. CONTRACTOR TO VERIFY AND COORDINATE ALL STRUCTURAL, MECHANICAL, ELECTRICAL AND PLUMBING REQUIREMENTS OF EQUIPMENT WITH MANUFACTURER'S APPROVED SHOP DRAWINGS PRIOR TO INSTALLATION.
3. THIS LAYOUT IS PROVIDED FOR GENERAL LOCATION OF EQUIPMENT. UNLESS SPECIFICALLY LOCATED BY DIMENSIONS ON THE DRAWINGS, THE EQUIPMENT SHALL BE PLACED NEAR THE LOCATION ON THE DRAWINGS BUT IN THE MOST OPERATIONALLY EFFICIENT POSITION AND ORIENTATION.
4. SEISMICALLY BRACE ALL FIXED EQUIPMENT AND STORAGE EQUIPMENT PER LOCAL AND STATE SEISMIC RESTRAINT GUIDELINES.
5. COORDINATE WORK WITH ARCHITECTURAL FEATURES SO THE INTERFERENCE BETWEEN PIPING, EQUIPMENT, MECHANICAL WORK AND BUILDING STRUCTURE IS AVOIDED.

ABBREVIATIONS

#	NUMBER
AFF	ABOVE FINISH FLOOR
CA	COMPRESSED AIR
CC	CONTROL CONSOLE
CF/CI	CONTRACTOR FURNISHED / CONTRACTOR INSTALLED
CFM	CUBIC FEET PER MINUTE
CG	CHASSIS GREASE
CL	CENTERLINE
CL	CENTERLINE
DN	DOWN
EQ	EQUAL
EQPM	EQUIPMENT
F-R	FILTER-REGULATOR
F-R-L	FILTER-REGULATOR LUBRICATOR
FD	FLOOR DRAIN
GO	GEAR OIL
HPR	HIGH PRESSURE
OF/CI	OWNER FURNISHED / CONTRACTOR INSTALLED
OF/OI	OWNER FURNISHED / OWNER INSTALLED
OH	OVERHEAD
Q	EQUIPMENT
RE	REFERENCE
S/O	SAND/OIL
SPEC	SPECIFICATION
TYP	TYPICAL
UO	USED OIL
W	WATER

CF/CI EQUIPMENT SCHEDULE

Q ID #	DESCRIPTION	SPEC SECTION
1098	BOARD, PEG, TOOL	10 56 00
1106	CABINET, 5 DRAWER, 33 INCHES, UNDERBENCH	10 56 00
1110	CABINET, 10 DRAWER, 59 INCHES	10 56 00
1140	CABINET, FLAMMABLE MATERIALS, LARGE	10 56 00
1185	CABINET, STORAGE, SHOP	10 56 00
1200	CART, PARTS	10 56 00
1215	CHAIR, SHOP, ELECTRONIC, STATIC DISSIPATIVE	10 56 00
1455	RACK, BULK STORAGE	10 56 00
1545	RACK, PALLET, HIGH BAY	10 56 00
1570	RACK, SPOOL, WIRE	10 56 00
1688	SHELVING UNIT, 18 INCHES	10 56 00
1805	WORKBENCH, ELECTRONICS, STATIC DISSIPATIVE	10 56 00
1860	WORKBENCH, SEVERE USE, 6 FEET	45 39 00
2090	BUFFER/GRINDER, 10 INCHES, WITH DUST COLLECTOR	11 11 29
2161	COMPRESSOR, AIR, RECEIVER MOUNTED, 10 HP DUPLEX	11 11 00
2220	DRILL PRESS, VARIABLE SPEED, 20 INCHES	11 11 29
2228	DRYER, AIR, REFRIGERATED, 100 CFM	11 11 00
2600	PRESS, ELECTRIC/HYDRAULIC, 100 TON	11 11 29
2832	VISE, COMBINATION, SWIVEL BASE, 5 INCHES	11 11 29
2880	VISE, ELECTRONICS, SWIVEL BASE	11 11 29
3085	CABINET, ABRASIVE BLAST, WITH DUST COLLECTOR	11 11 29
3540	TANK, PARTS, CLEANING	11 11 29
3718	WASHER, HIGH PRESSURE, HOT WATER, NG, 4 GPM	11 11 29
3810	WASHER, WALK-AROUND, VEHICLE	11 11 29
5075	CRANE, BRIDGE, TOP RUNNING, 7.5 TON	41 22 00
5392	HOIST, CHAIN, ELECTRIC, MOTORIZED TROLLEY, 2 TON	41 22 00
5404	FORKLIFT, ELECTRIC, 4,000 POUND	11 11 29
5432	LIFT, PARTS, 3000 POUND	14 43 19
5876	LIFTS, PORTABLE, 80,000 POUND (SET OF 8)	14 45 01
5881	LIFT TABLE, BOGIE	14 45 01
5950	TURNTABLE, TRUCK ASSEMBLY, 144 INCH DIAMETER (ADD ALTERNATE #1)	14 45 01
7510	PUMP, AIR PISTON (CG), WITH HOIST	11 11 00
7520	PUMP, AIR PISTON, 10:1 RATIO (GO)	11 11 00
7540	PUMP, DIAPHRAGM, USED FLUID EVACUATION (UO)	11 11 00
7710	REEL BANK (CA)	11 11 00
7730	REEL BANK (CA, CG, GO)	11 11 00
7960	TANK, DOUBLE WALL, CUBE, 280 GALLON (GO, UO)	11 11 00
7999	RECEIVER, USED OIL, 25 GALLONS	11 11 00

Maintenance Design Group
1600 Stout Street, Suite 940
Denver, CO 80202 | p 303.302.0266

NOT FOR CONSTRUCTION

NO.	DATE	REVISION	BY

ORIGINAL PLANS PREPARED BY

HNTB
11414 W. PARK PLACE
MILWAUKEE, WI 53224
(414) 359-2300

PLANS PREPARED FOR

CITY OF MILWAUKEE
DEPARTMENT OF
PUBLIC WORKS

MILWAUKEE STREETCAR

MAINTENANCE FACILITY

95% SUBMISSION | 29 FEB 2016

DESIGNED BY	JMB	DESIGN CK'D	MDS	DRAWN BY	AR	PLANS CK'D	JMB

EQPM NOTES AND SCHEDULE

Q001

NOT FOR CONSTRUCTION

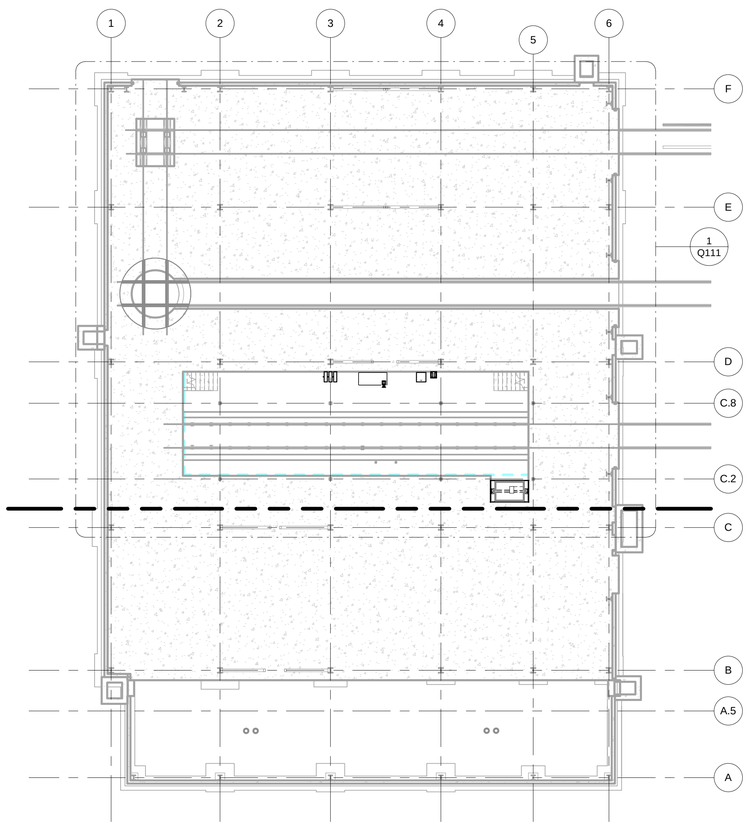

1 PIT LEVEL OVERALL EQUIPMENT LAYOUT PLAN
1/16" = 1'-0"

N

0' 8' 16' 32'

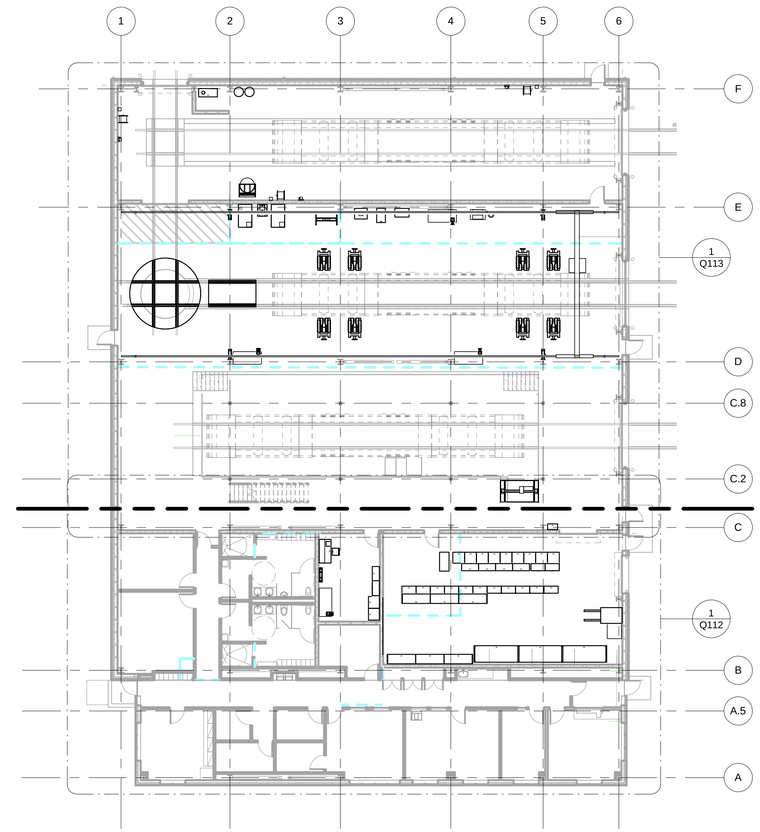

2 SHOP LEVEL OVERALL EQUIPMENT LAYOUT PLAN
1/16" = 1'-0"

N

0' 8' 16' 32'

Maintenance Design Group
1600 Stout Street, Suite 940
Denver, CO 80202 | p 303.302.0266

NOT FOR CONSTRUCTION

NO.	DATE	REVISION	BY

ORIGINAL PLANS PREPARED BY

HNTB
11414 W. PARK PLACE
MILWAUKEE, WI 53224
(414) 359-2300

PLANS PREPARED FOR

CITY OF MILWAUKEE
DEPARTMENT OF
PUBLIC WORKS

MILWAUKEE STREETCAR

MAINTENANCE FACILITY

95% SUBMISSION			29 FEB 2016		
DESIGNED BY	JMB	DESIGN CK'D	MDS	DRAWN BY	AR	PLANS CK'D	JMB

OVERALL EQPM PLANS

Q101

NOT FOR CONSTRUCTION

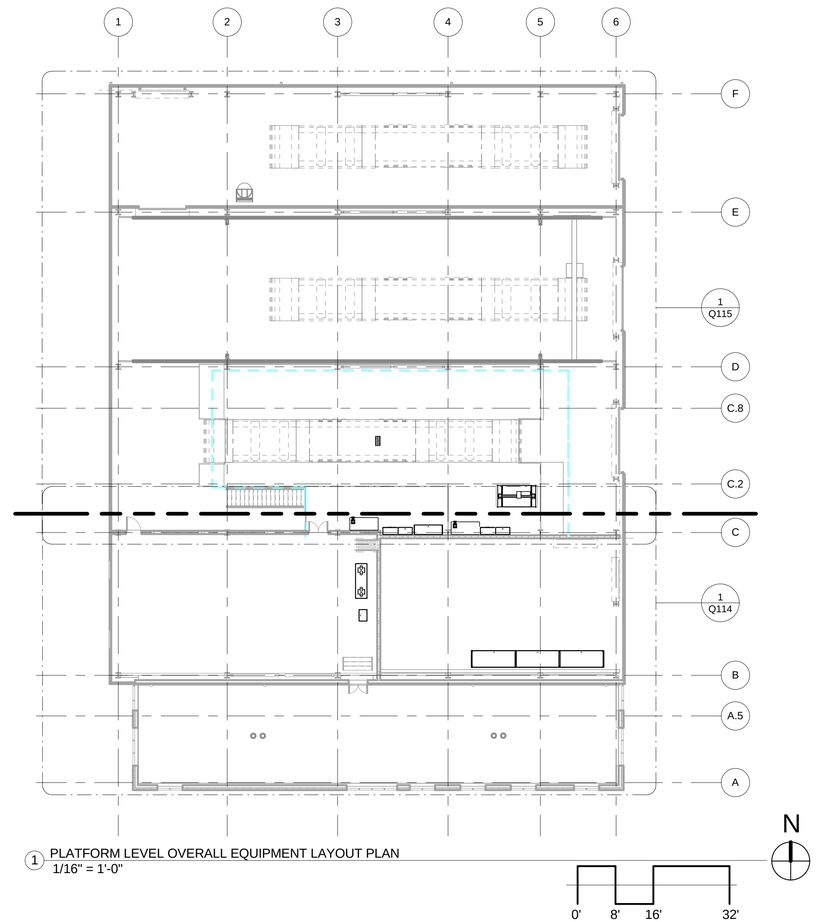

1 PLATFORM LEVEL OVERALL EQUIPMENT LAYOUT PLAN
1/16" = 1'-0"

Maintenance Design Group
1600 Stout Street, Suite 940
Denver, CO 80202 | p 303.302.0266

NOT FOR CONSTRUCTION

NO.	DATE	REVISION	BY

ORIGINAL PLANS PREPARED BY

HNTB
11414 W. PARK PLACE
MILWAUKEE, WI 53224
(414) 359-2300

PLANS PREPARED FOR

CITY OF MILWAUKEE
DEPARTMENT OF
PUBLIC WORKS

MILWAUKEE STREETCAR

MAINTENANCE FACILITY

95% SUBMISSION		29 FEB 2016	
DESIGNED BY JMB	DESIGN CK'D MDS	DRAWN BY AR	PLANS CK'D JMB

OVERALL EQPM PLAN

Q102

NOT FOR CONSTRUCTION

EQPM DWG SHEET NOTES

1 REFERENCE SHEET Q001 FOR ALL EQUIPMENT DESCRIPTIONS.
2 REFERENCE SHEET Q001 FOR ALL GENERAL EQUIPMENT NOTES
3 REFERENCE SHEET Q001 FOR ALL ABBREVIATIONS
4 REFERENCE SHEET Q001 FOR ALL EQUIPMENT KEYNOTES

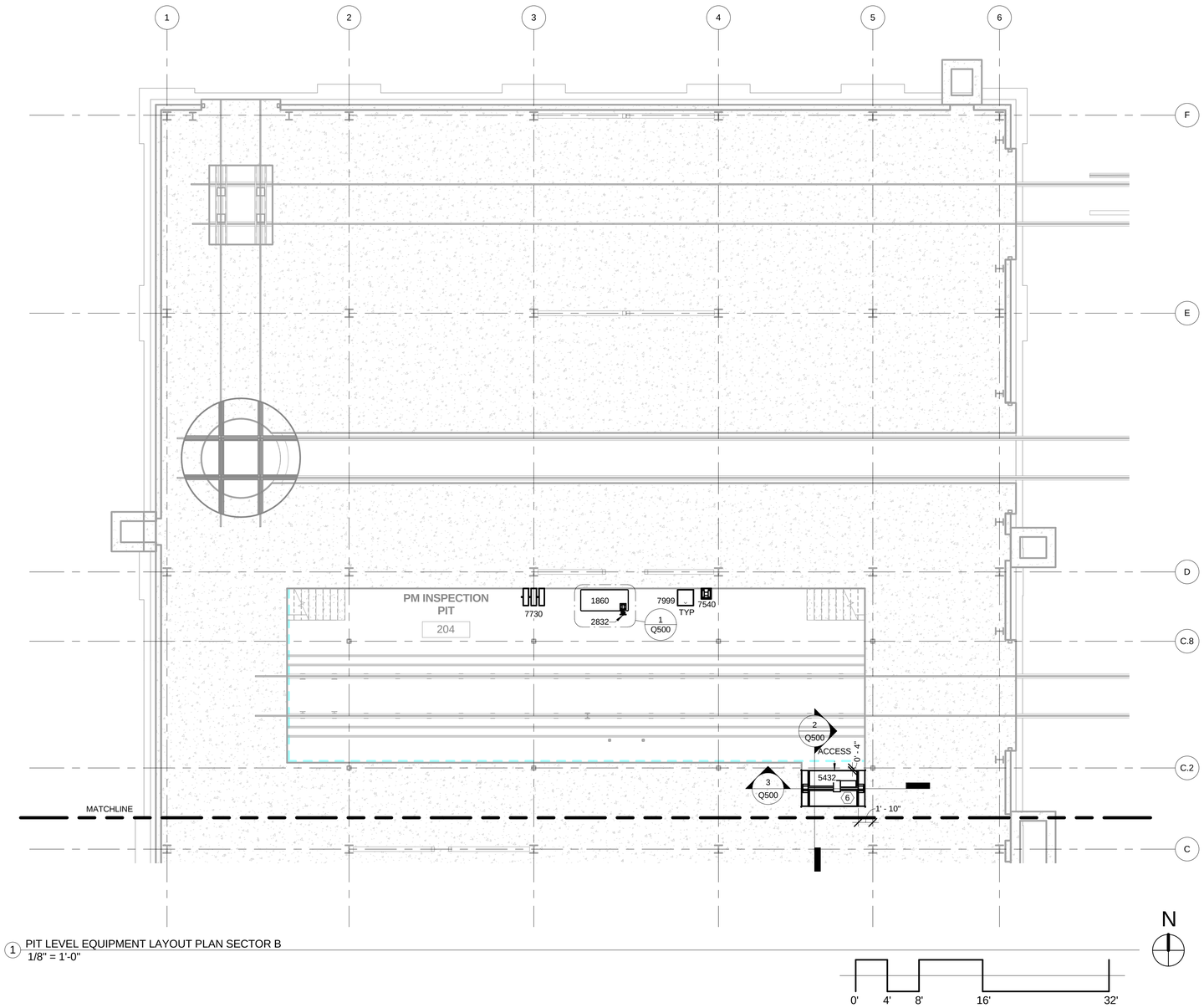

1 PIT LEVEL EQUIPMENT LAYOUT PLAN SECTOR B
1/8" = 1'-0"

Maintenance Design Group
1600 Stout Street, Suite 940
Denver, CO 80202 | p 303.302.0266

NOT FOR CONSTRUCTION

NO.	DATE	REVISION	BY

ORIGINAL PLANS PREPARED BY

HNTB
11414 W. PARK PLACE
MILWAUKEE, WI 53224
(414) 359-2300

PLANS PREPARED FOR

CITY OF MILWAUKEE
DEPARTMENT OF
PUBLIC WORKS

MILWAUKEE STREETCAR

MAINTENANCE FACILITY

95% SUBMISSION	29 FEB 2016

DESIGNED BY	Designer	DESIGN CK'D	Checker	DRAWN BY	Author	PLANS CK'D	Approver

PIT LEVEL EQPM LAYOUT PLAN SECTOR B

Q111

NOT FOR CONSTRUCTION

EQPM DWG SHEET NOTES

1 REFERENCE SHEET Q001 FOR ALL EQUIPMENT DESCRIPTIONS.
2 REFERENCE SHEET Q001 FOR ALL GENERAL EQUIPMENT NOTES
3 REFERENCE SHEET Q001 FOR ALL ABBREVIATIONS
4 REFERENCE SHEET Q001 FOR ALL EQUIPMENT KEYNOTES

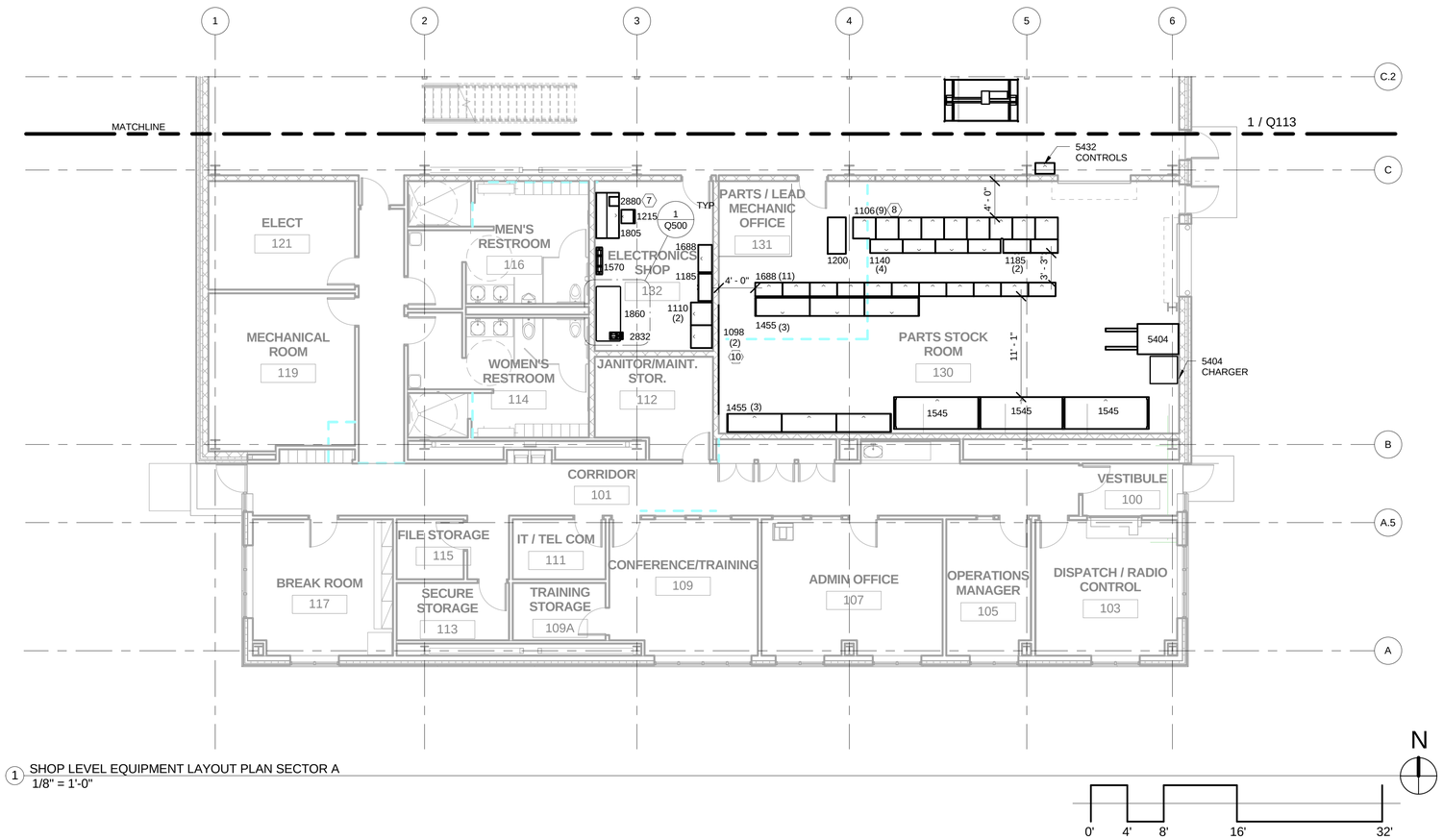

1 SHOP LEVEL EQUIPMENT LAYOUT PLAN SECTOR A
1/8" = 1'-0"

Maintenance Design Group
1600 Stout Street, Suite 940
Denver, CO 80202 | p 303.302.0266

NOT FOR CONSTRUCTION

NO.	DATE	REVISION	BY

ORIGINAL PLANS PREPARED BY

HNTB
11414 W. PARK PLACE
MILWAUKEE, WI 53224
(414) 359-2300

PLANS PREPARED FOR

CITY OF MILWAUKEE
DEPARTMENT OF
PUBLIC WORKS

MILWAUKEE STREETCAR

MAINTENANCE FACILITY

95% SUBMISSION		29 FEB 2016	
DESIGNED BY JMB	DESIGN CK'D MDS	DRAWN BY AR	PLANS CK'D JMB

SHOP LEVEL EQPM
PLAN SECTOR A

Q112

NOT FOR CONSTRUCTION

EQPM DWG SHEET NOTES

1 REFERENCE SHEET Q001 FOR ALL EQUIPMENT DESCRIPTIONS.
2 REFERENCE SHEET Q001 FOR ALL GENERAL EQUIPMENT NOTES
3 REFERENCE SHEET Q001 FOR ALL ABBREVIATIONS
4 REFERENCE SHEET Q001 FOR ALL EQUIPMENT KEYNOTES

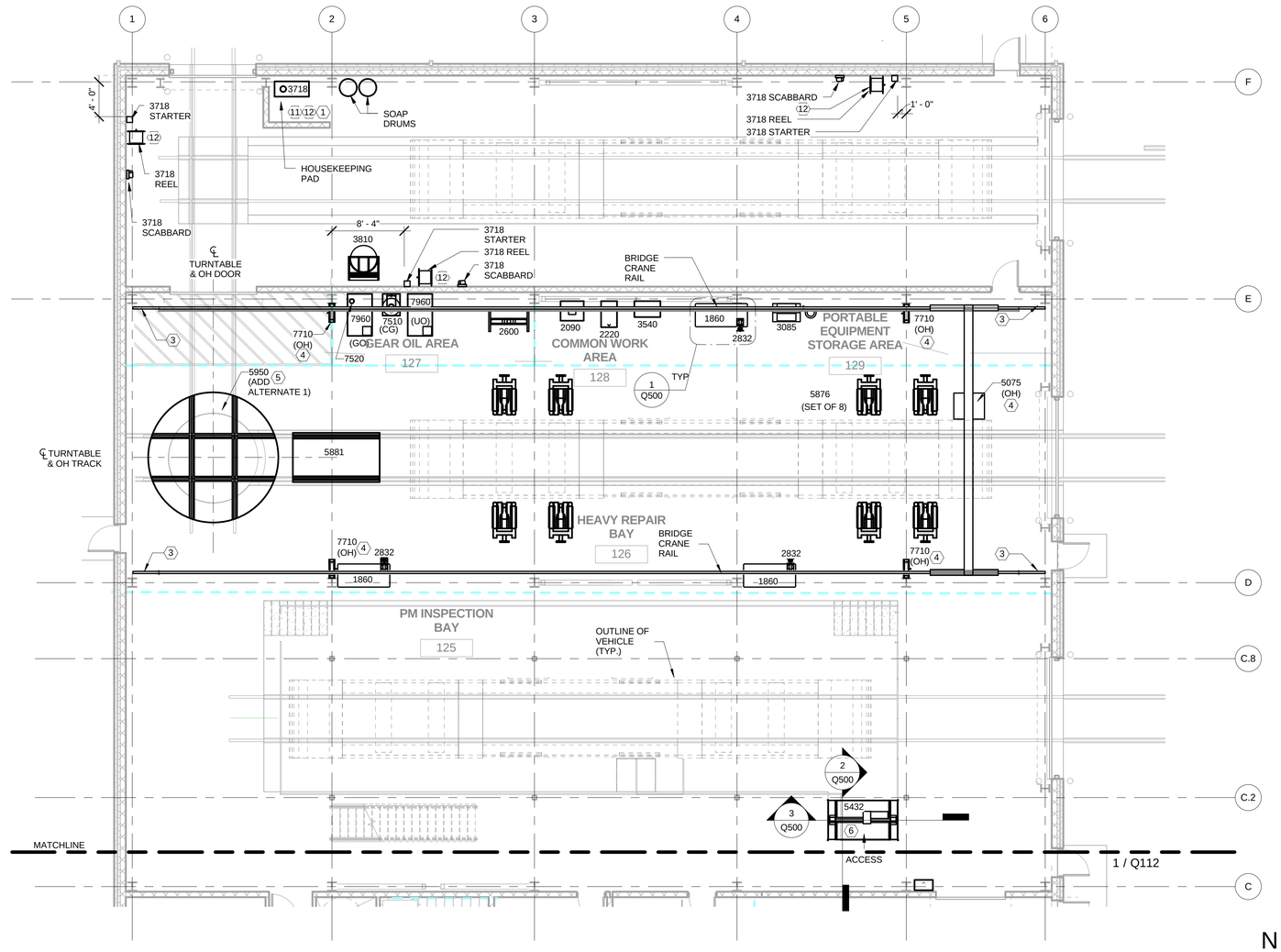

1 SHOP LEVEL EQUIPMENT LAYOUT PLAN SECTOR B
1/8" = 1'-0"

N

0' 4' 8' 16' 32'

Maintenance Design Group
1600 Stout Street, Suite 940
Denver, CO 80202 | p 303.302.0266

NOT FOR CONSTRUCTION

NO.	DATE	REVISION	BY

ORIGINAL PLANS PREPARED BY

HNTB
11414 W. PARK PLACE
MILWAUKEE, WI 53224
(414) 359-2300

PLANS PREPARED FOR

CITY OF MILWAUKEE
DEPARTMENT OF
PUBLIC WORKS

MILWAUKEE STREETCAR

MAINTENANCE FACILITY

95% SUBMISSION		29 FEB 2016	
DESIGNED BY JMB	DESIGN CK'D MDS	DRAWN BY AR	PLANS CK'D JMB

SHOP LEVEL EQPM PLAN SECTOR B

Q113

NOT FOR CONSTRUCTION

EQPM DWG SHEET NOTES

1 REFERENCE SHEET Q001 FOR ALL EQUIPMENT DESCRIPTIONS.
2 REFERENCE SHEET Q001 FOR ALL GENERAL EQUIPMENT NOTES
3 REFERENCE SHEET Q001 FOR ALL ABBREVIATIONS
4 REFERENCE SHEET Q001 FOR ALL EQUIPMENT KEYNOTES

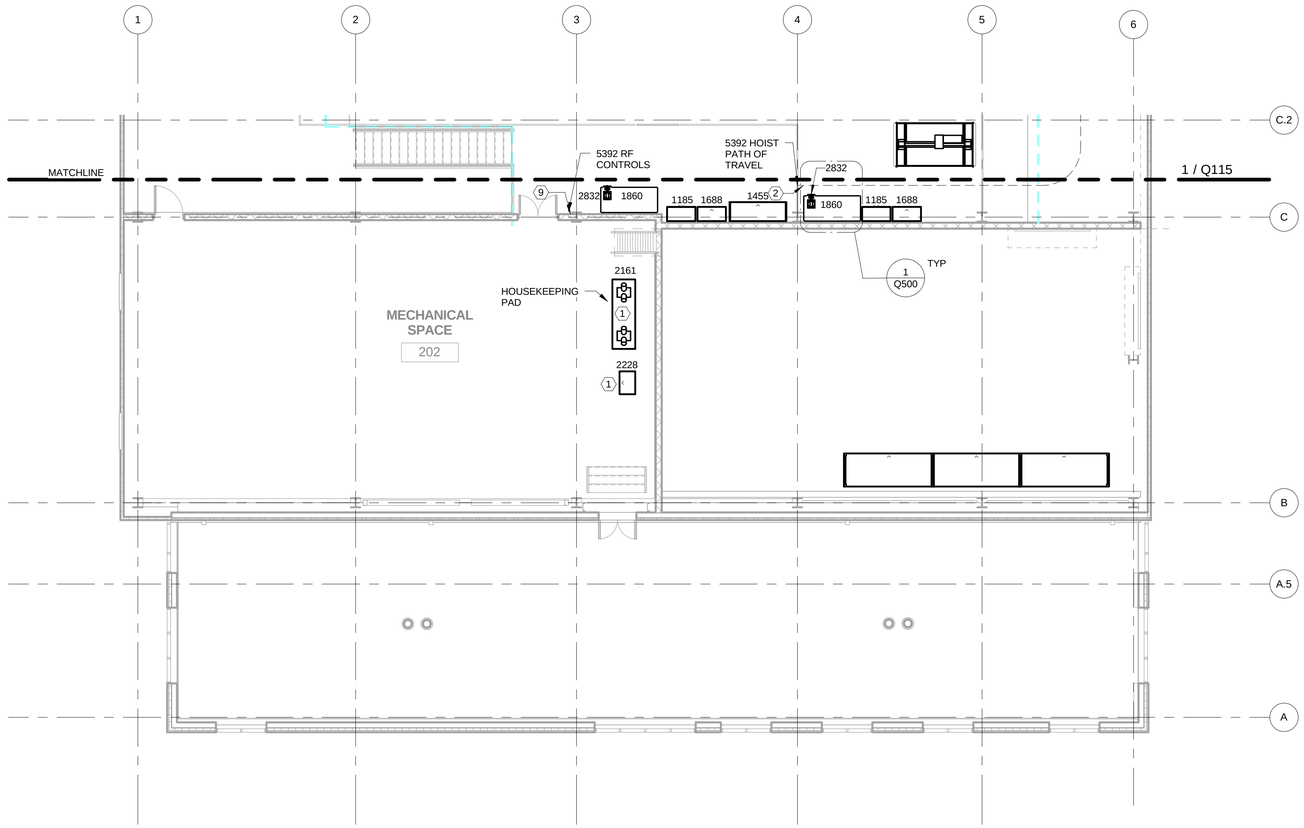

1 PLATFORM LEVEL EQUIPMENT LAYOUT PLAN SECTOR A
1/8" = 1'-0"

N

0' 4' 8' 16' 32'

Maintenance Design Group
1600 Stout Street, Suite 940
Denver, CO 80202 | p 303.302.0266

NOT FOR CONSTRUCTION

NO.	DATE	REVISION	BY

ORIGINAL PLANS PREPARED BY

HNTB
11414 W. PARK PLACE
MILWAUKEE, WI 53224
(414) 359-2300

PLANS PREPARED FOR

CITY OF MILWAUKEE
DEPARTMENT OF
PUBLIC WORKS

MILWAUKEE STREETCAR

MAINTENANCE FACILITY

95% SUBMISSION		29 FEB 2016	
DESIGNED BY JMB	DESIGN CK'D MDS	DRAWN BY AR	PLANS CK'D JMB

PLATFORM LEVEL EQPM PLAN SECTOR A

Q114

NOT FOR CONSTRUCTION

EQPM DWG SHEET NOTES

1 REFERENCE SHEET Q001 FOR ALL EQUIPMENT DESCRIPTIONS.
2 REFERENCE SHEET Q001 FOR ALL GENERAL EQUIPMENT NOTES
3 REFERENCE SHEET Q001 FOR ALL ABBREVIATIONS
4 REFERENCE SHEET Q001 FOR ALL EQUIPMENT KEYNOTES

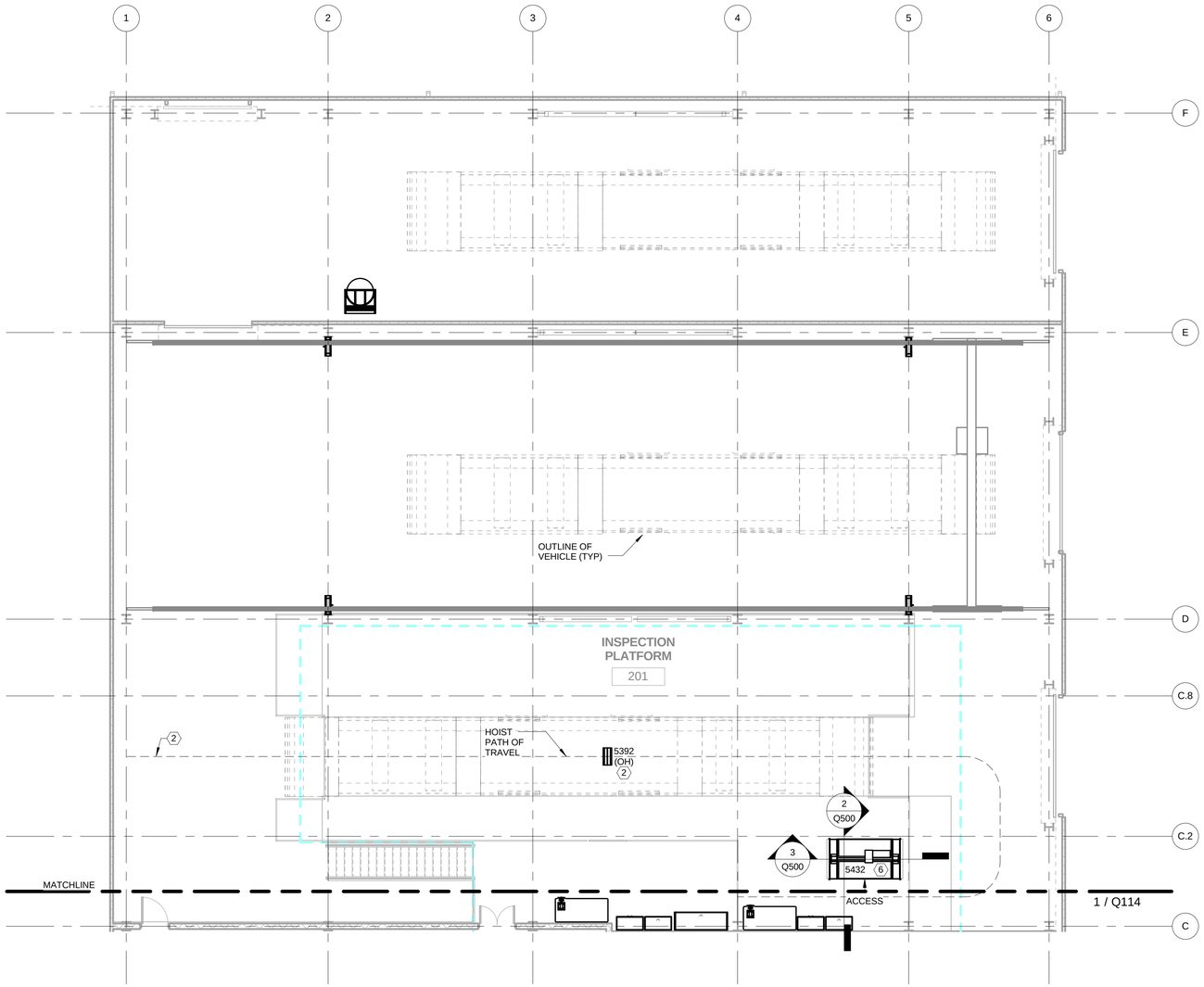

1 PLATFORM LEVEL EQUIPMENT LAYOUT PLAN SECTOR B
1/8" = 1'-0"

N

0' 4' 8' 16' 32'

Maintenance Design Group
1600 Stout Street, Suite 940
Denver, CO 80202 | p 303.302.0266

NOT FOR CONSTRUCTION

NO.	DATE	REVISION	BY

ORIGINAL PLANS PREPARED BY

HNTB
11414 W. PARK PLACE
MILWAUKEE, WI 53224
(414) 359-2300

PLANS PREPARED FOR

CITY OF MILWAUKEE
DEPARTMENT OF
PUBLIC WORKS

MILWAUKEE STREETCAR

MAINTENANCE FACILITY

95% SUBMISSION		29 FEB 2016	
DESIGNED BY JMB	DESIGN CK'D MDS	DRAWN BY AR	PLANS CK'D JMB

PLATFORM LEVEL EQPM PLAN SECTOR B

Q115

NOT FOR CONSTRUCTION

EQPM DWG SHEET NOTES

1 REFERENCE SHEET Q001 FOR ALL EQUIPMENT DESCRIPTIONS.
2 REFERENCE SHEET Q001 FOR ALL GENERAL EQUIPMENT NOTES
3 REFERENCE SHEET Q001 FOR ALL ABBREVIATIONS
4 REFERENCE SHEET Q001 FOR ALL EQUIPMENT KEYNOTES

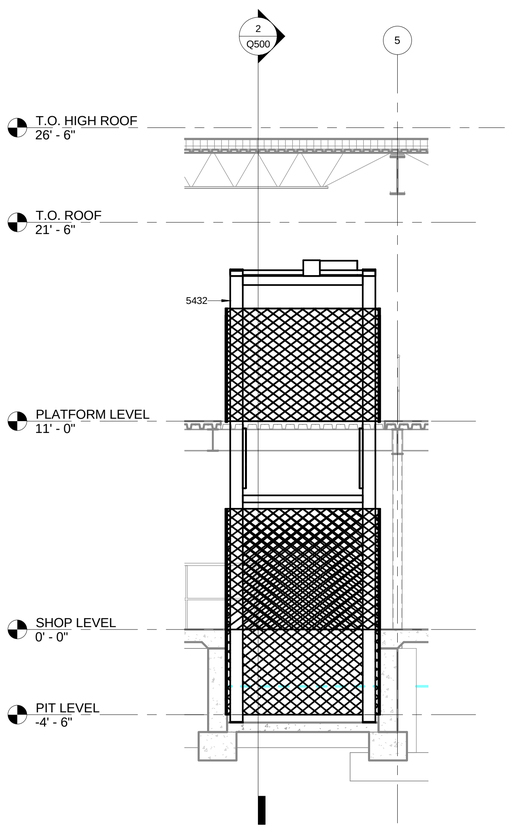

3 SECTION 2
1/4" = 1'-0"

0' 2' 4' 8' 16'

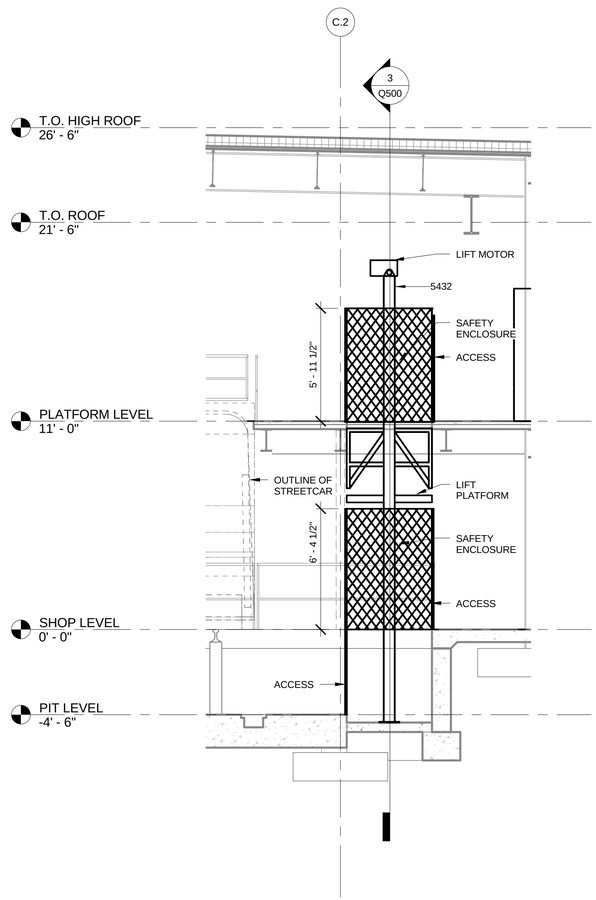

2 SECTION 3
1/4" = 1'-0"

0' 2' 4' 8' 16'

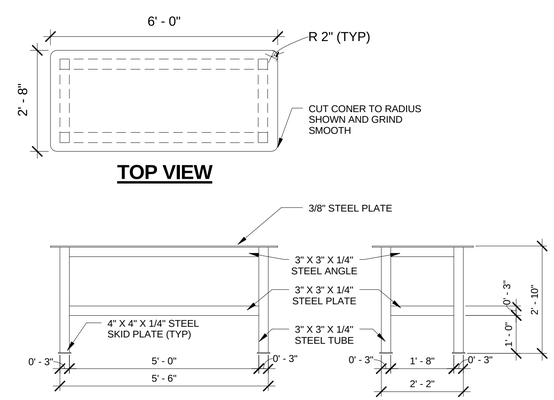

NOTE: CONTRACTOR SHALL MOUNT VISE Q ID # TO WORKBENCH AT LOCATION SHOWN ON PLANS

1 WORKBENCH SEVERE USE DETAIL
NTS

Maintenance Design Group
1600 Stout Street, Suite 940
Denver, CO 80202 | p 303.302.0266

NOT FOR CONSTRUCTION

NO.	DATE	REVISION	BY

ORIGINAL PLANS PREPARED BY

HNTB
11414 W. PARK PLACE
MILWAUKEE, WI 53224
(414) 359-2300

PLANS PREPARED FOR

CITY OF MILWAUKEE
DEPARTMENT OF
PUBLIC WORKS

MILWAUKEE STREETCAR

MAINTENANCE FACILITY

95% SUBMISSION		29 FEB 2016			
DESIGNED BY	JMB	DESIGN CK'D	MDS	DRAWN BY	AR	PLANS CK'D	JMB

EQPM DETAILS AND SECTIONS

Q500

NOT FOR CONSTRUCTION

SAFETY SIGNAGE SCHEDULE

SIGN	DESCRIPTION	MANUFACTURER	MANUFACTURER PHONE	MODEL	LENGTH	HEIGHT	MATERIAL	GENERAL LOCATION INSTRUCTIONS
A	CAUTION AREA IN FRONT OF THIS ELECTRICAL PANEL KEPT CLEAR FOR 48 INCHES	COMPLIANCESIGNS.COM	1-800-578-1245	OCE 1290	1' - 2"	0' - 10"	ALUMINUM	MOUNT SIGN ON ELECTRICAL PANEL DOORS
B	CAUTION EQUIPMENT STARTS AUTOMATICALLY	COMPLIANCESIGNS.COM	1-800-578-1245	CUSTOM	1' - 2"	0' - 10"	ALUMINUM	MOUNT ON WALL NEAR EQUIPMENT
D	CAUTION HEARING PROTECTION REQUIRED IN THIS AREA	COMPLIANCESIGNS.COM	1-800-578-1245	OCE 3610	1' - 2"	0' - 10"	ALUMINUM	MOUNT SIGN AS INDICATED ON DRAWINGS
E	CAUTION KEEP AISLES CLEAR	COMPLIANCESIGNS.COM	1-800-578-1245	CUSTOM	1' - 2"	0' - 10"	ALUMINUM	MOUNT SIGN AS INDICATED ON DRAWINGS
F	CAUTION LOW OVERHEAD CLEARANCE	COMPLIANCESIGNS.COM	1-800-578-1245	OCE 4405	1' - 2"	0' - 10"	ALUMINUM	MOUNT OVERHEAD AS INDICATED ON DRAWINGS AND AT AREAS WHERE OVERHEAD CLEARANCE MAY IMPEDE FORKLIFT OR VEHICLE MOVEMENT OR WHERE CLEARANCE FOR STAFF IS IMPACTED
G	CAUTION OVERHEAD EQUIPMENT	COMPLIANCESIGNS.COM	1-800-578-1245	OCE 5120	1' - 2"	0' - 10"	ALUMINUM	MOUNT NEAR OVERHEAD EQUIPMENT AND IN AREAS WHERE OVERHEAD MOVEMENT OF EQUIPMENT MAY NOT BE EVIDENT
H	CAUTION WATCH FOR FORKLIFTS	COMPLIANCESIGNS.COM	1-800-578-1245	OCE 6380	1' - 2"	0' - 10"	ALUMINUM	MOUNT ALONG SHARED FORKLIFT AND PEDESTRIAN AISLES AND INTERSECTION OF PEDESTRIAN WALKWAYS AND FORKLIFT AISLES
I	DANGER HIGH VOLTAGE UNAUTHORIZED PERSONS KEEP OUT	COMPLIANCESIGNS.COM	1-800-578-1245	ODE 3795	1' - 2"	0' - 10"	ALUMINUM	MOUNT ON ELECTRICAL ROOM DOORS AND ON WALLS NEAR ELECTRICAL ALVOCES OR PANEL LOCATIONS
J	EMERGENCY SHOWER/EYE WASH	COMPLIANCESIGNS.COM	1-800-578-1245	OEE 2770	1' - 2"	0' - 10"	ALUMINUM	MOUNT AT EACH EMERGENCY SHOWER/EYE WASH
K	MATERIAL SAFETY DATA SHEET COMPLIANCE CENTER SINGLE STATION	COMPLIANCESIGNS.COM	1-800-578-1245	57-073	1' - 2"	20' - 0"	ALUMINUM	MOUNT SIGN AS INDICATED ON DRAWINGS
L	NOTICE FORKLIFT STORAGE AREA	COMPLIANCESIGNS.COM	1-800-578-1245	ONE 3280	1' - 2"	0' - 10"	ALUMINUM	MOUNT SIGN AS INDICATED ON DRAWINGS
M	NOTICE LOADING AREA NO PARKING	COMPLIANCESIGNS.COM	1-800-578-1245	ONE 4310	1' - 2"	0' - 10"	ALUMINUM	MOUNT SIGN IN DESIGNATED LOADING AREAS

GENERAL STRIPING NOTES

1 ALL DIMENSIONS EXCEPT WHERE NOTED OTHERWISE FOR LOCATIONS OF FLOOR STRIPES REFER TO STRIPE CENTERLINES.
2 REFERENCE ARCHITECTS PAINT SCHEDULE FOR MARKING PAINT.
3 ALL STRIPING SHALL BE SAFETY YELLOW UNLUESS OTHERWISE NOTED.
4 ALL STRIPING SHALL BE 4 INCHES WIDE UNLESS OTHERWISE NOTED.

GENERAL SIGNAGE NOTES

1 ALL SAFETY SIGNAGE SHOULD BE CONSTRUCTED OF .040" THICK SCREEN PRINTED ALUMINUM WITH A 1 MILLIMETER FILM OVER LAMINATE. ROUNDED CORNERS AND MOUNTING HOLES SHALL BE PROVIDED. SIGNS SHALL WITHSTAND SPLASHES, WASHDOWNS, OUTDOOR CONDITIONS AND WITHSTAND TEMPERATURES RANGING FROM -40 TO 176 DEGREES FAHRENHEIT.
2 THIS LAYOUT IS PROVIDED FOR GENERAL LOCATION OF SIGNAGE. UNLESS SPECIFICALLY LOCATED BY DIMENSIONS ON THE DRAWINGS THE SIGNS SHALL BE LOCATED NEAR LOCATION ON DRAWINGS BUT IN THE MOST OPERATIONALLY EFFICIENT POSITION AND ORIENTATION WITH NO SIGHT OBSTRUCTIONS.
3 ALTERNATE MANUFACTURERS ARE ACCEPTABLE PROVIDED QUALITY, LETTER SIZE, MATERIAL, SIGN TYPE, COLORING, CODE COMPLIANCE, AND MESSAGE MATCH LISTED UNIT.
4 MOUNT BOTTOM OF ALL SIGNS 60 INCHES AFF THROUGH MOUNTING HOLES OR PERMANENT MASTIC ADHESIVE UNLESS DIRECTED OTHERWISE IN THE FIELD BY OWNER OR ARCHITECT.
5 ALL SIGN MESSAGES SHALL BE IN CAPITAL LETTERS AND MEET OSHA STANDARDS FOR SIZE AND COLOR.

STRIPING AND SIGNAGE SYMBOLS

SAFETY SIGNAGE TAG

SAFETY STRIPE

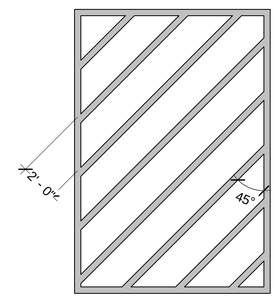

1 AISLE SAFETY STRIPING DETAIL
NTS

Maintenance Design Group
1600 Stout Street, Suite 940
Denver, CO 80202 | p 303.302.0266

NOT FOR CONSTRUCTION

NO.	DATE	REVISION	BY

ORIGINAL PLANS PREPARED BY

HNTB
11414 W. PARK PLACE
MILWAUKEE, WI 53224
(414) 359-2300

PLANS PREPARED FOR

CITY OF MILWAUKEE
DEPARTMENT OF
PUBLIC WORKS

MILWAUKEE STREETCAR

MAINTENANCE FACILITY

95% SUBMISSION | 29 FEB 2016

DESIGNED BY JMB | DESIGN CK'D MDS | DRAWN BY AR | PLANS CK'D JMB

SIGNAGE AND STRIPING NOTES AND SCHEDULE

QG001

NOT FOR CONSTRUCTION

QG DWG SHEET NOTES

1. REFERENCE SHEET QG001 SAFETY SIGNAGE SCHEDULE
2. REFENCE SHEET QG001 FOR STIPING GENERAL NOTES
3. REFERENCE SHEET QG001 FOR SINGAGE GENERAL NOTES
4. REFERNCE SHEET QG001 FOR STRIPING AND SIGNAGE SYMBOLS

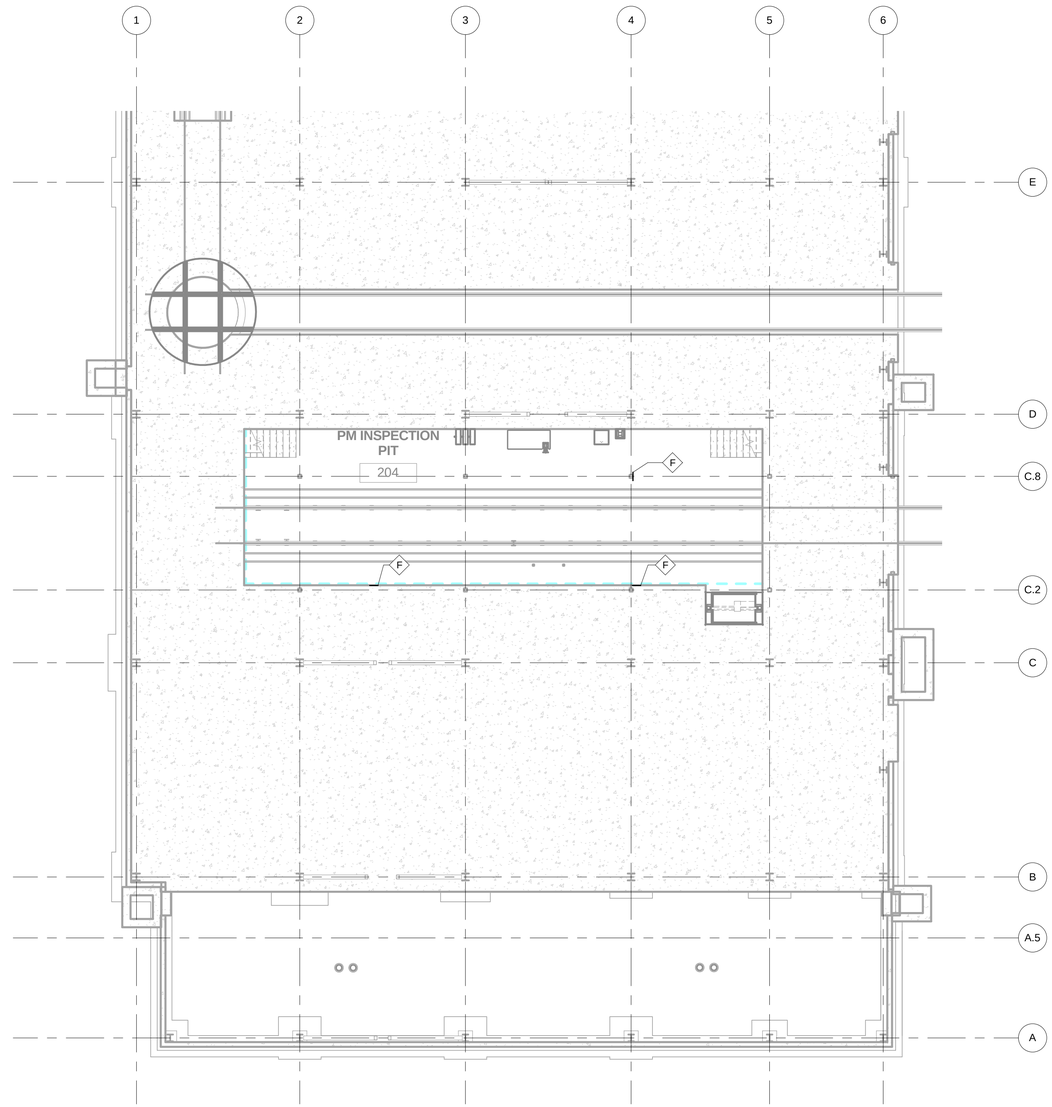

1 PIT LEVEL SIGNAGE AND STRIPING LAYOUT PLAN
3/32" = 1'-0"

Maintenance Design Group
1600 Stout Street, Suite 940
Denver, CO 80202 | p 303.302.0266

NOT FOR CONSTRUCTION

NO.	DATE	REVISION	BY

ORIGINAL PLANS PREPARED BY

HNTB
11414 W. PARK PLACE
MILWAUKEE, WI 53224
(414) 359-2300

PLANS PREPARED FOR

CITY OF MILWAUKEE
DEPARTMENT OF
PUBLIC WORKS

MILWAUKEE STREETCAR

MAINTENANCE FACILITY

95% SUBMISSION		29 FEB 2016	
DESIGNED BY JMB	DESIGN CK'D MDS	DRAWN BY AR	PLANS CK'D JMB

PIT LEVEL SINGNAGE AND STRIPING PLAN

QG101

NOT FOR CONSTRUCTION

QG DWG SHEET NOTES

1 REFERENCE SHEET QG001 SAFETY SIGNAGE SCHEDULE
2 REFENCE SHEET QG001 FOR STIPING GENERAL NOTES
3 REFERENCE SHEET QG001 FOR SINGAGE GENERAL NOTES
4 REFERNCE SHEET QG001 FOR STRIPING AND SIGNAGE SYMBOLS

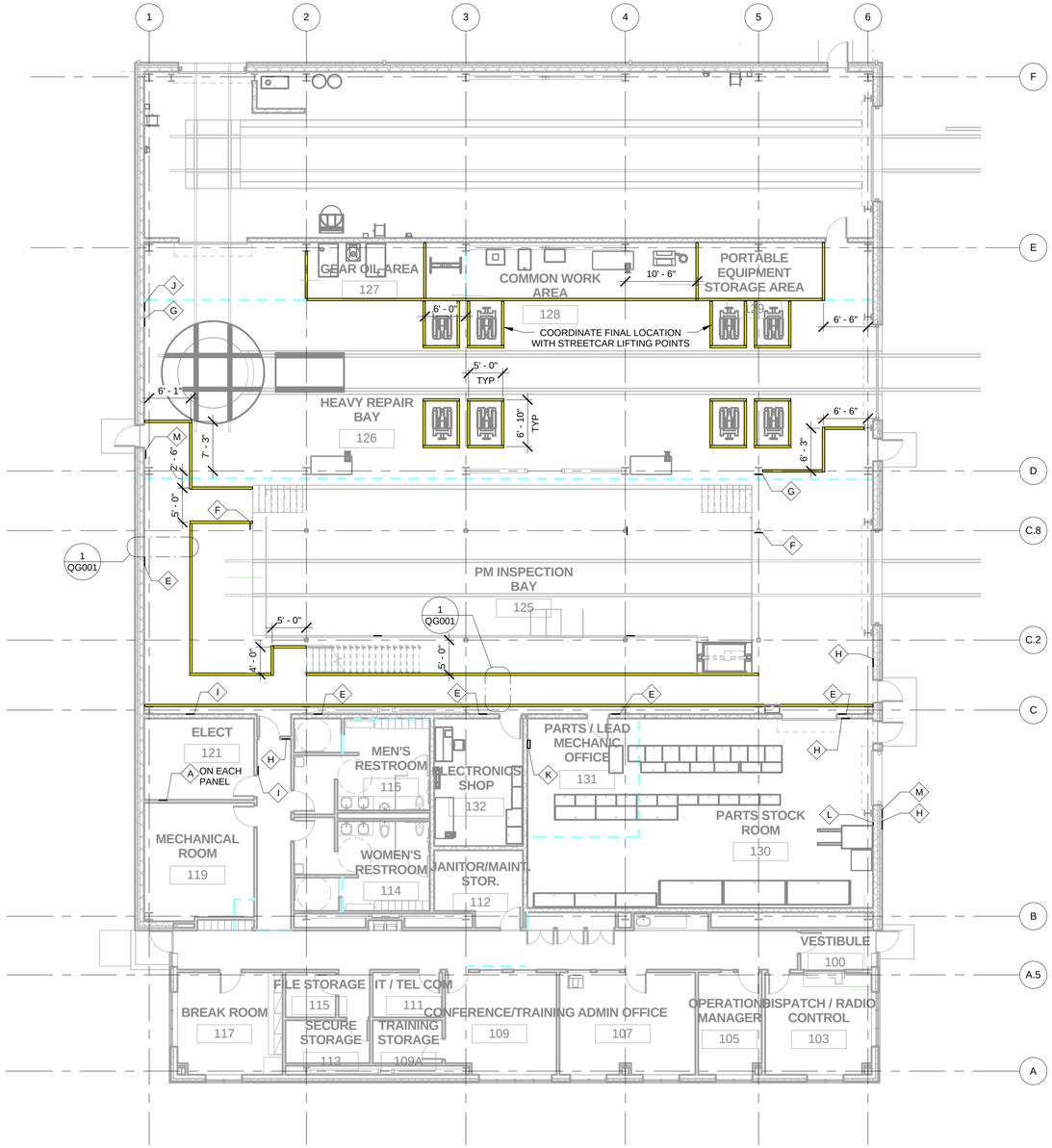

1 SHOP LEVEL SIGNAGE AND STRIPING LAYOUT PLAN
3/32" = 1'-0"

N

0' 5' 10' 20'

Maintenance Design Group
1600 Stout Street, Suite 940
Denver, CO 80202 | p 303.302.0266

NOT FOR CONSTRUCTION

NO.	DATE	REVISION	BY

ORIGINAL PLANS PREPARED BY

HNTB
11414 W. PARK PLACE
MILWAUKEE, WI 53224
(414) 359-2300

PLANS PREPARED FOR

CITY OF MILWAUKEE
DEPARTMENT OF
PUBLIC WORKS

MILWAUKEE STREETCAR

MAINTENANCE FACILITY

95% SUBMISSION | 29 FEB 2016

DESIGNED BY JMB | DESIGN CK'D MDS | DRAWN BY AR | PLANS CK'D JMB

SHOP LEVEL SIGNAGE AND STRIPING PLAN

QG102

NOT FOR CONSTRUCTION

QG DWG SHEET NOTES

1 REFERENCE SHEET QG001 SAFETY SIGNAGE SCHEDULE
2 REFENCE SHEET QG001 FOR STIPING GENERAL NOTES
3 REFERENCE SHEET QG001 FOR SINGAGE GENERAL NOTES
4 REFERNCE SHEET QG001 FOR STRIPING AND SIGNAGE SYMBOLS

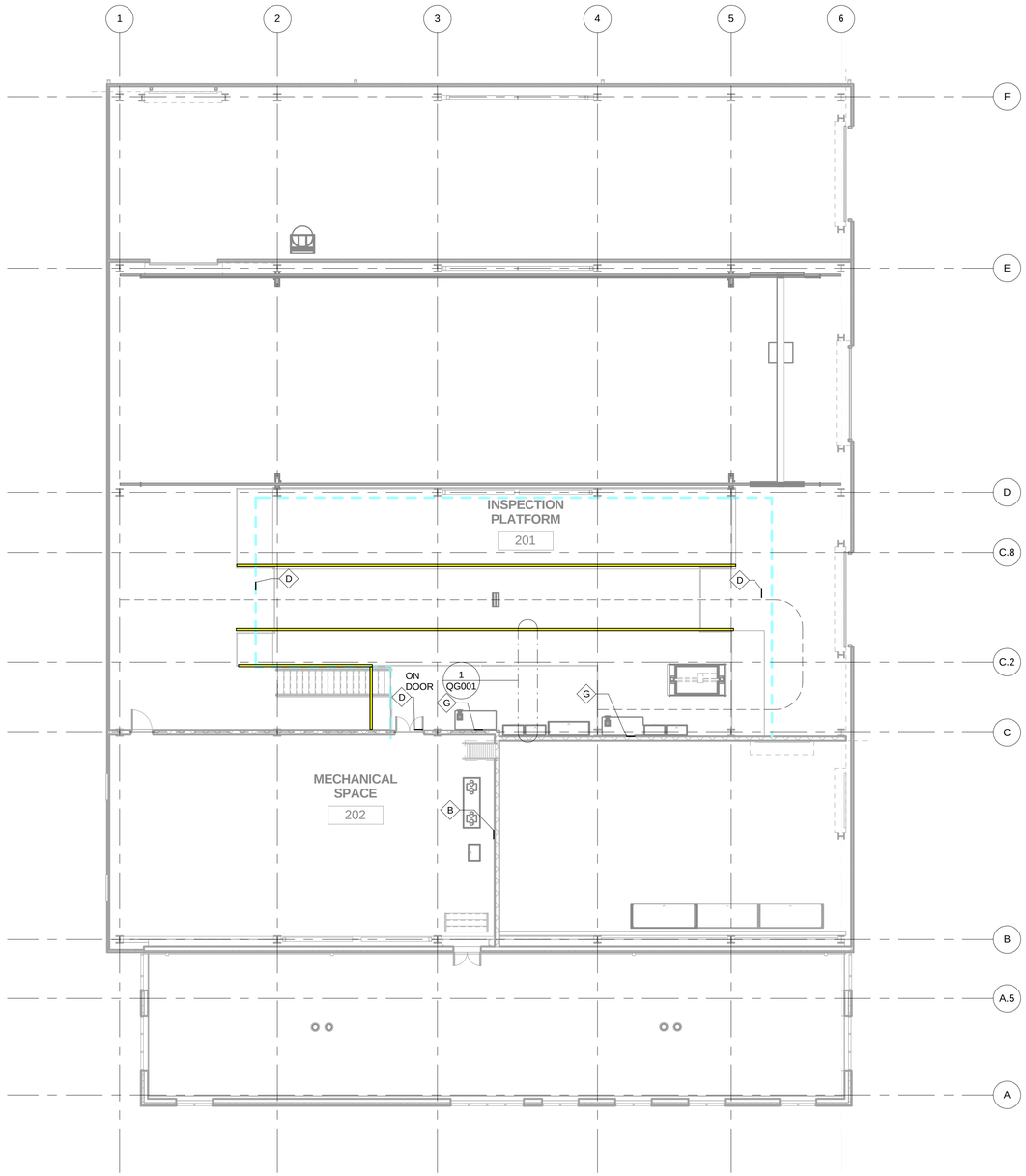

1 PLATFORM LEVEL SIGNAGE AND STRIPING LAYOUT PLAN
3/32" = 1'-0"

0' 5' 10' 20'

N

Maintenance Design Group
1600 Stout Street, Suite 940
Denver, CO 80202 | p 303.302.0266

NOT FOR CONSTRUCTION

NO.	DATE	REVISION	BY

ORIGINAL PLANS PREPARED BY

HNTB
11414 W. PARK PLACE
MILWAUKEE, WI 53224
(414) 359-2300

PLANS PREPARED FOR

CITY OF MILWAUKEE
DEPARTMENT OF
PUBLIC WORKS

MILWAUKEE STREETCAR

MAINTENANCE FACILITY

95% SUBMISSION		29 FEB 2016	
DESIGNED BY JMB	DESIGN CK'D MDS	DRAWN BY AR	PLANS CK'D JMB

PLATFORM LEVEL SIGNAGE AND STRIPING PLAN

QG103

NOT FOR CONSTRUCTION

COMPRESSED AIR PIPING SCHEDULE

PIPE TYPE	FITTING TYPE	JOINT TYPE	VALVE TYPE
ASTM B88 TYPE "L" COPPER TUBING	ANSI B16.22 WROUGHT COPPER SOLDER JOINT	ASTM B32-SOLDER GRADE 95TA (LEAD FREE)	ASTM B283-C37700 BRASS BALL VALVE 300 PSI (MIN)

ACCESSORIES

QUICK COUPLERS	PROVIDE 3/8 INCH QUICK DISCONNECT COUPLERS AT COMPRESSED AIR DROP GRACO MODEL #110198. PROVIDE 1/2 INCH QUICK DISCONNECT COUPLERS AT COMPRESSED AIR DROP GRACO MODEL #110199. VERIFY WITH OWNER THE TYPE OF COUPLER TO MATCH EXISTING TOOL CONNECTIONS.
FILTER / REGULATOR / LUBRICATOR ASSEMBLY	PROVIDE 3/4 INCH PORT SIZE FILTER / REGULATOR / LUBRICATOR ASSEMBLY AS SHOWN ON DETAIL: 4/QS501 GRACO MODEL'S #246948 (F-R) AND #214849 (L) OR APPROVED EQUAL. FOR FILTER/REGULATOR ASSEMBLY AS SHOWN ON DETAIL 3/QS501 GRACO MODEL #246948.

PIPING NOTES

GENERAL

1. ALL PIPING/TUBING SHALL BE INSTALLED BY AN EXPERIENCED INSTALLATION CONTRACTOR WITH A MINIMUM OF 5 YEARS EXPERIENCE INSTALLING COMPRESSED AIR PIPING SYSTEMS FOR VEHICLE MAINTENANCE FACILITIES. INSTALLING CONTRACTOR SHALL PROVIDE AND MAINTAIN A WARRANTY FOR THE SYSTEMS AND ITS COMPONENTS FOR ONE FULL YEAR FROM ACCEPTANCE.

2. INSTALLING CONTRACTOR SHALL SUBMIT DETAILED SYSTEM AND COMPONENT SHOP DRAWING(S) TO THE DESIGN TEAM FOR APPROVAL PRIOR TO INSTALLATION.

INSTALLATION

3. INSTALLING CONTRACTOR SHALL ENSURE THAT ALL FITTINGS, JOINTS AND VALVES FOR COMPRESSED AIR PIPING/TUBING SHALL MATCH THE PROPER RATING AND BURST PRESSURE FOR THE AIR COMPRESSOR'S CAPABILITY.

4. INSTALLING CONTRACTOR SHALL INSTALL PIPING/TUBING IN ACCORDANCE WITH THE PLANS PROVIDED IN THESE CONSTRUCTION DOCUMENTS AND WITH THE APPLICABLE NATIONAL / LOCAL CODES AND REGULATIONS.

5. INSTALLING CONTRACTOR SHALL REMOVE ALL SCALING, DIRT, CORROSION, AND DEBRIS FROM INSIDE AND OUTSIDE OF PIPING, FITTINGS, JOINTS, AND VALVES BEFORE ASSEMBLY.

6. INSTALLING CONTRACTOR SHALL INSTALL UNIONS ON ALL COMPRESSED AIR PIPING 2 INCHES OR LESS ADJACENT TO VALVES, AT ALL FINAL CONNECTIONS TO EQUIPMENT AND ELSEWHERE AS INDICATED ON THE DRAWINGS. UNIONS SHALL NOT BE CONCEALED.

7. INSTALLING CONTRACTOR SHALL ROUTE ALL PIPING/TUBING IN AN ORDERLY MANNER, AND IN THE LOCATION OR ZONE DESIGNATED ON THESE DRAWINGS. PIPING/TUBING SHALL BE GROUPED WHENEVER PRACTICAL AT COMMON ELEVATIONS AND SHALL BE BENT WHEREVER A CHANGE IN DIRECTION IS NECESSARY. 90 DEGREE FITTINGS SHALL ONLY BE USED WHEN TUBING CANNOT BE BENT TO CHANGE DIRECTION DUE TO FIELD CONDITIONS OR OTHER PHYSICAL CONSTRAINTS.

8. INSTALLING CONTRACTOR SHALL INSTALL ALL PIPING/TUBING IN A MANNER THAT CONSERVES BUILDING AREA AND NOT INTERFERE WITH THE PRIMARY USE OF THE SPACE. PIPING/TUBING SHALL BE SPACED NO CLOSER THAN 4 INCHES TOGETHER AND NO MORE THAN 6 INCHES APART.

9. INSTALLING CONTRACTOR SHALL INSTALL A VALVE BYPASS AROUND THE AIR DRYER.

10. INSTALLING CONTRACTOR SHALL INSTALL A 6 INCH LONG, CAPPED DRIP LEG AT THE BASE OF THE VERTICAL RISER AND AT THE ENDS OF THE MAIN COMPRESSED AIR PIPING RUNS WITH A VALVE DRAIN PIPE AT THE NEAREST FLOOR OR HUB DRAIN.

11. INSTALLING CONTRACTOR SHALL INSTALL ALL PIPING/TUBING IN A MANNER THAT WILL ALLOW FOR PROPER CLEARANCE AND ACCESS TO JOINTS, UNIONS, AND VALVES.

12. ALL PIPING/TUBING, JOINTS, UNIONS AND CONNECTIONS SHALL BE PAINTED. GENERAL CONTRACTOR SHALL BE RESPONSIBLE FOR AND SHALL COORDINATE ALL ASPECTS OF THE PAINTING. ALL PIPING/TUBING SHALL BE PROPERLY PREPARED AND CLEANED PRIOR TO APPLYING ONE COAT OF PRIMER AND ONE COAT OF FINISH PAINT. PAINT COLOR AND TYPE SHALL BE COORDINATED WITH ARCHITECT.

13. INSTALLING CONTRACTOR SHALL LABEL ALL COMPRESSED AIR PIPING/TUBING WITH PRODUCT TYPES EVERY 20 FEET, AT EACH CHANGE OF DIRECTION, OR MORE OFTEN IF NEEDED FOR CLARITY.

14. CONTRACTOR SHALL ADD OIL TO LUBRICATORS UPON INSTALLATION COMPLETION OF COMPRESSED AIR DROPS.

TESTING

15. ALL SYSTEM COMPONENTS (i.e. COMPRESSOR, VALVES, REGULATORS, DRYERS, OUTLETS, REELS, AND PIPING/TUBING) INSTALLED AS A PART OF THE CENTRAL COMPRESSED AIR DISTRIBUTION SYSTEM SHALL BE TESTED BY THE INSTALLING CONTRACTOR PRIOR TO ACCEPTANCE BY THE OWNER. COMPRESSED AIR PIPING/TUBING SHALL BE TESTED WITH AIR PRESSURE OF 150 PSI FOR 1 HOUR WHILE CHECKING THE ENTIRE SYSTEM FOR LEAKS. THE RESULTING PRESSURE DIFFERENTIAL SHALL NOT BE GREATER THAN THE DIFFERENTIAL CAUSE BY TEMPERATURE. LEAKING JOINTS SHALL BE REMADE WITH NEW MATERIALS. ALL EQUIPMENT MUST BE DISCONNECTED PRIOR TO START OF TEST.

16. INSTALLING CONTRACTOR SHALL BE RESPONSIBLE FOR TESTING COMPRESSED AIR OUTLET ASSEMBLES AND COMPRESSED AIR HOSE REELS.

LUBRICATION FLUID PIPING SCHEDULE

FLUID TYPE	PIPE TYPE	MINIMUM WALL THICKNESS	FITTING TYPE	JOINT TYPE	VALVE TYPE
LOW PRESSURE OILS FLUID (GO)	ASTM A/ASME SA-179 SEAMLESS STEEL TUBING	3/4" = 0.049 1" = 0.065 1-1/4" = 0.095	SAE J1065 HYDRAULIC TUBE FITTINGS 1,000 PSI	COMPRESSION 1,000 PSI	ASTM A-167 CARBON STEEL BALL VALVE 1,000 PSI
CHASSIS GREASE (CG)	ASTM A/ASME SA-179 SEAMLESS STEEL TUBING	3/4" = 0.095 1" = 0.109 1-1/4" = 0.120	SAE J1065 HYDRAULIC TUBE FITTINGS 4,000 PSI	COMPRESSION 4,000 PSI	FORGED STEEL BALL VALVE 4,000 PSI
USED OIL (UO)	ASTM B-88 TYPE "L" COPPER TUBING	N/A	ASME B-16.22 WROUGHT COPPER & BRONZE 125 PSI	ASME B-32 - SOLDER GRADE 95TA (LEAD FREE) 125 PSI	ASTM A-167 BRASS BALL VALVE 300 PSI

PIPING NOTES

GENERAL

1. ALL PIPING/TUBING SHALL BE INSTALLED BY AN EXPERIENCED INSTALLATION CONTRACTOR WITH A MINIMUM OF 5 YEARS EXPERIENCE INSTALLING PROCESS FLUID PIPING SYSTEMS FOR VEHICLE MAINTENANCE FACILITIES. INSTALLING CONTRACTOR SHALL PROVIDE AND MAINTAIN A WARRANTY FOR THE SYSTEM AND ITS COMPONENTS FOR ONE FULL YEAR FROM ACCEPTANCE.

2. INSTALLING CONTRACTOR SHALL SUBMIT DETAILED SYSTEM AND COMPONENT SHOP DRAWING(S) TO THE DESIGN TEAM FOR APPROVAL PRIOR TO INSTALLATION.

INSTALLATION

3. INSTALLING CONTRACTOR SHALL ENSURE THAT ALL FITTINGS, JOINTS AND VALVES FOR FLUID PIPING/TUBING SHALL MATCH THE PROPER RATING AND BURST PRESSURE OF THAT FLUID TYPE.

4. INSTALLING CONTRACTOR SHALL INSTALL PIPING/TUBING IN ACCORDANCE WITH THE PLANS PROVIDED IN THESE CONSTRUCTION DOCUMENTS AND WITH THE APPLICABLE NATIONAL / LOCAL CODES AND REGULATIONS.

5. INSTALLING CONTRACTOR SHALL REMOVE ALL SCALING, DIRT, CORROSION, AND DEBRIS FROM INSIDE AND OUTSIDE OF PIPING, FITTINGS, JOINTS, AND VALVES BEFORE ASSEMBLY.

6. INSTALLING CONTRACTOR SHALL PREPARE ALL PIPING/TUBING CONNECTIONS TO EQUIPMENT WITH THE NECESSARY FLANGES OR UNIONS AS REQUIRED. FLANGES AND UNIONS SHALL BE PROVIDED BY THE INSTALLING CONTRACTOR FOR ALL CONNECTIONS.

7. INSTALLING CONTRACTOR SHALL ROUTE ALL PIPING/TUBING IN AN ORDERLY MANNER, AND IN THE LOCATION OR ZONE DESIGNATED ON THESE DRAWINGS. PIPING/TUBING SHALL BE GROUPED WHENEVER PRACTICAL AT COMMON ELEVATIONS AND SHALL BE BENT WHEREVER A CHANGE IN DIRECTION IS NECESSARY. 90 DEGREE FITTINGS SHALL ONLY BE USED WHEN TUBING CANNOT BE BENT TO CHANGE DIRECTION DUE TO FIELD CONDITIONS OR OTHER PHYSICAL CONSTRAINTS.

8. INSTALLING CONTRACTOR SHALL INSTALL ALL PIPING/TUBING IN A MANNER THAT CONSERVES BUILDING AREA AND NOT INTERFERE WITH THE PRIMARY USE OF THE SPACE. PIPING/TUBING SHALL BE SPACED NO CLOSER THAN 4 INCHES TOGETHER AND NO MORE THAN 6 INCHES APART.

9. INSTALLING CONTRACTOR SHALL INSTALL ALL PIPING/TUBING IN A MANNER THAT WILL ALLOW FOR EXPANSION AND CONTRACTION WITHOUT STRESSING THE PIPE, TUBE, JOINTS, UNIONS, OR CONNECTED EQUIPMENT.

10. INSTALLING CONTRACTOR SHALL INSTALL ALL PIPING/TUBING IN A MANNER THAT WILL ALLOW FOR PROPER CLEARANCE AND ACCESS TO JOINTS, UNIONS, AND VALVES.

11. ALL PIPING/TUBING, JOINTS, UNIONS AND CONNECTIONS SHALL BE PAINTED. GENERAL CONTRACTOR SHALL BE RESPONSIBLE FOR AND SHALL COORDINATE ALL ASPECTS OF THE PAINTING. ALL PIPING/TUBING SHALL BE PROPERLY PREPARED AND CLEANED PRIOR TO APPLYING ONE COAT OF PRIMER AND ONE COAT OF FINISH PAINT. PAINT COLOR AND TYPE SHALL BE COORDINATED WITH ARCHITECT.

12. INSTALLING CONTRACTOR SHALL LABEL ALL PRODUCT PIPING/TUBING WITH PRODUCT TYPES AND DIRECTION OF FLOW EVERY 20 FEET, AT EACH CHANGE OF DIRECTION, OR MORE OFTEN IF NEEDED FOR CLARITY.

TESTING

13. ALL SYSTEM COMPONENTS (i.e. PUMPS, VALVES, REGULATORS, AND PRODUCT PIPING/TUBING) INSTALLED AS A PART OF THE CENTRAL LUBRICATION DISTRIBUTION SYSTEM AND USED OIL RECOVERY SYSTEMS SHALL BE TESTED BY THE INSTALLING CONTRACTOR PRIOR TO ACCEPTANCE BY THE OWNER. PIPING/TUBING SHALL BE TESTED PNEUMATICALLY AT 125 PSI AND HELD FOR 4 HOURS WHILE CHECKING THE ENTIRE SYSTEM FOR LEAKS. PIPING/TUBING SHALL THEN BE TESTED WITH PRODUCT AT 150% OF PRODUCT PUMPS STANDARD OPERATING PRESSURE (125 PSI).

14. INSTALLING CONTRACTOR SHALL BE RESPONSIBLE FOR TESTING PRODUCT OUTPUT AT NOZZLES AND FOR PUMP INTAKE. INSTALLING CONTRACTOR IS RESPONSIBLE FOR CLEANING ALL DELIVERY KITS, NOZZLES, SCREENS, AND REMOVING DEBRIS AND OBSTRUCTIONS FROM THE SYSTEM AND RETESTING THE ENTIRE SYSTEM AS NECESSARY.

15. INSTALLING CONTRACTOR SHALL CLEAN UP ANY OILS, GREASE, AND SOLVENT DRIPS OR LEAKS AND TOUCHUP ANY DAMAGE TO THE PAINTED FINISHES AND MAKE THE SYSTEM READY FOR USE.

GENERAL SERVICE EQUIPMENT NOTES

1. RUNNING ACCESSORY RACK, CONTRACTOR SHALL REFER TO EQUIPMENT LAUOUT DRAWINGS FOR EXACT LOCATIONS AND COORDINATION OF ALL EQUIPMENT.
2. INSTALL PRODUCT PIPING TO PROVIDE THE MAXIMUM POSSIBLE CLEAR HEIGHT UNDERNEATH. ALL PIPING MUST BE A MINIMUM OF 6 FEET FROM HEATING DEVICES.
3. WORKING PRESSURE OF OIL PIPING SYSTEMS AND EQUIPMENT HAS BEEN DESIGNED AT 1000 PSIG. THE WORK PRESSURE OF GREASE PIPING SYSTEMS AND EQUIPMENT HAS BEEN DESIGNED AT 4000 PSIG.
4. THE ENTIRE SYSTEM AND ITS COMPONENT ITEMS OF EQUIPMENT SHALL OPERATE WITHOUT OBJECTIONABLE VIBRATION OR MORE.
5. COORDINATE WORK WITH ARCHITECTURAL FEATURES SO THE INTERFERENCE BETWEEN PIPING, EQUIPMENT, MECHANICAL WORK AND BUILDING STRUCTURE IS AVOIDED.
6. REFER TO PIPING SCHEDULES ON THIS SHEET FOR SYSTEM REQUIREMENTS MATERIALS AND METHODS OF CONSTRUCTION.
7. NOT ALL PIPING OFFSETS AND TRANSITIONS REQUIRED TO INSTALL PIPING ARE SHOWN ON DRAWINGS. FIELD MEASURE FOR EXACT REQUIREMENTS AND INSTALL ACCORDINGLY.
8. SEISMICALLY BRACE ALL PIPING SYSTEMS PER 1998 SMACNA SEISMIC RESTRAINT GUIDELINES. (CALIFORNIA ONLY).

SERVICE EQUIPMENT KEYNOTES BY SYMBOL " ⟨#⟩ "

20 MOUNT WASTE OIL ALARM AT 8 FEET AFF. ROUTE CONTROL WIRING FROM TANK TO ALARM IN CONDUIT. PROVIDE ALARM LABEL WITH MINIMUM 2 INCH HIGH LETTERING.
21 CONNECT PNEUMATIC EQUIPMENT TO COMPRESSED AIR.
22 ROUTE SERVICE FLUID AND COMPRESSED AIR PIPING TIGHT TO STRUCTURAL BEAMS AND COLUMNS
23 ROUTE SERVICE FLUID AND COMPRESSED AIR PIPING TIGHT TO WALL, ALONG CEILING AND BACK DOWN STRUCTURAL COLUMNS SO AS TO AVOID CRANE PATH CONFLICTS.
24 ROUTE HIGH PRESSURE PIPING TIGHT TO STRUCTURAL JOISTS AND COLUMNS.

SERVICE EQUIPMENT SYMBOLS LEGEND

CHECK VALVE
UNION
TEE
RUNAWAY PUMP VALVE
PRESSURE RELIEF VALVE
CUTOFF
LUBRICATOR
SOLENOID
SHUTOFF VALVE
BALL VALVE

Maintenance Design Group
1600 Stout Street, Suite 940
Denver, CO 80202 | p 303.302.0266

NOT FOR CONSTRUCTION

NO.	DATE	REVISION	BY

ORIGINAL PLANS PREPARED BY

HNTB
11414 W. PARK PLACE
MILWAUKEE, WI 53224
(414) 359-2300

PLANS PREPARED FOR

CITY OF MILWAUKEE
DEPARTMENT OF
PUBLIC WORKS

MILWAUKEE STREETCAR

MAINTENANCE FACILITY

95% SUBMISSION | 29 FEB 2016

DESIGNED BY	DESIGN CK'D	DRAWN BY	PLANS CK'D
JMB	MDS	EG	JMB

SERVICE EQPM NOTES AND SCHEDULES

QS001

NOT FOR CONSTRUCTION

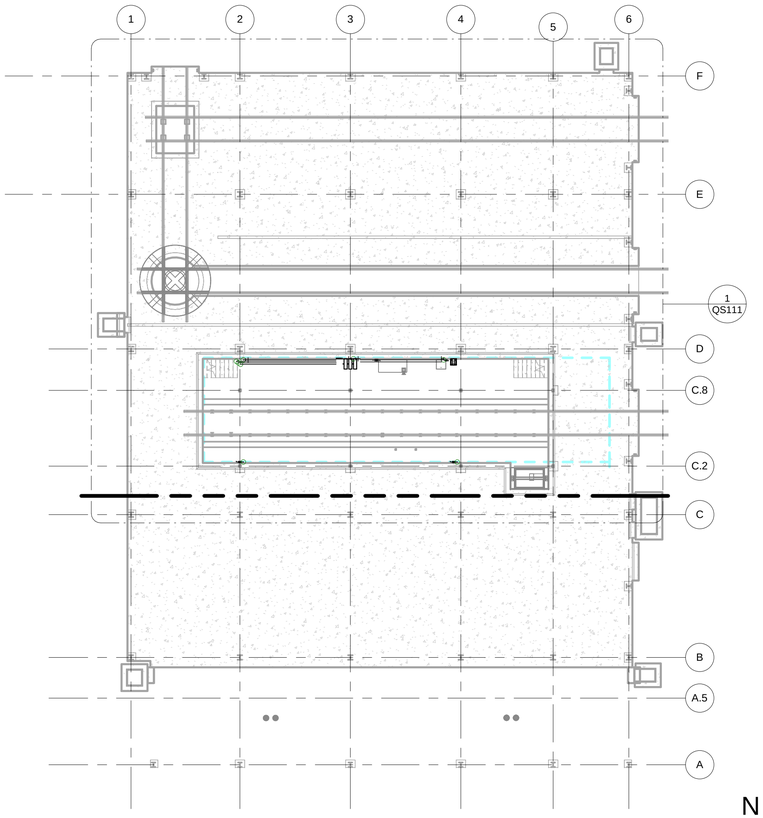

1 PIT LEVEL OVERALL SERVICE EQUIPMENT LAYOUT PLAN
1/16" = 1'-0"

N

0' 8' 16' 32'

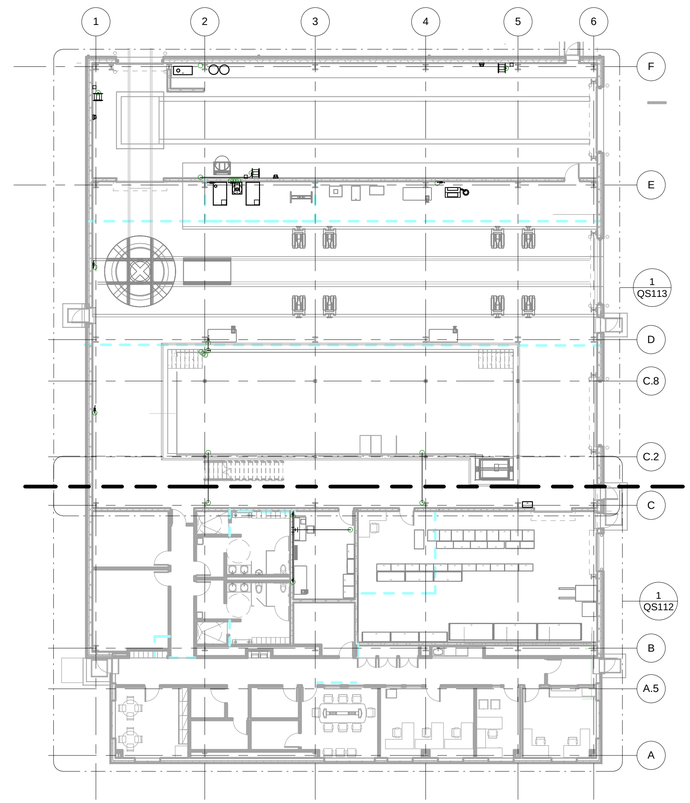

2 SHOP LEVEL OVERALL SERVICE EQUIPMENT LAYOUT PLAN
1/16" = 1'-0"

N

0' 8' 16' 32'

Maintenance Design Group
1600 Stout Street, Suite 940
Denver, CO 80202 | p 303.302.0266

NOT FOR CONSTRUCTION

NO.	DATE	REVISION	BY

ORIGINAL PLANS PREPARED BY

HNTB
11414 W. PARK PLACE
MILWAUKEE, WI 53224
(414) 359-2300

PLANS PREPARED FOR

CITY OF MILWAUKEE
DEPARTMENT OF
PUBLIC WORKS

MILWAUKEE STREETCAR

MAINTENANCE FACILITY

95% SUBMISSION		29 FEB 2016	
DESIGNED BY JMB	DESIGN CK'D MDS	DRAWN BY EG	PLANS CK'D JMB

OVERALL SERVICE EQPM PLANS

QS101

NOT FOR CONSTRUCTION

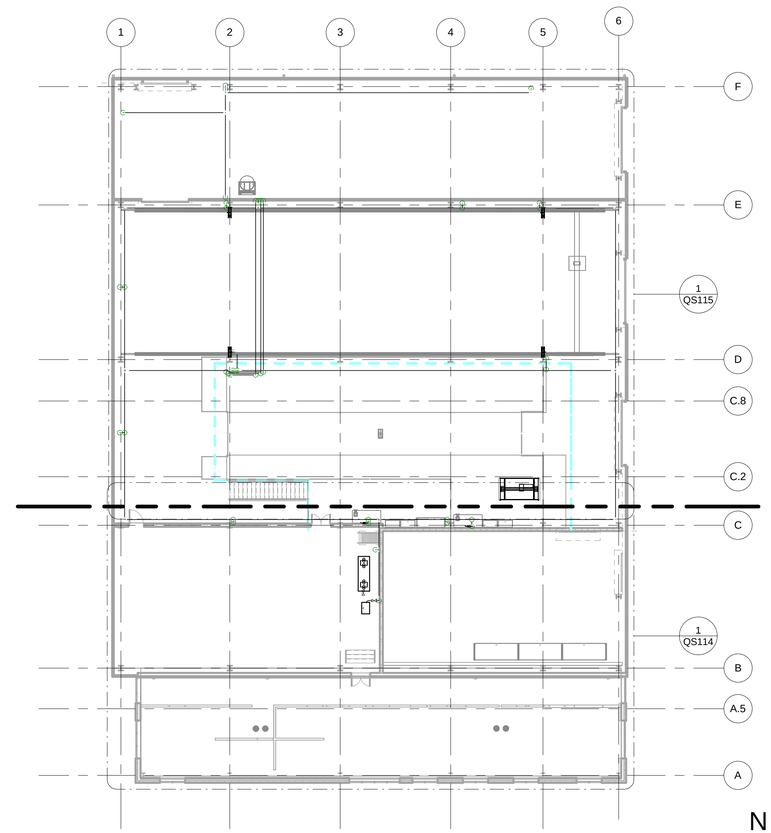

1 PLATFORM LEVEL OVERALL SERVICE EQUIPMENT LAYOUT PLAN REMAKE
1/16" = 1'-0"

N

0' 8' 16' 32'

Maintenance Design Group
1600 Stout Street, Suite 940
Denver, CO 80202 | p 303.302.0266

NOT FOR CONSTRUCTION

NO.	DATE	REVISION	BY

ORIGINAL PLANS PREPARED BY

HNTB
11414 W. PARK PLACE
MILWAUKEE, WI 53224
(414) 359-2300

PLANS PREPARED FOR

CITY OF MILWAUKEE
DEPARTMENT OF
PUBLIC WORKS

MILWAUKEE STREETCAR

MAINTENANCE FACILITY

95% SUBMISSION		29 FEB 2016	
DESIGNED BY JMB	DESIGN CK'D MDS	DRAWN BY EG	PLANS CK'D JMB

OVERALL SERVICE EQPM PLAN

QS102

NOT FOR CONSTRUCTION

QS DWG SHEET NOTES

1 REFERENCE SHEET Q001 FOR ALL EQUIPMENT DESCRIPTIONS
2 REFERENCE SHEET QS001 FOR ALL SERVICE EQUIPMENT GENERAL NOTES
3 REFERENCE SHEET Q001 FOR ALL ABBREVIATIONS
4 REFERENCE SHEET QS001 FOR ALL SERVICE EQUIPMENT KEYNOTES

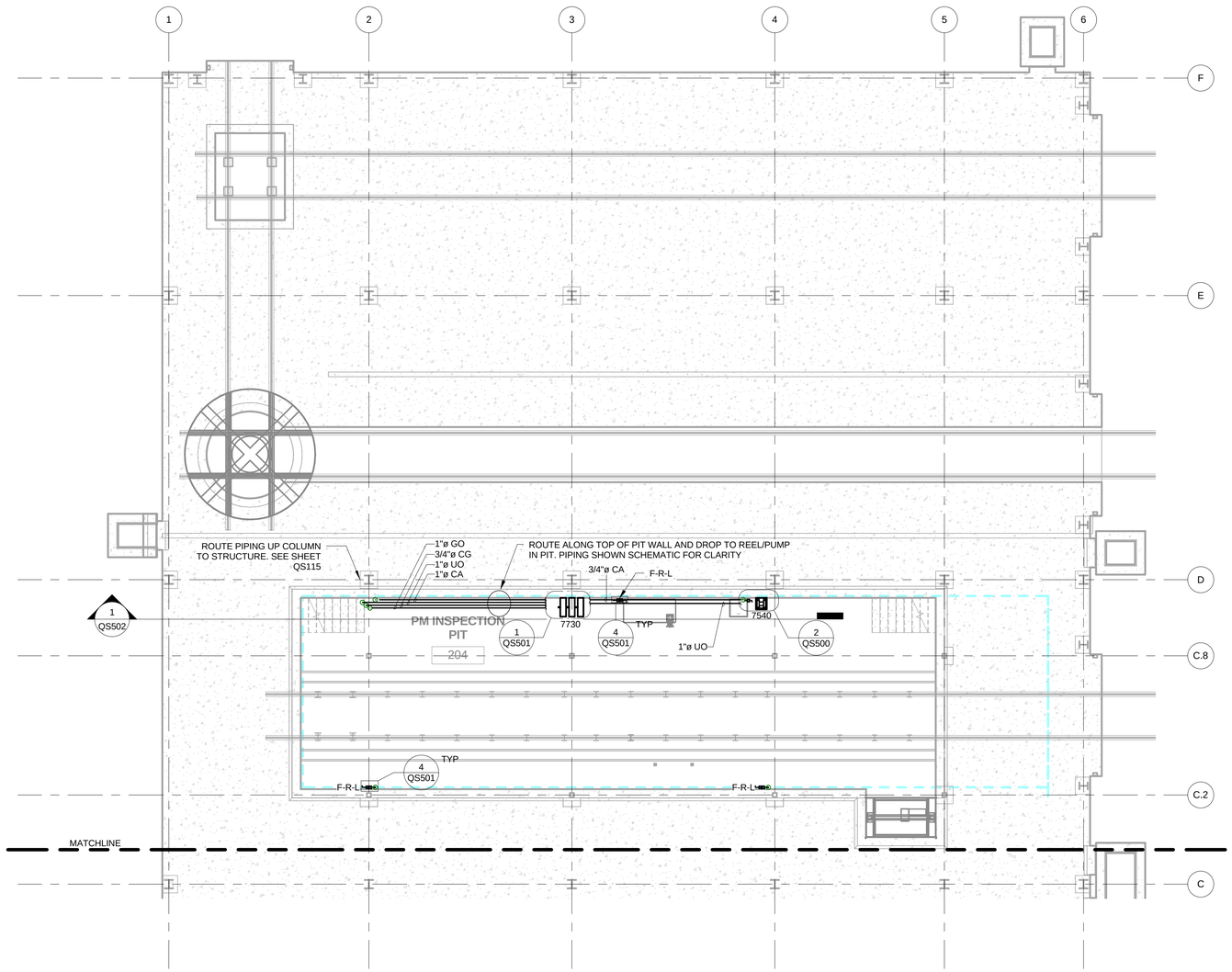

1 PIT LEVEL SERVICE EQUPMENT LAYOUT PLAN SECTOR B
1/8" = 1'-0"

N

0' 4' 8' 16' 32'

Maintenance Design Group
1600 Stout Street, Suite 940
Denver, CO 80202 | p 303.302.0266

NOT FOR CONSTRUCTION

NO.	DATE	REVISION	BY

ORIGINAL PLANS PREPARED BY

HNTB
11414 W. PARK PLACE
MILWAUKEE, WI 53224
(414) 359-2300

PLANS PREPARED FOR

CITY OF MILWAUKEE
DEPARTMENT OF
PUBLIC WORKS

MILWAUKEE STREETCAR

MAINTENANCE FACILITY

95% SUBMISSION	29 FEB 2016

DESIGNED BY	Designer	DESIGN CK'D	Checker	DRAWN BY	Author	PLANS CK'D	Approver

PIT LEVEL SERVICE EQPM PLAN SECTOR B

QS111

NOT FOR CONSTRUCTION

QS DWG SHEET NOTES

1 REFERENCE SHEET Q001 FOR ALL EQUIPMENT DESCRIPTIONS
2 REFERENCE SHEET QS001 FOR ALL SERVICE EQUIPMENT GENERAL NOTES
3 REFERENCE SHEET Q001 FOR ALL ABBREVIATIONS
4 REFERENCE SHEET QS001 FOR ALL SERVICE EQUIPMENT KEYNOTES

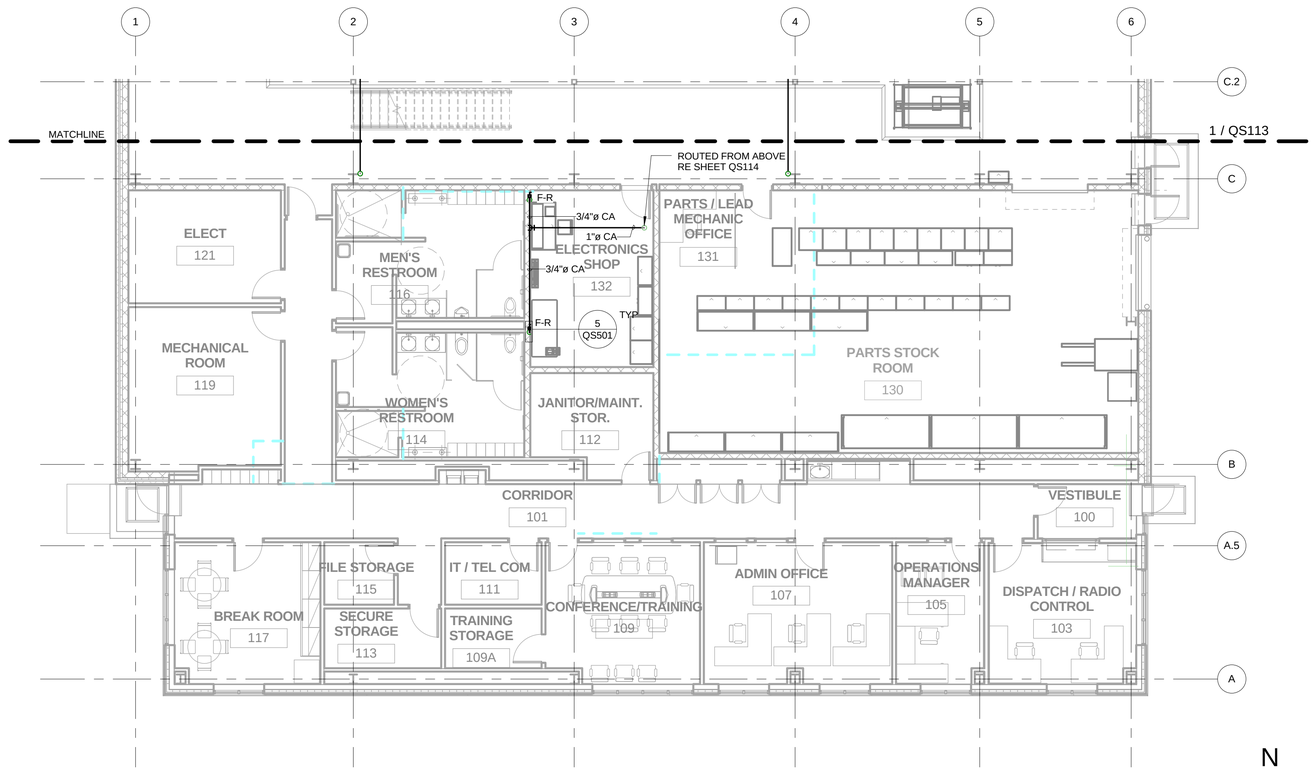

1 SHOP LEVEL SERVICE EQUIPMENT LAYOUT PLAN SECTOR A
1/8" = 1'-0"

N

0' 4' 8' 16' 32'

Maintenance Design Group
1600 Stout Street, Suite 940
Denver, CO 80202 | p 303.302.0266

NOT FOR CONSTRUCTION

NO.	DATE	REVISION	BY

ORIGINAL PLANS PREPARED BY

HNTB
11414 W. PARK PLACE
MILWAUKEE, WI 53224
(414) 359-2300

PLANS PREPARED FOR

CITY OF MILWAUKEE
DEPARTMENT OF
PUBLIC WORKS

MILWAUKEE STREETCAR

MAINTENANCE FACILITY

95% SUBMISSION | 29 FEB 2016

DESIGNED BY	JMB	DESIGN CK'D	MDS	DRAWN BY	EG	PLANS CK'D	JMB

SHOP LEVEL SERVICE EQPM PLAN SECTOR A

QS112

NOT FOR CONSTRUCTION

QS DWG SHEET NOTES

1 REFERENCE SHEET Q001 FOR ALL EQUIPMENT DESCRIPTIONS
2 REFERENCE SHEET QS001 FOR ALL SERVICE EQUIPMENT GENERAL NOTES
3 REFERENCE SHEET Q001 FOR ALL ABBREVIATIONS
4 REFERENCE SHEET QS001 FOR ALL SERVICE EQUIPMENT KEYNOTES

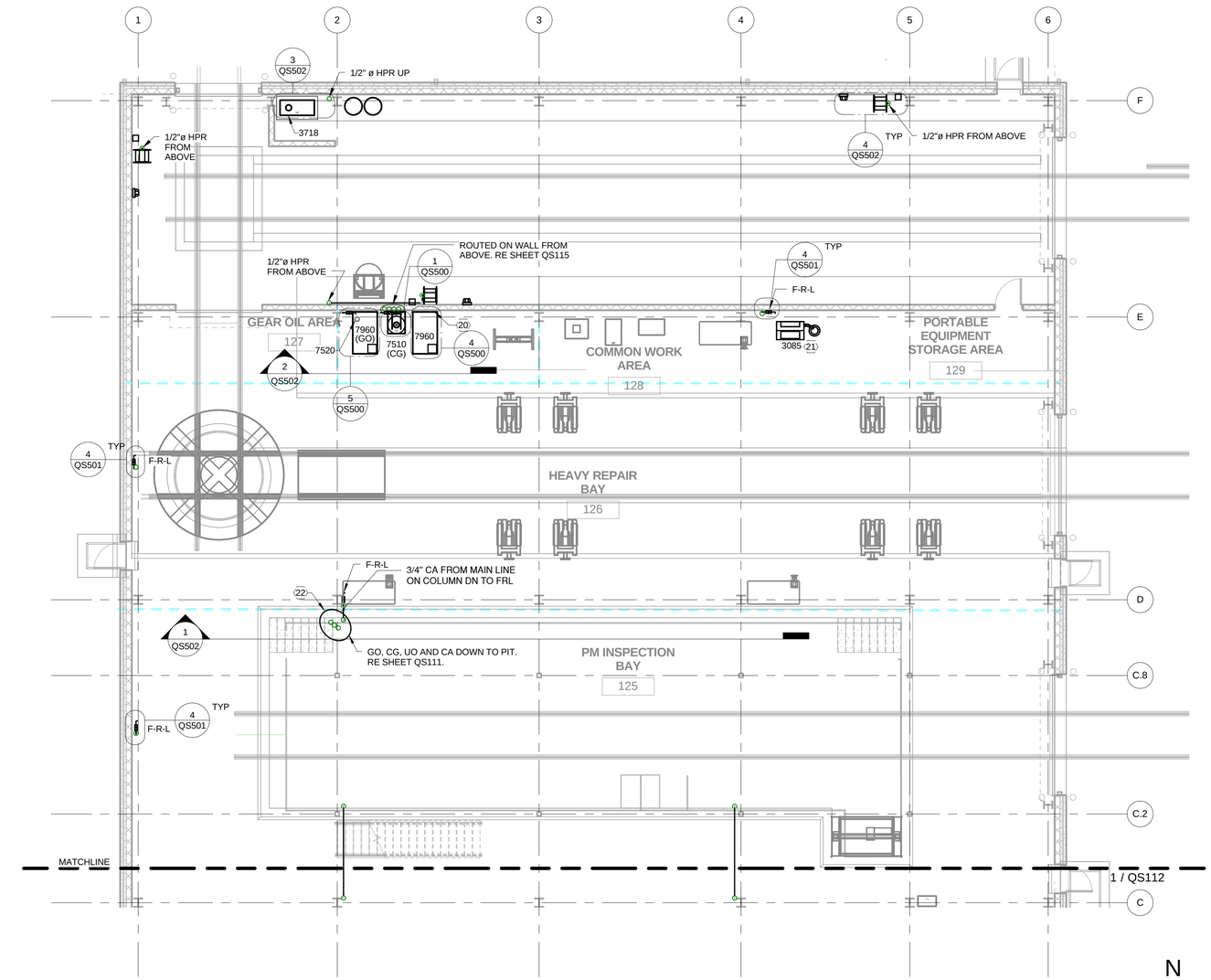

1 SHOP LEVEL SERVICE EQUIPMENT LAYOUT PLAN SECTOR B
1/8" = 1'-0"

Maintenance Design Group
1600 Stout Street, Suite 940
Denver, CO 80202 | p 303.302.0266

NOT FOR CONSTRUCTION

NO.	DATE	REVISION	BY

ORIGINAL PLANS PREPARED BY

HNTB
11414 W. PARK PLACE
MILWAUKEE, WI 53224
(414) 359-2300

PLANS PREPARED FOR

CITY OF MILWAUKEE
DEPARTMENT OF
PUBLIC WORKS

MILWAUKEE STREETCAR

MAINTENANCE FACILITY

95% SUBMISSION		29 FEB 2016	
DESIGNED BY JMB	DESIGN CK'D MDS	DRAWN BY EG	PLANS CK'D JMB

SHOP LEVEL SERVICE EQPM PLAN SECTOR B

QS113

NOT FOR CONSTRUCTION

QS DWG SHEET NOTES

1. REFERENCE SHEET Q001 FOR ALL EQUIPMENT DESCRIPTIONS
2. REFERENCE SHEET QS001 FOR ALL SERVICE EQUIPMENT GENERAL NOTES
3. REFERENCE SHEET Q001 FOR ALL ABBREVIATIONS
4. REFERENCE SHEET QS001 FOR ALL SERVICE EQUIPMENT KEYNOTES

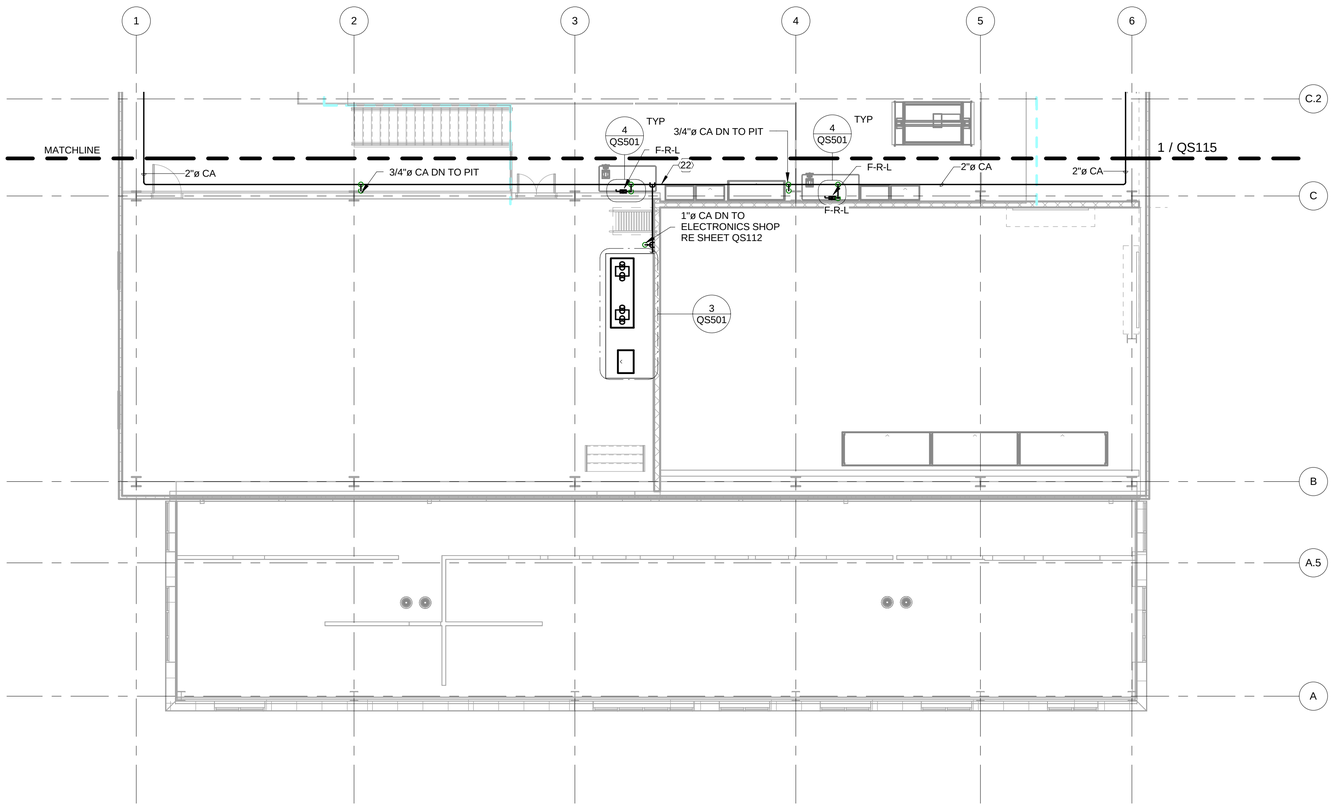

1 PLATFORM LEVEL SERVICE EQUIPMENT LAYOUT PLAN SECTOR A
1/8" = 1'-0"

N

0' 4' 8' 16' 32'

Maintenance Design Group
1600 Stout Street, Suite 940
Denver, CO 80202 | p 303.302.0266

NOT FOR CONSTRUCTION

NO.	DATE	REVISION	BY

ORIGINAL PLANS PREPARED BY

HNTB
11414 W. PARK PLACE
MILWAUKEE, WI 53224
(414) 359-2300

PLANS PREPARED FOR

CITY OF MILWAUKEE
DEPARTMENT OF
PUBLIC WORKS

MILWAUKEE STREETCAR

MAINTENANCE FACILITY

95% SUBMISSION		29 FEB 2016	
DESIGNED BY JMB	DESIGN CK'D MDS	DRAWN BY EG	PLANS CK'D JMB

PLATFORM LEVEL SERVICE EQPM PLAN SECTOR A

QS114

NOT FOR CONSTRUCTION

QS DWG SHEET NOTES

1 REFERENCE SHEET Q001 FOR ALL EQUIPMENT DESCRIPTIONS
2 REFERENCE SHEET QS001 FOR ALL SERVICE EQUIPMENT GENERAL NOTES
3 REFERENCE SHEET Q001 FOR ALL ABBREVIATIONS
4 REFERENCE SHEET QS001 FOR ALL SERVICE EQUIPMENT KEYNOTES

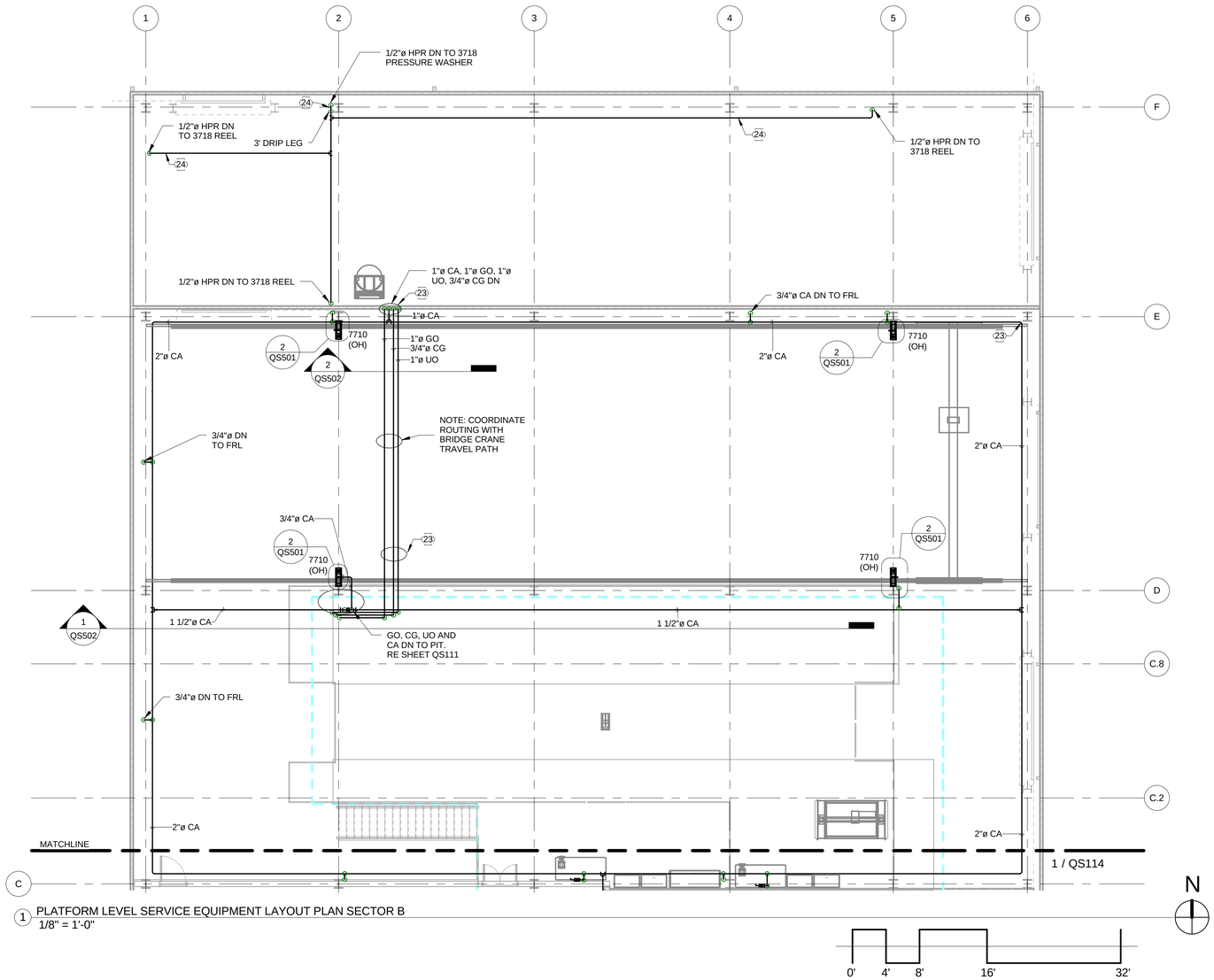

1 PLATFORM LEVEL SERVICE EQUIPMENT LAYOUT PLAN SECTOR B
1/8" = 1'-0"

Maintenance Design Group
1600 Stout Street, Suite 940
Denver, CO 80202 | p 303.302.0266

NOT FOR CONSTRUCTION

NO.	DATE	REVISION	BY

ORIGINAL PLANS PREPARED BY

HNTB
11414 W. PARK PLACE
MILWAUKEE, WI 53224
(414) 359-2300

PLANS PREPARED FOR

CITY OF MILWAUKEE
DEPARTMENT OF
PUBLIC WORKS

MILWAUKEE STREETCAR

MAINTENANCE FACILITY

95% SUBMISSION		29 FEB 2016	
DESIGNED BY JMB	DESIGN CK'D MDS	DRAWN BY EG	PLANS CK'D JMB

PLATFORM LEVEL SERVICE EQPM PLAN SECTOR B

QS115

NOT FOR CONSTRUCTION

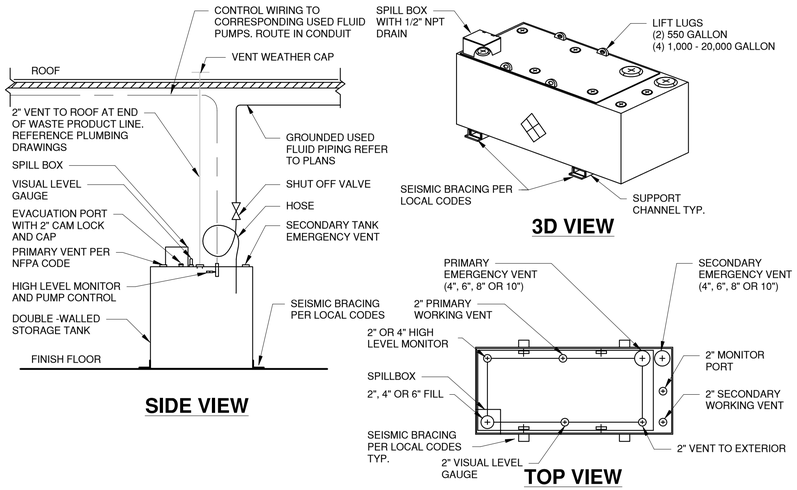

4 TANK FOR USED FLUID DETAIL
NTS

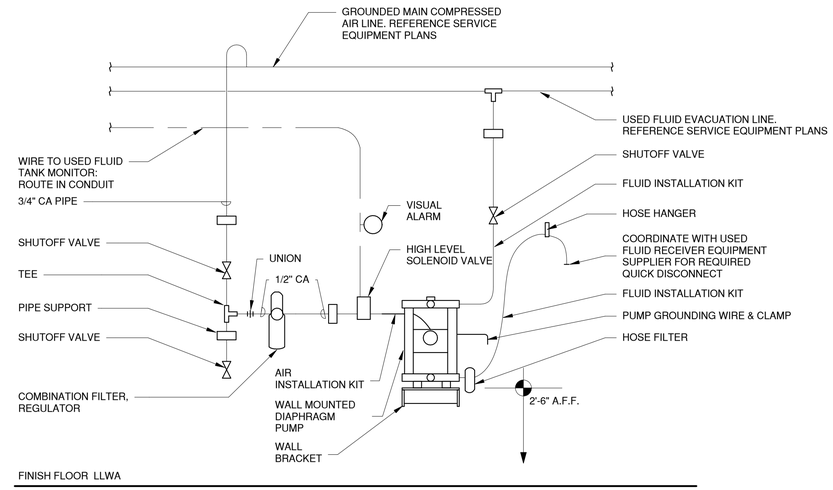

2 PUMP FOR USED FLUID IN PIT DETAIL
NTS

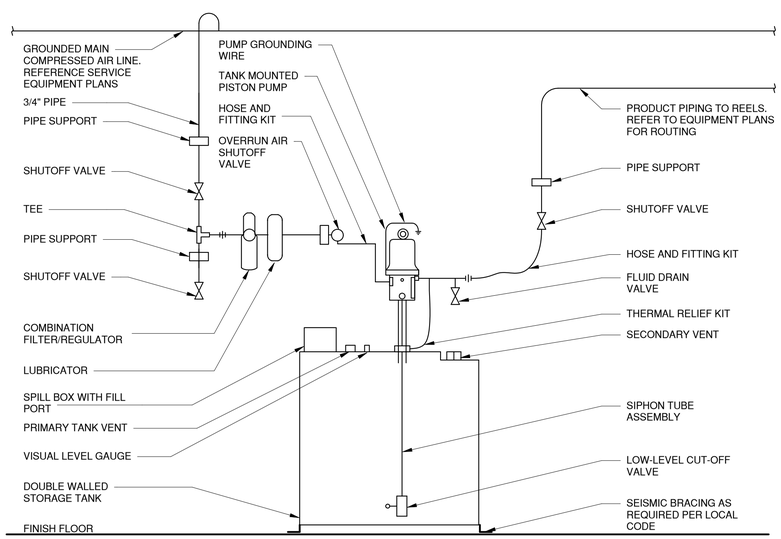

5 TANK WITH TANK MOUNTED PISTON PUMP DETAIL
NTS

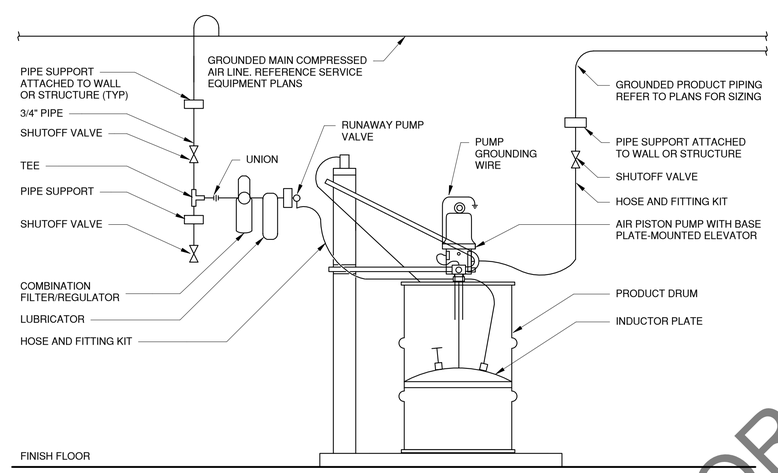

1 DRUM AND PUMP FOR CHASSIS GREASE DETAIL
NTS

Maintenance Design Group
1600 Stout Street, Suite 940
Denver, CO 80202 | p 303.302.0266

NOT FOR CONSTRUCTION

NO.	DATE	REVISION	BY

ORIGINAL PLANS PREPARED BY

HNTB
11414 W. PARK PLACE
MILWAUKEE, WI 53224
(414) 359-2300

PLANS PREPARED FOR

CITY OF MILWAUKEE
DEPARTMENT OF
PUBLIC WORKS

MILWAUKEE STREETCAR

MAINTENANCE FACILITY

95% SUBMISSION | 29 FEB 2016

DESIGNED BY	DESIGN CK'D	DRAWN BY	PLANS CK'D
JMB	MDS	EG	JMB

SERVICE EQPM DETAILS AND ENLARGED PLANS

QS500

NOT FOR CONSTRUCTION

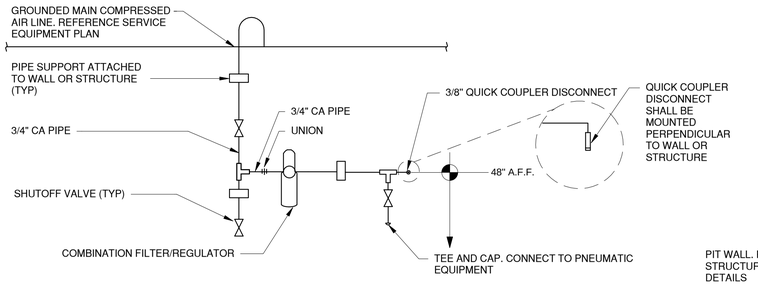

5 COMPRESSED AIR OUTLET, WALL MOUNTED WITH COMBINATION FILTER/REGULATOR
NTS

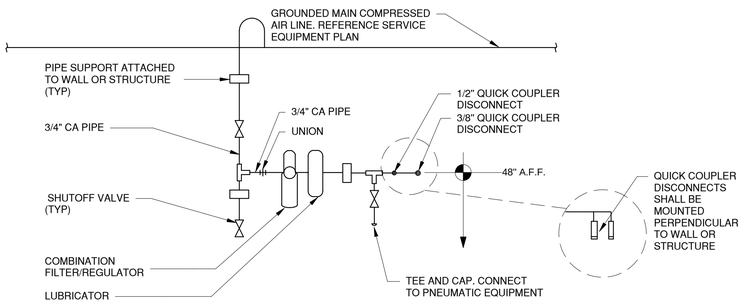

NOTE: QUICK COUPLER DISCONNECTS SHALL BE MOUNTED PERPENDICULAR TO WALL/COLUMN FACE

4 COMPRESSED AIR OUTLET WITH COMBINATION FILTER/REGULATOR AND LUBRICATOR
NTS

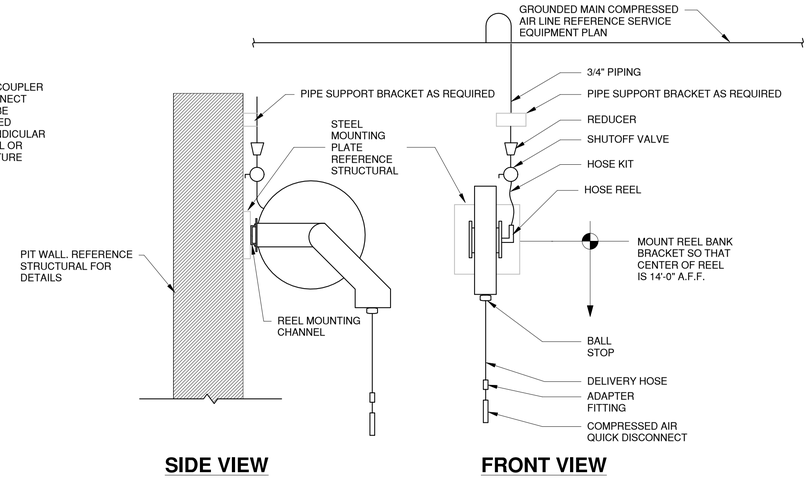

NOTE:
1. ROUTE PIPING TIGHT TO THE WALL/COLUMN
2. REFERENCE STRUCTURAL DRAWINGS FOR REEL BANK MOUNTING DETAILS.
3. SHUT-OFF VALVES ON AIR HOSES SHALL BE ADJUSTED SO THAT QUICK DISCONNECT SHALL BE 78 INCHES A.F.F.

2 REEL BANK, COMPRESSED AIR, SIDE MOUNTED DETAIL
NTS

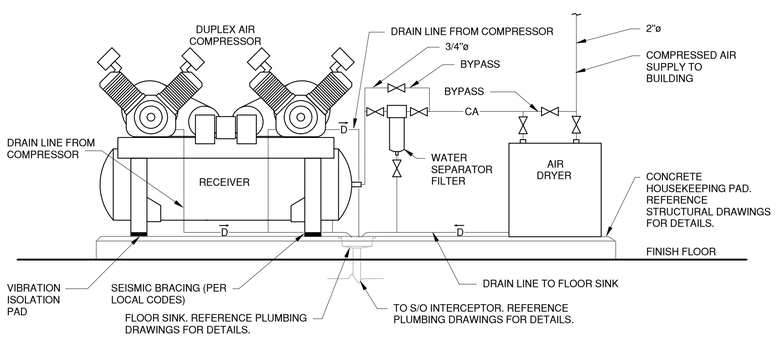

3 COMPRESSOR (DUPLEX) AND AIR DRYER DETAIL
NTS

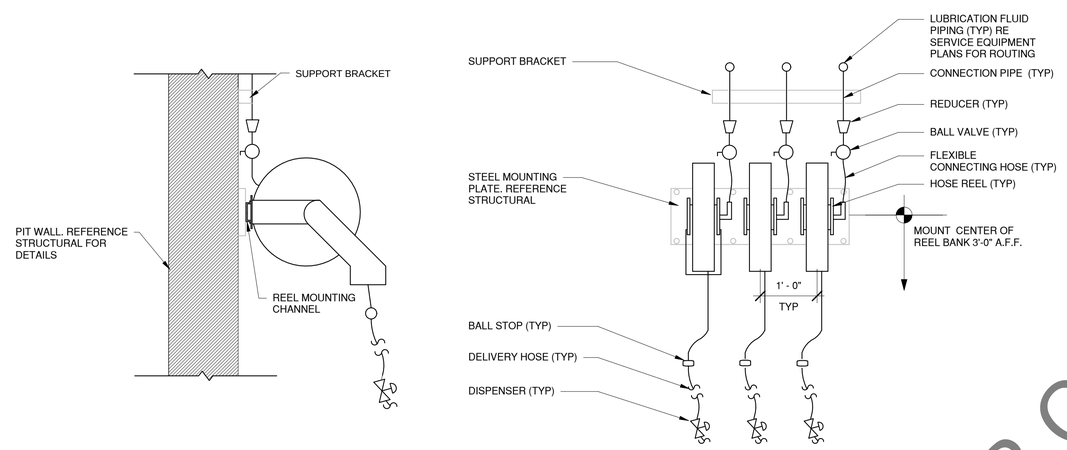

NOTE:
1. ROUTE PIPING IN AN ORDERLY MANNER AND TIGHT TO THE WALL.
2. REFERENCE STRUCTURAL DRAWINGS FOR REEL BANK MOUNTING DETAILS.

1 REEL BANK, PIT WALL MOUNTED DETAIL
NTS

Maintenance Design Group
1600 Stout Street, Suite 940
Denver, CO 80202 | p 303.302.0266

NOT FOR CONSTRUCTION

NO.	DATE	REVISION	BY

ORIGINAL PLANS PREPARED BY

HNTB
11414 W. PARK PLACE
MILWAUKEE, WI 53224
(414) 359-2300

PLANS PREPARED FOR

CITY OF MILWAUKEE
DEPARTMENT OF
PUBLIC WORKS

MILWAUKEE STREETCAR

MAINTENANCE FACILITY

95% SUBMISSION		29 FEB 2016	
DESIGNED BY JMB	DESIGN CK'D MDS	DRAWN BY EG	PLANS CK'D JMB

SERVICE EQPM DETAILS AND ENLARGED PLANS

QS501

NOT FOR CONSTRUCTION

QS DWG SHEET NOTES

1 REFERENCE SHEET Q001 FOR ALL EQUIPMENT DESCRIPTIONS
2 REFERENCE SHEET QS001 FOR ALL SERVICE EQUIPMENT GENERAL NOTES
3 REFERENCE SHEET Q001 FOR ALL ABBREVIATIONS
4 REFERENCE SHEET QS001 FOR ALL SERVICE EQUIPMENT KEYNOTES

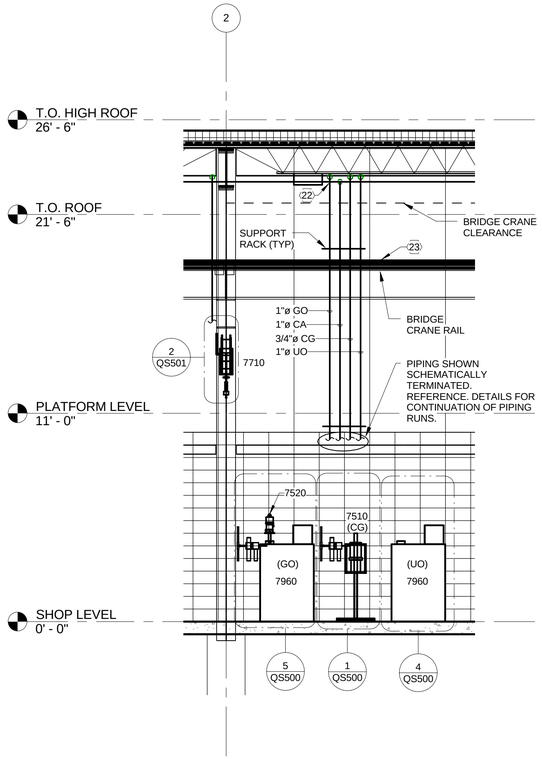

2 SERVICE PIPING (NORTH WALL)
1/4" = 1'-0"

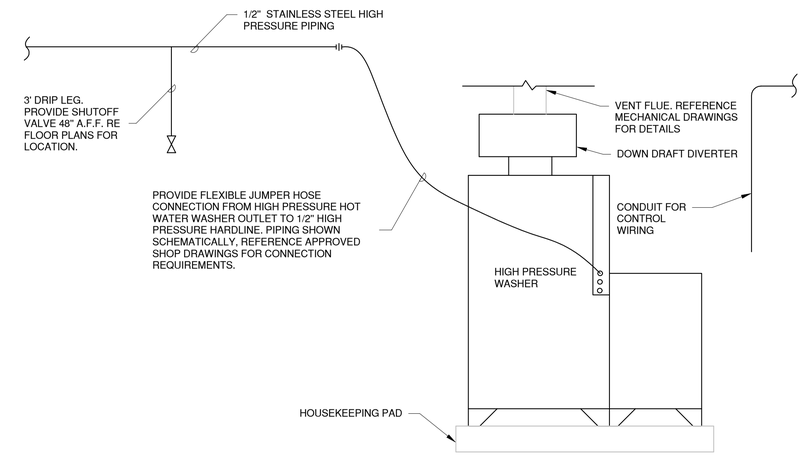

3 HIGH PRESSURE WASHER CONNECTION DETAIL
NTS

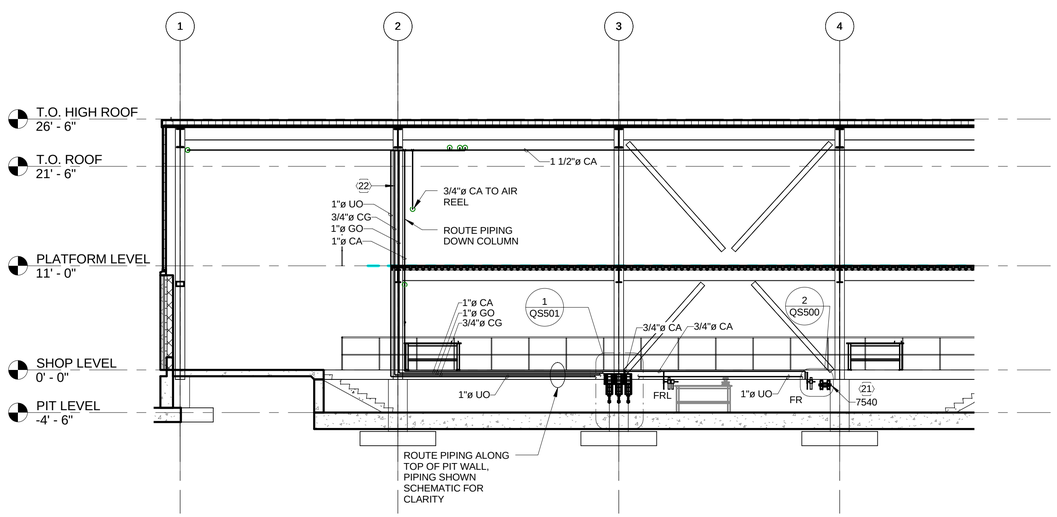

1 SERVICE PIPING INTO PIT AREA
1/8" = 1'-0"

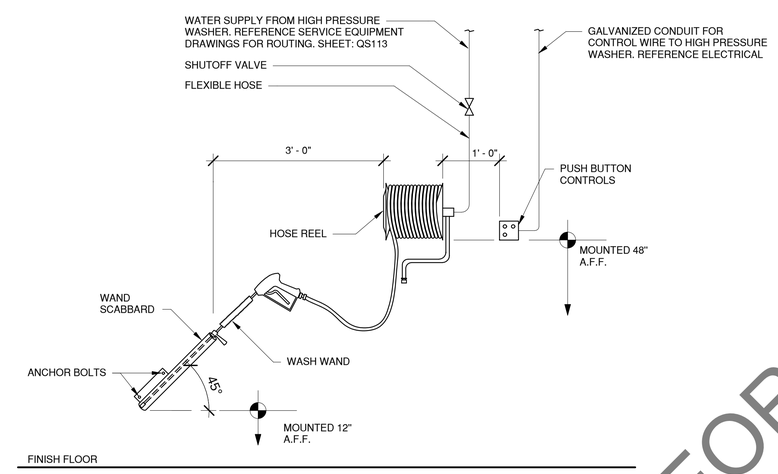

4 WAND SCABBARD, HOSE REEL AND WASH CONTROL DETAIL
NTS

Maintenance Design Group
1600 Stout Street, Suite 940
Denver, CO 80202 | p 303.302.0266

NOT FOR CONSTRUCTION

NO.	DATE	REVISION	BY

ORIGINAL PLANS PREPARED BY

HNTB
11414 W. PARK PLACE
MILWAUKEE, WI 53224
(414) 359-2300

PLANS PREPARED FOR

CITY OF MILWAUKEE
DEPARTMENT OF
PUBLIC WORKS

MILWAUKEE STREETCAR

MAINTENANCE FACILITY

95% SUBMISSION	29 FEB 2016

DESIGNED BY	JMB	DESIGN CK'D	MDS	DRAWN BY	EG	PLANS CK'D	JMB

SERVICE EQPM SECTIONS AND DETAILS

QS502

NOT FOR CONSTRUCTION