STATE PROJECT NUMBER	SHEET NO.
2100 - 07 - 72	8.0

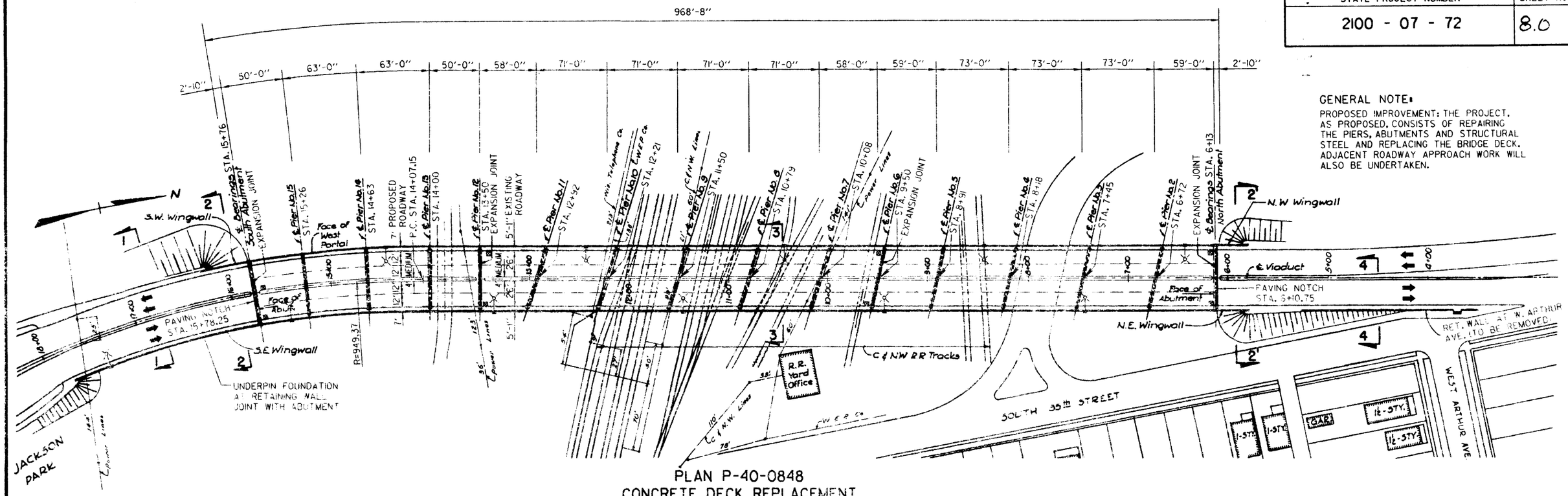

PLAN P-40-0848
CONCRETE DECK REPLACEMENT

SCALE: 1" = 50'-0"

GENERAL NOTE:

PROPOSED IMPROVEMENT: THE PROJECT, AS PROPOSED, CONSISTS OF REPAIRING THE PIERS, ABUTMENTS AND STRUCTURAL STEEL AND REPLACING THE BRIDGE DECK. ADJACENT ROADWAY APPROACH WORK WILL ALSO BE UNDERTAKEN.

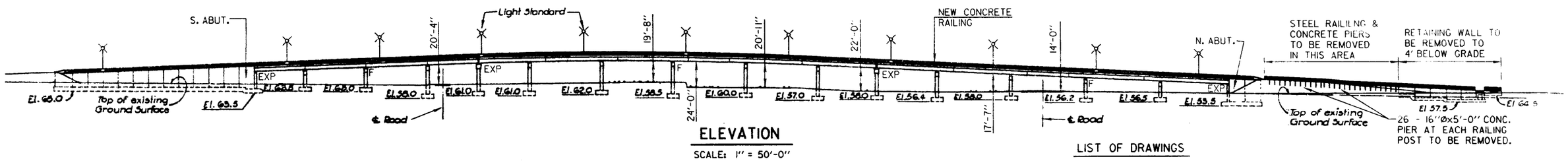

ELEVATION

SCALE: 1" = 50'-0"

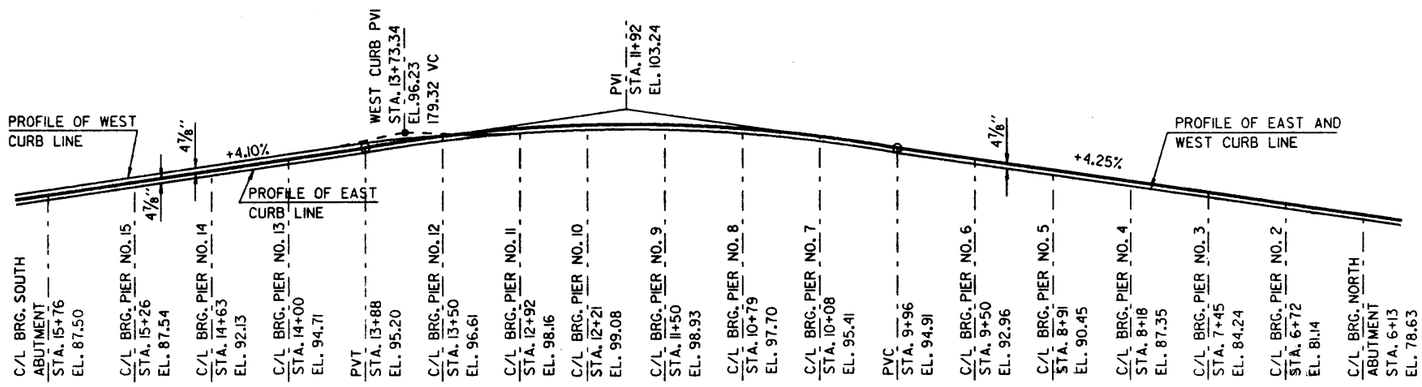

PROFILE GRADE LINE ALONG C/L OF BRIDGE

LIST OF DRAWINGS

1. SITE PLAN
2. CROSS SECTION & QUANTITIES
3. DECK - NORTH ABUTMENT TO PIER 3
4. DECK - PIER 3 TO PIER 5
5. DECK - PIER 5 TO PIER 7
6. DECK - PIER 7 TO PIER 9
7. DECK - PIER 9 TO PIER 11
8. DECK - PIER 11 TO PIER 13
9. DECK - PIER 13 TO PIER 15
10. DECK - PIER 15 TO SOUTH ABUTMENT
11. DECK - CROSS SECTION
12. DECK - BILL OF BARS
13. RAILING PLAN
14. RAILING PLAN
15. EAST RAILING ELEVATION
16. WEST RAILING ELEVATION
17. RAILING DETAILS
18. RAILING DETAILS
19. SE, SW, NW & NE WINGWALL CAP
20. NORTH AND SOUTH ABUTMENT REMODELING
21. ABUTMENT STRIP SEAL DETAILS
22. PIER 6 - MODULAR EXPANSION JOINT DETAIL
23. PIER 12 - MODULAR EXPANSION JOINT DETAIL
24. CONCRETE REPAIR ON ABUTMENT
25. CONCRETE REPAIR ON PIERS
26. PIPING DETAILS
27. FLOOR DRAIN - TYPE 'GC'

WISCONSIN GEORGE ROEMER, JR. E-10766 MILWAUKEE, WIS. PROFESSIONAL ENGINEER

BRIDGE OFFICE CONTACT
GERRY ANDERSON (608) 266-8488

NO.	DATE	REVISION	BY

CITY OF MILWAUKEE
DEPARTMENT OF PUBLIC WORKS
INFRASTRUCTURE SERVICES DIVISION

STRUCTURE P - 40 - 0848

DESIGNED BY	DRAWN BY	CHECKED BY	DATE
JTA	JH	JTA	8-96

SITE PLAN

SHEET 1 OF 27

X

FILE: w:\eng\struc\jackpkov\site.dgn
PLOT DATE: 2-APR-1997

STATE PROJECT NUMBER	SHEET NO.
2100 - 07 - 72	8.1

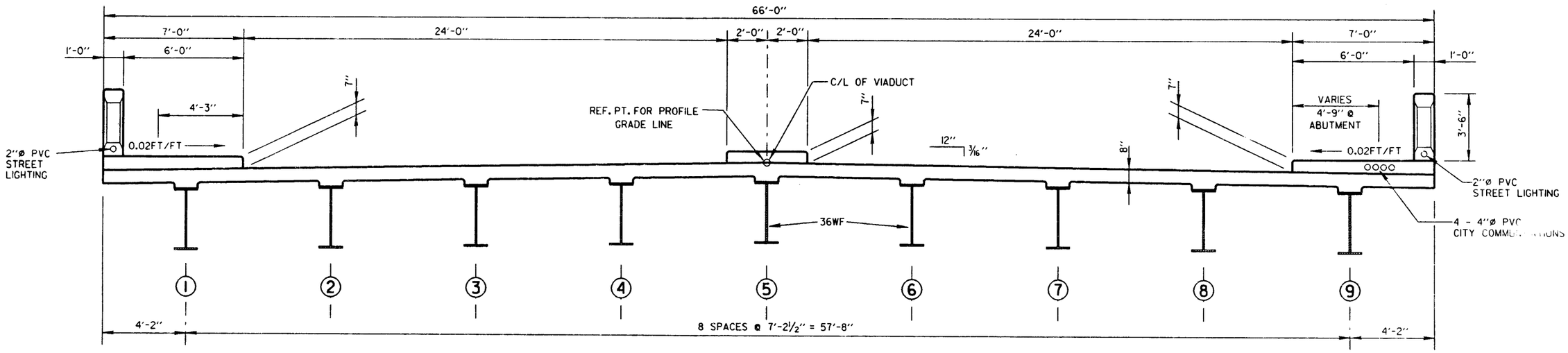

SECTION THRU BRIDGE LOOKING SOUTH

ESTIMATE OF QUANTITIES

ITEM NO.	BID ITEM	UNIT	PIER OR ABUTMENTS	WINGWALLS	SUPER-STRUCTURE	TOTAL
20351	REMOVE OLD BRIDGE, STA. 10+95.0	L.S.	✓	✓	✓	1
20610	EXCAVATION FOR STRUCTURES, BRIDGE P-40-0848	L.S.		✓		1
50201	CONCRETE MASONRY, BRIDGES	C.Y.	8	20	2120	2148
50232	EXPANSION DEVICE, STRUCTURE P-40-0848	L.S.			✓	1
50250	CONCRETE MASONRY ANCHORS, TYPE L, NO. 5 BARS	EACH	272	618		890
50265	PROTECTIVE SURFACE TREATMENT	S.Y.			6848	6848
50511	COATED HIGH STRENGTH BAR STEEL REINFOREMENT, BRIDGES	LBS.	1285	5087	470,120	476,492
50601	STRUCTURAL CARBON STEEL	LBS.	1624			1624
50915	CONCRETE SURFACE REPAIR	S.F.	444	8		452
51405	FLOOR DRAIN - TYPE 'GC'	EACH			8	8
60305	TEMPORARY PRECAST CONCRETE BARRIER, DELIVERED	L.F.			2188	2188
60308	TEMPORARY PRECAST CONCRETE BARRIER, INSTALLED	L.F.			2188	2188
64220	FIELD OFFICE, TYPE C	L.S.				1
65219	NONMETALLIC CONDUIT, SCHEDULE 40, 2 INCH	L.F.		312	1968	2280
65222	NONMETALLIC CONDUIT, SCHEDULE 40, 4 INCH	L.F.			3876	3876
90008	FLAME CUTTING STEEL GIRDERS	L.S.			✓	1
90009	UNDERPINING PILING, SE WINGWALL	L.F.		140		140
90010	CONCRETE RAILING	L.S.		✓	✓	1
90011	ELECTRICAL WORK	L.S.		✓	✓	1
90012	GRAFFITI REMOVAL	S.F.	200	100	100	400
90013	BRIDGE DRAINAGE REPAIR				✓	1
ITEM NO.	NON BID ITEM	UNIT	PIER OR ABUTMENTS	WINGWALLS	SUPER-STRUCTURE	TOTAL
	FELT FILLER				1/2"	✓

GENERAL NOTES

DRAWINGS SHALL NOT BE SCALED.

THE FIRST DIGIT OF A THREE BAR MARK SIGNIFIES THE BAR SIZE.

BAR STEEL REINFORCEMENT SHALL BE IMBEDDED 2" CLEAR UNLESS OTHERWISE SHOWN OR NOTED.

FILLER SHALL CONFORM TO THE REQUIREMENTS OF A.A.S.H.T.O. DESIGNATION: M153, TYPE I, II, III OR A.A.S.H.T.O. DESIGNATION: M213.

DESIGN DATA

STRUCTURE IS DESIGNED FOR A FUTURE WEARING SURFACE OF 20 #/SQ. FT.

LIVE LOAD

DESIGN RATING :	HS 20
INVENTORY RATING :	HS 20
OPERATIONAL RATING :	HS 45
MAX. STD. PERMIT VEHICLE LOAD	= 250 KIPS

ALLOWABLE DESIGN STRESSES

CONCRETE MASONRY (SLABS)	f'c = 4,000 psi
(ALL OTHERS)	f'c = 3,500 psi
HIGH STRENGTH AND COATED HIGH STRENGTH BARS STEEL REINFORCEMENT	fy = 60,000 psi

NO.	DATE	REVISION	BY

CITY OF MILWAUKEE
DEPARTMENT OF PUBLIC WORKS
INFRASTRUCTURE SERVICES DIVISION

STRUCTURE P - 40 - 0848

DESIGNED BY	DRAWN BY	CHECKED BY	DATE
JTA	JH	JTA	8/96

CROSS SECTION AND QUANTITIES

SHEET 2 OF 27

X

FILE: w:\eng\struc\jackpkov\cross.dgn
PLOT DATE: 1-APR-1997

STATE PROJECT NUMBER	SHEET NO.
2100 - 07 - 72	8.2

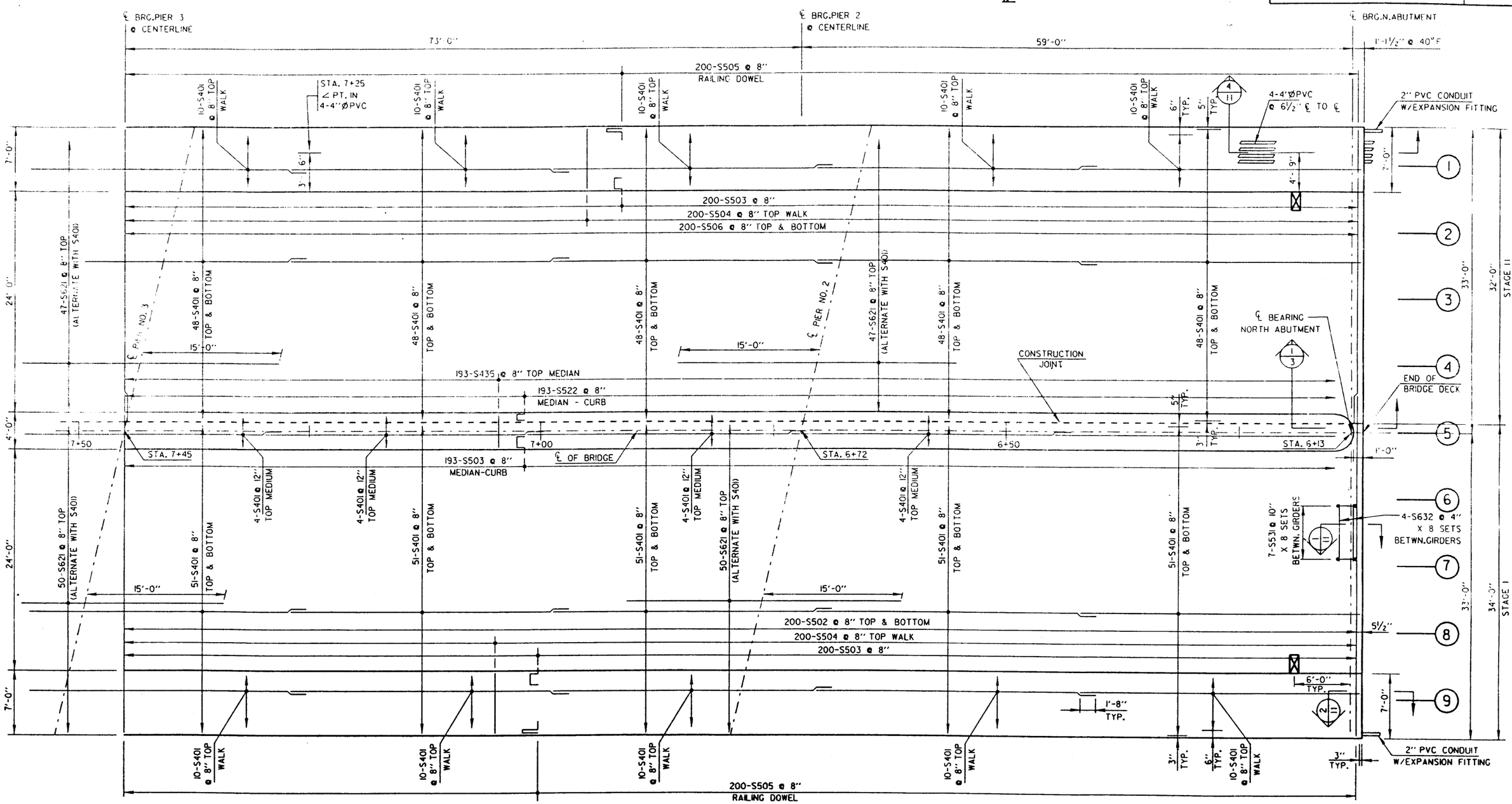

PLAN VIEW

SCALE : 3/16" = 1'-0"

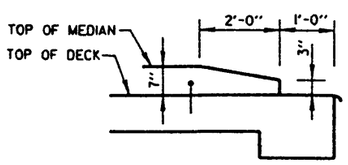

SECTION 1/3

NO.	DATE	REVISION	BY

CITY OF MILWAUKEE
DEPARTMENT OF PUBLIC WORKS
DIVISION OF ENGINEERS

STRUCTURE P - 40 - 0848

DESIGNED BY	DRAWN BY	CHECKED BY	DATE
M.P.T.	K.S.	J.T.A.	1/97

DECK
NORTH ABUTMENT
TO PIER NO. 3

SHEET 3 OF 27

X

FILE: m:\eng\struct\jackpkev\deck.dgn
PLOT DATE: 25-FEB-1997

STATE PROJECT NUMBER	SHEET NO.
2100 - 07 - 72	8.3

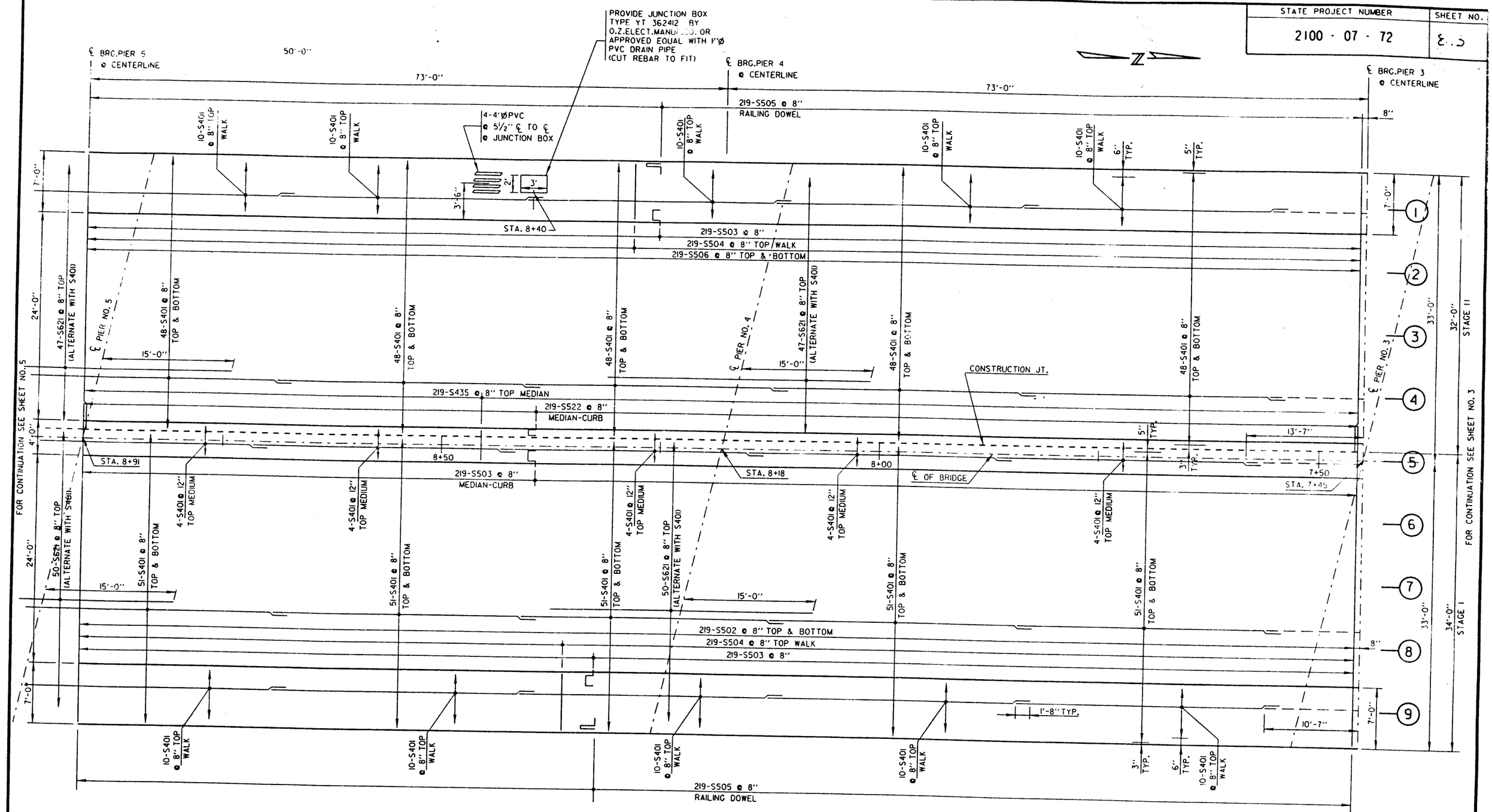

PLAN VIEW

SCALE : 3/16" = 1'-0"

NO.	DATE	REVISION	BY

CITY OF MILWAUKEE
DEPARTMENT OF PUBLIC WORKS
DIVISION OF ENGINEERS

STRUCTURE P - 40 - 0848

DESIGNED BY	DRAWN BY	CHECKED BY	DATE
M.P.T.	K.S.	J.T.A.	1/97

DECK
PIER NO. 3 TO
PIER NO. 5

SHEET 4 OF 27

X

FILE: w:\eng\structs\jackpkov\deck.dgn
PLOT DATE: 25-FEB 1997

STATE PROJECT NUMBER	SHEET NO.
2100 - 07 - 72	8.4

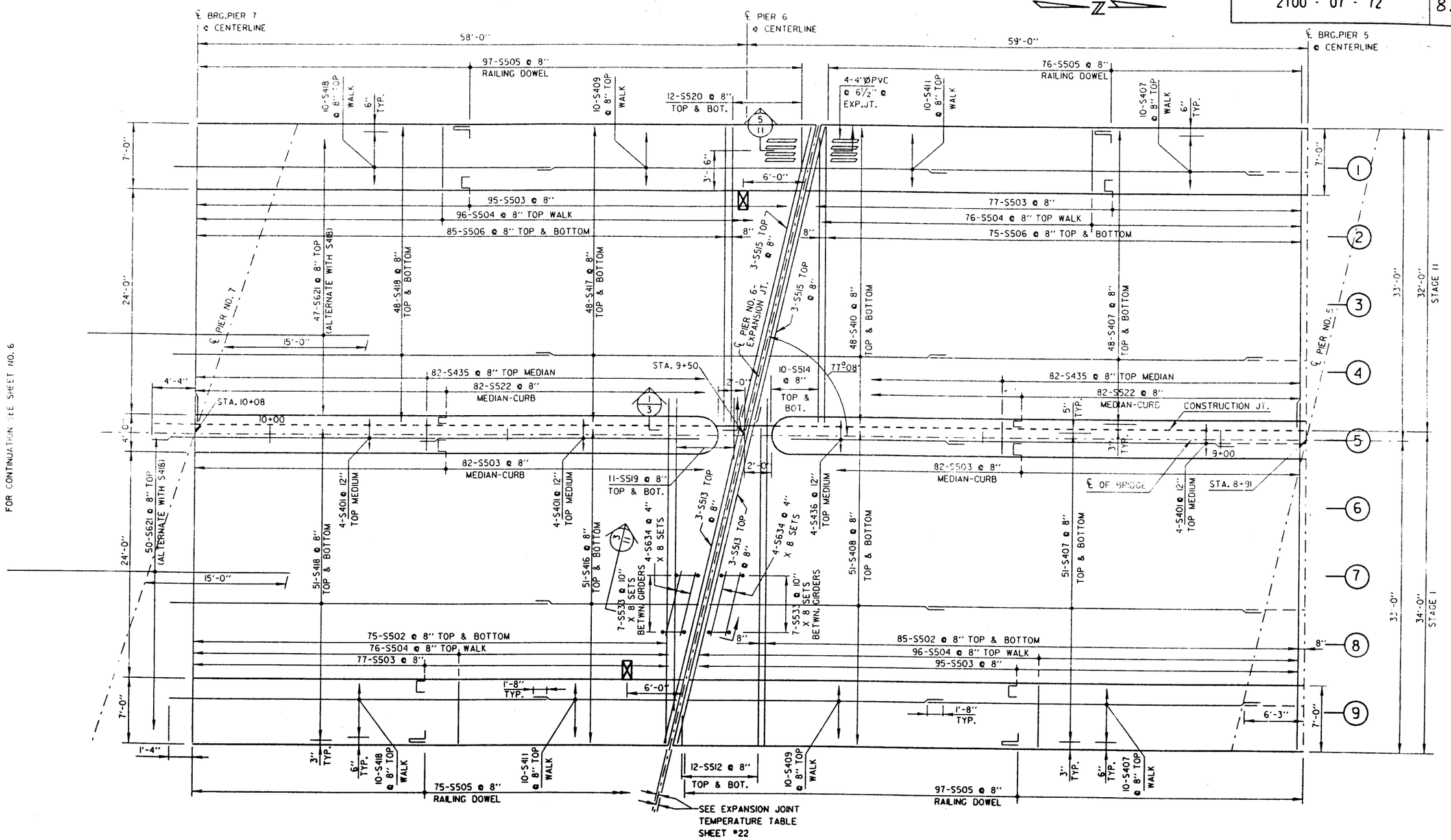

FOR CONTINUATION SEE SHEET NO. 6

FOR CONTINUATION SEE SHEET NO. 4

PLAN VIEW

SCALE : 3/16" = 1'-0"

NO.	DATE	REVISION	BY

CITY OF MILWAUKEE
DEPARTMENT OF PUBLIC WORKS
DIVISION OF ENGINEERS

STRUCTURE P - 40 - 0848

DESIGNED BY	DRAWN BY	CHECKED BY	DATE
M.P.T.	K.S.	J.T.A.	1/97

DECK
PIER NO. 5 TO
PIER NO. 7

SHEET 5 OF 27

X

FILE: w:\eng\struct\jackphov\deck.dgn
PLOT DATE: 25-FEB-1997

STATE PROJECT NUMBER	SHEET NO.
2100 - 07 - 72	8.5

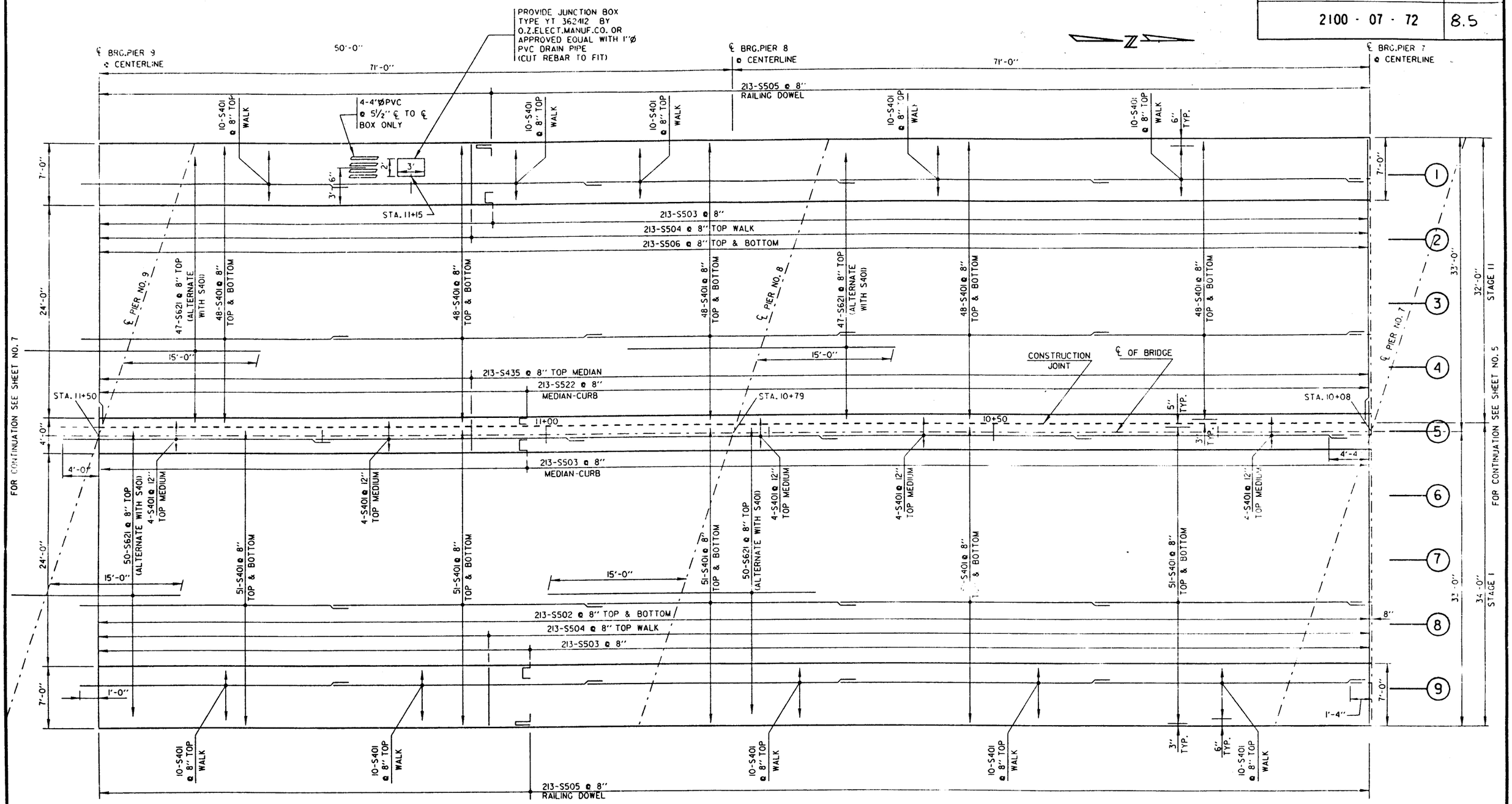

PLAN VIEW

SCALE : 3/16" = 1'-0"

NO.	DATE	REVISION	BY

CITY OF MILWAUKEE
DEPARTMENT OF PUBLIC WORKS
DIVISION OF ENGINEERS

STRUCTURE P - 40 - 0848

DESIGNED BY	DRAWN BY	CHECKED BY	DATE
M.P.T.	K.S.	J.T.A.	1/97

DECK
PIER NO. 7 TO
PIER NO. 9

SHEET 6 OF 27

X

FILE: w:\eng\structs\jackphow\deck.dgn
PLOT DATE: 25-FEB-1997

STATE PROJECT NUMBER	SHEET NO.
2100 - 07 - 72	8.6

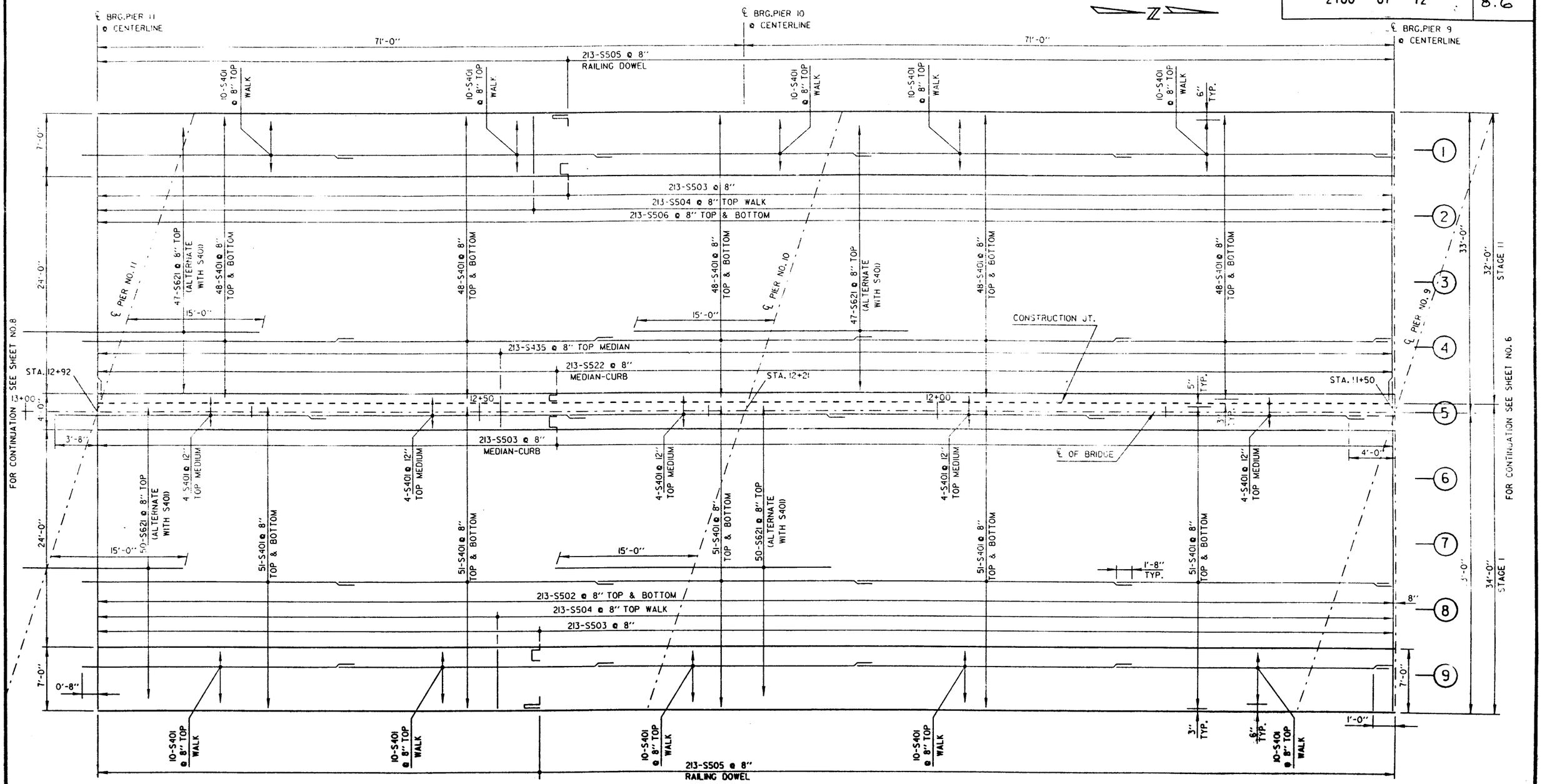

PLAN VIEW

SCALE : 3/16" = 1'-0"

NO.	DATE	REVISION	BY

CITY OF MILWAUKEE
DEPARTMENT OF PUBLIC WORKS
DIVISION OF ENGINEERS

STRUCTURE P - 40 - 0848

DESIGNED BY	DRAWN BY	CHECKED BY	DATE
M.P.T.	K.S.	J.T.A.	1/97

DECK
PIER NO. 9 TO
PIER NO. 11

SHEET 7 OF 27

X

FILE: w:\engf\structs\jackpiers\deck.dgn
PLOT DATE: 29-FEB-1997

STATE PROJECT NUMBER	SHEET NO.
2100 - 07 - 72	8.7

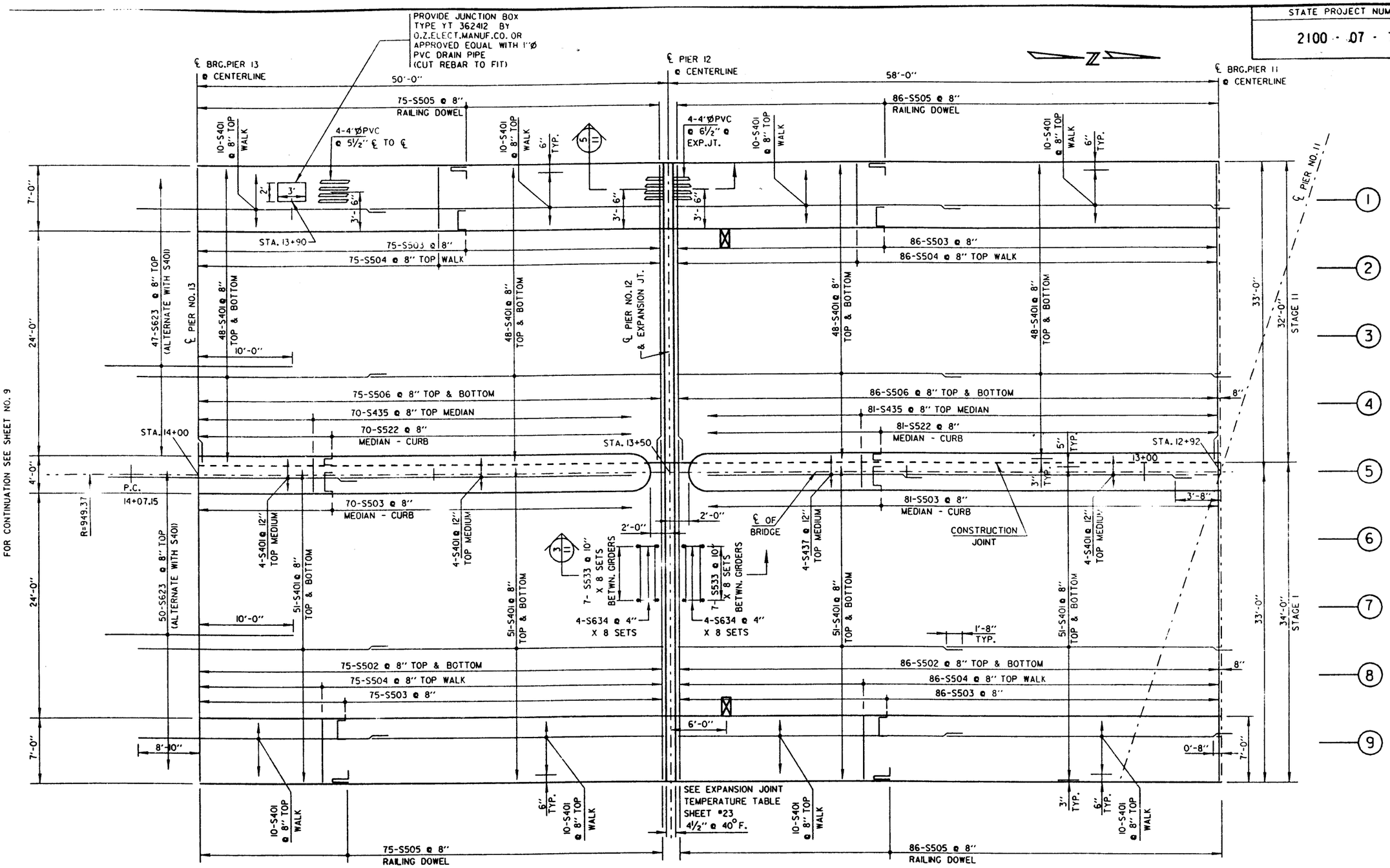

FOR CONTINUATION SEE SHEET NO. 9

FOR CONTINUATION SEE SHEET NO. 7

PLAN VIEW

SCALE : 3/16" = 1'-0"

NO.	DATE	REVISION	BY

CITY OF MILWAUKEE
DEPARTMENT OF PUBLIC WORKS
DIVISION OF ENGINEERS

STRUCTURE P - 40 - 0848

DESIGNED BY	DRAWN BY	CHECKED BY	DATE
M.P.T.	K.S.	J.T.A.	1/97

DECK
PIER NO. 11 TO
PIER NO. 13

SHEET 8 OF 27

X

FILE: w:\eng\struct\jackphov\deck.dgn
PLOT DATE: 25-FEB-1997

STATE PROJECT NUMBER	SHEET NO.
2100 - 07 - 72	8.8

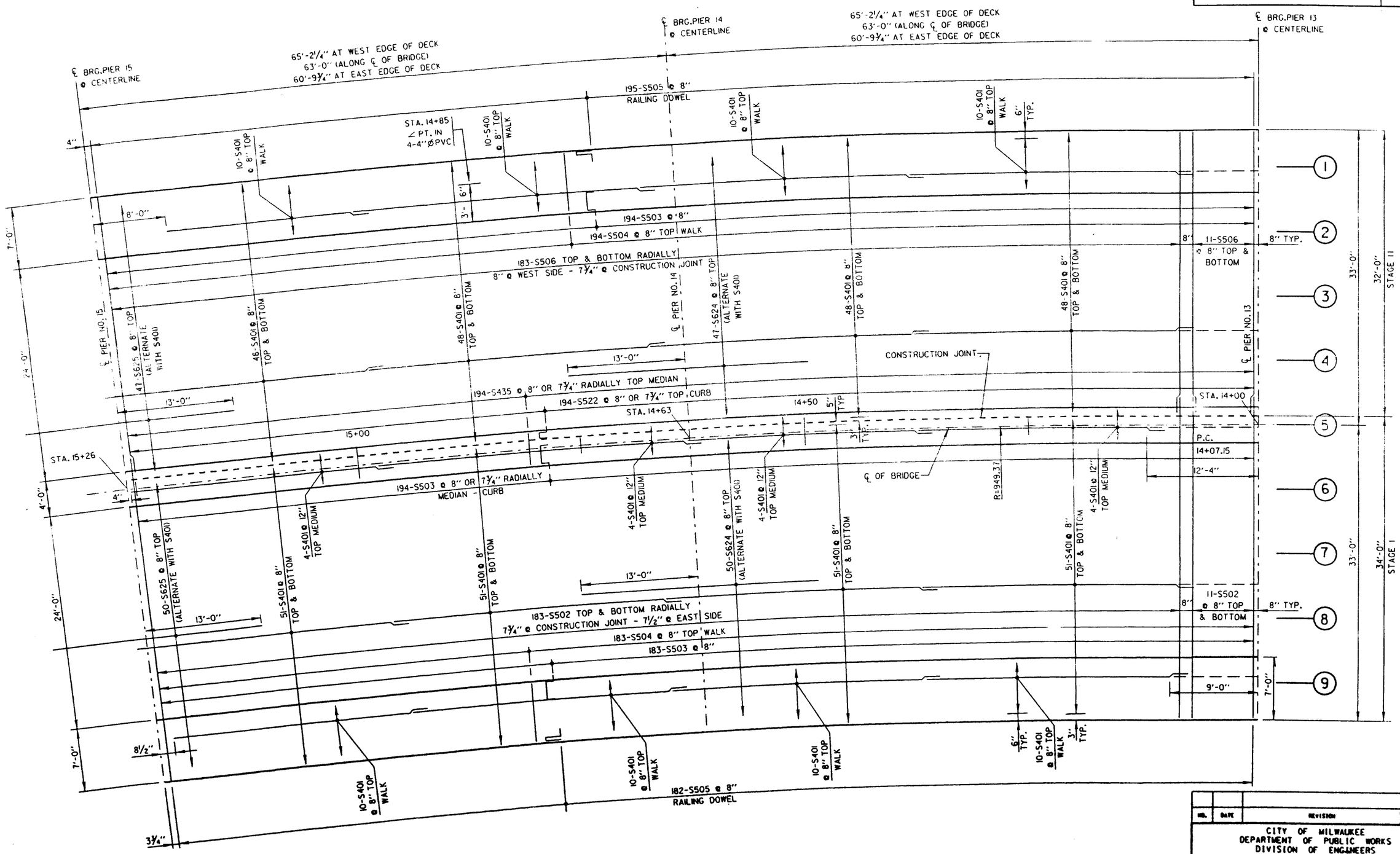

PLAN VIEW

SCALE : 3/16" = 1'-0"

NO.	DATE	REVISION	BY

CITY OF MILWAUKEE
DEPARTMENT OF PUBLIC WORKS
DIVISION OF ENGINEERS

STRUCTURE P - 40 - 0848

DESIGNED BY	DRAWN BY	CHECKED BY	DATE
M.P.T.	K.S.	J.T.A.	1/97

DECK
PIER NO. 13 TO
PIER NO. 15

SHEET 9 OF 27

X

FILE: w:\engf\structr\backup\v\deck.dgn
PLOT DATE: 25-FEB-1997

STATE PROJECT NUMBER	SHEET NO.
2100 - 07 - 72	8.4

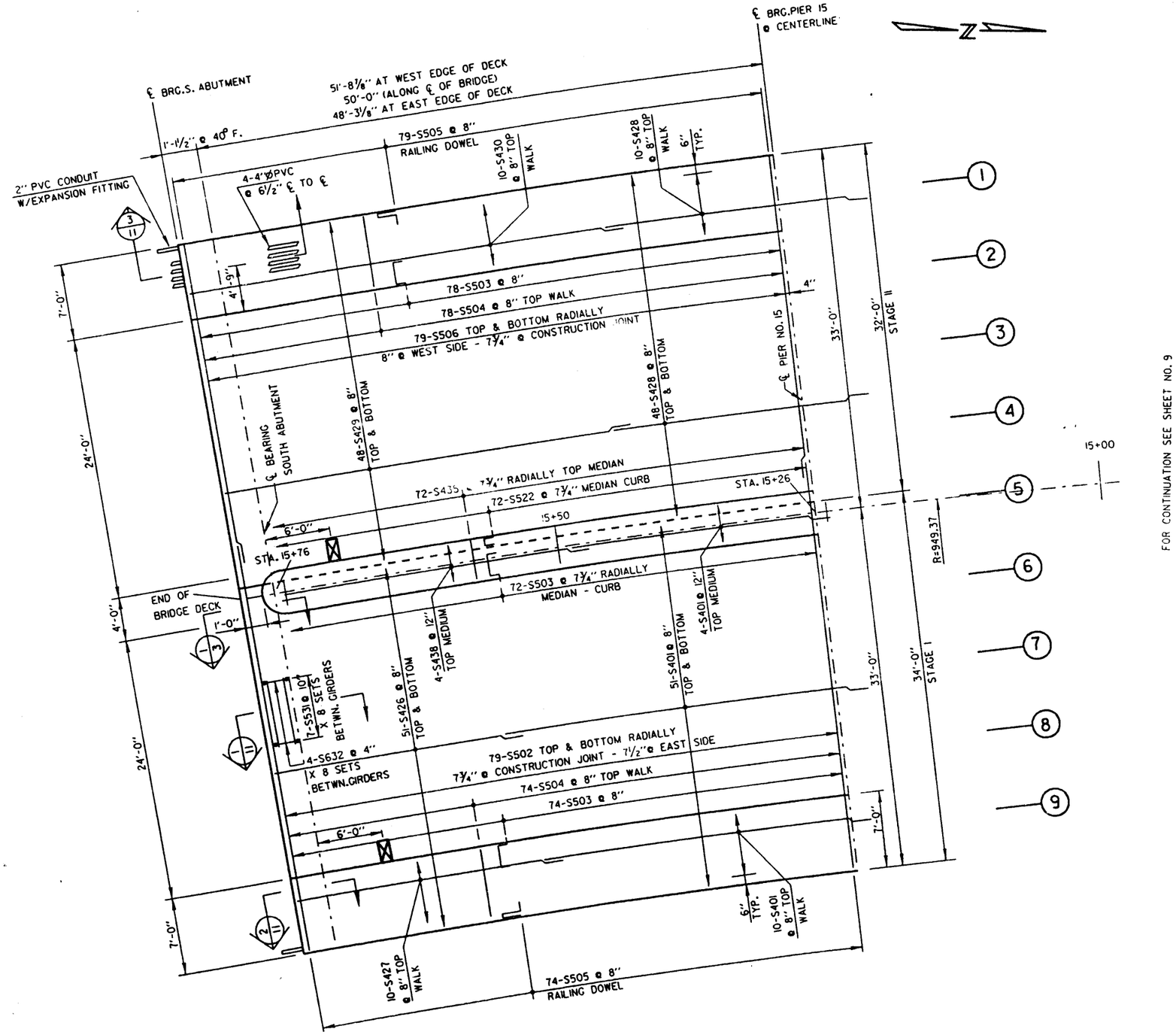

FOR CONTINUATION SEE SHEET NO. 9

PLAN VIEW

SCALE : 3/16" = 1'-0"

NO.	DATE	REVISION	BY

CITY OF MILWAUKEE
DEPARTMENT OF PUBLIC WORKS
DIVISION OF ENGINEERS

STRUCTURE P - 40 - 0848

DESIGNED BY	DRAWN BY	CHECKED BY	DATE
M.P.T.	K.S.	J.T.A.	1/97

DECK
PIER NO. 15 TO
SOUTH ABUTMENT

SHEET 10 OF 27

X

FILE: m:\eng\struc\jackphov\deck.dgn
PLOT DATE: 25-FEB-1997

STATE PROJECT NUMBER	SHEET NO.
2100 - 07 - 72	8.10

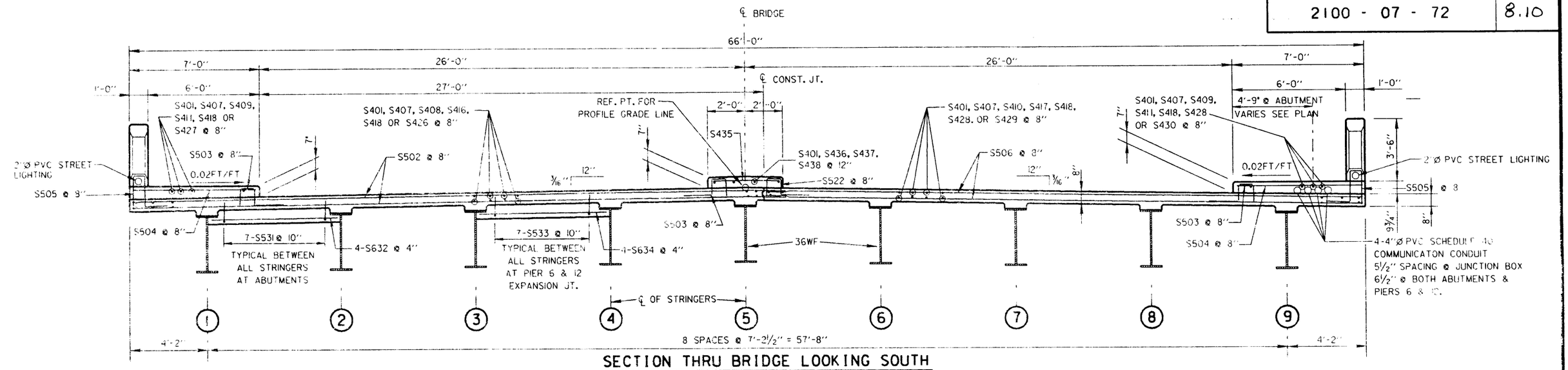

SECTION THRU BRIDGE LOOKING SOUTH

SCALE: ⅜" = 1'-0"

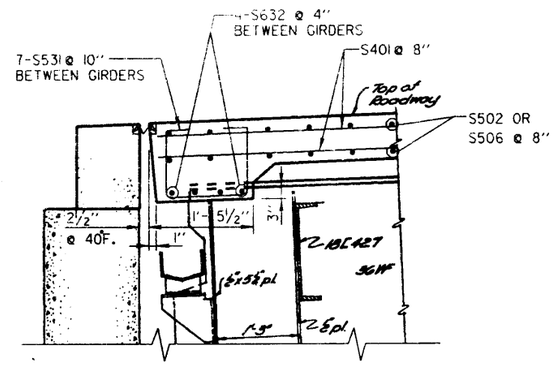

SECTION 1 (3 & 10)

SCALE: 1" = 1'-0"

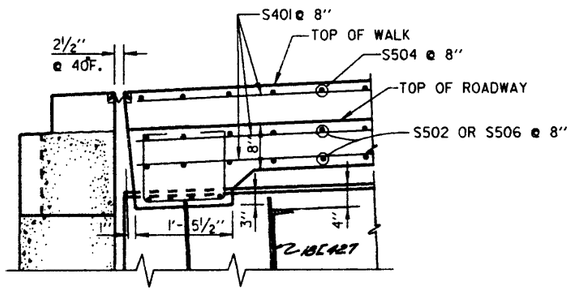

SECTION 2 (3 & 10)

SCALE: 1" = 1'-0"

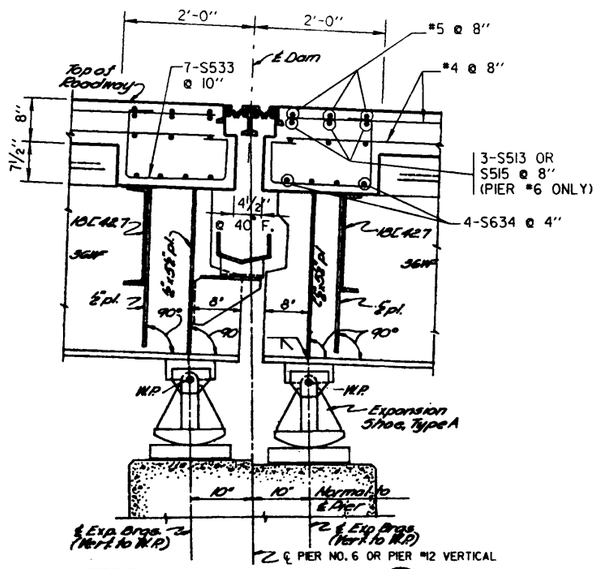

SECTION AT PIER NO. 6 & 12 (3 & 8)

SCALE: 1" = 1'-0"

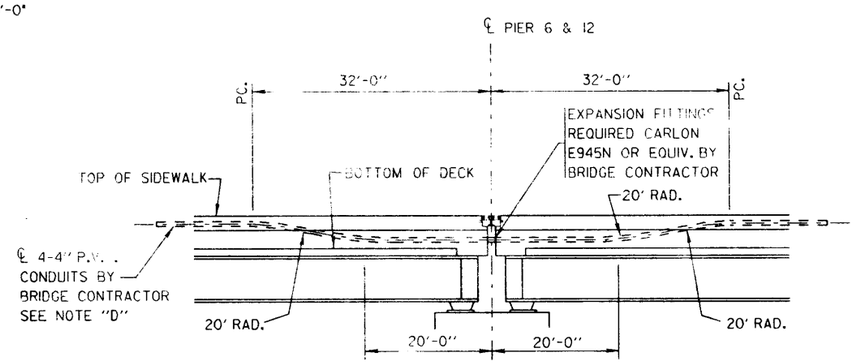

SECTION 5 (5 & 8)

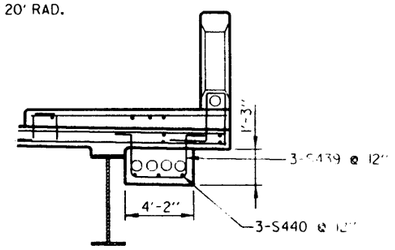

NOTE "D"
AFTER INSTALLING 4-4" PVC DUCTS AND PRIOR TO POURING BRIDGE DECK AND SIDEWALK CONCRETE, THE BRIDGE CONTRACTOR SHALL CONTACT THE UNDERGROUND CONDUIT ENGINEERING OFFICE OF THE CITY AT 286-3241 THREE(3) WORKING DAYS IN ADVANCE TO PROPERLY INSPECT THE 4-4" DUCT INSTALLATION.

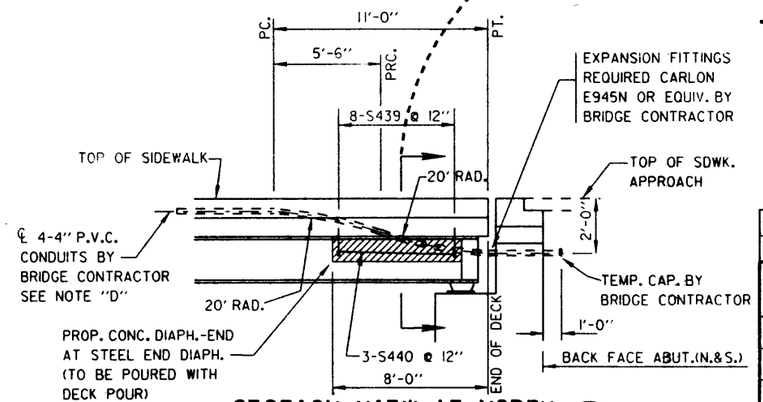

SECTION VIEW AT NORTH AND SOUTH ABUTMENT (4 3 & 10)

NO.	DATE	REVISION	BY

CITY OF MILWAUKEE
DEPARTMENT OF PUBLIC WORKS
INFRASTRUCTURE SERVICES DIVISION

STRUCTURE P - 40 - 0848

DESIGNED BY	MPT	DRAWN BY	JH	CHECKED BY	JTA	DATE	8/96

DECK CROSS SECTION

SHEET 11 OF 27

X

FILE: m:\eng\struc\jackpkov\cross.dgn
PLOT DATE: 1-APR-1997

STATE PROJECT NUMBER	SHEET NO.
2100 - 07 - 72	8.11

BILL OF BARS - DECK STAGE I

BAR MARK	NO. REQ'D.	LENGTH	BENT	CUT DIAG.	BUNDLE	LOCATION
S401	3248	30'-0"				DECK AND WALK - LONGITUDINAL - TOP AND BOTTOM
S502	2878	36'-6"				DECK - TRANSVERSE - TOP AND BOTTOM
S503	2854	4'-0"	X			DECK - CURB DOWEL
S504	435	6'-6"				WALK - TRANSVERSE - TOP
S505	1434	4'-9"	X			WALK - DOWELS FOR PARAPET
S407	112	35'-0"				SLAB & WALK-LONGITUDINAL-TOP & BOTTOM-PIER 6
S408	51	47'-11"		X		SLAB - LONGITUDINAL - TOP & BOTTOM - NEAR PIER 6
S409	5	54'-9"		X		WALK - LONGITUDINAL - TOP - NEAR PIER 6
S411	5	26'-11"		X		WALK - LONGITUDINAL - TOP NEAR PIER 6
S512	12	34'-10"		X		SLAB - TRANSVERSE - TOP & BOTTOM - NEAR PIER 6
S513	6	38'-0"				SLAB - TRANSVERSE - TOP & BOTTOM - NEAR PIER 6
S416	51	33'-1"		X		SLAB - LONGITUDINAL - TOP & BOT. - NEAR PIER 6
S418	112	41'-0"				SLAB & WALK - LONGITUDINAL - TOP & BOTTOM
S519	11	37'-11"		X		SLAB - TRANSVERSE - TOP & BOTTOM - NEAR PIER 6
S621	450	30'-0"				SLAB - LONGITUDINAL TOP
S623	50	22'-8"				SLAB LONGITUDINAL - TOP - ABOVE PIER 13
S624	50	26'-0"				SLAB LONGITUDINAL - TOP - ABOVE PIER 14
S625	50	24'-0"				SLAB LONGITUDINAL - TOP - ABOVE PIER 15
S426	51	50'-11"		X		SLAB LONGITUDINAL-TOP & BOT.-NEAR S.ABUTMENT
S427	5	46'-10"		X		WALK LONGITUDINAL-TOP - NEAR SOUTH ABUTMENT
S531	56	3'-3"	X			DECK AT ABUTMENT BETWEEN GIRDERS LONGITUDINAL
S632	32	6'-10"				DECK AT ABUTMENT BETWEEN GIRDERS TRANSVERSE
S533	112	4'-5"	X			DECK AT PIER 6 &12 BETWN.GIRDERS LONGITUDINAL
S634	64	6'-10"				DECK AT PIER 6 &12 BETWN.GIRDERS TRANSVERSE

BILL OF BARS - DECK STAGE II

BAR MARK	NO. REQ'D.	LENGTH	BENT	CUT DIAG.	BUNDLE	LOCATION
S401	2968	30'-0"				DECK AND WALK - LONGITUDINAL - TOP AND BOTTOM
S503	1450	4'-0"	X			DECK - CURB DOWEL
S504	1450	6'-6"				WALK - TRANSVERSE - TOP
S505	1453	4'-9"	X			WALK - DOWELS FOR PARAPET
S506	2878	31'-10"				DECK - TRANSVERSE - TOP AND BOTTOM
S407	106	35'-0"				DECK AND WALK - LONGITUDINAL - TOP AND BOTTOM
S409	5	54'-9"		X		WALK - LONGITUDINAL - TOP - NEAR PIER 6
S410	48	32'-3"		X		SLAB - LONGITUDINAL - TOP AND BOT. - NEAR PIER 6
S411	5	26'-11"		X		WALK - LONGITUDINAL - TOP - NEAR PIER 6
S514	10	35'-9"		X		SLAB - TRANSVERSE - TOP AND BOT. - NEAR PIER 6
S515	6	32'-0"				SLAB - TRANSVERSE - TOP AND BOT. - NEAR PIER 6
S417	48	48'-4"		X		SLAB - LONGITUDINAL - TOP AND BOT. - NEAR PIER 6
S418	106	41'-0"				SLAB & WALK - LONGITUDINAL - TOP & BOTTOM PIER 6
S520	12	34'-3"		X		SLAB - TRANSVERSE - TOP AND BOT. - NEAR PIER 6
S621	423	30'-0"				SLAB - LONGITUDINAL - TOP
S522	1419	2'-8"	X			DECK - CURB DOWEL AT MEDIAN
S623	47	22'-8"				SLAB - LONGITUDINAL - ABOVE PIER 13
S624	47	26'-0"				SLAB - LONGITUDINAL - TOP - ABOVE PIER 14
S625	47	24'-0"				SLAB - LONGITUDINAL - TOP - ABOVE PIER 15
S428	106	35'-0"				SLAB & WALL-LONGITUDINAL-TOP &BOTTOM NEAR PIER 15
S429	48	51'-8"		X		SLAB-LONGITUDINAL-TOP AND BOT.-NEAR S.ABUTMENT
S430	5	57'-8"		X		WALK - LONGITUDINAL - TOP - NEAR S.ABUTMENT
S531	56	3'-3"	X			DECK AT ABUTMENT BETWEEN GIRDERS LONGITUDINAL
S632	32	6'-10"				DECK AT ABUTMENT BETWEEN GIRDERS TRANSVERSE
S533	112	4'-5"	X			DECK AT PIER 6 &12 BETWN.GIRDERS LONGITUDINAL
S634	64	6'-10"				DECK AT PIER 6 &12 BETWN.GIRDERS TRANSVERSE
S439	16	5'-6"	X			STIRRUPS AT 4" DIA.CONDUIT ENCASEMENT AT ABUTMENTS
S440	6	7'-0"				BOTTOM OF DECK AT ABUTMENT 4" DIA.CONDUIT ENCASEMENT

BILL OF BARS - MEDIAN - STAGE III

BAR MARK	NO. REQ'D.	LENGTH	BENT	CUT DIAG.	BUNDLE	LOCATION
S401	124	30'-0"				MEDIAN - LONGITUDINAL - TOP
S435	1419	3'-6"				MEDIAN - TRANSVERSE - TOP
S436	4	19'-0"				MEDIAN - LONGITUDINAL - TOP - NEAR PIER 6
S437	4	23'-8"				MEDIAN - LONGITUDINAL - TOP - NEAR PIER 12
S438	4	21'-8"				MEDIAN - LONGITUDINAL - TOP - NEAR S. ABUTMENT

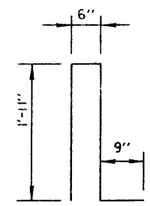

S505

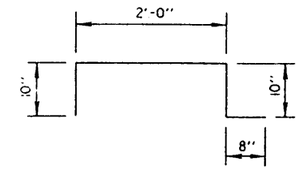

S503

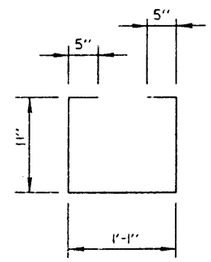

S531

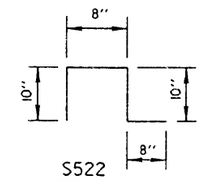

S522

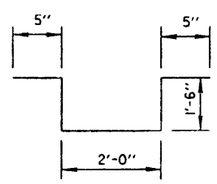

S439

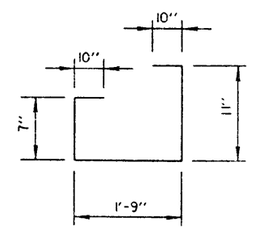

S533

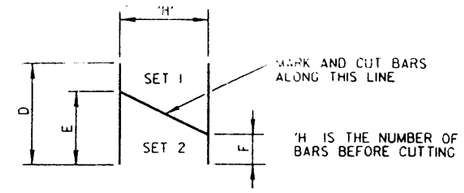

CUTTING DIAGRAM

MARK	D	E	F	'H'	NO. OF SETS REQ'D.
S408	47'-11"	27'-9"	20'-2"	51	1
S409	54'-9"	27'-9"	27'-0"	5	2
S410	32'-8"	19'-11"	12'-9"	48	1
S411	26'-11"	14'-2"	13'-7"	5	2
S512	34'-10"	33'-6"	1'-4"	12	1
S514	35'-9"	31'-0"	4'-9"	10	1
S416	33'-1"	20'-4"	12'-9"	51	1
S417	48'-4"	27'-9"	20'-7"	48	1
S519	37'-11"	33'-7"	4'-4"	11	1
S520	34'-3"	31'-9"	2'-6"	12	1
S426	50'-11"	27'-8"	23'-3"	51	1
S427	46'-10"	23'-7"	23'-5"	5	1
S429	51'-8"	29'-0"	22'-8"	48	1
S430	57'-8"	29'-0"	28'-10"	5	1

DECK QUANTITIES	
CONCRETE MASONRY	2120 C.Y.
COATED HIGH STRENGTH BAR STEEL	470120 LBS.
2" DIA. PVC CONDUIT	1968 L.F.
4" DIA. PVC CONDUIT	3876 L.F.

NO.	DATE	REVISION	BY

CITY OF MILWAUKEE
DEPARTMENT OF PUBLIC WORKS
DIVISION OF ENGINEERS

STRUCTURE P - 40 - 0848

DESIGNED BY	DRAWN BY	CHECKED BY	DATE
M.P.T.	K.S.	J.T.A.	10/96

CONCRETE DECK REPLACEMENT BILL OF BARS

SHEET 12 OF 27

X

FILE: w:\eng\struc\jackpkov\deckbar.dgn
PLOT DATE: 25-FEB-1997

STATE PROJECT NUMBER	SHEET NO.
2100 - 07 - 72	8.12

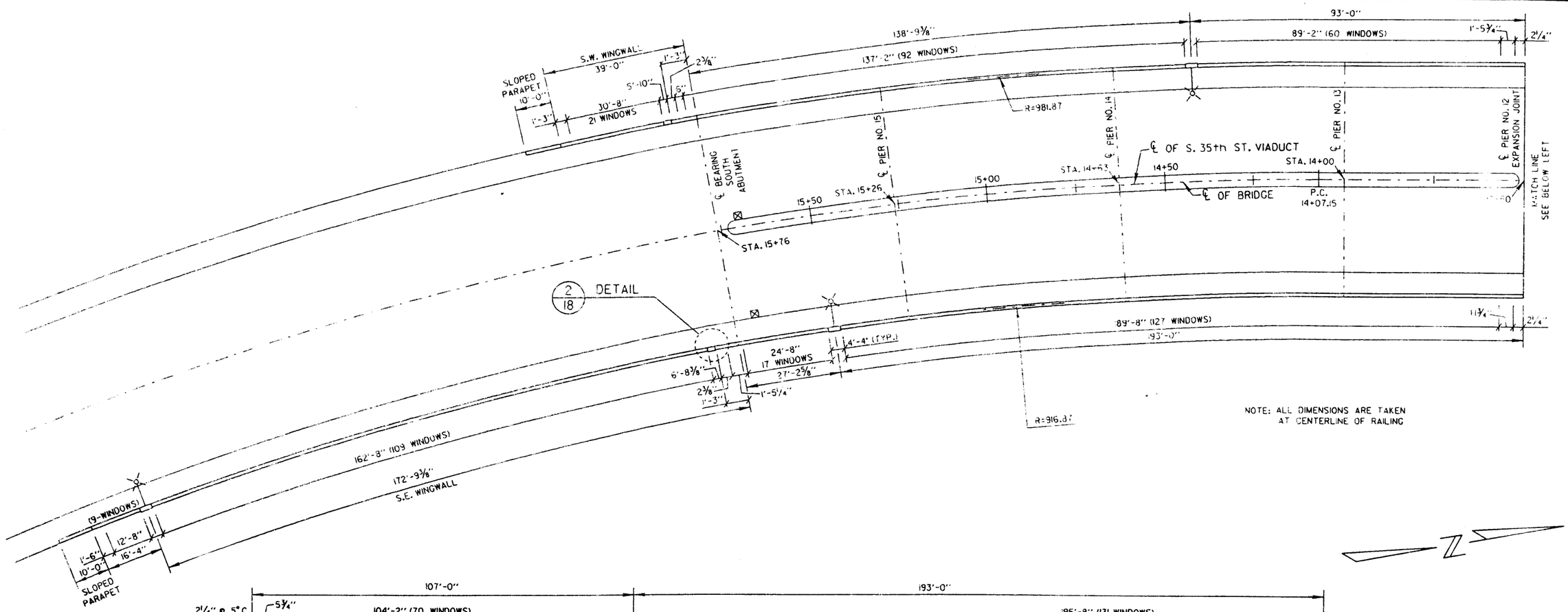

COMBINATION RAIL PLAN - PILASTER SPACING

NO.	DATE	REVISION	BY

CITY OF MILWAUKEE
DEPARTMENT OF PUBLIC WORKS
INFRASTRUCTURE SERVICES DIVISION

STRUCTURE P - 40 - 0848

DESIGNED BY	DRAWN BY	CHECKED BY	DATE
J.T.A.	K.S.	M.P.T.	11/96

RAILING PLAN

SHEET 13 OF 27

X

FILE: w:\eng\struc\jackpkov\rail.dgn
PLOT DATE: 25-FEB-1997

STATE PROJECT NUMBER	SHEET NO.
2100 - 07 - 72	8.13

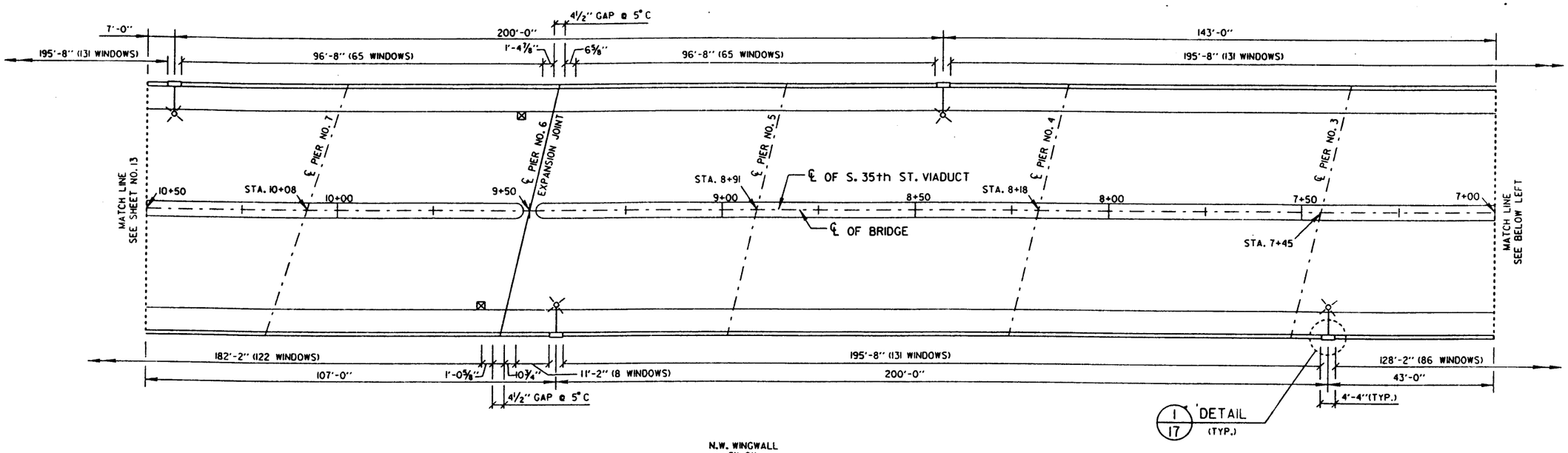

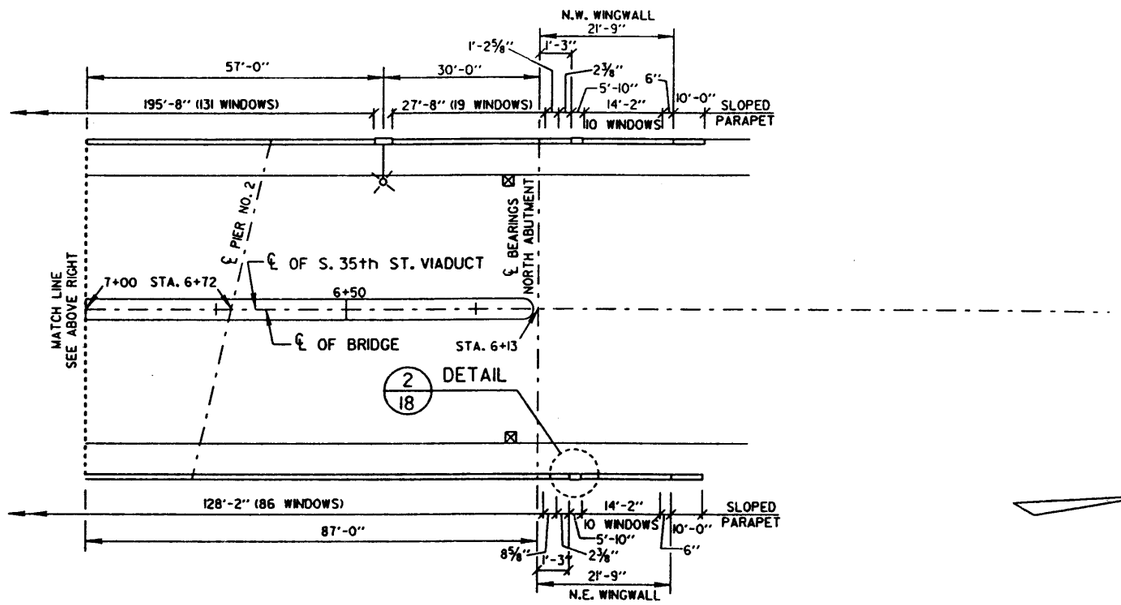

COMBINATION RAIL PLAN - PILASTER SPACING

NO.	DATE	REVISION	BY

CITY OF MILWAUKEE
DEPARTMENT OF PUBLIC WORKS
INFRASTRUCTURE SERVICES DIVISION

STRUCTURE P - 40 - 0848

DESIGNED BY	DRAWN BY	CHECKED BY	DATE
J.T.A.	K.S.	M.P.T.	11/96

RAILING PLAN

SHEET 14 OF 27

X

FILE: m:\eng\struc\jackpkov\rail.dgn
PLOT DATE: 25-FEB-1997

STATE PROJECT NUMBER	SHEET NO.
2100 - 07 - 72	8.14

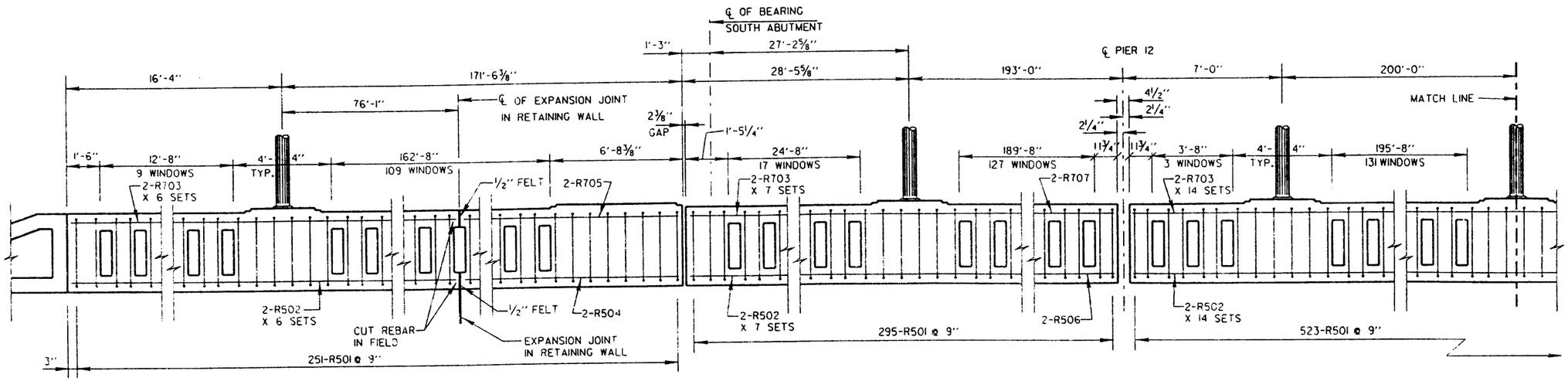

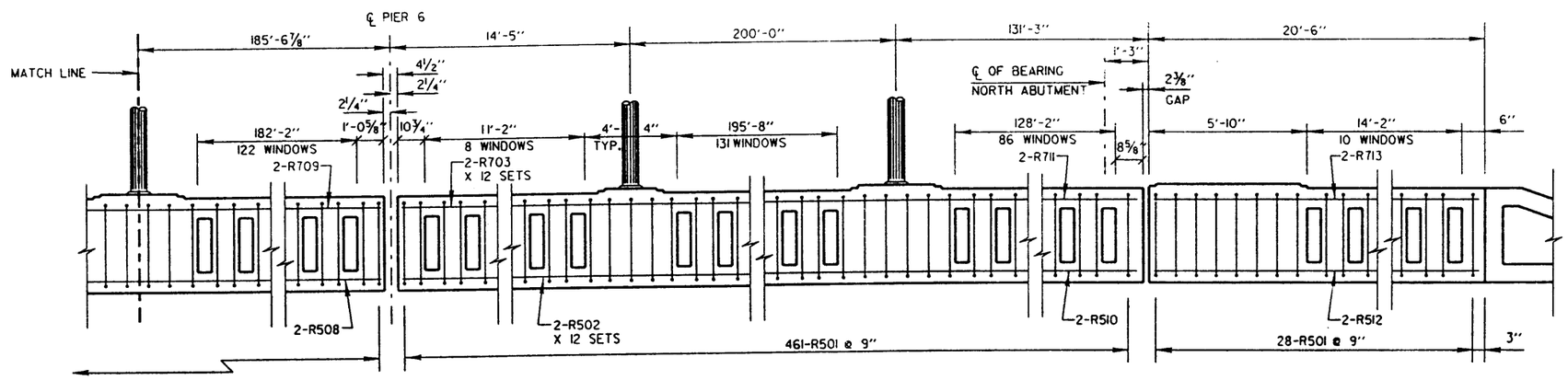

BAR LAP	
#5 BAR LAP	2'-8"
#7 BAR LAP	4'-3"

EAST ELEVATION - EAST SIDE RAILING (LOOKING WEST)

NO.	DATE	REVISION	BY

CITY OF MILWAUKEE
DEPARTMENT OF PUBLIC WORKS
INFRASTRUCTURE SERVICES DIVISION

STRUCTURE P - 40 - 0848

DESIGNED BY	J.T.A.	DRAWN BY	K.S.	CHECKED BY	M.P.T.	DATE	11/96

EAST RAILING ELEVATION

SHEET 15 OF 27

X

FILE: w:\eng\struc\jackpkov\rail3.dgn
PLOT DATE: 25-FEB-1997

STATE PROJECT NUMBER	SHEET NO.
2100 - 07 - 72	8.15

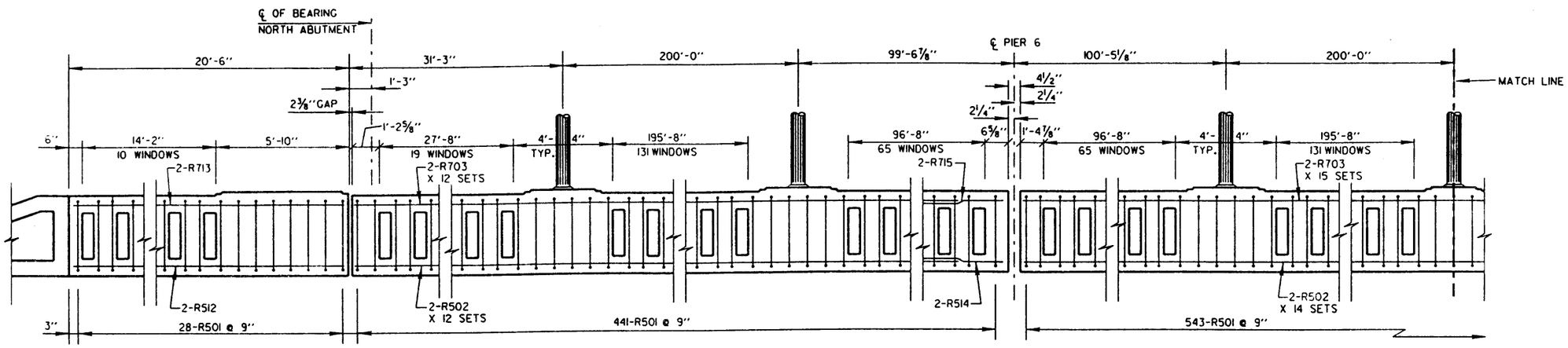

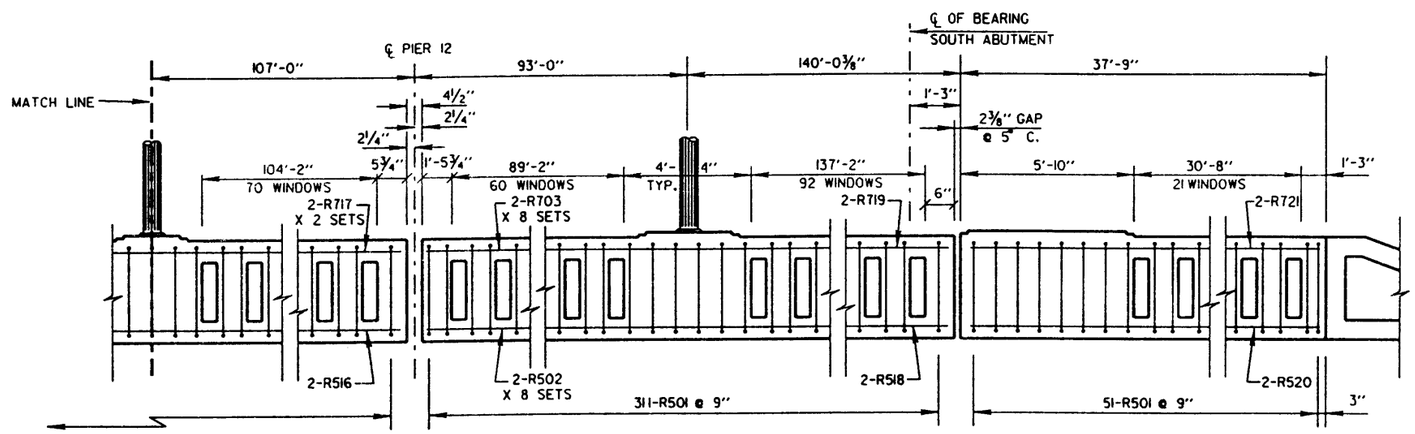

WEST ELEVATION - WEST SIDE RAILING (LOOKING EAST)

NO.	DATE	REVISION	BY

CITY OF MILWAUKEE
DEPARTMENT OF PUBLIC WORKS
INFRASTRUCTURE SERVICES DIVISION

STRUCTURE P - 40 - 0848

DESIGNED BY	DRAWN BY	CHECKED BY	DATE
J.T.A.	K.S.	M.P.T.	11/96

WEST RAILING ELEVATION

SHEET 16 OF 27

X

FILE: w:\eng\structs\jackpkov\rail3.dgn
PLOT DATE: 25-FEB-1997

STATE PROJECT NUMBER	SHEET NO.
2100 - 07 - 72	8.16

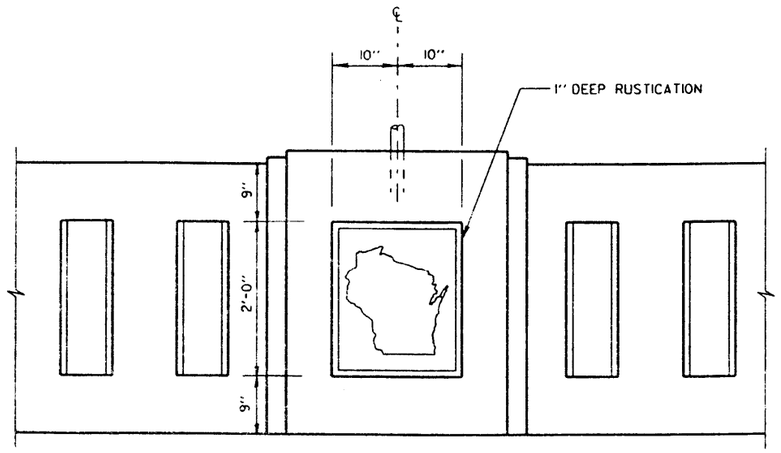

RUSTICATION AT LIGHT POLE SUPPORT

SECTION 2/17

SCALE : 1"=1'-0"

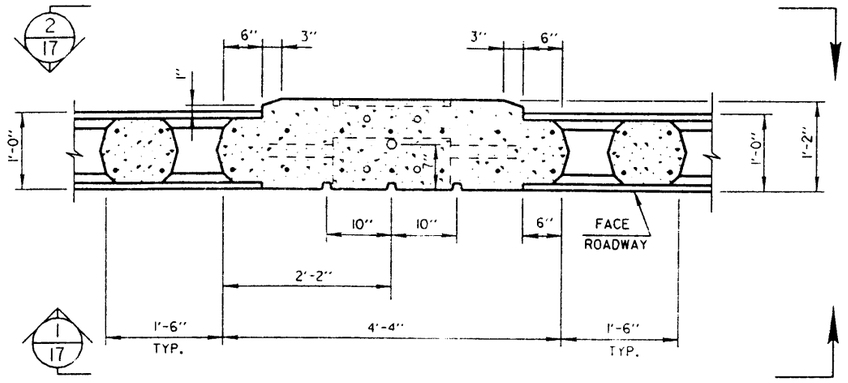

PILASTER DETAIL 1/13/14

SCALE : 1"=1'-0"

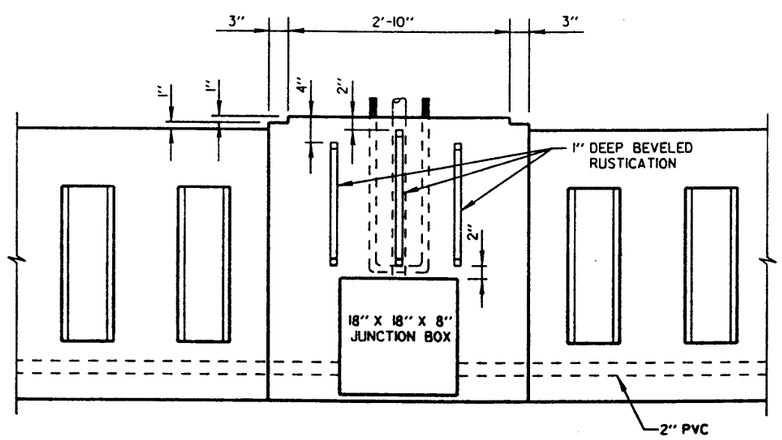

RUSTICATION AT LIGHT POLE SUPPORT

SECTION 1/17

SCALE : 1"=1'-0"

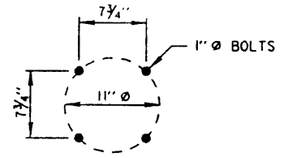

DETAIL OF BOLT CIRCLE

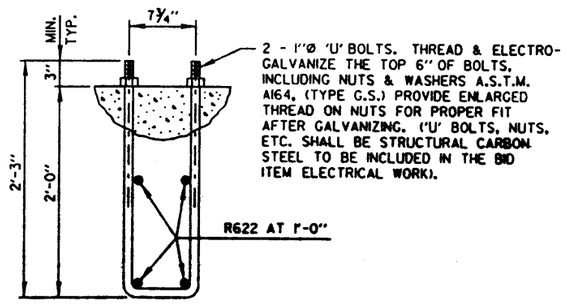

ANCHOR BOLT DETAIL

NO.	DATE	REVISION	BY

CITY OF MILWAUKEE
DEPARTMENT OF PUBLIC WORKS
INFRASTRUCTURE SERVICES DIVISION

STRUCTURE P - 40 - 0848

DESIGNED BY	DRAWN BY	CHECKED BY	DATE
J.T.A.	K.S.	M.P.T.	11/96

RAILING DETAILS

SHEET 17 OF 27

X

FILE: w:\eng\structure\jackplow\rail2.dgn
PLOT DATE: 25-FEB-1997

STATE PROJECT NUMBER	SHEET NO.
2100 - 07 - 72	8.17

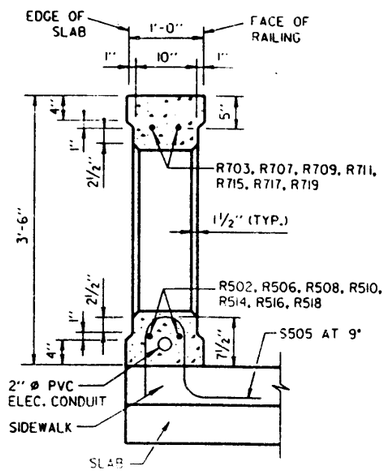

SECTION THRU WINDOW ON BRIDGE SLAB

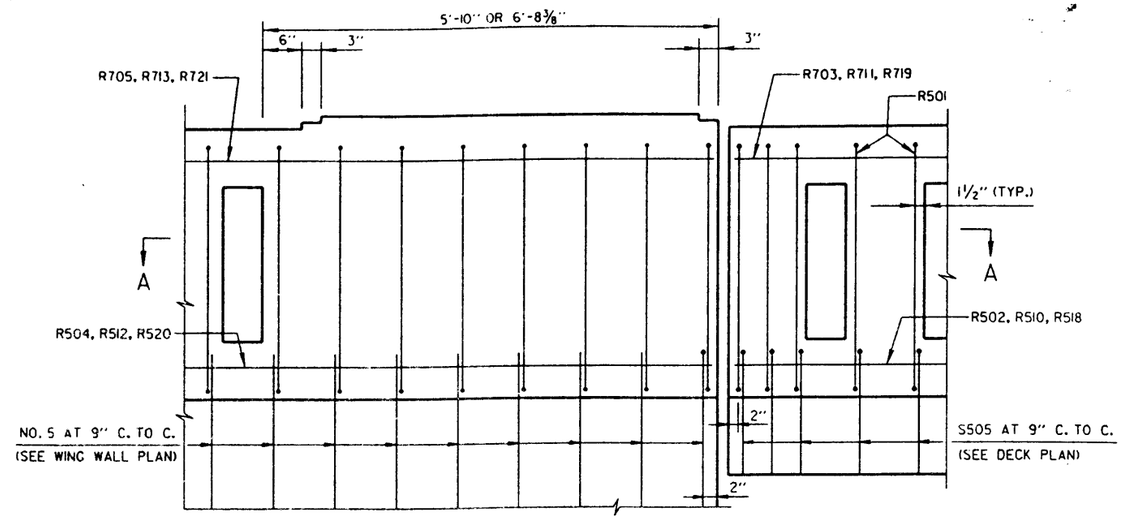

TYPICAL REINFORCING PLACEMENT

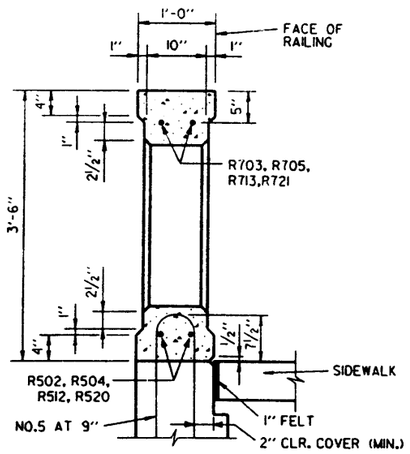

SECTION THRU WINDOW AT WING WALL

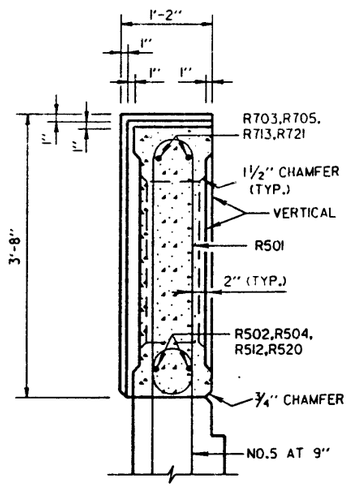

SECTION THRU PILASTER ON RETAINING WALL

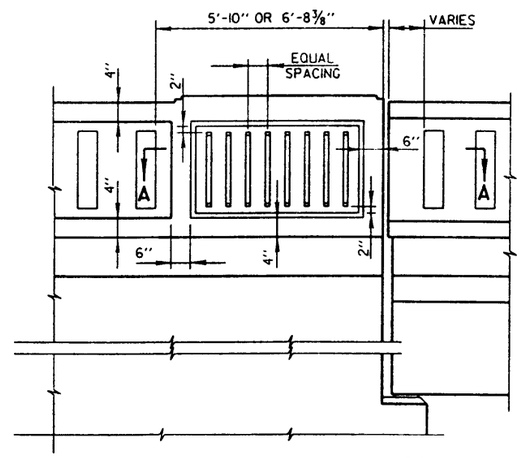

DETAIL 2/13/14

PARTIAL ELEVATION OF RAILING - FRONT FACE

SCALE : 1"=1'-0"

BILL OF BARS - RAILING

BAR MARK	NO. REQ'D.	LENGTH	BENT	CUT DIAG.	BUNDLE	LOCATION
R501	2932	8'-3"	X			VERTICAL STIRRUPS
R502	146	30'-0"				HORIZONTAL BOTTOM
R703	148	30'-0"				HORIZONTAL TOP
R504	2	23'-6"				HORIZONTAL BOT. E. RAILING S.E. RET. WALL
R705	2	33'-0"				HORIZONTAL TOP E.RAILING S.E.RETAINING WALL
R506	2	29'-4"				HORIZONTAL BOTTOM E. RAILING NEAR PIER 12
R707	2	40'-6"				HORIZONTAL TOP EAST RAILING NEAR PIER 12
R508	2	10'-0"				HORIZONTAL BOTTOM E. RAILING NEAR PIER 6
R709	2	31'-0"				HORIZONTAL TOP EAST RAILING NEAR PIER 6
R510	2	16'-6"				HORIZONTAL BOTTOM E. RAILING NEAR N. ABUT.
R711	2	36'-0"				HORIZONTAL TOP E. RAILING NEAR N. ABUTMENT
R512	4	20'-0"				HORIZONTAL BOT. RAILING N.E.&N.W.RET. WALL
R713	4	20'-0"				HORIZONTAL TOP RAILING N.E.&N.W.RET. WALL
R514	2	3'-0"				HORIZONTAL BOTTOM W. RAILING NEAR PIER 6
R715	2	21'-6"				HORIZONTAL TOP W. RAILING NEAR PIER 6
R516	2	24'-9"				HORIZONTAL BOTTOM W. RAILING NEAR PIER 12
R717	4	20'-9"				HORIZONTAL TOP W. RAILING NEAR PIER 12
R518	2	14'-4"				HORIZONTAL BOTTOM W. RAILING NEAR S. ABUT.
R719	2	27'-0"				HORIZONTAL TOP W. RAILING NEAR S. ABUT.
R520	2	37'-3"				HORIZONTAL BOT. W. RAILING AT S.W. RET.WALL
R721	2	37'-3"				HORIZONTAL TOP W. RAILING AT S.W. RET.WALL
R622	44	3'-4"				HORIZONTAL - LIGHT POLE PILASTER

RAILING QUANTITIES	
COATED REBARS	40766 LBS.
CONCRETE MASONRY	190 C.Y.

FOR INFORMATIONAL PURPOSE ONLY
BID RAILING PER LINEAR FOOT.

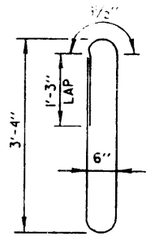

R501

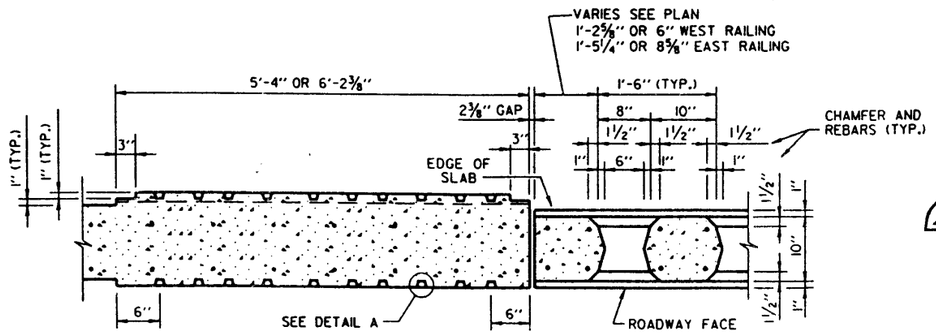

SECTION A-A

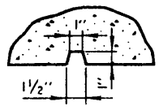

DETAIL A

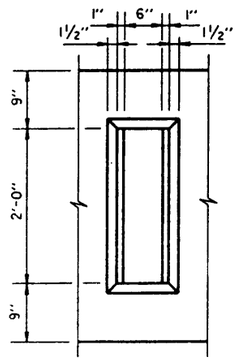

WINDOW OPENINGS

GENERAL NOTES:

ALL CONCRETE FOR RAILING WALL SHALL BE CLASS 'C'.

DIMENSIONS RELATING TO REINFORCING STEEL ARE TO CENTER OF BARS.

SHOP DRAWINGS WILL NOT BE REQUIRED FOR THIS RAIL.

SEE BRIDGE LAYOUT OR OTHER PLAN SHEET FOR THE NUMBER OF OPENINGS AND DIMENSIONS.

ALL REINFORCING STEEL SHALL BE EPOXY COATED.

NO.	DATE	REVISION	BY

CITY OF MILWAUKEE
DEPARTMENT OF PUBLIC WORKS
INFRASTRUCTURE SERVICES DIVISION

STRUCTURE P - 40 - 0848

DESIGNED BY J.T.A.	DRAWN BY K.S.	CHECKED BY M.P.T.	DATE 11/96

RAILING DETAILS

SHEET 18 OF 27

X

FILE: w:\eng\struc\lockpkov\rail2.dgn
PLOT DATE: 25-FEB-1997

STATE PROJECT NUMBER	SHEET NO.
2100 - 07 - 72	8.18

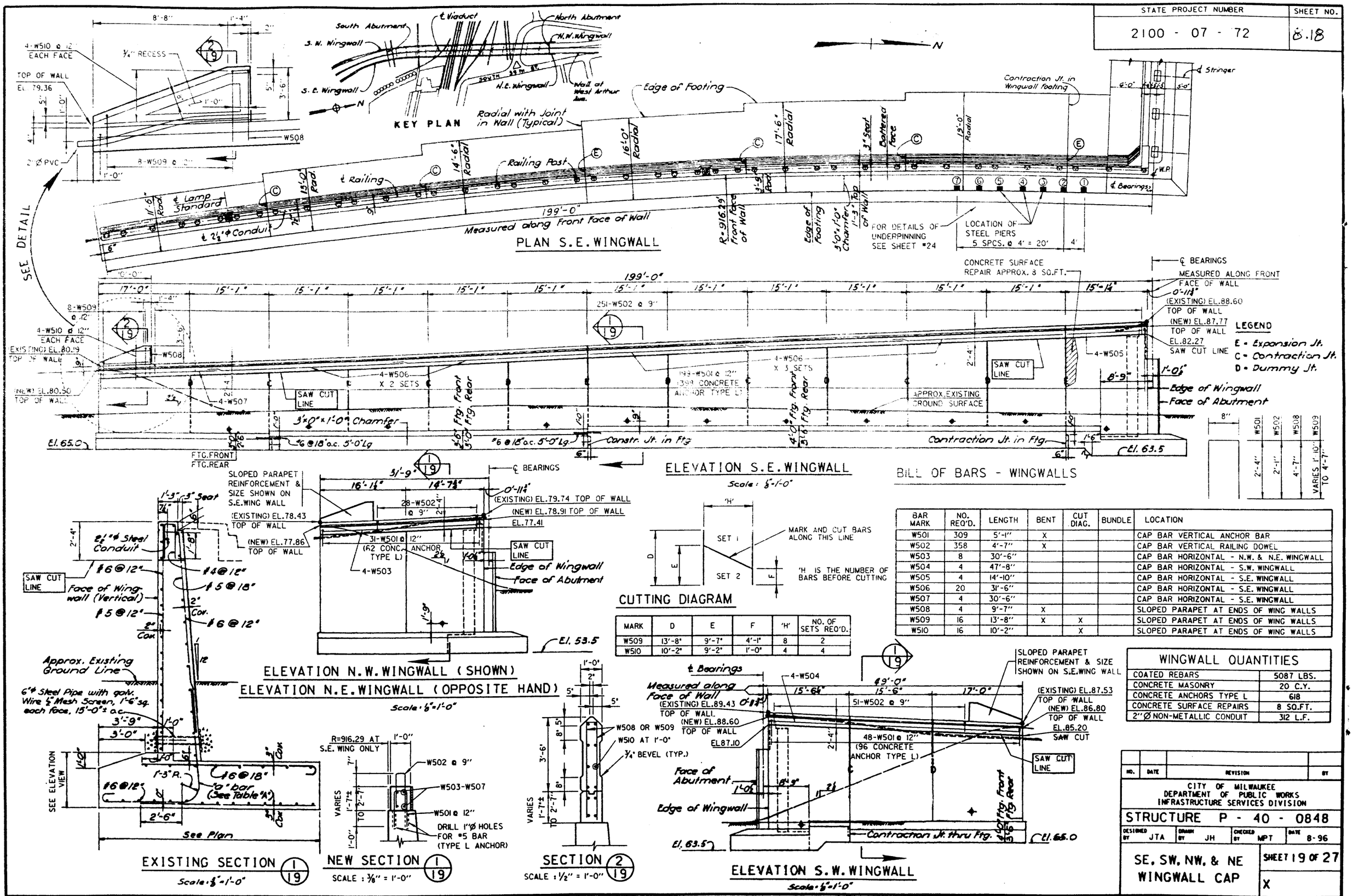

MARK	D	E	F	'H'	NO. OF SETS REQ'D.
W509	13'-8"	9'-7"	4'-1"	8	2
W510	10'-2"	9'-2"	1'-0"	4	4

BAR MARK	NO. REQ'D.	LENGTH	BENT	CUT DIAG.	BUNDLE	LOCATION
W501	309	5'-1"	X			CAP BAR VERTICAL ANCHOR BAR
W502	358	4'-7"	X			CAP BAR VERTICAL RAILING DOWEL
W503	8	30'-6"				CAP BAR HORIZONTAL - N.W. & N.E. WINGWALL
W504	4	47'-8"				CAP BAR HORIZONTAL - S.W. WINGWALL
W505	4	14'-10"				CAP BAR HORIZONTAL - S.E. WINGWALL
W506	20	31'-6"				CAP BAR HORIZONTAL - S.E. WINGWALL
W507	4	30'-6"				CAP BAR HORIZONTAL - S.E. WINGWALL
W508	4	9'-7"	X			SLOPED PARAPET AT ENDS OF WING WALLS
W509	16	13'-8"	X	X		SLOPED PARAPET AT ENDS OF WING WALLS
W510	16	10'-2"		X		SLOPED PARAPET AT ENDS OF WING WALLS

WINGWALL QUANTITIES	
COATED REBARS	5087 LBS.
CONCRETE MASONRY	20 C.Y.
CONCRETE ANCHORS TYPE L	618
CONCRETE SURFACE REPAIRS	8 SQ.FT.
2"Ø NON-METALLIC CONDUIT	312 L.F.

NO.	DATE	REVISION	BY

CITY OF MILWAUKEE
DEPARTMENT OF PUBLIC WORKS
INFRASTRUCTURE SERVICES DIVISION

STRUCTURE P - 40 - 0848

DESIGNED BY	DRAWN BY	CHECKED BY	DATE
JTA	JH	MPT	8-96

SE, SW, NW, & NE WINGWALL CAP

SHEET 19 OF 27

X

FILE: w:\eng\struc\jackpkov\6.dgn
PLOT DATE: 25-FEB-1997

STATE PROJECT NUMBER	SHEET NO.
2100 - 07 - 72	8.19

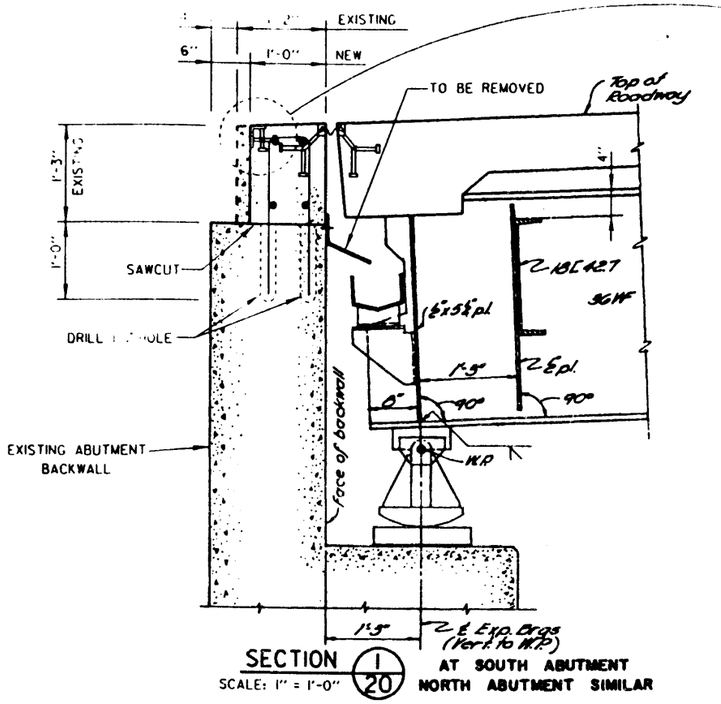

SECTION 1/20
SCALE: 1" = 1'-0"
AT SOUTH ABUTMENT
NORTH ABUTMENT SIMILAR

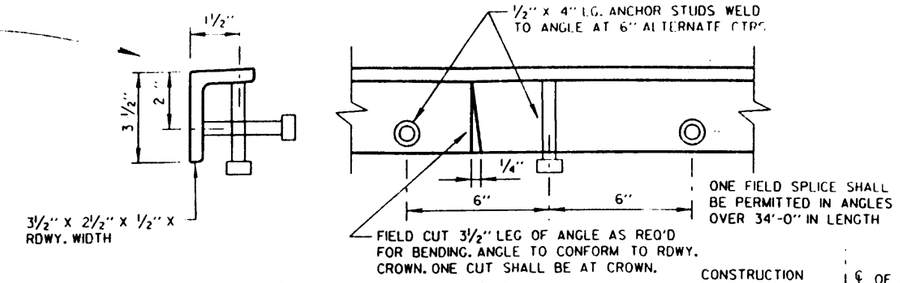

PROTECTION ANGLE ARMOR

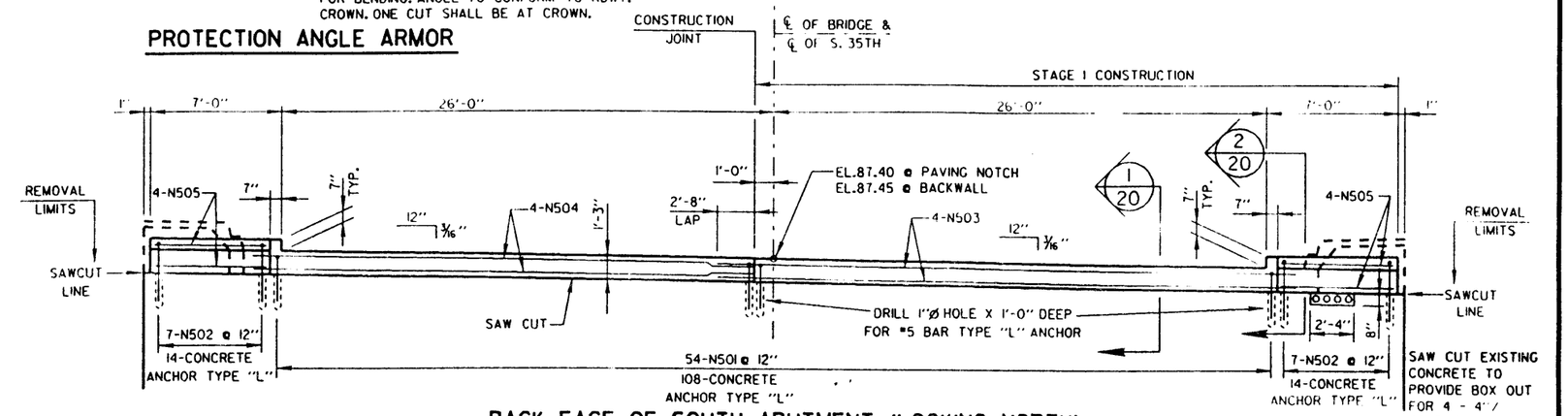

BACK FACE OF SOUTH ABUTMENT (LOOKING NORTH)

SCALE: 1/4" = 1'-0"

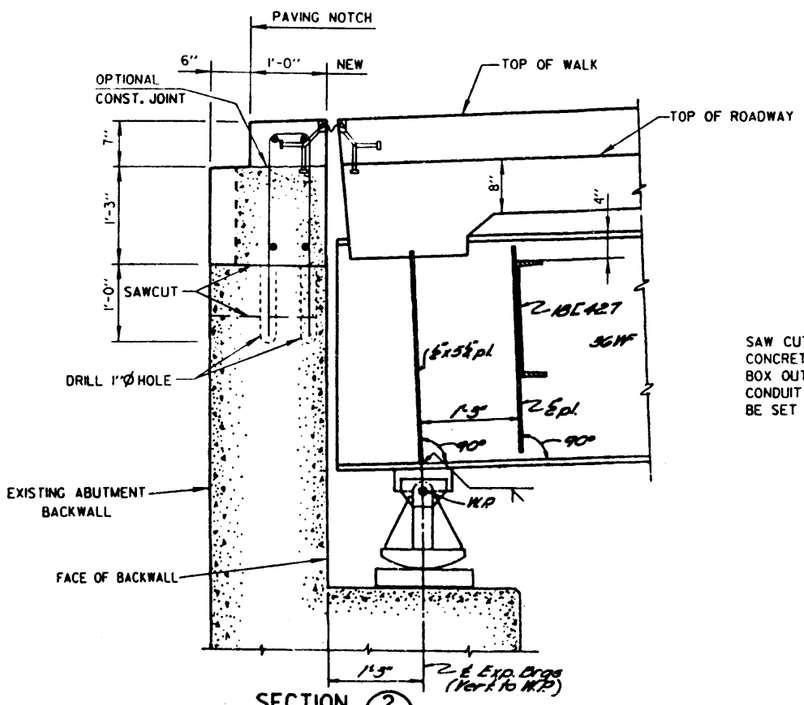

SECTION 2/20
SCALE: 1" = 1'-0"
AT SOUTH ABUTMENT
NORTH ABUTMENT SIMILAR

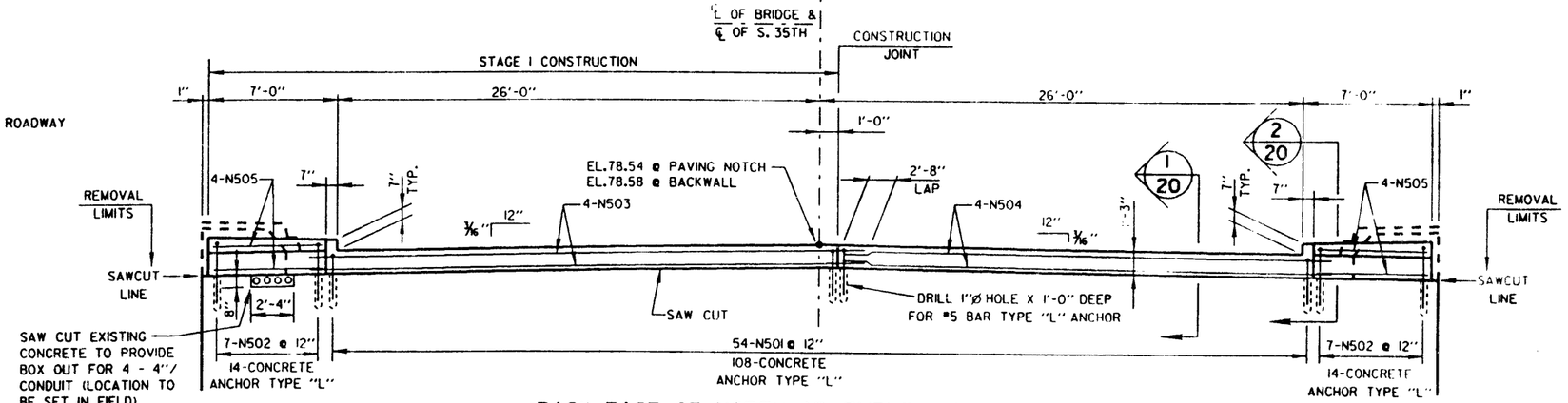

BACK FACE OF NORTH ABUTMENT (LOOKING SOUTH)

SCALE: 1/4" = 1'-0"

RAILING QUANTITIES	
COATED REBARS	1285 LBS.
CONCRETE MASONRY	8 C.Y.
CONCRETE ANCHORS TYPE L	272
STRUCTURAL CARBON STEEL	1624 LBS.

BILL OF BARS - TOP OF ABUTMENT BACKWALL

BAR MARK	NO. REQ'D.	LENGTH	BENT	CUT DIAG.	BUNDLE	LOCATION
N501	108	4'-7"	X			VERTICAL BAR ANCHOR BAR - ROADWAY
N502	28	5'-9"	X			VERTICAL BAR ANCHOR BAR - SIDEWALK
N503	8	32'-4"				HORIZONTAL BAR TOP ABUTMENT - ROADWAY
N504	8	27'-8"				HORIZONTAL BAR TOP ABUTMENT - ROADWAY
N505	16	6'-0"				HORIZONTAL BAR TOP ABUTMENT - SIDEWALK

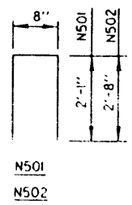

NO.	DATE	REVISION	BY

CITY OF MILWAUKEE
DEPARTMENT OF PUBLIC WORKS
INFRASTRUCTURE SERVICES DIVISION

STRUCTURE P - 40 - 0848

DESIGNED BY	DRAWN BY	CHECKED BY	DATE
J.T.A.	J.H.	J.T.A.	11/96

NORTH & SOUTH ABUTMENT REMODELING

SHEET 20 OF 27

X

FILE: w:\eng\struc\jackpkov\abut_ns.dgn
PLOT DATE: 25-FEB-1997

STATE PROJECT NUMBER	SHEET NO.
2100 - 07 - 72	8.20

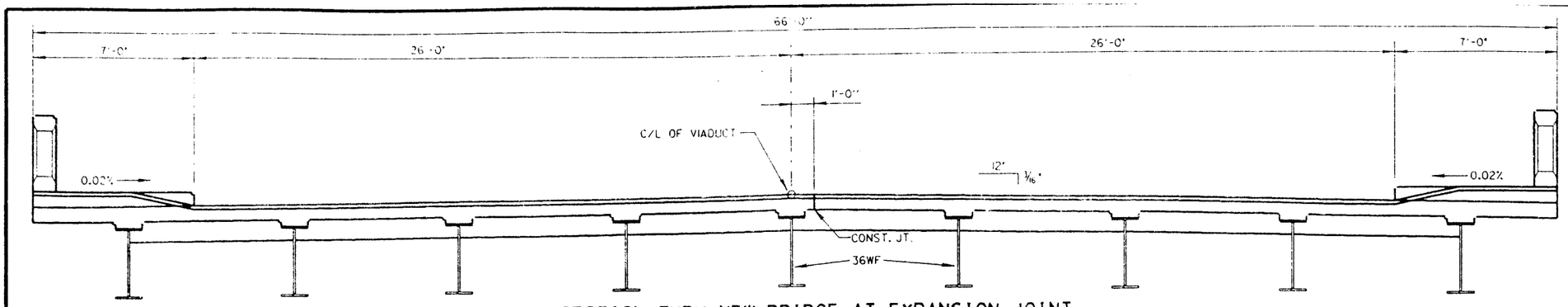

SECTION THRU NEW BRIDGE AT EXPANSION JOINT
(LOOKING SOUTH NEAR NORTH ABUTMENT)

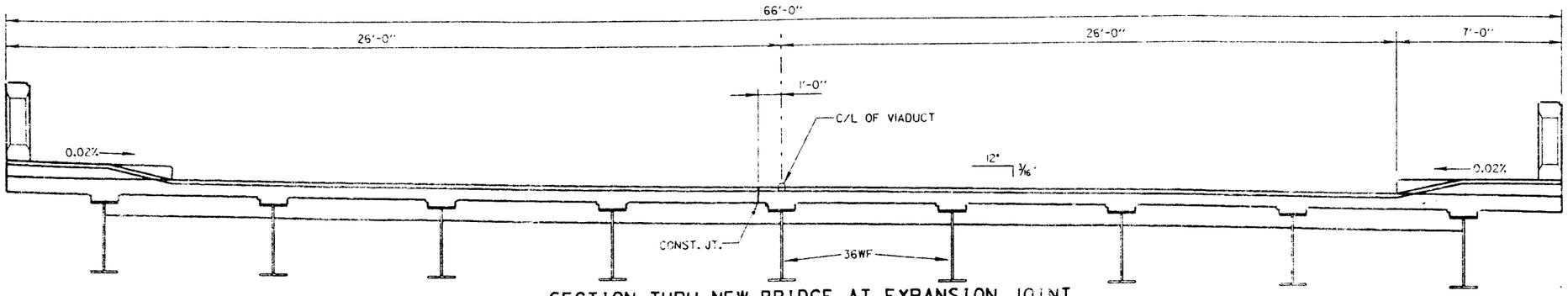

SECTION THRU NEW BRIDGE AT EXPANSION JOINT
(LOOKING NORTH NEAR SOUTH ABUTMENT)

LEGEND:

1. NEOPRENE STRIP SEAL AND STEEL EXTRUSIONS:
   A. BRN-SSA2-400A2, D.S. BROWN
   B. LENCO-W-400L, LEWIS ENGINEERING
   C. STR-SA2-400S, STRUCTURAL ACCESSORIES
   D. WABO-A3-400SE, WATSON-BOWMAN-ACME
   OR APPROVED EQUAL. EXTRUSIONS: ASTM A36.
2. STUDS 5/8 INCH ROUND BY 6-3/8 INCHES LONG AT 6 INCH ALTERNATE CENTERS. WELD TO EXTRUSIONS AND BEND AS SHOWN AFTER WELDING.
3. 3/4 INCH ROUND THREADED ROD WITH 2 NUTS AND WASHERS. WELD THREADED ROD TOP FLANGE OR ATTACH BY BOLTING THROUGH FLANGE.
4. 3/4 INCH ROUND THREADED ROD WITH NUT. TACK WELD NUT TO NO. 5.
5. FABRICATE SUPPORT FROM 3 INCHES BY 1/2 INCH BAR AS SHOWN OR EQUIVALENT. ONE PER GIRDER PER SIDE. WELD TO NO. 1. PROVIDE 1-1/2 INCHES HOLE FOR NO. 3 & 1 INCH HOLE FOR NO. 4.
6. PLATE 3/8 INCH BY 1'-6" HOLES FOR NO. 7 AND NO. 11. BEND AS SHOWN.
7. 3/4 INCH BY 1-1/2 INCHES STAINLESS STEEL FLAT HEAD MACHINE SCREWS. RECESS 1/16 INCH BELOW PLATE SURFACE.
8. 3/4 INCH BY 4 INCHES GALV. HEX HEAD BOLT. BENT 45 DEGREES.
9. 3/4 INCH BY 2-1/4 INCHES GALV. THREADED COUPLING.
10. 3/4 INCH BY 2-1/4 INCHES STAINLESS STEEL FLAT HEAD MACHINE SCREWS. RECESS 1/16 INCH BELOW PLATE SURFACE.
11. 1 INCH BY 5 INCHES SLOTTED CSK. HOLE FOR NO. 7. SLOT PARALLEL TO DIRECTION OF MOVEMENT.

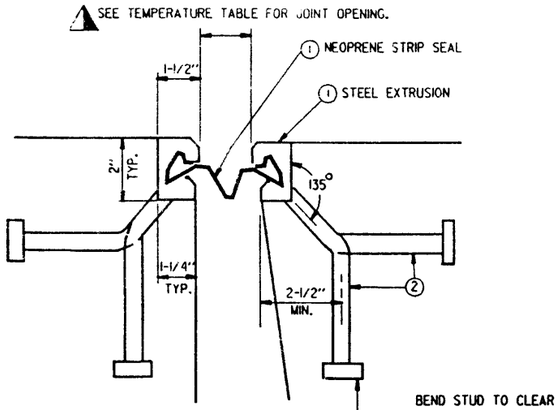

STRIP SEAL SECTION

TEMPERATURE TABLE

TEMP.	S.ABUT.	N.ABUT.
90	2	2
80	2-1/8	2
70	2-1/4	2-1/8
60	2-3/8	2-1/4
50	2-3/8	2-3/8
40	2-1/2	2-1/2
30	2-5/8	2-5/8

DIM. MEASURED NORMAL TO JOINT OPENING (INCHES)

SHADED UNDERSIDE DECK TEMPERATURE (°F)

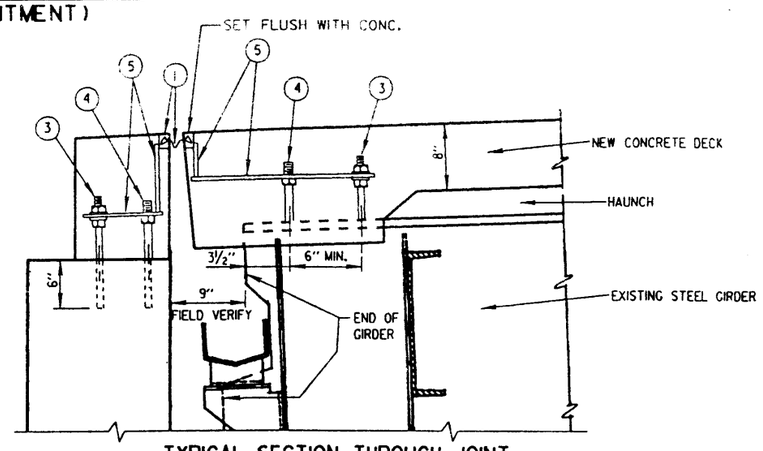

TYPICAL SECTION THROUGH JOINT
NORMAL TO SUBSTRUCTURE

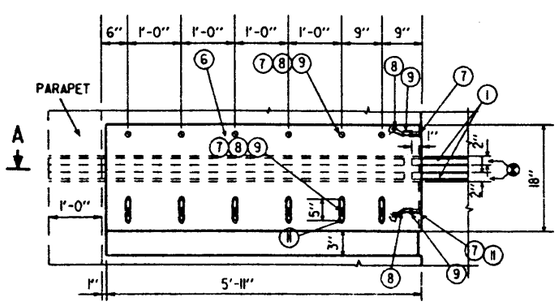

COVER PLATED STRIP SEAL TERMINATION

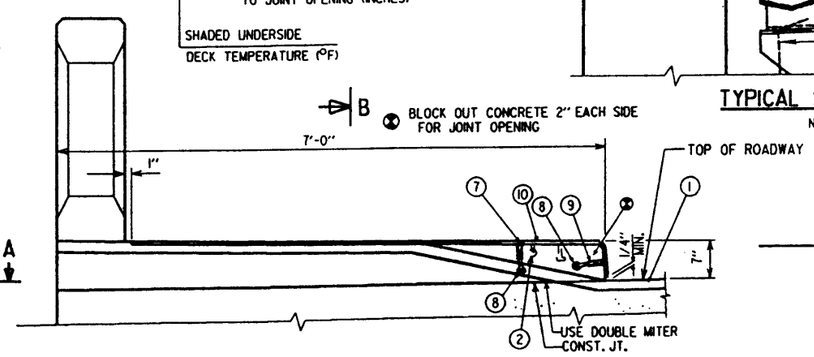

SECTION A

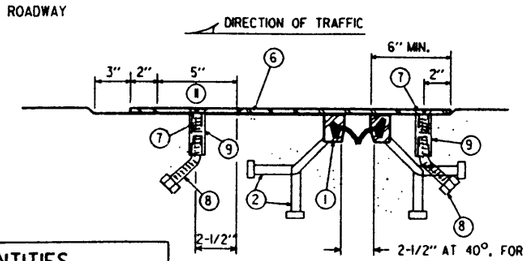

SECTION B

PAGE QUANTITIES	
EXPANSION DEVICE, STRUCTURE P-40-0848	1 L.S.

NOTES:

ONE FIELD SPLICE PERMITTED IN STEEL EXTRUSION. IF USED, SUBMIT DETAILS FOR APPROVAL. NO SPLICING PERMITTED IN NEOPRENE STRIP SEAL.

AFTER FABRICATION BUT BEFORE SHIPMENT, STRAIGHTEN EXTRUSIONS TO BE FREE FROM WARP, TWIST AND SWEEP.

FABRICATOR SHALL PROVIDE MEANS OF KEEPING GALVANIZED EXTRUSIONS CLEAN & SMOOTH DURING SHIPMENT AND PRIOR TO APPLYING LUBRICANT ADHESIVE FOR NEOPRENE GLAND INSTALLATION.

SANDBLAST PLATES & EXTRUSIONS AFTER FABRICATION IN ACCORDANCE WITH SSPC SP. #6 "COMMERCIAL BLAST CLEANING". AFTER BLAST CLEANING THE PLATES & EXTRUSIONS SHALL BE HOT DIPPED GALVANIZED.

ANCHOR SYSTEM NO. 8 AND NO. 9: ASTM A307. GALV. TO ASTM A153, CLASS C AND D, 1.24 MILS MIN.

BID STRIP SEAL EXPANSION JOINT ASSEMBLY, INCLUDING ANCHOR STUDS AND HARDWARE AT LUMP SUM PRICE FOR "EXPANSION DEVICE."

NO.	DATE	REVISION	BY

CITY OF MILWAUKEE
DEPARTMENT OF PUBLIC WORKS
INFRASTRUCTURE SERVICES DIVISION

STRUCTURE P-40-0848

DESIGNED BY	DRAWN BY	CHECKED BY	DATE
J.T.A.	J.H.	M.P.T.	12/96

ABUTMENT STRIP SEAL DETAILS

SHEET 21 OF 27

X

FILE: w:\eng\struc\jackpkov\abut_ns.dgn
PLOT DATE: 25-FEB-1997

STATE PROJECT NUMBER	SHEET NO.
2100 - 07 - 72	8.21

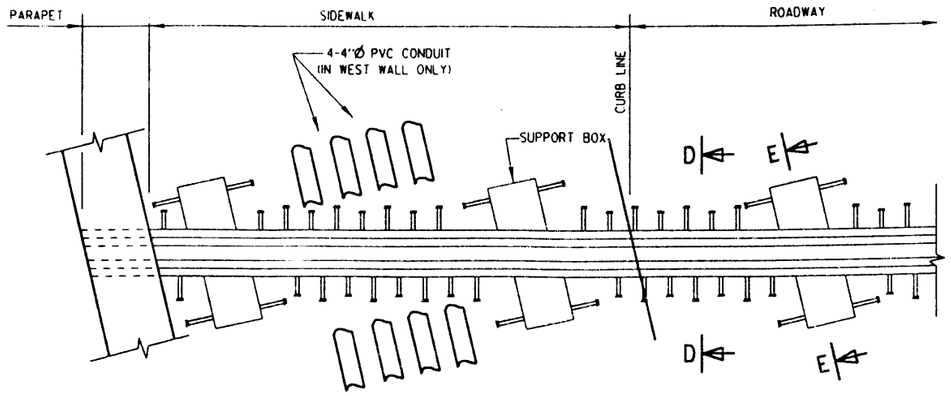

NOTE:
SUPPORT BOXES TO BE ARRANGED SO THAT THE WEST WALK HAS ENOUGH ROOM TO ALLOW THE 4-4"ØPVC CONDUIT TO CLEAR.

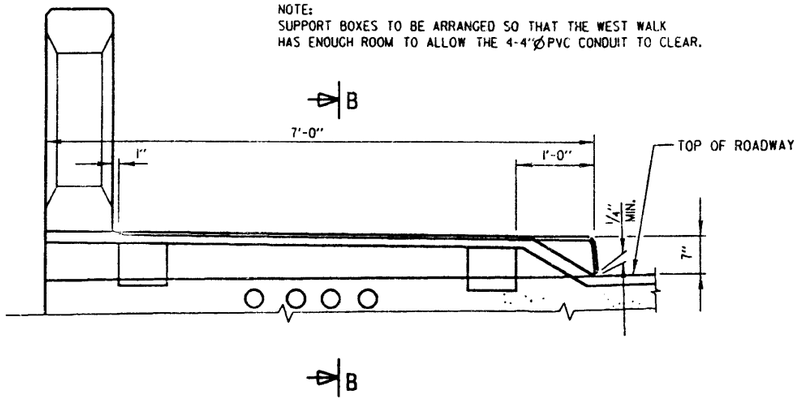

SECTION A

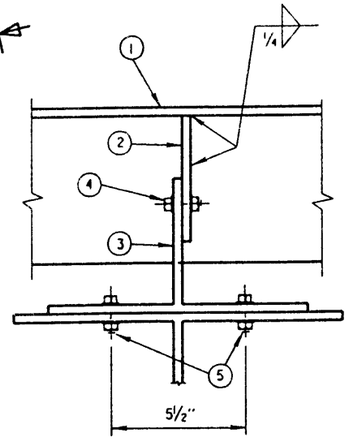

SECTION C

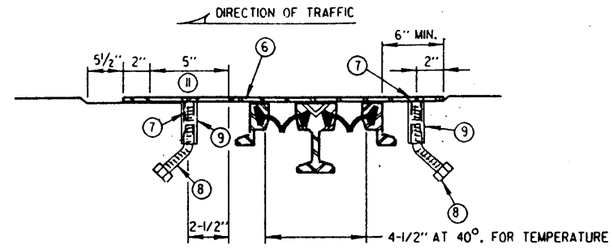

SECTION B

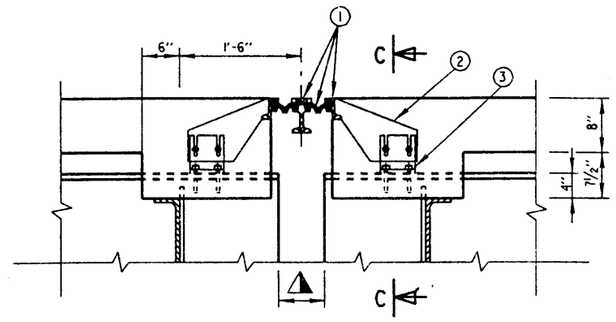

SECTION AT FLOOR BEAM SUPPORTS

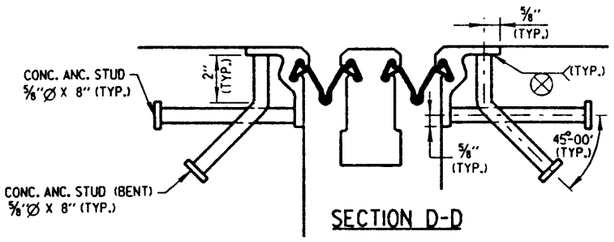

SECTION D-D

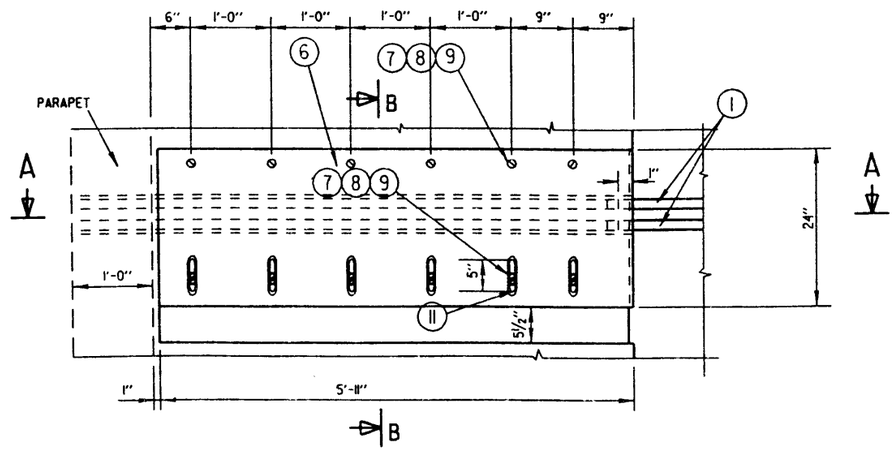

COVER PLATED STRIP SEAL TERMINATION

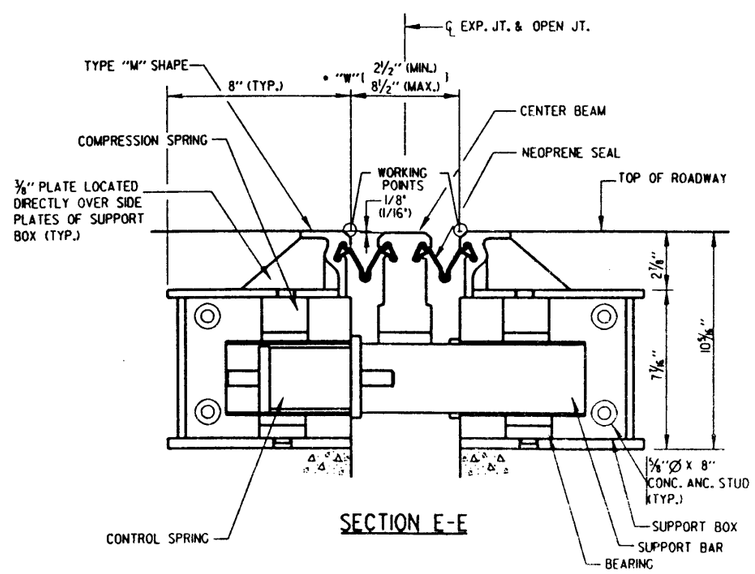

SECTION E-E

LEGEND:

1. MODULAR STRIP SEAL EXPANSION JOINT DEVICE TYPE:
   A. STEELFLEX D-160, D.S. BROWN
   B. RJW-RJ300, R.J. WATSON COMPANY
   C. SD-160, HARRIS SPECIALTY CHEMICAL, INC.
   OR APPROVED EQUAL.
2. 1/2" PLATE, ONE PER GIRDER. PROVIDE 2-1"X5" SLOTTED HOLES PLACED HORIZONTALLY FOR NO. 4.
3. WT 6X46, ONE PER GIRDER. PROVIDE 2-1"X5" SLOTTED HOLES PLACED VERTICALLY IN WEB FOR BOLTS NO.4.
4. 7/8" DIA. HIGH STRENGTH BOLTS WITH NUTS & WASHERS. (A325 TYPE 3)
5. 7/8" DIA. HIGH STRENGTH BOLTS WITH NUTS & WASHERS. FIELD DRILL HOLES IN GIRDER FLANGE.
6. PLATE 3/8 INCH BY 2'-0" HOLES FOR NO. 7 AND NO. 11. BEND AS SHOWN.
7. 3/4 INCH BY 1-1/2 INCHES STAINLESS STEEL FLAT HEAD MACHINE SCREWS. RECESS 1/16 INCH BELOW PLATE SURFACE.
8. 3/4 INCH BY 4 INCHES GALV. HEX HEAD BOLT. BENT 45 DEGREES.
9. 3/4 INCH BY 2-1/4 INCHES GALV. THREADED COUPLING.
10. 3/4 INCH BY 2-1/4 INCHES STAINLESS STEEL FLAT HEAD MACHINE SCREWS. RECESS 1/16 INCH BELOW PLATE SURFACE.
11. 1 INCH BY 5 INCHES SLOTTED CSK. HOLE FOR NO. 7. SLOT PARALLEL TO DIRECTION OF MOVEMENT.
12. SUPPORT BAR ASSEMBLY COVER BOX. SPACE PER MANUFACTURER. SPACE TO MISS GIRDERS. FABRICATE FROM 1/2" PLATES.

TEMPERATURE TABLE

TEMP.	PIER 6
90	2-7/8
80	3-1/8
70	3-1/2
60	3-7/8
50	4-1/8
40	4-1/2
30	4-7/8

DIM. MEASURED NORMAL TO JOINT OPENING (INCHES)

SHADED UNDERSIDE

DECK TEMPERATURE (°F)

NOTES:

NO EXPANSION JOINT PROTRUSIONS PERMITTED ABOVE ROADWAY SURFACE OR ON PARAPET ROADWAY FACE.

THE EXPANSION JOINT SEALS SHALL BE PLACED, BONDED & SEALED AS RECOMMENDED BY THE MANUFACTURER.

EXPANSION JOINT SHALL BE FABRICATED TO CONFORM TO ROADWAY CROWN & GRADE.

COST OF FURNISHING & PLACING OF THE EXPANSION JOINTS SHALL BE PAID FOR UNDER THE PRICE BID FOR "MODULAR EXPANSION DEVICE".

FABRICATOR SHALL PROVIDE MEANS OF KEEPING GALVANIZED EXTRUSIONS CLEAN & SMOOTH DURING SHIPMENT AND PRIOR TO APPLYING LUBRICANT ADHESIVE FOR NEOPRENE GLAND INSTALLATION.

SANDBLAST PLATES & EXTRUSIONS AFTER FABRICATION IN ACCORDANCE WITH SSPC SP. #6 "COMMERCIAL BLAST CLEANING". AFTER BLAST CLEANING THE PLATES & EXTRUSIONS SHALL BE HOT DIPPED GALVANIZED.

PAGE QUANTITIES	
MODULAR EXPANSION DEVICE, STRUCTURE P-40-0848	1 L.S.

NO.	DATE	REVISION	BY

CITY OF MILWAUKEE
DEPARTMENT OF PUBLIC WORKS
INFRASTRUCTURE SERVICES DIVISION

STRUCTURE P-40-0848

DESIGNED BY	DRAWN BY	CHECKED BY	DATE
J.T.A.	J.H.	M.P.T.	12/96

PIER 6
MODULAR EXPANSION JOINT DETAILS

SHEET 22 OF 27

X

FILE: w:\eng\struc\jackpkov\about.na.dgn
PLOT DATE: 25-FEB-1997

STATE PROJECT NUMBER	SHEET NO.
2100 - 07 - 72	8.22

NOTE:
SUPPORT BOXES TO BE ARRANGED SO THAT THE WEST WALK HAS ENOUGH ROOM TO ALLOW THE 4-4"ØPVC CONDUIT TO CLEAR.

SECTION A

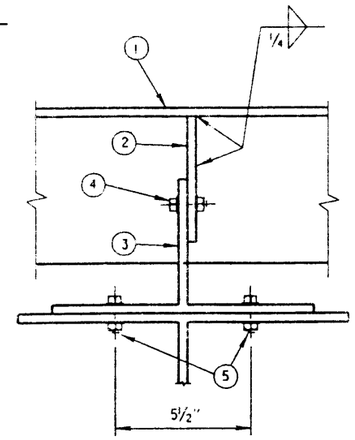

SECTION C

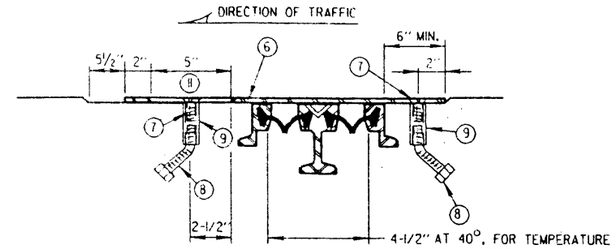

4-1/2" AT 40°. FOR TEMPERATURE VARIATIONS, ADJUST ANCHORAGE LOCATION USING JOINT OPENING FROM "TEMPERATURE TABLE"

SECTION B

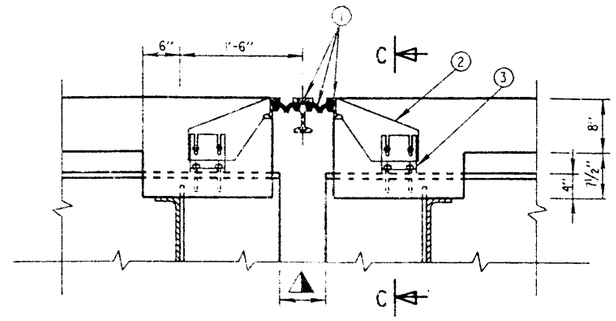

SECTION AT FLOOR BEAM SUPPORTS

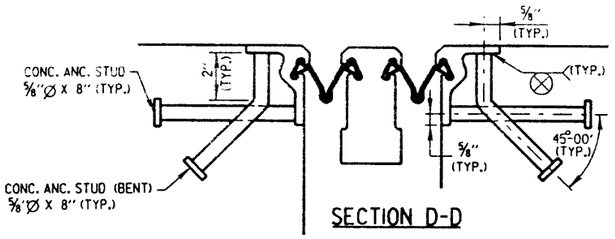

SECTION D-D

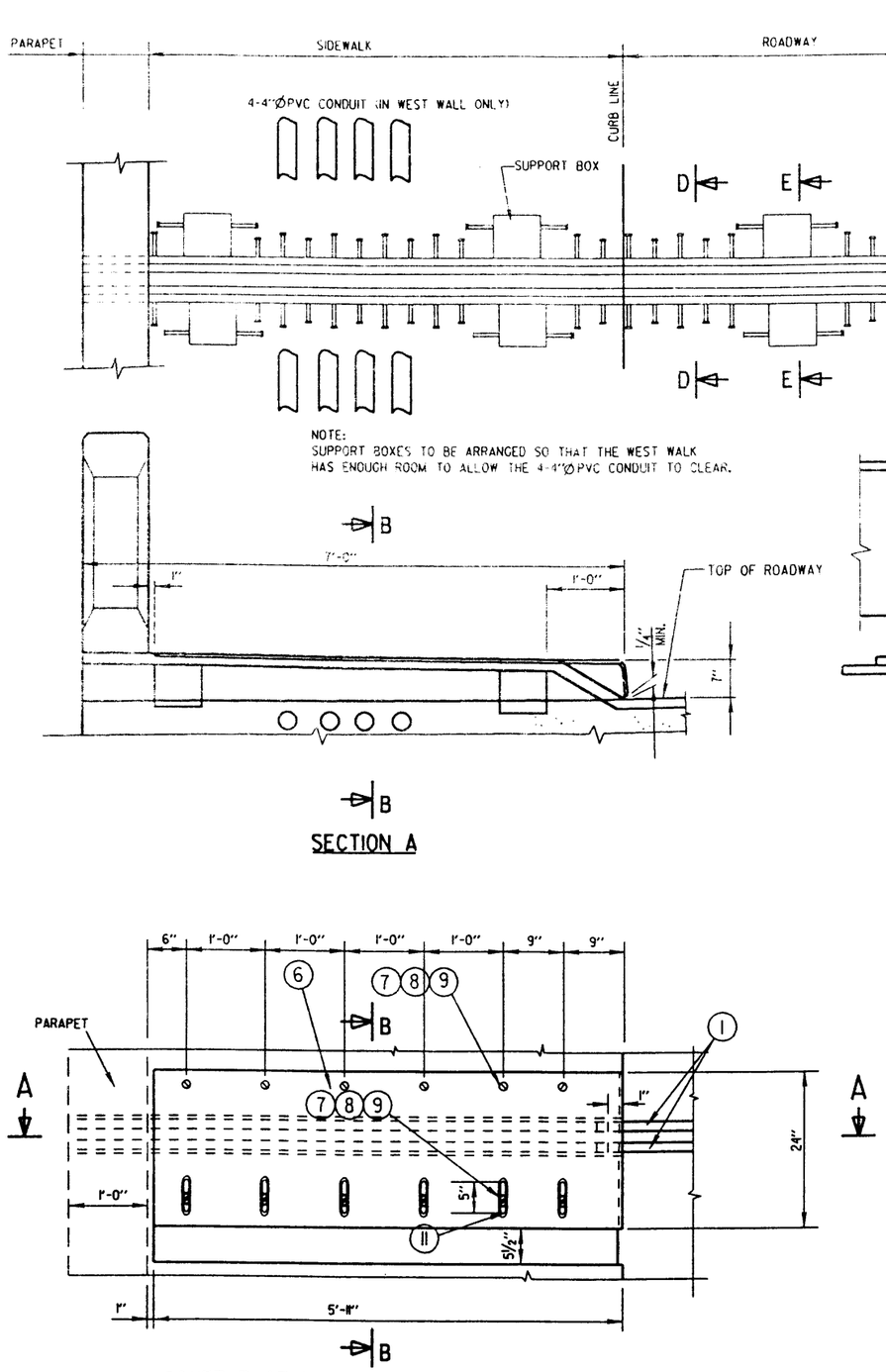

COVER PLATED STRIP SEAL TERMINATION

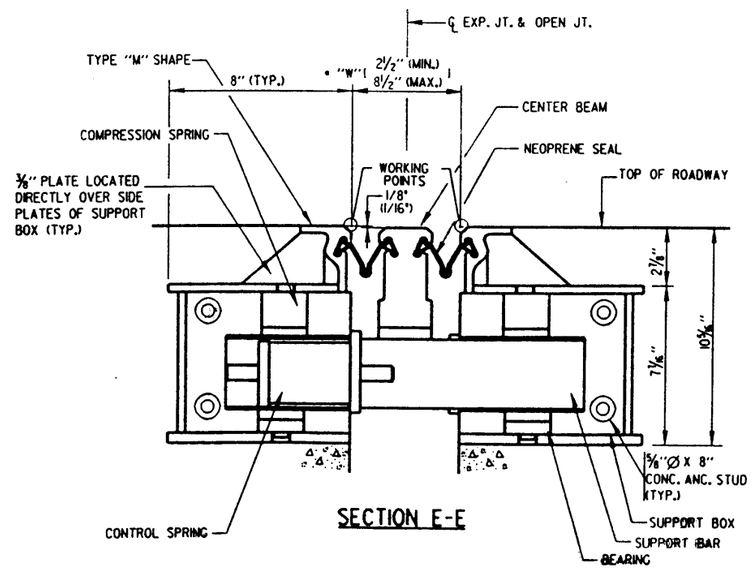

SECTION E-E

LEGEND:

1. MODULAR STRIP SEAL EXPANSION JOINT DEVICE TYPE:
   A. STEELFLEX D-160, D.S. BROWN
   B. RJW-RJ300, R.J. WATSON COMPANY
   C. SD-160, HARRIS SPECIALTY CHEMICAL, INC.
   OR APPROVED EQUAL.
2. 1/2" PLATE, ONE PER GIRDER. PROVIDE 2-1"X5" SLOTTED HOLES PLACED HORIZONTALLY FOR NO. 4.
3. WT 6X46, ONE PER GIRDER. PROVIDE 2-1"X5" SLOTTED HOLES PLACED VERTICALLY IN WEB FOR BOLTS NO.4.
4. 7/8" DIA. HIGH STRENGTH BOLTS WITH NUTS & WASHERS. (A325 TYPE 3)
5. 7/8" DIA. HIGH STRENGTH BOLTS WITH NUTS & WASHERS. FIELD DRILL HOLES IN GIRDER FLANGE.
6. PLATE 3/8 INCH BY 2'-0" HOLES FOR NO. 7 AND NO. 11. BEND AS SHOWN.
7. 3/4 INCH BY 1-1/2 INCHES STAINLESS STEEL FLAT HEAD MACHINE SCREWS. RECESS 1/16 INCH BELOW PLATE SURFACE.
8. 3/4 INCH BY 4 INCHES GALV. HEX HEAD BOLT. BENT 45 DEGREES.
9. 3/4 INCH BY 2-1/4 INCHES GALV. THREADED COUPLING.
10. 3/4 INCH BY 2-1/4 INCHES STAINLESS STEEL FLAT HEAD MACHINE SCREWS. RECESS 1/16 INCH BELOW PLATE SURFACE.
11. 1 INCH BY 5 INCHES SLOTTED CSK. HOLE FOR NO. 7. SLOT PARALLEL TO DIRECTION OF MOVEMENT.
12. SUPPORT BAR ASSEMBLY COVER BOX. SPACE PER MANUFACTURER. SPACE TO MISS GIRDERS. FABRICATE FROM 1/2" PLATES.

TEMPERATURE TABLE

TEMP.	PIER 12
90	3-1/4
80	3-1/2
70	3-3/4
60	4
50	4-1/4
40	4-1/2
30	4-3/4

DIM. MEASURED NORMAL TO JOINT OPENING (INCHES)

SHADED UNDERSIDE DECK TEMPERATURE (°F)

NOTES:

NO EXPANSION JOINT PROTRUSIONS PERMITTED ABOVE ROADWAY SURFACE OR ON PARAPET ROADWAY FACE.

THE EXPANSION JOINT SEALS SHALL BE PLACED, BONDED & SEALED AS RECOMMENDED BY THE MANUFACTURER.

EXPANSION JOINT SHALL BE FABRICATED TO CONFORM TO ROADWAY CROWN & GRADE.

COST OF FURNISHING & PLACING OF THE EXPANSION JOINTS SHALL BE PAID FOR UNDER THE PRICE BID FOR "MODULAR EXPANSION DEVICE".

FABRICATOR SHALL PROVIDE MEANS OF KEEPING GALVANIZED EXTRUSIONS CLEAN & SMOOTH DURING SHIPMENT AND PRIOR TO APPLYING LUBRICANT ADHESIVE FOR NEOPRENE GLAND INSTALLATION.

SANDBLAST PLATES & EXTRUSIONS AFTER FABRICATION IN ACCORDANCE WITH SSPC SP. #6 "COMMERCIAL BLAST CLEANING". AFTER BLAST CLEANING THE PLATES & EXTRUSIONS SHALL BE HOT DIPPED GALVANIZED.

PAGE QUANTITIES	
MODULAR EXPANSION DEVICE, STRUCTURE P-40-0848	1 L.S.

NO.	DATE	REVISION	BY

CITY OF MILWAUKEE
DEPARTMENT OF PUBLIC WORKS
INFRASTRUCTURE SERVICES DIVISION

STRUCTURE P-40-0848

DESIGNED BY	DRAWN BY	CHECKED BY	DATE
J.T.A.	J.H.	M.P.T.	12/96

PIER 12
MODULAR EXPANSION JOINT DETAILS

SHEET 23 OF 27

X

FILE: w:\eng\structure\jackpkow\sbut_ma.dgn
PLOT DATE: 23-FEB-1997

STATE PROJECT NUMBER	SHEET NO.
2100 - 07 - 72	8.23

PAGE QUANTITIES	
CONCRETE SURFACE REPAIR	53 SQ.FT.
GIRDER REPAIR	2 NO.'S
UNDERPINNING PILING	140 L.F.

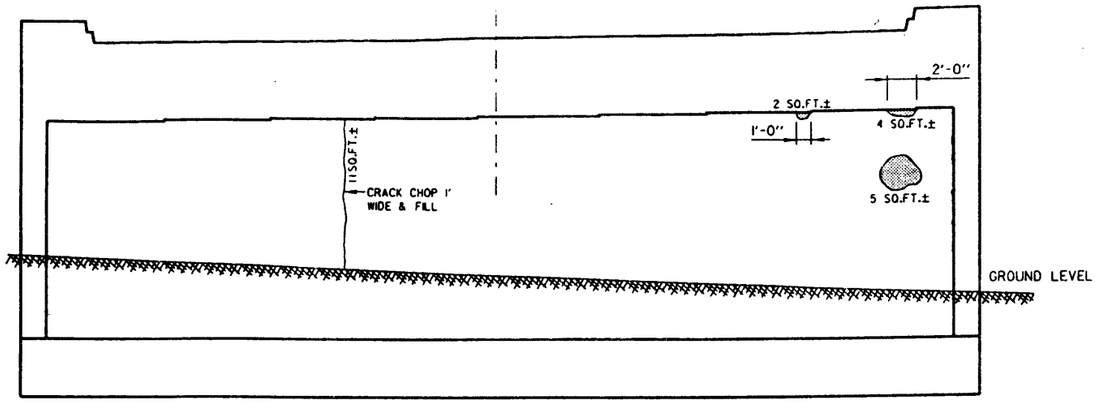

ELEVATION SOUTH ABUTMENT

SCALE: 3/16" = 1'-0"

INDICATES AREA OF CONCRETE SURFACE REPAIR

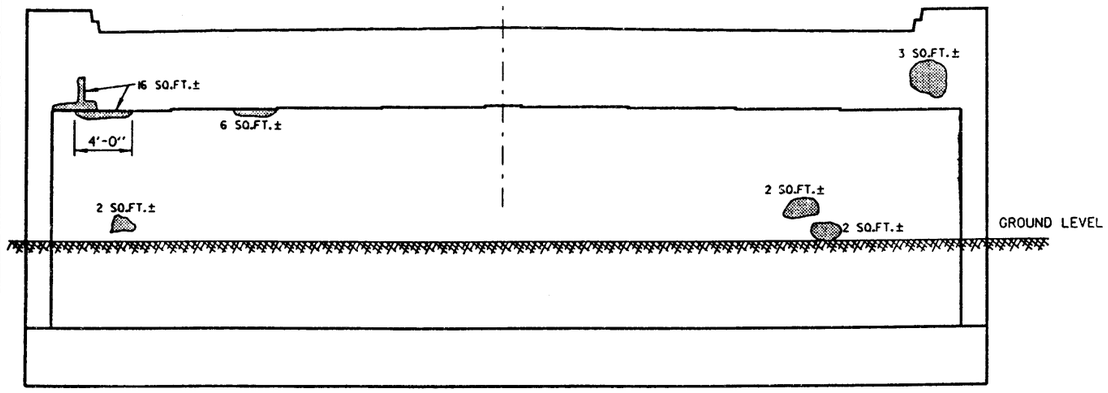

ELEVATION NORTH ABUTMENT

SCALE: 3/16" = 1'-0"

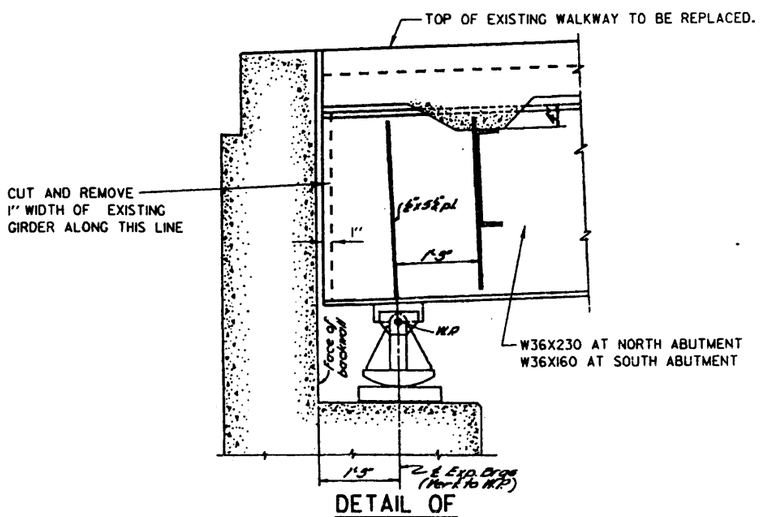

DETAIL OF
SOUTH ABUTMENT-WEST GIRDER
NORTH ABUTMENT-EAST GIRDER

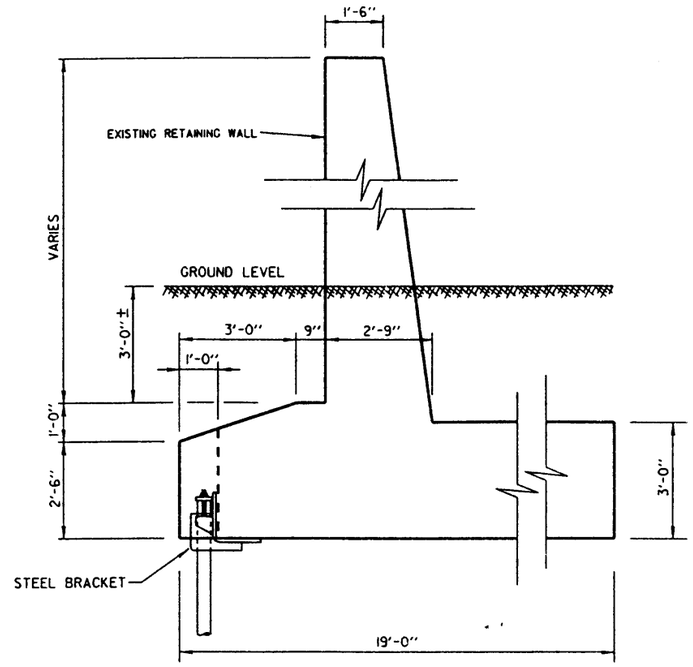

RETAINING WALL-UNDERPINNING

SCALE: 1/2" = 1'-0"

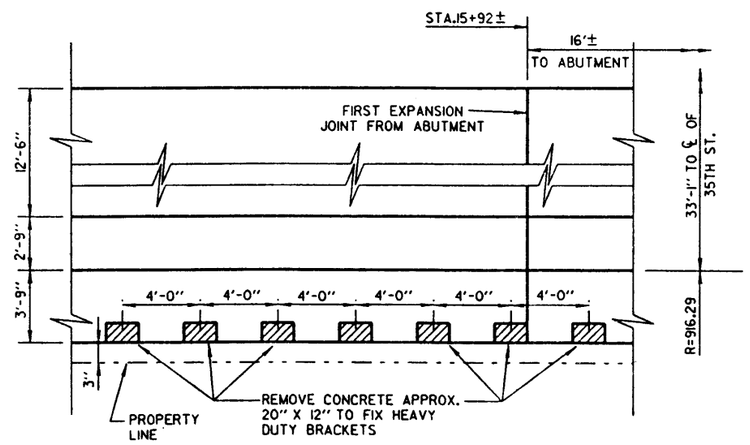

PLAN VIEW OF S.E. RETAINING WALL FOUNDATION
(PORTION TO BE UNDERPINNED)

SCALE: 1/4" = 1'-0"

NOTE:
JACKFORCE APPLIED AT EACH LOCATION IS 4000 LBS.

NO.	DATE	REVISION	BY

CITY OF MILWAUKEE
DEPARTMENT OF PUBLIC WORKS
INFRASTRUCTURE SERVICES DIVISION

STRUCTURE P - 40 - 0848

DESIGNED BY	DRAWN BY	CHECKED BY	DATE
MPT	JH	JTA	1/97

CONCRETE REPAIR ON ABUTMENTS

SHEET 24 OF 27

X

FILE: w:\eng\atruo\jackpkov\pier.dgn
PLOT DATE: 25-FEB-1997

STATE PROJECT NUMBER	SHEET NO.
2100 - 07 - 72	8.24

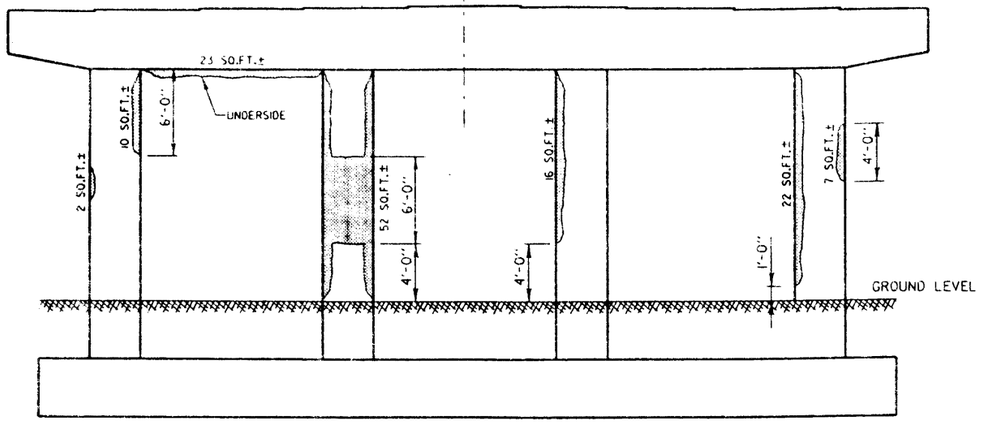

SOUTH ELEVATION PIER 12 (LOOKING NORTH)

SCALE: 3/16" = 1'-0"

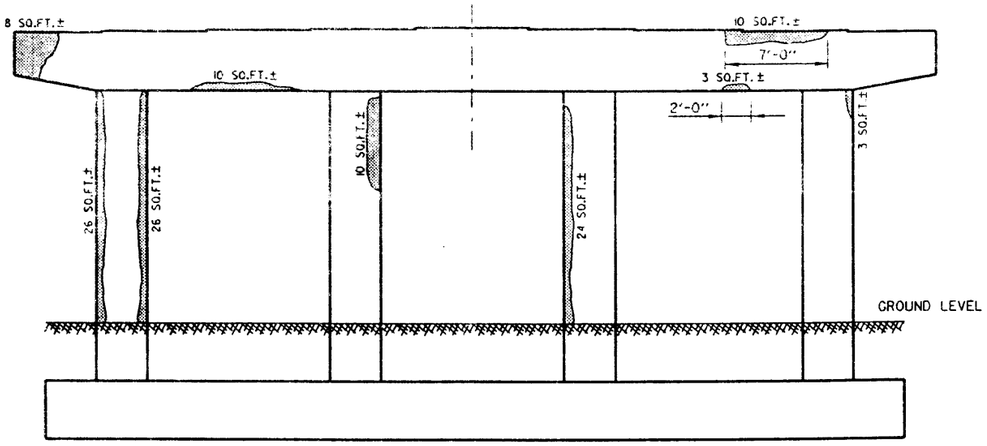

NORTH ELEVATION PIER 6 LOOKING SOUTH)

SCALE: 3/16" = 1'-0"

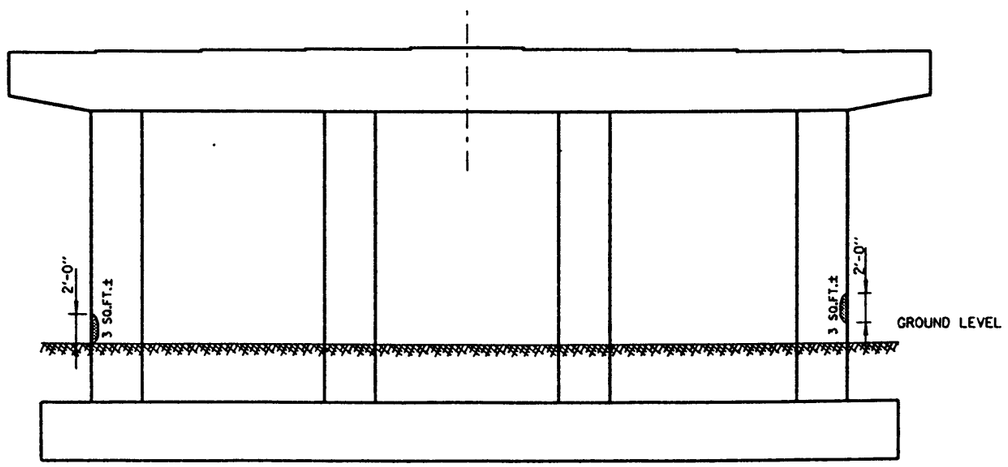

NORTH ELEVATION PIER 5 (LOOKING SOUTH)

SCALE: 3/16" = 1'-0"

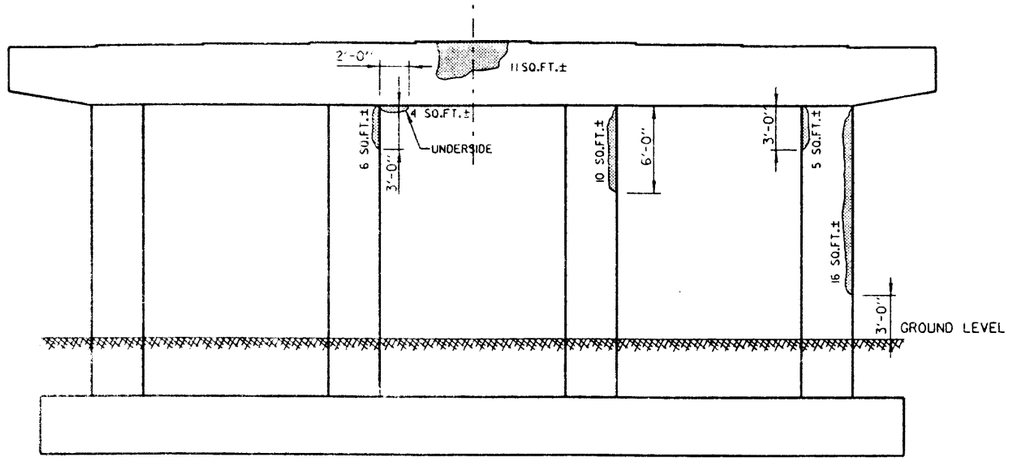

NORTH ELEVATION PIER 12 (LOOKING SOUTH)

SCALE: 3/16" = 1'-0"

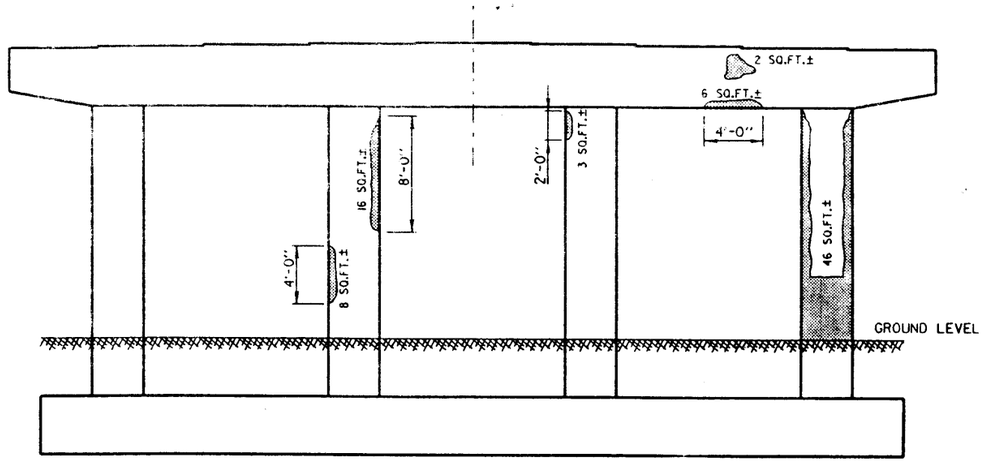

SOUTH ELEVATION PIER 6 (LOOKING NORTH)

SCALE: 3/16" = 1'-0"

INDICATES AREA OF CONCRETE SURFACE REPAIR

PAGE QUANTITES	
CONCRETE SURFACE REPAIR	391 SQ.FT.

NO.	DATE	REVISION	BY

CITY OF MILWAUKEE
DEPARTMENT OF PUBLIC WORKS
INFRASTRUCTURE SERVICES DIVISION

STRUCTURE P - 40 - 0848

DESIGNED BY	DRAWN BY	CHECKED BY	DATE
MPT	JH	JTA	1/97

CONCRETE REPAIRS ON PIERS

SHEET 25 OF 27

X

FILE: m:\eng\struc\jackpk.ev\pier.dgn
PLOT DATE: 25-FEB-1997

STATE PROJECT NUMBER	SHEET NO.
2100 - 07 - 72	8.25

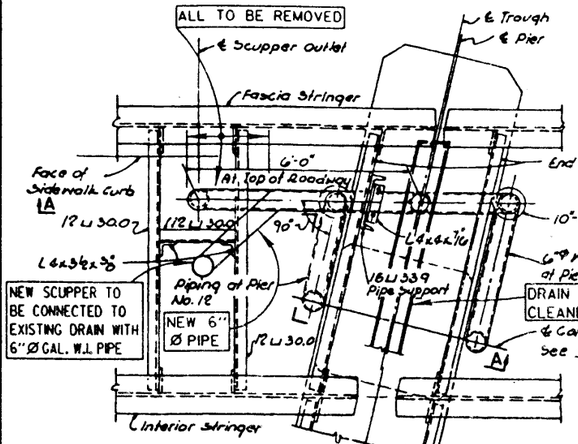

DETAIL "A"

DRAINAGE OF SIDEWALK SCUPPER AT TROUGH LOCATION
PIERS NO. 6, 12, NORTH AND SOUTH ABUTMENTS
PIER NO. 6 – W SIDEWALK – SHOWN
OTHERS – SIMILAR EXCEPT AS NOTED

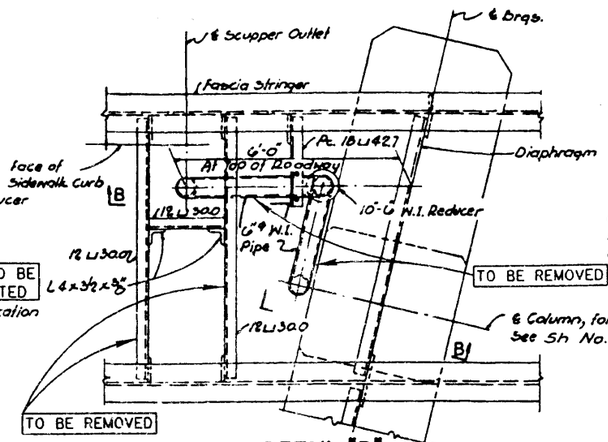

DETAIL "B"

DRAINAGE OF SIDEWALK SCUPPER
PIERS NO. 2, 3, 4, 7, 8, 11, 14 & 15
PIER NO. 3 – W SIDEWALK – SHOWN
OTHERS – SIMILAR EXCEPT AS NOTED
ALL TO BE REMOVED

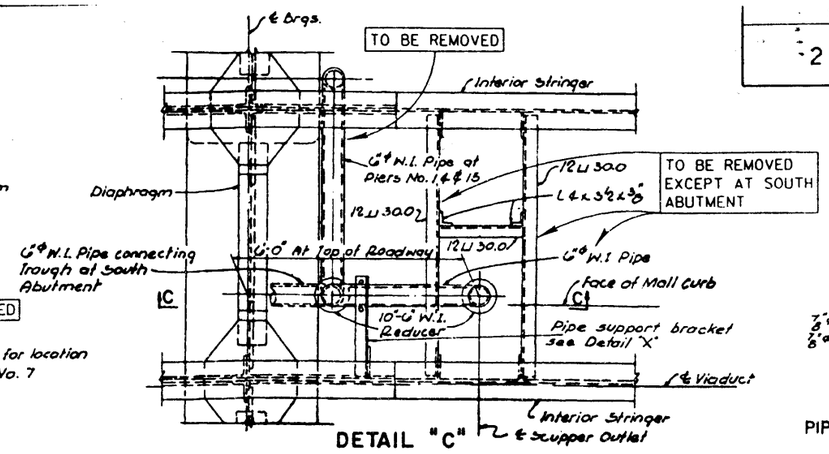

DETAIL "C"

DRAINAGE OF MALL SCUPPER
PIERS NO. 14, 15 AND SOUTH ABUTMENT } TO BE REMOVED
PIER NO. 14 – SHOWN, PIER NO. 15 – SIMILAR
SOUTH ABUTMENT – SIMILAR EXCEPT AS NOTED } TO REMAIN

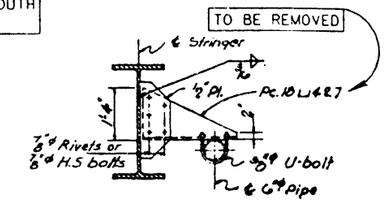

DETAIL "X"

PIPE SUPPORT BRACKET
Scale: ½"=1'-0"

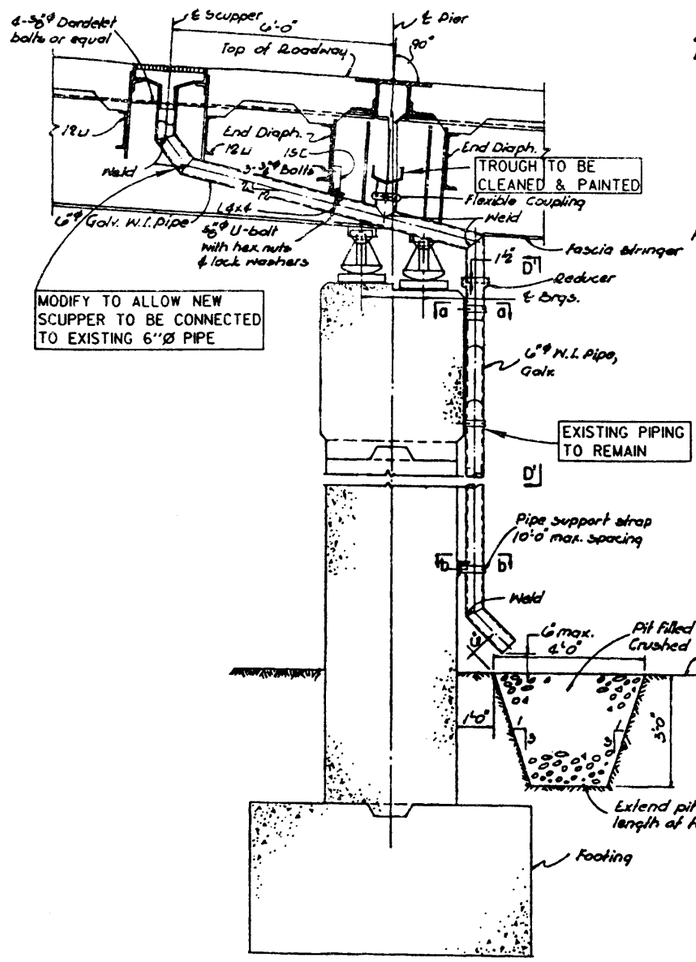

SECTION A–A

DRAINAGE AT PIER NO. 6 – SHOWN
DRAINAGE AT ABUTMENTS – SIMILAR

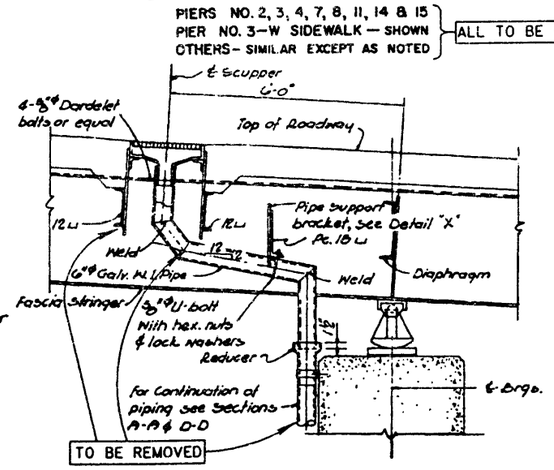

SECTION B–B

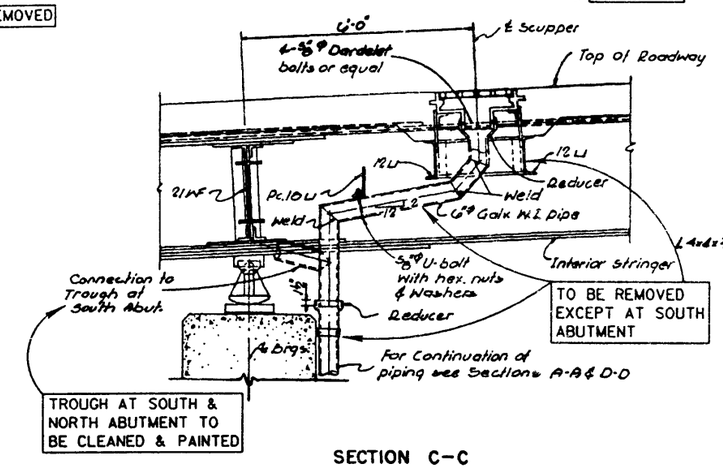

SECTION C–C

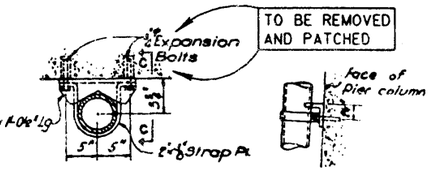

PLAN b–b ELEVATION c–c

DETAILS OF PIPE SUPPORT AT PIERS

All material Galv.
Scale: 1"=1'-0"

NOTES:
All pipe 6"φ genuine Wrought Iron Galvanized, Wall thickness = 0.286".

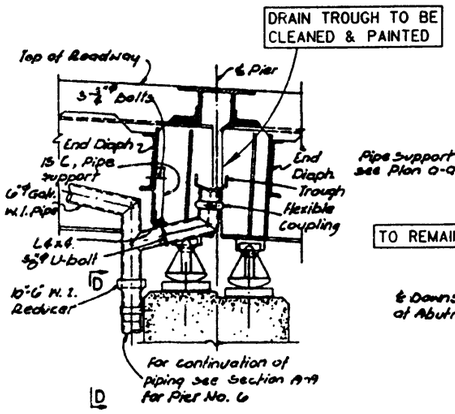

SECTION A–A

DRAINAGE AT PIER NO. 12
Scale: ½"=1'-0"

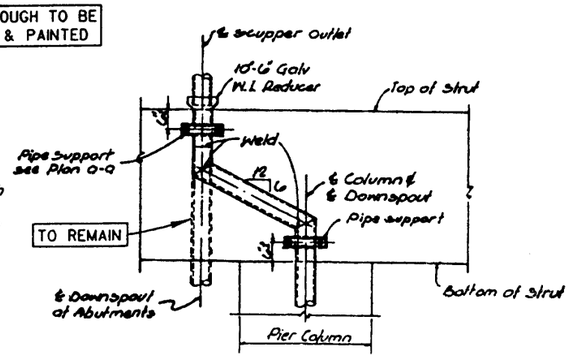

SECTION D–D
SECTION D'–D' – SIMILAR & OPP. HAND

NO.	DATE	REVISION	BY

CITY OF MILWAUKEE
DEPARTMENT OF PUBLIC WORKS
INFRASTRUCTURE SERVICES DIVISION

STRUCTURE P - 40 - 0848

DESIGNED BY	DRAWN BY	CHECKED BY	DATE
JTA	JH	JTA	12-2-96

PIPING DETAILS

SHEET 26 OF 27

X

FILE: w:\eng\struc\jackpkov\22.dgn
PLOT DATE: 25-FEB-1997

STATE PROJECT NUMBER	SHEET NO.
2100 - 07 - 72	8.26

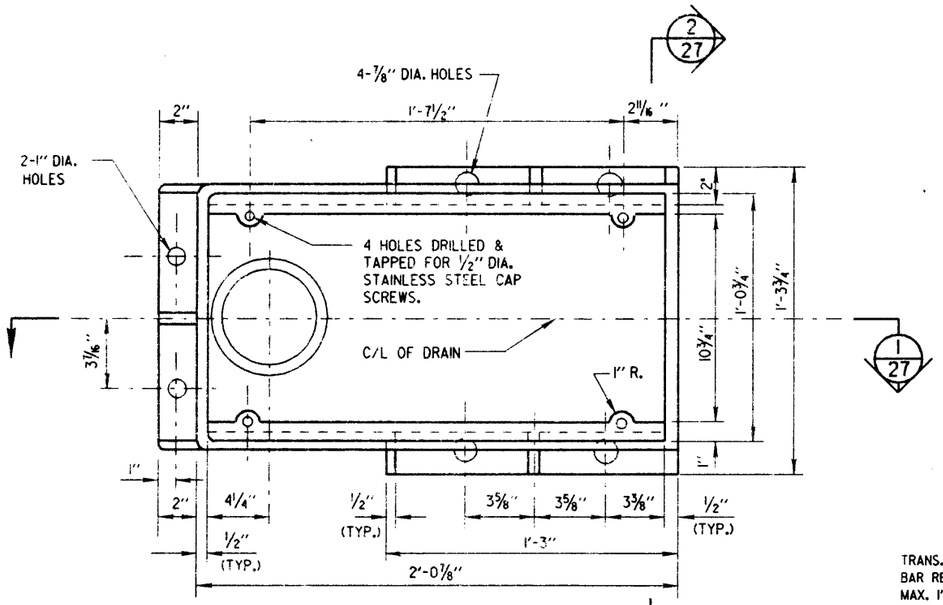

PLAN

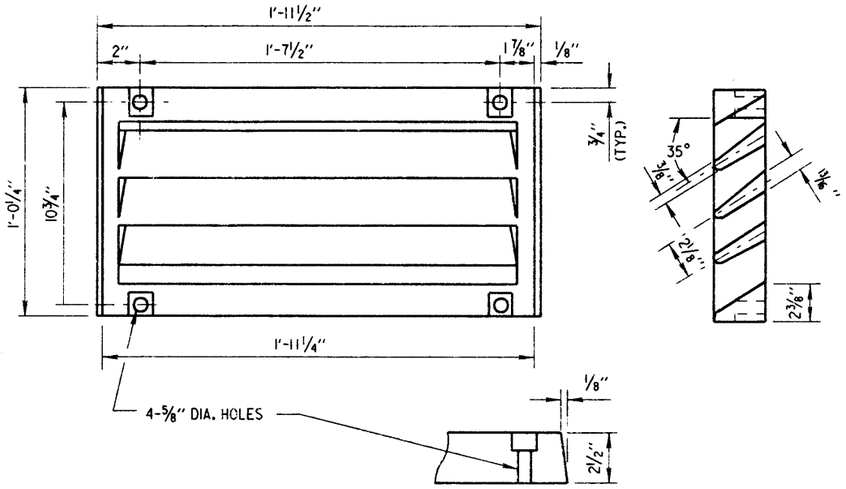

GRATE CASTING DETAIL

ATTACH GRATE TO FRAME FOR SHIPMENT

GENERAL NOTES

ALL MATERIAL FOR TYPE "GC" CASTING, EXCLUDING GRATE HOLD DOWN SCREWS, SHALL BE GRAY IRON CONFORMING TO A.S.T.M. A48, CLASS 30. (APPROX. WEIGHT = 225 LBS.)

MATERIAL FOR BRACKETS SHALL CONFORM TO A.S.T.M. A36.

THE CONTRACTOR MAY PROPOSE AN ALTERNATE TYPE OF BRACKET. THE PROPOSED ALTERNATE DETAILS SHALL BE SUBMITTED AND SUBJECT TO THE APPROVAL OF THE ENGINEER.

FLANGED 6" DIA. DOWNSPOUTS SHALL BE EITHER CAST MATERIAL OR FIBERGLASS CONFORMING TO A.S.T.M. D2996, GRADE 1, CLASS A.

TRANS. AND LONGIT. SLAB BAR REINF. TO BE CUT A MAX. 1" CL. FROM DRAIN DISPLACE BARS WHERE POSSIBLE

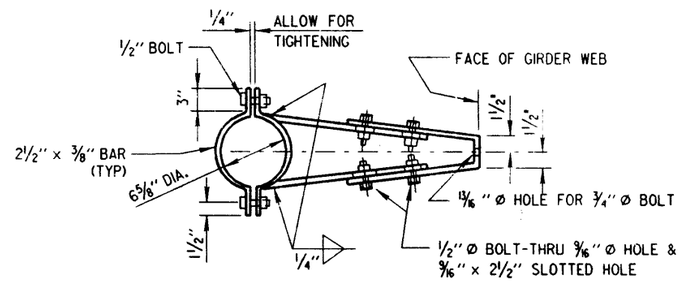

BRACKET DETAIL

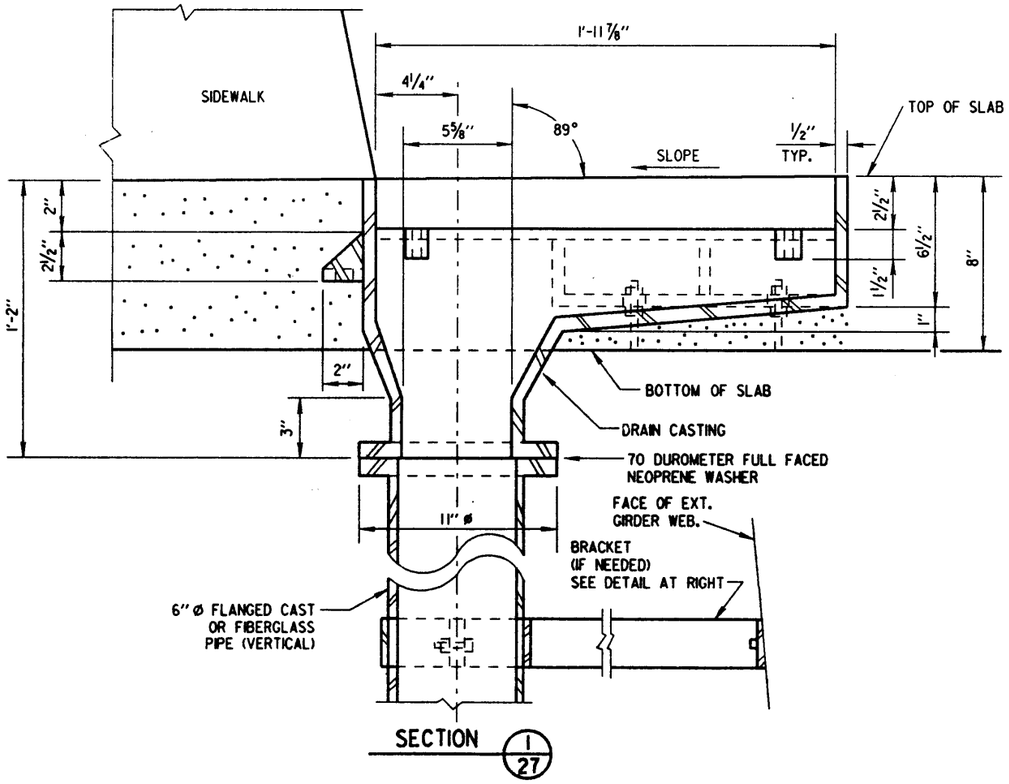

SECTION 1/27

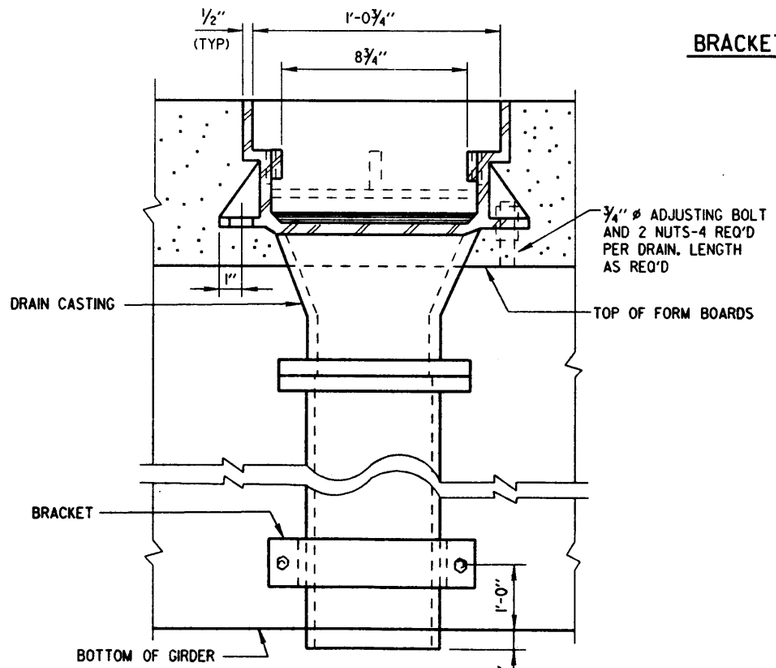

SECTION 2/27

NO.	DATE	REVISION	BY

CITY OF MILWAUKEE
DEPARTMENT OF PUBLIC WORKS
INFRASTRUCTURE SERVICES DIVISION

STRUCTURE P - 40 - 0848

DESIGNED BY	DRAWN BY	CHECKED BY	DATE
JTA	STATE	JTA	1-97

FLOOR DRAIN TYPE 'GC'

SHEET 27 OF 27

X

FILE: w:\eng\struc\jackpkov\drainge.dgn
PLOT DATE: 1-APR-1997