STATE PROJECT NUMBER	SHEET NO.
2060 - 09 - 70	

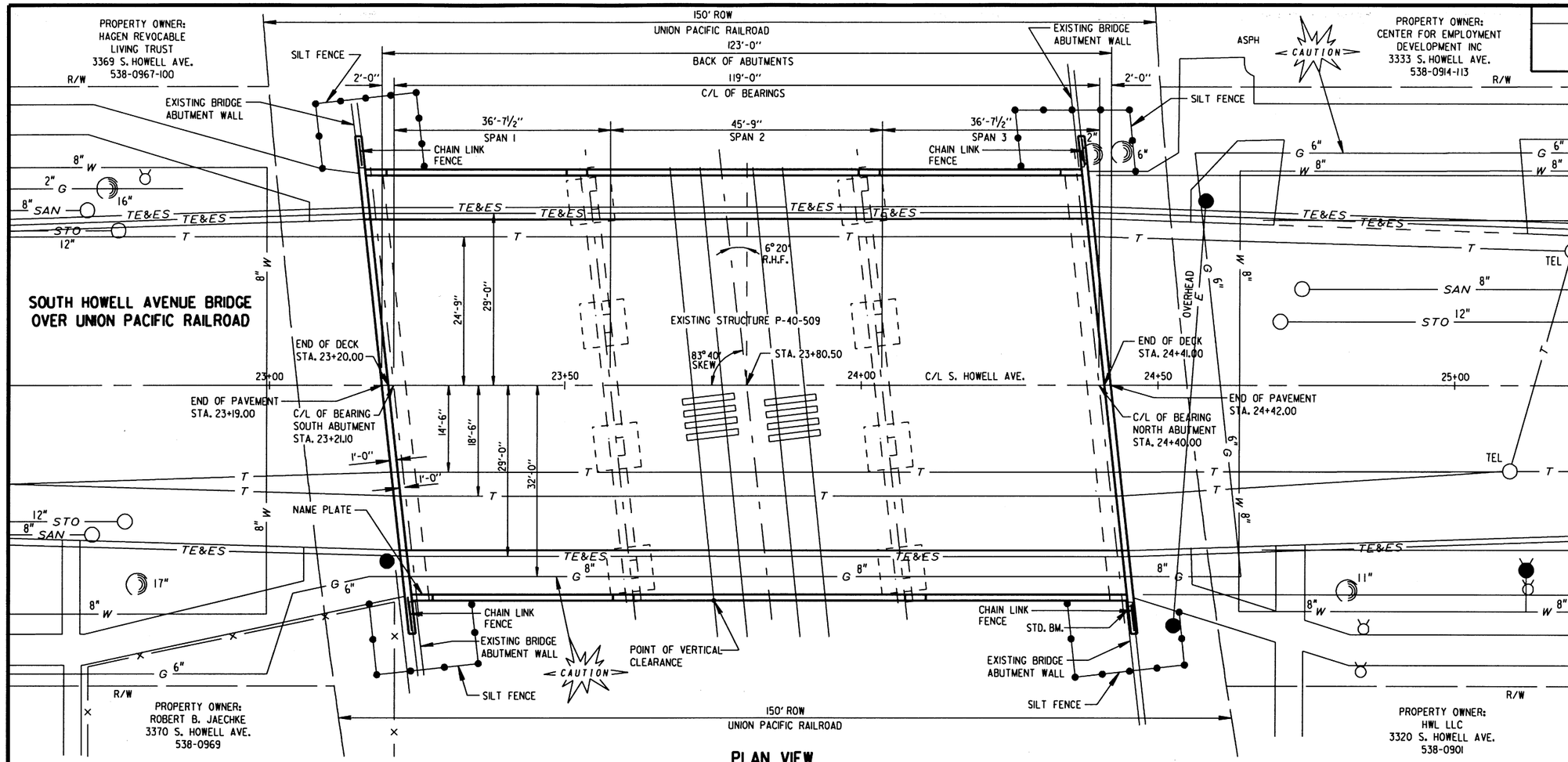

PLAN VIEW

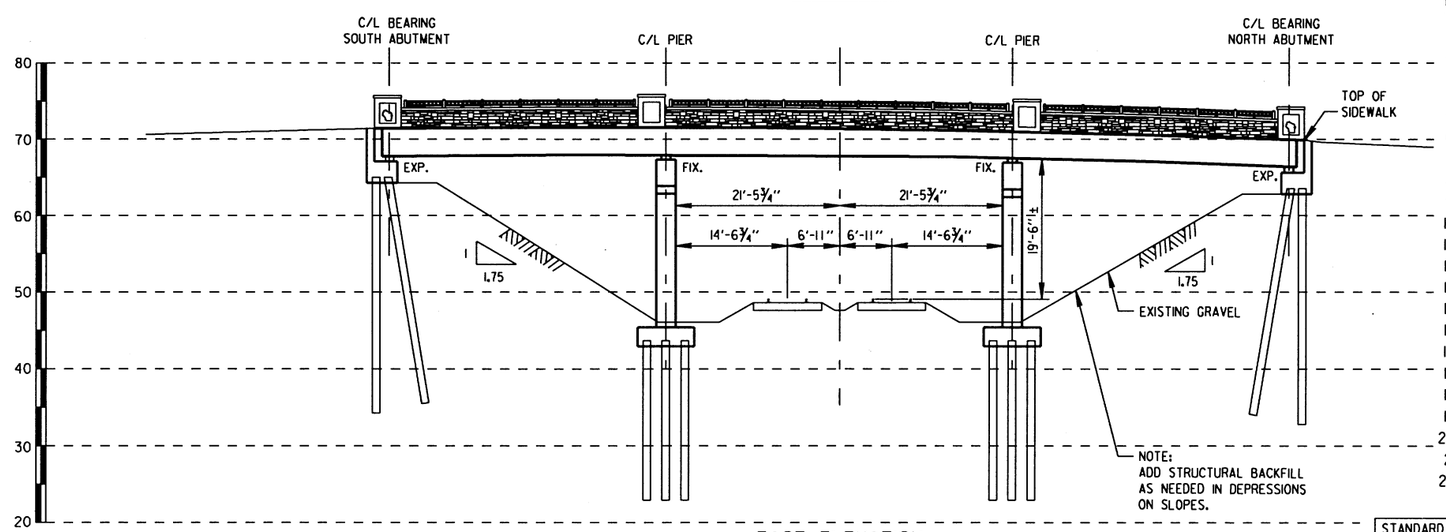

EAST ELEVATION

LOOKING WEST

LIST OF DRAWINGS

1. SITE PLAN
2. SECTION PLAN AND QUANTITIES
3. DECK PLAN
4. SHEAR REINFORCEMENT PLAN
5. STAGE 1 CONSTRUCTION CROSS SECTIONS
6. STAGE 2 CONSTRUCTION CROSS SECTIONS
7. DECK BILL OF BARS AND SHEAR CONNECTOR LAYOUT
8. DECK GRADES
9. SOUTH ABUTMENT ELEVATION AND PLAN VIEWS
10. SOUTH ABUTMENT SECTIONS AND BILL OF BARS
11. NORTH ABUTMENT ELEVATIONS AND PLAN VIEW
12. NORTH ABUTMENT SECTIONS AND BILL OF BARS
13. CHAIN LINK FENCE DETAILS
14. RAILING PLAN AND DETAILS
15. BRIDGE RAILING ELEVATIONS
16. RAILING BAR DETAILS AND RAILING PLAN
17. BRIDGE RAILING DETAILS
18. FORM LINER DETAILS AND BILL OF BARS
19. STEEL RAILING DETAILS
20. STRIP SEAL EXPANSION JOINT SECTIONS
21. STRIP SEAL EXPANSION JOINT DETAILS
22. BEARING DETAILS

STANDARD BM 1/2 BLOCK NORTH OF E. HOLT AVE. ON PLATE IN NORTHEAST CORNER OF BRIDGE WALL ON S. HOWELL AV. ELEV. = 69.851

WISDOT CONTACT:
BILL DREHER 608-261-8205

CONSULTANT CONTACT:
CRAIG LIBERTO 414-286-3294

WISCONSIN PROFESSIONAL ENGINEER
CRAIG S. LIBERTO
E-23746
MILWAUKEE
WIS.

Craig S. Liberto
2/12/10

NO.	DATE	REVISION	BY

STATE OF WISCONSIN
DEPARTMENT OF TRANSPORTATION
DIVISION OF HIGHWAYS

STRUCTURE P-40-509

SOUTH HOWELL AVENUE BRIDGE OVER UNION PACIFIC RAILROAD

COUNTY: MILWAUKEE		CITY: MILWAUKEE	
DESIGN SPEC. AASHTO 2008		LOAD HL-93	CONST. SPEC. 2010
DESIGNED BY J.J.K.	DESIGN CHECKED A.R.	DRAWN BY K.P.S.	PLANS CHECKED A.R.

APPROVED: _____ STATE BRIDGE ENGINEER _____ DATE

SITE PLAN

SHEET 1 OF 22

X

8

8

W:\STR\B0814\ 01SITE.DGN
02-12-2010

STATE PROJECT NUMBER	SHEET NO.
2060 - 09 - 70	

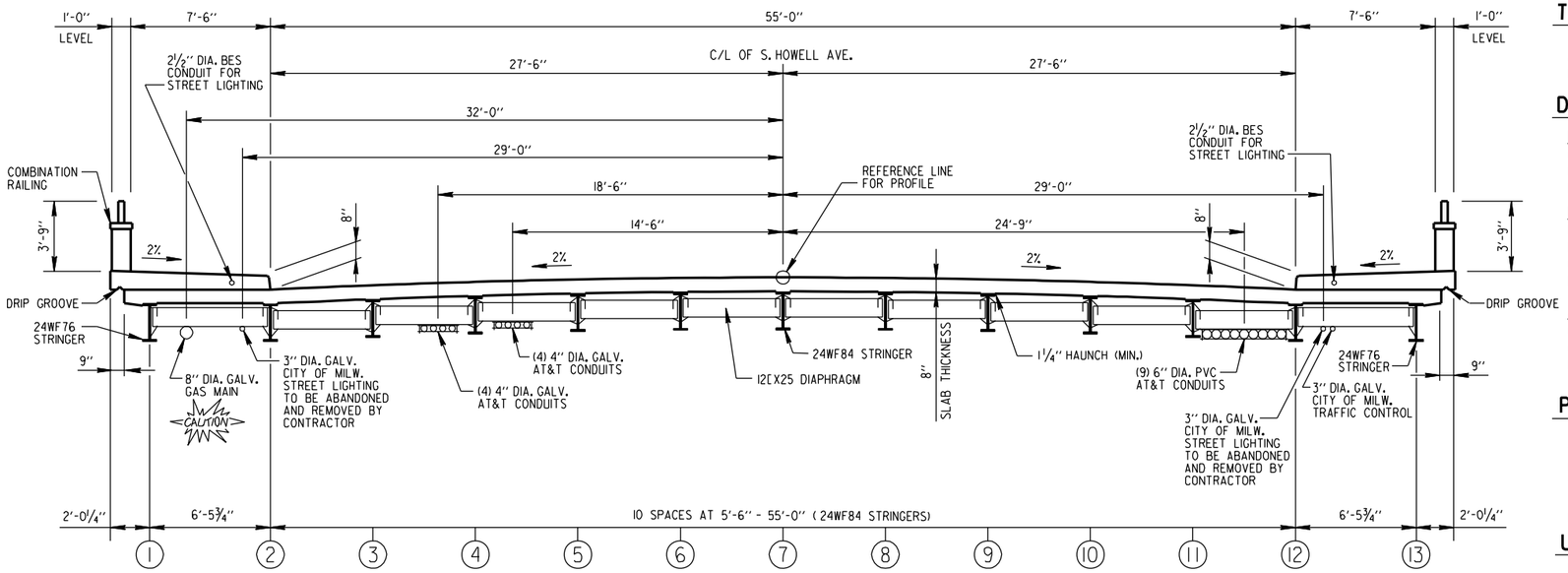

CROSS SECTION THRU BRIDGE LOOKING SOUTH

TRAFFIC VOLUME

ADT (2007) = 7,100
ADT (2027) = 8,200
R.D.S. = 30 M.P.H.

DESIGN DATA

DEAD LOAD

CONCRETE = 150 LB/CF
F.W.S. = 20 LB/SF
PARAPET = 350 LB/LF

LIVE LOAD

DESIGN RATING : HL-93
INVENTORY RATING FACTOR: RF = 1.17
OPERATING RATING FACTOR: RF = 1.52
MAX. STD. PERMIT VEHICLE LOAD = 250 KIPS

ALLOWABLE DESIGN STRESSES

CONCRETE MASONRY (DECK SLAB)	f'c = 4,000 PSI
CONCRETE MASONRY (ALL OTHERS)	f'c = 3,500 PSI
BAR STEEL REINFORCEMENT	fy = 60,000 PSI

PROJECT IMPROVEMENTS

THE PROJECT AS PROPOSED CONSISTS OF:
SURFACE REPAIRS TO THE ABUTMENTS AND PIERS;
REPAIR OR REPLACE BEARING ASSEMBLIES AS NEEDED;
SAND BLASTING AND PAINTING STEEL GIRDERS;
WELDING SHEAR STUDS TO TOP FLANGE OF GIRDERS;
REPLACING BRIDGE DECK, EXPANSION JOINTS AND RAILING.

UTILITIES

EXISTING UTILITIES ARE TO BE KEPT IN SERVICE AND PROTECTED DURING THE REHABILITATION PROJECT. PLEASE SEE PROJECT SPECIAL PROVISIONS.

GENERAL NOTES

ALL DETAILS, MATERIALS AND FABRICATION SHALL CONFORM TO THE STANDARD SPECIFICATIONS FOR HIGHWAY AND STRUCTURE CONSTRUCTION OF THE STATE OF WISCONSIN DEPARTMENT OF TRANSPORTATION EDITION OF 2010 EXCEPT AS OTHERWISE NOTED.

ALL STATIONS AND ALL ELEVATIONS ARE IN FEET.

ALL ELEVATIONS ARE REFERRED TO CITY OF MILWAUKEE DATUM.

DRAWINGS SHALL NOT BE SCALED.

BEVEL EXPOSED EDGES OF CONCRETE ¾" UNLESS OTHERWISE NOTED.

BENDING DIMENSIONS FOR REINFORCING BARS ARE OUT TO OUT.

ALL REINFORCING BARS ARE ENGLISH AND THE FIRST OR FIRST TWO DIGITS OF A BAR MARK SIGNIFIES THE SIZE OF THE BAR.

BAR STEEL REINFORCEMENT SHALL BE EMBEDDED 2" CLEAR UNLESS OTHERWISE NOTED.

THE EXISTING GROUND LINE SHALL BE THE UPPER LIMITS OF EXCAVATION FOR STRUCTURE.

ALL SPACES EXCAVATED AND NOT OCCUPIED BY THE NEW STRUCTURE SHALL BE BACKFILLED WITH STRUCTURE BACKFILL.

BACKFILL THE FRONT FACE OF WALLS BEFORE THE BACK FACE.

JOINT FILLER SHALL CONFORM TO AASHTO DESIGNATION M153 TYPE I, II, OR III, OR AASHTO DESIGNATION M213.

THE LOCATIONS OF EXISTING AND PROPOSED UTILITY INSTALLATIONS AS SHOWN ON THE PLANS ARE APPROXIMATE. THERE MAY BE OTHER UTILITY INSTALLATIONS WITHIN THE PROJECT AREA THAT ARE NOT SHOWN.

ESTIMATE OF QUANTITIES

ITEM NO.	BID ITEM	UNIT	NORTH ABUTMENT	SOUTH ABUTMENT	SUPER-STRUCTURE	RAILING	TOTAL
203.0225.S	DEBRIS CONTAINMENT STRUCTURE P-40-509	LS			1		1
206.1000	EXCAVATION FOR STRUCTURES BRIDGES (P-40-509)	LS	½	½			1
210.0100	BACKFILL STRUCTURE	CY	120	120			240
502.0100	CONCRETE MASONRY BRIDGES	CY	11	11	300	29	351
502.2000	COMPRESSION JOINT SEALER PREFORMED ELASTOMERIC (⅜-INCH)	LF			122		122
502.3100	EXPANSION DEVICE (P-40-509)	LS	½	½			1
502.3200	PROTECTIVE SURFACE TREATMENT	SY			976		976
502.5005	MASONRY ANCHORS TYPE L NO. 5 BARS	EACH	208	208			416
505.0605	BAR STEEL REINFORCEMENT HS COATED BRIDGES	LB	2,020	2,020	66,325	1,301	71,666
506.1510	SHEET ZINC	LB				177	177
506.3025	WELDED STUD SHEAR CONNECTORS ⅞ X 8-INCH	EACH			2,184		2,184
506.7000.S	BEARING REPLACEMENT STRUCTURE P-40-509	EACH	13	13			26
509.1500	CONCRETE SURFACE REPAIR	SF	10	10			20
513.7090	RAILING STEEL SPECIAL (P-40-509)	LS				1	1
516.0100	DAMPPROOFING	SY	41	41			82
516.0500	RUBBERIZED MEMBRANE WATERPROOFING	SY	15	15			30
517.0900.S	PREPARATION AND COATING OF TOP FLANGES	LS			1		1
517.1800.S	STRUCTURE REPAINTING RECYCLED ABRASIVE STRUCTURE P-40-509	LS			1		1
517.4500.S	NEGATIVE PRESSURE CONTAINMENT AND COLLECTION OF WASTE MATERIALS STRUCTURE P-40-509	LS			1		1
517.6001.S	PORTABLE DECONTAMINATION FACILITY	EACH			1		1
616.0206	FENCE CHAIN LINK 6-FT	LF	11	11			22
628.1504	SILT FENCE	LF	120	120			240
628.1520	SILT FENCE MAINTENANCE	LF	120	120			240
650.6500	CONSTRUCTION STAKING STRUCTURE LAYOUT (P-40-509)	LS			1		1
652.0230	CONDUIT RIGID NONMETALLIC SCHEDULE 40 2½-INCH	LF	7	7	242		256
SPV.0090	EPOXY INJECTION CRACK REPAIR	LF	30	30			60
SPV.0105	REMOVING OLD BRIDGE DECK (STA. 23+80.25)	LS			1		1
SPV.0165	CONCRETE STAINING	SF				1,425	1,425
SPV.0165	ARCHITECTURAL SURFACE TREATMENT	SF				997	997
SPV.0165	CAST STONE	SF				42	42

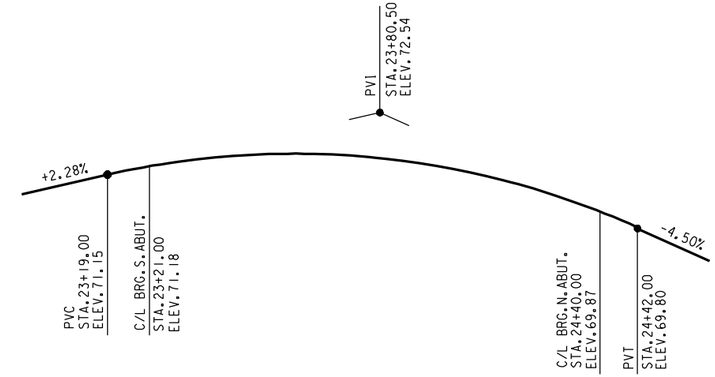

PROFILE GRADE LINE ALONG C/L OF S. HOWELL AVE.

NO.	DATE	REVISION	BY

CITY OF MILWAUKEE
DEPARTMENT OF PUBLIC WORKS
INFRASTRUCTURE SERVICES DIVISION

STRUCTURE P-40-509

DESIGNED BY	DRAWN BY	CHECKED BY	DATE
J.J.K.	K.P.S.	A.R.	02/2010

SECTION PLAN AND QUANTITIES

SHEET 2 OF 22

X

8

8

W:\STR\B0814\ 02ELEV.DGN
02-03-2010

STATE PROJECT NUMBER	SHEET NO.
2060 - 09 - 70	

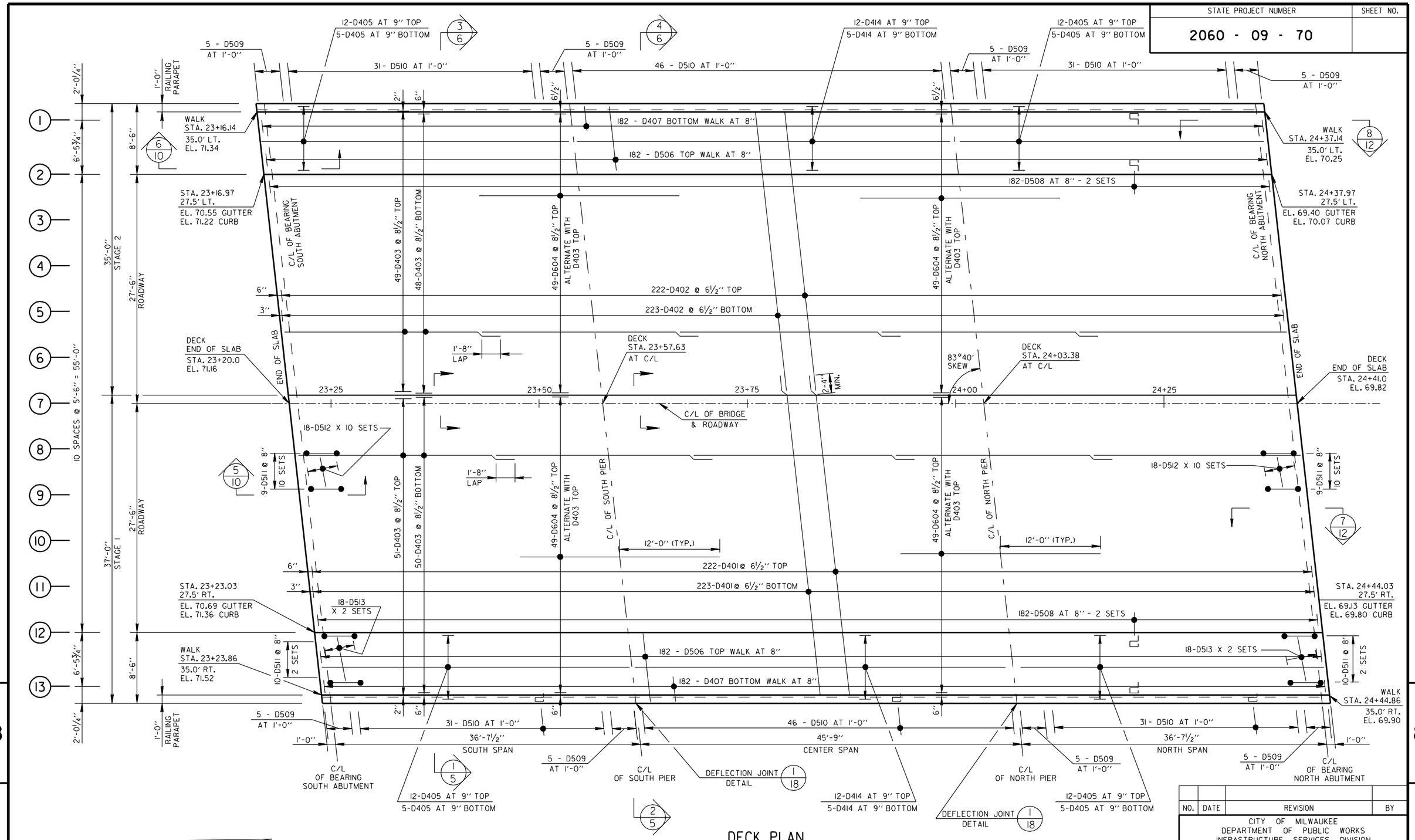

DECK PLAN

NO.	DATE	REVISION	BY

CITY OF MILWAUKEE
DEPARTMENT OF PUBLIC WORKS
INFRASTRUCTURE SERVICES DIVISION

STRUCTURE P-40-509

DESIGNED BY	DRAWN BY	CHECKED BY	DATE
J.J.K.	K.P.S.	A.R.	02-2010

DECK PLAN

SHEET 3 OF 22

X

8

8

W:\STR\B084\ 030DECKSOUTH.DGN
02-03-2010

STATE PROJECT NUMBER	SHEET NO.
2060 - 09 - 70	

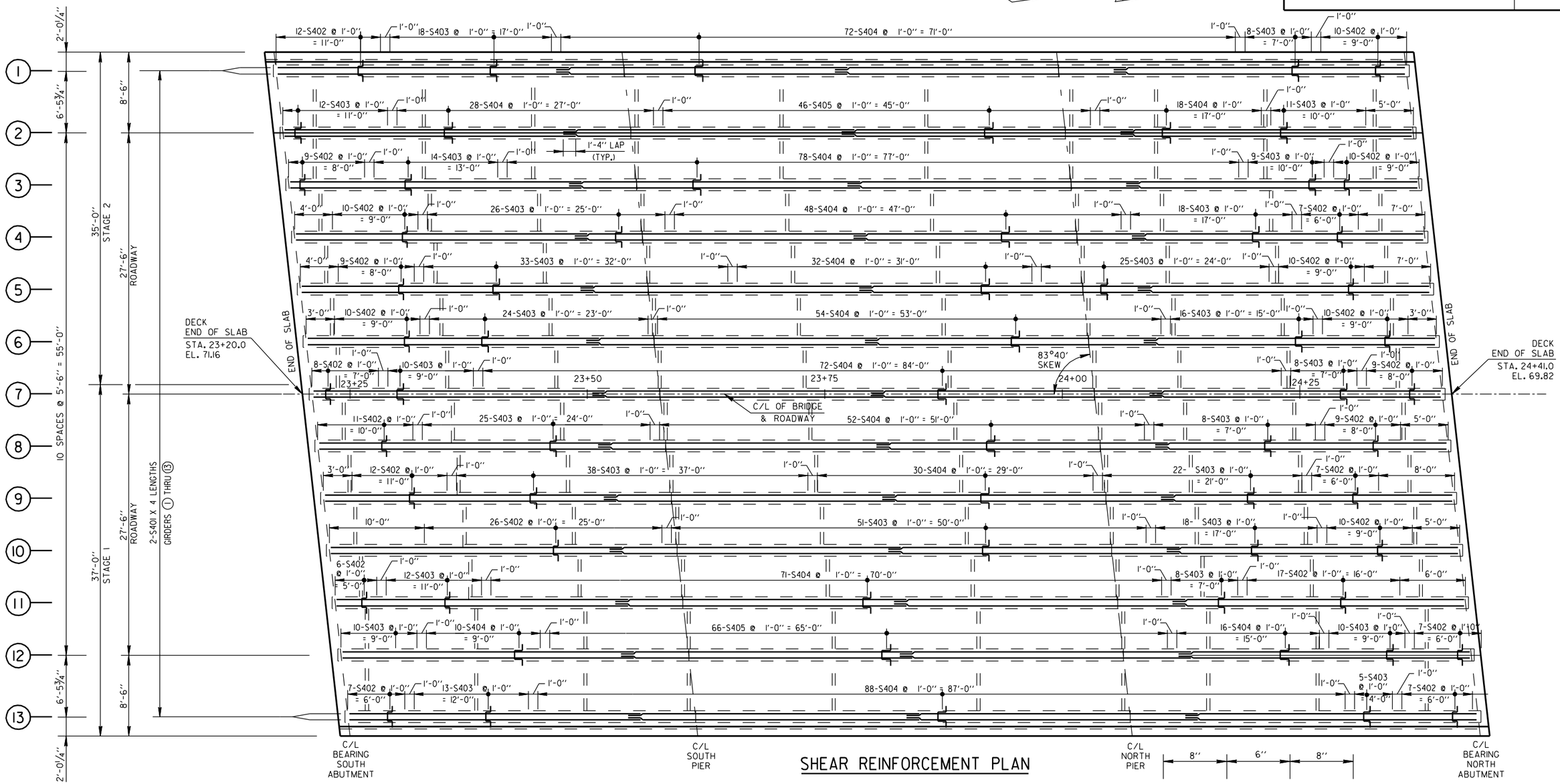

SHEAR REINFORCEMENT PLAN

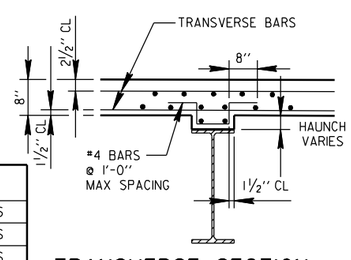

TRANSVERSE SECTION THRU SLAB ON GIRDERS

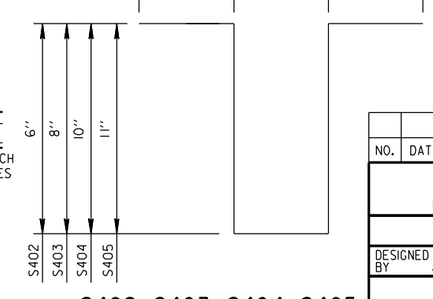

S402, S403, S404, S405

SHEAR REINFORCEMENT QUANTITIES

BID ITEM	UNIT	STAGE 1	STAGE 2
BAR STEEL REINFORCEMENT HS COATED BRIDGE	LB	2,575	2,241

BILL OF BARS - SHEAR REINFORCEMENT STAGE 1

BAR MARK	COAT	NO. REQ'D.	LENGTH	BENT	LOCATION
S401	X	56	30'-8"		DECK - SHEAR REINFORCEMENT - STRINGERS
S402	X	136	2'-6"	X	DECK - SHEAR REINFORCEMENT - STRINGERS
S403	X	242	2'-8"	X	DECK - SHEAR REINFORCEMENT - STRINGERS
S404	X	339	2'-10"	X	DECK - SHEAR REINFORCEMENT - STRINGERS
S405	X	66	2'-11"	X	DECK - SHEAR REINFORCEMENT - STRINGERS

BILL OF BARS - SHEAR REINFORCEMENT STAGE 2

BAR MARK	COAT	NO. REQ'D.	LENGTH	BENT	LOCATION
S401	X	48	30'-8"		DECK - SHEAR REINFORCEMENT - STRINGERS
S402	X	97	2'-6"	X	DECK - SHEAR REINFORCEMENT - STRINGERS
S403	X	214	2'-8"	X	DECK - SHEAR REINFORCEMENT - STRINGERS
S404	X	330	2'-10"	X	DECK - SHEAR REINFORCEMENT - STRINGERS
S405	X	46	2'-11"	X	DECK - SHEAR REINFORCEMENT - STRINGERS

NO.	DATE	REVISION	BY

CITY OF MILWAUKEE
DEPARTMENT OF PUBLIC WORKS
INFRASTRUCTURE SERVICES DIVISION

STRUCTURE P-40-509

DESIGNED BY J.J.K.	DRAWN BY C.J.R.	CHECKED BY A.R.	DATE 02-2010

SHEAR REINFORCEMENT PLAN

SHEET 4 OF 22

X

8

8

W:\STR\B0814\ 04SHEAR_REINF.DGN
02-03-2010

STATE PROJECT NUMBER	SHEET NO.
2060 - 09 - 70	

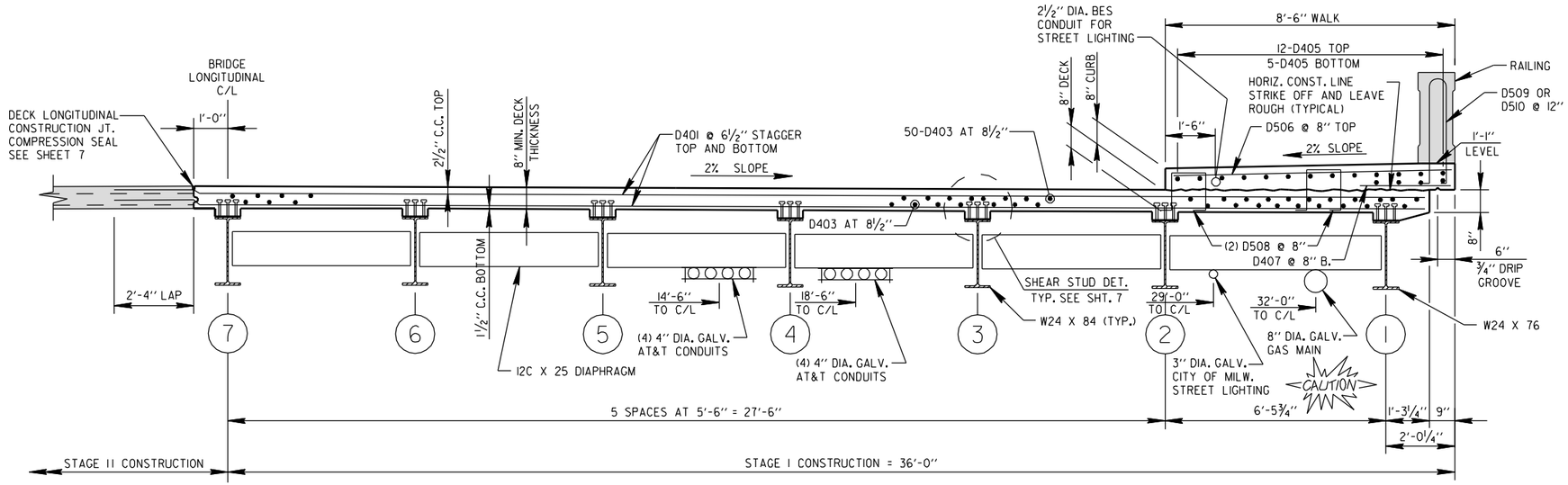

1/3 CROSS SECTION OF STAGE I ALL SPANS

LOOKING NORTH NEAR MIDSPAN

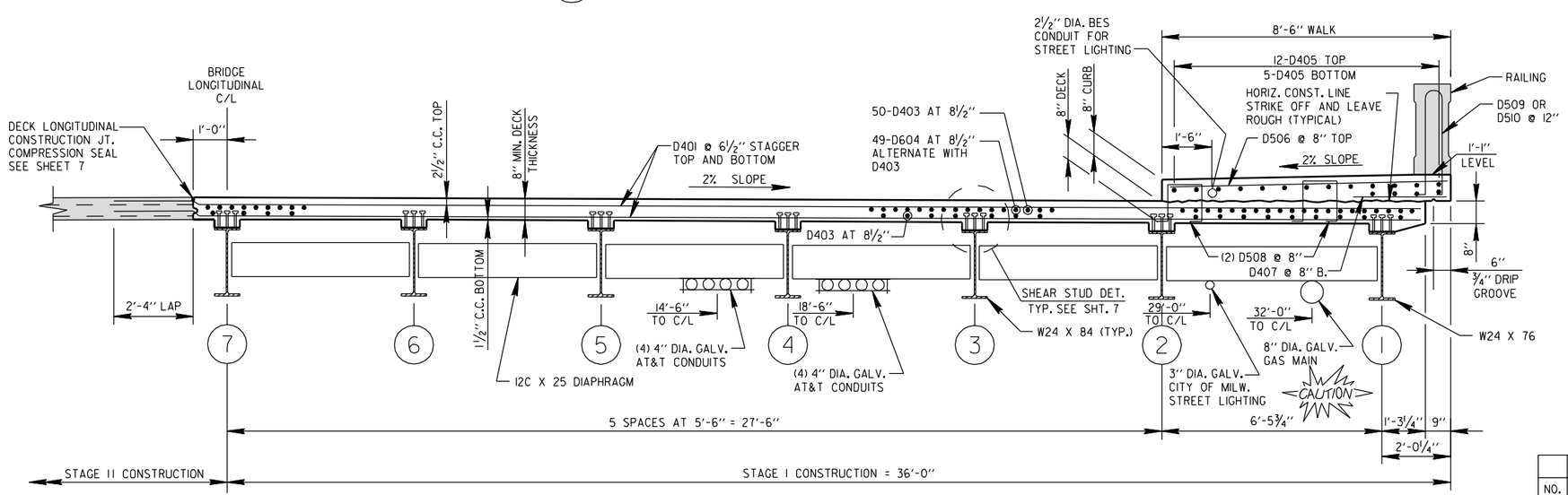

2/3 CROSS SECTION OF STAGE I ALL SPANS

LOOKING NORTH NEAR PIERS

8

8

NO.	DATE	REVISION	BY

CITY OF MILWAUKEE
DEPARTMENT OF PUBLIC WORKS
INFRASTRUCTURE SERVICES DIVISION

STRUCTURE P-40-509

DESIGNED BY J.J.K.	DRAWN BY K.P.S.	CHECKED BY A.R.	DATE 02/2010

STAGE I CONSTRUCTION CROSS SECTIONS

SHEET 5 OF 22

X

W:\STR\B08I4\ 05SECTION.DGN
02-03-2010

STATE PROJECT NUMBER	SHEET NO.
2060 - 09 - 70	

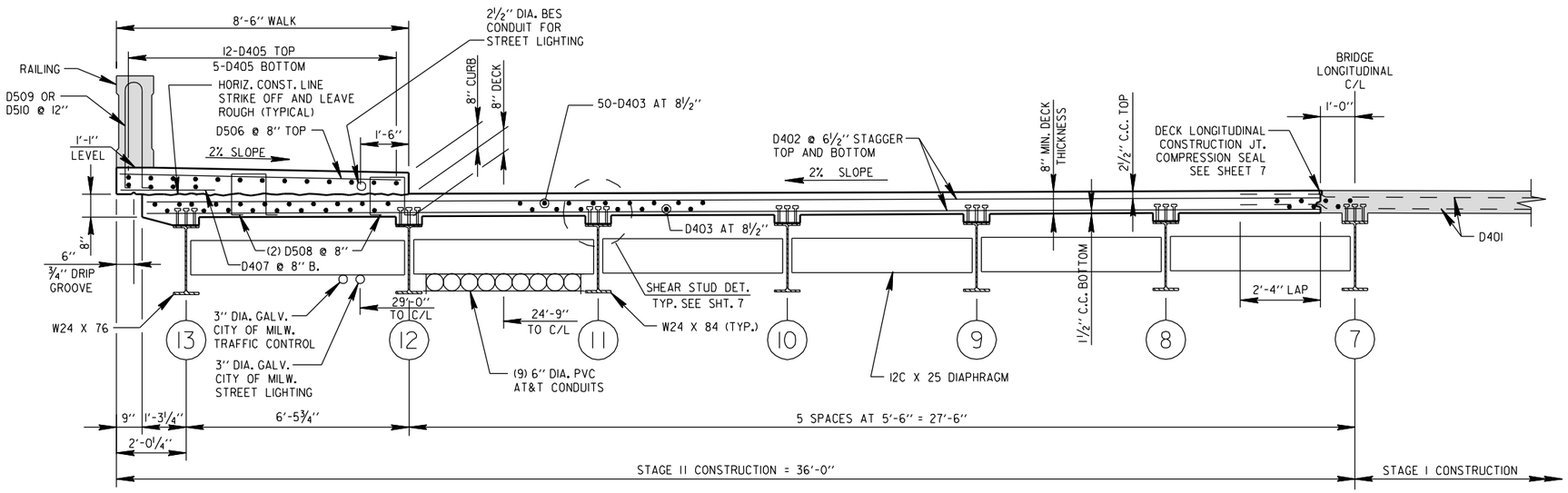

3/3 CROSS SECTION OF STAGE II ALL SPANS

LOOKING NORTH NEAR MIDSPAN

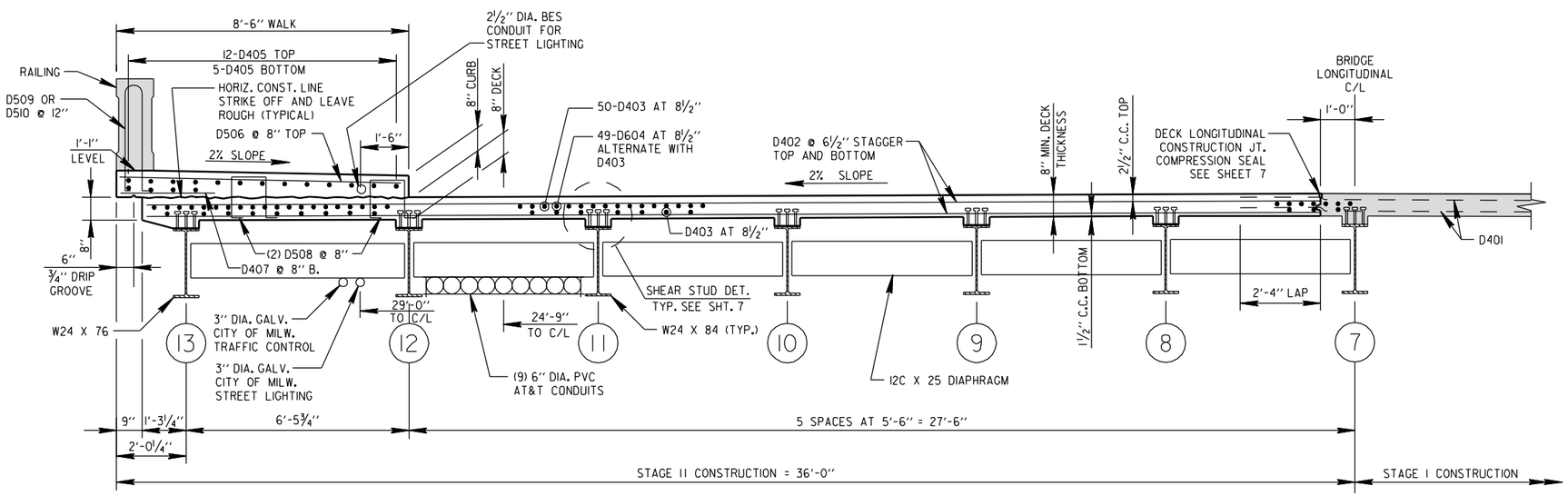

4/3 CROSS SECTION OF STAGE II ALL SPANS

LOOKING NORTH NEAR PIERS

8

8

W:\STR\B0814\ 06SECTION.DGN
02-03-2010

NO.	DATE	REVISION	BY

CITY OF MILWAUKEE
DEPARTMENT OF PUBLIC WORKS
INFRASTRUCTURE SERVICES DIVISION

STRUCTURE P-40-509

DESIGNED BY	DRAWN BY	CHECKED BY	DATE
J.J.K.	K.P.S.	A.R.	11/2009

STAGE II CONSTRUCTION CROSS SECTIONS

SHEET 6 OF 22

X

STATE PROJECT NUMBER	SHEET NO.
2060 - 09 - 70	

BILL OF BARS - DECK STAGE I

BAR MARK	COAT	NO. REQ'D.	LENGTH	BENT	CUT DIAG.	BUNDLE	LOCATION
D401	X	445	39'-7"				DECK - TRANSVERSE TOP AND BOTTOM
D403	X	505	25'-5"				DECK - LONGITUDINAL TOP AND BOTTOM
D604	X	98	24'-0"				DECK - TOP LONGITUDINAL AT PIERS
D405	X	34	37'-3"				WALK - LONGITUDINAL TOP AND BOTTOM
D506	X	182	8'-2"				WALK - TOP TRANSVERSE
D407	X	182	3'-0"				WALK - BOTTOM TRANSVERSE
D508	X	364	3'-10"	X			SIDEWALK STIRRUPS
D509	X	20	9'-9"	X			RAILING STIRRUPS
D510	X	111	7'-2"	X			RAILING STIRRUPS
D511	X	110	7'-8"	X			DIAPHRAGM STIRRUPS
D512	X	180	5'-2"				DIAPHRAGM
D513	X	36	6'-1"				DIAPHRAGM
D414	X	17	45'-5"				WALK - LONGITUDINAL TOP AND BOTTOM

BILL OF BARS - DECK STAGE II

BAR MARK	COAT	NO. REQ'D.	LENGTH	BENT	CUT DIAG.	BUNDLE	LOCATION
D402	X	445	34'-3"				DECK - TRANSVERSE TOP AND BOTTOM
D403	X	485	25'-5"				DECK - LONGITUDINAL TOP AND BOTTOM
D604	X	98	24'-0"				DECK - TOP LONGITUDINAL AT PIERS
D405	X	34	37'-3"				WALK - LONGITUDINAL TOP AND BOTTOM
D506	X	182	8'-2"				WALK - TOP TRANSVERSE
D407	X	182	3'-0"				WALK - BOTTOM TRANSVERSE
D508	X	364	3'-10"	X			SIDEWALK STIRRUPS
D509	X	20	9'-9"	X			RAILING STIRRUPS
D510	X	111	7'-2"	X			RAILING STIRRUPS
D511	X	110	7'-8"	X			DIAPHRAGM STIRRUPS
D512	X	180	5'-2"				DIAPHRAGM
D513	X	36	6'-1"				DIAPHRAGM
D414	X	17	45'-5"				WALK - LONGITUDINAL TOP AND BOTTOM

DECK QUANTITIES

BID ITEM	UNIT	STAGE I	STAGE II
CONCRETE MASONRY BRIDGES	CY	154	146
PROTECTIVE SURFACE TREATMENT	SY	502	474
BAR STEEL REINFORCEMENT HS COATED BRIDGE	LB	31,717	29,792
WELDED STUD SHEAR CONNECTORS 7/8 X 8-INCH ☒	EACH	1,176	1,008

☒ AFTER REMOVAL OF DECK, AND BEFORE ORDERING THE SHEAR STUDS, CONTRACTOR SHALL SHOOT GRADES OF THE TOP OF THE STRINGERS TO DETERMINE HAUNCH HEIGHTS. ORDER APPROPRIATE SIZE STUDS AS NEEDED TO ACHIEVE MINIMUM 2" EMBEDMENT INTO BOTTOM OF NEW DECK SLAB.

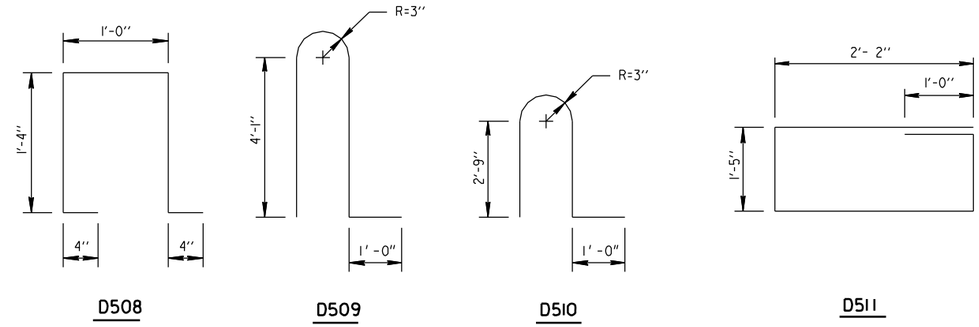

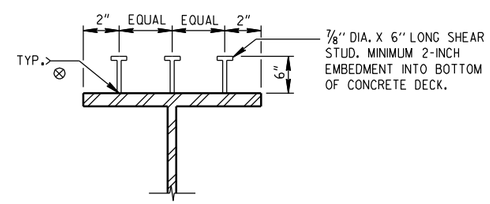

SHEAR STUD DETAIL

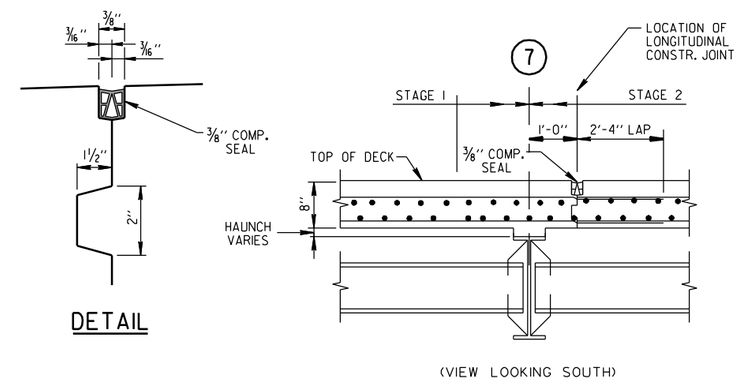

LONGITUDINAL COMPRESSION SEAL

PLACED ALONG LONGITUDINAL CONSTRUCTION JOINT OF BRIDGE DECK

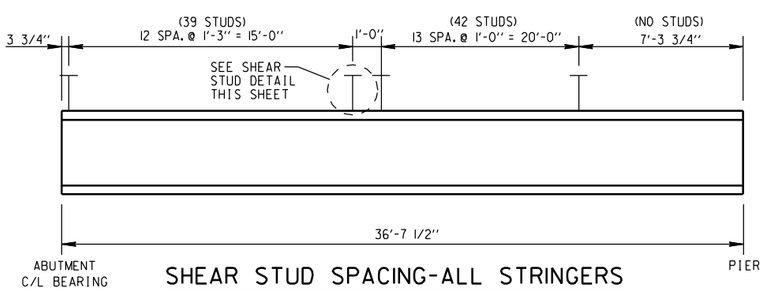

SHEAR STUD SPACING-ALL STRINGERS

END SPANS (NORTH SPAN AND SOUTH SPAN)

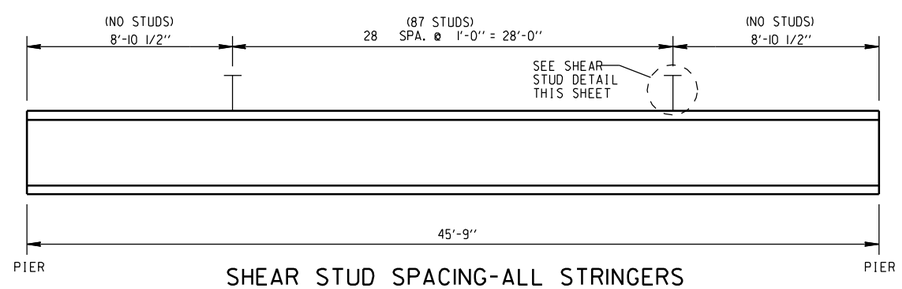

SHEAR STUD SPACING-ALL STRINGERS

CENTER SPAN

NO.	DATE	REVISION	BY

CITY OF MILWAUKEE
DEPARTMENT OF PUBLIC WORKS
INFRASTRUCTURE SERVICES DIVISION

STRUCTURE P-40-509

DESIGNED BY J.J.K.	DRAWN BY K.P.S. J.J.K.	CHECKED BY S.J.S.	DATE 11-2009

DECK BILL OF BARS AND SHEAR CONNECTOR LAYOUT

SHEET 7 OF 22

X

8

8

W:\STR\B0814\ 07DECK_BILL_BARS.DGN
11-03-09

STATE PROJECT NUMBER	SHEET NO.
2060 - 09 - 70	

121'-0"

1	T.DECK = 70.61 HNCH. = +0.31 DCK. = +0.67 D.L.DFL. = 0.00 T. BM. = XX.XX	T.DECK = 70.82 HNCH. = +0.XX DCK. = +0.67 D.L.DFL. = -0.02 T. BM. = XX.XX	T.DECK = 70.98 HNCH. = +0.59 DCK. = +0.67 D.L.DFL. = -0.03 T. BM. = XX.XX	T.DECK = 71.09 HNCH. = +0.XX DCK. = +0.67 D.L.DFL. = -0.02 T. BM. = XX.XX	T.DECK = 71.16 HNCH. = +0.69 DCK. = +0.67 D.L.DFL. = 0.00 T. BM. = XX.XX	T.DECK = 71.16 HNCH. = +0.XX DCK. = +0.67 D.L.DFL. = -0.02 T. BM. = XX.XX	T.DECK = 71.10 HNCH. = +0.75 DCK. = +0.67 D.L.DFL. = -0.04 T. BM. = XX.XX	T.DECK = 70.95 HNCH. = +0.XX DCK. = +0.67 D.L.DFL. = -0.02 T. BM. = XX.XX	T.DECK = 70.74 HNCH. = +0.75 DCK. = +0.67 D.L.DFL. = 0.00 T. BM. = XX.XX	T.DECK = 70.51 HNCH. = +0.XX DCK. = +0.67 D.L.DFL. = -0.02 T. BM. = XX.XX	T.DECK = 70.23 HNCH. = +0.68 DCK. = +0.67 D.L.DFL. = -0.03 T. BM. = XX.XX	T.DECK = 69.89 HNCH. = +0.XX DCK. = +0.67 D.L.DFL. = -0.02 T. BM. = XX.XX	T.DECK = 69.51 HNCH. = +0.34 DCK. = +0.67 D.L.DFL. = 0.00 T. BM. = XX.XX
2	T.DECK = 70.76 HNCH. = +0.48 DCK. = +0.67 D.L.DFL. = 0.00 T. BM. = XX.XX	T.DECK = 70.97 HNCH. = +0.XX DCK. = +0.67 D.L.DFL. = -0.01 T. BM. = XX.XX	T.DECK = 71.12 HNCH. = +0.75 DCK. = +0.67 D.L.DFL. = -0.02 T. BM. = XX.XX	T.DECK = 71.23 HNCH. = +0.XX DCK. = +0.67 D.L.DFL. = -0.01 T. BM. = XX.XX	T.DECK = 71.29 HNCH. = +0.81 DCK. = +0.67 D.L.DFL. = 0.00 T. BM. = XX.XX	T.DECK = 71.29 HNCH. = +0..90 DCK. = +0.67 D.L.DFL. = -0.01 T. BM. = XX.XX	T.DECK = 71.22 HNCH. = +0.XX DCK. = +0.67 D.L.DFL. = -0.02 T. BM. = XX.XX	T.DECK = 71.07 HNCH. = +0.XX DCK. = +0.67 D.L.DFL. = -0.01 T. BM. = XX.XX	T.DECK = 70.86 HNCH. = +0.87 DCK. = +0.67 D.L.DFL. = 0.00 T. BM. = XX.XX	T.DECK = 70.62 HNCH. = +0.XX DCK. = +0.67 D.L.DFL. = -0.01 T. BM. = XX.XX	T.DECK = 70.34 HNCH. = +0.73 DCK. = +0.67 D.L.DFL. = -0.02 T. BM. = XX.XX	T.DECK = 70.00 HNCH. = +0.XX DCK. = +0.67 D.L.DFL. = -0.01 T. BM. = XX.XX	T.DECK = 69.61 HNCH. = +0.45 DCK. = +0.67 D.L.DFL. = 0.00 T. BM. = XX.XX
3	T.DECK = 70.88 HNCH. = +0.35 DCK. = +0.67 D.L.DFL. = 0.00 T. BM. = XX.XX	T.DECK = 71.09 HNCH. = +0.XX DCK. = +0.67 D.L.DFL. = -0.0 T. BM. = XX.XX	T.DECK = 71.24 HNCH. = +0.63 DCK. = +0.67 D.L.DFL. = -0.02 T. BM. = XX.XX	T.DECK = 71.35 HNCH. = +0.XX DCK. = +0.67 D.L.DFL. = -0.01 T. BM. = XX.XX	T.DECK = 71.40 HNCH. = +0.73 DCK. = +0.67 D.L.DFL. = 0.00 T. BM. = XX.XX	T.DECK = 71.40 HNCH. = +0.XX DCK. = +0.67 D.L.DFL. = -0.01 T. BM. = XX.XX	T.DECK = 71.32 HNCH. = +0.79 DCK. = +0.67 D.L.DFL. = -0.02 T. BM. = XX.XX	T.DECK = 71.17 HNCH. = +0.XX DCK. = +0.67 D.L.DFL. = -0.01 T. BM. = XX.XX	T.DECK = 70.95 HNCH. = +0.76 DCK. = +0.67 D.L.DFL. = 0.00 T. BM. = XX.XX	T.DECK = 70.71 HNCH. = +0.XX DCK. = +0.67 D.L.DFL. = -0.01 T. BM. = XX.XX	T.DECK = 70.42 HNCH. = +0.66 DCK. = +0.67 D.L.DFL. = -0.02 T. BM. = XX.XX	T.DECK = 70.08 HNCH. = +0.XX DCK. = +0.67 D.L.DFL. = -0.01 T. BM. = XX.XX	T.DECK = 69.69 HNCH. = +0.33 DCK. = +0.67 D.L.DFL. = 0.00 T. BM. = XX.XX
4	T.DECK = 71.01 HNCH. = +0.28 DCK. = +0.67 D.L.DFL. = 0.00 T. BM. = XX.XX	T.DECK = 71.21 HNCH. = +0.XX DCK. = +0.67 D.L.DFL. = -0.01 T. BM. = XX.XX	T.DECK = 71.36 HNCH. = +0.56 DCK. = +0.67 D.L.DFL. = -0.02 T. BM. = XX.XX	T.DECK = 71.46 HNCH. = +0.XX DCK. = +0.67 D.L.DFL. = -0.01 T. BM. = XX.XX	T.DECK = 71.51 HNCH. = +0.64 DCK. = +0.67 D.L.DFL. = 0.00 T. BM. = XX.XX	T.DECK = 71.50 HNCH. = +0.XX DCK. = +0.67 D.L.DFL. = -0.01 T. BM. = XX.XX	T.DECK = 71.43 HNCH. = +0.74 DCK. = +0.67 D.L.DFL. = -0.02 T. BM. = XX.XX	T.DECK = 71.27 HNCH. = +0.XX DCK. = +0.67 D.L.DFL. = -0.01 T. BM. = XX.XX	T.DECK = 71.05 HNCH. = +0.70 DCK. = +0.67 D.L.DFL. = 0.00 T. BM. = XX.XX	T.DECK = 70.81 HNCH. = +0.XX DCK. = +0.67 D.L.DFL. = -0.01 T. BM. = XX.XX	T.DECK = 70.51 HNCH. = +0.60 DCK. = +0.67 D.L.DFL. = -0.02 T. BM. = XX.XX	T.DECK = 70.17 HNCH. = +0.XX DCK. = +0.67 D.L.DFL. = -0.01 T. BM. = XX.XX	T.DECK = 69.78 HNCH. = +0.18 DCK. = +0.67 D.L.DFL. = 0.00 T. BM. = XX.XX
5	T.DECK = 71.13 HNCH. = +0.25 DCK. = +0.67 D.L.DFL. = 0.00 T. BM. = XX.XX	T.DECK = 71.33 HNCH. = +0.XX DCK. = +0.67 D.L.DFL. = -0.01 T. BM. = XX.XX	T.DECK = 71.48 HNCH. = +0.55 DCK. = +0.67 D.L.DFL. = -0.02 T. BM. = XX.XX	T.DECK = 71.57 HNCH. = +0.XX DCK. = +0.67 D.L.DFL. = -0.01 T. BM. = XX.XX	T.DECK = 71.62 HNCH. = +0.62 DCK. = +0.67 D.L.DFL. = 0.00 T. BM. = XX.XX	T.DECK = 71.61 HNCH. = +0.XX DCK. = +0.67 D.L.DFL. = -0.01 T. BM. = XX.XX	T.DECK = 71.53 HNCH. = +0.71 DCK. = +0.67 D.L.DFL. = -0.02 T. BM. = XX.XX	T.DECK = 71.37 HNCH. = +0.XX DCK. = +0.67 D.L.DFL. = -0.01 T. BM. = XX.XX	T.DECK = 71.15 HNCH. = +0.66 DCK. = +0.67 D.L.DFL. = 0.00 T. BM. = XX.XX	T.DECK = 70.90 HNCH. = +0.XX DCK. = +0.67 D.L.DFL. = -0.01 T. BM. = XX.XX	T.DECK = 70.60 HNCH. = +0.56 DCK. = +0.67 D.L.DFL. = -0.02 T. BM. = XX.XX	T.DECK = 70.26 HNCH. = +0.XX DCK. = +0.67 D.L.DFL. = -0.01 T. BM. = XX.XX	T.DECK = 69.86 HNCH. = +0.23 DCK. = +0.67 D.L.DFL. = 0.00 T. BM. = XX.XX
6	T.DECK = 71.26 HNCH. = +0.29 DCK. = +0.67 D.L.DFL. = 0.00 T. BM. = XX.XX	T.DECK = 71.45 HNCH. = +0.XX DCK. = +0.67 D.L.DFL. = -0.01 T. BM. = XX.XX	T.DECK = 71.60 HNCH. = +0.66 DCK. = +0.67 D.L.DFL. = -0.02 T. BM. = XX.XX	T.DECK = 71.69 HNCH. = +0.XX DCK. = +0.67 D.L.DFL. = -0.01 T. BM. = XX.XX	T.DECK = 71.74 HNCH. = +0.82 DCK. = +0.67 D.L.DFL. = 0.00 T. BM. = XX.XX	T.DECK = 71.72 HNCH. = +0.XX DCK. = +0.67 D.L.DFL. = -0.01 T. BM. = XX.XX	T.DECK = 71.63 HNCH. = +0.72 DCK. = +0.67 D.L.DFL. = -0.02 T. BM. = XX.XX	T.DECK = 71.47 HNCH. = +0.XX DCK. = +0.67 D.L.DFL. = -0.01 T. BM. = XX.XX	T.DECK = 71.24 HNCH. = +0.71 DCK. = +0.67 D.L.DFL. = 0.00 T. BM. = XX.XX	T.DECK = 70.99 HNCH. = +0.XX DCK. = +0.67 D.L.DFL. = -0.01 T. BM. = XX.XX	T.DECK = 70.69 HNCH. = +0.61 DCK. = +0.67 D.L.DFL. = -0.02 T. BM. = XX.XX	T.DECK = 70.34 HNCH. = +0.XX DCK. = +0.67 D.L.DFL. = -0.01 T. BM. = XX.XX	T.DECK = 69.95 HNCH. = +0.26 DCK. = +0.67 D.L.DFL. = 0.00 T. BM. = XX.XX
7	T.DECK = 71.38 HNCH. = +0.37 DCK. = +0.67 D.L.DFL. = 0.00 T. BM. = XX.XX	T.DECK = 71.57 HNCH. = +0.XX DCK. = +0.67 D.L.DFL. = -0.01 T. BM. = XX.XX	T.DECK = 71.71 HNCH. = +0.66 DCK. = +0.67 D.L.DFL. = -0.02 T. BM. = XX.XX	T.DECK = 71.80 HNCH. = +0.XX DCK. = +0.67 D.L.DFL. = -0.01 T. BM. = XX.XX	C/L	T.DECK = 71.85 HNCH. = +0.74 DCK. = +0.67 D.L.DFL. = 0.00 T. BM. = XX.XX	SOUTH	T.DECK = 71.83 HNCH. = +0.XX DCK. = +0.67 D.L.DFL. = -0.01 T. BM. = XX.XX	HOWELL	T.DECK = 71.74 HNCH. = +0.82 DCK. = +0.67 D.L.DFL. = -0.03 T. BM. = XX.XX	AVENUE	T.DECK = 71.57 HNCH. = +0.XX DCK. = +0.67 D.L.DFL. = -0.01 T. BM. = XX.XX	BRIDGE	T.DECK = 71.34 HNCH. = +0.83 DCK. = +0.67 D.L.DFL. = 0.00 T. BM. = XX.XX	C/L	T.DECK = 71.08 HNCH. = +0.XX DCK. = +0.67 D.L.DFL. = -0.01 T. BM. = XX.XX	T.DECK = 70.79 HNCH. = +0.70 DCK. = +0.67 D.L.DFL. = -0.02 T. BM. = XX.XX	T.DECK = 70.43 HNCH. = +0.XX DCK. = +0.67 D.L.DFL. = -0.01 T. BM. = XX.XX	T.DECK = 70.03 HNCH. = +0.35 DCK. = +0.67 D.L.DFL. = 0.00 T. BM. = XX.XX
8	T.DECK = 71.28 HNCH. = +0.31 DCK. = +0.67 D.L.DFL. = 0.00 T. BM. = XX.XX	T.DECK = 71.47 HNCH. = +0.XX DCK. = +0.67 D.L.DFL. = -0.01 T. BM. = XX.XX	T.DECK = 71.61 HNCH. = +0.60 DCK. = +0.67 D.L.DFL. = -0.02 T. BM. = XX.XX	T.DECK = 71.70 HNCH. = +0.XX DCK. = +0.67 D.L.DFL. = -0.01 T. BM. = XX.XX	T.DECK = 71.74 HNCH. = +0.66 DCK. = +0.67 D.L.DFL. = 0.00 T. BM. = XX.XX	T.DECK = 71.71 HNCH. = +0.XX DCK. = +0.67 D.L.DFL. = -0.01 T. BM. = XX.XX	T.DECK = 71.62 HNCH. = +0.74 DCK. = +0.67 D.L.DFL. = -0.03 T. BM. = XX.XX	T.DECK = 71.45 HNCH. = +0.XX DCK. = +0.67 D.L.DFL. = -0.01 T. BM. = XX.XX	T.DECK = 71.21 HNCH. = +0.69 DCK. = +0.67 D.L.DFL. = 0.00 T. BM. = XX.XX	T.DECK = 70.96 HNCH. = +0.XX DCK. = +0.67 D.L.DFL. = -0.01 T. BM. = XX.XX	T.DECK = 70.65 HNCH. = +0.60 DCK. = +0.67 D.L.DFL. = -0.02 T. BM. = XX.XX	T.DECK = 70.29 HNCH. = +0.XX DCK. = +0.67 D.L.DFL. = -0.01 T. BM. = XX.XX	T.DECK = 69.89 HNCH. = +0.23 DCK. = +0.67 D.L.DFL. = 0.00 T. BM. = XX.XX
9	T.DECK = 71.19 HNCH. = +0.28 DCK. = +0.67 D.L.DFL. = 0.00 T. BM. = XX.XX	T.DECK = 71.37 HNCH. = +0.XX DCK. = +0.67 D.L.DFL. = -0.01 T. BM. = XX.XX	T.DECK = 71.51 HNCH. = +0.XX DCK. = +0.67 D.L.DFL. = -0.02 T. BM. = XX.XX	T.DECK = 71.59 HNCH. = +0.XX DCK. = +0.67 D.L.DFL. = -0.01 T. BM. = XX.XX	T.DECK = 71.63 HNCH. = +0.XX DCK. = +0.67 D.L.DFL. = 0.00 T. BM. = XX.XX	T.DECK = 71.60 HNCH. = +0.XX DCK. = +0.67 D.L.DFL. = -0.01 T. BM. = XX.XX	T.DECK = 71.50 HNCH. = +0.XX DCK. = +0.67 D.L.DFL. = -0.01 T. BM. = XX.XX	T.DECK = 71.33 HNCH. = +0.XX DCK. = +0.67 D.L.DFL. = -0.01 T. BM. = XX.XX	T.DECK = 71.09 HNCH. = +0.66 DCK. = +0.67 D.L.DFL. = 0.00 T. BM. = XX.XX	T.DECK = 70.83 HNCH. = +0.XX DCK. = +0.67 D.L.DFL. = -0.01 T. BM. = XX.XX	T.DECK = 70.52 HNCH. = +0.57 DCK. = +0.67 D.L.DFL. = -0.02 T. BM. = XX.XX	T.DECK = 70.16 HNCH. = +0.XX DCK. = +0.67 D.L.DFL. = -0.01 T. BM. = XX.XX	T.DECK = 69.75 HNCH. = +0.12 DCK. = +0.67 D.L.DFL. = 0.00 T. BM. = XX.XX
10	T.DECK = 71.09 HNCH. = +0.33 DCK. = +0.67 D.L.DFL. = 0.00 T. BM. = XX.XX	T.DECK = 71.27 HNCH. = +0.XX DCK. = +0.67 D.L.DFL. = -0.01 T. BM. = XX.XX	T.DECK = 71.41 HNCH. = +0.60 DCK. = +0.67 D.L.DFL. = -0.02 T. BM. = XX.XX	T.DECK = 71.49 HNCH. = +0.XX DCK. = +0.67 D.L.DFL. = -0.01 T. BM. = XX.XX	T.DECK = 71.52 HNCH. = +0.66 DCK. = +0.67 D.L.DFL. = 0.00 T. BM. = XX.XX	T.DECK = 71.49 HNCH. = +0.XX DCK. = +0.67 D.L.DFL. = -0.01 T. BM. = XX.XX	T.DECK = 71.39 HNCH. = +0.73 DCK. = +0.67 D.L.DFL. = -0.02 T. BM. = XX.XX	T.DECK = 71.21 HNCH. = +0.XX DCK. = +0.67 D.L.DFL. = -0.01 T. BM. = XX.XX	T.DECK = 70.96 HNCH. = +0.69 DCK. = +0.67 D.L.DFL. = 0.00 T. BM. = XX.XX	T.DECK = 70.70 HNCH. = +0.XX DCK. = +0.67 D.L.DFL. = -0.01 T. BM. = XX.XX	T.DECK = 70.39 HNCH. = +0.56 DCK. = +0.67 D.L.DFL. = -0.02 T. BM. = XX.XX	T.DECK = 70.02 HNCH. = +0.XX DCK. = +0.67 D.L.DFL. = -0.01 T. BM. = XX.XX	T.DECK = 69.61 HNCH. = +0.23 DCK. = +0.67 D.L.DFL. = 0.00 T. BM. = XX.XX
11	T.DECK = 70.99 HNCH. = +0.40 DCK. = +0.67 D.L.DFL. = 0.00 T. BM. = XX.XX	T.DECK = 71.17 HNCH. = +0.XX DCK. = +0.67 D.L.DFL. = -0.01 T. BM. = XX.XX	T.DECK = 71.30 HNCH. = +0.67 DCK. = +0.67 D.L.DFL. = -0.02 T. BM. = XX.XX	T.DECK = 71.61 HNCH. = +0.XX DCK. = +0.67 D.L.DFL. = -0.01 T. BM. = XX.XX	T.DECK = 71.41 HNCH. = +0.74 DCK. = +0.67 D.L.DFL. = 0.00 T. BM. = XX.XX	T.DECK = 71.37 HNCH. = +0.XX DCK. = +0.67 D.L.DFL. = -0.01 T. BM. = XX.XX	T.DECK = 71.27 HNCH. = +0.76 DCK. = +0.67 D.L.DFL. = -0.02 T. BM. = XX.XX	T.DECK = 71.09 HNCH. = +0.XX DCK. = +0.67 D.L.DFL. = -0.01 T. BM. = XX.XX	T.DECK = 70.84 HNCH. = +0.77 DCK. = +0.67 D.L.DFL. = 0.00 T. BM. = XX.XX	T.DECK = 70.57 HNCH. = +0.XX DCK. = +0.67 D.L.DFL. = -0.01 T. BM. = XX.XX	T.DECK = 70.26 HNCH. = +0.42 DCK. = +0.67 D.L.DFL. = -0.02 T. BM. = XX.XX	T.DECK = 69.89 HNCH. = +0.XX DCK. = +0.67 D.L.DFL. = -0.01 T. BM. = XX.XX	T.DECK = 69.47 HNCH. = +0.28 DCK. = +0.67 D.L.DFL. = 0.00 T. BM. = XX.XX
12	T.DECK = 70.90 HNCH. = +0.53 DCK. = +0.67 D.L.DFL. = 0.00 T. BM. = XX.XX	T.DECK = 71.07 HNCH. = +0.XX DCK. = +0.67 D.L.DFL. = -0.01 T. BM. = XX.XX	T.DECK = 71.20 HNCH. = +0.81 DCK. = +0.67 D.L.DFL. = -0.02 T. BM. = XX.XX	T.DECK = 71.27 HNCH. = +0.XX DCK. = +0.67 D.L.DFL. = -0.01 T. BM. = XX.XX	T.DECK = 71.30 HNCH. = +0.86 DCK. = +0.67 D.L.DFL. = 0.00 T. BM. = XX.XX	T.DECK = 71.26 HNCH. = +0.XX DCK. = +0.67 D.L.DFL. = -0.01 T. BM. = XX.XX	T.DECK = 71.15 HNCH. = +0.87 DCK. = +0.67 D.L.DFL. = -0.02 T. BM. = XX.XX	T.DECK = 70.97 HNCH. = +0.XX DCK. = +0.67 D.L.DFL. = -0.01 T. BM. = XX.XX	T.DECK = 70.71 HNCH. = +0.87 DCK. = +0.67 D.L.DFL. = 0.00 T. BM. = XX.XX	T.DECK = 70.67 HNCH. = +0.XX DCK. = +0.67 D.L.DFL. = -0.01 T. BM. = XX.XX	T.DECK = 70.13 HNCH. = +0.71 DCK. = +0.67 D.L.DFL. = -0.02 T. BM. = XX.XX	T.DECK = 69.75 HNCH. = +0.XX DCK. = +0.67 D.L.DFL. = -0.01 T. BM. = XX.XX	T.DECK = 69.34 HNCH. = +0.38 DCK. = +0.67 D.L.DFL. = 0.00 T. BM. = XX.XX
13	T.DECK = 70.78 HNCH. = +0.40 DCK. = +0.67 D.L.DFL. = 0.00 T. BM. = XX.XX	T.DECK = 70.95 HNCH. = +0.XX DCK. = +0.67 D.L.DFL. = -0.02 T. BM. = XX.XX	T.DECK = 71.07 HNCH. = +0.66 DCK. = +0.67 D.L.DFL. = -0.03 T. BM. = XX.XX	T.DECK = 71.14 HNCH. = +0.XX DCK. = +0.67 D.L.DFL. = -0.02 T. BM. = XX.XX	T.DECK = 71.16 HNCH. = +0.69 DCK. = +0.67 D.L.DFL. = 0.00 T. BM. = XX.XX	T.DECK = 71.12 HNCH. = +0.XX DCK. = +0.67 D.L.DFL. = -0.02 T. BM. = XX.XX	T.DECK = 71.01 HNCH. = +0.72 DCK. = +0.67 D.L.DFL. = -0.03 T. BM. = XX.XX	T.DECK = 70.82 HNCH. = +0.XX DCK. = +0.67 D.L.DFL. = -0.02 T. BM. = XX.XX	T.DECK = 70.56 HNCH. = +0.69 DCK. = +0.67 D.L.DFL. = 0.00 T. BM. = XX.XX	T.DECK = 70.29 HNCH. = +0.XX DCK. = +0.67 D.L.DFL. = -0.02 T. BM. = XX.XX	T.DECK = 69.97 HNCH. = +0.81 DCK. = +0.67 D.L.DFL. = -0.03 T. BM. = XX.XX	T.DECK = 69.57 HNCH. = +0.XX DCK. = +0.67 D.L.DFL. = -0.02 T. BM. = XX.XX	T.DECK = 69.17 HNCH. = +0.27 DCK. = +0.67 D.L.DFL. = 0.00 T. BM. = XX.XX

6'-5¾" 5'-6" 5'-6" 5'-6" 5'-6" 5'-6" 5'-6" 5'-6" 5'-6" 5'-6" 5'-6" 5'-6" 6'-5¾"

9'-4⅞" 9'-4⅞" 9'-4⅞" 9'-4⅞" 11'-5¼" 11'-5¼" 11'-5¼" 11'-5¼" 9'-4⅞" 9'-4⅞" 9'-4⅞" 9'-4⅞"

37'-7½" 45'-9" 37'-7½"

C/L BRIDGE NORTH ABUTMENT

C/L BRIDGE SOUTH ABUTMENT

C/L BRIDGE SOUTH PIER

C/L BRIDGE EAST PIER

NOTE

HAUNCH HEIGHT SHOWN IS AN ESTIMATE ONLY AND BASED ON PRELIMINARY FIELD MEASUREMENTS OF TOP OF BEAM ELEVATIONS. FINAL HAUNCH HEIGHTS WILL BE DETERMINED AFTER SHOOTING GRADES OF TOP OF BEAMS AFTER REMOVAL OF DECK.

NO.	DATE	REVISION	BY

CITY OF MILWAUKEE
DEPARTMENT OF PUBLIC WORKS
INFRASTRUCTURE SERVICES DIVISION

STRUCTURE P-40-509

DESIGNED BY	DRAWN BY	CHECKED BY	DATE
S.J.S.	J.J.K.	J.J.K.	02-2010

DECK GRADES

SHEET 8 OF 22

X

8

8

2/1/2010
W:\STR\B0814\ 08_DECK_GRADES.DGN

STATE PROJECT NUMBER	SHEET NO.
2060 - 09 - 70	

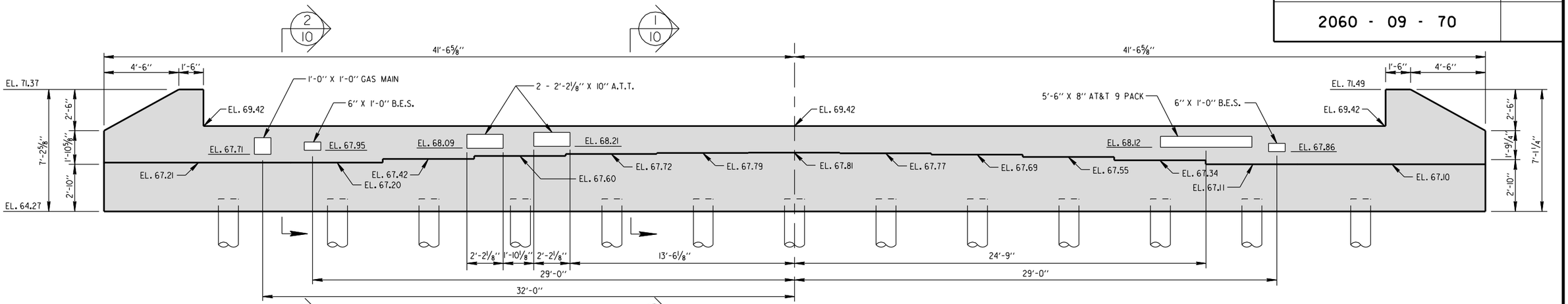

EXISTING SOUTH ABUTMENT - ELEVATION VIEW

LOOKING SOUTH

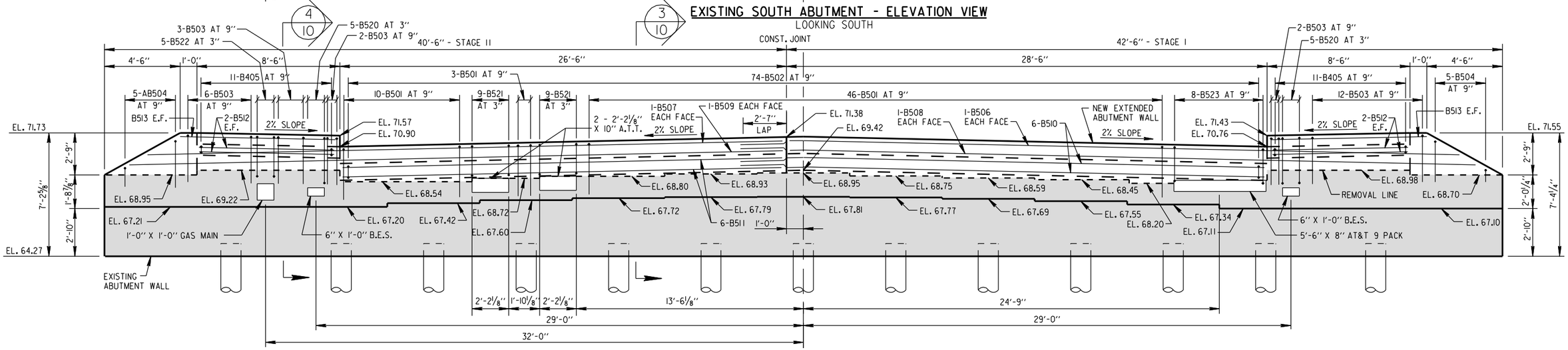

PROPOSED SOUTH ABUTMENT - ELEVATION VIEW

LOOKING SOUTH

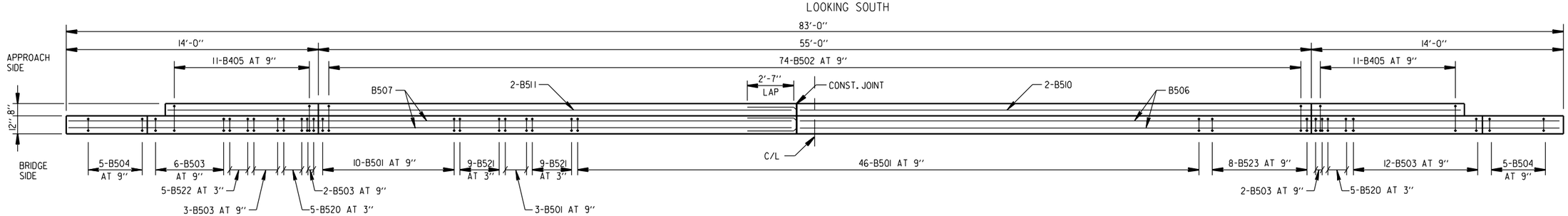

PROPOSED SOUTH ABUTMENT - PLAN VIEW

NO.	DATE	REVISION	BY

CITY OF MILWAUKEE
DEPARTMENT OF PUBLIC WORKS
INFRASTRUCTURE SERVICES DIVISION

STRUCTURE P-40-509

DESIGNED BY J.J.K.	DRAWN BY K.P.S.	CHECKED BY A.R.	DATE 02/2010

SOUTH ABUTMENT ELEVATION AND PLAN VIEWS

SHEET 9 OF 22

X

8

8

W:\STR\B0841\ 09ABUTSOUTH.DGN
02-03-2010

STATE PROJECT NUMBER	SHEET NO.
2060 - 09 - 70	

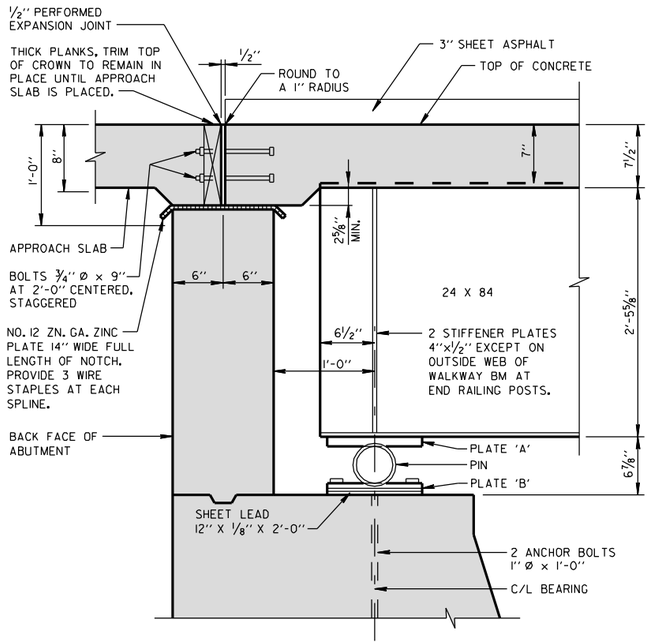

SECTION EXISTING ABUTMENT AT ROADWAY (1/9)

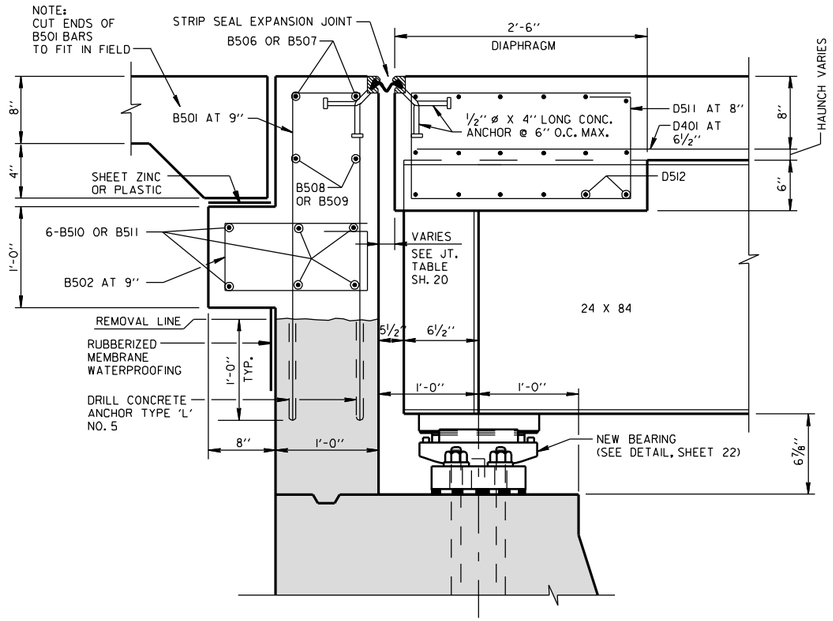

SECTION PROPOSED ABUTMENT AT ROADWAY (3/9) (5/3)

BILL OF BARS - SOUTH ABUTMENT

BAR MARK	COATED	NO. REQ'D.	LENGTH	BENT	CUT DIAG.	BUNDLE	LOCATION
B501	X	59	6'-11"	X			BACKWALL DOWEL ROADWAY
B502	X	74	4'-2"	X			ROADWAY CORBEL
B503	X	25	6'-5"	X			BACKWALL DOWEL WALK
B504	X	5	12'-0"	X	X		ENDWALL
B405	X	22	3'-8"	X			WALK CORBEL - SIDEWALK
B506	X	2	42'-7"				BACKWALL TRANSVERSE STAGE I - UPPER
B507	X	2	37'-10"				BACKWALL TRANSVERSE STAGE II - UPPER
B508	X	2	43'-6"				BACKWALL TRANSVERSE STAGE I - LOWER
B509	X	2	38'-11"				BACKWALL TRANSVERSE STAGE II - LOWER
B510	X	6	31'-0"				TRANSVERSE ROADWAY CORBEL STAGE I / BACKWALL
B511	X	6	26'-3"				TRANSVERSE ROADWAY CORBEL STAGE II / BACKWALL
B512	X	6	8'-2"				TRANSVERSE WALK CORBEL
B513	X	4	9'-2"				TRANSVERSE WALK / WINGWALL CONNECTION
B520	X	10	5'-9"	X			BLOCK OUT AT BES
B521	X	18	5'-2"	X			BLOCK OUT AT AT&T
B522	X	5	5'-1"	X			BLOCK OUT AT GAS MAIN
B523	X	8	3'-10"	X			ABOVE AT&T 9 PACK

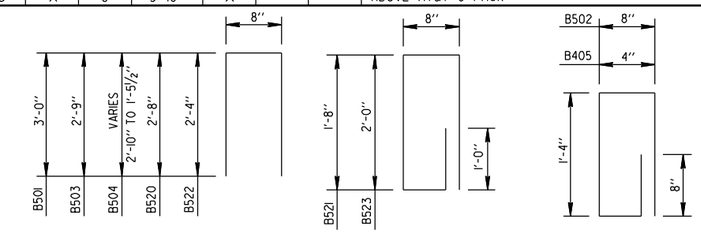

B501, B503, B504, B520, B522 | B521, B523 | B502, B405

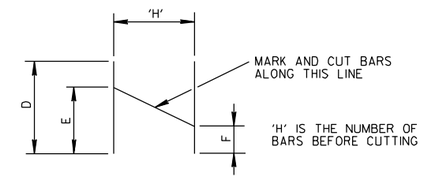

CUTTING DIAGRAM

MARK	D	E	F	'H'	NO. OF SETS REQ'D.
B504	12'-0"	8'-7"	3'-5"	5	1

SOUTH ABUTMENT QUANTITIES

BACKFILL STRUCTURE	120 CY
CONCRETE MASONRY BRIDGES	11 CY
MASONRY ANCHORS TYPE L NO. 5 BARS	208 EACH
BAR STEEL REINFORCEMENT HS COATED BRIDGES	2,020 LB
DAMPPROOFING	41 SY
RUBBERIZED MEMBRANE WATERPROOFING	15 SY
SILT FENCE	120 LF
SILT FENCE MAINTENANCE	120 LF

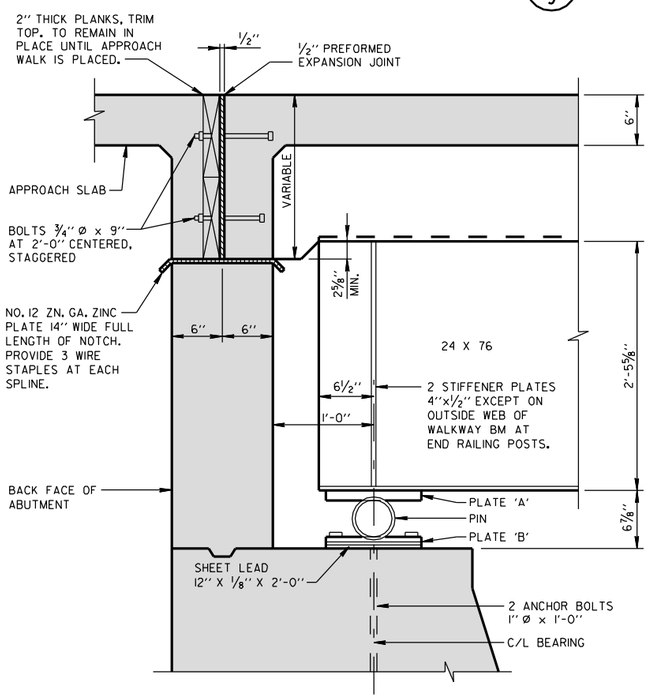

SECTION EXISTING ABUTMENT AT SIDEWALK (2/9)

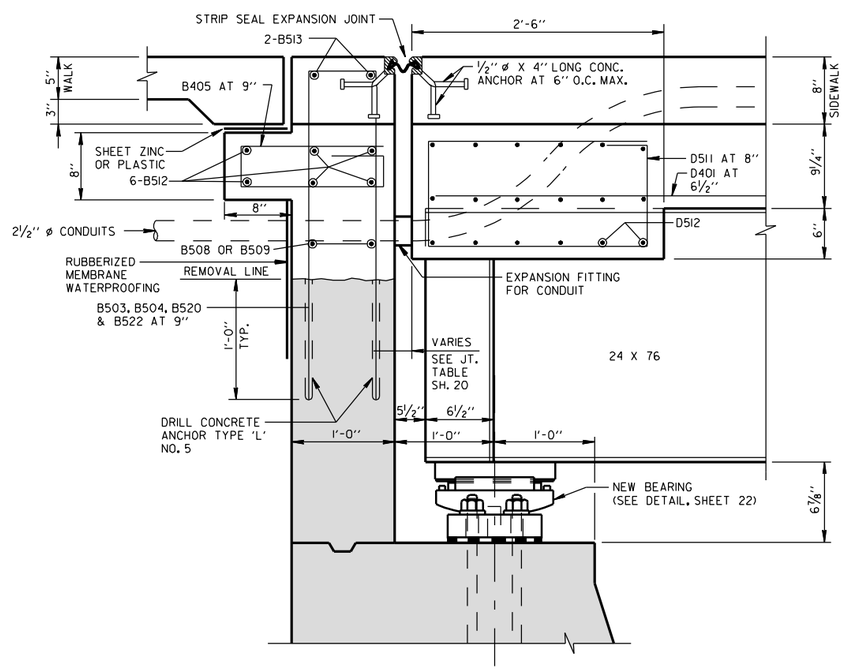

SECTION PROPOSED ABUTMENT AT SIDEWALK (4/9) (6/3)

NO.	DATE	REVISION	BY

CITY OF MILWAUKEE
DEPARTMENT OF PUBLIC WORKS
INFRASTRUCTURE SERVICES DIVISION

STRUCTURE P-40-509

DESIGNED BY	DRAWN BY	CHECKED BY	DATE
J.J.K.	K.P.S.	A.R.	02/2010

SOUTH ABUTMENT SECTIONS AND BILL OF BARS

SHEET 10 OF 22

X

8

8

W:\STR\BORI\ 10ABUTSOUTH.DGN
02-01-2010

STATE PROJECT NUMBER	SHEET NO.
2060 - 09 - 70	

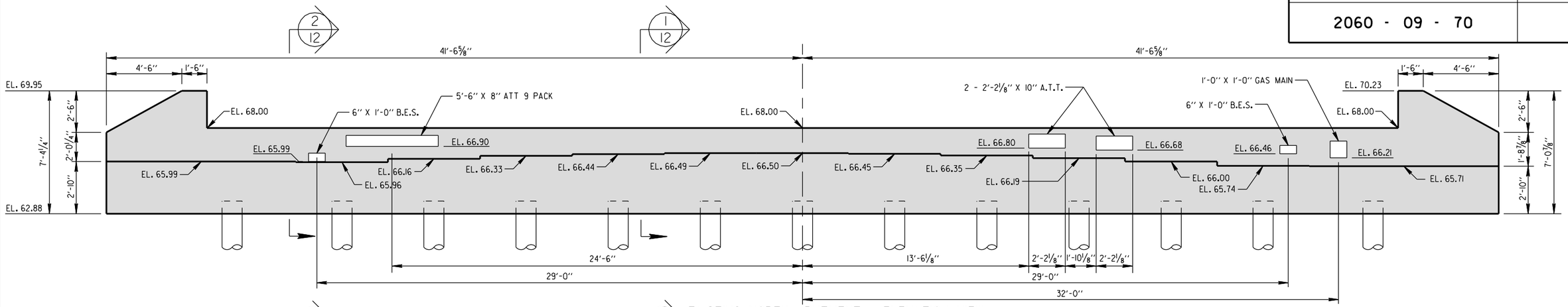

EXISTING NORTH ABUTMENT - ELEVATION VIEW

LOOKING NORTH

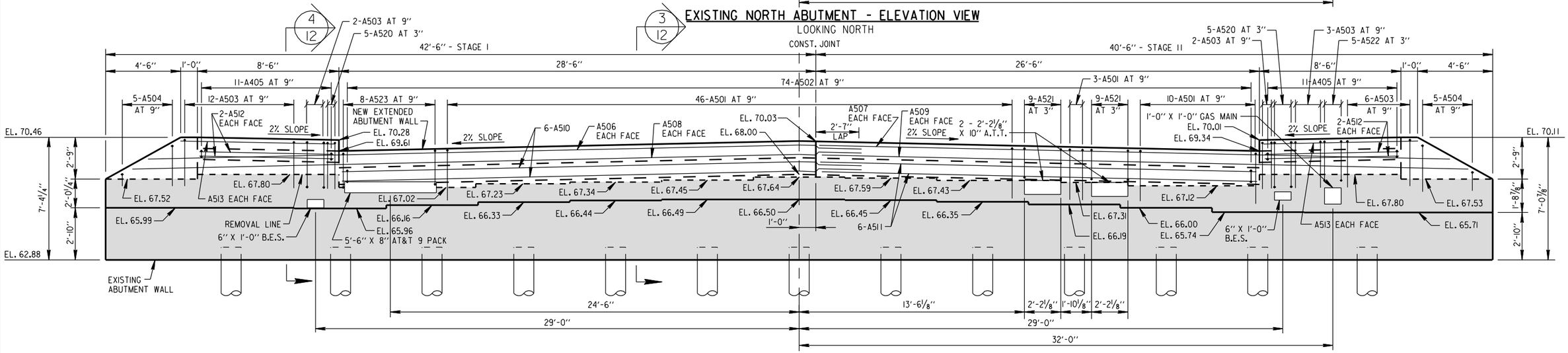

PROPOSED NORTH ABUTMENT - ELEVATION VIEW

LOOKING NORTH

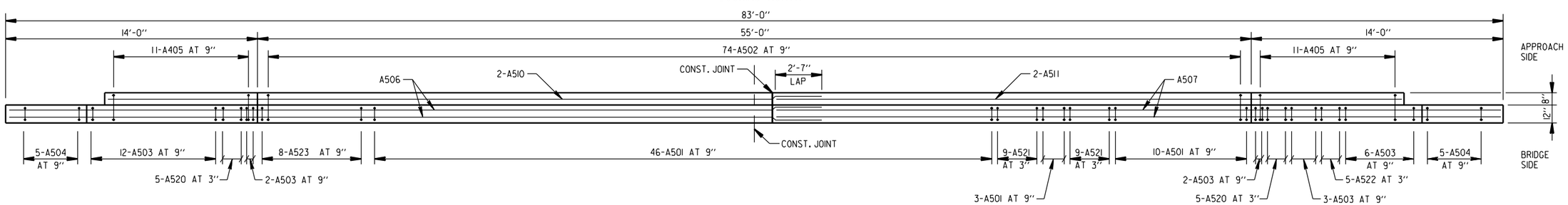

PROPOSED NORTH ABUTMENT - PLAN VIEW

NO.	DATE	REVISION	BY

CITY OF MILWAUKEE
DEPARTMENT OF PUBLIC WORKS
INFRASTRUCTURE SERVICES DIVISION

STRUCTURE P-40-509

DESIGNED BY S.J.S.	DRAWN BY K.P.S.	CHECKED BY A.R.	DATE 01/2010

NORTH ABUTMENT ELEVATION AND PLAN VIEW

SHEET 11 OF 22

X

8

8

W:\STR\B0844\ 11ABUTNORTH.DGN
02-03-2010

STATE PROJECT NUMBER	SHEET NO.
2060 - 09 - 70	

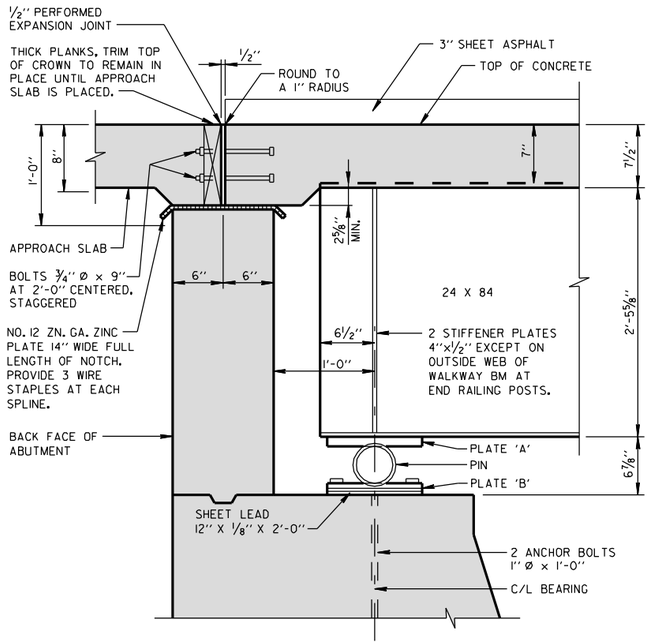

SECTION EXISTING ABUTMENT AT ROADWAY (1/11)

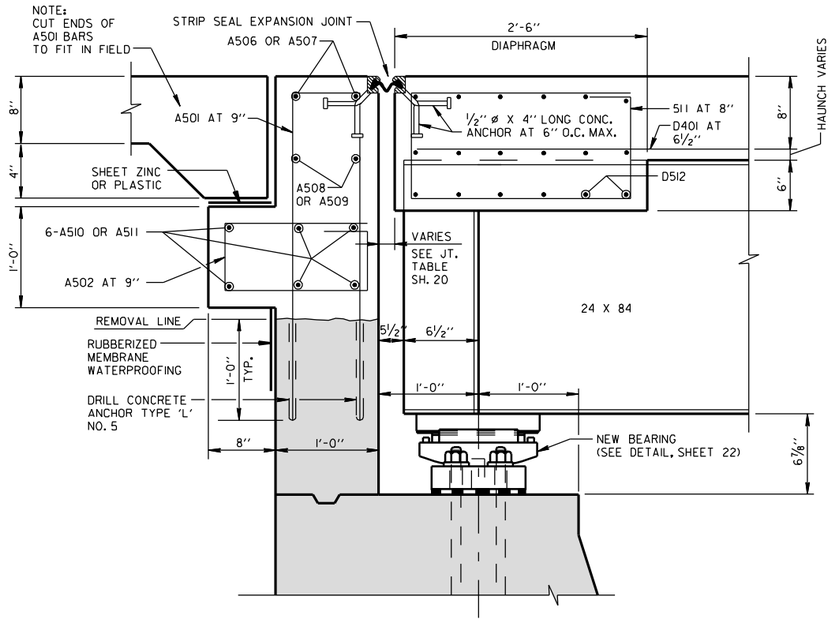

SECTION PROPOSED ABUTMENT AT ROADWAY (3/11) (7/3)

BILL OF BARS - NORTH ABUTMENT

BAR MARK	COATED	NO. REQ'D.	LENGTH	BENT	CUT DIAG.	BUNDLE	LOCATION
A501	X	59	6'-11"	X			BACKWALL DOWEL ROADWAY
A502	X	74	4'-2"	X			ROADWAY CORBEL
A503	X	25	6'-5"	X			BACKWALL DOWEL WALK
A504	X	5	12'-0"	X	X		BACKWALL DOWEL WALK
A405	X	22	3'-8"	X			WALK CORBEL - SIDEWALK
A506	X	2	42'-7"				BACKWALL TRANSVERSE STAGE I - UPPER
A507	X	2	27'-10"				BACKWALL TRANSVERSE STAGE II - UPPER
A508	X	2	43'-6"				BACKWALL TRANSVERSE STAGE I - LOWER
A509	X	2	38'-11"				BACKWALL TRANSVERSE STAGE II - LOWER
A510	X	6	31'-0"				TRANSVERSE ROADWAY CORBEL STAGE I / BACKWALL
A511	X	6	26'-3"				TRANSVERSE ROADWAY CORBEL STAGE II / BACKWALL
A512	X	6	8'-2"				TRANSVERSE WALK / CORBEL
A513	X	4	9'-2"				TRANSVERSE WALK / WINGWALL CONNECTION
A520	X	10	5'-9"	X			BLOCK OUT AT BES
A521	X	18	5'-2"	X			BLOCK OUT AT AT&T
A522	X	5	5'-1"	X			BLOCK OUT AT GAS MAIN
A523	X	8	3'-10"	X			ABOVE AT&T 9 PACK

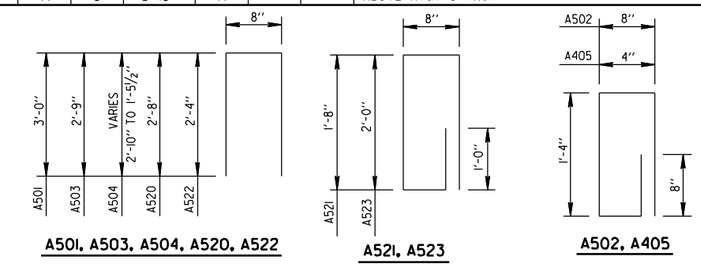

A501, A503, A504, A520, A522 — A521, A523 — A502, A405

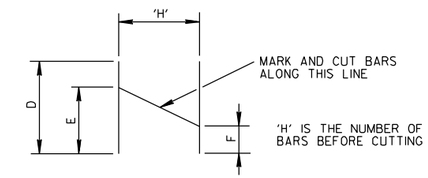

CUTTING DIAGRAM

MARK	D	E	F	'H'	NO. OF SETS REQ'D.
A504	12'-0"	8'-7"	3'-5"	5	1

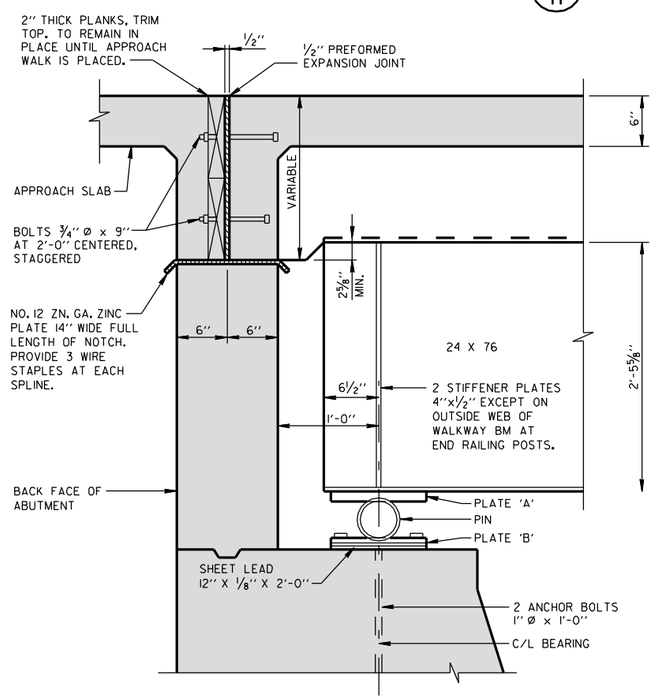

SECTION EXISTING ABUTMENT AT SIDEWALK (2/11)

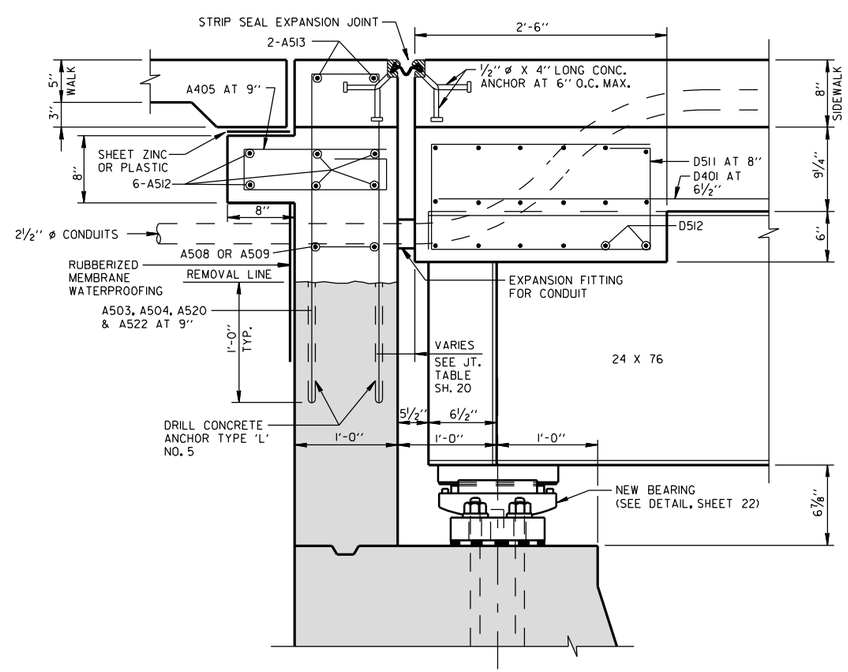

SECTION PROPOSED ABUTMENT AT SIDEWALK (4/11) (8/3)

NORTH ABUTMENT QUANTITIES

BACKFILL STRUCTURE	120 CY
CONCRETE MASONRY BRIDGES	11 CY
MASONRY ANCHORS TYPE L NO. 5 BARS	208 EACH
BAR STEEL REINFORCEMENT HS COATED BRIDGES	2,020 LB
DAMPPROOFING	41 SY
RUBBERIZED MEMBRANE WATERPROOFING	15 SY
SILT FENCE	120 LF
SILT FENCE MAINTENANCE	120 LF

NO.	DATE	REVISION	BY

CITY OF MILWAUKEE
DEPARTMENT OF PUBLIC WORKS
INFRASTRUCTURE SERVICES DIVISION

STRUCTURE P-40-509

DESIGNED BY	DRAWN BY	CHECKED BY	DATE
J.J.K.	K.P.S.	A.R.	02/2010

NORTH ABUTMENT SECTIONS AND BILL OF BARS

SHEET 12 OF 22

X

8

8

W:\STR\BOR\4\ 12ABUTNORTH.DGN
02-01-2010

STATE PROJECT NUMBER	SHEET NO.
2060 - 09 - 70	

● ALTERNATE BOULEVARD 2-WAY CLAMP MAY BE USED WHEN THE POST IS EITHER BOLTED TO THE 3½" SLEEVE OR DIRECTLY WELDED TO THE BASE PLATE.

▲ ½" DIA. X 6⅞" LONG GALVANIZED HEX BOLT WITH NUT & WASHER. TYPE S, ½" DIA. CONCRETE MASONRY ANCHORS MAY BE SUBSTITUTED FOR ½" DIA. BOLTS. ANCHOR PLATE NOT REQUIRED WHEN TYPE S ANCHORS ARE USED. SEE ✩

✩ ½" DIA. CONCRETE MASONRY ANCHOR, TYPE "S", 6" EMBEDMENT (EPOXY ANCHORED) MIN. PULLOUT OF 10 KIPS, THREADED LENGTH OF ANCHOR, WASHER, AND NUT SHALL BE GALVANIZED.

PAGE QUANTITIES	
FENCE CHAIN LINK 6-FT	21 LF

GENERAL NOTES

BID ITEM SHALL BE "FENCE CHAIN LINK 6-FT" WHICH INCLUDES ALL ITEMS SHOWN.

POSTS ARE TO BE SET VERTICAL.

ALL FENCING COMPONENTS SHALL BE GALVANIZED STEEL OR APPROVED ALTERNATE LISTED BELOW.

ALL RAILS, POSTS AND SLEEVES ARE STANDARD WEIGHT PIPE, SCHEDULE 40.

PLACE ALL NUTS ON OUTSIDE OF FENCE.

TOP RAIL SHALL BE CONTINUOUS OVER INTERIOR POSTS. MINIMUM LENGTH OF TOP RAIL BETWEEN SPLICES SHALL BE 20'-0". PLACE TOP RAIL SPLICES NEAR ¼ POINTS OF POST SPACING. NO 9 GAGE TIES AT 9" SPACING REQ'D. ON RAILS & POSTS WITHOUT TENSION BARS.

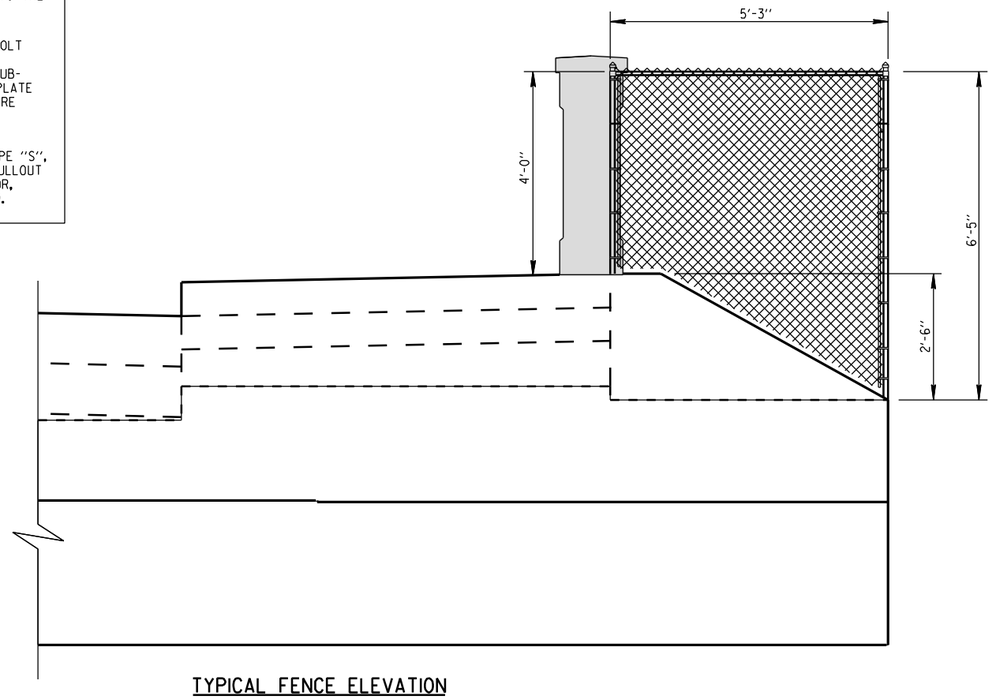

TYPICAL FENCE ELEVATION

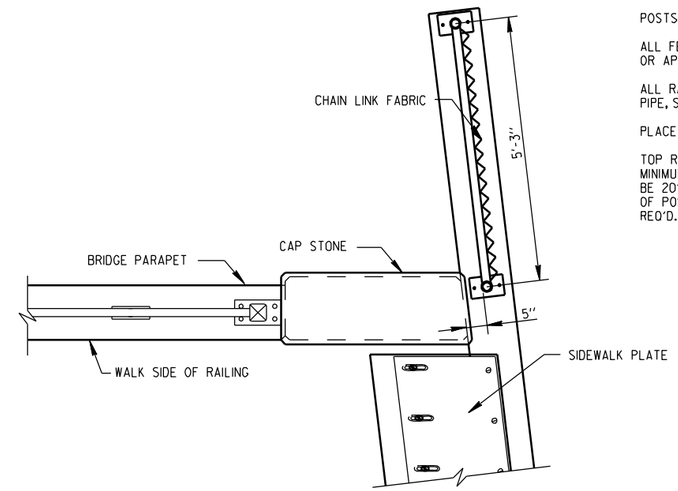

FENCE PLAN VIEW

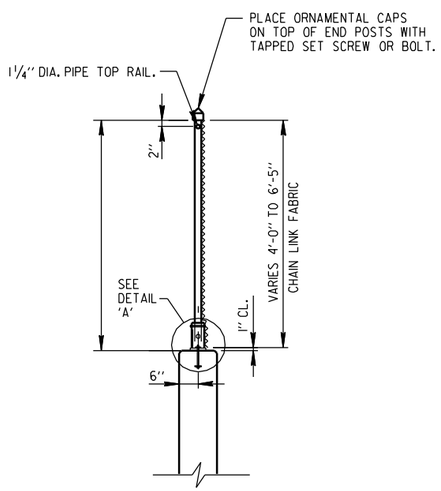

SECTION THRU FENCE ON ABUTMENT WING WALL

FOR NON-SIDEWALK APPLICATIONS

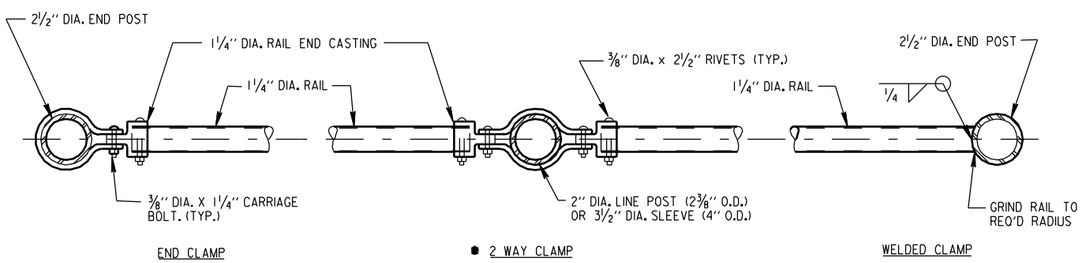

SECTION A-A

NOTE: PLACE ALL NUTS ON OUTSIDE OF FENCE

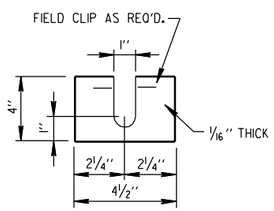

POST SHIM DETAILS

SHIMS REQUIRED ONLY WHEN POSTS ARE WELDED TO BASE PLATES. PROVIDE 4 SHIMS PER POST.

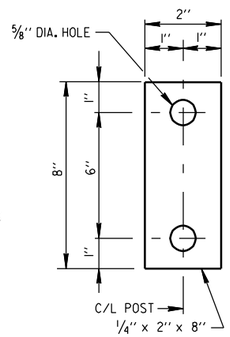

ANCHOR PLATE

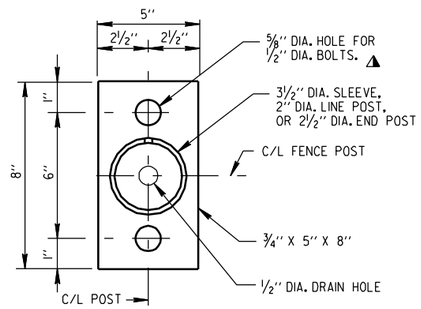

BASE PLATE

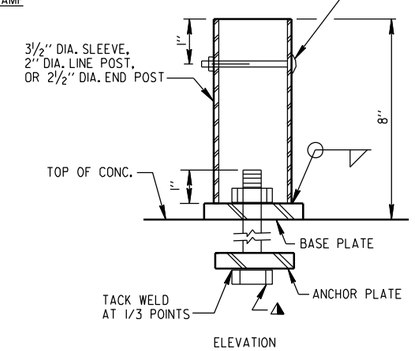

POST ATTACHMENT

UNIT SHALL BE GALV. AFTER FABRICATION

NOTE:
IN LIEU OF USING THE 3½" DIA. SLEEVE, THE 2" DIA. FENCE POST MAY BE WELDED TO THE BASE PLATE.

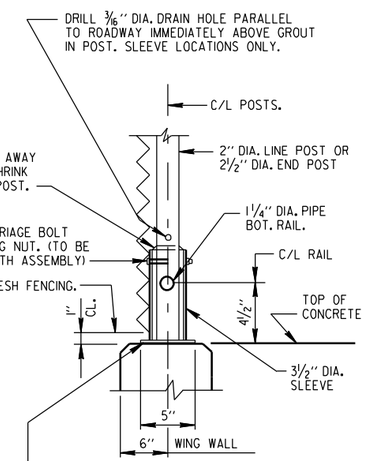

DETAIL A

NO.	DATE	REVISION	BY

CITY OF MILWAUKEE
DEPARTMENT OF PUBLIC WORKS
INFRASTRUCTURE SERVICES DIVISION

STRUCTURE P-40-509

DESIGNED BY S.S.	DRAWN BY K.P.S.	CHECKED BY A.R.	DATE 11/2009

CHAIN LINK FENCE DETAILS

SHEET 13 OF 22

X

8

8

W:\STR\B0814\ 13FENCE.DGN
11-24-09

STATE PROJECT NUMBER	SHEET NO.
2060 - 09 - 70	

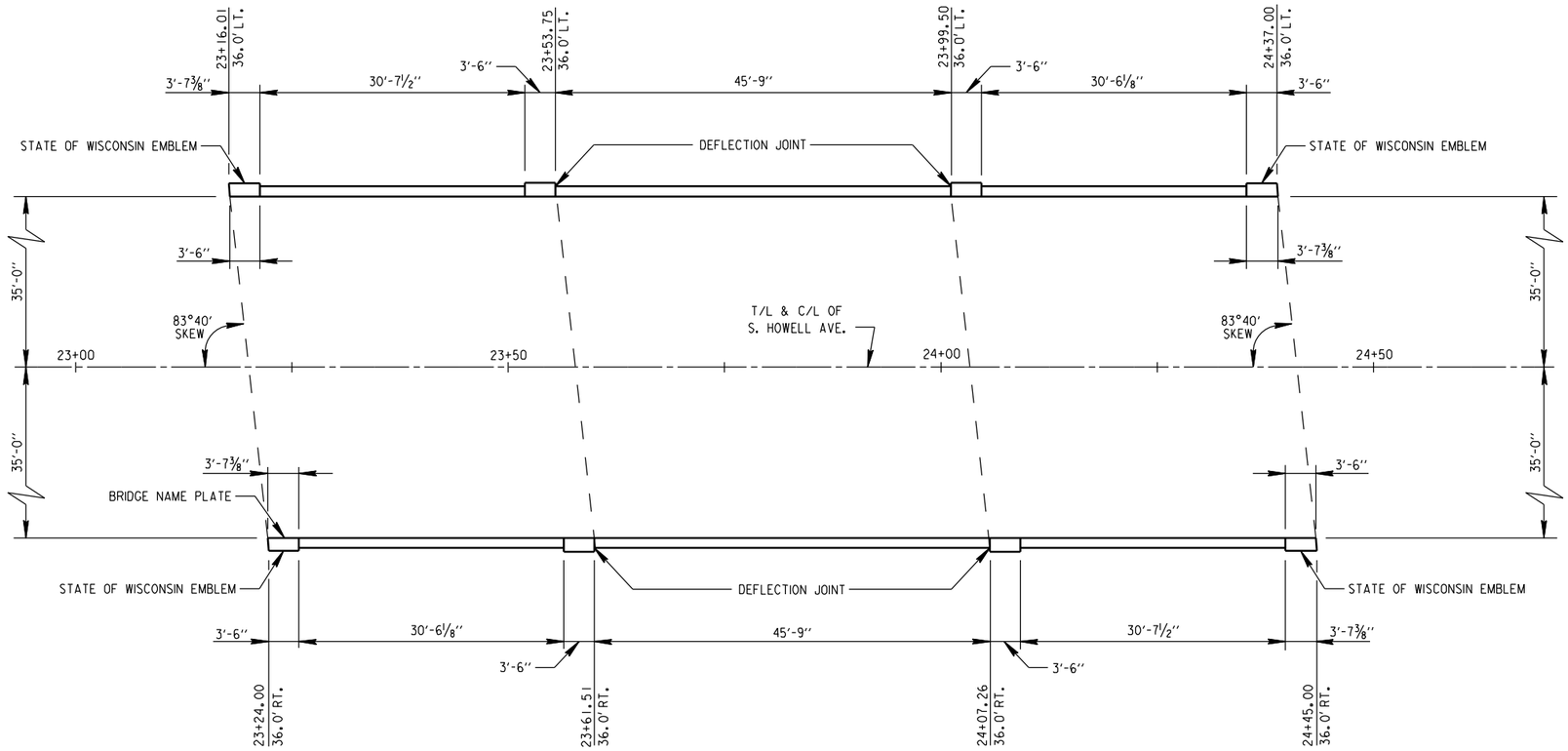

RAILING PLAN

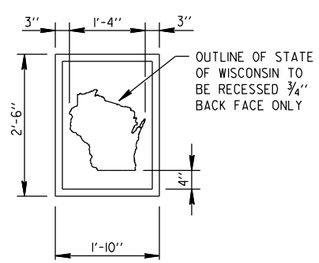

PARTIAL ELEVATION OF NORTH AND SOUTH RAILING - OUTSIDE FACE STATE OF WISCONSIN EMBLEM (4 LOCATIONS)

SCALE: ⅜" = 1'-0"

NO.	DATE	REVISION	BY

CITY OF MILWAUKEE
DEPARTMENT OF PUBLIC WORKS
INFRASTRUCTURE SERVICES DIVISION

STRUCTURE P-40-509

DESIGNED BY	DRAWN BY	CHECKED BY	DATE
J.J.K.	K.P.S.	S.J.S.	11-2009

RAILING PLAN AND DETAILS

SHEET 14 OF 22

X

8

8

W:\STR\B084\ 14RAILING.DGN
11-19-2009

STATE PROJECT NUMBER	SHEET NO.
2060 - 09 - 70	

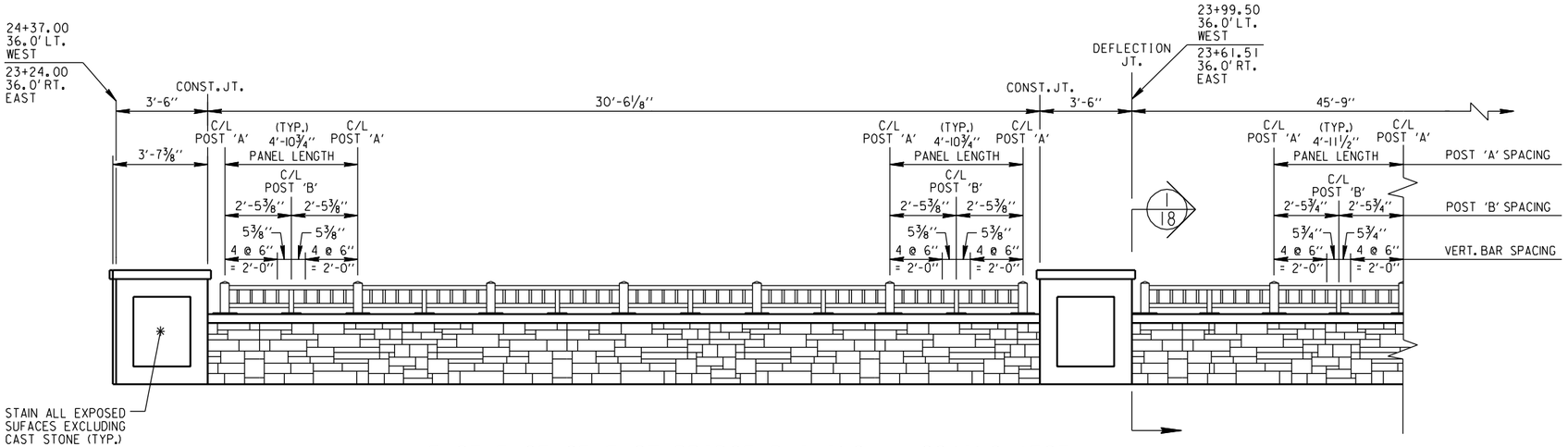

EAST FACE OF EAST BRIDGE RAILING - LOOKING WEST

WEST FACE OF WEST BRIDGE RAILING - LOOKING EAST

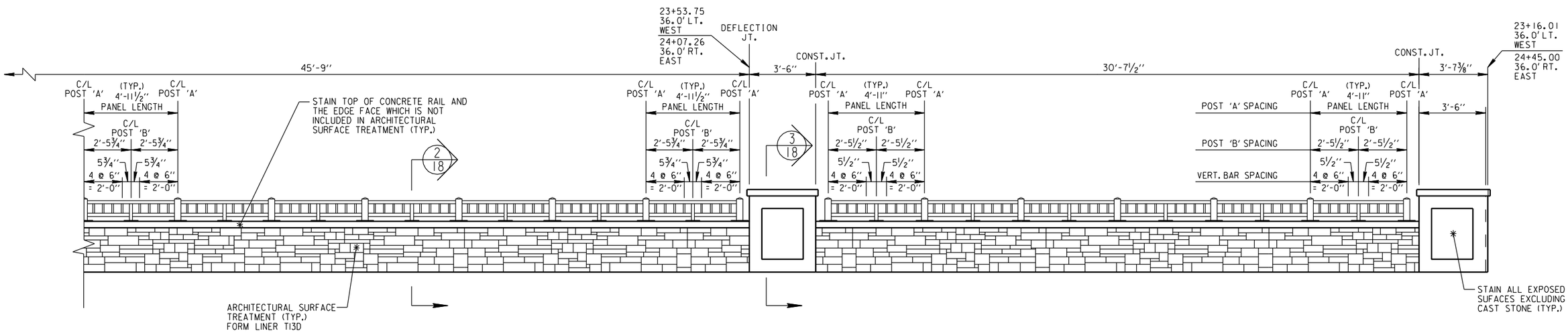

EAST FACE OF EAST BRIDGE RAILING - LOOKING WEST

WEST FACE OF WEST BRIDGE RAILING - LOOKING EAST

8

8

NO.	DATE	REVISION	BY

CITY OF MILWAUKEE
DEPARTMENT OF PUBLIC WORKS
INFRASTRUCTURE SERVICES DIVISION

STRUCTURE P-40-509

DESIGNED BY J.J.K.	DRAWN BY K.P.S.	CHECKED BY A.R.	DATE 02/2010

BRIDGE RAILING ELEVATIONS

SHEET 15 OF 22

X

W:\STR\B0814\15RAILING.DGN
02-01-2010

STATE PROJECT NUMBER	SHEET NO.
2060 - 09 - 70	

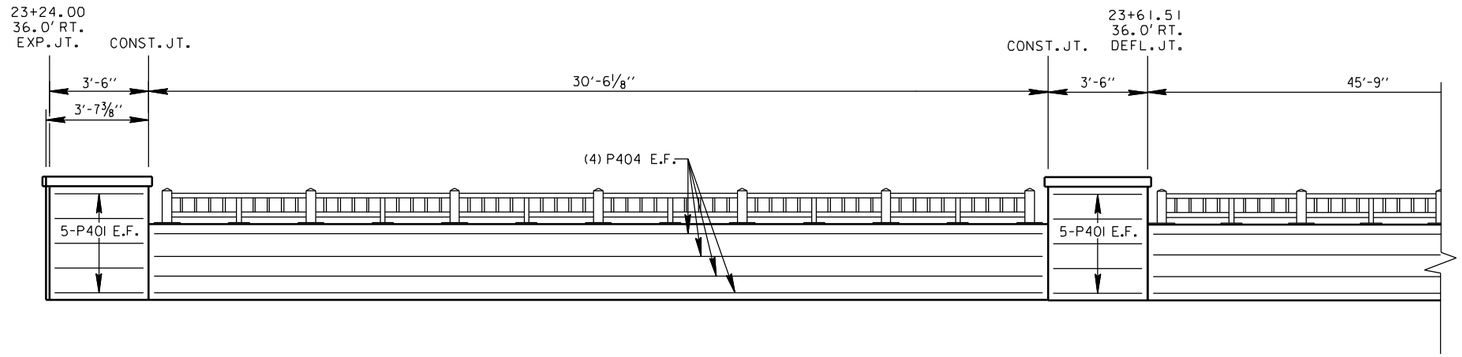

EAST FACE OF EAST BRIDGE RAILING - LOOKING WEST

WEST SIDE RAILING IS SIMILAR

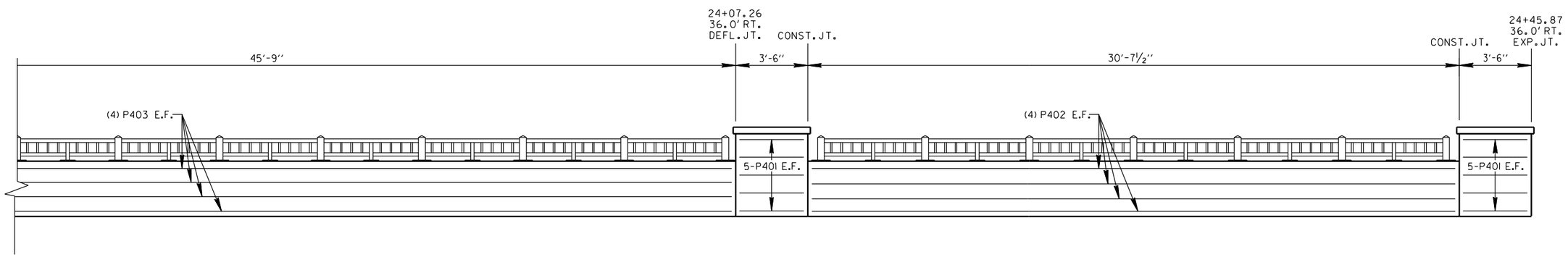

EAST FACE OF EAST BRIDGE RAILING - LOOKING WEST

WEST SIDE RAILING IS SIMILAR

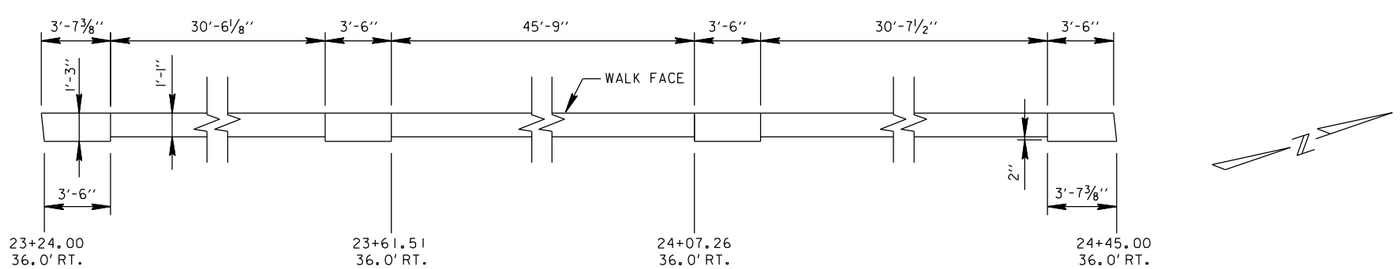

PLAN VIEW OF EAST BRIDGE RAILING

(WEST SIDE RAILING IS SIMILAR)

8

8

NO.	DATE	REVISION	BY

CITY OF MILWAUKEE
DEPARTMENT OF PUBLIC WORKS
INFRASTRUCTURE SERVICES DIVISION

STRUCTURE P-40-509

DESIGNED BY J.J.K.	DRAWN BY K.P.S.	CHECKED BY A.R.	DATE 11/2009

RAILING
BAR DETAILS
AND RAILING PLAN

SHEET 16 OF 22

X

W:\STR\B08H_16RAILING.DGN
11-19-2009

STATE PROJECT NUMBER	SHEET NO.
2060 - 09 - 70	

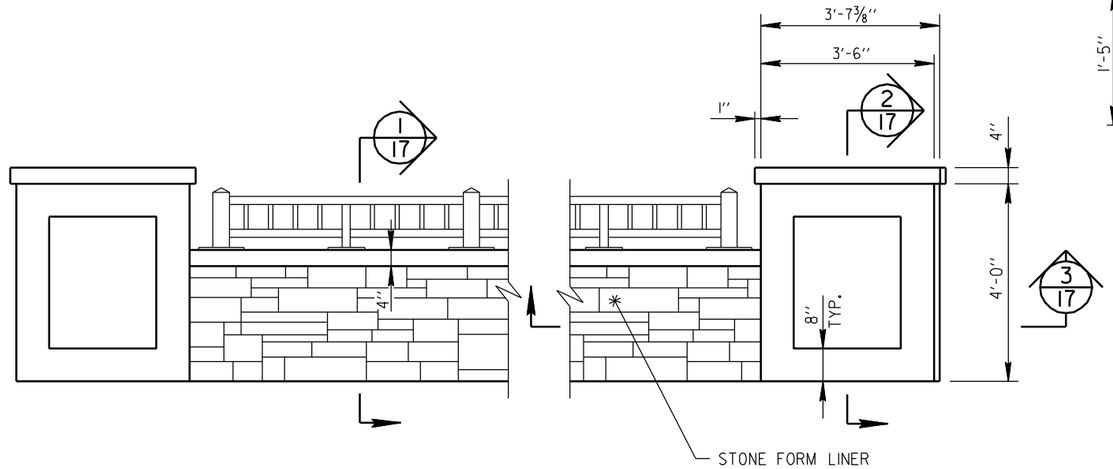

RAILING WITH ASHLAR STONE FORM LINER

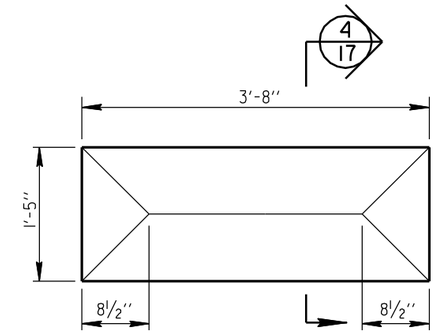

DETAIL A/17
PRECAST STONE CAP AT CENTER

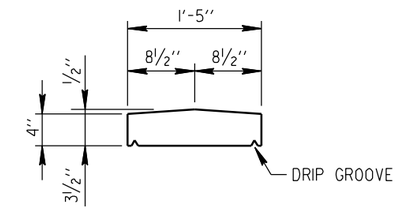

SECTION 4/17

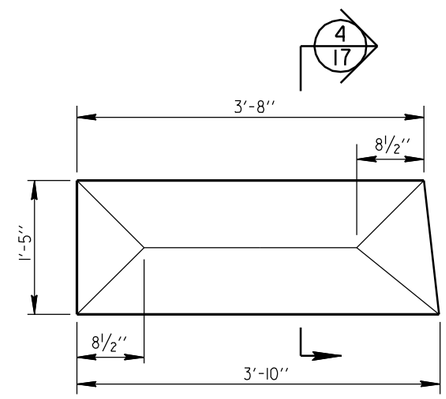

DETAIL B/17
PRECAST STONE CAP AT ENDS

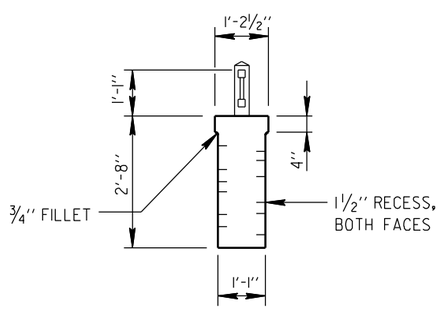

SECTION 1/17

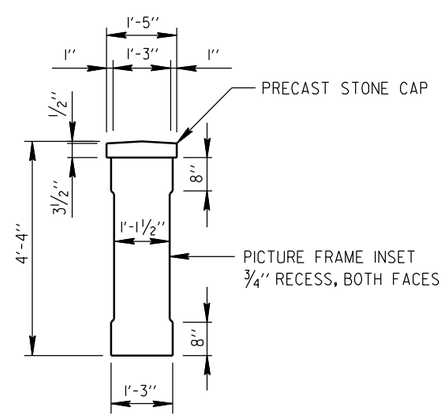

SECTION 2/17

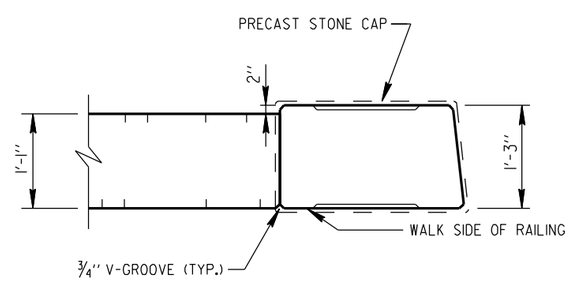

SECTION 3/17

NO.	DATE	REVISION	BY

CITY OF MILWAUKEE
DEPARTMENT OF PUBLIC WORKS
INFRASTRUCTURE SERVICES DIVISION

STRUCTURE P-40-509

DESIGNED BY J.J.K.	DRAWN BY K.P.S.	CHECKED BY A.R.	DATE 02/2010

BRIDGE RAILING DETAILS

SHEET 17 OF 22

X

8

8

W:\STR\B084\ 17RAILING.DGN
02-03-2010

STATE PROJECT NUMBER	SHEET NO.
2060 - 09 - 70	

BILL OF BARS - VERTICAL PARAPET WALL

BAR MARK	COAT	NO. REQ'D.	LENGTH	BENT	CUT DIAG.	BUNDLE	LOCATION
P401	X	80	3'-2"				PARAPET WALL - HORIZONTAL
P402	X	16	30'-3"				PARAPET WALL - HORIZONTAL
P403	X	16	45'-5"				PARAPET WALL - HORIZONTAL
P404	X	16	30'-2"				PARAPET WALL - HORIZONTAL

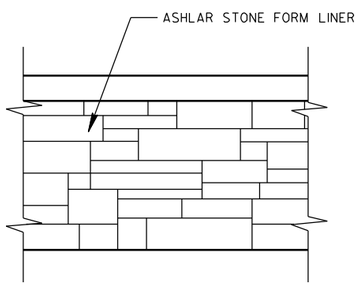

PARAPET ELEVATION

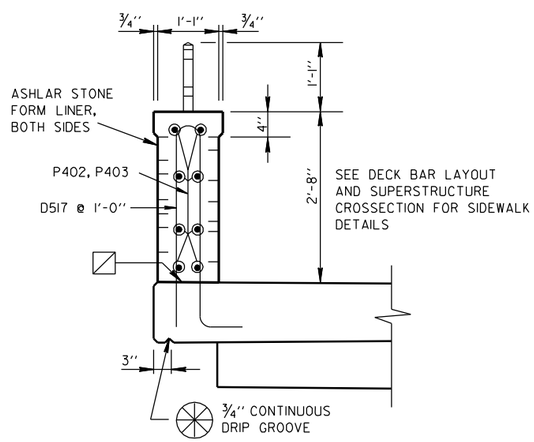

SECTION 2/15

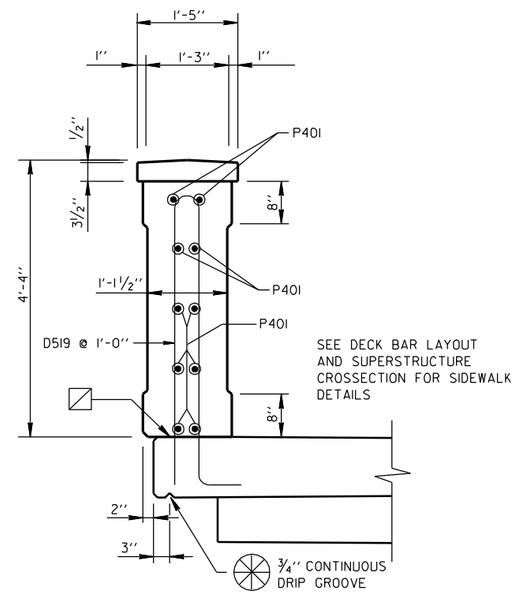

SECTION 3/15

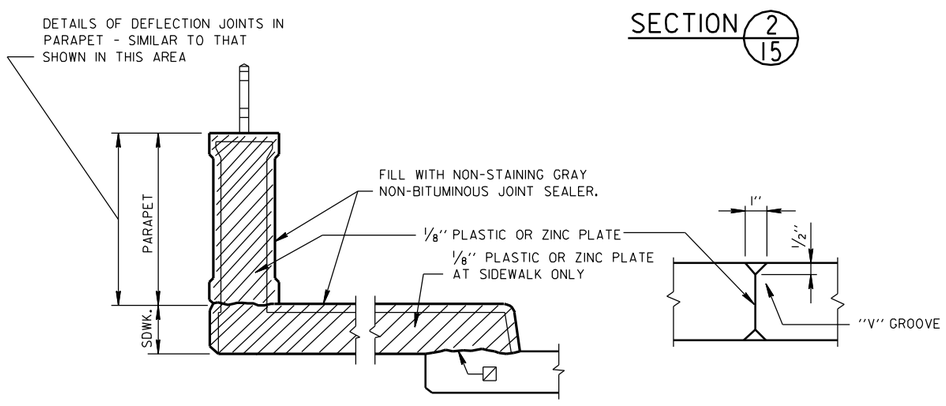

SECTION 1/15
ABOVE PIERS AT DEFLECTION JOINTS

ABOVE PIERS

NOTES

WHEN PARAPETS ARE POURED CONTINUOUSLY FROM END TO END, THEY SHALL BE SEPARATED AT THE DEFLECTION JOINTS BY A PIECE OF 1/8" ZINC OR PLASTIC PLATE CUT AS SHOWN IN THE SECTION AT LEFT BY THE SHADED AREA. IF CONSTRUCTION JOINTS IN PARAPETS ARE USED AT THE DEFLECTION JOINTS, ONE SIDE OF JOINT SHALL BE COATED WITH AN APPROVED LIQUID BOND BREAKER AND PLATE SEPARATORS MAY BE OMITTED.

HORIZ. CONST. JOINT-STRIKE OFF AS SHOWN AND LEAVE ROUGH.

END 2'-0" AWAY FROM FACE OF ABUT.

PARAPET QUANTITIES	
CONCRETE MASONRY BRIDGES	29 CY
BAR STEEL REINFORCEMENT HS COATED BRIDGES	1,301 LB
SHEET ZINC	177 LB
RAILING STEEL SPECIAL (P-40-509)	1 LS
CONCRETE STAINING	1,425 SF
ARCHITECTURAL SURFACE TREATMENT	997 SF
CAST STONE	42 SF

NO.	DATE	REVISION	BY

CITY OF MILWAUKEE
DEPARTMENT OF PUBLIC WORKS
INFRASTRUCTURE SERVICES DIVISION

STRUCTURE P-40-509

DESIGNED BY J.J.K.	DRAWN BY K.P.S.	CHECKED BY A.R.	DATE 11/2009

FORM LINER DETAILS AND BILL OF BARS

SHEET 18 OF 22

X

8

8

W:\STR\B0814\18RAILING.DGN
11-19-2009

STATE PROJECT NUMBER	SHEET NO.
2060 - 09 - 70	

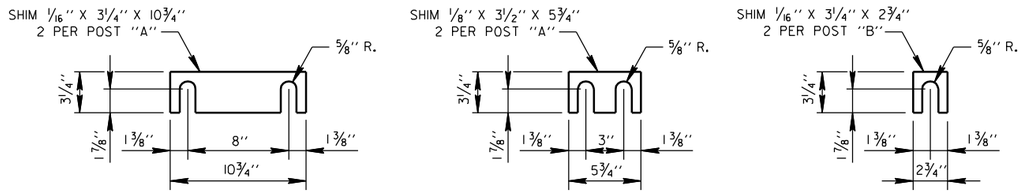

POST SHIM DETAILS

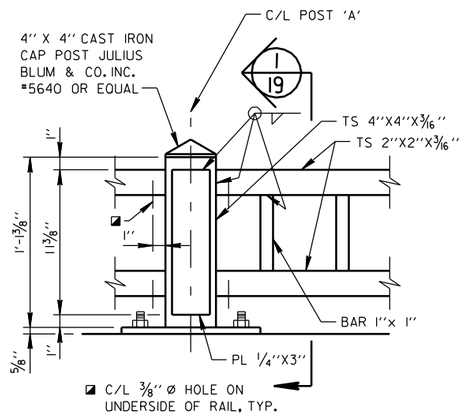

POST 'A'

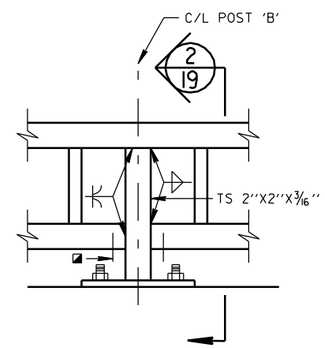

POST 'B'

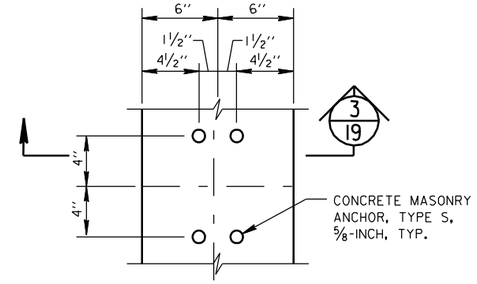

POST 'A' & END POST

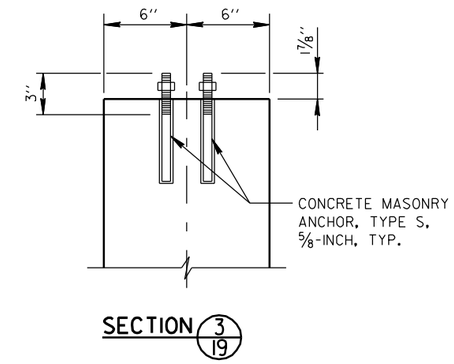

SECTION 3/19

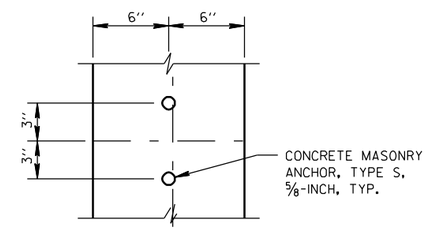

POST 'B'

NOTES:
HOLES FOR ANCHORS SHALL BE CORE DRILLED. IMPACT HAMMER NOT ALLOWED.

MATERIAL THICKNESS OF THICKER PART JOINED	MINIMUM SIZE OF FILLET WELD *
TO 1/2'' INCLUSIVE	3/16''
OVER 1/2'' TO 3/4''	1/4''
OVER 3/4'' TO 1 1/2''	5/16''
OVER 1 1/2'' TO 2 1/4''	3/8''
OVER 2 1/4'' TO 6''	1/2''

* EXCEPT THAT THE WELD SIZE SHALL NOT EXCEED THE THICKNESS OF THE THINNER PART JOINED.

ANCHOR BOLT DETAILS

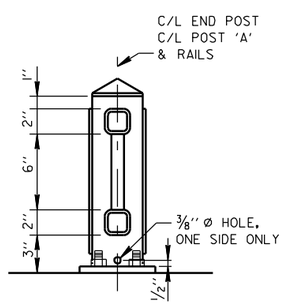

SECTION 1/19

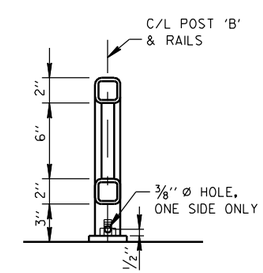

SECTION 2/19

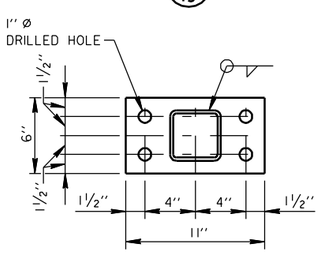

POST 'A' & END POST

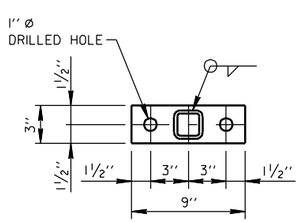

POST 'B'

BASE PLATE DETAILS

ALL BASE PLATES ARE 5/8'' THICK

NOTES

BID ITEM: ''RAILING STEEL SPECIAL (P-40-509)''.
STEEL BARS, PLATES, AND SHIMS: ASTM A709 GRADE 36.
STEEL TUBING: ASTM A500 GRADE B.

PAINT POSTS, RAILS, SHIMS, AND EXPOSED PORTIONS OF ANCHOR BOLTS. FINISH COAT COLOR DETERMINED BY ENGINEER AND MATCH FEDERAL STANDARD NO. 595A COLOR.

INCLUDE PAINTING COST IN BID ITEM ''RAILING STEEL SPECIAL, STRUCTURE (P-40-509)''.

RAILING: FABRICATE IN ONE PANEL LENGTH ON STRAIGHT SECTIONS.

USE SHIMS UNDER POSTS AND END PLATES WHERE REQUIRED FOR ALIGNMENT.

FILL EXPOSED OPENINGS BETWEEN SHIMS AND POST ANCHOR BOLT HOLES WITH NON-STAINING GRAY NON-BITUMINOUS JOINT SEALER.

5/8'' Ø CONCRETE MASONRY ANCHORS TYPE ''S'':
MINIMUM PULLOUT STRENGTH 15 KIPS, EMBED 7'' MIN.

NO.	DATE	REVISION	BY

CITY OF MILWAUKEE
DEPARTMENT OF PUBLIC WORKS
INFRASTRUCTURE SERVICES DIVISION

STRUCTURE P-40-509

DESIGNED BY J.J.K.	DRAWN BY K.P.S.	CHECKED BY A.R.	DATE 02/2010

STEEL RAILING DETAILS

SHEET 19 OF 22

X

8

8

W:\STR\B0814\19RAILING.DGN
02-03-2010

STATE PROJECT NUMBER	SHEET NO.
2060 - 09 - 70	

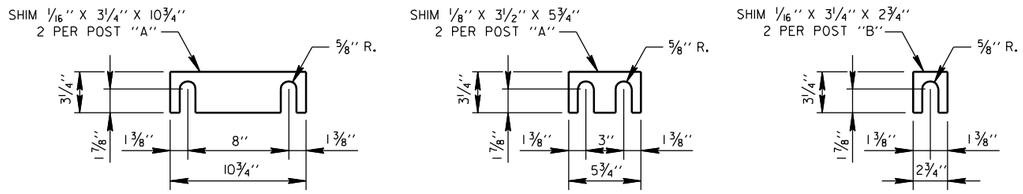

POST SHIM DETAILS

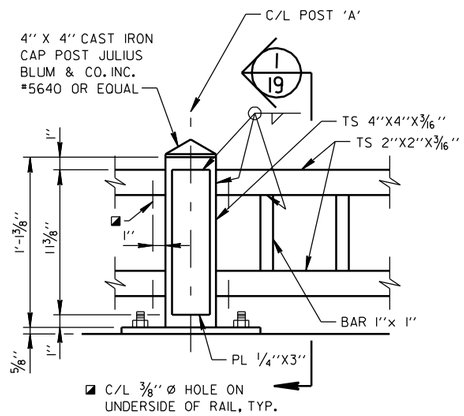

POST 'A'

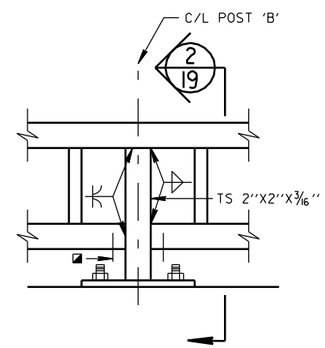

POST 'B'

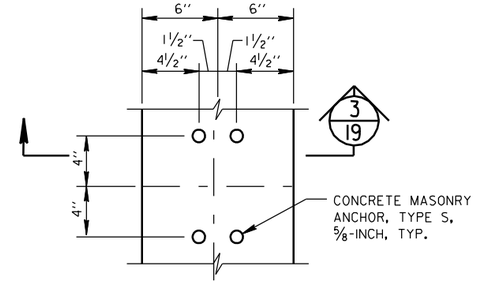

POST 'A' & END POST

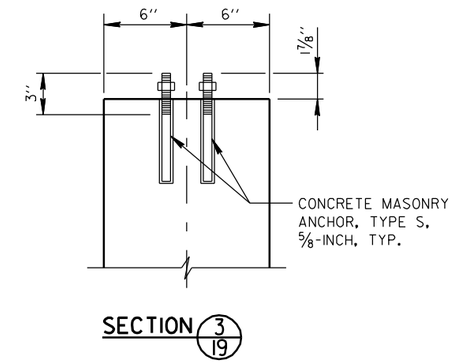

SECTION 3/19

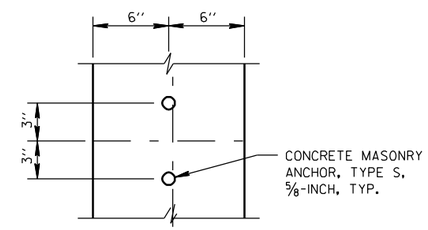

POST 'B'

NOTES:
HOLES FOR ANCHORS SHALL BE CORE DRILLED. IMPACT HAMMER NOT ALLOWED.

MATERIAL THICKNESS OF THICKER PART JOINED	MINIMUM SIZE OF FILLET WELD *
TO 1/2'' INCLUSIVE	3/16''
OVER 1/2'' TO 3/4''	1/4''
OVER 3/4'' TO 1 1/2''	5/16''
OVER 1 1/2'' TO 2 1/4''	3/8''
OVER 2 1/4'' TO 6''	1/2''

* EXCEPT THAT THE WELD SIZE SHALL NOT EXCEED THE THICKNESS OF THE THINNER PART JOINED.

ANCHOR BOLT DETAILS

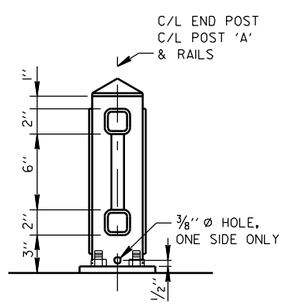

SECTION 1/19

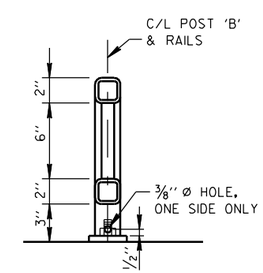

SECTION 2/19

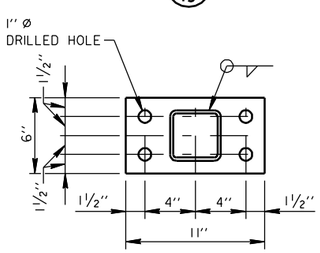

POST 'A' & END POST

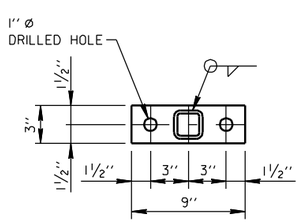

POST 'B'

BASE PLATE DETAILS

ALL BASE PLATES ARE 5/8'' THICK

NOTES

BID ITEM: ''RAILING STEEL SPECIAL (P-40-509)''.
STEEL BARS, PLATES, AND SHIMS: ASTM A709 GRADE 36.
STEEL TUBING: ASTM A500 GRADE B.

PAINT POSTS, RAILS, SHIMS, AND EXPOSED PORTIONS OF ANCHOR BOLTS. FINISH COAT COLOR DETERMINED BY ENGINEER AND MATCH FEDERAL STANDARD NO. 595A COLOR.

INCLUDE PAINTING COST IN BID ITEM ''RAILING STEEL SPECIAL, STRUCTURE (P-40-509)''.

RAILING: FABRICATE IN ONE PANEL LENGTH ON STRAIGHT SECTIONS.

USE SHIMS UNDER POSTS AND END PLATES WHERE REQUIRED FOR ALIGNMENT.

FILL EXPOSED OPENINGS BETWEEN SHIMS AND POST ANCHOR BOLT HOLES WITH NON-STAINING GRAY NON-BITUMINOUS JOINT SEALER.

5/8'' Ø CONCRETE MASONRY ANCHORS TYPE ''S'':
MINIMUM PULLOUT STRENGTH 15 KIPS, EMBED 7'' MIN.

NO.	DATE	REVISION	BY

CITY OF MILWAUKEE
DEPARTMENT OF PUBLIC WORKS
INFRASTRUCTURE SERVICES DIVISION

STRUCTURE P-40-509

DESIGNED BY J.J.K.	DRAWN BY K.P.S.	CHECKED BY A.R.	DATE 02/2010

STEEL RAILING DETAILS

SHEET 19 OF 22

X

8

8

W:\STR\B0814\19RAILING.DGN
02-03-2010

STATE PROJECT NUMBER	SHEET NO.
2060 - 09 - 70	

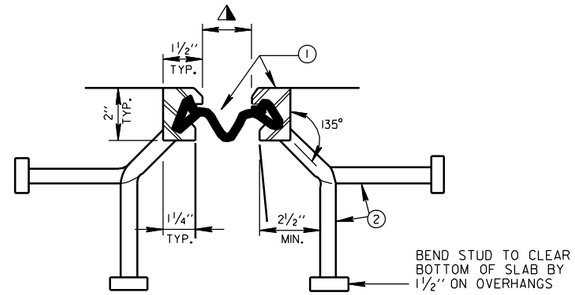

SECTION THRU JOINT (1/20)

EXTERIOR GIRDER TO EDGE OF SLAB AND AT PARAPETS, MEDIANS AND SIDEWALKS

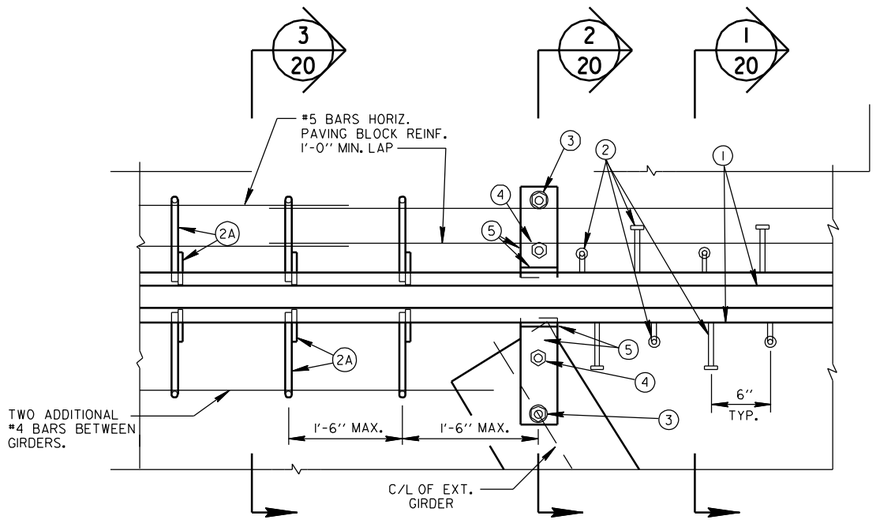

PARTIAL PLAN STRIP SEAL EXPANSION JT.

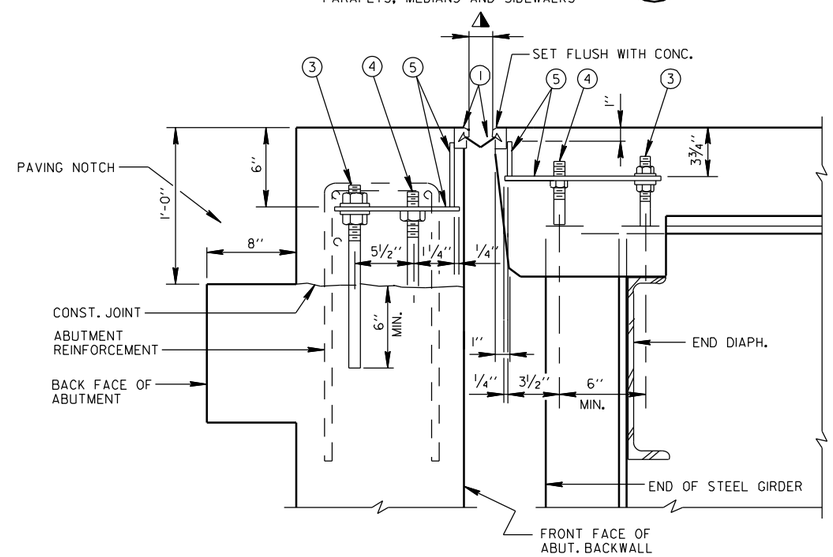

SECTION THRU JOINT AT STEEL GIRDER (2/20)

NORMAL TO C/L SUBSTRUCTURE

TEMPERATURE °F	JOINT OPENING
+ 30	3"
+ 60	2 1/2"
+ 90	2"
NOTE: USE LINEAR INTERPOLATION FOR OTHER TEMPERATURES	

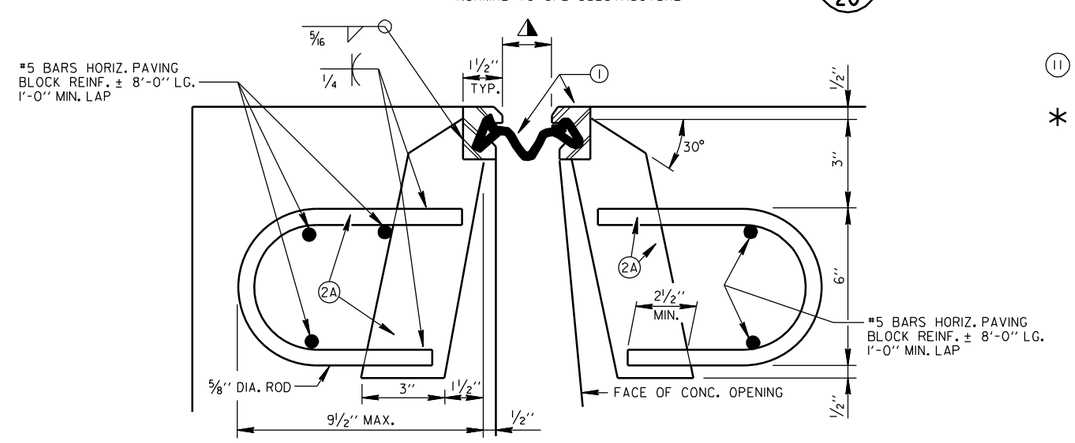

AT PAVING BLOCK

AT SLAB

SECTION THRU JOINT (3/20)

ROADWAY TRAFFIC AREA BETWEEN GIRDERS

LEGEND

1. NEOPRENE STRIP SEAL (2-INCH) AND STEEL EXTRUSIONS. SET JOINT OPENING TO 2 1/2" FOR 60° F. SEE TABLE THIS SHEET.
2. STUDS 5/8" DIA. X 6 3/8" LONG AT 6" ALTERNATE CENTERS. WELD TO EXTRUSIONS AND BEND AS SHOWN AFTER WELDING.
2A. 1/2" THICK ANCHOR PLATE WITH 5/8" DIA. ROD (OR ALTERNATE STRIP SEAL ANCHOR). WELD ROD TO ANCHOR PLATE, WELD ANCHOR PLATE TO NO. 5 BAR AT 1'-6" CENTERS BETWEEN GIRDERS.
3. 3/4" DIA. THREADED ROD WITH 2 NUTS AND WASHERS. FOR STEEL GIRDERS WELD THREADED ROD TO TOP FLANGE OR ATTACH BY BOLTING THRU FLANGE. ON ABUTMENT SIDE GROUT THREADED ROD INTO FIELD DRILLED HOLES IN ABUTMENT BACKWALL AS SHOWN.
4. 3/4" DIA. THREADED ROD WITH NUT. TACK WELD NUT TO NO. 5.
5. FABRICATE SUPPORT FROM 3" X 1/2" BAR AS SHOWN OR EQUIVALENT. ONE PER GIRDER PER SIDE. SHOP OR FIELD WELD TO NO. 1. IF FIELD WELDED, COVER WELDED AREAS WITH EPOXY COATING MATERIAL. PROVIDE 1 1/2" HOLE FOR NO. 3 AND 1" DIA. HOLE FOR NO. 4.
6. GALVANIZED PLATE 3/8" X 10 1/2" X (2'-0" LONG FOR SKEWS 10° TO 45° AND 3'-0" FOR SKEWS > 45° USE NO. 7 BEND AS SHOWN.
7. 3/4" DIA. X 1 1/2" STAINLESS STEEL SOCKET FLAT HEAD SCREWS TO 45° AND 3'-0" LONG FOR SKEWS > 45° WITH HOLES FOR NO. 7 AS SHOWN.
8. 3/4" DIA. X 4" GALVANIZED HEX HEAD BOLT. BEND 45°.
9. 3/4" DIA. X 2 1/4" GALVANIZED THREADED COUPLING.
10. GALVANIZED SIDEWALK PLATE 3/8" X (2'-0" WIDE FOR SKEWS TO 45° AND 3'-0" WIDE FOR SKEWS > 45°) X LIMITS SHOWN. BEND DOWN FACE OF SIDEWALK PLATE WITH HOLES FOR NO. 7 BAR.
11. 1" X 5" SLOTTED CSK. HOLE FOR NO. 7. SLOT PARALLEL TO DIRECTION OF MOVEMENT.

* NOTE: TWO (2) STRIP SEAL EXPANSION JOINTS REQUIRED FOR THIS PROJECT, ONE AT EA. ABUTMENT.

8

NO.	DATE	REVISION	BY

CITY OF MILWAUKEE
DEPARTMENT OF PUBLIC WORKS
INFRASTRUCTURE SERVICES DIVISION

STRUCTURE P-40-509

DESIGNED BY	DRAWN BY	CHECKED BY	DATE
J.J.K.	K.P.S.	A.R.	02/2010

STRIP SEAL EXPANSION JOINT SECTIONS

SHEET 20 OF 22

X

W:\STR\B0504\ 20EXPJT.DGN
02-03-2010

STATE PROJECT NUMBER	SHEET NO.
2060 - 09 - 70	

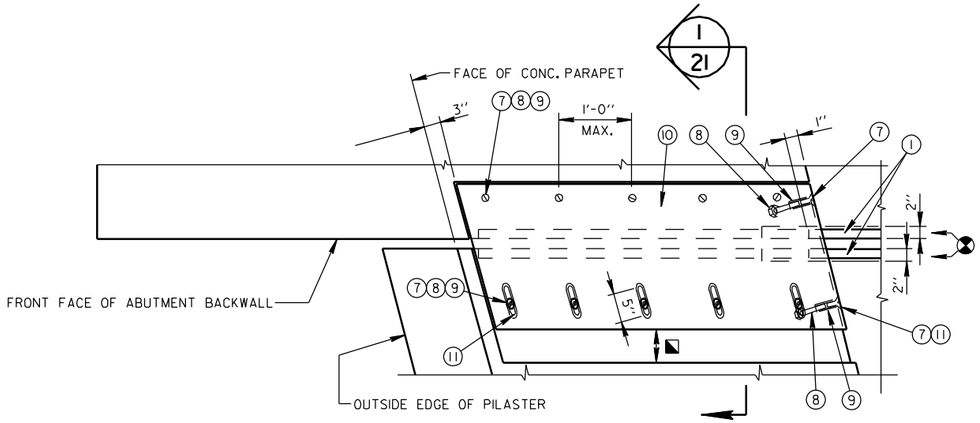

PLAN AT SIDEWALK

1'-2'' WHEN VERTICAL FACE PARAPET TYPE 'TX' IS USED

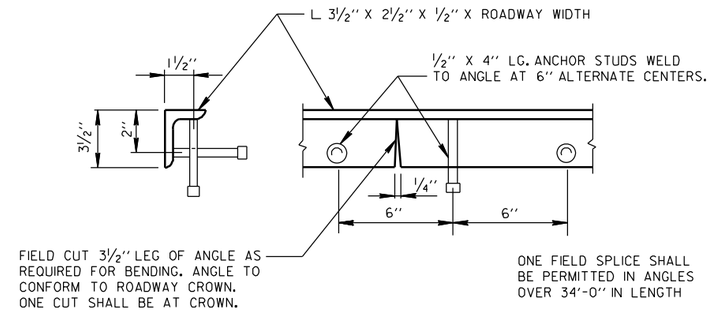

PROTECTION ANGLE ARMOR *

*BID AS STRUCTURAL STEEL CARBON

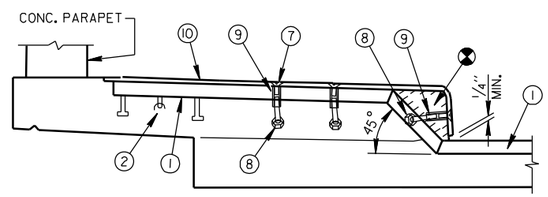

SECTION AT SIDEWALK

NOTE: COVER PLATE REQUIRED FOR ALL SIDEWALKS

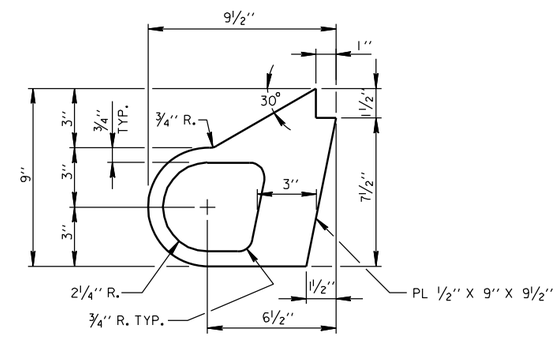

ALTERNATE STRIP SEAL ANCHOR

NOTES

ONE FIELD SPLICE PERMITTED IN STEEL EXTRUSIONS. IF USED, DETAILS SHALL BE SUBMITTED FOR APPROVAL. NO SPLICING PERMITTED IN NEOPRENE STRIP SEAL.

AFTER FABRICATION, BUT BEFORE SHIPMENT, STRAIGHTEN STEEL EXTRUSIONS SUCH THAT THEY SHALL BE FREE FROM WARP, TWIST AND SWEEP.

FABRICATOR SHALL PROVIDE MEANS OF KEEPING GALVANIZED EXTRUSIONS CLEAN AND SMOOTH DURING SHIPMENT AND PRIOR TO APPLYING LUBRICANT ADHESIVE FOR NEOPRENE GLAND INSTALLATION.

SANDBLAST PLATES AND EXTRUSIONS AFTER FABRICATION IN ACCORDANCE WITH SSPC SP. #6 "COMMERCIAL BLAST CLEANING". AFTER BLAST CLEANING, THE PLATES AND EXTRUSIONS SHALL BE HOT DIPPED GALVANIZED.

ANCHOR SYSTEM NO. 8 AND NO. 9 SHALL CONFORM TO ASTM A307 AND SHALL BE GALVANIZED IN ACCORDANCE WITH ASTM A153 CLASS C AND D.

STRIP SEAL EXPANSION JOINT ASSEMBLIES, INCLUDING ANCHOR STUDS AND HARDWARE WILL BE PAID FOR AT THE LUMP SUM PRICE BID FOR "EXPANSION DEVICE".

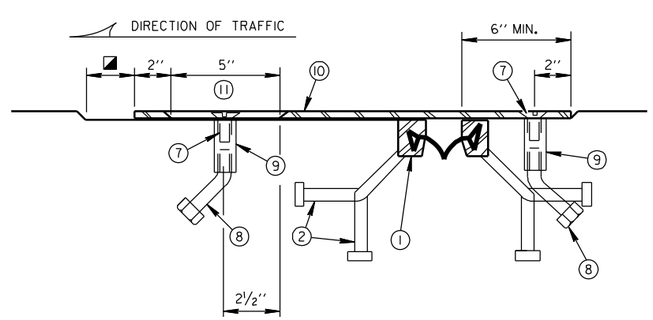

SECTION 1/21

8

8

NO.	DATE	REVISION	BY

CITY OF MILWAUKEE
DEPARTMENT OF PUBLIC WORKS
INFRASTRUCTURE SERVICES DIVISION

STRUCTURE P-40-509

DESIGNED BY J.J.K.	DRAWN BY K.P.S.	CHECKED BY A.R.	DATE 02/2010

STRIP SEAL EXPANSION JOINT DETAILS

SHEET 21 OF 22

X

W:\STR\B0814\ 21EXPJT.DGN
02-03-2010

STATE PROJECT NUMBER	SHEET NO.
2060 - 09 - 70	

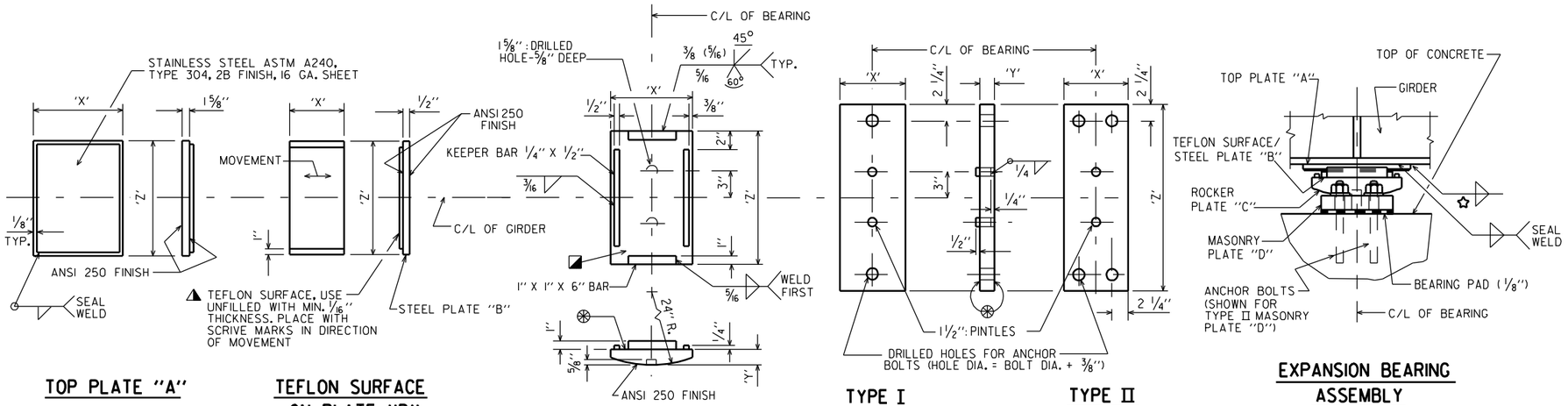

TOP PLATE "A"

TEFLON SURFACE ON PLATE "B"

ROCKER PLATE "C"

TYPE I

TYPE II

MASONRY PLATE "D"

EXPANSION BEARING ASSEMBLY

EXPANSION BEARING

	PLATE "A"		PLATE "B"		PLATE "C"			PLATE "D"			HEIGHT (IN)	NO. OF BRG'S REQ'D.	LOCATION
	'X'	'Z'	'X'	'Z'	'X'	'Y'	'Z'	'X'	'Y'	'Z'			
EXPANSION BEARING	11"	1'-0"	7"	1'-0"	9"	1 15/16"	1'-2 1/4"	8"	2 9/16"	2'-0"	6 7/8"	13	NORTH ABUTMENT
	11"	1'-0"	7"	1'-0"	9"	1 15/16"	1'-2 1/4"	8"	2 9/16"	2'-0"	6 7/8"	13	SOUTH ABUTMENT

ANCHOR BOLT NOTES

USE TYPE I MASONRY PLATE "D" WITH (2) - 1 1/4" Ø X 1'-5" LONG ANCHOR BOLTS.

DESIGNER NOTES

HEIGHT OF BEARINGS GIVEN IN TABLE INCLUDES 1/8" BEARING PAD, 16 GAGE STAINLESS STEEL SHEET AND 1/16" TEFLON SURFACE.

BEARING NOTES

ALL BEARINGS ARE SYMMETRICAL ABOUT C/L OF GIRDER AND C/L OF BEARING.

ALL STRUCTURAL STEEL BEARING PLATES SHALL BE FLAT ROLLED STEEL PLATES WITH ALL SURFACES SMOOTH AND FREE FROM WARP AND ALL EDGES SMOOTH, STRAIGHT AND VERTICAL.

ALL PLATE CUTS SHALL BE MACHINE OR MACHINE FLAME CUTS.

ALL FINISHED SURFACES SHALL BE MACHINE FINISHED BY AN AUTOMATIC PROCESS.

CHAMFER ANCHOR BOLTS PRIOR TO THREADING.

ANCHOR BOLTS SHALL BE THREADED 3". PROVIDE ONE STANDARD WROUGHT WASHER AND ONE HEX NUT PER BOLT. BOLT LENGTH TO BE 1'-5 FOR 1 1/4" Ø AND 1'-10 FOR 1 1/2" Ø BOLTS. PROJECT ANCHOR BOLTS, MASONRY PLATE "D" THICKNESS + 2 1/4", ABOVE TOP OF CONCRETE.

CHAMFER TOP OF PINTLES 1/8". DRILL HOLES FOR ALL PINTLES IN MASONRY PLATE "D" FOR A DRIVING FIT.

ALL MATERIAL IN BEARINGS, INCLUDING SHIM PLATES, BUT EXCLUDING ANCHOR BOLTS, STAINLESS STEEL SHEET, TEFLON SURFACE, PINTLES, NUTS AND WASHERS SHALL CONFORM TO ASTM A709 GRADE 50W.

STEEL PINTLES SHALL CONFORM TO ASTM A449 OR MATERIAL OF EQUIVALENT YIELD STRENGTH AND ELONGATION.

ANCHOR BOLTS, NUTS AND WASHERS SHALL CONFORM TO ASTM A709 GRADE 36, OR MATERIAL OF EQUIVALENT YIELD STRENGTH AND ELONGATION.

PROVIDE 1/8" THICK BEARING PAD THE SAME SIZE AS MASONRY PLATE "D" FOR EACH BEARING.

ALL MATERIAL IN BEARINGS, INCLUDING SHIM PLATES AND BEARING PADS, SHALL BE PAID FOR AT THE UNIT PRICE BID FOR "BEARING REPLACEMENT STRUCTURE P-40-509", EACH.

ANCHOR BOLTS, NUTS AND WASHERS SHALL BE GALVANIZED IN ACCORDANCE WITH ASTM A153, CLASS C.

EXPANSION BEARINGS:
TOP PLATE "A" AND STEEL PLATE "B" SHALL BE SHOP PAINTED. USE A WELDABLE PRIMER ON TOP PLATE "A". ROCKER PLATE "C" AND MASONRY PLATE "D" SHALL BE GALVANIZED. DO NOT PAINT STAINLESS STEEL OR TEFLON SURFACES.

⊛ FINISH THESE SURFACES TO ANSI 250 IF 'Y' DIMENSION IS GREATER THAN 2".

◪ PROVIDE A METHOD FOR HANDLING ROCKER PLATE "C" DURING GALVANIZING.

◭ BOND STEEL PLATE "B" AND TEFLON WITH ADHESIVE MATERIAL MEETING FEDERAL SPECIFICATION MMM-A-134, FEP FILM OR EQUAL.

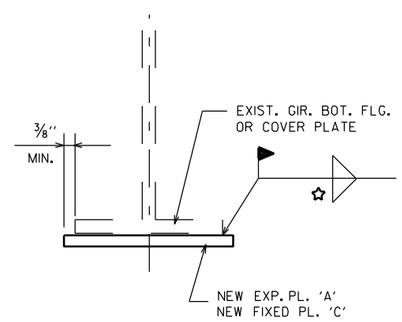

BEARING REPLACEMENT DETAILS

✩ TABLE OF FILLET WELD SIZES

MATERIAL THICKNESS OF THICKER PART JOINED.	‡ MIN. SIZE OF FILLET WELD
TO 1/2" INCLUSIVE	3/16"
OVER 1/2" TO 3/4"	1/4"
OVER 3/4" TO 1 1/2"	△ 5/16"
OVER 1 1/2" TO 2 1/4"	△ 3/8"
OVER 2 1/4" TO 6"	△ 1/2"

‡ EXCEPT THAT THE WELD SIZE SHALL NOT EXCEED THE THICKNESS OF THE THINNER PART JOINED.

△ MIN. PASS SIZE IS 5/16"

NO.	DATE	REVISION	BY

CITY OF MILWAUKEE
DEPARTMENT OF PUBLIC WORKS
INFRASTRUCTURE SERVICES DIVISION

STRUCTURE P-40-509

DESIGNED BY J.J.K.	DRAWN BY G.J.R.	CHECKED BY A.R.	DATE 01/2010

BEARING DETAILS

SHEET 22 OF 22

X

8

8

W:\STR\B084\ 22BRTFLON.DGN
01-20-2010