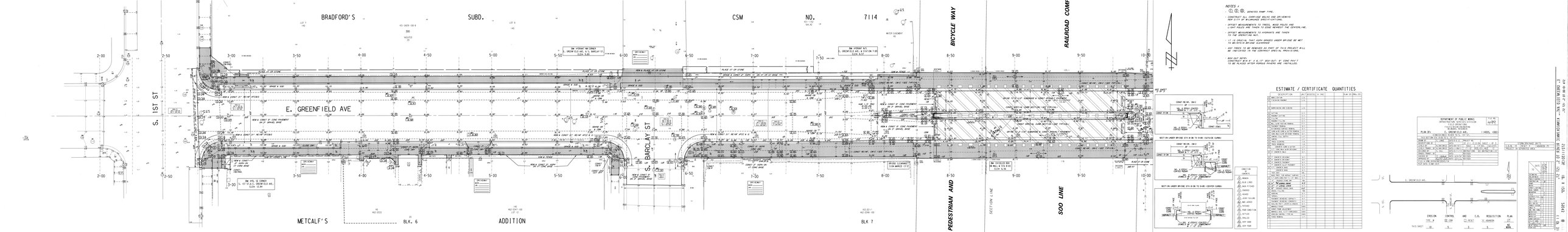
BRADFORD'S SUBD.
CSM NO. 7114
S. 1ST ST
E. GREENFIELD AVE
S. BARCLAY ST
BICYCLE WAY
PEDESTRIAN AND
RAILROAD COMP
SOO LINE
SECTION LINE
METCALF'S ADDITION
BLK. 6
BLK 7
NOTES :
- ① ② ③, DENOTES RAMP TYPE.
- CONSTRUCT ALL SIDEWALKS AND DRIVEWAYS PER CITY OF MILWAUKEE SPECIFICATIONS.
- OFFSET MEASUREMENTS TO POLES, MAST POLES AND LIGHT POLES ARE TAKEN TO EDGE NEAREST THE CENTERLINE.
- OFFSET MEASUREMENTS TO HYDRANTS ARE TAKEN TO THE OPERATING NUT.
- (*) IS SPECIAL THAT 450M GRADES UNDER BRIDGE BE MET TO ASSURE BRIDGE CLEARANCE.
- ALL CURB TO BE REMOVED AS PART OF THIS PROJECT WILL BE REPLACED IN THE CONTRACT SPECIAL PROVISIONS.
- BOX-OUT NOTES:
CONSTRUCT BOX AT A 6.25" BOX-OUT. BY CONC PAST TO BE PLACED AFTER RAMPS WERE INSTALLED.
CONST REINF. CMCC CURB TYPE I
CONST REINF. CMCC CURB TYPE II
SECT-ON LANDY BRIDGE STA 8+36 TO 9+48 (CENTER CURB)
SECT-ON LANDY BRIDGE STA 8+36 TO 9+48 (OUTER CURB)
CONSTRUCTION CONCRETE
ESTIMATE / CERTIFICATE QUANTITIES
DEPARTMENT OF PUBLIC WORKS
INFRASTRUCTURE SERVICES DIVISION
TITLE BLOCK INFORMATION
PLAN 21-
E. GREENFIELD AVE. T.14005.-100
PLAN SHEET INDEX
EROSION CONTROL AND C.S. REQUISITION PLAN
THIS SHEET 15 5 5 5 NO.
E. GREENFIELD AVE.
EROSION CONTROL AND C.S. REQUISITION PLAN
THIS SHEET 15 5 5 5 NO.
DATE
DRAWING INDEX
SHEETS
PLAN X SHEETS

MAP OF THAT

NOTES :

- Ⓘ, Ⓘⓘ, Ⓘⓘⓘ, DENOTES RAMP TYPE.
- CONSTRUCT ALL CARRIAGE WALKS AND DRIVEWAYS PER CITY OF MILWAUKEE SPECIFICATIONS.
- OFFSET MEASUREMENTS TO TREES, WOOD POLES AND LIGHT POLES ARE TAKEN TO EDGE NEAREST THE CENTERLINE.
- OFFSET MEASUREMENTS TO HYDRANTS ARE TAKEN TO THE OPERATING NUT.

CONDITION OF CONCRETE
B BROKEN
BL BLUE LINED
BP BACK PITCHED
C CRACKED
H HEAVED
JF JOINT FAILURE
MJ MUD JACKED
P PATCHED
PC POOR CONDITION
S SETTLED
SP SPALLED
VG VERY GOOD
VP VERY POOR

ESTIMATE / CERTIFICATE QUANTITIES

DESCRIPTION	UNIT	ASSESS.	X-ING			PLAN TOT.	PROJ. TOT.
MOBILIZATION	L.S.						
FINISHING ROADWAY	L.S.						
BARRICADING AND SIGNING	L.S.						
CUTTING	C.Y.						
ROADWAY CUTTING	C.Y.						
FILLING	C.Y.						
ROADWAY FILLING	C.Y.						
PAVEMENT REMOVAL	S.Y.						
BITUMINOUS SURFACE REMOVAL	S.Y.						
CURB &/OR CURB & GUTTER REMOVAL	L.F.						
CONC. WALK &/OR DRIVEWAY REMOVAL	S.F.						
SAWING (FULL DEPTH)	L.F.						
SAWING	L.F.						
TREES CLEARING	I.D.						
TREES GRUBBING	I.D.						
CONCRETE CURB & GUTTER	L.F.						
V.T. CONC. WALK &/OR DRIVEWAY	C.Y.						
5" CONCRETE WALK	S.F.						
7" CONCRETE DRIVEWAY	S.F.						
CONCRETE PAVEMENT	S.Y.						
7" CONCRETE ALLEY PAVEMENT	S.Y.						
V.T. CONCRETE BASE	C.Y.						
CONCRETE BASE	S.Y.						
TACK COAT	GAL.						
BASE PREP. FOR ASPHALT SURFACE	L.S.						
V.T. ASPH. CONC. PAV'T. (MAX.)	S.Y.						
CRUSHED STONE BASE							
CRUSHED GRAVEL BASE							
GRAVEL FILLING	TON						
SODDING	S.Y.						
TOPSOIL	C.Y.						
PAVEMENT GRINDING (ASPHALT)	S.Y.						
PAVEMENT GRINDING (CONCRETE)	S.Y.						
SEALING PAV'T JOINTS & CRACKS	S.Y.						
MANHOLE RINGS	EACH						
SEWER FRAME ADJUSTMENT	V.F.						
MANHOLE SEAL (CITY FURNISHED)	EACH						
EROSION CONTROL (TYPE M)	EACH						

DEPARTMENT OF PUBLIC WORKS
INFRASTRUCTURE SERVICES DIVISION
FIELD OPERATIONS
FIELD & DESIGN ENGINEERING
MILWAUKEE, WISCONSIN

FILE NO. 500

PLAN OF: E. GREENFIELD AVE. (1300S, 200E)
KINNICKINNIC RIVER TO S. 1ST ST.
THIS SECTION: STA 17+50 TO STA 10+00

DRAWN BY	G. LANGE	DATE: 9-6-12	PROJECT NO. ST 211 13 0136 SHEET 2 OF 3
DESCRIPTIONS BY		DATE:	
LEVELS BY	KLINKIEWICZ	DATE: 09/19/11	SCALE 1"=10' 1/4 SEC. 430, 431, 462 ALD. DIST. 12
LEVELS TRANSF. BY	KLINKIEWICZ	DATE: 11/08/11	
DESIGNED BY	S. CULL	DATE: 01/11/13	OBSTRUCTIONS - SEE OBSTRUCTION LIST
GRADES TRANSF. BY		DATE:	REVISED:
CHECKED BY	D. Ulatowski	DATE: 5/7/14	REVISED:
APPROVED BY	[signature]	DATE: 5/7/14	REVISED:
FILE: V:\PWELIB\PAVING\29243.FIN			
PLOT DATE: 15-MAY-2014			

STORM DRAINAGE UNITS		
C.B.W.-	RESET-	ABANDON-
PROJECT IN (COMB) (SEPARATED) AREA		

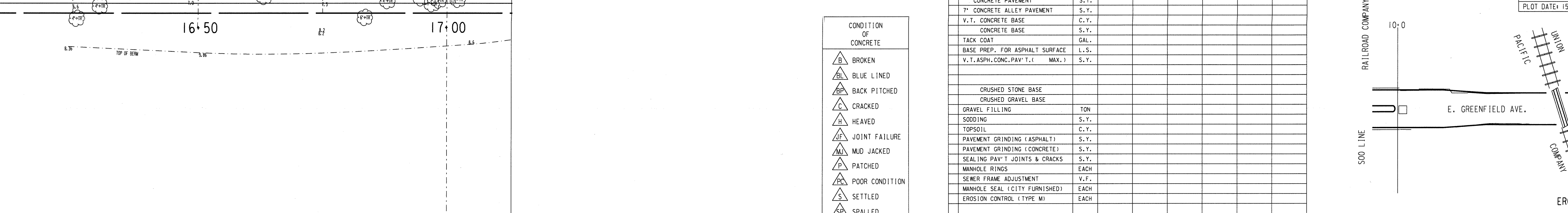

EROSION CONTROL AND C.B. REQUISITION PLAN				
TYPE M	☒ - CBW	☐ - RESET	✕ - ABANDON	∅
THIS SHEET 3	2	1	4	NO WORK

DATE / TO	5/20/14	5/20/14
ESTIMATING		
HOLLOW WALKS		
PUBLIC HEARING		
CONSTRUCTION		6
SEWER		
WATER		
STREET LIGHTING		
BLDG. SEWERS		
MEASURING	1	
FIELD		
DISTRICT FILE	2	
FORESTRY		
W.E. / G.O.		
WIS. GAS CO.		
TRANSIT SYSTEM		
CABLE TV		
UND. GRD. COND.		
WATER DIST.		
WEPCO N/S		
WEPCO S/S		
SEWER SERVICES		
UTILITY COOR.		
Traffic Eng KM 506		15
PLAN SIZE		

E. GREENFIELD AVE.: KINNICKINNIC RIVER TO S. 1ST ST. 18" X 150" E3424 # (2 OF 3)
STA 17+50 TO STA 10+00 ST2110136

NOTES :

- (I), (II), (III), DENOTES RAMP TYPE.
- CONSTRUCT ALL CARRIAGE WALKS AND DRIVEWAYS PER CITY OF MILWAUKEE SPECIFICATIONS.
- OFFSET MEASUREMENTS TO TREES, WOOD POLES AND LIGHT POLES ARE TAKEN TO EDGE NEAREST THE CENTERLINE.
- OFFSET MEASUREMENTS TO HYDRANTS ARE TAKEN TO THE OPERATING NUT.
- IT IS CRUCIAL THAT ASPH GRADES UNDER BRIDGE BE MET TO MAINTAIN BRIDGE CLEARANCE
- ANY TREES TO BE REMOVED AS A PART OF THIS PROJECT WILL BE NOTED IN THE CONTRACT SPECIAL PROVISIONS.

CONDITION OF CONCRETE

- B BROKEN
- BL BLUE LINED
- BP BACK PITCHED
- C CRACKED
- H HEAVED
- JF JOINT FAILURE
- MJ MUD JACKED
- P PATCHED
- PC POOR CONDITION
- S SETTLED
- SP SPALLED
- VGC VERY GOOD
- VPC VERY POOR

ESTIMATE / CERTIFICATE QUANTITIES

DESCRIPTION	UNIT	ASSESS.	X-ING			PLAN TOT.	PROJ. TOT.
MOBILIZATION	L.S.						
FINISHING ROADWAY	L.S.						
BARRICADING AND SIGNING	L.S.						
CUTTING	C.Y.						
ROADWAY CUTTING	C.Y.						
FILLING	C.Y.						
ROADWAY FILLING	C.Y.						
PAVEMENT REMOVAL	S.Y.						
BITUMINOUS SURFACE REMOVAL	S.Y.						
CURB &/OR CURB & GUTTER REMOVAL	L.F.						
CONC. WALK &/OR DRIVEWAY REMOVAL	S.F.						
SAWING (FULL DEPTH)	L.F.						
SAWING	L.F.						
TREES CLEARING	I.D.						
TREES GRUBBING	I.D.						
CONCRETE CURB & GUTTER	L.F.						
V.T. CONC. WALK &/OR DRIVEWAY	C.Y.						
5' CONCRETE WALK	S.F.						
7' CONCRETE DRIVEWAY	S.F.						
CONCRETE PAVEMENT	S.Y.						
7' CONCRETE ALLEY PAVEMENT	S.Y.						
V.T. CONCRETE BASE	C.Y.						
CONCRETE BASE	S.Y.						
TACK COAT	GAL.						
BASE PREP. FOR ASPHALT SURFACE	L.S.						
V.T. ASPH. CONC. PAV'T. (MAX.)	S.Y.						
CRUSHED STONE BASE							
CRUSHED GRAVEL BASE							
GRAVEL FILLING	TON						
SODDING	S.Y.						
TOPSOIL	C.Y.						
PAVEMENT GRINDING (ASPHALT)	S.Y.						
PAVEMENT GRINDING (CONCRETE)	S.Y.						
SEALING PAV'T JOINTS & CRACKS	S.Y.						
MANHOLE RINGS	EACH						
SEWER FRAME ADJUSTMENT	V.F.						
MANHOLE SEAL (CITY FURNISHED)	EACH						
EROSION CONTROL (TYPE M)	EACH						

DEPARTMENT OF PUBLIC WORKS
INFRASTRUCTURE SERVICES DIVISION
FIELD OPERATIONS
FIELD & DESIGN ENGINEERING
MILWAUKEE, WISCONSIN

FILE NO. 501

PLAN OF: E. GREENFIELD AVE. (1400S, 400E)
KINNICKINNIC RIVER TO S. 1ST ST.
THIS SECTION: KINNICKINNIC RIVER TO STA 17+50

DRAWN BY	G. LANGE	DATE: 9-6-12	PROJECT NO. ST211 13 0136 — SHEET 3 OF 3
DESCRIPTIONS BY		DATE:	
LEVELS BY	KLINKIEWICZ	DATE: 09/19/11	SCALE 1"=10' — 1/4 SEC. 430, 431, 462 — ALD. DIST. 12
LEVELS TRANSF. BY	KLINKIEWICZ	DATE: 11/08/11	
DESIGNED BY	S. CULL	DATE: 01/11/13	OBSTRUCTIONS - SEE OBSTRUCTION LIST
GRADES TRANSF. BY		DATE:	REVISED: 4/7/14 BIOSWALE UPDATE
CHECKED BY	D. [signature]	DATE: 5/17/14	REVISED:
APPROVED BY	[signature]	DATE: 5/19/14	REVISED:
FILE: V:\PWELIB\PAVING\29243.FIN			
PLOT DATE: 15-MAY-2014			

STORM DRAINAGE UNITS		
C.B.W.- 18	RESET- 4	ABANDON- 25
PROJECT IN SEPARATED AREA		

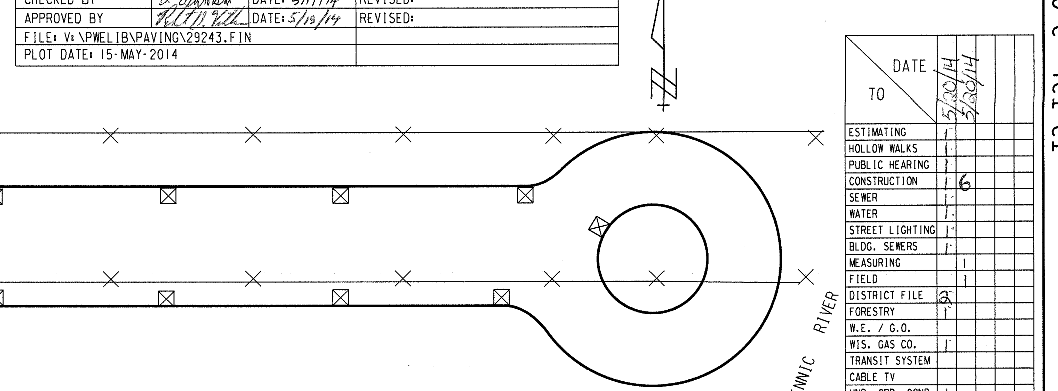

EROSION	CONTROL	AND C.B.	REQUISITION	PLAN
	TYPE M	☒ - CBW	☐ - RESET	✕ - ABANDON
THIS SHEET	11	11	0	16
PROJECT TOTAL	24	18	4	25

NO WORK

TO \ DATE	5/20/14	5/30/14
ESTIMATING	1	
HOLLOW WALKS	1	
PUBLIC HEARING	1	
CONSTRUCTION	1	6
SEWER	1	
WATER	1	
STREET LIGHTING	1	
BLDG. SEWERS	1	
MEASURING		1
FIELD		1
DISTRICT FILE	2	
FORESTRY	1	
W.E. / G.O.		
WIS. GAS CO.	1	
TRANSIT SYSTEM		
CABLE TV		
UND. GRD. COND.	1	
WATER DIST.	1	
WEPCO N/S		
WEPCO S/S	1	
SEWER SERVICES		
UTILITY COOR.	1	
Traffic Eng	1	
RM 506		15
PLAN SIZE		

E. GREENFIELD AVE.: KINNICKINNIC RIVER TO S. 1ST ST. ST211130136 18" X 120" 29243 # (3 OF 3)