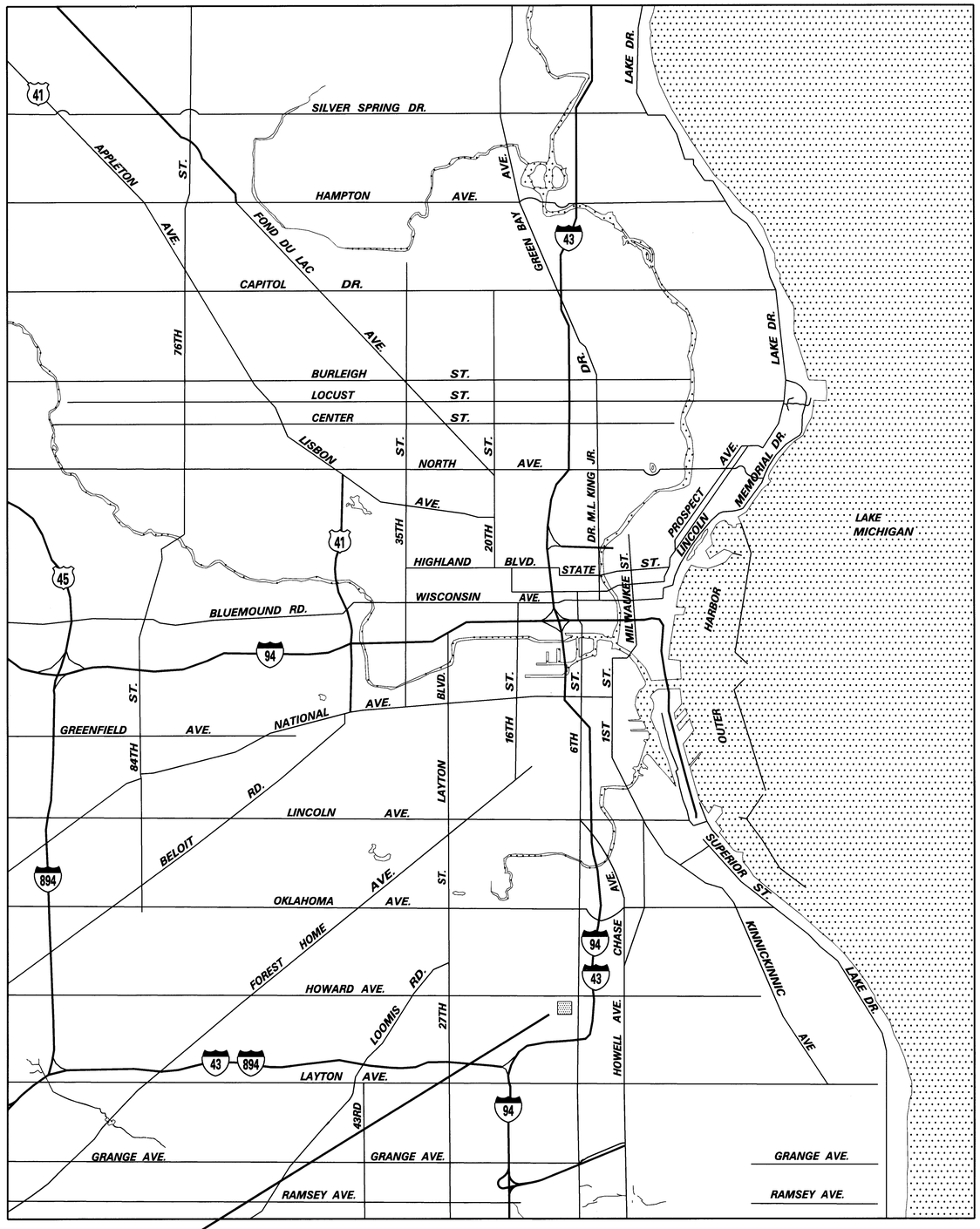

PROJECT LOCATION
HOWARD AVENUE PUMPING STATION
3929 SOUTH 6TH STREET
MILWAUKEE, WI 53221

MILWAUKEE, WISCONSIN

LOCATION MAP

0 0.5 1.0 1.5
APPROX SCALE IN MILES

Milwaukee Water Works

HOWARD AVENUE PUMPING STATION

HS-22: PUMP #2 REPLACEMENT VARIABLE SPEED - LOW SERVICE

AND

HS-25: PUMP #3 REPLACEMENT SINGLE SPEED - LOW SERVICE TO HIGH SERVICE

DRAWING INDEX

DRAWING NO.	TITLE
CONTRACT DRAWINGS	
HS-25-01	LOCATION MAP - DRAWING INDEX
HS-25-02	GENERAL PLAN OF PUMP FLOOR - DEMOLITION PLAN
HS-25-03	GENERAL PLAN OF PUMP FLOOR - INSTALLATION PLAN
HS-25-04	BASEMENT PIPING PLAN - DEMOLITION & INSTALLATION PLAN
HS-25-05	SECTIONS AND DETAILS - DEMOLITION PLAN
HS-25-06	SECTIONS AND DETAILS - INSTALLATION PLAN
HS-25-07	PIPE AND SUPPORT DETAILS
HS-25-08	PUMP #2 ASD REPLACEMENT - ELECTRICAL DETAILS
HS-25-09	ELECTRICAL ONE-LINE MODIFICATIONS
HS-25-10	BREAKER AND VALVE CONTROL - TYPICAL SCHEMATICS
HS-25-11	SOFT START CONTROLLER - SCHEMATICS
REFERENCE DRAWINGS	
HS-4 (HS-7-4)	HOWARD STA. GENERAL PLAN OF BASEMENT FLOOR
HS-5 (HS-7-5)	HOWARD STA. GENERAL PLAN OF PUMP FLOOR
HS-8 (HS-7-8)	HOWARD STA. BUILDING SECTIONS
HS-9 (HS-7-9)	HOWARD STA. BUILDING SECTION
HS-11 (HS-7-11)	HOWARD STA. STRUCTURAL PLAN OF PUMP FLOOR
HS-14 (HS-7-14)	HOWARD STA. CONCRETE SECTIONS AND DETAILS
HS-15 (HS-7-15)	HOWARD STA. BEAM, COLUMN AND REMOVABLE SLAB DETAILS
HS-16 (HS-7-16)	HOWARD STA. PUMP BASE AND METER MANHOLE DETAILS
HS-22 (HS-7-22)	HOWARD STA. PIPE FITTING DETAILS
HS-23 (HS-7-23)	HOWARD STA. PIPE SUPPORT DETAILS
HS-24 (HS-7-24)	HOWARD STA. MISCELLANEOUS PIPING PLAN
HS-25 (HS-7-25)	HOWARD STA. MISCELLANEOUS PIPING DETAILS
HS-28 (HS-7-28)	HOWARD STA. FUNCTIONAL ONE-LINE DIAGRAM
HS-29 (HS-7-29)	HOWARD STA. COMPREHENSIVE ONE-LINE DIAGRAM
HS-30 (HS-7-30)	HOWARD STA. BREAKER AND VALVE CONTROL - TYPICAL SCHEMATICS
HS-31 (HS-7-31)	HOWARD STA. BREAKER AND VALVE CONTROL - TYPICAL SCHEMATICS
HS-32 (HS-7-32)	HOWARD STA. MISCELLANEOUS DETAILS AND TYPICAL SCHEMATICS
HS-39 (HS-7-39)	HOWARD STA. PUMP FLOOR POWER WIRING
HS-40 (HS-7-40)	HOWARD STA. BASEMENT POWER WIRING
HS-16-1 (HS-16-01)	HOWARD STA. SUPERVISORY CONTROL EQUIPMENT

WISCONSIN
DINAH G. GANT
E-24682
MILWAUKEE, WI
10/13/2010
PROFESSIONAL ENGINEER

NO.	BY	REVISION	DATE

Milwaukee Water Works — Water Engineering, Department of Public Works

HOWARD AVENUE PUMPING STATION
PUMP #2 AND PUMP #3 REPLACEMENT
HOWARD AVENUE PUMPING STATION

DESIGNED BY	PJG
DRAWN BY	PJG
CHECKED BY	BST
DATE	10-12-2010
SCALE	AS SHOWN
WORK ORDER	WT450075500, WT450085300
OFFICIAL NOTICE	54-2010
FILE NO.	

APPROVED — DATE 10/12/10 — PLANTS PROJECT ENGINEER
10/13/10 — CHIEF DESIGN ENGINEER
10/13/10 — SPECIAL DEPUTY COMMISSIONER OF PUBLIC WORKS

DRAWING NO. HS-25-01

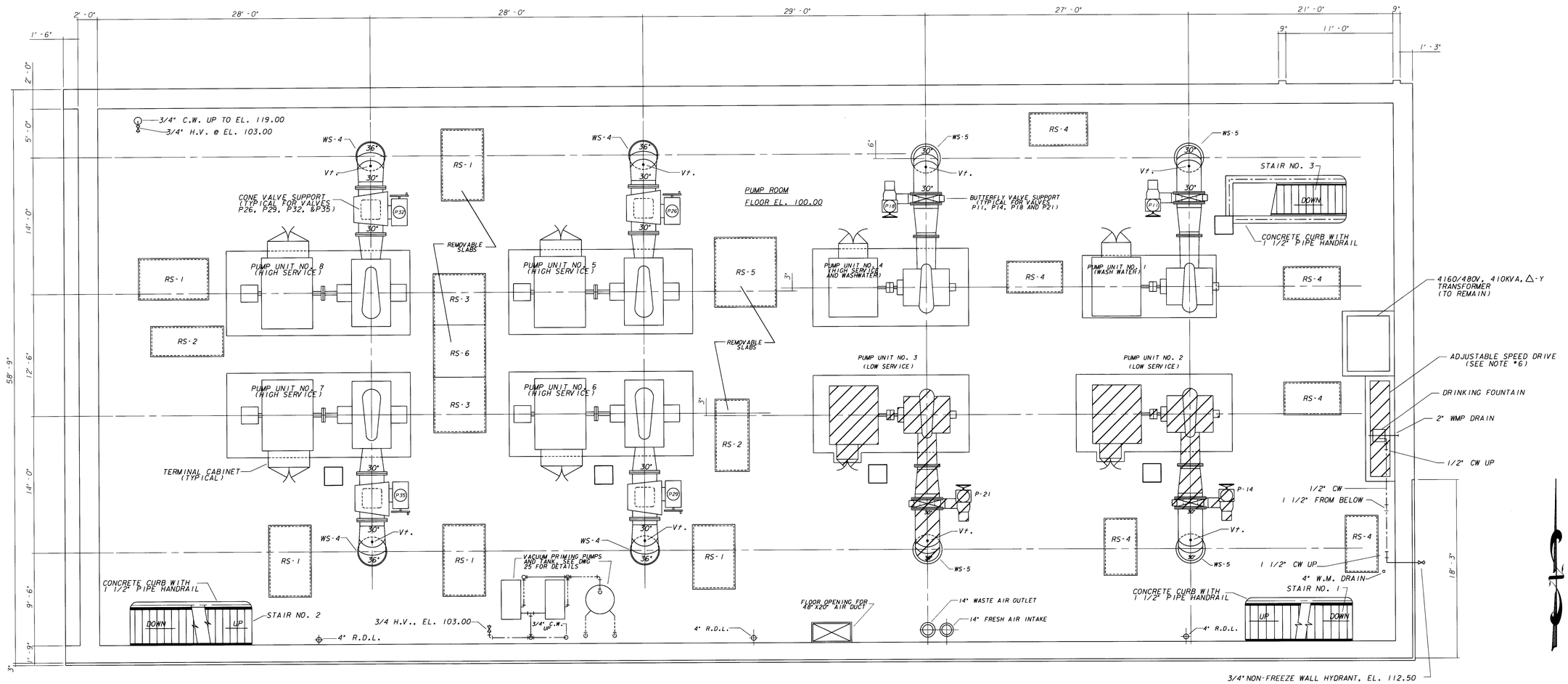

NOTES

1. REMOVE EXISTING 30" PUMP SUCTION PIPING, VALVES, AND REDUCERS FOR PUMPS #2 & #3
2. REMOVE EXISTING PUMP #2, MOTOR AND METAL BASE PLATE.
3. REMOVE EXISTING PUMP #3, MOTOR AND METAL BASE PLATE.
4. REMOVE ALL PIPING, PIPE SUPPORTS, VALVING, INSTRUMENTATION, AND COUPLINGS FROM EXISTING PUMP DISCHARGE PIPING FOR PUMPS #2 & #3.
5. DISCONNECT ELECTRICAL FOR POWER AND INSTRUMENTATION (CONTRACTOR). PLANT FORCES TO RACK OUT FOR BOTH PUMPS.
6. DISCONNECT & REMOVE EXISTING LOUIS ALLIS ADJUSTABLE SPEED DRIVE.

GENERAL PLAN OF PUMP FLOOR

SCALE 3/16" = 1'-0"

CONTRACTOR TO VERIFY DIMENSIONS PRIOR TO FABRICATION

WISCONSIN DINAH G. GANT E-24688 MILWAUKEE, WI PROFESSIONAL ENGINEER

NO.	BY	REVISION	DATE
△			
△			
△			

Milwaukee **Water Works** — **Water Engineering** Department of Public Works

HOWARD AVENUE PUMPING STATION

PUMP #2 AND PUMP #3 REPLACEMENT

GENERAL PLAN OF PUMP FLOOR DEMOLITION PLAN

DESIGNED BY	PJG
DRAWN BY	L. ROGERS
CHECKED BY	PJG
DATE	10-12-2010
SCALE	AS SHOWN
WORK ORDER	WT450075500, WT450085300
OFFICIAL NOTICE	54-2010
FILE NO.	

APPROVED — DATE
10/12/10 PLANTS PROJECT ENGINEER
10/13/10 CHIEF DESIGN ENGINEER
10/13/10 SPECIAL DEPUTY COMMISSIONER OF PUBLIC WORKS

DRAWING NO. HS-25-02

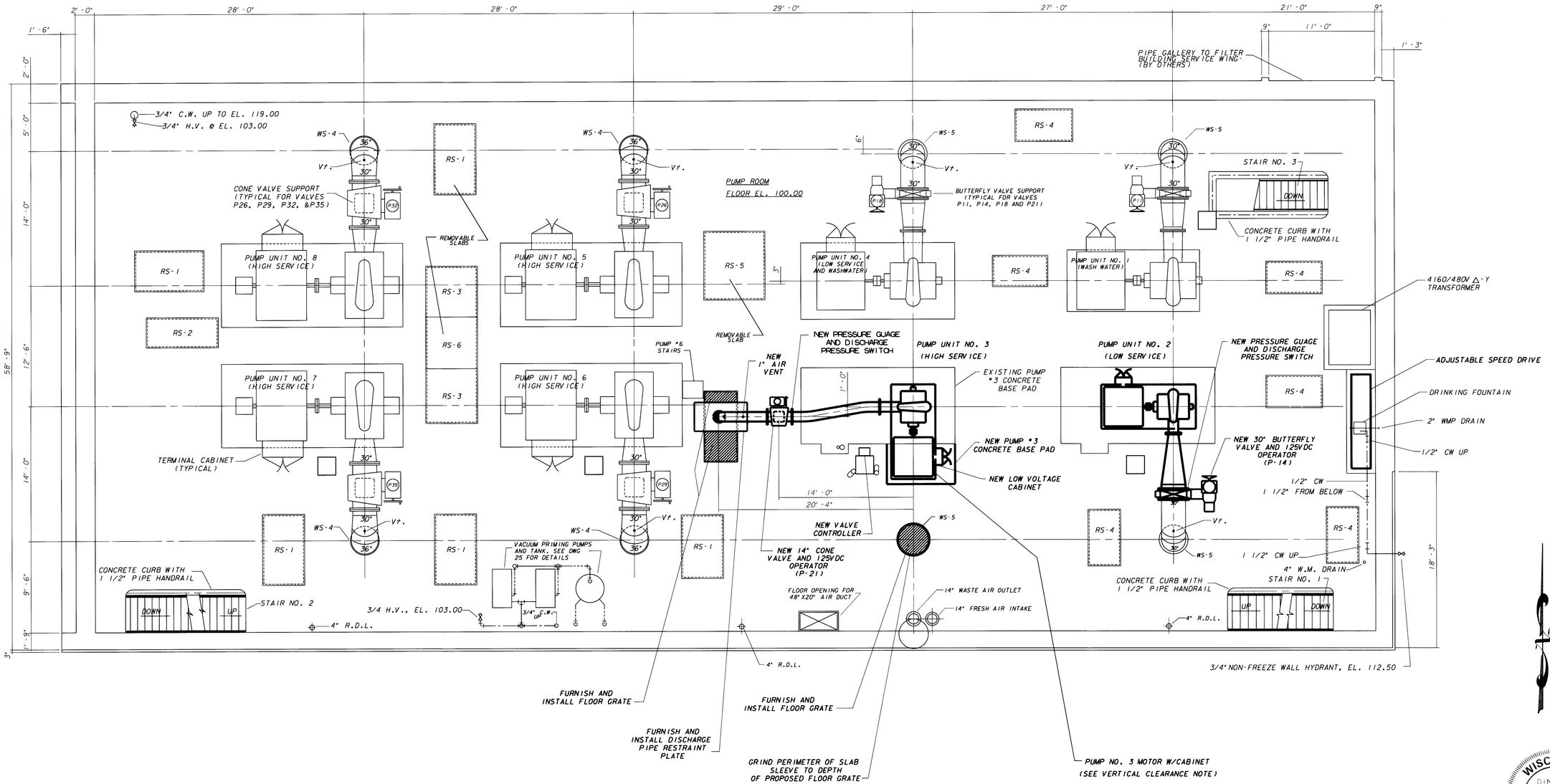

NOTE:

CONTRACTOR TO FURNISH AND INSTALL NEW 14"x28"x28" JUNCTION BOX. CONTRACTOR TO EXTEND CONDUITS FOR MOTOR POWER AND CONTROL TO NEW LV CABINET LOCATION.

GENERAL PLAN OF PUMP FLOOR

SCALE 3/16" = 1'-0"

CONTRACTOR TO VERIFY DIMENSIONS PRIOR TO FABRICATION

VERTICAL CLEARANCE NOTE:

VERTICAL DISTANCE TO CEILING OBSTRUCTIONS UNDER SWITCHGEAR BALCONY IS APPROXIMATELY 10'-2". CONTRACTOR TO VERIFY THIS AND ALL OTHER DIMENSIONS PRIOR TO FABRICATION OF MOTOR ENCLOSURE TO PROVIDE A MINIMUM 6" CLEARANCE BETWEEN TOP OF MOTOR ENCLOSURE AND CEILING OBSTRUCTIONS.

WISCONSIN DINAH G. GANT E-24682 MILWAUKEE, WI PROFESSIONAL ENGINEER

NO.	BY	REVISION	DATE
△			
△			
△			

Milwaukee Water Works — Water Engineering, Department of Public Works

HOWARD AVENUE PUMPING STATION

PUMP #2 AND PUMP #3 REPLACEMENT

GENERAL PLAN OF PUMP FLOOR INSTALLATION PLAN

DESIGNED BY	PJG
DRAWN BY	L. ROGERS
CHECKED BY	BST
DATE	10-12-2010
SCALE	AS SHOWN
WORK ORDER	WT480075500, WT460085300
OFFICIAL NOTICE	54-2010
FILE NO.	

APPROVED — DATE 10/12/10 — PLANTS PROJECT ENGINEER

BY 10/13/10 — CHIEF OPERATION ENGINEER

10/13/10 — SPECIAL DEPUTY COMMISSIONER OF PUBLIC WORKS

DRAWING NO. HS-25-03

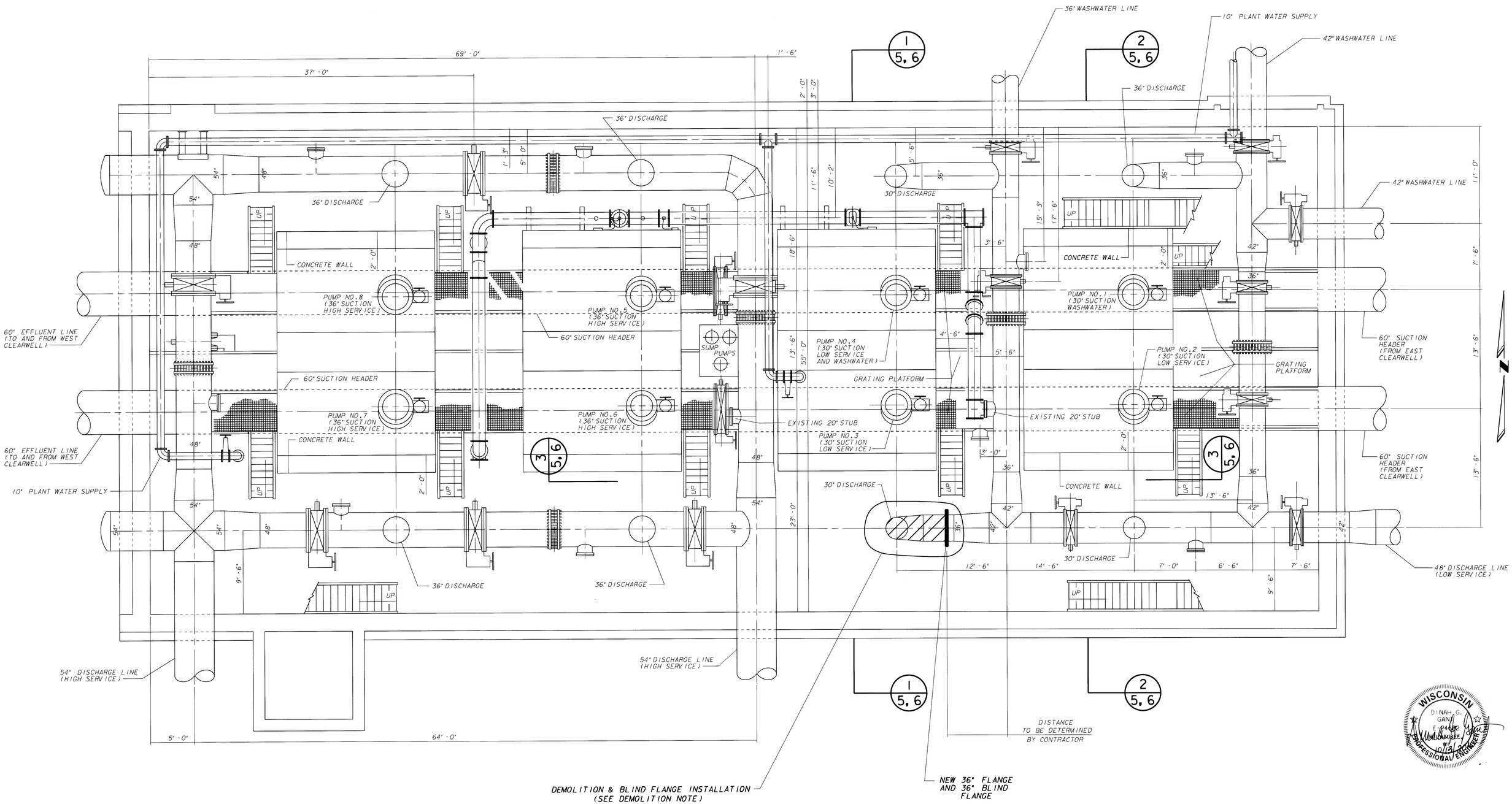

DEMOLITION NOTE

1. CUT AND REMOVE 36" & 30" AND TRANSITION DISCHARGE PIPING AS SHOWN.
2. WELD 36" FLANGE.
3. INSTALL 36" BLIND FLANGE AND ALL NECESSARY RESTRAINTS.
4. MOVE EXISTING HANGING PIPE SUPPORT. RELOCATE SO AS TO SUPPORT BLIND FLANGED PIPING.

PLAN VIEW

CONTRACTOR TO VERIFY DIMENSIONS PRIOR TO FABRICATION

NO.	BY	REVISION	DATE

Milwaukee Water Works — Water Engineering, Department of Public Works

HOWARD AVENUE PUMPING STATION

PUMP #2 AND PUMP 3# REPLACEMENT

BASEMENT PIPING PLAN
DEMOLITION & INSTALLATION PLAN

DESIGNED BY	PJG
DRAWN BY	PJG
CHECKED BY	BST
DATE	10-12-2010
SCALE	1" = 5'
WORK ORDER	WT450075500, WT450085300
OFFICIAL NOTICE	54-2010
FILE NO.	

APPROVED — DATE
Anthony Sigurdy 10/12/10 — PLANTS PROJECT ENGINEER
Dinah G. Gant 10/13/10 — CHIEF DESIGN ENGINEER
C. Lewis 10/13/10 — SPECIAL DEPUTY COMMISSIONER OF PUBLIC WORKS

DRAWING NO. HS-25-04

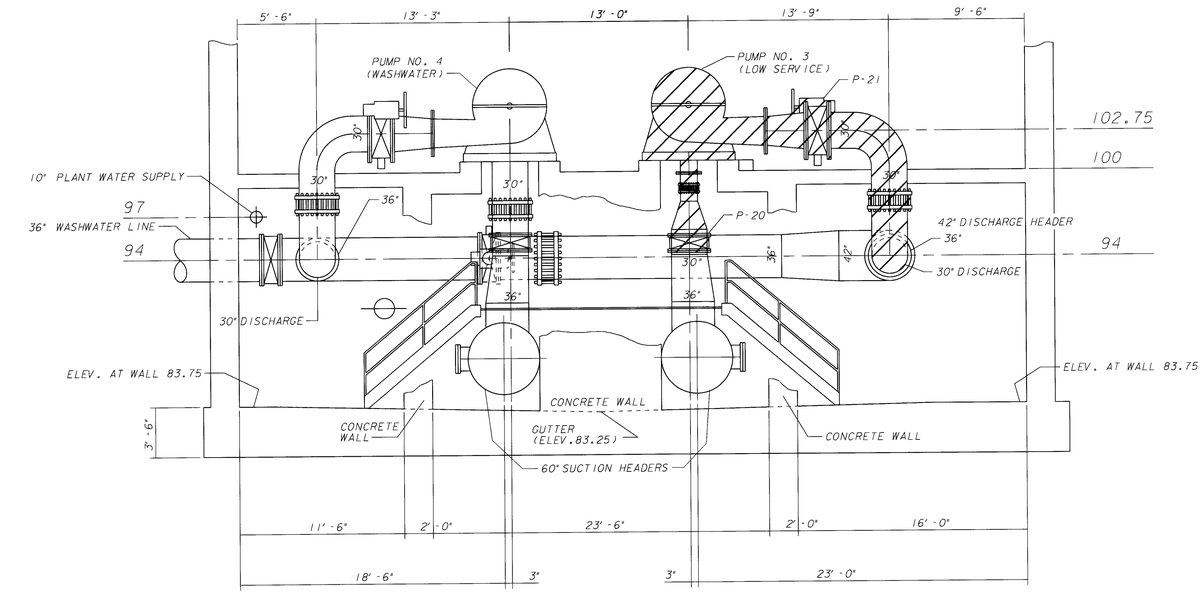

SECTION 1

(FACING EAST)

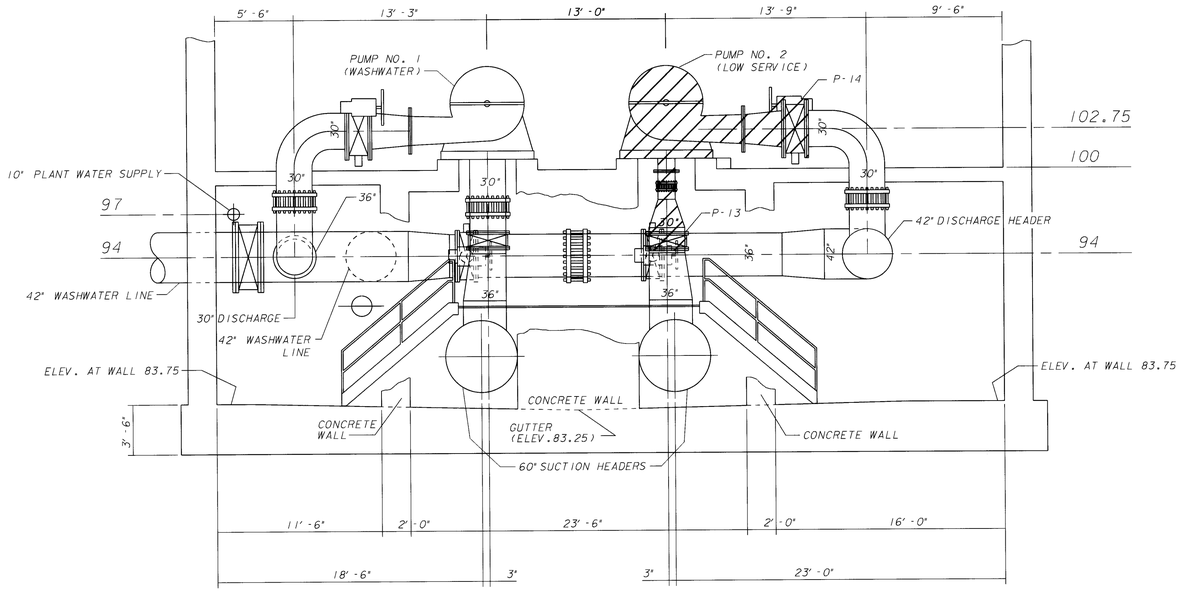

SECTION 2

(FACING EAST)

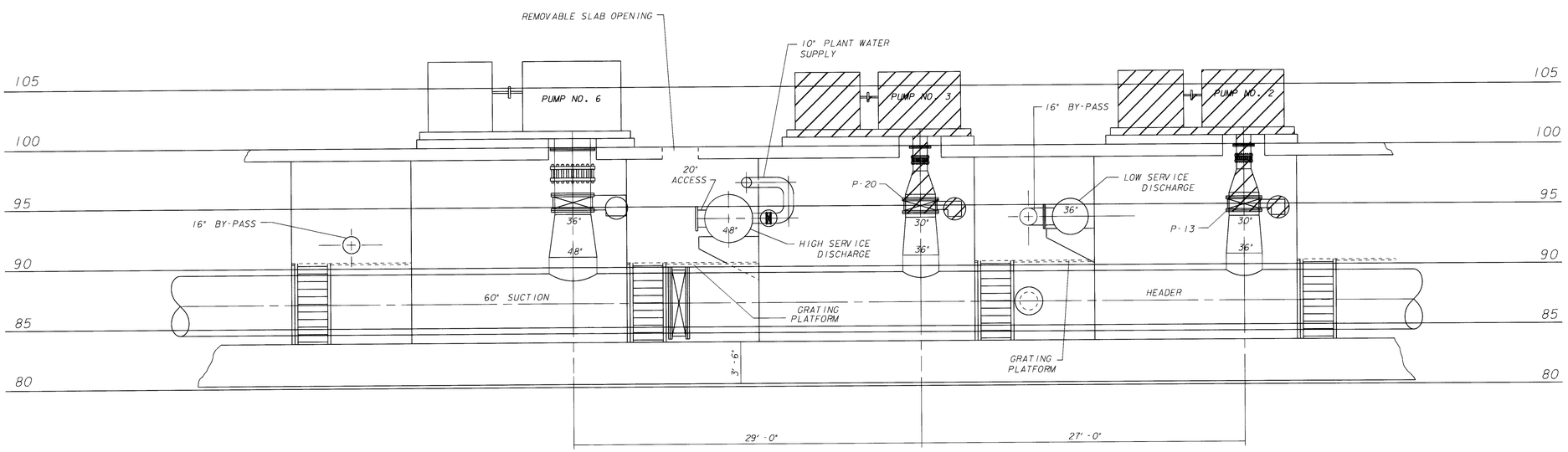

SECTION 3

(FACING NORTH)

CONTRACTOR TO VERIFY DIMENSIONS PRIOR TO FABRICATION

WISCONSIN DINAH G. GANT E-24462 MILWAUKEE PROFESSIONAL ENGINEER

NO.	BY	REVISION	DATE

Milwaukee Water Works — Water Engineering, Department of Public Works

HOWARD AVENUE PUMPING STATION

PUMP #2 AND PUMP 3# REPLACEMENT

SECTIONS AND DETAILS DEMOLITION PLAN

DESIGNED BY	PJG
DRAWN BY	PJG
CHECKED BY	BST
DATE	10-12-2010
SCALE	1" = 5'
WORK ORDER	WT450075500, WT450085300
OFFICIAL NOTICE	54-2010
FILE NO.	

APPROVED — DATE
PLANTS PROJECT ENGINEER — 10/12/10
CHIEF DESIGN ENGINEER — 10/13/10
SPECIAL DEPUTY COMMISSIONER OF PUBLIC WORKS — 10/13/10

DRAWING NO. HS-25-05

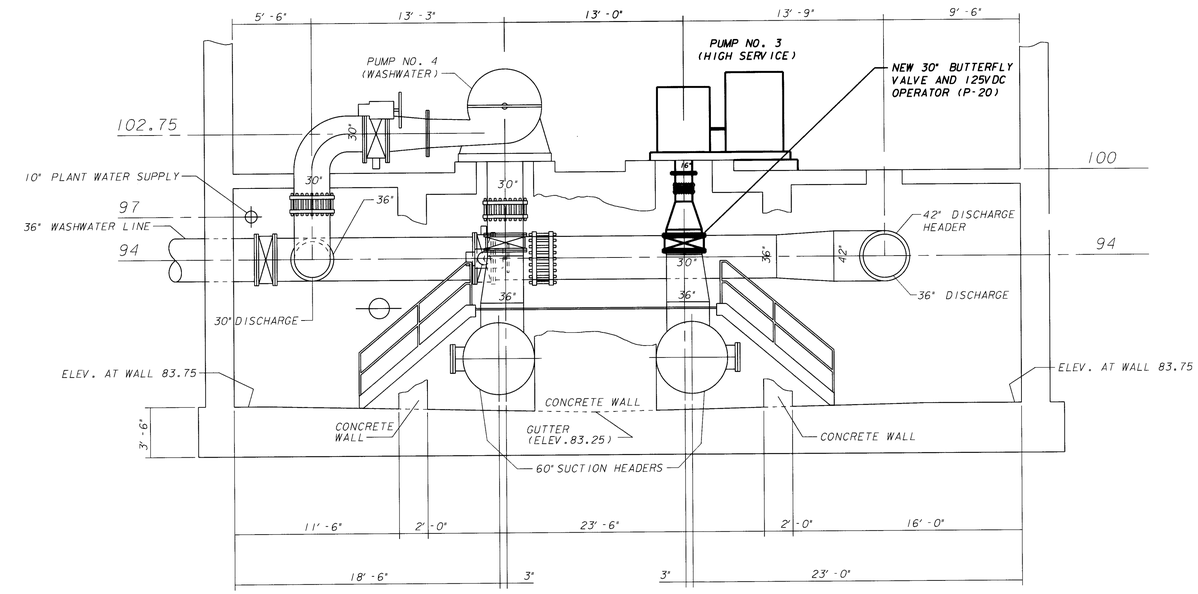

SECTION 1

(FACING EAST)

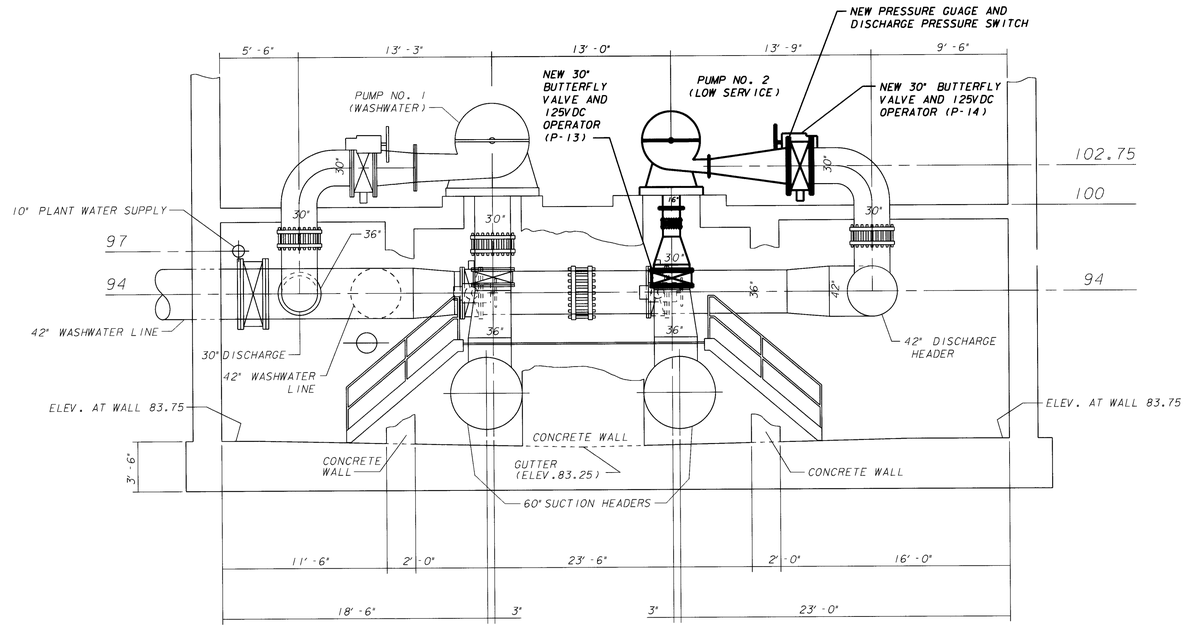

SECTION 2

(FACING EAST)

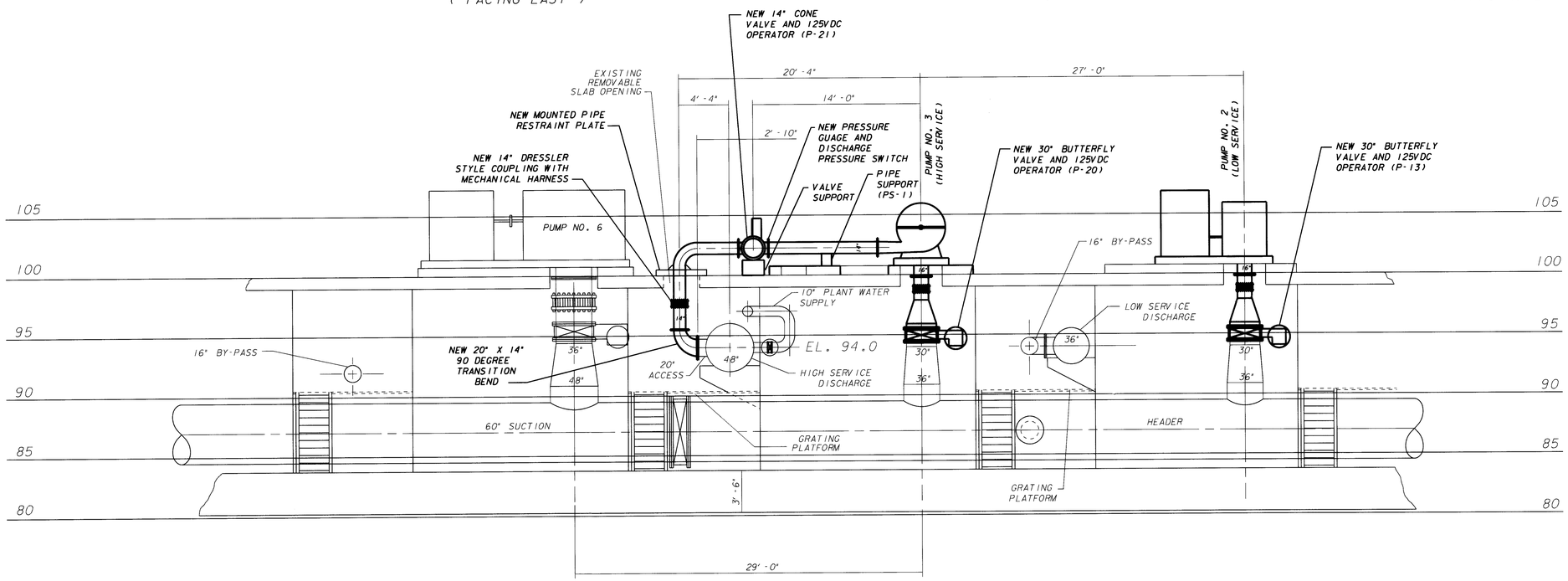

SECTION 3

(FACING NORTH)

CONTRACTOR TO VERIFY DIMENSIONS PRIOR TO FABRICATION

NO.	BY	REVISION	DATE

Milwaukee Water Works — Water Engineering, Department of Public Works

HOWARD AVENUE PUMPING STATION

PUMP #2 AND PUMP 3# REPLACEMENT

SECTIONS AND DETAILS INSTALLATION PLAN

DESIGNED BY	PJG
DRAWN BY	PJG
CHECKED BY	BST
DATE	10-12-2010
SCALE	1" = 5'
WORK ORDER	WT450075500, WT450085300
OFFICIAL NOTICE	54-2010
FILE NO.	

APPROVED — DATE
10/12/10 — PLANTS PROJECT ENGINEER
10/13/10 — CHIEF DESIGN ENGINEER
10/13/10 — SPECIAL DEPUTY COMMISSIONER OF PUBLIC WORKS

DRAWING NO. HS-25-06

MECHANICAL COUPLING HARNESS DIMENSIONS - 150 PSI

PIPE O.D.	BOLT DIA "D"	BOLTS PER HARNESS	A	W	Z	T	H	E	H_1	HOLE DIA.	5" RING L	5" RING B
14"	3/4"	2	3 3/4"	1 11/16"	3 1/2"	3/8"	4 1/8"	3 1/8"	2 7/8"		24"	10 1/4"

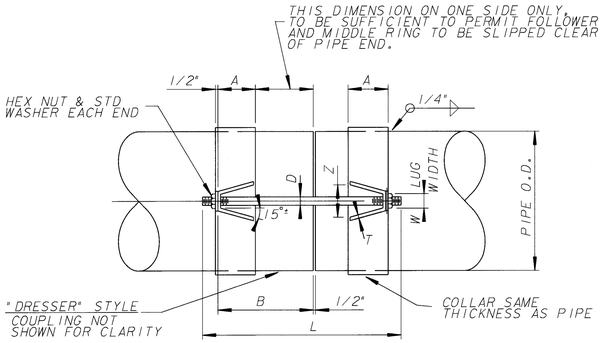

PLAN

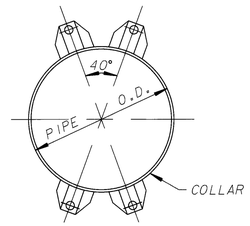

SECTION

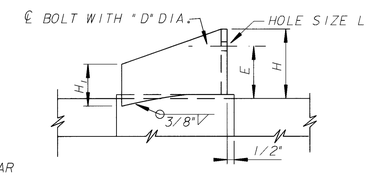

ELEVATION OF LUG

PUMP #3 DISCHARGE PIPE MECHANICAL HARNESS

N.T.S.

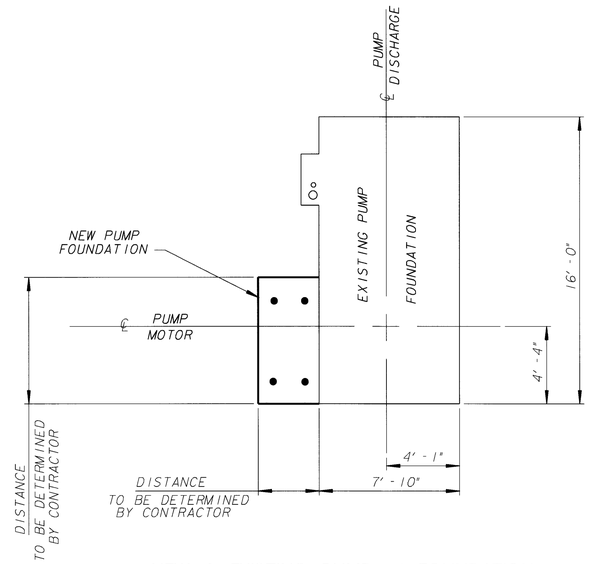

NEW & EXISTING PUMP #3 FOUNDATION

1" = 4' - 0"

NOTES:

1. CONTRACTOR TO SET ANCHOR BOLTS PER PUMP BASE PLATE MANUFACTURER TEMPLATE WHEN CONCRETE IS POURED FOR FOUNDATION.
2. GROUT SHALL BE NON-SHRINK, NON-METALLIC INSTALLED PER MANUFACTURER RECOMMENDATION. GROUT SHALL BE "5-STAR" OR EQUAL.
3. PAINT ALL EXTERIOR SURFACES PER SPECIFICATIONS 09900. COLOR TO BE DETERMINED.

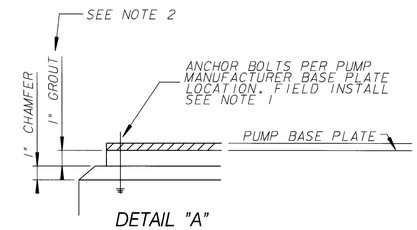

DETAIL "A"

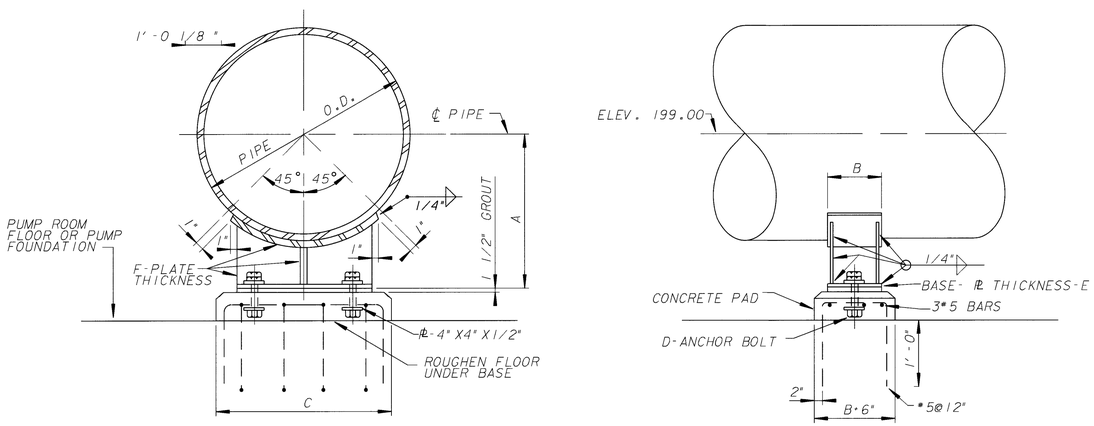

CONCRETE PIPE SUPPORT DETAIL

N.T.S.

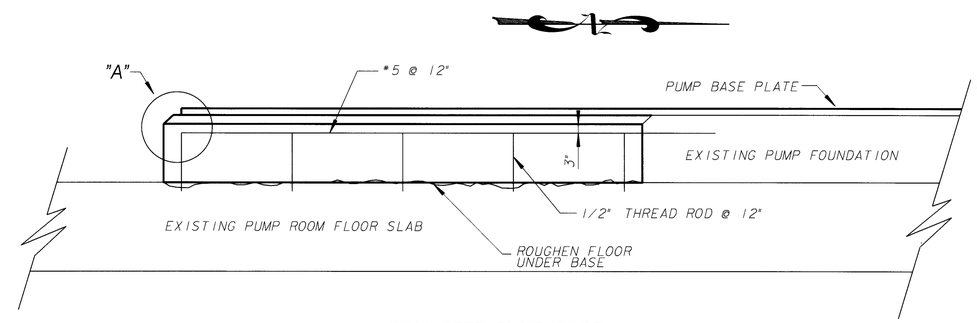

CONCRETE PUMP BASE

N.T.S.

PIPE SUPPORT DIMENSIONS							
PIPE O.D.	P.S. NO.	A	B	C	D	E	F
14"	PS-1	2' - 1"	12"	18"	3/4"	3/8"	3/8"

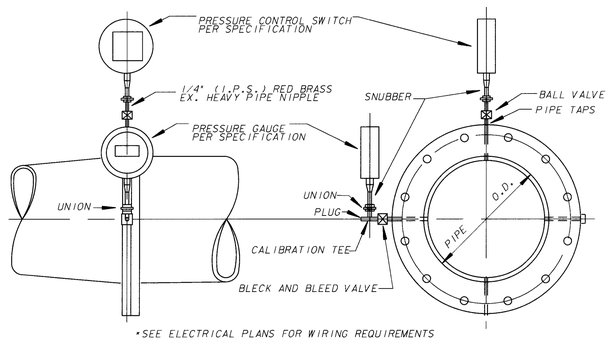

PRESSURE GAGE & CONTROL SWITCH DETAIL

N.T.S.

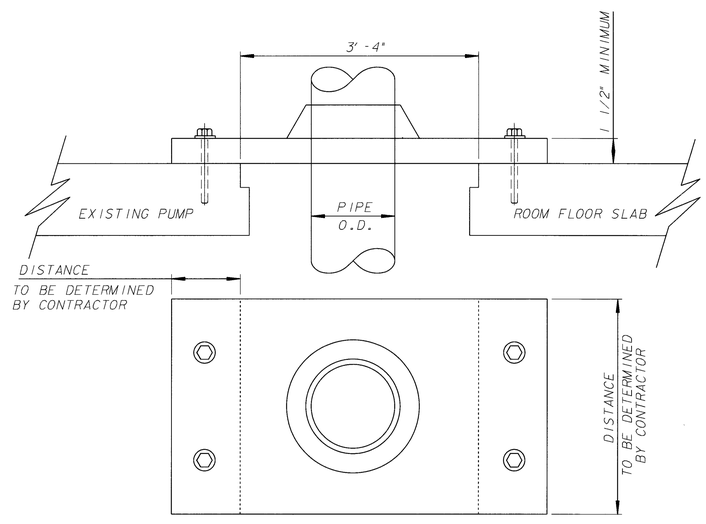

PUMP #3 DISCHARGE PIPE RESTRAINT

1" = 1' - 0"

WISCONSIN DINAH G. GANT E-24682 PROFESSIONAL ENGINEER

NO.	BY	REVISION	DATE

Milwaukee Water Works — Water Engineering, Department of Public Works

HOWARD AVENUE PUMPING STATION

PUMP #2 AND PUMP #3 REPLACEMENT

PIPE AND SUPPORT DETAILS

DESIGNED BY	PJG
DRAWN BY	PJG
CHECKED BY	BST
DATE	10-12-2010
SCALE	AS SHOWN
WORK ORDER	WT450075500, WT450065300
OFFICIAL NOTICE	54-2010
FILE NO.	

APPROVED — PLANTS PROJECT ENGINEER — DATE 10/12/10
CHIEF DESIGN ENGINEER — 10/13/10
SPECIAL DEPUTY COMMISSIONER OF PUBLIC WORKS — 10/13/10

DRAWING NO. HS-25-07

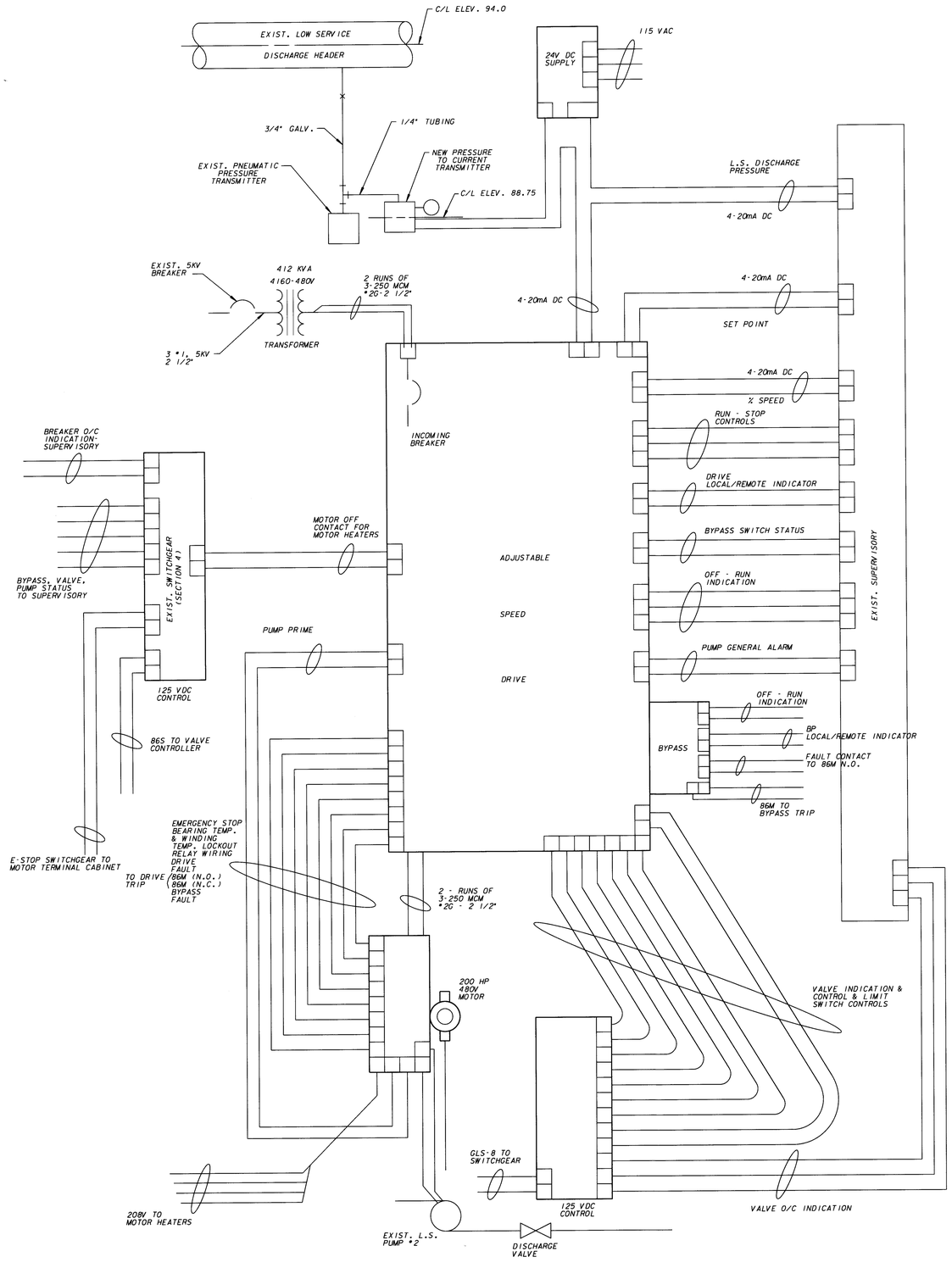

PUMP BUILDING

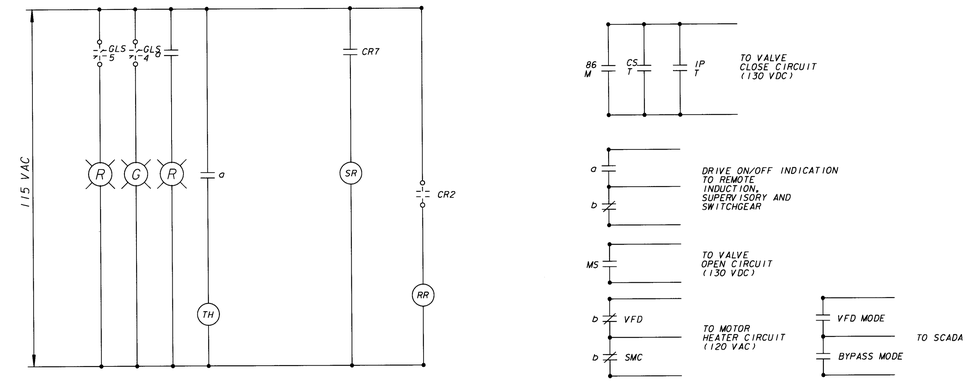

VARIABLE FREQUENCY DRIVE CONTROL SCHEMATIC

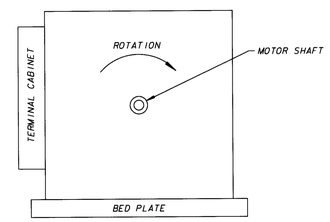

PUMP MOTOR NO. 2

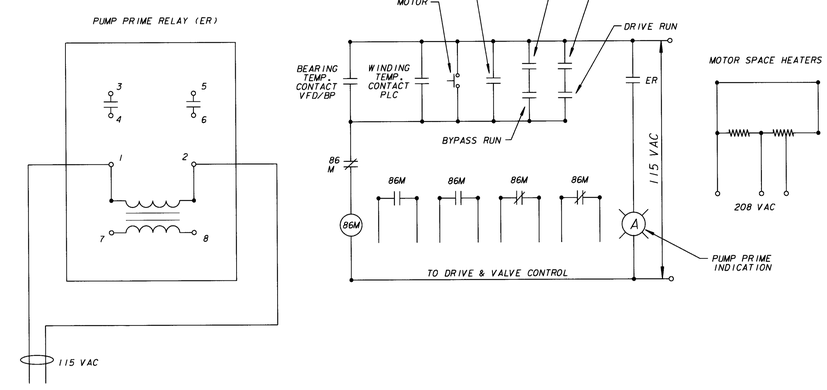

MOTOR TERMINAL COMPARTMENT

LEGEND

C - VALVE CONTROLLER "CLOSE" CONTRACTOR
CR2 - DRIVE START FROM PLC
CR7 - DRIVE STOP FROM PLC
CS - CONTROL SWITCH, SPRING RETURN
ER - ELECTRODE RELAY - CONTACT CLOSES WHEN PUMP IS PRIMED
ES - EMERGENCY STOP PUSHBUTTON AT MOTOR
G - GREEN INDICATOR LAMP
GLS/3 - GEARED LIMIT SWITCH ON VALVE - CONTACT CLOSES ONLY WHEN VALVE IS 95% CLOSED.
GLS-4 - GLS ON VALVE - OPENS WHEN VALVE FULLY OPEN
GLS-5 - GLS ON VALVE - OPENS WHEN VALVE FULLY CLOSED
GLS-6 - GLS ON VALVE - OPENS WHEN VALVE FULLY OPEN
GLS-7 - GLS ON VALVE - OPENS WHEN VALVE FULLY CLOSED
GLS-8 - GLS ON VALVE - CLOSED WHEN VALVE FULLY CLOSED
IP/C - INTERPOSING RELAY - CLOSE
IP/T - INTERPOSING RELAY - TRIP
KO - DRIVE OUTPUT CONTACTOR
K1 - BY PASS CONTACTOR
S/C - SUPERVISORY CONTROL "CLOSE" CONTACT
S/T - SUPERVISORY CONTROL "TRIP" CONTACT
TH - TOTAL HOUR METER
43 - SUPERVISORY CONTROL DISABLING SWITCH
86/M - PROTECTIVE LOCKOUT RELAY ON MOTOR
a - N.O. CONTACT, CLOSED WHEN MOTOR IS RUNNING
b - N.C. CONTACT, OPEN WHEN MOTOR IS RUNNING
MS - MINIMUM SPEED CONTACT, CLOSES WHEN MOTOR REACHES MINIMUM SPEED
RR - RUN RELAY
SR - STOP RELAY
o-|1|-o - CONTACTS BY OTHERS (DASHED)
R - RED INDICATOR LAMP
A - AMBER INDICATOR LAMP
G - GREEN INDICATOR LAMP

NOTE: 1) CONTRACTOR SHALL NOTE CONTROL VOLTAGES AND PROVIDE SUITABLY RATED CONTACTS.
2) ADDITIONAL 86M N.C. CONTACT SHALL BE WIRED INTO BYPASS CONTROLLER STOP CIRCUIT.
3) ALL INDICATING LIGHTS SHALL BE LED, PUSH-TO-TEST TYPE

WISCONSIN DINAH G. GANT E-24682 MILWAUKEE PROFESSIONAL ENGINEER 10/13/2010

NO.	BY	REVISION	DATE

Milwaukee Water Works — Water Engineering, Department of Public Works

HOWARD AVENUE PUMPING STATION

PUMP #2 AND PUMP #3 REPLACEMENT

PUMP #2 ASD REPLACEMENT ELECTRICAL DETAILS

DESIGNED BY	BST
DRAWN BY	PJG
CHECKED BY	PJG
DATE	10-12-2010
SCALE	AS SHOWN
WORK ORDER	WT450075500, WT450085300
OFFICIAL NOTICE	54-2010
FILE NO.	

APPROVED — DATE
10/12/10 PLANTS PROJECT ENGINEER
10/13/10 CHIEF DESIGN ENGINEER
10/13/10 SPECIAL DEPUTY COMMISSIONER OF PUBLIC WORKS

DRAWING NO. HS-25-08

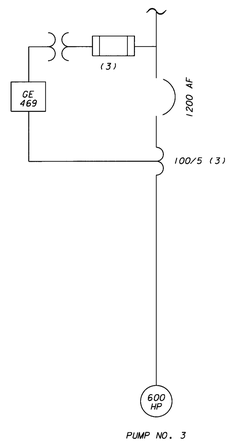

NEW PARTIAL ONE-LINE DIAGRAM
PUMPING UNIT NO. 3

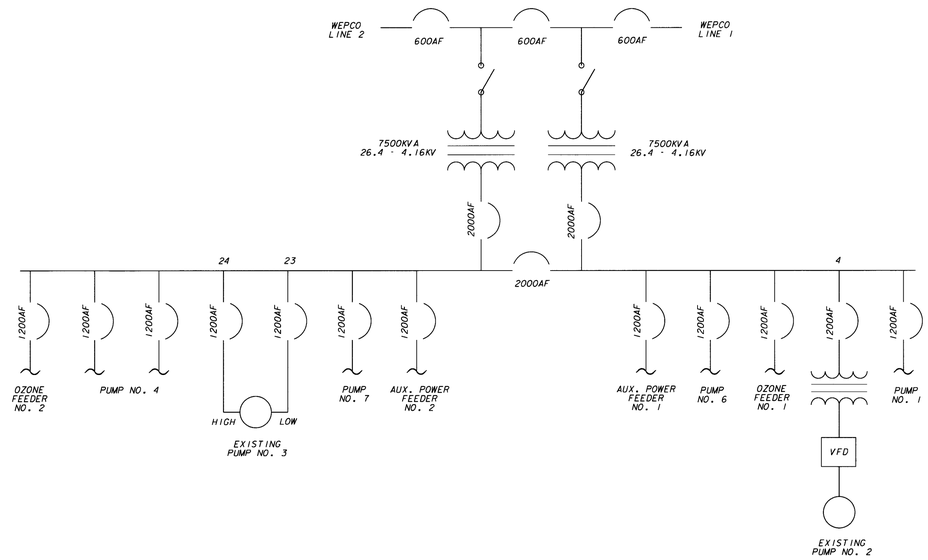

EXISTING ONE-LINE DIAGRAM

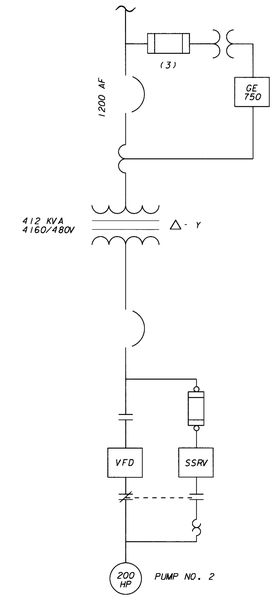

NEW PARTIAL ONE-LINE DIAGRAM
PUMPING UNIT NO. 2

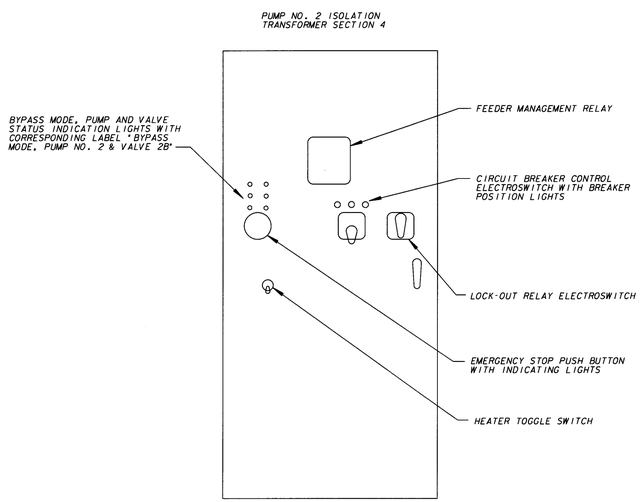

NEW 4.16KV PUMP NO. 2
ISOLATION TRANSFORMER
SWITCHGEAR SECTION ELEVATION

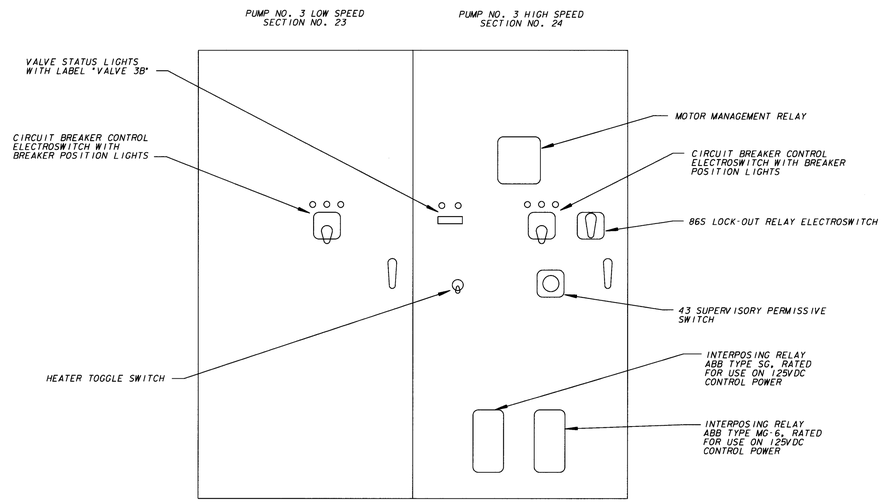

NEW 4.16KV PUMP NO. 3
LOW & HIGH SWITCHGEAR SECTIONS

NOTES:

1) CONTRACTOR TO DISCONNECT AND REMOVE ALL DEVICES AND ASSOCIATED WIRING ON SWITCHGEAR SECTIONS 4, 23 & 24, AND INSTALL NEW DEVICES & WIRING, AS INDICATED.

2) ALL INDICATION LIGHTS SHALL BE COMPLETE LED LIGHTS WITH 22MM PLASTIC LENS CAP AND RATED FOR USE ON 125VDC CONTROL POWER. RED INDICATES ENERGIZED OR OPEN, AND GREEN INDICATES DEENERGIZED OR CLOSED.

NO.	BY	REVISION	DATE
△			
△			
△			

Milwaukee Water Works — Water Engineering, Department of Public Works

HOWARD AVENUE PUMPING STATION

PUMP #2 AND PUMP #3 REPLACEMENT

ELECTRICAL ONE-LINE MODIFICATIONS

		APPROVED	DATE
DESIGNED BY	BST		
DRAWN BY	PJG		
CHECKED BY	PJG		
DATE	10-12-2010		
SCALE	AS SHOWN		
WORK ORDER	WT460075500, WT450085300		
OFFICIAL NOTICE	54-2010		
FILE NO.			

PLANTS PROJECT ENGINEER — 10/12/10
CHIEF DESIGN ENGINEER — 10/13/10
SPECIAL DEPUTY COMMISSIONER OF PUBLIC WORKS — 10/13/10

DRAWING NO. HS-25-09

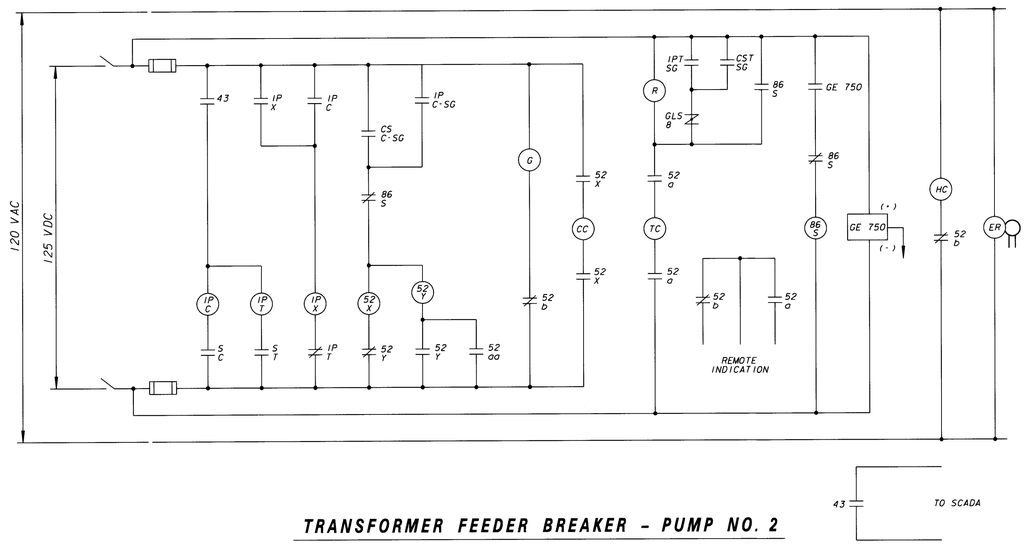

TRANSFORMER FEEDER BREAKER - PUMP NO. 2

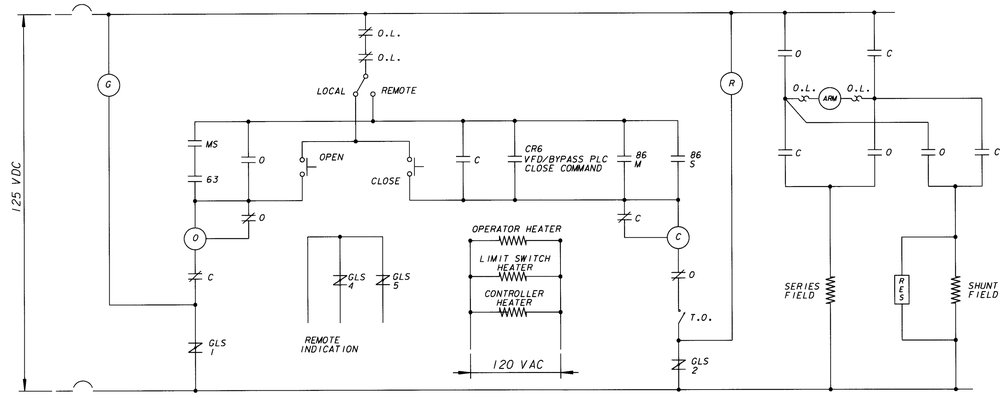

DISCHARGE VALVE - PUMP NO. 2

LEGEND

BPS	-	VFD/OFF/BYPASS SELECTOR SWITCH
C	-	VALVE CONTROLLER "CLOSE" CONTACTOR
CC	-	BREAKER CLOSING COIL
CS	-	CONTROL SWITCH, SPRING RETURN
ER	-	ELECTRODE RELAY - CONTACT CLOSES WHEN PUMP IS PRIMED
ES	-	EMERGENCY STOP PUSHBUTTON AT MOTOR
G	-	GREEN INDICATING LIGHT
GLS/1	-	GEARED LIMIT SWITCH ON VALVE - CONTACT OPEN ONLY WHEN VALVE IS FULLY OPEN
GLS/2	-	GEARED LIMIT SWITCH ON VALVE - CONTACT OPEN ONLY WHEN VALVE IS FULLY CLOSED
GLS/3	-	GEARED LIMIT SWITCH ON VALVE - CONTACT CLOSES ONLY WHEN VALVE IS 95% CLOSED.
GLS/4	-	GEARED LIMIT SWITCH ON VALVE - CONTACT OPEN ONLY WHEN VALVE IS FULLY OPEN
GLS/5	-	GEARED LIMIT SWITCH ON VALVE - CONTACT OPEN ONLY WHEN VALVE IS FULLY CLOSED
GLS/6	-	GEARED LIMIT SWITCH ON VALVE - CONTACT OPEN ONLY WHEN VALVE IS FULLY OPEN
GLS/7	-	GEARED LIMIT SWITCH ON VALVE - CONTACT OPEN ONLY WHEN VALVE IS FULLY CLOSED
GLS/8	-	GEARED LIMIT SWITCH ON VALVE - CONTACT CLOSES ONLY WHEN VALVE IS FULLY CLOSED
HC	-	CONTACTOR FOR MOTOR SPACE HEATER
IP/C	-	INTERPOSING RELAY - CLOSE
IP/T	-	INTERPOSING RELAY - TRIP
IP/X	-	INTERPOSING RELAY - AUXILIARY FOR WHITE LIGHT
KO	-	VFD CONTACTOR
K1	-	BYPASS CONTACTOR
LC	-	LEAKAGE DETECTOR
MS	-	MINIMUM SPEED CONTACT - DRIVE
O	-	VALVE CONTROLLER "OPEN" CONTACTOR
O.L.	-	OVERLOAD DEVICE
R	-	RED INDICATING LIGHT
-SG	-	PERTAINS TO SWITCHGEAR
-SS	-	PERTAINS TO SOFT START
S/C	-	SUPERVISORY CONTROL "CLOSE" CONTACT
S/T	-	SUPERVISORY CONTROL "TRIP" CONTACT
TC	-	BREAKER TRIPPING COIL
TH	-	TOTAL HOUR METER
T.O.	-	TORQUE OVERLOAD DEVICE
W	-	WHITE INDICATING LIGHT
26	-	STARTING PROTECTION
38	-	BEARING TEMPERATURE DEVICE
41	-	FIELD CONTACTOR
43	-	SUPERVISORY CONTROL DISABLING SWITCH
47	-	PHASE SEQUENCE AND UNDERVOLTAGE RELAY
49	-	MOTOR THERMAL RELAY
50	-	INSTANTANEOUS OVERCURRENT RELAY
51	-	TIME OVERCURRENT - PHASE
51/G	-	TIME OVERCURRENT - GROUND
52/a	-	NORMALLY OPEN BREAKER AUXILIARY SWITCH
52/b	-	NORMALLY CLOSED BREAKER AUXILIARY SWITCH
63	-	DISCHARGE PRESSURE SWITCH
67	-	DIRECTIONAL OVERCURRENT RELAY
86/M	-	PROTECTIVE LOCKOUT RELAY ON MOTOR/DRIVE
86/S	-	PROTECTIVE LOCKOUT RELAY ON SWITCHGEAR
86/T	-	TRANSFORMER LOCKOUT RELAY
87/M	-	MOTOR DIFFERENTIAL RELAY
87/T	-	TRANSFORMER DIFFERENTIAL RELAY
TDO	-	TIME DELAY OPEN
CS/SS	-	CONTROL SWITCH SOFT START CONTROLLER
IP/SS	-	INTERPOSING RELAY SOFT START CONTROLLER
AS	-	AT SPEED CONTACT SOFT START CONTROLLER

NOTE:

1) CONTRACTOR SHALL MAKE ALL CONTROL CIRCUIT WIRING CHANGES TO REFLECT REMOVAL AND REPLACEMENT OF OLD RELAYS AND DEVICES.

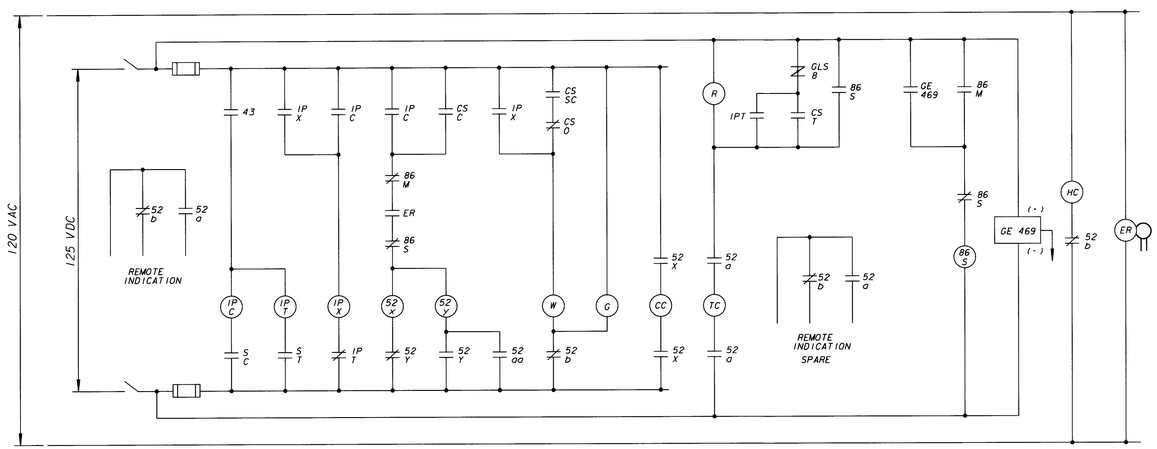

FEEDER BREAKER - PUMP NO. 3

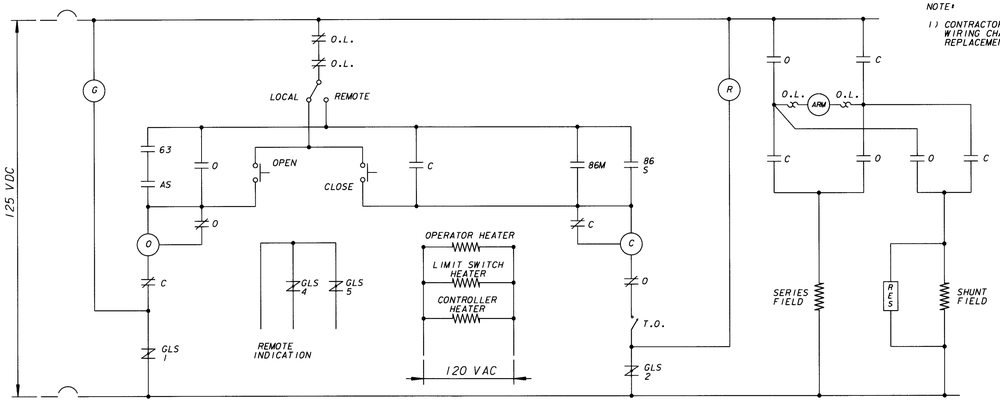

DISCHARGE VALVE - PUMP NO. 3

WISCONSIN
DINAH G. GANT
E 24682
MILWAUKEE
PROFESSIONAL ENGINEER

NO.	BY	REVISION	DATE

Milwaukee **Water Works**

Water Engineering
Department of Public Works

HOWARD AVENUE PUMPING STATION
PUMP #2 AND PUMP #3 REPLACEMENT

BREAKER AND VALVE CONTROL TYPICAL SCHEMATICS

DESIGNED BY	BST
DRAWN BY	PJG
CHECKED BY	PJG
DATE	10-12-2010
SCALE	AS SHOWN
WORK ORDER	WT450075500, WT450086300
OFFICIAL NOTICE	54-2010
FILE NO.	

APPROVED — DATE
PLANT PROJECT ENGINEER 10/13/10
CHIEF DESIGN ENGINEER 10/13/10
SPECIAL DEPUTY COMMISSIONER OF PUBLIC WORKS

DRAWING NO. **HS-25-10**

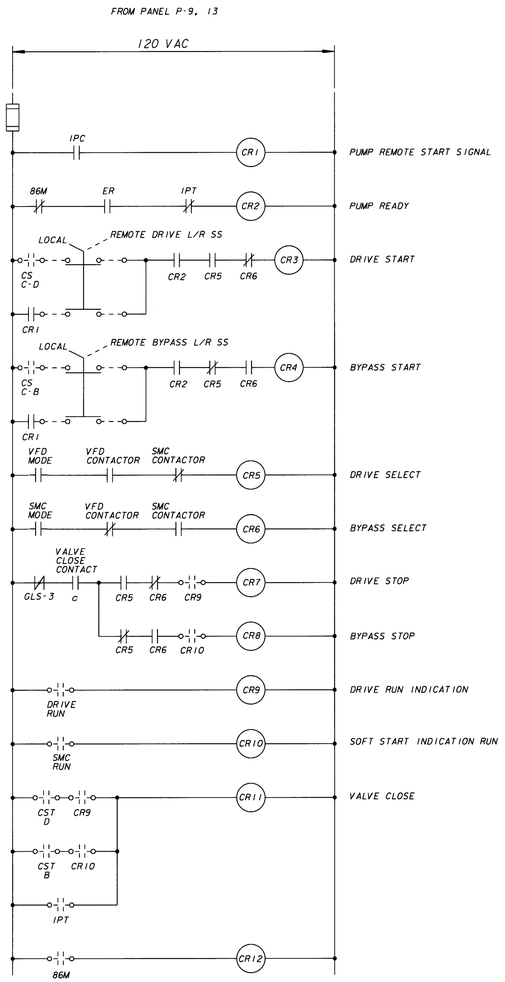

VARIABLE FREQUENCY DRIVE PLC

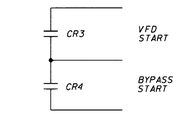

PUMP START CIRCUIT

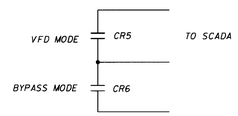

PUMP STOP CIRCUIT

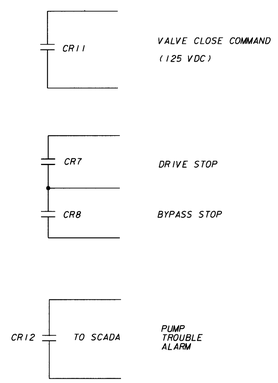

VALVE CLOSE COMMAND

VFD / BYPASS CONTROLLER LOGIC DIAGRAM

PUMP UNIT NO. 2

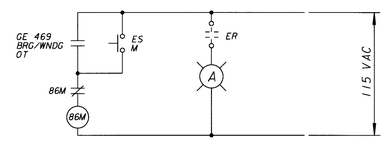

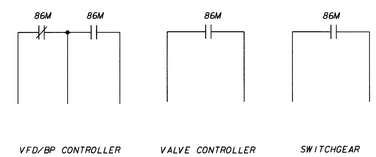

MOTOR TERMINAL COMPARTMENT

PUMP UNIT NO. 3

LEGEND

BPS - VFD/OFF/BYPASS SELECTOR SWITCH
C - VALVE CONTROLLER "CLOSE" CONTACTOR
CC - BREAKER CLOSING COIL
CS - CONTROL SWITCH, SPRING RETURN
ER - ELECTRODE RELAY - CONTACT CLOSES WHEN PUMP IS PRIMED
ES - EMERGENCY STOP PUSHBUTTON AT MOTOR
G - GREEN INDICATING LIGHT
GLS/1 - GEARED LIMIT SWITCH ON VALVE - CONTACT OPEN ONLY WHEN VALVE IS FULLY OPEN
GLS/2 - GEARED LIMIT SWITCH ON VALVE - CONTACT OPEN ONLY WHEN VALVE IS FULLY CLOSED
GLS/3 - GEARED LIMIT SWITCH ON VALVE - CONTACT CLOSES ONLY WHEN VALVE IS 95% CLOSED.
GLS/4 - GEARED LIMIT SWITCH ON VALVE - CONTACT OPEN ONLY WHEN VALVE IS FULLY OPEN
GLS/5 - GEARED LIMIT SWITCH ON VALVE - CONTACT OPEN ONLY WHEN VALVE IS FULLY CLOSED
GLS/6 - GEARED LIMIT SWITCH ON VALVE - CONTACT OPEN ONLY WHEN VALVE IS FULLY OPEN
GLS/7 - GEARED LIMIT SWITCH ON VALVE - CONTACT OPEN ONLY WHEN VALVE IS FULLY CLOSED
GLS/8 - GEARED LIMIT SWITCH ON VALVE - CONTACT CLOSES ONLY WHEN VALVE IS FULLY CLOSED
HC - CONTACTOR FOR MOTOR SPACE HEATER
IP/C - INTERPOSING RELAY - CLOSE
IP/T - INTERPOSING RELAY - TRIP
IP/X - INTERPOSING RELAY - AUXILIARY FOR WHITE LIGHT
KO - VFD CONTACTOR
KI - BYPASS CONTACTOR
LC - LEAKAGE DETECTOR
MS - MINIMUM SPEED CONTACT - DRIVE
O - VALVE CONTROLLER "OPEN" CONTACTOR
O.L. - OVERLOAD DEVICE
R - RED INDICATING LIGHT
S/C - SUPERVISORY CONTROL "CLOSE" CONTACT
S/T - SUPERVISORY CONTROL "TRIP" CONTACT
TC - BREAKER TRIPPING COIL
TH - TOTAL HOUR METER
T.O. - TORQUE OVERLOAD DEVICE
W - WHITE INDICATING LIGHT
26 - STARTING PROTECTION
38 - BEARING TEMPERATURE DEVICE
41 - FIELD CONTACTOR
43 - SUPERVISORY CONTROL DISABLING SWITCH
47 - PHASE SEQUENCE AND UNDERVOLTAGE RELAY
49 - MOTOR THERMAL RELAY
50 - INSTANTANEOUS OVERCURRENT RELAY
51 - TIME OVERCURRENT - PHASE
51/G - TIME OVERCURRENT - GROUND
52/a - NORMALLY OPEN BREAKER AUXILIARY SWITCH
52/b - NORMALLY CLOSED BREAKER AUXILIARY SWITCH
63 - DISCHARGE PRESSURE SWITCH
67 - DIRECTIONAL OVERCURRENT RELAY
86/M - PROTECTIVE LOCKOUT RELAY ON MOTOR/DRIVE
86/S - PROTECTIVE LOCKOUT RELAY ON SWITCHGEAR
86/T - TRANSFORMER LOCKOUT RELAY
87/M - MOTOR DIFFERENTIAL RELAY
87/T - TRANSFORMER DIFFERENTIAL RELAY
TDO - TIME DELAY OPEN
CS/SS - CONTROL SWITCH SOFT START CONTROLLER
IP/SS - INTERPOSING RELAY SOFT START CONTROLLER
AS - AT SPEED CONTACT SOFT START CONTROLLER

NOTE:

1) CONTRACTOR SHALL MAKE ALL CONTROL CIRCUIT WIRING CHANGES TO REFLECT REMOVAL AND REPLACEMENT OF OLD RELAYS AND DEVICES.

2) NEW PLC LOGIC, VALVE, AND SWITCHGEAR LOGIC DETAILS SHOWN ARE TO BE USED AS BASIS FOR DEVELOPMENT OF SHOP DRAWINGS.

3) CONTRACTOR TO FURNISH & INSTALL 120Y/208 VOLT BREAKER IN PANEL P-9, SPACE 13 FOR VFD/BP PLC POWER. BREAKER SHALL BE OF SAME TYPE AND MANUFACTURER AS EXISTING.

NO.	BY	REVISION	DATE
△			
△			
△			

Milwaukee Water Works — Water Engineering, Department of Public Works

HOWARD AVENUE PUMPING STATION

PUMP #2 AND PUMP #3 REPLACEMENT

SOFT START CONTROLLER SCHEMATICS

DESIGNED BY	BST
DRAWN BY	PJG
CHECKED BY	
DATE	10-12-2010
SCALE	N/A
WORK ORDER	WT450075500, WT450085300
OFFICIAL NOTICE	54-2010
FILE NO.	

APPROVED — DATE
10/12/10 PLANTS PROJECT ENGINEER
10/13/10 CHIEF DESIGN ENGINEER
10/13/10 SPECIAL DEPUTY COMMISSIONER OF PUBLIC WORKS

DRAWING NO. HS-25-11

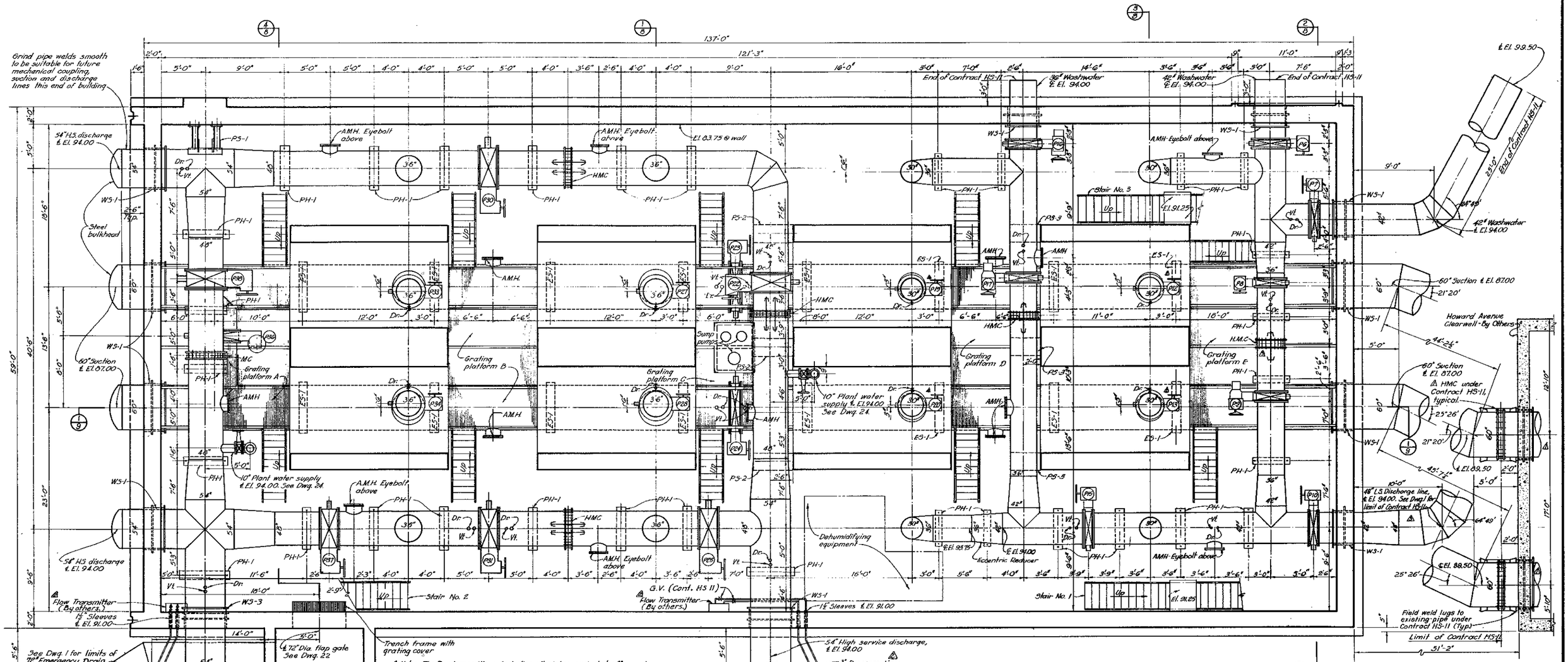

Note: The flow transmitters, including all piping and shut-off valves of the transmitter inside the pumping station to be furnished and installed by Others. The pressure lines from the flow tubes to the interior wall of the pumping station under Contract HS-11, with sufficient piping inside station for connection of lines by Others.

GENERAL PLAN OF BASEMENT FLOOR

Scale: 3/16" = 1'-0"

Note: 1" Eyebolt to be cast into bottom of slab above AMH flange where noted. See detail on Dwg. 16.

Concrete encasement for 60" suction header under Contract HS-7 and Grating Platforms under Contract HS-8 shall not be installed until 60" suction header has been tested under Contract HS-11 and accepted by the Commissioner.

LEGEND

- RDL - Roof drain leader
- PH - Pipe hanger
- WS - Wall sleeve
- PS - Pipe support
- ES - Erection pipe support
- AMH - 20" Welded steel access manhole
- MC - Mechanical coupling
- HMC - Harnessed mechanical coupling
- Dr. - Pipe drain valve. See Dwg. 22 for details.
- VL - Pipe air vent valve. See Dwg. 22 for details.
- GV - Gate valve
- HV - Hose valve
- CW - Cold water piping

REFERENCE DRAWINGS

Structural Details	-	Dwgs. 10 thru 16
Grating Platform Details	-	" 17
Stair and Handrail Details	-	" 18
Misc. Steel Details	-	" 19
Door and Window Details	-	" 20 & 21
Steel Pipe Details	-	" 22 & 23
Misc. Piping Details	-	" 24 & 25

Date	Revision	Description	By	Chk'd
12-23-59	4	Change position of 42"-48" Low Service line.	PES	WEM
10-16-59	3	Miscellaneous revisions as indicated.	PES	RAM
10-16-59	2	Additions to original plan.	PES	RAM

WATER ENGINEERING DIVISION
BUREAU OF ENGINEERS
MILWAUKEE WATER WORKS
DEPARTMENT OF PUBLIC WORKS

HOWARD AVENUE PUMPING STATION

GENERAL PLAN OF BASEMENT FLOOR

APPROVED [signature] CONSULTING ENGINEER — APPROVED [signature] ENGINEER IN CHARGE
APPROVED [signature] SPEC. DEP. COMMISSIONER OF PUBLIC WORKS — APPROVED [signature] CITY ENGINEER

BLACK & VEATCH
CONSULTING ENGINEERS, KANSAS CITY, MO.

DESIGNED WEM
DRAWN WEM PES WDS
TRACED RCS
CHECKED RAM
DATE 7-24-59
SCALE: AS SHOWN
FILE 4-41-1
DWG. HS-4

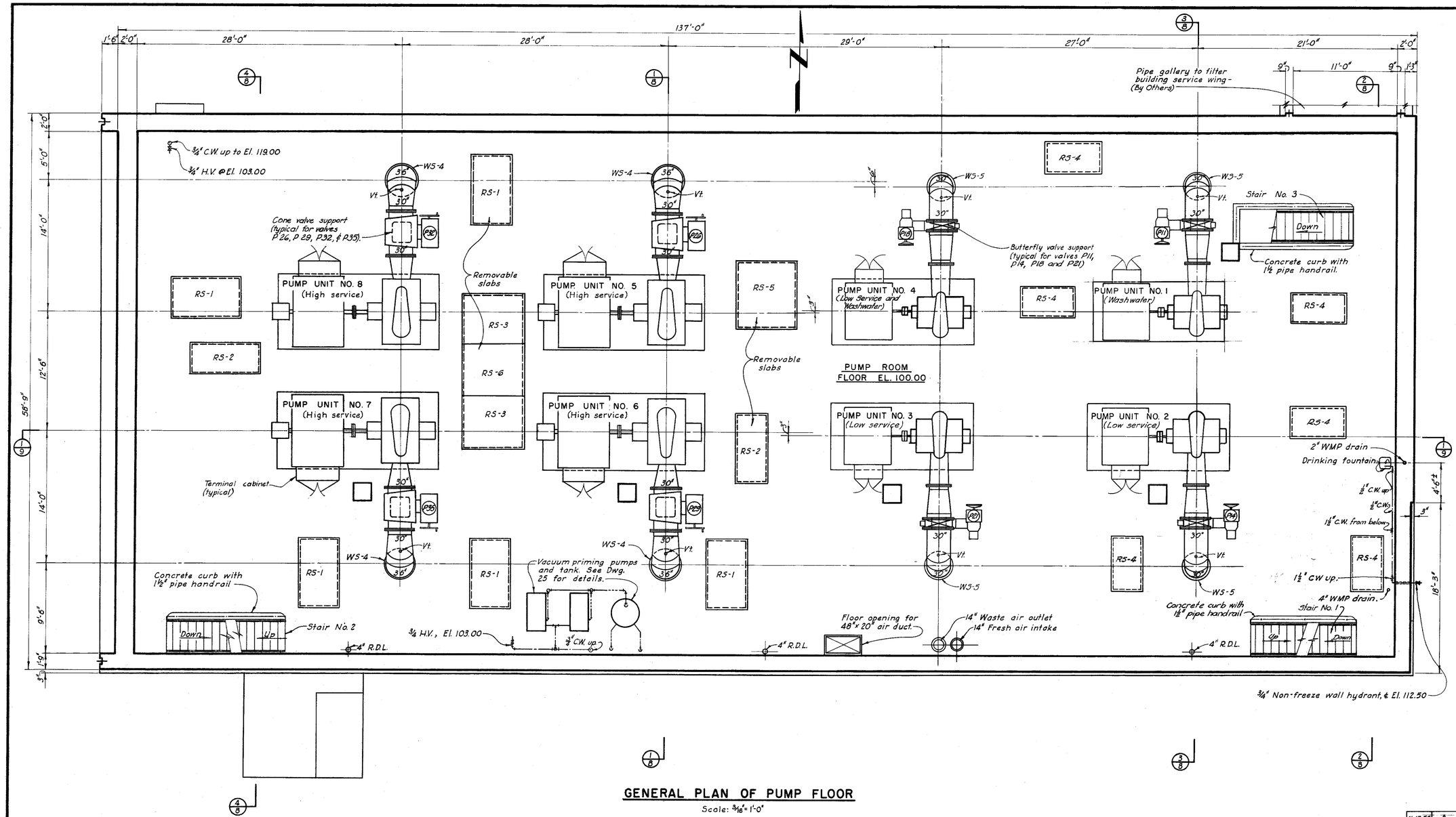

GENERAL PLAN OF PUMP FLOOR

Scale: 3/16" = 1'-0"

VALVE SCHEDULE

	Valve No.	Size (in.)	Type	Service	Oper. Pos.
	P 1			Located at 15 mg. Howard Avenue Clearwell.	
	P 2				
	P 3				
	P 4				
	P 5				
	P 6	42	BF	Washwater -sectionalize	B-5
	P 7	42	BF	" " "	A-5
	P 8	36	BF	" " "	B-1
	P 9	36	BF	" " "	A-3
	P 10	42	BF	Low Service - sectionalize	A-5
	P 11	30	BF	W.W. Discharge - pump shutoff	A-3
△	P 12	30	BF	W.W. Suction - pump shutoff	A-3
△	P 13	30	BF	L.S. Suction - " "	A-3
	P 14	30	BF	L.S. Discharge - " "	A-3
	P 15	42	BF	" " - sectionalize	A-5
	P 16	36	BF	" " "	A-7
	P 17	36	BF	" " "	A-3
	P 18	30	BF	L.S. Discharge - pump shutoff	A-3
△	P 19	30	BF	" Suction - " "	A-3
△	P 20	30	BF	" " " "	A-3
	P 21	30	BF	L.S. Discharge - " "	A-3
	P 22	48	BF	H.S. Discharge - sectionalize	B-1
	P 23	60	BF	Suction - sectionalize	A-1
	P 24	60	BF	" "	B-1
	P 25	48	BF	H.S. Discharge - sectionalize	A-5
	P 26	30	Cone	H.S. Discharge - pump shutoff	–
△	P 27	36	BF	H.S. Suction, pump shutoff	A-3
△	P 28	36	BF	" " " "	A-3
	P 29	30	Cone	H.S. Discharge - pump shutoff	–
	P 30	48	BF	H.S. Disharge - sectionalize	A-5
	P 31	48	BF	" " "	A-5
	P 32	30	Cone	H.S. Discharge - pump shutoff	–
△	P 33	36	BF	H.S. Suction - pump shutoff	A-3
△	P 34	36	BF	" " " "	A-3
	P 35	30	Cone	H.S. Discharge - pump shutoff	–
	P 36	60	BF	Suction - sectionalize	B-7
	P 37	48	BF	H.S. Discharge - sectionalize	A-5
	P 38	48	BF	" " "	A-1

Note:
"Operator Position" refers to mounting position as shown in Henry Pratt Co. Catalog B-2, page B-5

Note
See Dwg. 4 for explanation of symbols and reference drawings

Date	Revision	Description	By	Ch'k'd
11-17-59	△	Revise valve diameters and operator positions.	PES	RAM

WATER ENGINEERING DIVISION
BUREAU OF ENGINEERS
MILWAUKEE WATER WORKS
DEPARTMENT OF PUBLIC WORKS

HOWARD AVENUE PUMPING STATION

GENERAL PLAN OF PUMP FLOOR

APPROVED [signature] CONSULTING ENGINEER
APPROVED [signature] ENGINEER IN CHARGE
APPROVED [signature] SPEC. DEP. COMMISSIONER OF PUBLIC WORKS
APPROVED [signature] CITY ENGINEER

BLACK & VEATCH
CONSULTING ENGINEERS, KANSAS CITY, MO.

DESIGNED WEM
DRAWN PES WEM WDS
TRACED LSF ACW
CHECKED RAM
DATE 7-24-59
SCALE: AS SHOWN
FILE 4-41-1
DWG. HS-5

MICROFILMED 10-8-70

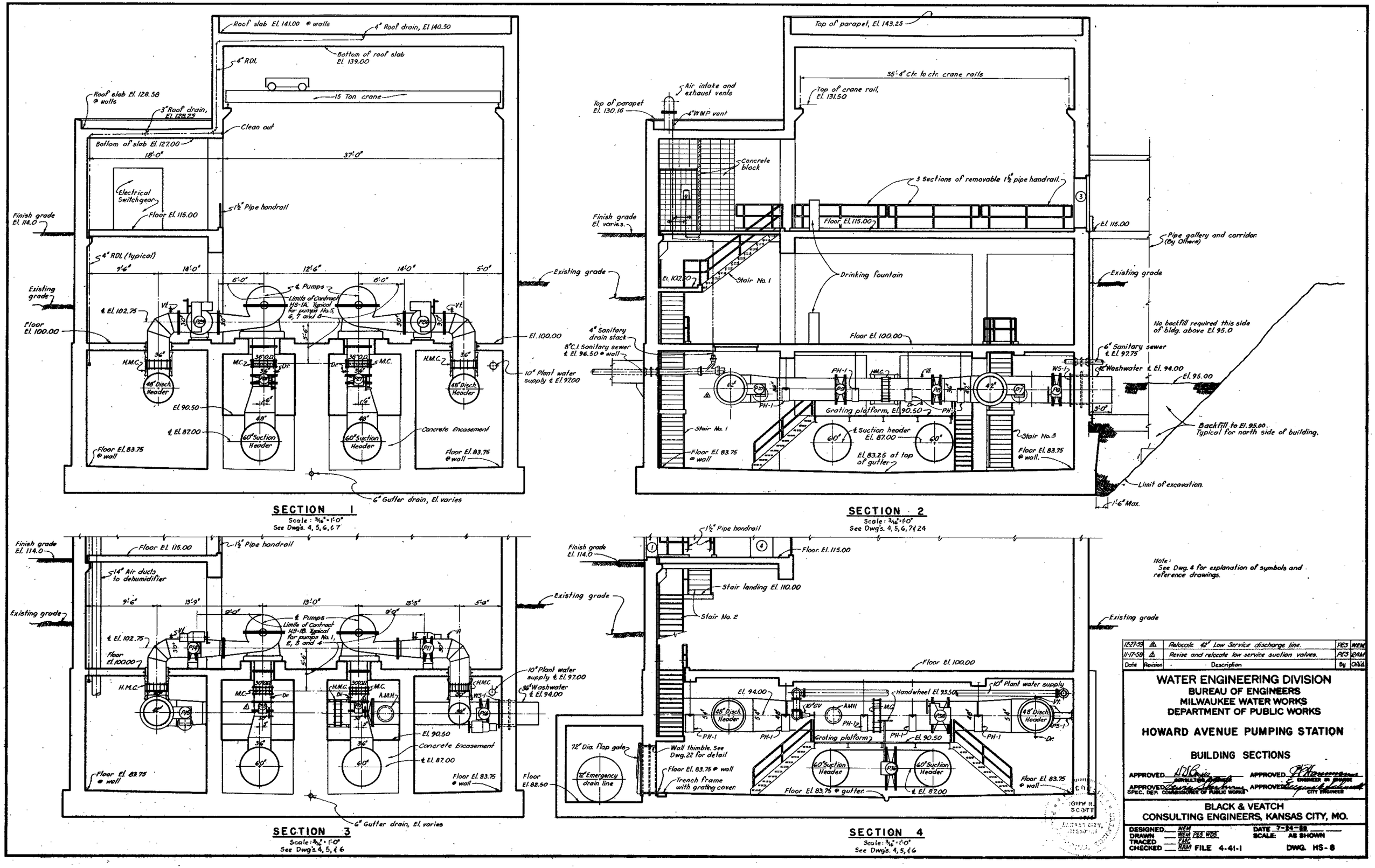

Date	Revision	Description	By	Chkd.
12-27-59	2	Relocate 42" Low Service discharge line.	PES	WEM
11-17-59	1	Revise and relocate low service suction valves.	PES	RAM

WATER ENGINEERING DIVISION
BUREAU OF ENGINEERS
MILWAUKEE WATER WORKS
DEPARTMENT OF PUBLIC WORKS

HOWARD AVENUE PUMPING STATION

BUILDING SECTIONS

APPROVED _____ CONSULTING ENGINEER — APPROVED _____ ENGINEER IN CHARGE
APPROVED _____ SPEC. DEP. COMMISSIONER OF PUBLIC WORKS — APPROVED _____ CITY ENGINEER

BLACK & VEATCH
CONSULTING ENGINEERS, KANSAS CITY, MO.

DESIGNED WEM
DRAWN WEM PES WDS
TRACED FMC
CHECKED RAM
DATE 7-14-59
SCALE: AS SHOWN
FILE 4-41-1
DWG. HS-8

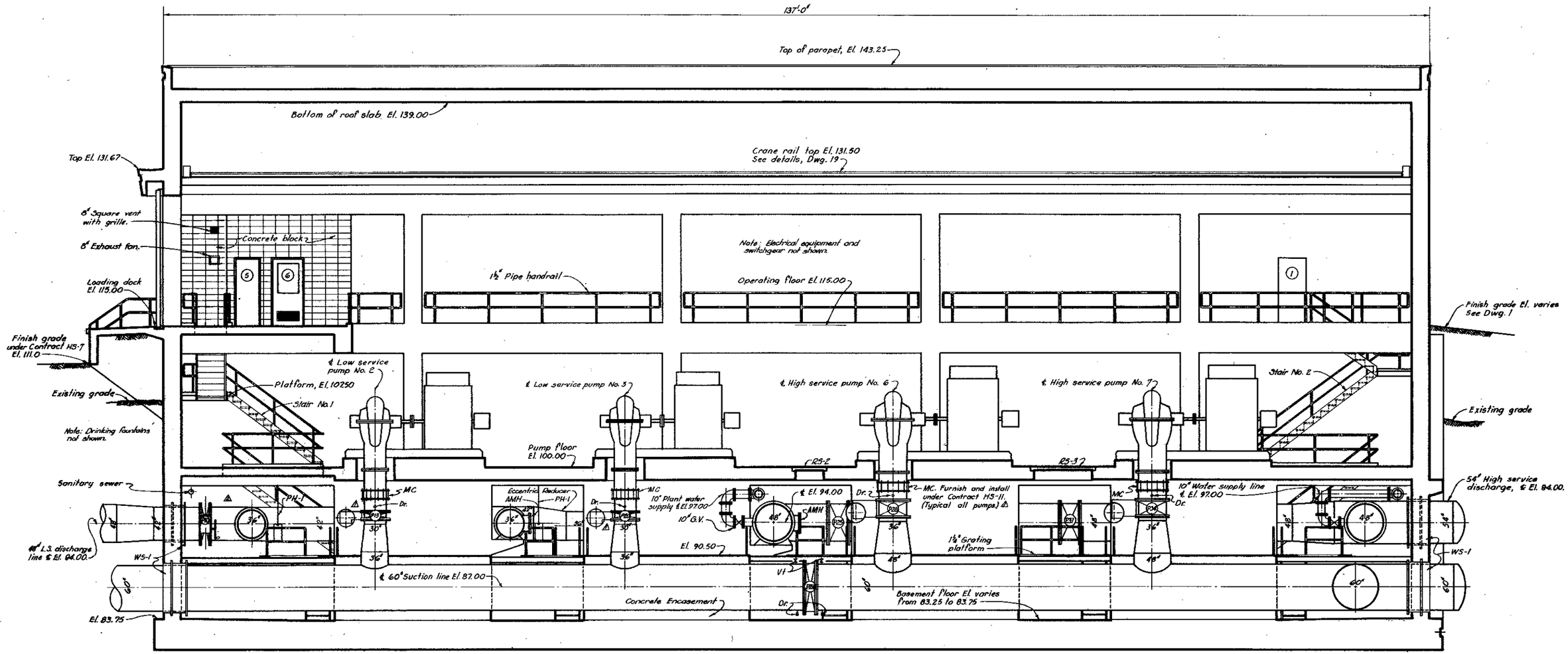

SECTION 1

Scale: 3/16" = 1'-0"
See Dwgs. 4, 5, 6 & 7

Note:
See Dwg. 4 for explanation of symbols and reference drawings.

Date	Revision	Description	By	Chkd.
12-27-59	2	Relocate 42" Low Service discharge line.	PES	WEM
11-17-59	1	Revise L.S. suction valves & misc. revisions as indicated.	PES	WEM

WATER ENGINEERING DIVISION
BUREAU OF ENGINEERS
MILWAUKEE WATER WORKS
DEPARTMENT OF PUBLIC WORKS

HOWARD AVENUE PUMPING STATION

BUILDING SECTION

APPROVED _____ CONSULTING ENGINEER — APPROVED _____ ENGINEER IN CHARGE
APPROVED _____ SPEC. DEP. COMMISSIONER OF PUBLIC WORKS — APPROVED _____ CITY ENGINEER

BLACK & VEATCH
CONSULTING ENGINEERS, KANSAS CITY, MO.

DESIGNED WEM — DATE 7-24-58
DRAWN PES, WDS — SCALE: AS SHOWN
TRACED FMC
CHECKED RAM — FILE 4-41-2 — DWG. HS-9

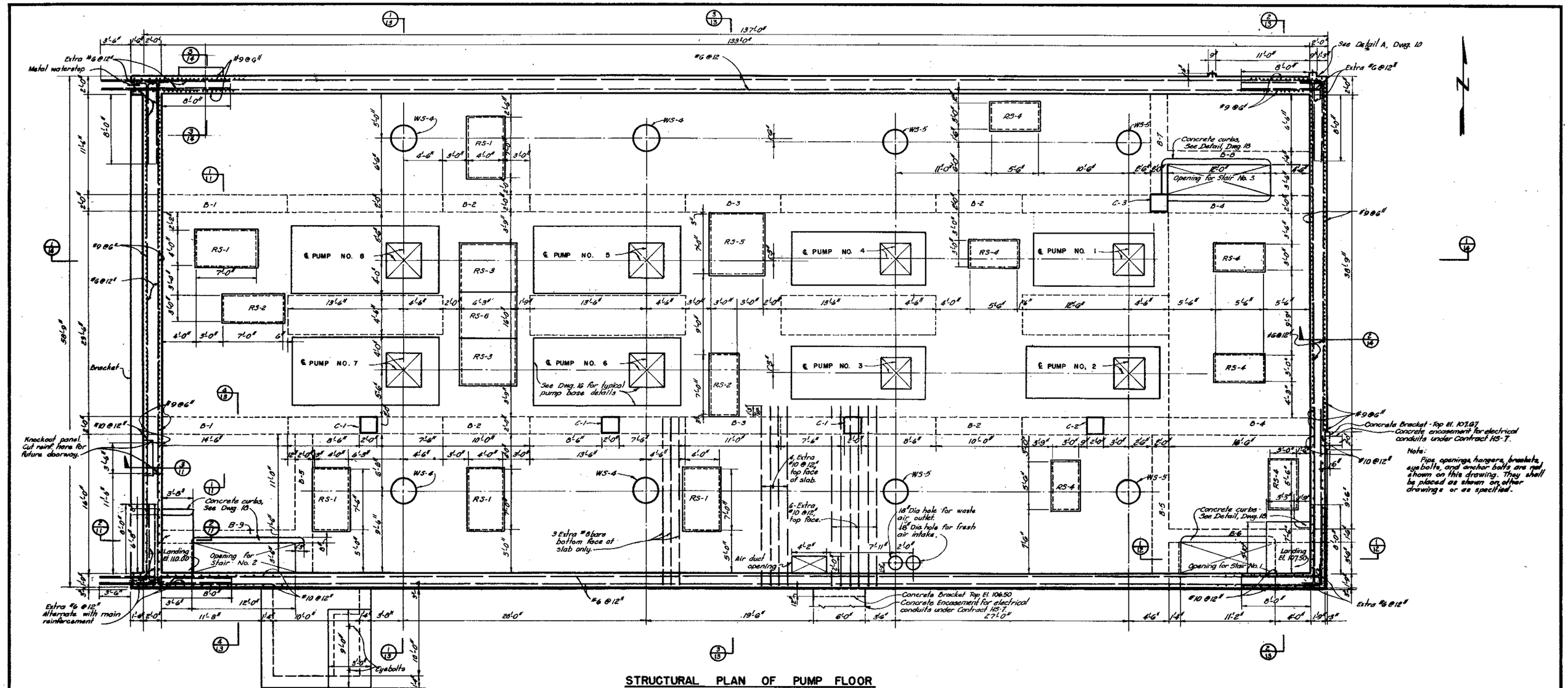

STRUCTURAL PLAN OF PUMP FLOOR

Scale: 1/8" = 1'-0"

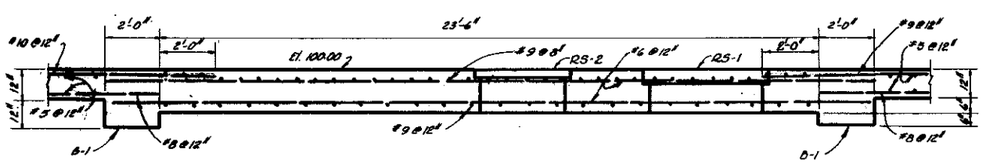

SECTION 1

Scale: 1/8" = 1'-0"
See this Dwg.

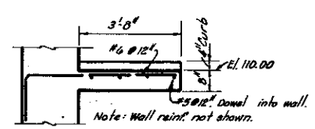

SECTION 2

Scale: 1/8" = 1'-0"
See this Dwg.

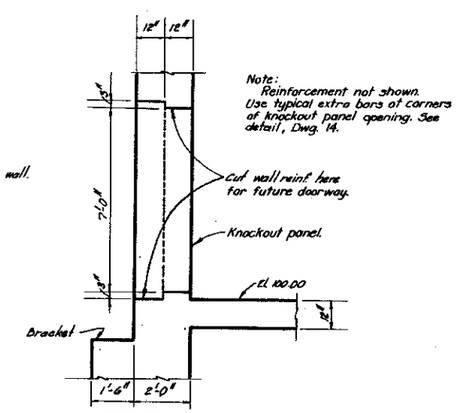

SECTION 3

Scale: 1/8" = 1'-0"
See this Dwg.

WATER ENGINEERING DIVISION
BUREAU OF ENGINEERS
MILWAUKEE WATER WORKS
DEPARTMENT OF PUBLIC WORKS

HOWARD AVENUE PUMPING STATION

STRUCTURAL PLAN OF PUMP FLOOR

APPROVED _____ CONSULTING ENGINEER — APPROVED _____ ENGINEER IN CHARGE
APPROVED _____ SPEC. DEP. COMMISSIONER OF PUBLIC WORKS — APPROVED _____ CITY ENGINEER

BLACK & VEATCH
CONSULTING ENGINEERS, KANSAS CITY, MO.

DESIGNED WEM. P.E.S. — DATE 1-14-69
DRAWN P.E.S. — SCALE: AS SHOWN
TRACED NEM
CHECKED RAM. — FILE 4-41-2 — DWG. HS-11

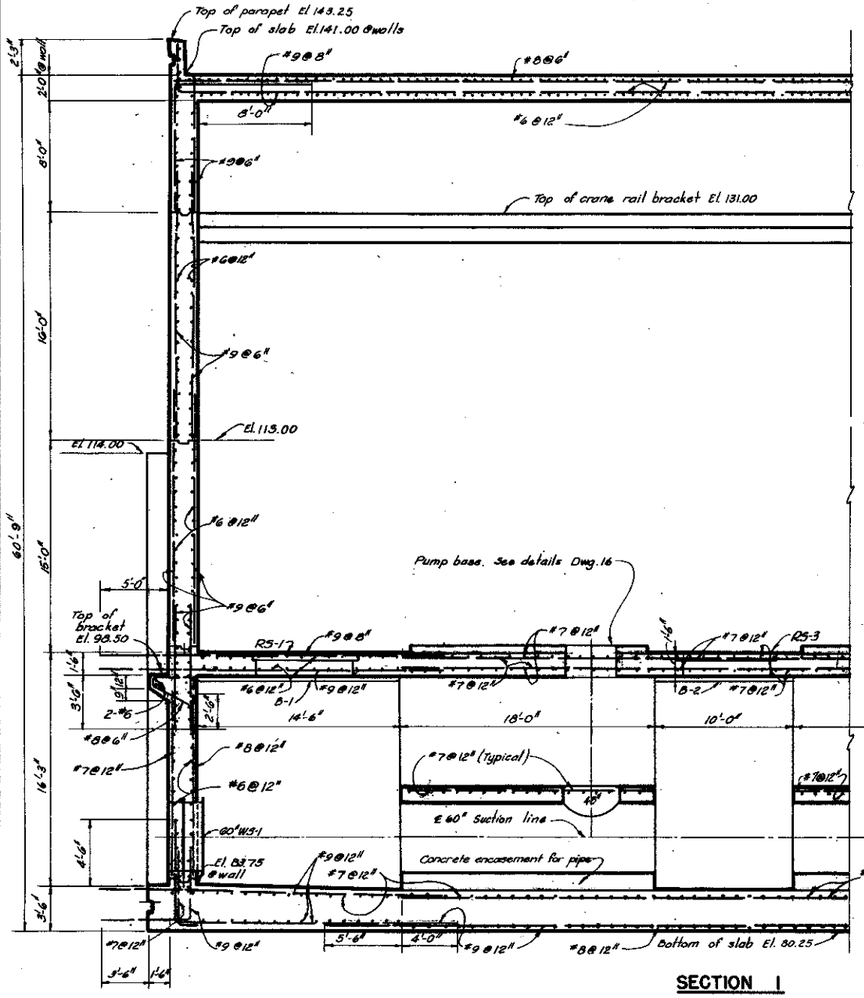

SECTION 1

Scale: $\frac{3}{8}$" = 1'-0"
See Dwg. 7, 10, 11, & 12

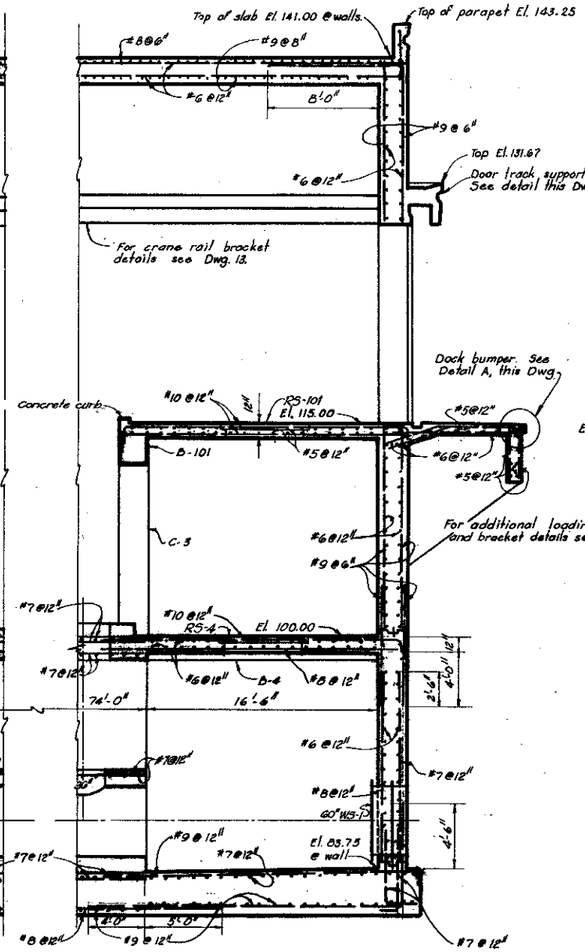

SECTION 2

Scale: $\frac{3}{8}$" = 1'-0"
See Dwg. 7, 10, 11, & 12

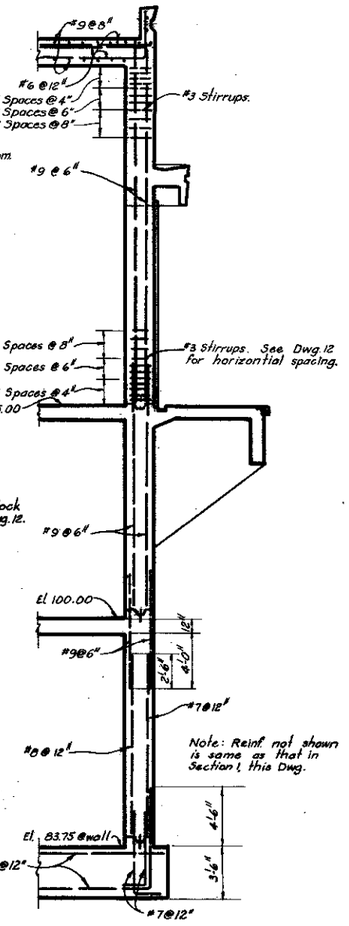

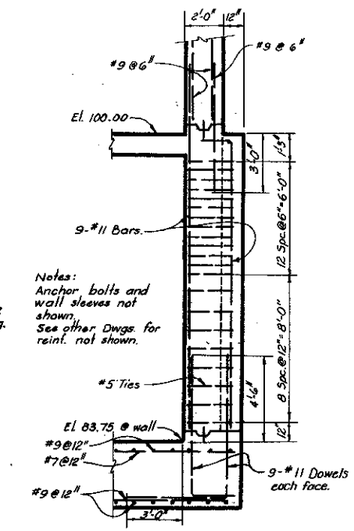

SECTION 3

Scale: $\frac{1}{4}$" = 1'-0"
See Dwg. 10 & 11.

Note:
Extra bars of each face of slab or wall, same size as principal reinforcement. To be used at all openings in walls or slabs unless otherwise shown.

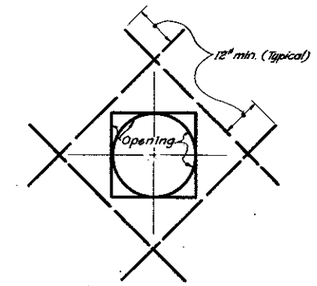

TYPICAL DETAIL OF EXTRA BARS AT OPENINGS

Not to Scale

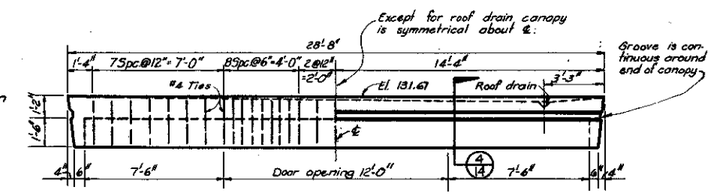

DOOR TRACK SUPPORT BEAM DETAIL

Scale: $\frac{1}{4}$" = 1'-0"

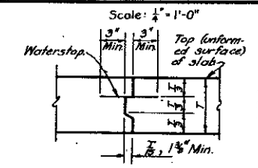

SLAB CONSTRUCTION JOINT SECTION

No Scale.

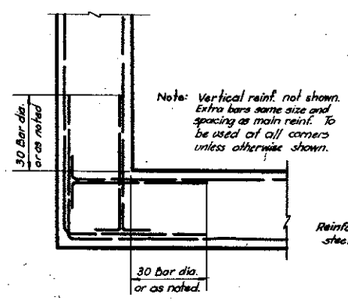

TYPICAL BARS AT CORNER

Not to Scale

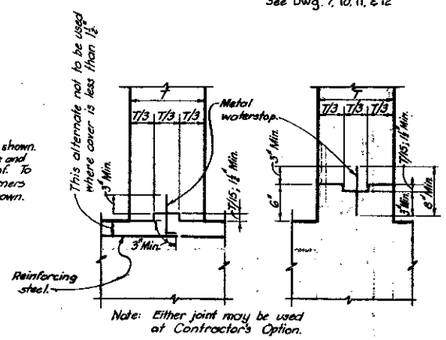

SECTIONS SHOWING ALTERNATE JOINT DETAILS AT BASE OF WALLS

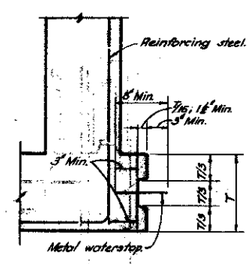

SECTIONAL PLAN AT WALL CORNERS

CONSTRUCTION JOINT AND WATERSTOP DETAILS

No Scale

Note: Construction joint details shown are typical for joints below El. 113.00. Above El. 113.00 these details apply except that waterstops are not required.

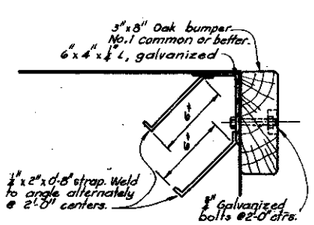

DETAIL A

Scale: 2" = 1'-0"
See this Dwg.
Note: Bumper and angle under Contract HS-2A.

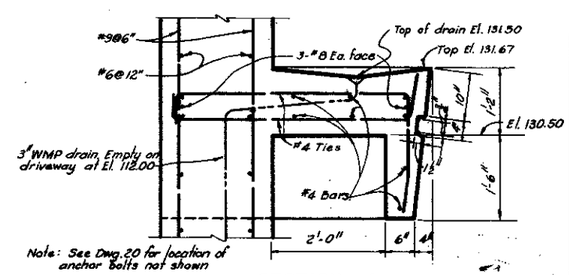

SECTION 4

Scale: $\frac{3}{4}$" = 1'-0"
See Dwgs. 7 & 14

WATER ENGINEERING DIVISION
BUREAU OF ENGINEERS
MILWAUKEE WATER WORKS
DEPARTMENT OF PUBLIC WORKS

HOWARD AVENUE PUMPING STATION

CONCRETE SECTIONS AND DETAILS

APPROVED [signature] CONSULTING ENGINEER — APPROVED [signature] ENGINEER IN CHARGE
APPROVED [signature] SPEC. DEP. COMMISSIONER OF PUBLIC WORKS — APPROVED [signature] CITY ENGINEER

BLACK & VEATCH
CONSULTING ENGINEERS, KANSAS CITY, MO.

DESIGNED REN. PES. — DATE 1-14-60
DRAWN PES. — SCALE: AS SHOWN
TRACED NGM.
CHECKED BAM. — FILE 4-441-2 — DWG. HS-14

BEAM SCHEDULE						
Beam	L	b	t	"A" bars	"B" bars	Stirrups
B-1	14'-6"	24"	24"	4 #11	4 #11	#4 @ 12"
B-2	10'-0"	24"	24"	3 #8	3 #8	#3 @ 12"
B-3	11'-0"	24"	24"	3 #8	3 #8	#3 @ 12"
B-4	16'-6"	24"	24"	4 #11	4 #11	#4 @ 12"
B-5	16'-0"	24"	20"	4 #9	4 #9	#3 @ 12"
B-6	16'-6"	18"	20"	4 #9	4 #9	#3 @ 12"
B-7	11'-6"	24"	18"	3 #8	3 #8	#3 @ 12"
B-8	16'-6"	18"	18"	4 #8	4 #8	#3 @ 12"
B-9	15'-6"	18"	20"	4 #9	4 #9	#3 @ 12"
B-101	37'-0"	24"	36"	See detail this Dwg.		
B-102	133'-0"	24"	36"	See detail this Dwg.		
B-103	16'-0"	12"	20"	3 #8	3 #8	#3 @ 12"
B-104	16'-0"	18"	21"	4 #10	4 #10	#3 @ 12"

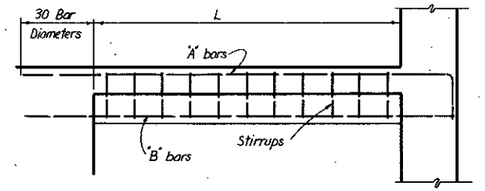

ELEVATION

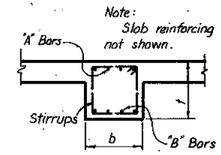

SECTION

TYPICAL BEAM DETAILS

Not to Scale
See Beam Schedule, this Dwg.

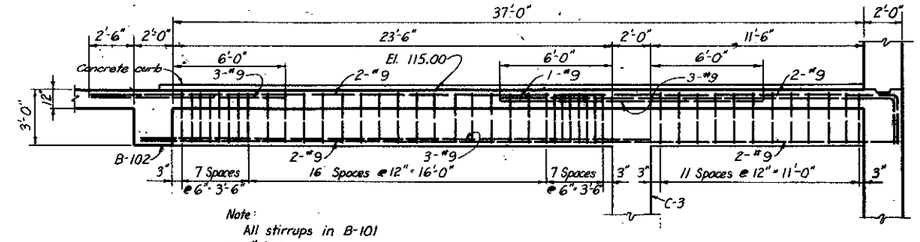

ELEVATION OF BEAM B-101

Scale: $\frac{1}{4}$" = 1'-0"

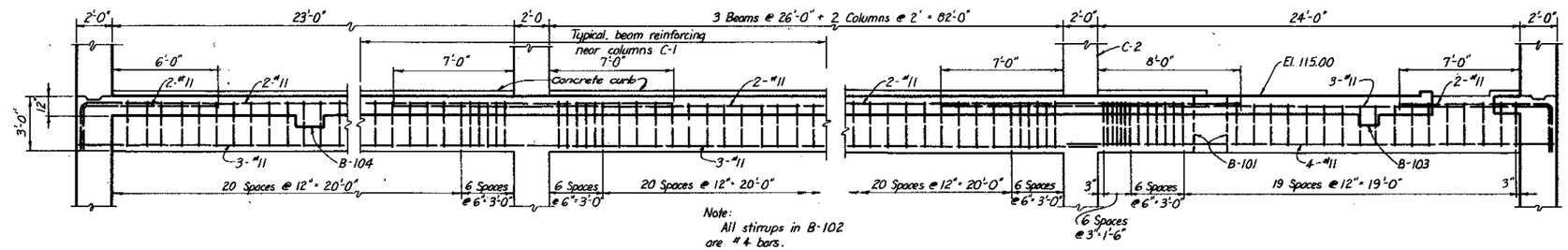

ELEVATION OF BEAM B-102

Scale: $\frac{1}{4}$" = 1'-0"

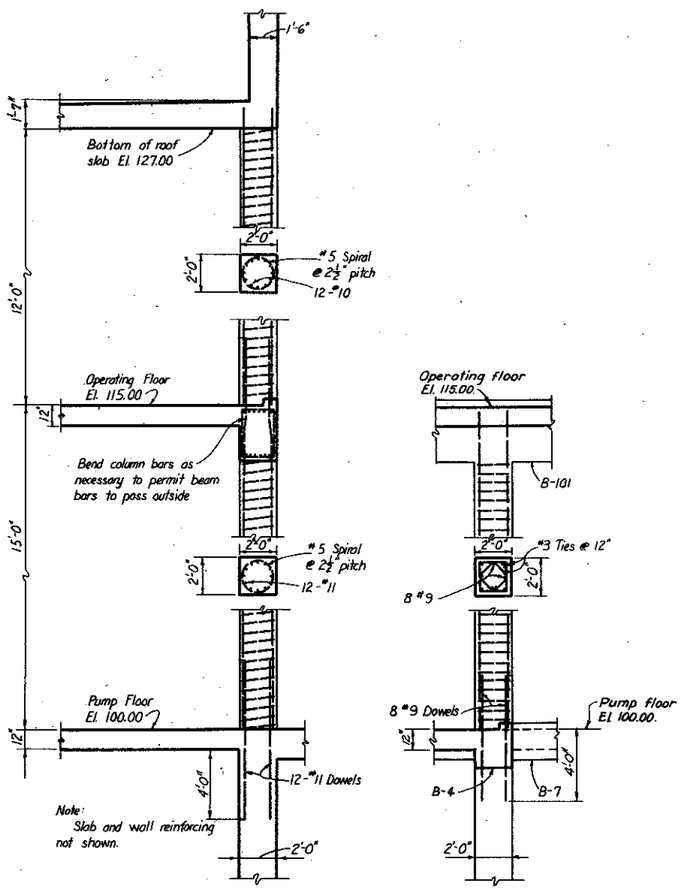

COLUMNS C-1 & C-2

COLUMN C-3

COLUMN DETAILS

Scale: $\frac{1}{4}$" = 1'-0"

REMOVABLE SLAB SCHEDULE						
Slab	No. Req'd	a	b	t	"A" Bars	"B" Bars
RS-1	5	4'-4"	7'-4"	6"	#3 @ 6"	#3 @ 6"
RS-2	2	3'-4"	7'-4"	4"	#3 @ 6"	#3 @ 6"
RS-3	2	6'-7"	5'-5"	6"	#4 @ 6"	#4 @ 6"
RS-4	6	3'-4"	5'-10"	4"	#3 @ 6"	#3 @ 6"
RS-5	1	6'-4"	7'-4"	6"	#4 @ 6"	#4 @ 6"
RS-6	1	6'-7"	5'-5"	6"	#4 @ 6"	#4 @ 6"
RS-101	3	3'-4"	5'-10"	4"	#3 @ 6"	#3 @ 6"

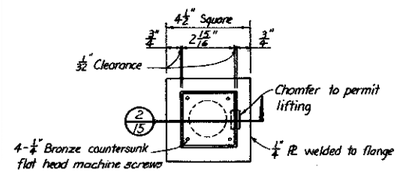

DETAIL B

Scale: 3" = 1'-0"

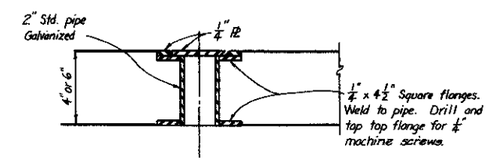

SECTION 2

Scale: 3" = 1'-0"
See this Dwg.

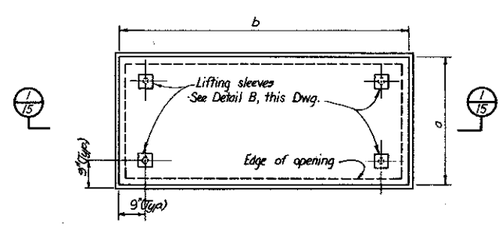

PLAN

Scale: ½" = 1'-0"

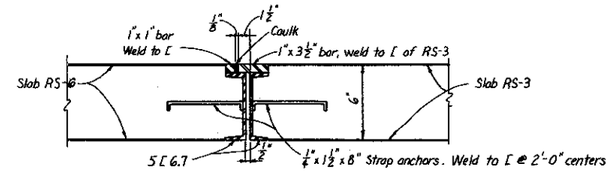

DETAIL OF INTERIOR FACE OF SLAB RS-6

Scale: 1½" = 1'-0"

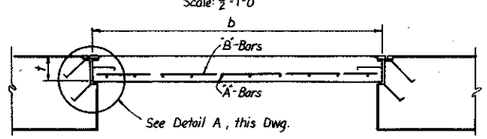

SECTION 1

Scale: ½" = 1'-0"
See this Dwg.

Note: Channels and angles which frame the removable slabs or the floor openings shall be mitered and continuously welded at corners.

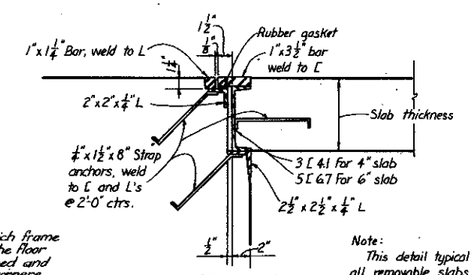

DETAIL A

Scale: 1½" = 1'-0"

Note: This detail typical for all removable slabs except interior face of RS-6.

DETAILS OF REMOVABLE SLABS

WATER ENGINEERING DIVISION
BUREAU OF ENGINEERS
MILWAUKEE WATER WORKS
DEPARTMENT OF PUBLIC WORKS

HOWARD AVENUE PUMPING STATION

BEAM, COLUMN AND REMOVABLE SLAB DETAILS

APPROVED [signature] CONSULTING ENGINEER — APPROVED [signature] ENGINEER IN CHARGE
APPROVED [signature] SPEC. DEP. COMMISSIONER OF PUBLIC WORKS — APPROVED [signature] CITY ENGINEER

BLACK & VEATCH
CONSULTING ENGINEERS, KANSAS CITY, MO.

DESIGNED WEM PES — DATE 1-14-60
DRAWN TTK — SCALE: AS SHOWN
TRACED DRG
CHECKED RAM — FILE 4-41-2 — DWG. HS-15

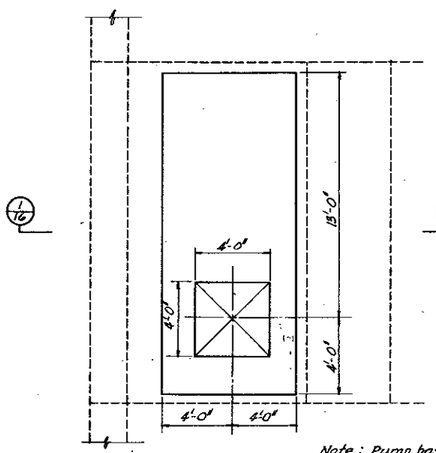

Note: Pump base dimensions subject to change to suit equipment purchased.

TYPICAL PLAN OF PUMPS 5,6,7 & 8

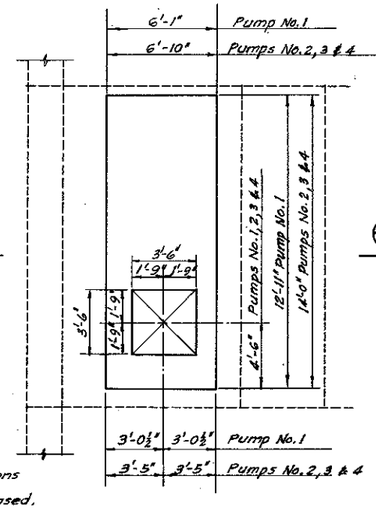

TYPICAL PLAN OF PUMPS 1, 2, 3 & 4

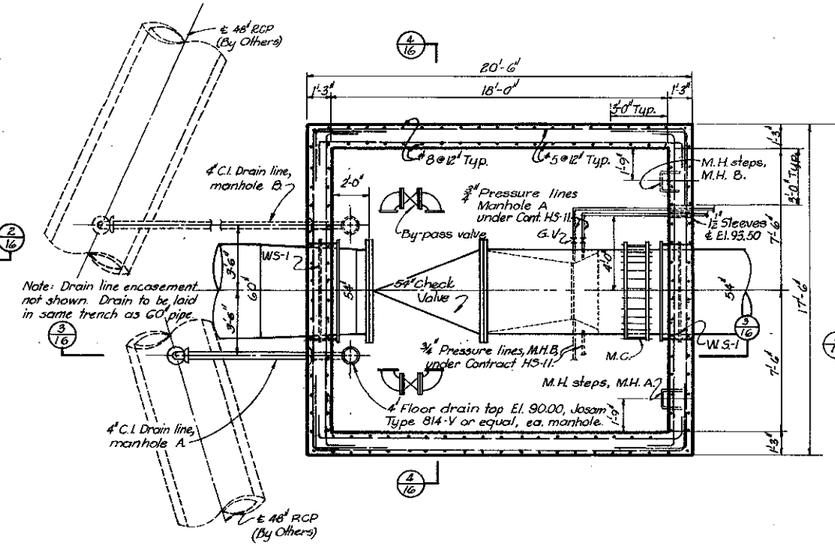

SECTIONAL PLAN

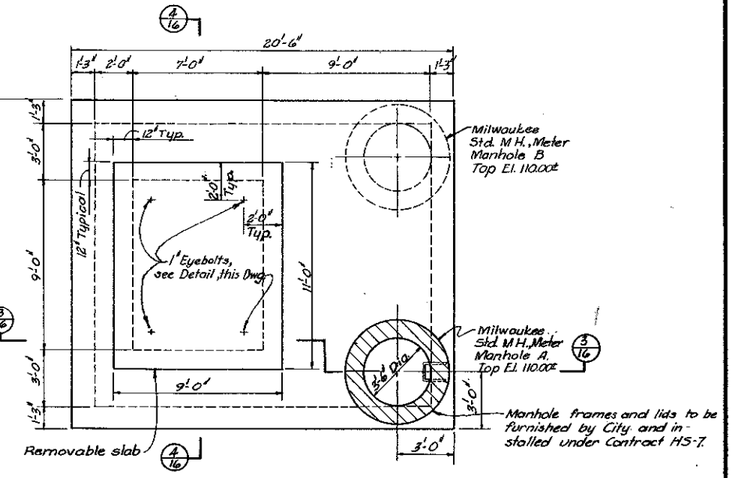

PLAN

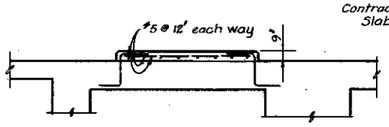

SECTION 1

See this Dwg.

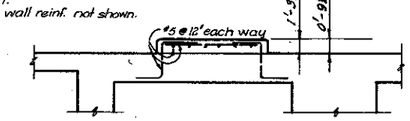

SECTION 2

See this Dwg.

PUMP BASE DETAILS

Not To Scale

Notes:
Conc. & reinf. steel in these Sections to be placed under Contract HS-7.
Anchor bolts and pump setting under Contract HS-1.
Slab and wall reinf. not shown.

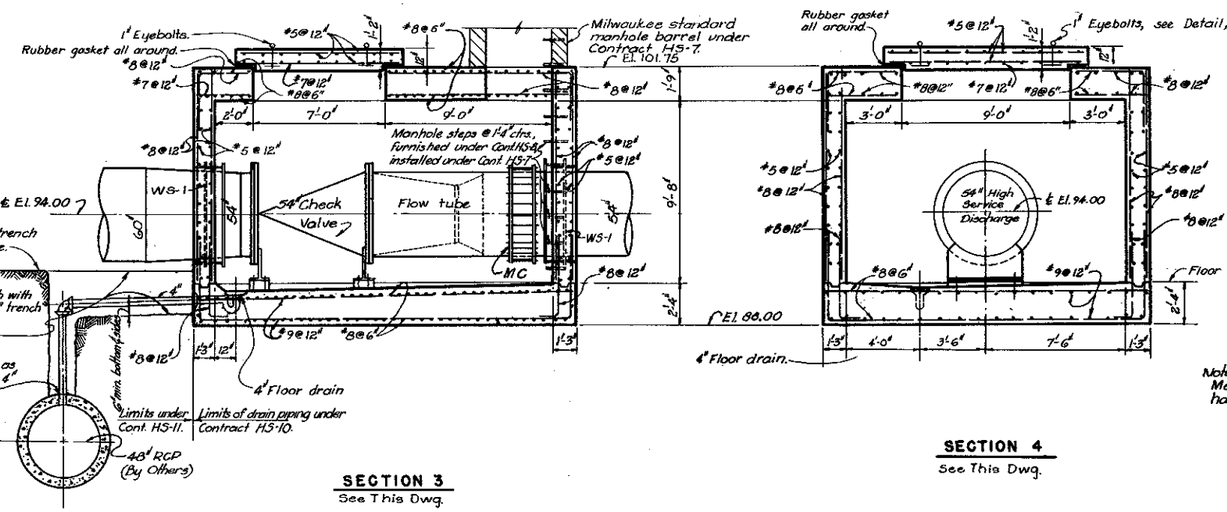

Note: Meter Manhole A shown. Meter Manhole B opposite hand.

SECTION 3

See This Dwg.

SECTION 4

See This Dwg.

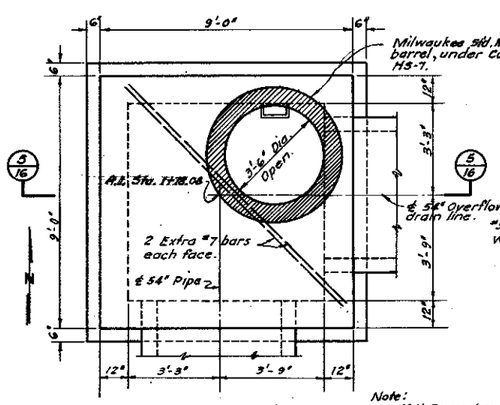

PLAN

Note:
M.H. Frame & cover furnished by City and installed under Contract HS-7.
M.H. steps furnished under Contract HS-8 and installed under Contract HS-7.

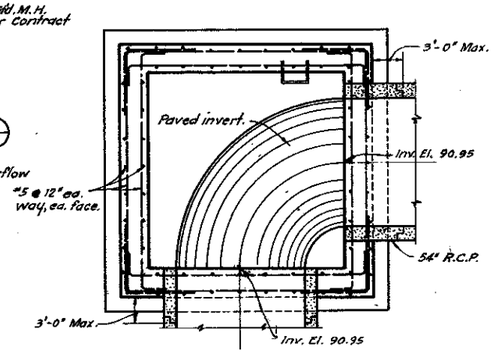

SECTIONAL PLAN

SPECIAL MANHOLE "A"

Scale 3/8" = 1'-0"

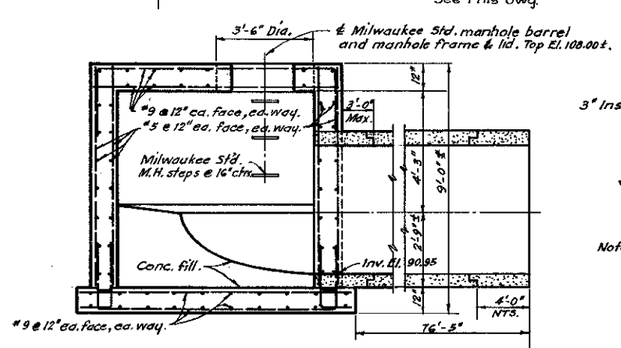

SECTION 5

METER MANHOLE DETAILS

Scale : ¼" = 1'-0"

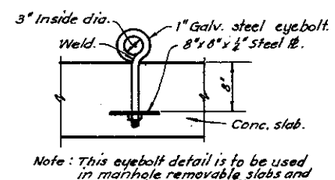

Note: This eyebolt detail is to be used in manhole removable slabs and inverted in the pump floor slab above access manholes into pipe.

EYEBOLT DETAIL

Scale 1" = 1'-0"
See this Dwg. and Dwg. 4.

Furnished under Contract HS-8. Installed under Contract HS-7.

No.	Date	Revision	By	Chkd
1	12-28-53	Added Manhole "A" and Eyebolt Detail.	L.L.B.	PES

WATER ENGINEERING DIVISION
BUREAU OF ENGINEERS
MILWAUKEE WATER WORKS
DEPARTMENT OF PUBLIC WORKS

HOWARD AVENUE PUMPING STATION

PUMP BASE AND METER MANHOLE DETAILS

APPROVED [signature] CONSULTING ENGINEER — APPROVED [signature] ENGINEER IN CHARGE
APPROVED [signature] SPEC. DEP. COMMISSIONER OF PUBLIC WORKS — APPROVED [signature] CITY ENGINEER

BLACK & VEATCH
CONSULTING ENGINEERS, KANSAS CITY, MO.

DESIGNED WEM PES WDS — DATE 1-14-60
DRAWN PES WDS — SCALE: AS SHOWN
TRACED JTK
CHECKED RAM — FILE 4-41-2 — DWG. HS-16

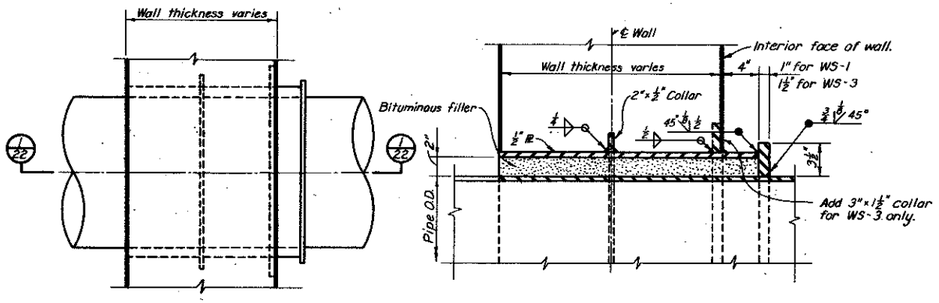

PLAN

SECTION 1

TYPE WS-1 AND WS-3

Note: There is no type WS-2 wall sleeve in this contract.

TYPICAL WALL SLEEVE DETAILS

Not to Scale
(Under Contract HS-11.)

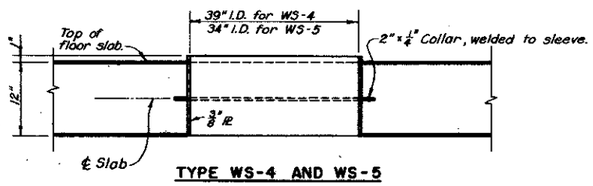

TYPE WS-4 AND WS-5

TYPICAL SLAB SLEEVE DETAIL

Not to Scale
(Under Contract HS-11.)

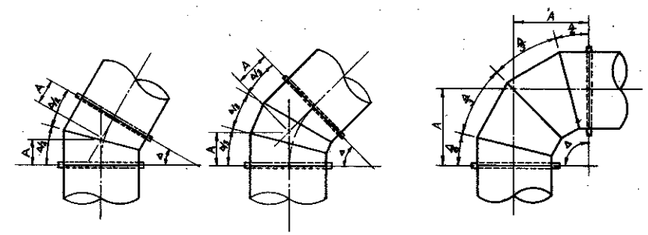

0°-30° BEND

31°-60° BEND

61°-90° BEND

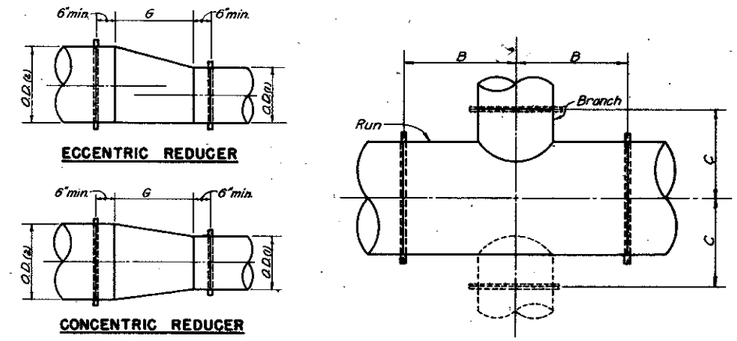

ECCENTRIC REDUCER

CONCENTRIC REDUCER

TEE OR CROSS

BENDS			TEES & CROSSES				REDUCERS		
Pipe O.D.	Degree of bend	A (min.)	Run O.D.	Branch O.D.	B (min.)	C (min.)	Pipe O.D. (1)	Pipe O.D. (2)	G
36"x30"	61°-90°	28"	36"	36"	28"	28"	24"	30"	30"
30"	61°-90°	25"	42"	30"	31"	31"	30"	36"	36"
42"	61°-90°	31"	42"	36"	31"	31"	36"	42"	42"
48"	61°-90°	34"	42"	42"	31"	31"	36"	48"	42"
54"	0°-30°	24"	48"	10"	12"	36"	42"	48"	48"
60"	0°-30°	24"	48"	36"	34"	34"	48"	54"	54"
			54"	48"	39"	39"	54"	60"	60"
			54"	54"	39"	39"			
			60"	36"	45"	45"			
			60"	48"	45"	45"			
			60"	60"	45"	45"			

Note: 20" Access manholes are not included in table.

Notes:

1. Dimensions A, B, and C are minimum dimensions and may be lengthened at the Contractor's option, subject to space limitations and as approved by the Commissioner.
2. Flanged end connections shall be provided in the locations indicated on the plans. Welded field joints may be made at locations selected by the Contractor as approved by the Commissioner.
3. Reducers shall be either concentric or eccentric as indicated by the plans.
4. Reinforcing of steel pipe fittings, as required by the specifications, is not shown.

TYPICAL FITTING DETAILS

Not to Scale
(Under Contract HS-11.)

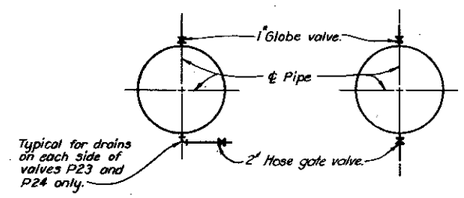

TYPICAL PIPE DRAIN AND VENT CONNECTIONS

Not to Scale
(Under Contract HS-11.)

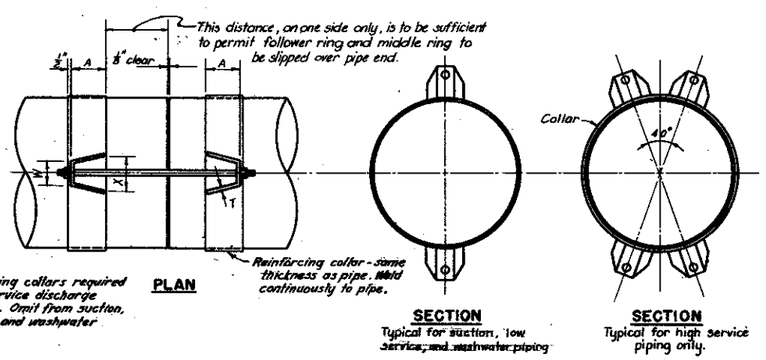

Note:
Reinforcing collars required on high service discharge piping only. Omit from suction, low service, and washwater piping.

PLAN

SECTION
Typical for suction, low service, and washwater piping

SECTION
Typical for high service piping only.

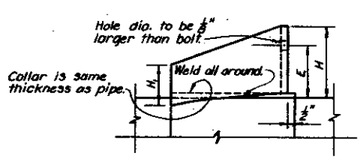

ELEVATION OF LUG

Pipe O.D.	No. of bolts	Bolt dia.	A	E	H	H_1	T	W	X	Remarks
30"	2	1¼"	6¾"	3¾"	5"	2½"	½"	2⅜"	6 11/16"	Low service
36"	2	1⅜"	7½"	5¾"	5⅜"	2½"	½"	2⅜"	7"	Low service
36"	4	1⅜"	7½"	3¾"	5⅜"	2½"	¾"	2⅞"	7"	High service
48"	4	2"	12⅛"	4¾"	6¾"	2½"	¾"	3⅜"	10"	High service
60"	2	2"	12⅛"	4¾"	6¾"	2½"	¾"	3⅜"	10"	Suction

TYPICAL MECHANICAL JOINT HARNESS DETAILS

Not to Scale
(Under Contract HS-11.)

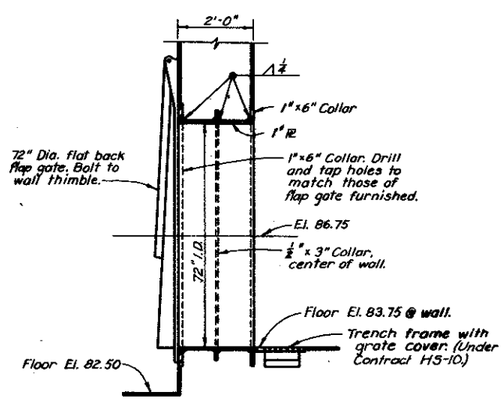

DETAIL OF WALL THIMBLE FOR 72" DIA. FLAP GATE

Not to Scale
(Under Contract HS-11.)

WATER ENGINEERING DIVISION
BUREAU OF ENGINEERS
MILWAUKEE WATER WORKS
DEPARTMENT OF PUBLIC WORKS

HOWARD AVENUE PUMPING STATION

PIPE FITTING DETAILS

APPROVED [illegible] Engineer of Water — APPROVED [illegible] Engineer of Water
APPROVED [illegible] Spec. Dep. Commissioner of Public Works — APPROVED [illegible] City Engineer

BLACK & VEATCH
CONSULTING ENGINEERS, KANSAS CITY, MO.

DESIGNED WM PES — DATE 1-14-60
DRAWN PES — SCALE: AS SHOWN
TRACED DJY
CHECKED RAM — FILE 4-41-3 — DWG. HS-22

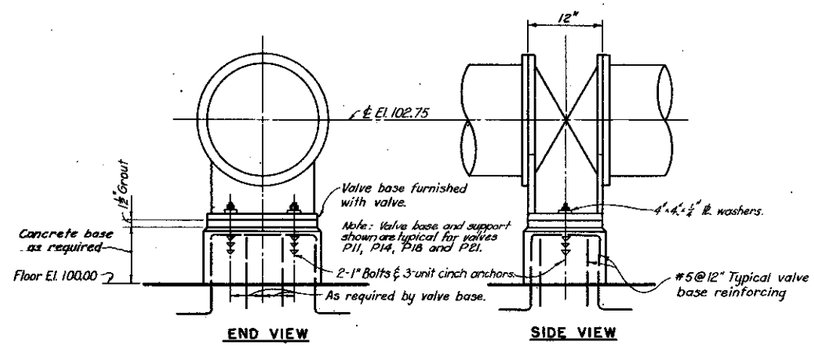

30" BUTTERFLY VALVE SUPPORT DETAIL

Not to Scale
(Under Contract HS-11.)

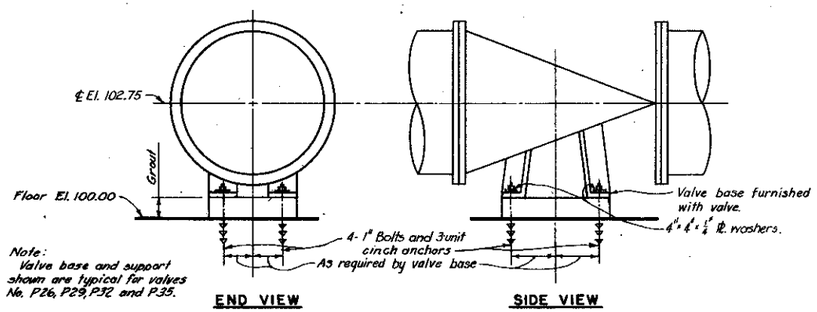

30" CONE VALVE SUPPORT DETAIL

Not to Scale
(Under Contract HS-11.)

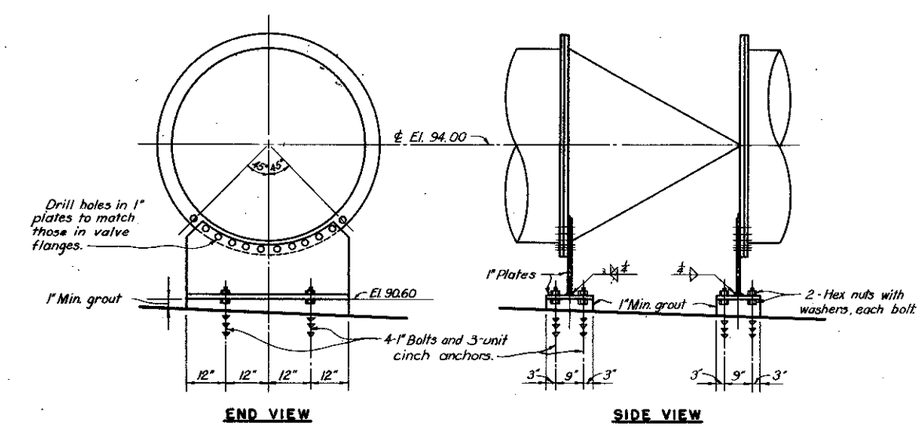

54" CHECK VALVE SUPPORT DETAIL

Not to Scale
(Under Contract HS-11.)

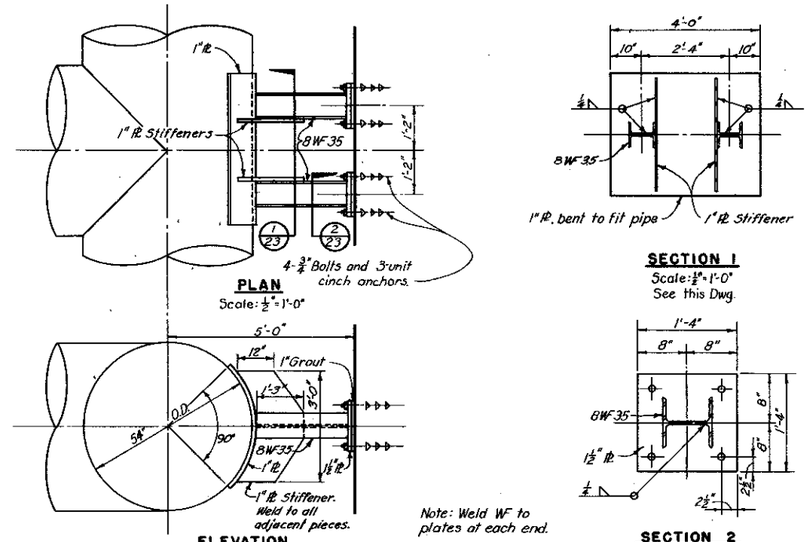

DETAILS OF PIPE SUPPORT TYPE PS-1

Scale as noted
(Under Contract HS-11.)

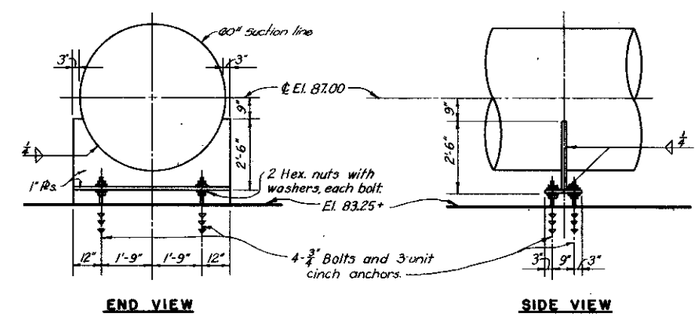

ERECTION SUPPORT TYPE ES-1

Scale: ⅜" = 1'-0"
(Under Contract HS-11.)

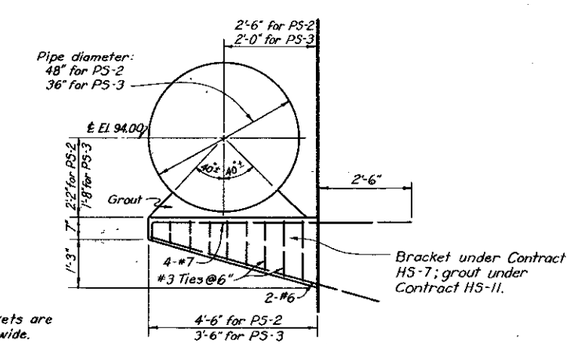

DETAIL OF PIPE BRACKET PS-2 & PS-3

Scale: ½" = 1'-0"

Pipe Size	Rod Size	a	b	t_b	c	s	x	y	Steel Strap Size
42" or smaller	1"	9"	7"	⅝"	1½"	5"	1 13/16"	1⅛"	¾" × 11"
48" and 54"	1¼"	11"	8"	⅞"	1 13/16"	6"	2¼"	1⅜"	⅞" × 12½"

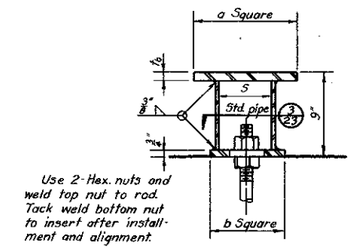

DETAIL A

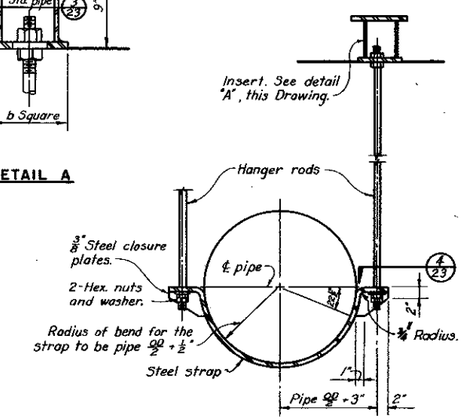

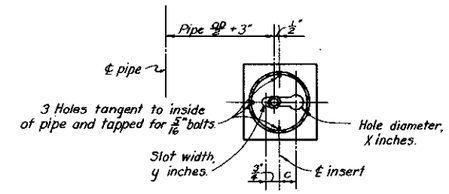

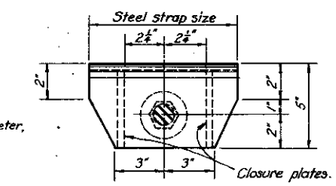

DETAILS OF PIPE HANGER PH-1

Not to Scale
(Under Contract HS-11.)

WATER ENGINEERING DIVISION
BUREAU OF ENGINEERS
MILWAUKEE WATER WORKS
DEPARTMENT OF PUBLIC WORKS

HOWARD AVENUE PUMPING STATION

PIPE SUPPORT DETAILS

APPROVED — CONSULTING ENGINEER
APPROVED — ENGINEER IN CHARGE
APPROVED — SPEC. BER. COMMISSIONER OF PUBLIC WORKS
APPROVED — CITY ENGINEER

BLACK & VEATCH
CONSULTING ENGINEERS, KANSAS CITY, MO.

DESIGNED WEM PES. WDS
DRAWN PES WDS
TRACED DJY
CHECKED RAM
DATE 1-14-60
SCALE: AS SHOWN
FILE 4-41-3
DWG. HS-23

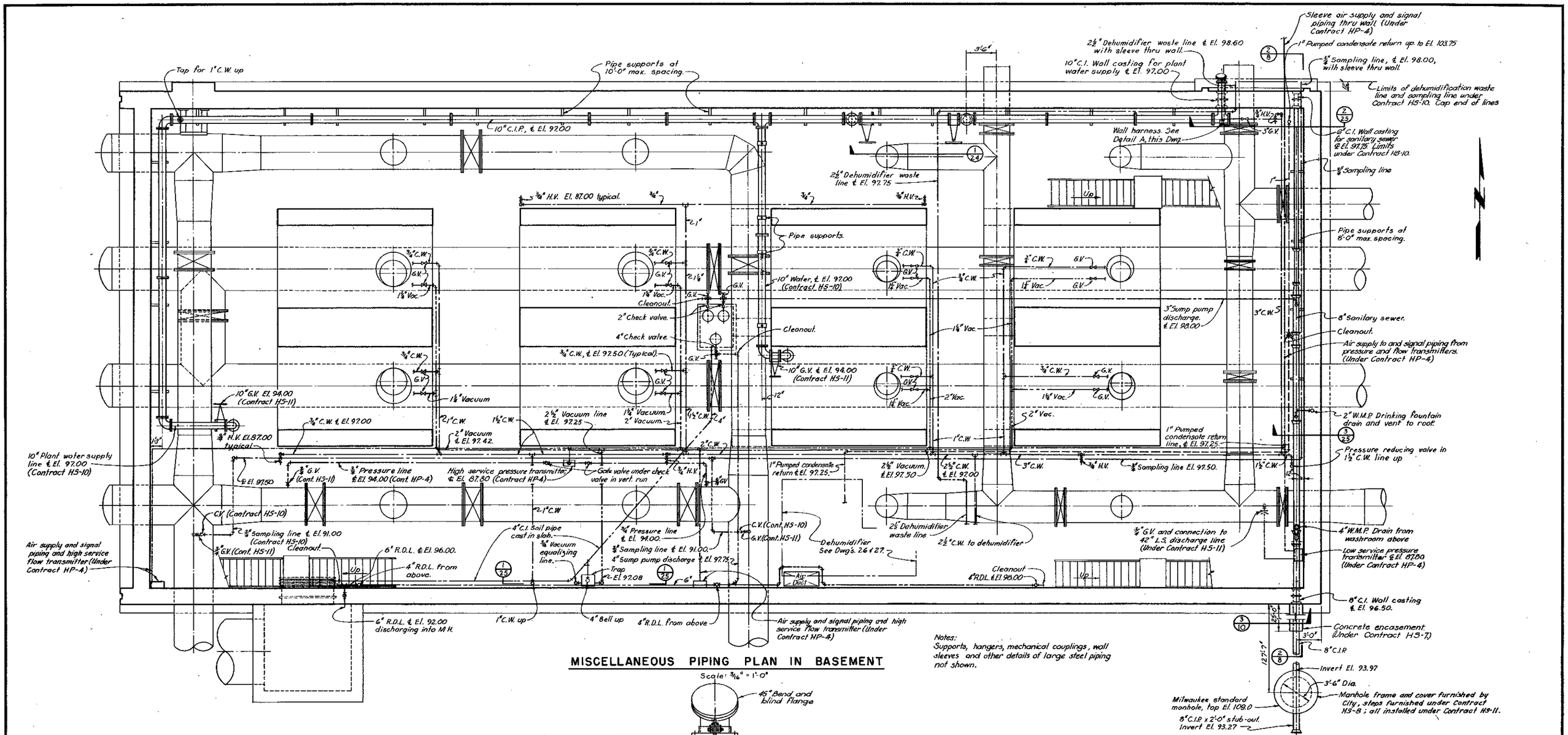

MISCELLANEOUS PIPING PLAN IN BASEMENT

Scale: 3/16" = 1'-0"

Notes:
Supports, hangers, mechanical couplings, wall sleeves and other details of large steel piping not shown.

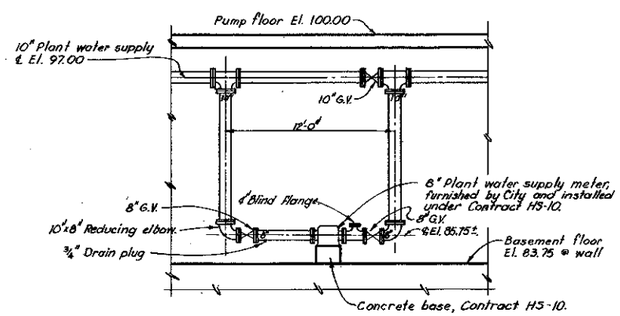

SECTION 1

Scale: 3/16" = 1'-0"
See this Dwg.

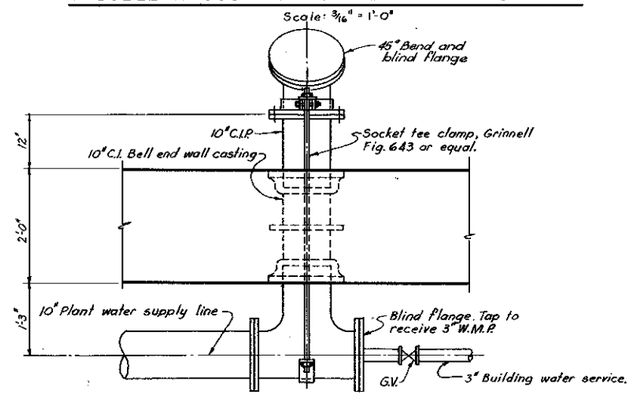

DETAIL A

Scale: 3/16" = 1'-0"
See this Dwg.

LEGEND

Air lines	
Water lines	C.W.
Waste lines	
Vacuum lines	
Condensate lines	
Gate valve	G.V.
Hose valve	H.V.
Check valve	C.V.

Notes:
See Dwg's. 5, 6, 7, 8, and 9 for additional miscellaneous piping details.
Electrical conduit and details not shown.
See Dwg's. 28 thru 40.

WATER ENGINEERING DIVISION
BUREAU OF ENGINEERS
MILWAUKEE WATER WORKS
DEPARTMENT OF PUBLIC WORKS

HOWARD AVENUE PUMPING STATION

MISCELLANEOUS PIPING PLAN

APPROVED — CONSULTING ENGINEER
APPROVED — ENGINEER IN CHARGE
APPROVED — SPEC. DEP. COMMISSIONER OF PUBLIC WORKS
APPROVED — CITY ENGINEER

BLACK & VEATCH
CONSULTING ENGINEERS, KANSAS CITY, MO.

DESIGNED	WEM PES	DATE	1-14-60
DRAWN	PES	SCALE	AS SHOWN
TRACED	FMC		
CHECKED	RAM	FILE 4-41-3	DWG. HS-24

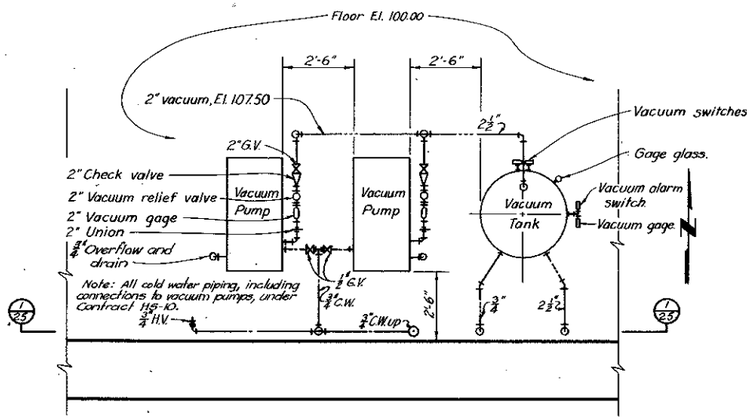

PLAN OF VACUUM PUMP LAYOUT

Scale: 3/8" = 1'-0"

(Under Contract HS-11, unless otherwise noted)

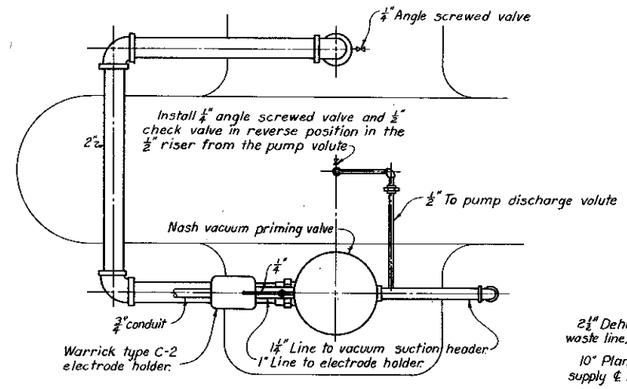

PLAN

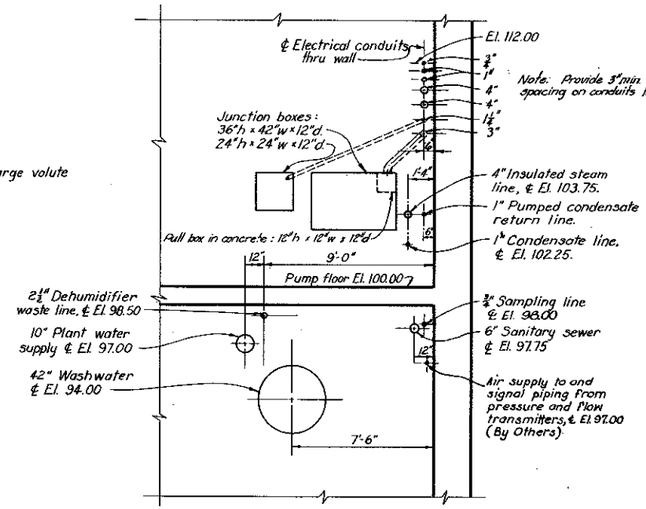

SECTION 2

Scale: 1/4" = 1'-0"

See Dwg. 24, 36 and 38

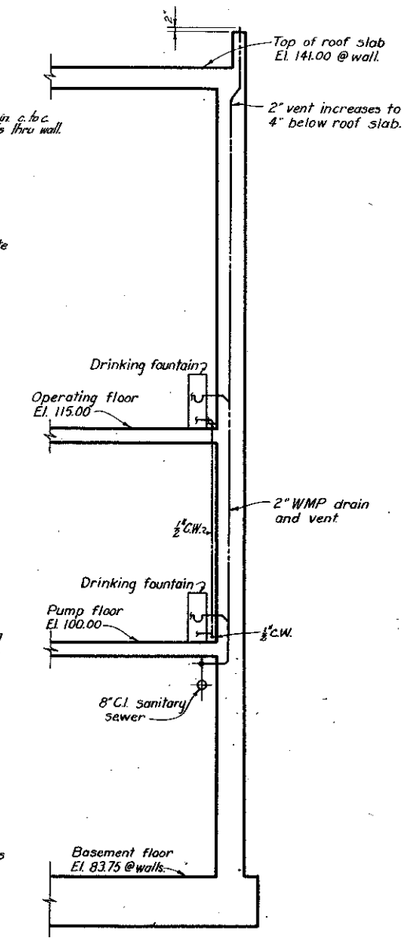

SECTION 3

Scale: 3/16" = 1'-0"

See Dwg. 24

Notes:
1. Bottom of priming valve to be above pump discharge volute.
2. 1/4" Angle screwed valves to be Crane No. 214 P, or equal.

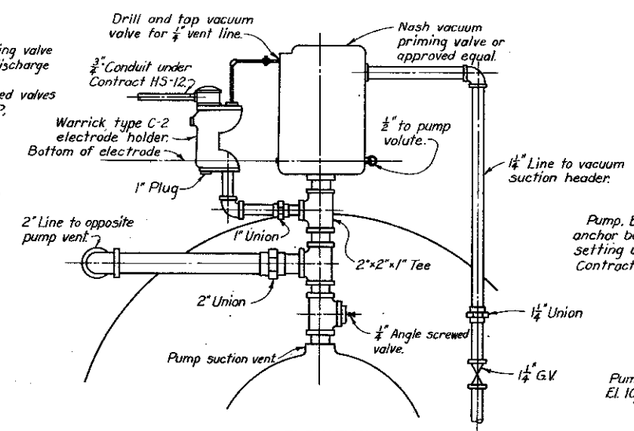

ELEVATION

VACUUM PRIMING VALVE DETAILS

Not to Scale

(Under Contract HS-11)

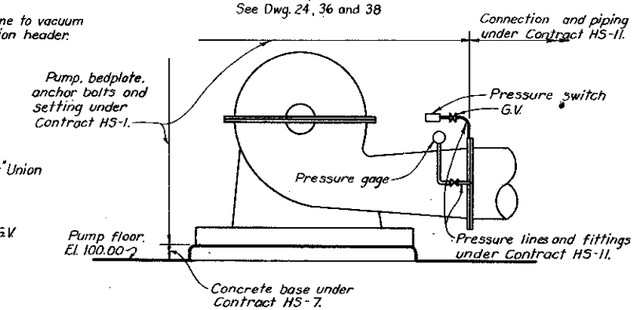

CONNECTIONS AT PUMP DISCHARGE

Not to Scale

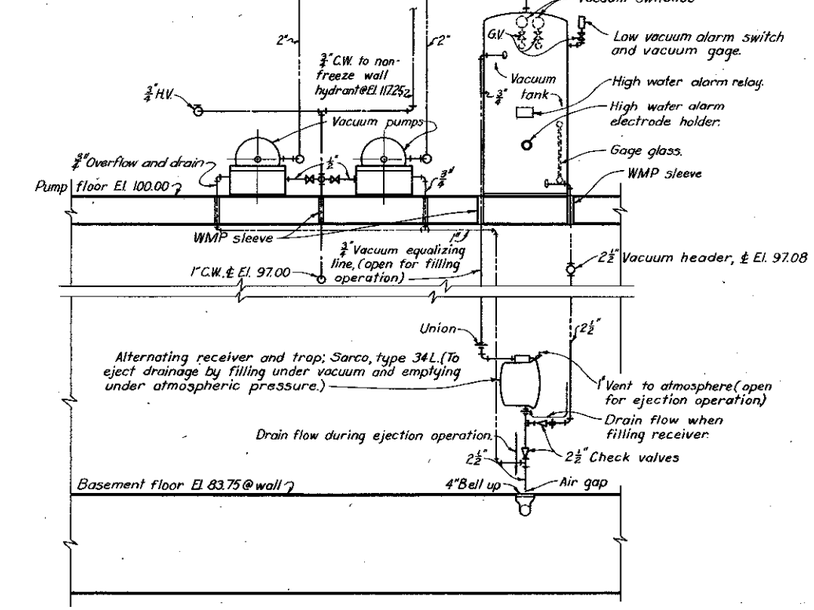

SECTION 1

Scale: 3/8" = 1'-0"

See Dwg. 24 & 25

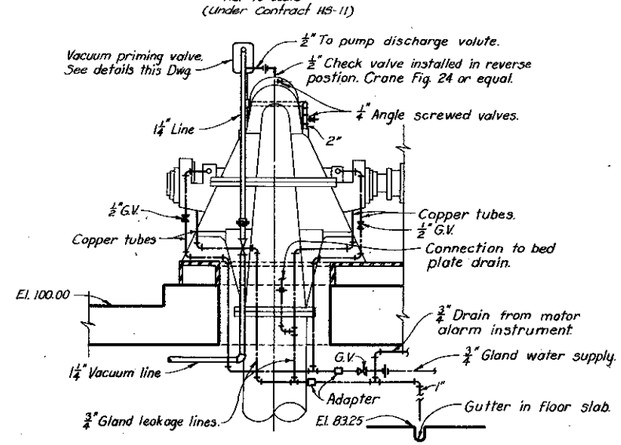

PIPING LAYOUT AT PUMPS

Not to Scale

Note: All gland water supply piping and gland water, bed plate and alarm instrument drains under Contract HS-10. All vacuum priming equipment and piping under Contract HS-11.

WATER ENGINEERING DIVISION
BUREAU OF ENGINEERS
MILWAUKEE WATER WORKS
DEPARTMENT OF PUBLIC WORKS

HOWARD AVENUE PUMPING STATION

MISCELLANEOUS PIPING DETAILS

APPROVED [signature] CONSULTING ENGINEER — APPROVED [signature] ENGINEER IN CHARGE

APPROVED [signature] SPEC. DEP. COMMISSIONER OF PUBLIC WORKS — APPROVED [signature] CITY ENGINEER

BLACK & VEATCH
CONSULTING ENGINEERS, KANSAS CITY, MO.

DESIGNED WEN PES. — DATE 1-14-60
DRAWN PES. — SCALE: AS SHOWN
TRACED DOY
CHECKED RRM — FILE 4-41-4 — DWG. HS-25

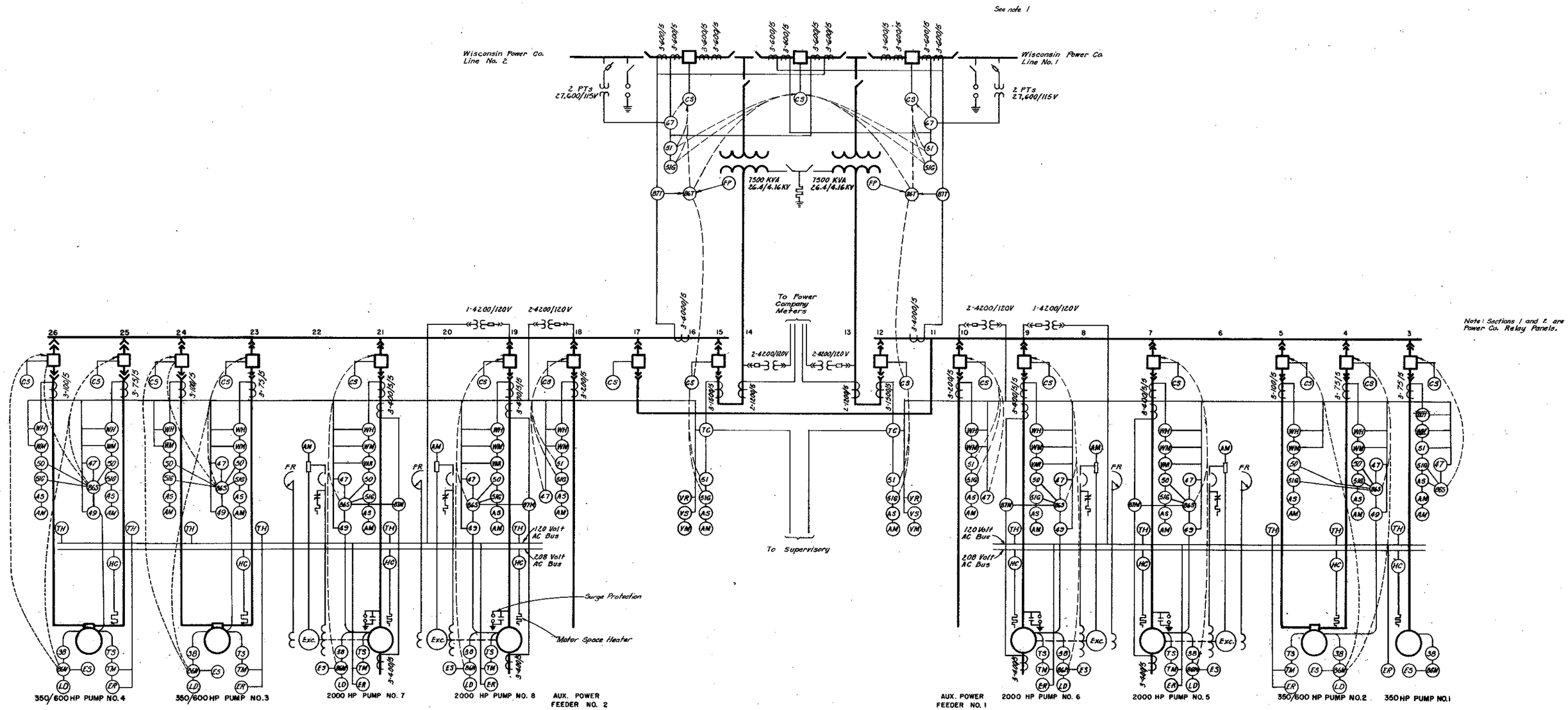

Note: Sections 1 and 2 are Power Co. Relay Panels.

LEGEND

AM	Ammeter
AS	Ammeter Switch
CS	Control Switch
ES	Emergency Stop Pushbutton
ER	Electrode Relay-detects pump prime
FP	Fault Pressure Relay
FR	Exciter Field Rheostat
HC	Contactor for motor space heaters
LD	Leakage Detector
TC	Thermal Converter for telemetering
TH	Total Hour Meter
TM	Temperature Meter
TS	Temperature Switch
VAR	Varmeter
VM	Voltmeter
VR	Voltage Recorder
VS	Voltmeter Switch
WH	Watthour Meter
WM	Watt Meter
38	Bearing Temperature Relay
47	Phase Sequence and Undervoltage Relay
49	Motor Thermal Relay
50	Instantaneous Overcurrent Relay
51	Induction-type Overcurrent Relay
51G	Ground Overcurrent Relay
86M	Lockout Relay-on motor
86S	Lockout Relay-on switchgear
86T	Transformer Lockout Relay
87M	Motor Differential Relay
87T	Transformer Differential Relay
67	Directional Overcurrent Relay

NOTE

1. Key interlock-Disconnect switches may not be opened unless breaker is open.

WATER ENGINEERING DIVISION
BUREAU OF ENGINEERS
MILWAUKEE WATER WORKS
DEPARTMENT OF PUBLIC WORKS

HOWARD AVENUE PUMPING STATION

FUNCTIONAL ONE-LINE DIAGRAM

APPROVED _____ CONSULTING ENGINEER — APPROVED _____ ENGINEER IN CHARGE
APPROVED _____ SPEC. DEP. COMMISSIONER OF PUBLIC WORKS — APPROVED _____ CITY ENGINEER

BLACK & VEATCH
CONSULTING ENGINEERS, KANSAS CITY, MO.

DESIGNED REM — DATE 1-14-60
DRAWN REM — SCALE: AS SHOWN
TRACED REM
CHECKED DEC — FILE 4-41-4 — DWG. HS-28

LEGEND

FP - Fault Pressure Relay
JB-9 - Junction Box No. 9
2"UG - One size 2" rigid steel conduit that is installed underground.
25-4#12, #12G & L6-1, 2-3, 6, 1¼" - Circuit No. 25 consisting of 4 No. 12 insulated wires, 1 No. 12 bare ground wire and circuits L6-1, L6-2, L6-3, L6-6 in a 1¼" rigid steel conduit
74 - Alarm contact.
(5) - 5 KV shielded cable.
[2/4] - Circuit breaker type combination starters.
PE Prime electrode
[VC] Valve controller
63 Discharge pressure switch

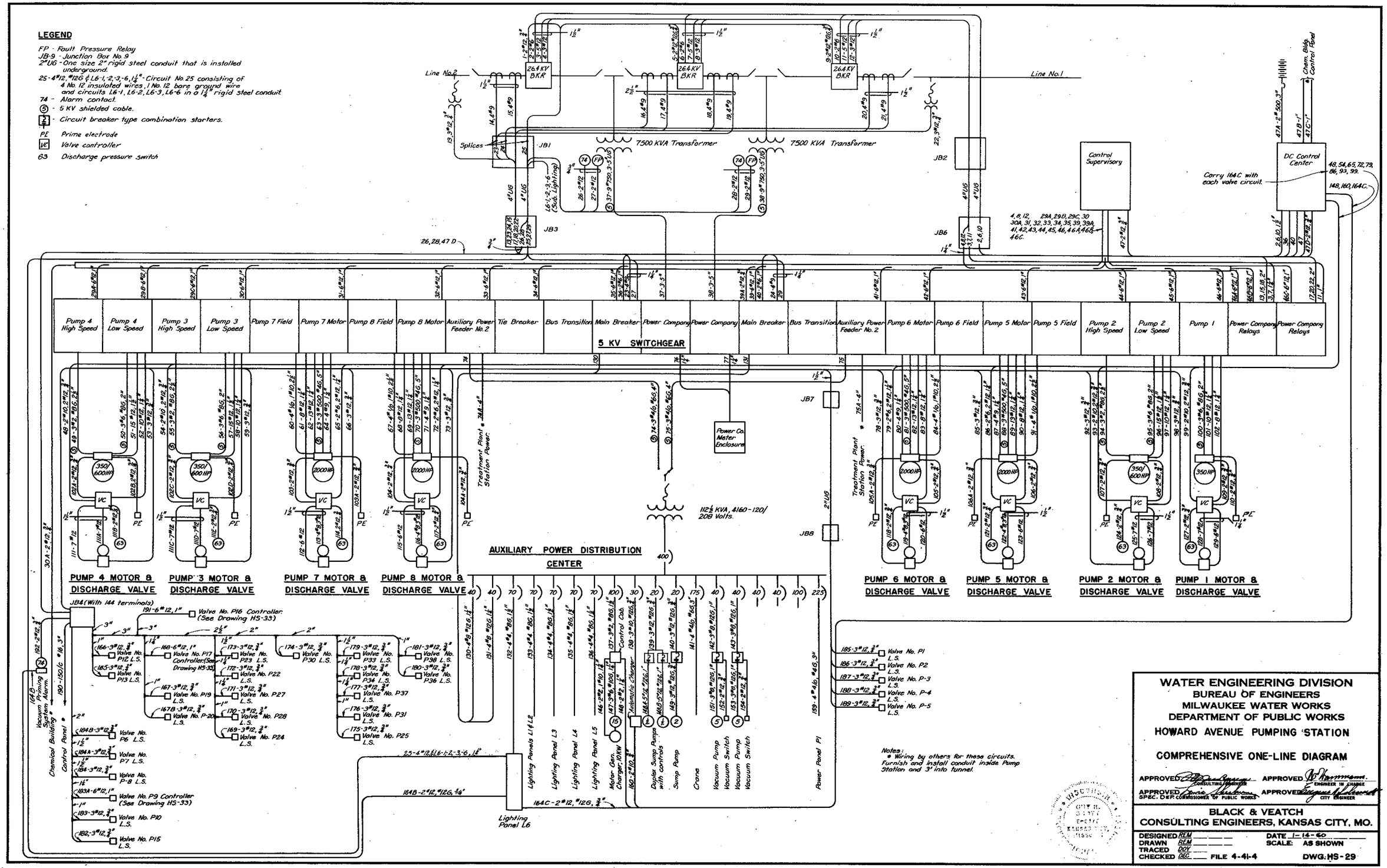

Notes:
* Wiring by others for these circuits. Furnish and install conduit inside Pump Station and 3" into tunnel.

WATER ENGINEERING DIVISION
BUREAU OF ENGINEERS
MILWAUKEE WATER WORKS
DEPARTMENT OF PUBLIC WORKS
HOWARD AVENUE PUMPING STATION

COMPREHENSIVE ONE-LINE DIAGRAM

APPROVED [signature] CONSULTING ENGINEER — APPROVED [signature] ENGINEER IN CHARGE
APPROVED [signature] SPEC. DEP. COMMISSIONER OF PUBLIC WORKS — APPROVED [signature] CITY ENGINEER

BLACK & VEATCH
CONSULTING ENGINEERS, KANSAS CITY, MO.

DESIGNED REM — DATE 1-14-60
DRAWN REM — SCALE: AS SHOWN
TRACED DOY
CHECKED DEC — FILE 4-41-4 — DWG: HS-29

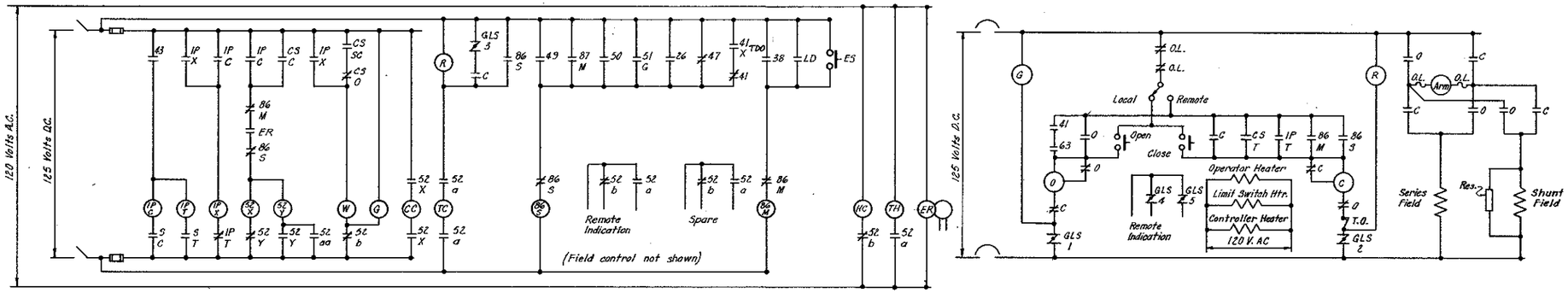

HIGH SERVICE PUMP & DISCHARGE VALVE

LEGEND

C - Valve controller "Close" contactor.
CC - Breaker closing coil.
CS - Control switch
ER - Electrode relay - contact closes when pump is primed.
ES - Emergency stop pushbutton at motor.
G - Green indicating light.
GLS/1 - Geared limit switch on valve - contact open only when valve is fully open.
GLS/2 - Geared limit switch on valve - contact open only when valve is fully closed.
GLS/3 - Geared limit switch on valve - contact closes only when valve is 95% closed.
GLS/4 - Geared limit switch on valve - contact open only when valve is fully open.
GLS/5 - Geared limit switch on valve - contact open only when valve is fully closed.
HC - Contactor for motor space heater.
IP/C - Interposing relay - close
IP/T - Interposing relay - trip.
IP/X - Interposing relay - auxiliary for white light.
LD - Leakage detector.
O - Valve controller "Open" contactor.
O.L. - Overload device.
R - Red indicating light.
S/C - Supervisory control "Close" contact.
S/T - Supervisory control "Trip" contact.
TC - Breaker tripping coil.
TH - Total hour meter
T.O. - Torque overload device.
W - White indicating light.
26 - Starting protection.
38 - Bearing temperature device.
41 - Field contactor.
43 - Supervisory control disabling switch.
47 - Phase sequence and undervoltage relay.
49 - Motor thermal relay.
50 - Instantaneous overcurrent relay.
51 - Time overcurrent - phase.
51/G - Time overcurrent - ground.
52/a - Normally open breaker auxiliary switch.
52/b - Normally closed breaker auxiliary switch.
63 - Discharge pressure switch.
67 - Directional overcurrent relay.
86/T - Transformer lockout relay
86/S - Protective lockout relay on switchgear.
86/M - Protective lockout relay on motor.
87/M - Motor differential relay
87/T - Transformer differential relay.
TDO - Time delay open

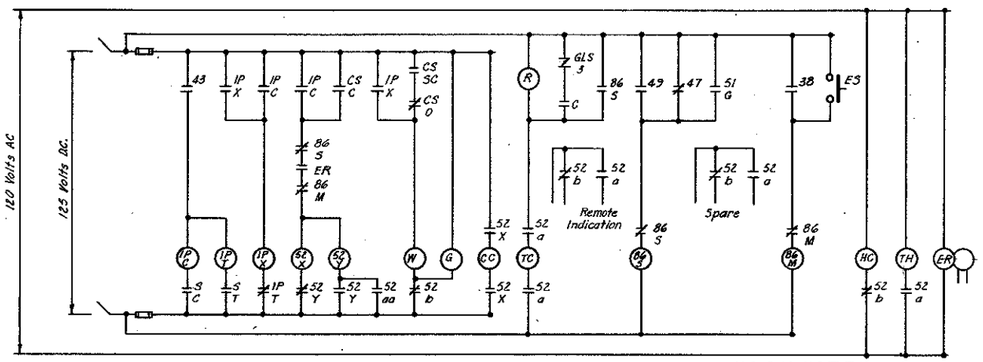

WASHWATER PUMP & DISCHARGE VALVE

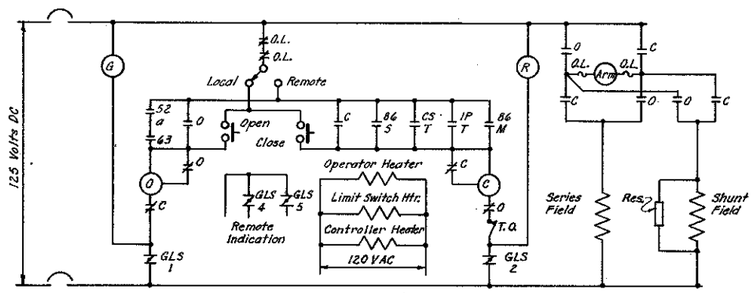

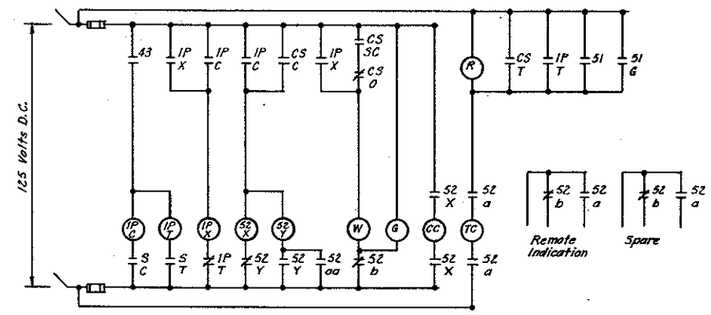

AUXILIARY POWER FEEDER

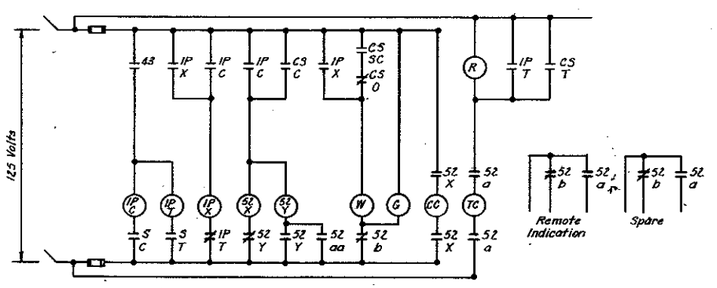

5 KV TIE BREAKER

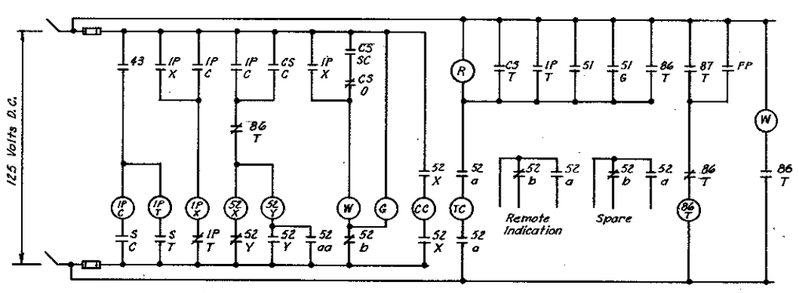

5 KV MAIN BREAKER

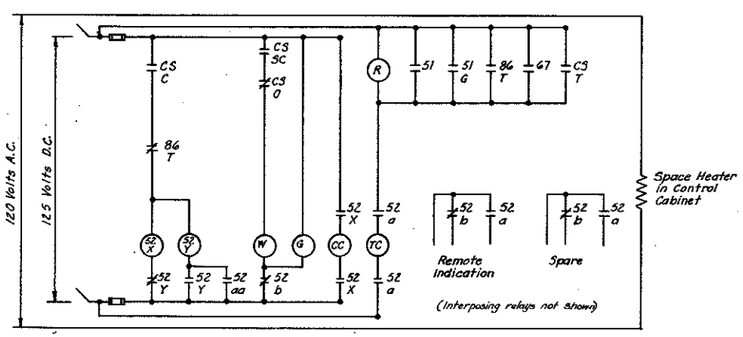

26.4 KV LINE BREAKER

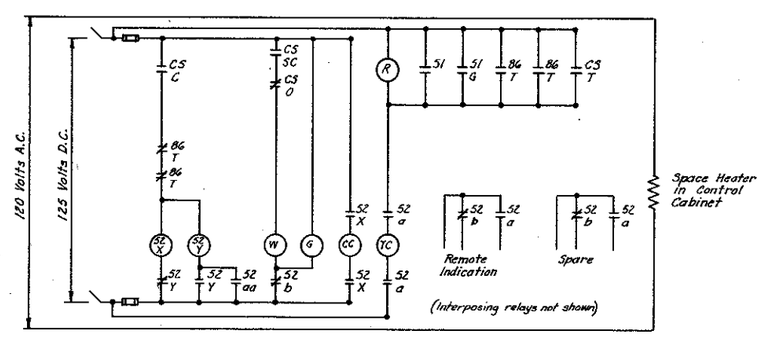

26.4 KV TIE BREAKER

WATER ENGINEERING DIVISION
BUREAU OF ENGINEERS
MILWAUKEE WATER WORKS
DEPARTMENT OF PUBLIC WORKS

HOWARD AVENUE PUMPING STATION

BREAKER AND VALVE CONTROL TYPICAL SCHEMATICS

APPROVED _____ CONSULTING ENGINEER
APPROVED _____ ENGINEER IN CHARGE
APPROVED _____ SPEC. DEP. COMMISSIONER OF PUBLIC WORKS
APPROVED _____ CITY ENGINEER

BLACK & VEATCH
CONSULTING ENGINEERS, KANSAS CITY, MO.

DESIGNED REM
DRAWN REM
TRACED REM
CHECKED DEC
DATE 1-14-60
SCALE: AS SHOWN
FILE 4-41-4
DWG. HS-30

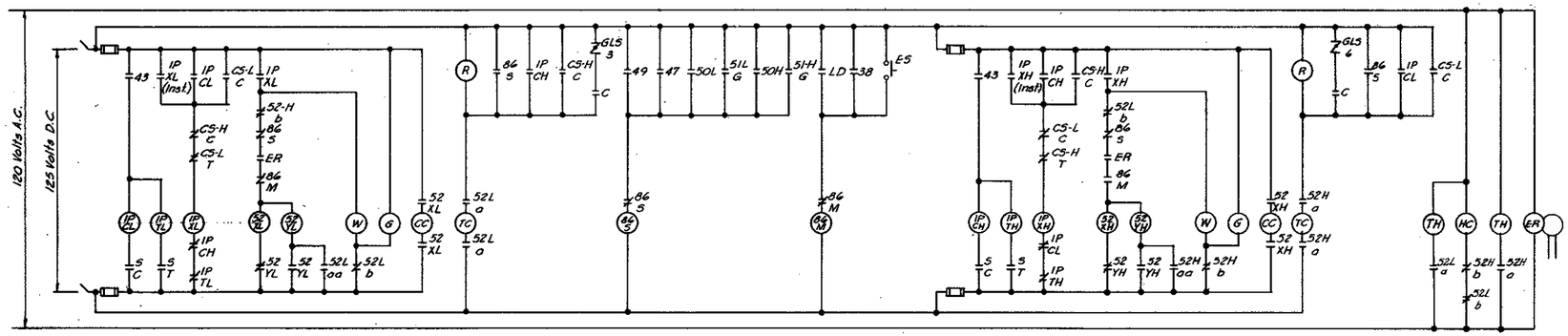

LOW SPEED CONTROL

MOTOR PROTECTION

HIGH SPEED CONTROL

LEGEND

C -Valve controller "Close" contactor.
CC -Breaker closing coil.
CS -Control switch.
ER -Electrode relay-contact closes when pump is primed.
ES -Emergency stop pushbutton at motor.
G -Green indicating light.
GLS/1-Geared limit switch on valve-contact open only when valve is fully open.
GLS/2-Geared limit switch on valve-contact open only when valve is fully closed.
GLS/3-Geared limit switch on valve-contact closes only when valve is 95% closed.
GLS/4-Geared limit switch on valve-contact open only when valve is fully open.
GLS/5-Geared limit switch on valve-contact open only when valve is fully closed.
GLS/6-Geared limit switch on valve-contact closes only when valve is 95% closed.
HC -Contactor for motor space heater.
IP/CH-Interposing relay-close (High Speed).
IP/CL-Interposing relay-close (Low Speed).
IP/TH-Interposing relay-trip (High Speed).
IP/TL-Interposing relay-trip (Low Speed).
IP/XH-Time delay relay-after energization (High Speed).
IP/XL-Time delay relay-after energization (Low Speed).
LD -Leakage detector.
O -Valve controller "Open" contactor.
TD -Time delay relay-after energization (Valve).
O.L. Overload device.
R -Red indicating light.
S/C -Supervisory control "Close" contact.
S/T -Supervisory control "Trip" contact.
TC -Breaker tripping coil.
TH -Total hour meter.
T.O. -Torque overload device.
W. -White indicating light.
38 -Bearing temperature device.
43 -Supervisory control disabling switch.
47 -Phase sequence and undervoltage relay.
49 -Motor thermal relay.
50H -Instantaneous overcurrent relay (High Speed).
50L -Instantaneous overcurrent relay (Low Speed).
51H -Time overcurrent-phase (High Speed).
51L -Time overcurrent-phase (Low Speed).
51H/G-Time overcurrent-ground (High Speed).
51L/G-Time overcurrent-ground (Low Speed).
52H/a-Normally open, auxiliary switch, high speed breaker.
52L/a-Normally open, auxiliary switch, low speed breaker.
52H/b-Normally closed auxiliary switch, high speed breaker.
52L/b-Normally closed, auxiliary switch, low speed breaker.
63 -Discharge pressure switch.
86/S-Protective lockout relay on switchgear.
87/M-Motor differential relay.
86/M-Protective lockout relay on motor.

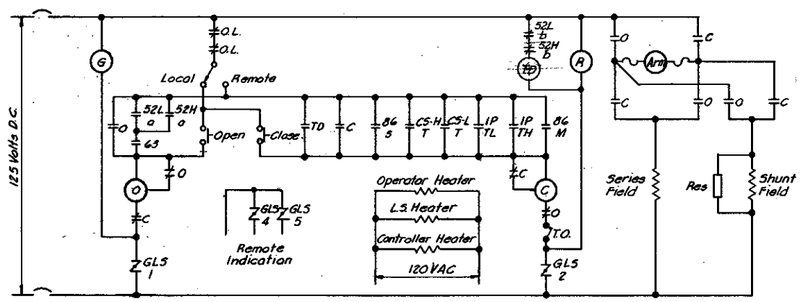

VALVE CONTROL

Spring return to normal

Contacts		Position		
		Close	Normal	Trip
* CS C	1/T	X		
CS T	1/T			X
CS C	1/T		X	X
CS T	1/T	X	X	

* There are two of these contacts on each switch

CONTROL SWITCH DEVELOPMENT

LOW SERVICE PUMP & DISCHARGE VALVE

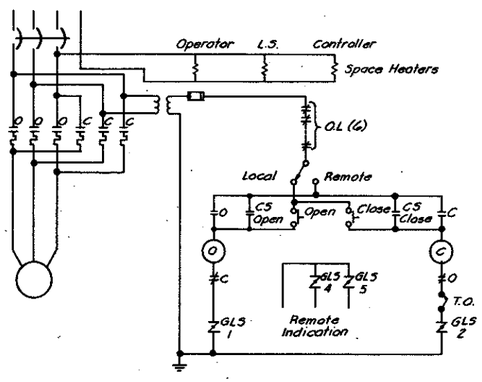

VALVES P9, P16, P17

WATER ENGINEERING DIVISION
BUREAU OF ENGINEERS
MILWAUKEE WATER WORKS
DEPARTMENT OF PUBLIC WORKS

HOWARD AVENUE PUMPING STATION

BREAKER AND VALVE CONTROL
TYPICAL SCHEMATICS

APPROVED [signature] CONSULTING ENGINEER APPROVED [signature] ENGINEER IN CHARGE
APPROVED [signature] SPEC. DEP. COMMISSIONER OF PUBLIC WORKS APPROVED [signature] CITY ENGINEER

BLACK & VEATCH
CONSULTING ENGINEERS, KANSAS CITY, MO.

DESIGNED REM DATE 1-14-60
DRAWN REM SCALE: AS SHOWN
TRACED TIB
CHECKED DEC FILE 4-41-4 DWG. HB-31

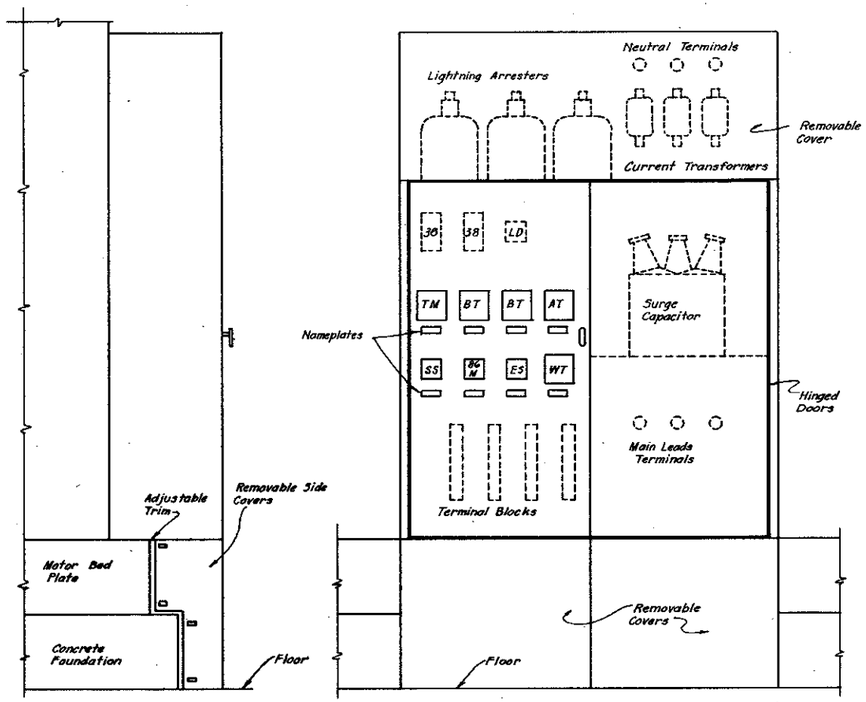

TYPICAL MOTOR TERMINAL COMPARTMENT FOR HIGH SERVICE PUMPS

Not To Scale

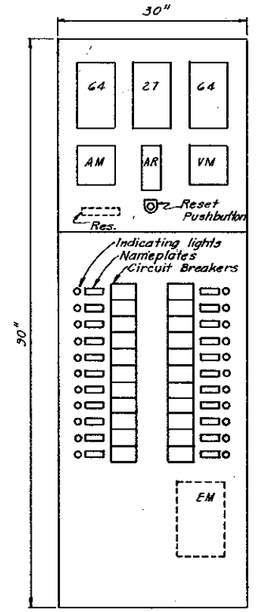

D.C. CONTROL CENTER

Scale : 1"=1'-0"

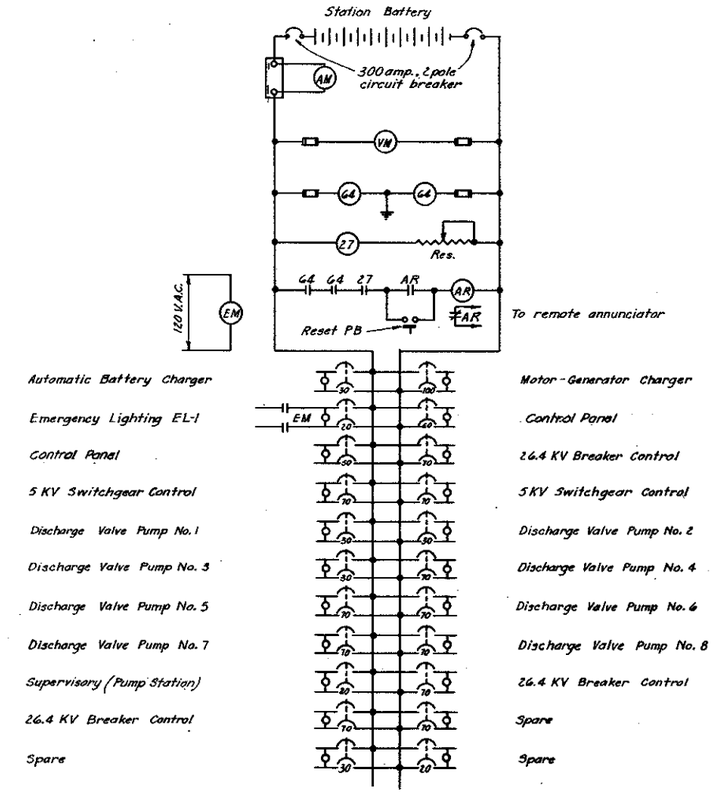

D.C. CONTROL CENTER SCHEMATIC

LEGEND

AM - Ammeter
AR - Auxiliary Relay
AT - Air Temperature Meter
BT - Bearing Temperature Meter
EM - Emergency Lighting Contactor
ES - Emergency Stop Switch
M - Motor Starter
1ML - Motor Starter for low speed of fan motor.
1MH - Motor Starter for high speed of fan motor.
2M - Motor Starter for Kathabar Pump.
3M - Motor Starter for regeneration fan.
SS - Motor Temperature Selector Switch.
TM - Motor Temperature Meter
VM - Voltmeter
WT - Water Temperature Meter
27 - Undervoltage Relay
64 - Ground Detector Relay
38 - Bearing Temperature Relay.
86/M - Hand-Reset Lockout Relay on motor terminal cabinet.
R - Red indicating light

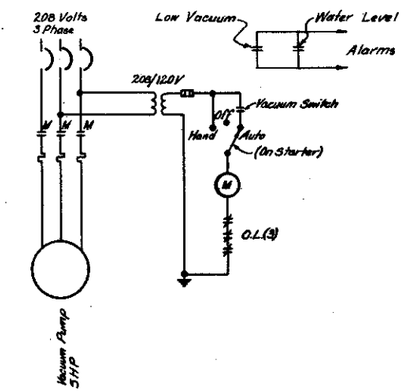

VACUUM PRIMING

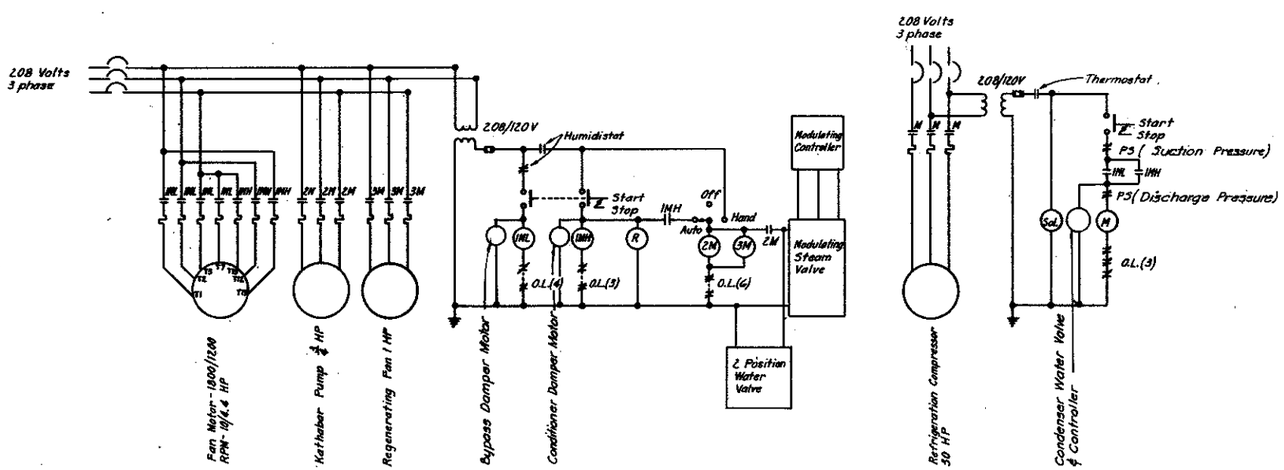

DEHUMIDIFICATION EQUIPMENT

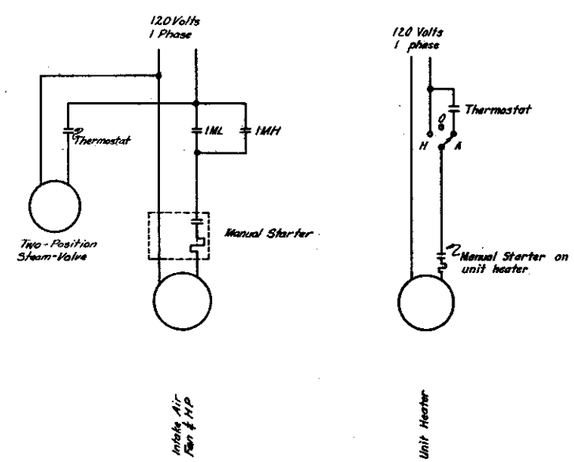

HEATING

WATER ENGINEERING DIVISION
BUREAU OF ENGINEERS
MILWAUKEE WATER WORKS
DEPARTMENT OF PUBLIC WORKS

HOWARD AVENUE PUMPING STATION

MISC. DETAILS AND TYPICAL SCHEMATICS

APPROVED [signature] CONSULTING ENGINEER
APPROVED [signature] ENGINEER OF DESIGN
APPROVED [signature] SPEC. DEP. COMMISSIONER OF PUBLIC WORKS
APPROVED [signature] CITY ENGINEER

BLACK & VEATCH
CONSULTING ENGINEERS, KANSAS CITY, MO.

DESIGNED REM
DRAWN REM
TRACED REM, DAB
CHECKED DEC
FILE 4-41-4
DATE 1-14-60
SCALE: AS SHOWN
DWG. HS-32

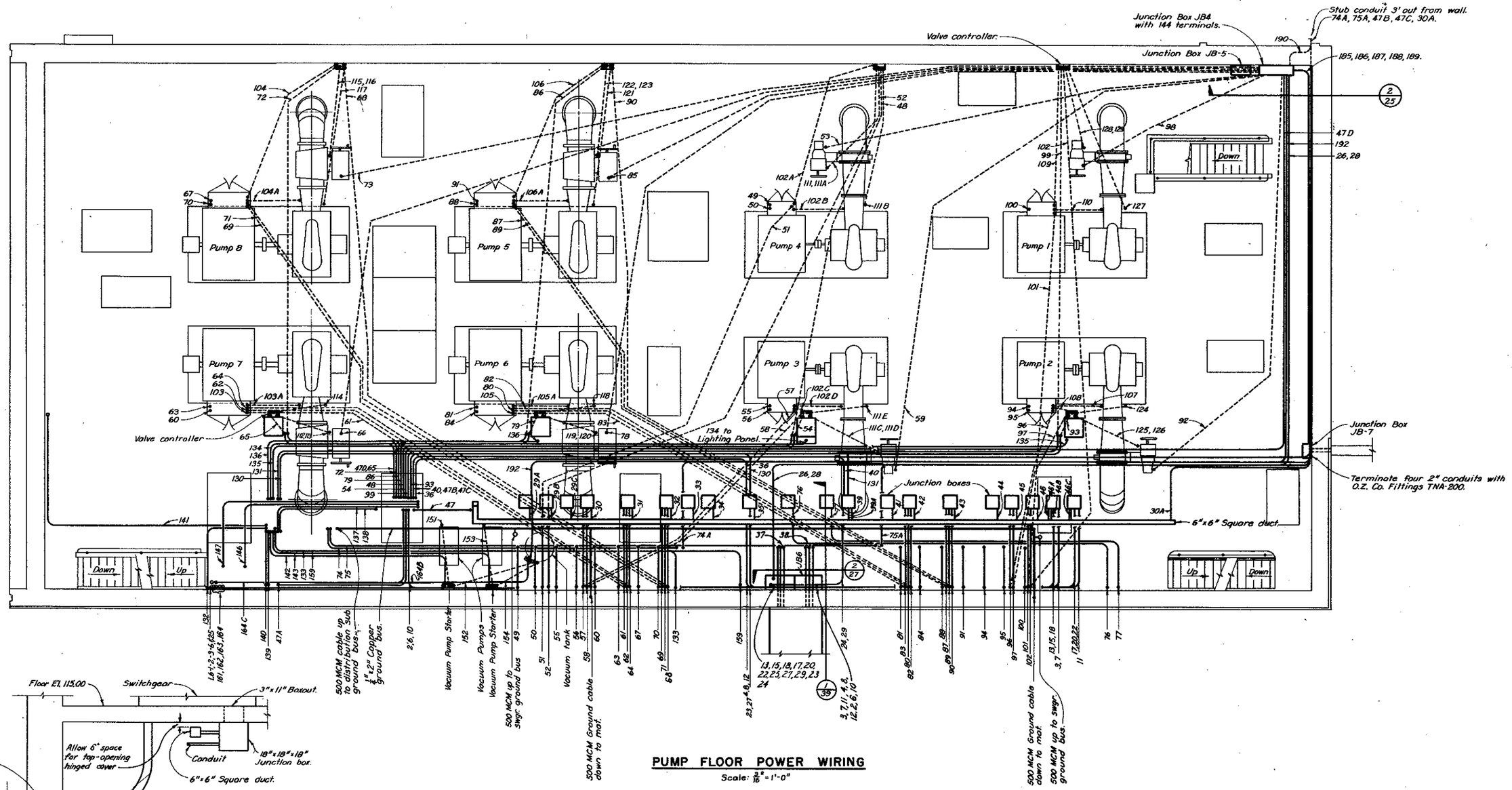

PUMP FLOOR POWER WIRING

Scale: $\frac{3}{16}$" = 1'-0"

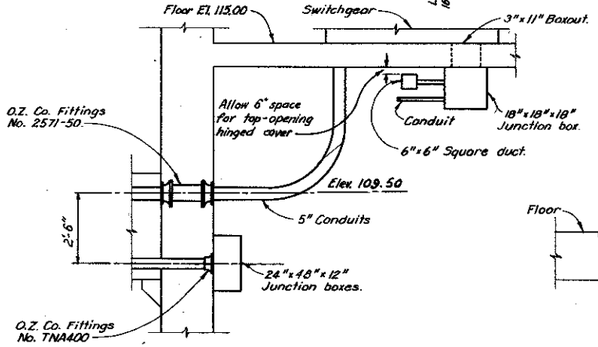

SECTION I

Scale: $\frac{3}{8}$" = 1'-0"
See this Dwg.

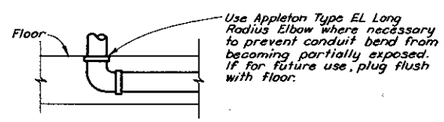

CONDUIT EXIT DETAIL

Not to Scale

POWER WIRING LEGEND

- Rigid conduit concealed in floor or wall.
- Rigid conduit concealed in ceiling or wall.
- Exposed conduit.
- Tee conduit fitting.
- Conduit passing from floor below to floor above.
- Conduit rising to floor above.
- Conduit rising from floor below.
- Conduit terminations.
- (P6) Valve No. P6
- (H) Humidistat - mount 5'-0" above floor.
- (T) Thermostat - mount 5'-0" above floor.
- (L) Valve limit switches.

WATER ENGINEERING DIVISION
BUREAU OF ENGINEERS
MILWAUKEE WATER WORKS
DEPARTMENT OF PUBLIC WORKS

HOWARD AVENUE PUMPING STATION

PUMP FLOOR POWER WIRING

APPROVED [signature] CONSULTING ENGINEER — APPROVED [signature] ENGINEER IN CHARGE
APPROVED [signature] SPEC. DEP. COMMISSIONER OF PUBLIC WORKS — APPROVED [signature] CITY ENGINEER

BLACK & VEATCH
CONSULTING ENGINEERS, KANSAS CITY, MO.

DESIGNED REM		DATE 1-14-50	
DRAWN REM		SCALE: AS SHOWN	
TRACED DOY			
CHECKED DEC	FILE 4-41-5		DWG. HS-39

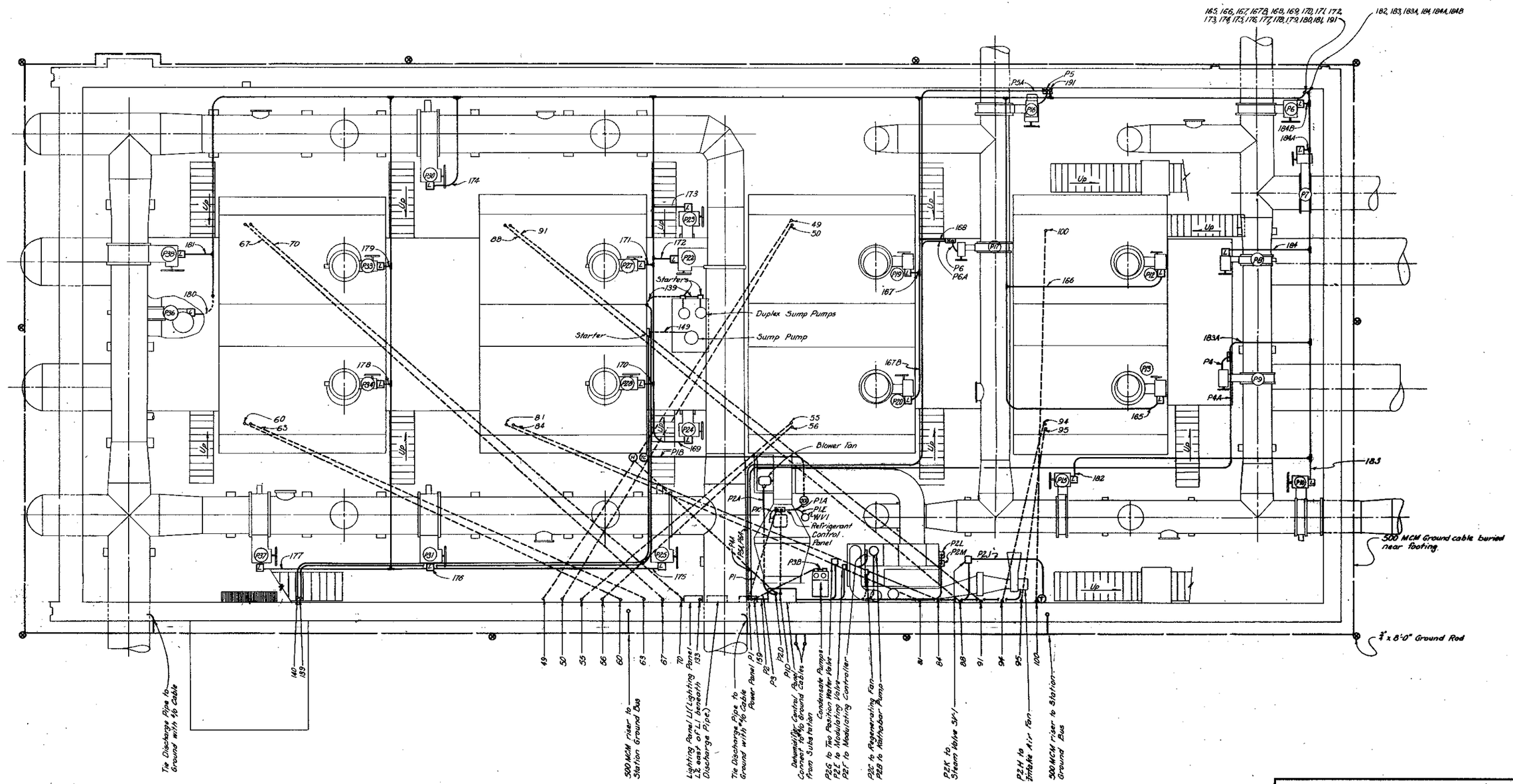

Note: See drawing 38 for legend

BASEMENT POWER WIRING

Scale: 1/8" = 1'-0"

WATER ENGINEERING DIVISION
BUREAU OF ENGINEERS
MILWAUKEE WATER WORKS
DEPARTMENT OF PUBLIC WORKS
HOWARD AVENUE PUMPING STATION

BASEMENT POWER WIRING

APPROVED _____ CONSULTING ENGINEER — APPROVED _____ ENGINEER IN CHARGE
APPROVED _____ SPEC. DEP. COMMISSIONER OF PUBLIC WORKS — APPROVED _____ CITY ENGINEER

BLACK & VEATCH
CONSULTING ENGINEERS, KANSAS CITY, MO.

DESIGNED REM		DATE 1-14-60	
DRAWN REM DAB		SCALE: AS SHOWN	
TRACED DAB			
CHECKED DEC	FILE 4-41-5		DWG. HS-40

HOWARD STATION

DEVICE & NAMEPLATE LEGEND

NO.	DESCRIPTION	NAMEPLATE
1.	Nameplate	Howard Station
2.	Printer	-
3.	Breaker Control Point	26KV Feeder No. 1
4.	" " "	" " No. 2
5.	" " "	" Tie Breaker
6.	" " "	5KV Main Breaker No. 1
7.	" " "	" " " No. 2
8.	" " "	" Tie Breaker
9.	" " "	Aux. Power Feeder No. 1
10.	Motor Control Point	High Service Pump No. 6
11.	" " "	" " " No. 5
12.	" " "	Low Service Pump No. 2-Low Speed
13.	" " "	" " " No. 2-High Speed
14.	" " "	Washwater Pump No. 1
15.	Breaker " "	Aux. Feeder No. 2
16.	Motor " "	High Service Pump No. 8
17.	" " "	" " " No. 7
18.	" " "	Low " " No. 3-Low Speed
19.	" " "	" " " No. 3-High Speed
20.	" " "	" " " No. 4-Low Speed
21.	" " "	" " " No. 4-High Speed
22.	Valve " "	Valve No. Y4
23.	" " "	" " P9
24.	" " "	" " P16
25.	" " "	" " P17
26.	Breaker Trip Control	Breaker Trip
27.	Pump Stop "	Pump Stop
28.	Blank	-
29.	"	-
30.	"	-
31.	"	-
32.	"	-
33.	As Required by System	As Required by System
34.	" " " "	" " " "
35.	" " " "	" " " "
36.	Pump Run Control	Pump Start
37.	Breaker Close "	Breaker Close
38.	Line Identification	W.E.P. Co. Line 3282 SW. # 537
39.	" "	W.E.P. Co. Line 3274 SW. # 498
40.	Access Panel to RS-232 Port	

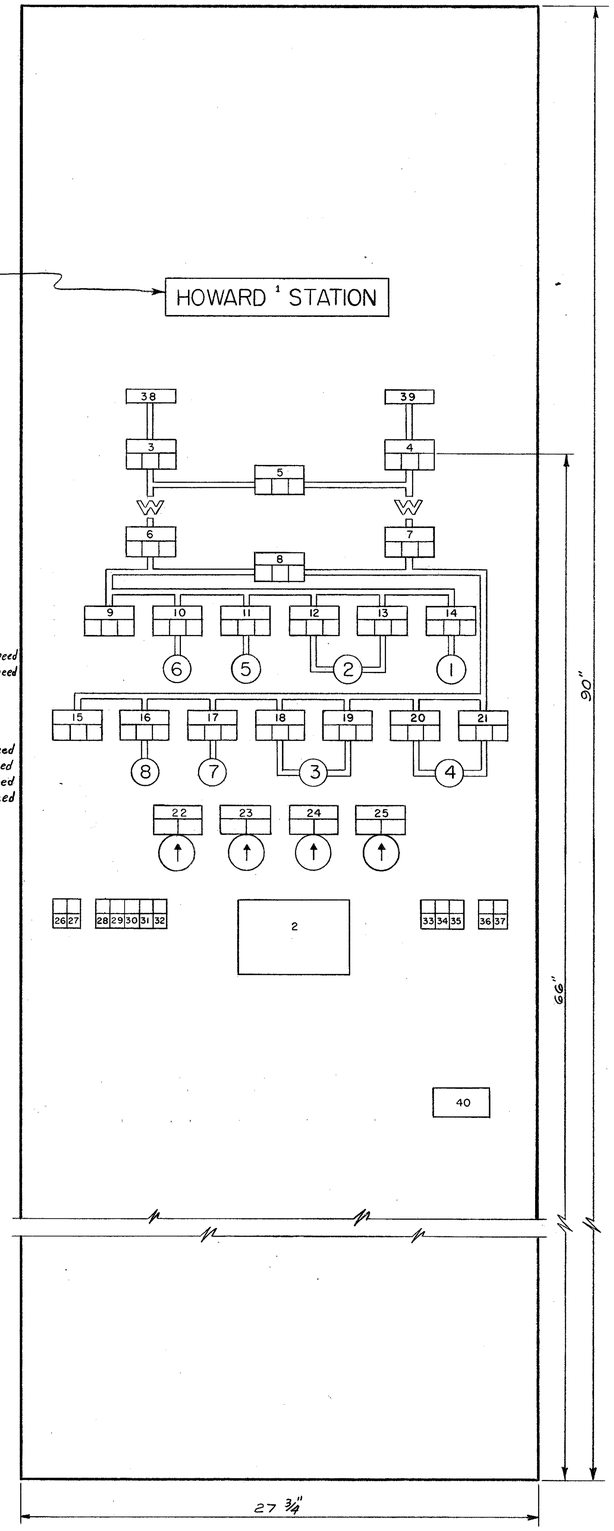

MASTER CONTROL PANEL

SCALE 1/4" = 1"

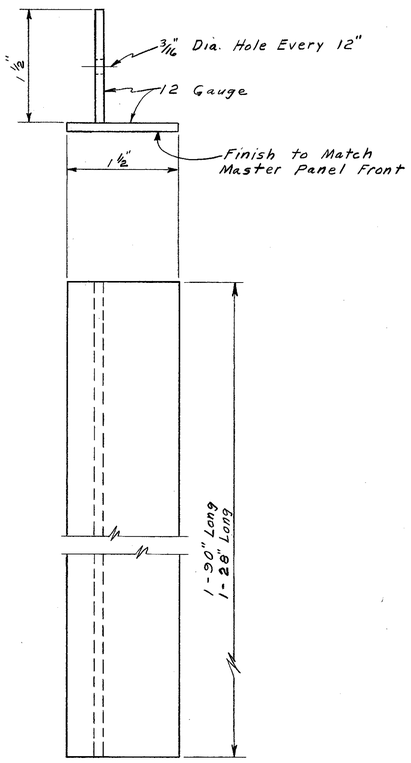

TRIM PIECE

FULL SCALE

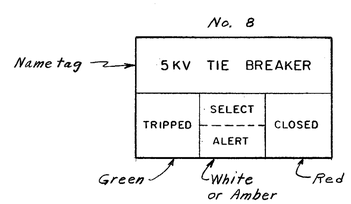

TYPICAL BREAKER CONTROL

FULL SCALE

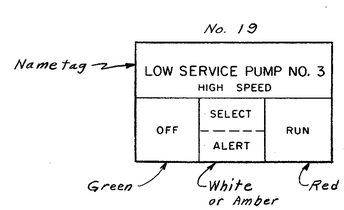

TYPICAL PUMP CONTROL

FULL SCALE

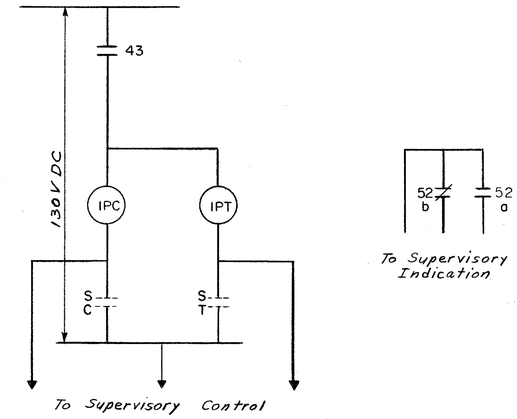

TYPICAL BREAKER CIRCUIT CONNECTIONS

N.T.S.

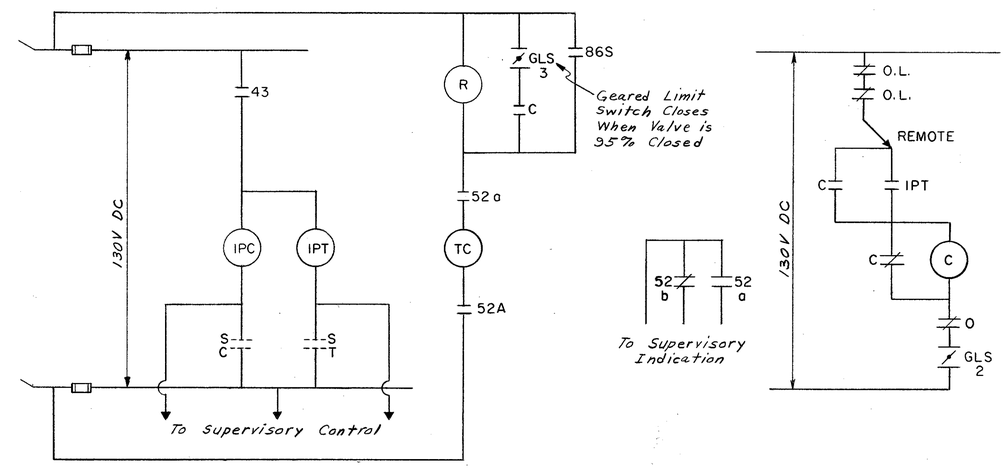

TYPICAL HIGH SERVICE PUMP & DISCHARGE VALVE OR WASHWATER PUMP & DISCHARGE VALVE CIRCUIT CONNECTIONS

N.T.S.

No.	Date	Revision	By	Chk'd.

WATER ENGINEERING DIVISION
BUREAU OF ENGINEERS
MILWAUKEE WATER WORKS
DEPARTMENT OF PUBLIC WORKS

HOWARD AVE. PUMPING STATION
SUPERVISORY CONTROL EQUIPMENT

APPROVED A.V. Simons 11-15-83 (PLANT DESIGN ENGINEER) APPROVED R.J. Kocol 11/15/83 (ENGINEER IN CHARGE)
APPROVED Norman P. Zamm 11-16-83 (SPEC. DEPUTY COMMISSIONER OF PUBLIC WORKS) APPROVED E.J. Lenardi 11/15/83 (CITY ENGINEER)

DESIGNED BY A.F.H.
DRAWN BY N.P.L.
TRACED BY
CHECKED BY AVS
DATE NOV. 2, 1983
SCALE AS SHOWN
FILE 4-41-6
DRWG. HS-16-1

WISCONSIN RAYMOND J. KOCOL E-627 MILWAUKEE, WIS. PROFESSIONAL ENGINEER

MICROFILMED 5-6-86