CITY OF MILWAUKEE
DEPARTMENT OF PUBLIC WORKS

SANITATION HEADQUARTERS RENOVATION

2363 SOUTH 35TH STREET
MILWAUKEE, WI 53215

CONTINUUM
ARCHITECTS + PLANNERS, S.C.

02/01/2013

ISSUED FOR BID

CODE PLAN KEY

XX	EXIT WIDTH PROVIDED
FE-1	FIRE EXTINGUISHER - MAXIMUM TRAVEL DISTANCE - 75 FEET - SEE SPECIFICATIONS FOR FIRE EXTINGUISHER TYPE.
	EXIT SIGN
	STANDING SPACE OFF LIMITS, 3' - 0" DEEP TYPICAL
	ACCESSIBLE ROUTE
1 1	ONE HOUR RATED FIRE PARTITION OR WALL
2 2	TWO HOUR RATED FIRE PARTITION OR WALL

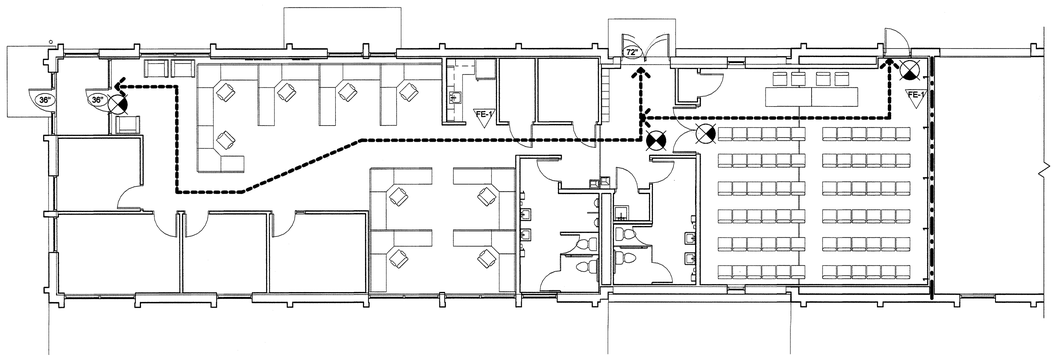

1 FIRST FLOOR NEW EXIT PLAN
Scale: 1/8" = 1'-0"

CODE SUMMARY

APPLICABLE CODES:

ARCHITECTURAL SPS 360-366 WI COMMERCIAL BUILDING CODE, EFFECTIVE SEPT. 1, 2011
2009 ICC COMMERCIAL BUILDING CODE

ICC/ANSI - ACCESSIBLE AND USEABLE BUILDING AND FACILITIES STANDARDS - ANSI 117.1-2003

UNIFORM FEDERAL ACCESSIBILITY STANDARDS (UFAS) OR AMERICAN WITH DISABILITY ACT - ACCESSIBILITY GUIDELINES FOR BUILDINGS AND FACILITIES (ADAAG).

LIFE SAFETY CODE - NFPA 7-2006

SAFETY & HEALTH - OSHA CFR PART 1926.62

ARCHITECT/ENGINEER CONTRACTOR DESIGN REQUIREMENTS - 48CFR PART 36

PLUMBING WI SPS 381 ADMINISTRATION & ENFORCEMENT

MECHANICAL WI SPS 364 HVAC

ENERGY WI SPS 363 ENERGY CONSERVATION

ELECTRICAL WI SPS 316 2008 NATIONAL ELECTRICAL CODE

BUILDING DATA:

OCCUPANCY CLASSIFICATION:
BUSINESS GROUP B
ASSEMBLY GROUP A-3
STORAGE GROUP S-2
UTILITY GROUP U

CONSTRUCTION TYPE:
CONSTRUCTION TYPE IIB (MASONRY UNPROTECTED, NOT INCLUDING STORAGE SHED)

FIRE RESISTANCE RATING OF BUILDING ELEMENTS:
STRUCTURAL FRAMES - 1 HOUR
BEARING WALLS:
EXTERIOR - 1 HOUR
INTERIOR - 1 HOUR
FLOOR CONSTRUCTION - 1 HOUR
ROOF CONSTRUCTION - 1 HOUR

ALLOWABLE HEIGHT AND AREA (TABLE 503):
GROUP B MAX. HEIGHT - 3 STORIES
MAX. AREA - 23,000 SQ. FT.
GROUP A-3 MAX. HEIGHT - 2 STORIES
MAX. AREA - 9,500 SQ. FT.
GROUP S-2 MAX. HEIGHT - 3 STORIES
MAX. AREA - 26,000 SQ. FT.
GROUP U MAX. HEIGHT - 2 STORIES
MAX. AREA - 8,500 SQ. FT.

BUILDING DATA:

OFFICE BUILDING (B)	2,520 SQ. FT.
OFFICE BUILDING (A-3)	860 SQ. FT.
OFFICE BUILDING (S-2)	3,550 SQ. FT.
TOTAL	6,930 SQ. FT.

STORAGE SHED DATA:

OFFICE BUILDING (U)	660 SQ. FT.
TOTAL	660 SQ. FT.

EXISTING BUILDING IS NOT SPRINKLERED. NEW ADDITION WILL NOT BE SPRINKLERED.

FIRE SEPARATION DISTANCE: EXTERIOR WALL TO HAVE 0 RATING BETWEEN 10 AND 30 FEET.

BUILDING WILL HAVE NON-SEPARATED OCCUPANCIES BETWEEN B AND A-3 OCCUPANCIES, AND WILL FOLLOW THE MOST RESTRICTIVE OCCUPANCY (A-3).

BUILDING WILL HAVE SEPARATED OCCUPANCIES BETWEEN S-2 OCCUPANCY AND REMAINDER OF THE BUILDING. SEPARATION BETWEEN OCCUPANCY S-2 AND OCCUPANCY A-3: 1 HOUR.

REQUIRED EGRESS WIDTHS:
WITHOUT SPRINKLER: IBC 1008 - 32" CLEAR PER DOOR.
DOOR WIDTHS: IBC 1005.1 - MIN. EGRESS WIDTH = OCCUPANT LOAD X .2 INCH

MINIMUM CORRIDOR WIDTH: IBC 1018.2 - 44"

COMMON PATH OF EGRESS TRAVEL: IBC 1014.3 - NOT SPRINKLERED = 75 FEET

REQUIRED EXIT WIDTH DESIGN CRITERIA FOR BUSINESS (B):
90 X .2 = 18" PER EXIT DOOR PER FLOOR.
90 X .2 = 18" PER EXIT PER FLOOR

ACCESSIBLE MEANS OF EGRESS: IBC 1007

SECTION 1015.2.1 REQUIRES TWO ACCESSIBLE MEANS OF EGRESS.

OCCUPANCY LOAD TO BE POSTED IN ASSEMBLY AREAS/STORAGE PER IBC 1004.3

(IBC 2009) 1004. OCCUPANCY LOAD:

BUSINESS GROUP B	2,826SF / 100SF = 29 OCCUPANTS
ASSEMBLY GROUP A-3	860SF / 75F = 74 OCCUPANTS
STORAGE GROUP S-2	3,830SF / 300SF = 13 OCCUPANTS
TOTAL	116 OCCUPANTS
UTILITY GROUP U	660SF / 500SF = 2 OCCUPANTS
TOTAL	2 OCCUPANTS

EXIT REQUIREMENTS:
EXIT REQUIREMENTS: BUSINESS (B)
PER ROOM OR SPACE - OCCUPANCY <50 = 1, OCCUPANCY >50 = 2+.
TRAVEL DISTANCE - 75FT, NOT SPRINKLERED (IBC 1014.3)
PER FLOOR - 1 TO 500 OCCUPANTS, MINIMUM TWO EXITS.

EXIT REQUIREMENTS: STORAGE (S-2)
PER ROOM OR SPACE - OCCUPANCY <50 = 1, OCCUPANCY >50 = 2+.
TRAVEL DISTANCE - 75FT, NOT SPRINKLERED (IBC 1014.3)
PER FLOOR - 1 TO 500 OCCUPANTS, MINIMUM TWO EXITS.

SECTION 1003.2.13 REQUIRES TWO ACCESSIBLE MEANS OF EGRESS.

(IBC 2009) TABLE 2902.1, MINIMUM SANITARY FIXTURES:
BUSINESS GROUP B:
1 WATER CLOSET / URINAL PER 25 OCCUPANTS FOR 1ST 50 = 1 PER 50 FOR REMAINDER EXCEEDING 50
1 LAVATORY PER 40 OCCUPANTS FOR 1ST 80 = 1 PER 80 FOR REMAINDER EXCEEDING 80
1 DRINKING FOUNTAIN PER 100 OCCUPANTS

29 OCCUPANTS X 50% = 15 MEN AND 15 WOMEN

ASSEMBLY GROUP A-3:
MEN - 1 WATER CLOSET / URINAL PER 125 OCCUPANTS
WOMEN - 1 WATER CLOSET PER 65 OCCUPANTS
1 LAVATORY PER 200 OCCUPANTS
1 DRINKING FOUNTAIN PER 500 OCCUPANTS

123 OCCUPANTS X 50% = 62 MEN AND 62 WOMEN

STORAGE GROUP S-2:
1 WATER CLOSET / URINAL PER 100 OCCUPANTS
1 LAVATORY PER 100 OCCUPANTS
1 DRINKING FOUNTAIN PER 1,000 OCCUPANTS

13 OCCUPANTS X 50% = 7 MEN AND 7 WOMEN

	WATER CLOSETS / URINALS		LAVATORIES	
OCCUPANCY	MEN	WOMEN	MEN	WOMEN
BUSINESS	0.6	0.6	0.38	0.38
ASSEMBLY	0.5	0.95	0.31	0.31
STORAGE	0.07	0.07	0.07	0.07
SUBTOTALS	1.17	1.62	0.76	0.76
REQUIRED TOTALS	2	2	1	1

CAP PROJECT #: 120905

OWNER:
CITY OF MILWAUKEE
DEPARTMENT OF PUBLIC WORKS
INFRASTRUCTURE SERVICES DIVISION
FACILITIES DEVELOPMENT & MANAGEMENT
841 NORTH BROADWAY
ROOM 602
MILWAUKEE, WI 53202

CONSULTING ARCHITECT:
CONTINUUM ARCHITECTS + PLANNERS, S.C.
228 SOUTH FIRST STREET - SUITE 301
MILWAUKEE, WI 53204
TEL. (414) 220-9640
FAX. (414) 220-9595

CONSULTING STRUCTURAL ENGINEER:
STRASS-MAGUIRE & ASSOCIATES, INC.
6512 WEST MEQUON ROAD
MEQUON, WI 53092
TEL. (262) 242-5050
FAX. (262) 242-5055

CONSULTING MECHANICAL ENGINEER:
GRUMMAN BUTKUS ASSOCIATES
1011 MAYFAIR ROAD, SUITE 300
WAUWATOSA, WI 53226
TEL. (414) 476-8980
FAX. (414) 476-2470

WISCONSIN URSULA TWOMBLY A-8501 MILWAUKEE 2/1/13

WISCONSIN LAVERN L. NALL E-16536 Sheboygan Falls, Wis. PROFESSIONAL ENGINEER 2/1/13

WISCONSIN HANS K. PLICHTA 32729 BROOKFIELD WI PROFESSIONAL ENGINEER 2-1-13

SHEET INDEX

CIVIL
C0.01 SITE SURVEY

ARCHITECTURAL
A0.00 TITLE SHEET & CODE INFORMATION
A0.01 GENERAL INFORMATION SHEET
A0.02 PARTITION TYPES
A0.10 SITE PLAN
A1.00 PHASING & DEMOLITION PLANS
A2.00 NEW WORK PLANS - OFFICE BUILDING
A2.01 PLANS & EXTERIOR ELEVATIONS - STORAGE BUILDING
A3.00 REFLECTED CEILING PLAN - OFFICE BUILDING
A4.00 EXTERIOR ELEVATIONS, SECTIONS & DETAILS
A4.01 WINDOW TYPES AND DETAILS AND ROOF DETAILS
A7.00 INTERIOR ELEVATIONS - OFFICE BUILDING
A8.00 SCHEDULES

STRUCTURAL
S1.01 PLANS
S1.02 PLAN & SECTIONS
S1.03 DETAILS & GENERAL NOTES

MECHANICAL
M0.01 MECHANICAL SYMBOLS, ABBREVIATIONS AND SCHEDULES
M2.01 FIRST FLOOR MECHANICAL (SOUTH) DEMOLITION & NEW WORK
M2.02 ROOF MECHANICAL (SOUTH) DEMOLITION & NEW WORK
M2.03 FIRST FLOOR AND ROOF (NORTH) MECHANICAL NEW WORK
TC2.01 TEMPERATURE CONTROLS DIAGRAMS

ELECTRICAL
E0.01 ELECTRICAL SYMBOLS AND ABBREVIATIONS
E1.01 SITE PLAN POWER NEW WORK
E2.01 FIRST FLOOR ELECTRICAL (SOUTH) DEMOLITION & NEW WORK
E2.02 FIRST FLOOR ELECTRICAL (NORTH) DEMOLITION & NEW WORK
E2.03 FIRST FLOOR POWER (SOUTH) DEMOLITION & NEW WORK
E2.04 FIRST FLOOR POWER (NORTH) DEMOLITION & NEW WORK
E2.05 ROOF POWER (SOUTH) DEMOLITION & NEW WORK
E3.01 ELECTRICAL SCHEDULES
E3.02 ELECTRICAL PANEL SCHEDULES
E4.01 ELECTRICAL WORK ONE-LINE SCHEMATIC DIAGRAMS

PLUMBING
P0.01 PLUMBING SYMBOLS, ABBREVIATIONS AND SCHEDULES
P2.01 UNDERFLOOR PLUMBING DEMOLITION & NEW WORK
P2.02 FIRST FLOOR PLUMBING DEMOLITION & NEW WORK
P3.01 PLUMBING ISOMETRICS

CONTINUUM ARCHITECTS + PLANNERS, S.C.
P.O. BOX 37643
MILWAUKEE, WI 53203
P 414.220.9640
F 414.220.9595

City of Milwaukee Department of Public Works
Infrastructure Services Division
Facilities Development & Management Services

APPROVED:
SUPERVISOR IN CHARGE 3-7-13
DIRECTOR, FACILITIES DEVELOPMENT AND MANAGEMENT 3-7-2013
COMMISSIONER OF PUBLIC WORKS 3-11-2013

SANITATION HEADQUARTERS BUILDING
2363 SOUTH 35TH STREET
MILWAUKEE, WI 53215

SANITATION HEADQUARTERS RENOVATION
TITLE SHEET & CODE INFORMATION

ISSUE	DATE	REMARKS
-		
-		
-		
-		
-		
-		
-		
-		
-		
-		

ARCHITECT JOB#:	120905
CITY PROJECT#:	BU11091119
DATE:	02/01/2013
ISSUE:	ISSUED FOR BID

A0.00

© Copyright 2013, Continuum Architects + Planners S.C.

Continuum Architects

PLAT OF SURVEY

LOCATION: 2363 South 35th Street, Milwaukee, Wisconsin

LEGAL DESCRIPTION:
Lands in the Northwest 1/4 of Section 12, Township 6 North, Range 21 East, in the City of Milwaukee, Milwaukee County, Wisconsin: Commencing on the West line of South 35th Street 313 feet South and 85 feet West of Northeast corner of said 1/4 Section; thence South along said Westerly street line 320 feet to North line of West Hayes Avenue; thence West along said Northerly street line 533.77 feet; thence North 267.21 feet; thence East 253 feet; thence North 53 feet; thence East 280 feet to the point of commencement.

December 14, 2012
January 2, 2013 Revised Drawing

Survey No. 103824

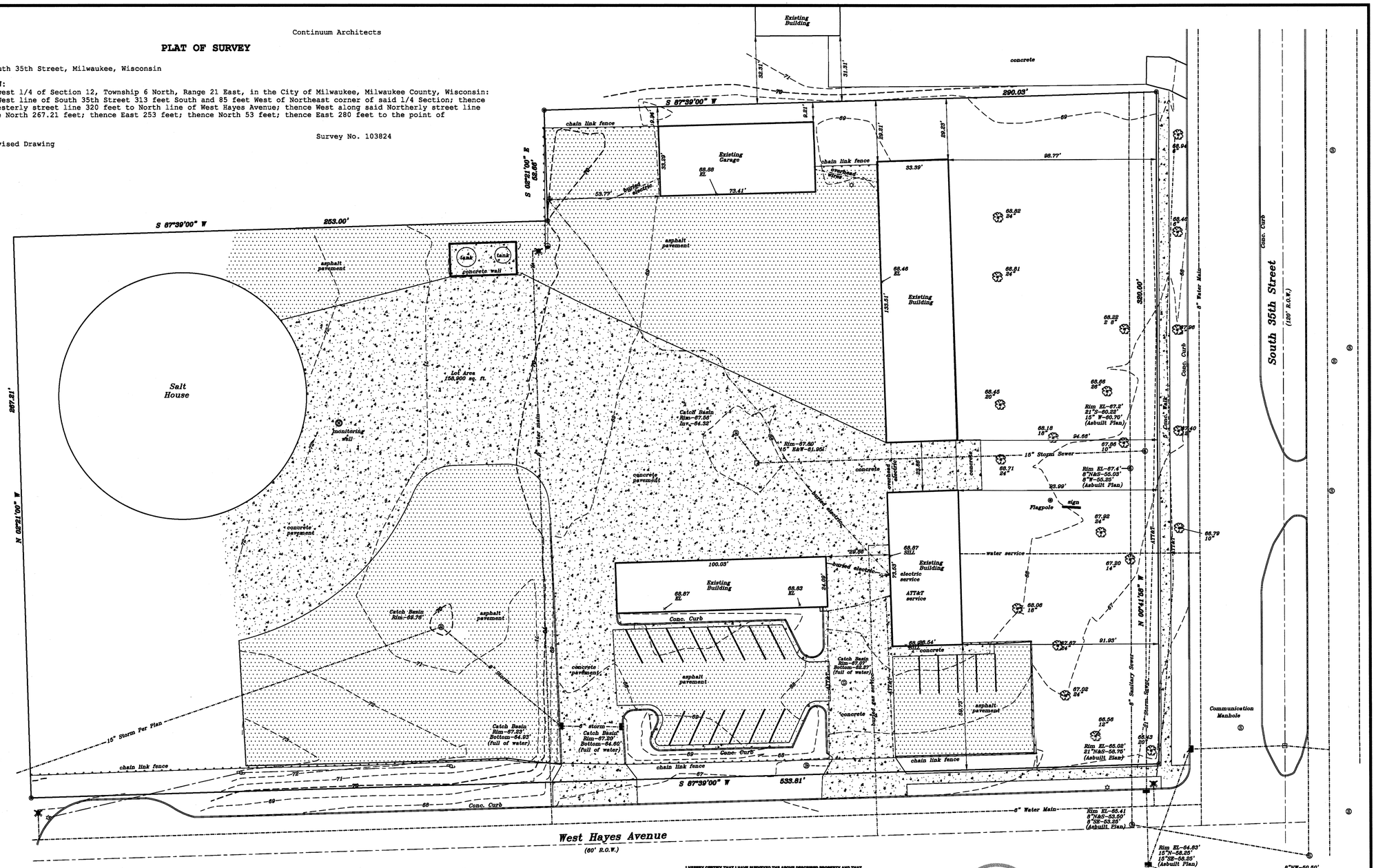

TO OBTAIN LOCATIONS OF PARTICIPANTS UNDERGROUND FACILITIES BEFORE YOU DIG IN WISCONSIN

CALL DIGGERS HOTLINE
1-800-242-8511
TOLL FREE
WIS STATUTE 182.0175(1974) REQUIRES MIN. 3 WORK DAYS NOTICE BEFORE YOU EXCAVATE
1-800-242-8511

METROPOLITAN SURVEY SERVICE, INC.
REGISTERED LAND SURVEYORS AND CIVIL ENGINEERS
5800 Broad Street, Greendale, Wisconsin 53129
PH. (414) 529-5380 FAX (414) 529-9787
email address: survey@bbrwi.rr.com

⊗ — *Denotes Iron Pipe Found*
O — *Denotes Iron Pipe Set*

GRAPHIC SCALE
20 0 10 20 40 80
(IN FEET)
1 inch = 20 ft.

I HEREBY CERTIFY THAT I HAVE SURVEYED THE ABOVE DESCRIBED PROPERTY AND THAT THE ABOVE MAP IS A TRUE REPRESENTATION THEREOF AND SHOWS THE SIZE AND LOCATION OF THE PROPERTY, ITS EXTERIOR BOUNDARIES, THE LOCATION OF ALL VISIBLE STRUCTURES AND DIMENSIONS OF ALL PERIODICAL BUILDINGS THEREON, BOUNDARY FENCES, APPARENT EASEMENTS AND ROADWAYS AND VISIBLE ENCROACHMENT, IF ANY.

THIS SURVEY IS MADE FOR THE EXCLUSIVE USE OF THE PRESENT OWNERS OF THE PROPERTY, AND ALSO THOSE WHO PURCHASE, MORTGAGE, OR GUARANTEE THE TITLE THERETO WITHIN ONE (1) YEAR FROM THE DATE HEREON.

SIGNED _____
Dennis C. Sauer
Registered Land Surveyor S-2421

WISCONSIN
DENNIS C. SAUER
S-2421
Franklin, WI
LAND SURVEYOR

CONTINUUM
ARCHITECTS + PLANNERS, S.C.
P.O. BOX 510643
MILWAUKEE, WI 53203
P 414.220.9640
F 414.220.9592

City of Milwaukee
Department of Public Works
Infrastructure Services Division
Facilities Development & Management Services

SANITATION HEADQUARTERS BUILDING
2363 SOUTH 35TH STREET
MILWAUKEE, WI 53215

SANITATION HEADQUARTERS RENOVATION
SITE SURVEY

ISSUE	DATE	REMARKS
-		
-		
-		
-		
-		
-		
-		
-		
-		
-		
-		
-		
-		
-		

ARCHITECT JOB#:	120905
CITY PROJECT#:	BU11091119
DATE:	02/01/2013
ISSUE:	ISSUED FOR BID

C0.01

© Copyright 2013,
Continuum Architects + Planners S.C.

MATERIAL IDENTIFICATION:

MATERIAL BEING REPRESENTED

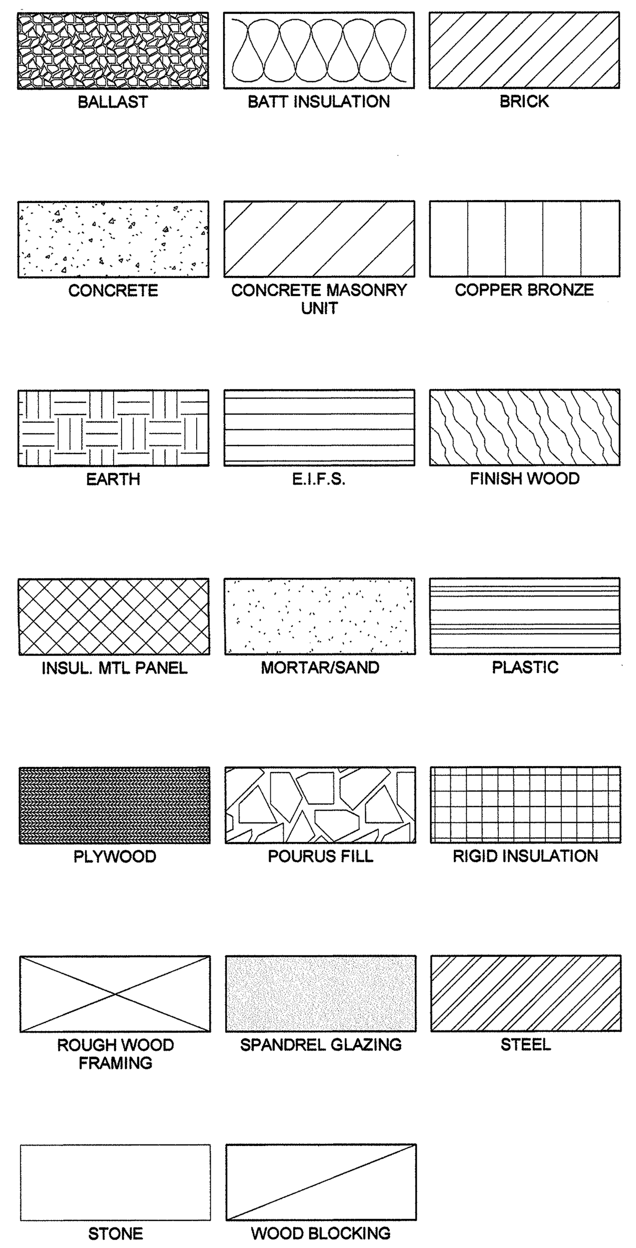

DRAWING SYMBOLS KEY

Symbol	Description
X.XX X	EXTERIOR ELEVATION REFERENCE REFER TO SHEET NUMBER INDICATED INSIDE OF SYMBOL
X.XX X	INTERIOR ELEVATION REFERENCE REFER TO SHEET NUMBER INDICATED INSIDE OF SYMBOL
X / X.XX SIM	DETAIL REFERENCE REFER TO SHEET NUMBER INDICATED IN BOTTOM OF SYMBOL
X / X.XX SIM	SECTION REFERENCE REFER TO SHEET NUMBER INDICATED IN BOTTOM OF SYMBOL
ROOM NAME XXX	ROOM NAME/NUMBER REFERENCE REFER TO ROOM FINISH SCHEDULE
XX	DOOR REFERENCE REFER TO DOOR SCHEDULE
X	EXTERIOR BUILDING SYSTEM REFERENCE REFER TO BUILDING ENVELOPE SYSTEMS
X / X	INTERIOR WALL TYPE REFERENCE REFER TO INTERIOR PARTITION TYPES
	ELEVATION REFERENCE FINISHED PLAN
	ELEVATION REFERENCE CONSTRUCTION ITEM
X	COLUMN GRID REFERENCE
XX	KEY NOTE REFERENCE REFER TO KEY NOTES
XX	DEMOLITION NOTE REFERENCE REFER TO DEMOLITION NOTES
X	REVISION REFERENCE REFER TO TITLE BLOCK
X	WINDOW TYPE REFERENCE REFER TO WINDOW TYPE ELEVATIONS
X' - X"	CEILING HEIGHT REFERENCE
X	EQUIPMENT TAG REFER TO EQUIPMENT SCHEDULE

ABBREVIATION KEY:

AB	AIR BARRIER
ACT	ACOUSTICAL CEILING TILE
ADJ	ADJACENT
A.F.F.	ABOVE FINISHED FLOOR
ALUM	ALUMINUM
AP	ACCESS PANEL
BL	BORROWED LIGHT
BLKG	BLOCKING
BLKHD	BULK HEAD
B.O.	BOTTOM OF
BRG	BEARING
BRZ	BRONZE
CG	CORNER GUARD
CH	COAT HOOK
CHKBD	CHALKBOARD
CJ	CONTROL/CONSTRUCTION JOINT
CL	CENTER LINE
CLG	CEILING
CLR	CLEARANCE / CLEAR
CMU	CONCRETE MASONRY UNIT
CONC	CAST-IN-PLACE CONCRETE
CONT	CONTINUOUS
CONTR	CONTRACTOR
CORR	CORRIDOR
CPT	CARPET
CRK	CORK
CS	COPING SYSTEM
CT	CERAMIC TILE
CTB	CERMIC TILE BASE
CW	CURTAIN WALL SYSTEM
DCS	DIAPER CHANGING STATION
DIM	DIMENSION
DL	DEAD LOAD
DS	DOWN SPOUT
DWG	DRAWING
EIFS	EXTERIOR INSULATION FINISH SYSTEM
EL	ELEVATION
ELEC	ELECTRICAL
ELEV	ELEVATOR
EQ	EQUAL
EQUIP	EQUIPMENT
ERF	EPOXY RESINOUS FLOORING
ESS	EXTERIOR SOFFIT SYSTEM
EST	ESTIMATE
EWS	EXTERIOR WALL SYSTEM
EXIST	EXISTING
EXJ	EXPANSION JOINT
EXP	EXPOSED CONSTRUCTION
FD	FLOOR DRAIN
FDN	FOUNDATION
FE	FIRE EXTINGUISHER
FEP	FINISHED END PANEL
FIN	FINISHED FLOOR
FLR	FLOOR
FR	FRAME
FRP	FIBERGLASS REINFORCED POLYESTER
FSTOP	FIRESTOPPING
FTG	FOOTING
FWS	FOUNDATION WALL SYSTEM
GALV	GALVANIZED
GB	GRAB BAR
GFI	GROUND FAULT INTERRUPTER
GFRC	GLASS FIBER REINFORCED CONCRETE
GMU	GLASS MASONRY UNIT
GT	GLASS TILE
GWB	GYPSUM WALL BOARD
HB	HOSE BIBB
HD	ELECTRIC HAND DRYER
HM	HOLLOW METAL DOORS AND FRAMES
HP	HIGH POINT
HR	HOUR
INSUL	INSULATION
JAN	JANITOR
JNT	JOINT
JST	JOIST
LF	LINEAR FOOT
LL	LIVE LOAD
LP	LOW POINT
LVR	LOUVER
MAS	MASONRY
MAT	MATERIAL
MB	MOISTURE BARRIER
MECH	MECHANICAL
MEP	MECHANICAL/ ELECTRICAL/ PLUMBING
MIR	MIRROR
MKBD	MARKER BOARD
MO	MOISTURE RESISTANT
MP	MANUFACTURED METAL PANEL
MR	MIRROR
MTD	MOUNTED
MTL	METAL
NTS	NOT TO SCALE
OC	ON CENTER
OCD	OVERHEAD COILING DOOR
OCG	OVERHEAD COILING GRILLE
OFD	OVERHEAD FABRIC DOOR
OFCI	OWNER FURNISHED CONTRACTOR INSTALLED
OFOI	OWNER FURNISHED OWNER INSTALLED
PC	POLISHED CONCRETE
PLAM	PLASTIC LAMINATE
PPT	PRESSURE TREATED WOOD
PREFIN	PREFINISHED
PRT	PARTITION
PS	PROJECTION SCREEN
P&S	CLOSET POLE AND SHELF
PT	PAINT
PTD	PAPER TOWEL DESPENSER
QT	QUARRY TILE
R	RISER
RAD	RADIUS
RCP	REFLECTED CEILING PLAN
RD	ROOF DRAIN
REC	RECESSED
RECD	RECEIVED
REFER	REFERENCE
REQD	REQUIRED
RF	RUBBER FLOOR TILE
RO	ROUGH OPENING
RS	ROOF SYSTEM
RVL	REVEAL
SA	SMOKE ALARM
SC	SEALED CONCRETE
SCD	SUN CONTROL DEVICE
SCHED	SCHEDULE
SD	SOAP DISPENSER
SDT	STATIC DISSIPATIVE TILE
SF	SQUARE FOOT
SHGT	SHEATHING
SIM	SIMILAR
SMC	SUSPENDED METAL CEILING
SND	SANITARY NAPKIN DISPENSER
SNV	SANITARY NAPKIN VENDER
SOD	SECTIONAL OVERHEAD DOOR
SPFL	SPECIALTY FLOORING
SQ FT	SQUARE FOOT
SS	SOLID SURFACE
SSG	STRUCTURAL SILICONE GLAZED
SST	STAINLESS STEEL
STA	STAIN
STC	SOUND TRANSMISSION CLASS
STL	STEEL
STN	STONE
STOR	STORAGE
SUSP	SUSPENDED
SV	SHEET VINYL
SYNFL	SYNTHETIC FLOOR
TER	TERRAZZO
T&G	TONGUE & GROOVE
T.O.	TOP OF
TPD	TOILET PAPER DISPENSER
TR	TOILET ROOM
TWF	THROUGH WALL FLASHING
TYP	TYPICAL
UG	UNDER LAVATORY GUARD
UNO	UNLESS NOTED OTHERWISE
VB	VINYL BASE
VCT	VINYL COMPOSITION TILE
VEST	VESTIBULE
VFA	VINYL FLOORING ADAPTER
VNR	VENEER
VSN	VINYL STAIR NOSING
VTR	VENT THROUGH ROOF
WC	WALL COVERING
WD	WOOD
WDW	WINDOW
WL	WIND LOAD
WDP	WOOD PANEL
WRC	WAST RECEPTICAL

GENERAL NOTES TO CONTRACTOR(S):

1. THESE DRAWINGS ARE DIAGRAMMATIC AND SHOW THE INTENT OF THE PROJECT, BUT DO NOT NECESSARILY INDICATE ALL MATERIALS OR METHODS OF CONSTRUCTION. ALL CONTRACTORS ARE RESPONSIBLE TO REVIEW THE DOCUMENTS THOROUGHLY, AND FOR PROVIDING ALL MATERIALS AND MEANS OF CONSTRUCTION NECESSARY FOR THE COMPLETION OF THE WORK IN ACCORDANCE WITH THE INTENT OF THE DRAWINGS.
2. ALL WORK OF ALL TRADES, SHALL BE COMPLETED IN ACCORDANCE WITH ALL LOCAL GOVERNING CODES AND ORDINANCES.
3. EACH CONTRACTOR SHALL COORDINATE THEIR WORK WITH THE OWNER, THE OWNER'S OTHER CONTRACTORS, AND ALL OTHERS AT THE SITE.
4. EACH CONTRACTOR IS TO OBTAIN AND PAY FOR PERMITS, LICENSES, FEES, ETC. AS REQUIRED FOR THE COMPLETION OF THEIR PORTION OF WORK.
5. EACH CONTRACTOR SHALL VERIFY ALL CONDITIONS AND DIMENSIONS AT THE SITE TO SATISFY THEIR EXECUTION OF THE WORK. ANY DISCREPANCIES SHALL BE REPORTED TO THE ARCHITECT. NEITHER THE OWNER NOR THE ARCHITECT ASSUMES RESPONSIBILITY FOR CONDITIONS OR DIMENSIONS SHOWN AS EXISTING.
6. IF ANY CONTRACTOR OBSERVES THAT ANY OF THE CONTRACT DOCUMENTS ARE AT VARIANCE WITH APPLICABLE LAWS, STATUES, BUILDING CODES, OR ORDINANCES, THEY SHALL PROMPTLY NOTIFY THE ARCHITECT.
7. ALL HOLES FOR PLUMBING, ELECTRICAL, HVAC, FIRE PROTECTION CONDUIT, PIPING, OR DUCTWORK ARE TO BE REPAIRED BY THE ASSOCIATED TRADE.
8. ALL TRADES SHALL TAKE CARE TO MAKE HOLES ONLY AS LARGE AS NECESSARY. ALL HOLES SHALL BE NEATLY CUT. DO NOT PUNCH OR POUND HOLES IN WALLS OR ROOF DECK.
9. ANY HOLES OR PENETRATIONS THROUGH FIRE RATED CONSTRUCTION SHALL BE APPROPRIATELY FIRE STOPPED, DAMPENED, OR SEALED AS REQUIRED BY CODE.
10. EACH CONTRACTOR SHALL INCLUDE NECESSARY DEMOLITION AND REMOVAL OF ALL MATERIAL AS REQUIRED TO PERFORM THEIR WORK.
11. REMOVAL OF ALL HAZARDOUS CONTAINING MATERIALS IS THE SOLE RESPONSIBILITY OF THE OWNER. SHOULD ANY MATERIALS BE ENCOUNTERED DURING ANY OF THE CONSTRUCTION PHASES CONTAINING, OR SUSPECTED TO BE HAZARDOUS: CONTRACTOR SHALL STOP WORK IMMEDIATELY AND NOTIFY OWNER AND ARCHITECT.
12. DO NOT SCALE DRAWINGS.
13. CONTRACTOR TO PROVIDE SOLID WOOD BLOCKING IN STUD WALLS WHICH ARE TO RECEIVE SURFACE MOUNTED EQUIPMENT, ACCESSORIES, CASEWORK, AND OWNER FURNISHED FURNITURE.
14. EACH CONTRACTOR SHALL PATCH, LEVEL, AND PREPARE ALL WALLS AND FLOORS AS SCHEDULED AND REQUIRED TO RECEIVE NEW FINISHES.
15. NOT USED.
16. SEE SHEET A0.01 FOR TYPICAL MOUNTING HEIGHTS, ABBREVIATION KEY, AND DRAWING SYMBOLS.
17. SEE SHEET A0.02 FOR INTERIOR PARTITION TYPES.

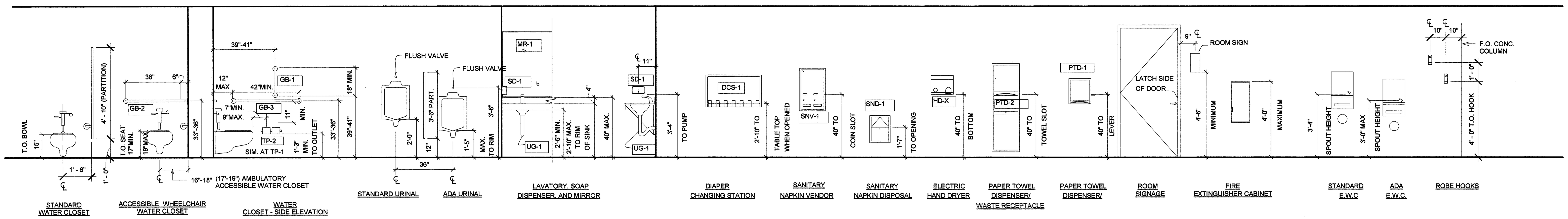

GENERAL NOTES:

1. LIGHT SWITCHES, ELECTRICAL OUTLETS, AND OTHER ENVIRONMENTAL CONTROLS SHALL BE MOUNTED NO HIGHER THAN 4'-0" U.N.O. & NO LOWER THAN 1'-3" ABOVE FINISHED FLOOR. IF THE CONTROL IS MOUNTED ABOVE A COUNTER OR OTHER OBSTRUCTION, WHICH IS BETWEEN 20"-25" IN DEPTH, THEN THE MAXIMUM MOUNTING HEIGHT SHALL BE LOWERED TO 3'-8" AFF. LIGHT SWITCHES AND THERMOSTATS IN THE SAME LOCATION ARE TO ALIGN HORIZONTALLY. IF SWITCHES ARE UNABLE TO BE ALIGNED, THE CONTRACTOR IS TO NOTIFY THE ARCHITECT BEFORE PROCEEDING WITH WORK. SEE GENERAL ADA REACH RANGES DIAGRAM FOR MORE INFORMATION.
2. PROVIDE SOLID WOOD BLOCKING OR METAL STRAPPING IN WALLS FOR INSTALLATION OF ACCESSORIES.
3. NOT ALL ACCESSORIES SHOWN ON THIS DRAWING ARE PROVIDED IN THE PROJECT.

SOURCE: ANSI A117.1 - 2003

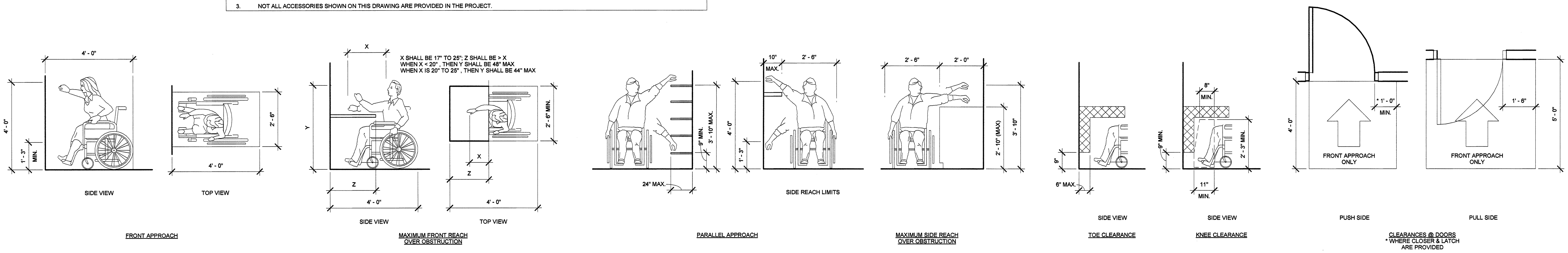

1 GENERAL - ADA REACH RANGES - FOR REFERENCE ONLY
Scale: 1/2" = 1'-0"

CONTINUUM
ARCHITECTS + PLANNERS, S.C.
P. O. BOX 510663
MILWAUKEE, WI 53203
T 414.220.9640
F 414.220.9595
ARCHITECTURE · MASTERPLANNING · INTERIORDESIGN

City of Milwaukee
Department of Public Works
Infrastructure Services Division
Facilities Development & Management Services

SANITATION HEADQUARTERS BUILDING
2363 SOUTH 35TH STREET
MILWAUKEE, WI 53215

SANITATION HEADQUARTERS RENOVATION
GENERAL INFORMATION SHEET

ISSUE	DATE	REMARKS
-		
-		
-		
-		
-		
-		
-		
-		
-		
-		

ARCHITECT JOB#: 120905
CITY PROJECT#: BU11091119
DATE: 02/01/2013
ISSUE: ISSUED FOR BID

A0.01

© Copyright 2013, Continuum Architects + Planners S.C.

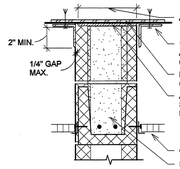

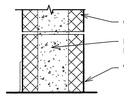

SCALE: 1 1/2" = 1'-0"

*** REFER TO SUBSCRIPT KEY FOR ADDITIONAL REQUIREMENTS ***

PARTITION TYPE	BLOCK WIDTH	FIRE RESISTANCE		STC @ DENSITY 130pcf			NOTES	AS DRAWN DIMENSION
		HOLLOW CORE	SOLID CORE	HOLLOW UNITS	GROUT FILLED	SAND FILLED		
M3 -	2 5/8"	NA	NA	NA	NA	NA	NO UL RATED ASSEMBLY AVAILABLE	3"
M4 -	3 5/8"	NA	1HR	45	52	50	NO UL RATED ASSEMBLY AVAILABLE	4"
M6 -	5 5/8"	1 HR 2 HR	3 HR	47	54	52	UL #U906 - 2 HR	6"
M8 -	7 5/8"	1 HR 2 HR 3 HR	4 HR	49	57	55	UL #U901 - 4 HR UL #U904 - 3 HR UL #U905 - 2 HR	8"
M10 -	9 5/8"	2 HR	NA	51	59	57	NO UL RATED ASSEMBLY AVAILABLE	10"
M12 -	11 5/8"	2 HR 3 HR 4 HR	NA	52	61	58	NO UL RATED ASSEMBLY AVAILABLE	12"

M	MASONRY PARTITION	FIRE RATING: 0,1,2,3,4 HR - UL #U---

METAL STUD PARTITION NOTES

METAL STUD PARTITION CONSTRUCTION

A. PROVIDE 25 GAUGE METAL STUDS AND ACCESSORIES UNLESS NOTED BY PARTITION TYPE SUBSCRIPT.

B. PROVIDE 5/8" GYPSUM BOARD UNLESS OTHERWISE NOTED.

C. PROVIDE A MINIMUM 20GA METAL STUDS AT ALL ABUSE-RESISTANT GYP PARTITIONS OR STUD GAUGE AS RECOMENDED BY MANUFACTURER

D. PROVIDE OTHER TYPES OF GYPSUM BOARD AS INDICATED BY PARTITION TYPE SUBSCRIPT.

E. INSTALLATION OF ALL TYPES OF GYPSUM BOARD SHALL CONFORM TO REQUIREMENTS FOR FIRE RATINGS AND ACOUSTICAL RATINGS.

F. TYPICAL FLOOR PLAN DIMENSIONS ARE TO THE FACE OF THE OUTERMOST LAYER OF GYPSUM BOARD OR OTHER FINISH MATERIALS (SUCH AS TILE) UNLESS NOTED AS TO CENTERLINE OF PARTITION.

G. ALL GYPSUM BOARD SHEATHING IS TO BE INSTALLED WITH THE LONG DIMENSION RUNNING HORIZONTALLY UNLESS THE REQUIREMENT FOR THE FIRE RATING AND ACOUSTICAL RATINGS DIFFER.

MASONRY PARTITION NOTES

(SEE INTERIOR PARTITION GENERTAL NOTES FOR MORE INFORMATION)

MASONRY PARTITION CONSTRUCTION

A. TYPICAL FLOOR PLAN DIMENSIONS ARE TO NOMINAL FACE OF MASONRY PARTITIONS.

B. NON-BEARING INTERIOR MASONRY PARTITIONS REQUIRE LATERAL SUPPORT AS INDICATED IN PARTITION TYPE TO THE STRUCTURAL FLOOR OR ROOF SYSTEM AT THE TOP OF THE PARTITION UNLESS BOTH FOLLOWING CONDITIONS ARE MET:

- EACH PARTITION SEGMENT HAS AN INTERSECTION PARTITION MEETING THE CONDITIONS ILLUSTRATED IN THE FOLLOWING DIAGRAM.

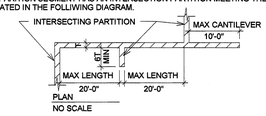

- HORIZONTAL JOINT REINFORCING OF AT LEAST TWO #9 WIRES IS PROVIDED AT 16" O.C.

C.

MASONRY NON-LOAD BEARING WALL REINFORCING SCHEDULE			
TYPE	NOMINAL THICKNESS	REINFORCING	REMARKS
NON-LOAD BEARING	SEE ARCHITECTURALS	FULLY GROUTED CORES AT 48" O.C.	GROUT CORES WITH #5 DOWELS

NOTES:
1. PROVIDE TYPICAL VERTICAL REINFORCING AT WALL ENDS AND EACH SIDE OF CONTROL JOINTS. REINFORCE FIRST TWO CELLS EACH SIDE OF OPENING FULL HEIGHT OF WALL WHERE THE USE OF STEEL LINTELS INTERUPTS VERTICAL CONTINUITY OF WALL. SHIFT REINFORCED CELLS PAST LINTEL BEARING AND GROUT WALL SOLID BELOW END OF LINTELS.
2. PROVIDE DOWELS FOR VERTICAL REINFORCING INTO FOUNDATION WALLS AND FOOTINGS BELOW PER DETAILS.
3. SEE GENERAL NOTES AND DETAILS FOR HORIZONTAL JOINT REINFORCENING AND BOND BEAM REQUIREMENTS.
4. UNLESS DETAILED OR OTHERWISE CALLED OUT, PROVIDE CMU LINTELS PER LINTEL SCHEDULE OVER OPENINGS IN MASONRY WALLS.
5. PROVIDE CONTINUOUS HORIZONTAL JOINT REINFORCING IN ALL WALLS AS PER SPECIFICATIONS.
6. OPENINGS IN ALL WALLS PROVIDED FOR MECHANICAL DUCTWORK SHALL BE CENTERED IN BETWEEN ADJACENT JOISTS OR POSITIONED WITH THE NEAREST EDGE NO CLOSER THAN 24" EITHER SIDE OF BEAM REACTIONS.
7. SEE PLAN & DETAILS FOR ADDITIONAL WALL REINFORCING & GROUTING REQUIREMENTS NOT COVERED IN THIS SCHEDULE.

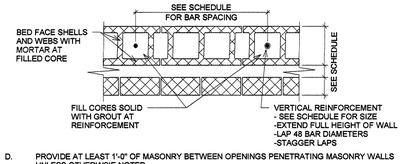

D. PROVIDE AT LEAST 1'-0" OF MASONRY BETWEEN OPENINGS PENETRATING MASONRY WALLS UNLESS OTHERWSIE NOTED.

E.

MISCELLANEOUS LINTEL SCHEDULE USE AT ALL NON-LOAD BEARING MASONRY WALLS, SEE ARCH. DWGS. FOR LOCATIONS				
WALL THICKNESS	SPAN	DEPTH	REINFORCING	BEARING LENGTH
8"	6'-0" OR LESS	8"	(2) #5	8"
	6'-0" TO 8'-0"	8"	(2) #5	8"
	8'-0" TO 10'-0"	16"	(2) #5	16"
10"	6'-0" OR LESS	8"	(2) #5	8"
	6'-0" TO 8'-0"	8"	(2) #5	8"
	8'-0" TO 10'-0"	16"	(2) #5	16"
	10'-0" TO 12'-0"	16"	(2) #8	16"
12"	6'-0" OR LESS	8"	(2) #5	8"
	6'-0" TO 8'-0"	8"	(2) #5	8"
	8'-0" TO 10'-0"	16"	(2) #5	16"
	10'-0" TO 12'-0"	16"	(2) #8	16"

GENERAL NOTES:
1. UNLESS OTHERWISE INDICATED ON THE ARCHITECTURAL PLANS AND DETAILS, CONTRACTOR MAY USE STEEL OR CMU LINTELS IN NON-LOAD BEARING WALLS AT THEIR OPTION.
2. FOR LINTELS IN BEARING WALLS SEE STRUCTURAL PLANS.

CONCRETE MASONRY LINTEL NOTES:
3. CMU LINTEL DESIGNATES CONCRETE MASONRY LINTEL BLOCK. DEPTH IN SCHEDULE REFERS TO OVERALL DEPTH OF LINTEL BLOCK UNIT.
4. UNLESS OTHERWISE NOTED REINFORCEMENT IN CMU LINTEL IS TO BE PROVIDED IN ONE LAYER IN THE BOTTOM OF THE UNIT.
5. CMU LINTEL WIDTH SHALL BE THE SAME AS THE WALL SUPPORTED.
6. FILL CMU LINTELS SOLID WITH GROUT CONFORMING TO ASTM SPECIFICATION C476.

MASONRY PARTITION DIMENSIONS

NOMINAL PLAN DIMENSIONS:

A. DRAWING DIMS. BASED ON MODULAR SIZED MASONRY UNITS UNLESS OTHERWISE NOTED.

B. ON PLAN DRAWINGS, HORIZONTAL MASONRY DIMENSIONS ARE TO THE NOMINAL FACE OF THE MASONRY UNIT. I.E.: DIMENSIONS ARE TO THE CENTER OF JOINT

EXAMPLE:

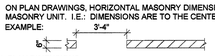

ACTUAL PLAN DIMENSIONS:

A. THE ACTUAL DIMENSIONS, FACE-TO-FACE IN THE CASE ABOVE, ARE AS FOLLOWS.

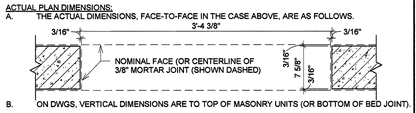

B. ON DWGS, VERTICAL DIMENSIONS ARE TO TOP OF MASONRY UNITS (OR BOTTOM OF BED JOINT).

C. UNLESS OTHERWISE SHOWN, VERTICAL DIMENSIONS OF MASONRY ARE IN MULTIPLES OF ONE FULL COURSE (ONE MORTAR JOINT + ONE MASONRY UNIT)

D. FLOOR LINE(S) COINCIDE WITH THE BOTTOM OF A BED JOINT UNLESS OTHERWISE NOTED.

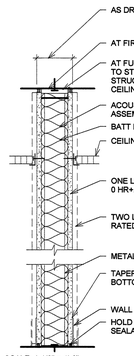

SCALE: 1 1/2" = 1'-0"

*** REFER TO SUBSCRIPT KEY FOR ADDITIONAL REQUIREMENTS ***

PARTITION TYPE	STUD WIDTH	PARTITION WIDTH 0,1hr/2hr	ACOUSTICAL INSULATION WIDTH	STC @ 0,1hr		STC @ 2hr		NOTES	AS DRAWN DIMENSION 1hr / 2hr
				W/O INS	W/ INS	W/O INS	W/ INS		
A2 -	2 1/2"	3 3/4"/ 5"	2 3/4"	40	47	40	56	1.5" OF BATT INS. REQ. @ 1HR RATED PARTITION	4" / 5"
A3 -	3 5/8"	4 7/8"/ 6 1/8"	3 5/8"	40	50	48	56		5" / 6"
A6 -	6"	7 1/4"/ 8 1/2"	6 1/2"	40	51	48	58		7" / 8"
A8 -	8"								

A	METAL STUD PARTITION	FIRE RATING: 0, 1, 2 HR - UL #U419

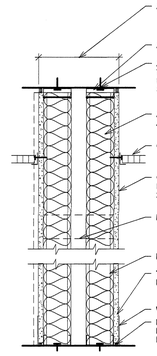

SCALE: 1 1/2" = 1'-0"

*** REFER TO SUBSCRIPT KEY FOR ADDITIONAL REQUIREMENTS ***

PARTITION TYPE	STUD WIDTH	PARTITION WIDTH 0,1hr	INSULATION WIDTH	STC @ 0,1 hr		STC @ 2 hr		NOTES	AS DRAWN DIMENSION
				W/O INS	W/ INS	W/O INS	W/ INS		
C1 -	1 5/8"	SEE PLAN	N/A	-	N/A	-	N/A		SEE PLAN
C2 -	2 1/2"	SEE PLAN	2 3/4"	-	52	-	-		SEE PLAN
C3 -	3 5/8"	SEE PLAN	3 5/8"	-	60	-	-		SEE PLAN
C6 -	6"	SEE PLAN	6 1/2"	-	-	-	-		SEE PLAN

C	METAL STUD CHASE	FIRE RATING: 0, 1, 2 HR - UL #U420

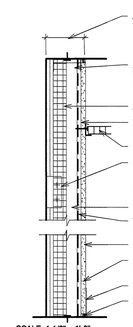

SCALE: 1 1/2" = 1'-0"

*** REFER TO SUBSCRIPT KEY & PARTITION NOTES FOR ADDITIONAL REQUIREMENTS ***

PARTITION TYPE	STUD WIDTH	PARTITION WIDTH	THERMAL INSULATION WIDTH & R VALUE	STC		NOTES	AS DRAWN DIMENSION
				W/O INS	W/ INS		
F1 -	1 5/8"	2 1/4"	NOT AVAIL.	NA	NA	PROVIDE CLIP ANGLES TO BACK-UP @ 4'-0" O.C. (MAX.) VERT.	3"
F2 -	2 1/2"	3 1/8"	NOT AVAIL.	NA	NA	PROVIDE CLIP ANGLES TO BACK-UP @ 4'-0" O.C. (MAX.) VERT.	4"
F3 -	3 5/8"	4 1/4"	3 1/2" R=11	NA	NA	PROVIDE BRACES TO BACK-UP AT VERT. MIDPOINT OF STUD WHERE UNBRACED HEIGHT EXCEEDS 12'-0"	5"
F6 -	6"	6 5/8"	6 1/4" R=19	NA	NA	PROVIDE BRACES TO BACK-UP AT VERT. MIDPOINT OF STUD WHERE UNBRACED HEIGHT EXCEEDS 12'-0"	7"

F	METAL STUD FURRING	FIRE RATING: 0 HOUR

INTERIOR PARTITION GENERAL NOTES

A. PARTITION TYPES ARE INDICATED ON PLANS WITH THE FOLLOWING PARTITION TYPE TAG: A2 / -- . REFER TO PARTITION DETAILS FOR CONSTRUCTION REQUIREMENTS OF PARTITION TYPES. REFER ALSO TO PARTITION TYPE SUBSCRIPT KEY FOR MODIFICATIONS TO BASIC PARTITION TYPE. IF NO PARTITION TYPE TAG IS INDICATED ON THE PLANS FOR A SPECIFIC SECTION OF STUD WALL, PROVIDE PARTITION TYPE 'A3, SUBSCRIPT A'. IF NO PARTITION TYPE TAG IS INDICATED ON THE PLANS FOR A SPECIFIC SECTION OF MASONRY WALL, PROVIDE PARTITION TYPE 'M8'. NOTE: SOME PARTITION TYPES DESCRIBED MAY NOT BE USED ON THIS PROJECT.

B. REFER TO 'PARTITION TYPE SUBSCRIPT KEY' FOR SYMBOLS AND SUBSCRIPTS USED TO IDENTIFY ADDITIONAL REQUIREMENTS OR MODIFICATIONS TO BASIC PARTITION TYPE. PLEASE NOTE THAT UNLESS SPECIFICALLY MODIFIED BY A SUBSCRIPT (0,S,C, OR X*) THE BASIC PARITION INCLUDING STUDS AND GWB, EXTENDS COMPLETELY UP TO STRUCTURE.

C. PARTITION DETAILS DESCRIBE GENERAL REQUIREMENTS FOR PARTITIONS. REFER TO THE MANUFACTURERS' SPECIFICATIONS AND REQUIREMENTS OF APPLICABLE TESTING AGENCIES FOR SPECIFICS OF PARTITION CONSTRUCTION.

D. PARTITION DETAILS SHOWN ARE CONSIDERED MINIMUM STANDARDS. WHERE CONDITIONS OF THE WORK CAUSE PARTITION TO EXCEED LIMITS RECOMMENDED BY MANUFACTURER, REINFORCE PARTITION AS REQUIRED.

E. ALL PENETRATIONS IN ACOUSTICALLY RATED, FIRE RATED, AND SMOKE RATED PARTITIONS AND CONNECTIONS OF THE PARTITIONS TO OTHER PORTIONS OF THE WORK SHALL BE IN ACCORDANCE WITH MANUFACTURER'S RECOMMENDED DETAILS AND IN COMPLIANCE WITH APPLICABLE TESTING AGENCY REQUIREMENTS.

F. UNLESS OTHERWISE INDICATED PARTITIONS SHALL EXTEND TO UNDERSIDE OF ROOF OR FLOOR DECK ABOVE.

G. WHERE A CLEAR DIMENSION OR OPENING IS REQUIRED OR NOTED, MEASURE DIMENSION TO FACE OF PARTITION FINISH.

H. WHERE PARTITIONS AND/OR FURRING MEET, MAINTAIN SURFACES FLUSH AND PLUMB.

I. REFER TO STRUCTURAL DRAWINGS FOR EXTENT AND DESCRIPTION OF INTERIOR STRUCTURAL WALLS IDENTIFIED AS "STR" IN THE PARTITION TYPE SYMBOL SUBSCRIPT.

J. INSTALL BLOCKING OR BACKER MATERIAL FOR ATTACHMENT/MOUNTING OF ALL WALL HUNG ITEMS OR EQUIPMENT DESCRIBED IN THE DOCUMENTS, WHETHER CONTRACTOR FURNISHED OR OWNER FURNISHED.

K. COORDINATE WITH OWNER THE LOCATION OF BLOCKING FOR OWNER SUPPLIED ITEMS.

L. AT ACOUSTICAL RATED PARTITIONS INSTALL STC RATED ASSEMBLY MATCHING WALLS STC RATING.

M. ALL PENETRATIONS IN ACOUSTICALLY RATED PARTITIONS ARE TO BE ACOUSTICALLY SEALED TO MAINTAIN STC ASSEMBLY RATINGS.

N. AT PLENUM RATED CEILINGS, ALL PENETRATIONS ARE TO BE SEALED TO MAINTAIN PLENUM CEILINGS AIR TIGHTNESS / 5PSF.

O. NOT USED

P. FIREWALLS, FIRE PARTITIONS, FIRE BARRIERS OR ANY WALL REQUIRED TO HAVE PROTECTED OPENINGS OR PENETRATIONS SHALL BE IDENTIFIED WITH SIGNS LOCATED IN ACCESSIBLE CONCEALED FLOOR, CEILING OR ATTIC SPACES AT INTERVALS NOT EXCEEDING 30 FEET HORIZONTALLY ALONG WALL. LETTERING SHALL BE AT LEAST 5" HIGH, DENOTING THE TYPE OF CONSTRUCTION (FIREWALL, FIRE PARTITION ETC) AND THAT ALL OPENINGS SHAOULD BE PROTECTED. SEE IBC 703.6 FOR MORE INFO.

Q. WHERE FIREWALLS, FIRE PARTITIONS, FIRE BARRIERS OR ANY WALL REQUIRED TO HAVE FIRE RATING IS CALLED OUT IN THE DRAWINGS EXTEND THE RATING UP TO THE NEXT FIRE RATED PARTITION (CONCRETE, MASONRY OR METAL) IN A MANNER THAT ENSURES A CONTINUOUS FIRE SEPARATION AND MAINTAINS THE INTEGRITY OF THE FIRE RATED PARTITION. PROVIDE FIRE RESISTIVE JOINT SYSTEMS PER SPEC SECTION 07 84 46.

R. U.O.N. PROVIDE 4" AT DOOR JAMBS (FROM EDGE OF FRAME TO FINISHED FACE OF WALL)

PARTITION TYPE SUBSCRIPT KEY

NOTE: TYPE A PARTITION IS SHOWN HERE AS A GENERAL REPRESENTATION. THESE SUBSCRIPTS MODIFY BASIC PARTITION TYPE CONSTRUCTION REQUIREMENTS AND APPLY TO ALL PARTITION TYPES.

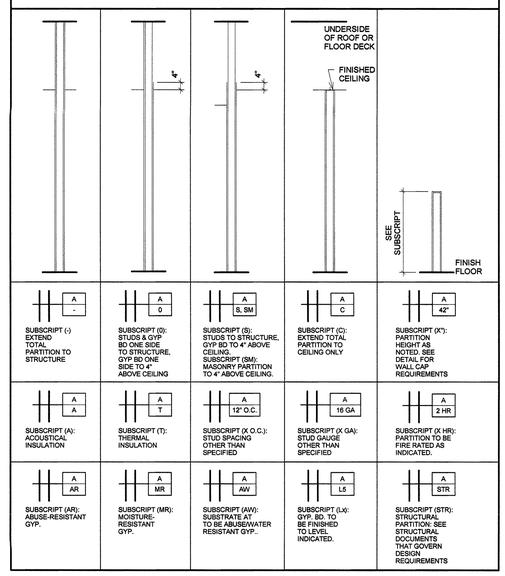

CONTINUUM
ARCHITECTS + PLANNERS, S.C.
P. O. BOX 510643
MILWAUKEE, WI 53203
T 414.220.9640
F 414.220.9595

City of Milwaukee
Department of Public Works
Infrastructure Services Division
Facilities Development & Management Services

SANITATION HEADQUARTERS BUILDING
2320 SOUTH 10TH STREET
MILWAUKEE, WI 53215

SANITATION HEADQUARTERS RENOVATION
PARTITION TYPES

ISSUE	DATE	REMARKS
-		
-		
-		
-		
-		
-		
-		
-		
-		
-		
-		

ARCHITECT JOB#: 120905

CITY PROJECT#: BU11091119

DATE: 02/01/2013

ISSUE: ISSUED FOR BID

A0.02

© Copyright 2013
Continuum Architects + Planners S.C.

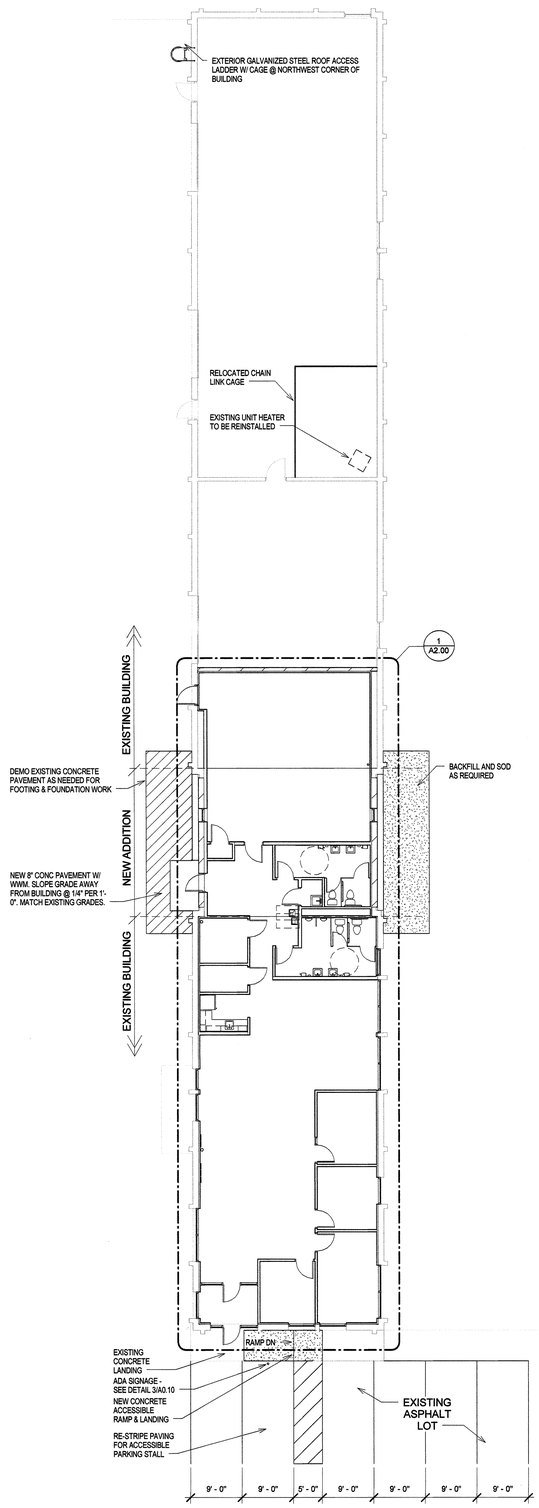

2 OVERALL BUILDING PLAN
Scale: 3/32" = 1'-0"

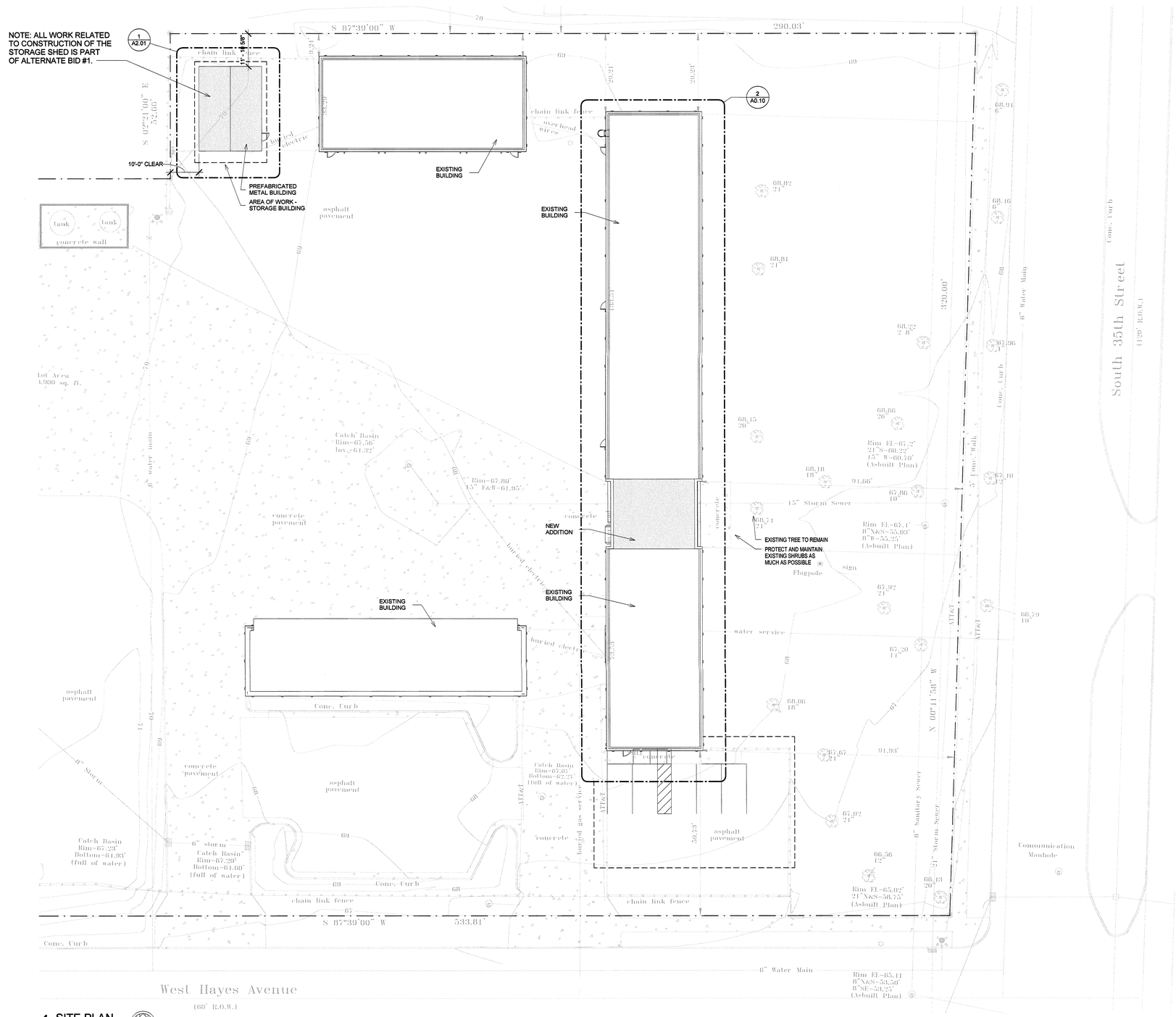

1 SITE PLAN
Scale: 1/16" = 1'-0"

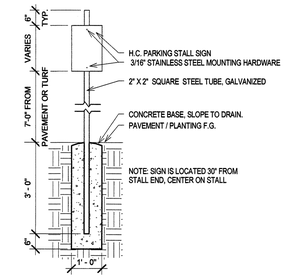

3 ADA PARKING STALL SIGN
Scale: 1/2" = 1'-0"

CONTINUUM
ARCHITECTS + PLANNERS, S.C.
P.O. BOX 3/0663
MILWAUKEE, WI 53203
T 414.220.9640
F 414.220.9593

City of Milwaukee
Department of Public Works
Infrastructure Services Division
Facilities Development & Management Services

SANITATION HEADQUARTERS BUILDING
7320 SOUTH 35TH STREET
MILWAUKEE, WI 53219

SANITATION HEADQUARTERS RENOVATION
SITE PLAN

ISSUE	DATE	REMARKS
-		
-		
-		
-		
-		
-		
-		
-		
-		
-		
-		

ARCHITECT JOB#:	120905
CITY PROJECT#:	BUI1091119
DATE:	02/01/2013
ISSUE:	ISSUED FOR BID

A0.10

© Copyright 2013, Continuum Architects + Planners S.C.

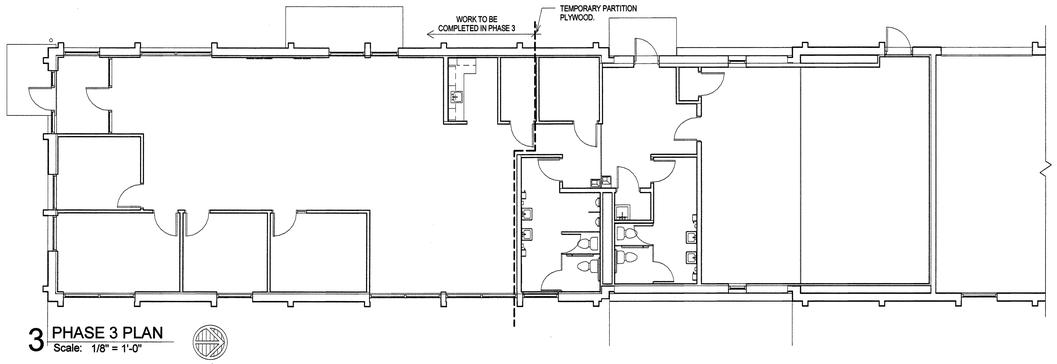

3 PHASE 3 PLAN
Scale: 1/8" = 1'-0"

PHASING NOTES TO CONTRACTOR(S):

GENERAL NOTE: CONTRACTOR SHALL PLACE ALL TEMPORARY OFFICE STRUCTURES AND ALL CONSTRUCTION RELATED EQUIPMENT AND MATERIALS IN THE STAGING AREA LOCATED ON THESE PLANS. CONTRACTOR TO REPAIR / REPLACE PAVEMENT OR ANY EXISTING CONSTRUCTION THAT IS DAMAGED FROM ANY OF THE ABOVE OR FROM TEMPORARY FENCING AS REQUIRED.

PHASE 1:
BUILD NEW STORAGE SHED AS SHOWN ON A0.10.

PHASE 2:
OFFICE STAFF TO MOVE TO EXISTING ASSEMBLY AREA. CITY OF MILWAUKEE TO PROVIDE TEMPORARY POWER, PHONE AND DATA. GC TO COORDINATE WITH THE CITY OF MILWAUKEE FOR THIS TEMPORARY SERVICE.
GC TO INSTALL TEMPORARY PLYWOOD PARTITION IN LOCATION MARKED ON PHASING PLANS. NOTE: ONE TOILET STALL IN THE MEN'S ROOM IS TO REMAIN OPERABLE DURING PHASE 2.
GC TO CONSTRUCT ALL WORK LOCATED NORTH OF TEMPORARY PARTITION DURING THIS PHASE.
WORK IN PHASE TWO IS TO BE SUBSTANTIALLY COMPLETE PRIOR TO BEGINNING WORK IN PHASE 3.
CONTRACTORS TO HAVE MINIMAL ACCESS TO PORTION OF BUILDING SOUTH OF TEMPORARY PARTITION WALL DURING PHASE 2.

PHASE 3:
OFFICE STAFF TO MOVE TO NEW ASSEMBLY AREA. CITY OF MILWAUKEE TO PROVIDE TEMPORARY PHONE AND DATA. GC TO COORDINATE WITH THE CITY OF MILWAUKEE FOR THIS TEMPORARY SERVICE. OFFICE STAFF TO USE NEW POWER IN THIS ROOM.
GC TO MAINTAIN TEMPORARY PLYWOOD PARTITION IN LOCATION MARKED ON PHASING PLANS.
GC TO CONSTRUCT ALL WORK LOCATED SOUTH OF TEMPORARY PARTITION DURING THIS PHASE. ONCE WORK SOUTH OF PARTITION IS 80% COMPLETE, AND UPON APPROVAL FROM OWNER, GC TO DECONSTRUCT TEMPORARY PARTITION WALL AND COMPLETE WORK THAT WAS NOT ENTIRELY ACCESSIBLE BECAUSE OF PARTITION.

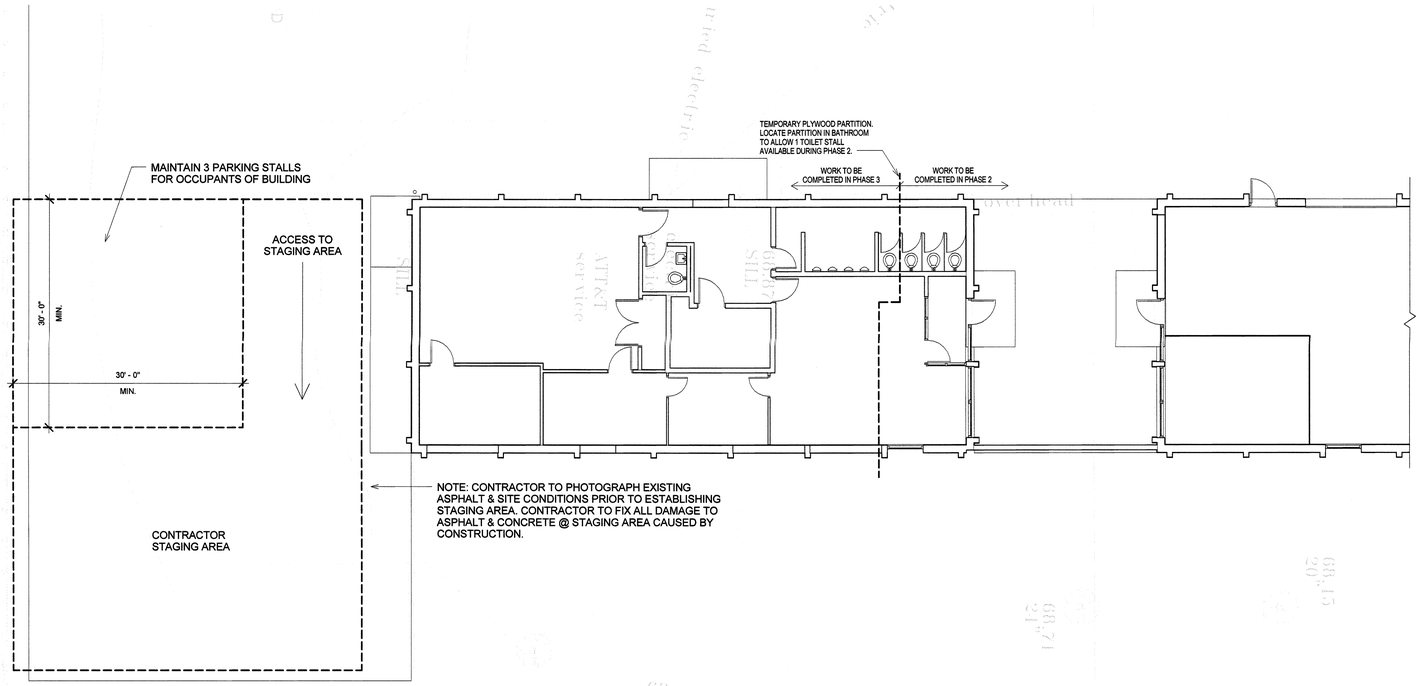

2 PHASE 1 & 2 PLAN
Scale: 1/8" = 1'-0"

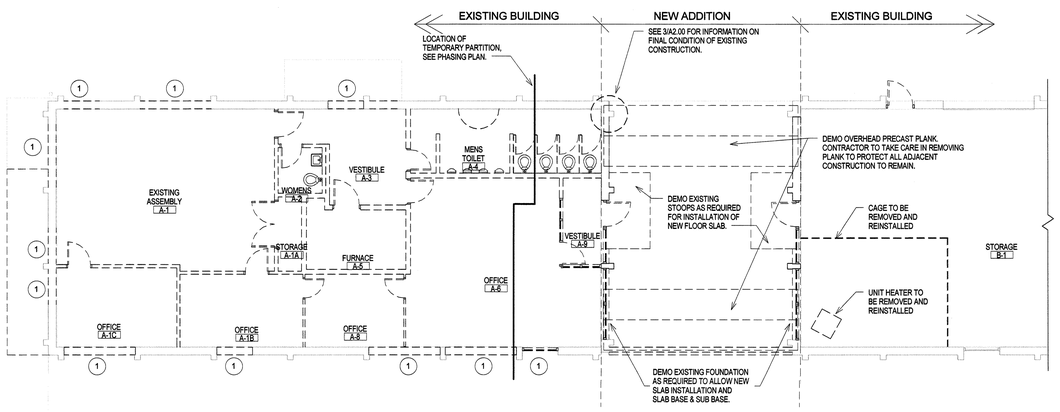

1 FIRST FLOOR DEMOLITION PLAN
Scale: 1/8" = 1'-0"

DEMOLITION KEY NOTES

SEE PROJECT MANUAL 02 41 16, SELECTIVE DEMOLITION, FOR ADDITIONAL INFORMATION.

SEE PROJECT GENERAL CONDITIONS, GENERAL INFORMATION ON SHEET A001.

DEMOLITION KEY NOTES APPLY TO ALL DEMOLITION DRAWINGS AND MAY NOT BE USED ON EVERY SHEET.

(1) REMOVE EXISTING WINDOW. EXISTING WINDOW SILLS TO REMAIN. TAKE CARE TO PROTECT EXISTING WINDOW SILLS DURING REMOVAL OF WINDOWS. TAKE CARE TO PROTECT EXISTING EXTERIOR STUCCO FINISH, AS WELL AS ALL ADJACENT CONSTRUCTION TO ALLOW FOR RE-INSTALLATION OF NEW WINDOWS.

DEMOLITION LEGEND

- EXISTING, TO BE REMOVED
- EXISTING, TO REMAIN
- (X) DEMOLITION KEY NOTE

GENERAL DEMOLITION NOTES TO CONTRACTOR(S):

1. SEE SHEET A0.01 AND PROJECT MANUAL DIVISION 01 SECTIONS FOR PROJECT CONSTRUCTION ALTERNATIVE SCOPES.
2. DRAWINGS WERE PREPARED BASED ON AVAILABLE EXISTING BUILDING DOCUMENTATION AND FIELD MEASUREMENTS. ADDITIONAL INFORMATION IS SPECIFIED IN DIVISION 01 SECTIONS OF THE PROJECT MANUAL. PRIOR TO CONSTRUCTION, CONTRACTOR SHALL FIELD VERIFY EXISTING CONDITIONS, AND DIMENSIONS TO SATISFY THEIR EXECUTION OF WORK. ANY DISCREPANCIES SHALL BE REPORTED TO THE ARCHITECT IMMEDIATELY.
3. EXISTING WALLS, DOORS, FRAMES, ETC. THAT ARE SCHEDULED TO BE REMOVED ARE SHOWN BY DASHED LINE TYPES. SEE DEMOLITION KEY NOTES FOR SPECIFIC INSTRUCTIONS.
4. EXISTING WALLS, DOORS, FRAMES, ETC. THAT ARE SCHEDULED TO REMAIN ARE SHOWN IN A LIGHT LINE WEIGHT AND ARE TO BE PROTECTED FROM DAMAGE DURING DEMOLITION AND CONSTRUCTION. ANY SUCH EXISTING CONDITIONS WHICH ARE DAMAGED OR BECOME UNSTABLE DUE TO OTHER DEMOLITION SHALL BE REPLACED AT NO COST TO THE OWNER, WITH NEW CONSTRUCTION TO MATCH EXISTING.
5. REMOVAL OF ALL HAZARDOUS MATERIALS IS THE SOLE RESPONSIBILITY OF THE OWNER. THE EXISTING BUILDING IS ASSUMED TO NOT CONTAIN SUCH MATERIALS. SHOULD ANY MATERIAL BE FOUND, OR IS SUSPECTED TO CONTAIN BE HAZARDOUS MATERIAL, THE CONTRACTOR SHOULD STOP WORK IMMEDIATELY AND NOTIFY OWNER AND ARCHITECT.
6. SEE MEP DRAWINGS AND DIVISION 15 AND 16 DOCUMENTS FOR ELECTRICAL, PLUMBING, AND HVAC REMOVAL. THESE FIXTURES AND THEIR RELATED SYSTEMS ARE SHOWN ON THIS SHEET FOR COORDINATION PURPOSES ONLY.
7. SEE REFLECTED CEILING PLANS FOR THE REMOVAL OR RELOCATION OF CEILING RELATED ITEMS. SEE MEP DRAWINGS AND DIVISION 15 AND 16 FOR THE REMOVAL OF THEIR SYSTEMS.
8. REMOVE AND SALVAGE ALL MISCELLANEOUS ITEMS FROM AREAS WHERE WORK IS SCHEDULED. I.E. CLOCKS, COAT HOOKS, TACK BOARDS, BULLETIN BOARDS, WHITE BOARD, SIGNAGE, SPEAKERS, ETC.

CONTINUUM
ARCHITECTS + PLANNERS, S.C.
P.O. BOX 37 0663
MILWAUKEE, WI 53203
T 414.220.9640
F 414.220.9595

City of Milwaukee
Department of Public Works
Infrastructure Services Division
Facilities Development & Management Services

SANITATION HEADQUARTERS BUILDING
2303 SOUTH 10TH STREET
MILWAUKEE, WI 53215

SANITATION HEADQUARTERS RENOVATION
PHASING & DEMOLITION PLANS

ISSUE	DATE	REMARKS
-		
-		
-		
-		
-		
-		
-		
-		
-		
-		
-		

ARCHITECT JOB#: 120905
CITY PROJECT#: BU11091119
DATE: 02/01/2013
ISSUE: ISSUED FOR BID

A1.00

© Copyright 2013, Continuum Architects + Planners S.C.

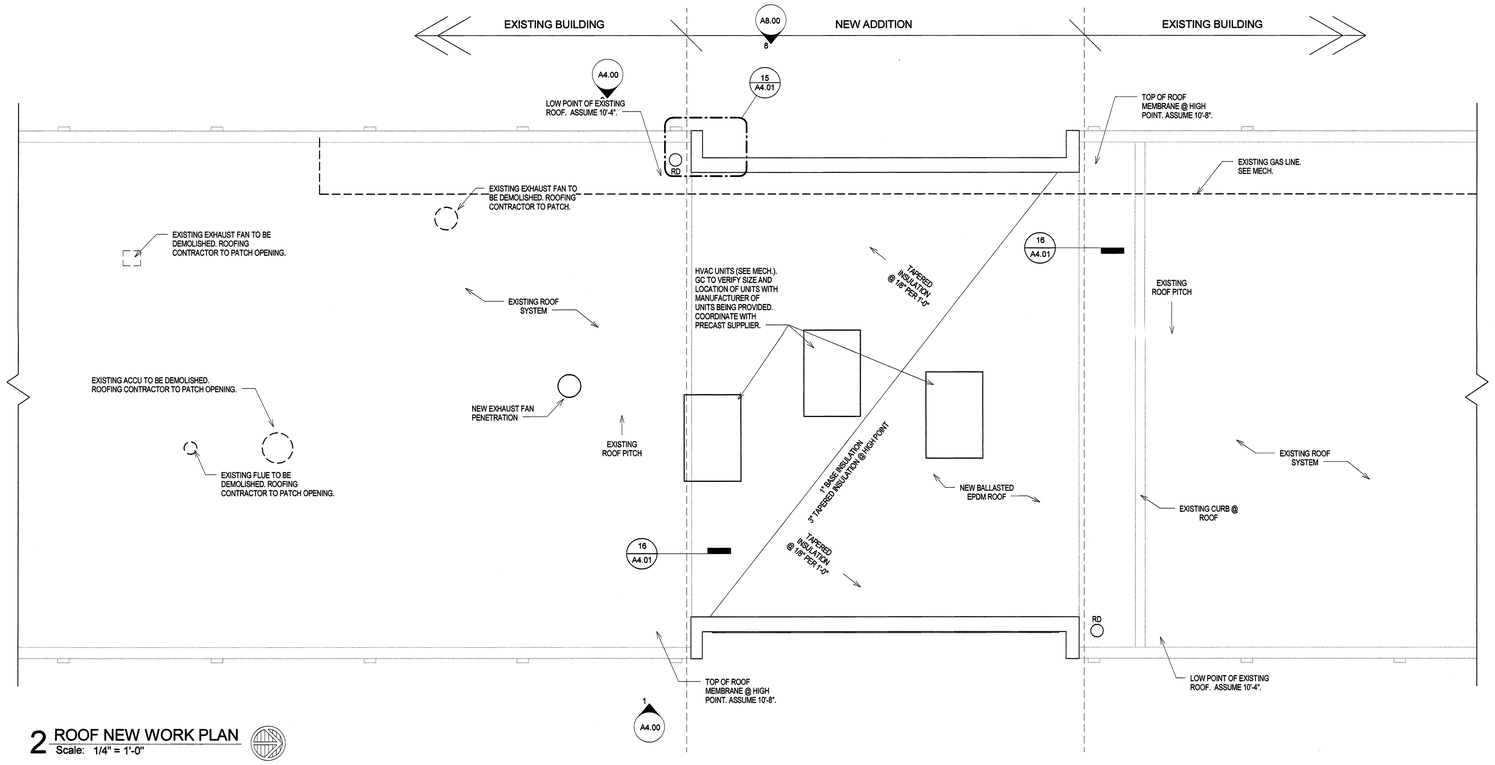

2 ROOF NEW WORK PLAN
Scale: 1/4" = 1'-0"

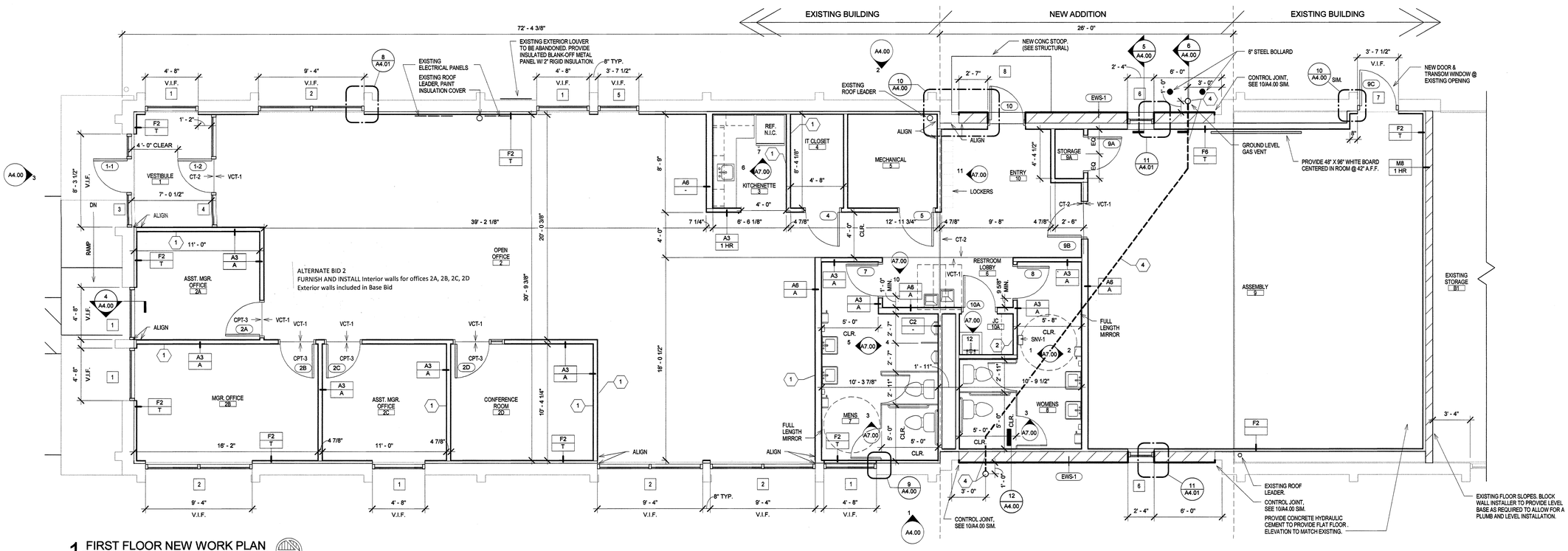

1 FIRST FLOOR NEW WORK PLAN
Scale: 1/4" = 1'-0"

FLOOR PLAN GENERAL NOTES:

1. THIS DRAWING IS FURTHER SUPPORTED BY INFORMATION CONTAINED IN THE SPECIFICATION MANUAL.
2. THE CIVIL, STRUCTURAL, MECHANICAL, ELECTRICAL, PLUMBING, FIRE PROTECTION, AUDIO-VISUAL, AND SECURITY DRAWINGS ARE SUPPLEMENTARY TO THE ARCHITECTURAL DRAWINGS. IT SHALL BE THE RESPONSIBILITY OF THE CONTRACTOR TO COORDINATE THE INFORMATION CONTAINED IN ALL THE DRAWINGS BEFORE THE INSTALLATION OF ALL WORK.
3. DO NOT SCALE DRAWINGS. CONTRACTOR TO VERIFY ALL CONDITIONS AND DIMENSIONS AT THE JOB SITE PRIOR TO COMMENCING CONSTRUCTION.
4. FINISH FLOOR ELEVATIONS ARE TO THE TOP OF THE FINISHED FLOOR MATERIAL UNLESS OTHERWISE NOTED.
5. CONTRACTORS SHALL JOINTLY PROVIDE AND INSTALL ALL STIFFENERS, BRACING, BACKING PLATES, WALL BLOCKING AND SUPPORTING BRACKETS REQUIRED FOR THE INSTALLATION OF CASEWORK, TOILET ACCESSORIES, PARTITIONS, MILLWORK, AND ALL WORK MOUNTED OR SUSPENDED BY ALL TRADES.
6. SEE SHEET A0.02 FOR WALL TYPES AND DETAILS.
7. REFER TO SHEETS AX.XX THROUGH AX.XX FOR RATED WALLS, FLOORS, SHAFTS AND FIRE PROOFING NOTES.
8. SEE SHEET AX.XX FOR FIRE RATED PARTITION WALL PLAN DETAILS.
9. SEE SHEET A8.00 FOR DOOR AND FRAME SCHEDULE.
10. DIMENSIONS AT EXTERIOR WALLS ARE TO STRUCTURAL WALL ONLY AND DO NOT INCLUDE FINISHES.
11. SEE A8.00 FOR ROOM FINISH SCHEDULE.
12. PATCH EXISTING FLOOR SLAB FROM ALL PLUMBING & MECHANICAL DEMOLITION TO ALLOW FOR INSTALLATION OF NEW FLOOR FINISH.
13. ALL WALLS TO BE A3 / - UNLESS OTHERWISE NOTED.

ROOF PLAN GENERAL NOTES:

1. USE MANUFACTURER'S STANDARD DETAILS FOR ALL ROOFING CONDITIONS THAT PROVIDE SPECIFIED WARRANTY .
2. SEE 17/A4.01 & 18/A4.01 FOR FLASHING DETAILS @ EQUIP. CURBS & ROOF PENETRATIONS.

NEW WORK KEY NOTES

SEE PROJECT GENERAL CONDITIONS, GENERAL INFORMATION ON SHEET A0.01 AND SELECTIVE DEMOLITION, CUTTING AND PATCHING SPECIFICATIONS THAT ARE USED IN ASSOCIATION WITH THESE NOTES.

NEW WORK KEY NOTES APPLY TO ALL NEW WORK DRAWINGS AND MAY NOT BE USED ON EVERY SHEET.

1. GENERAL CONTRACTOR TO PROVIDE PLYWOOD BACKING AT WALL AS NEEDED FOR OWNER FURNISHED EQUIPMENT. COORDINATE WITH OWNER.
2. PROVIDE (3) 5'-0" LONG X 1'-0" DEEP ADJUSTABLE SHELVING ON EAST WALL.
3. NOT USED.
4. PASSIVE UNDERSLAB VENTING SYSTEM TO BE 4" DIA. PERFORATED PVC VENT PIPE WITHIN 6" DEEP LAYER OF 1" CLEAR STONE (NO FINES). VENT SYSTEM TO GO THROUGH BLOCK FOUNDATION WALL. PROVIDE 4" FLEXIBLE HOSE WITHIN 6" SCHEDULE 40 PVC PIPE SLEEVE @ PENETRATION THROUGH WALL.

NEW WORK LEGEND

- EXISTING, TO REMAIN
- MASONRY PARTITION, SEE PARTITION TYPES FOR DETAILS
- METAL STUD PARTITION, SEE PARTITION TYPES FOR DETAILS
- TYPE A3 / - U.N.O.

CONTINUUM
ARCHITECTS + PLANNERS, S.C.
P.O. BOX 170663
MILWAUKEE, WI 53203
T 414.220.9440
F 414.220.9595

City of Milwaukee
Department of Public Works
Infrastructure Services Division
Facilities Development & Management Services

SANITATION HEADQUARTERS BUILDING
2320 OTTO STREET
MILWAUKEE, WI 53212

SANITATION HEADQUARTERS RENOVATION
NEW WORK PLANS - OFFICE BUILDING

ISSUE	DATE	REMARKS
-		

ARCHITECT JOB#: 120905
CITY PROJECT#: BU11091119
DATE: 02/01/2013
ISSUE: ISSUED FOR BID

A2.00

© Copyright 2013, Continuum Architects + Planners S.C.

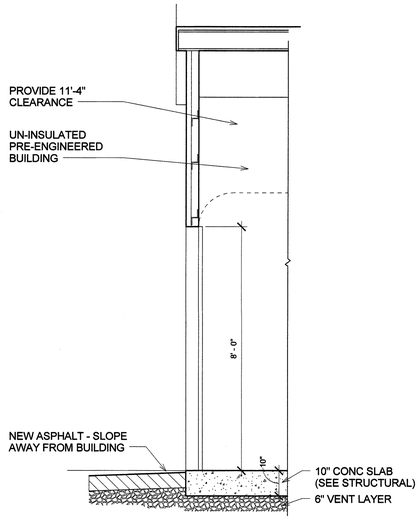

2 STORAGE BUILDING WALL SECTION
Scale: 1/2" = 1'-0"

NOTE: ALL WORK RELATED TO CONSTRUCTION OF THE STORAGE SHED IS TO BE PART OF ALTERNATE BID #1.

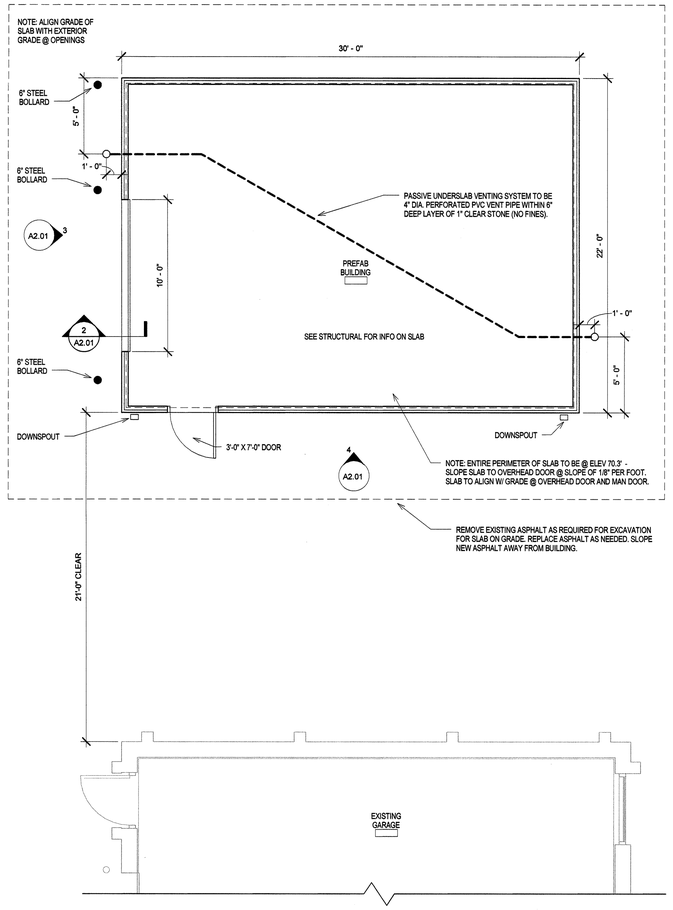

1 NEW WORK PLAN - STORAGE BUILDING
Scale: 1/4" = 1'-0"

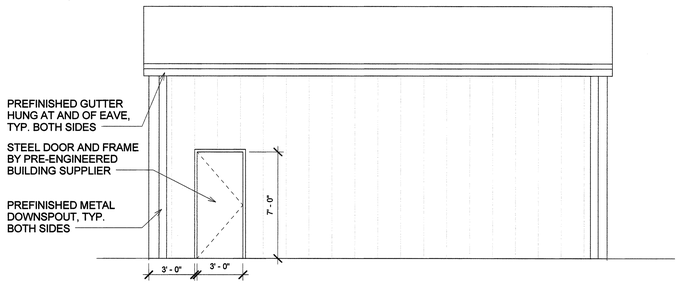

4 EAST ELEVATION - STORAGE BUILDING
Scale: 1/4" = 1'-0"

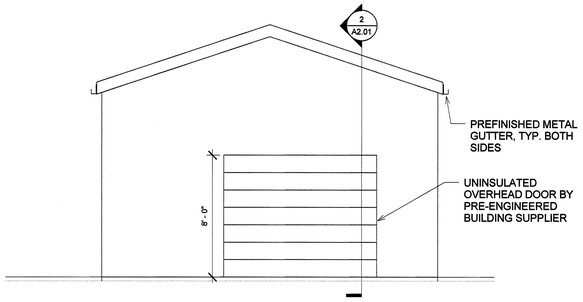

3 SOUTH ELEVATION - STORAGE BUILDING
Scale: 1/4" = 1'-0"

CONTINUUM
ARCHITECTS+PLANNERS,S.C.
P. O. BOX 510663
MILWAUKEE, WI 53203
T 414.220.9640
F 414.220.9595

City of Milwaukee
Department of Public Works
Infrastructure Services Division
Facilities Development & Management Services

SANITATION HEADQUARTERS BUILDING
2363 SOUTH 35TH STREET
MILWAUKEE, WI 53215

SANITATION HEADQUARTERS RENOVATION
PLANS & EXTERIOR ELEVATIONS - STORAGE BUILDING

ISSUE	DATE	REMARKS
-		
-		
-		
-		
-		
-		
-		
-		
-		
-		

ARCHITECT JOB#: 120905
CITY PROJECT#: BU11091119
DATE: 02/01/2013
ISSUE: ISSUED FOR BID

A2.01

© Copyright 2013, Continuum Architects + Planners S.C.

REFLECTED CEILING PLAN KEY

- SMOKE DETECTOR
- SPRINKLER HEAD
- SPRINKLER HEAD, WALL MOUNTED
- FIRE ALARM SPEAKER
- SPEAKER
- LINEAR FLUORESCENT LIGHT SEE ELECTRICAL DRAWINGS
- RECESSED DOWNLIGHT SEE ELECTRICAL DRAWINGS
- RECESSED FLANGELESS TRACK SEE ELECTRICAL DRAWINGS
- SD — SLOT DIFFUSER SEE MECHANICAL DRAWINGS
- SUPPLY MECH DIFFUSER SEE MECHANICAL DRAWINGS
- AP — ACCESS PANEL
- MECH RETURN DIFFUSER SEE MECHANICAL DRAWINGS
- SG — MECH DIFFUSER SEE MECHANICAL DRAWINGS
- SC — SECURITY SYSTEM SEE SECURITY
- ICS — INFRARED COUNTING SYSTEM
- HP — HOIST POINT REFER TO 10/A9.06 FOR HP DETAIL AT WD CLG-1 SEE STRUCTURAL DRAWINGS
- HP AC — HOIST POINT, 3" ABOVE CEILING REFER TO 10/A9.06 FOR HP DETAIL AT WD CLG-1 SEE STRUCTURAL DRAWINGS
- 1 — ONE HOUR RATED FIRE PARTITION
- 2 — TWO HOUR RATED FIRE PARTITION
- EXIT SIGN, CEILING MOUNTED
- WIRELESS ACCESS POINT DATA
- CEILING OUTLET, ABOVE
- CEILING OUTLET, EXPOSED
- SB — ELECTRICAL SENSOR
- RECESSED DOWNLIGHT IN ACP-1 SEE ELECTRICAL DRAWINGS
- 2X2 LED LIGHT FIXTURE
- 2X4 LED LIGHT FIXTURE
- 1X4 LIGHT FIXTURE - MECH ROOM

REFLECTED CEILING PLAN GENERAL NOTES:

1. THIS PLAN SHALL BE USED TO ESTABLISH THE LOCATIONS OF THE MAJOR CEILING PENETRATIONS INCLUDING: LIGHTING, HVAC, ACCESS PANEL, SPRINKLERS, SPEAKERS, ETC. SEE M.E.P. DRAWINGS FOR MORE SPECIFIC INFORMATION REGARDING EACH DISCIPLINE. IF CONFLICTS ARE DISCOVERED REGARDING LOCATION OF CEILING PENETRATIONS, CONTACT ARCHITECT FOR FURTHER INFORMATION.
2. USE MOISTURE RESISTANT GWB AT ALL TOILET ROOM CEILINGS.
3. SEE A8.00 FOR ROOM FINISH SCHEDULE.
4. ALL DEVICES SHOWN IN CEILING TILE SHALL BE LOCATED IN THE CENTER OF THAT TILE UNLESS OTHERWISE NOTED.
5. ALL DIMENSIONS TO CEILING FIXTURES ARE TO CENTER OF FIXTURE.
6. REFLECTED CEILING PLANS SHOW FIXTURES AND DEVICES OF ALL DISCIPLINES FOR COORDINATION AND LOCATION OF THESE DEVICES. SEE EACH DISCIPLINES DRAWINGS FOR SPECIFIC INFORMATION ON THESE FIXTURES AND DEVICES. CONTRACTOR TO NOTIFY ARCHITECT WITH ANY DISCREPANCIES WITH THE LOCATION OF THESE FIXTURES AND DEVICES BETWEEN THE ARCHITECTURAL DRAWINGS AND THE SPECIFIC DISCIPLINES DRAWINGS.

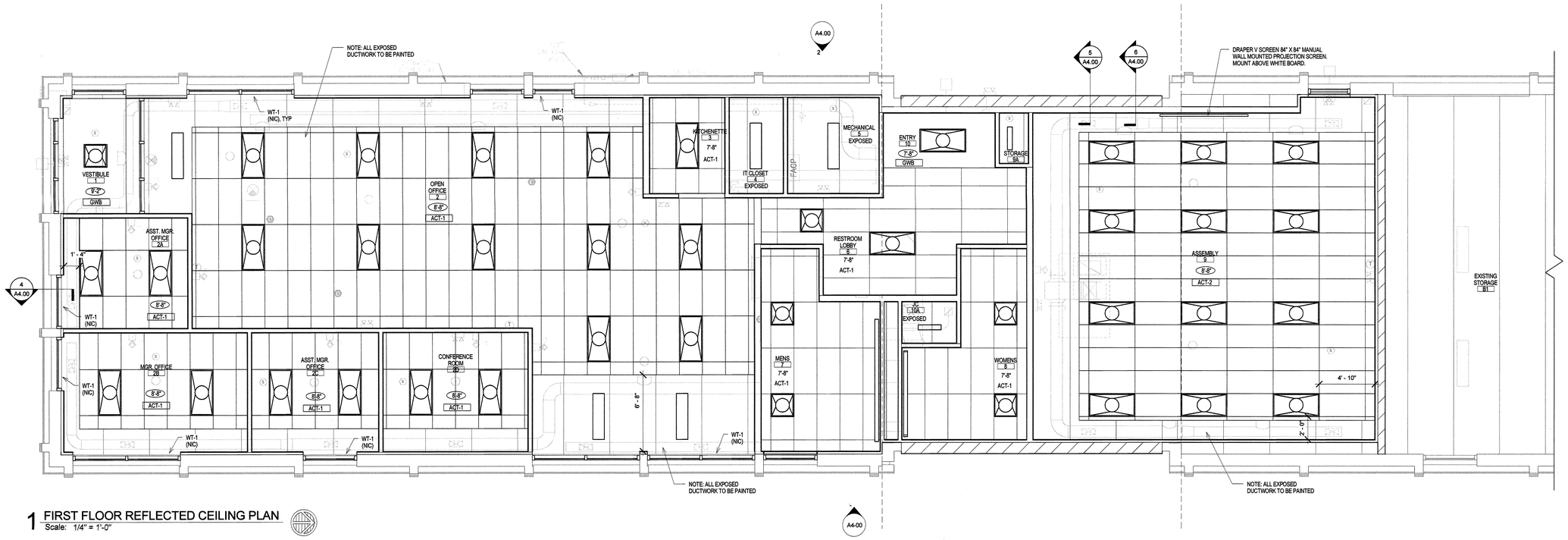

1 FIRST FLOOR REFLECTED CEILING PLAN
Scale: 1/4" = 1'-0"

CONTINUUM
ARCHITECTS + PLANNERS S.C.
P.O. BOX 5206.63
MILWAUKEE, WI 53203
T 414.320.9640
F 414.320.9593

City of Milwaukee Department of Public Works
Infrastructure Services Division
Facilities Development & Management Services

SANITATION HEADQUARTERS BUILDING
2363 SOUTH 35TH STREET
MILWAUKEE, WI 53215

SANITATION HEADQUARTERS RENOVATION
REFLECTED CEILING PLAN - OFFICE BUILDING

ISSUE	DATE	REMARKS
-		
-		
-		
-		
-		
-		
-		
-		
-		
-		

ARCHITECT JOB#:	120905
CITY PROJECT#:	BU11091119
DATE:	02/01/2013
ISSUE:	ISSUED FOR BID

A3.00

© Copyright 2013, Continuum Architects + Planners S.C.

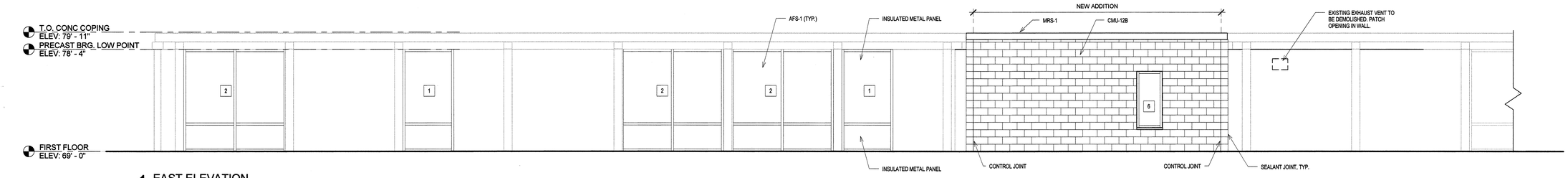

1 EAST ELEVATION
Scale: 1/4" = 1'-0"

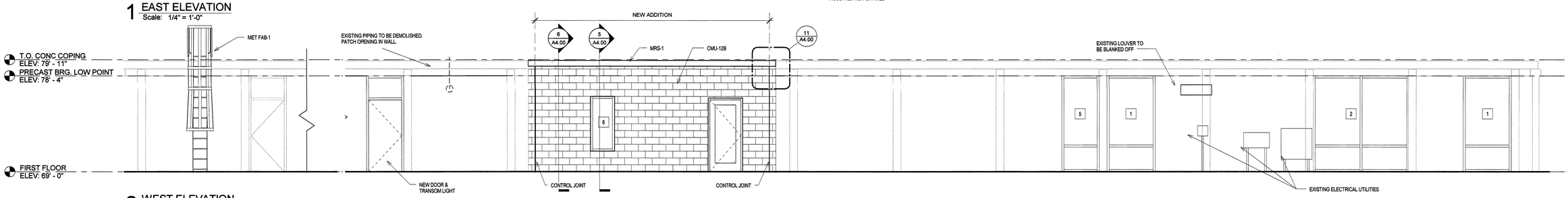

2 WEST ELEVATION
Scale: 1/4" = 1'-0"

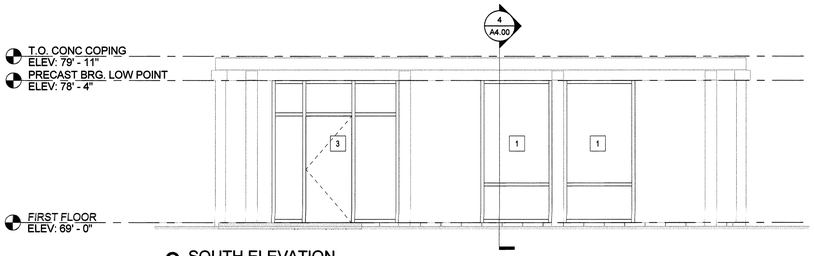

3 SOUTH ELEVATION
Scale: 1/4" = 1'-0"

BUILDING ENVELOPE SYSTEMS

NOTE:
- ASSEMBLIES AND COMPONENTS DESCRIBED FROM EXTERIOR TO INTERIOR
- REFER TO STRUCTURAL DRAWINGS FOR ADDITIONAL INFORMATION AT LOAD BEARING WALLS
- SEE SHEET A0.01 FOR GENERAL INFORMATION

FLOOR SYSTEM #1: FS-1
- FLOOR FINISH (SEE ROOM FINISH SCHEDULE)
- CONCRETE SLAB (SEE STRUCTURAL)
- VAPOR BARRIER TO BE 15 MIL CLASS "A" MATERIAL
- FILTER FABRIC
- 6" STONE VENT LAYER
- FILTER FABRIC
- CRUSHED STONE SUB BASE (SEE STRUCTURAL)

FOUNDATION WALL SYSTEM #1: FWS-1
- CONCRETE GRADE BEAM (SEE STRUCTURAL)
- 3" INSULATION AT EXTERIOR PERIMETER OF BUILDING

EXTERIOR WALL SYSTEM #1: EWS-1
- CMU-12B (SEE STRUCTURAL)
- CLEAR WATER PROOF SEALER

ROOF SYSTEM #1: RS-1
- BALLASTED EPDM MEMBRANE
- TAPERED INSULATION & VAPOR BARRIER BY ROOFING INSTALLER
- 8" PRECAST HOLLOW CORE PLANK (SEE STRUCTURAL)

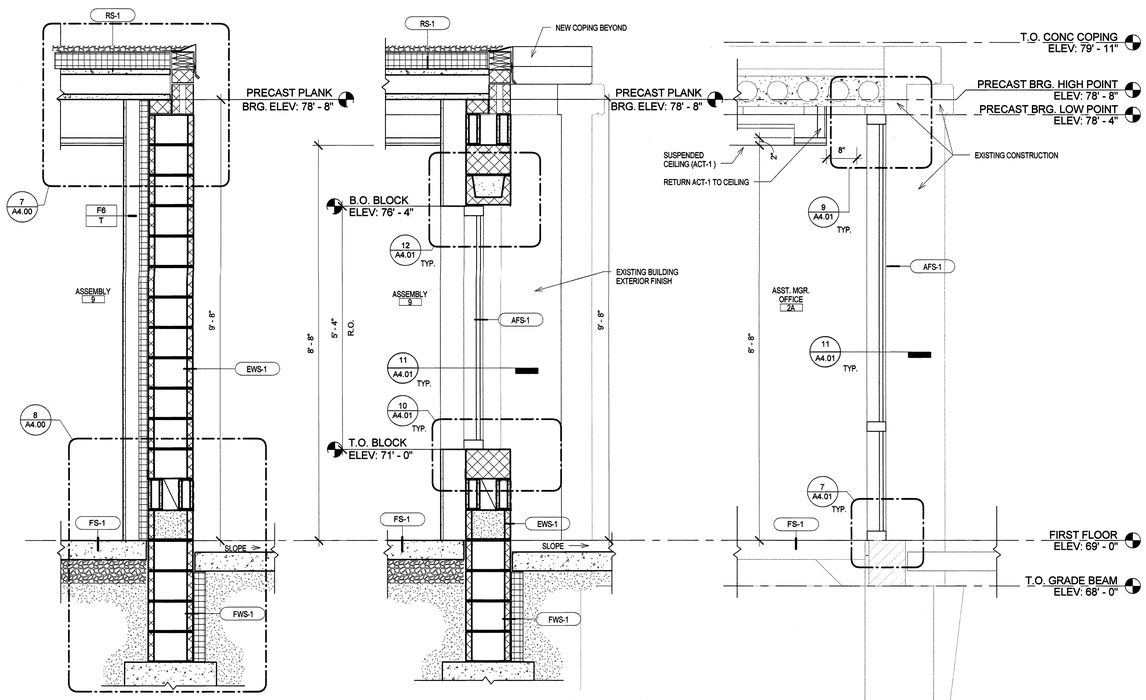

6 TYP. EXT. WALL SECTION
Scale: 3/4" = 1'-0"

5 TYP. EXT. WALL SECTION @ WINDOW
Scale: 3/4" = 1'-0"

4 TYP. EXISTING EXT. WALL SECTION
Scale: 3/4" = 1'-0"

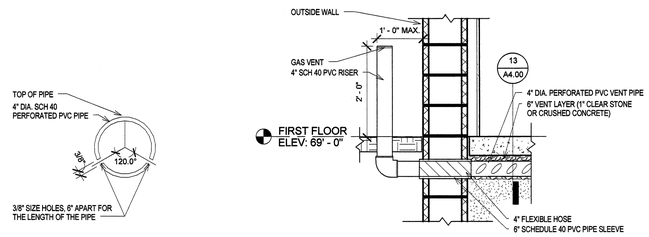

13 PERFORATED VENT PIPES
Scale: 3" = 1'-0"

12 GROUND LEVEL GAS VENT
Scale: 3/4" = 1'-0"

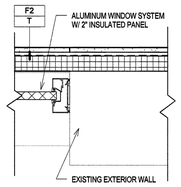

9 PLAN DETAIL @ MENS RESTROOM WINDOW
Scale: 1 1/2" = 1'-0"

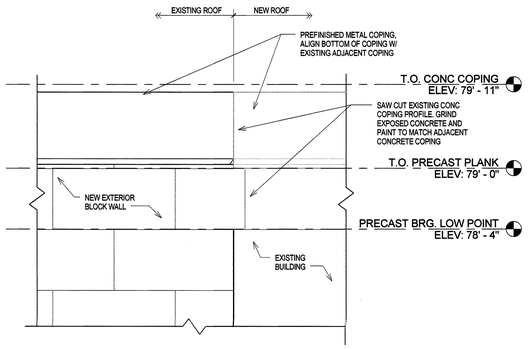

11 ELEVATION DETAIL
Scale: 1 1/2" = 1'-0"

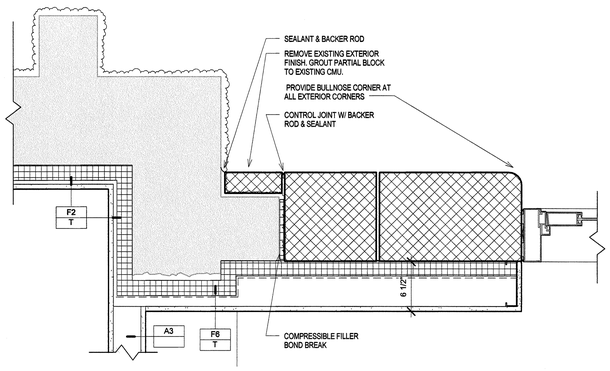

10 PLAN DETAIL @ INFILL WALL
Scale: 1 1/2" = 1'-0"

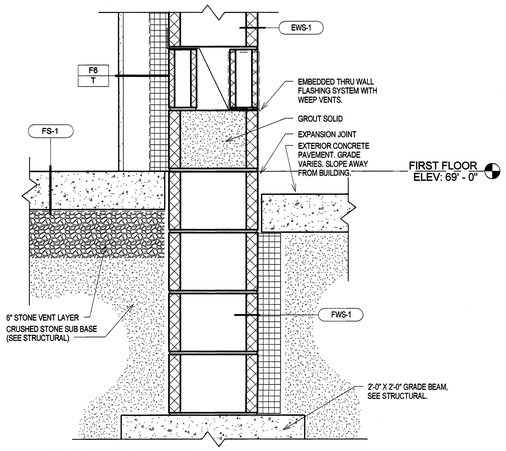

8 B.O. WALL DETAIL
Scale: 1 1/2" = 1'-0"

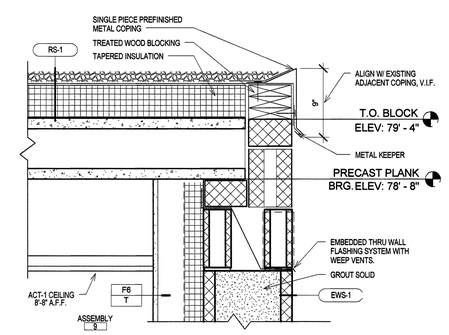

7 PARAPET DETAIL
Scale: 1 1/2" = 1'-0"

CONTINUUM
ARCHITECTS + PLANNERS, S.C.
P.O. BOX 3/0643
MILWAUKEE, WI 53203
T 414.220.9440
F 414.220.9595

City of Milwaukee
Department of Public Works
Infrastructure Services Division
Facilities Development & Management Services

SANITATION HEADQUARTERS BUILDING
2320 W. OTTER STREET
MILWAUKEE, WI 53215

SANITATION HEADQUARTERS RENOVATION
EXTERIOR ELEVATIONS, SECTIONS & DETAILS

ISSUE	DATE	REMARKS
-		
-		
-		
-		
-		
-		
-		
-		
-		
-		
-		

ARCHITECT JOB#: 120905
CITY PROJECT#: BU11091119
DATE: 02/01/2013
ISSUE: ISSUED FOR BID

A4.00

© Copyright 2013.
Continuum Architects + Planners S.C.

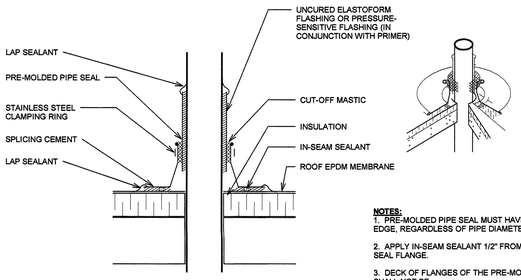

NOTES:
1. PRE-MOLDED PIPE SEAL MUST HAVE INTACT RIB AT TOP EDGE, REGARDLESS OF PIPE DIAMETER
2. APPLY IN-SEAM SEALANT 1/2" FROM INSIDE EDGE OF PIPE SEAL FLANGE.
3. DECK OF FLANGES OF THE PRE-MOLDED PIPE FLASHING SHALL NOT BE OVERLAPPED, CUT OR APPLIED OVER ANY ANGLE CHANGE.
4. ON MECHANICALLY FASTENED ROOFING SYSTEMS, ADDITIONAL MEMBRANE SECUREMENT IS REQUIRED.

18 ROOF PENETRATION
Scale: 1 1/2" = 1'-0"

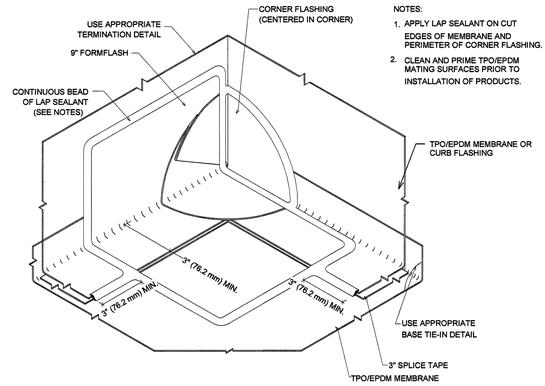

NOTES:
1. APPLY LAP SEALANT ON CUT EDGES OF MEMBRANE AND PERIMETER OF CORNER FLASHING.
2. CLEAN AND PRIME TPO/EPDM MATING SURFACES PRIOR TO INSTALLATION OF PRODUCTS.

17 ROOF FLASHING
Scale: 3" = 1'-0"

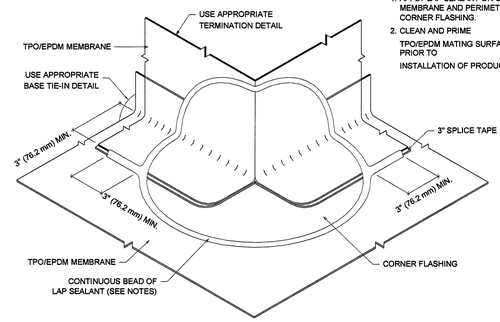

NOTES:
1. APPLY LAP SEALANT ON CUT EDGES OF MEMBRANE AND PERIMETER OF CORNER FLASHING.
2. CLEAN AND PRIME TPO/EPDM MATING SURFACES PRIOR TO INSTALLATION OF PRODUCTS.

THIS DETAIL ILLUSTRATES THE APPLICATION OF CURB FLASHING ONLY. BASE/ CORNER FLASHINGS AND TERMINATIONS NOT SHOWN FOR CLARITY. REFER TO APPROPRIATE BASE TIE-IN, CORNER & TERMINATION DETAILS.

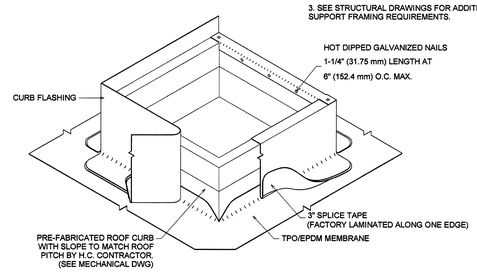

NOTES:
1. CLEAN AND PRIME TPO/EPDM MATING SURFACES PRIOR TO INSTALLATION OF PRODUCTS.
2. ALL ROOF CURBS FOR MECHANICAL EQUIPMENT ARE PROVIDED BY MECHANICAL CONTRACTOR AND INSTALLED BY ROOFING CONTRACTOR.
3. SEE STRUCTURAL DRAWINGS FOR ADDITIONAL SUPPORT FRAMING REQUIREMENTS.

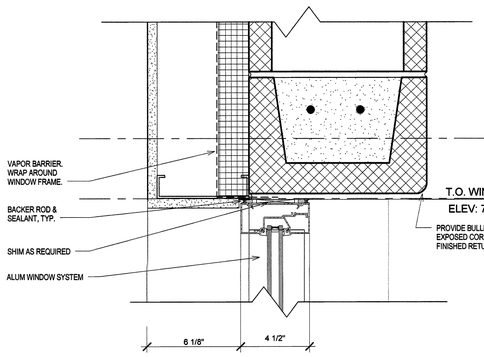

12 HEAD @ NEW WALL
Scale: 3" = 1'-0"

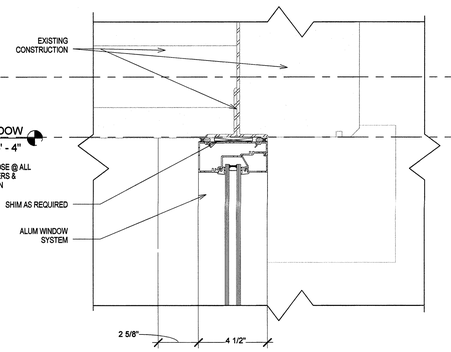

14 HEAD @ WEST WALL
Scale: 3" = 1'-0"

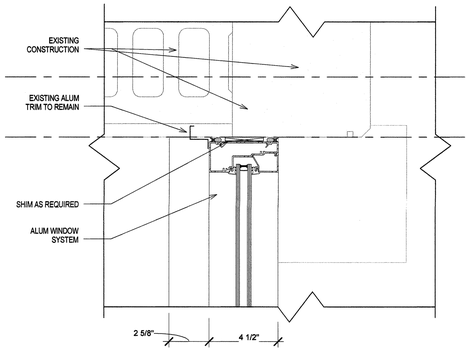

13 HEAD @ SOUTH WALL
Scale: 3" = 1'-0"

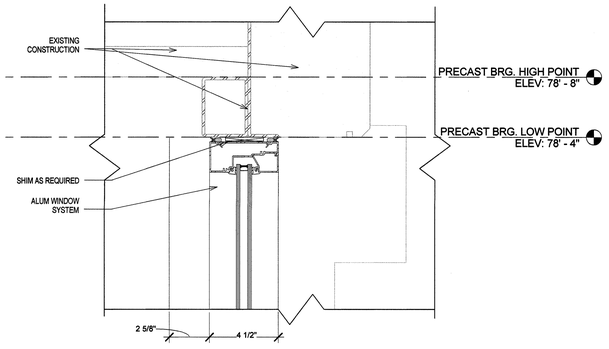

9 HEAD @ EAST WALL
Scale: 3" = 1'-0"

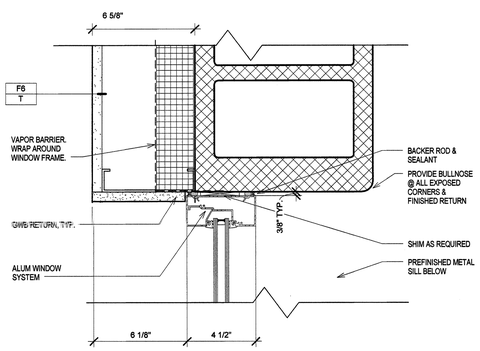

11 JAMB @ NEW WALL
Scale: 3" = 1'-0"

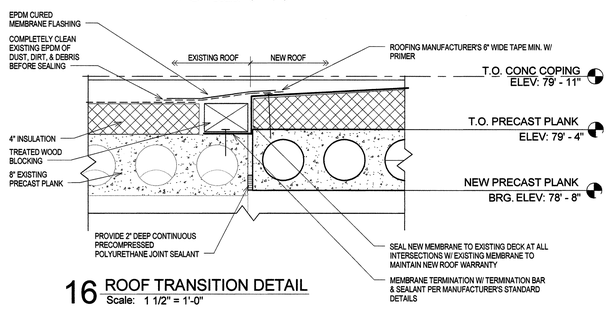

16 ROOF TRANSITION DETAIL
Scale: 1 1/2" = 1'-0"

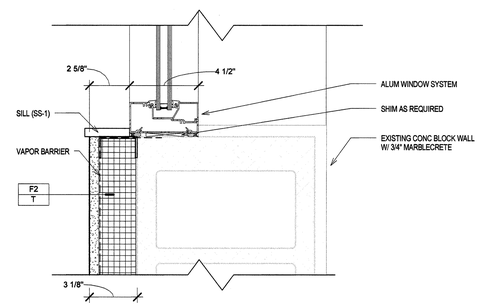

8 JAMB @ EXISTING WALL
Scale: 3" = 1'-0"

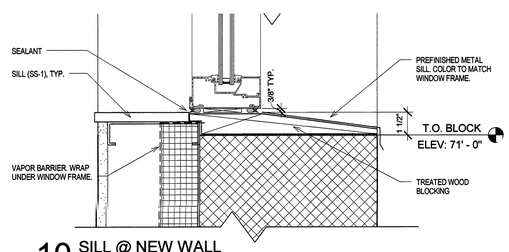

10 SILL @ NEW WALL
Scale: 3" = 1'-0"

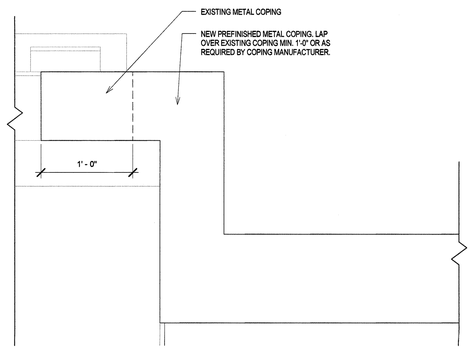

15 ROOF COPING DETAIL @ EXISTNG/NEW CONSTRUCTION
Scale: 1 1/2" = 1'-0"

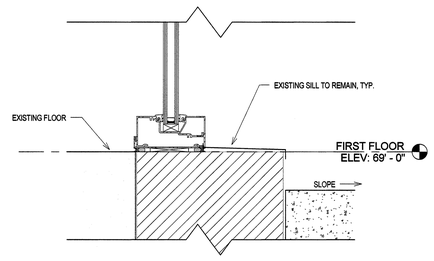

7 SILL @ EXISTING WALL
Scale: 3" = 1'-0"

CONTINUUM
ARCHITECTS + PLANNERS, S.C.
P.O. BOX 510643
MILWAUKEE, WI 53203
T 414.220.9540
F 414.220.9595

City of Milwaukee
Department of Public Works
Infrastructure Services Division
Facilities Development & Management Services

SANITATION HEADQUARTERS BUILDING
2320 W. OTTO STREET
MILWAUKEE, WI 53215

SANITATION HEADQUARTERS RENOVATION
WINDOW TYPES AND DETAILS AND ROOF DETAILS

ISSUE	DATE	REMARKS
-		
-		
-		
-		
-		
-		
-		
-		
-		
-		

ARCHITECT JOB#: 120905
CITY PROJECT#: BU11091119
DATE: 02/01/2013
ISSUE: ISSUED FOR BID

A4.01

© Copyright 2013, Continuum Architects + Planners S.C.

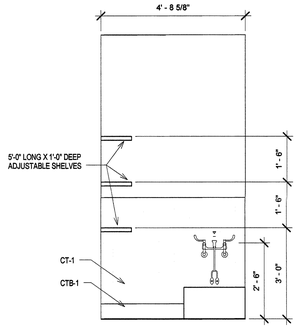

12 JC- EAST WALL
Scale: 1/2" = 1'-0"

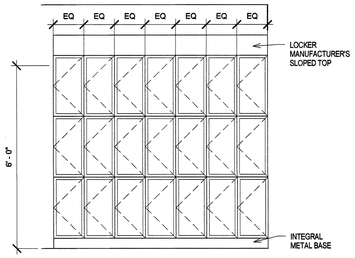

11 ENTRY - SOUTH WALL
Scale: 1/2" = 1'-0"

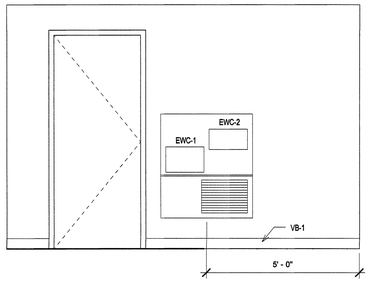

10 RESTROOM LOBBY - EAST WALL
Scale: 1/2" = 1'-0"

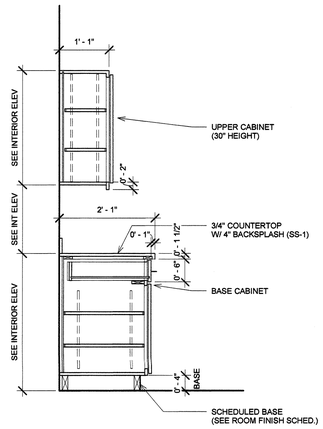

9 SECTION @ CABINET (TYP.)
Scale: 3/4" = 1'-0"

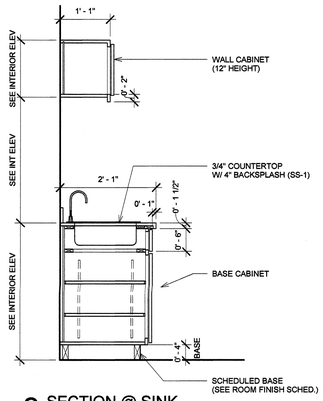

8 SECTION @ SINK
Scale: 3/4" = 1'-0"

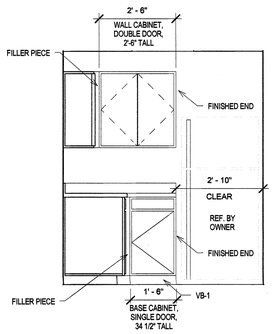

7 KITCHENETTE - WEST WALL
Scale: 1/2" = 1'-0"

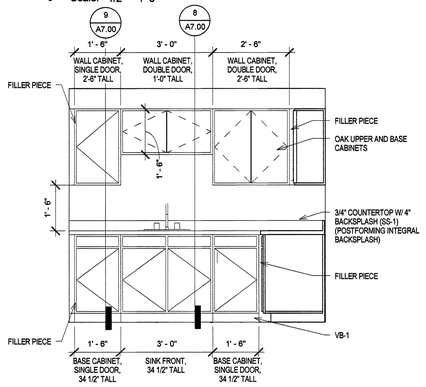

6 KITCHENETTE - SOUTH WALL
Scale: 1/2" = 1'-0"

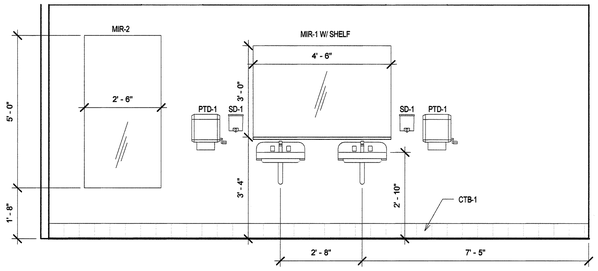

5 MENS RESTROOM - SOUTH WALL
Scale: 1/2" = 1'-0"

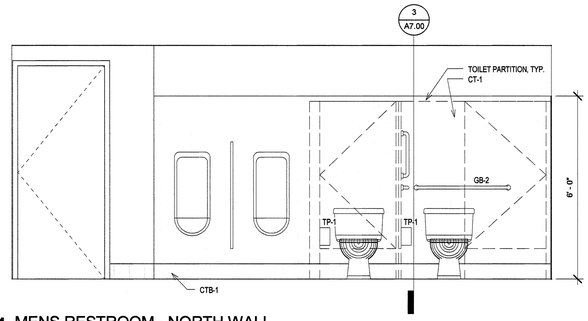

4 MENS RESTROOM - NORTH WALL
Scale: 1/2" = 1'-0"

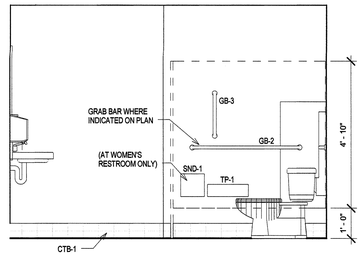

3 TYP. TOILET PARTITION
Scale: 1/2" = 1'-0"

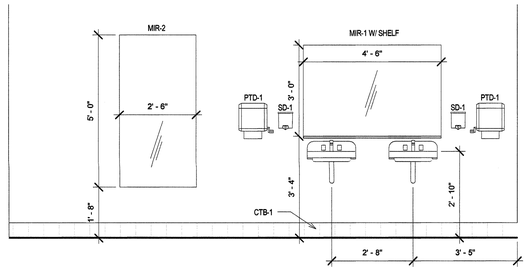

2 WOMENS RESTROOM - NORTH WALL
Scale: 1/2" = 1'-0"

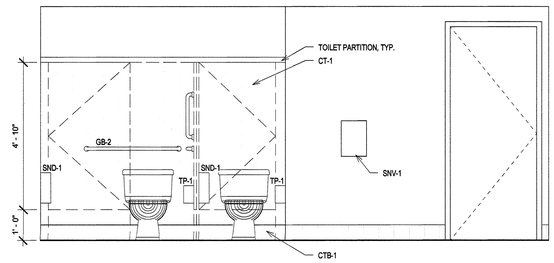

1 WOMENS RESTROOM - SOUTH WALL
Scale: 1/2" = 1'-0"

CONTINUUM
ARCHITECTS + PLANNERS, S.C.
P.O. BOX 3/0643
MILWAUKEE, WI 53203
T 414.220.9640
F 414.220.9595

City of Milwaukee
Department of Public Works
Infrastructure Services Division
Facilities Development & Management Services

SANITATION HEADQUARTERS BUILDING
2000 CLYBOURN STREET
MILWAUKEE, WI 53215

SANITATION HEADQUARTERS RENOVATION
INTERIOR ELEVATIONS - OFFICE BUILDING

ISSUE	DATE	REMARKS
-		
-		
-		
-		
-		
-		
-		
-		
-		
-		

ARCHITECT JOB#: 120905
CITY PROJECT#: BU11091119
DATE: 02/01/2013
ISSUE: ISSUED FOR BID

A7.00

© Copyright 2013, Continuum Architects + Planners S.C.

DOOR AND FRAME SCHEDULE

DOOR NO.	ROOM NAME	DOORS							FRAMES			DETAILS		FIRE RATING	HARDWARE GROUP	NOTES
		LEAF QUANTITY	WIDTH	HEIGHT	TYPE	MATERIAL	FINISH	GLASS	TYPE	MATERIAL	FINISH	HEAD	JAMB			
1-1	VESTIBULE	(1)	3' - 0"	7' - 0"	FL	ALUM	PREFIN	GL-20T	-	ALUM	PREFIN	11/A4.00	10/A4.00		206	
1-2	VESTIBULE	(1)	3' - 0"	7' - 0"	FL	ALUM	PREFIN	GL-1T	-	ALUM	PREFIN	11/A4.00	10/A4.00		110	
2A	ASST. MGR. OFFICE	(1)	3' - 0"	7' - 0"	F	WD	ST	-	1	HM	PT-2	9/A8.00	9/A8.00		12	1
2B	MGR. OFFICE	(1)	3' - 0"	7' - 0"	F	WD	ST	-	1	HM	PT-2	9/A8.00	9/A8.00		12	1
2C	ASST. MGR. OFFICE	(1)	3' - 0"	7' - 0"	F	WD	ST	-	1	HM	PT-2	9/A8.00	9/A8.00		12	1
2D	CONFERENCE ROOM	(1)	3' - 0"	7' - 0"	F	WD	ST	-	1	HM	PT-2	9/A8.00	9/A8.00		12	1
4	IT CLOSET	(1)	3' - 0"	7' - 0"	F	HM	PT-2	-	1	HM	PT-2	9/A8.00	9/A8.00		14	
5	MECHANICAL	(1)	3' - 0"	7' - 0"	F	HM	PT-2	-	1	HM	PT-2	9/A8.00	9/A8.00		14	
7	MENS	(1)	2' - 10"	7' - 0"	F	WD	ST	-	1	HM	PT-2	9/A8.00	9/A8.00		95	1
8	WOMENS	(1)	2' - 10"	7' - 0"	F	WD	ST	-	1	HM	PT-2	9/A8.00	9/A8.00		95	1
9A	STORAGE	(1)	3' - 0"	7' - 0"	F	WD	ST	-	1	HM	PT-2	9/A8.00	9/A8.00		14	
9B	ASSEMBLY	(1)	3' - 0"	7' - 0"	NL	WD	ST	GL-1T	3	HM	PT-2	9/A8.00	9/A8.00		83	
9C	ASSEMBLY	(1)	3' - 2 1/2"	7' - 0"	NL	ALUM	PREFIN	GL-20T	-	ALUM	PREFIN	11/A4.00	10/A4.00		100	2
10	ENTRY	(1)	3' - 0"	7' - 0"	FL	ALUM	PREFIN	GL-20T	-	ALUM	PREFIN	11/A4.00	10/A4.00		207	
10A	JC	(1)	2' - 10"	7' - 0"	F	HM	PT-2	-	1	HM	PT-2	9/A8.00	9/A8.00		14	

DOOR SCHEDULE NOTES

1. PROVIDE 16 X 16 DOOR GRILLE - SEE MECH.
2. FIELD VERIFY DOOR WIDTH.
3. NOT USED.

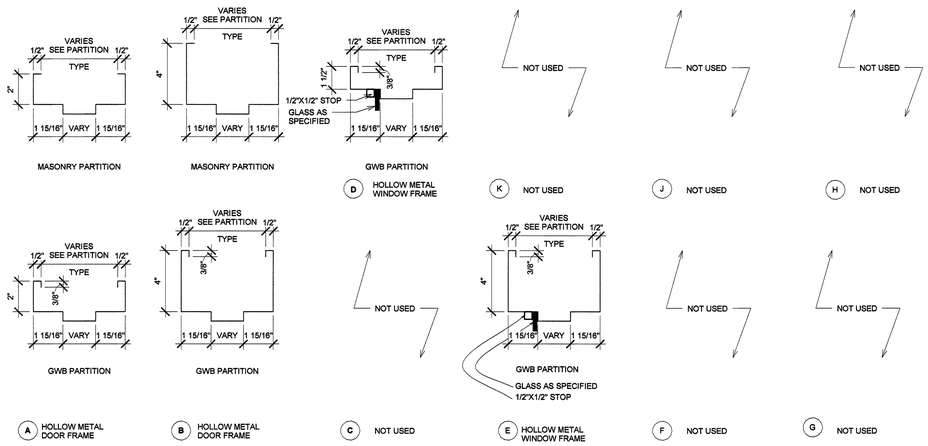

DOOR FRAME PROFILES
Scale: 3" = 1'-0"

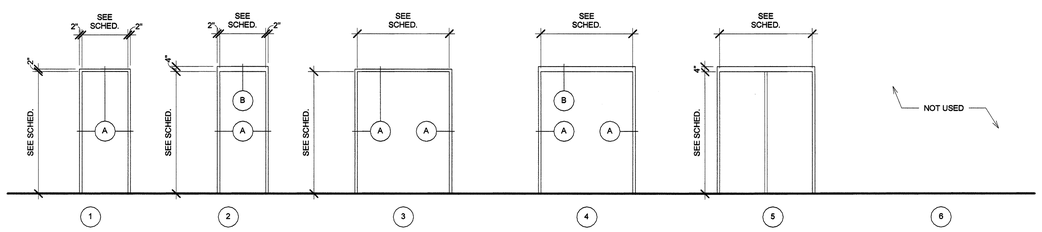

FRAME TYPES
Scale: 1/4" = 1'-0"

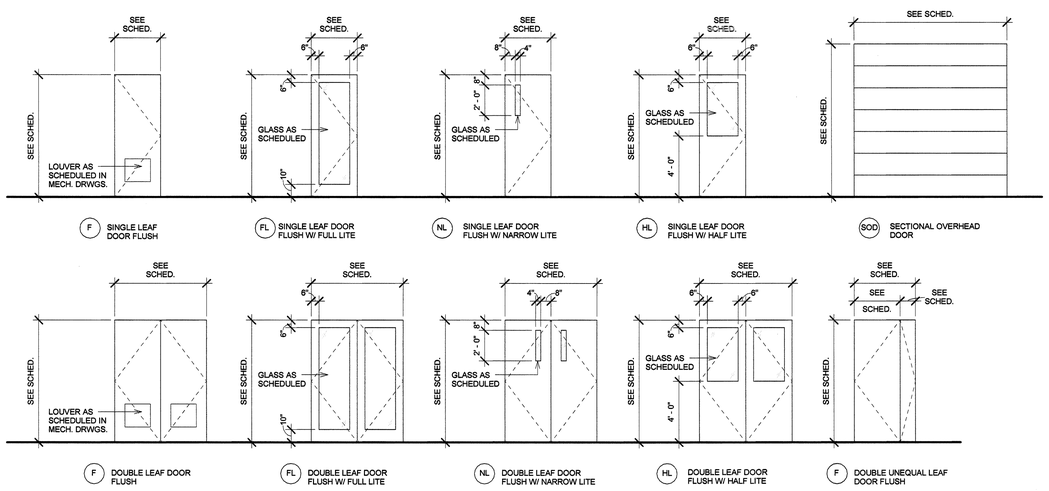

DOOR TYPES
Scale: 1/4" = 1'-0"

ROOM FINISH SCHEDULE

ROOM #	ROOM NAME	FLOOR	BASE	WALL NORTH	WALL SOUTH	WALL WEST	WALL EAST	CEILING	NOTES
1	VESTIBULE	CT-2	CTB-2	PT-1	PT-1	PT-1	PT-1	GWB/PT-3	
2	OPEN OFFICE	VCT-1	VB-1	PT-1	PT-1	PT-1	PT-1	ACT-1	
2A	ASST. MGR. OFFICE	CPT-3	VB-2	PT-1	PT-1	PT-1	PT-1	ACT-1	
2B	MGR. OFFICE	CPT-3	VB-2	PT-1	PT-1	PT-1	PT-1	ACT-1	
2C	ASST. MGR. OFFICE	CPT-3	VB-2	PT-1	PT-1	PT-1	PT-1	ACT-1	
2D	CONFERENCE ROOM	CPT-3	VB-2	PT-1	PT-1	PT-1	PT-1	ACT-1	
3	KITCHENETTE	VCT-1	VB-1	PT-1	PT-1	PT-1	PT-1	ACT-1	
4	IT CLOSET	CONC-1	-	PT-1	PT-1	PT-1	PT-1	EXP.	
5	MECHANICAL	CONC-1	-	PT-1	PT-1	PT-1	PT-1	EXP.	
6	RESTROOM LOBBY	VCT-1	VB-1	PT-1	PT-1	PT-1	PT-1	ACT-1	
7	MENS	CT-1	CTB-1	PT-1/CT-1	PT-1	PT-1	PT-1	ACT-2	1
8	WOMENS	CT-1	CTB-1	PT-1	PT-1/CT-1	PT-1	PT-1	ACT-2	1
9	ASSEMBLY	VCT-1	VB-1	PT-1	PT-1	PT-1	PT-1	ACT-1	
9A	STORAGE	VCT-1	VB-1	PT-1	PT-1	PT-1	PT-1	ACT-1	
10	ENTRY	CT-2	CTB-2	PT-1	PT-1	PT-1	PT-1	GWB/PT-3	
10A	JC	CONC-1	CTB-1	PT-1	PT-1	PT-1	PT-1/CT-1	EXP.	1

ROOM FINISH SCHEDULE NOTES

1. CERAMIC TILE WAINSCOT - SEE INTERIOR ELEVATIONS.

ROOM FINISH SCHEDULE ABBREVIATIONS

ACT	ACOUSTICAL CEILING TILE	CPT	CARPET	IAW	INTERIOR ARCHITECTURAL WOODWORK	PT	PAINT
CG	CORNER GUARD	EXP	EXPOSED TO STRUCTURE	PLAM	PLASTIC LAMINATE	RB	RUBBER BASE
CNTR	COUNTERTOP	HPC	HIGH PERFORMANCE COATING	PC	POLISHED CONCRETE	RF	RUBBER FLOORING
CT	CERAMIC TILE					SC	SEALED CONCRETE
CTB	CERAMIC TILE BASE					WD FL	WOOD FLOORING
						WT	WINDOW TREATMENTS

ACT-1 DESIGN BASIS:
ARMSTRONG CORTEGA
COLOR: WHITE
SIZE: 24" X 48"
EDGE: 15/16" TEGULAR

ACT-2 MOISTURE RESISTANCE CEILING TILE
DESIGN BASIS:
ARMSTRONG ULTIMA HRC
COLOR: WHITE
SIZE: 24" X 48"
EDGE: 15/16" SQUARE LAY-IN

CPT-1 DESIGN BASIS:
LEE FACULTY IV
CARPET TILE
COLOR: TO BE SELECTED BY ARCHITECT

CT-1 DESIGN BASIS:
DAL-TILE, CERAMIC TILE
GROUP: CONCRETE CONNECTION
COLOR: BOULEVARD BEIGE, CN90
SIZE: 13" X 13"

CT-2 DESIGN BASIS:
DAL-TILE, QUARRY FLOOR TILE
GROUP: QUARRY TILE
COLOR: ARID FLASH, QQ40
SIZE: 6" X 6"

CTB-1 DESIGN BASIS:
DAL-TILE, CERAMIC TILE
GROUP: CONCRETE CONNECTION
COLOR: BOULEVARD BEIGE, CN90
STYLE: COVE BASE
SIZE: 6" X 13"

CTB-2 DESIGN BASIS:
DAL-TILE, QUARRY FLOOR TILE
GROUP: QUARRY TILE
COLOR: ARID FLASH, QQ40
STYLE: COVE BASE
SIZE: 6" X 6"

PT-1 WALLS
DESIGN BASIS:
FINISH: EGGSHELL
COLOR: TO BE SELECTED BY ARCHITECT

PT-2 HOLLOW METAL FRAMES
DESIGN BASIS:
FINISH: GLOSS
COLOR: TO BE SELECTED BY ARCHITECT

PT-3 CEILINGS
DESIGN BASIS:
FINISH: FLAT
COLOR: TO BE SELECTED BY ARCHITECT

SS-1 COUNTERTOPS & WINDOW SILLS
DESIGN BASIS:
CORIAN
COLOR: MEDEA

VB-1 DESIGN BASIS:
JOHNSONITE
4" VINYL BASE, COVED
COLOR: FROM MANUFACTURER'S STANDARD SELECTION

VB-2 DESIGN BASIS:
JOHNSONITE
4" VINYL BASE, STRAIGHT
COLOR: FROM MANUFACTURER'S STANDARD SELECTION

VCT-1 DESIGN BASIS:
ARMSTRONG
GROUP: EXCELON, IMPERIAL TEXTURE
COLOR: WHITE WASHED LINEN 51810
SIZE: 12" X 12"

WT-1 (NIC) DESIGN BASIS:
HUNTER DOUGLAS
SUNFLEX MODEL #CC80, BALI CLASSIC # 008, OR EQUAL

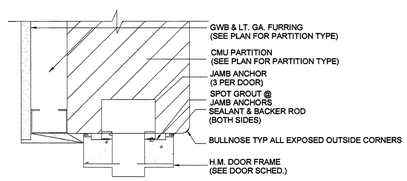

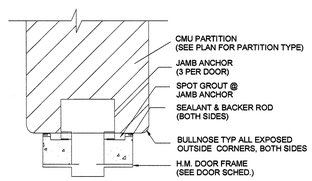

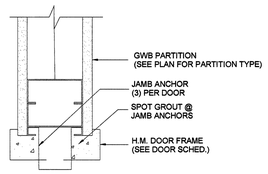

9 DOOR JAMB DETAILS
Scale: 3" = 1'-0"

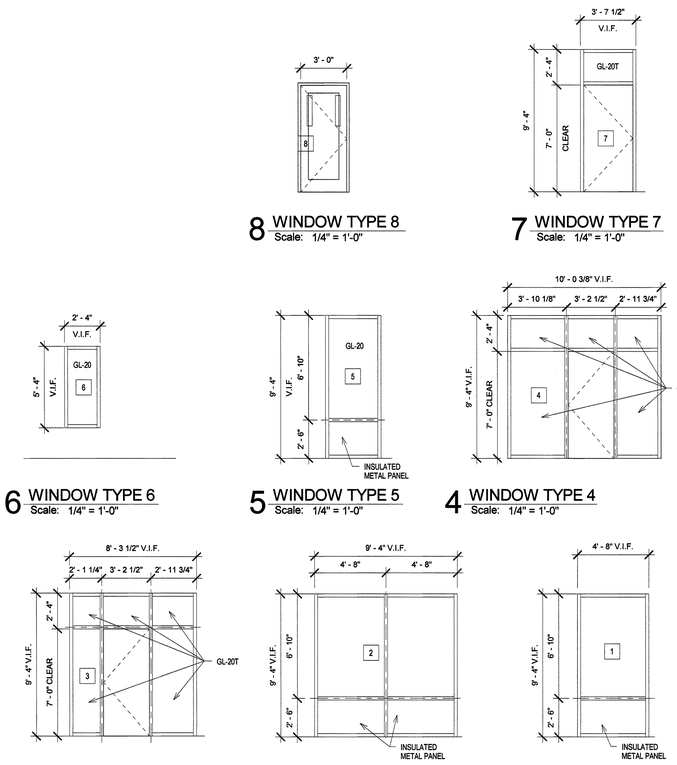

8 WINDOW TYPE 8
Scale: 1/4" = 1'-0"

7 WINDOW TYPE 7
Scale: 1/4" = 1'-0"

6 WINDOW TYPE 6
Scale: 1/4" = 1'-0"

5 WINDOW TYPE 5
Scale: 1/4" = 1'-0"

4 WINDOW TYPE 4
Scale: 1/4" = 1'-0"

3 WINDOW TYPE 3
Scale: 1/4" = 1'-0"

2 WINDOW TYPE 2
Scale: 1/4" = 1'-0"

1 WINDOW TYPE 1
Scale: 1/4" = 1'-0"

CONTINUUM
ARCHITECTS + PLANNERS, S.C.
P.O. BOX 511643
MILWAUKEE, WI 53203
T 414.220.9640
F 414.220.9595

City of Milwaukee
Department of Public Works
Infrastructure Services Division
Facilities Development & Management Services

SANITATION HEADQUARTERS BUILDING
2320 S. 10TH STREET
MILWAUKEE, WI 53215

SANITATION HEADQUARTERS RENOVATION
SCHEDULES

ISSUE	DATE	REMARKS
-		
-		
-		
-		
-		
-		
-		
-		
-		
-		
-		

ARCHITECT JOB#: 120905
CITY PROJECT#: BU11091119
DATE: 02/01/2013
ISSUE: ISSUED FOR BID

A8.00

© Copyright 2013, Continuum Architects + Planners S.C.

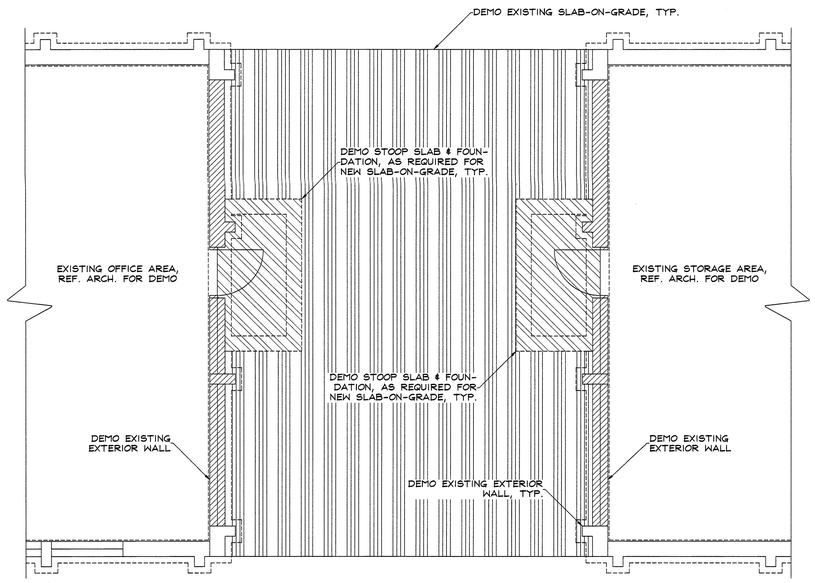

1 S1.01 - WALL & FOUNDATION DEMO PLAN
SCALE: 1/4" = 1'-0"

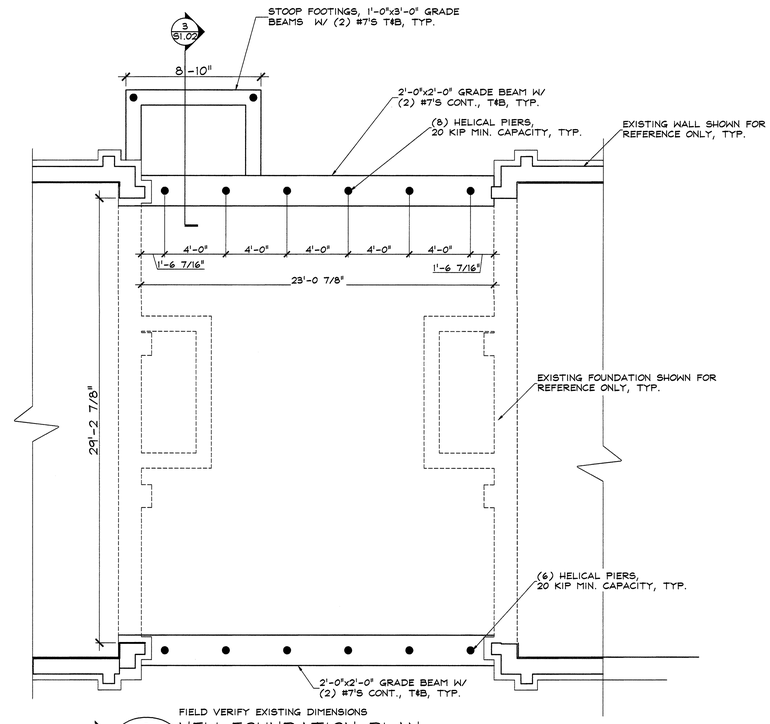

FIELD VERIFY EXISTING DIMENSIONS

3 S1.01 - NEW FOUNDATION PLAN
SCALE: 1/4" = 1'-0"

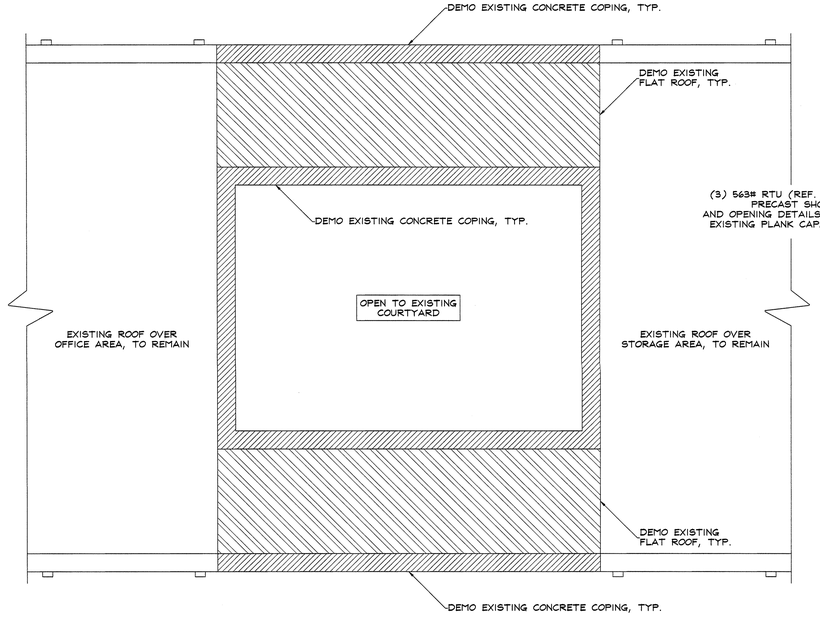

2 S1.01 - ROOF DEMO PLAN
SCALE: 1/4" = 1'-0"

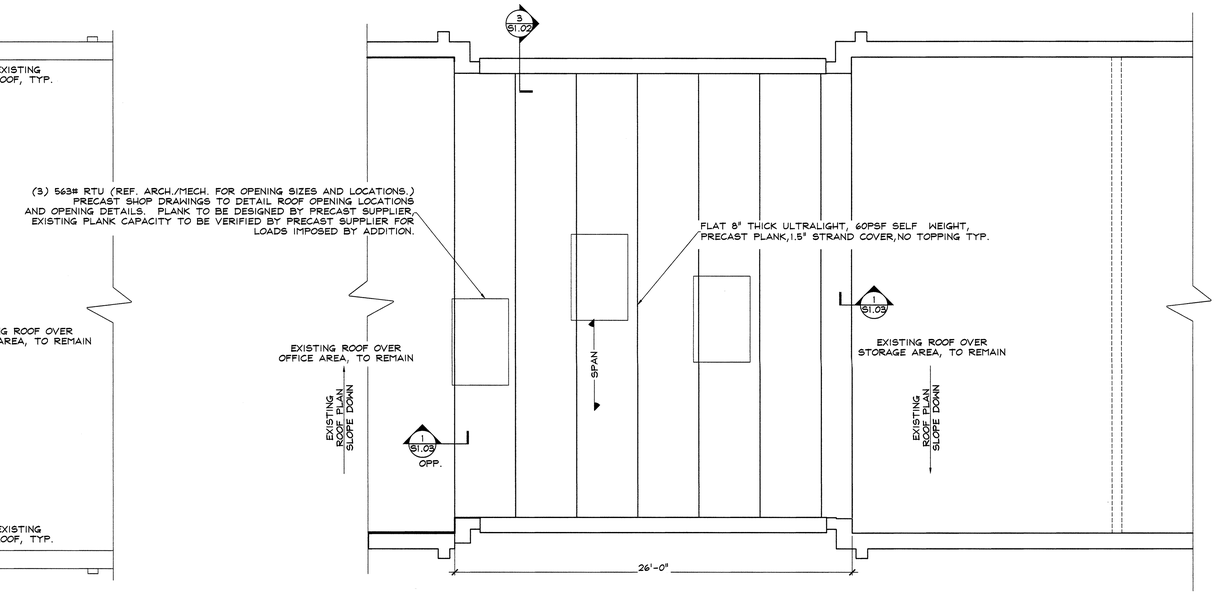

FIELD VERIFY EXISTING DIMENSIONS

4 S1.01 - NEW ROOF FRAMING PLAN
SCALE: 1/4" = 1'-0"

CONTINUUM
ARCHITECTS + PLANNERS, S.C.
P. O. BOX 51 0663
MILWAUKEE, WI 53203
T 414.270.9640
F 414.270.9595

City of Milwaukee
Department of Public Works
Infrastructure Services Division
Facilities Development & Management Services

structural plans prepared by:
STRASS-MAGUIRE&ASS.
CIVIL*STRUCTURAL*
*INDUSTRIAL*ENGINEERS
6512 WEST MEQUON ROAD
MEQUON, WISCONSIN 53092
P: 262.242.5050 F: 262.242.5055
Strass-Maguire Project No. 12-160

SANITATION HEADQUARTERS BUILDING
2363 SOUTH 35TH STREET
MILWAUKEE, WI 53215

SANITATION HEADQUARTERS RENOVATION PLANS

ISSUE	DATE	REMARKS
-		
-		
-		
-		
-		
-		
-		
-		
-		
-		

ARCHITECT JOB#: 120905
CITY PROJECT#: BU11091119
DATE: 02/01/2013
ISSUE: ISSUED FOR BID

S1.01

© Copyright 2013, Continuum Architects + Planners S.C.

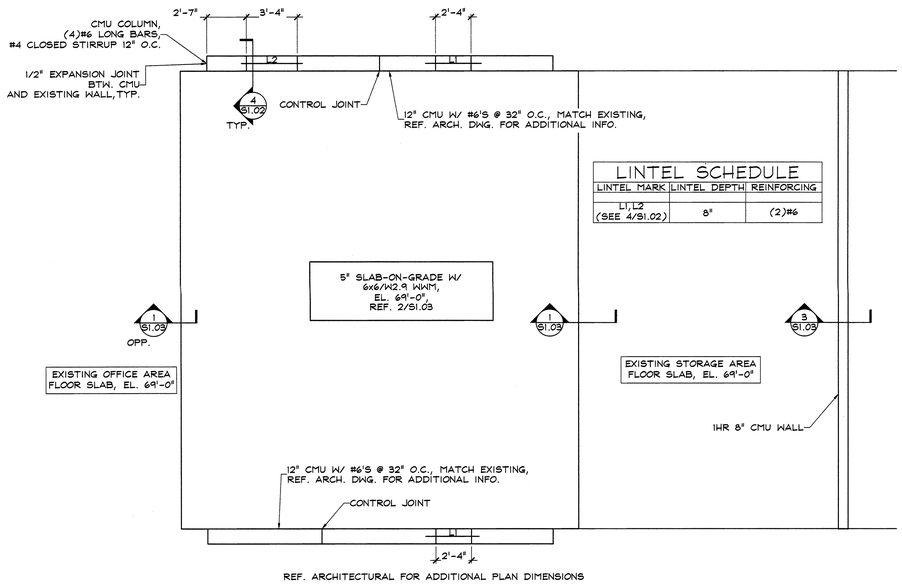

LINTEL SCHEDULE		
LINTEL MARK	LINTEL DEPTH	REINFORCING
L1, L2 (SEE 4/S1.02)	8"	(2)#6

1/S1.02 NEW WALL & SLAB PLAN
SCALE: 1/4" = 1'-0"

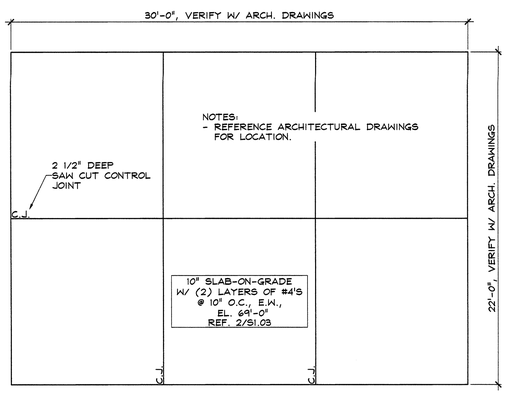

2/S1.02 STORAGE BUILDING FOUNDATION PLAN
SCALE: 1/4" = 1'-0"

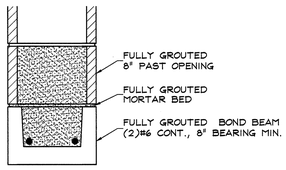

4/S1.02 LINTEL, TYP.
SCALE: 1 1/2" = 1'-0"

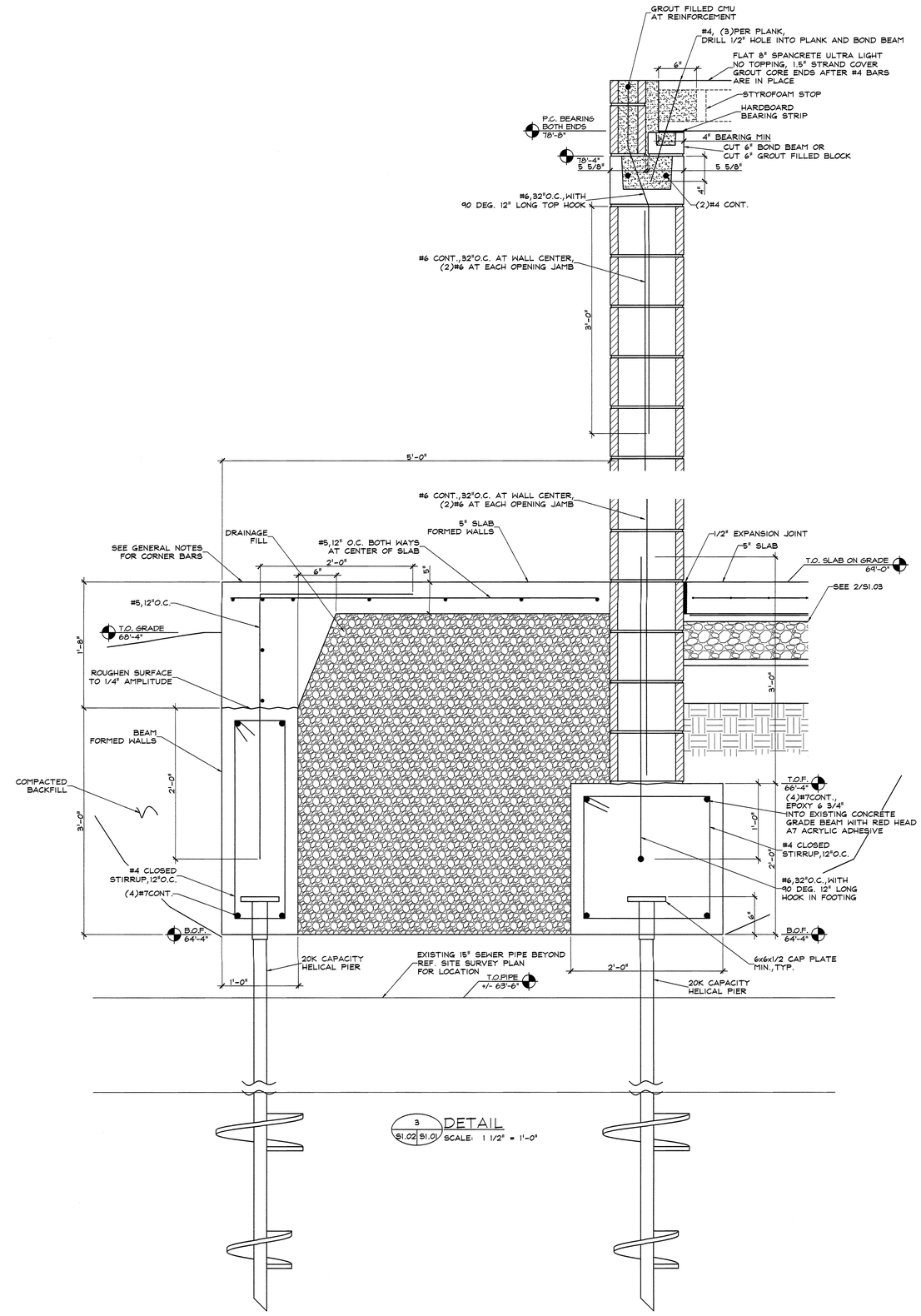

3/S1.02 S1.01 DETAIL
SCALE: 1 1/2" = 1'-0"

CONTINUUM
ARCHITECTS + PLANNERS, S.C.
P. O. BOX 1/5663
MILWAUKEE, WI 53203
T 414.270.9640
F 414.270.9595

City of Milwaukee
Department of Public Works
Infrastructure Services Division
Facilities Development & Management Services

structural plans prepared by:
STRASS-MAGUIRE&ASS.
CIVIL*STRUCTURAL*
*INDUSTRIAL*ENGINEERS
6512 WEST MEQUON ROAD
MEQUON, WISCONSIN 53092
P: 262.242.5050 F: 262.242.5055
Strass-Maguire Project No. 12-160

SANITATION HEADQUARTERS BUILDING
2300 SOUTH 1ST STREET
MILWAUKEE, WI 53215

SANITATION HEADQUARTERS RENOVATION
PLAN & SECTIONS

ISSUE	DATE	REMARKS
-		
-		
-		
-		
-		
-		
-		
-		
-		
-		

ARCHITECT JOB#: 120905
CITY PROJECT#: BU11091119
DATE: 02/01/2013
ISSUE: ISSUED FOR BID

S1.02

© Copyright 2013, Continuum Architects + Planners S.C.

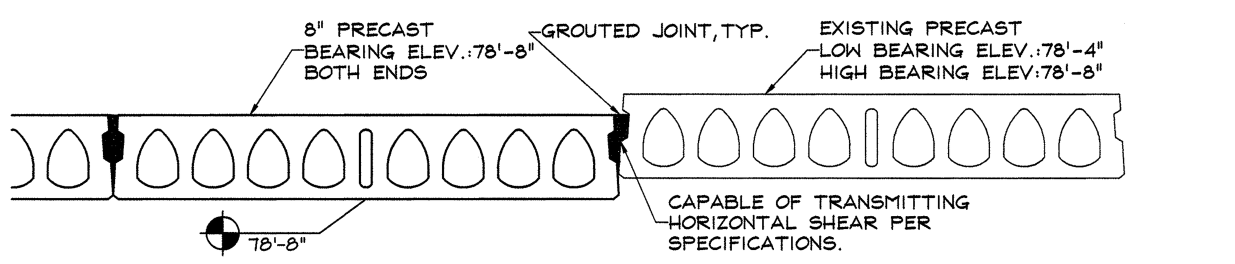

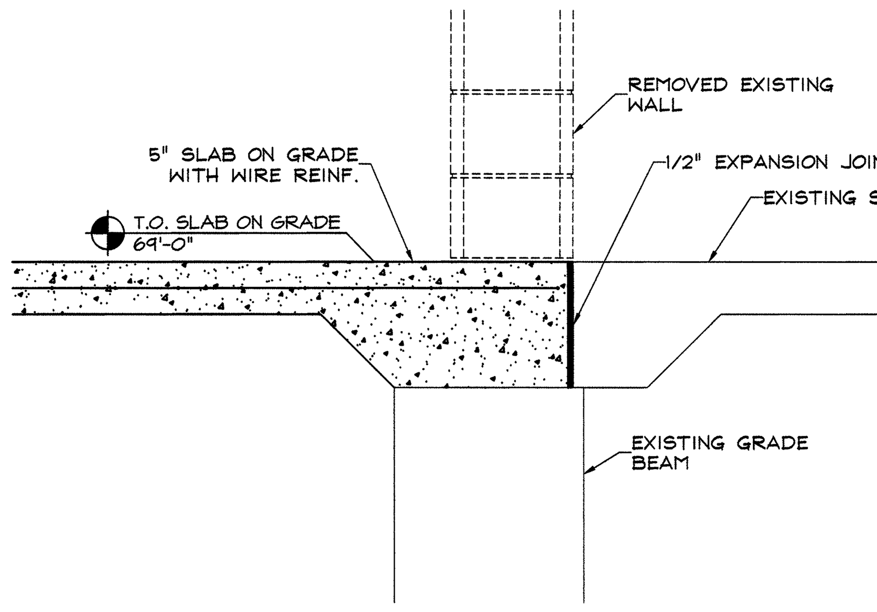

1 S1.03 S1.01 DETAIL
SCALE: 1" = 1'-0"

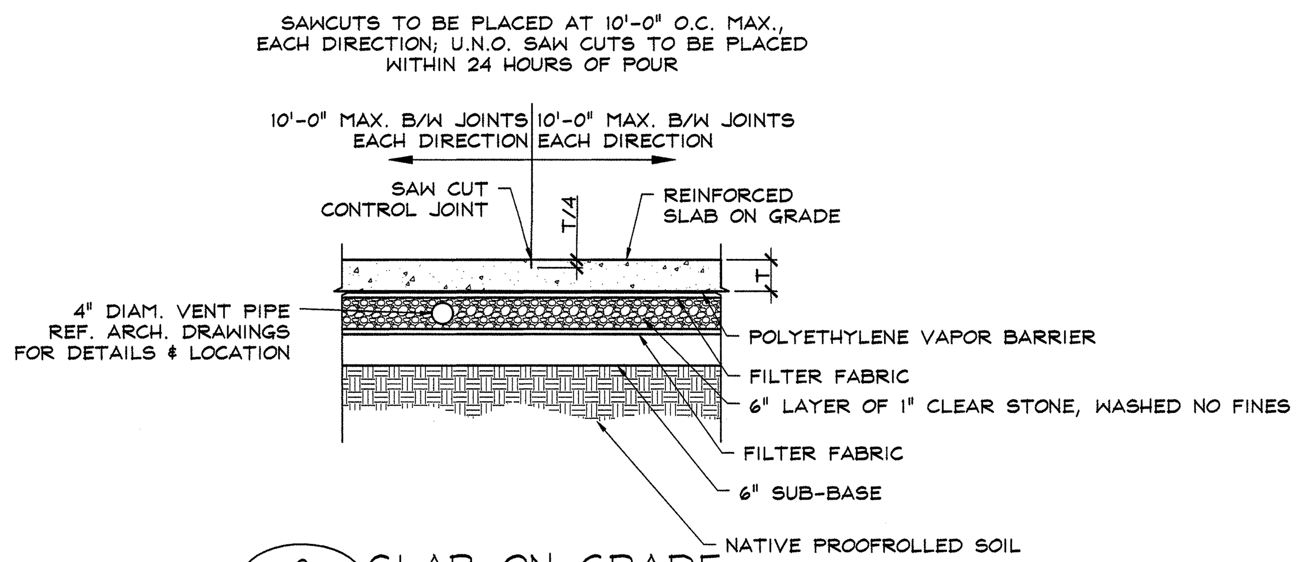

2 S1.03 S1.02 SLAB ON GRADE
SCALE: 1/2" = 1'-0"

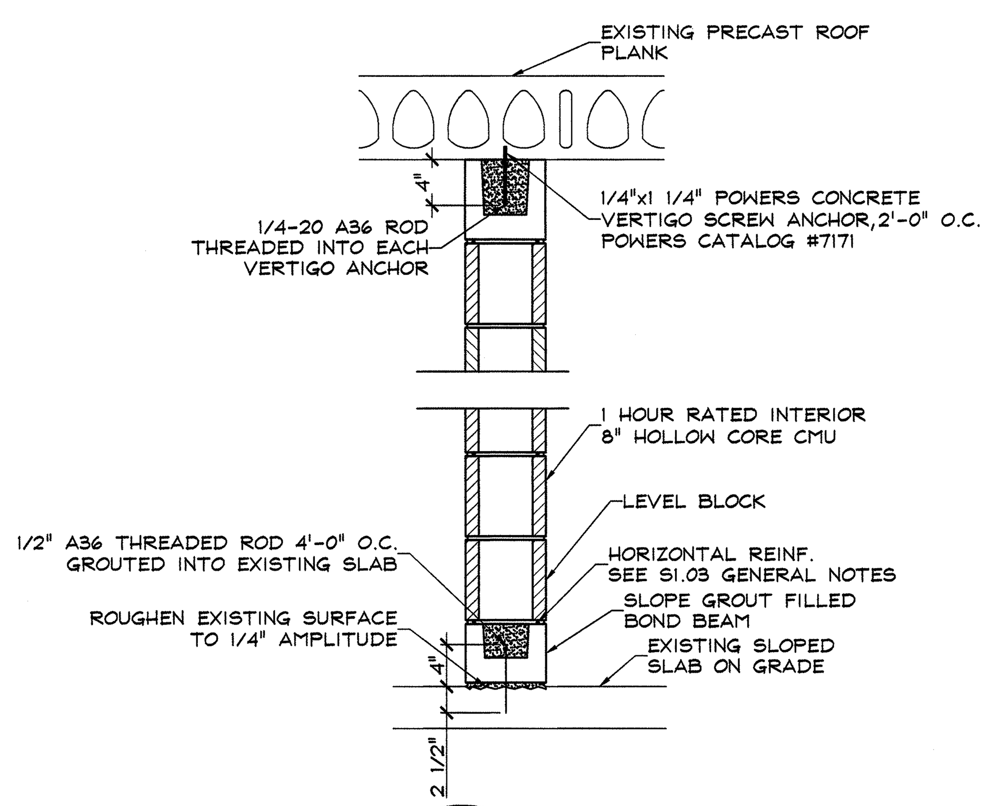

3 S1.03 S1.02 DETAIL
SCALE: 1" = 1'-0"

GENERAL NOTES

SECTION 01000

1. THE FOLLOWING GENERAL AND SPECIFIC NOTES SHALL APPLY EQUALLY TO ALL CONTRACTORS, SUB-CONTRACTORS AND SUPPLIERS ENGAGED IN EXECUTION OF THE WORK SHOWN ON THESE PLANS. THESE NOTES SUPPLEMENT AND ARE MADE A PART OF THE CONTRACT DOCUMENTS.
2. ALL CONSTRUCTION SHALL BE EXECUTED IN CONFORMANCE WITH THE FOLLOWING:
   -PLANS
   -STATE OF WISCONSIN BUILDING AND SAFETY CODES
   -GOVERNING LOCAL AND MUNICIPAL CODES
   CONCRETE CONSTRUCTION:
   -AMERICAN CONCRETE INSTITUTE
   MASONRY:
   -NATIONAL CONCRETE MASONRY ASSOCIATION & AMERICAN CONCRETE INSTITUTE
   STRUCTURAL AND MISCELLANEOUS STEEL WORK:
   -AMERICAN INSTITUTE OF STEEL CONSTRUCTION, CODE OF STANDARD PRACTICE
   COLD FORMED STEEL: AMERICAN IRON & STEEL INSTITUTE, COLD FORMED STEEL DESIGN MANUAL.
   WOOD:
   -NATIONAL DESIGN SPECIFICATION FOR WOOD CONSTRUCTION AND MANUAL FOR ENGINEERED WOOD CONSTRUCTION
   - AFPA AMERICAN WOOD COUNCIL
   ELECTRICAL-NATIONAL ELECTRICAL CODE
   CONTRACTOR SHALL INSURE FAMILIARITY OF THE ABOVE ITEMS. ARCHITECT AND/OR ENGINEER OBSERVATIONS SHALL BE IN CONFORMANCE WITH THE ABOVE.
3. CONTRACTOR TO CROSS CHECK DIMENSIONS AND ELEVATIONS BETWEEN ARCHITECTURAL, MECHANICAL AND STRUCTURAL PLANS. ARCHITECT/ENGINEER TO BE NOTIFIED OF ANY VARIANCE BEFORE CONTRACTOR BEGINS WORK. ALL EQUIPMENT SUPPORTS AND ANCHORAGES TO BE CROSS CHECKED WITH MANUFACTURER'S DRAWINGS. CONTRACTOR SHALL VERIFY ALL PROFILES, HEIGHTS AND DIMENSIONS AT PROJECT PRIOR TO FABRICATION OF ANY MATERIAL AND INFORM THE ENGINEER OF ANY DISCREPANCIES OR FRAMING INTERFERENCES.
4. REFER TO ENGINEERING AND MECHANICAL PLANS FOR ADDITIONAL DETAILS OF CONSTRUCTION.
5. CONTRACTOR TO COORDINATE WITH OTHER TRADES TO PROVIDE OPENINGS IN WALLS, FLOORS, ROOFS, ETC. IN NO CASE SHALL STRUCTURAL ALTERATIONS OR WORK AFFECTING A STRUCTURAL MEMBER BE MADE, UNLESS APPROVED BY THE STRUCTURAL ENGINEER. MECHANICAL TRADES MUST SUBMIT LAYOUTS OF ALL SLEEVES PASSING THROUGH STRUCTURAL MEMBERS FOR ENGINEERS APPROVAL.
6. SHOP DRAWINGS - ARCHITECT OR ENGINEER REVIEW DOES NOT RELIEVE THE CONTRACTOR OF ANY RESPONSIBILITY FOR CORRECTNESS OR FIT. SHOP DRAWINGS MUST CLEARLY SHOW DETAILS FOR ACCURATE PLACING OF REINFORCING STEEL, STRUCTURAL STEEL, PRECAST CONCRETE, ETC.
7. DESIGN DATA:

LIVE LOADS	
OFFICE	50 PSF
SNOW LOADING	
FLAT ROOF SNOW LOAD	pf=23 PSF
SNOW EXPOSURE FACTOR	Ce=1.0
SNOW LOAD IMPORTANCE FACTOR	I=1.0
THERMAL FACTOR	Ct=1.1
WIND LOADING	
BASIC WIND SPEED	V=90MPH
WIND IMPORTANCE FACTOR	I=1.0
WIND EXPOSURE	B
WIND PRESSURE (ANY DIRECTION)	12.8PSF (MWFRS)

CRITERIA:

CONCRETE:	f'c = 4000 PSI
SLABS ON GRADE	f'c = 4000 PSI
PRESTRESSED CONCRETE	f'c = PER MFG'S SPECS.

ALL EXPOSED CONCRETE TO BE AIR-ENTRAINED

MASONRY f'm = 2000 PSI
REINFORCING STEEL #3 & LARGER A615-6 Fy = 60000 PSI
STRUCTURAL STEEL BEAMS ASTM A992 Fy = 50000 PSI
MISC. STEEL SHAPES, PLATES & ANGLES ASTM A36 Fy = 36000 PSI
TUBE STEEL - ASTM A500 GD B Fy = 46000 PSI
HOLLOW CONC. MASONRY UNITS ASTM C-90 GRADE N-II
SOIL BEARING CAPACITY: PROOFROLL SEE SPECIFICATIONS

SECTION 02200 EARTH WORK (SEE SPECIFICATIONS)

SECTION 03000 REINFORCED CONCRETE

1. ALL CONCRETE SHALL BE STONE OR GRAVEL CONCRETE TO TEST AS REQUIRED IN SECTION 01000 IN STANDARD 6x12 IN. CYLINDERS AT 28 DAYS. ALL CONCRETE EXPOSED TO WEATHER TO BE AIR-ENTRAINED.
2. REINFORCING STEEL SHALL BE OF ASTM GRADE REQUIRED IN SECTION 01000 WITH DEFORMATIONS COMPLYING WITH ASTM, A305 LATEST EDITION. DEFORMATIONS OR OTHER SYMBOL ROLLED INTO BAR AT MILL SHALL CLEARLY INDICATE THE GRADE OF STEEL. REINFORCING TO BE EPOXY COATED IN ACCORDANCE WITH PROJECT SPECIFICATIONS.
3. ALL DETAILING, FABRICATION AND ERECTION OF REINFORCING BARS, UNLESS OTHERWISE NOTED, MUST FOLLOW THE ACI "MANUAL OF STANDARD PRACTICE FOR DETAILING REINFORCED CONCRETE STRUCTURES (ACI 315 LATEST EDITION)".
4. SPLICES IN CONTINUOUS REINFORCING, COLUMN VERTICALS, WALL BARS, DOWELS, SHALL BE LAPPED 38 DIAMETERS FOR #6 BARS AND SMALLER. SPLICES SHALL BE LAPPED 47 DIAMETERS FOR #7 BARS AND LARGER. OTHER LAPPED SPLICES SHALL BE PERMITTED ONLY WHERE SHOWN. IN GROUPS OF PARALLEL BARS, SPLICES SHALL BE STAGGERED.
5. TERMINATE NON-CONTINUOUS TOP AND BENT BARS IN ACCORDANCE WITH ACI BY A HOOK IF REQUIRED EMBEDMENT CANNOT BE OBTAINED.
6. PROVIDE ADDITIONAL 40 DIAMETER LENGTH EACH WAY BENT CORNER BARS, OF SAME SIZE AND SPACING AS HORIZONTAL BARS, AT ALL CORNER WALL INTERSECTIONS, UNLESS OTHERWISE NOTED.
7. WHERE OPENINGS IN SLABS OCCUR, PROVIDE AN EQUIVALENT AREA OF STEEL, USING TYPICAL SLAB BARS ON EACH SIDE OF OPENING. PROVIDE TWO #5 BARS AT RIGHT ANGLES TO MAIN REINFORCING AND #5 DIAGONAL BARS, TWO AT TOP AND TWO AT BOTTOM, AT EACH CORNER OF OPENING.
8. ALL CONCRETE ACCESSORIES SUCH AS CHAIRS, TIES, ETC., THAT COME IN CONTACT WITH FORMWORK ON EXPOSED CONCRETE SHALL BE GALVANIZED OR PLASTIC COATED.
9. SLABS ON GRADE SHALL HAVE 6x6 - W2.9/W2.9 WELDED WIRE REINFORCING MESH UNLESS OTHERWISE INDICATED ON PLANS. ALL MESH TO BE LAPPED A MINIMUM OF 6 INCHES. SEE DRAWINGS FOR CONSTRUCTION AND CONTROL JOINT LOCATIONS AND DETAILS. WELDED WIRE REINFORCING TO BE EPOXY COATED OR HOT DIPPED GALVANIZED IN ACCORDANCE WITH PROJECT SPECIFICATIONS.
10. WHERE REINFORCING IS CALLED FOR IN A CERTAIN PORTION OF THE BUILDING, IT SHALL BE DUPLICATED IN SIMILAR PORTIONS OF THE BUILDING, UNLESS OTHERWISE SHOWN.
11. CONCRETE REINFORCING PROTECTION:

BOTTOM OF FOOTINGS, CONCRETE CAST AGAINST EARTH	3"
SLABS, PIERS, WALLS EXPOSED TO GROUND OR WEATHER	
#5 AND SMALLER	1 1/2"
#6 AND LARGER	2"
INTERIOR SLABS, WALLS	1"
BEAMS, GIRDERS, COLUMNS - PRIMARY REINFORCEMENT	1-1/2"
TIES, STIRRUPS, SPIRALS	1-1/2"

12. NO HORIZONTAL CONSTRUCTION JOINTS TO BE MADE IN STRUCTURAL SLABS OR BEAMS UNLESS SHOWN OTHERWISE. ANY STOP IN CONCRETE WORK MUST BE MADE AT CENTER OF SPAN WITH VERTICAL KEYED BULKHEADS. LOCATION OF ALL CONSTRUCTION JOINTS TO BE APPROVED BY ENGINEER PRIOR TO POURING CONCRETE.
13. CAMBER ALL FORMWORK APPROXIMATELY 1/4" PER 10'-0" SPAN.
14. ALL EXPOSED CORNERS OF CONCRETE BEAMS AND COLUMNS TO HAVE A 3/4" x 45 DEGREE CHAMFER.
15. ALL SHORING TO BE REMOVED OR RELEASED SUFFICIENTLY TO ALLOW FOR FULL DEAD LOAD DEFLECTION PRIOR TO INSTALLING PARTITIONS UNLESS OTHERWISE NOTED ON PLANS.
16. ALL CONDUIT AND PIPING TO BE INDIVIDUALLY SLEEVED UNLESS SHOWN OTHERWISE OR APPROVED BY ARCHITECT AND/OR ENGINEER.
17. AT ALL CONCRETE WALLS, BEAMS AND COLUMNS RECEIVING MASONRY VENEER OF ONE FOOT OR HIGHER AND MASONRY WALLS ABUTTING CONCRETE WALLS AND COLUMNS, PROVIDE MASONRY ANCHOR SLOTS IN CONCRETE WITH MAXIMUM SPACING OF 2'-0" C/C. SEE ARCHITECTURAL PLANS FOR BRICK SHELF ELEVATIONS.
18. CONCRETE CONTRACTOR TO PROVIDE AND COORDINATE WITH ALL OTHER TRADES FOR SIZE AND LOCATIONS OF ANY AND ALL OPENINGS, SLEEVES, ETC., OCCURRING IN BASEMENT WALLS, FOOTINGS AND FLOORS.
19. FOR ALL EXPOSED CONCRETE WALL FINISHES, SEE ARCHITECTURAL DRAWINGS AND SPECIFICATIONS.
20. PROVIDE APPROVED EXPANSION JOINT MATERIAL WHERE SLABS ABUT WALLS, COLUMNS AND OTHER VERTICAL SURFACES, UNLESS OTHERWISE NOTED.

SECTION 03400 PRECAST PLANK

1. PRECAST PLANK SHALL BE OF SIZES AND DESIGNATIONS AS SCHEDULED.
2. PRECAST PLANK SHALL HAVE A MINIMUM BEARING OF 4" ON CONCRETE MASONRY.
3. PRECAST ROOF PLANK SUPPLIER TO FURNISH AND INSTALL, REINFORCING ROD ANCHORS, WELDING INSERTS AND GALVANIZED CEILING HANGERS WHERE REQUIRED.
4. PRECAST MANUFACTURERS TO FIELD MEASURE CONSTRUCTION BEFORE FABRICATION OF MATERIAL. APPROVED SHOP DRAWINGS DO NOT RELIEVE CONTRACTOR OF THIS RESPONSIBILITY.
5. SHOP DRAWINGS SHALL SHOW SPACING OF PLANK, REINFORCING, ACCESSORIES, SEATING DETAILS AND ANY OTHER DETAILS AS REQUIRED. SHOP DRAWINGS MUST STATE SUPERIMPOSED CAPACITY OF ALL PLANK, AND ANTICIPATED CAMBER BOTH SHORT AND LONG TERM.

SECTION 04200 CONCRETE MASONRY

1. ALL MASONRY CONSTRUCTION SHALL CONFORM TO A.C.I. 530.1 SPECIFICATIONS FOR MASONRY STRUCTURES.
2. ALL CONCRETE MASONRY WALLS SHALL BE REINFORCED WITH WIRE IN HORIZONTAL JOINTS, AT 16" ON CENTER IN A VERTICAL DIMENSION FOR EXTERIOR WALLS AND 24" ON CENTER FOR INTERIOR WALLS. USE GALVANIZED NO. 9 GA SIDE RODS AND TIE RODS UNLESS NOTED OTHERWISE IN SPECIFICATIONS.
3. MASONRY SHALL BE ANCHORED TO SUPPORTING BEAMS AND COLUMNS UNLESS NOTED OTHERWISE. CONCRETE MASONRY UNITS SHALL BE SECURED TO CONCRETE WALLS AND COLUMNS WITH DOVETAIL ANCHOR SLOTS WITH A MAXIMUM SPACING OF 24" ON CENTER.
4. WHERE STRUCTURAL MEMBERS BEAR ON CONCRETE MASONRY FILL CORES OF BLOCK 8" DEEP MINIMUM WITH GROUT CONFORMING TO ASTM C476, 2500 PSI COMPRESSIVE STRENGTH PER ASTM C1019. (f'c = 2500 P.S.I).
5. IN MASONRY BEARING WALLS, NO CHASE, RISERS, CONDUIT OR TOOTHING OF MASONRY SHALL OCCUR WITHIN 1'-6" OF CENTERLINE OF BEAM BEARING OR LOAD CONCENTRATION.
6. WHERE PRECAST CONCRETE PLANK BEARS ON MASONRY WALLS, MASONRY CONTRACTOR TO PROVIDE CONTINUOUS BOND BEAM BLOCK WITH TWO #4's CONTINUOUS BOTTOM, UNLESS NOTED OTHERWISE.
7. BEAMS AND LINTELS, UNLESS NOTED OTHERWISE, SHALL HAVE 8" MINIMUM BEARING AT EACH END.
8. VERTICAL REINFORCING IN MASONRY WALLS SHALL BE LAPPED 48 BAR DIAMETERS MINIMUM WHERE SPLICED. MINIMUM EMBEDMENT OF BARS IN TENSION SHALL BE 48 BAR DIAMETERS.
9. WHERE MASONRY WALLS ARE REINFORCED, THE CELLS SHALL BE FILLED WITH GROUT CONFORMING TO ASTM C476. STRENGTH OF GROUT, DETERMINED IN ACCORDANCE WITH ASTM C1019 SHALL BE AT LEAST 2500 PSI. (f'c = 2500 P.S.I.).
10. WHERE CELLS ARE GROUTED, FACE SHELL AND WEB FORMING CELLS SHALL BE FULL BEDDED TO PREVENT LEAKAGE OF GROUT.
11. VERTICAL CELLS TO BE GROUTED SHALL HAVE VERTICAL ALIGNMENT SUFFICIENT TO MAINTAIN A CLEAR, UNOBSTRUCTED CONTINUOUS CELL.
12. PLACE REINFORCING BEFORE GROUTING.
13. GROUT TO BE PLACED BY EITHER THE LOW LIFT OR HIGH LIFT GROUTING METHOD RECOMMENDED BY THE NATIONAL CONCRETE MASONRY ASSOCIATION.
14. IF THE LIFT EXCEEDS FOUR FEET, (HIGH LIFT GROUTING), PROVIDE CLEAN- OUT OPENINGS FOR INSPECTION BEFORE GROUTING. THE GROUTING SHALL BE COMPLETED IN FOUR FOOT LIFTS AND VIBRATED. WAIT 15 TO 60 MINUTES BEFORE POURING NEXT FOUR FOOT LIFT AND VIBRATING 12" TO 18" INTO PRECEDING LIFT.
15. DETERMINE COMPRESSIVE STRENGTH OF MASONRY PER ACI 530.1. DETERMINE THE COMPRESSIVE STRENGTH OF MASONRY BY THE PRISM TEST METHOD PER ACI 530.1 WHEN REQUIRED BY THE SPECIFICATIONS OR NOTES ON DRAWINGS.
16. PROVIDE REINFORCING IN ACCORDANCE WITH SECTION 01000.

CONTINUUM
ARCHITECTS + PLANNERS, S.C.
P. O. BOX 510663
MILWAUKEE, WI 53203
T 414.220.9640
F 414.220.9595
ARCHITECTURE · MASTERPLANNING · INTERIORDESIGN

City of Milwaukee
Department of Public Works
Infrastructure Services Division
Facilities Development & Management Services

structural plans prepared by:
STRASS-MAGUIRE&ASS.
CIVIL*STRUCTURAL*
*INDUSTRIAL*ENGINEERS
6512 WEST MEQUON ROAD
MEQUON, WISCONSIN 53092
P: 262.242.5050 F: 262.242.5055
Strass-Maguire Project No. 12-160

SANITATION HEADQUARTERS BUILDING
2363 SOUTH 35TH STREET
MILWAUKEE, WI 53215

SANITATION HEADQUARTERS RENOVATION
DETAILS & GENERAL NOTES

ISSUE	DATE	REMARKS
-		
-		
-		
-		
-		
-		
-		
-		
-		
-		

ARCHITECT JOB#: 120905
CITY PROJECT#: BU11091119
DATE: 02/01/2013
ISSUE: ISSUED FOR BID

S1.03

c Copyright 2013,
Continuum Architects + Planners S.C.

PACKAGED ROOFTOP AIR CONDITIONING UNIT SCHEDULE

TAG	SERVES	SUPPLY FAN / MOTOR DATA				COOLING DATA							HEATING DATA							ELECTRICAL DATA						WEIGHT (LBS)	MANUFACTURER AND MODEL NO.	NOTES
		TOTAL AIRFLOW (CFM)	VENTILATION CFM	E.S.P. (IN. H_2O)	MOTOR HP	COOLING MEDIUM	TONS	TOTAL CAPACITY MBH	SENSIBLE CAPACITY MBH	AMBIENT TEMP DB (°F)	E.A.T. DB/WB (°F)	L.A.T. DB/WB (°F)	HEATING MEDIUM	NUMBER OF BURNERS	STAGES OF HEAT	HEATING INPUT (MBH)	HEATING OUTPUT (MBH)	E.A.T. (°F)	L.A.T. (°F)	VOLTS/ø/Hz	MCA	MAX. FUSE SIZE	FLA	LRA	SEER			
RTU-1	WEST OFFICE SPACE	1200	150	0.75	0.75	R-410A	3	36.39	24.11	95	77.4/66.2	60/56	NATURAL GAS	2	X	80	64	60	109.6	208-230/1/60	26.7	40	6.0	–	15	750	TRANE YHC-036E	SEE GENERAL NOTES
RTU-2	EAST OFFICE SPACE	1200	150	0.75	0.75	R-410A	3	36.39	24.11	95	77.4/66.2	60/56	NATURAL GAS	2	X	80	64	60	109.6	208-230/1/60	26.7	40	6.0	–	15	750	TRANE YHC-036E	SEE GENERAL NOTES
RTU-3	ASSEMBLY AREA	1600	440	0.75	1	R-410A	4	47.86	31.32	95	79/67.6	61/58	NATURAL GAS	2	X	80	64	48	85.3	208-230/1/60	37.3	50	7.6	–	15	935	TRANE YHC-048F	SEE GENERAL NOTES

GENERAL NOTES:
1. UNITS SHALL BE ENERGY STAR CERTIFIED. REFER TO SPECIFICATIONS FOR OTHER REQUIREMENTS.

ELECTRIC BASEBOARD RADIATION SCHEDULE

TAG	SERVICE	LOCATION	HEATING CAPACITY (WATTS)	ELECTRIC COIL DATA		PHYSICAL CHARACTERISTICS			MANUFACTURER	MODEL NUMBER	REMARKS
				VOLTAGE-PH-HZ (V-ø-HZ)	CURRENT (AMPS)	MOUNTING LOCATION	ENCLOSURE LENGTH	ENCLOSURE MATERIAL/ FINISH			
EBB-1	PERIMETER HEATING	MENS TOILET 7	1000	240V-1ø-60	4.2	WALL	4'-0"	STEEL/ POWDER COAT	BERKO	BKOC2544W	W/INTEGRAL THERMOSTAT AND DISCONNECT SWITCH
EBB-2	PERIMETER HEATING	WOMEN'S TOILET 8	1000	240V-1ø-60	4.2	WALL	4'-0"	STEEL/ POWDER COAT	BERKO	BKOC2544W	W/INTEGRAL THERMOSTAT AND DISCONNECT SWITCH

ELECTRIC WALL HEATER SCHEDULE

TAG	SERVICE	LOCATION	MOUNTING	DISCHARGE	HEATING CAPACITY (WATTS)	AIRFLOW (CFM)	ELECTRIC COIL DATA			SHIPPING WEIGHT (LBS)	MANUFACTURER	MODEL NUMBER	REMARKS
							VOLTAGE-PH-HZ (V-ø-HZ)	CURRENT (AMPS)	NUMBER OF CONTROL STEPS				
EWH-1	PERIMETER HEATING	VESTIBULE 1	FULLY RECESSED	HORIZONTAL	3000	100	240V-1ø-60	12.5	*	*	BERKO	FRC4027	SEE NOTE 1
EWH-2	PERIMETER HEATING	ENTRY 10	FULLY RECESSED	HORIZONTAL	3000	100	240V-1ø-60	12.5	*	*	BERKO	FRC4027	SEE NOTE 1

NOTES:
1. ELECTRIC WALL HEATER SHALL BE COMPLETE WITH FRONT PANEL, HEATER ASSEMBLY AND BACK BOX AND SHALL INCLUDE INTEGRAL DISCONNECT SWITCH AND THERMOSTAT BY UNIT MANUFACTURER.

FAN SCHEDULE

TAG	SERVICE	LOCATION	TYPE	DRIVE (BELT OR DIRECT)	AIR QUANTITY (CFM)	TOTAL PRESSURE (IN WG)	MOTOR				SHIPPING WEIGHT (LBS)	MANUFACTURER AND MODEL NO.	REMARKS
							ABSORBED POWER (BHP)	RATED POWER (HP)	SPEED (RPM)	V-ø-Hz			
EF-1	TOILET/GENERAL EXHAUST	ROOF	CENTRIFUGAL	BELT	600	0.5	0.17	1/6	1670	120V-1ø-60	60	GREENHECK GB-081	

AIR DISTRIBUTION DEVICE SCHEDULE

TAG	TYPE	DIMENSION DATA			MATERIAL	FRAME TYPE	INTEGRAL DAMPER	FINISH OR COLOR	MANUFACTURER AND MODEL NO.	REMARKS
		FACE SIZE	CFM RANGE	NECK SIZE						
EG-1	EXHAUST GRILLE	16x16	160-300	14x14	ALUM.	SURFACE	NO	WHITE	TITUS 350FL	
EG-2	EXHAUST GRILLE	12x12	80-150	10x10	ALUM.	SURFACE	NO	WHITE	TITUS 350FL	
EG-3	EXHAUST GRILLE	10x10	0-75	8x8	ALUM.	SURFACE	NO	WHITE	TITUS 350FL	
EG-4	EXHAUST GRILLE	14x8	0-75	12x6	ALUM.	SIDEWALL	NO	WHITE	TITUS 350FL	
LSD-1	LINEAR SLOT DIFFUSER	(2) 3/4" SLOTS 4'-0" LONG	0-120	6"ø	ALUM.	LAY-IN	NO	WHITE	TITUS TBD-30	WITH FACTORY PLENUM
RG-1	RETURN GRILLE	NECK + 3/4"	0-1200	42x12	ALUM.	SIDEWALL	NO	WHITE	TITUS 350FL	WALL MOUNTED
RG-2	RETURN GRILLE	24x24 (LAY-IN)	0-1200	22x22	ALUM.	LAY-IN	NO	WHITE	TITUS 350FL	MOUNT IN LAY-IN TYPE CEILING GRID
SG-1A	SUPPLY GRILLE FOR MOUNTING ON ROUND DUCTS	14x8	0-200	12x6	ALUM.	SURFACE	YES	WHITE	TITUS S301FL	MOUNTED ON 10"ø DUCT
SG-1B	SUPPLY GRILLE FOR MOUNTING ON ROUND DUCTS	14x8	0-200	12x6	ALUM.	SURFACE	YES	WHITE	TITUS S301FL	MOUNTED ON 12"ø DUCT
DG-1	DOOR RETURN GRILLE	16x16	0-300	14x14	ALUM.	SURFACE	NO	–	TITUS CT-700	

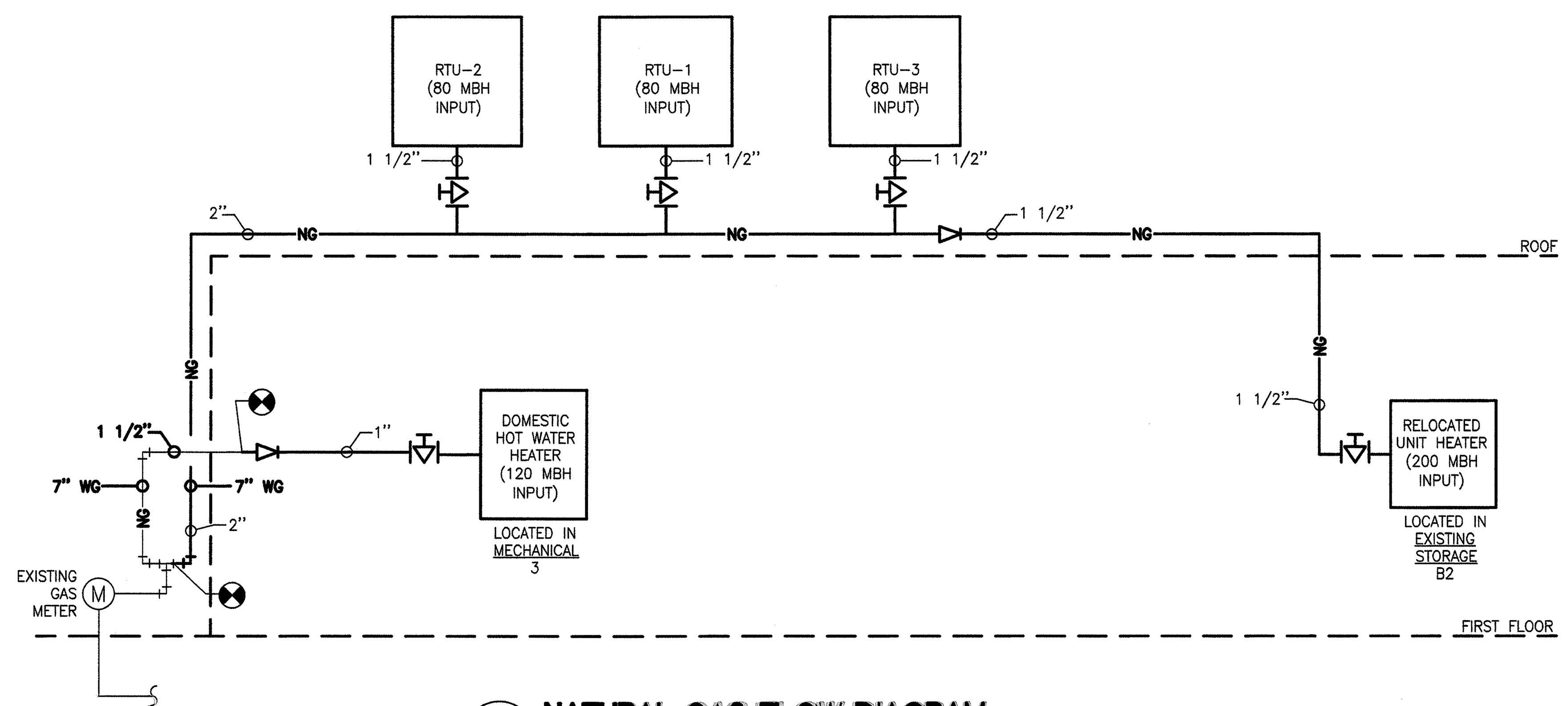

1 M0.01 **NATURAL GAS FLOW DIAGRAM**
NOT TO SCALE

DUCTWORK SYMBOLS

DESIGNATION	DESCRIPTION
	RECTANGULAR SUPPLY DUCT ELBOW TURNED DOWN
	RECTANGULAR SUPPLY DUCT ELBOW TURNED UP
	RECTANGULAR EXHAUST/RETURN DUCT ELBOW TURNED DOWN
	RECTANGULAR EXHAUST/RETURN DUCT ELBOW TURNED UP
	ROUND DUCT ELBOW TURNED DOWN
	ROUND DUCT ELBOW TURNED UP
20x12	DUCT AIR PATH SIZE, FIRST FIGURE IS SIDE SHOWN
	FLEXIBLE DUCT
36"x12"	DUCT SECTION, POSITIVE PRESSURE, FIRST FIGURE IS TOP
36"x12"	DUCT SECTION, NEGATIVE PRESSURE, FIRST FIGURE IS TOP
20x10 15x8	TRANSITION WITH DUCT SIZE
	RECTANGULAR ELBOWS WITH TURNING VANES
	RECTANGULAR ELBOWS WITHOUT TURNING VANES
	CEILING-MOUNTED SUPPLY AIR TERMINAL DEVICE
	CEILING-MOUNTED EXHAUST/RETURN AIR TERMINAL DEVICE
	VOLUME DAMPER

PIPEWORK FITTINGS

NOTE:
ALL FITTINGS SHOWN BELOW ARE FOR USE IN SCREWED PIPING SYSTEMS UNO. REFER TO SPECIFICATION FOR SPECIFIC PIPING SYSTEM REQUIREMENTS (SCREWED VS. FLANGED VS. WELDED VS. SOLDERED).

DESIGNATION	DESCRIPTION
	CAP
	CONNECTION, BOTTOM
	CONNECTION, TOP
	ELBOW, 90°
	ELBOW TURNED UP
	ELBOW TURNED DOWN
	ELBOW, REDUCING (SHOW SIZES)
	ELBOW, LONG RADIUS
	ELBOW, SIDE OUTLET, OUTLET UP
	ELBOW, SIDE OUTLET, OUTLET DOWN
	LATERAL BRANCH
	REDUCER, CONCENTRIC
	INCREASER, CONCENTRIC
	REDUCER, ECCENTRIC STRAIGHT INVERT
	REDUCER, ECCENTRIC STRAIGHT CROWN
	TEE
	TEE, OUTLET UP
	TEE, OUTLET DOWN
	TEE, SIDE OUTLET, OUTLET UP
	TEE, SIDE OUTLET, OUTLET DOWN
	UNION, SCREWED

GENERAL NOTES

1. TO AVOID INTERFERENCE WITH NEW WORK, RELOCATE EXISTING PIPING, CONDUIT, EQUIPMENT, DUCTWORK, ETC. THAT WILL REMAIN IN SERVICE. CONTRACTOR IS RESPONSIBLE FOR VERIFYING EXISTING FIELD CONDITIONS.
2. MECHANICAL CONTRACTOR SHALL BE RESPONSIBLE FOR ALL GENERAL WORK SUCH AS CUTTING, PATCHING, AND SEALING OF WALLS, FLOORS, AND CEILINGS ASSOCIATED WITH THEIR OWN WORK ON THIS PROJECT.
3. ROOF OPENINGS BY GENERAL CONTRACTOR. CONFIRM OPENING SIZE ALLOWED IN NEW AND EXISTING PRECAST CONCRETE PLANKS AND COORDINATE WITH ACTUAL EQUIPMENT PURCHASED.
4. IF HAZARDOUS MATERIALS ARE IN ANY WAY SUSPECTED, INFORM THE OWNER IMMEDIATELY AND SUSPEND WORK ON THAT PORTION OF WORK.
5. EXISTING CONDITIONS ARE SHOWN BASED ON INFORMATION OBTAINED FROM FIELD SURVEYS AND EXISTING BUILDING DOCUMENTS. CONTRACTOR SHALL VERIFY EXISTING CONDITIONS AND REPORT ANY CONFLICTS TO ENGINEER BEFORE PROCEEDING.
6. CONTRACTOR SHALL PERFORM ALL DEMOLITION WORK REQUIRED TO COMPLETE THE INTENDED SCOPE OF WORK, WHETHER SHOWN ON THE DRAWINGS OR NOT. REMOVE ALL EXISTING PIPING & APPURTENANCES THAT ARE ABANDONED OR NOT TO BE USED.
7. ELECTRICAL CONTRACTOR, (CITY OF MILWAUKEE ELECTRICIANS) TO DISCONNECT POWER, REMOVE UNUSED POWER WIRING, CONDUITS, ACCESSORIES, ETC. TO EXISTING EQUIPMENT THAT IS TO BE REMOVED.
8. MECHANICAL CONTRACTOR TO DISCONNECT CONTROL WIRING TO EXISTING CONTROL ITEMS THAT ARE TO BE REMOVED. REMOVE CONDUIT, WIRING, AND CONTROL DEVICES THAT ARE NOT TO BE REUSED.
9. THIS CONTRACTOR SHALL REMOVE ALL DEBRIS RESULTING FROM DEMOLITION AND INSTALLATION OF NEW WORK. THE WORK AREAS SHALL BE KEPT CLEAN AT ALL TIMES TO THE SATISFACTION OF THE OWNER.
10. WHERE PIPING AND DUCTWORK IS DEMOLISHED, ALSO DEMOLISH ALL HANGERS AND ACCESSORIES UNLESS OTHERWISE CALLED OUT TO BE SAVED OR REINSTALLED.
11. EXISTING MECHANICAL SYSTEMS SERVE OCCUPIED AREAS. SOME OF THESE SYSTEMS MAY HAVE TO BE IN OPERATION DURING OCCUPIED PERIOD. DEMOLITION AND INSTALLATION OF NEW SYSTEMS NEED TO BE COORDINATED TO MINIMIZE DOWNTIME. SCHEDULE COORDINATION WITH OWNER FOR TYING OF NEW DUCTWORK TO EXISTING SYSTEMS.
12. LOCATION OF MECHANICAL EQUIPMENT, DUCTWORK, GRILLES AND ETC. HAVE BEEN COORDINATED TO AVOID ANY CONFLICTS WITH ELECTRICAL LIGHTING.

ABBREVIATIONS

DESIGNATION	DESCRIPTION
ABV	ABOVE
AFF	ABOVE FINISHED FLOOR
BAS	BUILDING AUTOMATION SYSTEM
BHP	BRAKE HORSEPOWER
BTU	BRITISH THERMAL UNIT
CFM	CUBIC FEET PER MINUTE
DB	DRY BULB
DDC	DIRECT DIGITAL CONTROL
EA	EXHAUST AIR
FLA	FULL LOAD AMPS
FPM	FEET PER MINUTE
FT	FEET OR FOOT
GA	GAUGE
GAL	GALLONS
GPM	GALLONS PER MINUTE
HP	HORSEPOWER
HVAC	HEATING VENTILATING AND AIR CONDITIONING
KW	KILOWATT
LRA	LOCK ROTOR AMPS
MAT	MIXED AIR TEMPERATURE
MAX	MAXIMUM
MCA	MAXIMUM CIRCUIT AMPACITY
MIN	MINIMUM
MOCP	MAXIMUM OVER CURRENT PROTECTION
NTS	NOT TO SCALE
OA	OUTDOOR AIR
PC	PLUMBING CONTRACTOR
PSI(G)	POUNDS PER SQUARE INCH (GAUGE)
RA	RETURN AIR
RH	RELATIVE HUMIDITY
RPM	REVOLUTIONS PER MINUTE
SA	SUPPLY AIR
TYP	TYPICAL
WB	WET BULB

PIPING SYSTEMS

DESIGNATION	DESCRIPTION
— NG —	NATURAL GAS

PIPEWORK SYMBOLS

DESIGNATION	DESCRIPTION
	PLUG VALVE (GAS SERVICE)
	PRESSURE REDUCING VALVE

GENERAL

DESIGNATION	DESCRIPTION
	(HEAVY LINES) – NEW PIPING/DUCTWORK/EQUIPMENT
	(THIN LINES) – EXISTING PIPING/DUCTWORK/ EQUIPMENT TO REMAIN
	(HEAVY HIDDEN LINES) – EXISTING PIPING/DUCTWORK/ EQUIPMENT TO BE DEMOLISHED
	POINT OF CONNECTION BETWEEN NEW WORK AND EXISTING
	POINT OF CONNECTION BETWEEN DEMO WORK AND EXISTING

CONTINUUM
ARCHITECTS + PLANNERS, S.C.
P.O. BOX 510663
MILWAUKEE, WI 53203
T 414.220.9640
F 414.220.9595
ARCHITECTURE – MASTER PLANNING – INTERIOR DESIGN

City of Milwaukee
Department of Public Works
Infrastructure Services Division
Facilities Development & Management Services

Consultant:
GRUMMAN/BUTKUS ASSOCIATES
Energy Efficiency Consultants and Sustainable Design Engineers
1011 North Mayfair Road
Suite 300
Wauwatosa, Wisconsin 53226
414 476.8980

Copyright ©2012 Grumman/Butkus Associates
G/BA Job Number: 12433

SANITATION HEADQUARTERS BUILDING
2363 SOUTH 35TH STREET
MILWAUKEE, WI 53215

SANITATION HEADQUARTERS RENOVATION

MECHANICAL SYMBOLS, ABBREVIATIONS AND SCHEDULES

ISSUE	DATE	REMARKS
–		
–		
–		
–		
–		
–		
–		
–		
–		
–		

ARCHITECT JOB#: 120905
CITY PROJECT#: BU11091119
DATE: 02/01/2013
ISSUE: ISSUED FOR BID

M0.01

c Copyright 2013,
Continuum Architects + Planners S.C.

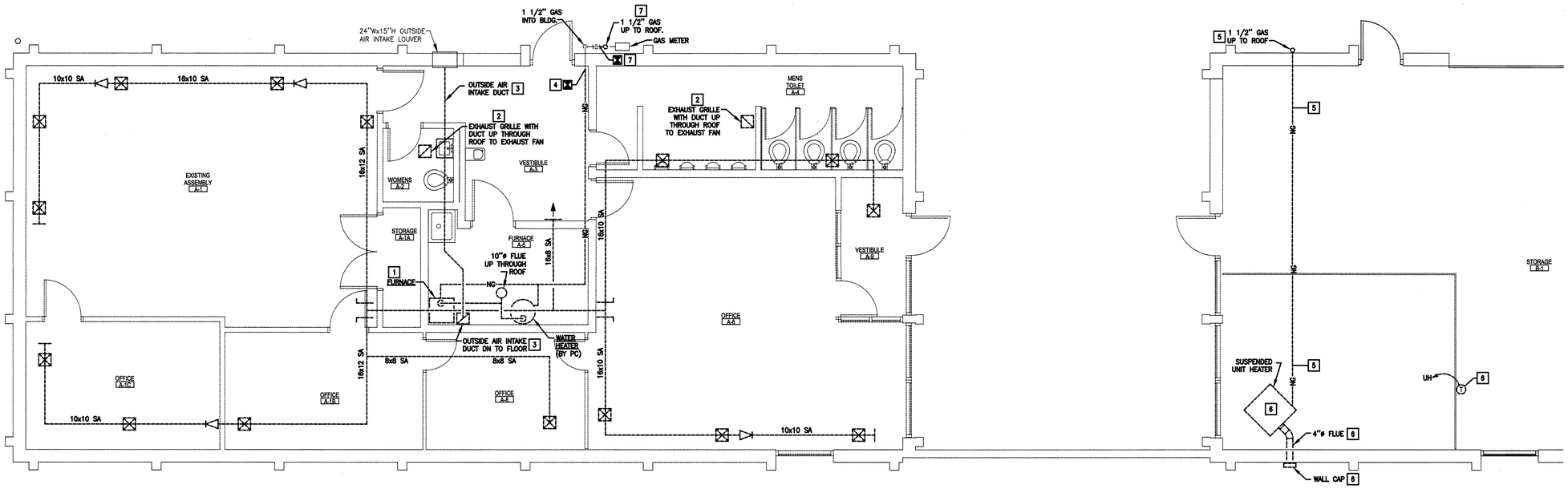

1 M2.01 **FIRST FLOOR MECHANICAL - DEMOLITION (SOUTH)** 0 1' 2' 4' 6' N

X DEMOLITION NOTES:

1. DEMOLISH EXISTING FURNACE. COORDINATE ELECTRICAL DEMOLITION WITH EC. CAP EXISTING UNDERFLOOR DUCTWORK AT FLOOR.
2. DEMOLISH EXISTING EXHAUST FAN AND DUCTWORK. COORDINATE ELECTRICAL DEMOLITION WITH EC.
3. DEMOLISH EXISTING OUTSIDE INTAKE DUCT FROM LOUVER BACK TO FURNACE. PROVIDE AN AIRTIGHT SHEETMETAL BLANK-OFF PANEL ON INSIDE FACE OF LOUVER.
4. DEMOLISH EXISTING 1 1/2" GAS LINE FROM POINT SHOWN BACK TO FURNACE.
5. DEMOLISH EXISTING 1 1/2" GAS LINE FROM UNIT HEATER. SEE M2.02/1 FOR CONTINUATION OF PIPING TO BE DEMOLISHED.
6. EXISTING UNIT HEATER, FLUE, WALL CAP AND THERMOSTAT TO BE REMOVED AND RELOCATED. SEE M2.03 FOR NEW LOCATION.
7. DEMOLISH EXISTING 1 1/2" GAS LINE FROM POINT SHOWN AND UP TO ROOF. SEE M2.02 FOR CONTINUATION OF GAS PIPING ON ROOF TO BE DEMOLISHED.

X NEW WORK NOTES:

1. 17x16 SUPPLY AND 24x14 RETURN DUCTS UP THROUGH ROOF OPENING AND ROOF CURB TO ROOFTOP UNIT CONNECTIONS. PROVIDE OFFSETS IN CURB AS NEEDED. SEE M2.02 FOR CONTINUATION OF DUCTWORK.
2. PROVIDE AN AIRTIGHT SHEETMETAL BLANK-OFF ON INSIDE FACE OF LOUVER. SEE PLAN ABOVE FOR DEMOLITION WORK.
3. PROVIDE NEW ELBOW AND REDUCER AND RUN NEW 1" GAS PIPE TIGHT TO WALL TO WATER HEATER (BY PC) IN MECHANICAL 3. SEE PLAN ABOVE FOR DEMOLITION WORK.
4. RUN NEW GAS PIPE UP ALONG SIDE OF BUILDING TO ROOF. SEE PLAN ABOVE FOR DEMOLITION WORK. SEE M2.02 FOR CONTINUATION OF NEW PIPING ON RUN ON ROOF.
5. 18x14 SUPPLY AND 24x14 RETURN DUCTS UP THROUGH ROOF OPENING AND TRANSITION TO UNIT CONNECTION SIZES IN CURB. SEE M2.02 FOR CONTINUATION OF DUCTWORK.
6. RECTANGULAR SUPPLY DUCT SHALL BE EXPOSED BELOW CEILING GRID. PROVIDE RIGID BOARD INSULATION WITH ALL SERVICE JACKET ON RECTANGULAR DUCT ONLY.
7. PROVIDE DUCT TRANSITION FROM RETURN GRILLE TO 24x14 RETURN DUCT RISER.
8. SUPPLY GRILLE AT 45 DEGREE DOWN ANGLE.

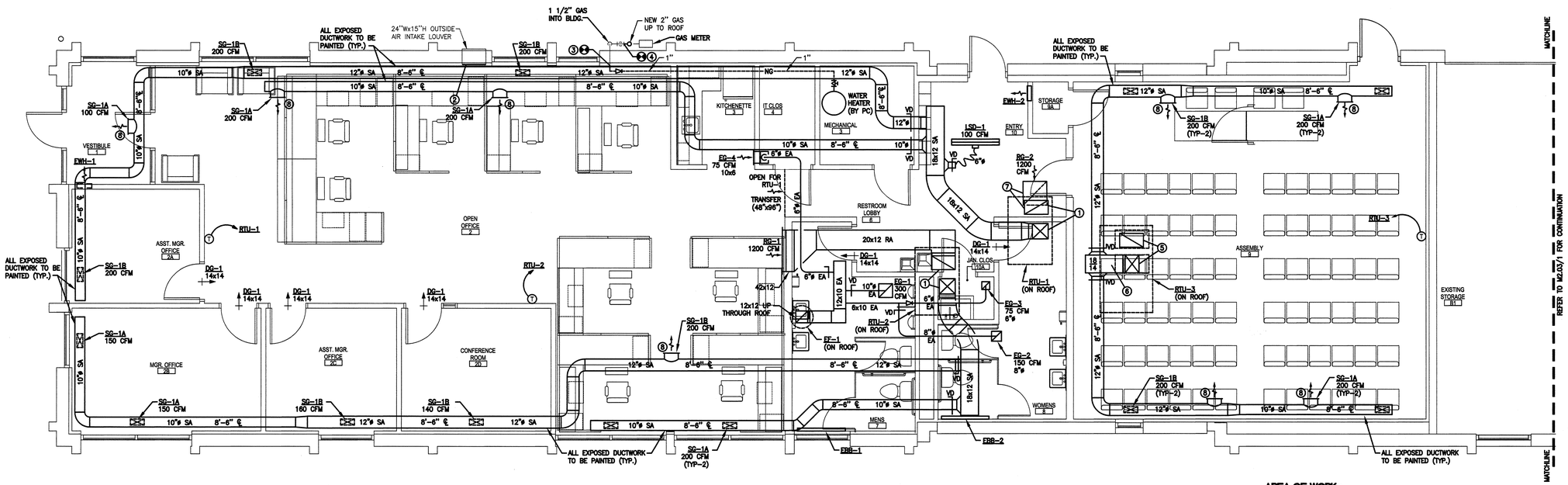

2 M2.01 **FIRST FLOOR MECHANICAL - NEW WORK (SOUTH)** 0 1' 2' 4' 6' N

GENERAL NOTES:

1. LOCATION OF MECHANICAL EQUIPMENT, DUCTWORK, GRILLES, AND ETC. HAVE BEEN COORDINATED TO AVOID ANY CONFLICTS WITH ELECTRICAL LIGHTING.

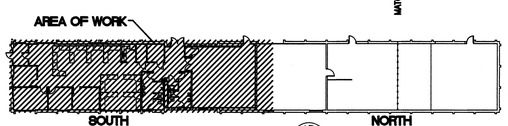

KEY PLAN SCALE – NONE N

CONTINUUM ARCHITECTS + PLANNERS, S.C.
P.O. BOX M10663
MILWAUKEE, WI 53203
T 414.220.9640
F 414.220.9595

City of Milwaukee
Department of Public Works
Infrastructure Services Division
Facilities Development & Management Services

Consultant:

GRUMMAN/BUTKUS ASSOCIATES
Energy Efficiency Consultants and Sustainable Design Engineers
1011 North Mayfair Road
Suite 300
Wauwatosa, Wisconsin 53226
414 476.8880

Copyright ©2013 Grumman/Butkus Associates
G/B Job Number: 1243

SANITATION HEADQUARTERS BUILDING
2383 SOUTH 35TH STREET
MILWAUKEE, WI 53215

SANITATION HEADQUARTERS RENOVATION

FIRST FLOOR MECHANICAL (SOUTH) DEMOLITION & NEW WORK

ISSUE	DATE	REMARKS
-		
-		
-		
-		
-		
-		
-		
-		
-		
-		

ARCHITECT JOB#: 120905
CITY PROJECT#: BU11091119
DATE: 02/01/2013
ISSUE: ISSUED FOR BID

M2.01

© Copyright 2013, Continuum Architects + Planners S.C.

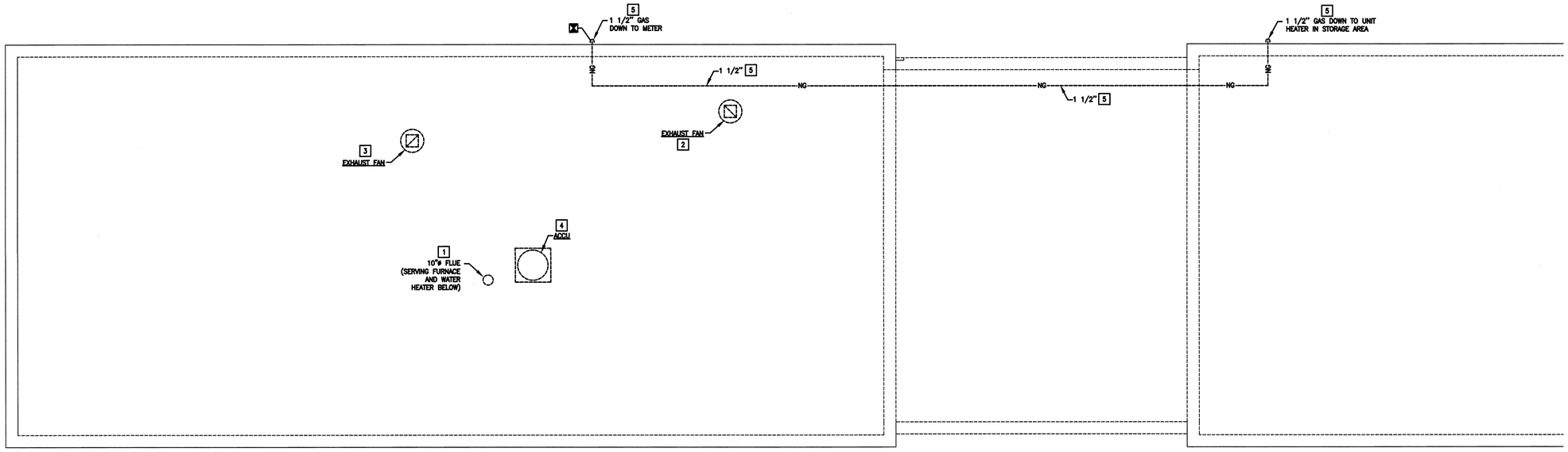

1 M2.02 ROOF MECHANICAL - DEMOLITION (SOUTH) 0 1' 2' 4' 6' N

X DEMOLITION NOTES:

1. DEMOLISH EXISTING FLUE SERVING FURNACE AND HOT WATER HEATER.
2. DEMOLISH EXISTING EXHAUST FAN AND DUCTWORK. COORDINATE ELECTRICAL DEMOLITION WITH E.C. SEE M2.01 FOR CONTINUATION OF EXHAUST DUCTWORK TO BE DEMOLISHED.
3. DEMOLISH EXISTING EXHAUST FAN AND DUCTWORK. COORDINATE ELECTRICAL DEMOLITION WITH E.C. SEE M2.01 FOR CONTINUATION OF EXHAUST DUCTWORK TO BE DEMOLISHED.
4. DEMOLISH EXISTING ACCU AND ALL ASSOCIATED PIPING AND ETC. COORDINATE ELECTRICAL DEMOLITION WITH E.C.
5. DEMOLISH EXISTING GAS PIPING. SEE M2.01 FOR CONTINUATION OF PIPING TO BE DEMOLISHED.

X NEW WORK NOTES:

1. 17x16 SUPPLY AND 24x14 RETURN DUCTS FROM UNIT CONNECTIONS DOWN THROUGH ROOF CURB AND ROOF OPENING. SEE M2.01 FOR CONTINUATION OF DUCTWORK.
2. ROOF OPENING BY GENERAL CONTRACTOR. CONFIRM OPENING SIZE ALLOWED IN PRECAST CONCRETE PLANKS WITH FINAL EQUIPMENT PURCHASED. (TYPICAL FOR 3 ROOFTOP UNITS)
3. CLEARANCE REQUIRED AROUND ROOFTOP UNIT FOR ACCESS AND AIRFLOW. (TYPICAL FOR 3 ROOFTOP UNITS AS SHOWN.)
4. 12x12 EXHAUST DUCT DOWN THROUGH ROOF CURB AND ROOF OPENING. ROOF OPENING BY G.C. COORDINATE EXACT OPENING LOCATION IN EXISTING PRECAST CONCRETE PLANK WITH FINAL EQUIPMENT PURCHASED SEE M2.01 FOR CONTINUATION OF DUCTWORK.
5. BAROMETRIC RELIEF HOOD. (TYPICAL FOR 3 ROOFTOP UNITS)
6. ECONOMIZER HOOD. (TYPICAL FOR 3 ROOFTOP UNITS)
7. TRANSITION 34x14 SUPPLY TO 18x14 SUPPLY AND 34x18 RETURN TO 24x14 RETURN IN CURB AND CONTINUE DOWN THROUGH CURB AND ROOF OPENING. SEE M2.01 FOR CONTINUATION OF DUCTWORK.

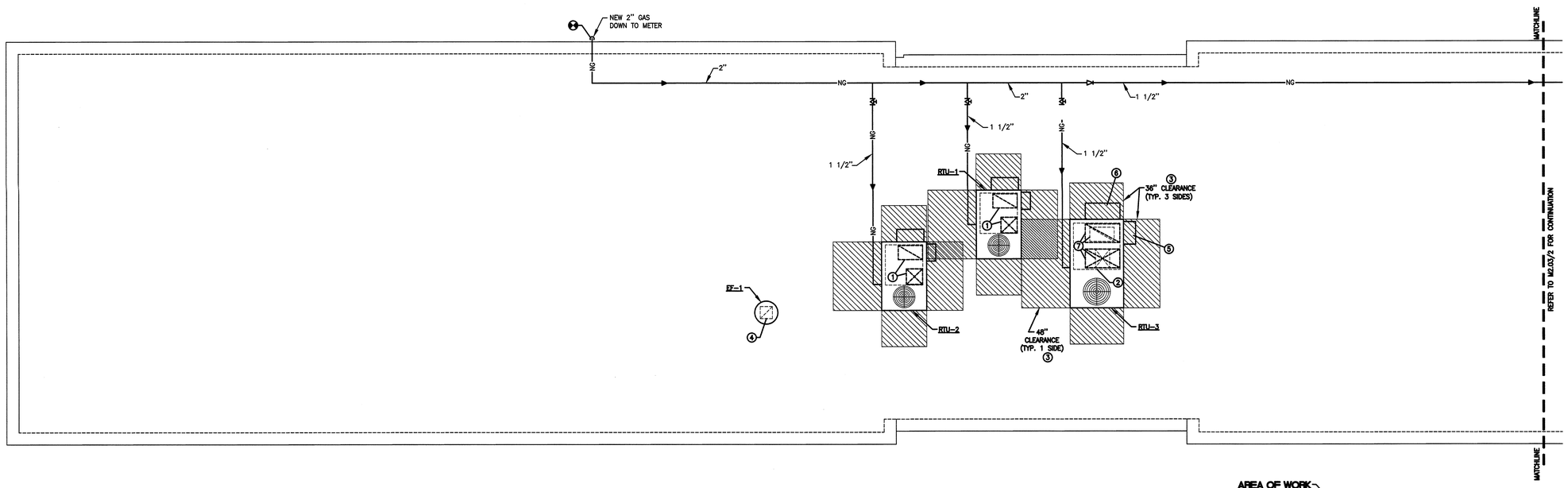

2 M2.02 ROOF MECHANICAL - NEW WORK (SOUTH) 0 1' 2' 4' 6' N

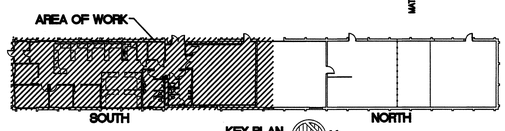

KEY PLAN SCALE - NONE N

CONTINUUM
ARCHITECTS+PLANNERS,S.C.
P.O.BOX 510663
MILWAUKEE, WI 53203
T 414.220.9640
F 414.220.9595

City of Milwaukee
Department of Public Works
Infrastructure Services Division
Facilities Development & Management Services

Consultant:
GRUMMAN/BUTKUS ASSOCIATES
Energy Efficiency Consultants and Sustainable Design Engineers
1521 North Mayfair Road
Suite 300
Wauwatosa, Wisconsin 53226
414 476.8960
Copyright ©2013 Grumman/Butkus Associates
G/BA Job Number 12433

SANITATION HEADQUARTERS BUILDING
2363 SOUTH 35TH STREET
MILWAUKEE, WI 53215

SANITATION HEADQUARTERS RENOVATION
ROOF MECHANICAL (SOUTH) DEMOLITION & NEW WORK

ISSUE	DATE	REMARKS
–		
–		
–		
–		
–		
–		
–		
–		
–		
–		

ARCHITECT JOB#: 120905
CITY PROJECT#: BU11091119
DATE: 02/01/2013
ISSUE: ISSUED FOR BID

M2.02

© Copyright 2013, Continuum Architects + Planners S.C.

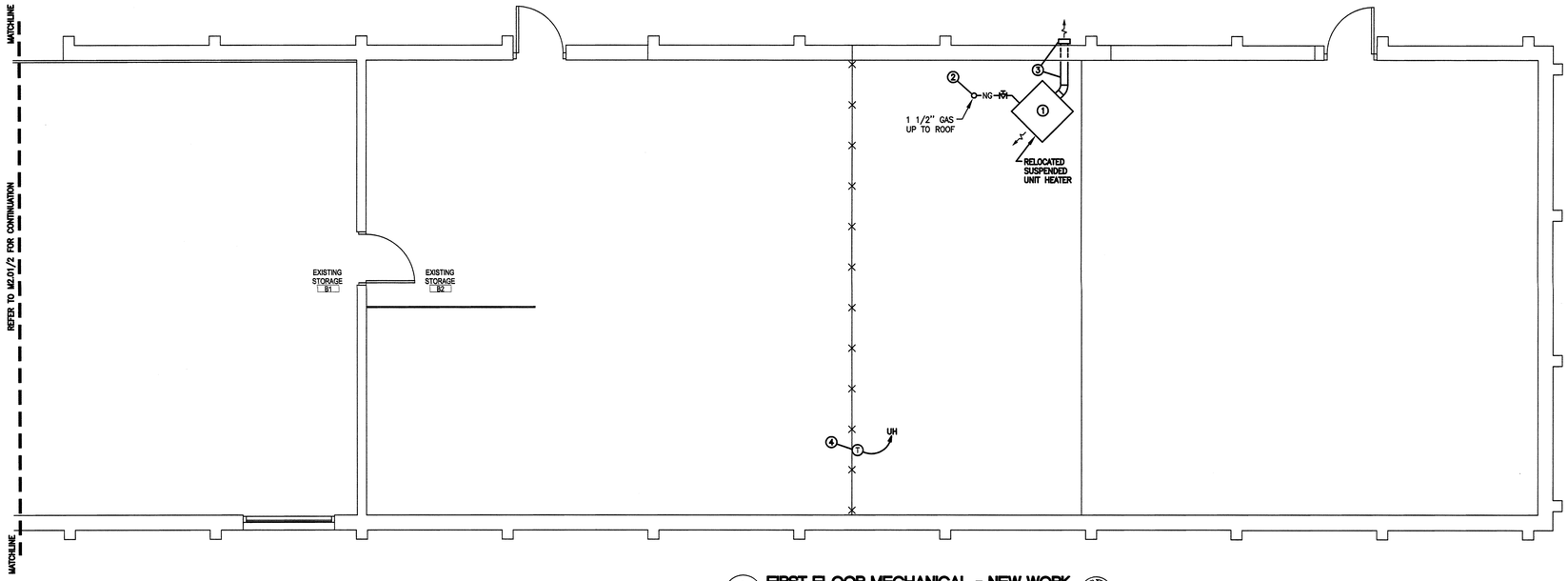

1 M2.03 FIRST FLOOR MECHANICAL - NEW WORK (NORTH)

0 1' 2' 4' 6'

N

⊗ NEW WORK NOTES:

1. EXISTING UNIT HEATER RELOCATED TO LOCATION SHOWN. SEE M2.01 FOR DEMOLITION WORK.
2. NEW GAS PIPING UP THROUGH ROOF. SEE ROOF PLAN BELOW FOR CONTINUATION OF PIPING. SEE M2.01 FOR DEMOLITION WORK
3. EXISTING 4"ø FLUE RELOCATED AND RUN OUT SIDEWALL. TERMINATE WITH EXISTING WALL CAP. SEE M2.01 FOR DEMOLITION WORK.
4. EXISTING THERMOSTAT RELOCATED TO LOCATION SHOWN. SEE M2.01 FOR DEMOLITION WORK.

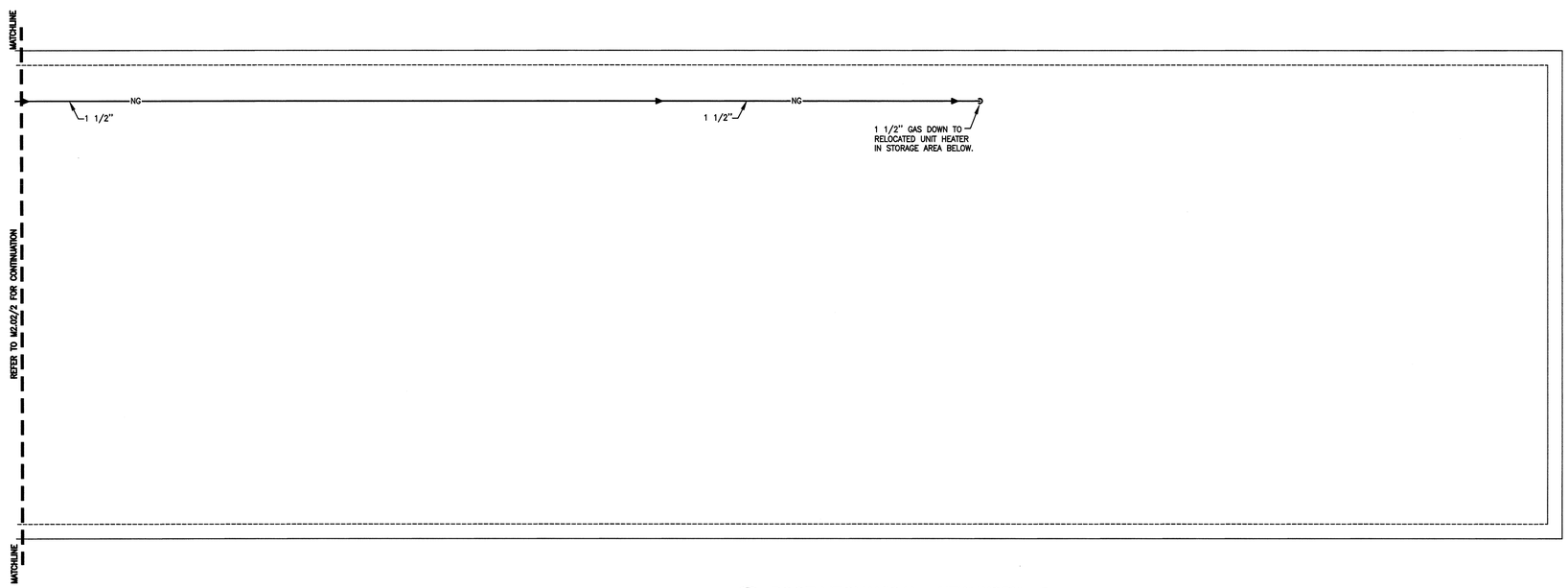

2 M2.03 ROOF MECHANICAL - NEW WORK (NORTH)

0 1' 2' 4' 6'

N

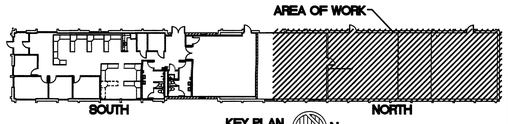

KEY PLAN
SCALE – NONE

N

CONTINUUM
ARCHITECTS+PLANNERS,SC
P.O.BOX 510663
MILWAUKEE, WI 53203
T 414.220.9640
F 414.220.9595

City of Milwaukee
Department of Public Works
Infrastructure Services Division
Facilities Development & Management Services

Consultant:

GRUMMAN/BUTKUS ASSOCIATES
Energy Efficiency Consultants and Sustainable Design Engineers
1011 North Mayfair Road
Suite 300
Wauwatosa, Wisconsin 53226
414 476.8980

Copyright ©2013 Grumman/Butkus Associates
G/B Job Number: 12432

SANITATION HEADQUARTERS BUILDING
2363 SOUTH 35TH STREET
MILWAUKEE, WI 53215

SANITATION HEADQUARTERS RENOVATION

FIRST FLOOR AND ROOF (NORTH) MECHANICAL NEW WORK

ISSUE	DATE	REMARKS
–		
–		
–		
–		
–		
–		
–		
–		
–		
–		

ARCHITECT JOB#: 120905
CITY PROJECT#: BU11091119
DATE: 02/01/2013
ISSUE: ISSUED FOR BID

M2.03

© Copyright 2013, Continuum Architects + Planners S.C.

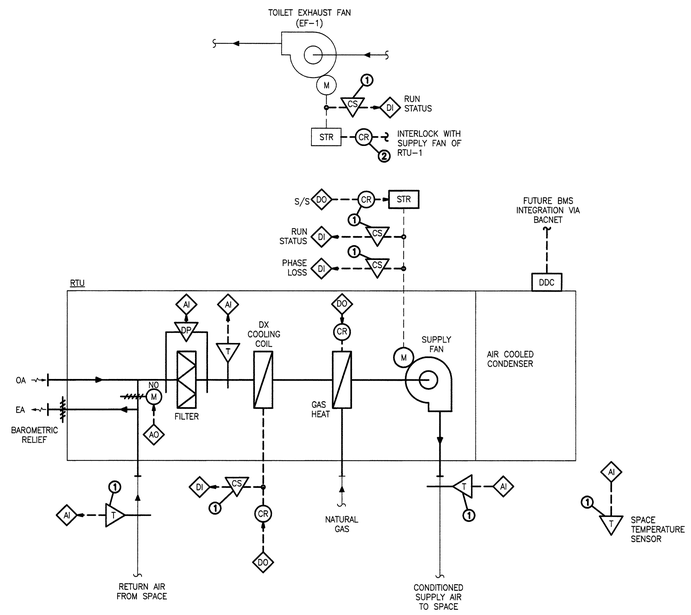

1 TC2.01 **RTU-1, RTU2, AND RTU-3 TEMPERATURE CONTROL DIAGRAM**
NOT TO SCALE

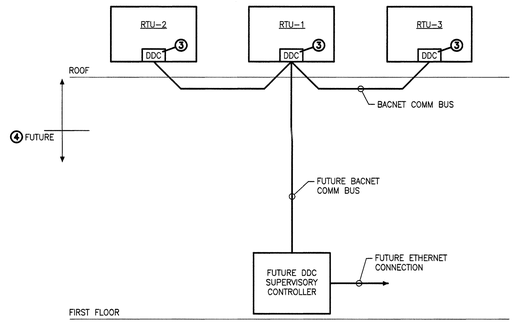

2 TC2.01 **BMS RISER DIAGRAM**
NOT TO SCALE

⊗ NEW WORK NOTES:

1. PROVIDE NEW CONTROL DEVICE AND WIRE TO NEW RTU DDC CONTROLLER.
2. PROVIDE CONTROL DEVICE AND WIRING INTERLOCK.
3. RTU MANUFACTURER SHALL PROVIDE FACTORY INSTALLED DDC CONTROLLER SERVING NEW RTU.
4. RUN DEDICATED CONDUIT BETWEEN RTU CONTROLLER AND MECHANICAL ROOM FOR FUTURE BMS COMMUNICATION.

CONTINUUM
ARCHITECTS+PLANNERS,S.C.
P.O.BOX 510663
MILWAUKEE, WI 53203
T 414.220.9640
F 414.220.9595

City of Milwaukee
Department of Public Works
Infrastructure Services Division
Facilities Development & Management Services

Consultant:
GRUMMAN/BUTKUS ASSOCIATES
Energy Efficiency Consultants and Sustainable Design Engineers
1011 North Mayfair Road
Suite 300
Wauwatosa, Wisconsin 53226
414 476.8980

SANITATION HEADQUARTERS BUILDING
2363 SOUTH 35TH STREET
MILWAUKEE, WI 53215

SANITATION HEADQUARTERS RENOVATION
TEMPERATURE CONTROLS DIAGRAMS

ISSUE	DATE	REMARKS
–		
–		
–		
–		
–		
–		
–		
–		
–		
–		

ARCHITECT JOB#: 120905
CITY PROJECT#: BU11091119
DATE: 02/01/2013
ISSUE: ISSUED FOR BID

TC2.01

© Copyright 2013,
Continuum Architects + Planners S.C.

ELECTRICAL ABBREVIATIONS

DESIGNATION	DESCRIPTION
AC AF AFF AHU AMP APPROX AT ATS AWG	ALTERNATING CURRENT AMPERE FUSE ABOVE FINISHED FLOOR AIR HANDLING UNIT AMPERE APPROXIMATE AMPERE TRIP AUTOMATIC TRANSFER SWITCH AMERICAN WIRING GAUGE
BLDG BP BRKR	BUILDING BRANCH CIRCUIT PANEL BREAKER
C C/B CKT OR CIR CONTR CUH	CONDUIT CIRCUIT BREAKER CIRCUIT CONTRACTOR CABINET UNIT HEATER
DISC DN DWG	DISCONNECT DOWN DRAWING
EF EMERG EMT ETR EXH EXIST OR E	EXHAUST FAN EMERGENCY ELECTRIC METALLIC TUBING EXISTING TO REMAIN EXHAUST EXISTING
F FA FLA FLR FLUOR FMC FREQ FUT	FUSE FIRE ALARM FULL LOAD AMPERES FLOOR FLUORESCENT FLEXIBLE METAL CONDUIT FREQUENCY FUTURE
GA GEN GF GFCI GRD	GAGE, GAUGE GENERATOR GROUND FAULT GROUND FAULT CIRCUIT INTERRUPTER GROUND
HOA HP HTG HZ	HAND OFF AUTO HORSEPOWER HEATING HERTZ (CYCLE)
IC	INTERRUPTING CAPACITY
JB	JUNCTION BOX
KV KVA KW	KILOVOLT KILOVOLT-AMPERE KILOWATT
LP LTG	LIGHTING PANEL LIGHTING
MAN MCB MCC MLO MIN MSB MTD MTG MTR	MANUAL MAIN CIRCUIT BREAKER MOTOR CONTROL CENTER MAIN LUGS ONLY MINIMUM MAIN SWITCH BOARD MOUNTED MOUNTING MOTOR
N/A NEC NEMA NEUT NF NO	NOT APPLICABLE NATIONAL ELECTRIC CODE NATIONAL ELECTRICAL MANUFACTURERS ASSOCIATION NEUTRAL NON-FUSED NORMALLY OPEN
PB PF PH PNL PP PVC	PULL BOX POWER FACTOR PHASE PANELBOARD POWER PANEL POLYVINYL CHLORIDE CONDUIT
RECP RF RGS RM RMC RP	RECEPTACLE RETURN FAN RIGID GALVANIZED STEEL CONDUIT ROOM RIGID METAL CONDUIT RECEPTACLE PANEL
SEC SPR SW SWBD	SECONDARY SPARE SWITCH SWITCHBOARD
TP TRANS	TAMPER PROOF TRANSFORMER
UH UNO	UNIT HEATER UNLESS NOTED OTHERWISE
V VFD	VOLTAGE VARIABLE FREQUENCY DRIVE
W WG WP	WATT WIRE GUARD WEATHERPROOF
XFMR	TRANSFORMER

POWER SYMBOLS

DESIGNATION	DESCRIPTION
	DISCONNECT SWITCH (NON-FUSED)
	COMBINATION MOTOR STARTER AND DISCONNECT SWITCH
	MOTOR STARTER
M	MANUAL MOTOR STARTER
X Y	EQUIPMENT TAG SEE EQUIPMENT SCHEDULE
	FLEXIBLE CONDUIT
DP-X	PANELBOARD SEE ONE-LINE FOR TYPE
M	MOTOR M=1 WHEN MOTOR IS SINGLE PHASE M=3 WHEN MOTOR IS THREE PHASE M=M WHEN MOTOR IS BEING DEMOLISHED
VFD	VARIABLE FREQUENCY DRIVE

LIGHTING SYMBOLS

DESIGNATION	DESCRIPTION
X	2x4 FLUORESCENT FIXTURE X=FIXTURE TYPE (SEE LIGHTING FIXTURE SCHEDULE)
X	1x4 FLUORESCENT FIXTURE X=FIXTURE TYPE (SEE LIGHTING FIXTURE SCHEDULE)
X	1x4 FLUORESCENT FIXTURE WITH EMERGENCY BATTERY BACK-UP X=FIXTURE TYPE (SEE LIGHTING FIXTURE SCHEDULE)
X	SWITCH. NO MODIFIER EQUALS. SINGLE POLE SWITCH. 3=THREE WAY 4=FOUR WAY M=MOTOR RATED TOGGLE SWITCH T=TIME SWITCH OC=WITH OCCUPANCY SENSOR
X	6" DOWN LIGHT
X	12" ROUND OPEN LIGHT FIXTURE
	EXTERIOR WALL MOUNTED LIGHT FIXTURE
OC	OCCUPANCY SENSOR
	COMBINATION EXIT SIGN/EMERGENCY LIGHT
	EXIT SIGN

ELECTRICAL GENERAL NOTES

1. CODES

THE WORK SHALL COMPLY WITH ALL APPLICABLE LOCAL, MUNICIPAL, AND NATIONAL CODES. WHERE THE CONSTRUCTION DOCUMENTS INDICATE MORE RESTRICTIVE REQUIREMENTS THE CONSTRUCTION DOCUMENTS SHALL GOVERN. HOWEVER, THE CONSTRUCTION DOCUMENTS SHALL NOT BE INTERPRETED AS AUTHORITY TO VIOLATE AND CODE OR REGULATION.

2. DRAWINGS AND SPECIFICATIONS

THE CONTRACTOR SHALL BE RESPONSIBLE FOR READING AND COMPLYING WITH BOTH THE DRAWINGS AND SPECIFICATIONS. IN THE EVENT OF A CONFLICT OR INCONSISTENCY BETWEEN THE DRAWINGS, NOTES, SPECIFICATIONS, OR CODES, THE REFERENCE WHICH PROVIDES THE MORE COMPLETE OR HIGHER STANDARD SHALL PREVAIL.

3. INTERPRETATION OF THE DOCUMENTS

CAREFULLY COMPARE THE DRAWINGS AND SPECIFICATIONS, CHECKING MEASUREMENTS AND CONDITIONS UNDER WHICH THIS INSTALLATION IS TO BE MADE. FOR CLARIFICATION BETWEEN VARIOUS DRAWINGS, BETWEEN DRAWINGS OR SPECIFICATION, OR BETWEEN SECTIONS OF THE SPECIFICATION, THE MATTER SHALL BE REFERRED TO THE ENGINEER BEFORE ANY WORK IS EXECUTED. THE CONTRACTOR SHALL STATE IN THEIR PROPOSAL ANY EXCEPTIONS NECESSARY TO MAKE THIS A COMPLETE, READY TO USE INSTALLATION. IF NOT STATED IN THE PROPOSAL, IT WILL NOT BE CONSIDERED EXTRA.

4. ELECTRICAL DRAWINGS

THE ELECTRICAL DRAWINGS ARE DIAGRAMMATIC AND SHALL NOT BE SCALED. THE CONTRACTOR SHALL DETERMINE THE EXACT LOCATION OF ALL DOORS, WALLS, FURNITURE, EQUIPMENT, ETC.. THE LOCATION OF RACEWAY SYSTEM COMPONENTS IS SCHEMATIC. THE EXACT LOCATION OF RACEWAY SYSTEM COMPONENTS SHALL BE DETERMINED BY THE CONTRACTOR IN THE FIELD. THE CONTRACTOR SHALL CONFIRM THE DIMENSIONS OF THE ACTUAL EQUIPMENT TO BE SUPPLIED FOR THIS PROJECT, AND VERIFY CLEARANCES AND ROUGH-INS PRIOR TO STARTING WORK.

5. SITE EXAMINATION

BEFORE SUBMITTING A BID, THE CONTRACTOR SHALL VISIT THE SITE, EXAMINE THE PREMISES, AND MAKE A THOROUGH SURVEY OF THE EXISTING CONDITIONS. THE SUBMISSION OF A PROPOSAL WILL BE CONSTRUED AS EVIDENCE THAT SUCH AN EXAMINATION HAS BEEN SCALED. NO CONSIDERATION OR ALLOWANCE WILL BE GRANTED FOR FAILURE TO VISIT THE SITE OR FOR LATER CLAIMS FOR LABOR, EQUIPMENT, MATERIALS REQUIRED, OR FOR DIFFICULTIES ENCOUNTERED WHICH COULD HAVE BEEN FORESEEN HAD SUCH AN SITE EXAMINATION BEEN MADE.

6. COORDINATION WITH OTHER TRADES

THE ELECTRICAL CONTRACTOR SHALL OBTAIN A COMPLETE SET OF ARCHITECTURAL AND ENGINEERING DOCUMENTS AND COORDINATE WITH MECHANICAL, PLUMBING, ARCHITECTURAL, AND OTHER TRADES FOR EXACT DIMENSIONS, CLEARANCES, ROUGH-IN LOCATIONS, AND OTHER ADDITIONAL SCOPES OF WORK THAT MAY NOT BE SHOWN ON THE ELECTRICAL PLANS. THE ELECTRICAL CONTRACTOR SHALL BE RESPONSIBLE FOR ALL 120 VOLT (AND HIGHER) AC POWER TO OTHER TRADES EQUIPMENT AND HARDWARE. THIS SHALL INCLUDE, BUT NOT BE LIMITED TO, CONTROLS, FIRE AND SECURITY SYSTEMS, MOTORIZED DOORS, DAMPERS, LIFTS, AND OTHER SYSTEMS. UNLESS SPECIFICALLY NOTED OTHERWISE ON THE ELECTRICAL PLANS, THE ELECTRICAL CONTRACTOR SHALL FURNISH ALL SAFETY DISCONNECT SWITCHES TO MECHANICAL EQUIPMENT.

7. PERMITS, APPLICATIONS AND RELEASES

THE CONTRACTOR SHALL OBTAIN AND PAY FOR ALL PERMITS INSPECTIONS, APPLICATIONS, RELEASES AND FEES REQUIRED BY LOCAL, STATE AND FEDERAL AGENCIES FOR THE EXECUTION OF THIS WORK. SCHEDULING OF ALL REQUIRED INSPECTIONS SHALL BE THE RESPONSIBILITY OF THE CONTRACTOR.

8. FIRE STOPPING

ALL PENETRATIONS IN WALL, FLOOR OR CEILINGS SHALL BE SUITABLY CLOSED UP AND SEALED WITH AN INTUMESCENT FIRE STOPPING COMPOUND LISTED IN THE MOST RECENT FACTORY MUTUAL RESEARCH CORPORATION (FMRC) APPROVAL GUIDE.

9. ELECTRICAL SERVICE DISRUPTIONS

ALL WORK WHICH EXPOSES ACTIVE BUS REQUIRES A WRITTEN NOTIFICATION TO THE OWNER WHICH WILL OUTLINE THE METHOD OF PROCEDURE FOR THE WORK. THE CONTRACTOR SHALL PROVIDE A MINIMUM OF 5 DAYS NOTICE TO THE OWNER BEFORE WORKING ON ANY ENERGIZED ELECTRICAL SYSTEM. NO POWER DISRUPTIONS ARE ACCEPTABLE.

10. EQUIPMENT

ALL MATERIALS AND EQUIPMENT USED IN THIS INSTALLATION SHALL BE NEW, AND HAVE THE APPROPRIATE UL LISTING AND LABEL.

11. MISCELLANEOUS SUPPORTING MEMBERS

ALL ANGLES CHANNELS, AND OTHER MISCELLANEOUS STEEL, BOLTS, RODS, ETC.. REQUIRED TO SUPPORT LIGHT FIXTURE, CONDUIT, RACEWAY, LADDER TRAY, OR OTHER ELECTRICAL EQUIPMENT OR DEVICES SHALL BE FURNISHED AND INSTALLED BY THE CONTRACTOR.

12. PANEL BOARDS

ALL PANEL BOARDS SHALL BE PROVIDED WITH TYPEWRITTEN DIRECTORIES. SEE PANEL SCHEDULES ON THE DRAWINGS AND THE SPECIFICATION FOR COMPLETE IDENTIFICATION AND LABELING REQUIREMENTS.

13. SAFETY

THE CONTRACTOR SHALL TAKE ALL STEPS NECESSARY TO ENSURE THE SAFETY OF THE OWNERS EMPLOYEES, BUILDING EMPLOYEES AND GUESTS, AS WELL AS THEIR OWN FORCES, BY ADEQUATELY PROTECTING ANY EXPOSED LIVE CONDUCTORS, OR DEVICES THROUGHOUT THE COURSE OF THIS WORK.

14. EQUIPMENT CONNECTIONS

PROVIDE FINAL CONNECTIONS FOR ALL EQUIPMENT FURNISHED UNDER OTHER DIVISIONS AND FOR ALL OWNER FURNISHED EQUIPMENT. PROVIDE A FLEXIBLE LIQUID TIGHT CONNECTION TO ALL VIBRATION PRODUCING EQUIPMENT.

15. CABLING

BRANCH CIRCUITS TO RECEPTACLES, LIGHTING AND MISC. SMALL LOADS (15 OR 20 AMP CIRCUITS), UNLESS SPECIFICALLY NOTED OTHERWISE, SHALL BE 2 – #12, 1 – #12 GRD., 1/2" C. A SEPARATE NEUTRAL AND GROUND SHALL BE RUN FOR EACH CIRCUIT. SEE NOTE BELOW FOR ADDITIONAL REQUIREMENTS.

16. CABLING SIZES

BRANCH CIRCUIT CABLE SIZING SHALL BE ADJUSTED BASED ON THE VALUES INDICATED BELOW:

A. 120/208V CABLING FROM PANEL TO THE ELECTRICAL LOAD SHALL BE AS FOLLOWS UNLESS SPECIFICALLY NOTED OTHERWISE:

0' – 100' #12 AWG MINIMUM
100' – 200' #10 AWG MINIMUM
200' – 250' #8 AWG MINIMUM

POWER

SYMBOL	DESCRIPTION
X Y X Y	SURFACE MOUNTED RACEWAY DEVICES INSTALLED 18" O.C. UNLESS NOTED OTHERWISE
P T	TELEPHONE/POWER POLE
J	CEILING MOUNTED JUNCTION BOX
J	WALL MOUNTED JUNCTION BOX
J	FLOOR MOUNTED JUNCTION BOX
X Y	EQUIPMENT TAG SEE EQUIPMENT SCHEDULE
PB	WALL MOUNTED PULL BOX
PB	CEILING MOUNTED PULL BOX
	MAGNETIC STARTER
	DISCONNECT SWITCH (NON-FUSED)
	COMBINATION STARTER AND DISCONNECT SWITCH
F	FUSE DISCONNECT SWITCH
	CONDUIT RUN EXPOSED
	CONDUIT CONCEALED IN CEILING OR WALLS
	CONDUIT CONCEALED IN OR UNDER FLOOR
	CONDUIT UP
	CONDUIT DOWN
	FLEXIBLE CONDUIT
DP-X	POWER DISTRIBUTION PANELBOARD
LP-X	LIGHTING PANELBOARD
BP-X	BRANCH CIRCUIT PANELBOARD
X Y	DUPLEX RECEPTACLE X=CIRCUIT NUMBER Y=MODIFIER WP=WEATHER PROOF GFCI=GROUND FAULT INTERRUPTER
X Y	MODULAR FURNITURE MOUNTED DUPLEX RECEPTACLE – BY FURNITURE MANUFACTURER X=CIRCUIT NUMBER Y=MODIFIER
X Y	QUADRUPLEX RECEPTACLE X=CIRCUIT NUMBER Y=MODIFIER
X Y	DUPLEX RECEPTACLE ON UPS POWER X=CIRCUIT NUMBER Y=MODIFIER
X Y	QUADRUPLEX RECEPTACLE ON UPS POWER X=CIRCUIT NUMBER Y=MODIFIER
X Y	DUPLEX OUTLET SPLIT WIRED X=CIRCUIT NUMBER Y=MODIFIER
X Y	SINGLE SPECIAL OUTLET
X Y	DUPLEX SPECIAL OUTLET
X Y	FLOOR SINGLE OUTLET
X Y	FLOOR DUPLEX OUTLET
X Y	FLOOR SPECIAL OUTLET
T	TRANSFORMER
M	MOTOR M=HP
	COMBINATION VOICE/DATA RECEPTACLE
	VOICE RECEPTACLE
	DATA RECEPTACLE

WORK ON E SHEETS IS NIC UNLESS NOTED OTHERWISE. ELECTRICAL WORK SHALL BE PROVIDED BY THE CITY OF MILWAUKEE. PROVIDE COORDINATION OVERSIGHT FOR THE SCOPE OF THE PROJECT INCLUDING COORDINATION WITH THE CITY ELECTRICAL CONTRACTORS.

CONTINUUM
ARCHITECTS + PLANNERS, S.C.
P.O. BOX 510663
MILWAUKEE, WI 53203
T 414.220.9640
F 414.220.9595
ARCHITECTURE – MASTER PLANNING – INTERIOR DESIGN

City of Milwaukee
Department of Public Works
Infrastructure Services Division
Facilities Development & Management Services

Consultant:
GRUMMAN/BUTKUS ASSOCIATES
Energy Efficiency Consultants and Sustainable Design Engineers
1011 North Mayfair Road
Suite 300
Wauwatosa, Wisconsin 53226
414 476.8980

Copyright ©2012 Grumman/Butkus Associates
G/BA Job Number: 12433

SANITATION HEADQUARTERS BUILDING
2363 SOUTH 35TH STREET
MILWAUKEE, WI 53215

SANITATION HEADQUARTERS RENOVATION
ELECTRICAL SYMBOLS AND ABBREVIATIONS

ISSUE	DATE	REMARKS
–		
–		
–		
–		
–		
–		
–		
–		
–		
–		

ARCHITECT JOB#: 120905
CITY PROJECT#: BU11091119
DATE: 02/01/2013
ISSUE: ISSUED FOR BID

E0.01

© Copyright 2013,
Continuum Architects + Planners S.C.

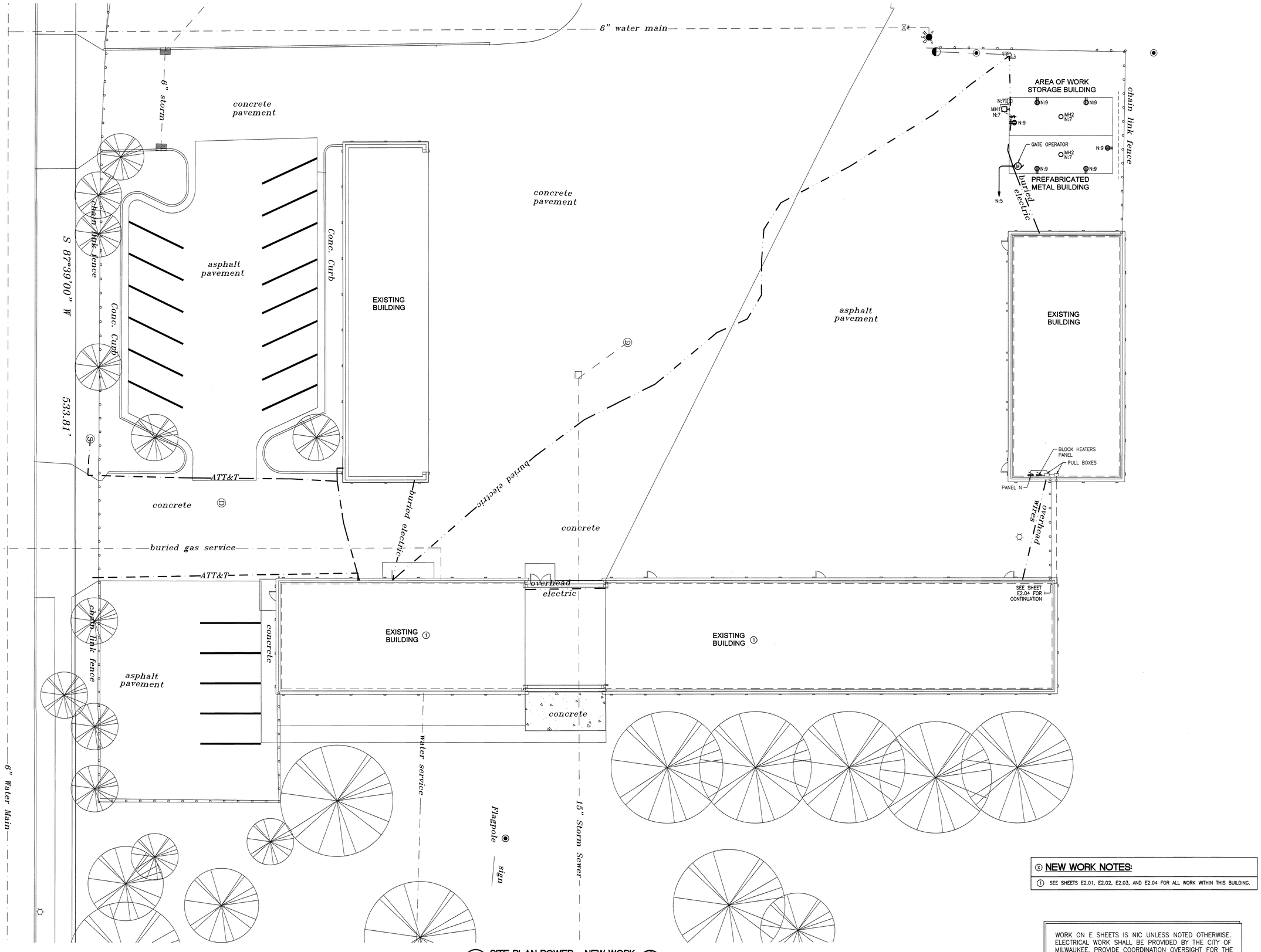

1 E1.01 SITE PLAN POWER - NEW WORK

0 2' 4' 8' 16'

N

ⓧ NEW WORK NOTES:

① SEE SHEETS E2.01, E2.02, E2.03, AND E2.04 FOR ALL WORK WITHIN THIS BUILDING.

WORK ON E SHEETS IS NIC UNLESS NOTED OTHERWISE. ELECTRICAL WORK SHALL BE PROVIDED BY THE CITY OF MILWAUKEE. PROVIDE COORDINATION OVERSIGHT FOR THE SCOPE OF THE PROJECT INCLUDING COORDINATION WITH THE CITY ELECTRICAL CONTRACTORS.

CONTINUUM
ARCHITECTS+PLANNERS S.C.
P.O. BOX 510663
MILWAUKEE, WI 53203
T 414.220.9640
F 414.220.9595

City of Milwaukee
Department of Public Works
Infrastructure Services Division
Facilities Development & Management Services

Consultant:
GRUMMAN/BUTKUS ASSOCIATES
Energy Efficiency Consultants and Sustainable Design Engineers
1011 North Mayfair Road
Suite 300
Wauwatosa, Wisconsin 53226
414 476.8980

Copyright ©2012 Grumman/Butkus Associates
G/BA Job Number: 12432

SANITATION HEADQUARTERS BUILDING
2363 SOUTH 35TH STREET
MILWAUKEE, WI 53215

SANITATION HEADQUARTERS RENOVATION
SITE PLAN POWER
NEW WORK

ISSUE	DATE	REMARKS
-		
-		
-		
-		
-		
-		
-		
-		
-		
-		

ARCHITECT JOB#: 120905
CITY PROJECT#: BU11091119
DATE: 02/01/2013
ISSUE: ISSUED FOR BID

E1.01

© Copyright 2013, Continuum Architects + Planners S.C.

X DEMOLITION NOTES:

1. MAINTAIN THE CONDUIT AND WIRING TO THE EXISTING LIGHT FIXTURES. REFER TO SHEET E2.02 FOR NEW CEILING AND SWITCHING REQUIREMENTS.

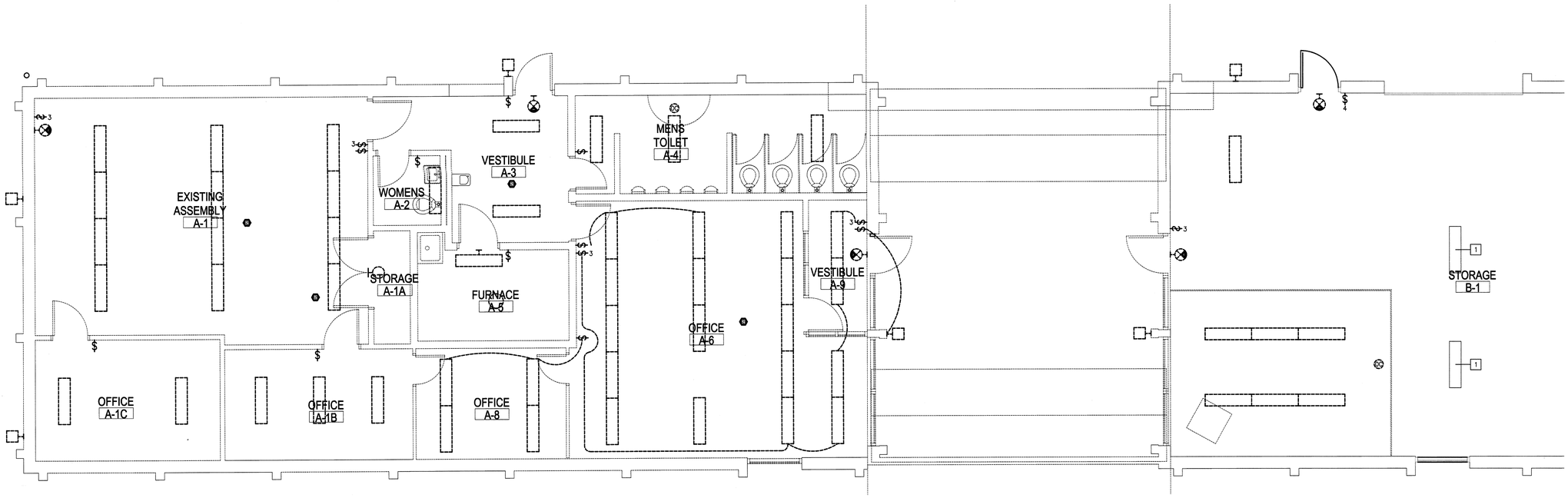

1 E2.01 FIRST FLOOR LIGHTING- DEMOLITION (SOUTH)

0 1' 2' 4' 6' N

WORK ON E SHEETS IS NIC UNLESS NOTED OTHERWISE. ELECTRICAL WORK SHALL BE PROVIDED BY THE CITY OF MILWAUKEE. PROVIDE COORDINATION OVERSIGHT FOR THE SCOPE OF THE PROJECT INCLUDING COORDINATION WITH THE CITY ELECTRICAL CONTRACTORS.

WORK ON THIS PROJECT SHALL BE PHASED TO MAINTAIN PRODUCTIVITY AND STAFF SHALL REMAIN ON SITE DURING ALL WORK.

X NEW WORK NOTES:

1. NO ACCESS PANELS WILL BE INSTALLED IN THE GYPSUM WALL BOARD CEILING. PLACE ALL JUNCTION BOXES REQUIRED FOR LIGHT FIXTURES WHERE ACCESSIBLE TO COMPLY WITH NEC REQUIREMENTS.
2. COORDINATE FINAL LOCATION OF FIXTURE SUPPORTS WITH MECHANICAL DUCTWORK PRIOR TO INSTALLATION.
3. PENDANT MOUNT 9'-2" AFF TO BOTTOM OF FIXTURE.

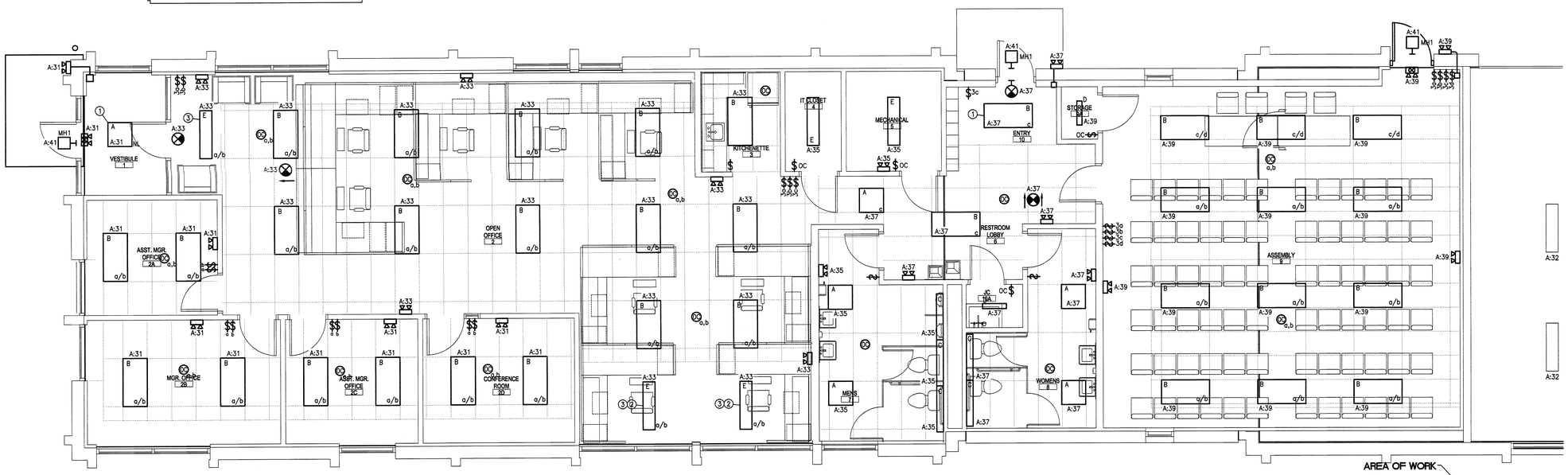

2 E2.01 FIRST FLOOR LIGHTING- NEW WORK (SOUTH)

0 1' 2' 4' 6' N

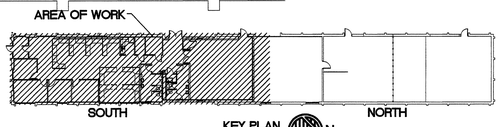

KEY PLAN
SCALE – NONE
N

CONTINUUM
ARCHITECTS + PLANNERS, S.C.
P.O. BOX 510663
MILWAUKEE, WI 53203
T 414.220.9640
F 414.220.9595

City of Milwaukee
Department of Public Works
Infrastructure Services Division
Facilities Development & Management Services

Consultant:
GRUMMAN/BUTKUS ASSOCIATES
Energy Efficiency Consultants and Sustainable Design Engineers
1011 North Mayfair Road
Suite 300
Wauwatosa, Wisconsin 53226
414 476.6980

SANITATION HEADQUARTERS BUILDING
2363 SOUTH 35TH STREET
MILWAUKEE, WI 53215

SANITATION HEADQUARTERS RENOVATION
FIRST FLOOR ELECTRICAL (SOUTH) DEMOLITION AND NEW WORK

ISSUE	DATE	REMARKS
–		
–		
–		
–		
–		
–		
–		
–		
–		
–		

ARCHITECT JOB#: 120905
CITY PROJECT#: BU11091119
DATE: 02/01/2013
ISSUE: ISSUED FOR BID

E2.01

© Copyright 2013, Continuum Architects + Planners S.C.

X DEMOLITION NOTES:

1. MAINTAIN EXISTING CONDUIT AND WIRING TO THE EXISTING LIGHTS IN THIS ROOM.
2. DEMOLISH SWITCHING AS SHOWN.
3. DEMOLISH EXISTING SWITCH. MAINTAIN CONDUIT AND WIRING TO EXTEND TO NEW SWITCH.
4. DEMOLISH EXISTING LIGHTING CIRCUIT BACK TO SOURCE PANEL. MAINTAIN CONDUIT AND WIRING IN THIS ROOM TO REFEED EXISTING TO REMAIN AND NEW LIGHTS AND SWITCHES FROM A NEW CIRCUIT.

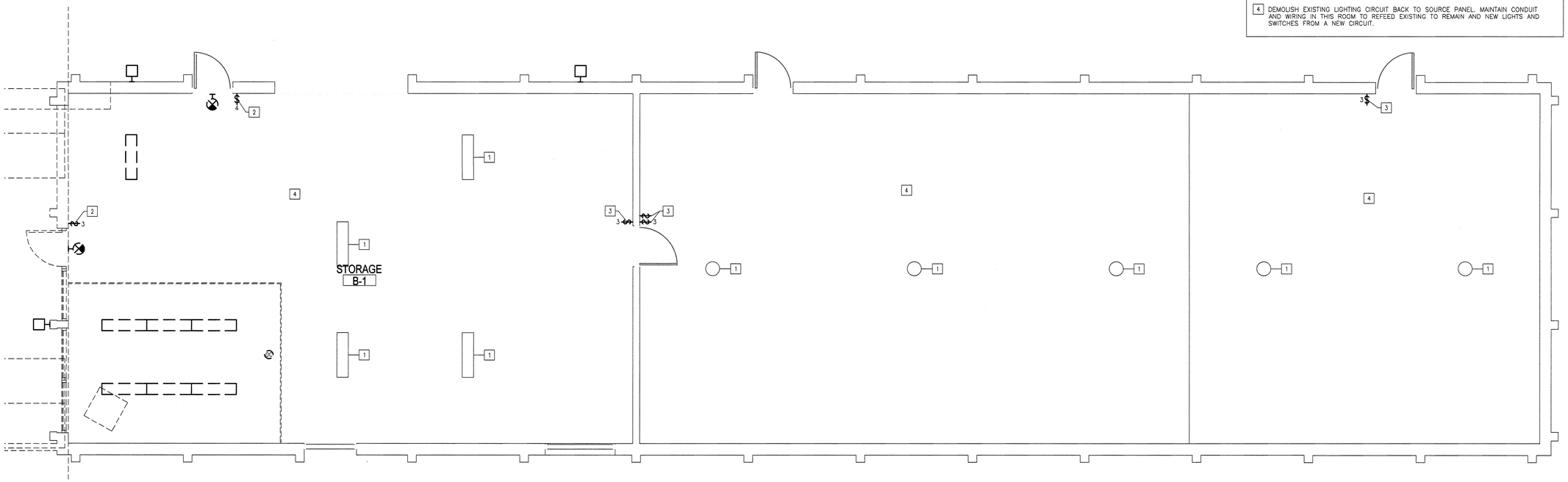

1 E2.02 FIRST FLOOR LIGHTING- DEMOLITION (NORTH)

0 1' 2' 4' 6'

N

WORK ON E SHEETS IS NIC UNLESS NOTED OTHERWISE. ELECTRICAL WORK SHALL BE PROVIDED BY THE CITY OF MILWAUKEE. PROVIDE COORDINATION OVERSIGHT FOR THE SCOPE OF THE PROJECT INCLUDING COORDINATION WITH THE CITY ELECTRICAL CONTRACTORS.

WORK ON THIS PROJECT SHALL BE PHASED TO MAINTAIN PRODUCTIVITY AND STAFF SHALL REMAIN ON SITE DURING ALL WORK.

(X) NEW WORK NOTES:

1. PROVIDE A NEW LIGHT SWITCH.
2. PROVIDE A NEW LIGHT SWITCH IN THE EXISTING WALL BOX.
3. PROVIDE POWER TO EXISTING LIGHTS FROM A NEW CIRCUIT.

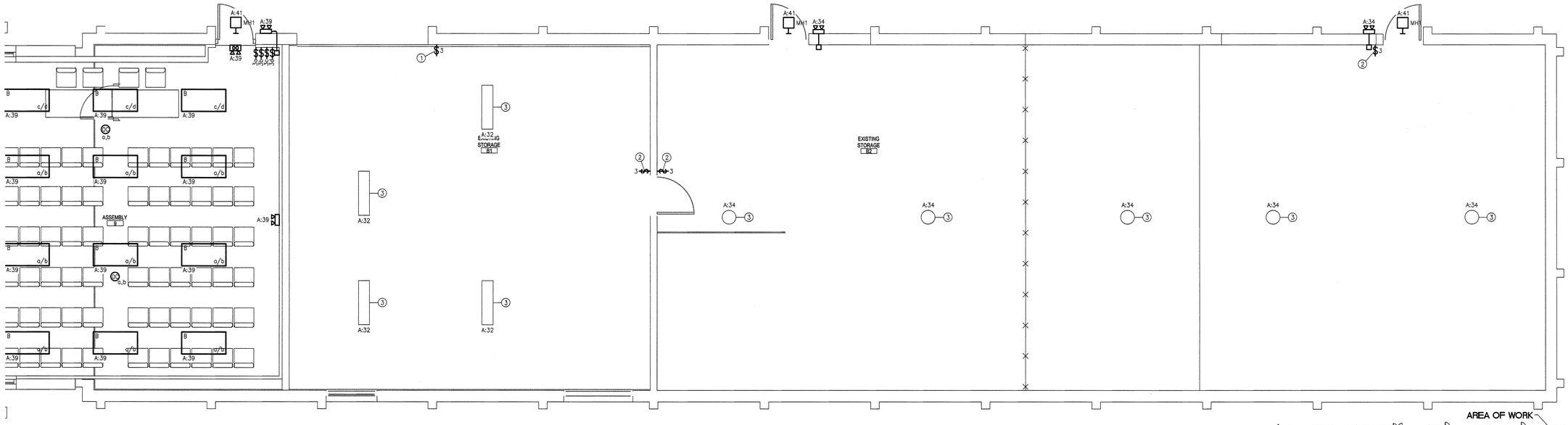

2 E2.02 FIRST FLOOR LIGHTING- NEW WORK (NORTH)

0 1' 2' 4' 6'

N

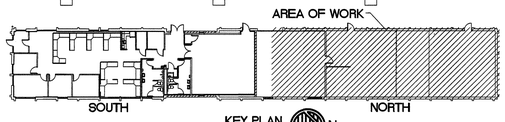

KEY PLAN
SCALE – NONE

N

CONTINUUM
ARCHITECTS + PLANNERS S.C.
P.O. BOX 510863
MILWAUKEE, WI 53203
T 414.272.9640
F 414.272.9595

City of Milwaukee Department of Public Works
Infrastructure Services Division
Facilities Development & Management Services

Consultant:

GRUMMAN/BUTKUS ASSOCIATES

Energy Efficiency Consultants and Sustainable Design Engineers
1011 North Mayfair Road
Suite 300
Wauwatosa, Wisconsin 53226
414 476.5860

Copyright © 2012 Grumman/Butkus Associates
G/BA Job Number: 12410

SANITATION HEADQUARTERS BUILDING
2363 SOUTH 35TH STREET
MILWAUKEE, WI 53215

SANITATION HEADQUARTERS RENOVATION

FIRST FLOOR ELECTRICAL (NORTH) DEMOLITION AND NEW WORK

ISSUE	DATE	REMARKS
–		
–		
–		
–		
–		
–		
–		
–		
–		
–		

ARCHITECT JOB#:	120905
CITY PROJECT#:	BU11091119
DATE:	02/01/2013
ISSUE:	ISSUED FOR BID

E2.02

© Copyright 2013, Continuum Architects + Planners S.C.

X DEMOLITION NOTES:

1. THE CITY OF MILWAUKEE WILL COORDINATE ALL REQUIRED UTILITY WORK.

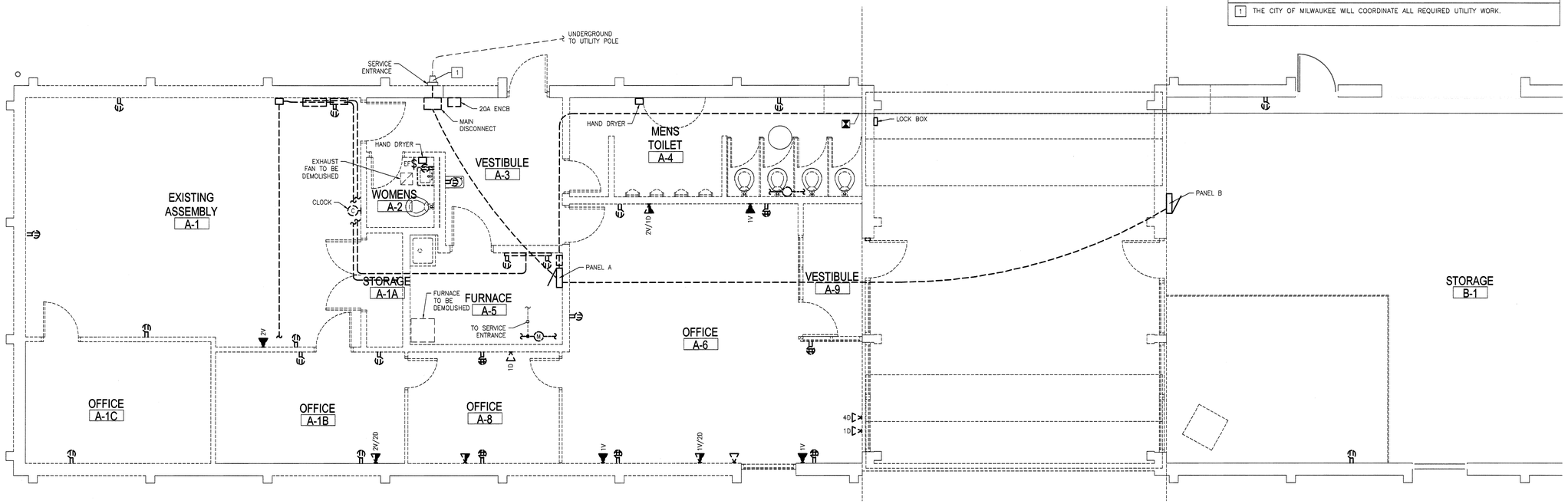

1 E2.03 FIRST FLOOR POWER, COMMUNICATIONS, AND GROUNDING - DEMOLITION (SOUTH)

0 1' 2' 4' 6'

N

WORK ON E SHEETS IS NIC UNLESS NOTED OTHERWISE. ELECTRICAL WORK SHALL BE PROVIDED BY THE CITY OF MILWAUKEE. PROVIDE COORDINATION OVERSIGHT FOR THE SCOPE OF THE PROJECT INCLUDING COORDINATION WITH THE CITY ELECTRICAL CONTRACTORS.

WORK ON THIS PROJECT SHALL BE PHASED TO MAINTAIN PRODUCTIVITY AND STAFF SHALL REMAIN ON SITE DURING ALL WORK.

X NEW WORK NOTES:

1. PROVIDE RACK MOUNTED SURGE SUPPRESSION FOR IT/DATA EQUIPMENT.
2. COORDINATE RECEPTACLE FINAL LOCATION WITH IT RACK AND BACKBOARD FINAL LOCATIONS.
3. COORDINATE FURNITURE WHIP LOCATIONS WITH THE FURNITURE. WHIPS SHOULD BE LOCATED AT OPEN PANELS.
4. INSTALL URINAL FLUSH VALVE POWER TRANSFORMER ABOVE THE CEILING. PROVIDE POWER FROM PANEL A AS SHOWN. EXTEND 24V AC POWER TO TWO URINAL FLUSH VALVES. REFER TO MANUFACTURERS WIRING DIAGRAM.

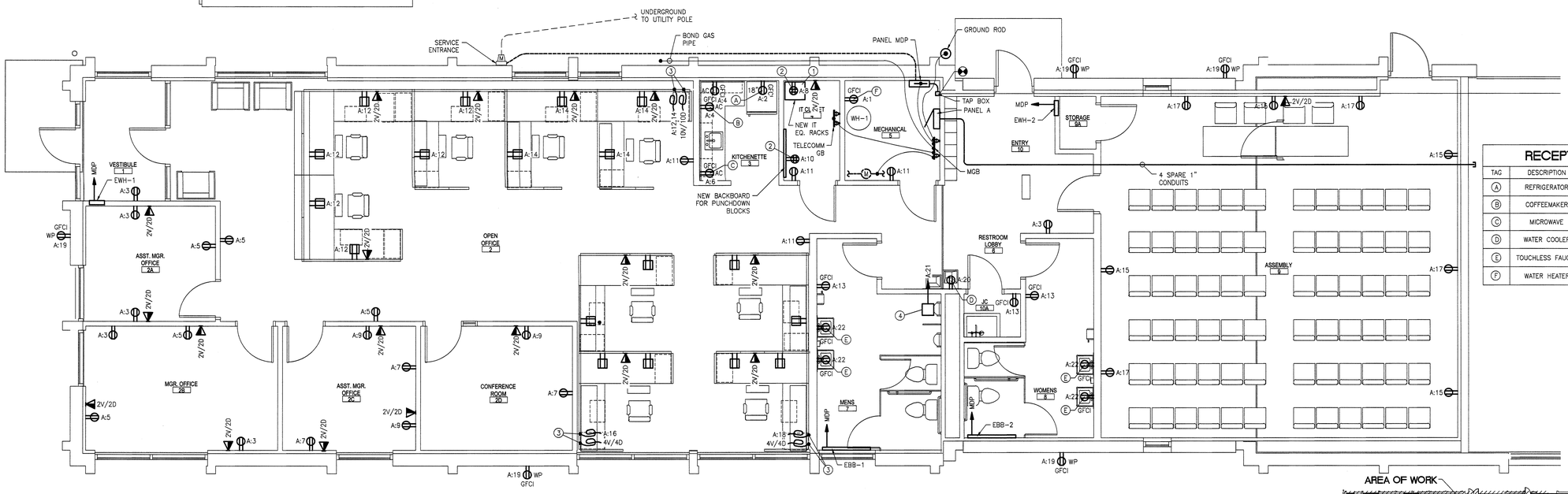

2 E2.03 FIRST FLOOR POWER, COMMUNICATIONS, AND GROUNDING - NEW WORK (SOUTH)

0 1' 2' 4' 6'

N

RECEPTACLE SCHEDULE

TAG	DESCRIPTION	FED FROM	NOTE
A	REFRIGERATOR	A:2	18" AFF
B	COFFEEMAKER	A:4	ABOVE COUNTER HEIGHT
C	MICROWAVE	A:6	ABOVE COUNTER HEIGHT
D	WATER COOLER	A:20	COORDINATE LOCATION WITH EQUIPMENT
E	TOUCHLESS FAUCET	A:22	COORDINATE LOCATION WITH EQUIPMENT
F	WATER HEATER	A:1	COORDINATE LOCATION WITH EQUIPMENT

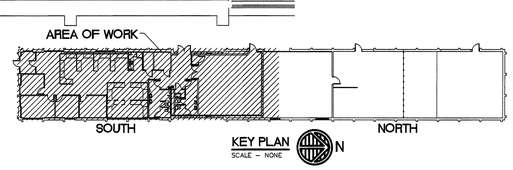

KEY PLAN
SCALE – NONE

N

CONTINUUM ARCHITECTS+PLANNERS,SC
P.O. BOX 510663
MILWAUKEE, WI 53203
T 414.220.9640
F 414.220.9595

City of Milwaukee Department of Public Works
Infrastructure Services Division
Facilities Development & Management Services

Consultant:

GRUMMAN/BUTKUS ASSOCIATES

Energy Efficiency Consultants and Sustainable Design Engineers
1011 North Mayfair Road
Suite 300
Wauwatosa, Wisconsin 53226
414 476.5880

Copyright ©2013 Grumman/Butkus Associates
S/W Job Number: 13410

SANITATION HEADQUARTERS BUILDING
2363 SOUTH 35TH STREET
MILWAUKEE, WI 53215

SANITATION HEADQUARTERS RENOVATION FIRST FLOOR POWER (SOUTH) DEMOLITION AND NEW WORK

ISSUE	DATE	REMARKS
-		
-		
-		
-		
-		
-		
-		
-		
-		
-		

ARCHITECT JOB#: 120905
CITY PROJECT#: BU11091119
DATE: 02/01/2013
ISSUE: ISSUED FOR BID

E2.03

© Copyright 2013, Continuum Architects + Planners S.C.

X DEMOLITION NOTES:

1. EXISTING TO REMAIN RECEPTACLES IN THESE AREAS COULD NOT BE COMPLETELY FIELD SURVEYED BECAUSE OF FIELD CONDITIONS. RECEPTACLES SHOULD BE DEMOLISHED AND NEW DEVICES INSTALLED IN EXISTING BOXES. REFEED NEW DEVICES FROM CIRCUITS AS SHOWN. DEVICES SHOWN ARE CONSISTENT WITH THE ORIGINAL DESIGN DRAWINGS.
2. DEMOLISH RECEPTACLE, FACE PLATE, AND ALL WIRING BACK TO SOURCE PANEL B. MAINTAIN BOX AND CONDUIT FOR NEW RECEPTACLE.

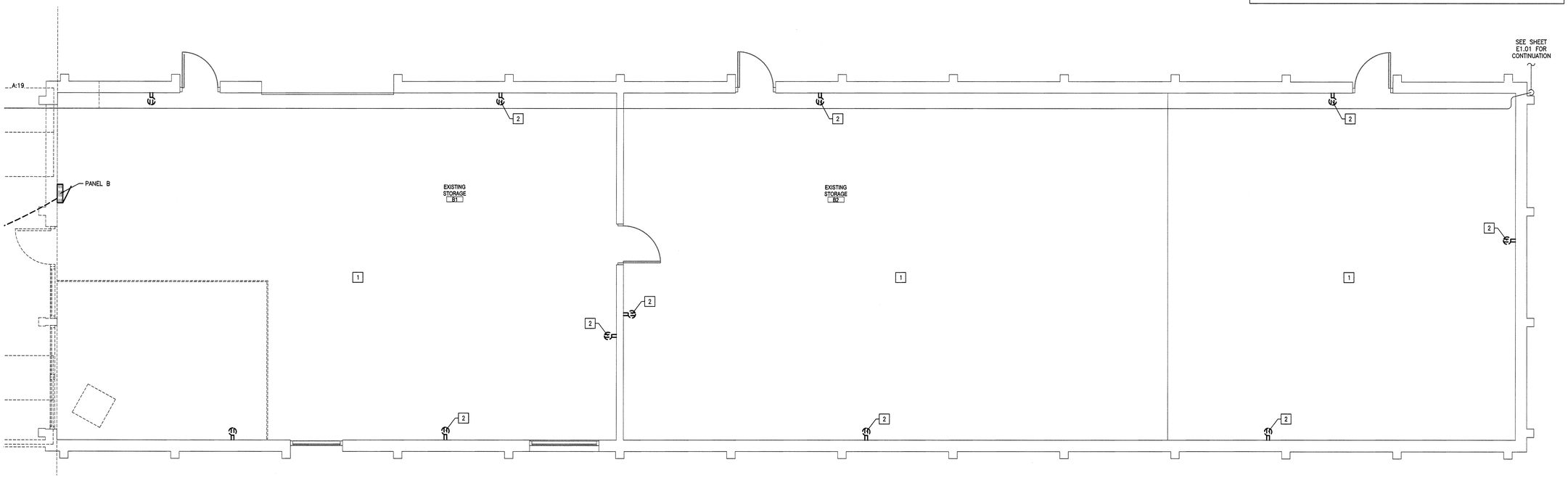

1 / E2.04 FIRST FLOOR POWER, COMMUNICATIONS, AND GROUNDING - DEMOLITION (NORTH)

0 1' 2' 4' 6' N

WORK ON E SHEETS IS NIC UNLESS NOTED OTHERWISE. ELECTRICAL WORK SHALL BE PROVIDED BY THE CITY OF MILWAUKEE. PROVIDE COORDINATION OVERSIGHT FOR THE SCOPE OF THE PROJECT INCLUDING COORDINATION WITH THE CITY ELECTRICAL CONTRACTORS.

WORK ON THIS PROJECT SHALL BE PHASED TO MAINTAIN PRODUCTIVITY AND STAFF SHALL REMAIN ON SITE DURING ALL WORK.

X NEW WORK NOTES:

1. EXISTING TO REMAIN RECEPTACLES IN THESE AREAS COULD NOT BE COMPLETELY FIELD SURVEYED BECAUSE OF FIELD CONDITIONS. RECEPTACLES SHOULD BE DEMOLISHED AND NEW DEVICES INSTALLED IN EXISTING BOXES. REFEED NEW DEVICES FROM CIRCUITS AS SHOWN. DEVICES SHOWN ARE CONSISTENT WITH THE ORIGINAL DESIGN DRAWINGS.
2. PROVIDE NEW RECEPTACLE, FACE PLATE, AND POWER CIRCUIT. REUSE EXISTING BOXES AND AS MUCH CONDUIT AS POSSIBLE.
3. PROVIDE A NEW DEDICATED SINGLE 20A RECEPTACLE FOR THE BUILDING AIR COMPRESSOR.

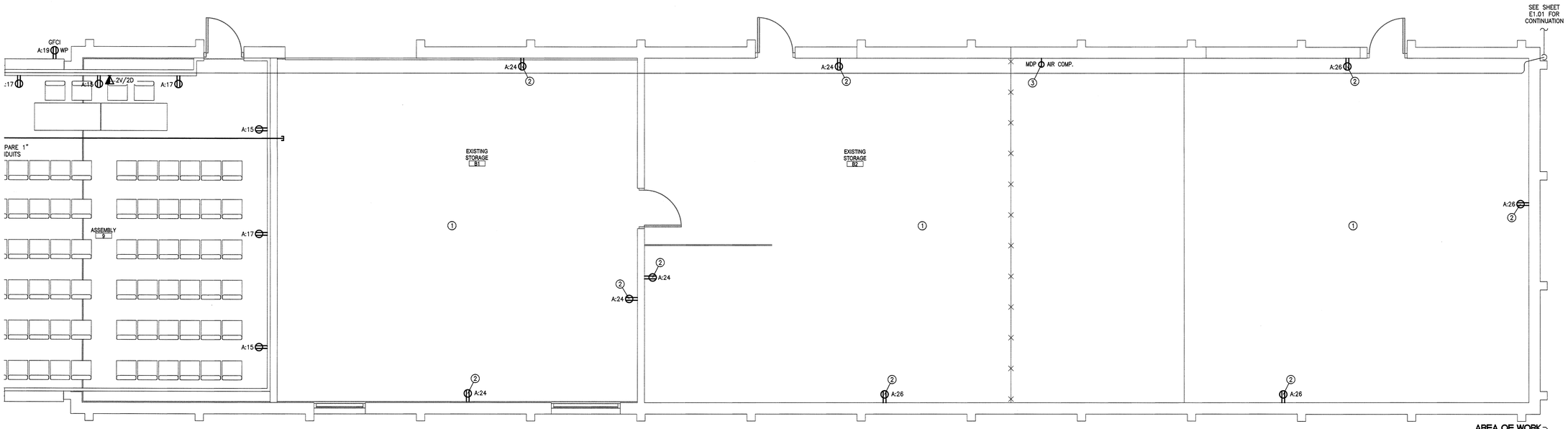

2 / E2.04 FIRST FLOOR POWER, COMMUNICATIONS, AND GROUNDING - NEW WORK (NORTH)

0 1' 2' 4' 6' N

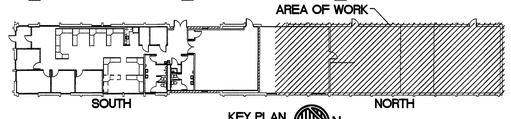

KEY PLAN
SCALE – NONE

CONTINUUM
ARCHITECTS+PLANNERS S.C.
P.O. BOX 510663
MILWAUKEE, WI 53203
T 414.270.9640
F 414.270.9395

City of Milwaukee Department of Public Works
Infrastructure Services Division
Facilities Development & Management Services

Consultant:

GRUMMAN/BUTKUS ASSOCIATES
Energy Efficiency Consultants and Sustainable Design Engineers
1011 North Mayfair Road
Suite 300
Wauwatosa, Wisconsin 53226
414 476.6960

Copyright (C)2012 Grumman/Butkus Associates
G/B Job Number: 12423

SANITATION HEADQUARTERS BUILDING
2363 SOUTH 35TH STREET
MILWAUKEE, WI 53215

SANITATION HEADQUARTERS RENOVATION
FIRST FLOOR POWER (NORTH)
DEMOLITION AND NEW WORK

ISSUE	DATE	REMARKS
-		
-		
-		
-		
-		
-		
-		
-		
-		
-		
-		

ARCHITECT JOB#: 120905
CITY PROJECT#: BU11091119
DATE: 02/01/2013
ISSUE: ISSUED FOR BID

E2.04

© Copyright 2013, Continuum Architects + Planners S.C.

X DEMOLITION NOTES:

1. DEMOLISH POWER TO EXISTING ROOF EQUIPMENT.

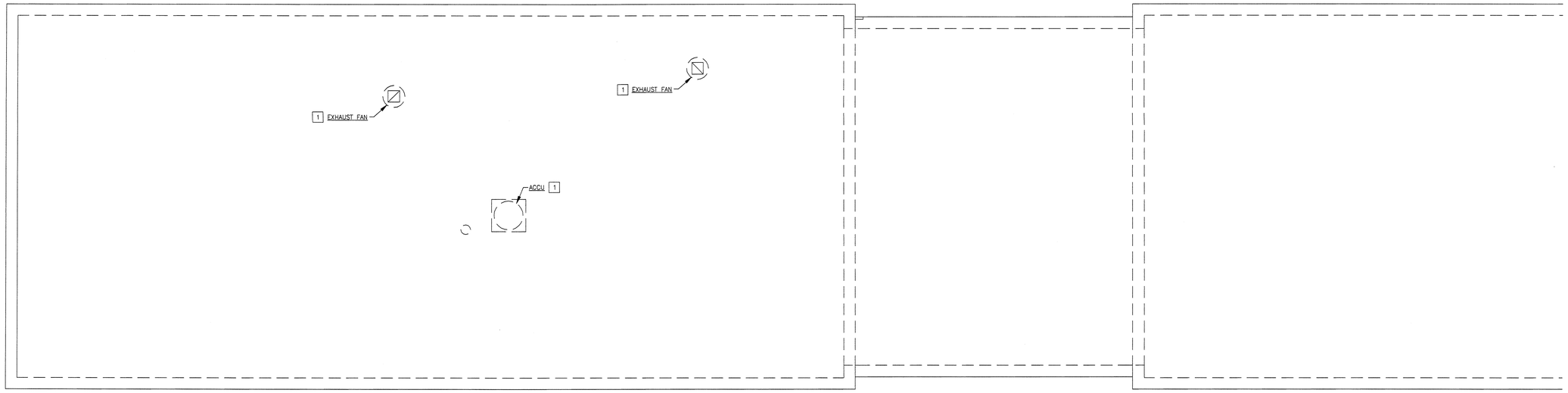

1 / E2.03 ROOF POWER AND GROUNDING - DEMOLITION (SOUTH)

0 1' 2' 4' 6'

N

WORK ON E SHEETS IS NIC UNLESS NOTED OTHERWISE. ELECTRICAL WORK SHALL BE PROVIDED BY THE CITY OF MILWAUKEE. PROVIDE COORDINATION OVERSIGHT FOR THE SCOPE OF THE PROJECT INCLUDING COORDINATION WITH THE CITY ELECTRICAL CONTRACTORS.

WORK ON THIS PROJECT SHALL BE PHASED TO MAINTAIN PRODUCTIVITY AND STAFF SHALL REMAIN ON SITE DURING ALL WORK.

X NEW WORK NOTES:

1. NEW DISCONNECT SWITCHES SHALL BE FURNISHED BY THE DIV. 13 CONTRACTOR.
2. EF-1 WILL BE PROVIDED WITH AN INTEGRAL DISCONNECT SWITCH.

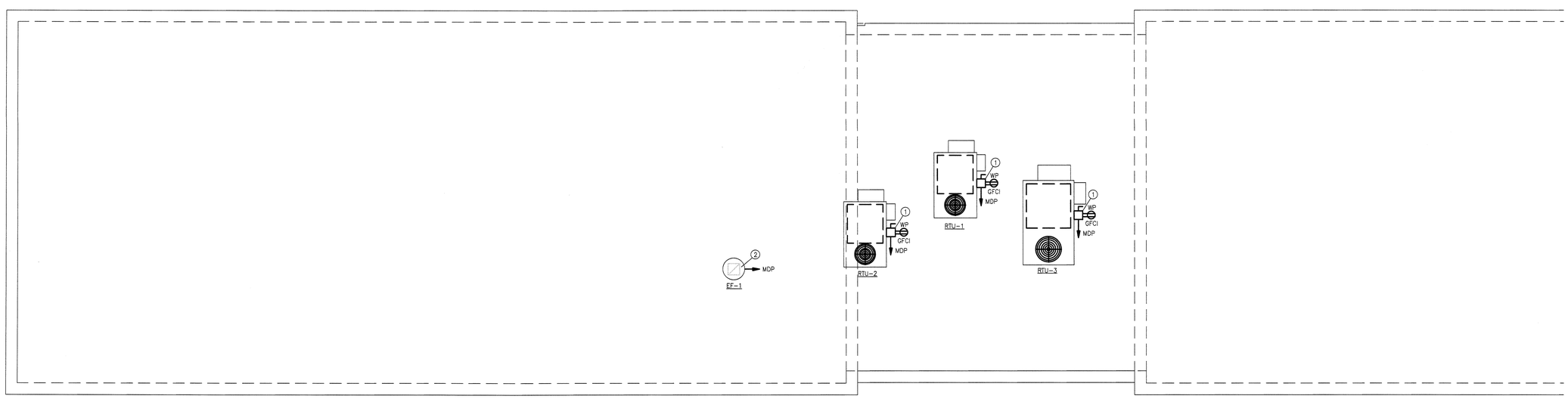

2 / E2.03 ROOF POWER AND GROUNDING - NEW WORK (SOUTH)

0 1' 2' 4' 6'

N

AREA OF WORK

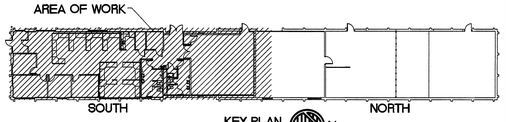

KEY PLAN
SCALE – NONE

N

CONTINUUM
ARCHITECTS + PLANNERS S.C.
P.O.BOX 510563
MILWAUKEE, WI 53203
T 414.320.9640
F 414.320.9395

City of Milwaukee Department of Public Works
Infrastructure Services Division
Facilities Development & Management Services

Consultant:

GRUMMAN/BUTKUS ASSOCIATES

Energy Efficiency Consultants and Sustainable Design Engineers
1011 North Mayfair Road
Suite 300
Wauwatosa, Wisconsin 53226
414 476.5560

Copyright © 2013 Grumman/Butkus Associates
G/B Job Number: 12410

SANITATION HEADQUARTERS BUILDING
2383 SOUTH 35TH STREET
MILWAUKEE, WI 53215

SANITATION HEADQUARTERS RENOVATION

ROOF POWER (SOUTH) DEMOLITION AND NEW WORK

ISSUE	DATE	REMARKS
–		
–		
–		
–		
–		
–		
–		
–		
–		
–		
–		

ARCHITECT JOB#:	120905
CITY PROJECT#:	BU11091119
DATE:	02/01/2013
ISSUE:	ISSUED FOR BID

E2.05

© Copyright 2013, Continuum Architects + Planners S.C.

EQUIPMENT SCHEDULE

TAG	EQUIPMENT	LOCATION	LOAD					FED FROM	BREAKER	CONDUIT & CABLE	DISCONNECT				REMARKS
			PHASE	VOLTS	FLA	MCA	HP/WATTS				SIZE	FUSE	NEMA ENCLOSURE	FURNISHED BY DIV 13/16	
RTU-1	ROOF TOP UNIT	ROOF	1	240		26.7		MDP	40A	(2)#8 + (1)#10 GND IN 3/4"C	60A	–	3R	13	
RTU-2	ROOF TOP UNIT	ROOF	1	240		26.7		MDP	40A	(2)#8 + (1)#10 GND IN 3/4"C	60A	–	3R	13	
RTU-3	ROOF TOP UNIT	ROOF	1	240		37.3		MDP	50A	(2)#6 + (1)#10 GND IN 3/4"C	60A	–	3R	13	
EF-1	EXHAUST FAN	ROOF	1	120	44			MDP	15A	(2)#12 + (1)#12 GND IN 3/4"C	–	–	–	–	MOTOR RATED TOGGLE SWITCH DISCONNECT AT UNIT PROVIDED WITH EQUIPMENT
WH-1	WATER HEATER	MECHANICAL RM. 5	1	120	6.2			MDP	15A	(2)#12 + (1)#12 GND IN 3/4"C	M	–	–	16	
EWH-1	ELECTRIC WALL HEATER	VESTIBULE 1	1	240	–	–	3000W	MDP	20A	(2)#12 + (1)#12 GND IN 1/2"C	INTEGRAL DISCONNECT				
EWH-2	ELECTRIC WALL HEATER	ENTRY 5	1	240	–	–	3000W	MDP	20A	(2)#12 + (1)#12 GND IN 1/2"C	INTEGRAL DISCONNECT				
EBB-1	ELECTRIC BASEBOARD HEATER	MENS 8	1	240	–	–	1000W	MDP	15A	(2)#12 + (1)#12 GND IN 1/2"C	INTEGRAL DISCONNECT				
EBB-2	ELECTRIC BASEBOARD HEATER	WOMENS 7	1	240	–	–	1000W	MDP	15A	(2)#12 + (1)#12 GND IN 1/2"C	INTEGRAL DISCONNECT				

NOTES:
1) SEE SPECIFICATIONS FOR ADDITIONAL INFORMATION.
2) WHERE STARTERS ARE INDICATED, SELECT THERMAL OVERLOAD PER MANUFACTURER RECOMMENDATIONS.
3) ALL SIZES ARE BASED ON DESIGNED EQUIPMENT VALUES. THE DIVISION 16 CONTRACTOR SHALL COORDINATE WITH THE EQUIPMENT AS PROVIDED BY THE DIVISION 13 CONTRACTOR TO SIZE ALL DEVICES, CONDUIT AND WIRING PER NEC.

LUMINARE SCHEDULE

ID	DESCRIPTION	MANUFACTURERS	CATALOG NUMBER	VOLTS	MOUNTING	REMARKS
A	2X2 RECESSED LED TROFFER	LITHONIA	2TL2 33L FW A19 D38 LP850 BLD	120	RECESSED	PROVIDE DGA22 FOR FIXTURES IN VESTIBULE AND ENTRY
B	2X4 RECESSED LED TROFFER	LITHONIA	2TL4 46L FW A19 D50 LP850 BLD	120	RECESSED	PROVIDE DGA24 FOR FIXTURES IN ENTRY
C	RECESSED STRIP LIGHT	LITHONIA	ZL2 L46 2300L LP840	120	RECESSED	
D	1X2 LED LIGHT	LITHONIA	STL2 22L D26 LP850	120	PENDANT	PENDANT MOUNT 8'-6" AFF
E	1X4 LED LIGHT	LITHONIA	STL4 40L D40 LP850	120	PENDANT	PENDANT MOUNT 8'-6" AFF
MH1	WALL MOUNTED EXTERIOR LIGHT	LITHONIA	CSXW LED 1 30B350/50K SR4 120 PE	120	EXTERIOR WALL 7'-6" AFF	COORDINATE FINISH WITH ARCHITECT PRIOR TO ORDERING
MH2	LED HIGH BAY	HUBBELL INDUSTRIAL	HBL 48L U A X 4K W 070 GR WG	120	PENDANT	
	EXIT SIGN, SINGLE OR DOUBLE FACE. PROVIDE WITH NICAD BATTERY WITH SELF DIAGNOSTICS	LITHONIA	LQM S W 3R 120/277 EL N SD	120	CEILING	
	COMBINATION EXIT SIGN/EMERGENCY LIGHT	LITHONIA	LHQM S W 3 R N	120	CEILING	
	SELF-CONTAINED EMERGENCY LIGHT	LITHONIA	ELM2 SD	120	WALL	
	EXTERIOR SELF-CONTAINED EMERGENCY LIGHT UNIT WITH REMOTE LAMPS	LITHONIA	ELM618 RO/ELA WTNX H0806	120	EXTERIOR WALL	

NOTES:
1) MANUFACTURERS NAMES AND CATALOG NUMBERS ARE USED FOR QUALITY AND PERFORMANCE ONLY. EQUIVALENT EQUIPMENT MANUFACTURED BY OTHERS WILL BE EQUALLY ACCEPTABLE.
2) SUBMIT CUTSHEETS FOR ENGINEER APPROVAL. SEE SPECIFICATION DIVISION 26 51 13.

WORK ON E SHEETS IS NIC UNLESS NOTED OTHERWISE. ELECTRICAL WORK SHALL BE PROVIDED BY THE CITY OF MILWAUKEE. PROVIDE COORDINATION OVERSIGHT FOR THE SCOPE OF THE PROJECT INCLUDING COORDINATION WITH THE CITY ELECTRICAL CONTRACTORS.

CONTINUUM
ARCHITECTS + PLANNERS, S.C.
P.O. BOX 510563
MILWAUKEE, WI 53203
T 414.220.9540
F 414.220.9595

City of Milwaukee
Department of Public Works
Infrastructure Services Division
Facilities Development & Management Services

Consultant:

GRUMMAN/BUTKUS ASSOCIATES
Energy Efficiency Consultants and Sustainable Design Engineers
2011 North Mayfair Road
Suite 300
Wauwatosa, Wisconsin 53226
414 476.8980

Copyright ©2013 Grumman/Butkus Associates
S/N Job Number: 13032

SANITATION HEADQUARTERS BUILDING
2363 SOUTH 35TH STREET
MILWAUKEE, WI 53215

SANITATION HEADQUARTERS RENOVATION
ELECTRICAL SCHEDULES

ISSUE	DATE	REMARKS
–		
–		
–		
–		
–		
–		
–		
–		
–		
–		

ARCHITECT JOB#: 120905
CITY PROJECT#: BU11091119
DATE: 02/01/2013
ISSUE: ISSUED FOR BID

E3.01

© Copyright 2013,
Continuum Architects + Planners S.C.

Demolition Panel A Left

NEW OR EXISTING: DEMO | LOCATION : FURNACE A-5 | MOUNTING : SURFACE | ENCLOSURE: NEMA 1

VOLTAGE/PHASE : | BUS AMPS : | MAIN BREAKER : M.L.O. | FED FROM : PANEL A

NEUTRAL BUS: 100% | GROUND BUS: YES- BOLTED | ISO. GRND. BUS: NONE | FULLY RATED AIC:

LOAD DESCRIPTION	LOAD TYPE	NOTE	VOLT-AMPS A	VOLT-AMPS B	CKT	BKR/ POLE	A B	BKR/ POLE	CKT	VOLT-AMPS A	VOLT-AMPS B	NOTE	LOAD TYPE	LOAD DESCRIPTION
REC 1S0 PHONE BOARD		1	0		1	15/1	* -	20/1	2	0		1		LITES OLD SALT SHED
REC OUTSIDE SALT SHED		1		0	3	20/1	- *	20/1	4		0	1		WEST WALL OFICE
BLDG LTS SHED		1			5	20/1	* -	20/1	6			1		UNLABELED
SPACE		1	0		7		- *	20/1	8	0		1		UNLABELED
SPACE		1		0	9		* -	20/1	10		0	1		SE OFFICE
SPACE		1			11		- *	20/1	12			1		SE OFFICE
SPACE		1	0		13		* -		14	0		1		SPACE
SPACE		1		0	15		- *		16		0	1		SPACE
SPACE		1			17		* -		18			1		SPACE
SPACE		1	0		19		- *		20	0		1		SPACE
SPACE		1		0	21		* -		22		0	1		SPACE
SPACE		1			23		- *		24			1		SPACE

BREAKER NOTES
1) Thermal Magnetic
2) Shunt trip
3) Lock-out device
4) GFIC
5) AFCI
6) HACR

CONNECTED PHASE LOADS
0 VA
0 VA

LOAD TYPES	CONNECTED	DEMAND
LIGHTING (L) =	0	0
RECEPTACLES (R)=	0	0
MOTORS (M)=	0	0
ELECTRIC HEATING (H) =	0	0
EQUIPMENT (E) =	0	0
PANELS (P) =	0	0
TOTAL VA =	0	0
TOTAL AMPS =	0.0	0.0

Demolition Panel A

NEW OR EXISTING: DEMO | LOCATION : FURNACE A-5 | MOUNTING : SURFACE | ENCLOSURE: NEMA 1

VOLTAGE/PHASE : | BUS AMPS : 225A | MAIN BREAKER : M.L.O. | FED FROM : 200A MAIN

NEUTRAL BUS: 100% | GROUND BUS: YES- BOLTED | ISO. GRND. BUS: NONE | FULLY RATED AIC:

LOAD DESCRIPTION	LOAD TYPE	NOTE	VOLT-AMPS A	VOLT-AMPS B	CKT	BKR/ POLE	A B	BKR/ POLE	CKT	VOLT-AMPS A	VOLT-AMPS B	NOTE	LOAD TYPE	LOAD DESCRIPTION
LITES ASSEMBLY ROOM	L	1	0		1	20/1	* -	20/1	18	0		1		SPARE
LITES WOMENS RM AND EF	L	1		0	2	20/1	- *	20/1	19		0	1	H	GARAGE BLOCK HEATERS
LITES-VEST-BOILER RM-E OFFICE	L	1			3	20/1	* -	15/1	20			1	H	FURNACE
LITES MAIN OFFICE	L	1	0		4	20/1	- *	20/2	21	0		1	H	MENS ROOM HAND DRYER
LITES MAIN OFFICE	L	1		0	5	20/1	* -		22		0	1	H	
LITES TOILET RM-EF	L	1			6	20/1	- *	100/2	23			1	P	PANEL TO THE LET
RECEPT. E + S WALL ASSEMBLY RM	R	1	0		7	20/1	* -		24	0		1	P	
RECEPT. W + N WALL ASSMBLY RM	R	1		0	8	20/1	- *	20/1	25		0	1		UNLABELED
RECEPT. E OFFICE COMP. DED	R	1			9	20/1	* -	20/1	26			1		UNLABELED
RECEPT TOILET RM OUTSIDE TELE BELL	R	1	0		10	20/1	- *	20/1	27	0		1	R	ROOF TOP OUTLET
RECEPT S + W WALL MAIN OFFICE	R	1		0	11	20/1	* -	40/2	28		0	1	E	ROOF TOP CENTRAL AIR
RECEPT E WALL MAIN OFFICE	R	1			12	20/1	- *		29			1	E	
UNLABELED		1	0		13	20/1	* -	20/1	30	0		1		UNLABELED
LIGHTS OUTSIDE BRACKETS	L	1		0	14	20/1	- *	20/1	31		0	1	H	WOMEN'S ROOM HAND DRYER
OFFICE W WALL RECEPT.	R	1			15	20/1	* -	20/2	32	0		1	L	YARD LIGHTS
OFFICE E WALL RECEPT.	R	1	0		16	20/1	- *							
PANEL B STORAGE BLDG	P	1		0	17	30/2	* -	30/2	33		0	1		SPARE
	P	1					- *							
N. GARAGE PANEL/ BLOCK OUTLETS	P	1	0			100/2	* -			0		1		NO SPACE
	P	1		0			- *				0	1		NO SPACE
SPACE		1	0			20/1	* -	20/1		0		1	R	GFCI RECEPT. NEW SINK

BREAKER NOTES
1) Thermal Magnetic
2) Shunt trip
3) Lock-out device
4) GFIC
5) AFCI
6) HACR

CONNECTED PHASE LOADS
0 VA
0 VA

LOAD TYPES	CONNECTED	DEMAND
LIGHTING (L) =	0	0
RECEPTACLES (R)=	0	0
MOTORS (M)=	0	0
ELECTRIC HEATING (H) =	0	0
EQUIPMENT (E) =	0	0
PANELS (P) =	0	0
TOTAL VA =	0	0
TOTAL AMPS =	0.0	0.0

Demolition Panel B

NEW OR EXISTING: DEMO | LOCATION : STORAGE B-1 | MOUNTING : SURFACE | ENCLOSURE: NEMA 1

VOLTAGE/PHASE : | BUS AMPS : | MAIN BREAKER : M.L.O. | FED FROM : PANEL A

NEUTRAL BUS: 100% | GROUND BUS: YES- BOLTED | ISO. GRND. BUS: NONE | FULLY RATED AIC:

LOAD DESCRIPTION	LOAD TYPE	NOTE	VOLT-AMPS A	VOLT-AMPS B	CKT	BKR/ POLE	A B	BKR/ POLE	CKT	VOLT-AMPS A	VOLT-AMPS B	NOTE	LOAD TYPE	LOAD DESCRIPTION
UNLABELED		1	0		1	20/1	* -	20/1	2	0		1		UNLABELED
STORAGE RECEPTACLES		1		0	3	20/1	- *	15/1	4		0	1		EM LITS?
UNLABELED		1			5	20/1	* -	15/1	6			1		HEAT
UNLABELED		1	0		7	20/1	- *	20/1	8	0		1		WALL PACK LTS

BREAKER NOTES
1) Thermal Magnetic
2) Shunt trip
3) Lock-out device
4) GFIC
5) AFCI
6) HACR

CONNECTED PHASE LOADS
0 VA
0 VA

LOAD TYPES	CONNECTED	DEMAND
LIGHTING (L) =	0	0
RECEPTACLES (R)=	0	0
MOTORS (M)=	0	0
ELECTRIC HEATING (H) =	0	0
EQUIPMENT (E) =	0	0
PANELS (P) =	0	0
TOTAL VA =	0	0
TOTAL AMPS =	0.0	0.0

Existing Panel N - New Work

Square D QO Load Center

NEW OR EXISTING: EXISTING | LOCATION : NORTH GARAGE | MOUNTING : SURFACE | ENCLOSURE: NEMA 1

VOLTAGE/PHASE : 120/240V, | BUS AMPS : 100A | MAIN BREAKER : 60A-2P | FED FROM : PANEL A

NEUTRAL BUS: 100% | GROUND BUS: YES- BOLTED | ISO. GRND. BUS: NONE | FULLY RATED AIC:

LOAD DESCRIPTION	LOAD TYPE	NOTE	VOLT-AMPS A	VOLT-AMPS B	CKT	BKR/ POLE	A B	BKR/ POLE	CKT	VOLT-AMPS A	VOLT-AMPS B	NOTE	LOAD TYPE	LOAD DESCRIPTION
POLE LIGHTS WEST	L	1	0		1	20/1	* -	20/1	2	0		1	L	GARAGE LIGHTS
EXIT	L	1		0	3	20/1	- *	20/1	4		0	1	L	GARAGE LIGHTS
(1) GATE OPERATOR NW STORAGE BUILDING	M	1			5	20/1	* -	15/2	6			1	M	EXHAUST FANS
(1) LIGHTS - NW STORAGE BUILDING	L	1	0		7	20/1	- *		8	0		1	M	
(1) RECEPTACLES - NW STORAGE BUILDING	R	1		0	9	20/1	* -	20/1	10		0	1	R	WALL OUTLET
POLE LIGHTS EAST	L	1			11	20/1	- *	20/1	12			1	R	WALL OUTLET
SPACE		1	0		13		* -		14	0		1		SPACE
SPACE		1		0	15		- *		16		0	1		SPACE

BREAKER NOTES
1) Thermal Magnetic
2) Shunt trip
3) Lock-out device
4) GFIC
5) AFCI
6) HACR

CONNECTED PHASE LOADS
0 VA
0 VA

LOAD TYPES	CONNECTED	DEMAND
LIGHTING (L) =	0	0
RECEPTACLES (R)=	0	0
MOTORS (M)=	0	0
ELECTRIC HEATING (H) =	0	0
EQUIPMENT (E) =	0	0
PANELS (P) =	0	0
TOTAL VA =	0	0
TOTAL AMPS =	0.0	0.0

(X) NEW WORK NOTES:

(1) PROVIDE NEW CIRCUIT BREAKER IN THE EXISTING PANEL.

New Panel A Section 1

NEW OR EXISTING: NEW | LOCATION : MECHANICAL 5 | MOUNTING : SURFACE | ENCLOSURE: NEMA 1

VOLTAGE/PHASE : | BUS AMPS : 225A | MAIN BREAKER : MLO | FED FROM : PANEL A SECTION 1

NEUTRAL BUS: 100% | GROUND BUS: YES- BOLTED | ISO. GRND. BUS: NONE | FULLY RATED AIC: 22,000 - coordinate with utility

LOAD DESCRIPTION	LOAD TYPE	NOTE	VOLT-AMPS A	VOLT-AMPS B	CKT	BKR/ POLE	A B	BKR/ POLE	CKT	VOLT-AMPS A	VOLT-AMPS B	NOTE	LOAD TYPE	LOAD DESCRIPTION
Water Heater	H	1	600		1	20/1	* -	20/1	2	180		1	E	Refridgerator Receptacle
Vestibule 1, Office 2A, Office 2B Receptacles	R	1		900	3	20/1	- *	20/1	4		360	1	R	Coffee Maker and above counter Receptacles
Open Office 2, Office 2A, Office 2B Receptacles	R	1	900		5	20/1	- *	20/1	6	180		1	R	Mircowave Receptacle
Office 2C, Office 2D Receptacles - Circuit 1	R	1		540	7	20/1	* -	20/1	8		360	1	R	IT Closet Equipment Receptacle - Circuit 1
Office 2C, Office 2D Receptacles - Circuit 2	R	1	540		9	20/1	* -	20/1	10	360		1	R	IT Closet Equipment Receptacle - Circuit 2
Open Office 2, IT Closet 4, Mechanical Room 5 Receptacles	R	1		720	11	20/1	- *	20/1	12		1,080	1	R	Workstations Power Whip - SW
Restroom Lobby 6, Mens 7, Janitor 10A, Womens 8 Recepts	R	1	540		13	20/1	- *	20/1	14	720		1	R	Workstations Power Whip - NW
Assembly 9 Receptacles - Circuit 1	R	1		720	15	20/1	* -	20/1	16		720	1	R	Workstations Power Whip - SE
Assembly 9 Receptacles - Circuit 2	R	1	720		17	20/1	* -	20/1	18	720		1	R	Workstations Power Whip - NE
Exterior Receptacles	R	1		720	19	20/1	- *	20/1	20		528	1	E	Water Cooler Receptacle
Urinal Flush Valves	R	1	100		21	15/1	- *	15/1	22	140		1	E	Touchless Faucet Receptacles (total of 4)
Spare		1		0	23	20/1	* -	20/1	24		900	1	R	Storage B1 , Storage B2 Receptacles
Spare		1	0		25	20/1	- *	20/1	26	720		1	R	Storage B2 Receptacles
Spare		1		0	27	20/1	* -	20/1	28		0	1		Spare
Spare		1	0		29	20/1	* -	20/1	30	0		1		Spare

BREAKER NOTES
1) Thermal Magnetic
2) Shunt trip
3) Lock-out device
4) GFIC
5) AFCI
6) HACR

CONNECTED PHASE LOADS
6,420 VA
7,548 VA

LOAD TYPES	CONNECTED	DEMAND
LIGHTING (L) =	0	0
RECEPTACLES (R)=	12520	11260
MOTORS (M)=	0	0
ELECTRIC HEATING (H) =	600	480
EQUIPMENT (E) =	848	678.4
PANELS (P) =	0	0
TOTAL VA =	13968	12418.4
	58.2	51.7
TOTAL AMPS Both Sections =	71.2	64.8

New Panel A Section 2

NEW OR EXISTING: NEW | LOCATION : MECHANICAL 5 | MOUNTING : SURFACE | ENCLOSURE: NEMA 1

VOLTAGE/PHASE : | BUS AMPS : 225A | MAIN BREAKER : MLO | FED FROM : PANEL A SECTION 1

NEUTRAL BUS: 100% | GROUND BUS: YES- BOLTED | ISO. GRND. BUS: NONE | FULLY RATED AIC: 22,000 - coordinate with utility

LOAD DESCRIPTION	LOAD TYPE	NOTE	VOLT-AMPS A	VOLT-AMPS B	CKT	BKR/ POLE	A B	BKR/ POLE	CKT	VOLT-AMPS A	VOLT-AMPS B	NOTE	LOAD TYPE	LOAD DESCRIPTION
Lts - Vest 1, Offices 2A, 2B, 2C, 2D	L	1	434		31	20/1	* -	20/1	32	256		1	L	Storage B1
Lts- Open Office 2	L	1		708	33	20/1	- *	20/1	34		375	1	L	Storage B2
Lts - IT 4, Mech 5, Mens 7	L	1	248		35	20/1	- *	20/1	36	0		1		Spare
Lts - Entry 10, Rest Rm Lobby 6, Womens 8, JC 10A	L	1		299	37	20/1	* -	20/1	38		0	1		Spare
Lts - Assembly 9, Storage 9A	L	1	620		39	20/1	* -	20/1	40	0		1		Spare
Exterior Lights	L	1		190	41	20/1	- *	20/1	42		0	1		Spare
Spare		1	0		43	20/1	- *	20/1	44	0		1		Spare
Spare		1		0	45	20/1	* -	20/1	46		0	1		Spare
Spare		1	0		47	20/1	* -	20/1	48	0		1		Spare
Spare		1		0	49	20/1	- *	20/1	50		0	1		Spare
Spare		1	0		51	20/1	- *	20/1	52	0		1		Spare
Spare		1		0	53	20/1	* -	20/1	54		0	1		Spare
Spare		1	0		55	20/1	* -	20/1	56	0		1		Spare
Spare		1		0	57	20/1	- *	20/1	58		0	1		Spare
Spare		1	0		59	20/1	* -	20/1	60	0		1		Spare

BREAKER NOTES
1) Thermal Magnetic
2) Shunt trip
3) Lock-out device
4) GFIC
5) AFCI
6) HACR

CONNECTED PHASE LOADS
1,569 VA
1,572 VA

LOAD TYPES	CONNECTED	DEMAND
LIGHTING (L) =	3130.5	3130.5
RECEPTACLES (R)=	0	0
MOTORS (M)=	0	0
ELECTRIC HEATING (H) =	0	0
EQUIPMENT (E) =	0	0
PANELS (P) =	0	0
TOTAL VA =	3130.5	3130.5
TOTAL AMPS =	13.0	13.0

NEW PANEL MDP

NEW OR EXISTING: NEW | LOCATION : MECHANICAL 5 | MOUNTING : SURFACE | ENCLOSURE: NEMA 1

VOLTAGE/PHASE : | BUS AMPS : 400A | MAIN BREAKER : 300A | FED FROM : UTILITY XFMR

NEUTRAL BUS: 100% | GROUND BUS: YES- BOLTED | ISO. GRND. BUS: NONE | FULLY RATED AIC: 22,000 - coordinate with utility

LOAD DESCRIPTION	LOAD TYPE	NOTE	VOLT-AMPS A	VOLT-AMPS B	CKT	BKR/ POLE	A B	BKR/ POLE	CKT	VOLT-AMPS A	VOLT-AMPS B	NOTE	LOAD TYPE	LOAD DESCRIPTION
RTU-1	E	6	2,136		1	40/2	* -	150/2	2	7,945		1	P	Panel A
	E	6		2,136	3		- *		4		7,945	1	P	
RTU-2	E	6	2,136		5	40/2	- *	100/2	6	0		1	P	Panel N and Block Heaters Panel
	E	6		2,136	7		* -		8		0	1	P	
RTU-3	E	6	4,476		9	50/2	* -	20/2	10	1,500		1	H	EWH-1
	E	6		4,476	11		- *		12		1,500	1	H	
EF-1	M	1	528		13	15/1	- *	20/2	14	1,500		1	H	EWH-2
AIR COMPRESSOR	M	1		1,800	15	30/1	* -		16		1,500	1	H	
Spare		1	0		17	20/1	* -	15/2	18	500		1	H	EBB-1
Spare		1		0	19	20/1	- *		20		500	1	H	
Spare		1	0		21	20/1	- *	15/2	22	500		1	H	EBB-2
Spare		1		0	23	15/1	* -		24		500	1	H	
Space		1	0		25		- *		26	0		1		Space
Space		1		0	27		* -		28		0	1		Space
Space		1	0		29		* -		30	0		1		Space

BREAKER NOTES
1) Thermal Magnetic
2) Shunt trip
3) Lock-out device
4) GFIC
5) AFCI
6) HACR

CONNECTED PHASE LOADS
21,221 VA
22,493 VA

LOAD TYPES	CONNECTED	DEMAND
LIGHTING (L) =	0	0
RECEPTACLES (R)=	0	0
MOTORS (M)=	2328	1862.4
ELECTRIC HEATING (H) =	8000	6400
EQUIPMENT (E) =	17496	13996.8
PANELS (P) =	15890.9	15890.9
TOTAL VA =	43714.9	38150.1
TOTAL AMPS =	182.1	159.0

WORK ON E SHEETS IS NIC UNLESS NOTED OTHERWISE. ELECTRICAL WORK SHALL BE PROVIDED BY THE CITY OF MILWAUKEE. PROVIDE COORDINATION OVERSIGHT FOR THE SCOPE OF THE PROJECT INCLUDING COORDINATION WITH THE CITY ELECTRICAL CONTRACTORS.

CONTINUUM
ARCHITECTS + PLANNERS, S.C.
P.O. BOX 510663
MILWAUKEE, WI 53203
T 414.220.9640
F 414.220.9595
ARCHITECTURE - MASTER PLANNING - INTERIOR DESIGN

City of Milwaukee
Department of Public Works
Infrastructure Services Division
Facilities Development & Management Services

Consultant:
GRUMMAN /BUTKUS ASSOCIATES
Energy Efficiency Consultants and Sustainable Design Engineers
1011 North Mayfair Road
Suite 300
Wauwatosa, Wisconsin 53226
414 476.8980
Copyright ©2012 Grumman/Butkus Associates
G/BA Job Number: 12433

SANITATION HEADQUARTERS BUILDING
2363 SOUTH 35TH STREET
MILWAUKEE, WI 53215

SANITATION HEADQUARTERS RENOVATION
ELECTRICAL PANEL SCHEDULES

ISSUE	DATE	REMARKS
–		
–		
–		
–		
–		
–		
–		
–		
–		
–		

ARCHITECT JOB#: 120905
CITY PROJECT#: BU11091119
DATE: 02/01/2013
ISSUE: ISSUED FOR BID

E3.02

© Copyright 2013, Continuum Architects + Planners S.C.

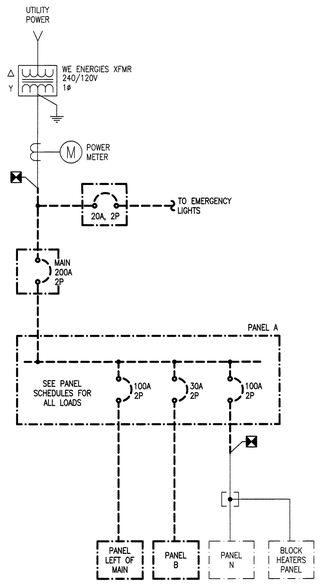

1 E4.01 **ELECTRICAL ONE-LINE DIAGRAM - DEMOLITION**
NOT TO SCALE

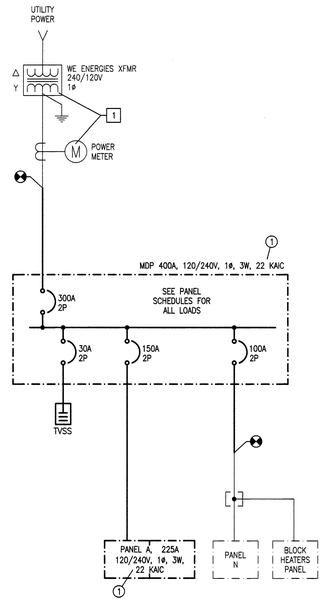

2 E4.01 **ELECTRICAL ONE-LINE DIAGRAM - NEW WORK**
NOT TO SCALE

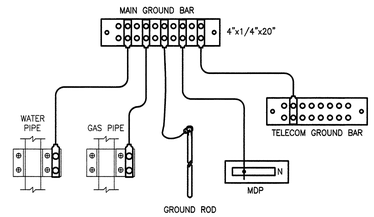

3 E4.01 **GROUNDING SCHEMATIC - NEW WORK**
NOT TO SCALE

X DEMOLITION NOTES:

1 NEW ELECTRICAL SERVICE WORK WILL BE PERFORMED AND COORDINATED BY THE CITY OF MILWAUKEE.

X NEW WORK NOTES:

1 COORDINATE PANEL KAIC RATINGS WITH THE AVAILABLE FAULT CURRENT AT THE NEW UTILITY TRANSFORMER SECONDARY.

WORK ON E SHEETS IS NIC UNLESS NOTED OTHERWISE. ELECTRICAL WORK SHALL BE PROVIDED BY THE CITY OF MILWAUKEE. PROVIDE COORDINATION OVERSIGHT FOR THE SCOPE OF THE PROJECT INCLUDING COORDINATION WITH THE CITY ELECTRICAL CONTRACTORS.

CONTINUUM
ARCHITECTS + PLANNERS LLC
P.O. BOX 511643
MILWAUKEE, WI 53203
T 414.276.9640
F 414.276.9695

City of Milwaukee Department of Public Works
Infrastructure Services Division
Facilities Development & Management Services

Consultant:

GRUMMAN/BUTKUS ASSOCIATES
Energy Efficiency Consultants and Sustainable Design Engineers
1011 North Mayfair Road
Suite 300
Wauwatosa, Wisconsin 53226
414 476.5960

Copyright © 2012 Grumman/Butkus Associates
G/B Job Number: 12423

SANITATION HEADQUARTERS BUILDING
2363 SOUTH 35TH STREET
MILWAUKEE, WI 53215

SANITATION HEADQUARTERS RENOVATION
ELECTRICAL WORK - ONE-LINE SCHEMATIC DIAGRAM

ISSUE	DATE	REMARKS
-		
-		
-		
-		
-		
-		
-		
-		
-		
-		

ARCHITECT JOB#: 120905
CITY PROJECT#: BU11091119
DATE: 02/01/2013
ISSUE: ISSUED FOR BID

E4.01

© Copyright 2013, Continuum Architects + Planners S.C.

PLUMBING FIXTURE SCHEDULE

TAG	FIXTURE	RISER AND AIR CHAMBER FOR FIXTURE		FIXTURE NIPPLE (VALVE INLET)		CODE REQUIREMENTS		MOUNTING HEIGHT (FLOOR TO RIM)	REMARKS
		HW	CW	HW	CW	SAN	VENT		
WC-1	WATER CLOSET	--	1-1/4"	--	1"	4"	2"	15"	FLOOR MOUNTED; FLUSH TANK
WC-2	WATER CLOSET	--	1-1/4"	--	1"	4"	2"	18" *	FLOOR MOUNTED; FLUSH TANK; BARRIER-FREE
UR-1	URINAL	--	1"	--	3/4"	2"	1-1/2"		FLOOR MOUNTED; ELECTRICALLY POWERED SENSOR OPERATED FLUSH VALVE; BARRIER-FREE
L-1	LAVATORY	3/4"	3/4"	1/2"	1/2"	1-1/2"	1-1/2"	34" *	WALL HUNG; BARRIER-FREE; THERMOSTATIC MIXING VALVE ON HW, ELECTRICALLY POWERED SENSOR OPERATED FAUCET
S-1	SINK	3/4"	3/4"	1/2"	1/2"	1-1/2"	1-1/2"	34"	COUNTERTOP; SINGLE COMPARTMENT; SINGLE LEVER FAUCET; LOUNGE OR BREAK ROOM
MB-1	MOP BASIN	3/4"	3/4"	1/2"	1/2"	3"	1-1/2"	FAUCET: 30" AFF	SQUARE; ELEVATED VB; HOSE; MOP RACK; WALL GUARDS
EWC-1	ELECTRIC WATER COOLER	--	3/4"	--	1/2"	1-1/2"	1-1/2"	*	BI-LEVEL; BARRIER-FREE
HB-1	HOSE BIBB - EXTERIOR	--	--	--	3/4"	--	--		FREEZE-PROOF

* SHALL BE INSTALLED TO MEET ADA REQUIREMENTS

WATER HEATER SCHEDULE

TAG	MANUFACTURER & MODEL	TYPE	LOCATION	CAPACITY GALLONS	EWT DEG F	LWT DEG F	RECOVERY GPH	HTG INPUT	THERMAL EFFICIENCY	VOLTS	PHASE	HERTZ	REMARKS
WH-1	AMERICAN WATER HEATER PDVG62-40T42-NV	NATURAL GAS-FIRED WATER HEATER	MECHANICAL 5	40	40	120	67	42,000 BTU	95%	120	1	60	SEE NOTE 1

NOTE
1. WATER HEATER MUST BE ENERGY STAR RATED.

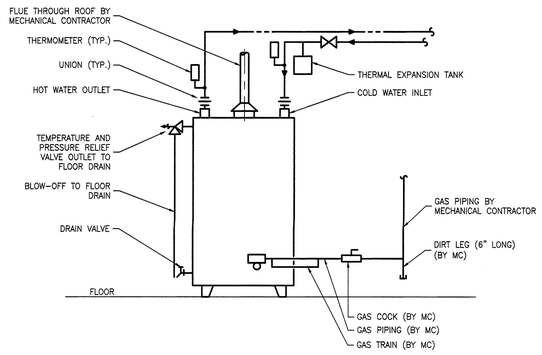

1 / P0.01 **GAS WATER HEATER DETAIL**
NO SCALE

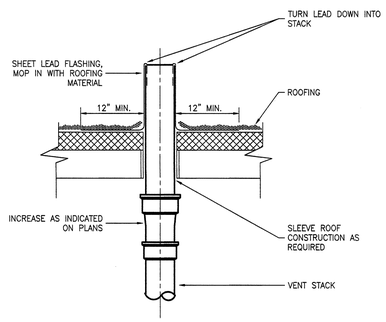

2 / P0.01 **VENT THRU ROOF DETAIL**
NO SCALE

PLUMBING ABBREVIATIONS

DESIGNATION	DESCRIPTION
AFF	ABOVE FINISHED FLOOR
CO	CLEANOUT
CW	COLD WATER
EC	ELECTRICAL CONTRACTOR
EWC	ELECTRIC WATER COOLER
EXIST	EXISTING
FCO	FLOOR CLEANOUT
FD	FLOOR DRAIN
GC	GENERAL CONTRACTOR
GPM	GALLONS PER MINUTE
HB	HOSE BIBB
HP	HORSEPOWER
HW	HOT WATER
HWR	HOT WATER RETURN
IE	INVERT ELEVATION
IN	INCH
L OR LAV	LAVATORY
MAX	MAXIMUM
MB	MOP BASIN
MC	MECHANICAL CONTRACTOR
MFR	MANUFACTURER
MIN	MINIMUM
NA	NOT APPLICABLE
NG	NATURAL GAS
NIC	NOT IN CONTRACT
NTS	NOT TO SCALE
PC	PLUMBING CONTRACTOR
PSI	POUNDS PER SQUARE INCH
QTY	QUANTITY
RD	ROOF DRAIN
S	SINK
SAN	SANITARY
SPEC	SPECIFICATION
ST	STORM
TYP	TYPICAL
UR	URINAL
V	VENT
VB	VACUUM BREAKER
VTR	VENT THRU ROOF
W	WASTE
WC	WATER CLOSET
WCO	WALL CLEANOUT
WH	WATER HEATER

PLUMBING PIPEWORK FITTINGS

SYM-PFITTINGS

NOTE:
ALL FITTINGS SHOWN BELOW ARE FOR USE IN SCREWED PIPING SYSTEMS UNO. REFER TO SPECIFICATION FOR SPECIFIC PIPING SYSTEM REQUIREMENTS (SCREWED VS. FLANGED VS. WELDED VS. SOLDERED).

DESIGNATION	DESCRIPTION
	CAP
	CONNECTION, BOTTOM
	CONNECTION, TOP
	ELBOW TURNED UP
	ELBOW TURNED DOWN
	ELBOW UP, BOTTOM CONNECTION, ELBOW DOWN
	REDUCER, CONCENTRIC
	REDUCER, ECCENTRIC STRAIGHT INVERT
	UNION, SCREWED
	P TRAP
	PIPE ANCHOR
	PIPE SLEEVE
	LINK SEAL
	VALVE ON RISE (DROP)

PLUMBING SYMBOLS

SYM-PLBG

DESIGNATION	DESCRIPTION
	PUMP
	BALL VALVE
	PRECALIBRATED MANUAL BALANCING VALVE W/PRESSURE SENSING PORTS
	SWING GATE CHECK VALVE
	FLOOR DRAIN
	ROOF DRAIN
	FLOOR CLEANOUT
	SUSPENDED CLEANOUT
M	WATER METER
	NON-FREEZE SILL COCK
BP	BACKFLOW PREVENTER

PLUMBING PIPING LEGEND

DESIGNATION	DESCRIPTION
	DOMESTIC COLD WATER
	DOMESTIC HOT WATER
	DOMESTIC HOT WATER RETURN
CW	UNDERGROUND COLD WATER
	VENT
	SUSPENDED SANITARY SEWER
	UNDERGROUND SANITARY SEWER
ST	SUSPENDED STORM SEWER
ST	UNDERGROUND STORM SEWER

CONTINUUM
ARCHITECTS + PLANNERS, S.C.
P. O. BOX 3/0643
MILWAUKEE, WI 53203
T 414.220.9440
F 414.220.9999

City of Milwaukee
Department of Public Works
Infrastructure Services Division
Facilities Development & Management Services

Consultant:
GRUMAN/BUTKUS ASSOCIATES
Energy Efficiency Consultants and Sustainable Design Engineers
1011 North Mayfair Road
Suite 300
Wauwatosa, Wisconsin 53226
414 476.5900
Copyright (C)2013 Gruman/Butkus Associates
G/B Job Number: 12425

SANITATION HEADQUARTERS BUILDING
2383 SOUTH 35TH STREET
MILWAUKEE, WI 53215

SANITATION HEADQUARTERS RENOVATION
PLUMBING SYMBOLS, DETAILS, ABBREVIATIONS AND SCHEDULES

ISSUE	DATE	REMARKS
-		
-		
-		
-		
-		
-		
-		
-		
-		
-		
-		

ARCHITECT JOB#: 120905
CITY PROJECT#: BU11091119
DATE: 02/01/2013
ISSUE: ISSUED FOR BID

P0.01

© Copyright 2013,
Continuum Architects + Planners S.C.

X DEMOLITION NOTES:

1. DEMOLISH WASTE PIPES BACK UNDERFLOOR AND CAP WATERTIGHT. PC TO PATCH FLOOR TO MATCH ADJACENT SURFACES.
2. REMOVE AND REPLACE CLEANOUT TO MATCH NEW FLOOR TYPE AND HEIGHT.
3. DEMOLISH ABANDONED PIPE AS NEEDED TO INSTALL NEW UNDERFLOOR PIPE. CAP BOTH ENDS OF PIPE WHEN REMOVING MIDDLE SECTION.
4. CAP BOTH ENDS OF UNDERFLOOR WATER PIPES BELOW FLOOR AND ABANDON.
5. PLUMBING CONTRACTOR TO SAW CUT FLOOR AS REQUIRED TO ACCESS EXISTING AND INSTALL NEW PLUMBING PIPING. PLUMBING CONTRACTOR IS RESPONSIBLE FOR BACKFILLING, REPAIRING, AND REFINISHING CONCRETE FLOOR AFTER INSTALLATION OR DEMOLITION OF PIPING. PC RESPONSIBLE FOR LOCATION OF UNDERFLOOR CONDUITS, PIPES AND OTHER OBSTRUCTIONS PRIOR TO SAWCUTTING FLOOR. TYPICAL ALL NEW AND DEMOLISHED UNDERFLOOR PIPING.

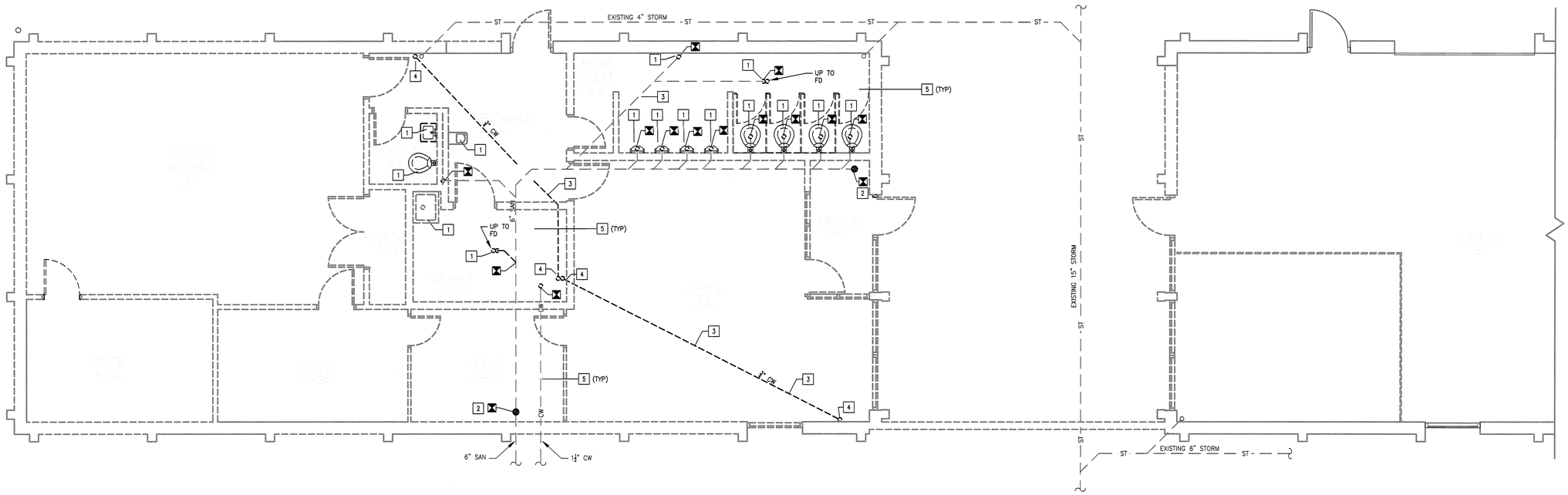

1 P2.01 UNDERFLOOR PLUMBING - DEMOLITION

0 1' 2' 4' 6'

NORTH

X NEW WORK NOTES:

1. REMOVE AND REPLACE CLEANOUT TO MATCH NEW FLOOR TYPE AND HEIGHT.
2. PLUMBING CONTRACTOR TO SAW CUT FLOOR AS REQUIRED TO ACCESS EXISTING AND INSTALL NEW PLUMBING PIPING. PLUMBING CONTRACTOR IS RESPONSIBLE FOR BACKFILLING, REPAIRING, AND REFINISHING CONCRETE FLOOR AFTER INSTALLATION OR DEMOLITION OF PIPING. PC RESPONSIBLE FOR LOCATION OF UNDERFLOOR CONDUITS, PIPES AND OTHER OBSTRUCTIONS PRIOR TO SAWCUTTING FLOOR. TYPICAL ALL NEW AND DEMOLISHED UNDERFLOOR PIPING.

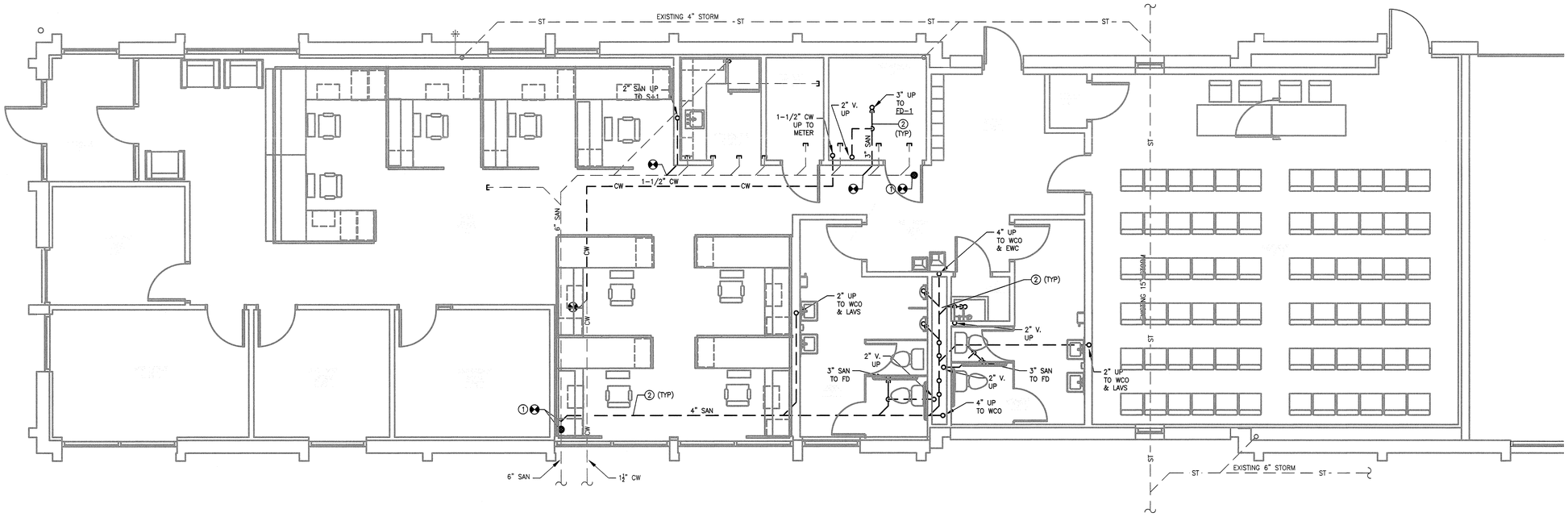

2 P2.01 UNDERFLOOR PLUMBING - NEW WORK

0 1' 2' 4' 6'

NORTH

CONTINUUM
ARCHITECTS + PLANNERS, S.C.
P. O. BOX 510663
MILWAUKEE, WI 53203
T 414.220.9640
F 414.220.9595

City of Milwaukee
Department of Public Works
Infrastructure Services Division
Facilities Development & Management Services

Consultant:
GRUMMAN/BUTKUS ASSOCIATES
Energy Efficiency Consultants and Sustainable Design Engineers
1011 North Mayfair Road
Suite 300
Wauwatosa, Wisconsin 53226
414 476.8980

Copyright ©2012 Grumman/Butkus Associates
G/Bk job number: 12435

SANITATION HEADQUARTERS BUILDING
2363 SOUTH 35TH STREET
MILWAUKEE, WI 53215

SANITATION HEADQUARTERS RENOVATION

UNDERFLOOR PLUMBING DEMOLITION & NEW WORK

ISSUE	DATE	REMARKS
-		
-		
-		
-		
-		
-		
-		
-		
-		
-		

ARCHITECT JOB#: 120905
CITY PROJECT#: BU11091119
DATE: 02/01/2013
ISSUE: ISSUED FOR BID

P2.01

© Copyright 2013, Continuum Architects + Planners S.C.

X DEMOLITION NOTES:

1. DEMOLISH WATER HEATER, PIPING AND ACCESSORIES. GAS PIPING AND FLUE DUCTWORK/STACK BY MC.
2. DEMOLISH WASH SINK, ACCESSORIES AND PIPING. CAP WASTE AT BELOW FLOOR LEVEL AND PC TO PATCH FLOOR TO MATCH ADJACENT SURFACES.
3. DEMOLISH WATER CLOSET, PIPING AND ACCESSORIES. CAP WASTE AT BELOW FLOOR LEVEL AND PC TO PATCH FLOOR TO MATCH ADJACENT SURFACES.
4. DEMOLISH URINAL, PIPING AND ACCESSORIES. CAP WASTE AT BELOW FLOOR LEVEL AND PC TO PATCH FLOOR TO MATCH ADJACENT SURFACES.
5. DEMOLISH LAVATORY, PIPING AND ACCESSORIES. CAP WASTE AT BELOW FLOOR LEVEL AND PC TO PATCH FLOOR TO MATCH ADJACENT SURFACES.
6. DEMOLISH FLOOR DRAIN AND PIPING. PC TO PATCH FLOOR TO MATCH ADJACENT SURFACES.
7. DEMOLISH VENT THROUGH ROOF. PC TO PATCH OPENING WATER TIGHT TO MATCH EXISTING.
8. DEMOLISH MOP BASIN, ACCESSORIES AND PIPING. PC TO PATCH FLOOR TO MATCH ADJACENT SURFACES.
9. DEMOLISH ELECTRIC WATER COOLER, PIPING AND ACCESSORIES. CAP WASTE AT BELOW FLOOR LEVEL AND PC TO PATCH FLOOR TO MATCH ADJACENT SURFACES.
10. DEMOLISH HOSE BIBB AND CAP WATER PIPING BELOW FLOOR (CW RUNS UNDER FLOOR). PC TO PATCH EXISTING OPENING TO MATCH ADJACENT SURFACES.
11. HOSE BIBB TO REMAIN. DEMOLISH PIPING BACK TO UNDERFLOOR AND CAP (CW RUNS UNDER FLOOR). NEW PIPING WILL BE RECONNECTED IN NEW WORK.
12. REMOVE AND REPLACE CLEANOUT TO MATCH NEW FLOOR TYPE AND HEIGHT.

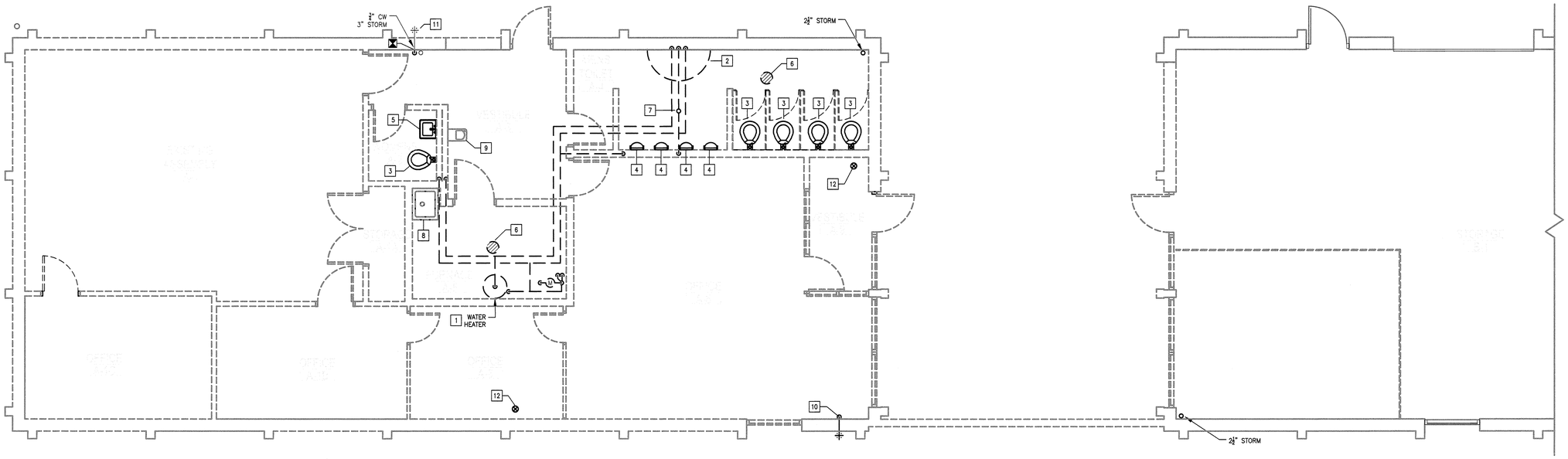

1 P2.02 FIRST FLOOR PLUMBING - DEMOLITION

0 1' 2' 4' 6'

NORTH

X NEW WORK NOTES:

1. REMOVE AND REPLACE CLEANOUT TO MATCH NEW FLOOR TYPE AND HEIGHT.
2. WATER CLOSET (WC-1)
3. WATER CLOSET - ADA (WC-2)
4. URINAL - ADA (UR-1)
5. LAVATORY - ADA (L-1)
6. SINK (S-1)
7. MOP BASIN (MB-1)
8. ELECTRIC WATER COOLER (EWC-1)
9. HOSE BIBB (HB-1)
10. GAS WATER HEATER (WH-1). ROUTE 3" VENT THROUGH ROOF. GAS PIPING BY DIV 23.
11. 3" FLOOR DRAIN WITH TRAP GUARD DIAPHRAGM (FD-1).
12. NEW 4" VENT THROUGH ROOF. COORDINATE WITH HVAC OUTSIDE AIR INTAKES.
13. 1-1/2" CW METER AND 1-1/2" BYPASS LINE.
14. REFER TO ARCHITECTURAL PLANS FOR FINAL ROOF DRAIN LOCATION.

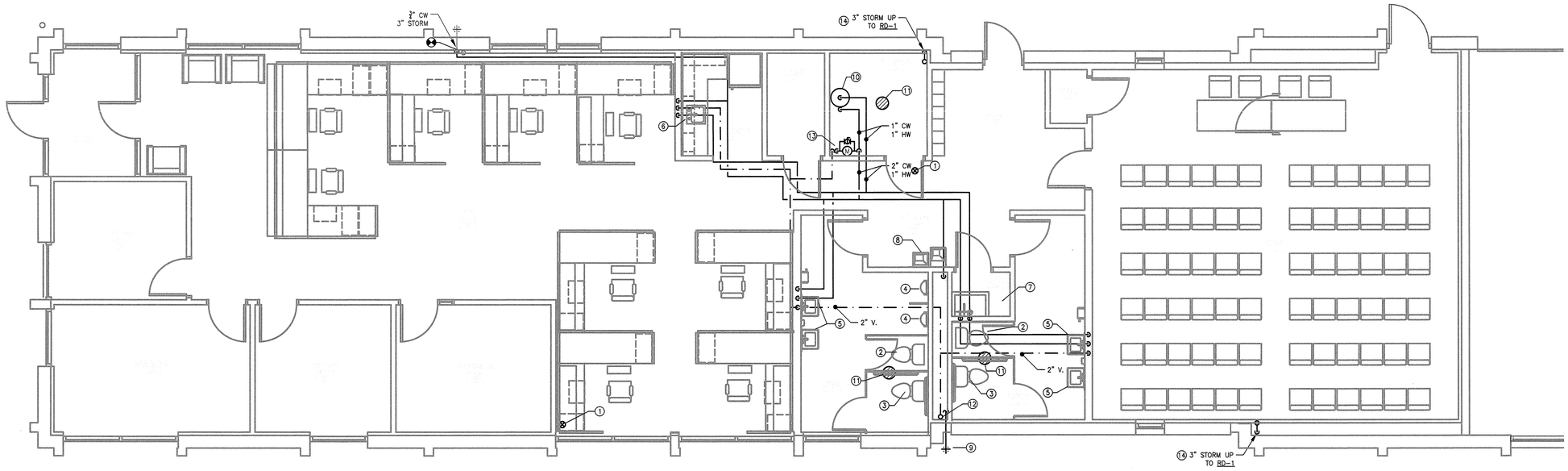

2 P2.02 FIRST FLOOR PLUMBING - NEW WORK

0 1' 2' 4' 6'

NORTH

CONTINUUM
ARCHITECTS + PLANNERS, S.C.
P. O. BOX 510663
MILWAUKEE, WI 53203
T 414.230.9640
F 414.270.9595

City of Milwaukee
Department of Public Works
Infrastructure Services Division
Facilities Development & Management Services

Consultant:

GRUMMAN/BUTKUS ASSOCIATES
Energy Efficiency Consultants and Sustainable Design Engineers
1011 North Mayfair Road
Suite 300
Wauwatosa, Wisconsin 53226
414 476.8980

Copyright ©2012 Grumman/Butkus Associates

SANITATION HEADQUARTERS BUILDING
2363 SOUTH 35TH STREET
MILWAUKEE, WI 53215

SANITATION HEADQUARTERS RENOVATION

FIRST FLOOR PLUMBING DEMOLITION & NEW WORK

ISSUE	DATE	REMARKS
-		
-		
-		
-		
-		
-		
-		
-		
-		
-		

ARCHITECT JOB#: 120905

CITY PROJECT#: BU11091119

DATE: 02/01/2013

ISSUE: ISSUED FOR BID

P2.02

© Copyright 2013, Continuum Architects + Planners S.C.

GENERAL NOTES:

1. REFER TO FIXTURE SCHEDULE ON P0.01 FOR FIXTURE BRANCH CONNECTIONS.

ⓧ NEW WORK NOTES:

1. WATER CLOSET (WC-1)
2. WATER CLOSET – ADA (WC-2)
3. URINAL – ADA (UR-1)
4. LAVATORY – ADA (L-1)
5. SINK (S-1)
6. MOP BASIN (MB-1)
7. ELECTRIC WATER COOLER (EWC-1)
8. HOSE BIBB (HB-1)
9. GAS WATER HEATER (WH-1). ROUTE 3" VENT THROUGH ROOF. GAS PIPING BY DIV 23.
10. 3" FLOOR DRAIN WITH TRAP GUARD DIAPHRAGM (FD-1).
11. NEW 4" VENT THROUGH ROOF. COORDINATE WITH HVAC OUTSIDE AIR INTAKES.
12. 1-1/2" CW METER AND 1-1/2" BYPASS LINE.
13. 4" WCO
14. 2" CO

PLUMBING LOADS

Fixture Type (Public Use)	QTY.	Wisconsin Administrative Code							
		HW		WSFU CW		TW		DFU	
		Each	Total	Each	Total	Each	Total	Each	Total
WC (Tank Type)	4	0.0	0	3.0	12	3.0	12	6.0	24
LAV	4	0.5	2	0.5	2	1.0	4	1.0	4
UR (Washdown)	2	0.0	0	2.0	4	2.0	4	2.0	4
DF/EWC	1	0.0	0	0.5	0.5	0.5	0.5	1.0	1
MB	1	2.0	2	2.0	2	3.0	3	3.0	3
HB (CW only)	2	0.0	0	4.0	8	4.0	8	0.0	0
S (Misc.)	1	1.5	1.5	1.5	1.5	2.0	2	2.0	2
FD (3-inch)	3	0.0	0	0.0	0	0.0	0	3.0	9
TOTALS:	18	5.5		30		33.5		47	

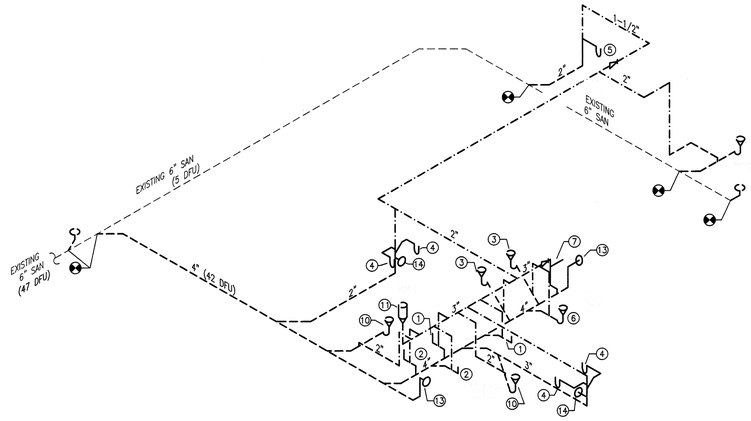

1 P3.01 WASTE AND VENT ISOMETRIC
NO SCALE

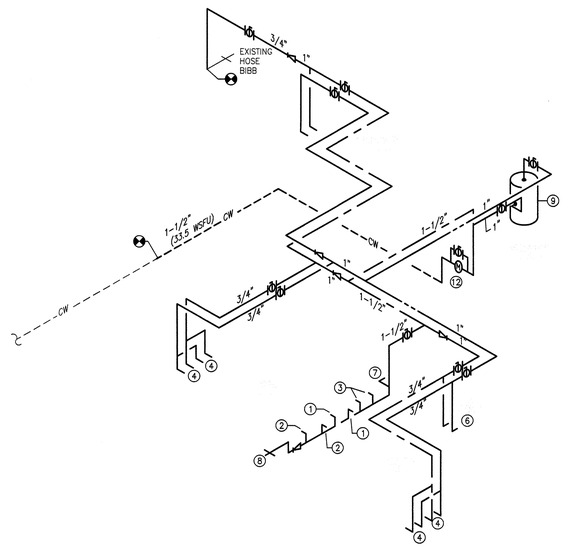

2 P3.01 WATER ISOMETRIC
NO SCALE

CONTINUUM
ARCHITECTS + PLANNERS, S.C.
P. O. BOX 510663
MILWAUKEE, WI 53203
T 414.220.9440
F 414.220.9595

City of Milwaukee
Department of Public Works
Infrastructure Services Division
Facilities Development & Management Services

Consultant:
GRUMMAN/BUTKUS ASSOCIATES
Energy Efficiency Consultants and Sustainable Design Engineers
1011 North Mayfair Road
Suite 300
Wauwatosa, Wisconsin 53226
414 476.8980

Copyright ©2012 Grumman/Butkus Associates

SANITATION HEADQUARTERS BUILDING
2363 SOUTH 35TH STREET
MILWAUKEE, WI 53215

SANITATION HEADQUARTERS RENOVATION
PLUMBING ISOMETRICS

ISSUE	DATE	REMARKS
-		
-		
-		
-		
-		
-		
-		
-		
-		
-		

ARCHITECT JOB#: 120905
CITY PROJECT#: BU11091119
DATE: 02/01/2013
ISSUE: ISSUED FOR BID

P3.01

© Copyright 2013, Continuum Architects + Planners S.C.