CITY OF MILWAUKEE

DEPARTMENT OF PUBLIC WORKS

BUREAU OF BRIDGES AND PUBLIC BUILDINGS

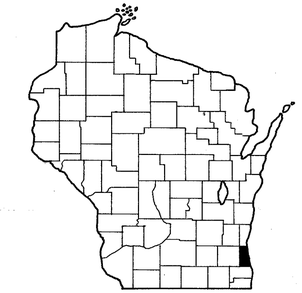

MICHIGAN STREET VERTICAL LIFT BRIDGE AND APPROACHES

NORTH PLANKINTON AVENUE TO NORTH WATER STREET

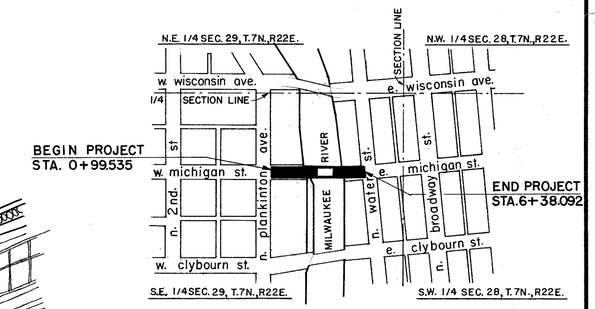

Layout
scale: 1" = 400'

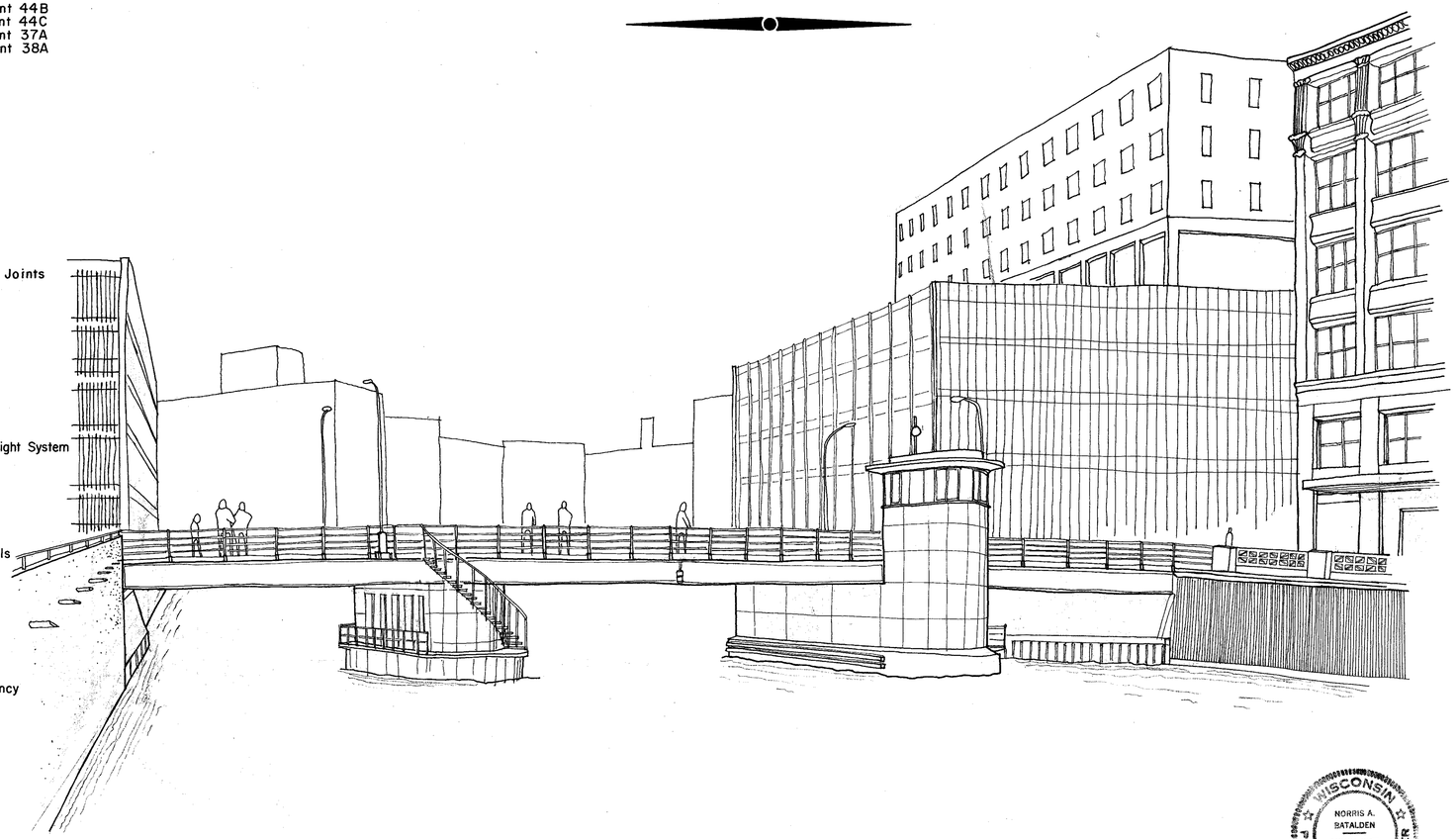

INDEX OF SHEETS

PAVING PLANS

Sheet No. 77 Approaches - N. Plankinton Ave. to Bridge
Sheet No. 78 Approaches - Bridge to N. Water St.
Sheet No. 79 Concrete Pavement Approach Slab

PLANS OF NEW BRIDGE

Sheet No. 1 Title
Sheet No. 2 Estimate of Quantities
Sheet No. 3 General Construction Plan
Sheet No. 4 Site Plan
Sheet No. 5 Soil Borings
Sheet No. 6 Alignment Plan
Sheet No. 7 General Framing Plan
Sheet No. 8 Typical Cross Sections
Sheet No. 9 Stringer Elevations & Dimensions - West Approach Span
Sheet No. 10 Stringer Elevations & Dimensions - East Approach Span
Sheet No. 11 Girder Elevations & Dimensions - Lift Span
Sheet No. 12 West Abutment - General Plan
Sheet No. 13 East Abutment - General Plan
Sheet No. 14 Abutments - Sheet Piling Plan
Sheet No. 15 Sheet Piling Details
Sheet No. 16 Abutment Piling Plan
Sheet No. 17 West Abutment
Sheet No. 18 East Abutment
Sheet No. 19 Abutment & Deadman Details
Sheet No. 20 N.W. Retaining Wall
Sheet No. 21 S.W. Retaining Wall
Sheet No. 22 Plan of W. Abutment at N.W. Corner - Dock Point 44B
Sheet No. 23 Plan of W. Abutment at S.W. Corner - Dock Point 44C
Sheet No. 24 Plan of E. Abutment at N.E. Corner - Dock Point 37A
Sheet No. 25 Plan of E. Abutment at S.E. Corner - Dock Point 38A
Sheet No. 26 Sewer Extension
Sheet No. 27 Stop Plank Chamber Details
Sheet No. 28 Piers 1 & 2 Foundation & Piling Plan
Sheet No. 29 Pier 1
Sheet No. 30 Pier 1 - Plan at Elev. + 4.00
Sheet No. 31 Pier 1 - Approach Span Beam
Sheet No. 32 Pier 2
Sheet No. 33 Pier 2 - Plan at Elev. + 4.00
Sheet No. 34 Pier 2 - Approach Span Beam
Sheet No. 35 Bridge Operators House
Sheet No. 36 Operators House - Concrete Details
Sheet No. 37 Operators House - Window & Door Details
Sheet No. 38 Operators House - Steel & Roof Details
Sheet No. 39 Operators House - Signal Ball
Sheet No. 40 West Approach Span - Deck Plan
Sheet No. 41 East Approach Span - Deck Plan
Sheet No. 42 Approach Span - Cross Sections & Expansion Joints
Sheet No. 43 Approach Span - Bearings, Diaphragms
Sheet No. 44 Railing Plan
Sheet No. 45 Railing Details
Sheet No. 46 Circular Stairs - Operators House Stairs
Sheet No. 47 Lift Span - Plan
Sheet No. 48 Lift Span - Cross Section
Sheet No. 49 Lift Span - End Section & Expansion Joint
Sheet No. 50 Lift Span - Expansion Joint Detail
Sheet No. 51 Lift Span - Jacking Beam & Lift Leg
Sheet No. 52 Lift Span - Bumper Beam Plan & Elevation
Sheet No. 53 Lift Span - Bumper Beam Details
Sheet No. 54 Lift Span - Counterweight
Sheet No. 55 Machinery - Transverse Equalizer & Counterweight System
Sheet No. 56 Machinery - Longitudinal Equalizer System
Sheet No. 57 Machinery - Counterweight Sheave Assembly
Sheet No. 58 Machinery - Transverse Equalizer Assembly
Sheet No. 59 Machinery - Longitudinal Equalizer Assembly
Sheet No. 60 Machinery - Roller Guide Assembly
Sheet No. 61 Machinery - Cable and Bearing Brackets
Sheet No. 62 Electrical - Layout Plan
Sheet No. 63 Electrical - Approach Span Section & Details
Sheet No. 64 Electrical - Bridge House Layout
Sheet No. 65 Electrical - Sections and Details
Sheet No. 66 Electrical - Sections and Details
Sheet No. 67 Electrical - Schematic Diagram 1
Sheet No. 68 Electrical - Schematic Diagram 2
Sheet No. 69 Hydraulic - Plan and Sections
Sheet No. 70 Hydraulic - Hydraulic Jack Assembly
Sheet No. 71 Plot Plan - Utilities
Sheet No. 72 Operators House - Heating & Plumbing
Sheet No. 73 Operators House - Plumbing Diagrams & Emergency Generator Details
Sheet No. 74 Bill of Reinforcement
Sheet No. 75 Bill of Reinforcement
Sheet No. 76 Name Plate

PLANS OF EXISTING BRIDGE

Sheet No. 80 General Plan of Bascule Bridge
Sheet No. 81 Foundation Plan
Sheet No. 82 Abutment Details
Sheet No. 83 East Abutment Masonry
Sheet No. 84 Superstructure at Main Pier
Sheet No. 85 Details of Moving Parts

BRIDGE DESIGN DATA

LIVE LOAD — HS 20

ALLOWABLE DESIGN STRESSES

Concrete Masonry (Class D-Slabs)	f'c = 4000 psi
Concrete Masonry (All Others)	f'c = 3500 psi
Bar Steel Reinforcement	fy = 60000 psi
Structural Carbon Steel (A36)	fs = 20000 psi

FOUNDATION DATA

Abutments and retaining walls to be supported on 12 HP53 steel piles driven to 55 tons/pile with an estimated length of 85 feet. Deadman to be supported on 8 HP36 steel piles driven to 40 tons/pile with an estimated length of 60 feet. Piers to be supported on 12 HP53 steel piles driven to 55 tons/pile to an approximate elevation of −80. Sewer slab to be supported on 8 HP36 steel piles driven to 25 tons/pile.

HYDRAULIC DATA

Highwater Elev. 581.77 (1955 I.G.L.D.)
Q_{50} = 15,000 cfs
The City of Milwaukee Zero Datum = 579.301 (1955 I.G.L.D.)

DESIGN SPECIFICATIONS

1973 AASHTO Specifications and 1970 AASHTO Specifications for Moveable Bridges (except for sheave diameter) All materials, work and fabrication shall be in accordance with and shall conform to the requirements of the State of Wisconsin Department of Transportation, Division of Highways, Standard Specifications for Road and Bridge Construction 1975 except as otherwise noted.

WISCONSIN
NORRIS A. BATALDEN
MILWAUKEE WISC.
PROFESSIONAL ENGINEER

DEPARTMENT OF PUBLIC WORKS
BUREAU OF BRIDGES AND PUBLIC BUILDINGS
CITY OF MILWAUKEE

REVISIONS		
MARK	DATE	BY
A		
B		
C		
D		
E		
F		
G		
H		
I		
J		
K		
L		
M		

MICHIGAN ST. VERTICAL LIFT BRIDGE
OVER MILWAUKEE RIVER

TITLE

DESIGNED BY: _____ TRACED BY: _____ DATE: _____
DRAWN BY: D.G.H & J.J.J. CHECKED BY: _____ DATE: _____
APPROVED:— SCALE: _____
Norris A. Batalden — DESIGNER IN CHARGE — DATE: 2-2-77 SHEET NUMBER 1
Henry J. Balcom — DIV. OF BRIDGES AND PUBLIC BUILDINGS — DATE: 2-2-77 SET OF 85 SHEETS
F. Wenzler — COMMISSIONER OF PUBLIC WORKS — DATE: 2-3-77 JOB NO. 505-98
Special Deputy

CPE-2

ESTIMATE OF QUANTITIES

BRANCH	PROJECT	ITEM NO.	BID ITEM	UNIT	ABUTMENTS WEST	ABUTMENTS EAST	PIERS 1	PIERS 2	SUPERSTRUCTURE LIFT SPAN	SUPERSTRUCTURE APPROACH SPANS WEST	SUPERSTRUCTURE APPROACH SPANS EAST	APPROACH WORK ON GRADE WEST	APPROACH WORK ON GRADE EAST	TOTAL
1	A	20351	REMOVING OLD BRIDGE - STA. 4+01	LUMP SUM										1
		20610	EXCAVATION FOR STRUCTURES - BRIDGES	LUMP SUM										1
		20650	COFFERDAM - PIER NO. 1	LUMP SUM			✓							1
		20651	COFFERDAM - PIER NO. 2	LUMP SUM				✓						1
		40701	BITUMINOUS CONCRETE PAVEMENT	TON					9.5					9.5
		50201	CONCRETE MASONRY - BRIDGES	CUBIC YARD	290.0	252.0	1155.0	969.0	81.0	125.0	127.0			3000.0
		50211	CONCRETE MASONRY - SEAL	CUBIC YARD			732.0	630.0						1362.0
		50220	PREFORMED ELASTOMERIC COMPRESSION JOINT SEAL	LIN. FEET						77.0	74.0			151.0
		50504	HIGH STRENGTH BAR STEEL REINFORCEMENT-BRIDGES	POUND	20,910.0	15,670.0	109,470.0	93,040.0	11,530.0	26,200.0	26,940.0			303760.0
		50702	TREATED LUMBER AND TIMBER	M.B.M			2.1	2.6						4.7
		51120	STEEL PILING DELIVERED AND DRIVEN HP 8x36 POUND	LIN. FEET	2672.0	3092.0								5764.0
		51122	STEEL PILING DELIVERED AND DRIVEN HP 12x53 POUND	LIN. FEET	1785.0	1530.0	3630.0	2970.0						9915.0
		51205	STEEL SHEET PILING DELIVERED	SQ. FT.	4377.0	4350.0								8727.0
		51206	STEEL SHEET PILING DRIVEN	SQ. FT.	4377.0	4350.0								8727.0
		51207	TEMPORARY STEEL SHEET PILING	SQ. FT.									2400.0	2400.0
		51601	DAMPPROOFING	SQ. YD.	121.0	91.0								212.0
		51604	WATERPROOF MEMBRANE	SQ. YD.					96.0					96.0
		90001	BRIDGE OPERATOR'S HOUSE	LUMP SUM			✓							1
		90010	SKID-RESISTANT WEARING SURFACE	SQ. FT.					1750.0					1750.0
1	A	90011	CONSTRUCTION BARRICADES	LIN. FEET								440.0	245.0	685.0
1	B	50601	STRUCTURAL CARBON STEEL	POUND	7022.0	5372.0	8869.0	8676.0	308636.0	100400.0	101485.0			540460.0
		50605	STRUCTURAL LOW ALLOY STEEL	POUND	1463.0	1426.0	1060.0	1060.0	32010.0	4155.0	4155.0			45329.0
		50621	BEARING PADS	SQ. FT.	13.0	13.0	23.0	23.0						72.0
		51320	STEEL PIPE RAILING TYPE B	LIN. FEET			134.0	130.0						264.0
		51321	ALUMINUM CIRCULAR RAILING TYPE D	LUMP SUM			✓							1
		51330	STEEL TUBULAR RAILING TYPE A	LIN. FEET					149.0	151.0	126.0			426.0
		51331	STEEL TUBULAR RAILING TYPE C	LUMP SUM			✓							1
		51426	DOWNSPOUTS, 6 INCH DIA.	LIN. FEET						8.0	8.0			16.0
		51502	1 INCH OPEN STEEL GRID FLOOR	SQ. FT.			51.0							51.0
		51503	2½ INCH OPEN STEEL GRID FLOOR	SQ. FT.					2660.0					2660.0
		90006	MACHINERY	LUMP SUM			✓	✓	✓					1
1	B	90007	ALUMINUM FLOOR PLATES	LUMP SUM					✓					1
1	C	20401	REMOVING PAVEMENT	SQ. YD.								112.0	181.0	293.0
		20402	REMOVING BITUMINOUS SURFACE	SQ. YD.								275.0	213.0	488.0
		20405	REMOVING CURB AND GUTTER	LIN. FEET								52.0	165.0	217.0
		20406	REMOVING CONCRETE SIDEWALK AND DRIVEWAY	SQ. FT.								2020.0	2441.0	4461.0
		20408	REMOVING WALL AND/OR FOOTING	CUBIC YARD								7.0		7.0
		20901	GRANULAR BACKFILL	TON								2269.0	2341.0	4610.0
		30404	CRUSHED AGGREGATE BASE COURSE	CUBIC YARD								41.0	47.0	88.0
		30709	CONCRETE BASE COURSE - 8 INCH	SQ. YD.								10.0	5.0	15.0
		40701	VARIABLE THICKNESS ASPHALT CONCRETE PAVEMENT	SQ. YD.								1150.0	597.0	1747.0
		40931	CONCRETE DRIVEWAY - 7 INCH	SQ. FT.								998.0	808.0	1806.0
		40935	CONCRETE PAVEMENT APPROACH SLAB	SQ. YD.								153.0	174.0	327.0
		40950	CONCRETE PAVEMENT REINFORCEMENT	SQ. YD.								153.0	174.0	327.0
		50507	HIGH STRENGTH BAR STEEL REINFORCEMENT-SLAB	POUND								10020.0	10900.0	20920.0
		60124	CONCRETE CURB AND GUTTER - 31 INCH	LIN. FEET								191.0	90.0	281.0
		60171	SPECIAL CURB AND GUTTER SECTION	LIN. FEET								63.0	70.0	133.0
		60205	CONCRETE SIDEWALK - 5 INCH	SQ. FT.								2061.0	2190.0	4251.0
		61182	ADJUSTING MANHOLE COVERS	EACH										12
		64202	FIELD OFFICE TYPE B	LUMP SUM								✓		1
		90012 90013	COLD PLASTIC PAVEMENT MARKING - 5 INCH WHITE COLD PLASTIC PAVEMENT MARKING - 5 INCH YELLOW	LIN. FEET LIN. FEET								231.0 1000.0	205.0 282.0	436.0 1282.0
		90014	TEMPORARY SIDEWALK	LUMP SUM								✓		1
		90015	REMOVING REINFORCED CONCRETE WALK	SQ. FT.								396.0		396.0
		90016	VARIABLE THICKNESS CONCRETE BASE	CUBIC YARD										8.0
1	C	90017	ADJ. TO GRADE: STOP PLANK CHAMBER, INTER. CHAMBER	LUMP SUM								✓	✓	1
1	D	90008	STEEL SEWER PIPE - 42" DIA.	LIN. FEET		13.0								13.0
1	D	90009	STEEL SEWER PIPE - 54" DIA.	LIN. FEET	14.0									14.0
2		90002	ELECTRICAL WORK	LUMP SUM	✓		✓	✓	✓	✓	✓			1
2		90004	HEATING	LUMP SUM			✓							1
3		90003	HYDRAULIC EQUIPMENT	LUMP SUM			✓	✓	✓					1
4		90005	PLUMBING	LUMP SUM			✓							1

	BRIDGE REMOVAL	STOP PLANK CHAMBER	ABUTMENTS WEST	ABUTMENTS EAST	PIER # 1	PIER # 2	SUPER-STRUCTURE W. APP. SPAN	SUPER-STRUCTURE LIFT SPAN	SUPER-STRUCTURE E. APP. SPAN	APPROACHES WEST	APPROACHES EAST	MACHINERY	PLUMBING	ELECTRICAL	HEATING	HYDRAULICS	TOTAL
UNIT	LUMP SUM	LUMP SUM	CU. YD.	CU. YD.	LUMP SUM	LUMP SUM	SQ. FT.	SQ. FT	SQ. FT.	LIN. FT.	LIN. FT.	LUMP SUM	LUMP SUM	LUMP SUM	LUMP SUM	LUMP SUM	
QUANTITY	1	1	290	252	1	1	3949.92	4896	4010.40	223	137	1	1	1	1	1	
LOW BID UNIT COST	153,000	15,300	471.67	511.85	449,746	336,505	24.66	63.80	24.09	225.59	308.91	180,000	28,568	119,840	2,710	51,678	
AVE. BID UNIT COST	165,750	27,645	551.12	602.99	519,287	353,541	23.47	56.76	22.89	264.43	409.08	191,750	30,220	127,620	2,405	51,678	
LOW BID TOTAL	153,000	15,300	136,785	128,985	449,746	336,505	97,400	312,372	96,629	50,307	42,321	180,000	28,568	119,840	2,710	51,678	2,202,146
AVE. BID TOTAL	165,750	27,645	159,826	151,953	519,287	353,541	92,691	277,897	91,814	58,968	56,044	191,750	30,220	127,620	2,405	51,678	2,359,089

BID DATE: 3-7-77

DEPARTMENT OF PUBLIC WORKS
BUREAU OF BRIDGES AND PUBLIC BUILDINGS
CITY OF MILWAUKEE

MICHIGAN ST. VERTICAL LIFT BRIDGE
OVER MILWAUKEE RIVER

ESTIMATE OF QUANTITIES

REVISIONS

MARK	DATE	BY
A		
B		
C		
D		
E		
F		
G		
H		
I		
J		
K		
L		
M		

DESIGNED BY: TRACED BY: DATE:
DRAWN BY: DGH CHECKED BY: DATE:
APPROVED:— SCALE:
Norris A. Batalden DESIGNER IN CHARGE DATE: 2-2-77 SHEET NUMBER 2
Henry J. Balcom DIV. OF BRIDGES AND PUBLIC BUILDINGS DATE: 2-2-77 SET OF 85 SHEETS
F. Wenzly COMMISSIONER OF PUBLIC WORKS DATE: 2-3-77 JOB NO. 505-98

CPE-2

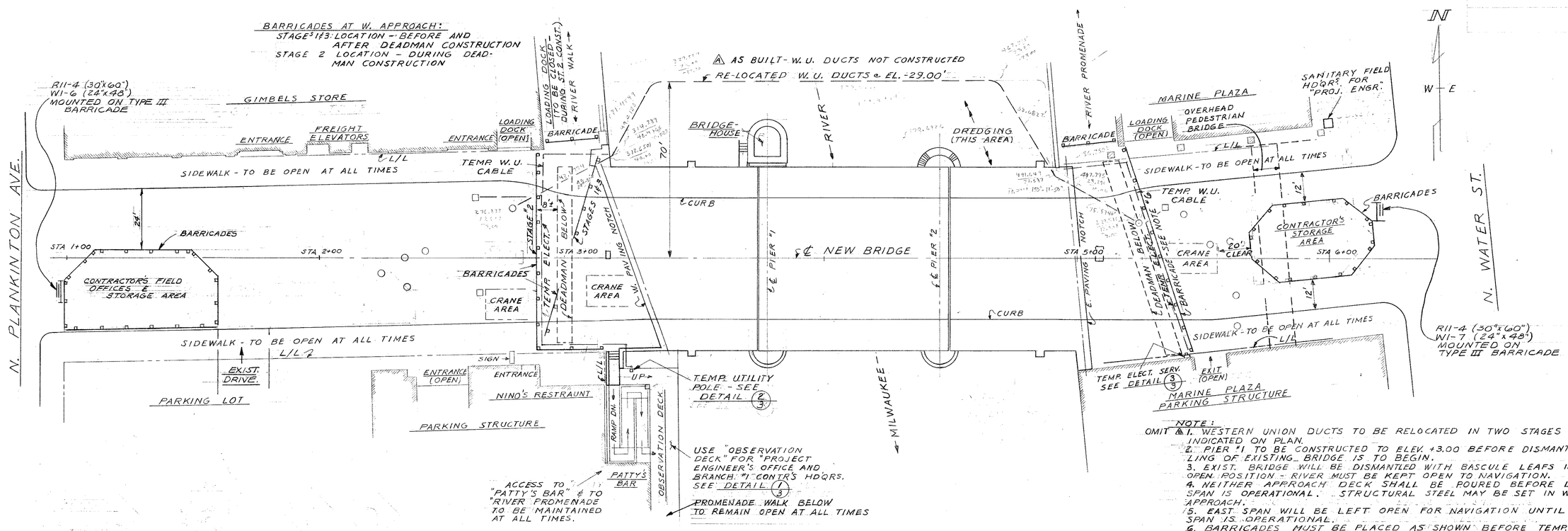

GENERAL CONSTRUCTION PLAN

SCALE 1" = 20.00'

NOTE:
1. WESTERN UNION DUCTS TO BE RELOCATED IN TWO STAGES AS INDICATED ON PLAN.
2. PIER #1 TO BE CONSTRUCTED TO ELEV. +3.00 BEFORE DISMANTLING OF EXISTING BRIDGE IS TO BEGIN.
3. EXIST. BRIDGE WILL BE DISMANTLED WITH BASCULE LEAFS IN OPEN POSITION - RIVER MUST BE KEPT OPEN TO NAVIGATION.
4. NEITHER APPROACH DECK SHALL BE POURED BEFORE LIFT SPAN IS OPERATIONAL. STRUCTURAL STEEL MAY BE SET IN WEST APPROACH.
5. EAST SPAN WILL BE LEFT OPEN FOR NAVIGATION UNTIL LIFT SPAN IS OPERATIONAL.
6. BARRICADES MUST BE PLACED AS SHOWN BEFORE TEMP. SHT. PILING IN EAST APPROACH IS DRIVEN AND AFTER TEMP. SHT. PILING IS PULLED. EXCAVATION FOR DEADMAN MUST BE BACKFILLED BEFORE PULLING PILING.

NOTE:
ALL SIGNING TO CONFORM TO "MINIMUM REQUIREMENTS FOR WARNING DEVICES" by DEPT. OF PUBLIC WORKS - CITY OF MILWAUKEE AND SHALL BE INCLUDED IN PRICE BID FOR REMOVING OLD BRIDGE.

OMIT
WESTERN UNION WORK: (by others)
STAGE 1: INSTALL 4 DUCTS AS SHOWN W/ 1 TEMPORARY 300 PAIR CABLE; INSTALL CORRESPONDING ELBOWS IN ABUTMENTS AND RETAINING WALL DURING THEIR CONST.
STAGE 2: EXTEND 3 DUCTS TO MANHOLES; REBUILD EAST MANHOLE; PULL 2 NEW CABLES; CUT SERVICE OVER;

AS BUILT - EXISTING W.U. CABLES & MANHOLES WERE ABANDONED. NO NEW CONSTRUCTION AS SHOWN IN PLAN ABOVE WAS PREFORMED. CABLES WERE RE-ROUTED OVERHEAD ACROSS RIVER ON EXPRESSWAY BRIDGE BETWEEN ST. PAUL AVE. & CLYBOURN ST.

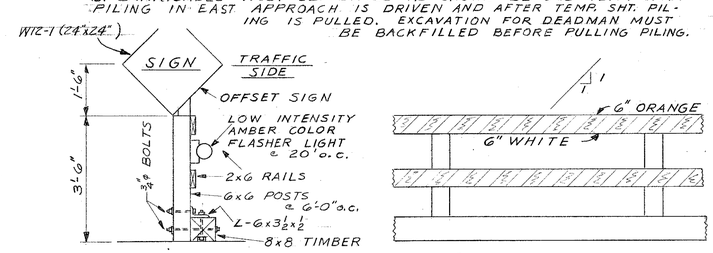

ALL BARRICADES TO CONFORM TO "MINIMUM REQUIREMENTS FOR WARNING DEVICES", DEPARTMENT OF PUBLIC WORKS CITY OF MILWAUKEE.

TYPICAL BARRICADE

SCALE ½" = 1'-0"

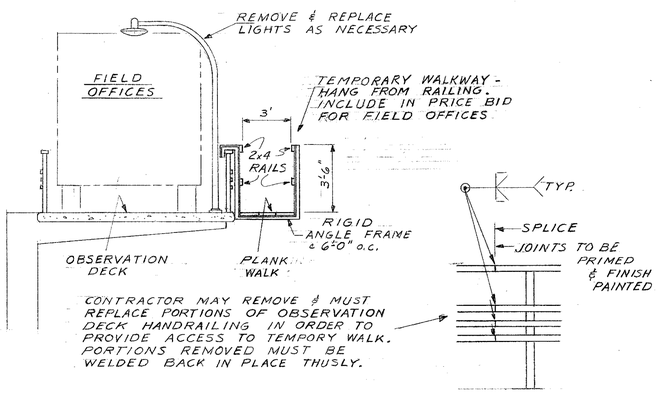

CONTRACTOR MAY REMOVE & MUST REPLACE PORTIONS OF OBSERVATION DECK HANDRAILING IN ORDER TO PROVIDE ACCESS TO TEMPORY WALK. PORTIONS REMOVED MUST BE WELDED BACK IN PLACE THUSLY.

DETAIL 1/3

SCALE ¼" = 1'-0"

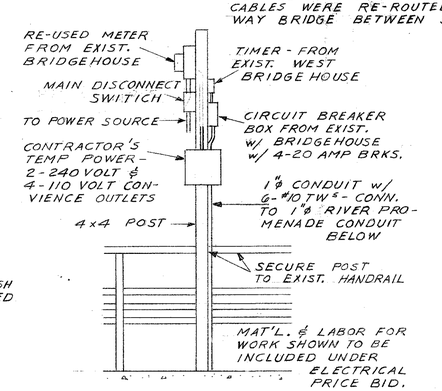

LOOKING NORTH

DETAIL 2/3

SCALE ½" = 1'-0"

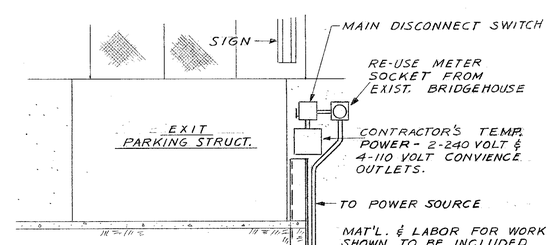

LOOKING SOUTH

DETAIL 3/3

SCALE ¼" = 1'-0"

DEPARTMENT OF PUBLIC WORKS
BUREAU OF BRIDGES AND PUBLIC BUILDINGS
CITY OF MILWAUKEE

REVISIONS		
MARK	DATE	BY
A	3-25-77	L.F.R.
B	1-4-79	DMK
C		
D		
E		
F		
G		
H		
I		
J		
K		
L		
M		

MICHIGAN ST. VERTICAL LIFT BRIDGE
OVER MILWAUKEE RIVER

GENERAL CONSTRUCTION PLAN

DESIGNED BY: L. F. R. — TRACED BY: — DATE:
DRAWN BY: L. F. R. — CHECKED BY: — DATE:
APPROVED:— — SCALE: AS NOTED

Norris A. Batalden, DESIGNER IN CHARGE — DATE: 2-2-77 — SHEET NUMBER 3
Henry J. Balcoi, DIR. OF BRIDGES AND PUBLIC BUILDINGS — DATE: 2-2-77 — SET OF 85 SHEETS
Deputy COMMISSIONER OF PUBLIC WORKS — DATE: 2-3-77 — JOB NO. 505-98

CPE-2

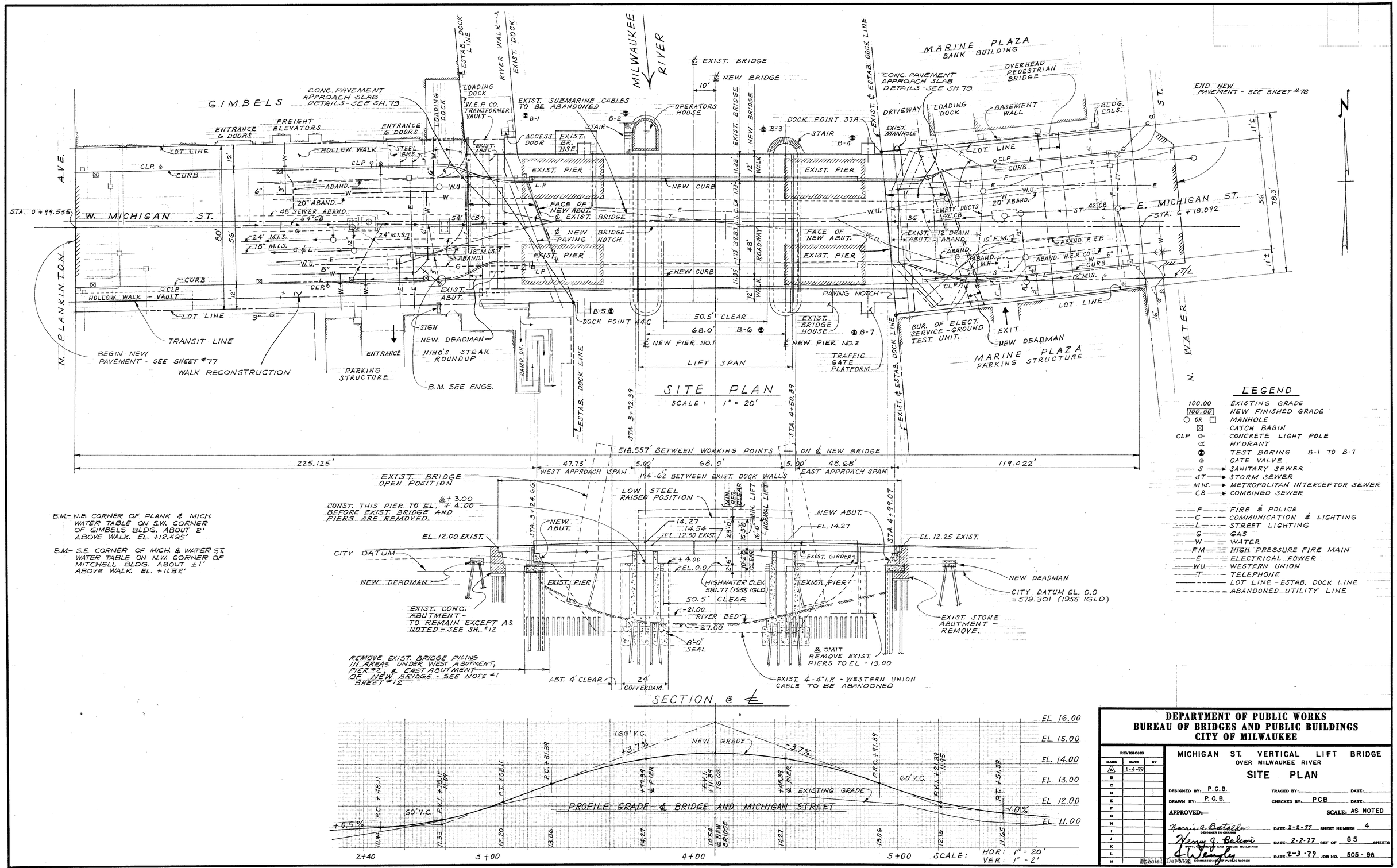

DEPARTMENT OF PUBLIC WORKS
BUREAU OF BRIDGES AND PUBLIC BUILDINGS
CITY OF MILWAUKEE

MICHIGAN ST. VERTICAL LIFT BRIDGE
OVER MILWAUKEE RIVER
SITE PLAN

REVISIONS

MARK	DATE	BY
A	1-4-79	
B		
C		
D		
E		
F		
G		
H		
I		
J		
K		
L		
M		

DESIGNED BY: P.C.B. TRACED BY: DATE:
DRAWN BY: P.C.B. CHECKED BY: PCB DATE:
APPROVED:— SCALE: AS NOTED
Harris A. Batallon DESIGNER IN CHARGE DATE: 2-2-77 SHEET NUMBER 4
Henry J. Balcoi ASST. COMMISSIONER AND PUBLIC BUILDINGS DATE: 2-2-77 SET OF 85 SHEETS
J. Wengler COMMISSIONER OF PUBLIC WORKS DATE: 2-3-77 JOB NO. 505 - 98

Special Deputy

105

CPE-2 22136

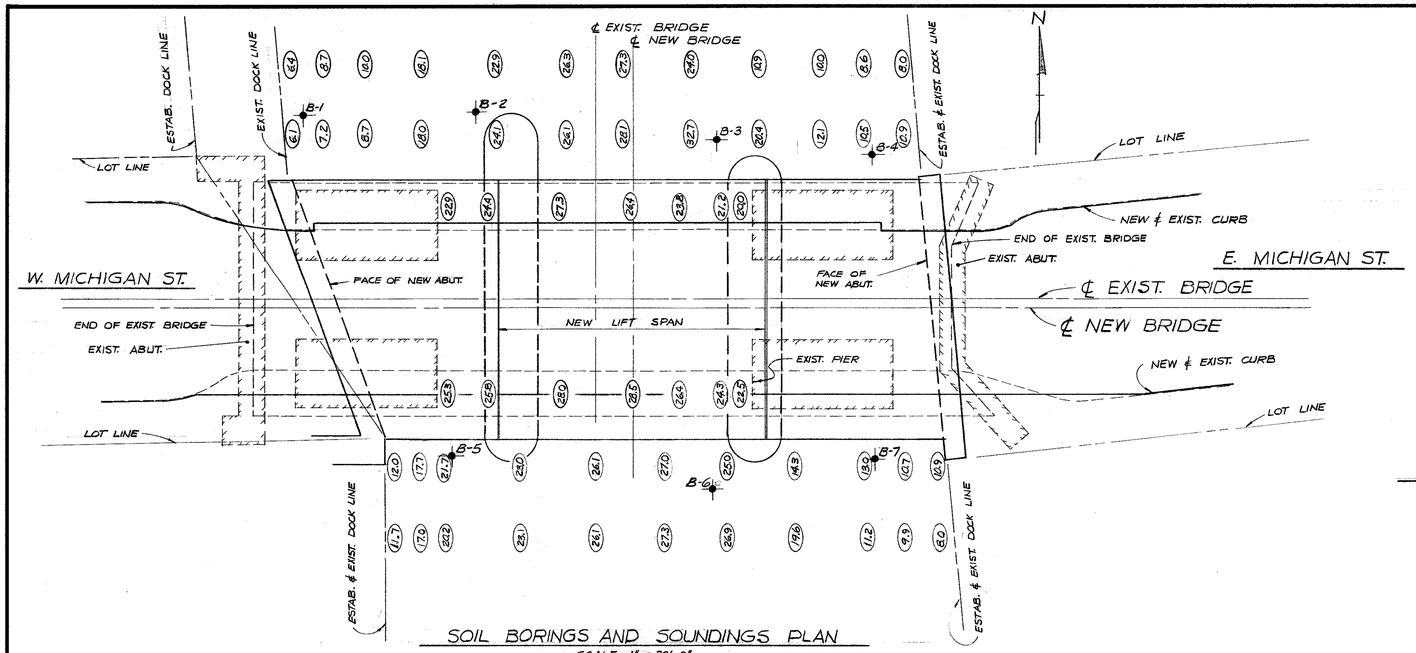

SOIL BORINGS AND SOUNDINGS PLAN

SCALE 1" = 20'-0"

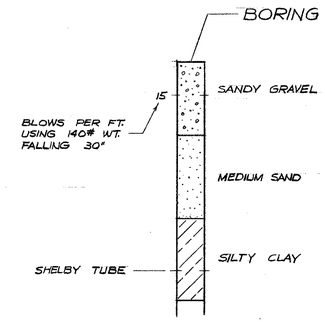

LEGEND OF BORING

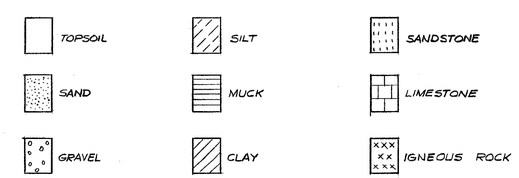

MATERIAL SYMBOLS

SUBSURFACE EXPLORATION FOR FOUNDATION DESIGN

TO OBTAIN RELATIVE DATA CONCERNING THE CHARACTER OF MATERIAL IN AND UPON WHICH THE FOUNDATION MIGHT BE BUILT, BORINGS AND/OR SOUNDINGS WERE MADE AT POINTS APPROXIMATELY AS INDICATED ON THE DRAWINGS. THE DATA PRESENTED HEREIN REPRESENTS THE FINDINGS OF THE SUBSURFACE EXPLORATIONS MADE. HOWEVER BECAUSE THE DEPTHS INVESTIGATED ARE LIMITED AND THE AREA OF THE BORINGS AND/OR SOUNDINGS IS VERY SMALL IN RELATION TO THE ENTIRE AREA, THE CITY OF MILWAUKEE DOES NOT WARRANT CONDITIONS BELOW THE DEPTHS INVESTIGATED OR THAT THE CLASSIFICATION ENCOUNTERED IN THESE INVESTIGATIONS IS NECESSARILY TYPICAL OF THE ENTIRE SITE.

NOTES:

B-3 — BORING NO. — INDICATES SOIL BORING - BORINGS MADE 7-23-75 TO 7-30-75

(20.0) — INDICATES SOUNDING - ELEVATION OF RIVER BOTTOM BELOW CITY DATUM EL. 0.0 - SOUNDINGS MADE 4-20-76

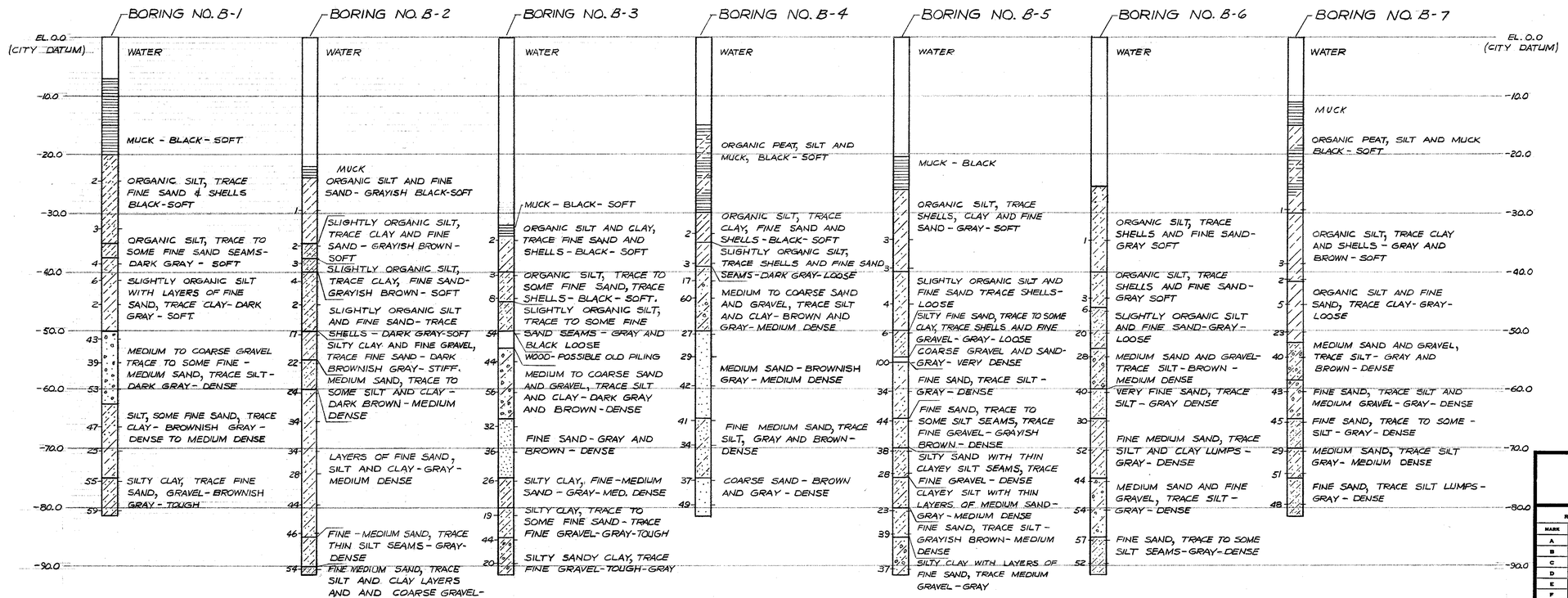

LOG OF SOIL BORINGS

SCALE 1" = 10'-0"

DEPARTMENT OF PUBLIC WORKS
BUREAU OF BRIDGES AND PUBLIC BUILDINGS
CITY OF MILWAUKEE

REVISIONS		
MARK	DATE	BY
A		
B		
C		
D		
E		
F		
G		
H		
I		
J		
K		
L		
M		

MICHIGAN ST. VERTICAL LIFT BRIDGE
OVER MILWAUKEE RIVER
SOIL BORINGS

DESIGNED BY: _____ TRACED BY: _____ DATE: _____
DRAWN BY: R/P CHECKED BY: P C B DATE: _____
APPROVED:— SCALE: AS NOTED
Norris A. Batalon — DESIGNER IN CHARGE — DATE: 2-2-77 SHEET NUMBER 5
Henry J. Balconi — CHIEF OF BRIDGES AND PUBLIC BUILDINGS — DATE: 2-2-77 SET OF 85 SHEETS
Edward Flis — COMMISSIONER OF PUBLIC WORKS — DATE: 2-3-77 JOB NO. 505-98

Special Design

CPE-2

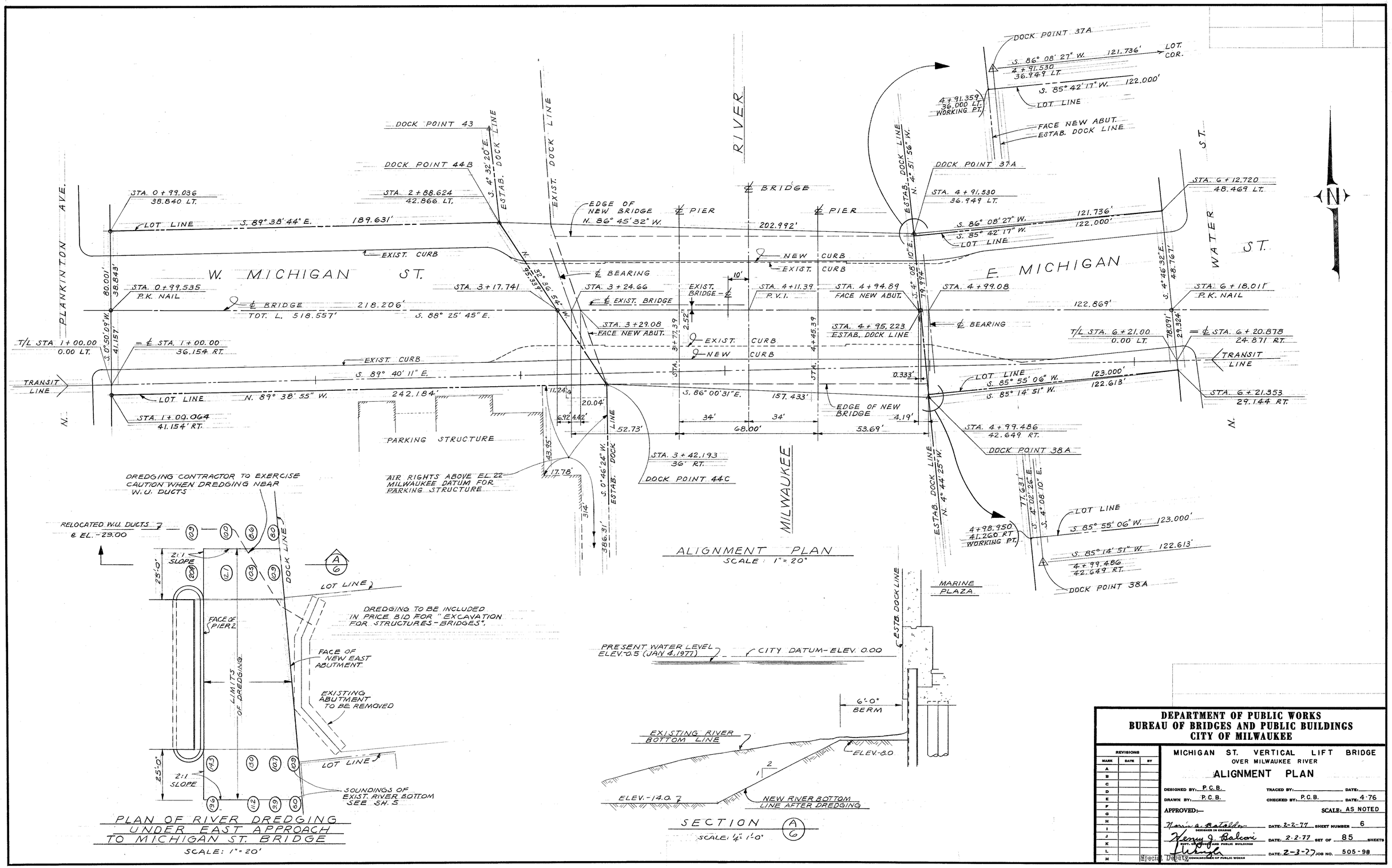
ALIGNMENT PLAN
SCALE: 1" = 20'
W. MICHIGAN ST.
E. MICHIGAN ST.
PLANKINTON AVE.
WATER ST.
RIVER
MILWAUKEE
PARKING STRUCTURE
MARINE PLAZA
DOCK POINT 43
DOCK POINT 44B
DOCK POINT 44C
DOCK POINT 37A
DOCK POINT 38A
STA. 0 + 99.036
38.840 LT.
STA. 2 + 88.624
42.866 LT.
STA. 0 + 99.535
P.K. NAIL
STA. 1 + 00.064
41.154' RT.
STA. 1 + 00.00
36.154 RT.
STA. 3 + 17.741
STA. 3 + 24.66
STA. 3 + 29.08
FACE NEW ABUT.
STA. 3 + 42.193
36' RT.
STA. 4 + 11.39
P.V.I.
STA. 4 + 94.89
FACE NEW ABUT.
STA. 4 + 99.08
STA. 4 + 95.223
ESTAB. DOCK LINE
STA. 4 + 91.530
36.949 LT.
4 + 91.359
36.000 LT.
WORKING PT.
STA. 4 + 99.486
42.649 RT.
4 + 98.950
41.260 RT
WORKING PT.
STA. 6 + 12.720
48.469 LT.
STA. 6 + 18.011
P.K. NAIL
STA. 6 + 20.878
24.871 RT.
STA. 6 + 21.353
29.144 RT.
T/L STA. 1 + 00.00
0.00 LT.
T/L STA. 6 + 21.00
0.00 LT.
TRANSIT LINE
LOT. COR.
℄ BRIDGE
℄ PIER
℄ BEARING
℄ EXIST. BRIDGE
EXIST. BRIDGE - ℄
EDGE OF NEW BRIDGE
EXIST. CURB
NEW CURB
LOT LINE
ESTAB. DOCK LINE
EXIST. DOCK LINE
S. 89° 38' 44" E. 189.631'
N. 86° 45' 32" W. 202.992'
S. 88° 25' 45" E. 218.206'
TOT. L. 518.557'
S. 89° 40' 11" E.
N. 89° 38' 55" W. 242.184'
S. 86° 00' 31" E. 157.433'
S. 86° 08' 27" W. 121.736'
S. 85° 42' 17" W. 122.000'
S. 85° 55' 06" W. 123.000'
S. 85° 14' 51" W. 122.613'
N. 86° 36' 54" W. 159.334'
S. 0° 50' 09" W. 80.001'
38.843'
41.157'
S. 4° 32' 20" E.
N. 4° 51' 56" W.
S. 4° 08' 10" E.
N. 4° 44' 25" W.
S. 4° 46' 32" E. 48.76'
S. 4° 02' 26" E. 77.631'
S. 0° 46' 24" W. 386.31'
N. 0° 46' 24" W.
11.24'
20.04'
6.92'
4.42'
52.73'
34'
68.00'
53.69'
4.19'
0.333'
43.95'
17.78'
3.4'
2.52'
10'
3+77.39
4+45.39
STA.
N.
DREDGING CONTRACTOR TO EXERCISE CAUTION WHEN DREDGING NEAR W.U. DUCTS
AIR RIGHTS ABOVE EL. 22 MILWAUKEE DATUM FOR PARKING STRUCTURE
RELOCATED W.U. DUCTS @ EL. -29.00
2:1 SLOPE
25'-0"
FACE OF PIER 2
LIMITS OF DREDGING
DREDGING TO BE INCLUDED IN PRICE BID FOR "EXCAVATION FOR STRUCTURES-BRIDGES".
FACE OF NEW EAST ABUTMENT
EXISTING ABUTMENT TO BE REMOVED
SOUNDINGS OF EXIST. RIVER BOTTOM SEE SH. 5
PLAN OF RIVER DREDGING UNDER EAST APPROACH TO MICHIGAN ST. BRIDGE
SCALE: 1" = 20'
PRESENT WATER LEVEL ELEV. 0.5 (JAN 4, 1977)
CITY DATUM - ELEV. 0.00
6'-0" BERM
EXISTING RIVER BOTTOM LINE
ELEV. -8.0
ELEV. -14.0
NEW RIVER BOTTOM LINE AFTER DREDGING
SECTION A/6
SCALE: 1/4" = 1'-0"
DEPARTMENT OF PUBLIC WORKS
BUREAU OF BRIDGES AND PUBLIC BUILDINGS
CITY OF MILWAUKEE
REVISIONS
MARK DATE BY
MICHIGAN ST. VERTICAL LIFT BRIDGE
OVER MILWAUKEE RIVER
ALIGNMENT PLAN
DESIGNED BY: P.C.B.
TRACED BY:
DATE:
DRAWN BY: P.C.B.
CHECKED BY: P.C.B.
DATE: 4-76
APPROVED:—
SCALE: AS NOTED
DATE: 2-2-77
SHEET NUMBER 6
DESIGNER IN CHARGE
SUPT. OF BRIDGES AND PUBLIC BUILDINGS
DATE: 2-2-77
SET OF 85 SHEETS
COMMISSIONER OF PUBLIC WORKS
DATE: 2-3-77
JOB NO. 505-98
Special Deputy

CPE-2

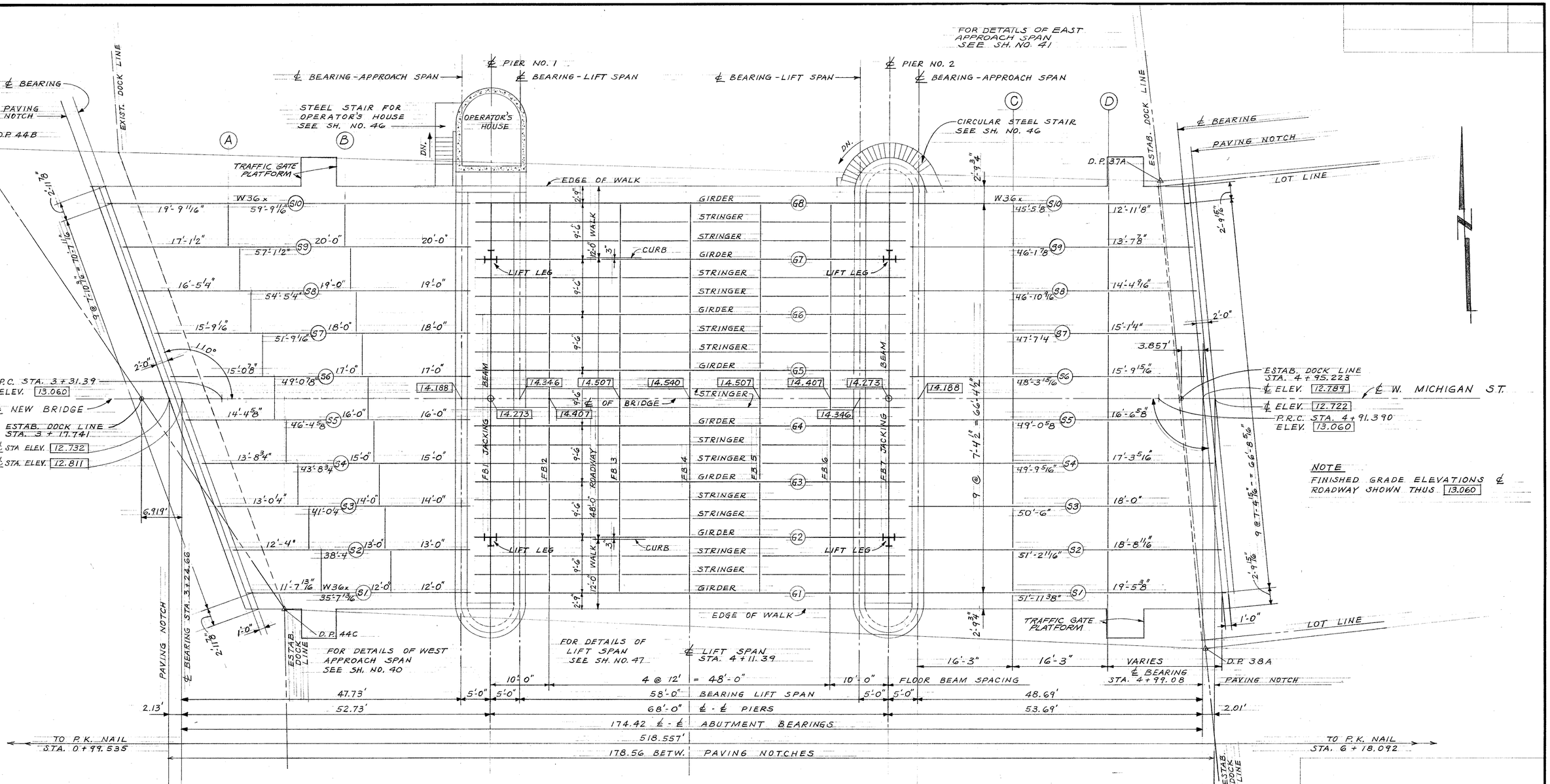

GENERAL FRAMING PLAN

SCALE: 1/8" = 1'-0"

DEPARTMENT OF PUBLIC WORKS
BUREAU OF BRIDGES AND PUBLIC BUILDINGS
CITY OF MILWAUKEE

REVISIONS		
MARK	DATE	BY
A		
B		
C		
D		
E		
F		
G		
H		
I		
J		
K		
L		
M		

MICHIGAN ST. VERTICAL LIFT BRIDGE
OVER MILWAUKEE RIVER

GENERAL FRAMING PLAN

DESIGNED BY: P.C.B. TRACED BY: DATE:
DRAWN BY: P.C.B. CHECKED BY: P.C.B. DATE:
APPROVED:— SCALE: AS NOTED

Norris A. Batalder — DESIGNER IN CHARGE — DATE: 2-2-77 SHEET NUMBER 7
Henry J. Balconi — SUPT. OF BRIDGES AND PUBLIC BUILDINGS — DATE: 2-2-77 SET OF 85 SHEETS
[signature] — COMMISSIONER OF PUBLIC WORKS — DATE: 2-3-77 JOB NO. 505-98

Special Deputy

CPE-2

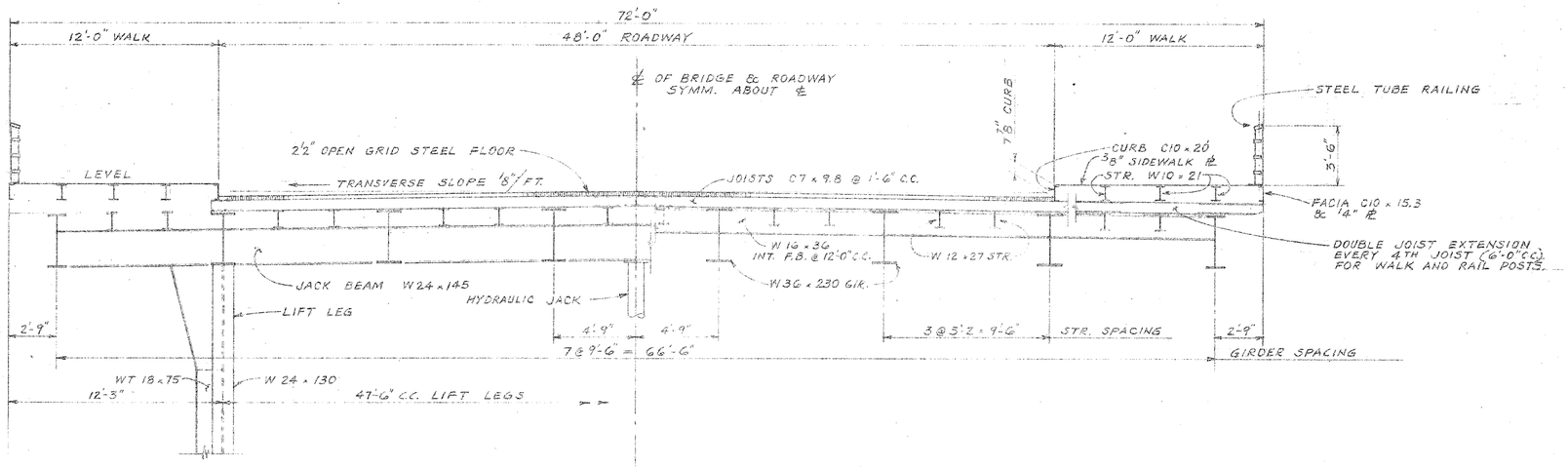

HALF SECTION AT PIER — HALF SECTION AT MIDSPAN

CROSS SECTION — LIFT SPAN

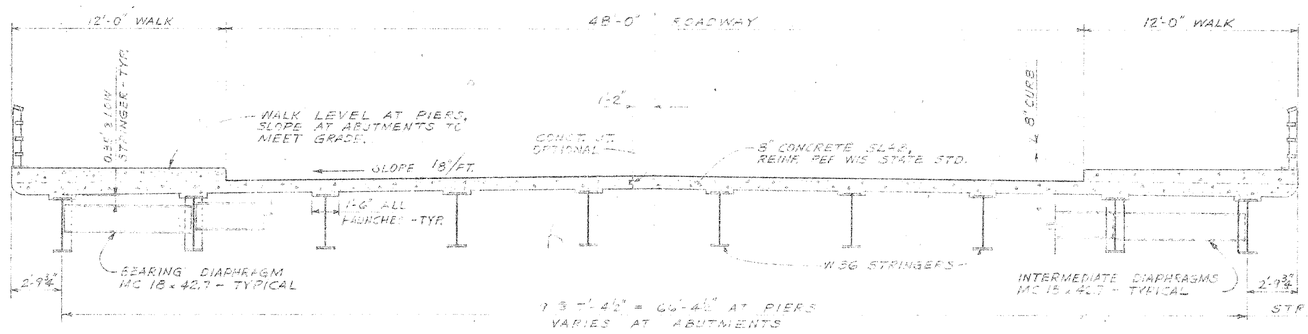

CROSS SECTION - APPROACH SPAN

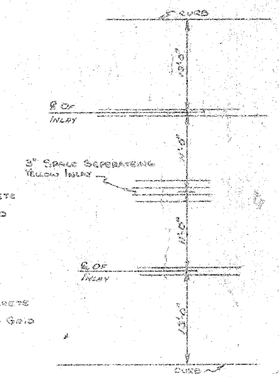

222' WHITE INLAY WITH ASPHALT
118' WHITE INLAY GLUE ON CONCRETE & ASPHALT ON GRID
340' TOTAL WHITE 5" PLASTIC

892' YELLOW INLAY WITH ASPHALT
414' YELLOW INLAY GLUE ON CONCRETE & ASPHALT ON GRID
1306' TOTAL YELLOW 5" PLASTIC

MARKING INSTALLATION DETAIL

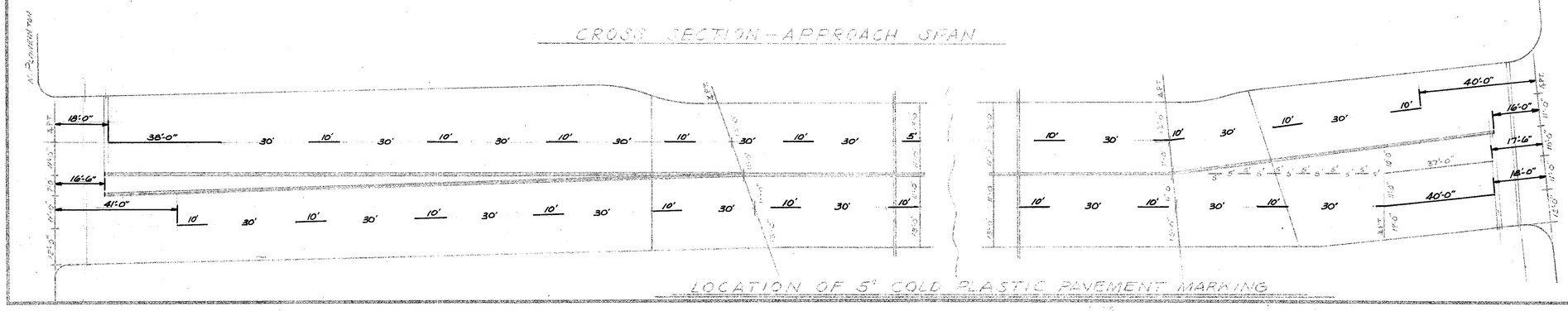

LOCATION OF 5" COLD PLASTIC PAVEMENT MARKING

DEPARTMENT OF PUBLIC WORKS
BUREAU OF BRIDGES AND PUBLIC BUILDINGS
CITY OF MILWAUKEE

REVISIONS			
MARK	DATE	BY	
A	7/8/72	P.C.B.	
B			
C			
D			
E			
F			
G			
H			
I			
J			
K			
L			
M			

MICHIGAN ST. VERTICAL LIFT BRIDGE
OVER MILWAUKEE RIVER

TYPICAL CROSS SECTIONS

DESIGNED BY: P.C.B. TRACED BY: DATE:
DRAWN BY: P.C.B. CHECKED BY: R.L.K. DATE:
APPROVED:— SCALE: AS NOTED

Norman R. Bertelsen — DESIGNER IN CHARGE — DATE: 2-2-77 SHEET NUMBER 8
Kenneth G. Bakken — DIRECTOR OF BRIDGE & PUBLIC BUILDINGS — DATE: 2-2-77 SHT OF 85 SHEETS
L. L. Bonk — CONSULTING ENGINEER — DATE: 2-2-77 JOB NO. 505-95

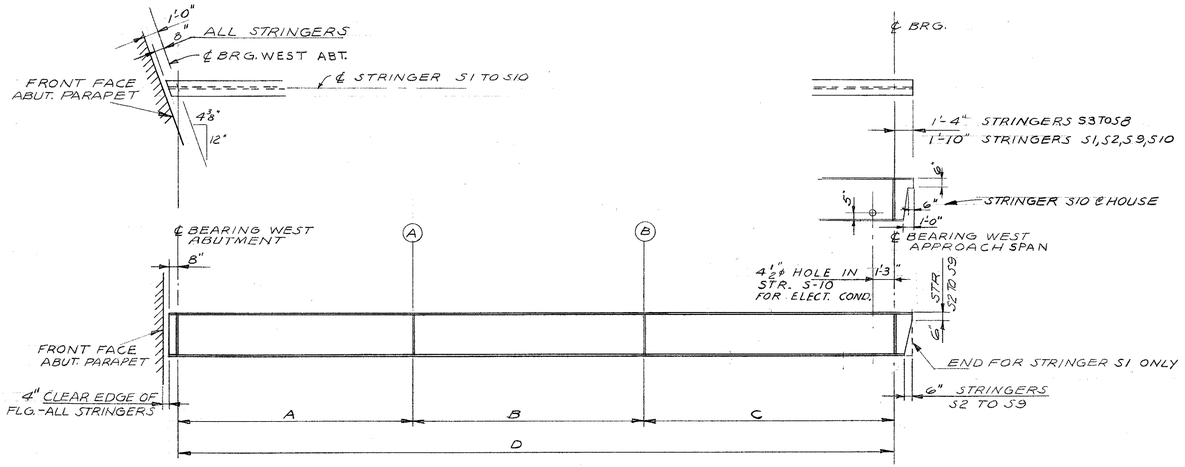

WEST APPROACH SPAN STRINGERS

ELEVATIONS AT TOP OF DECK (TD)–TOP OF WALK (TW)–TOP OF STEEL (TS)						
STRINGER		℄ BRG. WEST ABUT.	(A)	℄	(B)	℄ BRG. WEST APP. SPAN
S1	TW	13.668	14.039	14.210	14.356	14.605
	TD	12.906	13.276	13.447	13.593	13.842
	TS	12.224	12.531	12.693	12.844	13.160
S2	TW	13.574	13.980	14.175	14.332	14.605
	TD	12.888	13.294	13.489	13.646	13.919
	TS	12.206	12.538	12.722	12.888	13.237
S3	TD	12.869	13.310	13.529	13.698	13.996
	TS	12.187	12.315	12.750	12.929	13.314
S4	TD	12.846	13.324	13.568	13.750	14.073
	TS	12.164	12.549	12.779	12.971	13.391
S5	TD	12.824	13.336	13.608	13.802	14.150
	TS	12.142	12.554	12.806	13.009	13.468
S6	TD	12.724	13.269	13.568	13.776	14.150
	TS	12.055	12.493	12.769	12.987	13.481
S7	TD	12.548	13.124	13.452	13.673	14.073
	TS	11.879	12.343	12.642	12.874	13.404
S8	TD	12.372	12.977	13.334	13.570	13.996
	TS	11.703	12.193	12.515	12.760	13.327
S9	TW	12.880	13.514	13.901	14.152	14.605
	TD	12.196	12.828	13.215	13.466	13.919
	TS	11.527	12.043	12.389	12.647	13.250
S10	TW	12.781	13.440	13.860	14.124	14.605
	TD	12.020	12.677	13.097	13.362	13.842
	TS	11.351	11.997	12.392 ~~12.365~~	12.653	13.173

NOTE: TOP OF STEEL ELEVATIONS FOR STRINGER S10 INCLUDES CAMBER.

TABLE OF DIMENSIONS ~~EAST~~ WEST APPROACH SPAN STRINGERS						
STRINGER	SECTION	DIMENSIONS A	B	C	D	REMARKS
S1	W36 x 160	11'-7 9/16"	12'-0"	12'-0"	35'-7 9/16"	
S2	W36 x 160	12'-4"	13'-0"	13'-0"	38'-4"	
S3	W36 x 160	13'-0 1/4"	14'-0"	14'-0"	41'-0 1/4"	
S4	W36 x 160	13'-8 3/4"	15'-0"	15'-0"	43'-8 3/4"	
S5	W36 x 160	14'-4 3/8"	16'-0"	16'-0"	46'-4 3/8"	
S6	W36 x 182	15'-0 1/8"	17'-0"	17'-0"	49'-0 1/8"	
S7	W36 x 182	15'-9 1/16"	18'-0"	18'-0"	51'-9 1/16"	
S8	W36 x 182	16'-5 1/4"	19'-0"	19'-0"	54'-5 1/4"	
S9	W36 x 182	17'-1 1/2"	20'-0"	20'-0"	57'-1 1/2"	
S10	W36 x 182	19'-9 11/16" ~~17'-3 11/16"~~	20'-0" ~~21'-0"~~	20'-0" ~~21'-0"~~	59'-9 11/16"	

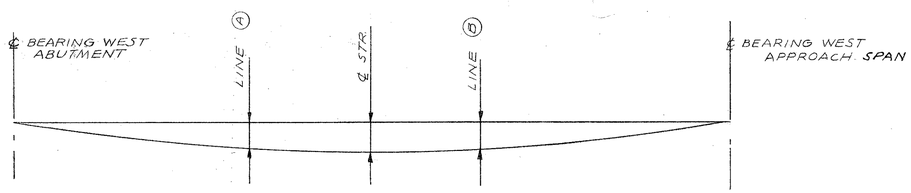

DEAD LOAD DEFLECTION DIAGRAM—WEST APPROACH SPAN

DEAD LOAD DEFLECTIONS-WEST APPROACH SPAN				
STRINGER	DEFLECTION	(A)	℄	(B)
S1	WALK ONLY	1/8"	1/8"+	1/8"
	CONC. ONLY	1/8"–	1/8"	1/8"–
	TOTAL	1/4"	5/16"–	1/4"
S2	WALK ONLY	1/8"–	1/8"	1/8"–
	CONC. ONLY	1/8"+	3/16"–	1/8"+
	TOTAL	1/4"+	5/16"–	1/4"+
S3	CONC. ONLY	3/16"+	1/4"	3/16"+
	TOTAL	1/4"	5/16"–	1/4"+
S4	CONC. ONLY	3/16"	1/4"–	3/16"+
	TOTAL	1/4"+	5/16"+	3/16"–
S5	CONC. ONLY	1/4"	1/4"+	1/4"
	TOTAL	3/8"–	7/16"–	3/8"
S6	CONC. ONLY	1/4"	5/16"	1/4"
	TOTAL	3/8"–	3/8"+	7/16"
S7	CONC. ONLY	5/16"–	3/8"	5/16"+
	TOTAL	7/16"+	9/16"–	1/2"–
S8	CONC. ONLY	3/8"+	1/2"–	7/16"–
	TOTAL	9/16"+	11/16"+	5/8"
S9	WALK ONLY	5/16"	3/8"+	5/16"+
	CONC. ONLY	7/16"	9/16"	1/2"
	TOTAL	7/8"	1 1/16"	15/16"
S10	WALK ONLY	5/8"	3/4"	11/16"
	CONC. ONLY	1/2"	5/8"	9/16"
	TOTAL	1 1/4"+	1 3/16"	1 1/16"–

NOTE: TOTAL DEAD LOAD DEFLECTIONS INCLUDE DEFLECTION DUE TO 20 PSF. FUTURE WEARING SURFACE

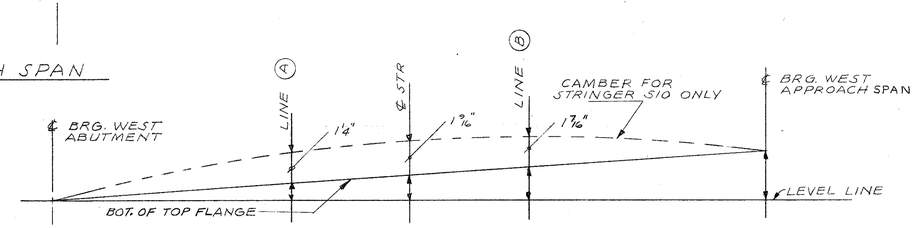

BLOCKING AND CAMBER DIAGRAM WEST APPROACH SPAN STRINGERS

BLOCKING DIMENSIONS WEST APPROACH SPAN STRINGERS				
STRINGER	(A)	℄	(B)	℄ BRG. W. APPROACH SPAN
S1	3 11/16"	5 5/8"	7 7/16"	11 1/2"–
S2	4"–	6 3/16"	8 3/16"	1'-0 3/8"
S3	4 5/16"–	6 3/4"	8 7/8"+	1'-1 1/2"+
S4	4 3/8"	7 1/8"	9 9/16"	1'-2 3/4"–
S5	4 7/16"	7 15/16"+	10 7/16"–	1'-3 9/16"–
S6	5 1/4"	8 9/16"	11 3/16"	1'-5 1/8"
S7	5 9/16"	9 1/8"+	11 15/16"	1'-6 9/16"
S8	5 7/8"	9 3/4"	1'-0 11/16"	1'-7 1/2"
S9	6 3/16"+	10 5/16"+	1'-1 7/16"	1'-8 11/16"
S10				1'-9 7/8"

AS BUILT

DEPARTMENT OF PUBLIC WORKS
BUREAU OF BRIDGES AND PUBLIC BUILDINGS
CITY OF MILWAUKEE

REVISIONS		
MARK	DATE	BY
A		
B		
C		
D		
E		
F		
G		
H		
I		
J		
K		
L		
M		

MICHIGAN ST. VERTICAL LIFT BRIDGE OVER MILWAUKEE RIVER

STRINGER ELEVATIONS & DIMENSIONS WEST SPAN

DESIGNED BY: R.L.K. TRACED BY: DATE:
DRAWN BY: D.G.H. CHECKED BY: R.L.K. DATE:
APPROVED:— SCALE: AS SHOWN
Norris A. Bataldo DESIGNER IN CHARGE DATE: 2-2-77 SHEET NUMBER 9
Henry J. Balcomi CHIEF, BUREAU OF BRIDGES AND PUBLIC BUILDINGS DATE: 2-2-77 SET OF 85 SHEETS
A. Wright Special Deputy COMMISSIONER OF PUBLIC WORKS DATE: 2-2-77 JOB NO. 505-98

CPE-2

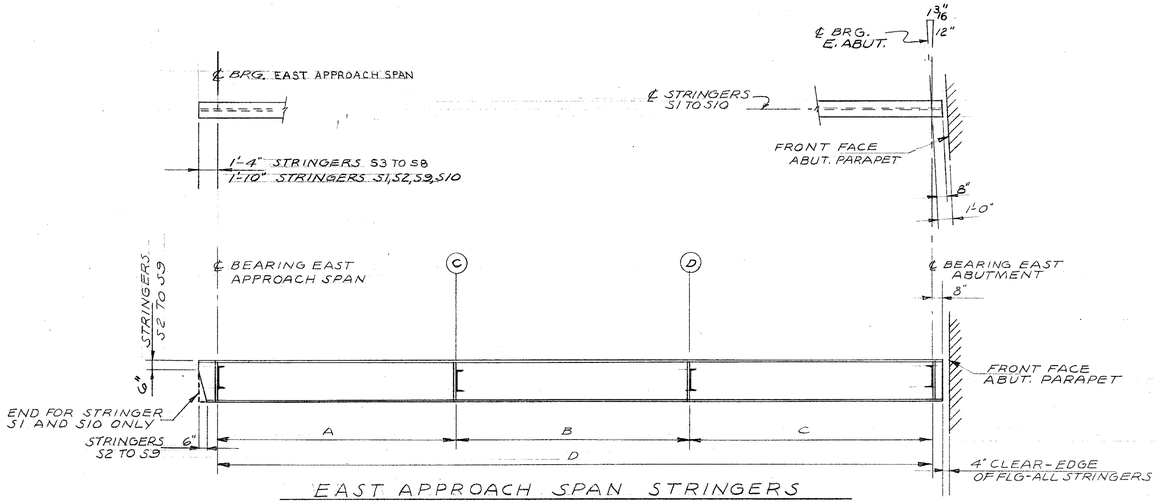

EAST APPROACH SPAN STRINGERS

TABLE OF DIMENSIONS EAST APPROACH SPAN STRINGERS						
STRINGER	DIMENSIONS					REMARKS
	SECTION	A	B	C	D	
S1	W 36 x 182	16'-3"	16'-3"	19'-5 3/8"	51'-11 3/8"	
S2	W 36 x 182	do	do	18'-8 11/16"	51'-2 11/16"	
S3	W 36 x 182	do	do	18'-0"	50'-6"	
S4	W 36 x 182	do	do	17'-3 5/16"	49'-9 5/16"	
S5	W 36 x 182	do	do	16'-6 3/8"	49'-0 5/8"	
S6	W 36 x 160	do	do	15'-9 9/16"	48'-3 15/16"	
S7	W 36 x 160	do	do	15'-1 4"	47'-7 4"	
S8	W 36 x 160	do	do	14'-4 9/16"	46'-10 9/16"	
S9	W 36 x 160	do	do	13'-7 1/8"	46'-1 1/8"	
S10	W 36 x 160	do	do	12'-11 1/8"	45'-5 1/8"	

ELEVATIONS AT TOP OF DECK (TD)-TOP OF WALK (TW)- TOP OF STEEL (TS)						
STRINGER		℄ BRG EAST APP. SPAN	C	℄	D	℄ BRG EAST ABUT.
S1	TW	14.605	14.252	13.981	13.775	13.099
	TD	13.842	13.488	13.218	13.012	12.336
	TS	13.173	12.702	12.420	12.230	11.667
S2	TW	14.605	14.252	13.991	13.775	13.123
	TD	13.919	13.566	13.306	13.089	12.436
	TS	13.250	12.777	12.507	12.309	11.767
S3	TD	13.996	13.642	13.393	13.166	12.537
	TS	13.327	12.858	12.597	12.389	11.868
S4	TD	14.073	13.719	13.481	13.243	12.637
	TS	13.404	12.937	12.687	12.468	11.968
S5	TD	14.150	13.796	13.568	13.319	12.738
	TS	13.481	13.012	12.777	12.545	12.069
S6	TD	14.150	13.796	13.579	13.319	12.763
	TS	13.468	13.003	12.774	12.534	12.081
S7	TD	14.073	13.719	13.513	13.243	12.710
	TS	13.391	12.926	12.711	12.460	12.028
S8	TD	13.996	13.642	13.446	13.166	12.658
	TS	13.314	12.851	12.643	12.388	11.976
S9	TW	14.605	14.252	14.066	13.775	13.292
	TD	13.919	13.566	13.380	13.089	12.606
	TS	13.237	12.773	12.580	12.315	11.924
S10	TW	14.605	14.252	14.077	13.775	13.317
	TD	13.842	13.488	13.314	13.012	12.555
	TS	13.160	12.701	12.516	12.238	11.873

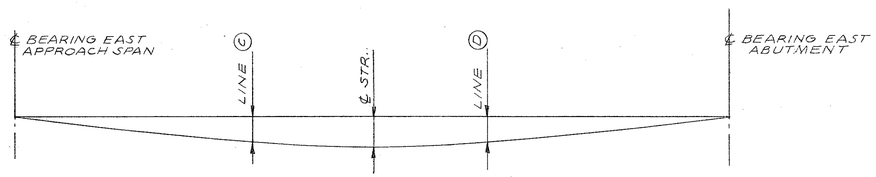

DEAD LOAD DEFLECTION DIAGRAM—EAST APPROACH SPAN

DEAD LOAD DEFLECTIONS-EAST APPROACH SPAN				
STRINGER	DEFLECTION	C	℄	D
S1	WALK ONLY	3/8"-	7/16"	3/8"+
	CONC. ONLY	5/16"-	3/8"-	5/16"+
	TOTAL	3/4"	13/16"+	7/8"+
S2	WALK ONLY	3/16"	1/4"-	1/4"-
	CONC. ONLY	1/4"+	5/16"	5/16"-
	TOTAL	9/16"	5/8"	5/8"-
S3	WALK ONLY	-	-	-
	CONC. ONLY	5/16"-	5/16"+	5/16"-
	TOTAL	7/16"	1/2"+	7/16"+
S4	CONC. ONLY	1/4"	5/16"+	5/16"-
	TOTAL	3/8"+	1/2"-	7/16"-
S5	CONC. ONLY	1/4"	5/16"	1/4"
	TOTAL	3/8"-	3/8"+	7/16"
S6	CONC. ONLY	1/4"	5/16"-	1/4"
	TOTAL	7/16"-	7/16"+	7/16"-
S7	CONC. ONLY	1/4"	5/16"-	1/4"
	TOTAL	3/8"+	7/16"+	3/8"+
S8	WALK ONLY	-	-	-
	CONC. ONLY	1/4"+	5/16"-	1/4"
	TOTAL	3/8"+	7/16"	3/8"-
S9	WALK ONLY	1/8"+	3/16"-	1/8"
	CONC. ONLY	1/4"-	1/4"	3/16"+
	TOTAL	7/16"	1/2"-	3/8"
S10	WALK ONLY	1/4"+	5/16"-	1/4"-
	CONC. ONLY	1/4"-	1/4"-	3/16"
	TOTAL	1/2"+	5/8"-	1/2"+

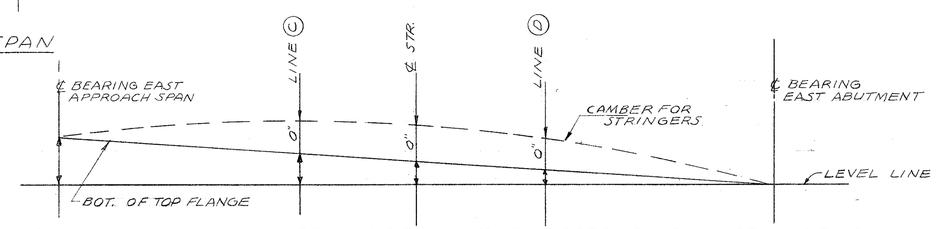

BLOCKING AND CAMBER DIAGRAM—EAST APPROACH SPAN STRINGERS

NOTE: TOTAL DEAD LOAD DEFLECTIONS INCLUDE DEFLECTION DUE TO 20 PSF FUTURE WEARING SURFACE.

BLOCKING DIMENSIONS EAST APPROACH SPAN STRINGERS				
STRINGER	℄ BRG. E. APPROACH SPAN	C	℄	D
S1	1'-6 1/16"	1'-0 7/16"-	9"	6 3/4"
S2	1'-5 3/4"+	1'-0 9/64"+	8 7/8"	6 1/2"
S3	1'-5 1/2"	11 7/8"-	8 3/4"	6'4"-
S4	1'-5 1/4"-	11 5/8"	8 5/8"-	6"-
S5	1'-4 15/16"	11 5/16"	8 1/2"-	5 3/4"-
S6	1'-4 5/8"+	11 1/16"-	8 5/16"	5 5/16"
S7	1'-4 3/8"	10 13/16"-	8 3/16"	5 3/16"
S8	1'-4 1/16"	10 1/2"	8"+	4 15/16"
S9	1'-3 3/4"	10 3/16"+	7 7/8"	4 11/16"-
S10	1'-3 1/16"	9 15/16"-	7 3/4"-	4 3/8"+

DEPARTMENT OF PUBLIC WORKS
BUREAU OF BRIDGES AND PUBLIC BUILDINGS
CITY OF MILWAUKEE

REVISIONS		
MARK	DATE	BY
A		
B		
C		
D		
E		
F		
G		
H		
I		
J		
K		
L		
M		

MICHIGAN ST. VERTICAL LIFT BRIDGE OVER MILWAUKEE RIVER

STRINGER ELEVATIONS & DIMENSIONS EAST SPAN

DESIGNED BY: RLK TRACED BY: DGH DATE:
DRAWN BY: DGH CHECKED BY: R.L.K. DATE:
APPROVED:— SCALE: AS NOTED

Morris A. Batalden DESIGNER IN CHARGE DATE: 2-2-77 SHEET NUMBER 10
Henry J. Baloni ASST. COMMISSIONER AND PUBLIC BUILDINGS DATE: 2-2-77 SET OF 85 SHEETS
Special Deputy COMMISSIONER OF PUBLIC WORKS DATE: 2-3-77 JOB NO. 505-98

CPE-2

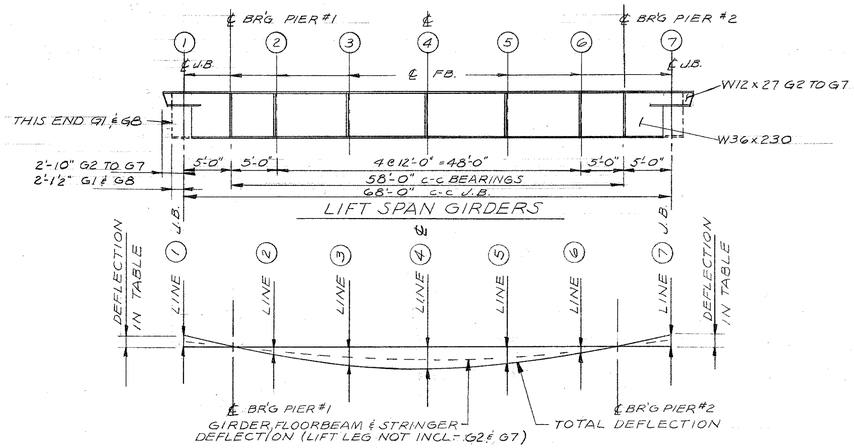

DEAD LOAD DEFLECTION DIAGRAM-LIFT SPAN

DEAD LOAD DEFLECTIONS — LIFT SPAN								
GIRDER	DEFLECTION	1	2	3	4 ℄	5	6	7
G1, G2,	G.F.B.S.	-1/16"	-1/16"	1/8"	+1/8"	1/8"	-1/16"	-1/16"
G7, G8	TOTAL	-1/8"	-1/8"	1/4"	-3/8"	1/4"	-1/8"	-1/8"
G3, G4,	G.F.B.S	-1/16"	-1/16"	1/8"	-3/16"	1/8"	-1/16"	-1/16"
G5, G6	TOTAL	1/8"	3/16"	1/2"	3/4"	1/2"	3/16"	1/8"

G.F.B.S: DEFLECTION FOR GIRDER, FLOORBEAMS & STRINGERS ONLY (LIFT LEG NOT INCLUDED FOR G2 & G7)
TOTAL DEFLECTION FOR G2 & G7 INCLUDES LIFT LEG & CTW. UPLIFT

ELEVATIONS AT TOP OF DECK (T.D.) — TOP OF WALK (T.W.) — TOP OF STEEL (T.S.)										
GIRDER		1	℄ BR'G PIER #1	2	3	4 ℄	5	6	℄ BR'G PIER #2	7
G1	T.W.	14.679	14.751	14.813	14.913	14.946	14.913	14.813	14.751	14.679
	T.S.	13.098	13.171	13.232	13.332	13.366	13.332	13.232	13.171	13.098
G2	T.W.	14.679	14.751	14.813	14.913	14.946	14.913	14.813	14.751	14.679
	T.D.	14.025	14.098	14.159	14.259	14.293	14.259	14.159	14.098	14.025
	T.S.	13.197	13.270	13.331	13.431	13.465	13.431	13.331	13.270	13.197
G3	T.D.	14.124	14.197	14.258	14.358	14.392	14.358	14.258	14.197	14.124
	T.S.	13.296	13.369	13.430	13.530	13.564	13.530	13.430	13.369	13.296
G4	T.D.	14.223	14.296	14.357	14.457	14.491	14.457	14.357	14.296	14.223
	T.S.	13.395	13.468	13.529	13.629	13.663	13.629	13.529	13.468	13.395
G5	T.D.	14.223	14.296	14.357	14.457	14.491	14.457	14.357	14.296	14.223
	T.S.	13.395	13.468	13.529	13.629	13.663	13.629	13.529	13.468	13.395
G6	T.D.	14.124	14.197	14.258	14.358	14.392	14.358	14.258	14.197	14.124
	T.S.	13.296	13.369	13.430	13.530	13.564	13.530	13.430	13.369	13.296
G7	T.W.	14.679	14.751	14.813	14.913	14.946	14.913	14.813	14.751	14.679
	T.D.	14.025	14.098	14.159	14.259	14.293	14.259	14.159	14.098	14.025
	T.S.	13.197	13.270	13.331	13.431	13.465	13.431	13.331	13.270	13.197
G8	T.W.	14.679	14.751	14.813	14.913	14.946	14.913	14.813	14.751	14.679
	T.S.	13.098	13.171	13.232	13.332	13.366	13.332	13.232	13.171	13.098

1.) TOP OF STEEL (T.S.) ELEVATIONS ARE TOP OF W36x230 FLANGE EXCEPT AT 1 & 7 WHICH ARE TOP OF W12x27 FLANGE FOR GIRDERS G2 TO G7
2.) TOP OF STEEL (T.S.) ELEVATIONS ARE TOP OF W36x230 FLANGE GIRDER G1 & G8

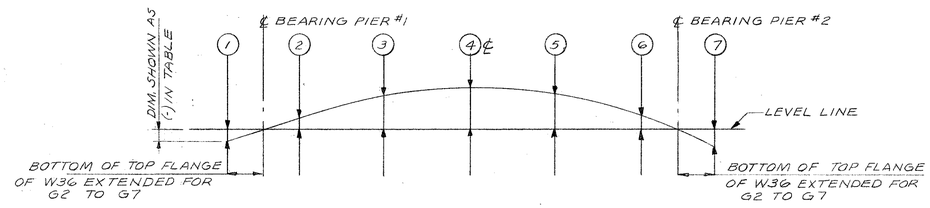

BLOCKING DIAGRAM LIFT SPAN GIRDERS

BLOCKING DIMENSIONS LIFT SPAN GIRDERS							
GIRDER	1	2	3	4	5	6	7
G1 TO G8	-1/8"	3/4"	1 15/16"	2 3/16"	1 15/16"	3/4"	-1/8"

NOTE:
GIRDERS TO BE CAMBERED FOR BLOCKING DIMENSION PLUS DEAD LOAD DEFLECTION

DEPARTMENT OF PUBLIC WORKS
BUREAU OF BRIDGES AND PUBLIC BUILDINGS
CITY OF MILWAUKEE

REVISIONS		
MARK	DATE	BY
A		
B		
C		
D		
E		
F		
G		
H		
I		
J		
K		
L		
M		

MICHIGAN ST. OVER MILWAUKEE RIVER VERTICAL LIFT BRIDGE

GIRDER ELEVATIONS & DIMENSIONS
LIFT SPAN

DESIGNED BY: R.L.K. TRACED BY: DATE:
DRAWN BY: D.G.H. CHECKED BY: R.L.K. DATE:
APPROVED:— SCALE: AS NOTED
Norris A. Batelder — DESIGNER IN CHARGE — DATE: 2-2-77 SHEET NUMBER 11
Henry J. Balconi — BUREAU OF BRIDGES & PUBLIC BUILDINGS — DATE: 2-2-77 SET OF 85 SHEETS
COMMISSIONER OF PUBLIC WORKS — DATE: 2-3-77 JOB NO: 505-98

CPE-2

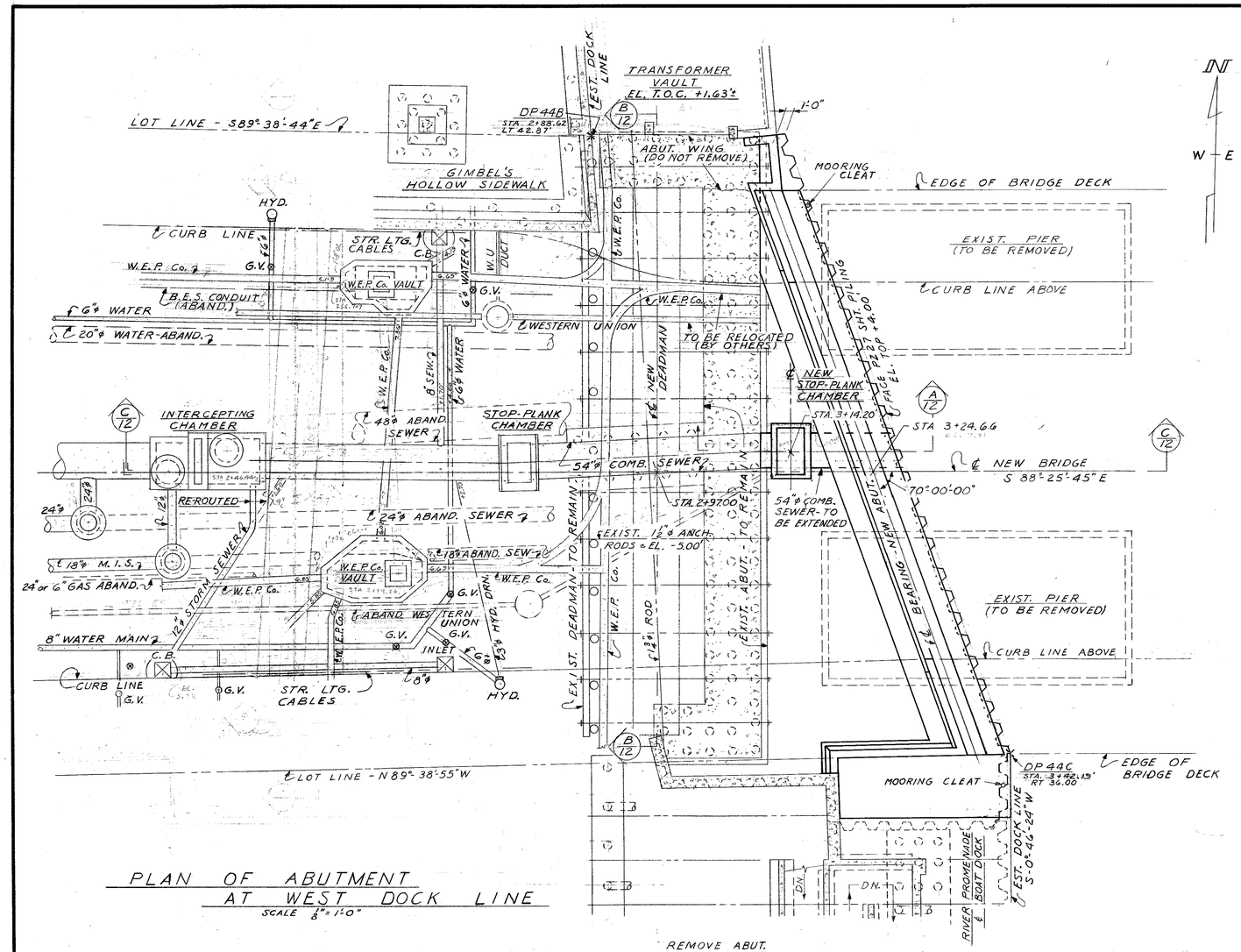

PLAN OF ABUTMENT AT WEST DOCK LINE

SCALE 1/8" = 1'-0"

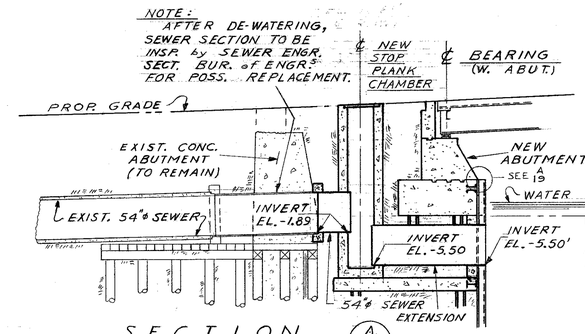

SECTION A/12

SCALE 1/8" = 1'-0"

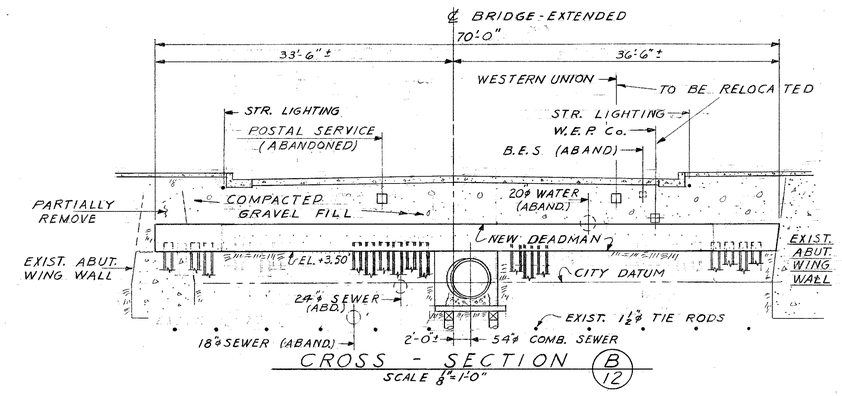

CROSS - SECTION B/12

SCALE 1/8" = 1'-0"

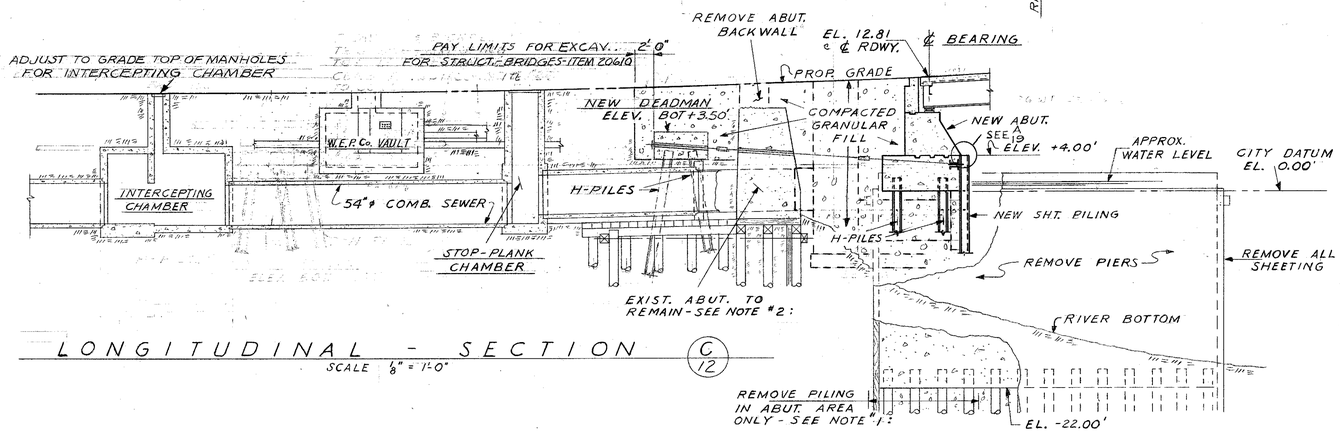

LONGITUDINAL - SECTION C/12

SCALE 1/8" = 1'-0"

NOTE:

1. VOIDS FROM PIER & PILING REMOVAL TO BE BACKFILLED w/ #1 CRUSHED STONE TO ELEV. -15.00' BEFORE DRIVING PILING. SHALL BE PAID FOR UNDER UNIT PRICE BID FOR GRANULAR BACKFILL.
2. CONTRACTOR HAS OPTION OF DRILLING ANCH. ROD HOLES THRU EXIST. ABUT. AS SHOWN OR REMOVING EXIST. ABUT. TO ELEV. +3.00' - SEE SKETCHES ABOVE.
3. EXIST. UNDERGROUND UTILITIES ARE SHOWN AND LOCATED FROM EXIST. PLANS. CONTRACTOR SHOULD EXCAVATE WITH EXTREME CAUTION AS UTILITY LOCATIONS MAY HAVE INACCURACIES - POSSIBLY NOT ALL UTILITIES ARE SHOWN.
4. RELOCATION OF EXISTING UTILITIES TO BE DONE BY RESPECTIVE UTILITIES.

105

DEPARTMENT OF PUBLIC WORKS
BUREAU OF BRIDGES AND PUBLIC BUILDINGS
CITY OF MILWAUKEE

REVISIONS		
MARK	DATE	BY
A		
B		
C		
D		
E		
F		
G		
H		
I		
J		
K		
L		
M		

MICHIGAN ST. VERTICAL LIFT BRIDGE
OVER MILWAUKEE RIVER

WEST ABUTMENT - GENERAL PLAN

DESIGNED BY: L. F. R. TRACED BY: DATE:
DRAWN BY: L. F. R. CHECKED BY: P.C.B. DATE:
APPROVED:— SCALE: AS NOTED

Norris A. Batalden — DESIGNER IN CHARGE — DATE: 2-2-77 SHEET NUMBER 12
Henry J. Balcom — SUPT. OF BRIDGES & PUBLIC BUILDINGS — DATE: 2-2-77 SET OF 85 SHEETS
H. Seidl — Deputy, COMMISSIONER OF PUBLIC WORKS — DATE: 2-3-77 JOB NO. 505-98

CPE-2

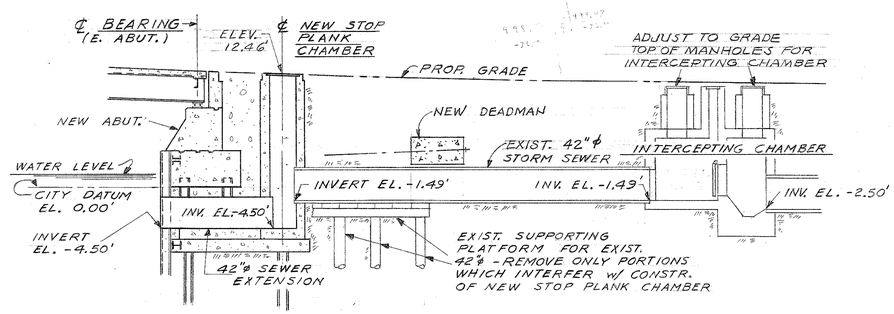

SECTION A/13
SCALE 1/8" = 1'-0"

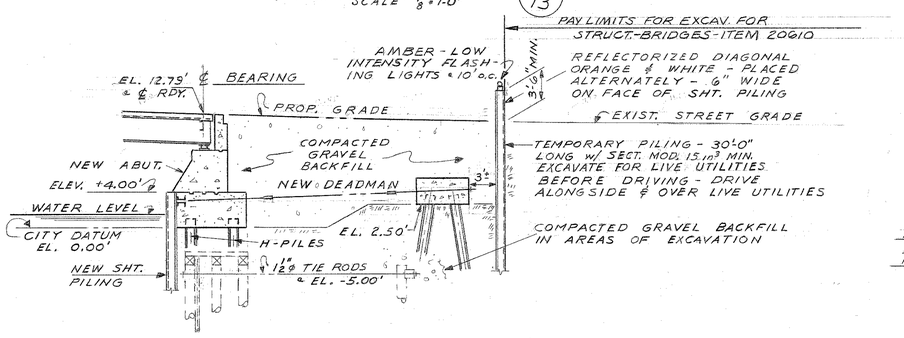

LONGITUDINAL - SECTION B/13
SCALE 1/8" = 1'-0"

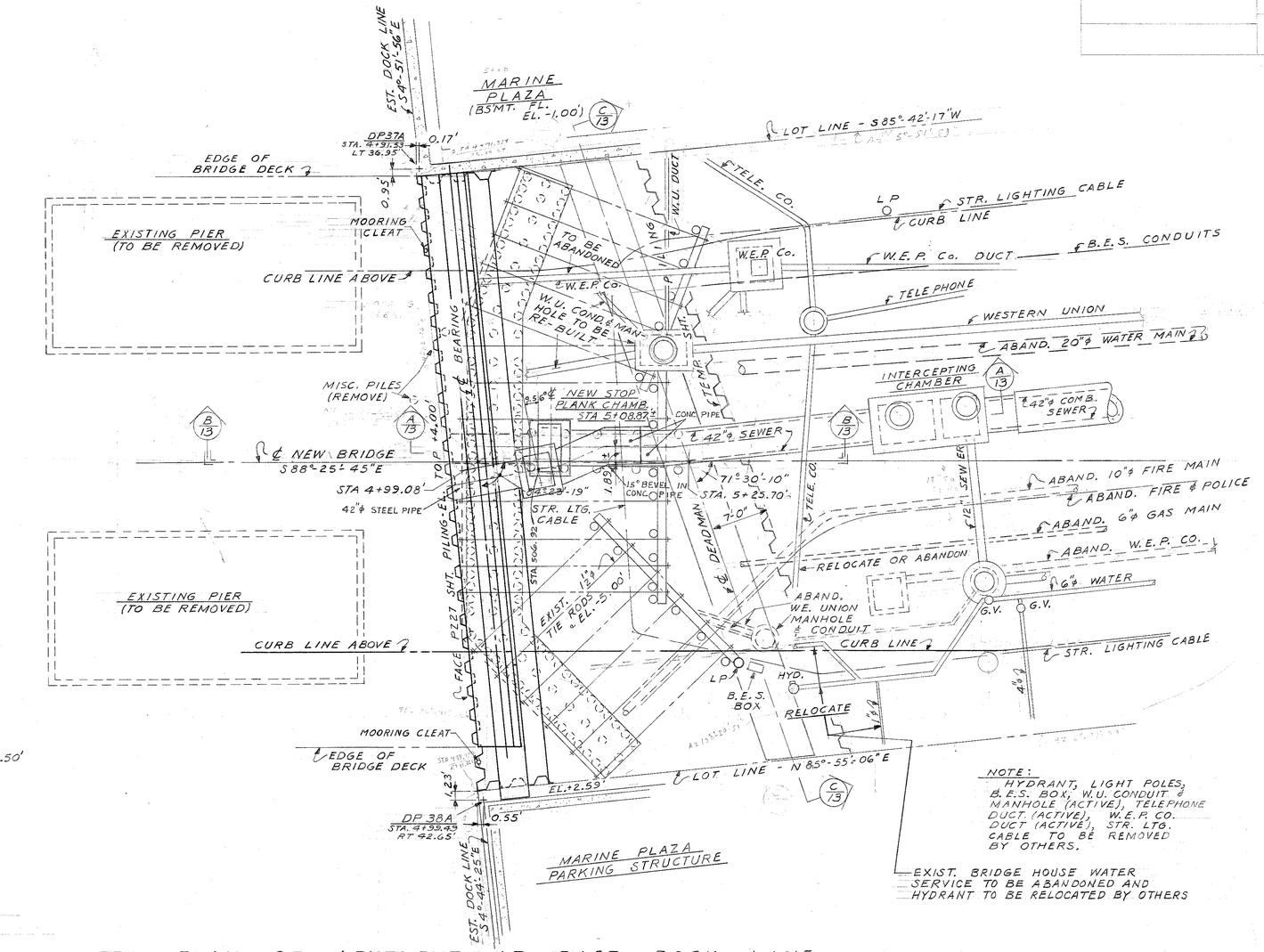

PLAN OF ABUTMENT AT EAST DOCK LINE
SCALE 1/8" = 1'-0"

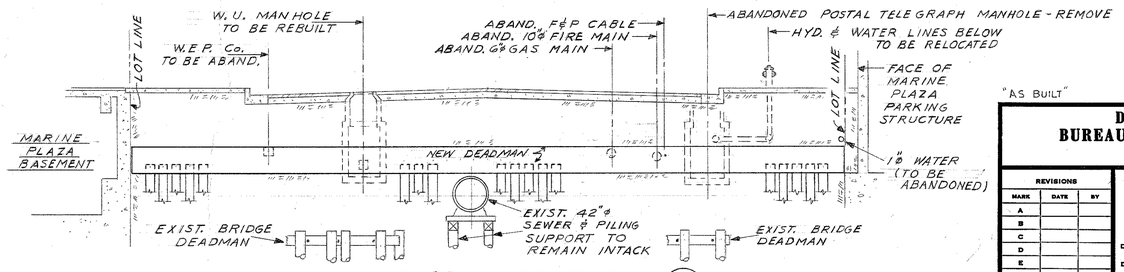

CROSS - SECTION C/13
SCALE 1/8" = 1'-0"

"AS BUILT"

165

DEPARTMENT OF PUBLIC WORKS
BUREAU OF BRIDGES AND PUBLIC BUILDINGS
CITY OF MILWAUKEE

REVISIONS		
MARK	DATE	BY
A		
B		
C		
D		
E		
F		
G		
H		
I		
J		
K		
L		
M		

MICHIGAN ST. VERTICAL LIFT BRIDGE
OVER MILWAUKEE RIVER

EAST ABUTMENT - GENERAL PLAN

DESIGNED BY: L.F.R. TRACED BY: DATE:
DRAWN BY: L.F.R. CHECKED BY: P.C.B. DATE:
APPROVED:— SCALE: AS NOTED
DESIGNER IN CHARGE DATE: 2-2-77 SHEET NUMBER 13
BUREAU OF BRIDGES AND PUBLIC BUILDINGS DATE: 2-2-77 SET OF 85 SHEETS
DEPUTY COMMISSIONER OF PUBLIC WORKS DATE: 2-3-77 JOB NO. 505-98

CPE-2

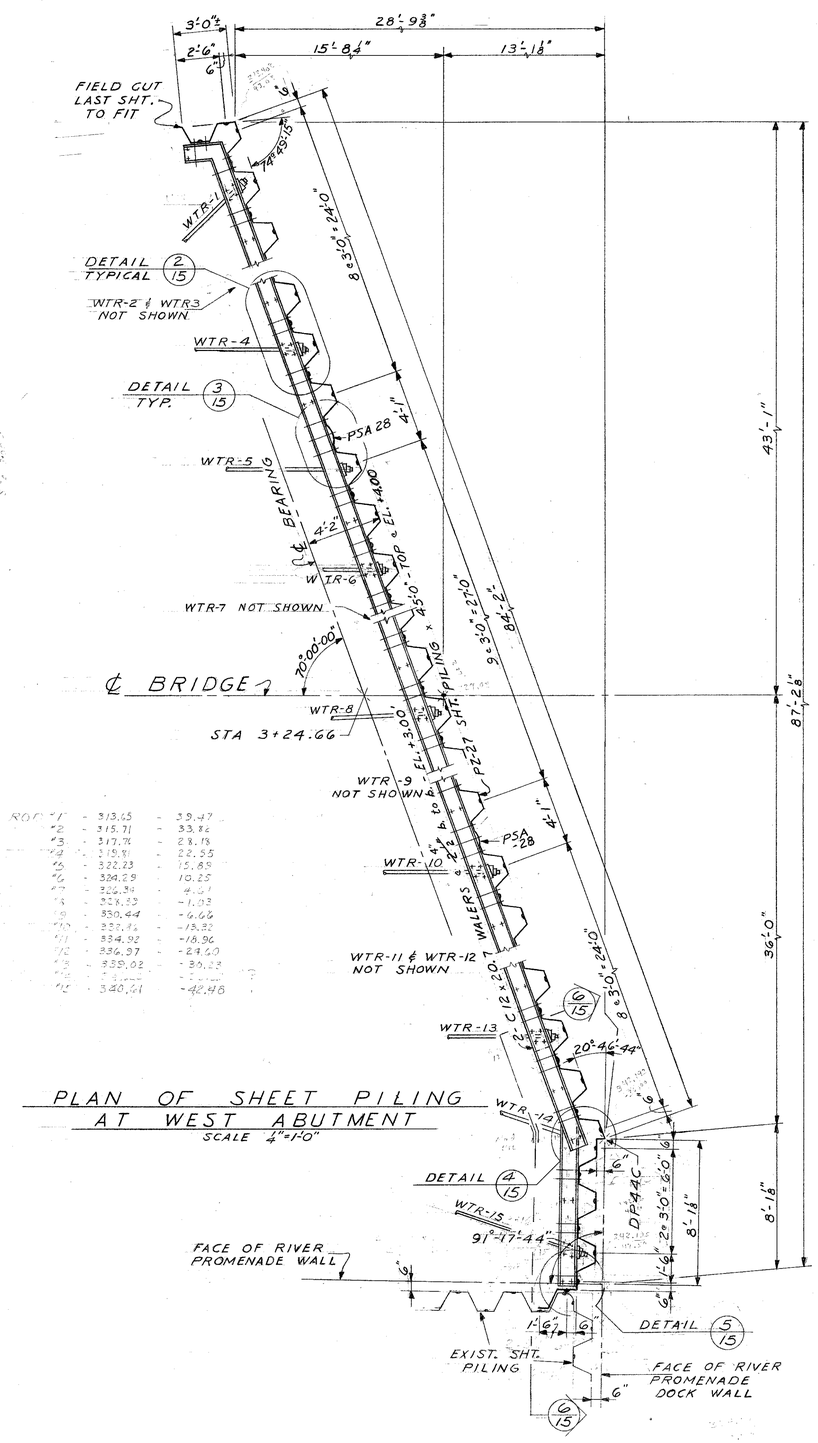

ROD			
1	313.65	39.47	
2	315.71	33.86	
3	317.76	28.18	
4	319.81	22.55	
5	322.23	15.85	
6	324.29	10.25	
7	326.34	4.61	
8	328.39	-1.03	
9	330.44	-6.66	
10	332.46	-13.33	
11	334.92	-18.96	
12	336.97	-24.60	
13	339.02	-30.23	
14	[illegible]	[illegible]	
15	340.61	-42.48	

PLAN OF SHEET PILING AT WEST ABUTMENT

SCALE 1/4"=1'-0"

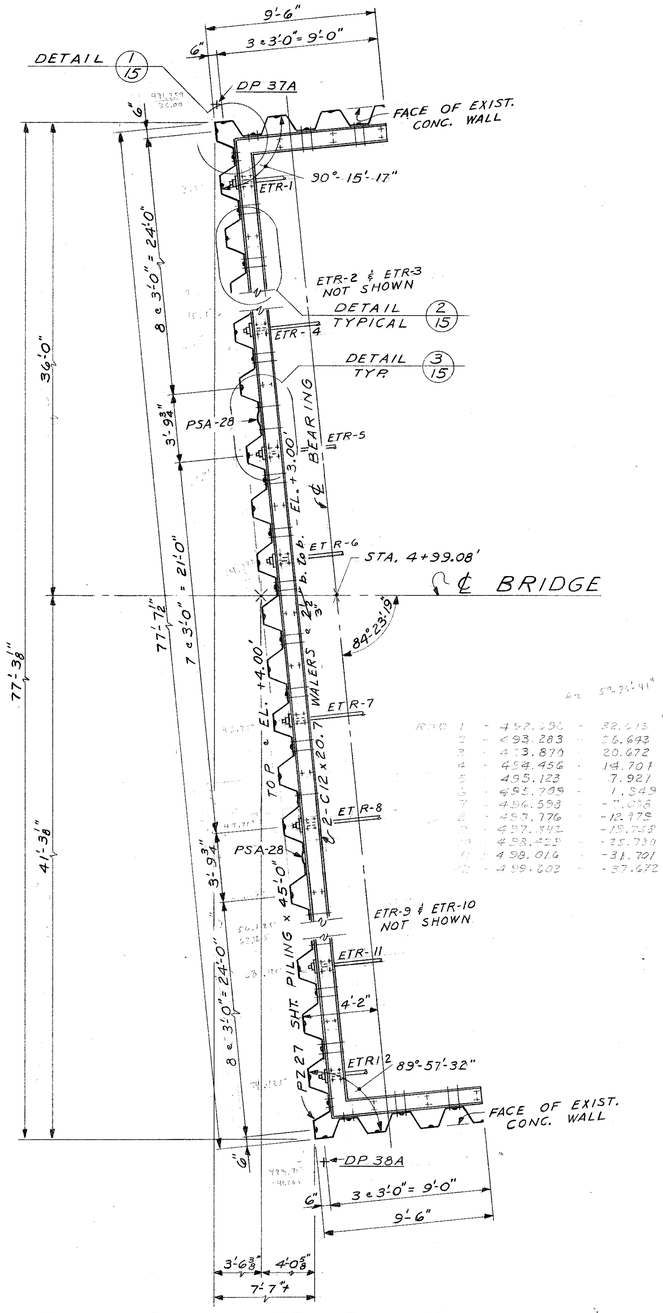

ROD			
1	492.496	82.413	
2	493.283	56.643	
3	493.870	20.672	
4	494.456	14.701	
5	495.123	7.921	
6	495.709	1.349	
7	496.593	-7.026	
8	497.776	-12.779	
9	497.842	-19.758	
10	498.425	-25.739	
11	498.016	-31.701	
12	499.602	-37.672	

PLAN OF SHEET PILING AT EAST ABUTMENT

SCALE 1/4"=1'-0"

ANCHOR ROD SCHEDULE

ROD NUMBER	OVERALL LENGTH	ROD DIA	@ WALER HORIZ BEVEL	@ WALER VERT. BEVEL	@ DEADMAN HORIZ BEVEL	@ DEADMAN VERT. BEVEL	@ DEADMAN DIM. "a"	@ DEADMAN DIM. "b"
WTR-1	29'-6"	2¼" ~~2½"~~	-5 11/16"	1"	-12 3/16"	1"	1'-2 3/4"	1'-11 1/8"
WTR-2	22'-11"	↑	4 3/8"	1 3/16"	NONE	1 9/16"	0'-8 1/4"	1'-5 5/8"
WTR-3	25'-0"		↑	1 3/8"	↑	1 3/8"	0'-8 3/4"	1'-5 1/8"
WTR-4	27'-0"			1 1/4"		1 1/4"	0'-9 1/8"	1'-4 3/4"
WTR-5	29'-4"			15/16"		15/16"	1'-3 1/8"	1'-8 7/8"
WTR-6	31'-5"		4 3/8"	1 1/16"	NONE	1 1/16"	0'-9 3/4"	1'-4 1/8"
WTR-7	34'-11"		8 3/4"	3/4"	3 7/16"	3/4"	1'-4 3/4"	1'-9 3/8"
WTR-8	35'-6"		3 9/16"	3/4"	-3/4"	3/4"	1'-3 3/4"	1'-8 1/8"
WTR-9	37'-6"		4 3/8"	11/16"	NONE	11/16"	1'-3 3/8"	1'-8 1/8"
WTR-10	40'-0"		↑	11/16"	↑	11/16"	1'-4"	1'-8"
WTR-11	42'-0"			5/8"		5/8"	1'-4 3/8"	1'-7 7/8"
WTR-12	44'-1"			3/4"		3/4"	0'-10 3/4"	1'-3 1/8"
WTR-13	46'-1"		4 3/8"	11/16"	NONE	11/16"	0'-10 7/8"	1'-3"
WTR-14	50'-6"		3 3/4" ~~3 5/8"~~	3/4"	3 1/16"	3/4"	1'-4 1/2"	1'-9 3/8"
WTR-15	50'-8"	2¼" ~~2½"~~	4" ~~4 3/8"~~	3/4"	4 1/8"	3/4"	1'-4 1/2"	1'-9 3/8"
ETR-1	25'-7"	2¼" ~~2½"~~	NONE	9/16"	2 3/4"	9/16"	1'-4 1/4"	1'-7 3/4"
ETR-2	27'-0"	↑	↑	1/2"	↑	1/2"	1'-4 3/8"	1'-7 5/8"
ETR-3	28'-4"			1/2"		1/2"	1'-4 1/2"	1'-7 1/2"
ETR-4	29'-8"			7/16"		7/16"	1'-4 5/8"	1'-7 3/8"
ETR-5	31'-3"			7/16"		7/16"	1'-4 5/8"	1'-7 3/8"
ETR-6	32'-7"			7/16"		7/16"	1'-4 3/4"	1'-7 1/4"
ETR-7	34'-8"			3/8"		3/8"	1'-4 3/4"	1'-7 1/4"
ETR-8	36'-0"			3/8"		3/8"	1'-4 7/8"	1'-7 1/8"
ETR-9	37'-7"			3/8"		3/8"	1'-4 7/8"	1'-7 1/8"
ETR-10	39'-0"			3/8"		3/8"	1'-5"	1'-7"
ETR-11	40'-4"			5/16"		5/16"	1'-5"	1'-7"
ETR-12	41'-9"	2¼" ~~2½"~~	NONE	5/16"	2 3/4"	5/16"	1'-5"	1'-7"

1. USE 2¼" ~~UPSET~~ THREADS ON ANCHOR RODS.
2. ANCHOR RODS, TURNBUCKLES, NUTS, WASHERS, ETC. TO BE PAID FOR AS STRUCTURAL CARBON STEEL.
3. WALERS, BOLTS, NUTS & WASHERS TO BE INCLUDED IN PRICE BID FOR STEEL SHEET PILING DELIVERED.

"AS BUILT"

DEPARTMENT OF PUBLIC WORKS
BUREAU OF BRIDGES AND PUBLIC BUILDINGS
CITY OF MILWAUKEE

REVISIONS		
MARK	DATE	BY
A		
B		
C		
D		
E		
F		
G		
H		
I		
J		
K		
L		
M		

MICHIGAN ST. VERTICAL LIFT BRIDGE
OVER MILWAUKEE RIVER

ABUTMENTS - SHEET PILING PLANS

DESIGNED BY: L.F.R. TRACED BY: DATE:
DRAWN BY: L.F.R. CHECKED BY: P.C.B. DATE:
APPROVED:— SCALE: AS NOTED

Harris A. Bateler — DESIGNER IN CHARGE — DATE: 2-2-77 SHEET NUMBER 14
Henry J. Balcomi — SUPT. OF BRIDGES AND PUBLIC BUILDINGS — DATE: 2-2-77 SET OF 85 SHEETS
Special Deputy — COMMISSIONER OF PUBLIC WORKS — DATE: 2-3-77 JOB NO. 505-98

CPE-2

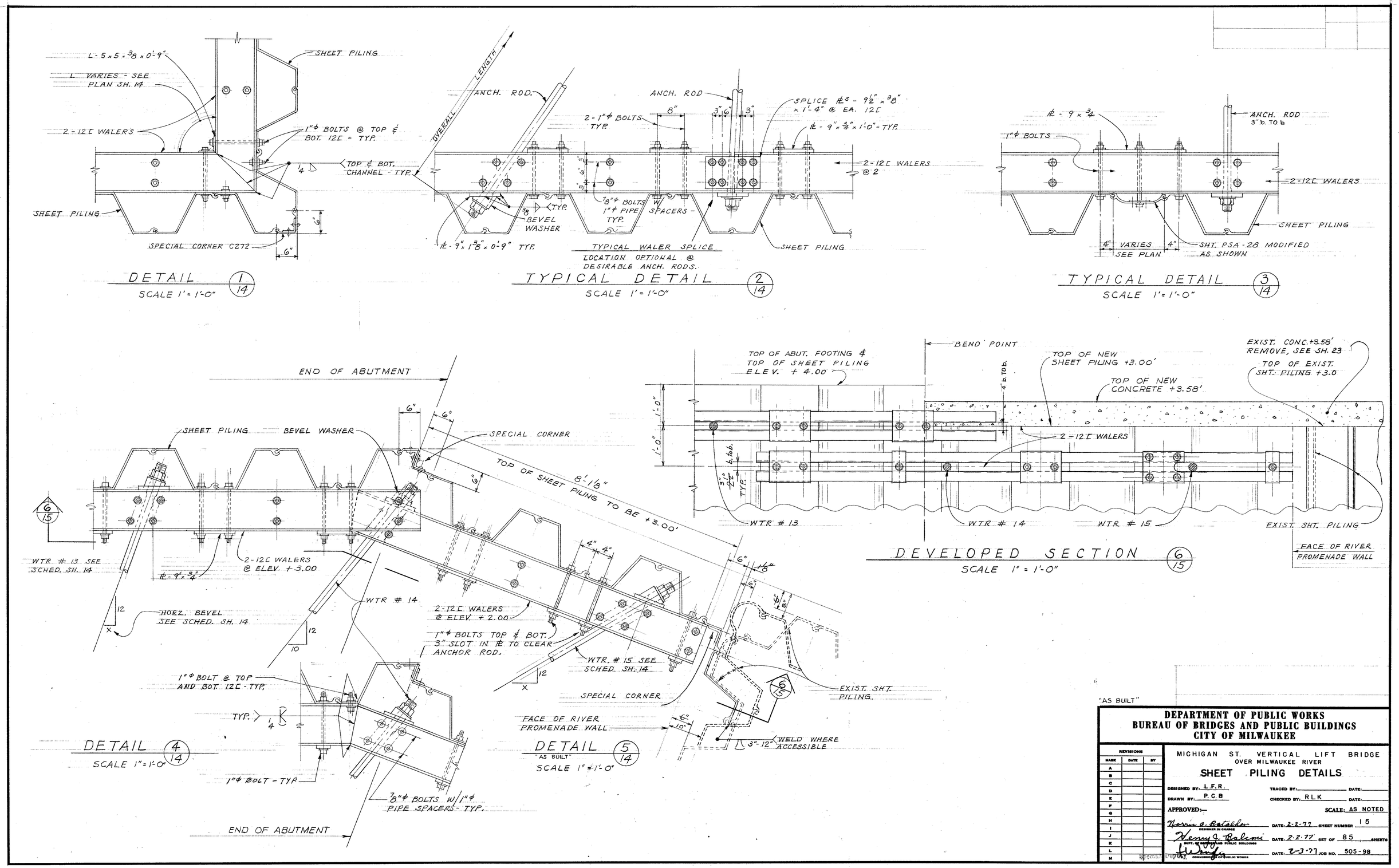

"AS BUILT"

DEPARTMENT OF PUBLIC WORKS
BUREAU OF BRIDGES AND PUBLIC BUILDINGS
CITY OF MILWAUKEE

REVISIONS		
MARK	DATE	BY
A		
B		
C		
D		
E		
F		
G		
H		
I		
J		
K		
L		
M		

MICHIGAN ST. VERTICAL LIFT BRIDGE
OVER MILWAUKEE RIVER

SHEET PILING DETAILS

DESIGNED BY: L.F.R. TRACED BY: DATE:
DRAWN BY: P.C.B CHECKED BY: RLK DATE:
APPROVED:— SCALE: AS NOTED
Norris A. Ratalder DESIGNER IN CHARGE DATE: 2-2-77 SHEET NUMBER 15
Henry J. Balcmi DEPT. OF BRIDGES AND PUBLIC BUILDINGS DATE: 2-2-77 SET OF 85 SHEETS
[signature] COMMISSIONER OF PUBLIC WORKS DATE: 2-3-77 JOB NO. 505-98

Special Deputy

CPE-2

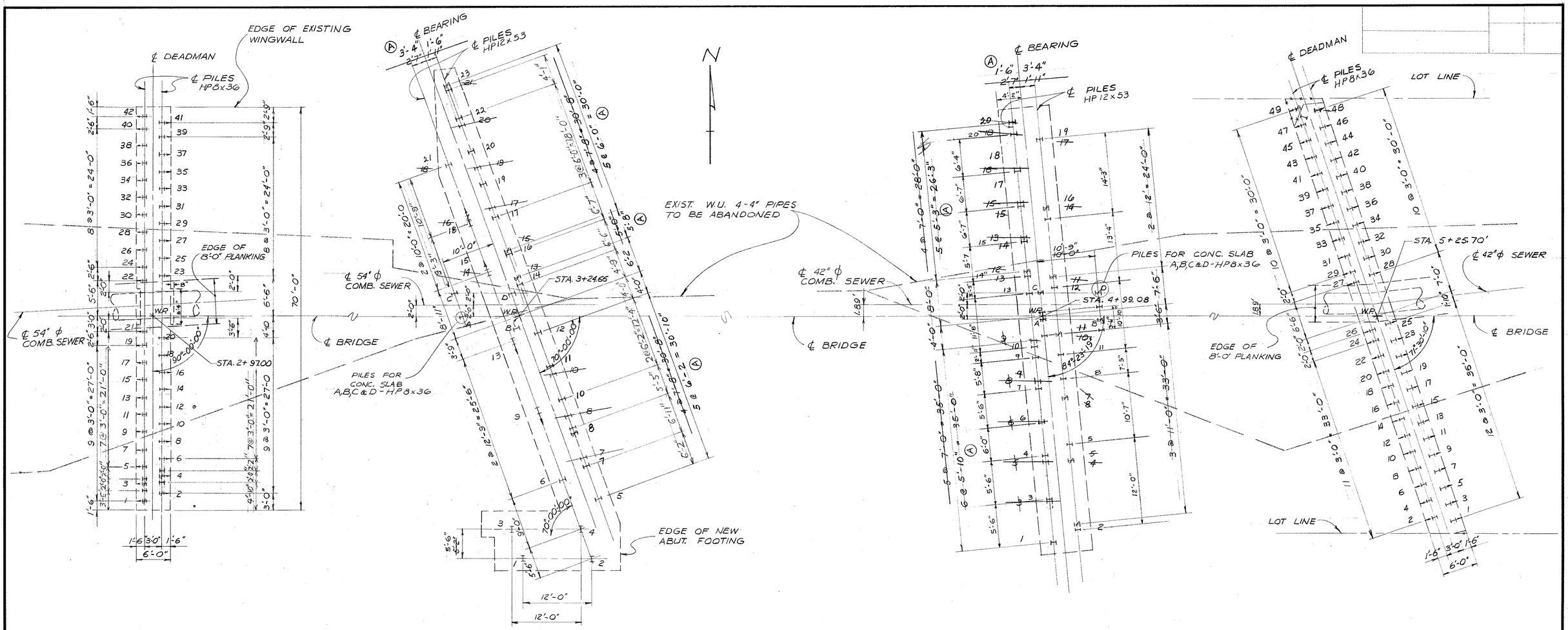

WEST DEADMAN

WEST ABUTMENT

EAST ABUTMENT

"AS BUILT" H PILING

EAST DEADMAN

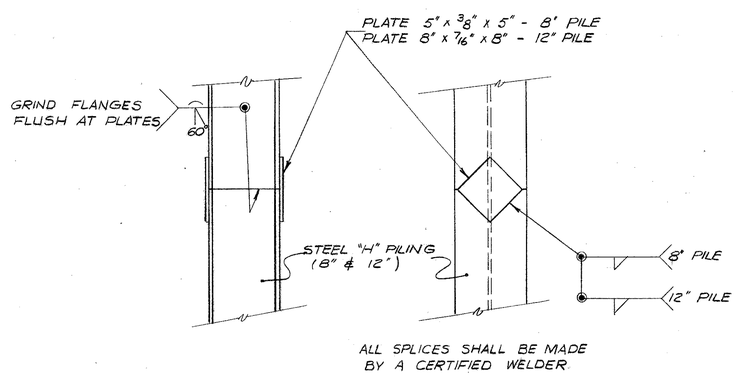

ALL SPLICES SHALL BE MADE BY A CERTIFIED WELDER

STEEL "H" PILE - SPLICE DETAIL

PLAN OF PILING AT ABUTMENTS

SCALE 1/8" = 1'-0"

PILE CUT - OFF ELEVATIONS

WEST ABUTMENT

PILES #1 THRU #21 - ELEV. +1.00
PILES FOR CONC. SLAB - ELEV. -7.50

WEST DEADMAN

ALL PILES ELEV. +4.50

EAST ABUTMENT

PILES #1 THRU #18 - ELEV. +1.00
PILES FOR CONC. SLAB - ELEV. -7.50

EAST DEADMAN

ALL PILES ELEV. +4.50

NOTES

1. CONTRACTOR TO DETERMINE EXACT LOCATION OF SEWERS AND OTHER UTILITIES PRIOR TO DRIVING PILES.
2. ALL PILES NEAR SEWER MUST HAVE 1'-0 MIN. CLEAR
3. HP 12 x 53 STEEL PILES AT ABUTMENTS TO BE DRIVEN TO A MIN. BEARING OF 55 TONS WITH ESTIMATED LENGTH OF 85 FEET. BATTERED PILES TO BE 2/12 BEVEL. PILES FOR CONC. SLAB TO BE HP 8 x 36 STEEL PILES (A, B, C & D) DRIVEN TO A MIN. BEARING OF 25 TONS.
4. HP 8 x 36 STEEL PILES AT DEADMAN TO BE DRIVEN TO A MIN. BEARING OF 40 TONS WITH ESTIMATED LENGTH OF 60 FEET. BATTERED PILES TO BE 2/12 BEVEL.

"AS BUILT"

DEPARTMENT OF PUBLIC WORKS
BUREAU OF BRIDGES AND PUBLIC BUILDINGS
CITY OF MILWAUKEE

REVISIONS		
MARK	DATE	BY
(A)	12-21-77	P.C.B.
B		
C		
D		
E		
F		
G		
H		
I		
J		
K		
L		
M		

MICHIGAN ST. VERTICAL LIFT BRIDGE
OVER MILWAUKEE RIVER

ABUTMENT PILING PLAN

DESIGNED BY: R.P. TRACED BY: DATE:
DRAWN BY: R.P. CHECKED BY: P.C.B. DATE:
APPROVED:— SCALE: AS NOTED

Norris A. Batalden DESIGNER IN CHARGE DATE: 2-2-77 SHEET NUMBER 16
Henry J. Balconi DEPT. OF PUBLIC WORKS PUBLIC BUILDINGS DATE: 2-2-77 SET OF 85 SHEETS
F. Wengler COMMISSIONER OF PUBLIC WORKS DATE: 2-3-77 JOB NO. 505-98

Special Deputy

CPE-2

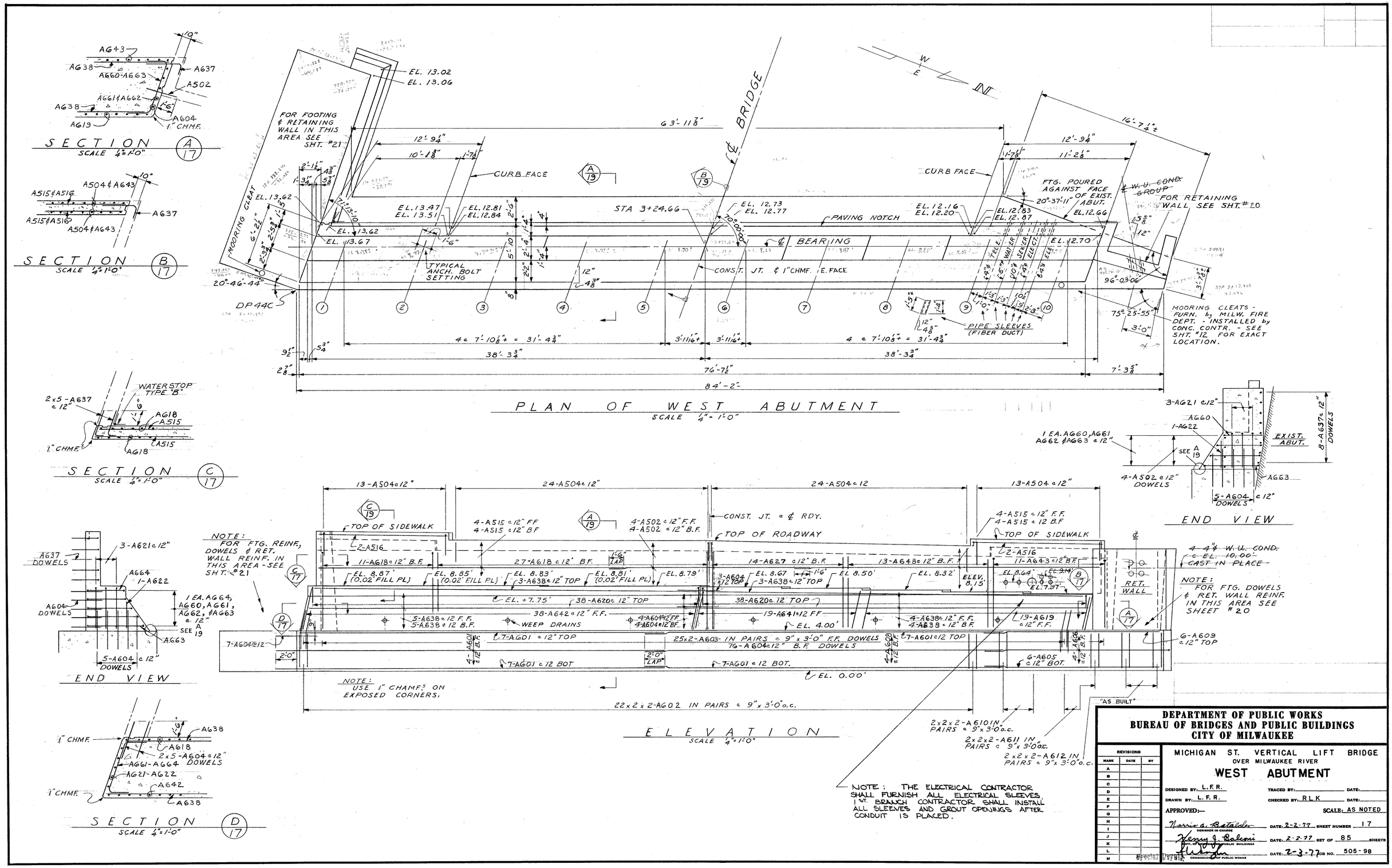

DEPARTMENT OF PUBLIC WORKS
BUREAU OF BRIDGES AND PUBLIC BUILDINGS
CITY OF MILWAUKEE

MICHIGAN ST. VERTICAL LIFT BRIDGE
OVER MILWAUKEE RIVER

WEST ABUTMENT

REVISIONS		
MARK	DATE	BY
A		
B		
C		
D		
E		
F		
G		
H		
I		
J		
K		
L		
M		

DESIGNED BY: L.F.R. TRACED BY: DATE:
DRAWN BY: L.F.R. CHECKED BY: RLK DATE:
APPROVED:— SCALE: AS NOTED
Norris A. Batalder DESIGNER IN CHARGE DATE: 2-2-77 SHEET NUMBER 17
Henry J. Balconi CITY OF MILWAUKEE PUBLIC BUILDINGS DATE: 2-2-77 SET OF 85 SHEETS
[signature] COMMISSIONER OF PUBLIC WORKS DATE: 2-3-77 JOB NO. 505-98

Special Drawing

CPE-2

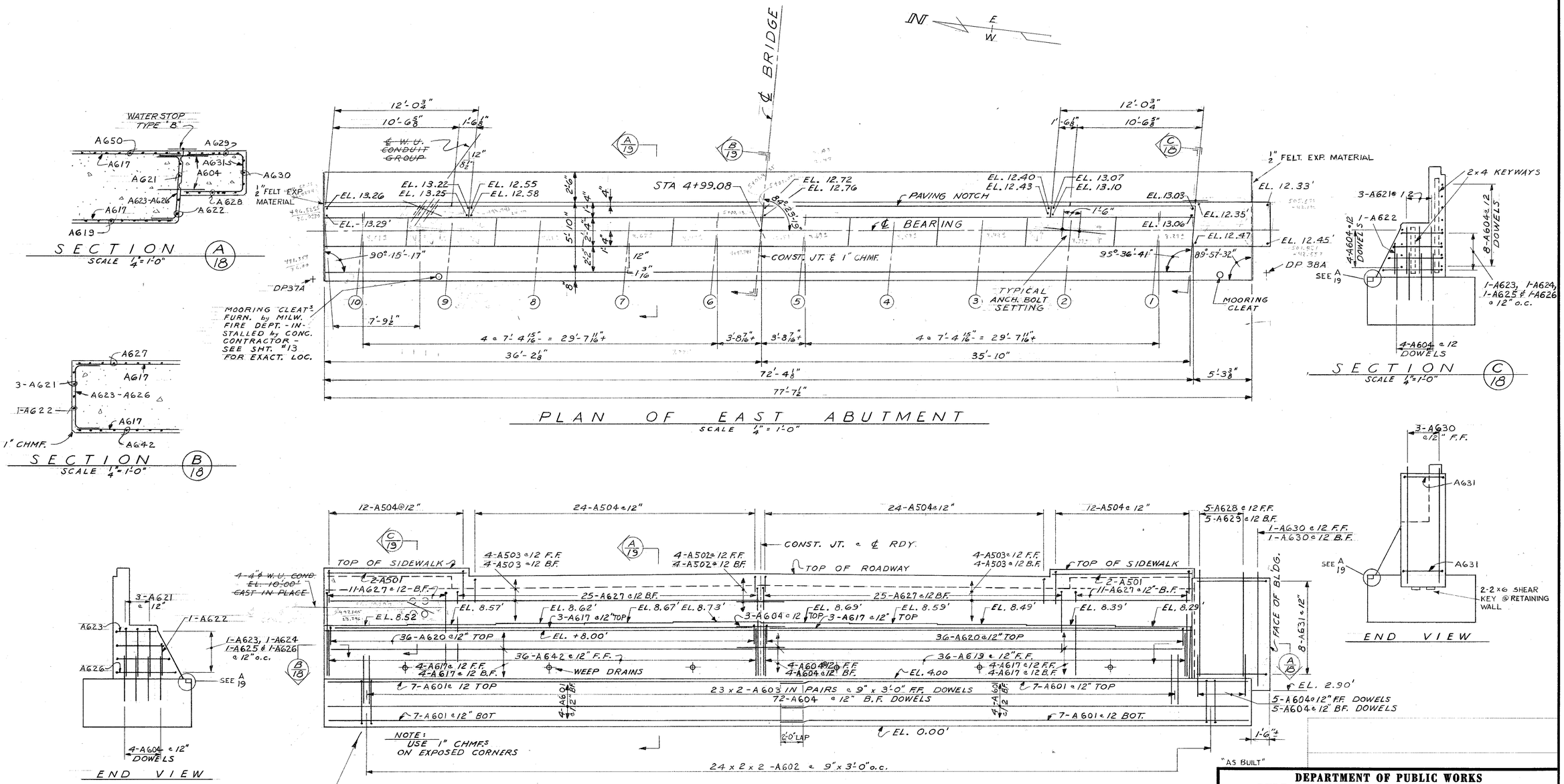

DEPARTMENT OF PUBLIC WORKS
BUREAU OF BRIDGES AND PUBLIC BUILDINGS
CITY OF MILWAUKEE

REVISIONS		
MARK	DATE	BY
A		
B		
C		
D		
E		
F		
G		
H		
I		
J		
K		
L		
M		

MICHIGAN ST. VERTICAL LIFT BRIDGE
OVER MILWAUKEE RIVER

EAST ABUTMENT

DESIGNED BY: L.F.R. TRACED BY: DATE:
DRAWN BY: L.F.R. CHECKED BY: RLK DATE:
APPROVED:— SCALE: AS NOTED
Norris A. Batalden — DESIGNER IN CHARGE — DATE: 2-2-77 SHEET NUMBER 18
Henry J. Balemi — SUPT. OF BRIDGES & PUBLIC BUILDINGS — DATE: 2-2-77 SET OF 85 SHEETS
COMMISSIONER OF PUBLIC WORKS — DATE: 2-3-77 JOB NO. 505-98

CPE-2

NOTE:
1. ANGLE & STUDS TO BE PAID FOR AS STRUCT. CARBON STL.
2. ONE FIELD SPLICE SHALL BE PERMITTED IN ANGLES

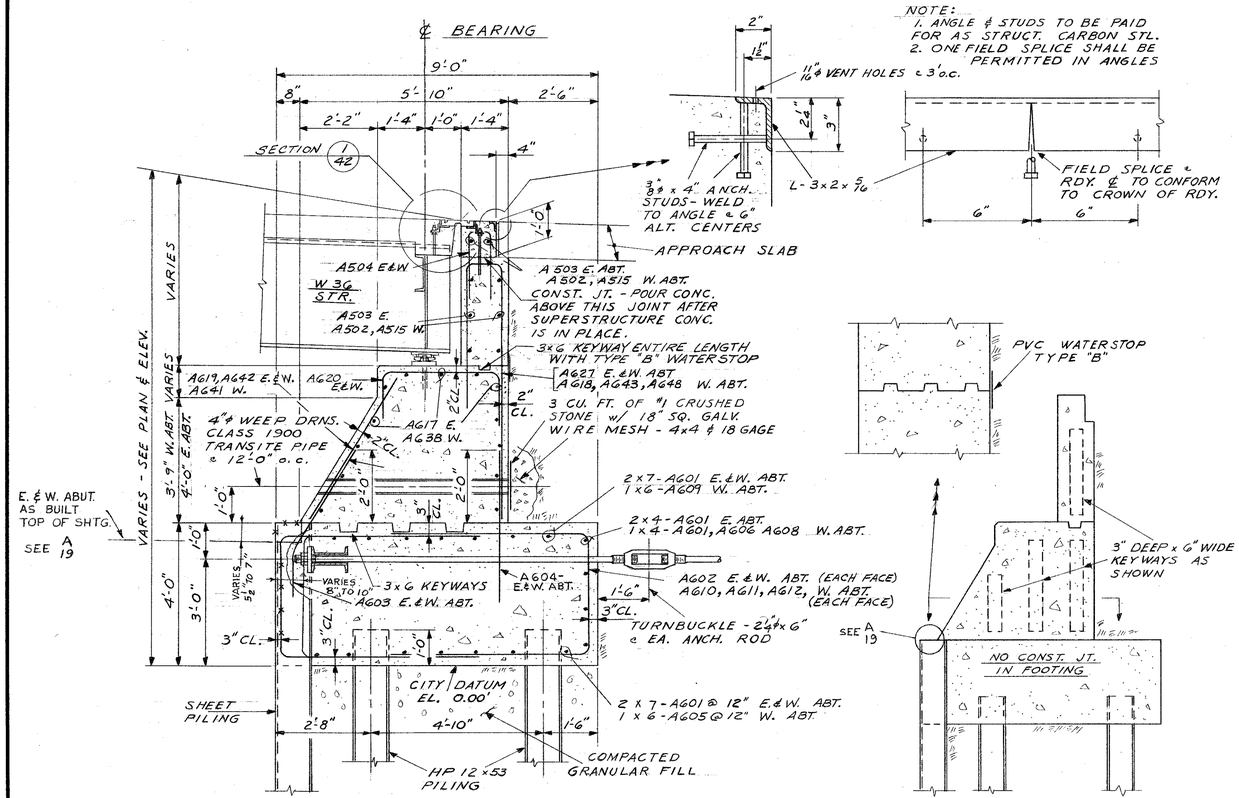

SECTION A 17/18
SCALE ½"=1'-0"

SECTION B 17/18
SCALE ½"=1'-0"

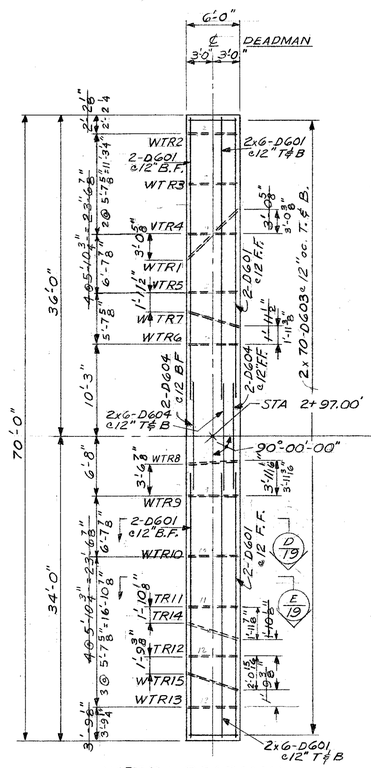

WEST DEADMAN

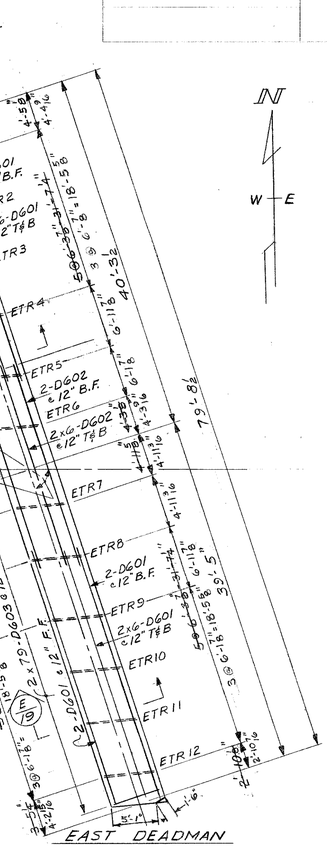

EAST DEADMAN

PLAN OF DEADMAN
SCALE ⅛"=1'-0"

DAMPPROOFING
DAMPPROOF THE BACKS OF ALL CONCRETE ABUTMENTS AND RETAINING WALLS TO BE IN CONTACT WITH EARTH OR GRANULAR BACKFILL, INCLUDING THE TOPS OF FOOTINGS

EPOXY COATING
TOP SURFACES OF ALL ABUTMENTS AND PIERS SHALL BE GIVEN A MOPPING OF EPOXY RESIN, 1" "COAL GAP" EPOXY POLYAMIDE RESIN AS MANUFACTURED BY P.R.G. INDUSTRIES). APPLY EPOXY PRIOR TO PLACEMENT OF THE BEARING PADS OR PLATES AND BEFORE ERECTION OF THE SUPERSTRUCTURE. FOR APPLICATION SEE STANDARD SPECS.
THE COST OF FURNISHING AND PLACING THE EPOXY SHALL BE CONSIDERED AS INCLUDED IN THE PRICE BID PER CUBIC YARD FOR CONCRETE MASONRY BRIDGES.

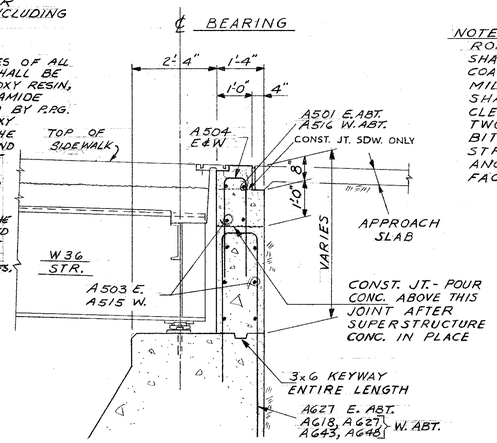

SECTION C 17/18
SCALE ½"=1'-0"

NOTE:
RODS, BOLTS, NUTS, SLEEVES, ETC. SHALL BE CLEANED & SHOP COATED WITH BITUMASTIC MILL UNDERCOAT. MATERIAL SHALL THEN AGAIN BE CLEANED IN FIELD & GIVEN TWO COATS OF BITUMASTIC IN STRICT ACCORDANCE w/ MANUFACTURES RECOMMENDATIONS

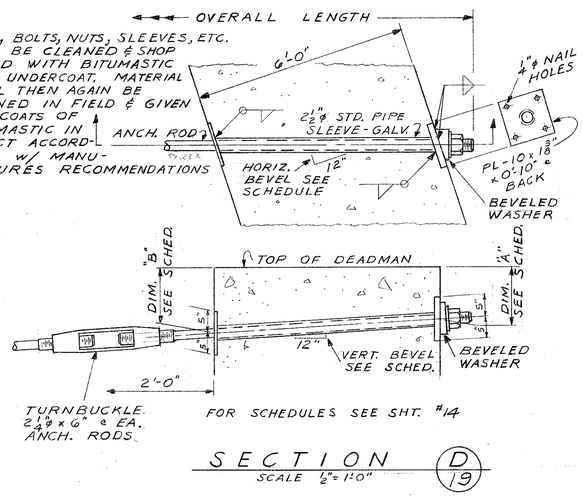

SECTION D 19
SCALE ½"=1'-0"

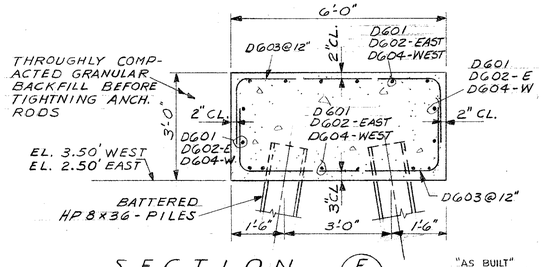

SECTION E 19
SCALE ½"=1'-0"

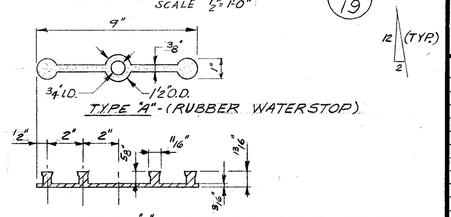

WATERSTOP DETAIL

"AS BUILT"

DEPARTMENT OF PUBLIC WORKS
BUREAU OF BRIDGES AND PUBLIC BUILDINGS
CITY OF MILWAUKEE

REVISIONS		
MARK	DATE	BY
A		
B		
C		
D		
E		
F		
G		
H		
I		
J		
K		
L		
M		

MICHIGAN ST VERTICAL LIFT BRIDGE
OVER MILWAUKEE RIVER

ABUTMENT & DEADMEN DETAILS

DESIGNED BY: L. F. R. TRACED BY: DATE:
DRAWN BY: L. F. R. CHECKED BY: RLK DATE:
APPROVED:— SCALE: AS NOTED
Norris A. Batalden — DESIGNER IN CHARGE — DATE: 2-2-77 SHEET NUMBER 19
Henry J. Baloni — SUPT. OF BRIDGES AND PUBLIC BUILDINGS — DATE: 2-2-77 SET OF 85 SHEETS
COMMISSIONER OF PUBLIC WORKS — DATE: 2-3-77 JOB NO. 505-98

CPE-2

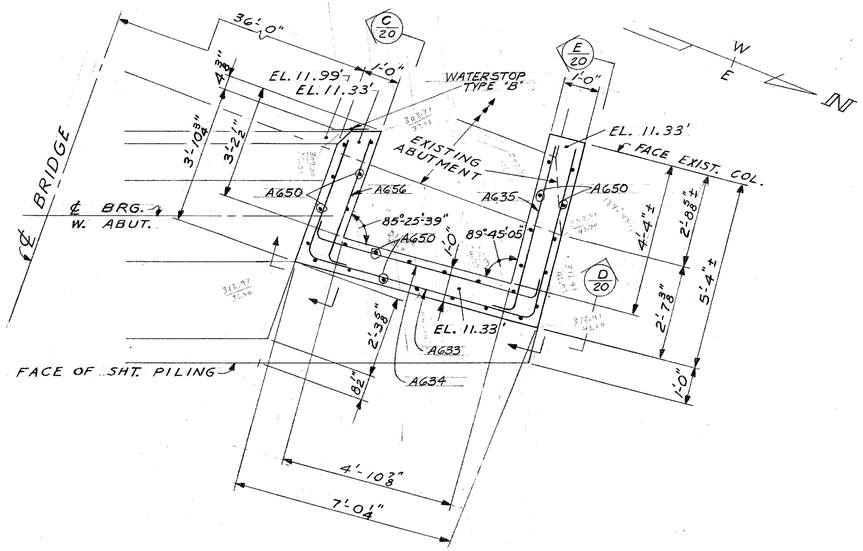

PLAN OF N.W. RETAINING WALL
SCALE ½" = 1'-0"

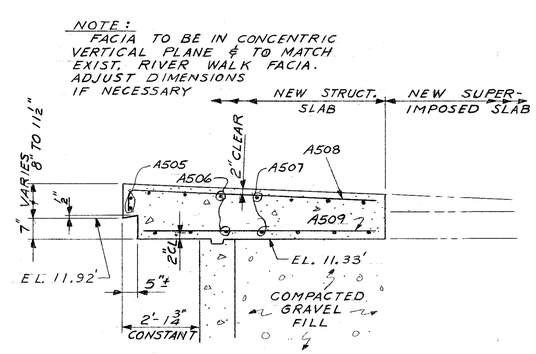

SECTION A 20
SCALE ½" = 1'-0"

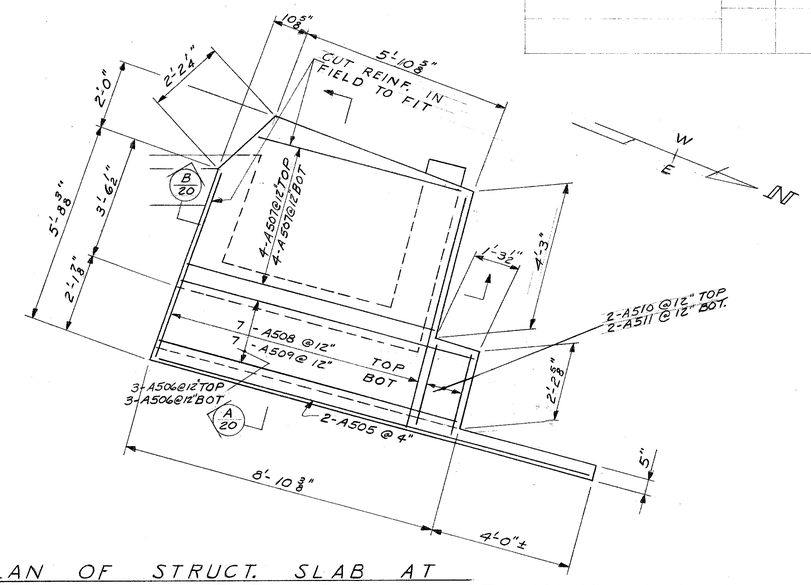

PLAN OF STRUCT. SLAB AT TOP OF N.W. RETAINING WALL
SCALE ½" = 1'-0"

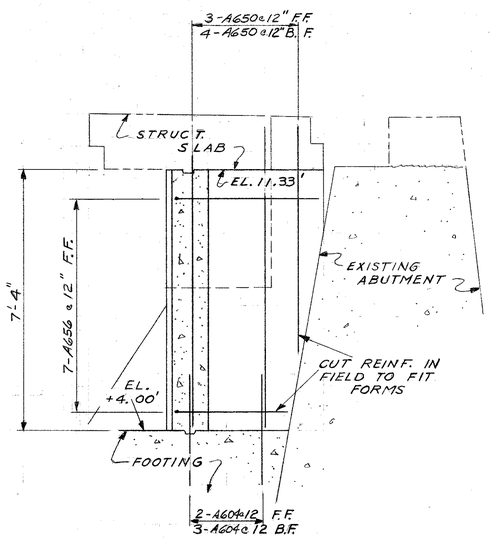

SECTION C 20
SCALE ½" = 1'-0"

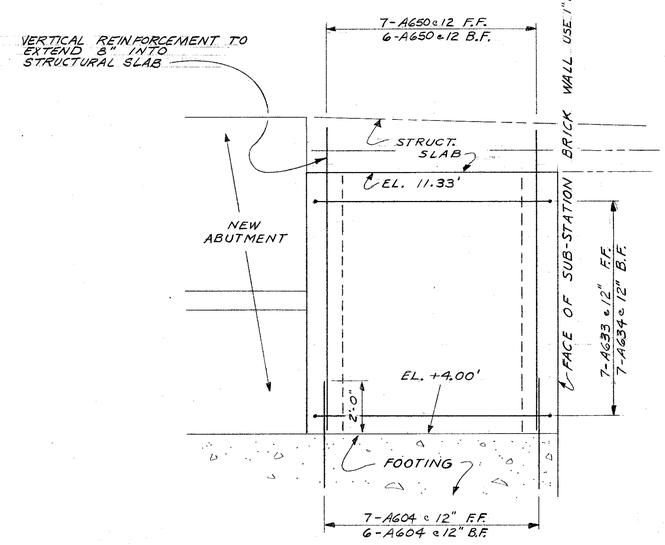

SECTION D 20
SCALE ½" = 1'-0"

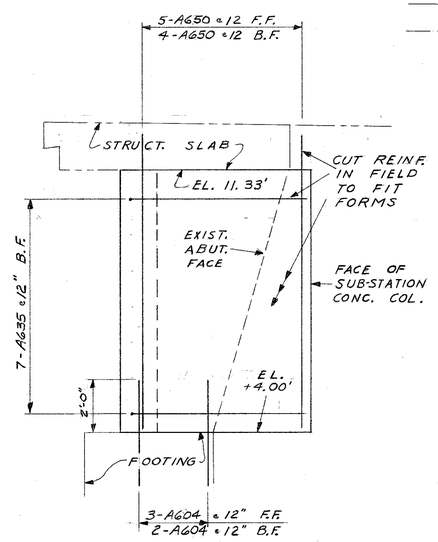

SECTION E 20
SCALE ½" = 1'-0"

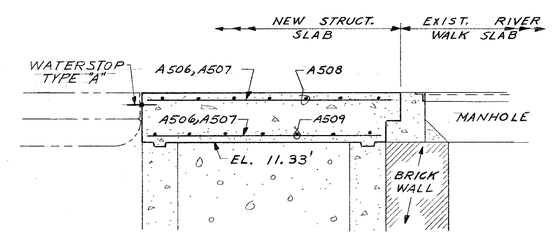

SECTION B 20
SCALE ½" = 1'-0"

"AS BUILT"

DEPARTMENT OF PUBLIC WORKS
BUREAU OF BRIDGES AND PUBLIC BUILDINGS
CITY OF MILWAUKEE

REVISIONS		
MARK	DATE	BY
A		
B		
C		
D		
E		
F		
G		
H		
I		
J		
K		
L		
M		

MICHIGAN ST. VERTICAL LIFT BRIDGE
OVER MILWAUKEE RIVER

N. W. RETAINING WALL

DESIGNED BY: L. F. R. TRACED BY: DATE:
DRAWN BY: L. F. R. CHECKED BY: PCB DATE:
APPROVED:— SCALE: AS NOTED

Norris A. Batalder — DESIGNER IN CHARGE — DATE: 2-2-77 SHEET NUMBER 20
Henry J. Balcom — SUPT. OF BRIDGES AND PUBLIC BUILDINGS — DATE: 2-2-77 SET OF 85 SHEETS
Special Deputy — COMMISSIONER OF PUBLIC WORKS — DATE: 2-3-77 JOB NO. 505-98

CPE-2

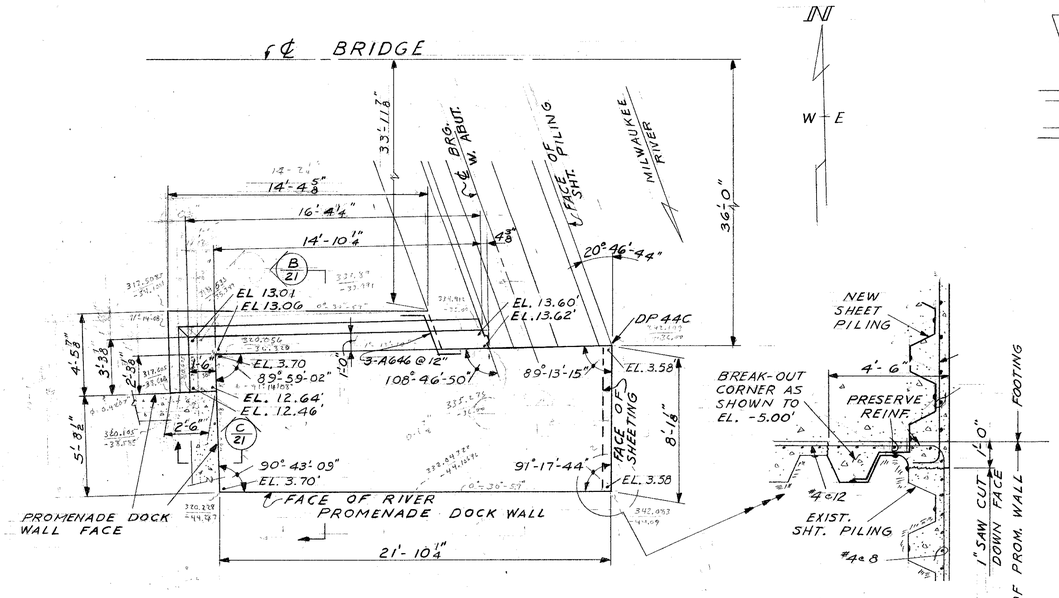

PLAN OF S.W. RETAINING WALL
SCALE ¼"=1'-0"

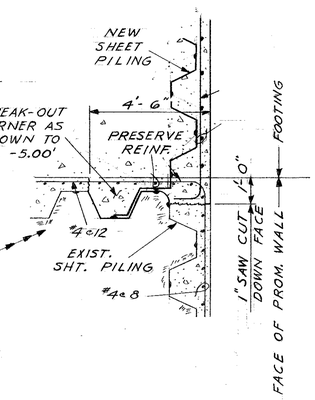

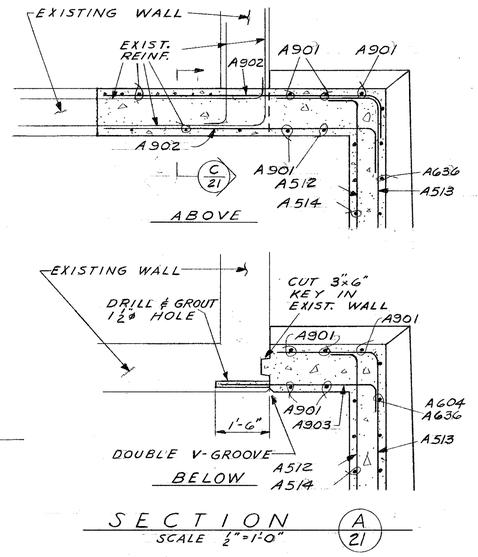

SECTION A 21
SCALE ½"=1'-0"

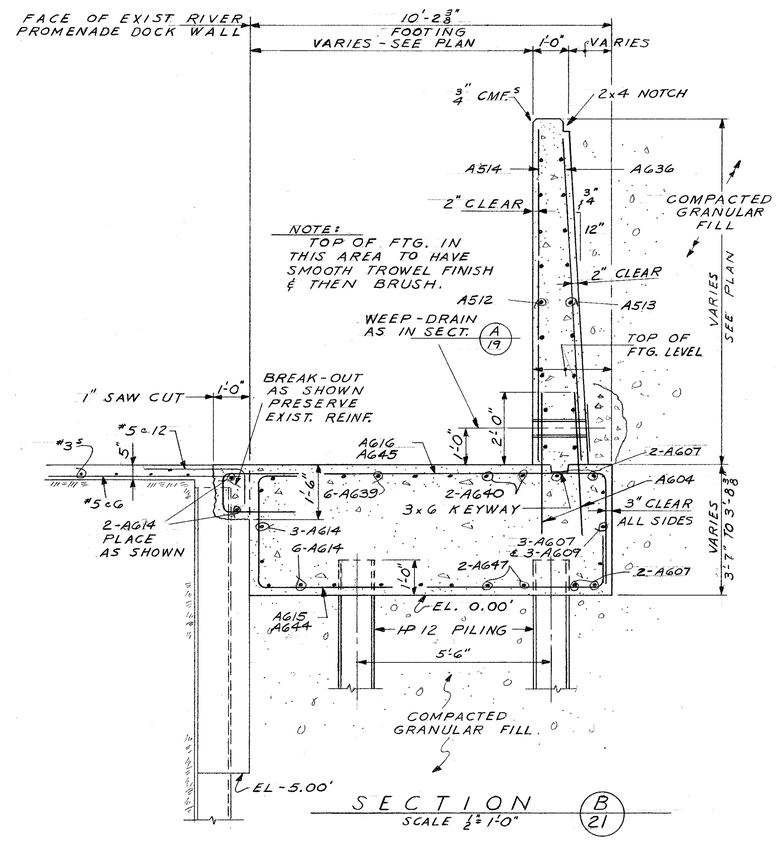

SECTION B 21
SCALE ½"=1'-0"

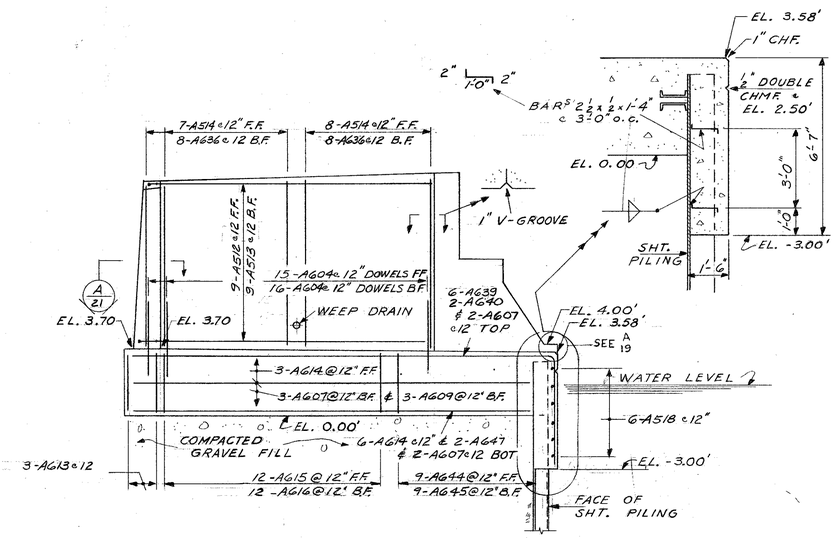

SOUTH ELEVATION
SCALE ¼"=1'-0"

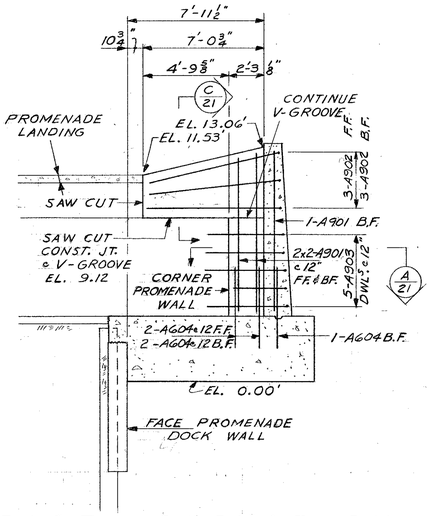

EAST ELEVATION
SCALE ¼"=1'-0"

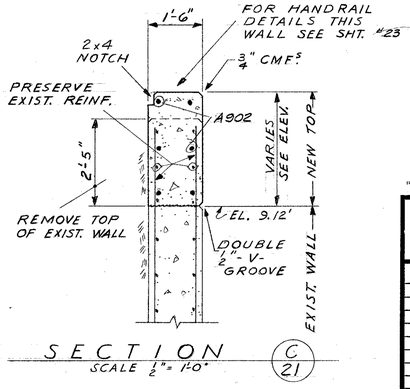

SECTION C 21
SCALE ½"=1'-0"

"AS BUILT"

DEPARTMENT OF PUBLIC WORKS
BUREAU OF BRIDGES AND PUBLIC BUILDINGS
CITY OF MILWAUKEE

REVISIONS		
MARK	DATE	BY
A		
B		
C		
D		
E		
F		
G		
H		
I		
J		
K		
L		
M		

MICHIGAN ST. VERTICAL LIFT BRIDGE
OVER MILWAUKEE RIVER
S.W. RETAINING WALL

DESIGNED BY: L. F. R. TRACED BY: DATE:
DRAWN BY: L. F. R. CHECKED BY: RLK DATE:
APPROVED:— SCALE: AS NOTED
Norris A. Batalden DESIGNER IN CHARGE DATE: 2-2-77 SHEET NUMBER 21
Henry J. Balcom SUPT. OF BRIDGES AND PUBLIC BUILDINGS DATE: 2-2-77 SET OF 85 SHEETS
R. W. Jahn COMMISSIONER OF PUBLIC WORKS DATE: 2-3-77 JOB NO. 505-98

CPE-2

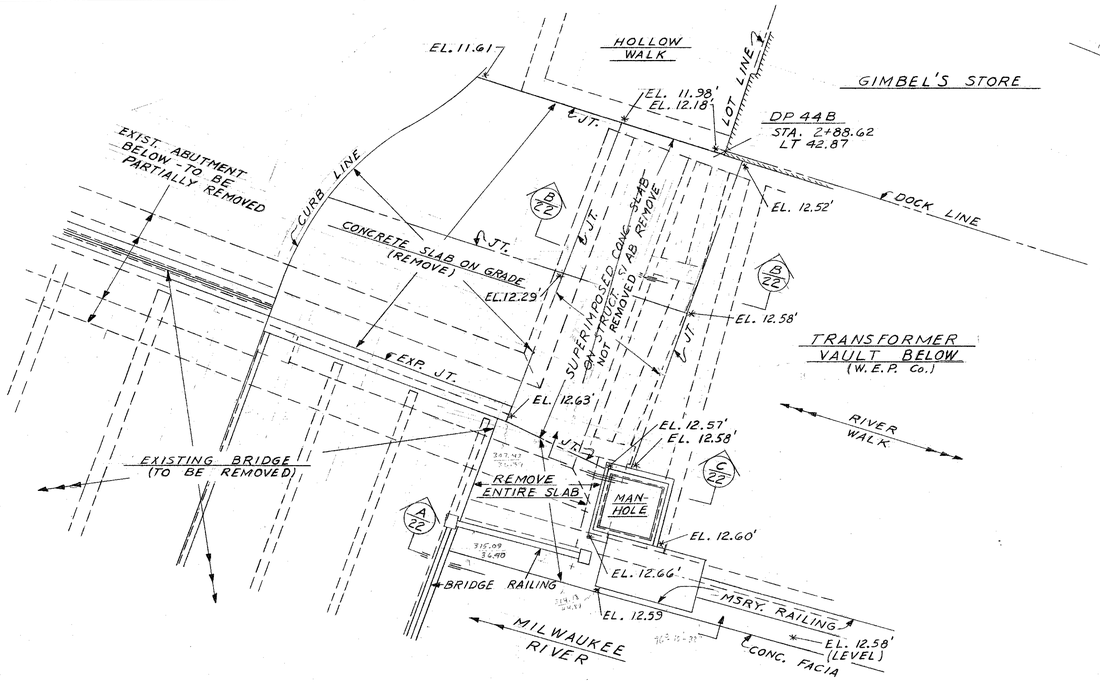

STREET LEVEL PLAN @ N.W. CORNER - EXISTING
SCALE 1/4" = 1'-0"

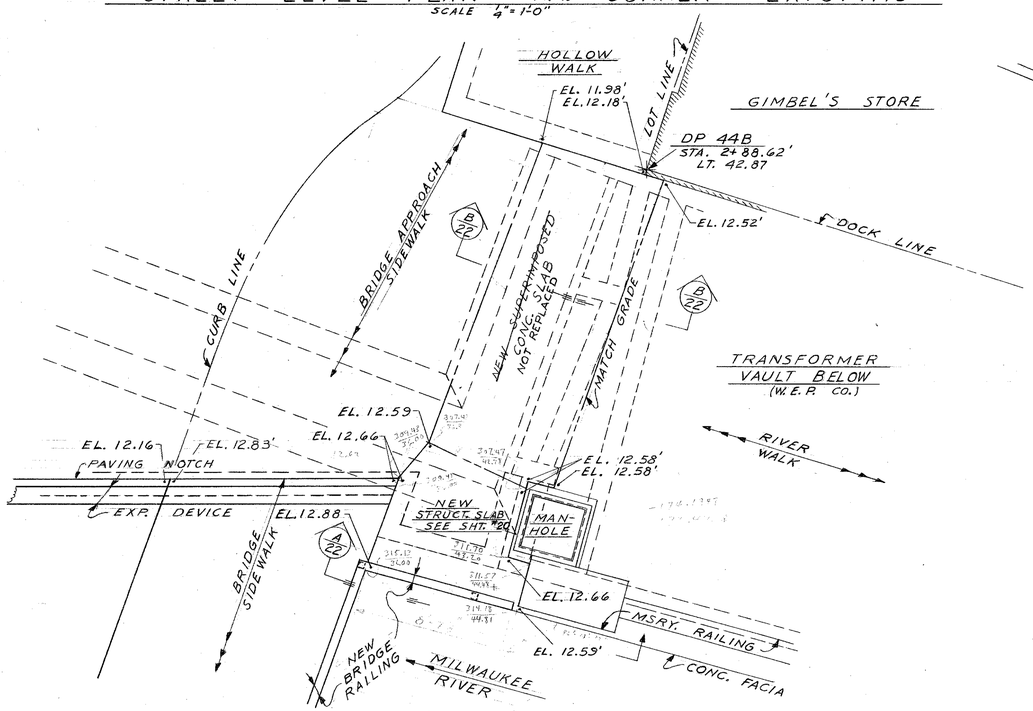

STREET LEVEL PLAN @ N.W. CORNER - NEW
SCALE 1/4" = 1'-0"

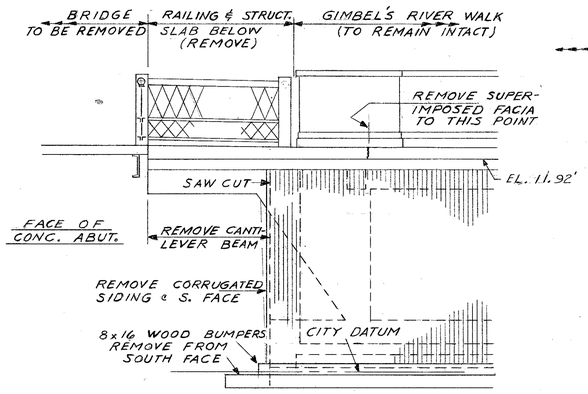

EAST ELEVATION - EXISTING
SECTION A 22
SCALE 1/4" = 1'-0"

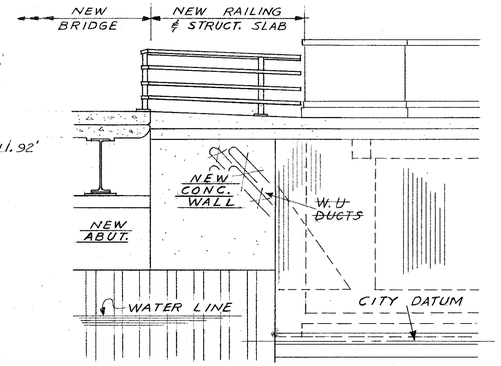

EAST ELEVATION - NEW
SECTION A 22
SCALE 1/4" = 1'-0"

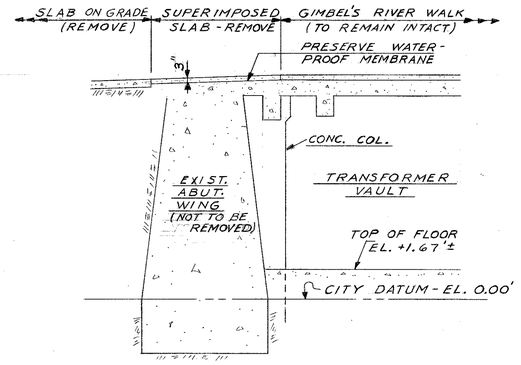

SECTION B 22 EXISTING
SCALE 1/4" = 1'-0"

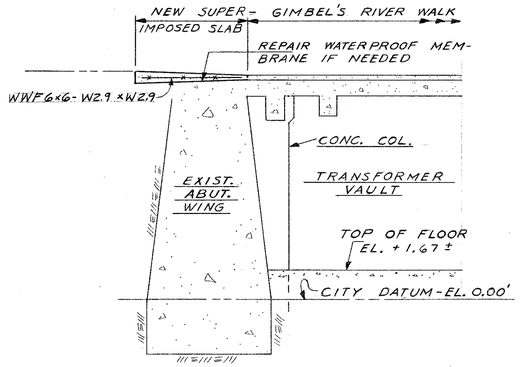

SECTION B 22 NEW
SCALE 1/4" = 1'-0"

NOTE:
NEW SUPERIMPOSED CONCRETE SLAB TO BE INCLUDED UNDER UNIT PRICE BID FOR CONCRETE MASONRY BRIDGES.

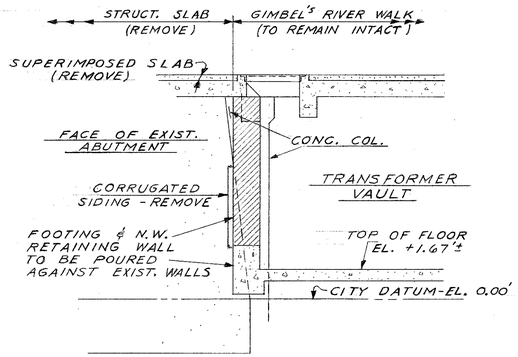

SECTION C 22 EXISTING
SCALE 1/4" = 1'-0"

"AS BUILT"

DEPARTMENT OF PUBLIC WORKS
BUREAU OF BRIDGES AND PUBLIC BUILDINGS
CITY OF MILWAUKEE

REVISIONS		
MARK	DATE	BY
A		
B		
C		
D		
E		
F		
G		
H		
I		
J		
K		
L		
M		

MICHIGAN ST. VERTICAL LIFT BRIDGE
OVER MILWAUKEE RIVER

PLAN OF W. ABUTMENT AT N.W. CORNER - DOCK POINT 44B

DESIGNED BY: L.F.R. TRACED BY: DATE:
DRAWN BY: L.F.R. CHECKED BY: PCB DATE:
APPROVED:— SCALE: AS NOTED
Norris A. Batalden — DESIGNER IN CHARGE — DATE: 2-2-77 SHEET NUMBER 22
Henry J. Balcerzak — BUR'U OF BRIDGES AND PUBLIC BUILDINGS — DATE: 2-2-77 SET OF 85 SHEETS
H. Wright — COMMISSIONER OF PUBLIC WORKS — DATE: 2-3-77 JOB NO. 505-98

Special Deputy

CPE-2

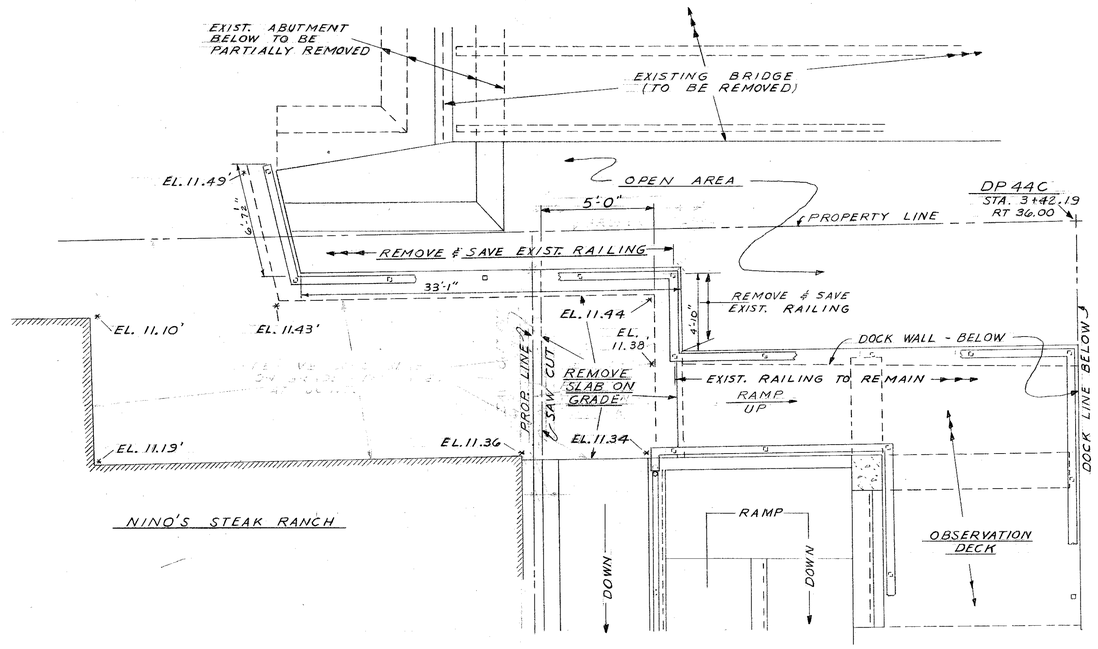

STREET LEVEL PLAN @ S.W. CORNER - EXISTING
SCALE 1/4" = 1'-0"

N
W — E

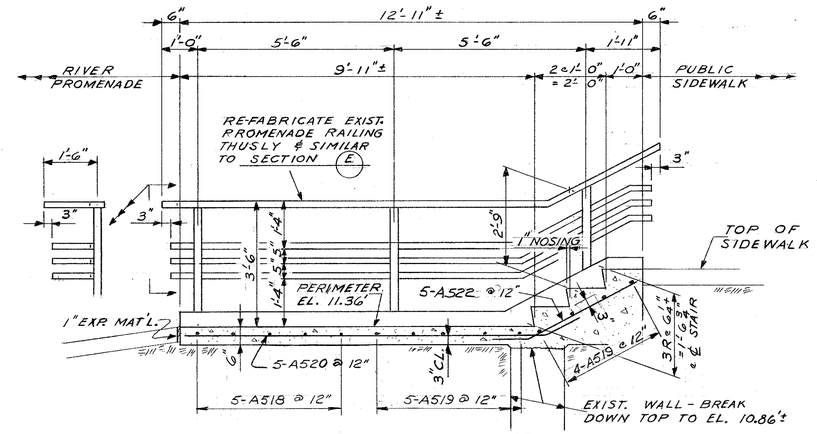

SECTION A 23
SCALE 1/2" = 1'-0"

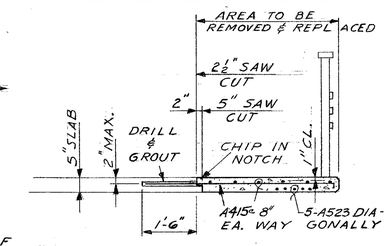

SECTION B 23
SCALE 1/2" = 1'-0"

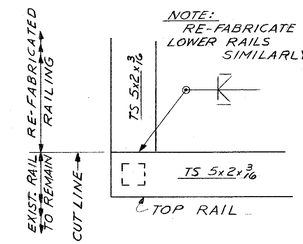

DETAIL D 23
SCALE 1/4" = 1'-0"

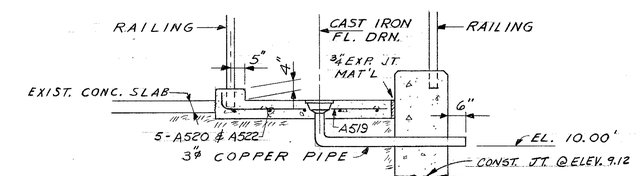

SECTION C 23
SCALE 1/2" = 1'-0"

BAR LIST - S.W. STAIRS						
MARK	NO. REQ'D	LGTH.	DET.	DIMENSION A	H	K
A415	10	6'-0"	STR.			
A518	5	6'-0"	5	5'-8"		
A519	9	5'-0"	5	4'-8"		
A520	5	11'-8"	2	10'-3"	11"	1'-2"
A521	2	5'-8"	STR.			
A522	5	4'-11"	2	3'-6"	11"	1'-2"
A523	5	6'-0"	STR.			

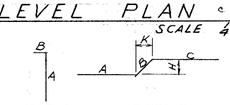

DET. 5 DET. 2

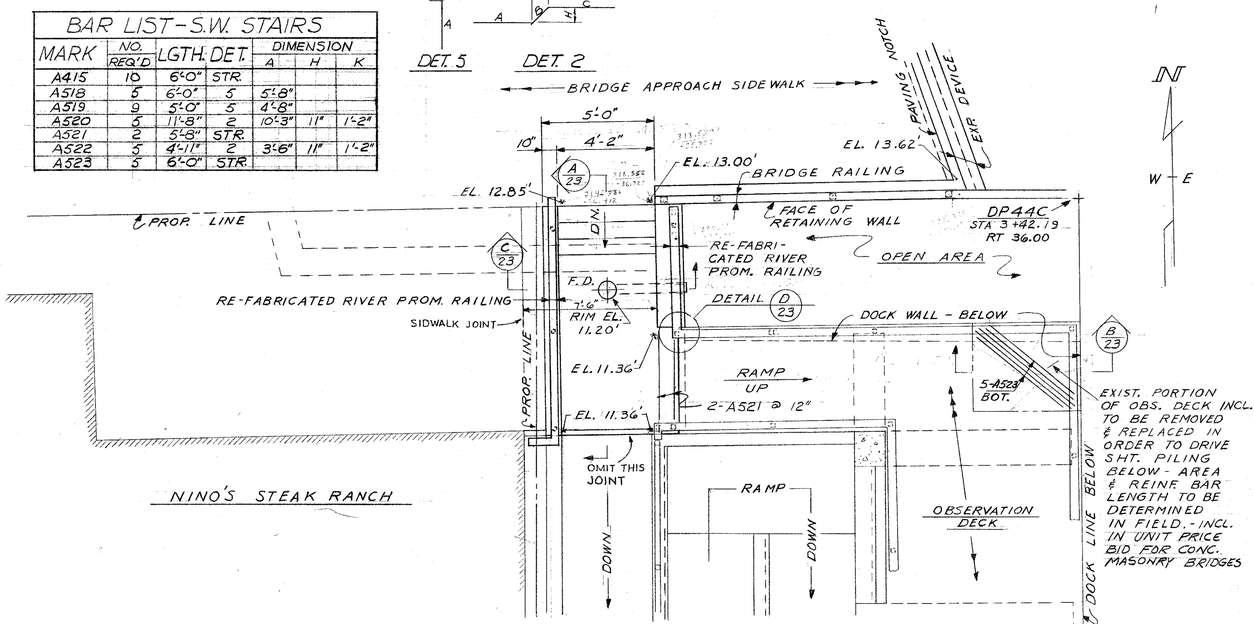

STREET LEVEL PLAN @ S.W. CORNER - NEW
SCALE 1/4" = 1'-0"

N
W — E

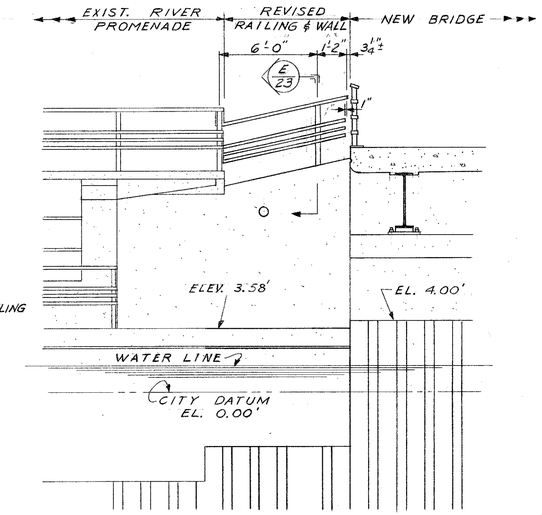

EAST ELEVATION - NEW
SCALE 1/4" = 1'-0"

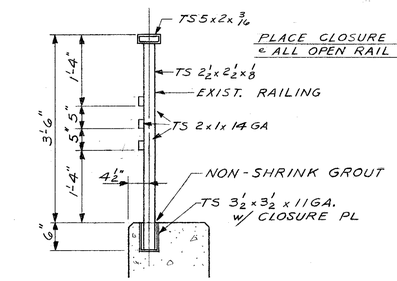

SECTION E 23
SCALE 3/4" = 1'-0"

"AS BUILT"

DEPARTMENT OF PUBLIC WORKS
BUREAU OF BRIDGES AND PUBLIC BUILDINGS
CITY OF MILWAUKEE

REVISIONS		
MARK	DATE	BY
A		
B		
C		
D		
E		
F		
G		
H		
I		
J		
K		
L		
M		

MICHIGAN ST. VERTICAL LIFT BRIDGE
OVER MILWAUKEE RIVER
PLAN OF W. ABUTMENT AT S.W. CORNER - DOCK POINT 44C

DESIGNED BY: L.F.R. TRACED BY: DATE:
DRAWN BY: L.F.R. CHECKED BY: PCB DATE:
APPROVED:— SCALE: AS NOTED
Harris A. Batalder DESIGNER IN CHARGE DATE: 2-2-77 SHEET NUMBER 23
Henry J. Balcom CITY ENGINEER AND PUBLIC BUILDINGS DATE: 2-2-77 SET OF 85 SHEETS
COMMISSIONER OF PUBLIC WORKS DATE: 2-3-77 JOB NO. 505-98

CPE-2

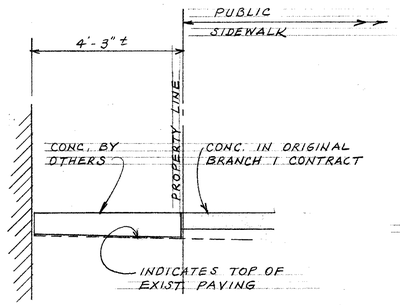

SECTION 1/1
SCALE: 1/2" = 1'-0"

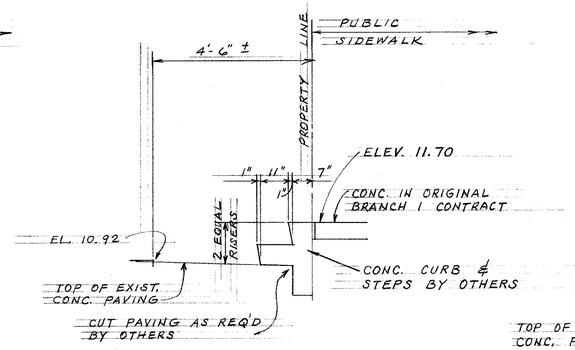

SECTION 2/1
SCALE: 1/2" = 1'-0"

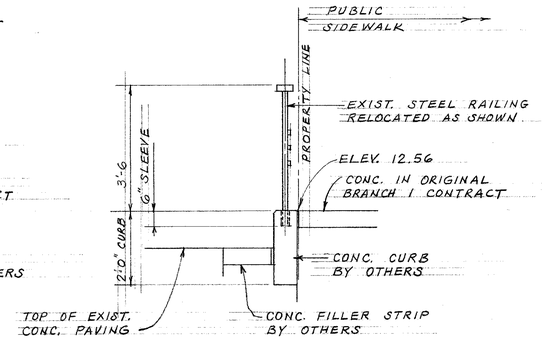

SECTION 3/1
SCALE: 1/2" = 1'-0"

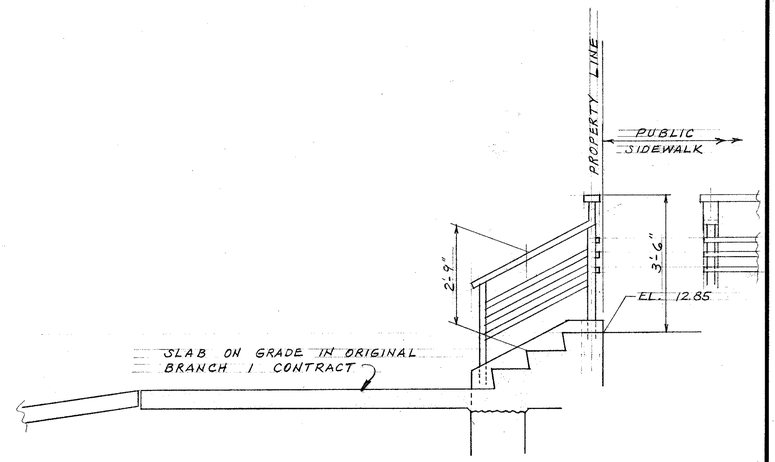

SECTION 4/1
SCALE: 1/2" = 1'-0"

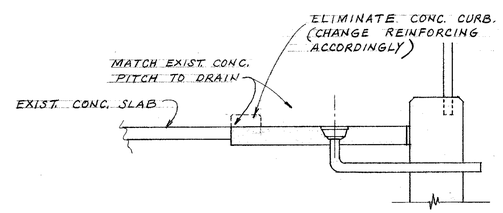

SECTION 5/1
SCALE: 1/2" = 1'-0"

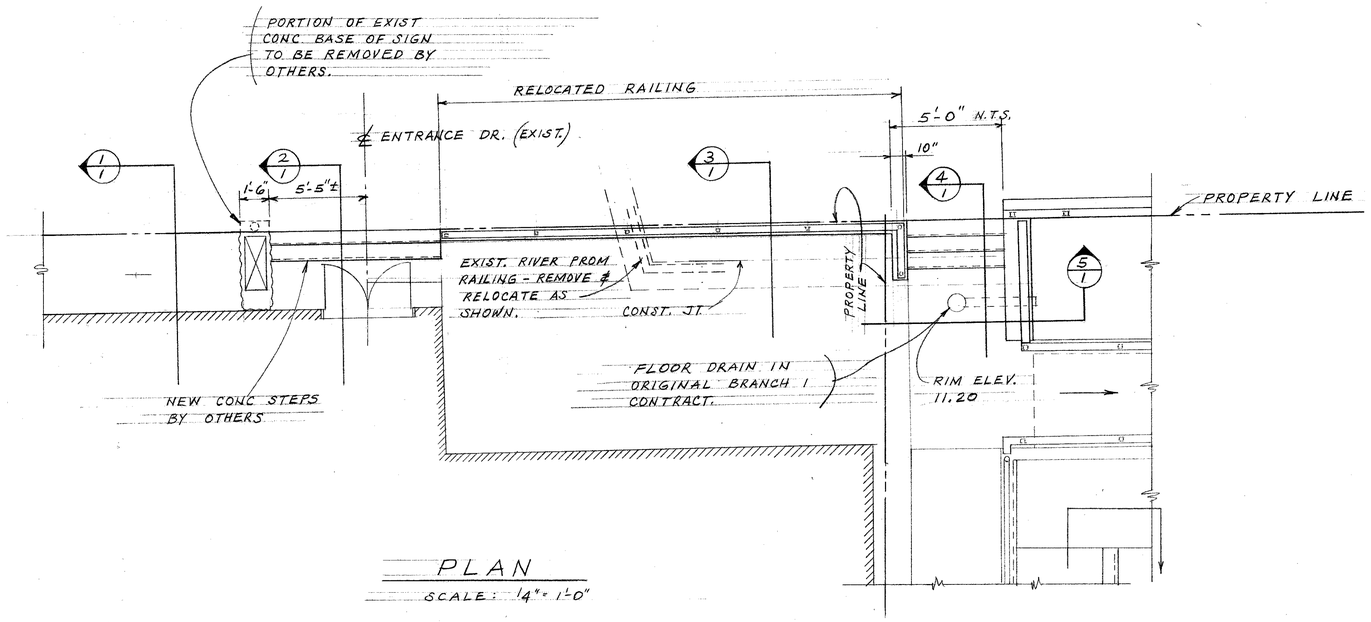

PLAN
SCALE: 1/4" = 1'-0"

NOTES

REFER TO DRAWING NO. 23 OF ORIGINAL CONTRACT DRAWINGS.
FOR DETAILS NOT SHOWN SAME AS SH. NO. 23
ALL CONCRETE WORK OUTSIDE OF CITY PROPERTY OR STREET RIGHT OF WAY WILL BE DONE BY OTHERS.

DEPARTMENT OF PUBLIC WORKS
BUREAU OF BRIDGES AND PUBLIC BUILDINGS
CITY OF MILWAUKEE

REVISIONS		
MARK	DATE	BY
A		
B		
C		
D		
E		
F		
G		
H		
I		
J		
K		
L		
M		

MICHIGAN ST. VERTICAL LIFT BRIDGE
OVER MILWAUKEE RIVER
DETAILS AT S.W. CORNER

DESIGNED BY: _____ TRACED BY: _____ DATE: _____
DRAWN BY: P.C.B. CHECKED BY: _____ DATE: 12-14-77
APPROVED:— SCALE: AS SHOWN

Norris A. Batalden DATE: 12/19/77 SHEET NUMBER 23 R.
DESIGNER IN CHARGE
Henry J. Balconi DATE: 12-19-77 SET OF _____ SHEETS
SUPT. OF BRIDGES AND PUBLIC BUILDINGS
COMMISSIONER OF PUBLIC WORKS DATE: _____ JOB NO. _____

CPE-2

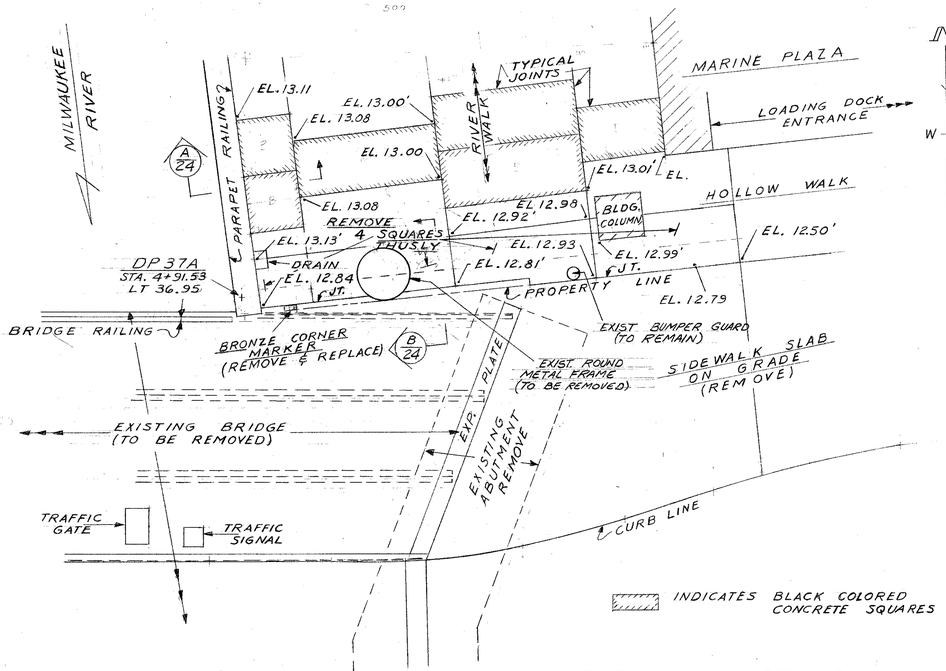

STREET LEVEL PLAN - N.E. CORNER - EXISTING
SCALE 1/4"=1'-0"

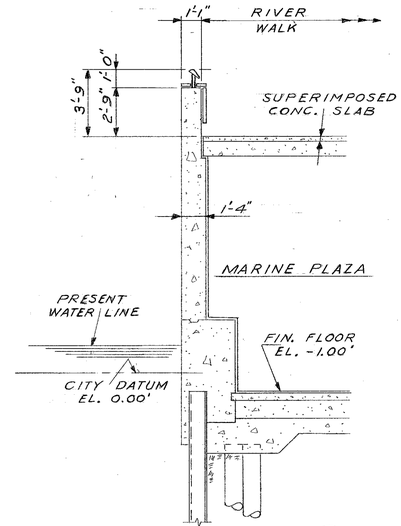

SECTION A/24
SCALE 1/4"=1'-0"

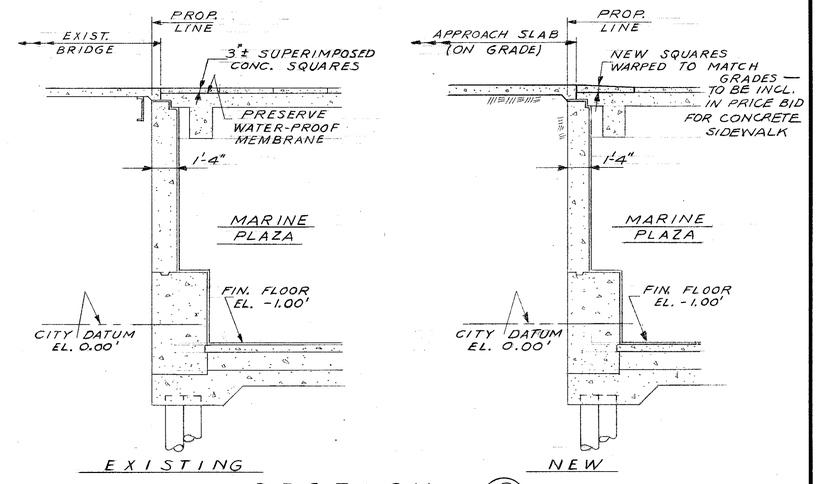

SECTION B/24
SCALE 1/4"=1'-0"

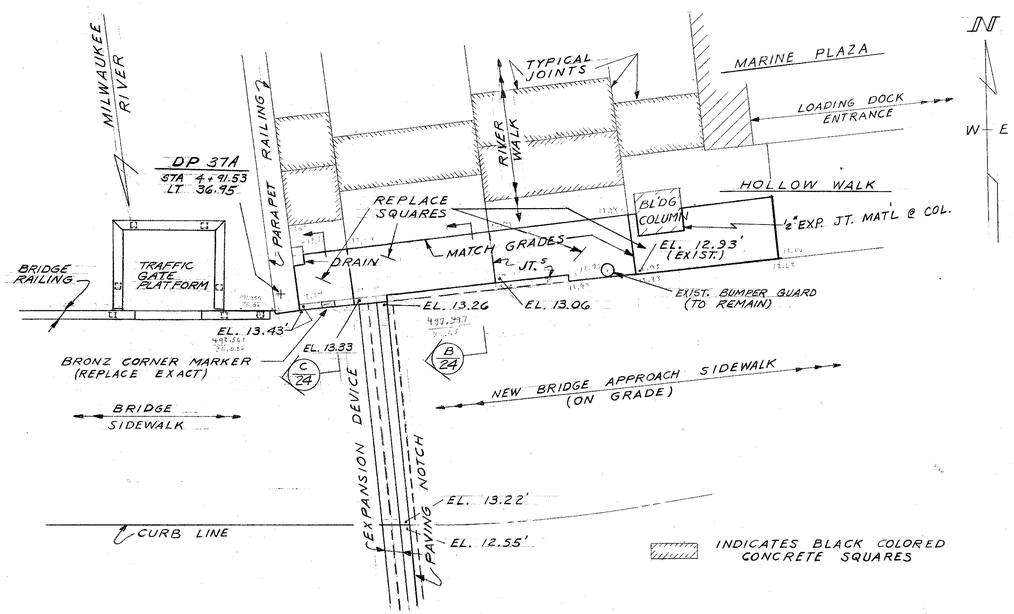

STREET LEVEL PLAN - N.E. CORNER - NEW
SCALE 1/4"=1'-0"

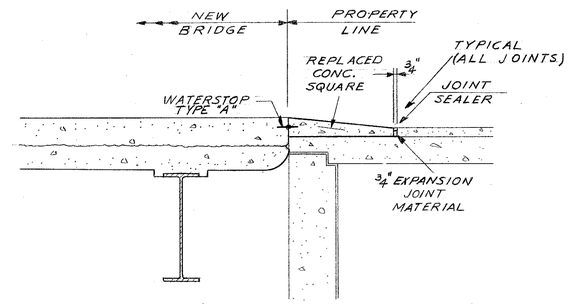

SECTION C/24
SCALE 1/4"=1'-0"

DEPARTMENT OF PUBLIC WORKS
BUREAU OF BRIDGES AND PUBLIC BUILDINGS
CITY OF MILWAUKEE

REVISIONS		
MARK	DATE	BY
A		
B		
C		
D		
E		
F		
G		
H		
I		
J		
K		
L		
M		

MICHIGAN ST. VERTICAL LIFT BRIDGE
OVER MILWAUKEE RIVER
PLAN OF E. ABUTMENT AT
N.E. CORNER - DOCK POINT 37A

DESIGNED BY: L.F.R. TRACED BY: DATE:
DRAWN BY: L.F.R. CHECKED BY: PCB DATE:
APPROVED:— SCALE: AS NOTED
Norris A. Batalden DATE: 2-2-77 SHEET NUMBER 24
DESIGNER IN CHARGE
Henry J. Balconi DATE: 2-2-77 SET OF 85 SHEETS
DEPUTY OF BRIDGES AND PUBLIC BUILDINGS
[signature] DATE: 2-3-77 JOB NO. 505-98
COMMISSIONER OF PUBLIC WORKS

CPE-2

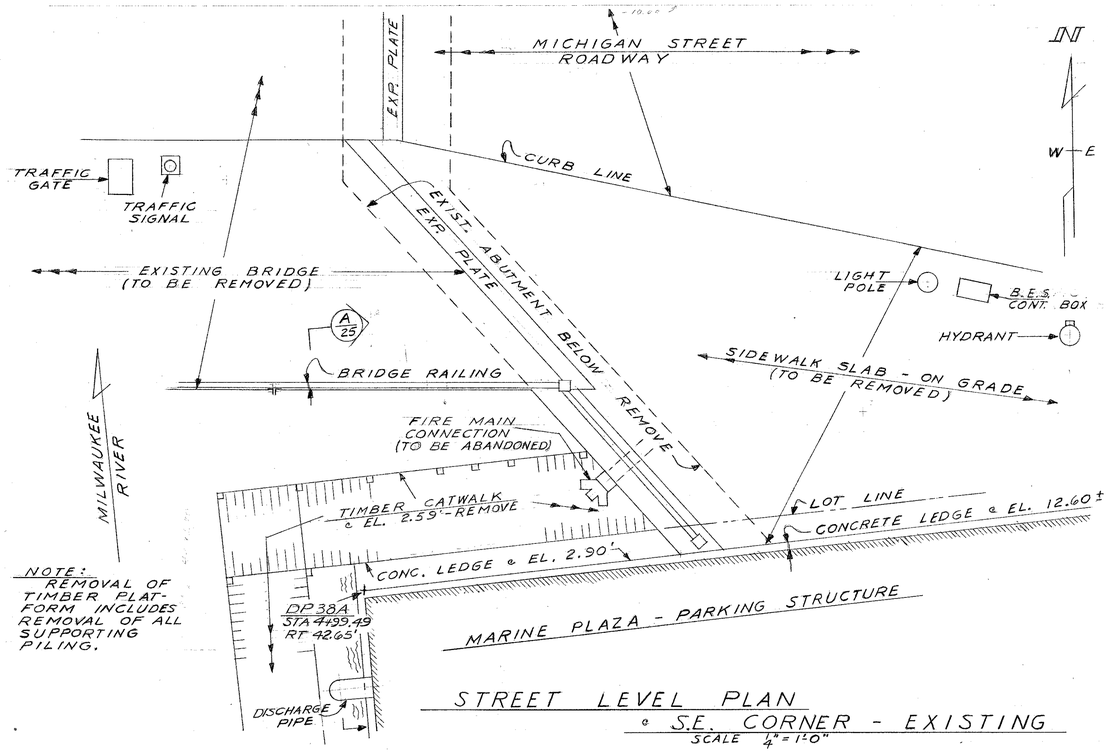

NOTE:
REMOVAL OF TIMBER PLATFORM INCLUDES REMOVAL OF ALL SUPPORTING PILING.

STREET LEVEL PLAN
@ S.E. CORNER - EXISTING
SCALE 1/4" = 1'-0"

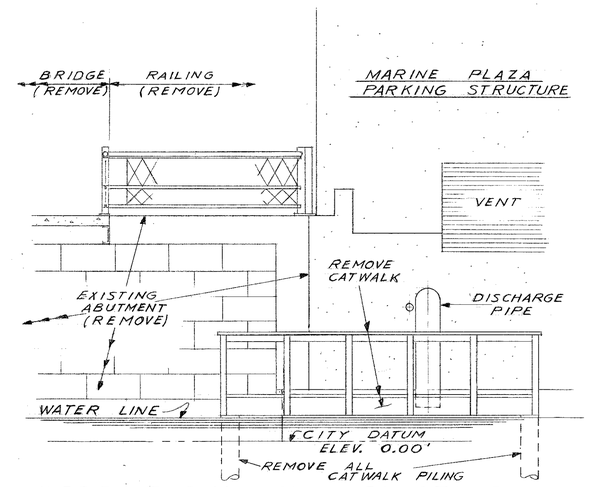

WEST ELEVATION - EXISTING
SECTION A/25
SCALE 1/4" = 1'-0"

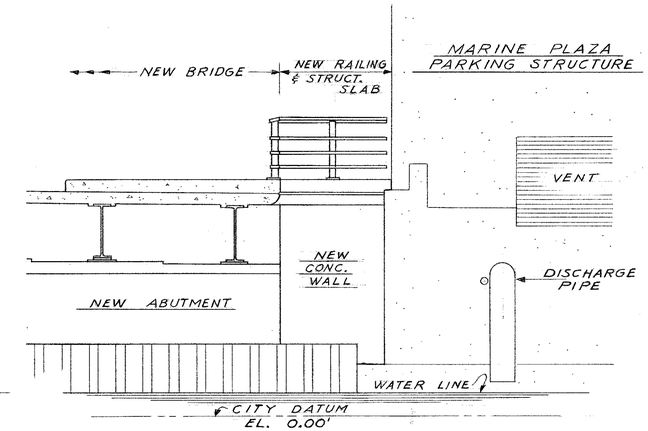

WEST ELEVATION - NEW
SECTION A/25
SCALE 1/4" = 1'-0"

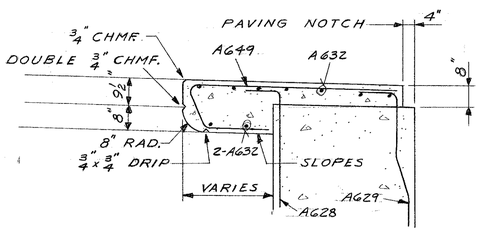

SECTION B/25
SCALE 1/2" = 1'-0"

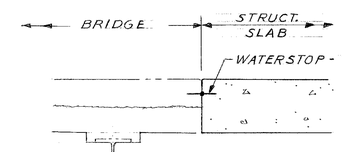

SECTION C/25
SCALE 1/2" = 1'-0"

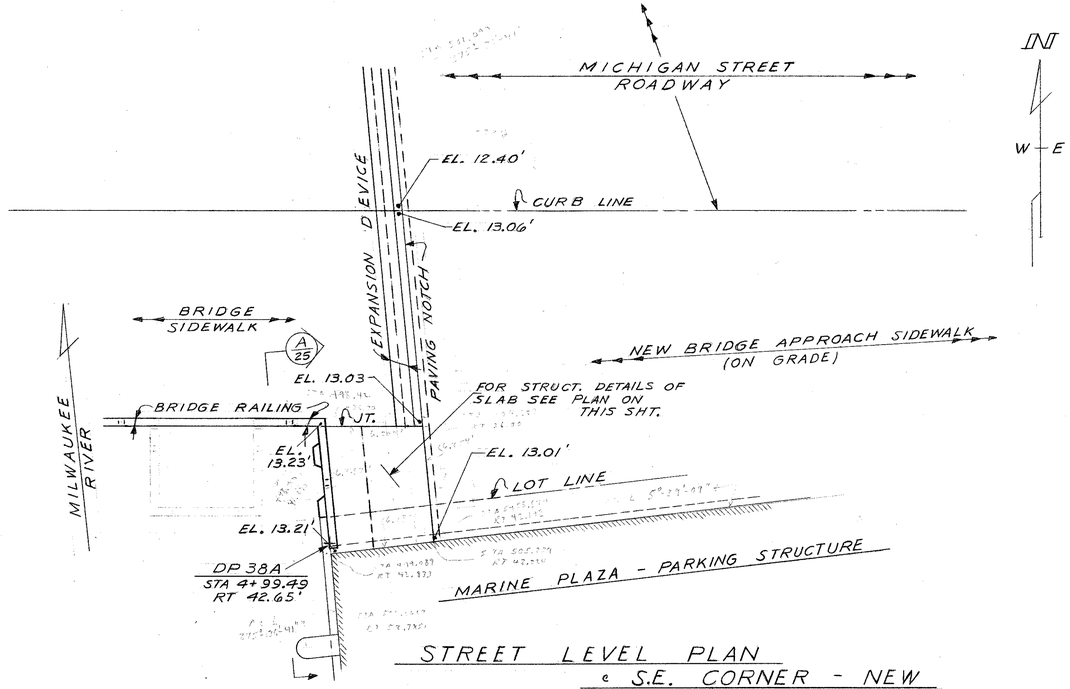

STREET LEVEL PLAN
@ S.E. CORNER - NEW
SCALE 1/4" = 1'-0"

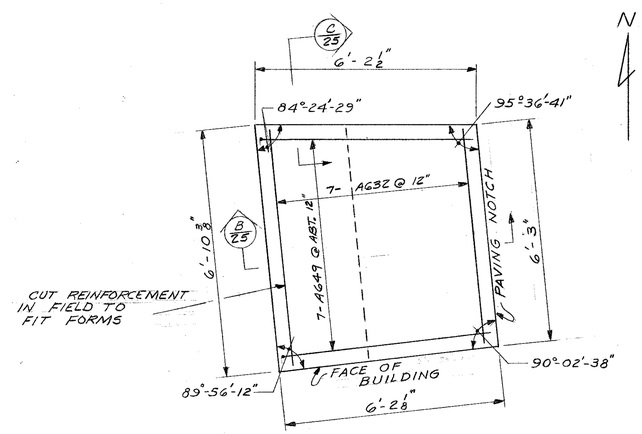

PLAN OF STRUCT. SLAB
IN S.E. CORNER
SCALE 1/2" = 1'-0"

DEPARTMENT OF PUBLIC WORKS
BUREAU OF BRIDGES AND PUBLIC BUILDINGS
CITY OF MILWAUKEE

REVISIONS		
MARK	DATE	BY
A		
B		
C		
D		
E		
F		
G		
H		
I		
J		
K		
L		
M		

MICHIGAN ST. VERTICAL LIFT BRIDGE
OVER MILWAUKEE RIVER
PLAN OF E. ABUTMENT AT
S.E. CORNER - DOCK POINT 38A

DESIGNED BY: L.F.R. TRACED BY: DATE:
DRAWN BY: L.F.R. CHECKED BY: P.C.B. DATE:
APPROVED:— SCALE: AS NOTED
Harris S. Bataller — DESIGNER IN CHARGE — DATE: 2-2-77 SHEET NUMBER 25
Henry J. Balcom — CITY ENGINEER AND PUBLIC BUILDINGS — DATE: 2-2-77 SET OF 85 SHEETS
Deputy — COMMISSIONER OF PUBLIC WORKS — DATE: 2-3-77 JOB NO. 505-98

CPE-2

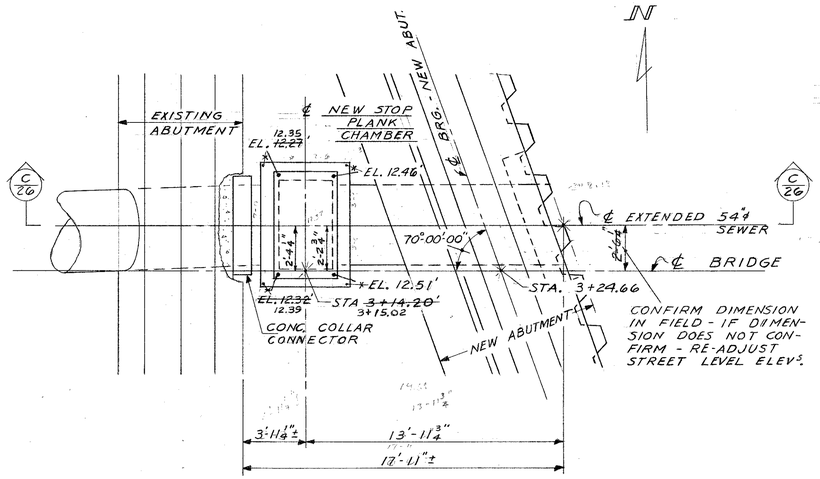

PLAN OF 54"ϕ STORM SEWER EXTENSION @ W. ABUTMENT
SCALE ¼"=1'-0"

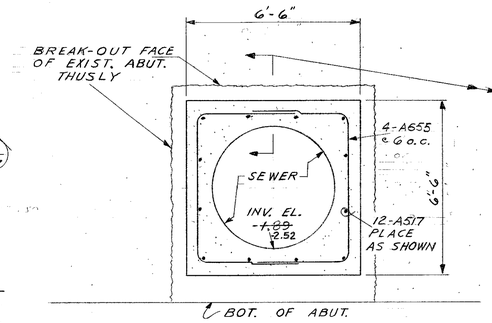

SECTION A 26
SCALE ⅜"=1'-0"

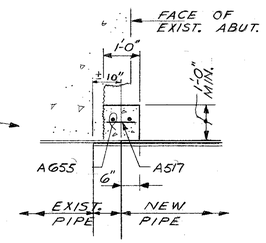

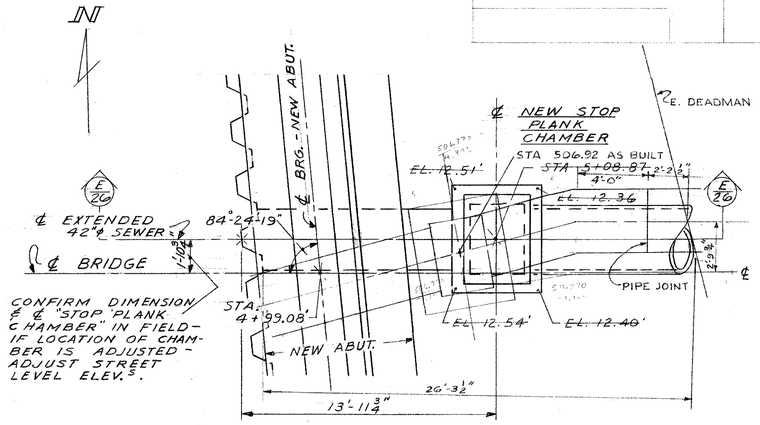

PLAN OF 42"ϕ STORM SEWER EXTENSION @ E. ABUTMENT
SCALE ¼"=1'-0"

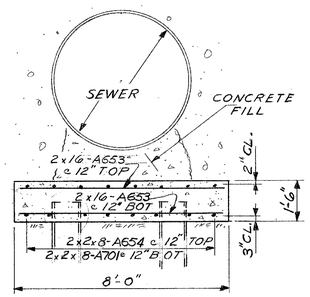

SECTION B 26
SCALE ⅜"=1'-0"

BAR LIST

LOC.	MARK	NO. REQ'D EAST	NO. REQ'D WEST	LENGTH	DET.	DIMENSIONS A	DIMENSIONS B
	A517	14	26	0'-9"	STR.		
	A651	4		12'-4"	11	3'-8"	5'-3"
	A652		4	14'-3"	11	4'-2"	6'-3"
	A653	32	32	7'-6"	STR.		
	A654	16	16	10'-4"	5	10'-0"	
	A655		4	13'-8"	11	4'-0	6'-0"
	A701	16	16	10'-6"	5	10'-2"	

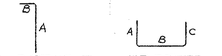

DET. 5 DET. 11

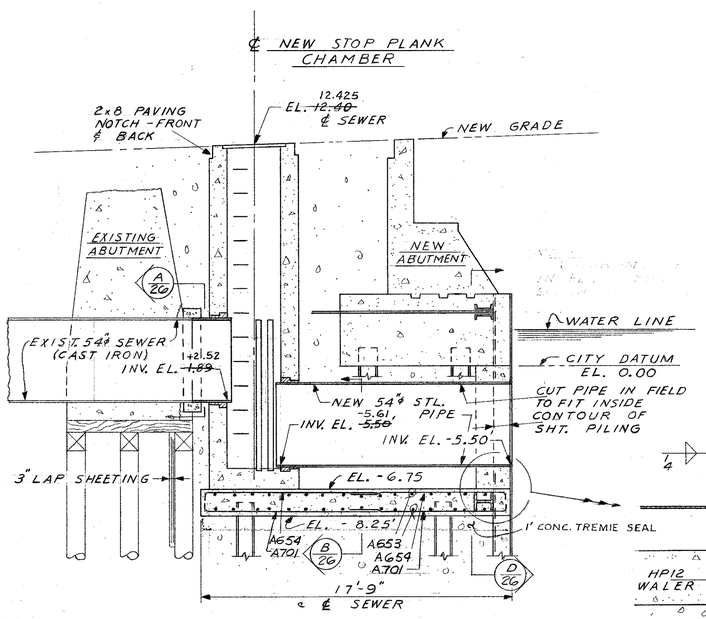

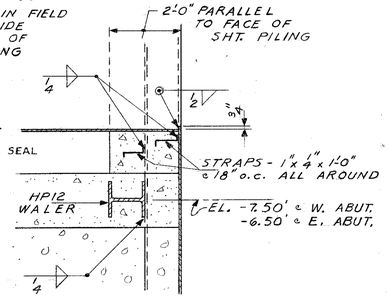

NOTE:
1. SEWER EXTENSIONS & STOP PLANK CHAMBER TO BE FURNISHED, INSTALLED & CONSTRUCTED ACCORDING TO THE "SEWER SPECIFICATIONS" - DEPT. OF PUBLIC WORKS - CITY OF MILWAUKEE.
2. STL. PIPE TO HAVE COAL TAR EPOXY COAT INSIDE & OUTSIDE EXCEPT ON OUTSIDE FOR 2'-0" FROM OUTLET END.

SECTION C 26
SCALE ¼"=1'-0"

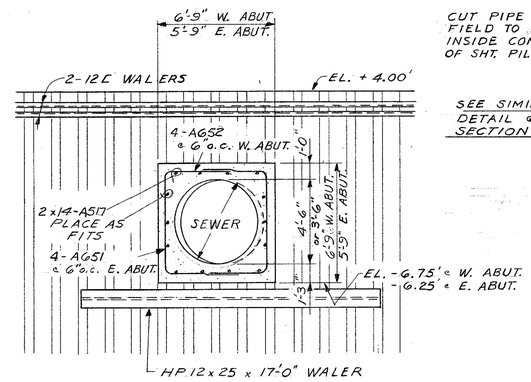

INSIDE ELEVATION
SECTION D 26
SCALE ¼"=1'-0"

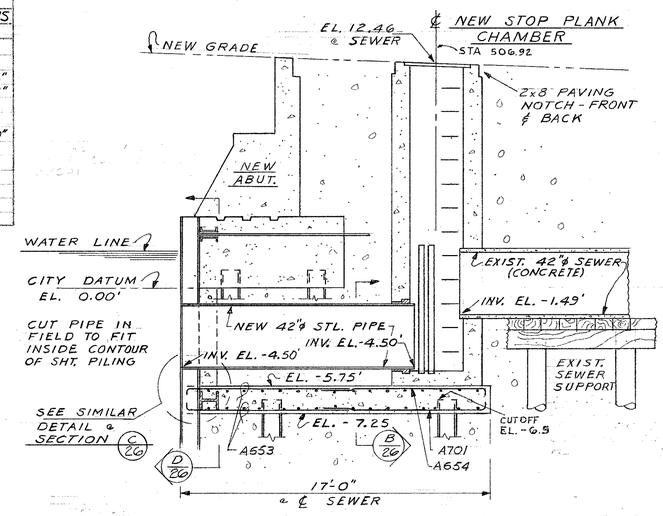

NOTES 1 & 2 IN SECTION C 26 APPLY

SECTION E 26
SCALE ¼"=1'-0"

"AS BUILT"

DEPARTMENT OF PUBLIC WORKS
BUREAU OF BRIDGES AND PUBLIC BUILDINGS
CITY OF MILWAUKEE

REVISIONS		
MARK	DATE	BY
A		
B		
C		
D		
E		
F		
G		
H		
I		
J		
K		
L		
M		

MICHIGAN ST. VERTICAL LIFT BRIDGE
OVER MILWAUKEE RIVER
SEWER EXTENSIONS

DESIGNED BY: L.F.R. TRACED BY: DATE:
DRAWN BY: L.F.R. CHECKED BY: RLK DATE:
APPROVED:— SCALE: AS NOTED
Norris A. Batelder — DESIGNER IN CHARGE — DATE: 2-2-77 SHEET NUMBER 26
Henry J. Balsini — BUR'T OF BRIDGES & PUBLIC BUILDINGS — DATE: 2-2-77 SET OF 85 SHEETS
J. Wm. Lin — COMMISSIONER OF PUBLIC WORKS — DATE: 2-3-77 JOB NO. 505-98

CPE-2

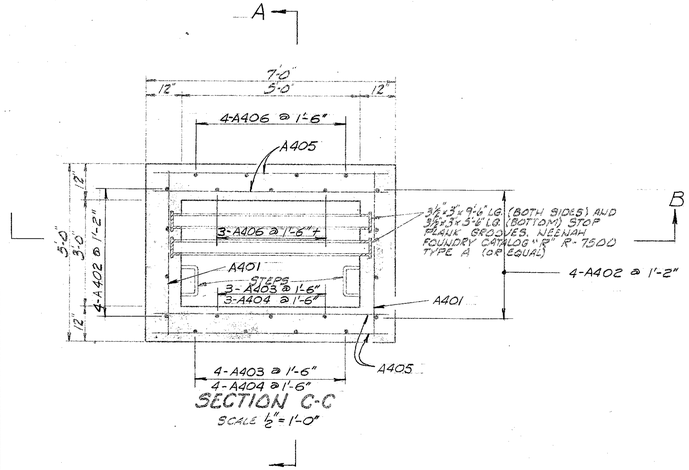

SECTION C-C
SCALE ½" = 1'-0"

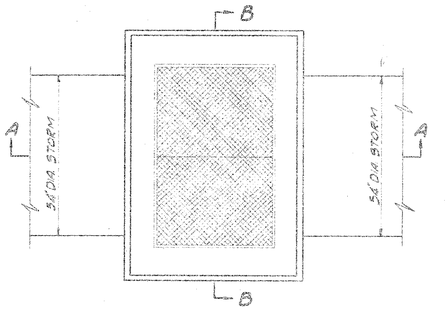

TOP VIEW OF STOP PLANK CHAMBER
SCALE ½" = 1'-0"

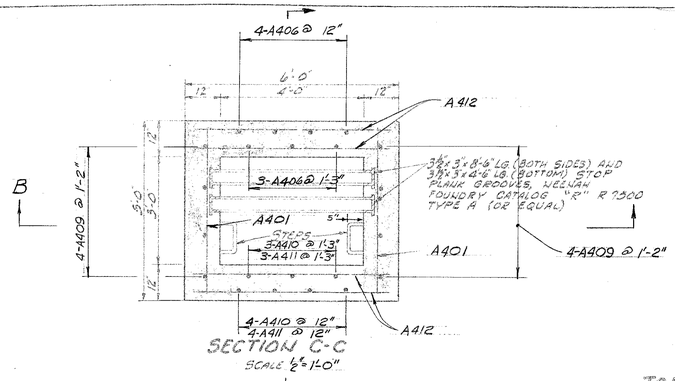

SECTION C-C
SCALE ½" = 1'-0"

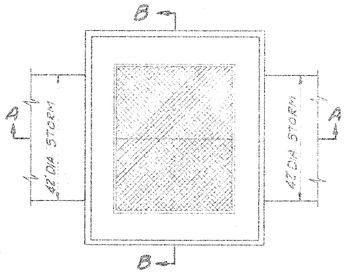

TOP VIEW OF STOP PLANK CHAMBER
SCALE ½" = 1'-0"

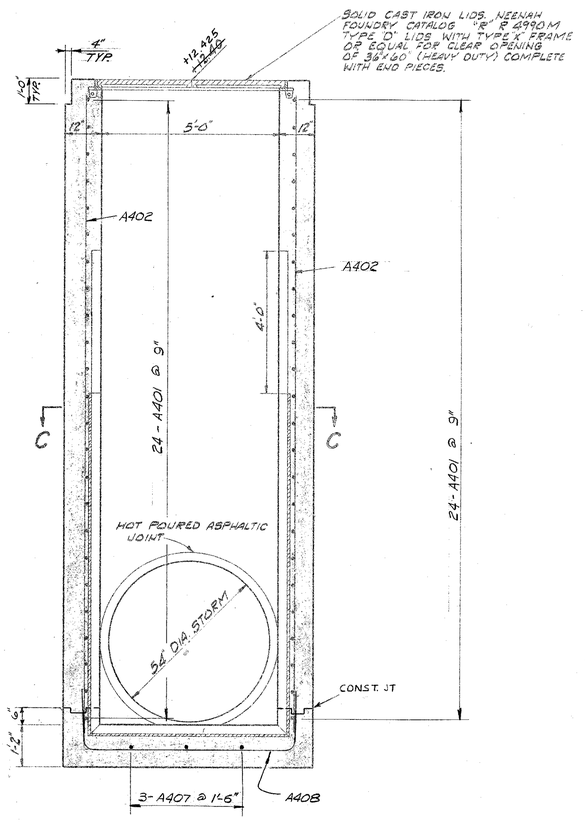

SECTION B-B
SCALE ½" = 1'-0"

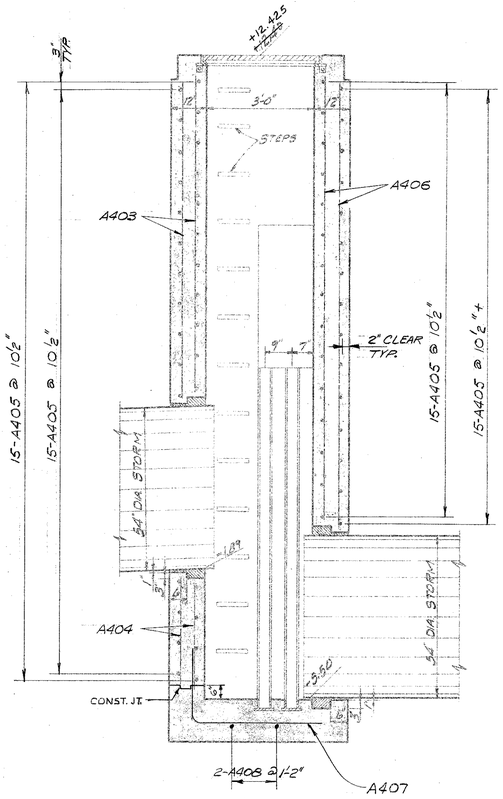

SECTION A-A
SCALE ½" = 1'-0"

CHAMBER AT STA. ~~3+14.20~~ 3+15.02

WEST ABUTMENT

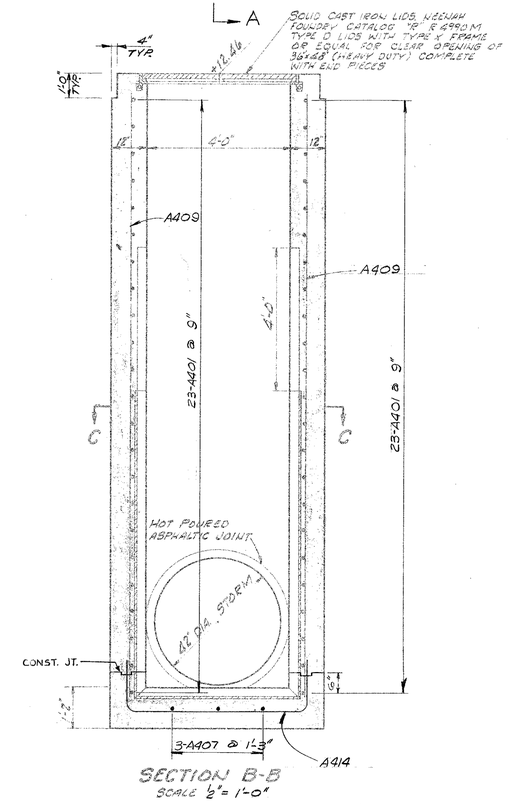

SECTION B-B
SCALE ½" = 1'-0"

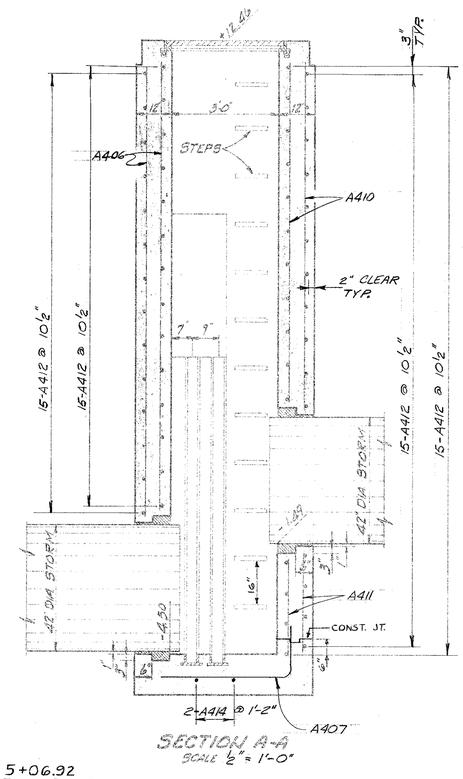

SECTION A-A
SCALE ½" = 1'-0"

CHAMBER AT STA. ~~5+08.87~~ 5+06.92

EAST ABUTMENT

NOTES:

MANHOLE FRAMES, LIDS, STOP PLANK GROOVES AND METAL STEPS TO BE INCLUDED IN UNIT PRICE BID FOR CONCRETE MASONRY BRIDGES.
STOP PLANK CHAMBER STEPS TO CONFORM TO CITY OF MILWAUKEE-SEWER SPECIFICATIONS - MARCH 18, 1970

"AS BUILT"

DEPARTMENT OF PUBLIC WORKS
BUREAU OF BRIDGES AND PUBLIC BUILDINGS
CITY OF MILWAUKEE

REVISIONS		
MARK	DATE	BY
A		
B		
C		
D		
E		
F		
G		
H		
I		
J		
K		
L		
M		

MICHIGAN ST. VERTICAL LIFT BRIDGE
OVER MILWAUKEE RIVER

STOP PLANK CHAMBER DETAILS

DESIGNED BY: ____ TRACED BY: ____ DATE: ____
DRAWN BY: R. P. CHECKED BY: RLK DATE: ____
APPROVED: ____ SCALE: AS NOTED
Norris A. Batalden DESIGNER IN CHARGE DATE: 2-2-77 SHEET NUMBER 27
Henry J. Balcom SUPT. OF BRIDGES AND PUBLIC BUILDINGS DATE: 2-2-77 SET OF 85 SHEETS
Special Deputy COMMISSIONER OF PUBLIC WORKS DATE: 2-3-77 JOB NO. 505-98

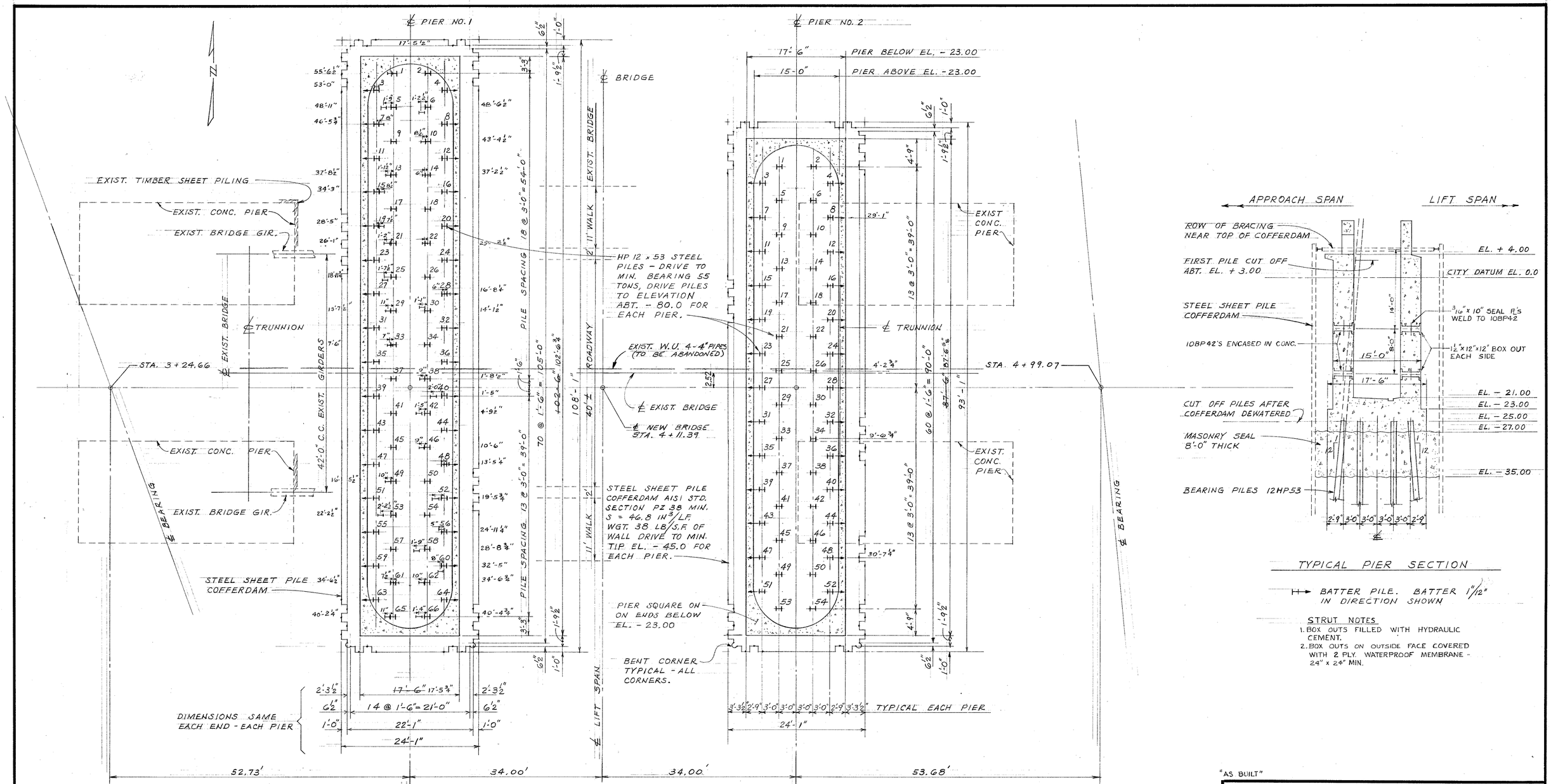

NOTE: PILES WITHOUT AS BUILT DIMENSION ARE WITH 6 INCHES OF PLAN LOCATION

FOUNDATION AND PILING PLAN
PIERS 1 AND 2
SCALE: 1/8" = 1'-0"

TYPICAL PIER SECTION

BATTER PILE. BATTER 1"/12" IN DIRECTION SHOWN

STRUT NOTES
1. BOX OUTS FILLED WITH HYDRAULIC CEMENT.
2. BOX OUTS ON OUTSIDE FACE COVERED WITH 2 PLY. WATERPROOF MEMBRANE - 24" x 24" MIN.

"AS BUILT"

DEPARTMENT OF PUBLIC WORKS
BUREAU OF BRIDGES AND PUBLIC BUILDINGS
CITY OF MILWAUKEE

MICHIGAN ST. VERTICAL LIFT BRIDGE OVER MILWAUKEE RIVER

PIERS 1 & 2 FOUNDATION & PILING PLAN

DESIGNED BY: P.C.B. TRACED BY: DATE:
DRAWN BY: P.C.B. CHECKED BY: RLK DATE:
APPROVED:— SCALE: AS NOTED
Norris A. Batalden DESIGNER IN CHARGE DATE: 2-2-77 SHEET NUMBER 28
Henry J. Balconi DEPT. OF PUBLIC BUILDINGS DATE: 2-2-77 SET OF 85 SHEETS
[signature] COMMISSIONER OF PUBLIC WORKS DATE: 2-3-77 JOB NO. 505-98

REVISIONS: MARK | DATE | BY — A, B, C, D, E, F, G, H, I, J, K, L, M

Special Deputy

CPE-2

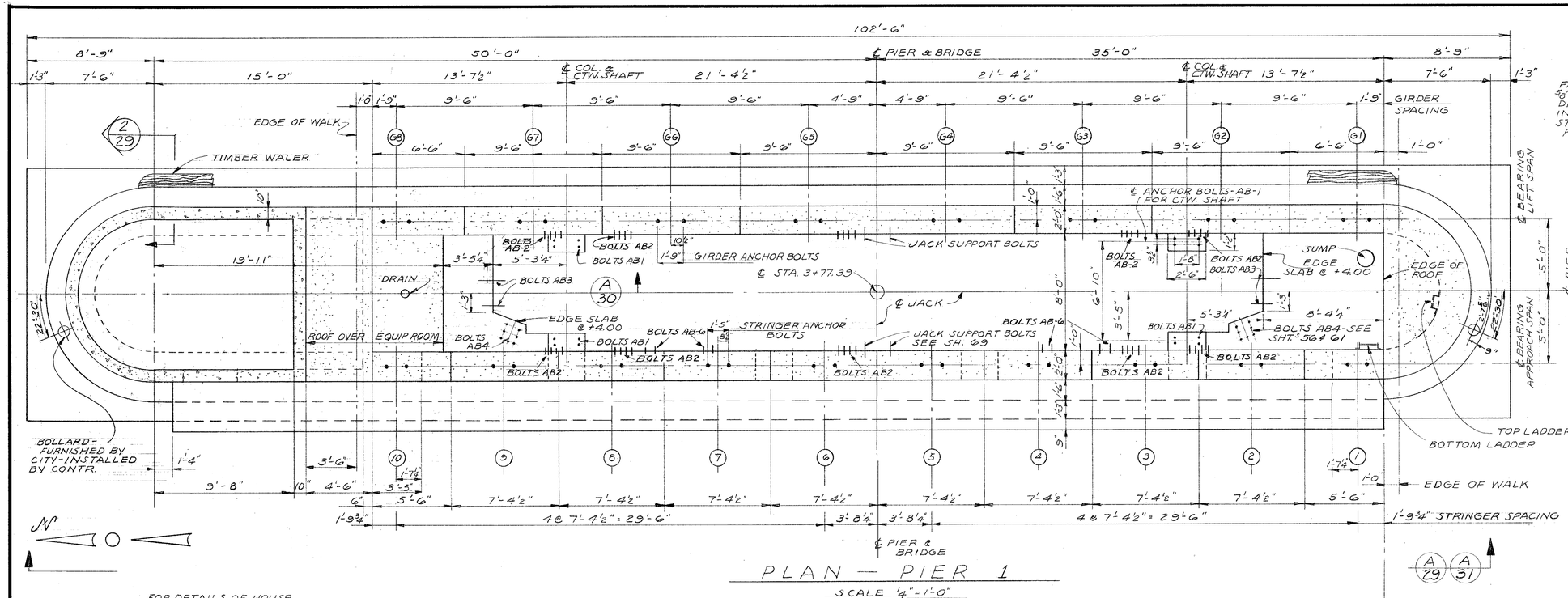

PLAN — PIER 1

SCALE ¼" = 1'-0"

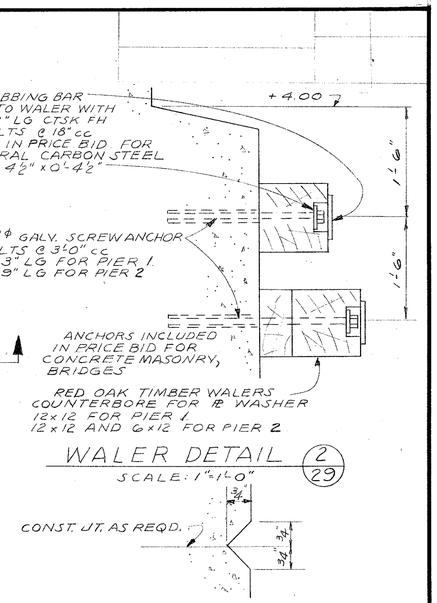

WALER DETAIL (2/29)

SCALE: 1" = 1'-0"

JOINT DETAIL

JOINT DETAIL

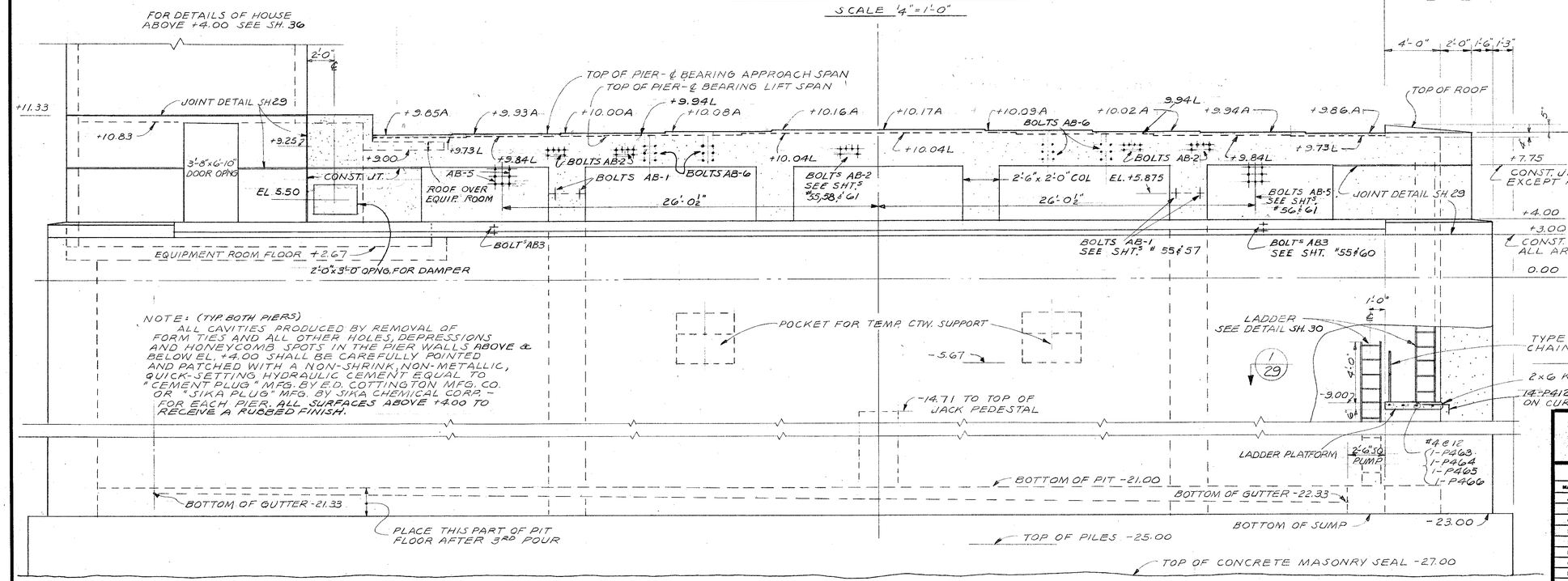

NOTE: (TYP. BOTH PIERS)
ALL CAVITIES PRODUCED BY REMOVAL OF FORM TIES AND ALL OTHER HOLES, DEPRESSIONS AND HONEYCOMB SPOTS IN THE PIER WALLS ABOVE & BELOW EL. +4.00 SHALL BE CAREFULLY POINTED AND PATCHED WITH A NON-SHRINK, NON-METALLIC, QUICK-SETTING HYDRAULIC CEMENT EQUAL TO "CEMENT PLUG" MFG. BY E.D. COTTINGTON MFG. CO. OR "SIKA PLUG" MFG. BY SIKA CHEMICAL CORP. - FOR EACH PIER. ALL SURFACES ABOVE +4.00 TO RECEIVE A RUBBED FINISH.

ELEVATION — PIER 1 (A/29)

LOOKING EAST

NOTE:
ANCHOR BOLTS FOR STRINGERS & GIRDERS SHALL BE DRILLED AND LEADED. MACHINERY ANCHOR BOLTS SHALL BE SET WITH A TEMPLATE AND BUILT INTO CONCRETE.

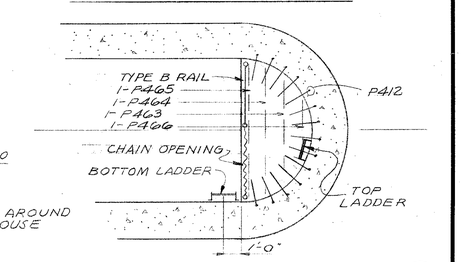

LADDER PLATFORM AT -9.00 (1/29)

TYPICAL EACH PIER

+3.940 A - INDICATES ELEV. TOP OF PIER-APPROACH SPAN
+3.838 L - INDICATES ELEV. TOP OF PIER-LIFT SPAN
CHAMFER ALL EXPOSED EDGES OF CONCRETE ¾"

105

DEPARTMENT OF PUBLIC WORKS
BUREAU OF BRIDGES AND PUBLIC BUILDINGS
CITY OF MILWAUKEE

REVISIONS		
MARK	DATE	BY
A		
B		
C		
D		
E		
F		
G		
H		
I		
J		
K		
L		
M		

MICHIGAN ST. VERTICAL LIFT BRIDGE
OVER MILWAUKEE RIVER

PIER 1

DESIGNED BY: TRACED BY: DATE:
DRAWN BY: D.G.H. CHECKED BY: P.C.B. DATE:
APPROVED:— SCALE: AS NOTED
Harry A. Bateleder — ENGINEER IN CHARGE — DATE: 2-2-77 SHEET NUMBER 29
Henry J. Balemi — DEPT. OF PUBLIC WORKS & PUBLIC BUILDINGS — DATE: 2-2-77 SET OF 85 SHEETS
Frank Kuchler — COMMISSIONER OF PUBLIC WORKS — DATE: 2-2-77 JOB NO. 505-98

CPE-2

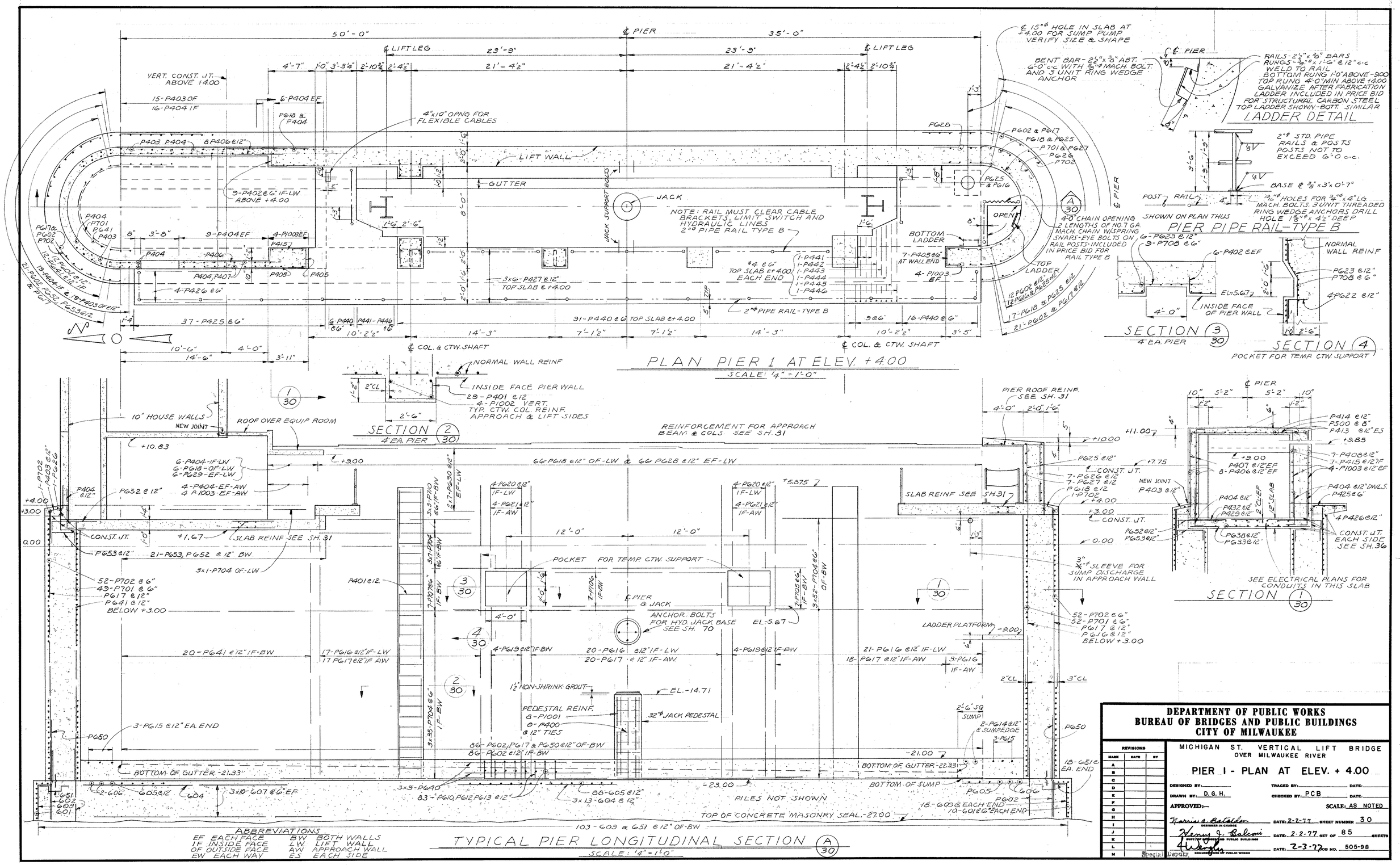

DEPARTMENT OF PUBLIC WORKS
BUREAU OF BRIDGES AND PUBLIC BUILDINGS
CITY OF MILWAUKEE

REVISIONS		
MARK	DATE	BY
A		
B		
C		
D		
E		
F		
G		
H		
I		
J		
K		
L		
M		

MICHIGAN ST. VERTICAL LIFT BRIDGE
OVER MILWAUKEE RIVER

PIER 1 - PLAN AT ELEV. + 4.00

DESIGNED BY: TRACED BY: DATE:
DRAWN BY: D. G. H. CHECKED BY: PCB DATE:
APPROVED:— SCALE: AS NOTED
Harris A. Batalden — DESIGNER IN CHARGE — DATE: 2-2-77 SHEET NUMBER 30
Henry J. Bolcom — DIV. OF PUBLIC BUILDINGS — DATE: 2-2-77 SET OF 85 SHEETS
Special Deputy — COMMISSIONER OF PUBLIC WORKS — DATE: 2-3-77 JOB NO. 505-98

CPE-2

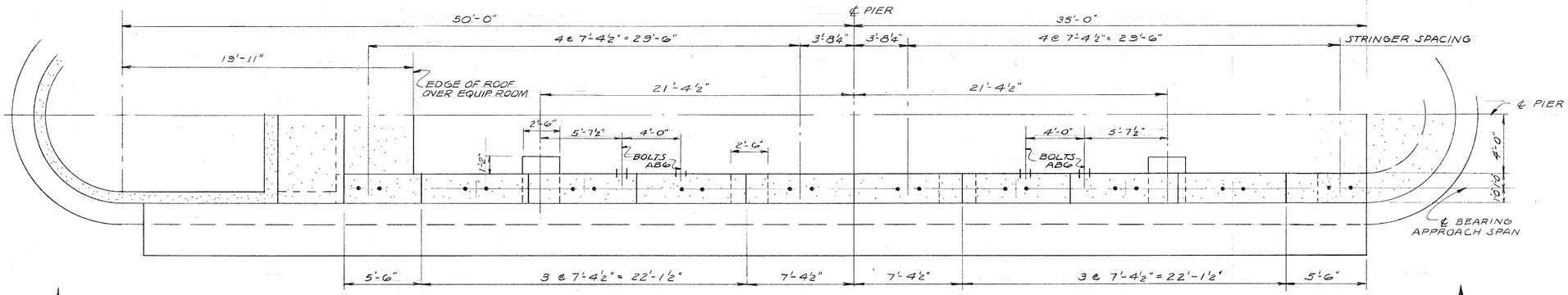

PLAN— APPROACH SPAN BEAM — PIER I

SCALE ¼" = 1'-0"

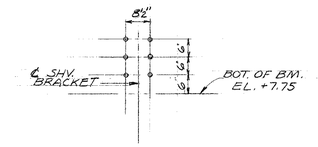

DETAIL BOLTS AB-6 FOR BUMPER BEAM

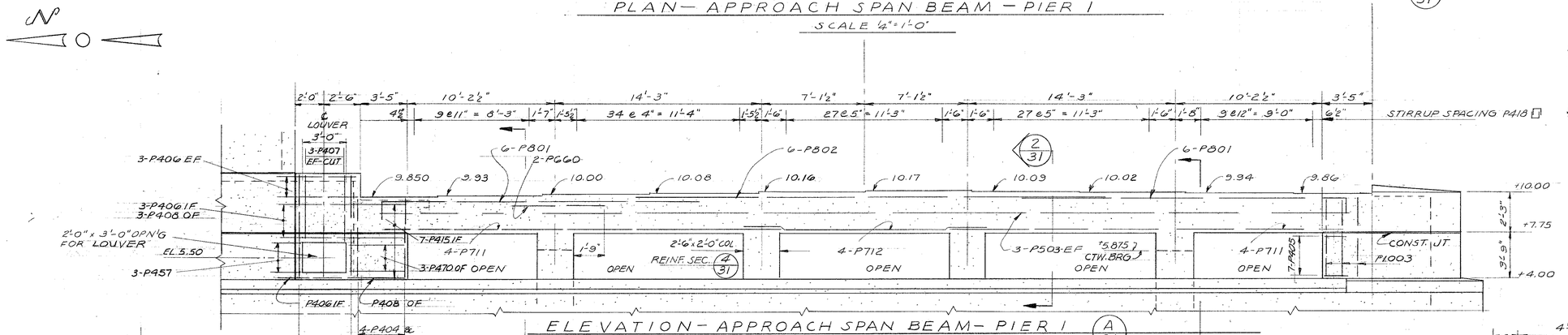

ELEVATION— APPROACH SPAN BEAM— PIER I (A/31)

SCALE: ¼" = 1'-0"

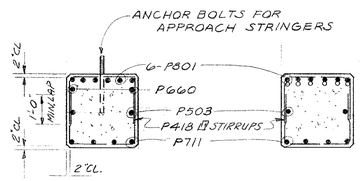

SECTION 1/31

SECTION 2/31

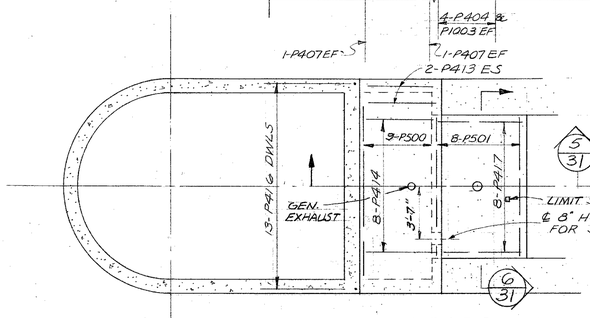

PLAN REINF. BARS ROOF OVER EQUIP. ROOM

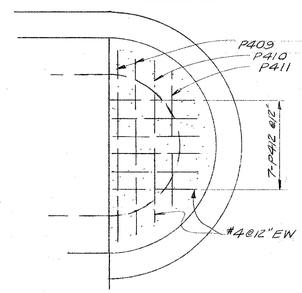

PLAN— REINF. BARS PIER ROOF AT EL +10.00

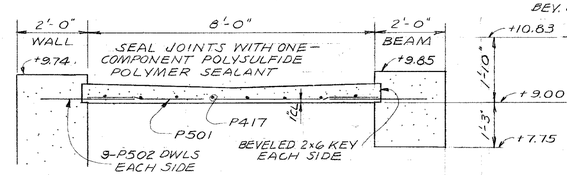

SECTION 6/31

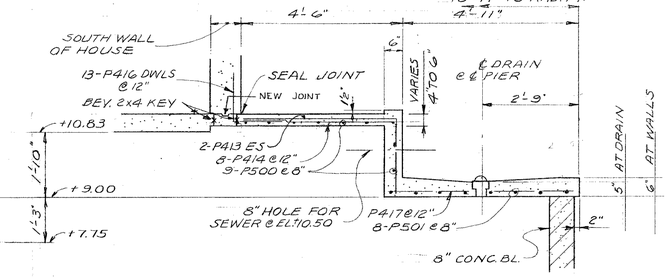

SECTION 5/31

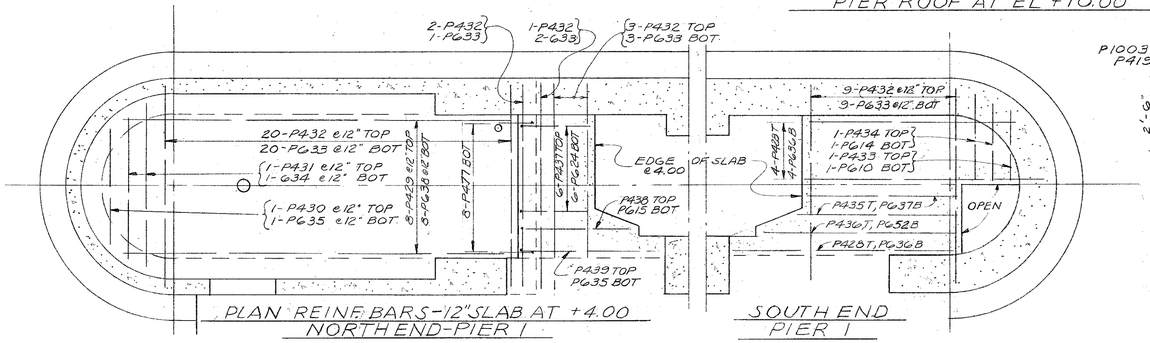

PLAN REINF. BARS—12" SLAB AT +4.00 NORTH END—PIER I

SOUTH END PIER I

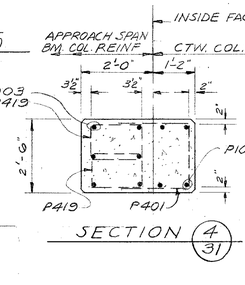

SECTION 4/31

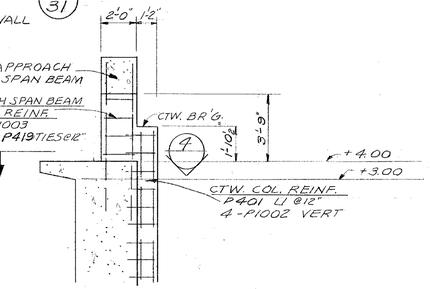

SECTION 3/31

DEPARTMENT OF PUBLIC WORKS
BUREAU OF BRIDGES AND PUBLIC BUILDINGS
CITY OF MILWAUKEE

REVISIONS		
MARK	DATE	BY
A		
B		
C		
D		
E		
F		
G		
H		
I		
J		
K		
L		
M		

MICHIGAN ST. VERTICAL LIFT BRIDGE
OVER MILWAUKEE RIVER

PIER I - APPROACH SPAN BEAM

DESIGNED BY: ____ TRACED BY: ____ DATE: ____
DRAWN BY: D. G. H. CHECKED BY: PCB DATE: ____
APPROVED:— SCALE: AS NOTED

Harris A. Batelder — DESIGNER IN CHARGE — DATE: 2-2-77 SHEET NUMBER 31
Henry J. Balcom — ASSISTANT COMMISSIONER OF PUBLIC BUILDINGS — DATE: 2-2-77 SET OF 85 SHEETS
H. Wagner — COMMISSIONER OF PUBLIC WORKS — DATE: 2-3-77 JOB NO. 505-98

CPE-2

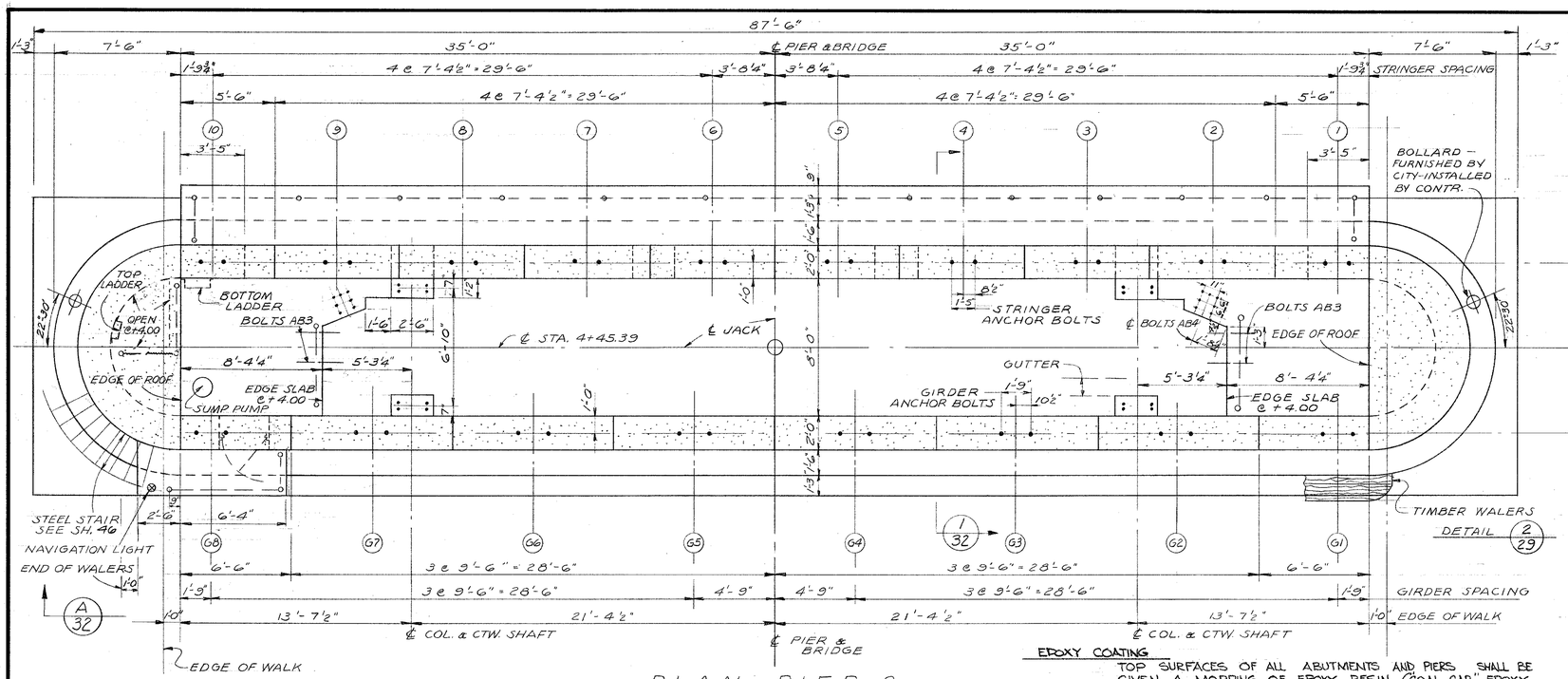

PLAN PIER 2

SCALE: ¼" = 1'-0"

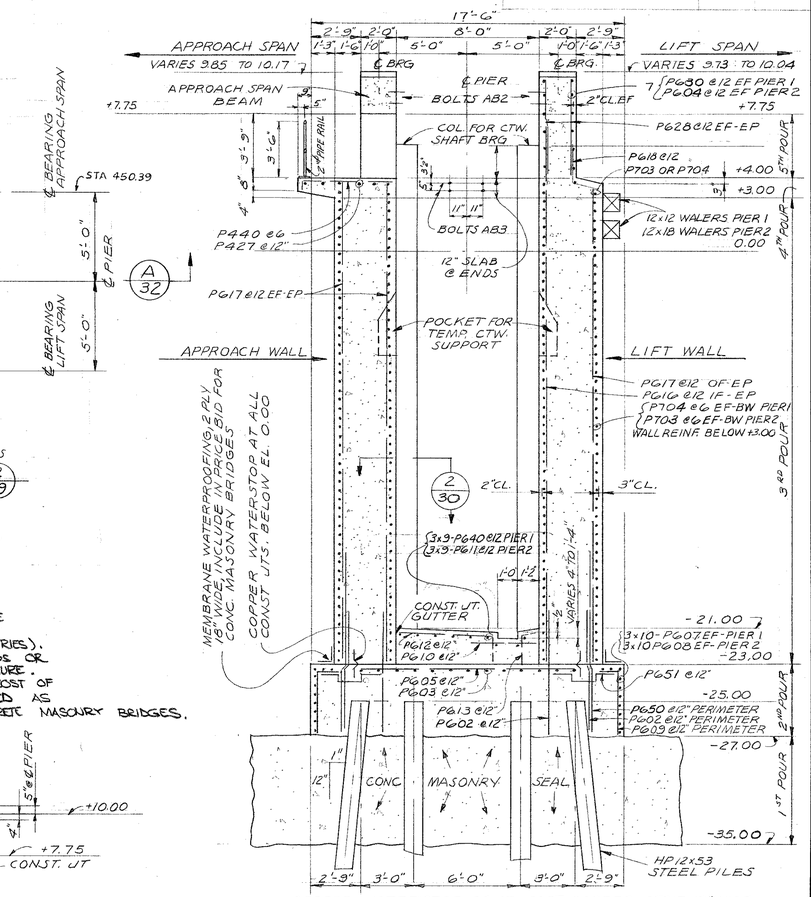

COPPER WATERSTOP-24 OZ. SOFT COPPER STRIP 12" WIDE - RIVETED AND SOLDERED AT JOINTS-EDGES SNIPPED 1" DEEP AT 4" o.c. AND ALTERNATELY BENT-INCLUDED IN PRICE BID FOR CONCRETE MASONRY, BRIDGES.

PIERS 1 & 2 TYPICAL SECTION (1/32)

SCALE ¼" = 1'-0"

EPOXY COATING

TOP SURFACES OF ALL ABUTMENTS AND PIERS SHALL BE GIVEN A MOPPING OF EPOXY RESIN, ("COAL CAP" EPOXY POLYAMIDE RESIN AS MANUFACTURED BY P.P.G. INDUSTRIES). APPY EPOXY PRIOR TO PLACEMENT OF BEARING PADS OR PLATES AND BEFORE ERECTION OF THE SUPER STRUCTURE. FOR APPLICATIONS SEE STANDARD SPECS. – THE COST OF FURNISHING AND PLACING THE EPOXY SHALL BE CONSIDERED AS INCLUDED IN THE PRICE BID PER CUBIC YARD FOR CONCRETE MASONRY BRIDGES.

NOTE:
MISC. MACH., HYDR., ETC. ANCH. BOLTS NOT SHOWN - SEE PIER #1 SHT. # 29 FOR LOCATION.

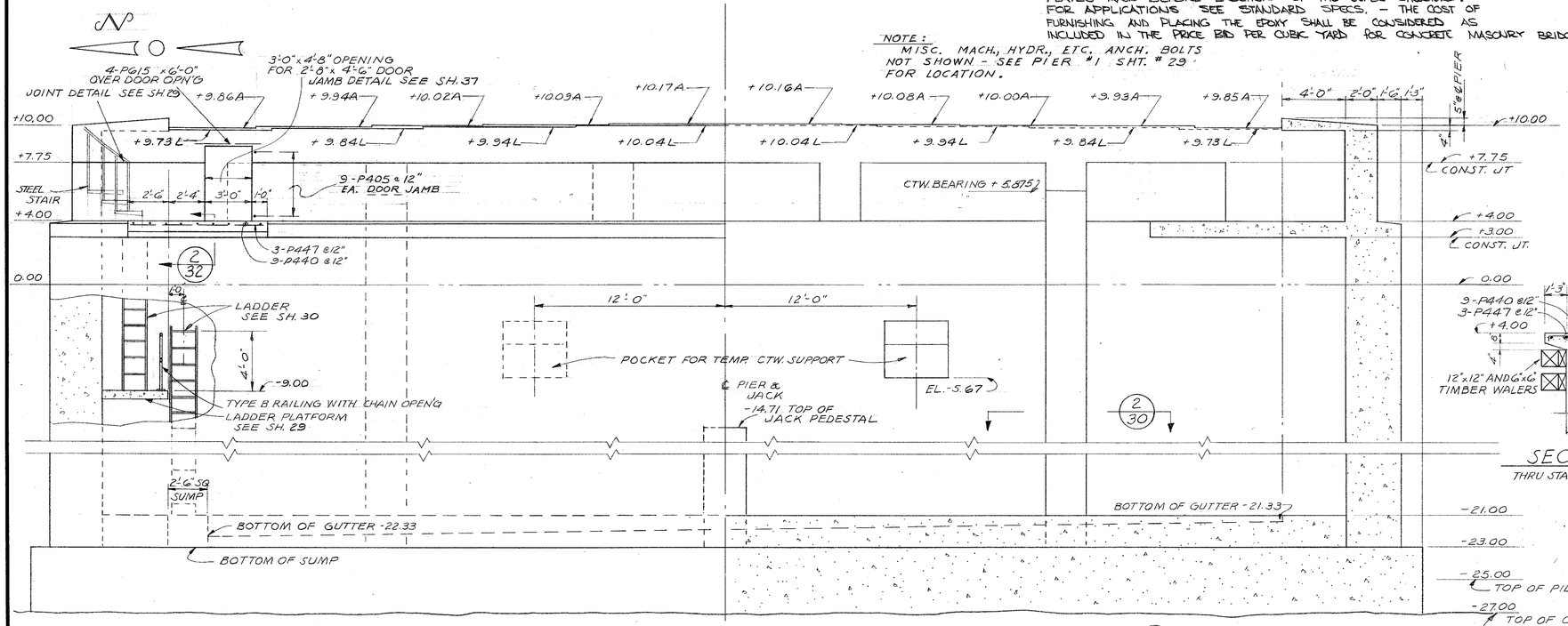

HALF SECTION AND ELEVATION – PIER 2 (A/32)

LOOKING EAST

NOTE:
ANCHOR BOLTS FOR STRINGERS & GIRDERS SHALL BE DRILLED & LEADED. MACHINERY ANCHOR BOLTS SHALL BE SET WITH A TEMPLATE AND BUILT INTO CONCRETE.

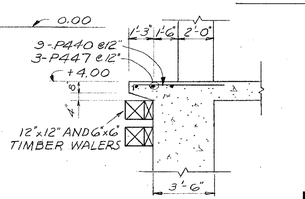

SECTION (2/32)

THRU STAIR LANDING

+9.95 A - INDICATES ELEV. TOP OF PIER - APPROACH SPAN
+9.84 L - INDICATES ELEV. TOP OF PIER - LIFT SPAN

105

DEPARTMENT OF PUBLIC WORKS
BUREAU OF BRIDGES AND PUBLIC BUILDINGS
CITY OF MILWAUKEE

REVISIONS		
MARK	DATE	BY
A		
B		
C		
D		
E		
F		
G		
H		
I		
J		
K		
L		
M		

MICHIGAN ST. VERTICAL LIFT BRIDGE
OVER MILWAUKEE RIVER

PIER 2

DESIGNED BY: _____ TRACED BY: _____ DATE: _____
DRAWN BY: D. G. H. CHECKED BY: PCB DATE: _____
APPROVED:— SCALE: AS NOTED
DESIGNER IN CHARGE — DATE: 2-2-77 SHEET NUMBER 32
BUREAU OF BRIDGES AND PUBLIC BUILDINGS — DATE: 2-2-77 SET OF 85 SHEETS
COMMISSIONER OF PUBLIC WORKS — DATE: 2-3-77 JOB NO. 505-98

CPE-2

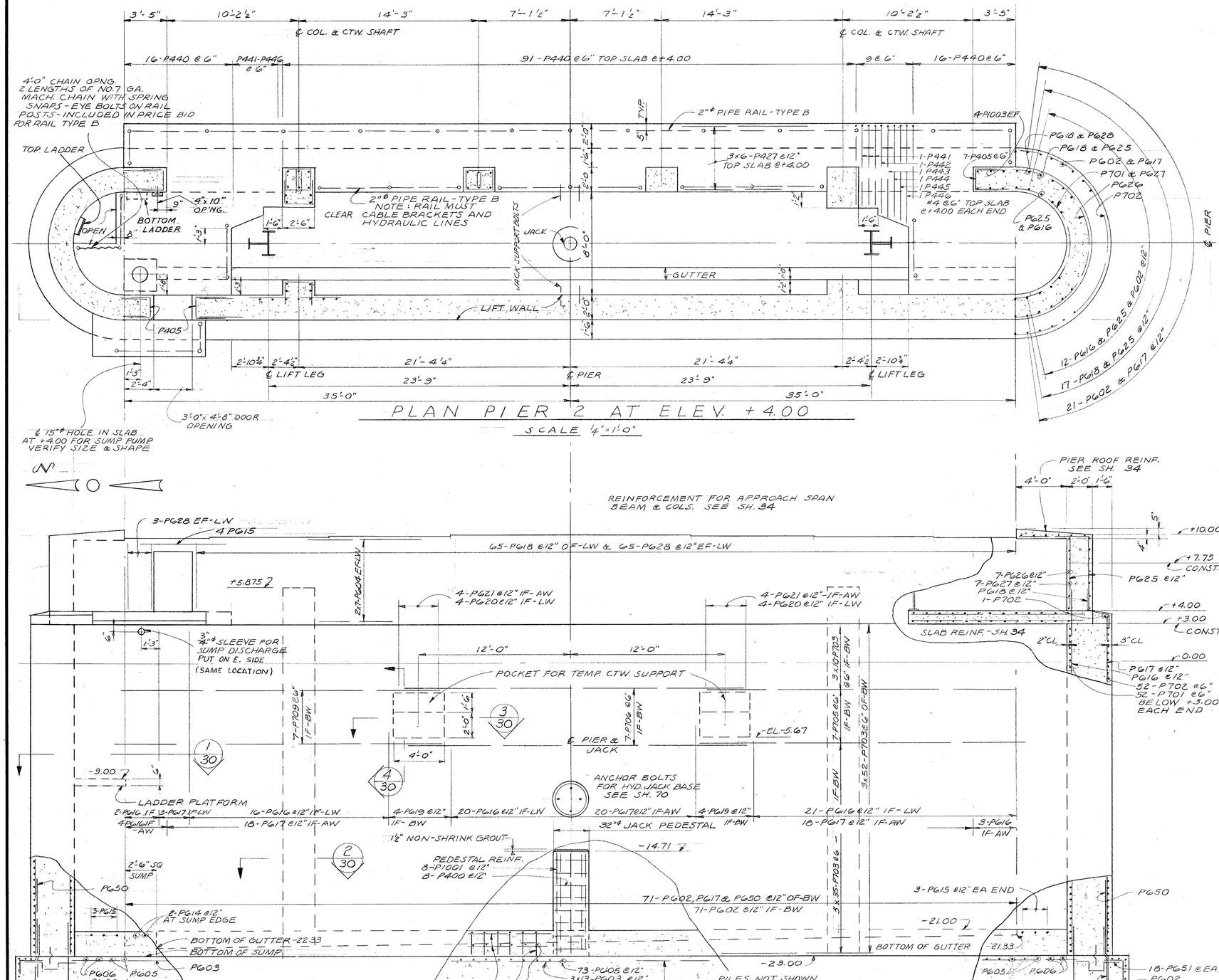

PLAN PIER 2 AT ELEV. +4.00

SCALE ¼"=1'-0"

TYPICAL PIER LONGITUDINAL SECTION

SCALE: ¼"=1'-0"

ABBREVIATIONS

EF-EACH FACE	BW-BOTH WALLS
IF-INSIDE FACE	LW-LIFT WALL
OF-OUTSIDE FACE	AW-APPROACH WALL
EW-EACH WAY	

THE FIRST DIGIT OF A THREE DIGIT BAR MARK AND THE FIRST TWO DIGITS OF A FOUR DIGIT BAR MARK INDICATES THE SIZE OF THE BAR

DEPARTMENT OF PUBLIC WORKS
BUREAU OF BRIDGES AND PUBLIC BUILDINGS
CITY OF MILWAUKEE

REVISIONS		
MARK	DATE	BY
A		
B		
C		
D		
E		
F		
G		
H		
I		
J		
K		
L		
M		

MICHIGAN ST. VERTICAL LIFT BRIDGE
OVER MILWAUKEE RIVER

PIER 2 - PLAN AT ELEV. +4.00

DESIGNED BY: TRACED BY: DATE:
DRAWN BY: D.G.H. CHECKED BY: PCB DATE:
APPROVED:— SCALE: AS NOTED
Norris A. Batalda DESIGNER IN CHARGE DATE: 2-2-77 SHEET NUMBER 33
Henry J. Balzoni ASST. DIR. OF BRIDGES & PUBLIC BUILDINGS DATE: 2-2-77 SET OF 85 SHEETS
H. Wolf COMMISSIONER OF PUBLIC WORKS DATE: 2-3-77 JOB NO. 505-98

Special Deputy

CPE-2

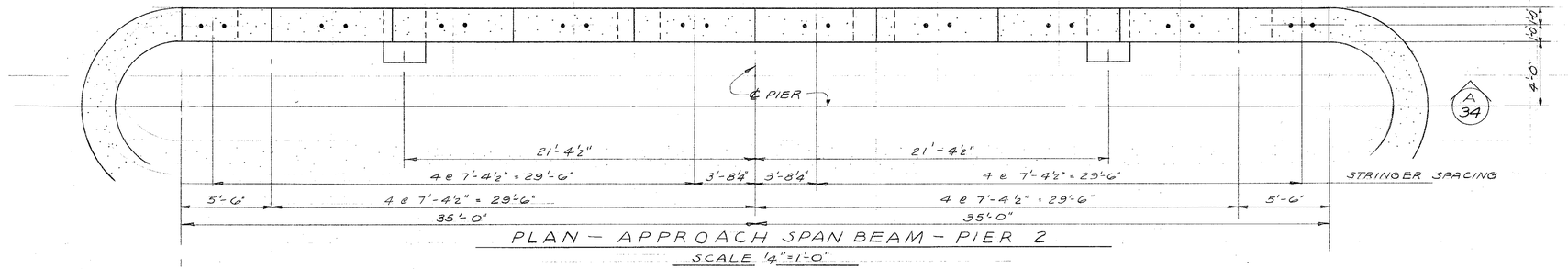

PLAN – APPROACH SPAN BEAM – PIER 2

SCALE ¼" = 1'-0"

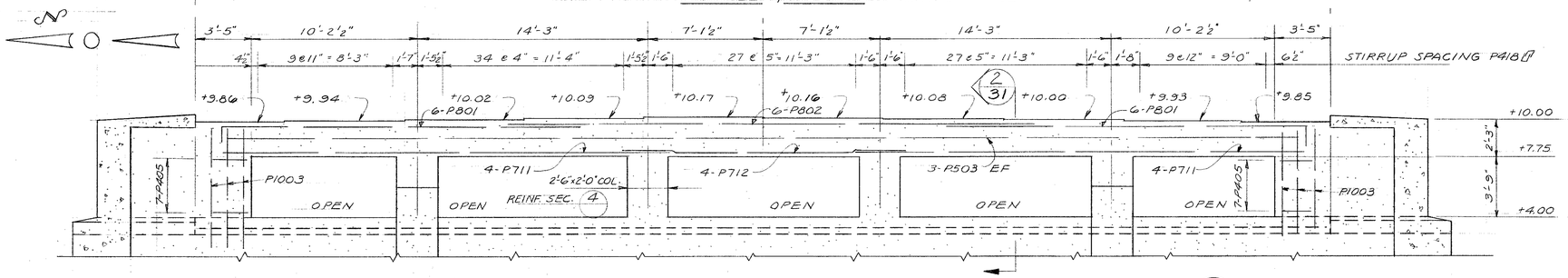

ELEVATION – APPROACH SPAN BEAM – PIER 2 (A/34)

SCALE ¼" = 1'-0"

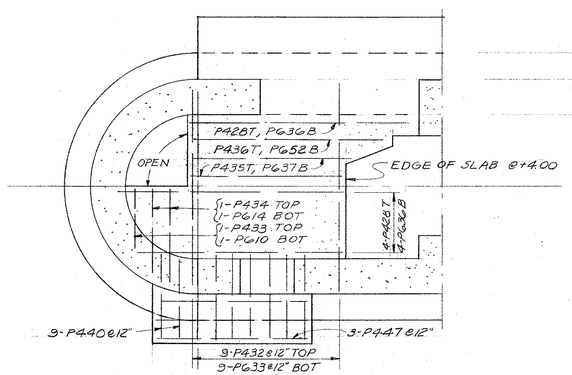

PLAN REINF. BARS
12" SLAB AT +4.00

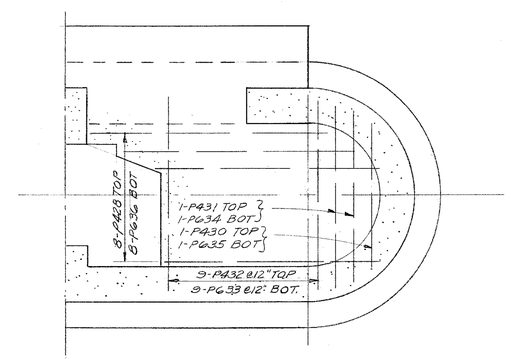

PLAN REINF. BARS
12" SLAB AT +4.00

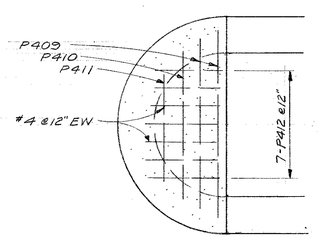

PLAN REINF. BARS – PIER ROOF AT +10.00

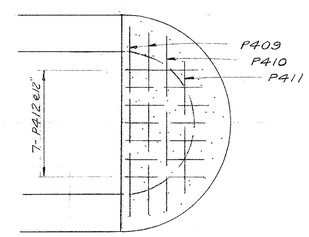

PLAN REINF. BARS – PIER ROOF AT +10.00

DEPARTMENT OF PUBLIC WORKS
BUREAU OF BRIDGES AND PUBLIC BUILDINGS
CITY OF MILWAUKEE

REVISIONS		
MARK	DATE	BY
A		
B		
C		
D		
E		
F		
G		
H		
I		
J		
K		
L		
M		

MICHIGAN ST. VERTICAL LIFT BRIDGE
OVER MILWAUKEE RIVER

PIER 2 - APPROACH SPAN BEAM

DESIGNED BY: _____ TRACED BY: _____ DATE: _____
DRAWN BY: D.G.H. CHECKED BY: PCB DATE: _____
APPROVED:— SCALE: AS NOTED
DESIGNER IN CHARGE — DATE: 2-2-77 SHEET NUMBER 34
DIV. OF BRIDGES & PUBLIC BUILDINGS — DATE: 2-2-77 SET OF 85 SHEETS
COMMISSIONER OF PUBLIC WORKS — DATE: 2-3-77 JOB NO. 505-98

CPE-2

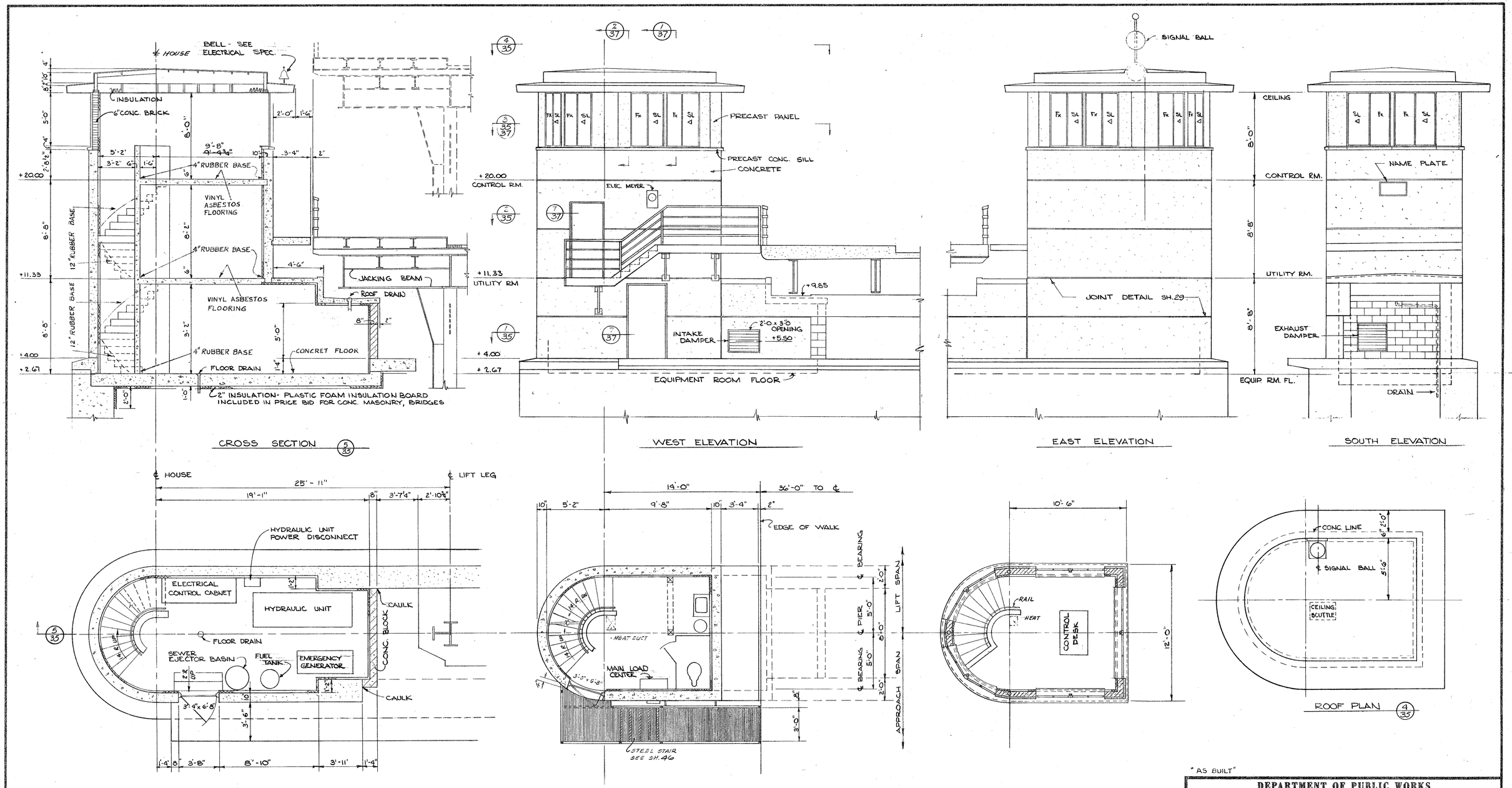

NOTE: PRICE BID FOR NAME PLATE SHOULD BE INCLUDED UNDER UNIT PRICE BID FOR OPERATORS HOUSE. ITEM 90001

"AS BUILT"

DEPARTMENT OF PUBLIC WORKS
BUREAU OF BRIDGES AND PUBLIC BUILDINGS
CITY OF MILWAUKEE

REVISIONS		
MARK	DATE	BY
A		
B		
C		
D		
E		
F		
G		
H		
I		
J		
K		
L		
M		

MICHIGAN ST. VERTICAL LIFT BRIDGE
OVER MILWAUKEE RIVER
BRIDGE OPERATOR'S HOUSE

DESIGNED BY: P.C.B. TRACED BY: DATE:
DRAWN BY: G.T.K. CHECKED BY: P.C.B DATE:
APPROVED:- SCALE: AS NOTED
Norris A. Batalden DATE: 2-2-77 SHEET NUMBER 35
Kenny J. Bolconi DATE: 2-2-77 SET OF 85 SHEETS
DATE: 2-3-77 JOB NO. 505-98

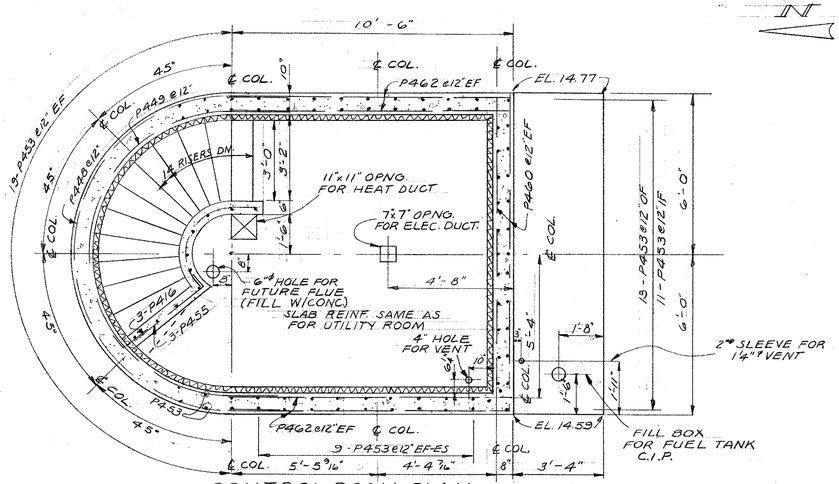

CONTROL ROOM PLAN
FLOOR ELEV. +20.00

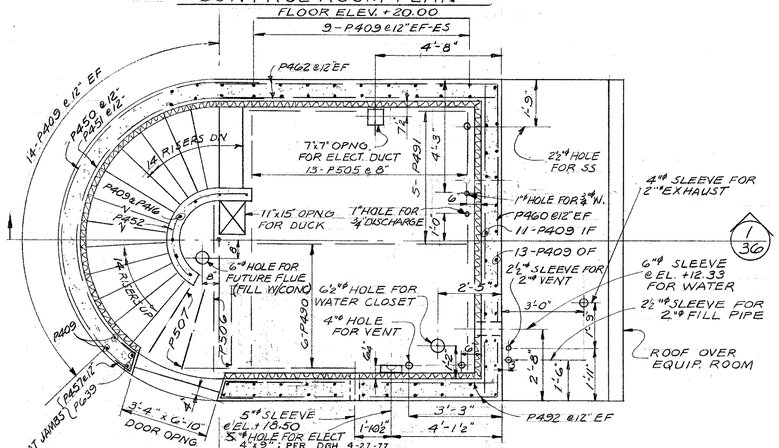

UTILITY ROOM PLAN
FLOOR ELEV. +11.33

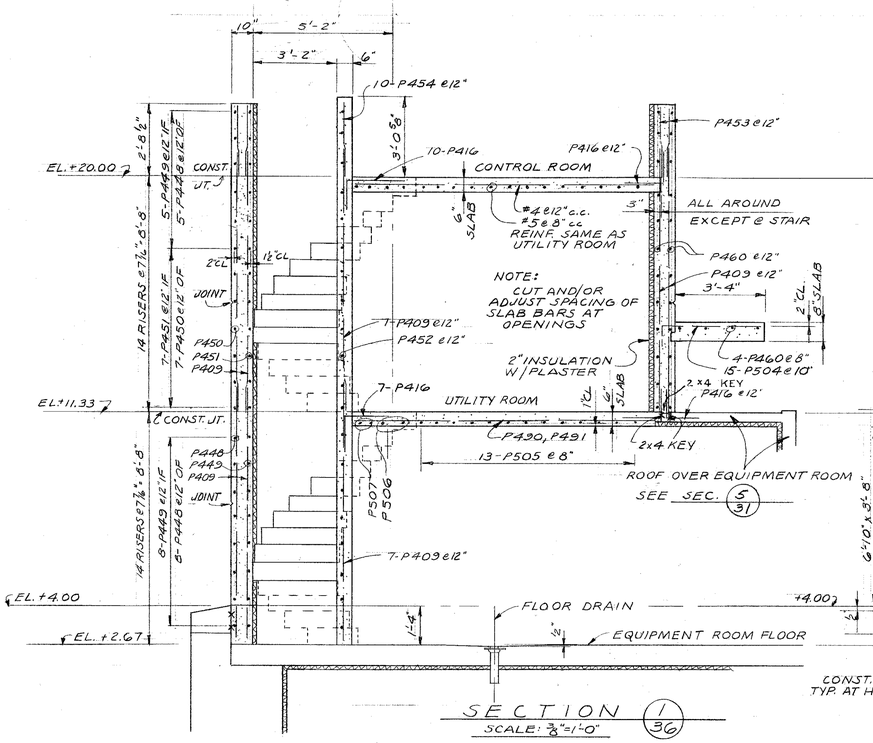

SECTION 1/36
SCALE: ⅜"=1'-0"

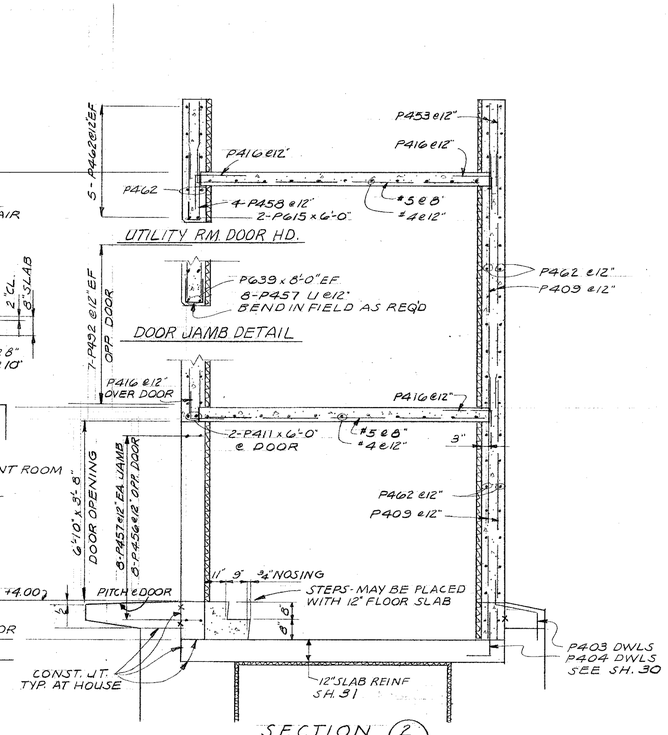

SECTION 2/36
SCALE: ⅜"=1'-0"

NOTE:
SEE ELECTRICAL, HYDRAULIC AND HEATING DRAWINGS FOR OPENINGS AND SLEEVES NOT SHOWN. OPERATOR'S HOUSE TO HAVE RUBBED SURFACE FINISH ON ALL EXPOSED INTERIOR AND ALL EXTERIOR SURFACES ABOVE EL. +4.00.

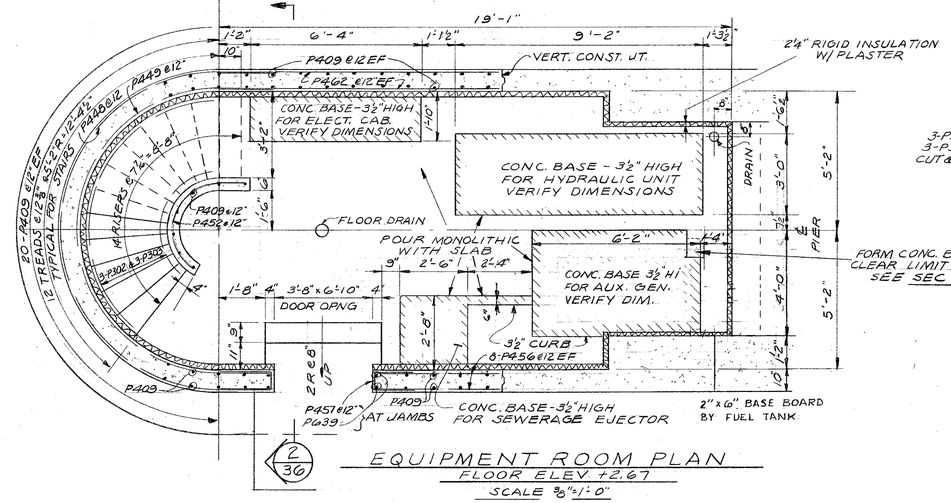

EQUIPMENT ROOM PLAN
FLOOR ELEV. +2.67
SCALE ⅜"=1'-0"

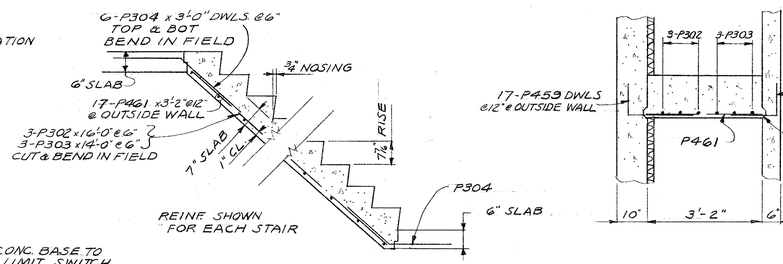

SECTIONS THRU STAIRS
SCALE ½"=1'-0"

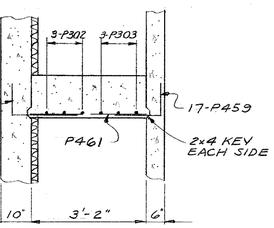

"AS BUILT"

DEPARTMENT OF PUBLIC WORKS
BUREAU OF BRIDGES AND PUBLIC BUILDINGS
CITY OF MILWAUKEE

REVISIONS		
MARK	DATE	BY
A		
B		
C		
D		
E		
F		
G		
H		
I		
J		
K		
L		
M		

MICHIGAN ST. VERTICAL LIFT BRIDGE OVER MILWAUKEE RIVER
OPERATOR'S HOUSE - CONCRETE DETAILS

DESIGNED BY: TRACED BY: DATE:
DRAWN BY: D.G.H. CHECKED BY: PCB DATE:
APPROVED:— SCALE: AS NOTED
DESIGNER IN CHARGE — DATE: 2-2-77 SHEET NUMBER 36
BUREAU CHIEF — DATE: 2-2-77 SET OF 85 SHEETS
COMMISSIONER OF PUBLIC WORKS — DATE: 2-3-77 JOB NO. 505-98

CPE-2

WINDOW NUMBERS SHOWN ARE FOR REFERENCE WINDOW TYPE. PENGUIN WINDOW TYPES M2C.
SEE "SPECIAL PROVISIONS".

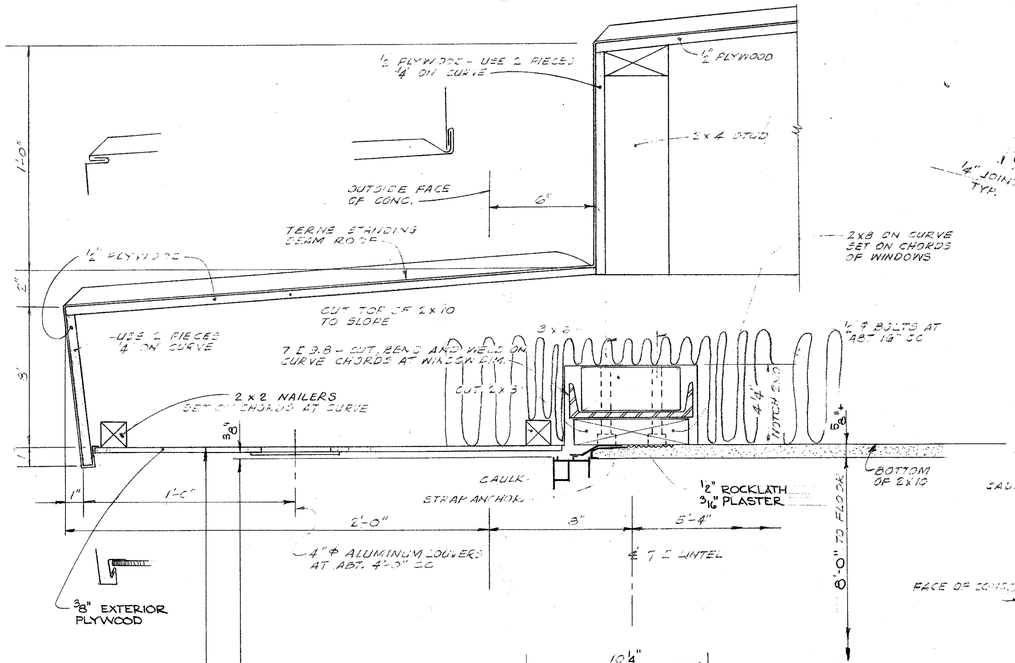

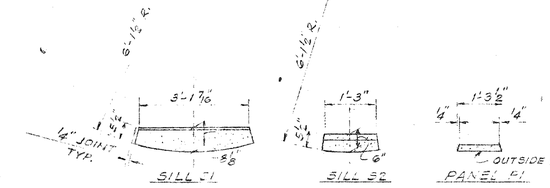

SILLS AND PANELS ON CURVE

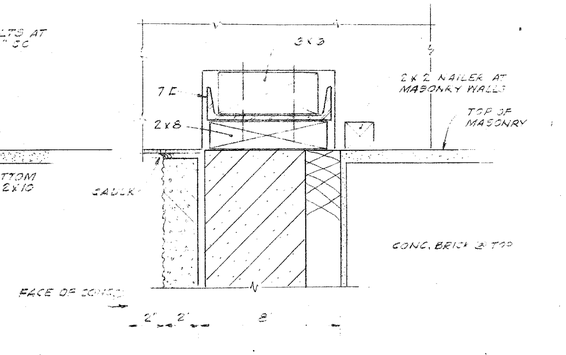

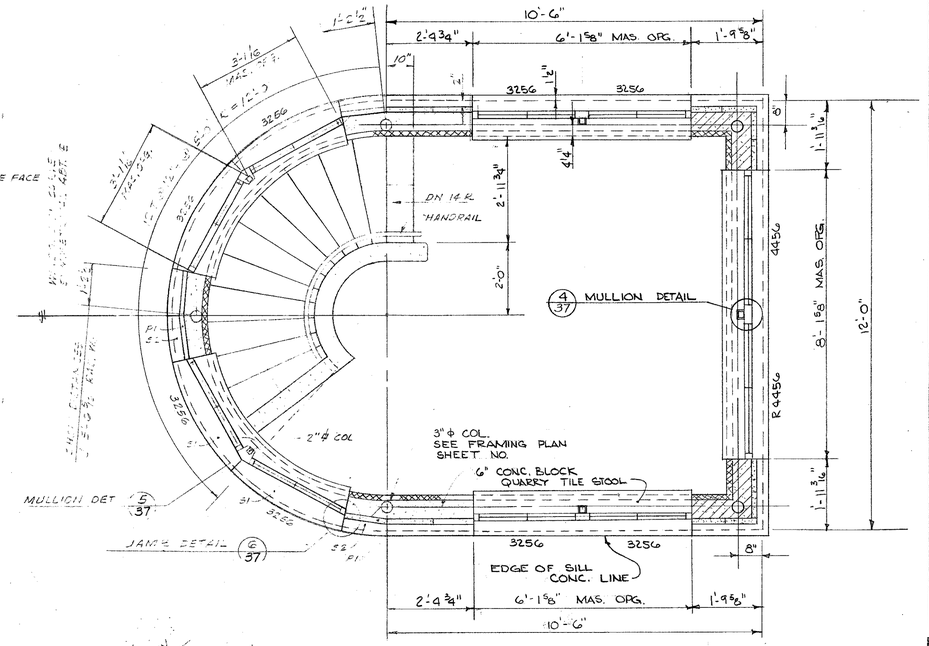

OPERATOR'S HOUSE HARDWARE - TYPE D
HINGES - 1½" NOMINAL DIAMETER - ALUM. ALLOY 6061-T 6 BALL BEARING, ALL SIDES ABOVE TILE
WALL BRACKETS - 3 PER HINGE, #14 FH SCREWS, 1½" BLINN & CO. OR
AN APPROVED EQUAL - #3 2" HEAVY DUTY BRACKETS, FASTEN TO WALL WITH ⅜" ϕ x 2½" LG ALUMINUM LAG BOLTS WITH LEAD EXPANSION SHIELD
BRACKETS ABT 3'-0" CC

CONTROL ROOM PLAN 3 35
FL. ELEV. ⊏ + 20.00
SCALE: 3" = 1'-0"

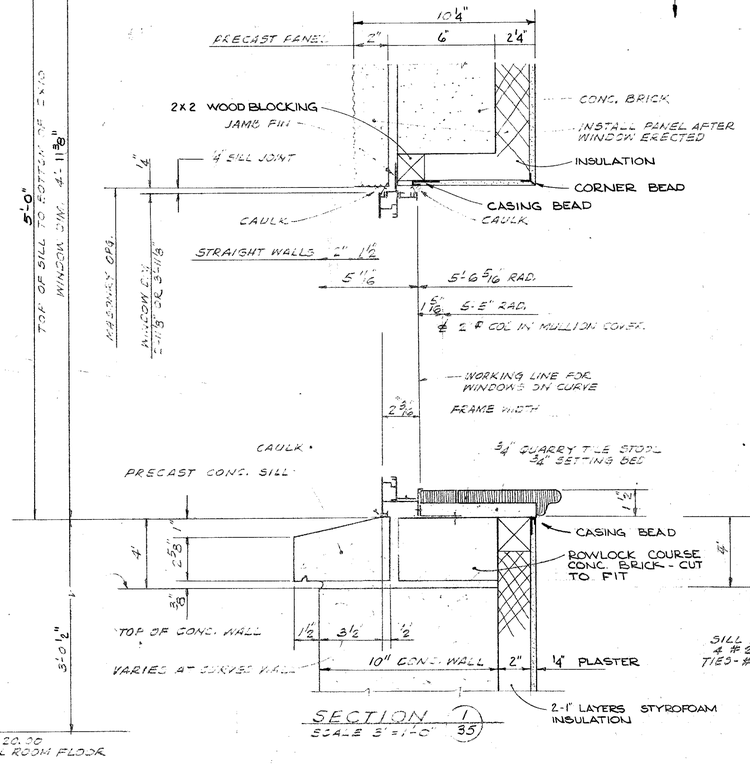

SECTION 1 35
SCALE 3" = 1'-0"

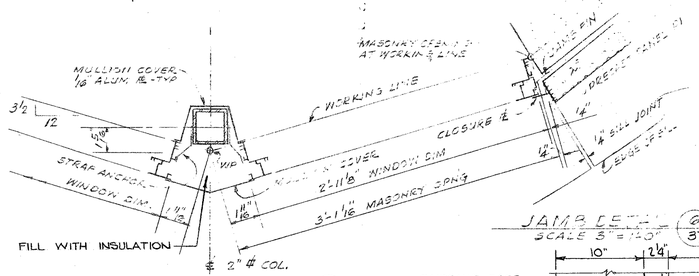

MULLION DETAIL 5 37
SCALE 3" = 1'-0"

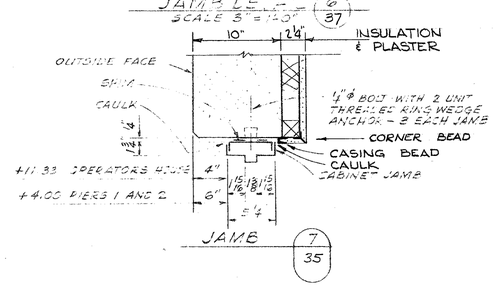

JAMB DETAIL 6 37
SCALE 3" = 1'-0"

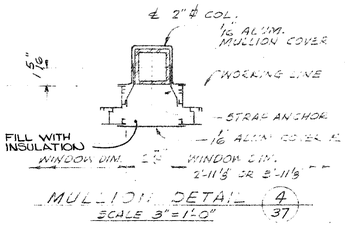

MULLION DETAIL 4 37
SCALE 3" = 1'-0"

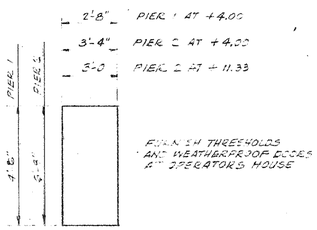

FINISH THRESHOLDS AND WEATHERPROOF DOORS AT OPERATOR'S HOUSE

DOOR TYPE F

DEPARTMENT OF PUBLIC WORKS
BUREAU OF BRIDGES AND PUBLIC BUILDINGS
CITY OF MILWAUKEE

REVISIONS		
MARK	DATE	BY
A		
B		
C		
D		
E		
F		
G		
H		
I		
J		
K		
L		
M		

MICHIGAN ST. VERTICAL LIFT BRIDGE
OVER MILWAUKEE RIVER

OPERATOR'S HOUSE-WINDOW & DOOR DETAIL

DESIGNED BY: ____ TRACED BY: ____ DATE: ____
DRAWN BY: GTK CHECKED BY: PCB DATE: ____
APPROVED:— SCALE: AS NOTED
DESIGNER IN CHARGE — DATE: 2-2-77 SHEET NUMBER 37
DIV. OF BRIDGES AND PUBLIC BUILDINGS — DATE: 2-2-77 SET OF 85 SHEETS
CONSULTING ENGINEER OF PUBLIC WORKS — DATE: 2-3-77 JOB NO. 505-98

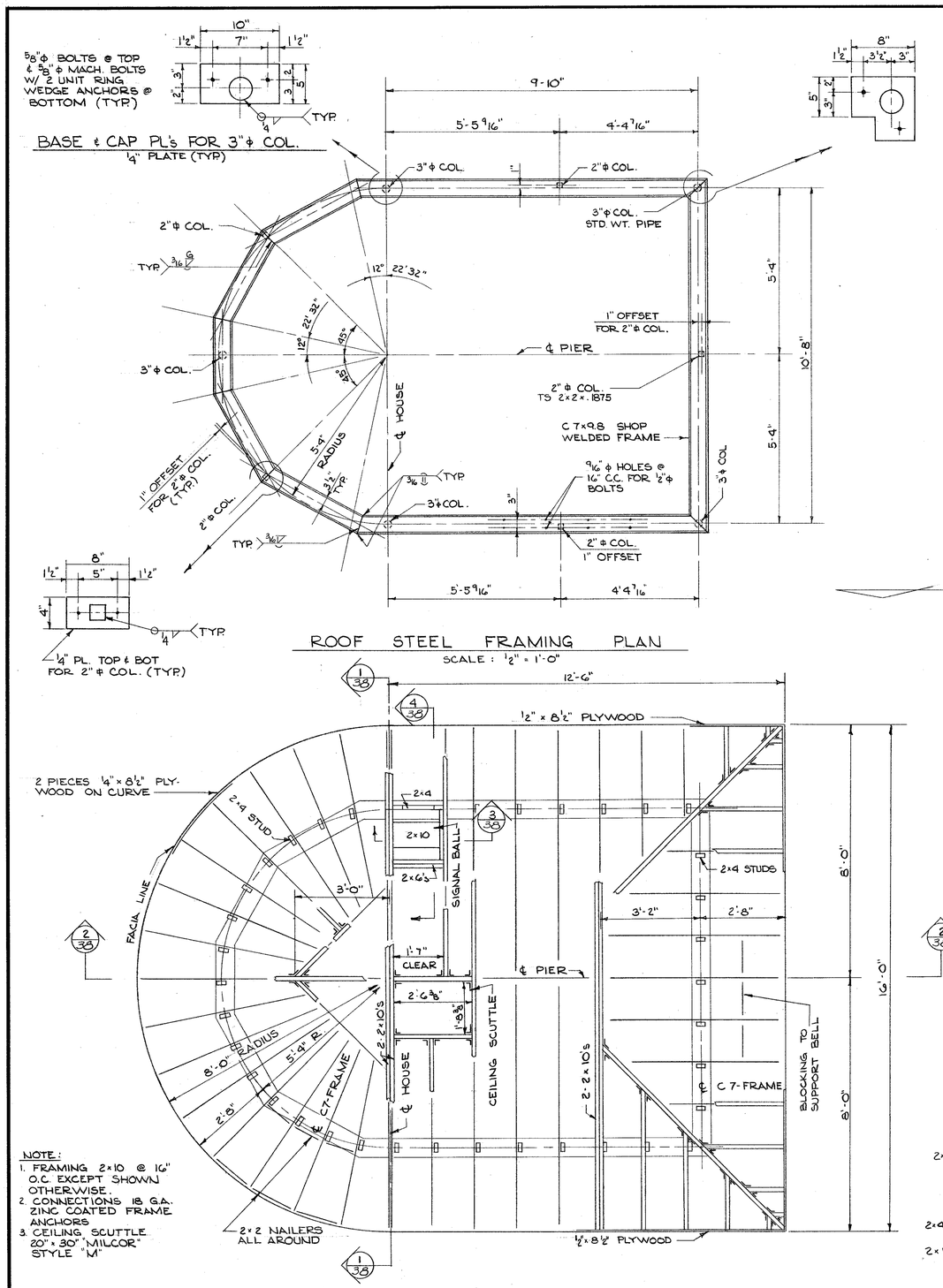

ROOF STEEL FRAMING PLAN
SCALE: 1/2" = 1'-0"

NOTE:
1. FRAMING - 2x4 @ 16" O.C. EXCEPT AS SHOWN OTHERWISE
2. CONNECTIONS - 18 GA. ZINC COATED FRAMING ANCHORS

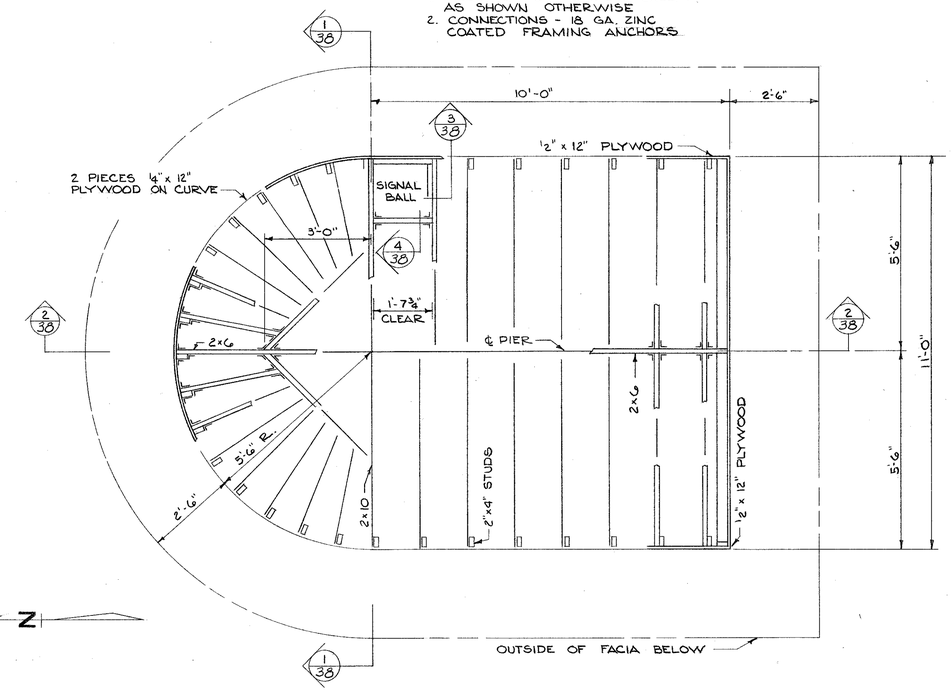

UPPER ROOF FRAMING PLAN
SCALE: 1/2" = 1'-0"

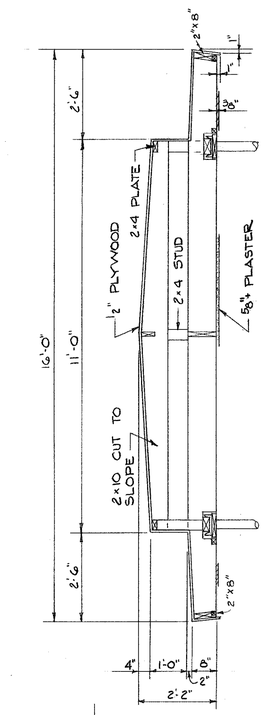

SECTION 1/38
SCALE 1/2" = 1'-0"

NOTE:
1. FRAMING 2x10 @ 16" O.C. EXCEPT SHOWN OTHERWISE.
2. CONNECTIONS 18 G.A. ZINC COATED FRAME ANCHORS
3. CEILING SCUTTLE 20" x 30" "MILCOR" STYLE "M"

LOWER ROOF & CEILING FRAMING PLAN
SCALE 1/2" = 1'-0"

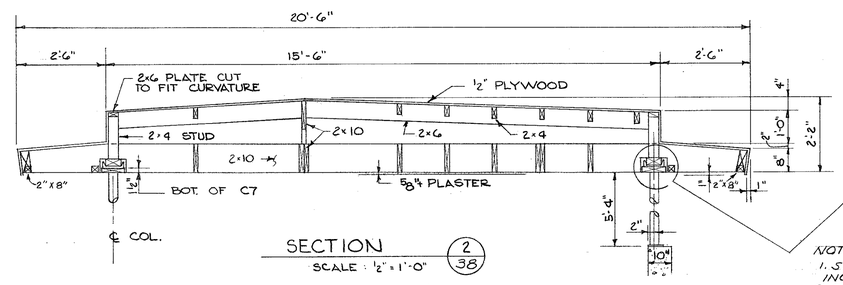

SECTION 2/38
SCALE: 1/2" = 1'-0"

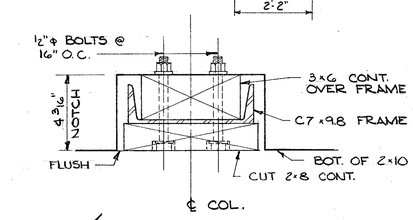

NOTES:
1. STRUCTURAL STEEL FOR OPERATOR'S HOUSE TO BE INCLUDED IN PRICE BID FOR STRUCTURAL CARBON STEEL.
2. CONCRETE FOR OPERATORS HOUSE TO BE INCLUDED IN PRICE BID FOR CONCRETE MASONRY, BRIDGES
3. ALUMINUM RAILING FOR OPERATORS HOUSE TO BE INCLUDED IN PRICE BID FOR ALUMINUM CIRCULAR RAILING, TYPE D

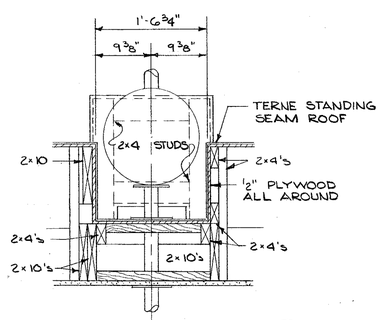

SECTION 3/38
SCALE: 1" = 1'-0"

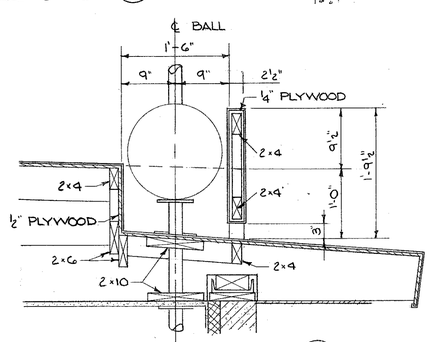

SECTION 4/38
SCALE: 1" = 1'-0"

"AS BUILT"

DEPARTMENT OF PUBLIC WORKS
BUREAU OF BRIDGES AND PUBLIC BUILDINGS
CITY OF MILWAUKEE

REVISIONS		
MARK	DATE	BY
A		
B		
C		
D		
E		
F		
G		
H		
I		
J		
K		
L		
M		

MICHIGAN ST. VERTICAL LIFT BRIDGE
OVER MILWAUKEE RIVER
OPERATOR'S HOUSE -
STEEL & ROOF DETAILS

DESIGNED BY: P.C.B. TRACED BY: DATE:
DRAWN BY: G.T.K. CHECKED BY: PCB DATE:
APPROVED:— SCALE: AS NOTED
Norris A. Batelden — DESIGNER IN CHARGE — DATE: 2-2-77 SHEET NUMBER 38
Henry J. Balconi — DEPT. HEAD — BRIDGES AND PUBLIC BUILDINGS — DATE: 2-2-77 SET OF 85 SHEETS
Special Deputy — COMMISSIONER OF PUBLIC WORKS — DATE: 2-3-77 JOB NO. 505-98

CPE-2

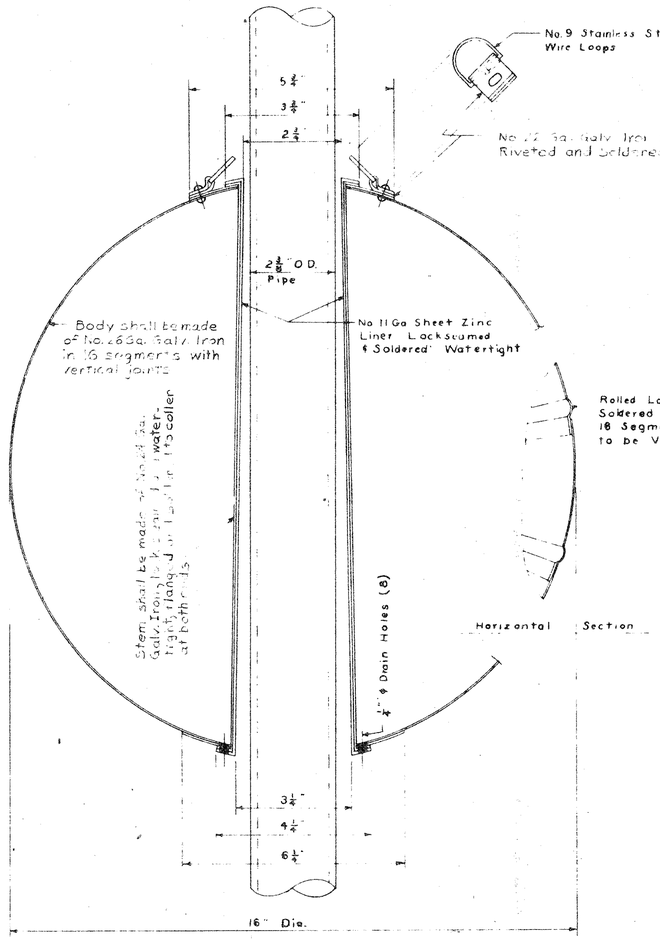

CROSS SECTION OF SIGNAL BALL

Half Size

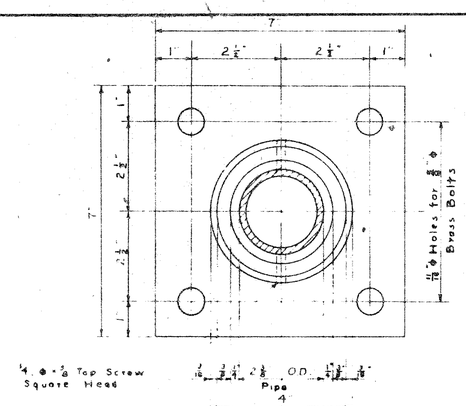

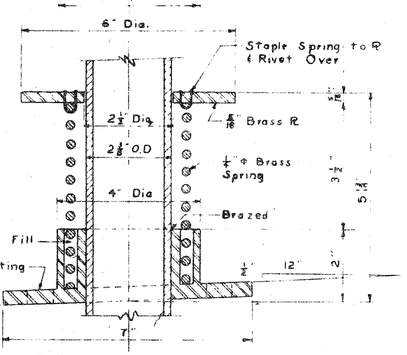

DETAIL OF BASE FLANGE FOR SIGNAL BALL

Half Size

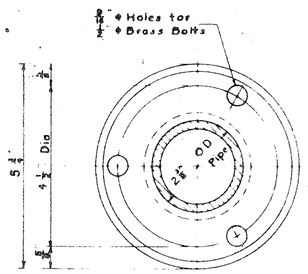

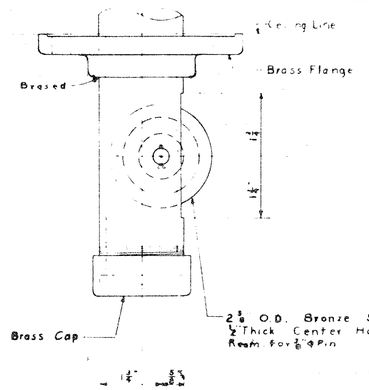

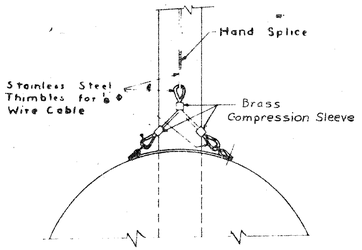

CABLE FASTENER DETAIL

Scale: 3" = 1'-0"

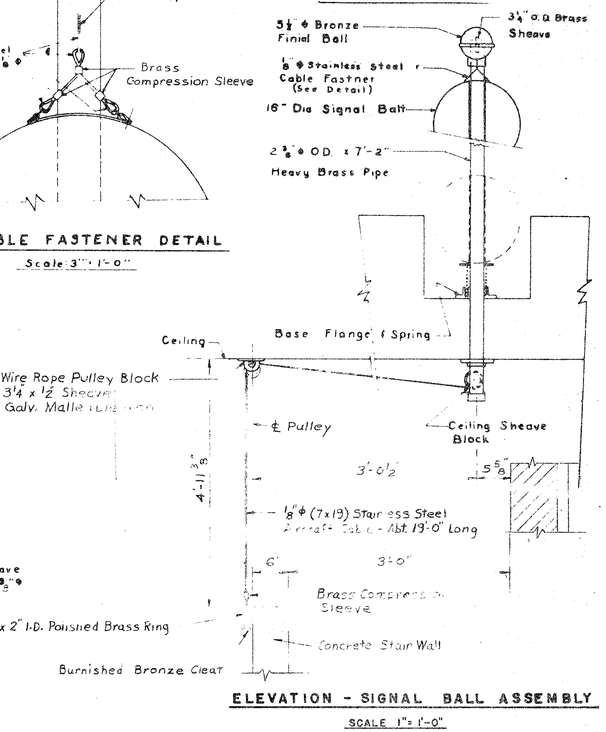

ELEVATION - SIGNAL BALL ASSEMBLY

SCALE 1" = 1'-0"

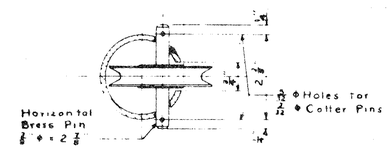

DETAIL OF CEILING SHEAVE BLOCK FOR SIGNAL BALL

Half Size

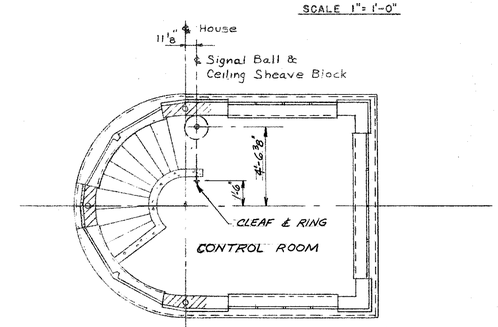

PLAN - SIGNAL BALL ASSEMBLY

SCALE 1/4" = 1'-0"

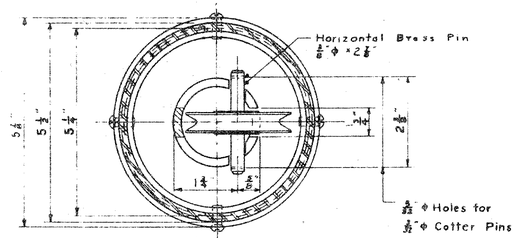

SECTION A-A

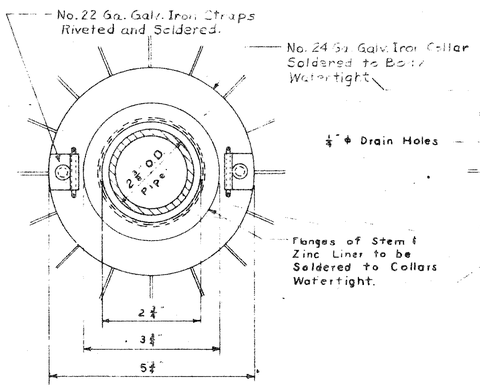

PLAN OF TOP COLLAR

Half Size

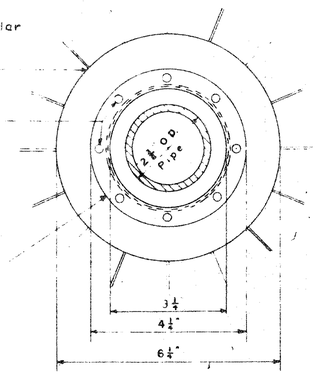

PLAN OF BOTTOM COLLAR

Half Size

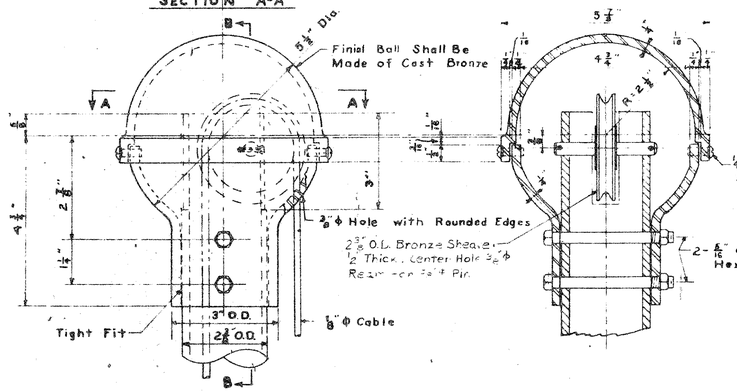

FINIAL BALL FOR SIGNAL BALL STAFF

Half Size

SECTION B-B

(JUNEAU AVE. BRIDGE PATTERN)

DEPARTMENT OF PUBLIC WORKS
BUREAU OF BRIDGES AND PUBLIC BUILDINGS
CITY OF MILWAUKEE

REVISIONS		
MARK	DATE	BY
A		
B		
C		
D		
E		
F		
G		
H		
I		
J		
K		
L		
M		

MICHIGAN ST. VERTICAL LIFT BRIDGE
OVER MILWAUKEE RIVER

OPERATOR'S HOUSE-SIGNAL BALL

DESIGNED BY: _____ TRACED BY: _____ DATE: _____
DRAWN BY: GTK CHECKED BY: PCB DATE: _____
APPROVED:— SCALE: AS NOTED

Norris A. Batalden — DATE 2-2-77 SHEET NUMBER 39
Henry J. Balconi — DATE 2-2-77 SET OF 85 SHEETS
Wendt — DATE 2-3-77 JOB NO. 505-98

Special Details

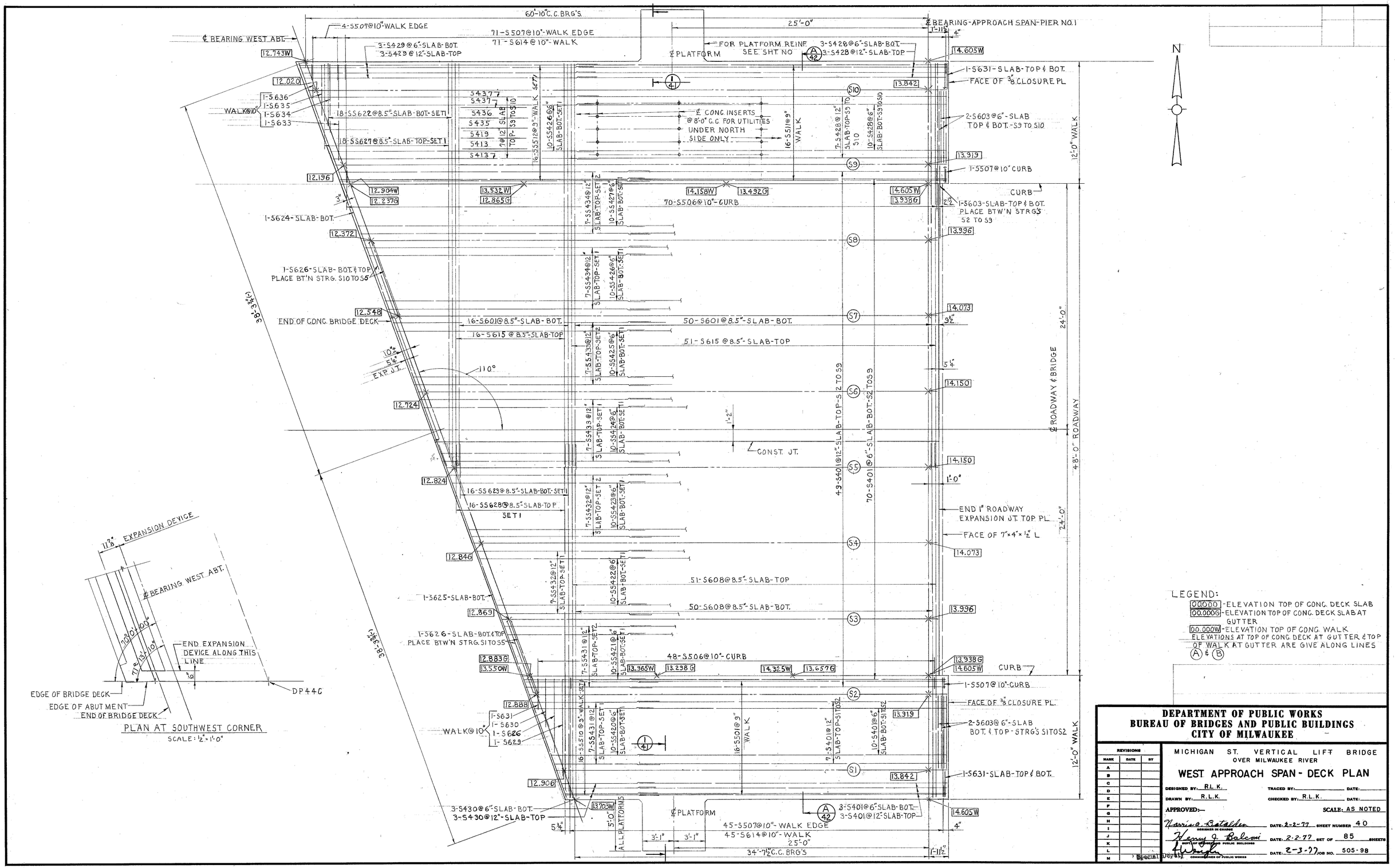
60'-10" C.C. BRG'S.
4-S507@10"-WALK EDGE
71-S507@10"-WALK EDGE
71-S614@10"-WALK
℄ BEARING WEST ABT.
℄ BEARING-APPROACH SPAN-PIER NO.1
3-S429@6"-SLAB-BOT.
3-S429@12"-SLAB-TOP
℄ PLATFORM
FOR PLATFORM REINF SEE SHT NO A/42
3-S428@6"-SLAB-BOT.
3-S428@12"-SLAB-TOP
12.743W
14.605W
12.020
13.842
1-S631-SLAB-TOP & BOT.
FACE OF 3/8" CLOSURE PL
WALK@10"
1-S636
1-S635
1-S634
1-S633
18-SS622@8.5"-SLAB-BOT-SET1
18-SS627@8.5"-SLAB-TOP-SET1
℄ CONC. INSERTS @ 8'-0" C.C. FOR UTILITIES UNDER NORTH SIDE ONLY
2-S603@6"-SLAB TOP & BOT.-S9 TO S10
13.919
1-S507@10" CURB
12.196
12.904W
12.237G
13.532W
12.865G
14.158W
13.492G
14.605W
13.938G
CURB
1-S603-SLAB-TOP & BOT. PLACE BTW'N STRG'S S2 TO S9
1-S624-SLAB-BOT.
70-S506@10"-CURB
12.372
13.996
1-S626-SLAB-BOT. & TOP PLACE BT'N STRG. S10 TO S5
12.548
END OF CONC. BRIDGE DECK
16-S601@8.5"-SLAB-BOT.
50-S601@8.5"-SLAB-BOT.
14.073
16-S615@8.5"-SLAB-TOP
51-S615@8.5"-SLAB-TOP
10"
5¼"
EXP. JT.
110°
14.150
12.724
CONST. JT.
12.824
16-SS623@8.5"-SLAB-BOT-SET1
16-SS628@8.5"-SLAB-TOP SET1
END 1" ROADWAY EXPANSION JT. TOP PL.
FACE OF 7"×4"×½" L
12.846
51-S608@8.5"-SLAB-TOP
1-S625-SLAB-BOT.
50-S608@8.5"-SLAB-BOT.
12.869
1-S626-SLAB-BOT. & TOP PLACE BTW'N STRG. S1 TO S5
48-S506@10"-CURB
12.883G
13.550W
13.965W
13.238G
14.325W
13.657G
13.938G
14.605W
CURB
1-S507@10"-CURB
12.888
FACE OF 3/8" CLOSURE PL.
WALK@10"
1-S631
1-S630
1-S626
1-S629
2-S603@6"-SLAB BOT. & TOP-STRG'S S1 TO S2
12.906
13.842
1-S631-SLAB-TOP & BOT.
3-S430@6"-SLAB-BOT.
3-S430@12"-SLAB-TOP
13.703W
℄ PLATFORM
3-S401@6"-SLAB-BOT.
3-S401@12"-SLAB-TOP
14.605W
45-S507@10"-WALK EDGE
45-S614@10"-WALK
25'-0"
34'-7½" C.C. BRG'S
ALL PLATFORMS
℄ ROADWAY & BRIDGE
24'-0"
48'-0" ROADWAY
12'-0" WALK
N
EXPANSION DEVICE
℄ BEARING WEST ABT.
END EXPANSION DEVICE ALONG THIS LINE
EDGE OF BRIDGE DECK
EDGE OF ABUTMENT
END OF BRIDGE DECK
DP440
PLAN AT SOUTHWEST CORNER
SCALE: ½" = 1'-0"
LEGEND:
00.000 - ELEVATION TOP OF CONC. DECK SLAB
00.000G - ELEVATION TOP OF CONC. DECK SLAB AT GUTTER
00.000W - ELEVATION TOP OF CONC. WALK
ELEVATIONS AT TOP OF CONC. DECK AT GUTTER & TOP OF WALK AT GUTTER ARE GIVE ALONG LINES (A) & (B)
DEPARTMENT OF PUBLIC WORKS
BUREAU OF BRIDGES AND PUBLIC BUILDINGS
CITY OF MILWAUKEE
REVISIONS
MARK DATE BY
MICHIGAN ST. VERTICAL LIFT BRIDGE
OVER MILWAUKEE RIVER
WEST APPROACH SPAN - DECK PLAN
DESIGNED BY: R.L.K.
DRAWN BY: R.L.K.
TRACED BY:
CHECKED BY: R.L.K.
DATE:
APPROVED:-
SCALE: AS NOTED
DESIGNER IN CHARGE
DATE: 2-2-77
SHEET NUMBER 40
BUREAU OF BRIDGES AND PUBLIC BUILDINGS
DATE: 2-2-77
SET OF 85 SHEETS
COMMISSIONER OF PUBLIC WORKS
DATE: 2-3-77
JOB NO. 505-98
Special Details

CPE-2

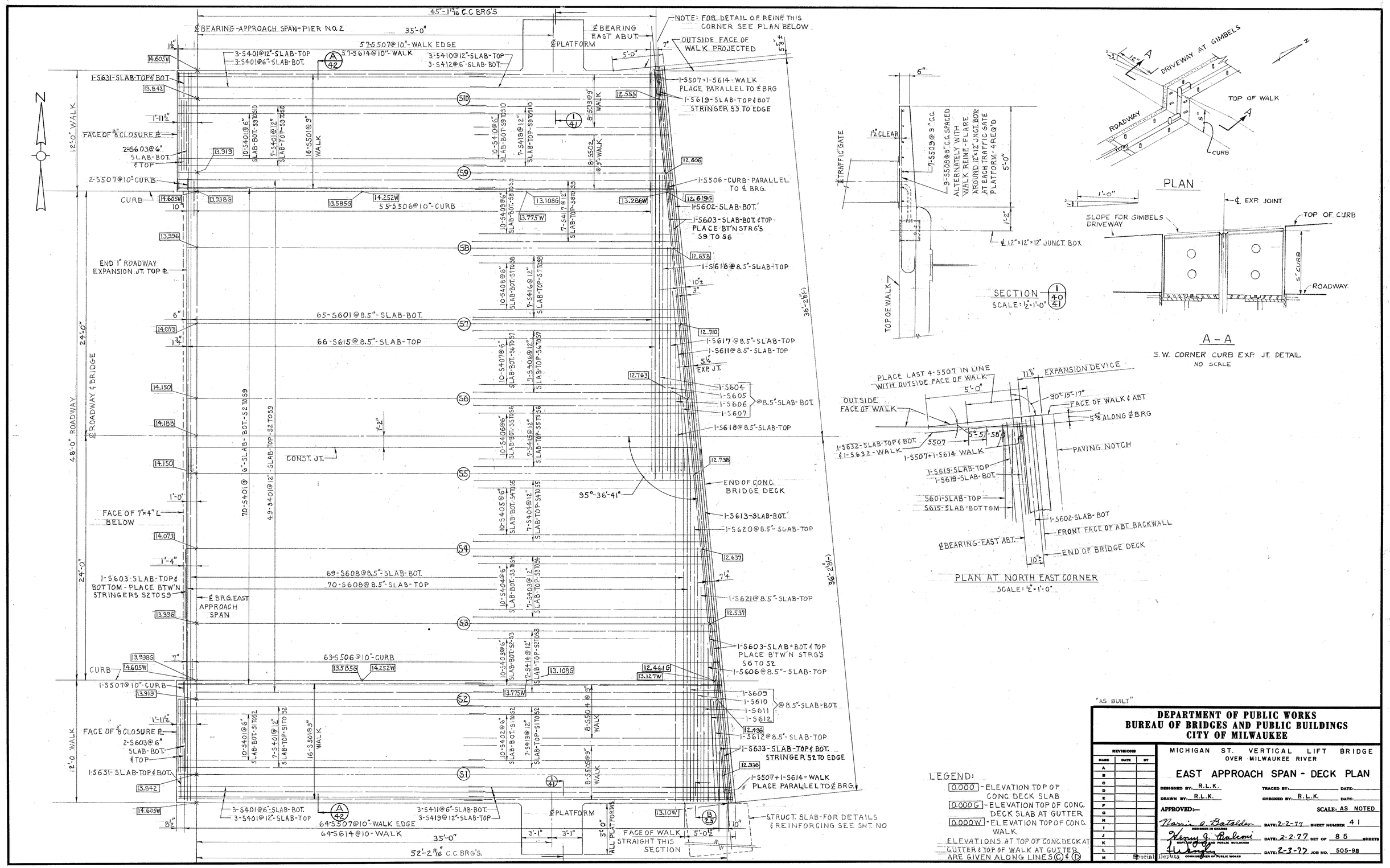
45'-1 13/16" C.C. BRG'S
℄ BEARING-APPROACH SPAN-PIER NO. 2
35'-0"
℄ BEARING EAST ABUT.
℄ PLATFORM
NOTE: FOR DETAIL OF REINF. THIS CORNER SEE PLAN BELOW
OUTSIDE FACE OF WALK PROJECTED
57-S507@10"-WALK EDGE
57-S614@10"-WALK
3-S401@12"-SLAB-TOP
3-S401@6"-SLAB-BOT.
3-S410@12"-SLAB-TOP
3-S412@6"-SLAB-BOT.
1-S631-SLAB-TOP & BOT.
FACE OF 3/8" CLOSURE PL
2-S603@6" SLAB-BOT. & TOP
2-S507@10"-CURB
CURB
12'-0" WALK
1-S507+1-S614-WALK PLACE PARALLEL TO ℄ BRG
1-S619-SLAB-TOP & BOT STRINGER S9 TO EDGE
1-S506-CURB-PARALLEL TO ℄ BRG.
1-S602-SLAB-BOT.
1-S603-SLAB-BOT. & TOP PLACE BT'N STRG'S S9 TO S6
END 1" ROADWAY EXPANSION JT. TOP PL
55-S506@10"-CURB
1-S616@8.5"-SLAB-TOP
65-S601@8.5"-SLAB-BOT.
66-S615@8.5"-SLAB-TOP
1-S617@8.5"-SLAB-TOP
1-S611@8.5"-SLAB-TOP
EXP. JT.
1-S604
1-S605
1-S606
1-S607
@8.5"-SLAB-BOT.
1-S618@8.5"-SLAB-TOP
24'-0" ROADWAY & BRIDGE
48'-0" ROADWAY
36'-2 1/8"(-)
CONST. JT.
END OF CONC. BRIDGE DECK
95°-36'-41"
70-S401@6"-SLAB-BOT.-S2 TO S9
49-S401@12"-SLAB-TOP-S2 TO S9
FACE OF 7"x4" L BELOW
1-S613-SLAB-BOT.
1-S620@8.5"-SLAB-TOP
1-S603-SLAB-TOP & BOTTOM-PLACE BTW'N STRINGERS S2 TO S9
69-S608@8.5"-SLAB-BOT.
70-S608@8.5"-SLAB-TOP
℄ BRG. EAST APPROACH SPAN
1-S621@8.5"-SLAB-TOP
63-S506@10"-CURB
1-S603-SLAB-BOT. & TOP PLACE B'TW'N STRG'S S6 TO S2
1-S606@8.5"-SLAB-TOP
1-S507@10"-CURB
1-S609
1-S610
1-S611
1-S612
@8.5"-SLAB-BOT.
1-S612@8.5"-SLAB-TOP
1-S633-SLAB-TOP & BOT. STRINGER S2 TO EDGE
1-S507+1-S614-WALK PLACE PARALLEL TO ℄ BRG.
3-S401@6"-SLAB-BOT.
3-S401@12"-SLAB-TOP
64-S507@10"-WALK EDGE
64-S614@10-WALK
3-S411@6"-SLAB-BOT.
3-S413@12"-SLAB-TOP
℄ PLATFORM
FACE OF WALK STRAIGHT THIS SECTION
STRUCT. SLAB-FOR DETAILS & REINFORCING SEE SHT. NO
52'-2 11/16" C.C. BRG'S.
DRIVEWAY AT GIMBELS
TOP OF WALK
ROADWAY
CURB
PLAN
℄ EXP. JOINT
SLOPE FOR GIMBELS DRIVEWAY
TOP OF CURB
5" CURB
ROADWAY
A - A
S.W. CORNER CURB EXP. JT. DETAIL
NO SCALE
℄ TRAFFIC GATE
1 1/2" CLEAR
7-S509@9" C.C.
9-S508@8" C.C. SPACED ALTERNATELY WITH WALK REINF.-FLARE AROUND 12x12 JNCT. BOX AT EACH TRAFFIC GATE PLATFORM-4 REQ'D
℄ 12"x12"x12" JUNCT. BOX
SECTION
SCALE: 1/2"=1'-0"
PLACE LAST 4-S507 IN LINE WITH OUTSIDE FACE OF WALK
EXPANSION DEVICE
OUTSIDE FACE OF WALK
90°-15'-17"
FACE OF WALK & ABT
5 5/8" ALONG ℄ BRG
1-S632-SLAB-TOP & BOT. & 1-S632-WALK
1-S507+1-S614 WALK
PAVING NOTCH
1-S619-SLAB-TOP
1-S619-SLAB-BOT.
S601-SLAB-TOP
S615-SLAB-BOTTOM
1-S602-SLAB-BOT
FRONT FACE OF ABT. BACKWALL
℄ BEARING-EAST ABT.
END OF BRIDGE DECK
PLAN AT NORTH EAST CORNER
SCALE: 1/2"=1'-0"
LEGEND:
0.000 - ELEVATION TOP OF CONC. DECK SLAB
0.000G - ELEVATION TOP OF CONC. DECK SLAB AT GUTTER
0.000W - ELEVATION TOP OF CONC. WALK
ELEVATIONS AT TOP OF CONC. DECK AT GUTTER & TOP OF WALK AT GUTTER ARE GIVEN ALONG LINES Ⓒ & Ⓓ
"AS BUILT"
DEPARTMENT OF PUBLIC WORKS
BUREAU OF BRIDGES AND PUBLIC BUILDINGS
CITY OF MILWAUKEE
REVISIONS
MARK DATE BY
MICHIGAN ST. VERTICAL LIFT BRIDGE OVER MILWAUKEE RIVER
EAST APPROACH SPAN - DECK PLAN
DESIGNED BY: R.L.K.
DRAWN BY: R.L.K.
TRACED BY:
CHECKED BY: R.L.K.
DATE:
APPROVED:-
SCALE: AS NOTED
DESIGNER IN CHARGE DATE: 2-2-77
SUPT. OF BRIDGES AND PUBLIC BUILDINGS DATE: 2-2-77
COMMISSIONER OF PUBLIC WORKS DATE: 2-3-77
SHEET NUMBER 41
SET OF 85 SHEETS
JOB NO. 505-98
Special Replates

CPE-2

NOTES: APPROACH SPANS

PLACE LONG. SLAB REINFORCING SYMMETRICALLY BETWEEN SUPPORTING MEMBERS.

TO DETERMINE "t" AFTER ALL STRUCTURAL STEEL HAS BEEN ERECTED, ELEVATIONS OF THE TOP FLANGES, TOP OF SPLICE, OR TOP OF COVERPLATES, WHICHEVER APPLIES, SHALL BE TAKEN AT CENTERLINE OF BEARINGS, CENTERLINE OF FIELD SPLICES, AND AT QUARTER POINTS OF EACH SPAN WHICH ARE MORE THAN SIX FEET FROM A FIELD SPLICE. THESE ELEVATIONS SUBTRACTED FROM THE GRADE ELEVATIONS, ADJUSTED FOR DEADLOAD DEFLECTION OF THE CONCRETE, MINUS THE SLAB DEPTH, PLUS THE STEEL THICKNESS TO BOTTOM OF TOP FLANGE, EQUALS THE HAUNCH DEPTH "t".

NOTES: EXPANSION JOINT

APPLY SEALANT ALONG BOTTOM AND SIDES OF TROUGH AS RECOMMENDED BY MFG. PRIOR TO PLACING EXPANSION DEVICE. CONCRETE MUST BE FREE OF ALL DEBRIS.

EXPANSION DEVICE ANCHORAGE IN CURBS AND SIDEWALKS SHALL BE WITH EITHER EXPANSION TYPE ANCHOR BOLTS OR EPOXY GROUTED TYPE ANCHOR BOLTS.

EACH STUD NO.4 OR ANCHORAGE DEVICE NO.10 SHALL HAVE A WASHER AND HEX NUT OR TORQUE NUT. TIGHTEN ALL NUTS TO MFG'S. RECOMMENDED TORQUE.

CLEAN BOLT HOLE CAVITY AND FILL CAVITY DEPTH WITH SEALANT AND/OR BOLT HOLE PLUG. CLEAN EXCESS SEALANT FROM SURFACE.

ELASTOMERIC JOINT ASSEMBLY INCLUDING ANCHORAGE ARMOR AND HARDWARE WILL BE PAID FOR BY THE LINEAL FOOT FOR ELASTOMERIC JOINT SEAL.

NOTES: DECK REINFORCEMENT

BOT. TRANS. BARS IN SLAB SHALL BE SUPPORTED BY CONT. BAR CHAIRS ON OR ADJ. TO EACH STRINGER AND BY INDIVIDUAL BAR CHAIRS @ 3'-0" CENTERS AT APPROX. THE 1/3 POINTS BETWEEN STRINGERS.

TOP LONG. BAR STEEL SHALL BE SUPPORTED BY CONT. BAR CHAIRS AT APPROX. 4'-0" CENTERS.

LEGEND: EXPANSION JOINT

1. BAR-2½"×⅜"-BUILD TO CONFORM TO ROADWAY CROWN.
2. L-3"×2½"×⅜"×3" LONG, PLACE MIDWAY BETWEEN STRINGERS AND AT 3'-0" CENTERS ON ABUTMENT SIDE. IF NECESSARY TURN L 180° WELD TO NO. 9. PROVIDE 15/16" ϕ HOLE IN 2½" LEG FOR NO. 3.
3. ¾" ϕ ROD, W/2 STD. NUTS & WASHERS, THREAD 4".
4. THREADED STUDS PROVIDED BY MANUF. WELD TO NO. 9.
5. ELASTOMERIC JOINT FEL-SPAN MODEL T-30 FOR EXP. MOVEMENT OF 3" OR LESS.
6. ½" ϕ × 0'-4" STUDS AT 0'-6" ALTERNATE CENTERS. BEND AFTER WELDING TO NO. 1.
7. ⅜" PLATE. WELD TO NO. 1 AND TO NO. 9.
8. FABRICATE FROM ⅜" WELDED PLATES.
9. BAR-3¾"×⅜"- WELD TO NO. 1.
10. THREADED ANCHORAGE DEVICES PROVIDED BY MFG.
11. ¾" ϕ ROD, THRD. 4". WELD NUT TO NO. 2
12. ⅜" PLATE AT CURB WELD TO NO. 9

DIMENSION	"A"	"B"	"C"
FEL-SPAN	5¼"	1¾"	2¼"

TEMPERATURE TABLE

TEMP °F	JOINT OPENING	
	WEST ABT.	EAST ABT.
90°	1 9/16"	1 3/8"
80°	1 5/8"	1 7/16"
70°	1 11/16"	1 7/16"
60°	1 3/4"	1 1/2"
50°	1 3/4"	1 1/2"
45°	1 3/4"	1 9/16"
40°	1 13/16"	1 9/16"
30°	1 7/8"	1 5/8"

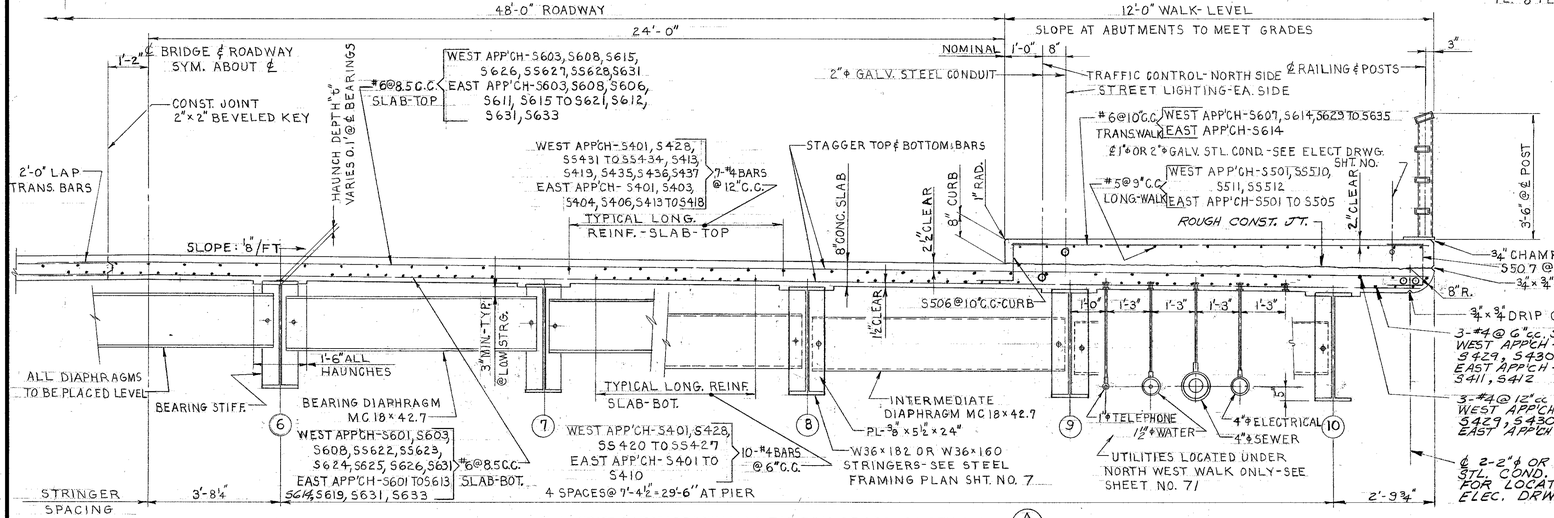

APPROACH SPAN-HALF DECK CROSS SECTION (A/40)
SCALE: ½" = 1'-0"

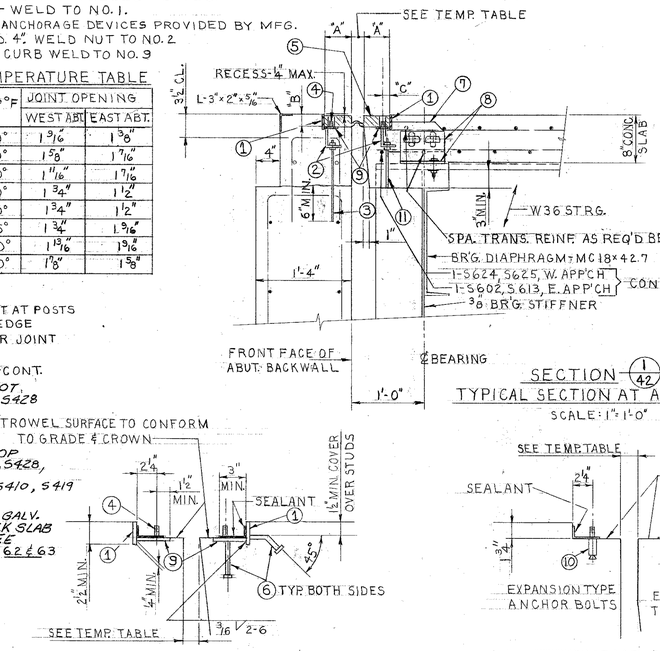

SECTION 1/42
TYPICAL SECTION AT ABUTMENTS
SCALE: 1" = 1'-0"

ANCHORAGE DETAILS
(ROADWAY SECTION)
SCALE: 1½" = 1'-0"

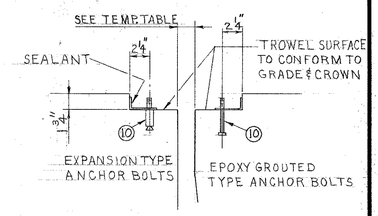

ANCHORAGE DETAILS
(SIDEWALK)
SCALE: 1½" = 1'-0"

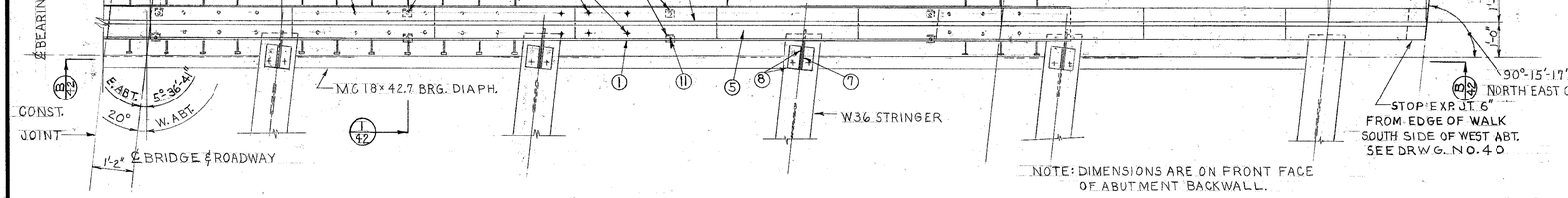

PLAN OF EXPANSION JOINT AT ABUTMENT
SCALE: ½" = 1'-0"

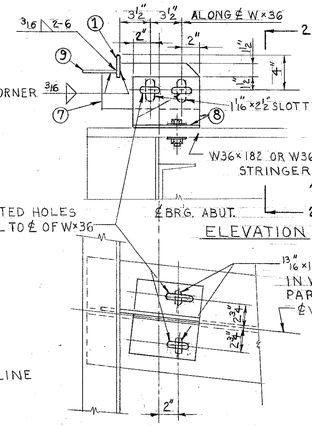

ELEVATION

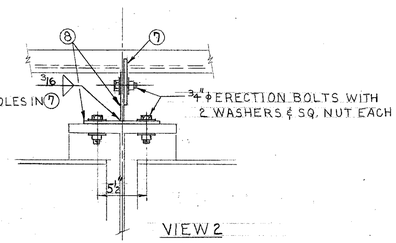

VIEW 2

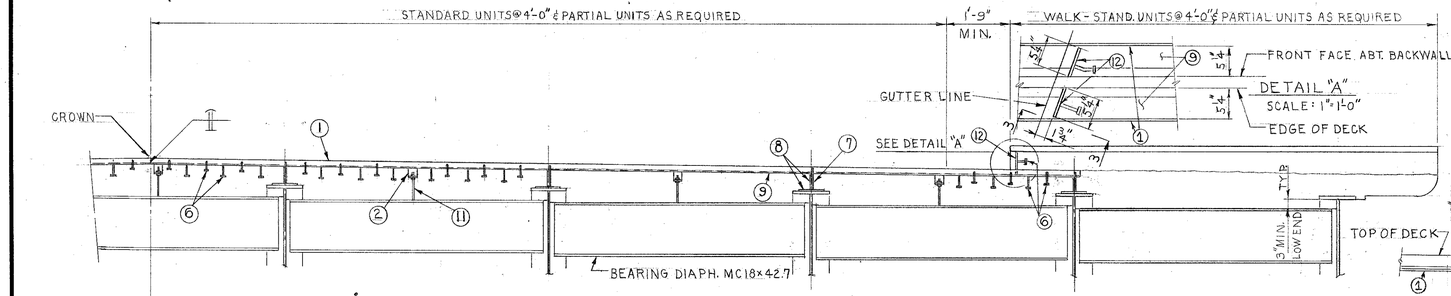

DETAIL "A"
SCALE: 1" = 1'-0"

SECTION B/42
SCALE: ½" = 1'-0"

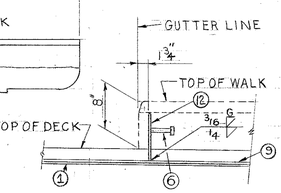

SECTION 3-3
SCALE: 1" = 1'-0"

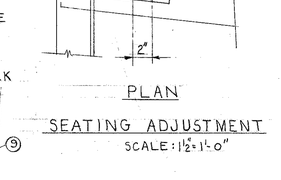

PLAN

SEATING ADJUSTMENT
SCALE: 1½" = 1'-0"

DEPARTMENT OF PUBLIC WORKS
BUREAU OF BRIDGES AND PUBLIC BUILDINGS
CITY OF MILWAUKEE

REVISIONS		
MARK	DATE	BY
A		
B		
C		
D		
E		
F		
G		
H		
I		
J		
K		
L		
M		

MICHIGAN ST. VERTICAL LIFT BRIDGE OVER MILWAUKEE RIVER

APPROACH SPANS - CROSS SECTIONS & EXPANSION JOINTS

DESIGNED BY: R.L.K. TRACED BY: DATE:
DRAWN BY: R.L.K. CHECKED BY: R.L.K. DATE:
APPROVED:- SCALE: AS NOTED

Narisa Bataldin — DESIGNER IN CHARGE — DATE: 2-2-77 SHEET NUMBER 42
Henry J. Balcom — ASST. ENGINEER OF PUBLIC BUILDINGS — DATE: 2-2-77 SET OF 85 SHEETS
Special Deputy — COMMISSIONER OF PUBLIC WORKS — DATE: 2-3-77 JOB NO. 505-98

CPE-2

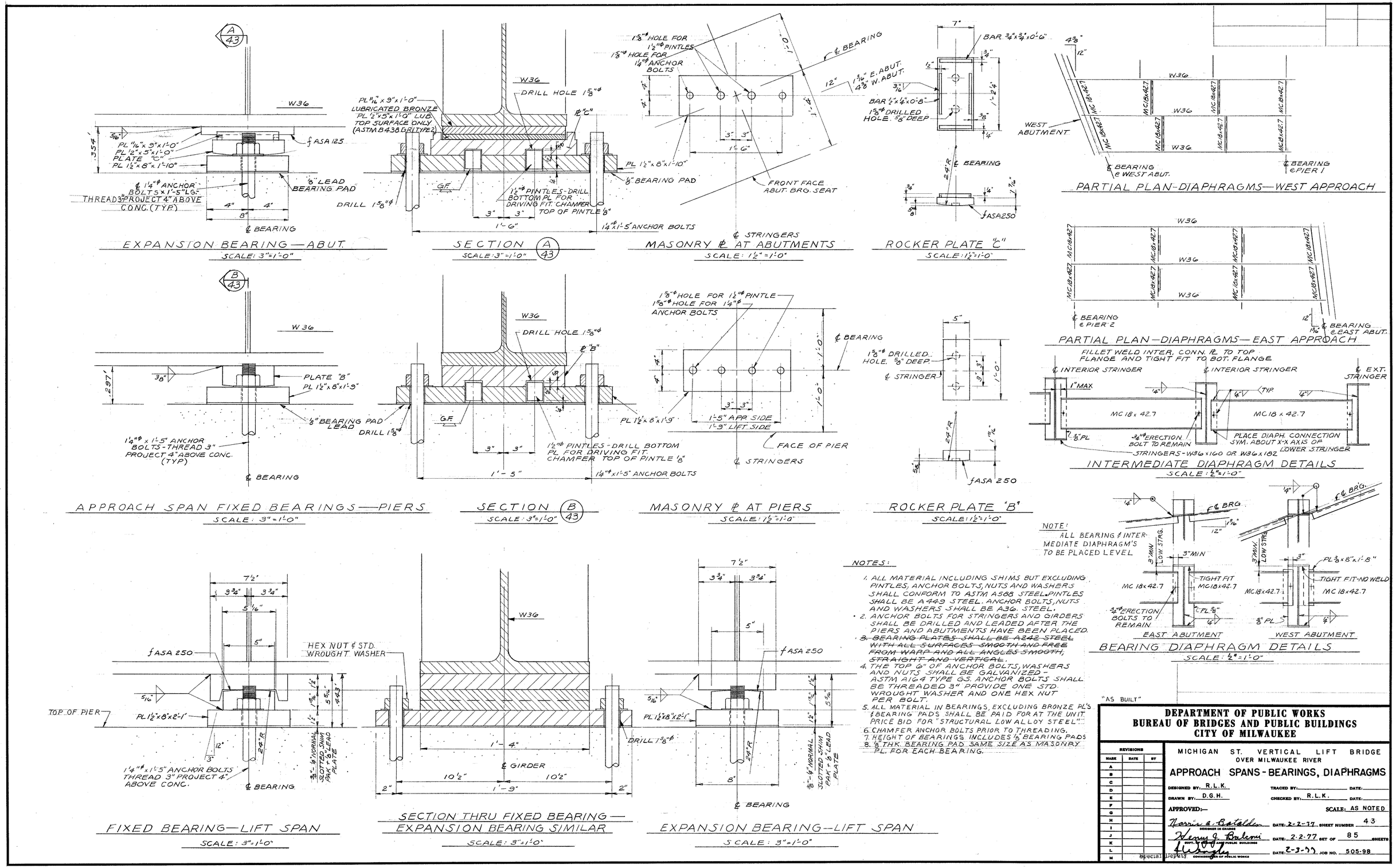

NOTES:

1. ALL MATERIAL INCLUDING SHIMS BUT EXCLUDING PINTLES, ANCHOR BOLTS, NUTS AND WASHERS SHALL CONFORM TO ASTM A588 STEEL. PINTLES SHALL BE A449 STEEL. ANCHOR BOLTS, NUTS AND WASHERS SHALL BE A36. STEEL.
2. ANCHOR BOLTS FOR STRINGERS AND GIRDERS SHALL BE DRILLED AND LEADED AFTER THE PIERS AND ABUTMENTS HAVE BEEN PLACED.
3. ~~BEARING PLATES SHALL BE A242 STEEL WITH ALL SURFACES SMOOTH AND FREE FROM WARP AND ALL ANGLES SMOOTH, STRAIGHT AND VERTICAL.~~
4. THE TOP 6" OF ANCHOR BOLTS, WASHERS AND NUTS SHALL BE GALVANIZED - ASTM A164 TYPE G5. ANCHOR BOLTS SHALL BE THREADED 3" PROVIDE ONE STD. WROUGHT WASHER AND ONE HEX NUT PER BOLT.
5. ALL MATERIAL IN BEARINGS, EXCLUDING BRONZE PL'S & BEARING PADS SHALL BE PAID FOR AT THE UNIT PRICE BID FOR "STRUCTURAL LOW ALLOY STEEL".
6. CHAMFER ANCHOR BOLTS PRIOR TO THREADING.
7. HEIGHT OF BEARINGS INCLUDES 1/8" BEARING PADS
8. 1/8" THK. BEARING PAD SAME SIZE AS MASONRY PL. FOR EACH BEARING.

"AS BUILT"

DEPARTMENT OF PUBLIC WORKS
BUREAU OF BRIDGES AND PUBLIC BUILDINGS
CITY OF MILWAUKEE

REVISIONS		
MARK	DATE	BY
A		
B		
C		
D		
E		
F		
G		
H		
I		
J		
K		
L		
M		

MICHIGAN ST. VERTICAL LIFT BRIDGE
OVER MILWAUKEE RIVER

APPROACH SPANS - BEARINGS, DIAPHRAGMS

DESIGNED BY: R.L.K. TRACED BY: DATE:
DRAWN BY: D.G.H. CHECKED BY: R.L.K. DATE:
APPROVED:— SCALE: AS NOTED
Norris A. Batalda — DESIGNER IN CHARGE — DATE: 2-2-77 SHEET NUMBER 43
Henry J. Bukowski — DIV'L ENGINEER AND PUBLIC BUILDINGS — DATE: 2-2-77 SET OF 85 SHEETS
Special Deputy — COMMISSIONER OF PUBLIC WORKS — DATE: 2-3-77 JOB NO. 505-98

CPE-2

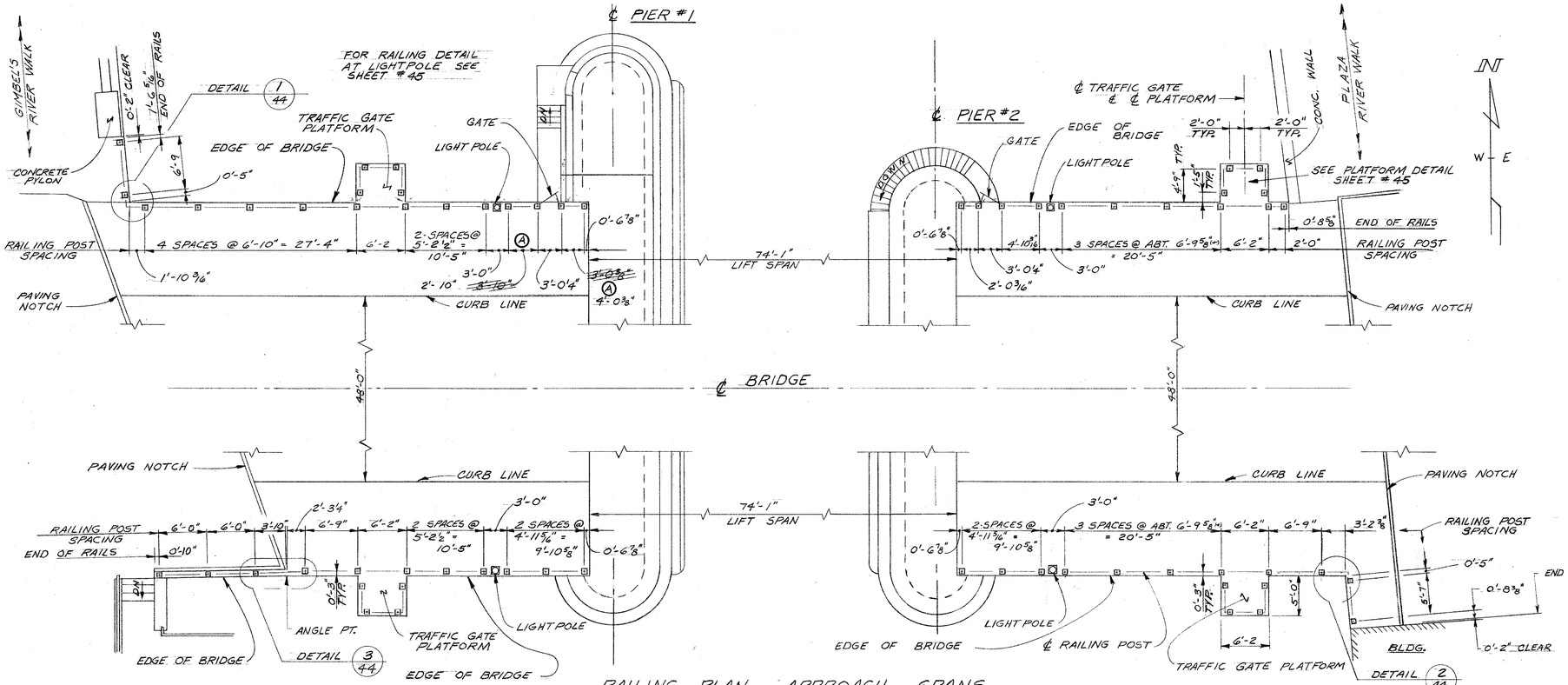

RAILING PLAN - APPROACH SPANS
SCALE 1/8" = 1'-0"

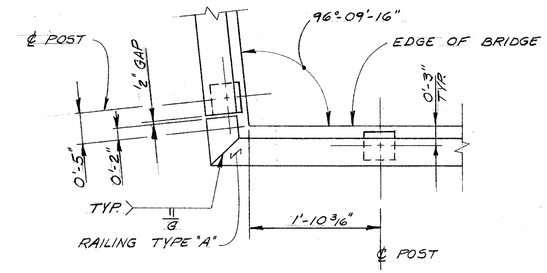

DETAIL 1/44
SCALE 1" = 1'-0"

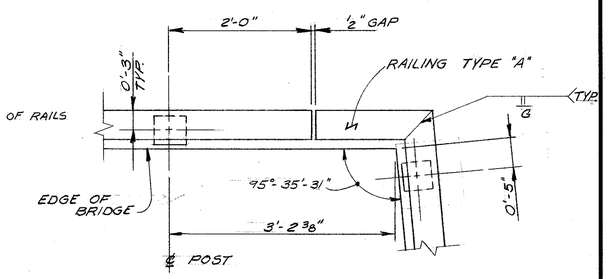

DETAIL 2/44
SCALE 1" = 1'-0"

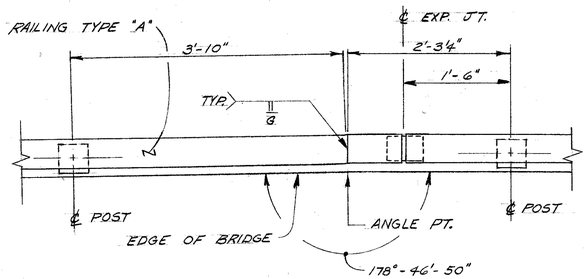

DETAIL 3/44
SCALE 1" = 1'-0"

DEPARTMENT OF PUBLIC WORKS
BUREAU OF BRIDGES AND PUBLIC BUILDINGS
CITY OF MILWAUKEE

REVISIONS		
MARK	DATE	BY
A	1-25-78	JTA
B		
C		
D		
E		
F		
G		
H		
I		
J		
K		
L		
M		

MICHIGAN ST. VERTICAL LIFT BRIDGE
OVER MILWAUKEE RIVER

RAILING PLAN

DESIGNED BY: J. T. A. TRACED BY: DATE:
DRAWN BY: J. T. A. CHECKED BY: PCB DATE:
APPROVED:— SCALE: AS NOTED
Norris G. Batalden DATE: 2-2-77 SHEET NUMBER 44
DESIGNER IN CHARGE
Henry J. Balconi DATE: 2-2-77 SET OF 85 SHEETS
SUPT. OF BRIDGES AND PUBLIC BUILDINGS
F. Wenger DATE: 2-3-77 JOB NO. 505-98
COMMISSIONER OF PUBLIC WORKS
Special Deputy

CPE-2

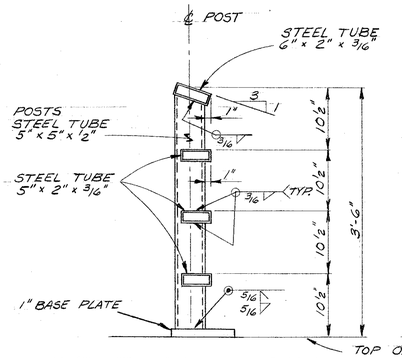

TYPICAL RAILING SECTION
TYPE "A"
SCALE: 1" = 1'-0"

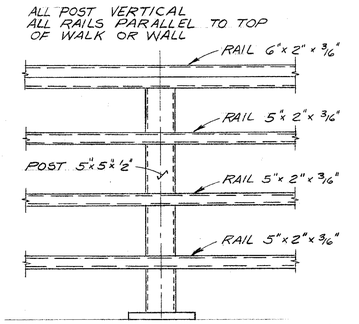

TYPICAL RAILING ELEVATION
SCALE: 1" = 1'-0"

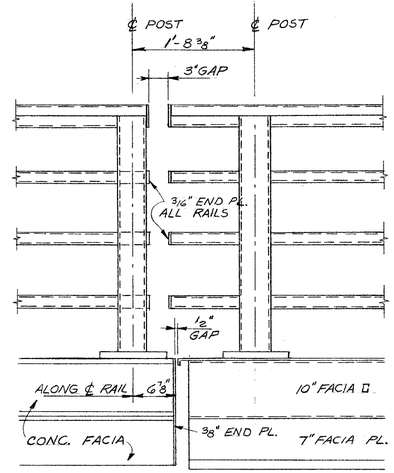

RAILING DETAIL AT JOINT BETWEEN APPROACH AND LIFT SPAN
SCALE 1" = 1'-0"

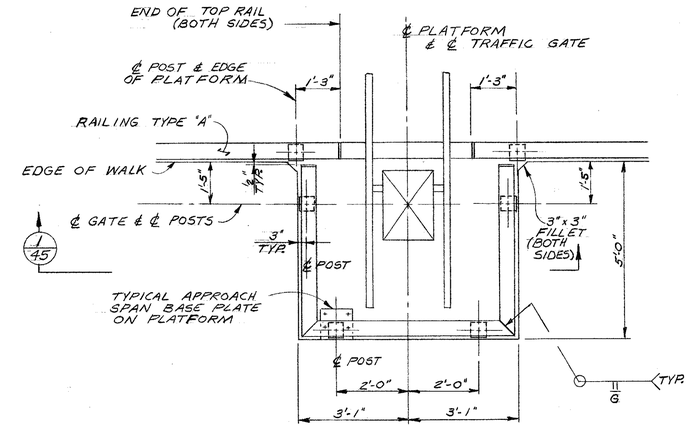

PLAN - TRAFFIC GATE PLATFORM
SCALE: 1/2" = 1'-0"

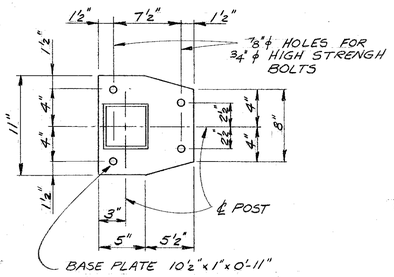

RAIL POST BASE PLATE
LIFT SPAN
SCALE 1½" = 1'-0"

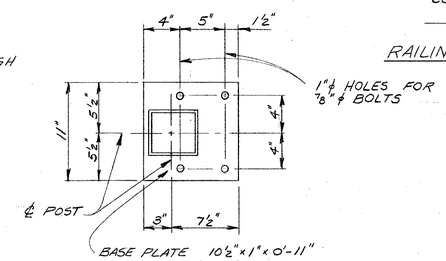

RAIL POST BASE PLATE
APPROACH SPAN AND WALLS
SCALE 1½" = 1'-0"

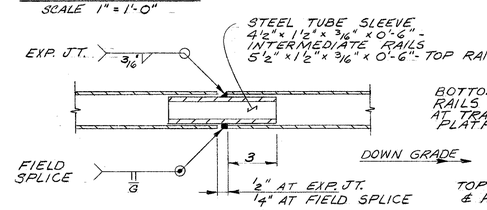

DETAIL - RAIL FIELD SPLICE AND
RAIL EXPANSION JOINT
SCALE 3" = 1'-0"

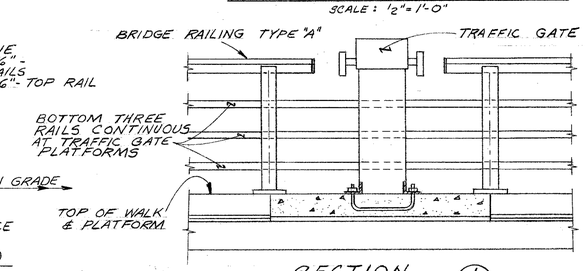

SECTION 1/45
SCALE 1/2" = 1'-0"

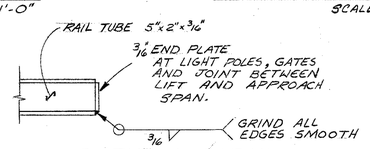

DETAIL AT END OF RAIL

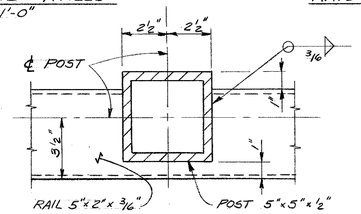

SECTION THRU RAILING
SCALE 3" = 1'-0"

NOTE:
BEFORE RAILING IS FABRICATED TAKE FIELD MEASUREMENTS TO DETERMINE EXACT LENGTHS AND ELEVATIONS

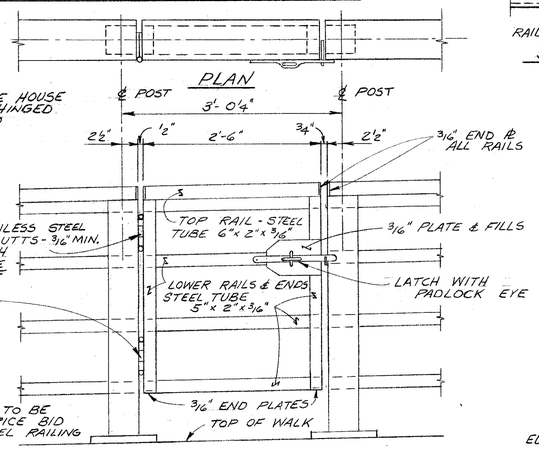

GATE ELEVATION
SCALE: 1" = 1'-0"

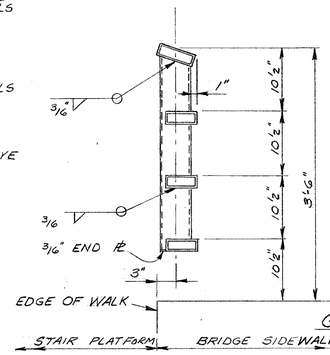

GATE SECTION
SCALE: 1" = 1'-0"

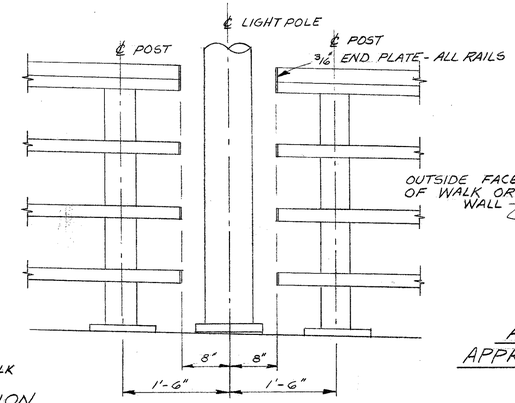

RAILING DETAIL AT LIGHT POLE
SCALE 1" = 1'-0"

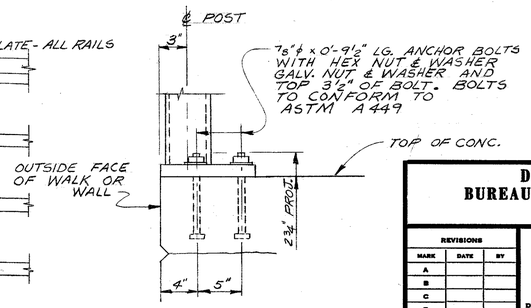

ANCHOR BOLT DETAIL
APPROACH SPANS & WALLS
SCALE 1½" = 1'-0"

DEPARTMENT OF PUBLIC WORKS
BUREAU OF BRIDGES AND PUBLIC BUILDINGS
CITY OF MILWAUKEE

REVISIONS		
MARK	DATE	BY
A		
B		
C		
D		
E		
F		
G		
H		
I		
J		
K		
L		
M		

MICHIGAN ST. VERTICAL LIFT BRIDGE
OVER MILWAUKEE RIVER
RAILING DETAILS

DESIGNED BY: _____ TRACED BY: _____ DATE: _____
DRAWN BY: J. T. A. CHECKED BY: PCB DATE: _____
APPROVED:— SCALE: AS NOTED
Norris A. Bartelds — DESIGNER IN CHARGE — DATE: 2-2-77 SHEET NUMBER 45
Henry J. Balcomi — CITY, OF MILWAUKEE PUBLIC BUILDINGS — DATE: 2-2-77 SET OF 85 SHEETS
Special Deputy — COMMISSIONER OF PUBLIC WORKS — DATE: 2-7-77 JOB NO. 505-98

CPE-2

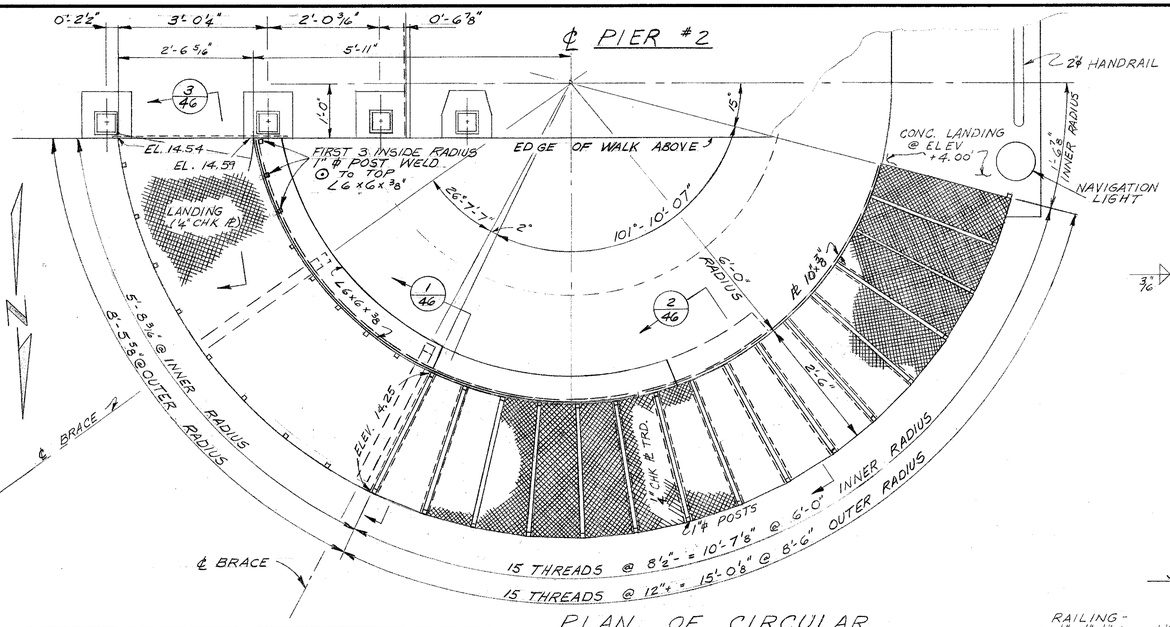

PLAN OF CIRCULAR STAIRS
SCALE ¾" = 1'-0"

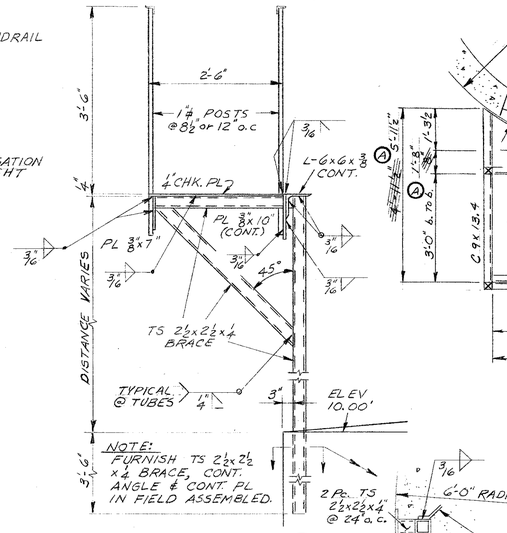

SECTION 1/46
SCALE ¾" = 1'-0"

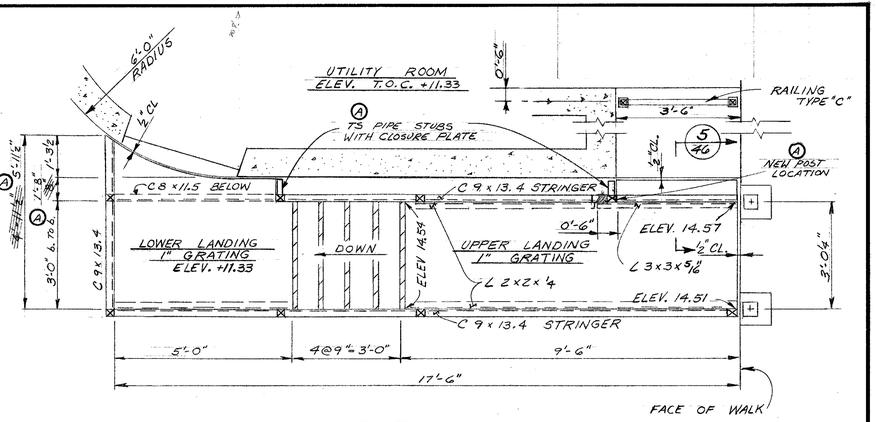

PLAN OF EXTERIOR OPERATOR'S HOUSE STAIR
SCALE ½" = 1'-0"

NOTE:
1. ALL STAIR LANDING SHALL BE OPEN GRID "X-BAR" PRESS LOCKED TYPE "A-A" W/ 1" x ⅛" BARS & CHECKERED PLATE NOSING.
2. STAIR TREADS TO BE "BORDEN" "TYPE W18" OR "IRVING" "TYPE A-A" - 1" x ⅜" BEARING BARS W/ CHK. PL. NOSING - 9¾" WIDE

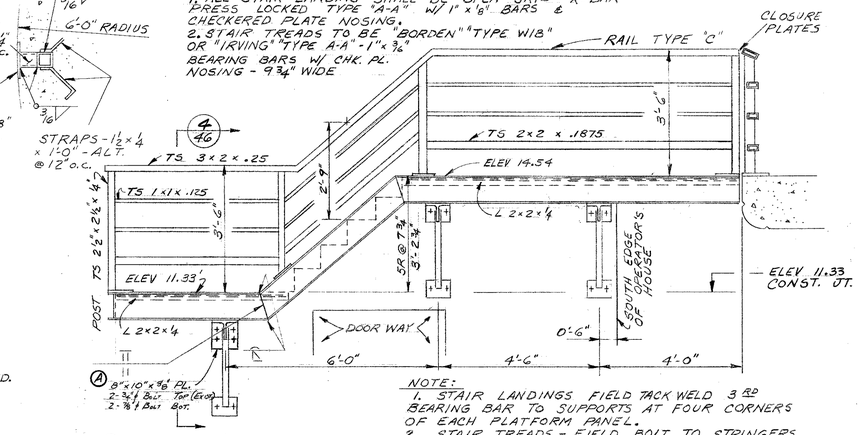

NOTE:
1. STAIR LANDINGS FIELD TACK WELD 3RD BEARING BAR TO SUPPORTS AT FOUR CORNERS OF EACH PLATFORM PANEL.
2. STAIR TREADS - FIELD BOLT TO STRINGERS w/ 2-⅜" BOLTS - EACH SIDE.

WEST ELEVATION
SCALE ½" = 1'-0"

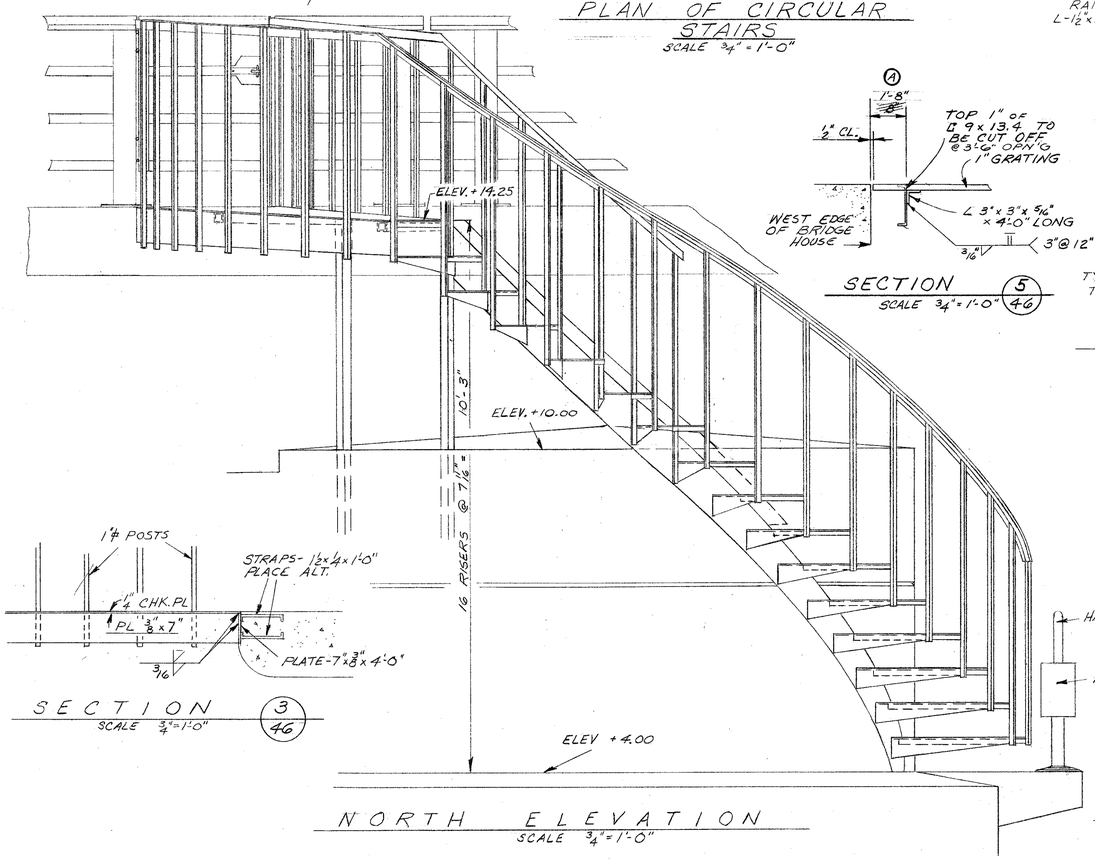

NORTH ELEVATION
SCALE ¾" = 1'-0"

SECTION 5/46
SCALE ¾" = 1'-0"

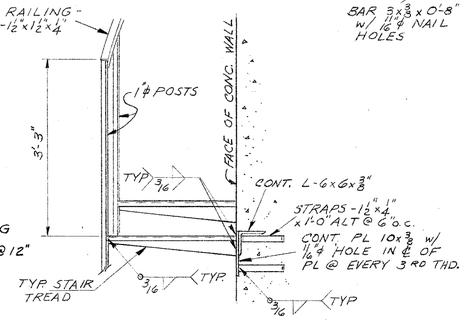

SECTION 2/46
SCALE ¾" = 1'-0"

SECTION 3/46
SCALE ¾" = 1'-0"

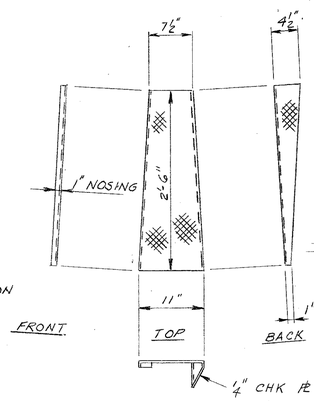

TYPICAL TREAD FOR CIRCULAR STAIR
SCALE 1" = 1'-0"

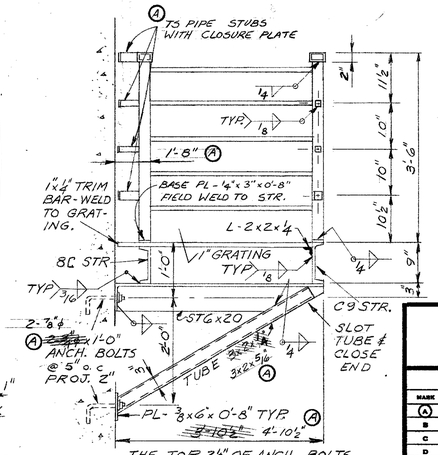

THE TOP 2⅛" OF ANCH. BOLTS, NUTS, AND WASHERS SHALL BE GALV. ASTM A164 TYPE G5

SECTION 4/46
SCALE ¾" = 1'-0"

NOTE:
STAIR THREADS & LANDING INCLUDED IN PRICE BID FOR AND IS 1" "OPEN STEEL GRID FLOOR"

DEPARTMENT OF PUBLIC WORKS
BUREAU OF BRIDGES AND PUBLIC BUILDINGS
CITY OF MILWAUKEE

REVISIONS		
MARK	DATE	BY
A	1-25-78	JTA
B		
C		
D		
E		
F		
G		
H		
I		
J		
K		
L		
M		

MICHIGAN ST. VERTICAL LIFT BRIDGE
OVER MILWAUKEE RIVER
CIRCULAR STAIRS - OPERATOR'S HOUSE STAIR

DESIGNED BY: J.T.A. TRACED BY: DATE:
DRAWN BY: J.T.A. CHECKED BY: PCB DATE:
APPROVED:— SCALE: AS NOTED
Norris A. Batalden DESIGNER IN CHARGE DATE: 2-2-77 SHEET NUMBER 46
Henry J. Balcomi SUPT. OF BRIDGES & PUBLIC BUILDINGS DATE: 2-2-77 SET OF 85 SHEETS
COMMISSIONER OF PUBLIC WORKS DATE: 2-3-77 JOB NO. 505-98

SPECIAL FORM

CPE-2

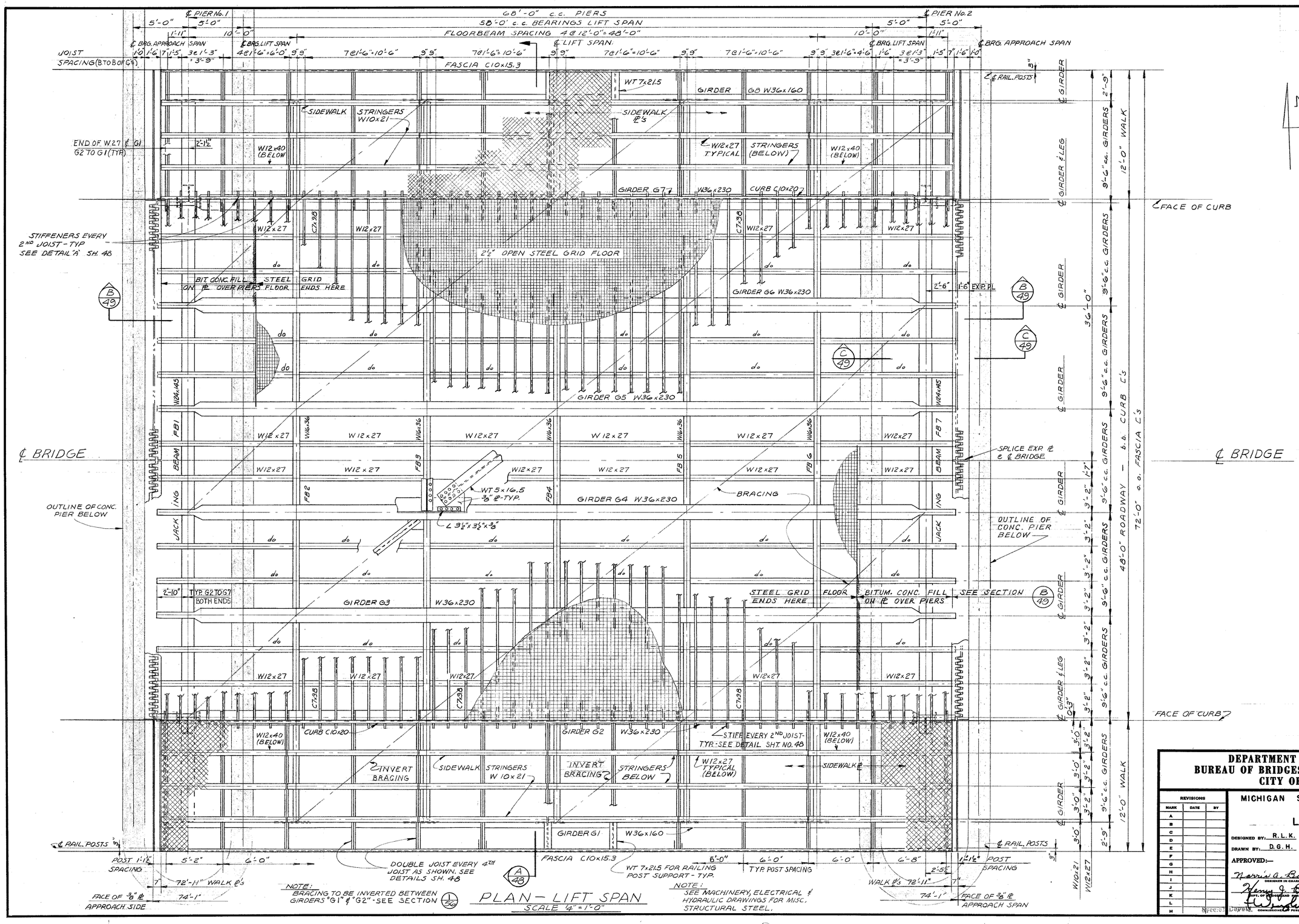

NOTE: BRACING TO BE INVERTED BETWEEN GIRDERS "G1" & "G2" - SEE SECTION 1/56

NOTE: SEE MACHINERY, ELECTRICAL & HYDRAULIC DRAWINGS FOR MISC. STRUCTURAL STEEL.

PLAN - LIFT SPAN
SCALE ¼" = 1'-0"

DEPARTMENT OF PUBLIC WORKS
BUREAU OF BRIDGES AND PUBLIC BUILDINGS
CITY OF MILWAUKEE

REVISIONS		
MARK	DATE	BY
A		
B		
C		
D		
E		
F		
G		
H		
I		
J		
K		
L		
M		

MICHIGAN ST VERTICAL LIFT BRIDGE
OVER MILWAUKEE RIVER

LIFT SPAN - PLAN

DESIGNED BY: R.L.K. TRACED BY: DATE:
DRAWN BY: D.G.H. CHECKED BY: R.L.K. DATE:
APPROVED:— SCALE: AS NOTED
Norris A. Batalden DESIGNER IN CHARGE DATE: 2-2-77 SHEET NUMBER 47
Henry J. Balcomi DEPT. OF BRIDGES AND PUBLIC BUILDINGS DATE: 2-2-77 SET OF 85 SHEETS
[signature] COMMISSIONER OF PUBLIC WORKS DATE: 2-3-77 JOB NO. 505-98

Special Deputy

CPE-2

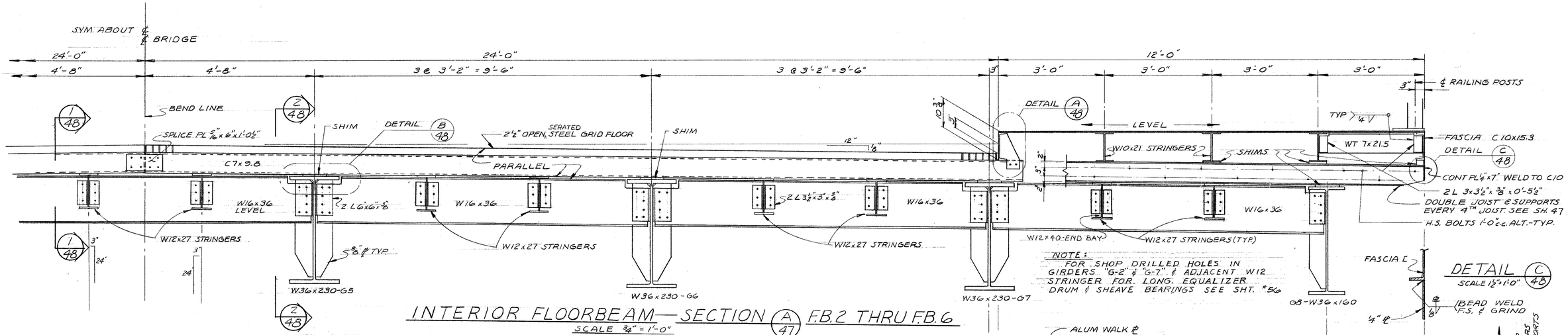

NOTE:
FOR SHOP DRILLED HOLES IN GIRDERS "G-2" & "G-7" & ADJACENT W12 STRINGER FOR LONG. EQUALIZER DRUM & SHEAVE BEARINGS SEE SHT. #56

INTERIOR FLOORBEAM — SECTION A 47 F.B.2 THRU F.B.6

SCALE ¾" = 1'-0"

FOR EXTERIOR (JACKING BEAM) FLOORBEAM SEE SH. 51

DETAIL C 48

SCALE 1½" = 1'-0"

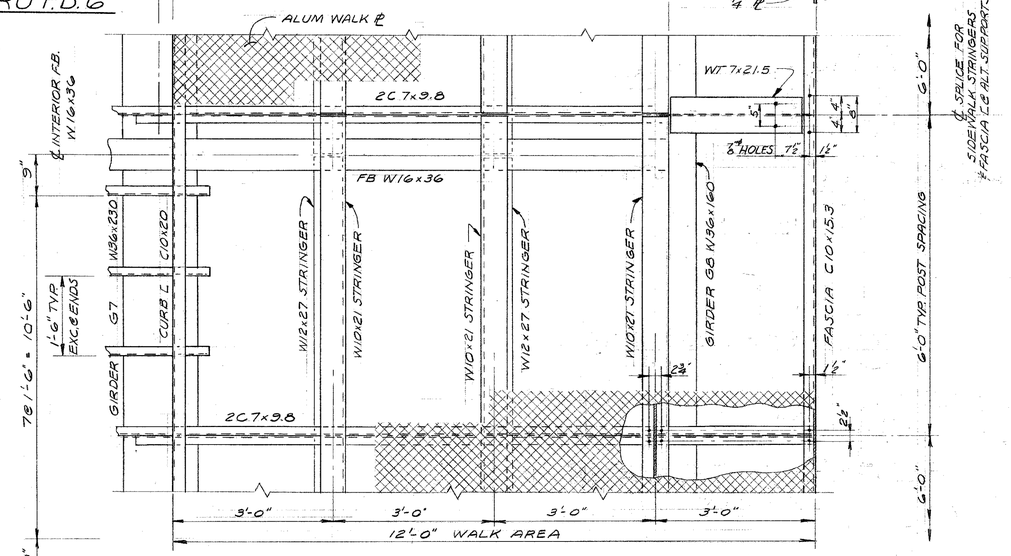

PARTIAL PLAN @ WALK

SCALE ¾" = 1'-0"

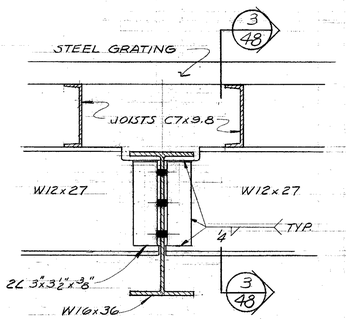

SECTION 1 48

SCALE 1½" = 1'-0"

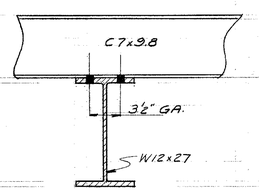

SECTION 3 48

SCALE 1½" = 1'-0"

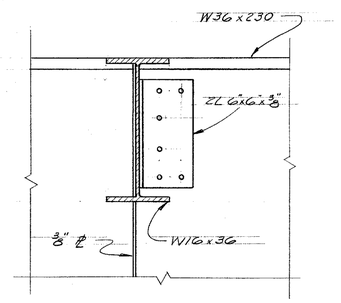

SECTION 2 48

SCALE 1½" = 1'-0"

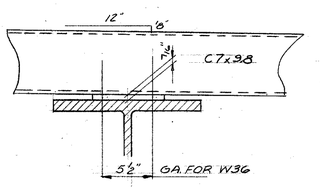

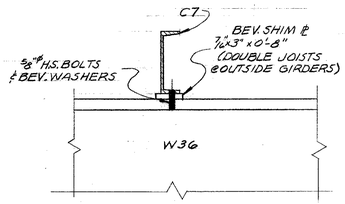

SHIM ℄ @ GIRDERS — DETAIL B 48

SCALE: 1½" = 1'-0"

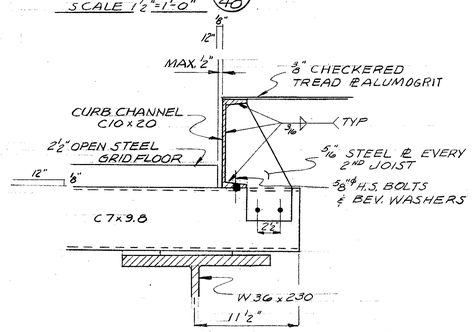

ROADWAY CURB DETAIL A 48

SCALE 1½" = 1'-0"

NOTES:

1. ALL SHOP CONNECTIONS MAY BE WELDED, RIVETED OR BOLTED USING ¾"ø H.S. BOLTS.
2. ALL FIELD CONNECTIONS TO BE ¾"ø HIGH STRENGTH BOLTS, ASTM A-325 FRICTION TYPE, EXCEPT AS NOTED.

DEPARTMENT OF PUBLIC WORKS
BUREAU OF BRIDGES AND PUBLIC BUILDINGS
CITY OF MILWAUKEE

REVISIONS		
MARK	DATE	BY
A		
B		
C		
D		
E		
F		
G		
H		
I		
J		
K		
L		
M		

MICHIGAN ST. VERTICAL LIFT BRIDGE
OVER MILWAUKEE RIVER

LIFT SPAN - CROSS SECTION

DESIGNED BY: R.L.K. TRACED BY: DATE:
DRAWN BY: D.G.H. CHECKED BY: R.L.K. DATE:
APPROVED:— SCALE: AS NOTED

Harris A. Bataldon — DESIGNER IN CHARGE — DATE: 2-2-77 SHEET NUMBER 48
Henry J. Balconi — DEPT. DIRECTOR OF PUBLIC BUILDINGS — DATE: 2-2-77 SET OF 85 SHEETS
H. Maier — COMMISSIONER OF PUBLIC WORKS — DATE: 2-3-77 JOB NO. 505-98

Special Layout

CPE-2

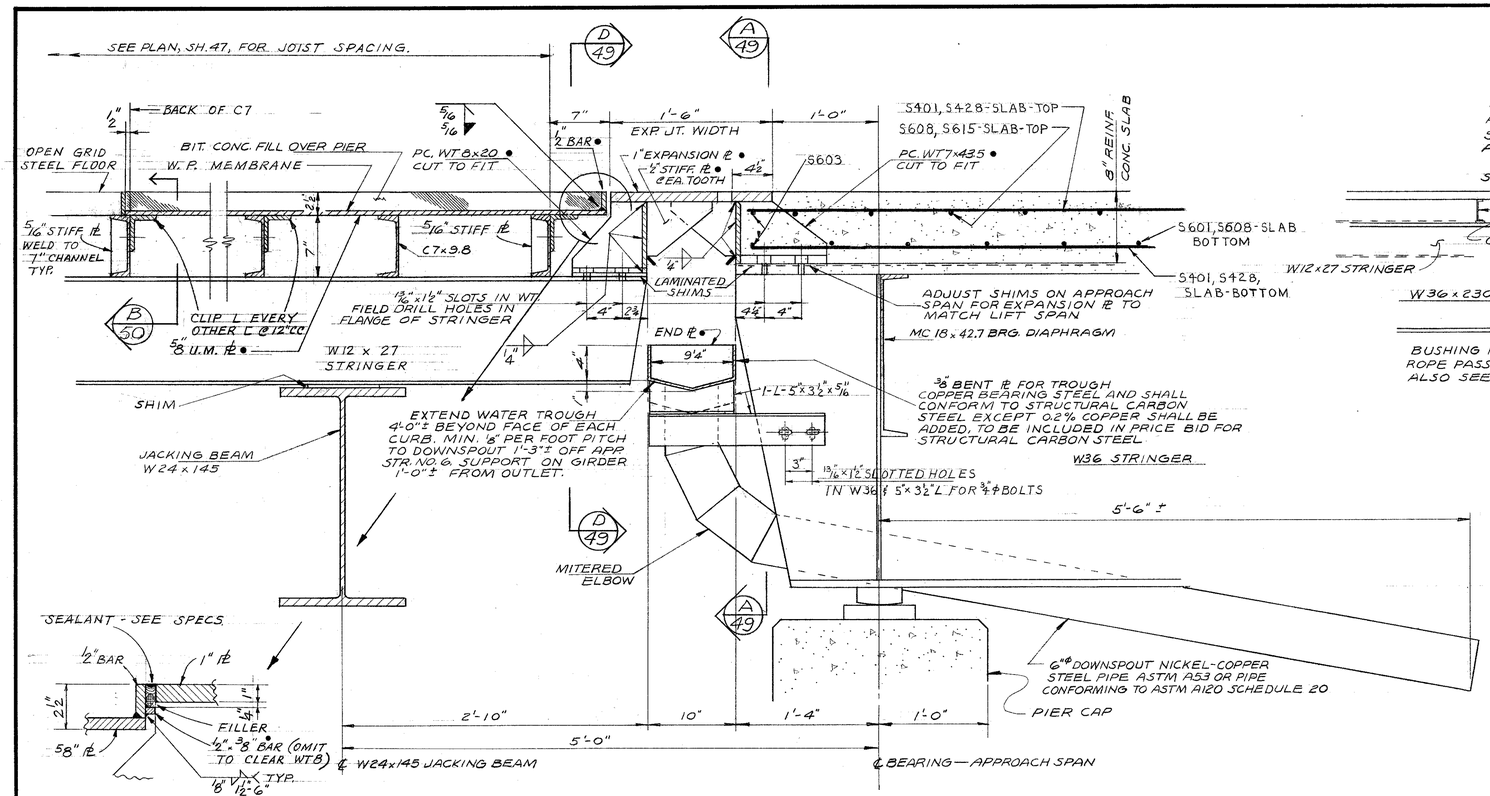

TYPICAL SECTION THRU ROADWAY EXPANSION JOINT @ MOVEABLE SPAN (C 47)

SCALE 1½" = 1'-0"

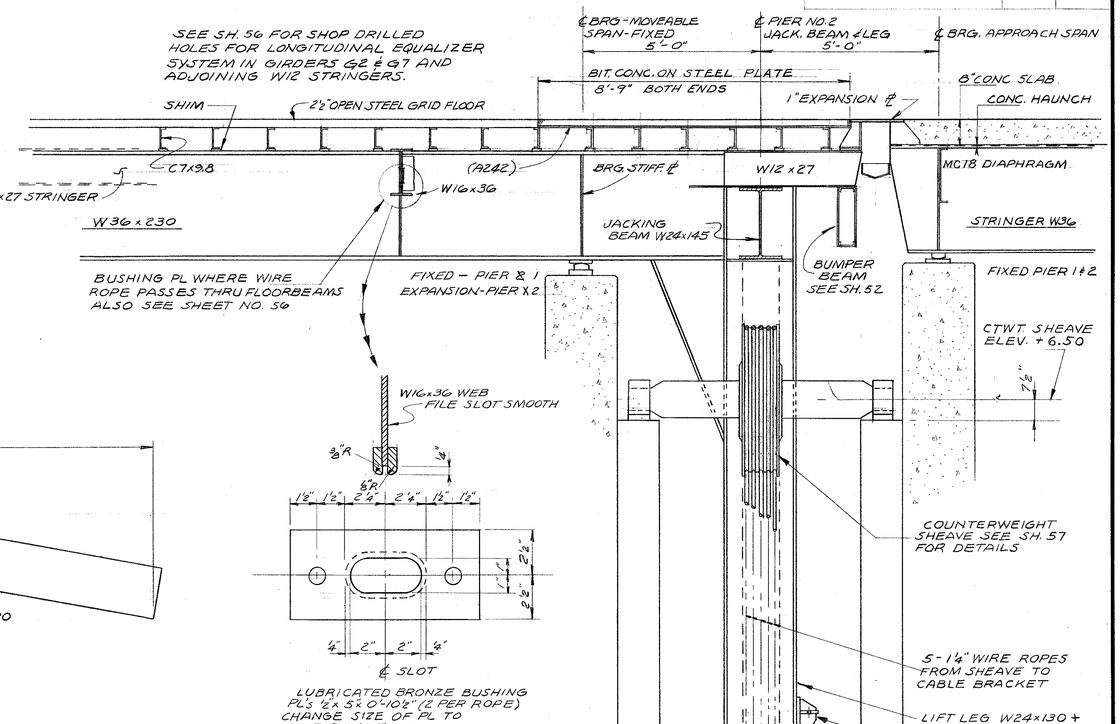

LUBRICATED BRONZE BUSHING PL'S ½" x 5" x 0'-10½" (2 PER ROPE) CHANGE SIZE OF PL TO SUIT CONDITION

CABLE GUIDE BUSHING PL'S

TO BE INCLUDED IN BID PRICE FOR STRUCTURAL CARBON STEEL

TYPICAL END SECTION (B 47)

SCALE ½" = 1'-0"

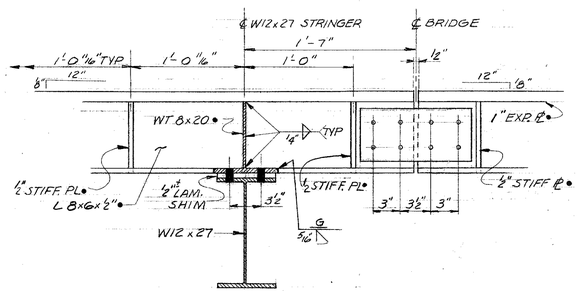

SECTION (D 49)

SCALE: 1½" = 1'-0"

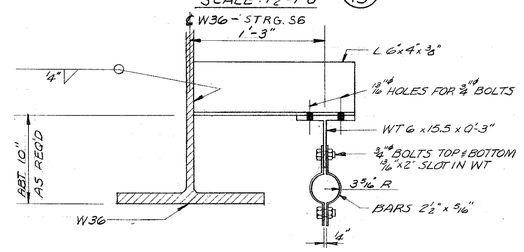

DOWNSPOUT HANGER DETAIL

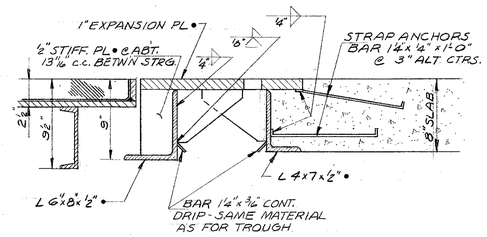

EXPANSION JOINT DETAIL BETWEEN STRINGERS

SCALE: 1½" = 1'-0"

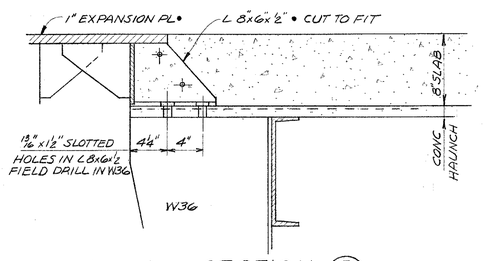

SECTION (E 49)

SCALE: 1½" = 1'-0"

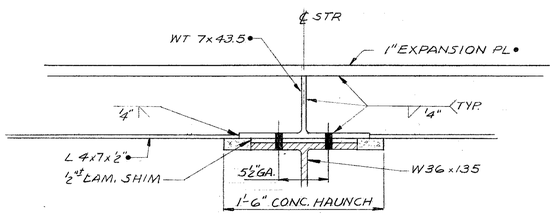

SECTION (A 49)

SCALE: 1½" = 1'-0"

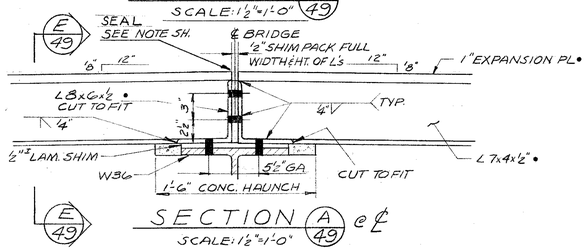

SECTION (A 49) @ ℄

SCALE: 1½" = 1'-0"

NOTE:
ALL STEEL MATERIAL MARKED THUS • SHALL BE ASTM A242 - ALL OTHER MATERIAL SHALL BE ASTM A36.

"AS BUILT"

DEPARTMENT OF PUBLIC WORKS
BUREAU OF BRIDGES AND PUBLIC BUILDINGS
CITY OF MILWAUKEE

REVISIONS		
MARK	DATE	BY
A		
B		
C		
D		
E		
F		
G		
H		
I		
J		
K		
L		
M		

MICHIGAN ST. VERTICAL LIFT BRIDGE
OVER MILWAUKEE RIVER

LIFT SPAN - END SECTION & EXPANSION JT.

DESIGNED BY: R. L. K. TRACED BY: DATE:
DRAWN BY: D. G. H. CHECKED BY: R. L. K. DATE:
APPROVED:— SCALE: AS NOTED

Harry A. Bataldo — DESIGNER IN CHARGE — DATE: 2-2-77 SHEET NUMBER 49
Henry J. Balcomi — DEPT. OF PUBLIC WORKS BUREAU OF PUBLIC BUILDINGS — DATE: 2-2-77 SET OF 85 SHEETS
F. Wingle — COMMISSIONER OF PUBLIC WORKS — DATE: 2-2-77 JOB NO. 505-98

CPE-2

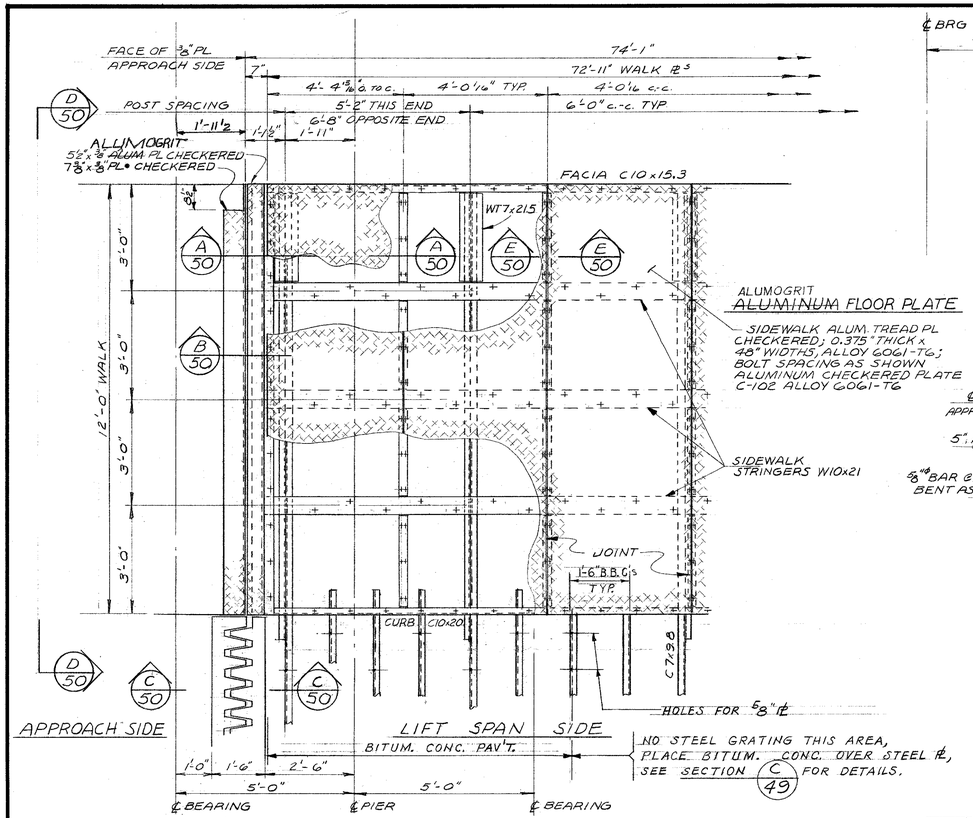

PLAN AT SIDEWALK EXPANSION JOINT
SCALE: 1/2" = 1'-0"

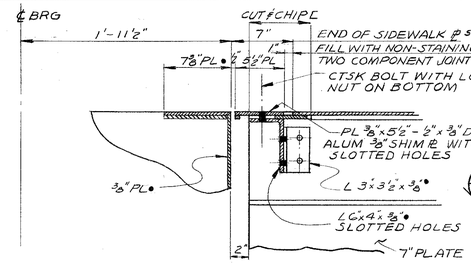

SECTION A/50
SCALE: 1 1/2" = 1'-0"

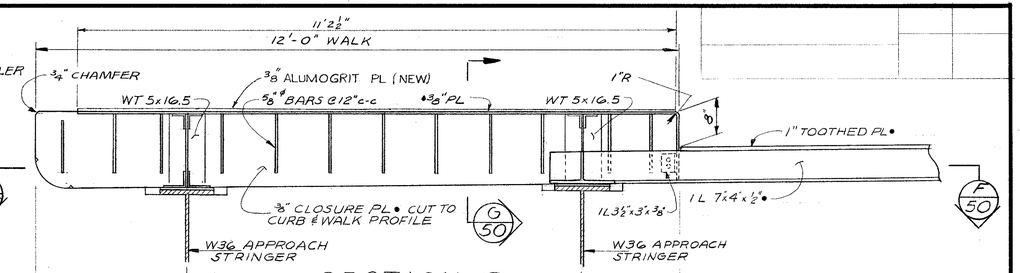

SECTION D/50
SCALE: 3/4" = 1'-0"

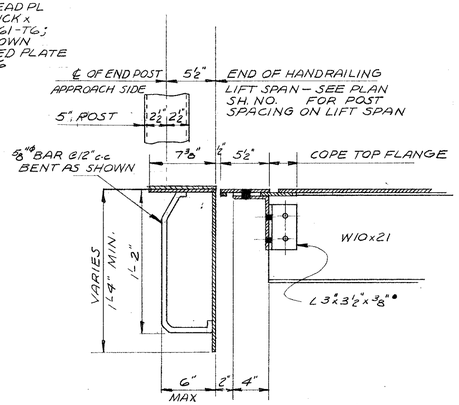

SECTION B/50
SCALE 1/2" = 1'-0"

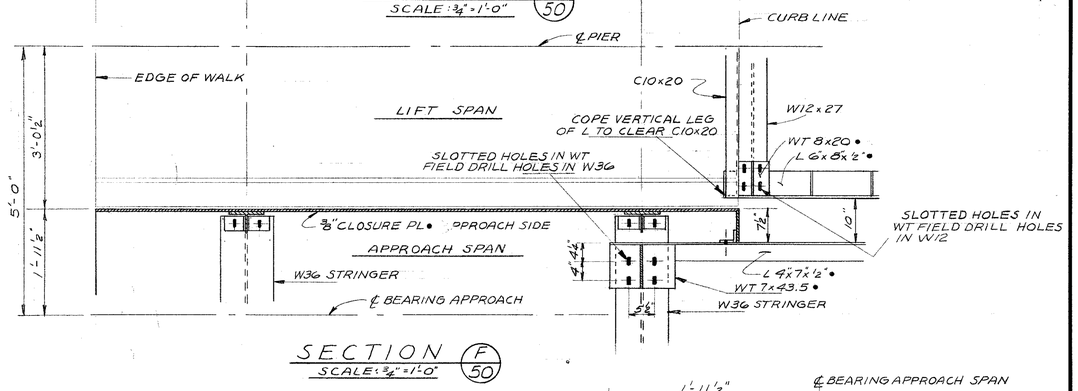

SECTION F/50
SCALE: 3/4" = 1'-0"

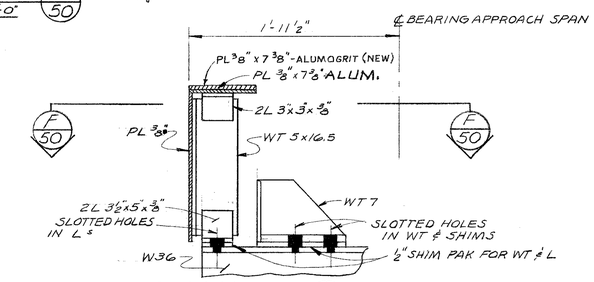

SECTION G/50
SCALE: 1/2" = 1'-0"

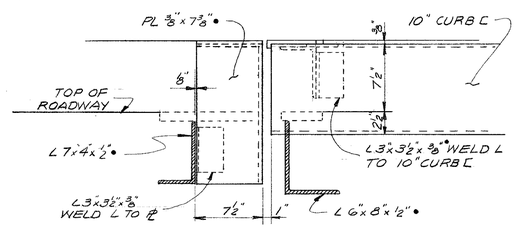

SECTION C/50
SCALE: 1/2" = 1'-0"

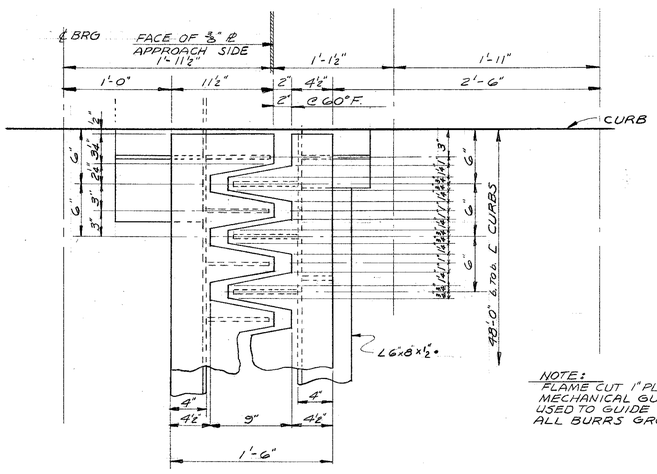

NOTE:
FLAME CUT 1" PL U.M.• MECHANICAL GUIDE SHALL BE USED TO GUIDE CUTTING TOOTH, ALL BURRS GROUND SMOOTH.

TOOTHED EXPANSION PLATE DETAIL
SCALE: 1/2" = 1'-0"

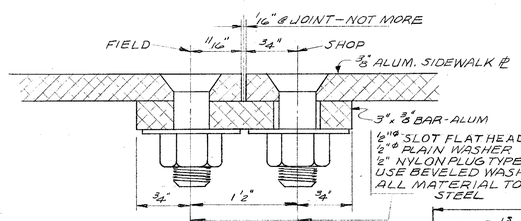

SECTION E/50
SCALE: 1 1/2" = 1'-0"

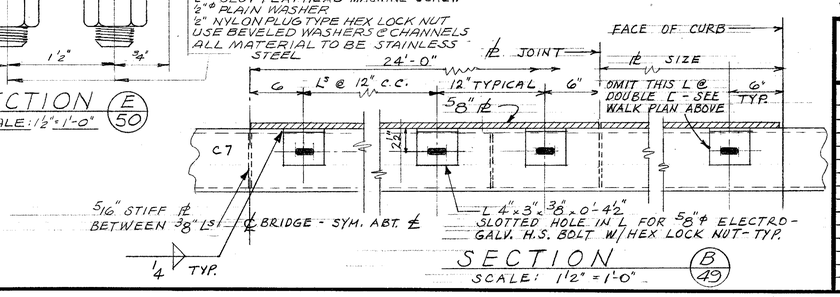

SECTION B/49
SCALE: 1 1/2" = 1'-0"

NOTES:

1. NON-STAIN JOINT SEALER: NON-STAINING GRAY TWO-COMPONENT POLYSULFIDE LIQUID POLYMER (GUN GRADE) WITH SURFACE PRIMER.
2. ALL SHOP CONNECTIONS WELDED.
3. ALL FIELD CONNECTIONS HIGH STRENGTH BOLTS.
4. ~~TOP OF ALUMINUM SIDEWALK PLATE TO RECEIVE ONE PRIME COAT AND ONE TOP COAT OF EPOXY RESIN COATINGS; TOP COAT TO CONTAIN AGGREGATE TO PRODUCE SKID-RESISTANT SURFACE;~~ CHANGED TO ABRASIVE ALUM. PLATES
5. EXPANSION JOINT MATERIAL MARKED THUS • SHALL BE ASTM A242 – ALL OTHER STEEL SHALL BE ASTM A36.
6. ALUMINUM SURFACES EXCEPT TOP OF SIDEWALK PLATE – ONE SHOP COAT EPOXY CHROMATE PRIMER. STEEL SURFACES IN CONTACT WITH ALUMINUM TO BE GIVEN ONE COAT OF HEAVY BODIED BITUMINOUS PAINT.

"AS BUILT"

DEPARTMENT OF PUBLIC WORKS
BUREAU OF BRIDGES AND PUBLIC BUILDINGS
CITY OF MILWAUKEE

REVISIONS		
MARK	DATE	BY
A		
B		
C		
D		
E		
F		
G		
H		
I		
J		
K		
L		
M		

MICHIGAN ST. VERTICAL LIFT BRIDGE
OVER MILWAUKEE RIVER

LIFT SPAN – EXPANSION JOINT DETAIL

DESIGNED BY: R.L.K. TRACED BY: DATE:
DRAWN BY: D.G.H. CHECKED BY: R.L.K. DATE:
APPROVED:– SCALE: AS NOTED
DESIGNER IN CHARGE DATE: 2-2-77 SHEET NUMBER 50
BUREAU OF BRIDGES AND PUBLIC BUILDINGS DATE: 2-2-77 SET OF 85 SHEETS
COMMISSIONER OF PUBLIC WORKS DATE: 2-3-77 JOB NO. 505-98

CPE-2

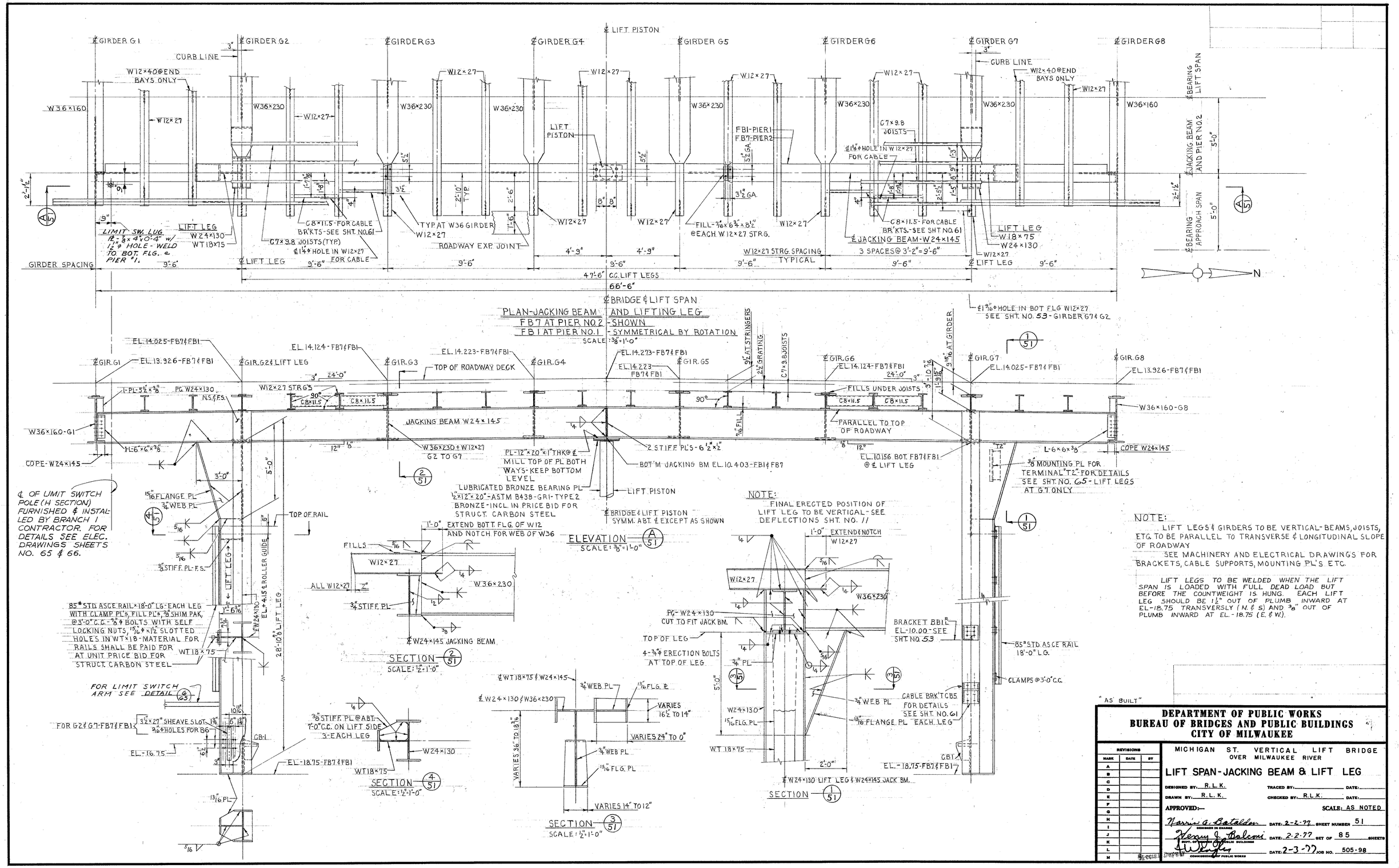

PLAN-JACKING BEAM AND LIFTING LEG
FB7 AT PIER NO. 2 - SHOWN
FB1 AT PIER NO. 1 - SYMMETRICAL BY ROTATION
SCALE: ⅜"=1'-0"

DEPARTMENT OF PUBLIC WORKS
BUREAU OF BRIDGES AND PUBLIC BUILDINGS
CITY OF MILWAUKEE

REVISIONS		
MARK	DATE	BY
A		
B		
C		
D		
E		
F		
G		
H		
I		
J		
K		
L		
M		

MICHIGAN ST. VERTICAL LIFT BRIDGE
OVER MILWAUKEE RIVER

LIFT SPAN - JACKING BEAM & LIFT LEG

DESIGNED BY: R. L. K. TRACED BY: DATE:
DRAWN BY: R. L. K. CHECKED BY: R. L. K. DATE:
APPROVED:— SCALE: AS NOTED
Harry A. Batalden, ENGINEER IN CHARGE — DATE: 2-2-77 SHEET NUMBER 51
Henry J. Balcomi, DEPT. OF PUBLIC BUILDINGS — DATE: 2-2-77 SET OF 85 SHEETS
Steven M. Mitchell, COMMISSIONER OF PUBLIC WORKS — DATE: 2-3-77 JOB NO. 505-98

CPE-2

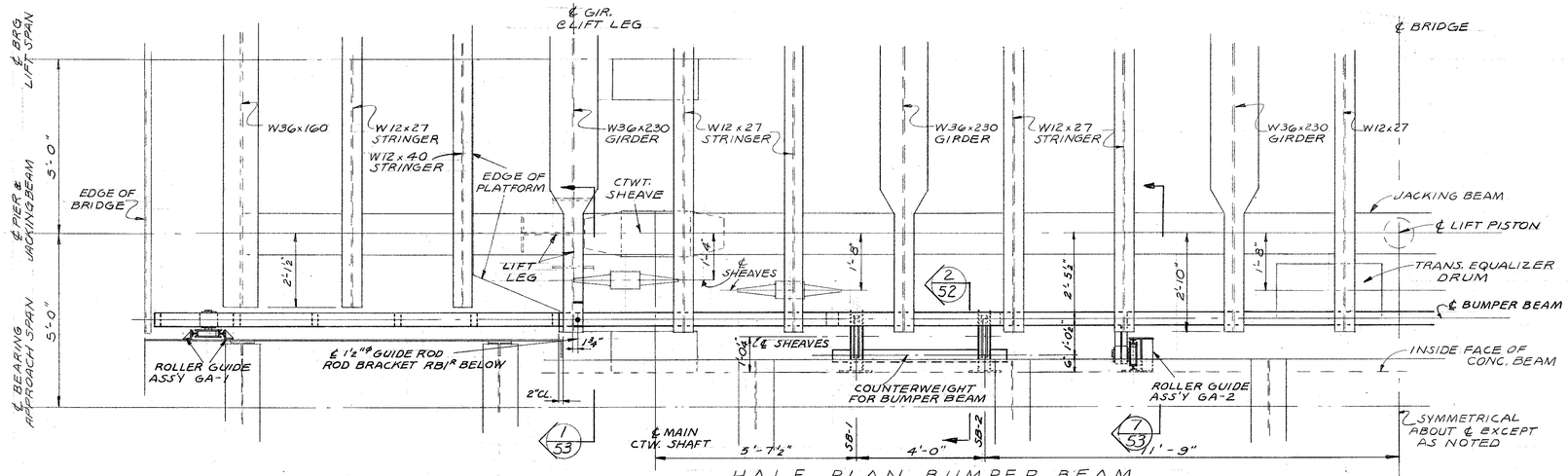

HALF PLAN BUMPER BEAM

SCALE: ½"=1'-0"

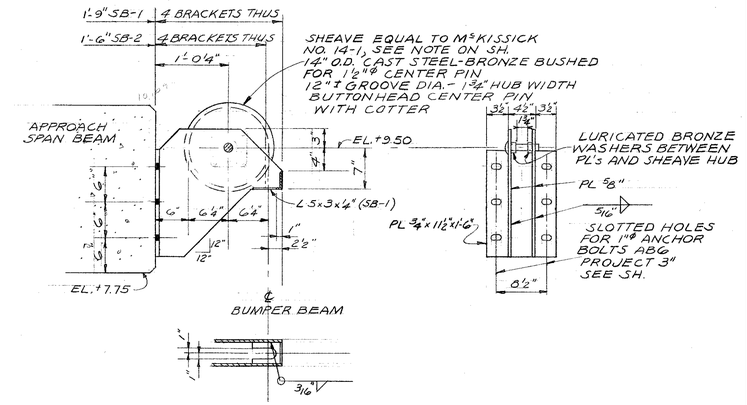

SHEAVE BRACKET SB-1, SB-2

SCALE: 1"=1'-0"

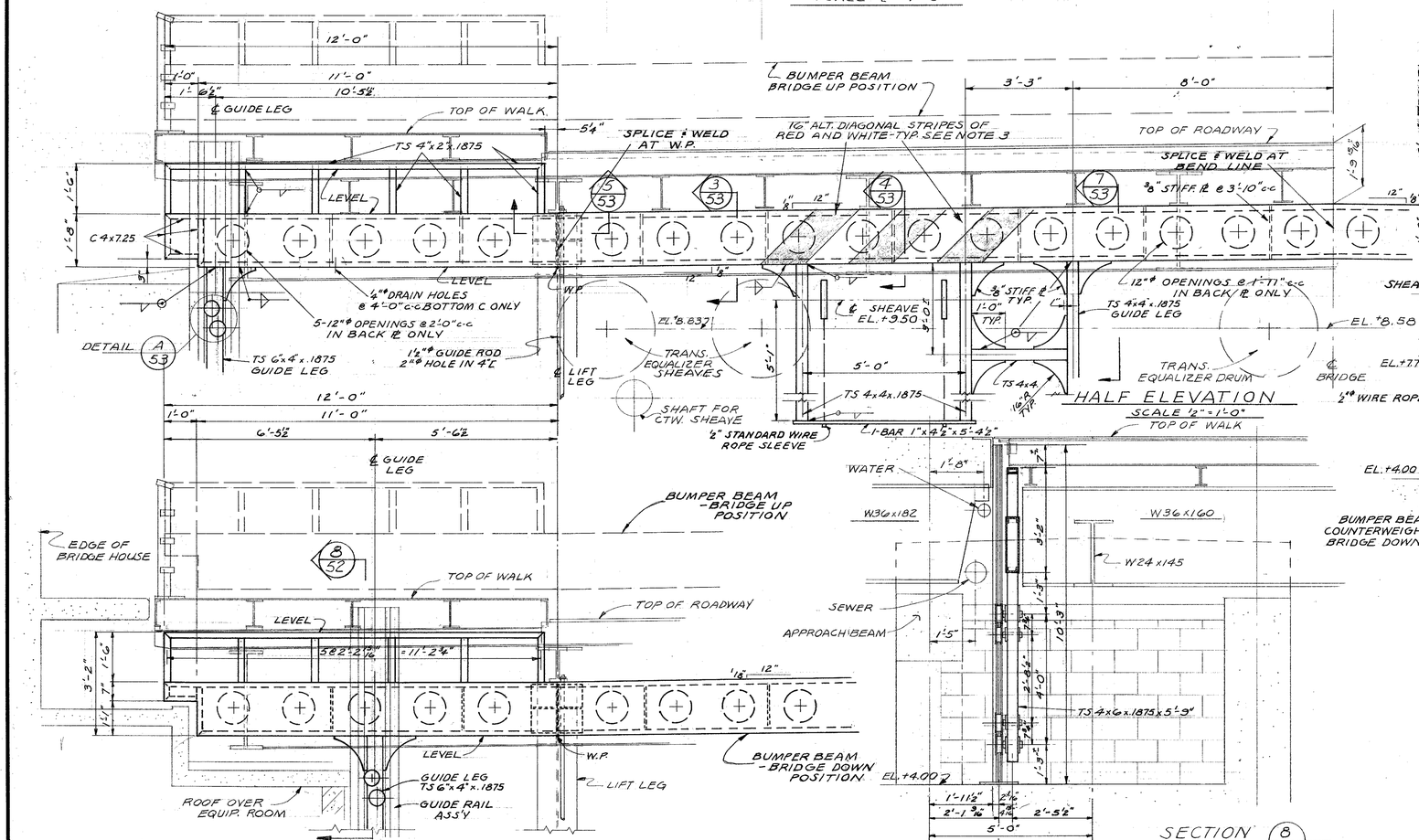

DETAIL OF BUMPER-BEAM PIER 1 & BRIDGE HOUSE

HALF ELEVATION

SCALE ½"=1'-0"

SECTION 8/52

SCALE ½"=1'-0"

BUMPER BEAM DETAIL TYPICAL ALL CORNERS

SECTION 2/52

SCALE ½"=1'-0"

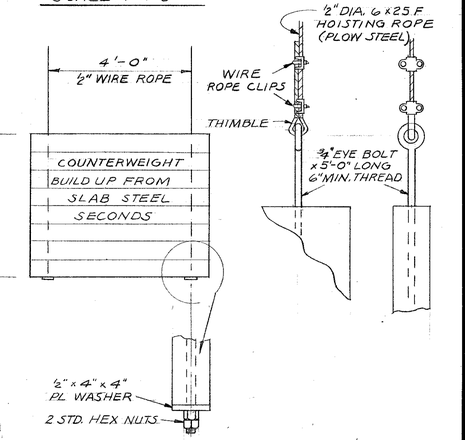

COUNTERWEIGHT DETAILS

NOTES:

1. ALL WELDS TO BE 3/16" EXCEPT AS NOTED
2. ALL BUMPER BEAM GUIDE LEGS TO BE PL LINB.
3. BUMPER BEAM TO BE STRIPED WITH 16 INCH ALTERNATE DIAGONAL REFLECTORIZED STRIPES OF RED AND WHITE-BY OTHERS

"AS BUILT"

DEPARTMENT OF PUBLIC WORKS
BUREAU OF BRIDGES AND PUBLIC BUILDINGS
CITY OF MILWAUKEE

REVISIONS		
MARK	DATE	BY
A		
B		
C		
D		
E		
F		
G		
H		
I		
J		
K		
L		
M		

MICHIGAN ST. VERTICAL LIFT BRIDGE
OVER MILWAUKEE RIVER

LIFT SPAN - BUMPER BEAM
PLAN & ELEVATION

DESIGNED BY: DGH — TRACED BY: — DATE:
DRAWN BY: D. G. H. — CHECKED BY: RLK — DATE:
APPROVED:— — SCALE: AS NOTED
DESIGNER IN CHARGE — DATE: 2-6-77 — SHEET NUMBER 52
ASST. DIR. BUREAU OF PUBLIC BUILDINGS — DATE: 2-2-77 — SET OF 85 SHEETS
COMMISSIONER OF PUBLIC WORKS — DATE: 2-3-77 — JOB NO. 505-98

Special Deputy

CPE-2

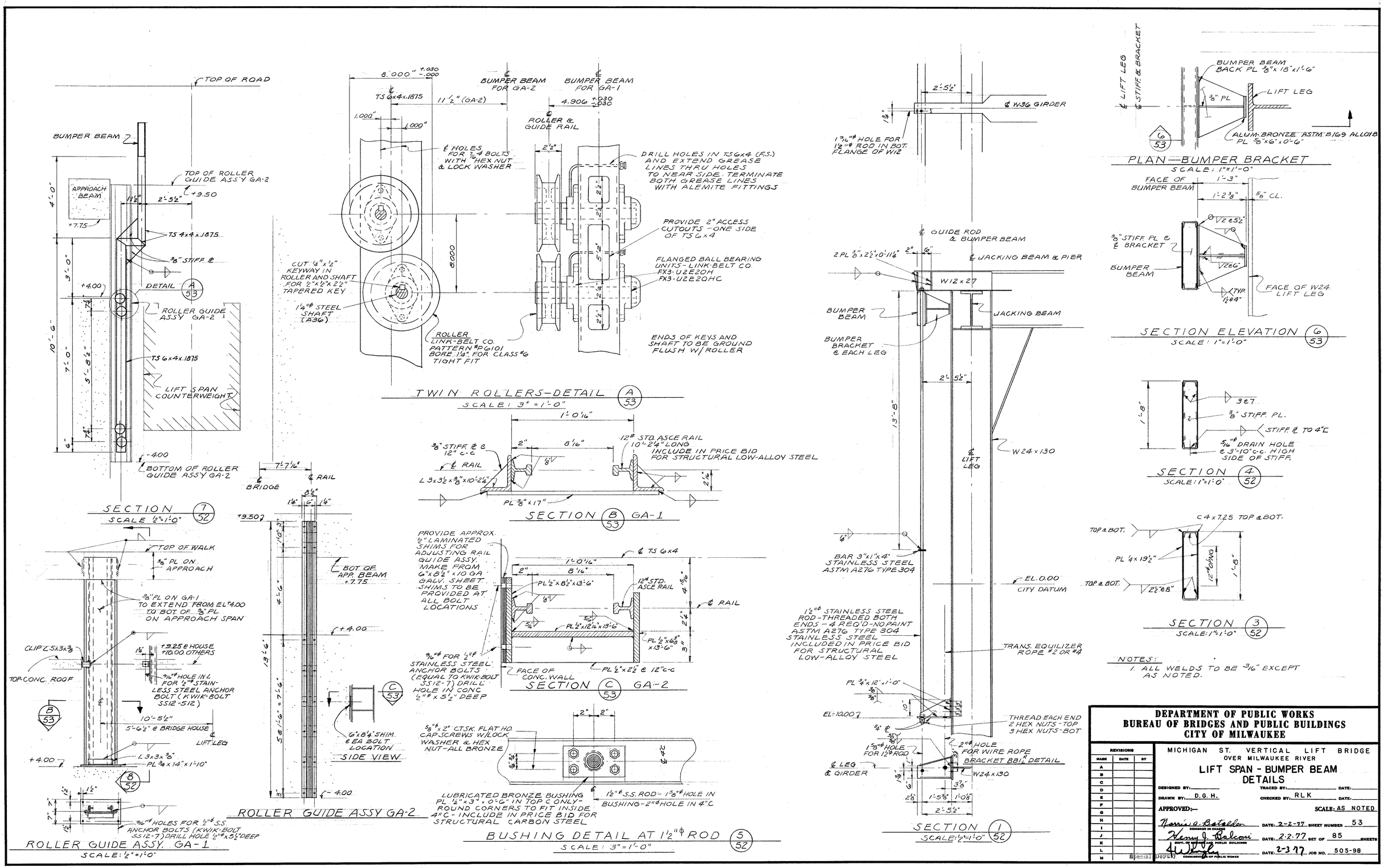
TOP OF ROAD
BUMPER BEAM
APPROACH BEAM
TOP OF ROLLER GUIDE ASS'Y GA-2
+9.50
+7.75
TS 4x4x.1875
3/8" STIFF. PL
DETAIL A 53
+4.00
ROLLER GUIDE ASS'Y GA-2
TS 6x4x.1875
LIFT SPAN COUNTERWEIGHT
-.400
BOTTOM OF ROLLER GUIDE ASSY GA-2
SECTION 7 52
SCALE 1/2"=1'-0"
8.000" +.030 -.000
BUMPER BEAM FOR GA-2
BUMPER BEAM FOR GA-1
TS 6x4x.1875
11 1/2" (GA-2)
4.906 +.030 -.030
ROLLER & GUIDE RAIL
1.000"
℄ HOLES FOR 3/4" BOLTS WITH HEX NUT & LOCK WASHER
DRILL HOLES IN TS6x4 (F.S.) AND EXTEND GREASE LINES THRU HOLES TO NEAR SIDE. TERMINATE BOTH GREASE LINES WITH ALEMITE FITTINGS
PROVIDE 2" ACCESS CUTOUTS - ONE SIDE OF TS 6x4
FLANGED BALL BEARING UNITS - LINK-BELT CO. FX3-U2E20H FX3-U2E20HC
CUT 1/4"x1/2" KEYWAY IN ROLLER AND SHAFT FOR 1/2"x1/2"x2 1/2" TAPERED KEY
1 1/4"ϕ STEEL SHAFT (A36)
ROLLER LINK-BELT CO. PATTERN #PG101 BORE 1 1/4" FOR CLASS #6 TIGHT FIT
ENDS OF KEYS AND SHAFT TO BE GROUND FLUSH W/ROLLER
TWIN ROLLERS-DETAIL A 53
SCALE: 3"=1'-0"
1'-0 1/16"
3/8" STIFF. PL @ 12" c-c
℄ RAIL
L 3x3 1/2x3/8"x10'-2 1/4"
PL 3/8"x17"
12# STD. ASCE RAIL 10'-2 1/4" LONG INCLUDE IN PRICE BID FOR STRUCTURAL LOW-ALLOY STEEL
SECTION B 53 GA-1
℄ BRIDGE
℄ RAIL
7'-7 1/16"
+9.50
BOT. OF APP. BEAM +7.75
+4.00
-4.00
SIDE VIEW
6"x8 1/4" SHIM @ EA BOLT LOCATION
C 53
TOP OF WALK
3/8" PL ON APPROACH
3/8" PL ON GA-1 TO EXTEND FROM EL +4.00 TO BOT. OF 3/8" PL ON APPROACH SPAN
CLIP L 5x3x3/8
TOP CONC. ROOF
+9.25 @ HOUSE +10.00 OTHERS
9/16"ϕ HOLE IN L FOR 1/2"ϕ STAINLESS STEEL ANCHOR BOLT (KWIK-BOLT SS12-512)
B 53
10'-5 1/2"
5'-6 1/2" @ BRIDGE HOUSE
LIFT LEG
L 3x3x3/8"
PL 3/8x14"x1'-10"
8 52
9/16"ϕ HOLES FOR 1/2"ϕ S.S. ANCHOR BOLTS (KWIK-BOLT SS12-7) DRILL HOLE 1/2"ϕ x 5 1/2" DEEP
ROLLER GUIDE ASSY. GA-1
SCALE: 1/2"=1'-0"
ROLLER GUIDE ASSY GA-2
PROVIDE APPROX. 1/2" LAMINATED SHIMS FOR ADJUSTING RAIL GUIDE ASSY. MAKE FROM 6"x8 1/2"x10 GA GALV. SHEET. SHIMS TO BE PROVIDED AT ALL BOLT LOCATIONS
℄ TS 6x4
PL 1/2"x8 1/2"x13'-6"
12# STD. ASCE RAIL
PL 1/2"x12 1/16"x13'-6"
PL 1/2"x6 3/8"x13'-6"
PL 1/2"x2 1/2" @ 12" c-c
9/16"ϕ FOR 1/2"ϕ STAINLESS STEEL ANCHOR BOLTS (EQUAL TO KWIK-BOLT SS12-7) DRILL HOLE IN CONC 1/2"ϕ x 5 1/2" DEEP
FACE OF CONC. WALL
SECTION C 53 GA-2
5/8"ϕ x 2" CTSK. FLAT HD. CAP SCREWS W/LOCK WASHER & HEX NUT-ALL BRONZE
℄ 4"C
LUBRICATED BRONZE BUSHING PL 1/2"x3"x0'-6" IN TOP C ONLY-ROUND CORNERS TO FIT INSIDE 4"C-INCLUDE IN PRICE BID FOR STRUCTURAL CARBON STEEL
1 1/2"ϕ S.S. ROD-1 5/8"ϕ HOLE IN BUSHING-2"ϕ HOLE IN 4"C
BUSHING DETAIL AT 1 1/2"ϕ ROD 5 52
SCALE: 3"=1'-0"
1 3/4"ϕ HOLE FOR 1 1/2"ϕ ROD IN BOT. FLANGE OF W12
2'-5 1/2"
℄ W36 GIRDER
℄ GUIDE ROD & BUMPER BEAM
2 PL 5/8"x2 1/2"x0'-11 1/2"
℄ JACKING BEAM & PIER
W12x27
BUMPER BEAM
JACKING BEAM
BUMPER BRACKET @ EACH LEG
13'-8"
℄ LIFT LEG
W24x130
BAR 3"x1"x4" STAINLESS STEEL ASTM A276 TYPE 304
EL. 0.00 CITY DATUM
1 1/2"ϕ STAINLESS STEEL ROD-THREADED BOTH ENDS-4 REQ'D-NO PAINT ASTM A276 TYPE 304 STAINLESS STEEL INCLUDED IN PRICE BID FOR STRUCTURAL LOW-ALLOY STEEL
TRANS. EQUILIZER ROPE #2 OR #4
PL 3/8"x12"x1'-0"
EL-10.00
THREAD EACH END 2 HEX NUTS-TOP 3 HEX NUTS-BOT
1 5/8"ϕ HOLE FOR 1 5/8"ϕ ROD
2"ϕ HOLE FOR WIRE ROPE
BRACKET B81 DETAIL
℄ LEG & GIRDER
W24x130
2'-5 1/2"
SECTION 1 52
SCALE: 1/2"=1'-0"
℄ LIFT LEG
℄ STIFF. & BRACKET
BUMPER BEAM BACK PL 3/8"x18"x1'-6"
3/8" PL
LIFT LEG
ALUM-BRONZE ASTM B169 ALLOY B PL 5/8"x6"x0'-6"
PLAN-BUMPER BRACKET
SCALE: 1"=1'-0"
FACE OF BUMPER BEAM
1'-3"
1'-2 3/8"
5/8" CL.
3/8" STIFF. PL @ ℄ BRACKET
BUMPER BEAM
FACE OF W24 LIFT LEG
TYP. 1/2"ϕ
SECTION ELEVATION 6 53
SCALE: 1"=1'-0"
3@7
3/8" STIFF. PL.
STIFF. ℄ TO 4"C
5/16"ϕ DRAIN HOLE @ 3'-10" c-c. HIGH SIDE OF STIFF.
1'-8"
SECTION 4 52
SCALE: 1"=1'-0"
C 4x7.25 TOP & BOT.
TOP & BOT.
PL 1/4x19 1/2"
12"ϕ O/ING
2 1/2"@8"
SECTION 3 52
SCALE: 1 1/2"=1'-0"
NOTES:
1. ALL WELDS TO BE 3/16" EXCEPT AS NOTED.
DEPARTMENT OF PUBLIC WORKS
BUREAU OF BRIDGES AND PUBLIC BUILDINGS
CITY OF MILWAUKEE
REVISIONS
MARK DATE BY
A B C D E F G H I J K L M
MICHIGAN ST. VERTICAL LIFT BRIDGE
OVER MILWAUKEE RIVER
LIFT SPAN - BUMPER BEAM DETAILS
DESIGNED BY:
TRACED BY:
DATE:
DRAWN BY: D.G.H.
CHECKED BY: RLK
DATE:
APPROVED:-
SCALE: AS NOTED
DESIGNER IN CHARGE
DATE: 2-2-77
SHEET NUMBER 53
DIRECTOR OF BRIDGES AND PUBLIC BUILDINGS
DATE: 2-2-77
SET OF 85 SHEETS
COMMISSIONER OF PUBLIC WORKS
DATE: 2-3-77
JOB NO. 505-98
CPE-2

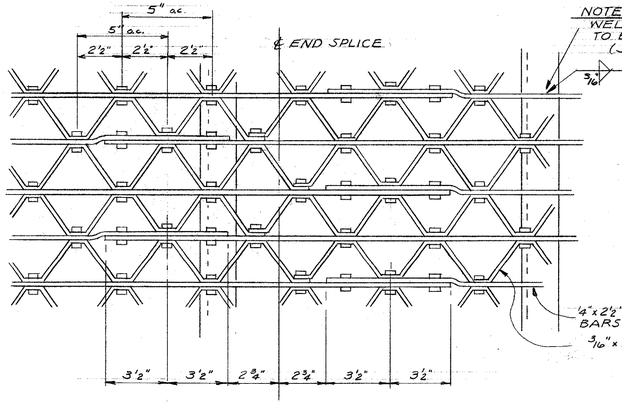

DETAIL OF SIDE & END SPLICE FOR STEEL GRATING

SCALE: 3"=1'-0"

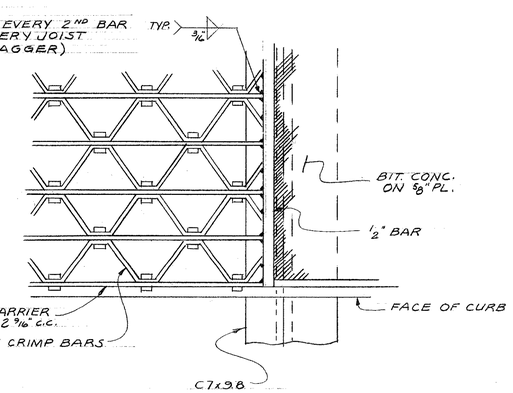

GRATING END DETAIL

SCALE: 3"=1'-0"

BAR LIST - COUNTERWEIGHTS

LOC.	MARK	NO. REQ'D EAST	NO. REQ'D WEST	LENGTH	DET.	DIMENSIONS A	B	C	D
	C501	20	20	9'-10"	11	2'-6"	5'-1"		
	C502	20	20	9'-1"	11	2'-6"	4'-4"		
	C503	38	38	14'-6"	11	5'-2"	4'-5"		
	C504	38	38	4'-6"	STR.				
	C505	76	76	4'-7"	11	2'-2"	0'-6"		
	C506	10	10	5'-3"	11	2'-6"	0'-6"		
	C507	10	10	10'-7"	11	5'-2"	0'-6"		
	C801	14	14	32'-0"	STR.				
	C802	14	14	13'-0"	STR.				
	C803	30	30	12'-0"	STR.				
	C804	14	14	19'-1"	STR.				
	C1001	2	2	32'-0"	STR.				
	C1002	2	2	14'-3"	STR.				
	C1003	6	6	13'-0"	STR.				

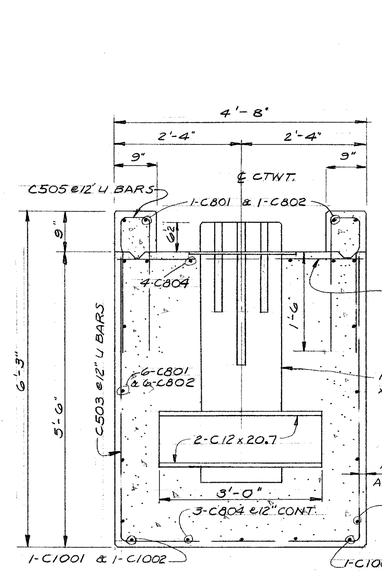

DET. 11

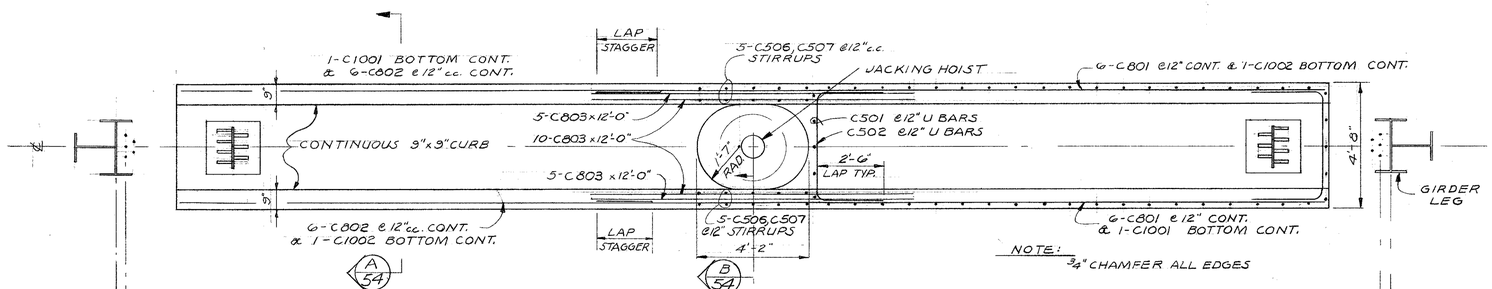

NOTE:
¾" CHAMFER ALL EDGES

PLAN OF COUNTERWEIGHT

SCALE: ⅜"=1'-0"

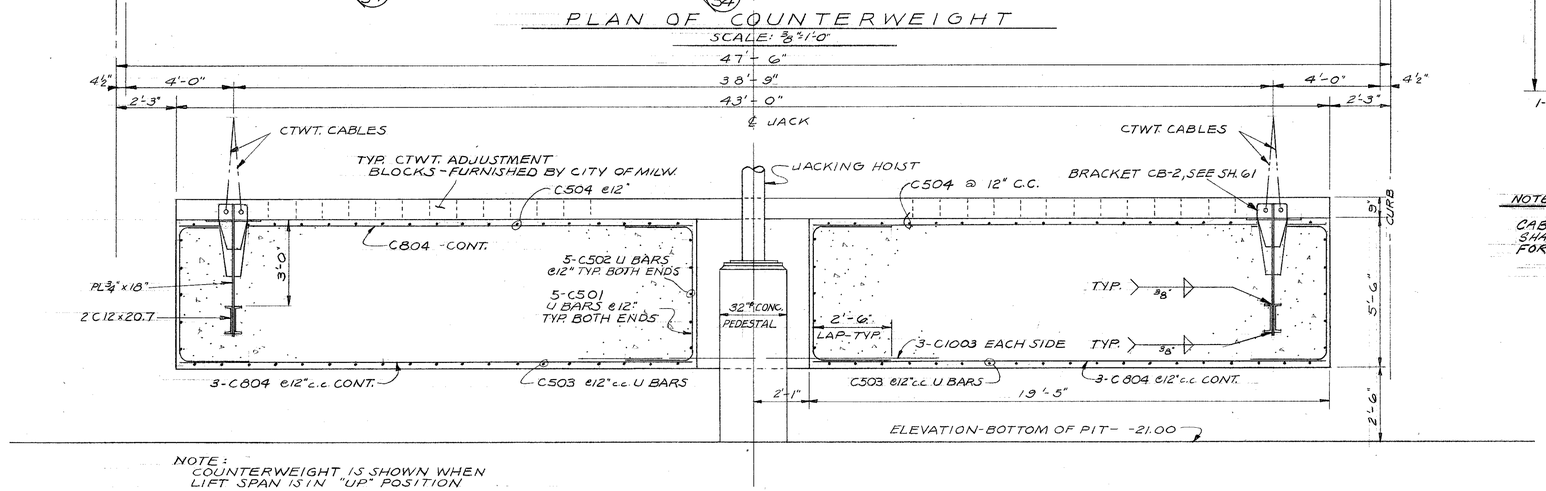

NOTE:
COUNTERWEIGHT IS SHOWN WHEN LIFT SPAN IS IN "UP" POSITION

SECTION ELEVATION

SCALE: ⅜"=1'-0"

SECTION A 54

SCALE: ¾"=1'-0"

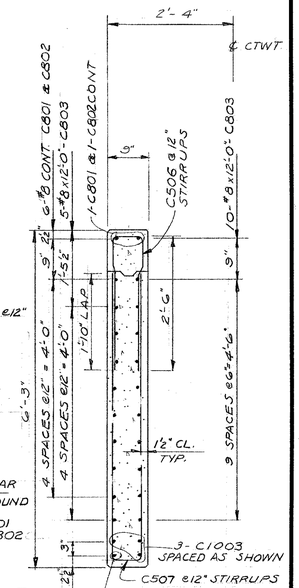

SECTION B 54

SCALE: ¾"=1'-0"

NOTE:
STEEL FOR COUNTER WEIGHT CABLE ATTACHMENTS IN COUNTER WEIGHT SHALL BE INCLUDED IN UNIT PRICE FOR STRUCTURAL CARBON STEEL.

DEPARTMENT OF PUBLIC WORKS
BUREAU OF BRIDGES AND PUBLIC BUILDINGS
CITY OF MILWAUKEE

REVISIONS MARK	DATE	BY
A		
B		
C		
D		
E		
F		
G		
H		
I		
J		
K		
L		
M		

MICHIGAN ST. VERTICAL LIFT BRIDGE
OVER MILWAUKEE RIVER

LIFT SPAN - COUNTERWEIGHT

DESIGNED BY: _____ TRACED BY: _____ DATE: _____
DRAWN BY: D.G.H. CHECKED BY: RLK DATE: _____
APPROVED:— SCALE: AS NOTED
Norris A. Batalla DESIGNER IN CHARGE DATE: 2-2-77 SHEET NUMBER 54
Henry J. Baloni SUPT. OF BRIDGES AND PUBLIC BUILDINGS DATE: 2-2-77 SET OF 85 SHEETS
Special Deputy COMMISSIONER OF PUBLIC WORKS DATE: 2-3-77 JOB NO. 505-98

CPE-2

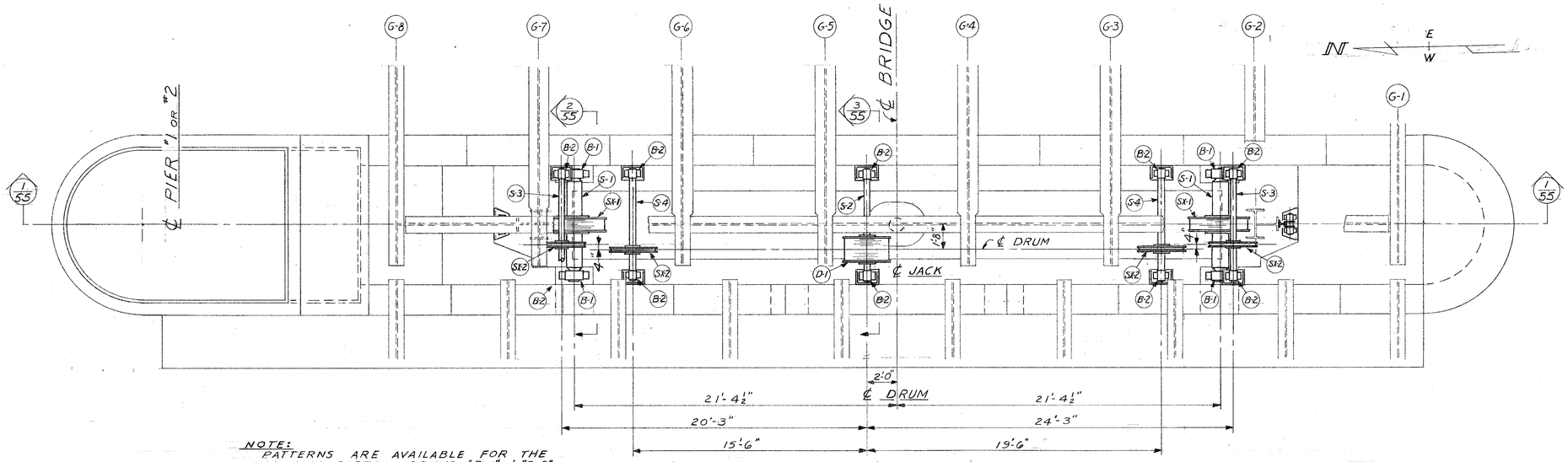

NOTE:
PATTERNS ARE AVAILABLE FOR THE FOLLOWING PARTS: DRUMS "D-1" & "D-2"; SHEAVES "SX-1", "SX-2", SX-3" & "SX-4" & BEARING "B-1".

PLAN OF TRANSVERSE EQUALIZER & COUNTERWEIGHT

PIER #1 IS SHOWN - FOR PIER #2 ROTATE 180°

SCALE ¼" = 1'-0"

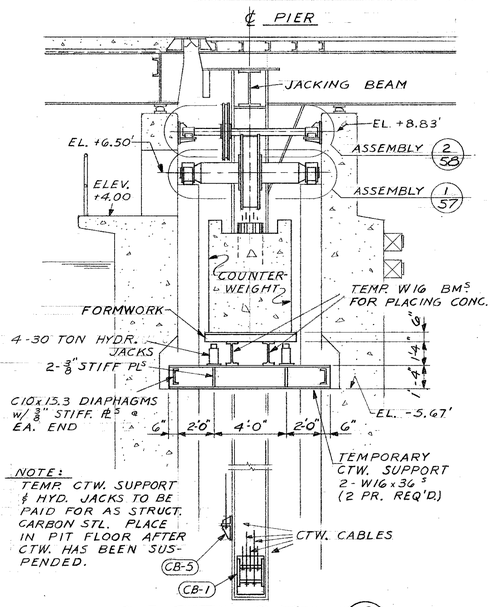

NOTE:
TEMP. CTW. SUPPORT & HYD. JACKS TO BE PAID FOR AS STRUCT. CARBON STL. PLACE IN PIT FLOOR AFTER CTW. HAS BEEN SUSPENDED.

SECTION 2/55

SCALE ¼" = 1'-0"

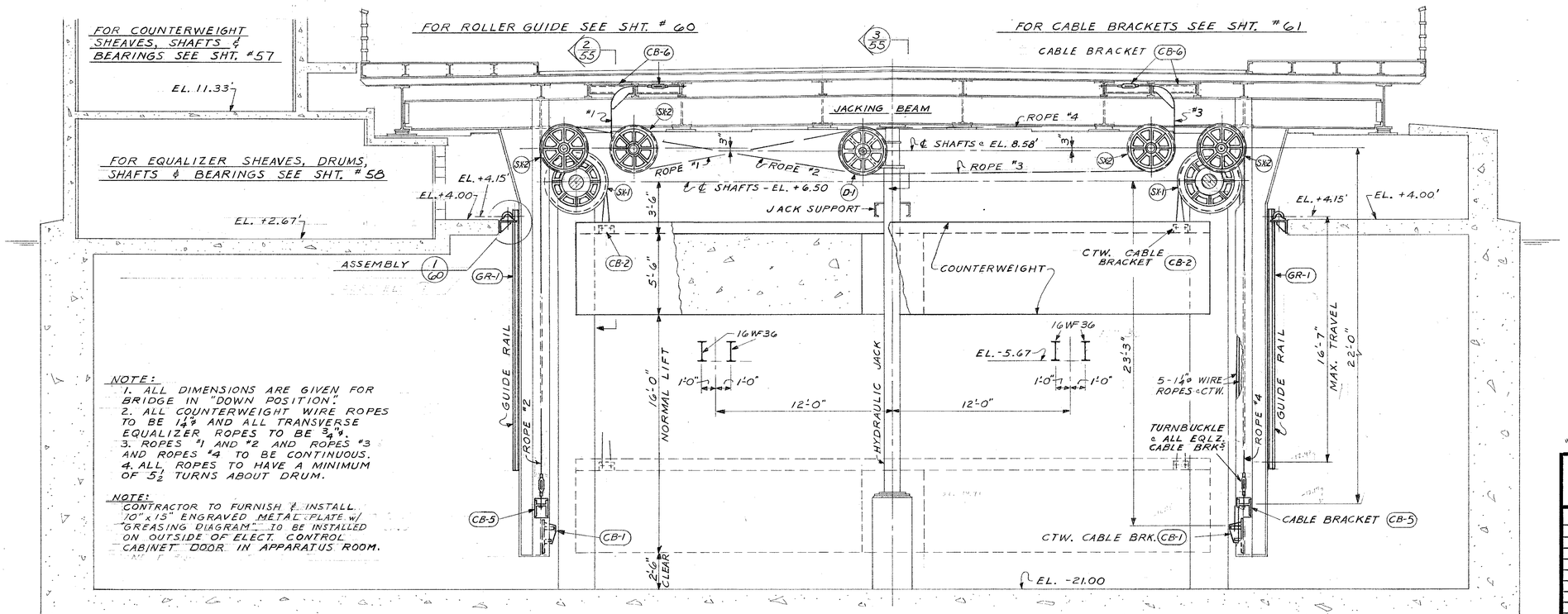

NOTE:
1. ALL DIMENSIONS ARE GIVEN FOR BRIDGE IN "DOWN POSITION".
2. ALL COUNTERWEIGHT WIRE ROPES TO BE 1⅛" AND ALL TRANSVERSE EQUALIZER ROPES TO BE ¾".
3. ROPES #1 AND #2 AND ROPES #3 AND ROPES #4 TO BE CONTINUOUS.
4. ALL ROPES TO HAVE A MINIMUM OF 5½ TURNS ABOUT DRUM.

NOTE:
CONTRACTOR TO FURNISH & INSTALL 10" x 15" ENGRAVED METAL PLATE w/ "GREASING DIAGRAM" TO BE INSTALLED ON OUTSIDE OF ELECT. CONTROL CABINET DOOR IN APPARATUS ROOM.

CROSS - SECTION 1/55

SCALE ¼" = 1'-0"

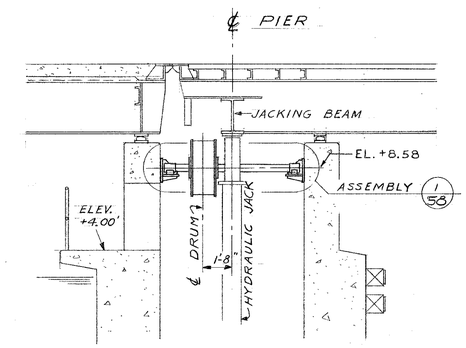

SECTION 3/55

SCALE ¼" = 1'-0"

"AS BUILT"

DEPARTMENT OF PUBLIC WORKS
BUREAU OF BRIDGES AND PUBLIC BUILDINGS
CITY OF MILWAUKEE

REVISIONS		
MARK	DATE	BY
A		
B		
C		
D		
E		
F		
G		
H		
I		
J		
K		
L		
M		

MICHIGAN ST. VERTICAL LIFT BRIDGE
OVER MILWAUKEE RIVER

MACHINERY - TRANSVERSE EQUALIZER & COUNTERWEIGHT SYSTEM

DESIGNED BY: L. F. R. TRACED BY: DATE:
DRAWN BY: L. F. R. CHECKED BY: PCB DATE:
APPROVED:— SCALE: AS NOTED

Norris A. Batalden — DESIGNER IN CHARGE — DATE: 2-2-77 SHEET NUMBER 55
Henry J. Baloni — BUREAU OF BRIDGES AND PUBLIC BUILDINGS — DATE: 2-2-77 SET OF 85 SHEETS
CONSULTING ENGINEER — COMMISSIONER OF PUBLIC WORKS — DATE: 2-3-77 JOB NO. 505-98

CPE-2

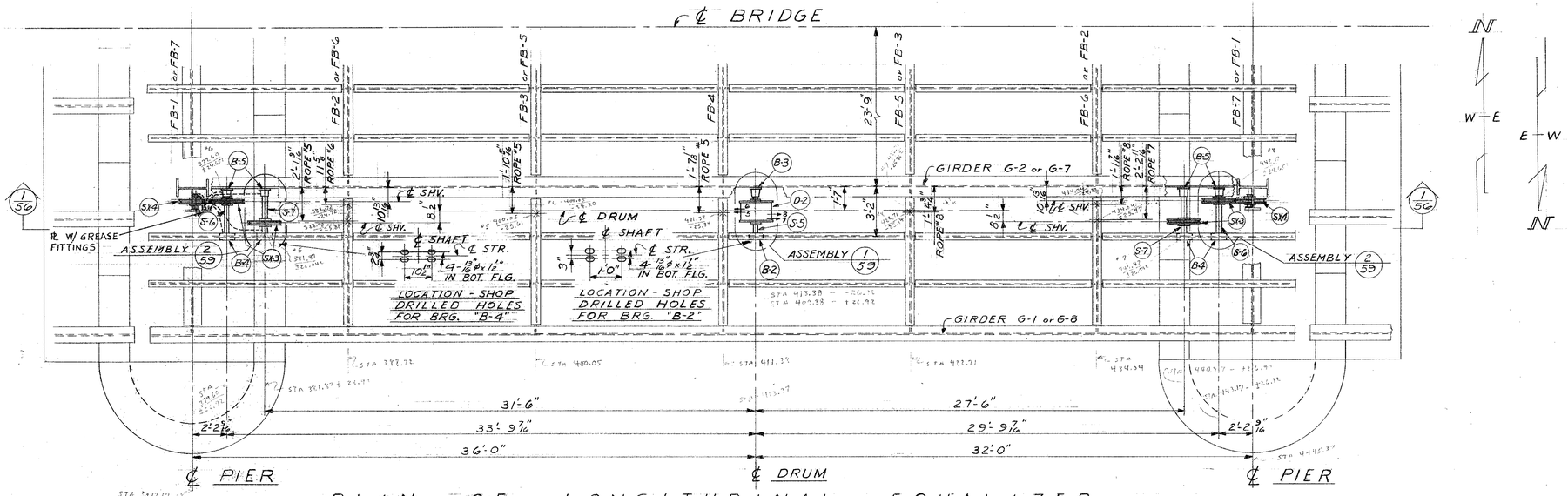

PLAN OF LONGITUDINAL EQUALIZER

SCALE 1/4" = 1'-0"

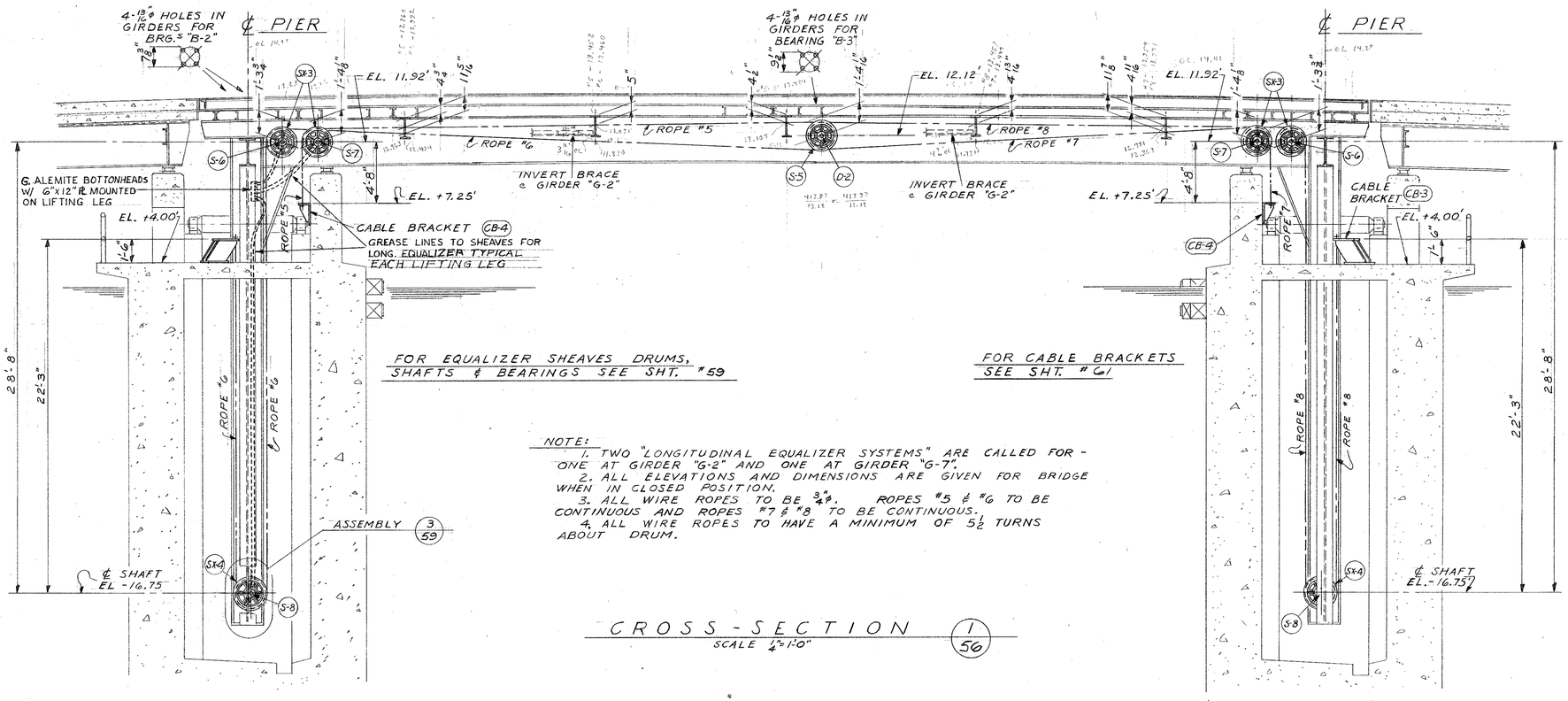

FOR EQUALIZER SHEAVES DRUMS, SHAFTS & BEARINGS SEE SHT. #59

FOR CABLE BRACKETS SEE SHT. #61

NOTE:
1. TWO "LONGITUDINAL EQUALIZER SYSTEMS" ARE CALLED FOR - ONE AT GIRDER "G-2" AND ONE AT GIRDER "G-7".
2. ALL ELEVATIONS AND DIMENSIONS ARE GIVEN FOR BRIDGE WHEN IN CLOSED POSITION.
3. ALL WIRE ROPES TO BE 3/4"ø. ROPES #5 & #6 TO BE CONTINUOUS AND ROPES #7 & #8 TO BE CONTINUOUS.
4. ALL WIRE ROPES TO HAVE A MINIMUM OF 5 1/2 TURNS ABOUT DRUM.

CROSS-SECTION 1/56

SCALE 1/4" = 1'-0"

"AS BUILT"

DEPARTMENT OF PUBLIC WORKS
BUREAU OF BRIDGES AND PUBLIC BUILDINGS
CITY OF MILWAUKEE

REVISIONS		
MARK	DATE	BY
A		
B		
C		
D		
E		
F		
G		
H		
I		
J		
K		
L		
M		

MICHIGAN ST. VERTICAL LIFT BRIDGE
OVER MILWAUKEE RIVER
MACHINERY - LONGITUDINAL EQUALIZER SYSTEM

DESIGNED BY: L.F.R. TRACED BY: DATE:
DRAWN BY: L.F.R. CHECKED BY: PCB DATE:
APPROVED:— SCALE: AS NOTED
Harris A. Batalden DESIGNER IN CHARGE DATE: 2-2-77 SHEET NUMBER 56
Henry J. Balconi BUR'L BRIDGES AND PUBLIC BUILDINGS DATE: 2-2-77 SET OF 85 SHEETS
COMMISSIONER OF PUBLIC WORKS DATE: 2-3-77 JOB NO. 505-98

Special Repair

CPE-2

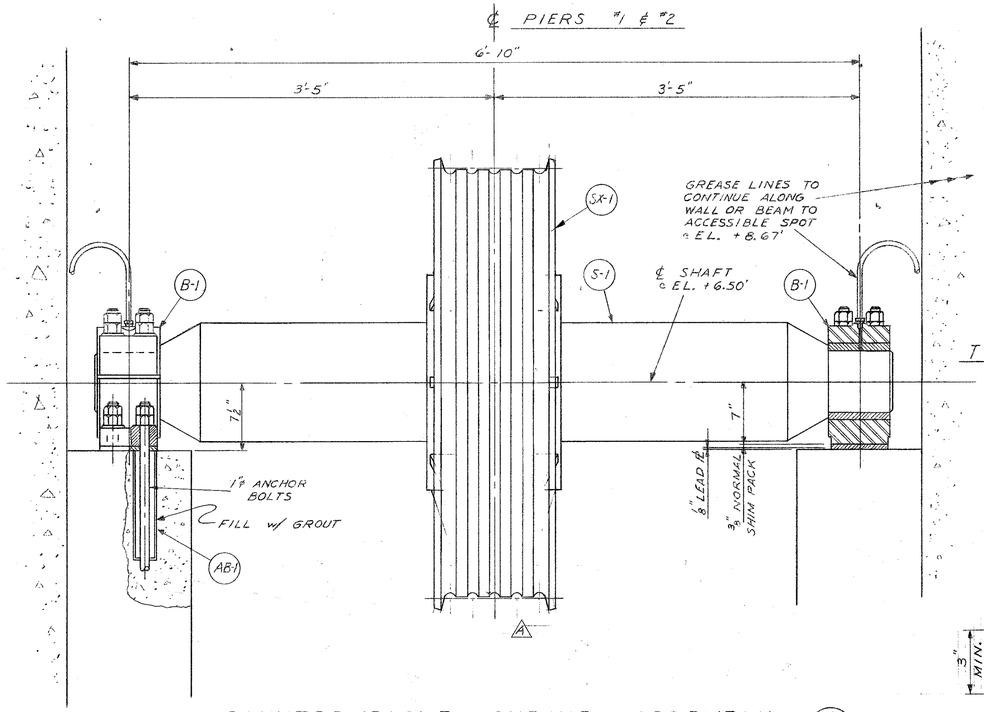

COUNTERWEIGHT SHEAVE ASSEMBLY (1/55)

SCALE 1½" = 1'-0"

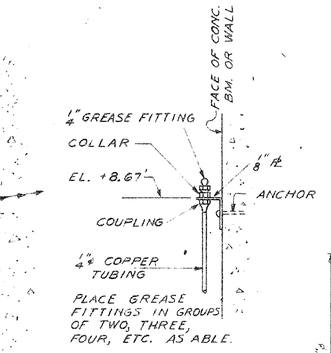

TYPICAL GREASE FITTING DETAIL

N.T.S.

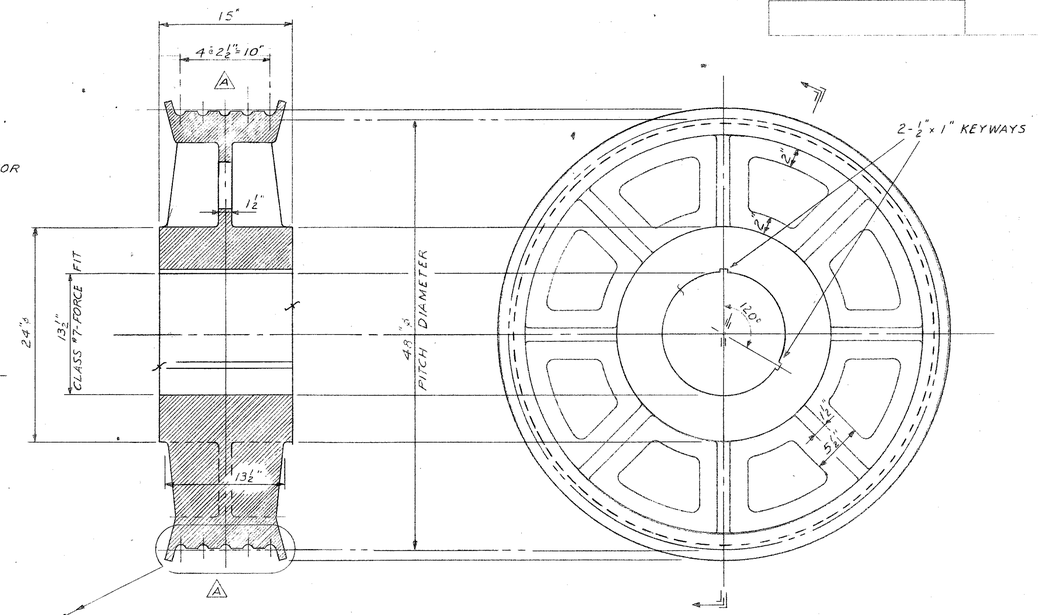

4 - COUNTERWEIGHT SHEAVES #SX-1

CAST STEEL

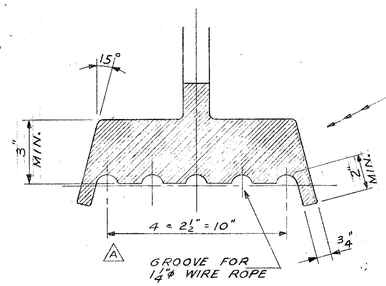

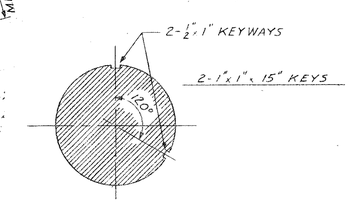

SECTION (1/57)

SCALE 1½" = 1'-0"

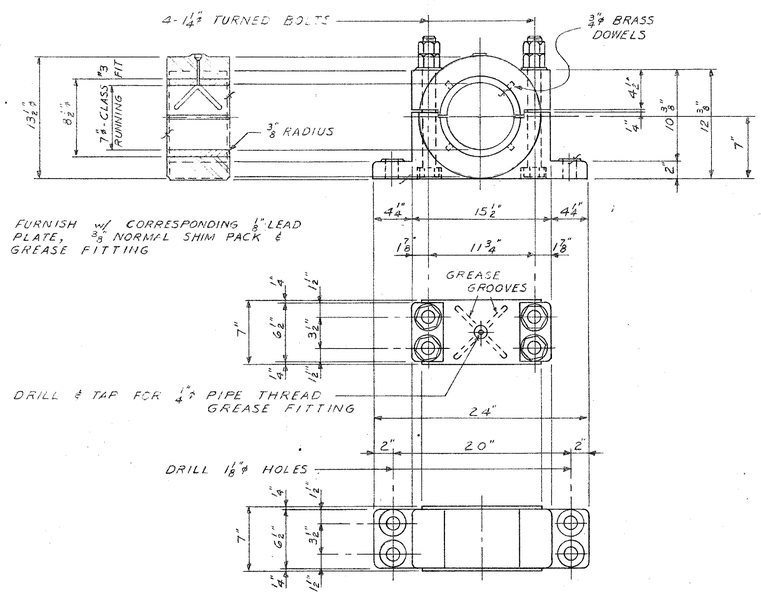

8 - COUNTERWEIGHT BEARINGS #B-1

CAST STEEL

PHOSPHOR BRONZE BUSHING

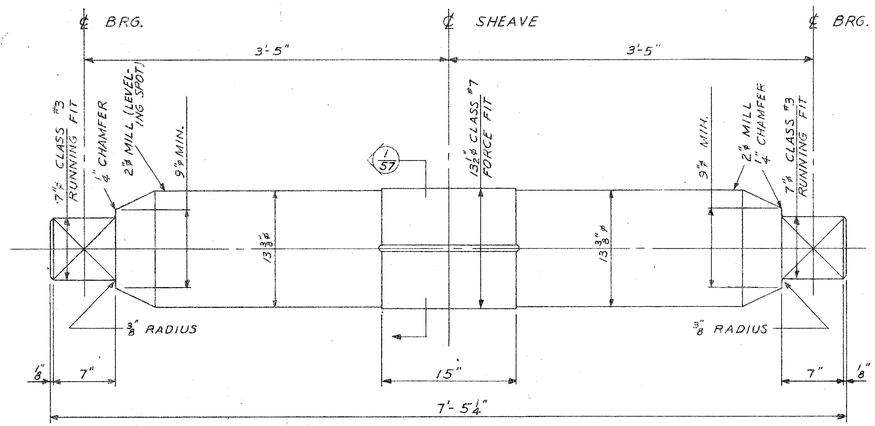

4 - COUNTERWEIGHT SHAFTS #S-1

FORGED STEEL (ANNEALED)

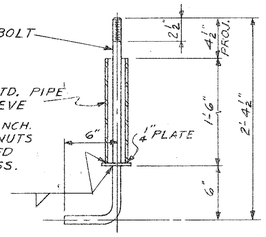

NOTE: THE TOP 6½" OF ANCH. BOLTS, WASHERS & NUTS SHALL BE GALVANIZED ASTM 164 TYPE GS.

32 - COUNTERWEIGHT BEARING ANCHOR BOLTS #AB-1

WGT. OF ANCHOR BOLTS PAID FOR AS STRUCTURAL CARBON STEEL

DEPARTMENT OF PUBLIC WORKS
BUREAU OF BRIDGES AND PUBLIC BUILDINGS
CITY OF MILWAUKEE

REVISIONS		
MARK	DATE	BY
A	2-14-77	LFR
B		
C		
D		
E		
F		
G		
H		
I		
J		
K		
L		
M		

MICHIGAN ST. VERTICAL LIFT BRIDGE OVER MILWAUKEE RIVER

MACHINERY - COUNTERWEIGHT SHEAVE ASSEMBLY

DESIGNED BY: L.F.R. TRACED BY: DATE:

DRAWN BY: L.F.R. CHECKED BY: PCB DATE:

APPROVED:— SCALE: AS NOTED

Norris A. Batalden — DESIGNER IN CHARGE — DATE: 2-2-77 SHEET NUMBER 57

Henry J. Balcomi — DEPT. OF PUBLIC WORKS AND PUBLIC BUILDINGS — DATE: 2-2-77 SET OF 85 SHEETS

[illegible] — COMMISSIONER OF PUBLIC WORKS — DATE: 2-3-77 JOB NO. 505-98

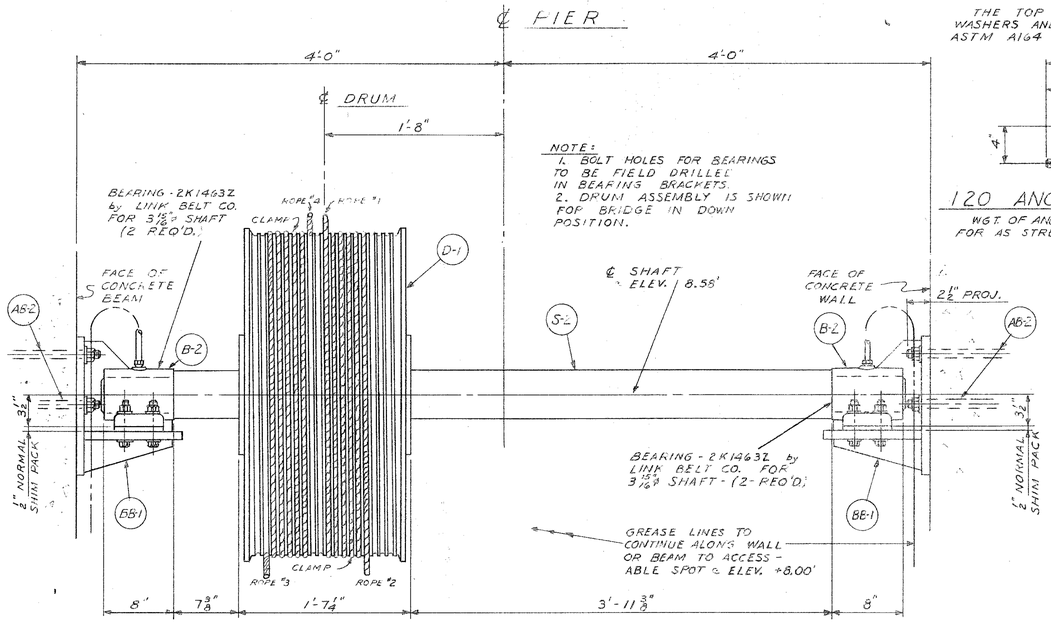

ASSEMBLY 1/55
SCALE 1 1/2" = 1'-0"

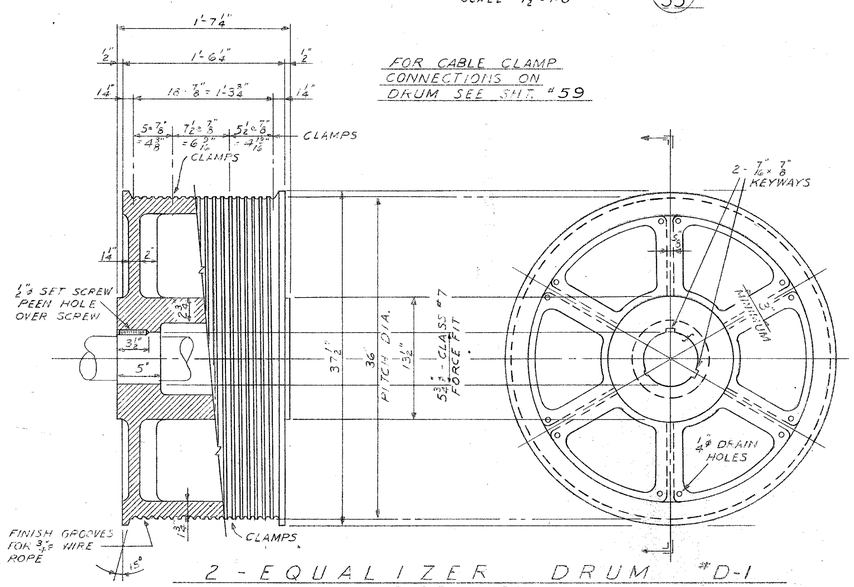

2 - EQUALIZER DRUM #D-1
CAST STEEL

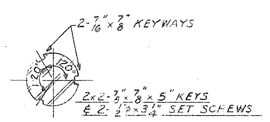

SECTION 2/58
SCALE 1 1/2" = 1'-0"

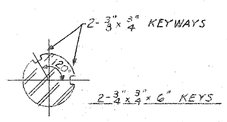

SECTION 3/58
SCALE 1 1/2" = 1'-0"

THE TOP 3 1/2" OF ANCHOR BOLTS, WASHERS AND NUTS SHALL BE GALV. ASTM A164 TYPE GS.

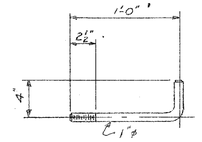

120 ANCH. BOLTS #AB-2

WGT. OF ANCHOR BOLTS SHALL BE PAID FOR AS STRUCTURAL CARBON STEEL

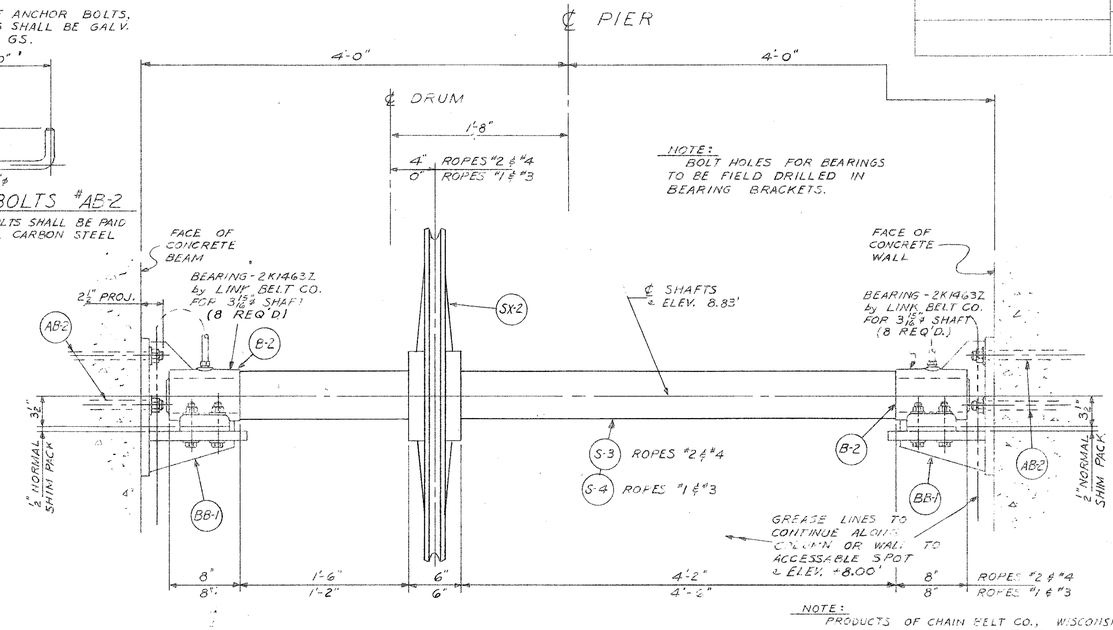

ASSEMBLY 2/55
SCALE 1 1/2" = 1'-0"

NOTE:
PRODUCTS OF CHAIN BELT CO., WISCONSIN BEARING CO. OR OTHER MANUFACTURES APPROVED EQUAL AS TO DESIGN, APPLICATION AND OTHER OPERATING CHARACTERISTICS TO LINK BELT CO., AS SHOWN ON DRAWINGS WILL BE ACCEPTED.

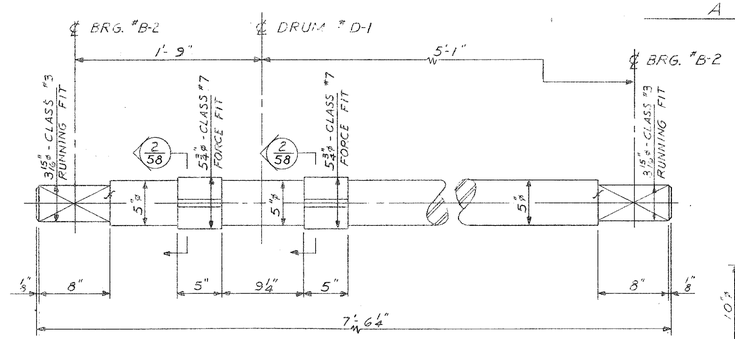

2 - EQUALIZER DRUM SHAFTS #S-2
SAE C-1045 STEEL - TURN AND POLISH

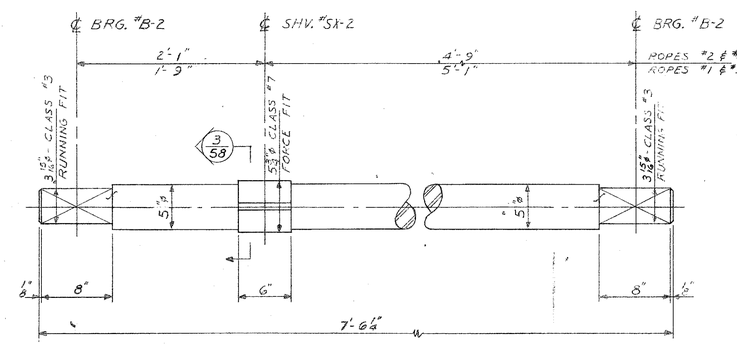

4 - EQUALIZER SHEAVE SHAFTS #S-3 (ROPES #2 & #4)
4 - " " " #S-4 (ROPES #1 & #3)
SAE C-1045 STEEL - TURN AND POLISH

NOTE:
SHEAVE #36LT8 by McKISSICK CO. MAY BE FURNISHED AS AN ALTERNATE PROVIDED SHEAVE HAS 5 3/4" FORCE FIT BORE w/ 3/4" x 3/4" KEYWAYS; 5" WIDE HUB AND GROOVED FOR 3/4" CABLE.

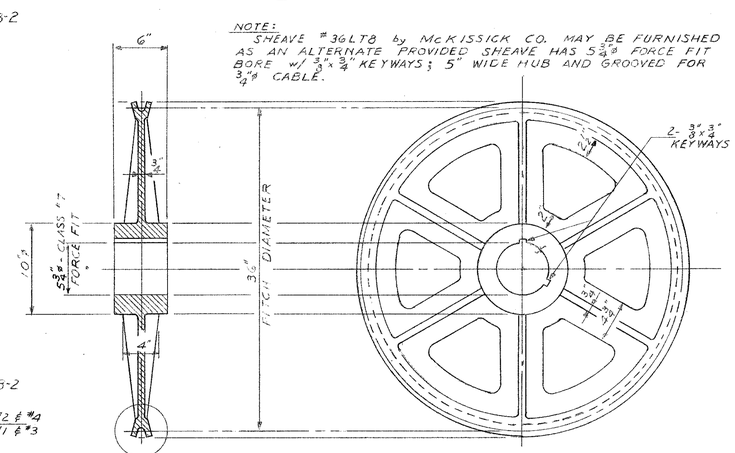

8 - SHEAVES SX-2
CAST STEEL

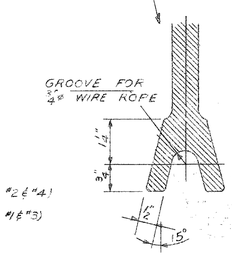

DEPARTMENT OF PUBLIC WORKS
BUREAU OF BRIDGES AND PUBLIC BUILDINGS
CITY OF MILWAUKEE

REVISIONS		
MARK	DATE	BY
A		
B		
C		
D		
E		
F		
G		
H		
I		
J		
K		
L		
M		

MICHIGAN ST. VERTICAL LIFT BRIDGE
OVER MILWAUKEE RIVER
MACHINERY - TRANSVERSE EQUALIZER ASSEMBLY

DESIGNED BY: L.F.R. TRACED BY: DATE:
DRAWN BY: L.F.R. CHECKED BY: PCB DATE:
APPROVEL:- SCALE: AS NOTED

Norris C. Batalden — DESIGNER IN CHARGE — DATE: 2-2-77 SHEET NUMBER 58
Henry J. Balcom — SUPT. MAINTENANCE PUBLIC BUILDINGS — DATE: 2-2-77 SET OF 85 SHEETS
Shount Bogert — COMMISSIONER OF PUBLIC WORKS — DATE: 2-3-77 JOB NO. 505-98

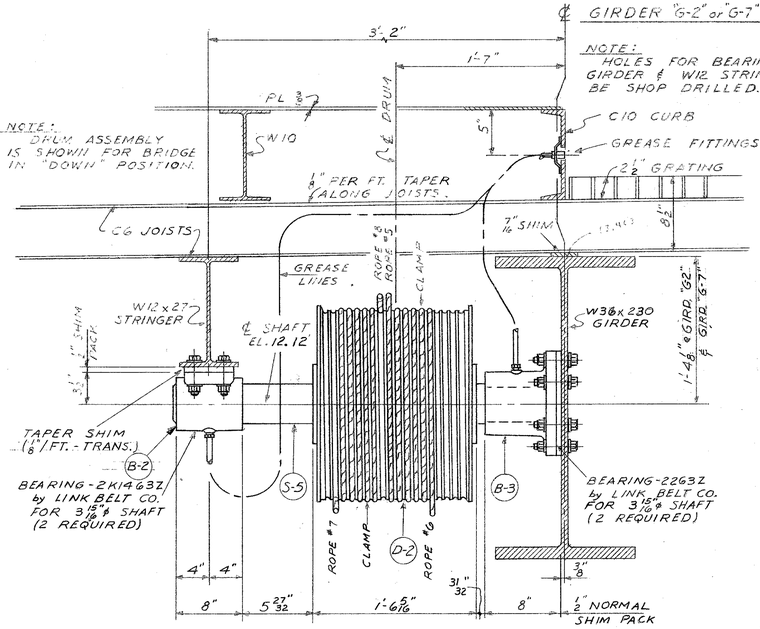

LONGITUDINAL EQUALIZER DRUM ASSEMBLY (1/56)
SCALE 1 1/2" = 1'-0"

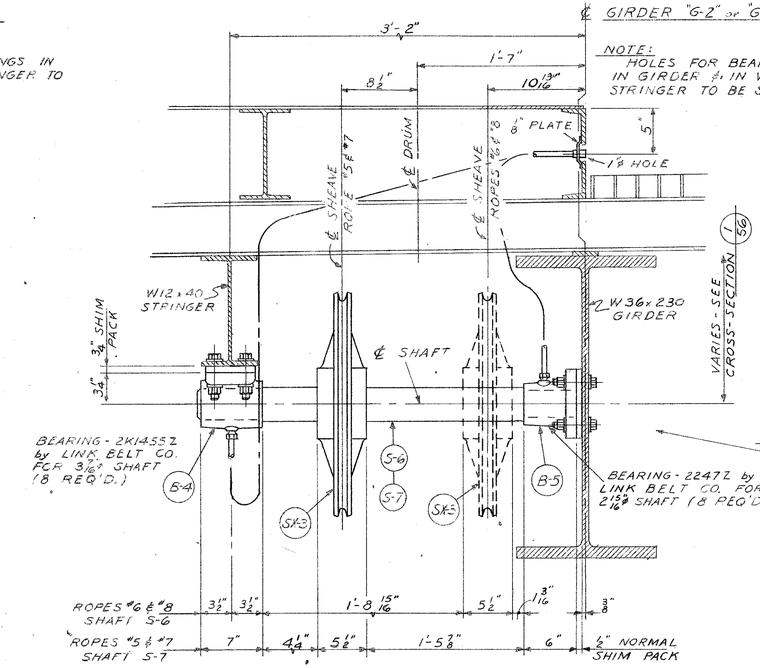

LONGITUDINAL EQUALIZER UPPER SHEAVE ASSEMBLIES (2/56)
SCALE 1 1/2" = 1'-0"

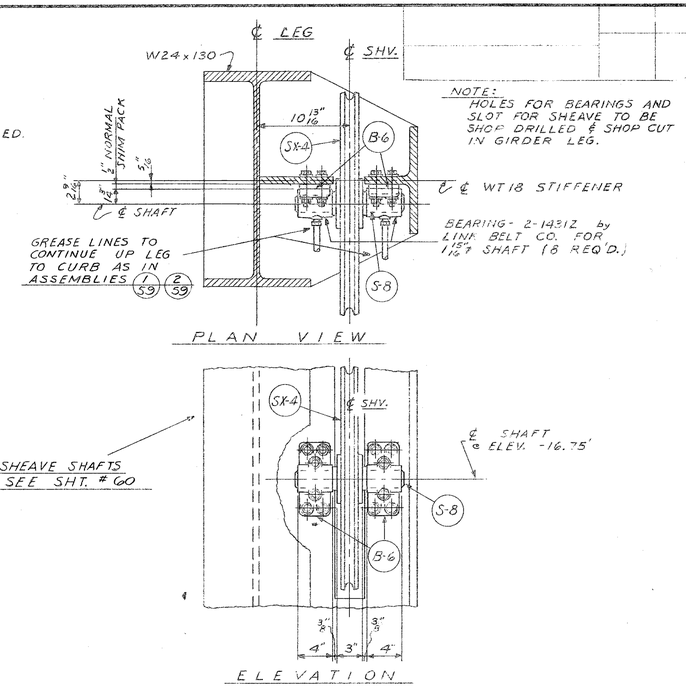

LONGITUDINAL EQUALIZER LOWER SHEAVE ASSEMBLY (3/56)
SCALE 1 1/2" = 1'-0"

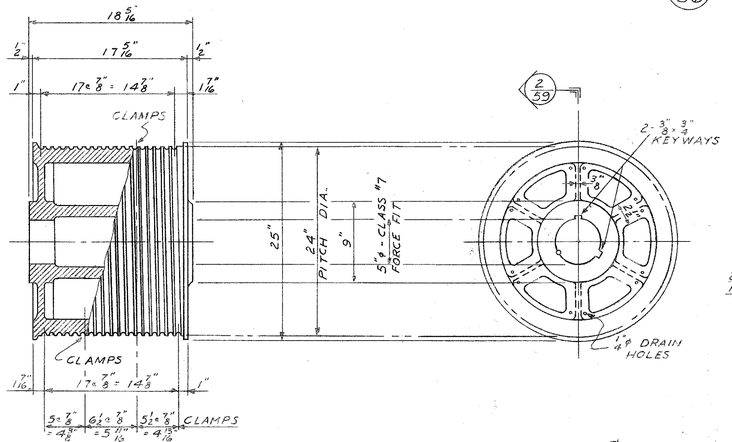

2 - EQUALIZER DRUMS #D-2
CAST STEEL

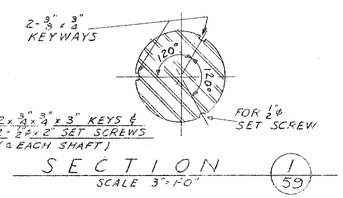

SECTION (1/59)
SCALE 3" = 1'-0"

NOTE:
JOHNSON SHEAVES AS MFG. BY DON R. HINDERLITER INC. OF TULSA, OKLA. OR OTHER MANUFACTURERS APPROVED EQUAL TO MCKISSICK SHEAVES AS SHOWN ON THE PLAN WILL BE ACCEPTED.

NOTE:
1. SHEAVE #24-12 by McKISSICK CO. MAY BE FURNISHED AS AN ALTERNATE FOR "SX-3" PROVIDED SHEAVE HAS A 5 1/8" FORCE FIT BORE w/ 3/4" x 3/8" KEYWAYS; 4 3/4" HUB WIDTH AND IS GROOVED FOR 3/4" WIRE ROPE.
2. SHEAVE #24-7 by McKISSICK CO. MAY BE FURNISHED AS AN ALTERNATE FOR "SX-4" PROVIDED SHEAVE HAS A 2 3/8" FORCE FIT BORE w/ 1/4" x 1/8" KEYWAYS; 2 1/2" HUB WIDTH AND IS GROOVED FOR 3/4" WIRE ROPE.

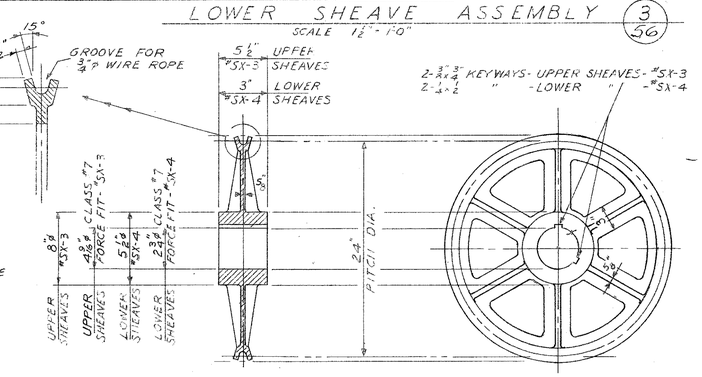

8 - UPPER SHEAVES #SX-3
4 - LOWER " #SX-4
CAST STEEL

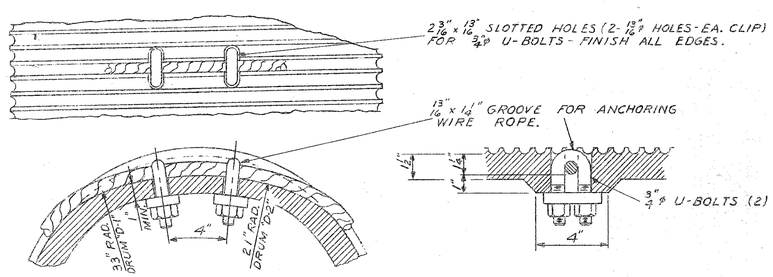

DRUM CABLE CLAMP CONNECTION
SCALE 3" = 1'-0"

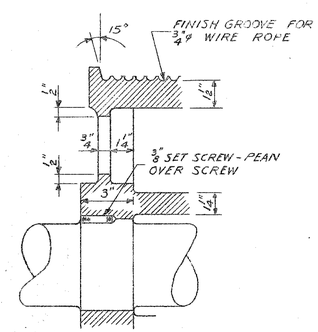

SECTION (2/59)
SCALE 3" = 1'-0"

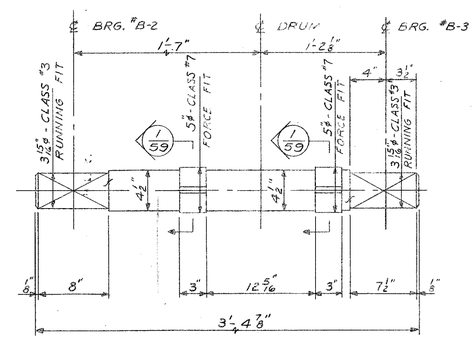

2 - EQUALIZER DRUM SHAFTS #S-5
SAE C-1045 STEEL - TURN AND POLISH

DEPARTMENT OF PUBLIC WORKS
BUREAU OF BRIDGES AND PUBLIC BUILDINGS
CITY OF MILWAUKEE

REVISIONS		
MARK	DATE	BY
A		
B		
C		
D		
K		
F		
G		
H		
I		
J		
K		
L		
M		

MICHIGAN ST. VERTICAL LIFT BRIDGE
OVER MILWAUKEE RIVER
MACHINERY - LONGITUDINAL EQUALIZER ASSEMBLY

DESIGNED BY: L.F.R. TRACED BY: DATE:
DRAWN BY: L.F.R. CHECKED BY: PCB DATE:
APPROVED:— SCALE: AS NOTED
DESIGNED IN CHARGE — DATE 2-2-77 SHEET NUMBER 59
BUR. CHIEF — DATE 2-2-77 SET OF 85 SHEETS
Special Deputy COMMISSIONER OF PUBLIC WORKS — DATE: 2-3-77 JOB NO. 505-98

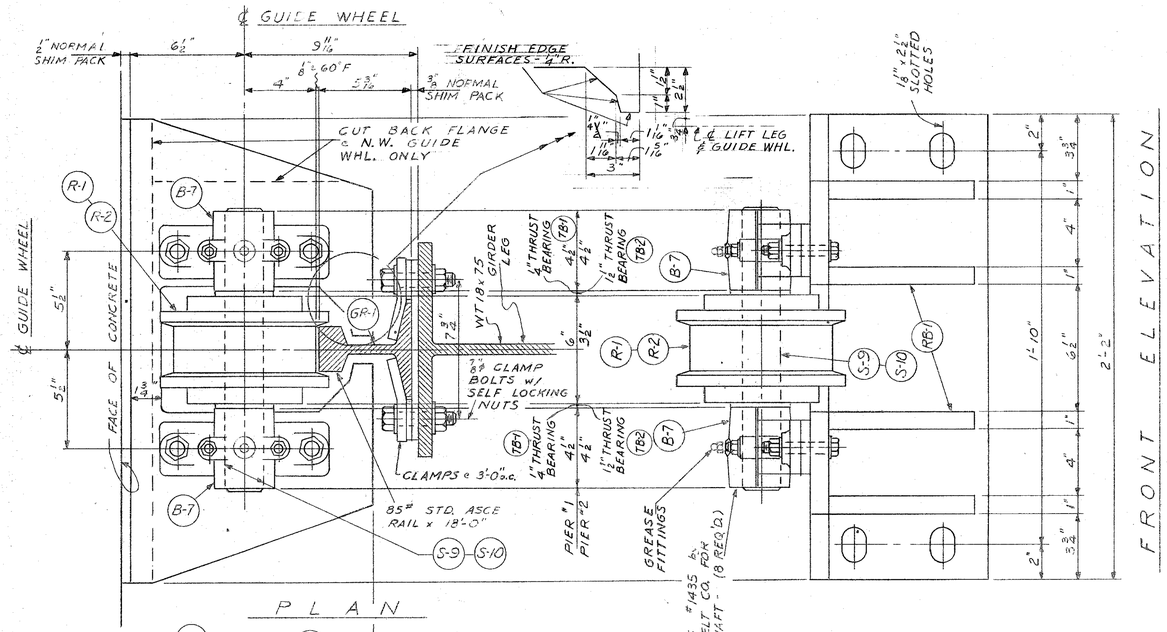

PLAN

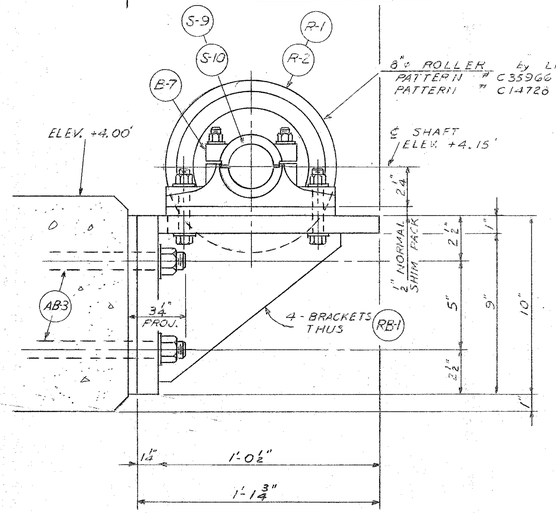

SIDE ELEVATION

ROLLER GUIDE ASSEMBLY (1/55)

SCALE 3" = 1'-0"

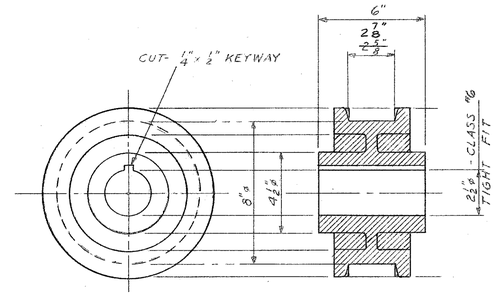

2 - ROLLERS - PIER #1 #R-1

LINK BELT CO. - PATTERN #C35966

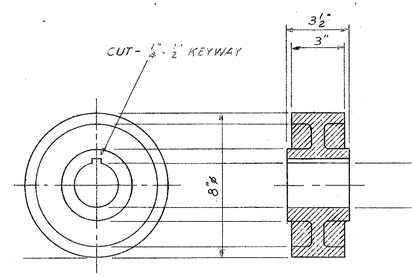

2 - ROLLERS - PIER #2 #R-2

LINK BELT CO. - PATTERN #C14728

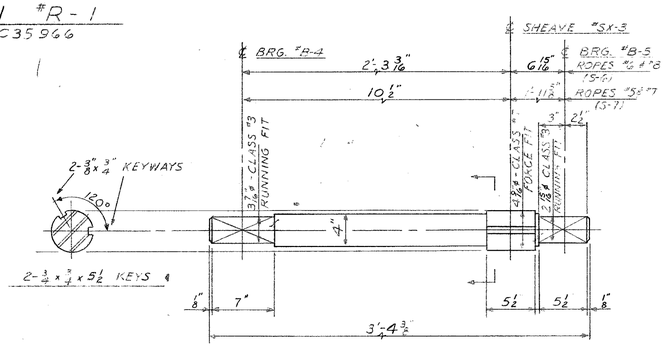

EQUALIZER UPPER SHEAVE SHAFTS

4 - (ROPES #6 & #8) - S-6

4 - (ROPES #5 & #7) - S-7

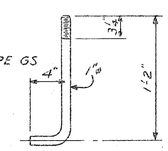

THE TOP 4" OF ANCHOR BOLTS WASHERS AND NUTS SHALL BE GALVANIZED ASTM A164 TYPE GS

16-ROLLER GUIDE BRACKET ANCHOR BOLTS #AB-3

WGT. OF ANCHOR BOLTS PAID FOR AS STRUCTURAL CARBON STEEL

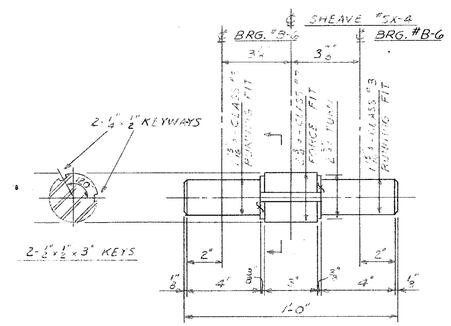

4 - LOWER SHEAVE SHAFTS - S-8

SAE C-1045 STEEL - TURN AND POLISH

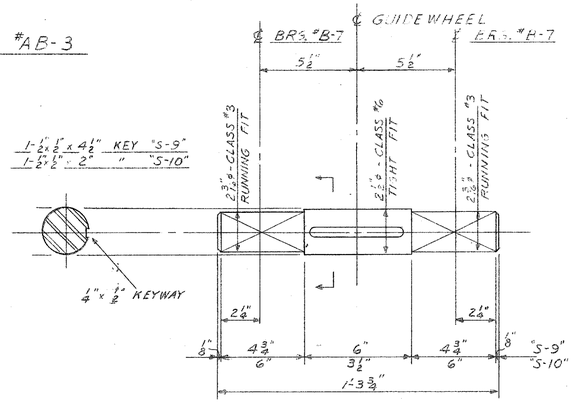

2-ROLLER GUIDE SHAFTS - PIER #1 #S-9

2 - " " " - PIER #2 #S-10

SAE C-1045 STEEL - TURN AND POLISH

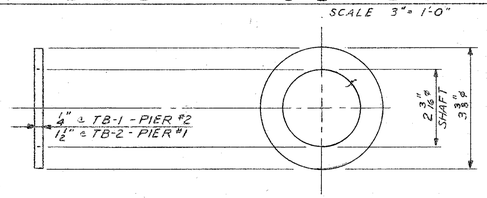

4 - 1/4" ROLLER GUIDE THRUST BEARINGS #TB-1

4 - 1/2" " " " " #TB-2

SELF LUBRICATING BRONZE

"AS BUILT"

DEPARTMENT OF PUBLIC WORKS
BUREAU OF BRIDGES AND PUBLIC BUILDINGS
CITY OF MILWAUKEE

REVISIONS		
MARK	DATE	BY
A		
B		
C		
D		
E		
F		
G		
H		
I		
J		
K		
L		
M		

MICHIGAN ST. VERTICAL LIFT BRIDGE
OVER MILWAUKEE RIVER

MACHINERY - ROLLER GUIDE ASSEMBLY

DESIGNED BY: L.F.R. TRACED BY: DATE:
DRAWN BY: L.F.R. CHECKED BY: PCB DATE:
APPROVED:— SCALE: AS NOTED

Norris G. Batalden — DESIGNER IN CHARGE — DATE: 2-2-77 SHEET NUMBER 60
Henry J. Balcerzak — CITY OF MILWAUKEE BUREAU OF PUBLIC BUILDINGS — DATE: 2-2-77 SET OF 85 SHEETS
J. Wingler — COMMISSIONER OF PUBLIC WORKS — DATE: 2-3-77 CONTRACT NO. 505-98

Special Depart.

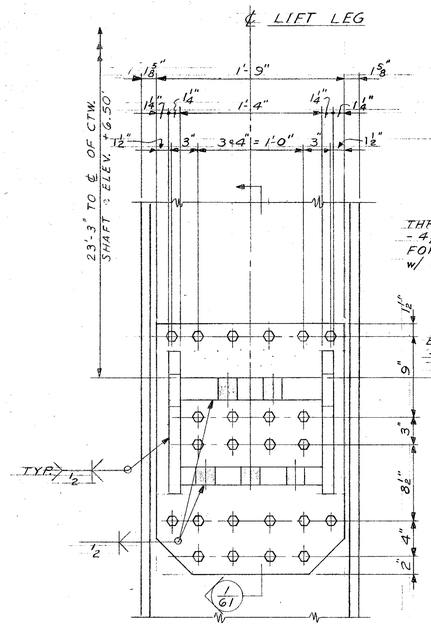

CABLE BRACKET CB-1
SCALE 1½" = 1'-0"
4 REQUIRED

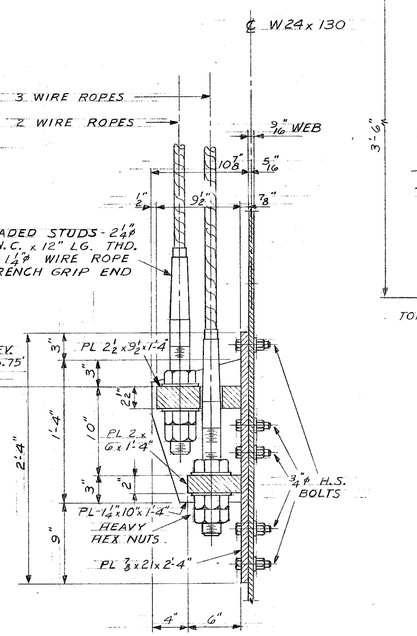

SECTION 1/61
SCALE 1½" = 1'-0"

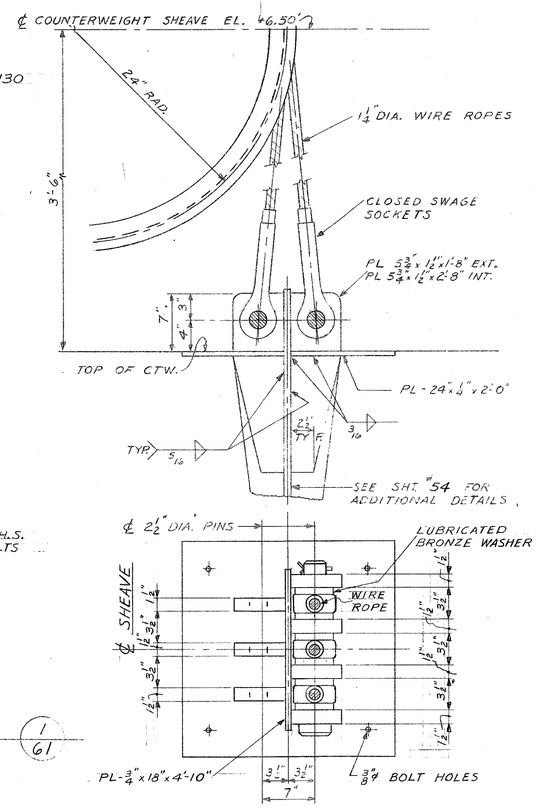

PLAN OF CB-2
SCALE 1½" = 1'-0"
4 - REQUIRED

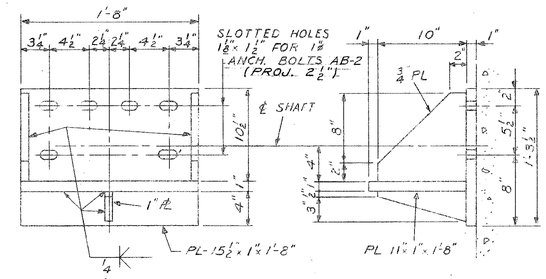

BEARING BRACKET BB-1
SCALE 1½" = 1'-0"
20 REQUIRED

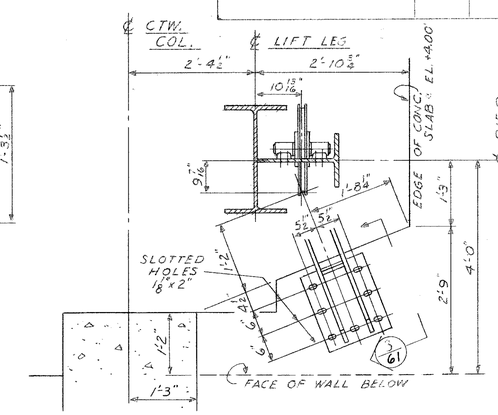

CABLE BRACKET CB-3
SCALE ¾" = 1'-0"
4 - REQUIRED

TENSION NUT

FURNISH & INSTALL AS FOLLOWS:
1. MICHIGAN ST. BRIDGE: 16 AS SHOWN
2. CLYBOURN ST. BRIDGE: 4 AS SHOWN & 4 - W/ SPECIAL 1⅜"ø & 4'-10" SPEC. 1¼"ø THR'D. ROD.
3. WISCONSIN AVE. BRDG: 16 AS SHOWN - DELIVER - DO NOT INSTALL.
4. PLEASANT ST. 4 - W/ 1⅜"ø THR'D. ROD AS SHOWN; 4 - W/ SPECIAL 1⅜" THR'D. ROD; 3 - W/ 1¼"ø THR'D. ROD AS SHOWN & 1 - W/ SPECIAL 1¼"ø THR'D. ROD.
5. ST. PAUL BRIDGE: 8 - W/ 1⅜"ø THR'D. ROD; 2 W/ ⅞"ø THR'D. ROD AS SHOWN & 2 W/ ⅜"ø SPEC. THR'D. ROD.

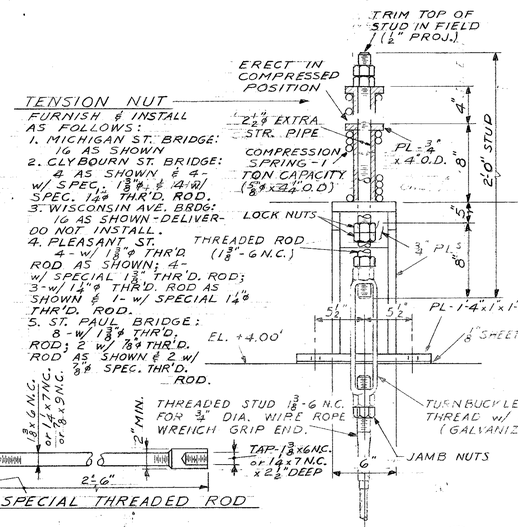

SPECIAL THREADED ROD

CB-3 SECTION 2/61
SCALE ½" = 1'-0"

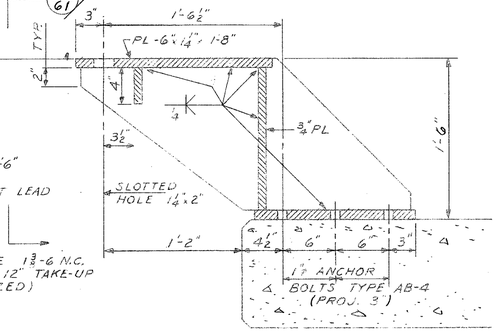

CB-3 SECTION 3/61
SCALE ½" = 1'-0"

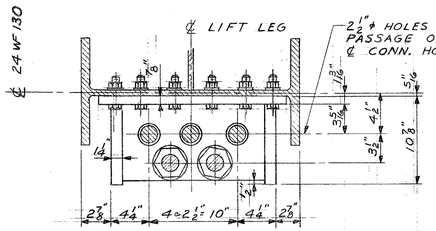

PLAN OF CB-1
SCALE 1½" = 1'-0"

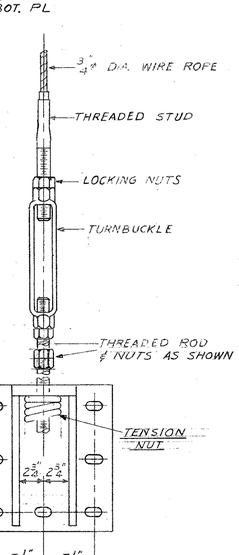

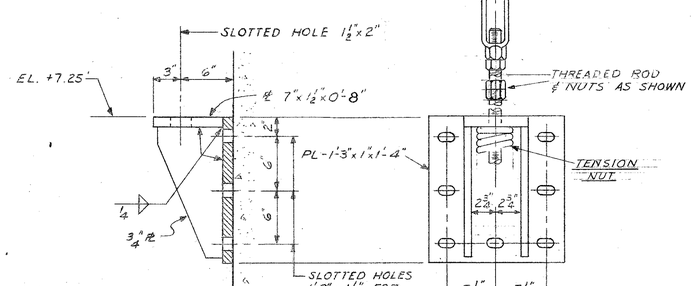

CABLE BRACKET CB-4
SCALE 1½" = 1'-0"
4 REQUIRED

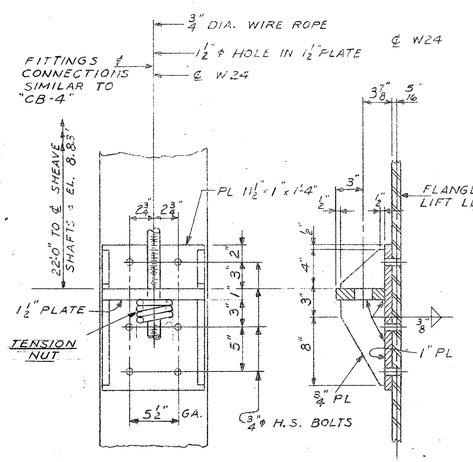

CABLE BRACKET CB-5
SCALE 1½" = 1'-0"
4 REQUIRED

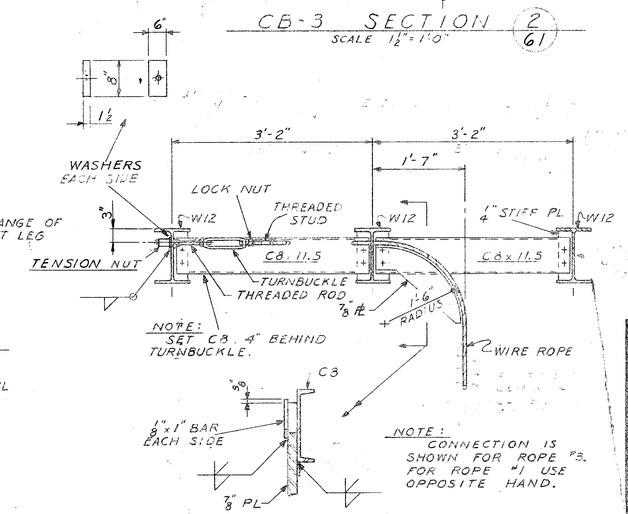

CABLE BRACKET CB-6
SCALE ¾" = 1'-0"
4 REQUIRED

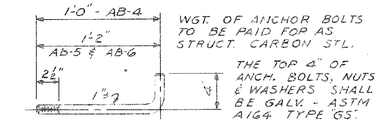

WGT. OF ANCHOR BOLTS TO BE PAID FOR AS STRUCT. CARBON STL.

THE TOP 4" OF ANCH. BOLTS, NUTS & WASHERS SHALL BE GALV. - ASTM A164 TYPE "GS".

28	- ANCHOR	BOLTS	AB-4
28	- "	"	AB-5
48	- "	"	AB-6

SCALE 1½" = 1'-0"

"AS BUILT"

DEPARTMENT OF PUBLIC WORKS
BUREAU OF BRIDGES AND PUBLIC BUILDINGS
CITY OF MILWAUKEE

REVISIONS		
MARK	DATE	BY
A		
B		
C		
D		
E		
F		
G		
H		
I		
J		
K		
L		
M		

MICHIGAN ST. VERTICAL LIFT BRIDGE
OVER MILWAUKEE RIVER

MACHINERY - CABLE AND BEARING BRACKETS

DESIGNED BY: L.F.R. TRACED BY: DATE:
DRAWN BY: L.F.R. CHECKED BY: PCB DATE:
APPROVED:— SCALE: AS NOTED

Norris G. Batelle — DESIGNER-IN-CHARGE — DATE: 2-2-77 SHEET NUMBER 61
Henry J. Balconi — DIV. OF BRIDGES AND PUBLIC BUILDINGS — DATE: 2-2-77 SET OF 85 SHEETS
Special Deputy — COMMISSIONER OF PUBLIC WORKS — DATE: 2-3-77 JOB NO. 505-98

CPE-2

NOTE:
1. ALL EXPOSED FIXTURES & OULETS TO BE WATERPROOF.
2. THERE IS TO BE NO EXPOSED CONDUIT UNLESS OTHERWISE INDICATED.
3. MIN. CONDUCTOR SIZE #12 THW - MINIMUM CONDUIT SIZE 3/4"ø.

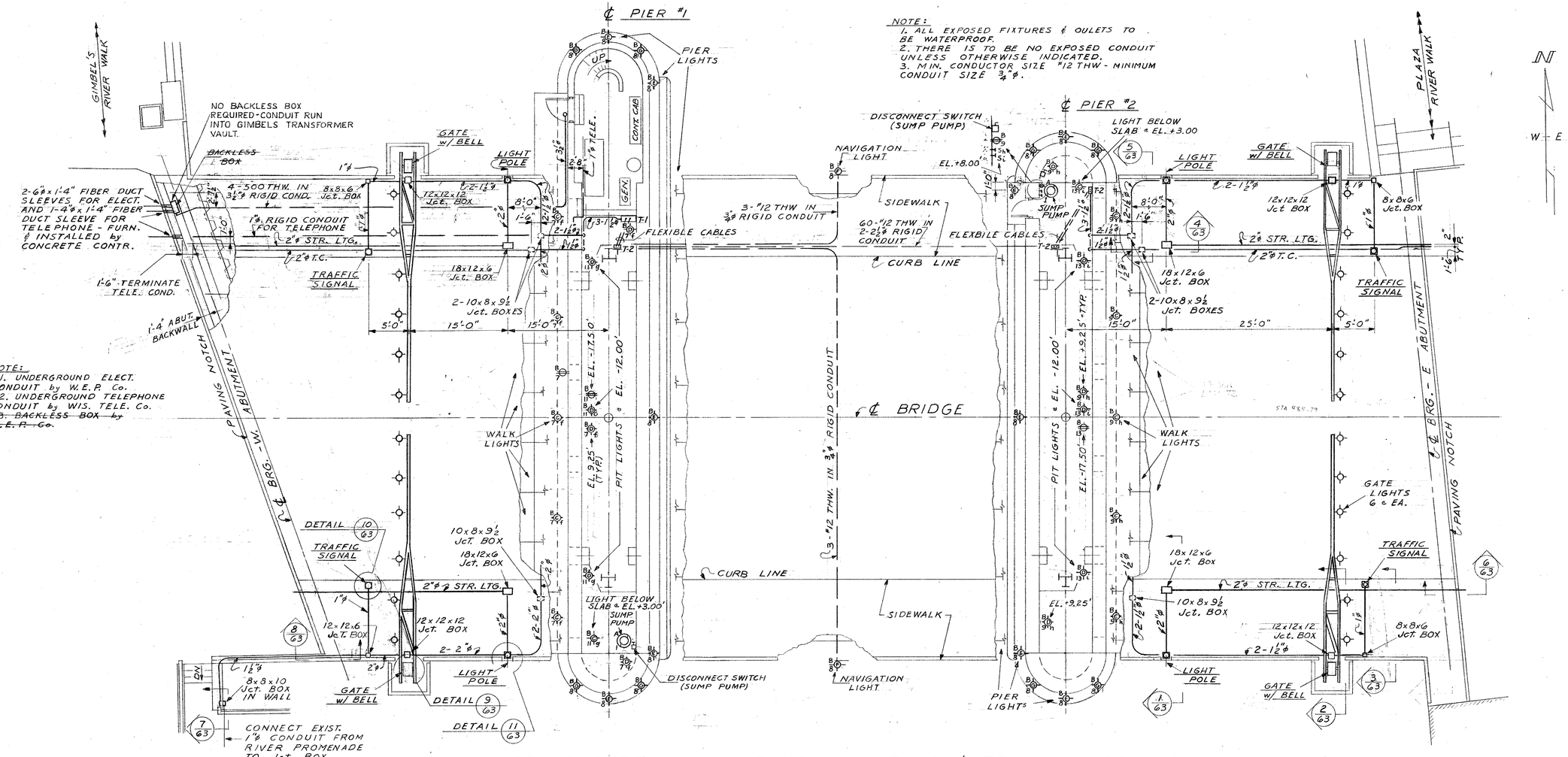

PLAN OF ELECTRICAL WIRING LIGHTING & TRAFFIC CONTROL

SCALE 1/8" = 1'-0"

NOTE:
1. UNDERGROUND ELECT. CONDUIT by W.E.P. Co.
2. UNDERGROUND TELEPHONE CONDUIT by WIS. TELE. Co.
~~3. BACKLESS BOX by W.E.P. Co.~~

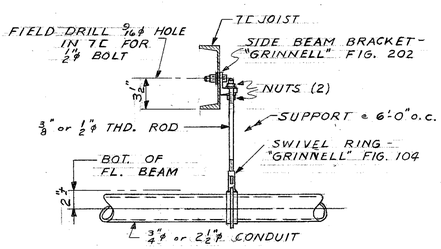

TYPICAL CONDUIT SUPPORT UNDER LIFT SPAN

SCALE 1 1/2" = 1'-0"

LEGEND:

BREAKER PANEL → B; TYPE FIXTURE; CIRCUIT → 3; SWITCH NUMBER → 4 — INDICATES LIGHTING FIXTURE

SWITCH NUMBER → 5a — INDICATES TOGGLE SWITCH - 48" ABV. FL. NORMAL

BREAKER PANEL → B; CIRCUIT → 3 — INDICATES CONVENIENCE OUTLET - 24" ABV. FL. NORMAL

BREAKER PANEL → A; CIRCUIT → 1 — INDICATES ELECTRIC MOTOR

BREAKER PANEL → A; CIRCUIT → 4 — INDICATES DISCONNECT SWITCH OR JCT. BOX

"AS BUILT"

DEPARTMENT OF PUBLIC WORKS
BUREAU OF BRIDGES AND PUBLIC BUILDINGS
CITY OF MILWAUKEE

REVISIONS		
MARK	DATE	BY
A		
B		
C		
D		
E		
F		
G		
H		
I		
J		
K		
L		
M		

MICHIGAN ST. VERTICAL LIFT BRIDGE
OVER MILWAUKEE RIVER

ELECTRICAL - LAYOUT PLAN

DESIGNED BY: L. F. R. TRACED BY: DATE:
DRAWN BY: L. F. R. CHECKED BY: PCB DATE:
APPROVED:— SCALE: AS NOTED
Norris A. Batelder — DESIGNER IN CHARGE — DATE: 2-2-77 SHEET NUMBER 62
Henry J. Balcomi — SUPT. OF BRIDGES AND PUBLIC BUILDINGS — DATE: 2-2-77 SET OF 85 SHEETS
COMMISSIONER OF PUBLIC WORKS — DATE: 2-3-77 JOB NO. 505-98

CPE-2

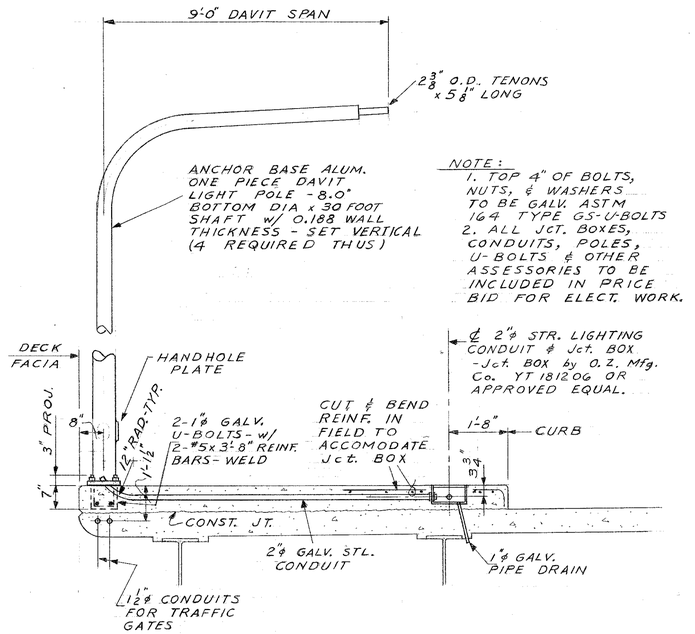

SECTION 1/62
SCALE 1/2" = 1'-0"

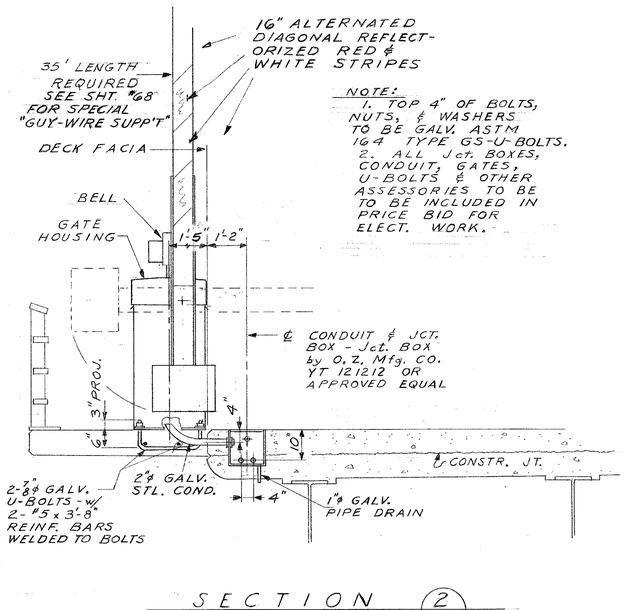

SECTION 2/62
SCALE 1/2" = 1'-0"

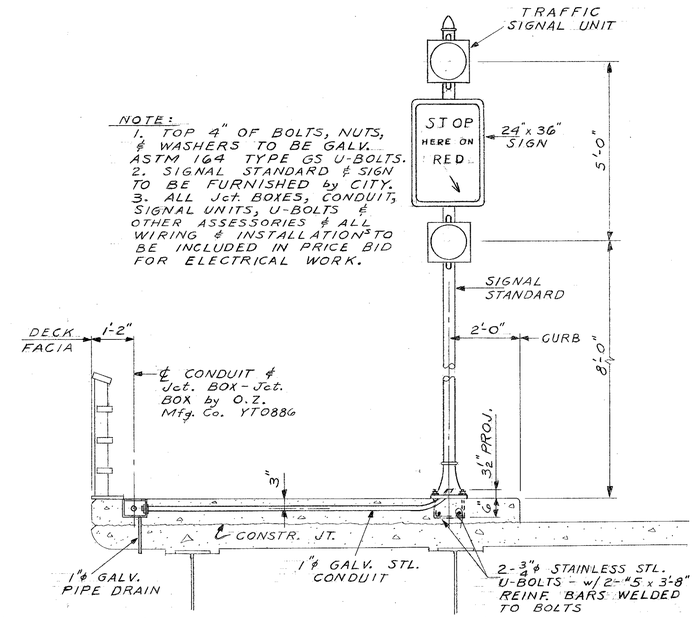

SECTION 3/62
SCALE 1/2" = 1'-0"

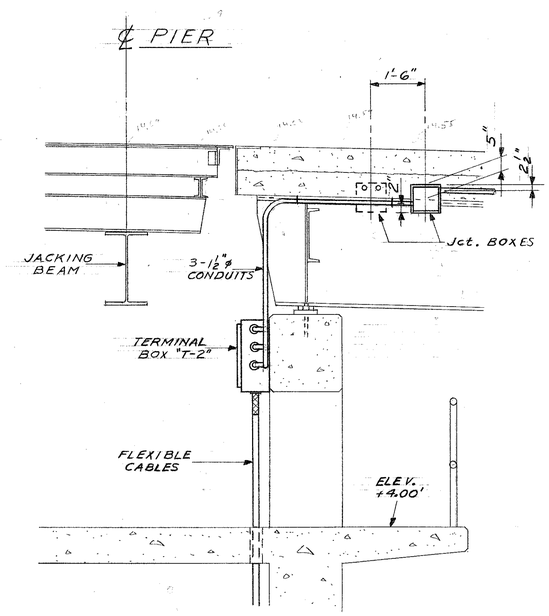

SECTION 4/62
SCALE 1/2" = 1'-0"

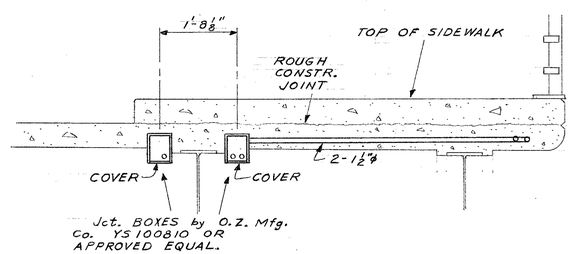

SECTION 5/62
SCALE 1/2" = 1'-0"

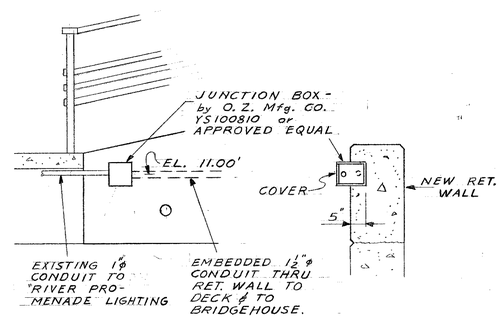

SECTION 7/62
SCALE 1/2" = 1'-0"

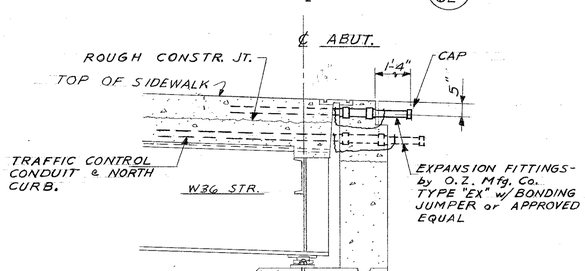

SECTION 6/62
SCALE 1/2" = 1'-0"

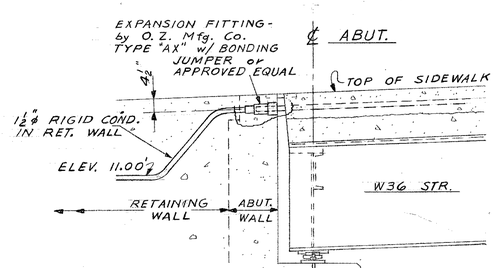

SECTION 8/62
SCALE 1/2" = 1'-0"

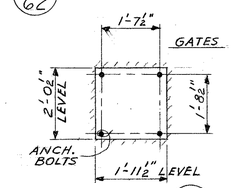

DETAIL 9/62
SCALE 1/2" = 1'-0"

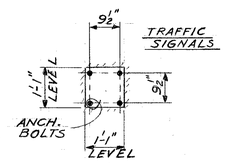

DETAIL 10/62
SCALE 1/2" = 1'-0"

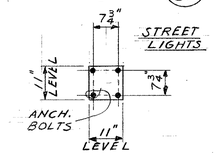

DETAIL 11/62

DEPARTMENT OF PUBLIC WORKS
BUREAU OF BRIDGES AND PUBLIC BUILDINGS
CITY OF MILWAUKEE

REVISIONS		
MARK	DATE	BY
A		
B		
C		
D		
E		
F		
G		
H		
I		
J		
K		
L		
M		

MICHIGAN ST. VERTICAL LIFT BRIDGE
OVER MILWAUKEE RIVER
ELECTRICAL - APPROACH SPAN
SECTIONS & DETAILS

DESIGNED BY: L.F.R. TRACED BY: DATE:
DRAWN BY: L.F.R. CHECKED BY: PCB DATE:
APPROVED:- SCALE: AS NOTED

Norris A. Bataldo — DESIGNER IN CHARGE — DATE: 2-2-77 SHEET NUMBER 63
Henry J. Balcerzak — CITY ENGINEER OF BRIDGES AND PUBLIC BUILDINGS — DATE: 2-2-77 SET OF 85 SHEETS
Lloyd Wright — COMMISSIONER OF PUBLIC WORKS — DATE: 2-3-77 JOB NO. 505-98

CPE-2

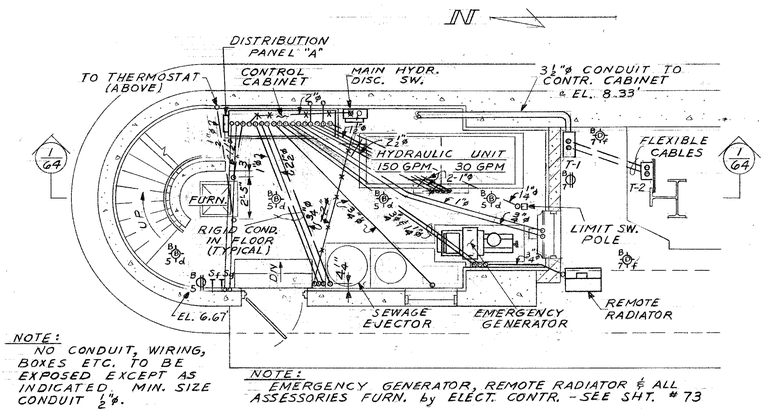

NOTE: NO CONDUIT, WIRING, BOXES ETC. TO BE EXPOSED EXCEPT AS INDICATED. MIN. SIZE CONDUIT ½"ø.

NOTE: EMERGENCY GENERATOR, REMOTE RADIATOR & ALL ASSESSORIES FURN. by ELECT. CONTR. - SEE SHT. # 73

PLAN OF EQUIPMENT ROOM
SCALE ¼"=1'-0"

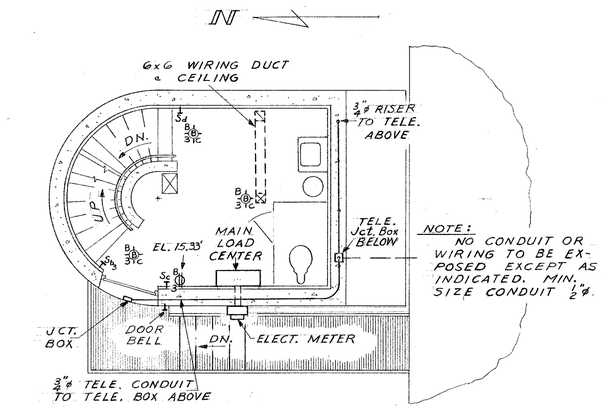

NOTE: NO CONDUIT OR WIRING TO BE EXPOSED EXCEPT AS INDICATED. MIN. SIZE CONDUIT ½"ø.

PLAN OF UTILITY ROOM
SCALE ¼"=1'-0"

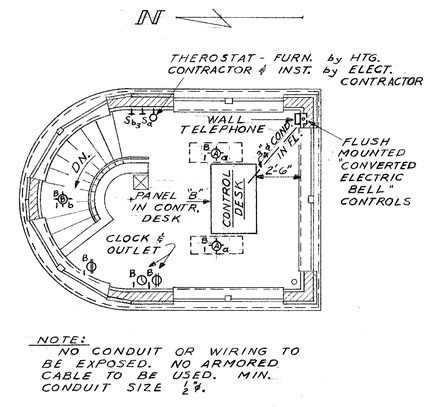

NOTE: NO CONDUIT OR WIRING TO BE EXPOSED. NO ARMORED CABLE TO BE USED. MIN. CONDUIT SIZE ½"ø.

PLAN OF CONTROL ROOM
SCALE ¼"=1'-0"

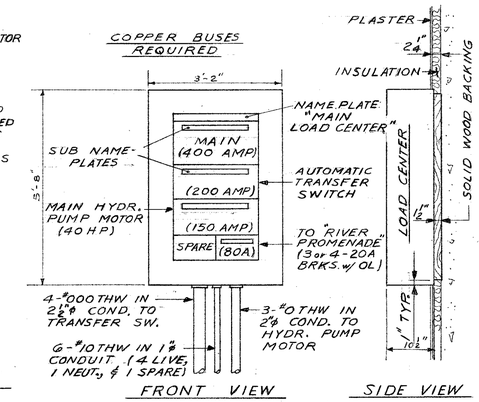

MAIN LOAD CENTER
SCALE ¾"=1'-0"

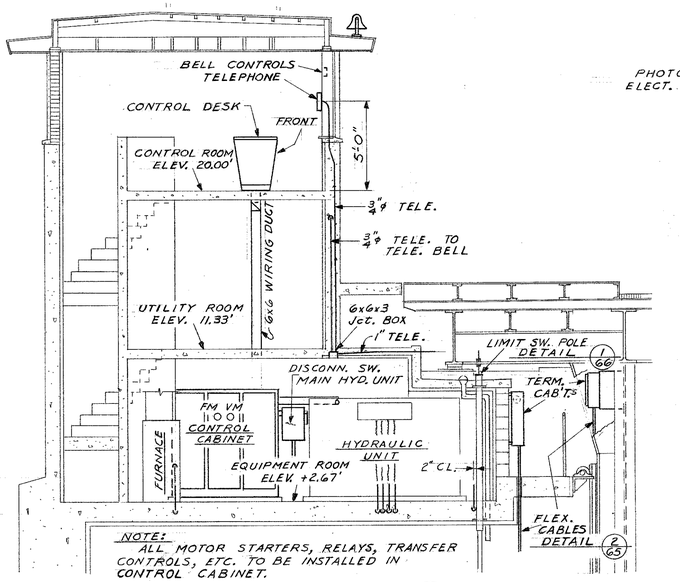

NOTE: ALL MOTOR STARTERS, RELAYS, TRANSFER CONTROLS, ETC. TO BE INSTALLED IN CONTROL CABINET.

CROSS SECTION 1/64
SCALE ¼"=1'-0"

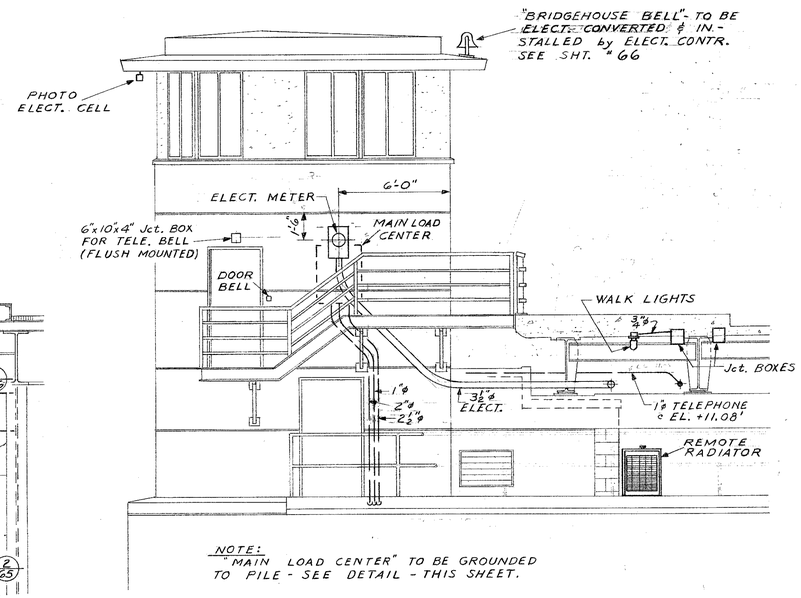

NOTE: "MAIN LOAD CENTER" TO BE GROUNDED TO PILE - SEE DETAIL - THIS SHEET.

WEST ELEVATION
SCALE ¼"=1'-0"

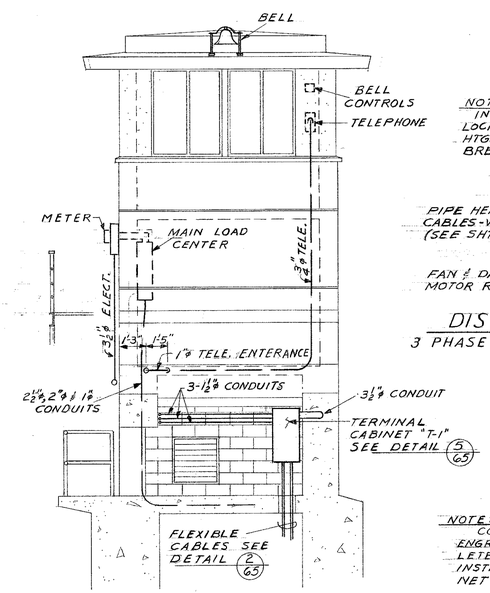

SOUTH ELEVATION
SCALE ¼"=1'-0"

NOTE: INSTALL LOCKS ON HTG. CABLE BREAKERS.

100 AMP (3 POLE)		LIGHTING & CONTROLS (PANEL "B")
70 AMP (3 POLE)		FURNACE
50 AMP (3 POLE)		EMERG. HYDR. PUMP MOTOR
SUMP PUMPS	15A 3P / 15A 3P	ROADWAY GATES
PIPE HEATING CABLES-WATER (SEE SHT. #71)	15A 2P / 15A 2P	PIPE HTG. CABLE-SEWER (SEE SHT. #71)
	15A 2P / 15A 2P	SEWAGE EJECTOR
FAN & DAMPER MOTOR RELAYS	15A 3P / SPARE / SPARE	VOLTMETER

DISTRIBUTION PANEL "A"
3 PHASE - 4WIRE - 125 AMP LUGS - 30 SPACES

NOTE: CONTRACTOR TO FURNISH 7-10"x15" ENGRAVED METAL PLATES w/ HIS COMPLETE WIRING DIAGRAMS ENGRAVED THERETO. INSTALL ON OUTSIDE OF CONTROL CABINET DOORS.

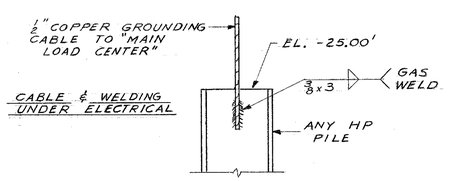

ELECTRICAL GROUNDING DETAIL
SCALE 1"=1'-0"

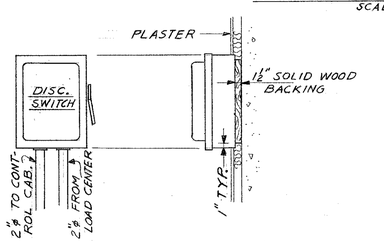

MAIN HYDRAULIC DISCONNECT SWITCH
SCALE ¾"=1'-0"

1	2
3	4
5	6
7	8
9	10
11	12
13	14
15	16
SPARES	SPARES

1. HOUSE LIGHTS - "CONTROL ROOM"
2. GATE BELLS
3. HOUSE LIGHTS - "UTILITY ROOM"
4. CONTROL DESK - GATE SIGNAL LT.S
5. HOUSE LIGHTS - "EQUIPMENT ROOM"
6. CONTROL DESK - LIFTING SIGNAL LT.S
7. EAST PIER WALK LIGHTS
8. PIER & NAVIGATION LIGHTS
9. WEST PIER WALK LIGHTS
10. BRIDGE TRAFFIC LIGHTS
11. EAST PIER PIT LIGHTS
12. TRAFFIC SIGNALS - B.E.S.
13. WEST PIER PIT LIGHTS
14. LIFTING MECHANISM CONTROLS
15. HOT WATER HEATER
16. BRIDGEHOUSE BELL

DISTRIBUTION PANEL "B"
3 PHASE 4 WIRE - 125 AMP LUGS - 30 SPACES

"AS BUILT"

DEPARTMENT OF PUBLIC WORKS
BUREAU OF BRIDGES AND PUBLIC BUILDINGS
CITY OF MILWAUKEE

REVISIONS		
MARK	DATE	BY
A		
B		
C		
D		
E		
F		
G		
H		
I		
J		
K		
L		
M		

MICHIGAN ST. VERTICAL LIFT BRIDGE
OVER MILWAUKEE RIVER

ELECTRICAL - BRIDGEHOUSE LAYOUT

DESIGNED BY: R.R. & L.F.R. TRACED BY: DATE:
DRAWN BY: L.F.R. CHECKED BY: PCB DATE:
APPROVED:— SCALE: AS NOTED
Harris A. Batalden DESIGNER IN CHARGE DATE: 2-2-77 SHEET NUMBER 64
Henry J. Balcom DIRECTOR OF PUBLIC BUILDINGS DATE: 2-2-77 SET OF 85 SHEETS
E. Wenger COMMISSIONER OF PUBLIC WORKS DATE: 2-3-77 JOB NO. 505-98

CPE-2

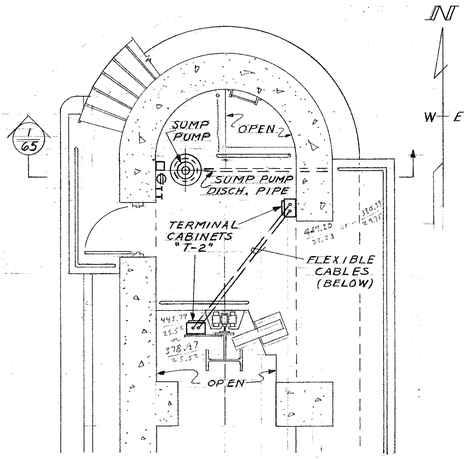

PLAN OF N. END OF PIER #2
S. END PIER #1 - SIMILAR
SCALE 1/4" = 1'-0"

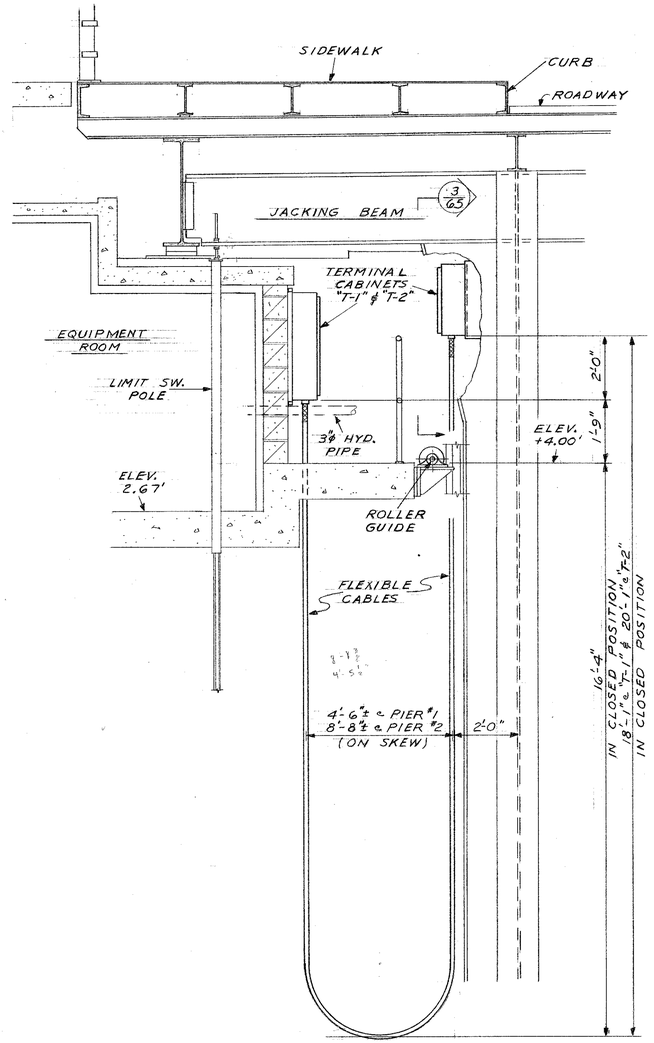

FLEXIBLE CABLES
DETAIL 2/64
SCALE 1/2" = 1'-0"

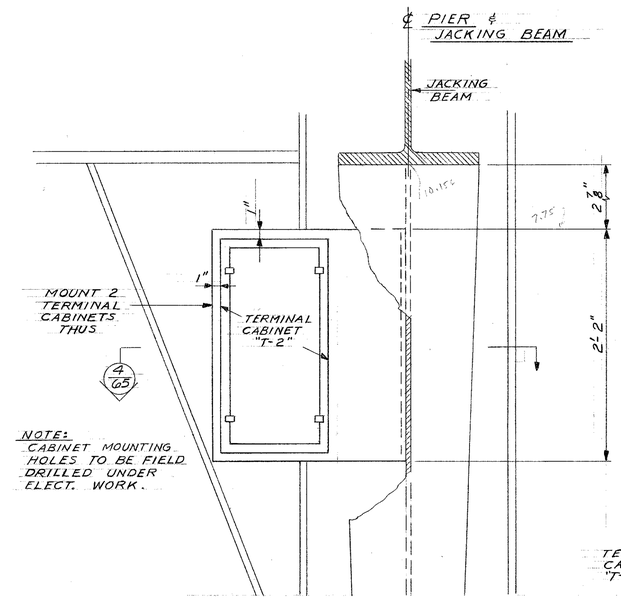

SECTION 3/65
SCALE 1/2" = 1'-0"

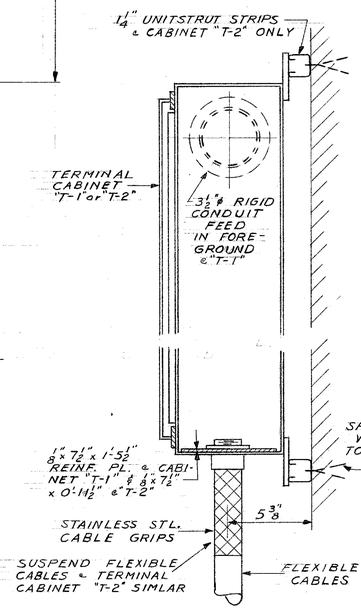

TYPICAL TERMINAL CABINET DETAIL 5/64
SCALE 3" = 1'-0"

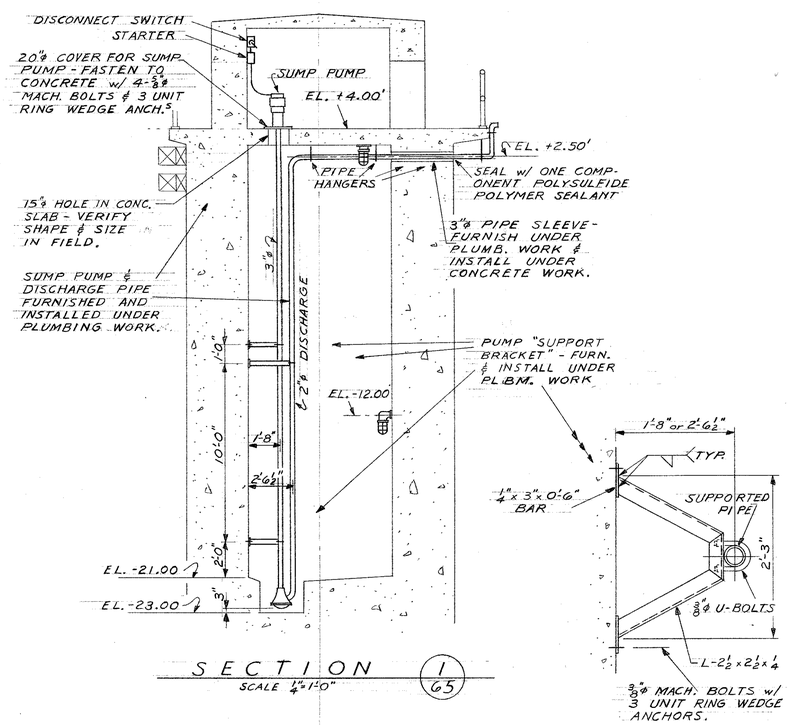

SECTION 1/65
SCALE 1/4" = 1'-0"

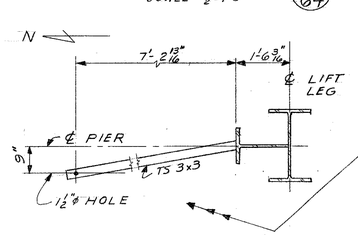

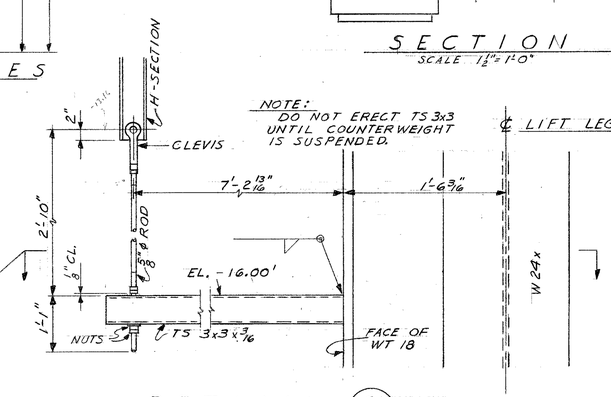

DETAIL 6/65
SCALE 1 1/2" = 1'-0"

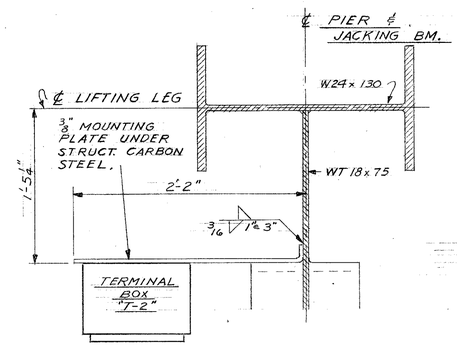

SECTION 4/65
SCALE 1 1/2" = 1'-0"

DEPARTMENT OF PUBLIC WORKS
BUREAU OF BRIDGES AND PUBLIC BUILDINGS
CITY OF MILWAUKEE

REVISIONS		
MARK	DATE	BY
A		
B		
C		
D		
E		
F		
G		
H		
I		
J		
K		
L		
M		

MICHIGAN ST. VERTICAL LIFT BRIDGE
OVER MILWAUKEE RIVER
ELECTRICAL - SECTIONS AND DETAILS

DESIGNED BY: R. R. & L.F.R. TRACED BY: DATE:
DRAWN BY: L.F.R. CHECKED BY: PCB DATE:
APPROVED:— SCALE: AS NOTED
Norman Betaller DESIGNER IN CHARGE DATE: 2-2-77 SHEET NUMBER 65
Henry J. Balcomi DIV. OF BRIDGES AND PUBLIC BUILDINGS DATE: 2-2-77 SET OF 85 SHEETS
Special Deputy COMMISSIONER OF PUBLIC WORKS DATE: 2-3-77 JOB NO. 505-98

CPE-2

NAMEPLATE MARKING:

1. VOLTMETER TRANSFER
2. LINE VOLTAGE
3. POWER - PUMP CURRENT
4. PIER LIGHTS - KEYED ALIKE 2 - RETRACTABLE
5. NAVIGATION LIGHTS - KEYED ALIKE 2 - RETRACTABLE
6. EMERENGY BY-PASS - KEYED ALIKE 2 - NON-RETR.
7. ~~EAST~~ WEST TRAFFIC GATES
8. ~~WEST~~ EAST TRAFFIC GATES
9. TRAFFIC LIGHTS
10. MAIN POWER LIGHT - GREEN
11. EMERGENCY POWER LIGHT - RED
12. GATE UP LIGHT - GREEN
13. GATE DOWN LIGHT - RED
14. OFF-ON - BELL OFF - KEYED ALIKE 1 - NON-RETR.
15. COMPLETE INSTRUCTIONS TO RAISE AND LOWER BRIDGE

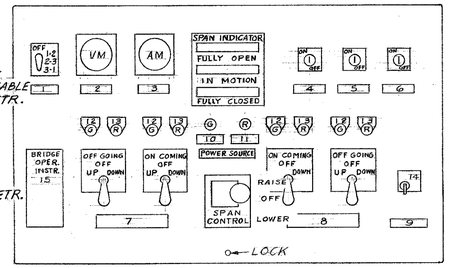

NOTE:
1. NAMEPLATE ITEMS #4, #5, #6 & #14 TO BE MASTERKEYED.
2. FURNISH & INSTALL 1 EA. ADD'L ITEMS #4, #5, #6, #14 & #15 ON SIMILAR LIFT BRIDGE @ WIS. AVE.
3. KEY ALL DESK LOCKS ALIKE & SAME AS SIMILAR DESK @ WIS. AVE. LIFT BRIDGE.

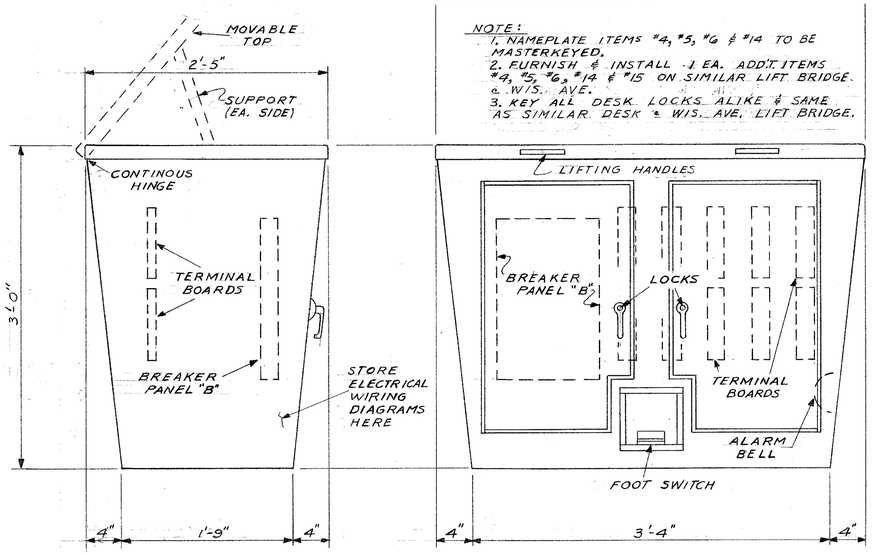

CONTROL DESK
SCALE 1½"=1'-0"

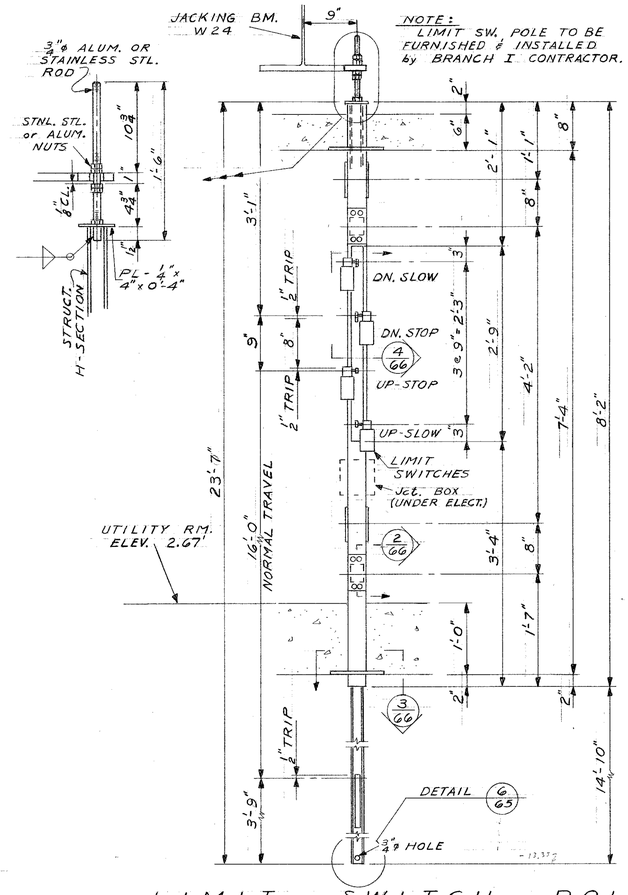

LIMIT SWITCH POLE DETAIL (1/64)
SCALE 1"=1'-0"

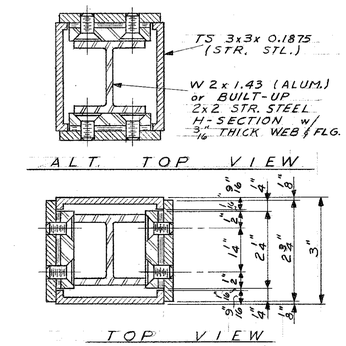

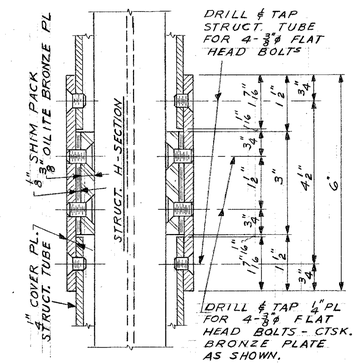

SECTION (2/66)
HALF SCALE

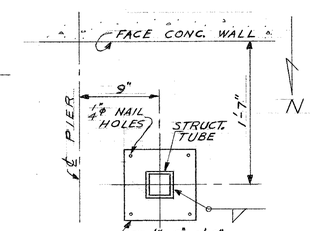

SECTION (3/66)
SCALE 1½"=1'-0"

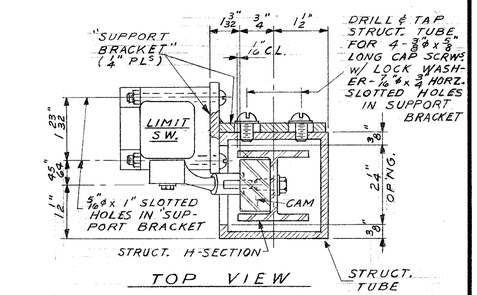

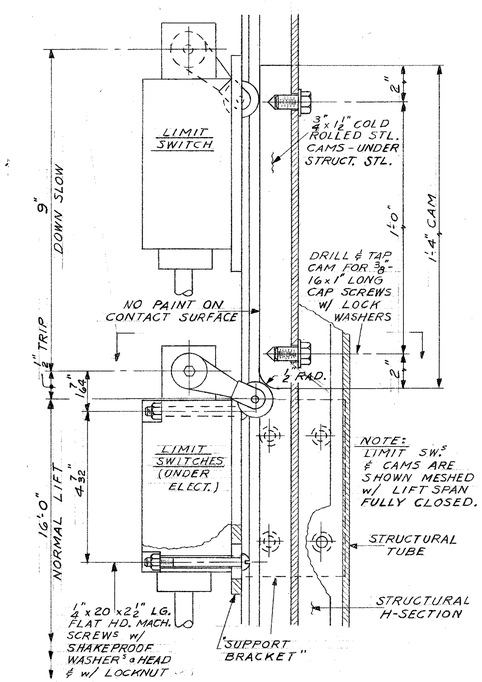

LIMIT SWITCHES SECTION (4/66)
HALF SCALE

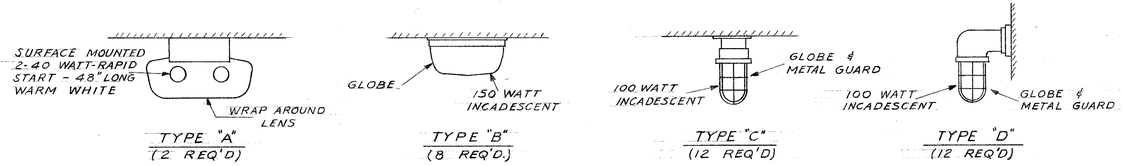

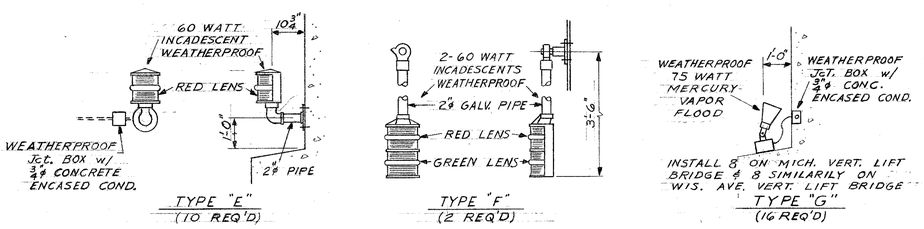

LIGHTING FIXTURE TYPES
N. T. S.

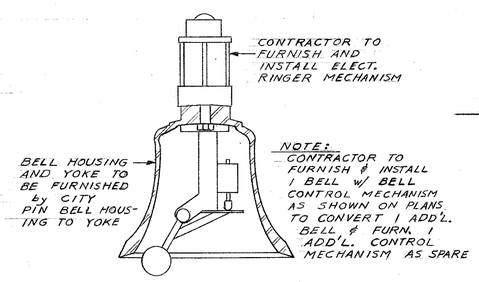

CONVERTED BRIDGEHOUSE BELL
(2 REQ'D)

"AS BUILT"

DEPARTMENT OF PUBLIC WORKS
BUREAU OF BRIDGES AND PUBLIC BUILDINGS
CITY OF MILWAUKEE

REVISIONS

MARK	DATE	BY
A		
B		
C		
D		
E		
F		
G		
H		
I		
J		
K		
L		
M		

MICHIGAN ST. VERTICAL LIFT BRIDGE
OVER MILWAUKEE RIVER
ELECTRICAL - SECTIONS AND DETAILS

DESIGNED BY: R.R. & L.F.R. TRACED BY: DATE:
DRAWN BY: L.F.R. CHECKED BY: PCB DATE:
APPROVED:— SCALE: AS NOTED
DESIGNER IN CHARGE — DATE: 2-2-77 SHEET NUMBER 66
CHIEF ENGINEER BUREAU OF PUBLIC BUILDINGS — DATE: 2-2-77 SET OF 85 SHEETS
COMMISSIONER OF PUBLIC WORKS — DATE: 2-3-77 JOB NO. 505-98

Special Deputy

CPE-2

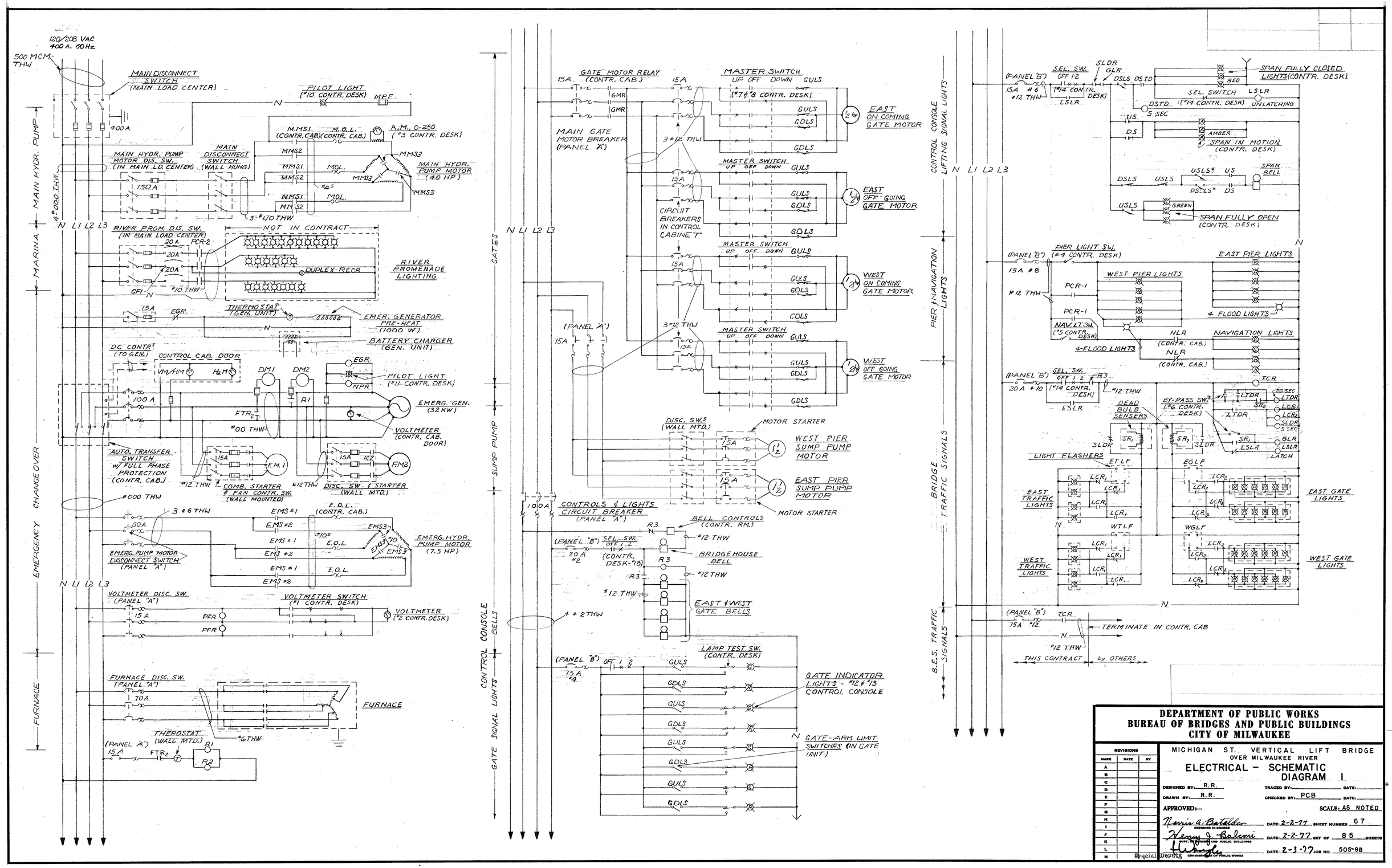

DEPARTMENT OF PUBLIC WORKS
BUREAU OF BRIDGES AND PUBLIC BUILDINGS
CITY OF MILWAUKEE

REVISIONS		
MARK	DATE	BY
A		
B		
C		
D		
E		
F		
G		
H		
I		
J		
K		
L		
M		

MICHIGAN ST. VERTICAL LIFT BRIDGE
OVER MILWAUKEE RIVER
ELECTRICAL - SCHEMATIC DIAGRAM I

DESIGNED BY: R.R. TRACED BY: DATE:
DRAWN BY: R.R. CHECKED BY: PCB DATE:
APPROVED:- SCALE: AS NOTED
DESIGNER IN CHARGE DATE: 2-2-77 SHEET NUMBER 67
DIRECTOR BUREAU OF PUBLIC BUILDINGS DATE: 2-2-77 SET OF 85 SHEETS
COMMISSIONER OF PUBLIC WORKS DATE: 2-3-77 JOB NO. 505-98

Special Deputy

CPE-2

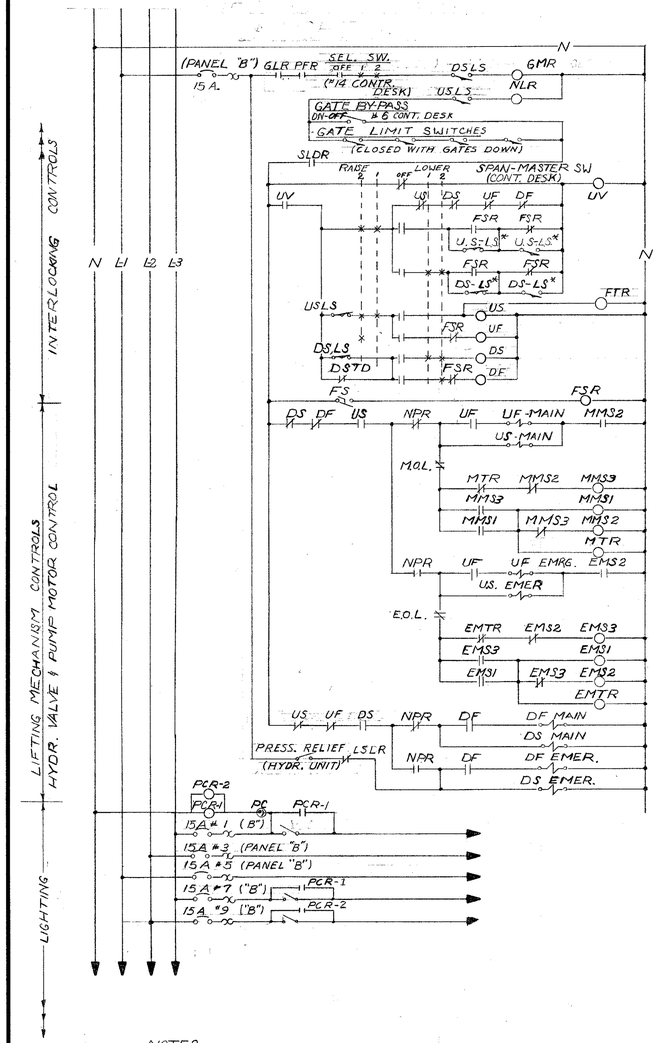

NOTES

1. ALL CONTROLS - MINIMUM WIRE SIZE # 14 THW
2. ALL POWER & LIGHTS MINIMUM WIRE # 12 THW
3. ALL MOTOR STARTERS, RELAYS, & ETC. IN CONTROL CABINET UNLESS OTHERWISE SPECIFIED.

LEGEND

	RELAY COIL
NO NC	SWITCHES, - LIMIT, TOGGLE,
	SOLENOID VALVE, HYDRAULIC FLUID
	FUSE
	3 POLE CIRCUIT BREAKER / WITH OVER LOAD PROTECTION
A.M.	AMP METER
A.T.S.	AUTO TRANSFER SWITCH
C.D.	CONTROL DESK
D.F.	DOWN FAST
DM-1	DAMPER MOTOR - INTAKE AIR
DM-2	DAMPER MOTOR - EXHAUST AIR
D.S.	DOWN SLOW
DSLS	DOWN STOP LIMIT SWITCH
DSLS*	DOWN SLOW LIMIT SWITCH
DSTD	TIME DELAY FOR SPAN LIGHTS (5 SEC.)
EMS (1-3)	EMERGENCY MOTOR STARTER
EMTR	EMERGENCY POWER TIME RELAY
E O L	EMERGENCY OVERLOAD
FM-1	FAN MOTOR RADIATOR 1 hp
FM-2	FAN MOTOR EXHAUST 1/2 hp
FSR	FOOT SWITCH RELAY
FTR	FURNACE TRANSFER SWITCH
GDLS	GATE DOWN LIMIT SWITCH
GFI	GROUND FAULT INDICATOR
GLR	GATE LIFT RELAY
GMR	GATE MOTOR RELAY
GULS	GATE UP LIMIT SWITCH
H.M	HERTZ (FREQUENCY) METER
LCR	LIGHT CONTROL RELAY
LTDR	LIFT TIME DELAY RELAY (20 SEC)
MMS (1-3)	MAIN MOTOR STARTER
MOL	MAIN OVERLOAD
MTR	MAIN POWER TIME RELAY
NLR	NAVIGATION LIGHT RELAY
NPR	EMERGENCY CHANGEOVER RELAY
PC	PHOTO CELL
PCR-1	PHOTO CELL RELAY
PCR-2	PHOTO CELL RELAY
PFR	PHASE FAILURE RELAY
SLDR	TIME DELAY FOR SPAN MASTER (5 SEC)
SR	SENSING RELAY
TCR	TRAFFIC CONTROL RELAY
TLF	TRAFFIC LIGHT FLASHER
UF	UP FAST
US	UP SLOW
USLS	UP STOP LIMIT SWITCH
USLS*	UP SLOW LIMIT SWITCH
UVR	UNDER VOLTAGE RELAY
VM	VOLT METER
VM HM	VOLT METER HOUR METER
R1	EQUIPMENT Rm. THERMOSTAT RELAY
R2	EQUIPMENT Rm. THERMOSTAT (1 MIN) TIME DELAY
R3	BELL CONTROL TIME DELAY RELAY (10 SEC.)

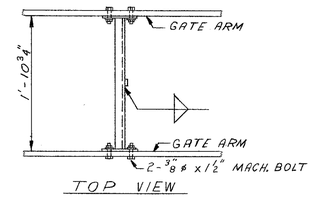

TOP VIEW

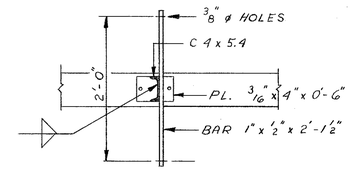

DETAIL 1/68
SCALE 1" = 1'-0"

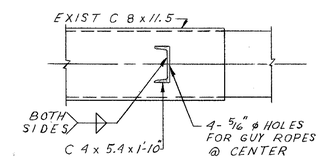

DETAIL 2/68
SCALE 1 1/2" = 1'-0"

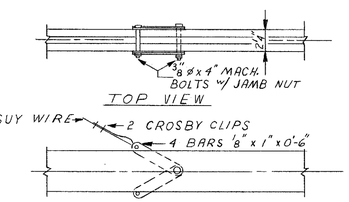

TOP VIEW

DETAIL 3/68
SCALE 1 1/2" = 1'-0"

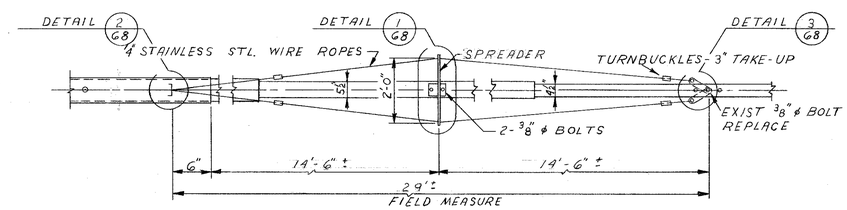

GATE ARM GUY-WIRE SUPPORT
HALE SECTION
SCALE 1/2" = 1'-0"

DEPARTMENT OF PUBLIC WORKS
BUREAU OF BRIDGES AND PUBLIC BUILDINGS
CITY OF MILWAUKEE

REVISIONS		
MARK	DATE	BY
A		
B		
C		
D		
E		
F		
G		
H		
I		
J		
K		
L		
M		

MICHIGAN ST. VERTICAL LIFT BRIDGE
OVER MILWAUKEE RIVER

ELECTRICAL - SCHEMATIC DIAGRAM 2

DESIGNED BY: R.R. TRACED BY: DATE:
DRAWN BY: R.R. CHECKED BY: DATE:
APPROVED:— SCALE: AS NOTED
Norris A. Batalden DESIGNER IN CHARGE DATE: 2-2-77 SHEET NUMBER 68
Henry J. Balcomi DIV. OF BRIDGES & PUBLIC BUILDINGS DATE: 2-2-77 SET OF 85 SHEETS
A. Wright COMMISSIONER OF PUBLIC WORKS DATE: 2-3-77 JOB NO. 505-95

Special Details

CPE-2

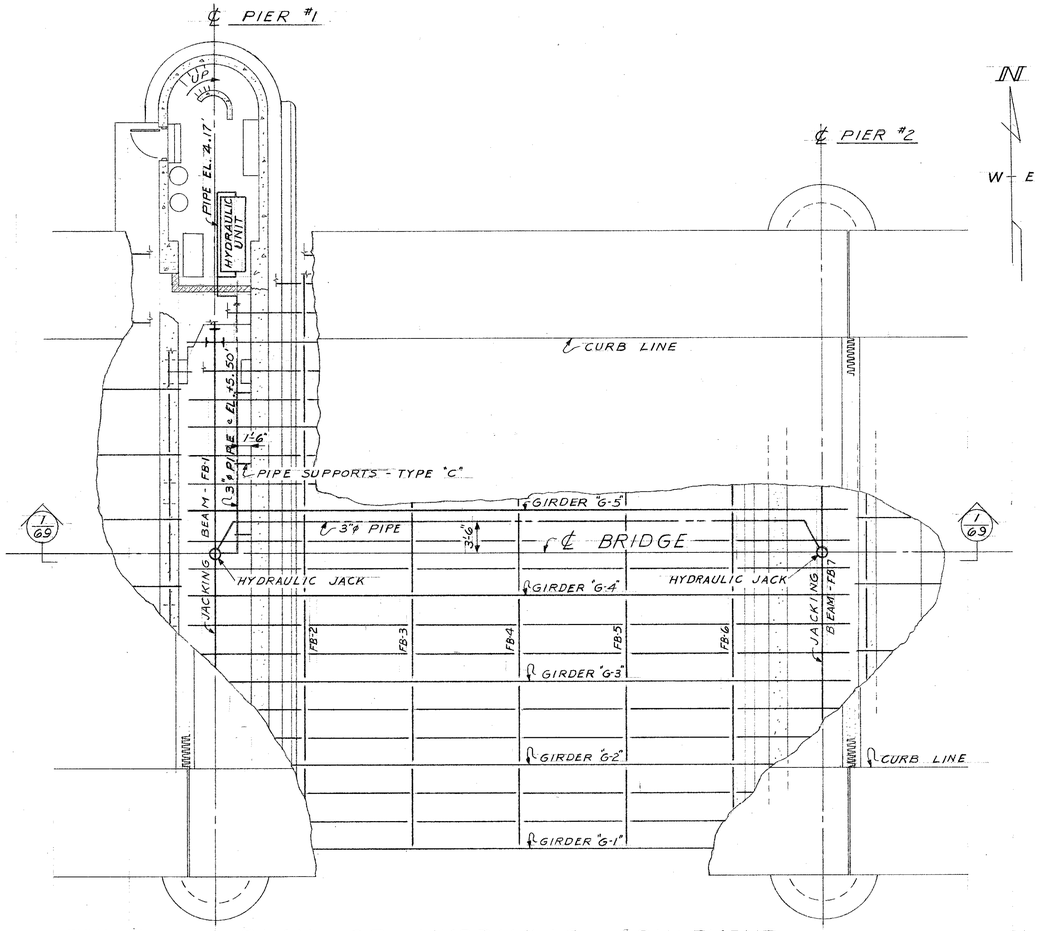

PLAN OF HYDRAULIC EQUIPMENT

SCALE 1/8" = 1'-0"

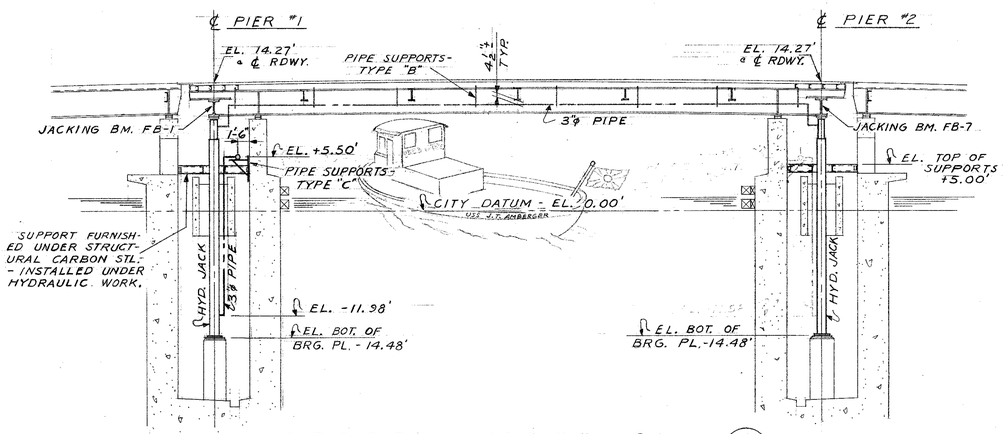

CROSS - SECTION 1/69

SCALE 1/8" = 1'-0"

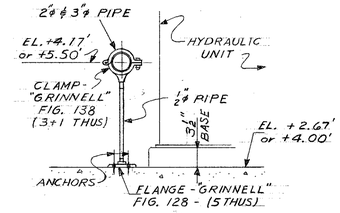

SUPPORT - TYPE "A"

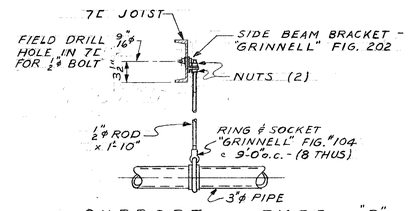

SUPPORT - TYPE "B"

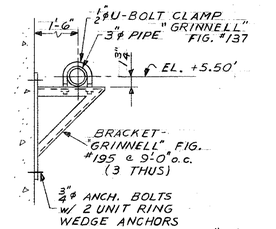

SUPPORT - TYPE "C"

NOTE:
ALL ELECTRICAL WORK TO JUNCTION BOXES INCLUDING STARTER CONTROLS & RELAYS - UNDER ELECTRICAL WORK. JUNCTION BOXES & HYDRAULIC UNIT UNDER HYD. WORK.

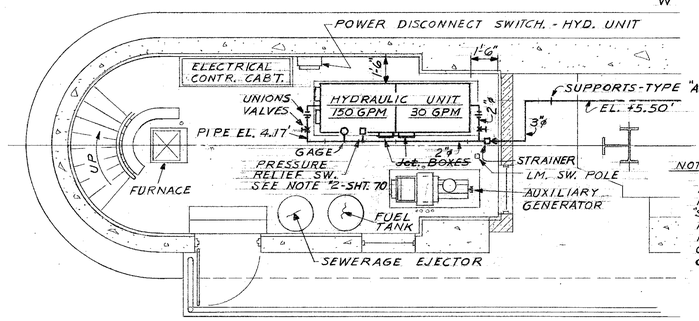

NOTE:
FURN. & INSTALL 10"x15" ENGRAVED METAL PLATE w/ "SUGGESTED HYDR. MAINT. SCHEDULE" INSTALL ON OUTSIDE OF DOOR OF ELECT. CONTROL CABINET.

PLAN OF HYDRAULIC UNIT AND PIPING IN EQUIPMENT ROOM - ELEV. +2.67'

SCALE 1/4" = 1'-0"

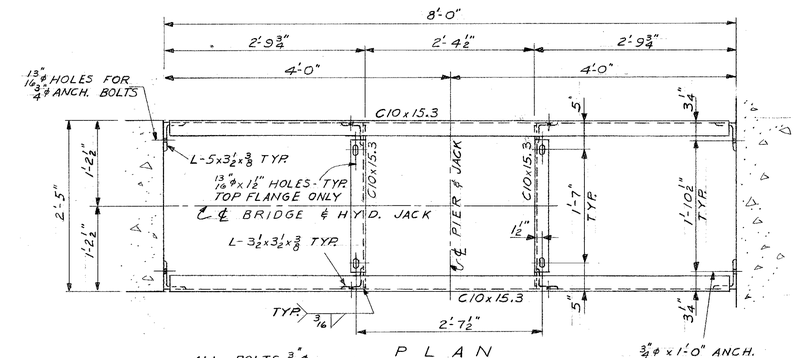

ALL BOLTS 3/4"ϕ H.S. w/ WASHERS

PLAN

3/4"ϕ x 1'-0" ANCH. BOLTS - CAST IN PLACE & PROJ. 1 1/2"

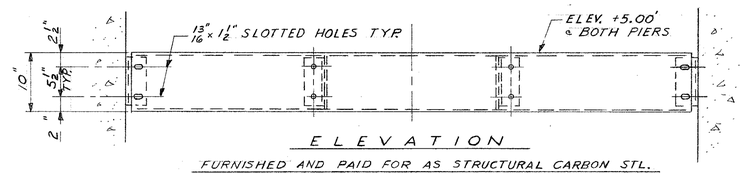

ELEVATION

FURNISHED AND PAID FOR AS STRUCTURAL CARBON STL.

JACK SUPPORT FRAME

2 REQUIRED

SCALE 1" = 1'-0"

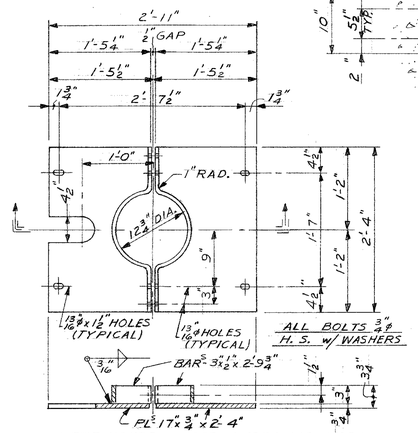

ALL BOLTS 3/4"ϕ H.S. w/ WASHERS

FURNISHED UNDER HYDRAULIC WORK

JACK SUPPORT PLATE

2 - REQUIRED

SCALE 1" = 1'-0"

"AS BUILT"

DEPARTMENT OF PUBLIC WORKS
BUREAU OF BRIDGES AND PUBLIC BUILDINGS
CITY OF MILWAUKEE

REVISIONS		
MARK	DATE	BY
A		
B		
C		
D		
E		
F		
G		
H		
I		
J		
K		
L		
M		

MICHIGAN ST. VERTICAL LIFT BRIDGE
OVER MILWAUKEE RIVER

HYDRAULIC - PLAN AND SECTIONS

DESIGNED BY: L.F.R. TRACED BY: DATE:
DRAWN BY: L.F.R. CHECKED BY: PCB DATE:
APPROVED:— SCALE: AS NOTED

Harris A. Batelder — DESIGNER IN CHARGE — DATE: 2-2-77 SHEET NUMBER 69
Henry J. Balcomi — BUREAU OF BRIDGES AND PUBLIC BUILDINGS — DATE: 2-2-77 SET OF 85 SHEETS
H. Wirth — COMMISSIONER OF PUBLIC WORKS — DATE: 2-3-77 JOB NO. 505-98

CPE-2

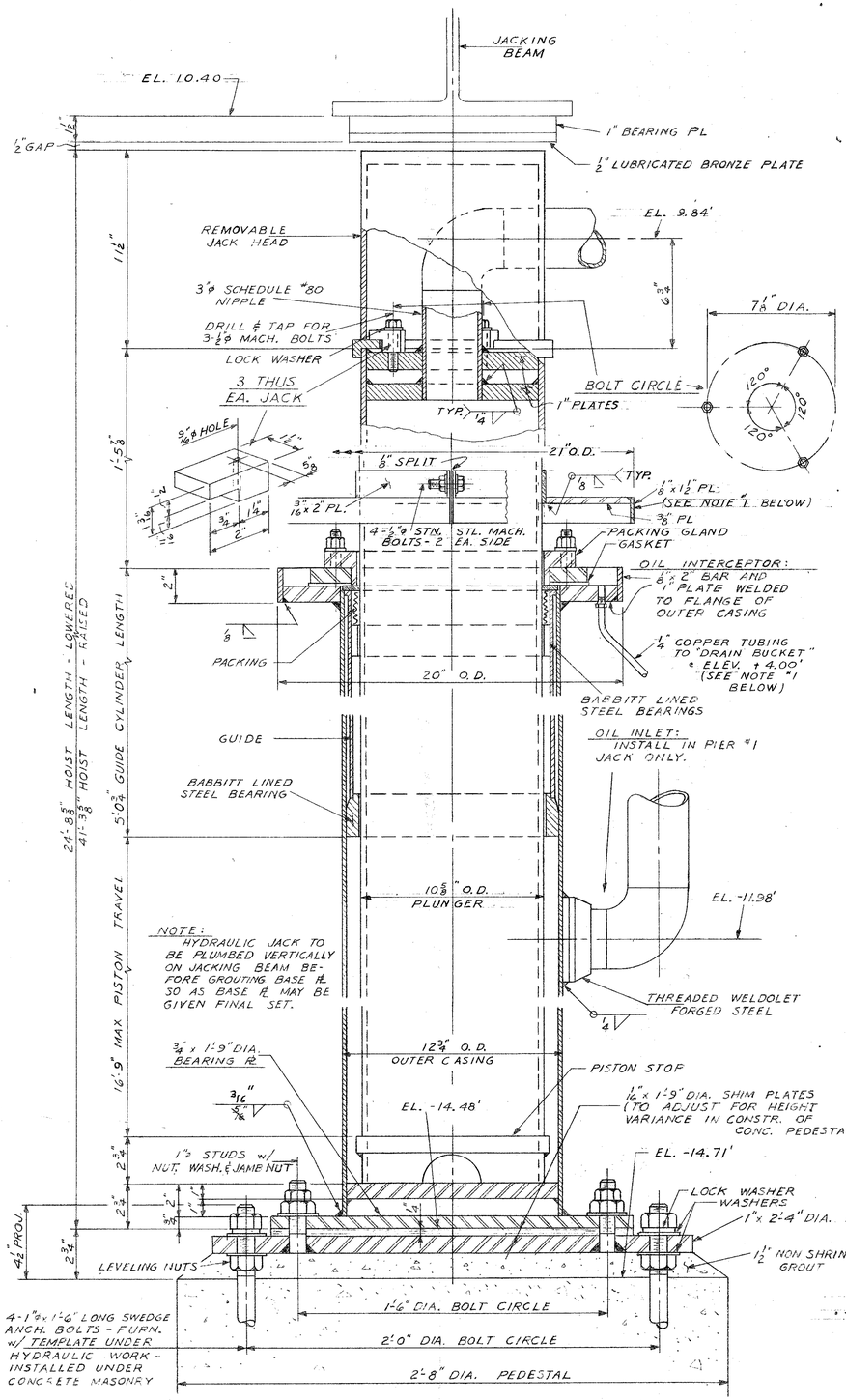

HOISTING MECHANISM ASSEMBLY
SCALE 3" = 1'-0"

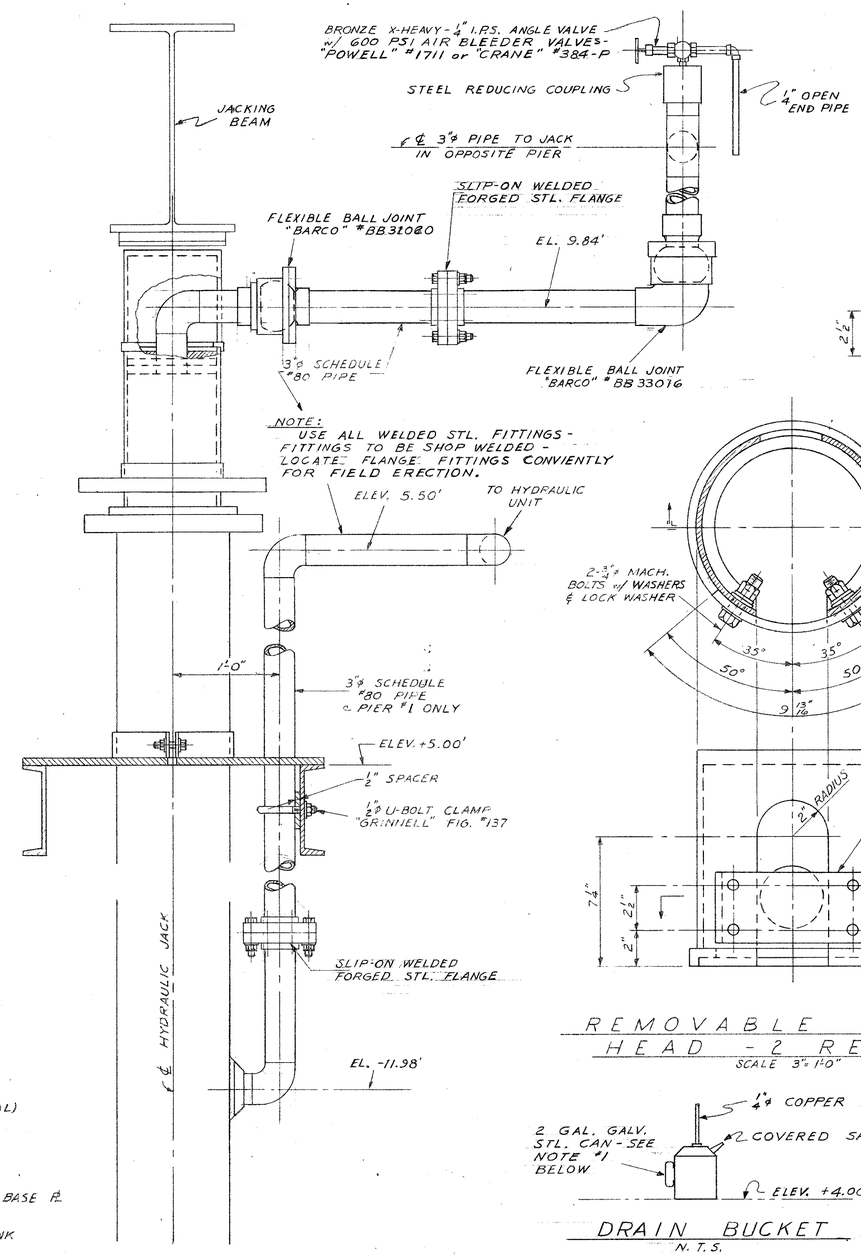

TYPICAL HYDRAULIC JACK PIPING ASSEMBLY
SCALE 1 1/2" = 1'-0"

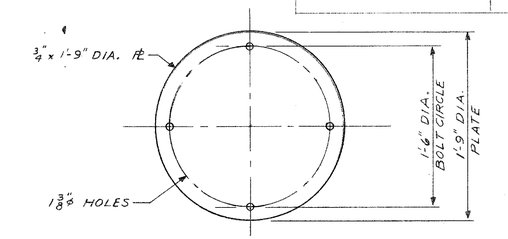

BEARING PLATE - 2 REQ'D.
SCALE 1 1/2" = 1'-0"

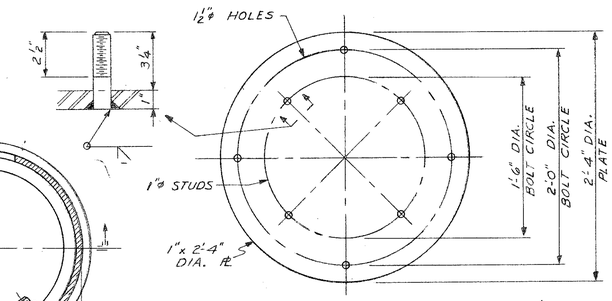

BASE PLATE - 2 REQ'D.
SCALE 1 1/2" = 1'-0"

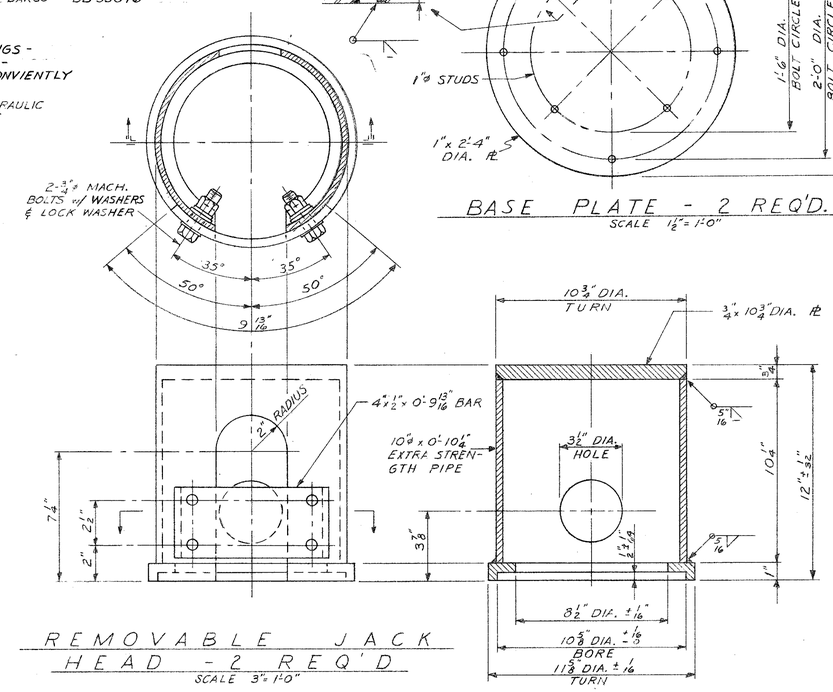

REMOVABLE JACK HEAD - 2 REQ'D
SCALE 3" = 1'-0"

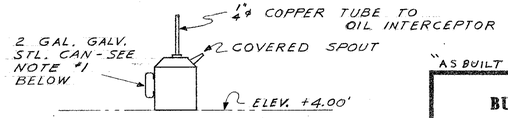

DRAIN BUCKET
N. T. S.

NOTES:
1. SUPPLY & INSTALL FOUR (4) ADDITIONAL MECHANISMS THUS ON SIMILAR LIFT BRIDGES OVER MILW. RIVER @ ST. PAUL AVE., @ CLYBOURN ST., & WISCONSIN AVE. & @ PLEASANT ST.
2. SUPPLY & INSTALL TWO (2) ADDITIONAL SWITCHES THUS ON SAME ST. PAUL AVE. & CLYBOURN ST. VERTICAL LIFT BRIDGES.

"AS BUILT"

DEPARTMENT OF PUBLIC WORKS
BUREAU OF BRIDGES AND PUBLIC BUILDINGS
CITY OF MILWAUKEE

REVISIONS		
MARK	DATE	BY
A		
B		
C		
D		
E		
F		
G		
H		
I		
J		
K		
L		
M		

MICHIGAN ST. VERTICAL LIFT BRIDGE
OVER MILWAUKEE RIVER
HYDRAULIC - HYDRAULIC JACK ASSEMBLY

DESIGNED BY: L.F.R. TRACED BY: DATE:
DRAWN BY: L.F.R. CHECKED BY: PCB DATE:
APPROVED:— SCALE: AS NOTED
Norris A. Batalden — DESIGNER-IN-CHARGE — DATE: 2-2-77 SHEET NUMBER 70
Henry J. Balcom — BUREAU OF PUBLIC BUILDINGS — DATE: 12-2-77 SET OF 85 SHEETS
SPECIAL SQUARE — COMMISSIONER OF PUBLIC WORKS — DATE: 2-3-77 JOB NO. 505-98

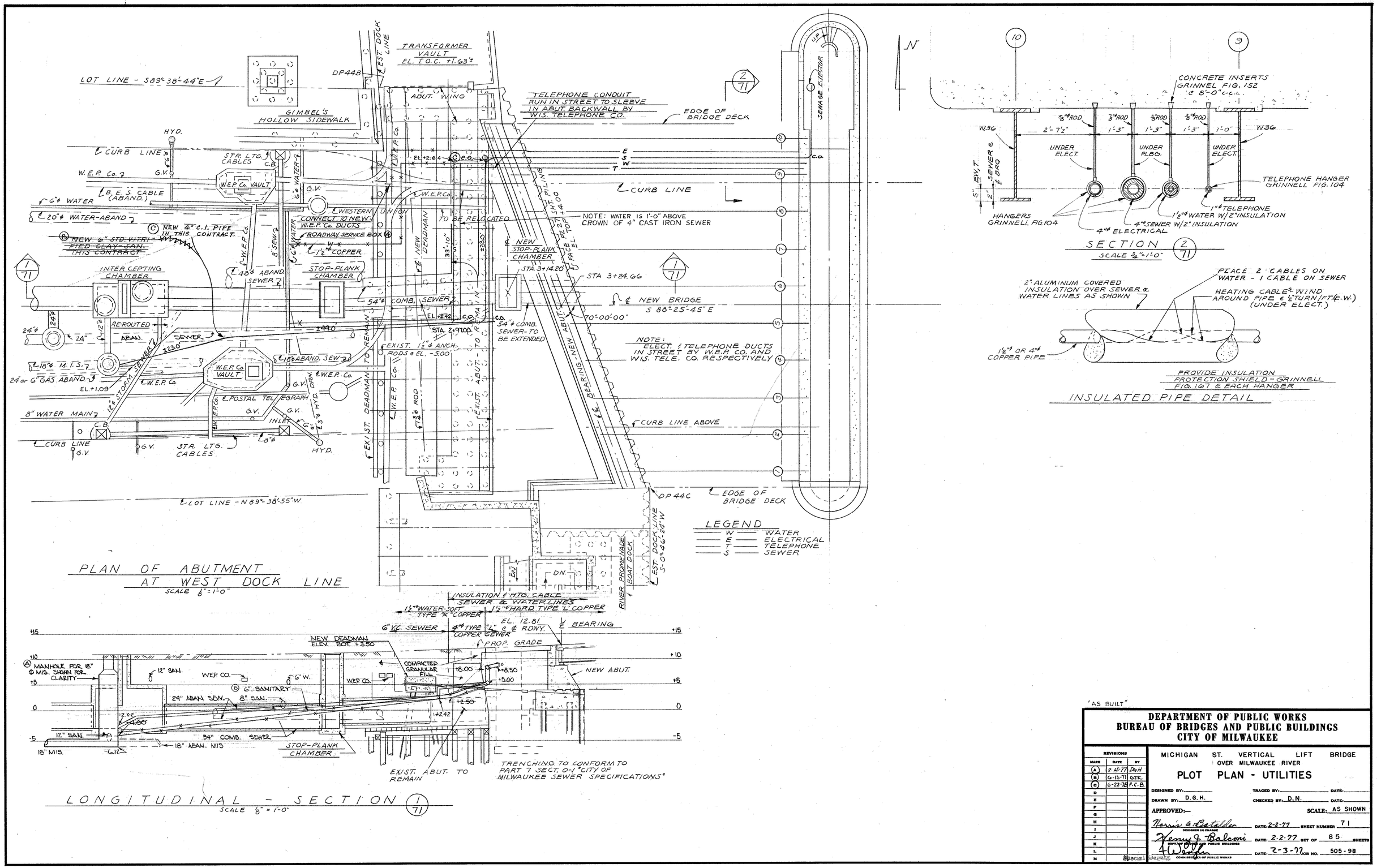

"AS BUILT"

DEPARTMENT OF PUBLIC WORKS
BUREAU OF BRIDGES AND PUBLIC BUILDINGS
CITY OF MILWAUKEE

REVISIONS		
MARK	DATE	BY
A	2-15-77	DGH
B	6-13-77	GTK
C	6-22-78	P.C.B.
D		
E		
F		
G		
H		
I		
J		
K		
L		
M		

MICHIGAN ST. VERTICAL LIFT BRIDGE OVER MILWAUKEE RIVER

PLOT PLAN - UTILITIES

DESIGNED BY: _____ TRACED BY: _____ DATE: _____
DRAWN BY: D.G.H. CHECKED BY: D.N. DATE: _____
APPROVED:— SCALE: AS SHOWN
Morris A. Bestelle — DESIGNER IN CHARGE — DATE: 2-2-77 SHEET NUMBER 71
Henry J. Balcomi — SUPT. OF BRIDGES AND PUBLIC BUILDINGS — DATE: 2-2-77 SET OF 85 SHEETS
A. Wolf — COMMISSIONER OF PUBLIC WORKS — DATE: 2-3-77 JOB NO. 505-98

CPE-2

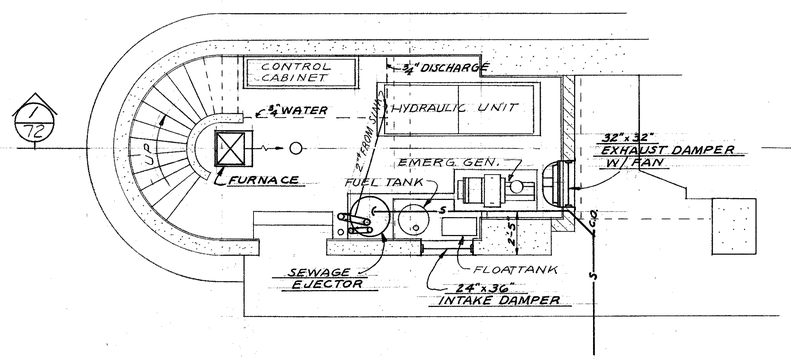

PLAN OF EQUIPMENT ROOM
SCALE: 1/4"=1'-0"

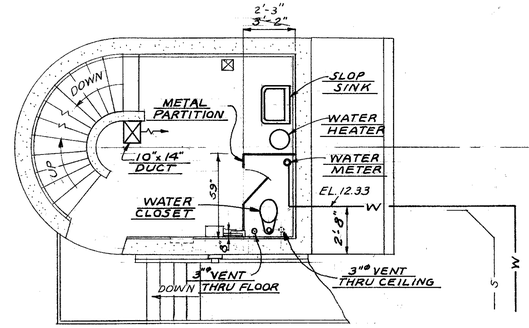

PLAN OF UTILITY ROOM
SCALE: 1/4"=1'-0"

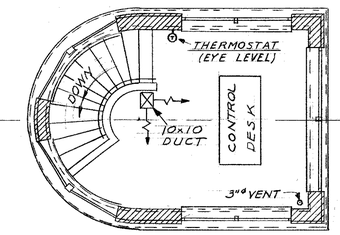

PLAN OF CONTROL ROOM
SCALE: 1/4"=1'-0"

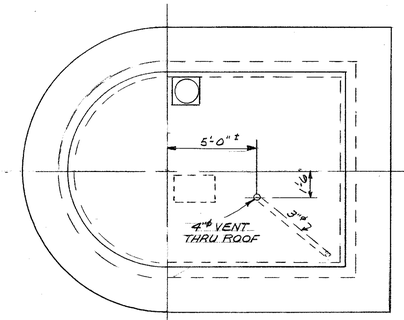

PLAN OF ROOF
SCALE: 1/4"=1'-0"

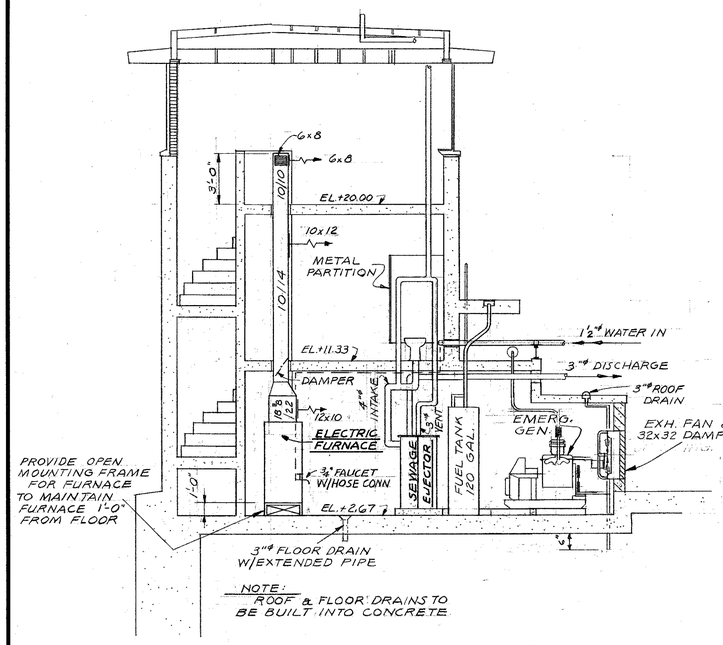

CROSS-SECTION 1/72
SCALE: 1/4"=1'-0"

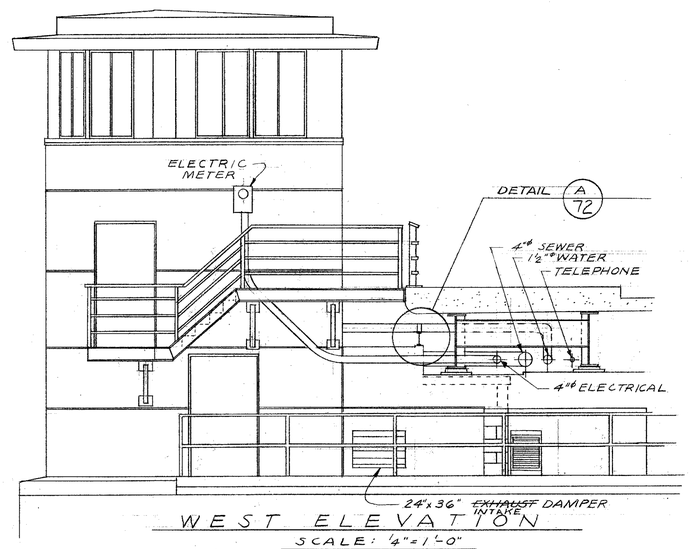

WEST ELEVATION
SCALE: 1/4"=1'-0"

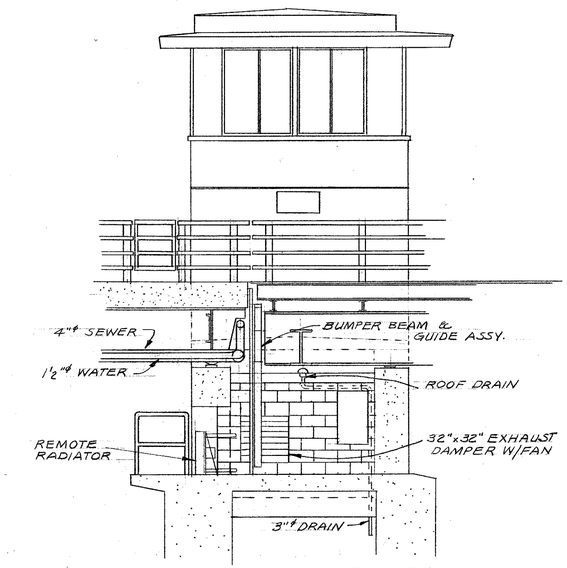

SOUTH ELEVATION
SCALE: 1/4"=1'-0"

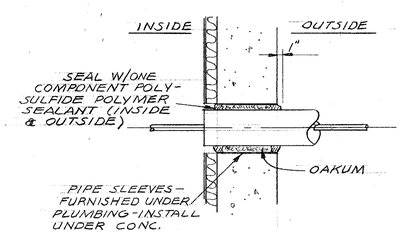

TYPICAL UTILITIES SLEEVE DETAIL

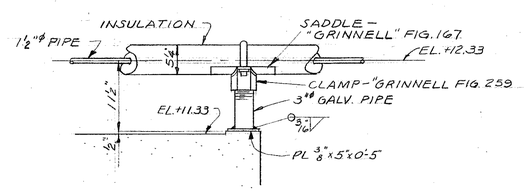

DETAIL A/72
SCALE: 1"=1'-0"

NOTE:
SUMP PUMPS, SUMP PUMP STARTERS, DISCHARGE PIPES & ALL SUPPORTS TO BE FURN. & INSTALLED UNDER BID FOR PLUMBING. SEE SHEET #65 FOR DETAILS.

"AS BUILT"

DEPARTMENT OF PUBLIC WORKS
BUREAU OF BRIDGES AND PUBLIC BUILDINGS
CITY OF MILWAUKEE

REVISIONS		
MARK	DATE	BY
A		
B		
C		
D		
E		
F		
G		
H		
I		
J		
K		
L		
M		

MICHIGAN ST. VERTICAL LIFT BRIDGE OVER MILWAUKEE RIVER

OPERATOR'S HOUSE - HEATING & PLUMBING

DESIGNED BY: _____ TRACED BY: _____ DATE: _____
DRAWN BY: D.G.H. CHECKED BY: D.N. DATE: _____
APPROVED:— SCALE: AS SHOWN

Harris A. Batalden — ENGINEER IN CHARGE — DATE: 2-2-77 SHEET NUMBER 72
Henry J. Balconi — BUREAU OF BRIDGES AND PUBLIC BUILDINGS — DATE: 2-2-77 SET OF 85 SHEETS
Special Uses — COMMISSIONER OF PUBLIC WORKS — DATE: 2-5-77 JOB NO. 505-98

CPE-2

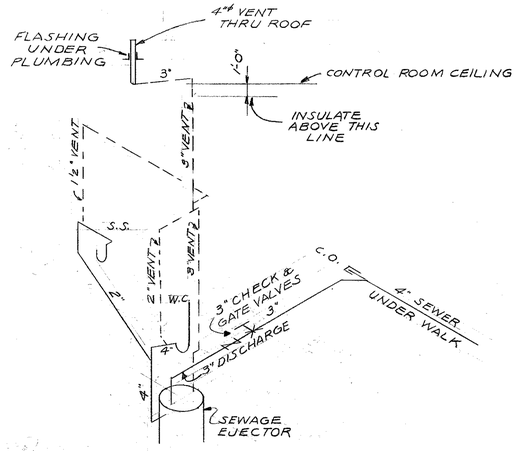

DRAINS AND VENTS

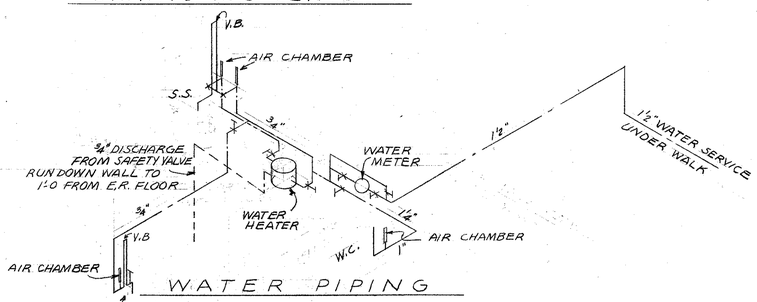

WATER PIPING

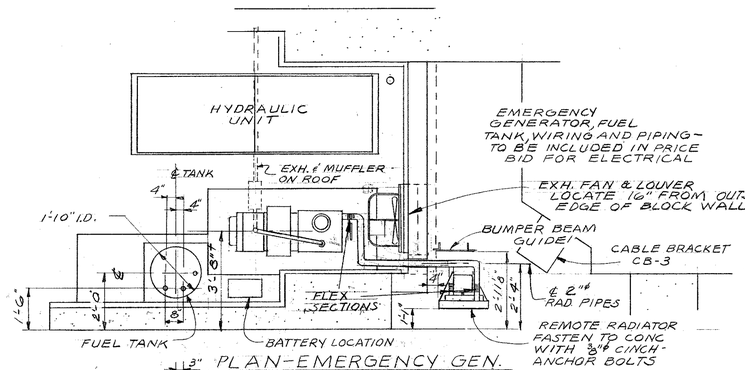

PLAN-EMERGENCY GEN.

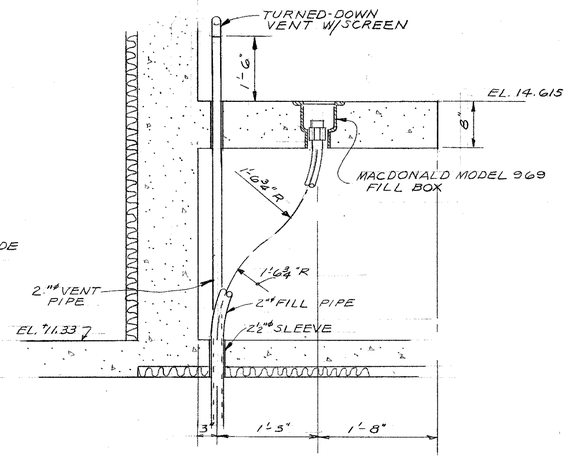

FILL & VENT PIPE DETAIL

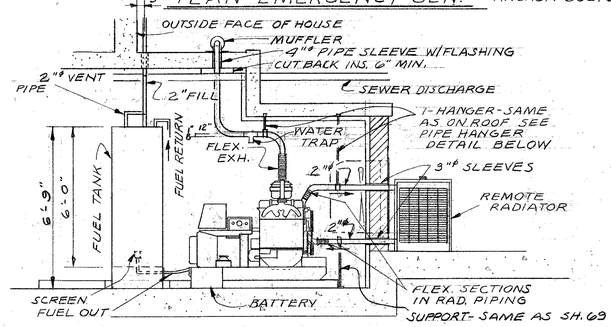

ELEVATION-EMERGENCY GEN.

SCALE: ⅜"=1'-0"

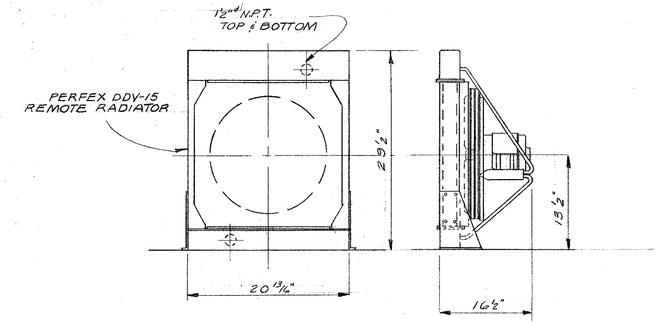

REMOTE RADIATOR DETAIL

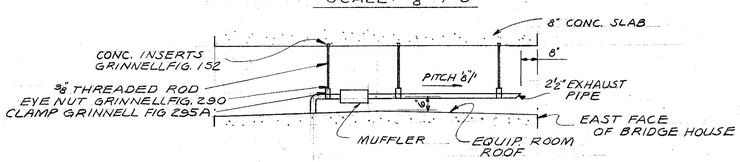

EXHAUST PIPE HANGERS

SCALE ⅜"=1'-0"

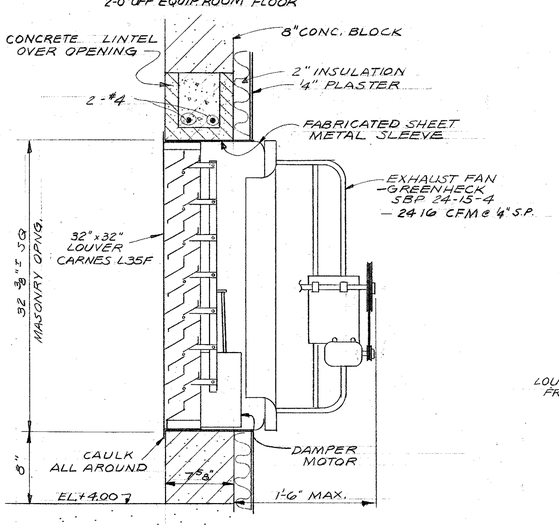

EXHAUST DAMPER DETAIL

SCALE: 1½"=1'-0"

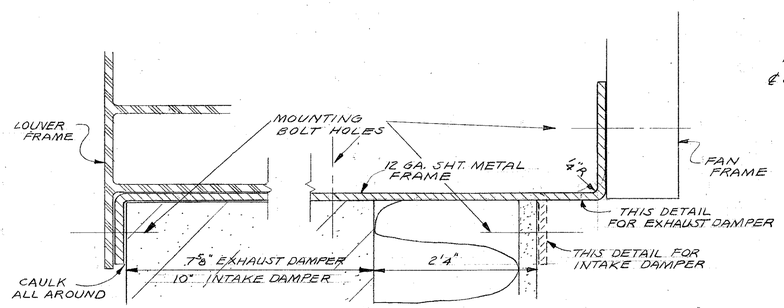

SLEEVE DETAIL

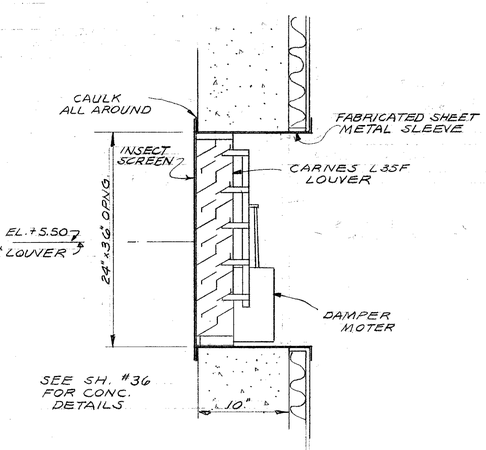

INTAKE DAMPER DETAIL

SCALE: 1½"=1'-0"

NOTES:

1. ALL SLEEVES TO BE PACKED WITH OAKUM AND CAULKED (EXC. GENERATOR EXHAUST) SEE UTILITIES SLEEVE DETAIL SH. 72

DEPARTMENT OF PUBLIC WORKS
BUREAU OF BRIDGES AND PUBLIC BUILDINGS
CITY OF MILWAUKEE

REVISIONS		
MARK	DATE	BY
A		
B		
C		
D		
E		
F		
G		
H		
I		
J		
K		
L		
M		

MICHIGAN ST. VERTICAL LIFT BRIDGE
OVER MILWAUKEE RIVER

OPERATOR'S HOUSE - PLUMBING DIAGRAMS & EMERGENCY GENERATOR DETAILS

DESIGNED BY: _____ TRACED BY: _____ DATE: _____
DRAWN BY: D.G.H. CHECKED BY: D.N. DATE: _____
APPROVED:— SCALE: AS SHOWN
Nancy A. Batalden DESIGNER IN CHARGE DATE: 2-2-77 SHEET NUMBER 73
Henry J. Balcerzai SUPT. OF BRIDGES AND PUBLIC BUILDINGS DATE: 2-2-77 SET OF 85 SHEETS
E. Wright COMMISSIONER OF PUBLIC WORKS DATE: 2-3-77 JOB NO. 505-98

CPE-2

EAST & WEST ABUTMENTS

LOC.	MARK	NO. REQ'D. EAST	NO. REQ'D. WEST	LENGTH	DET.	DIMENSIONS A	B	C	H	K	D	R
STOP PLANK CHAMBER	A401	46	48	4'-6"	STR.							
	A402		8	18'-4"	STR.							
	A403		7	9'-0"	STR.							
	A404		7	4'-0"	STR.							
	A405		60	6'-6"	STR.							
	A406		7	12'-8"	STR.							
	A407	3	3	4'-0	1	2'-0"	4'-6"					
	A408		2	10'-4"	1	2'-0"	6'-6"					
	A409	8		17'-4"	STR.							
	A410	7		9'-9"	STR.							
	A411	7		3'-5	STR.							
	A412	58		4'-6"	STR.							
	A413	7		12'-9"	STR.							
	A414	3		7'-5"	1	2'-0"	5'-6"					
DEADMAN	D601	16	32	30'-0"	STR.							
	D602	16		24'-0	STR.							
	D603	160	140	9'-2"	1							
	D604		16	14'-2"	STR.							
FOOTING	A518		6	9'-8"	5	7'-10"						
	A601	36	32	40'-0"	STR.							
	A602	96	88	13'-8"	11	5'-3"	3'-6"					
	A603	46	50	4'-5"	2	1'-0"			1'-8"	3'-0"		
	A604	90	128	4'-0"	STR.							
	A605		6	10'-0"	STR.							
	A606		4	16'-5"	STR.							
	A607		7	14'-1"	STR.							
	A608		4	28'-0	STR.							
	A609		9	8'-3"	STR.							
	A610		8	12'-8"	11	4'-9"	3'-6"					
	A611		8	11'-6"	11	4'-2"	3'-6"					
	A612		8	9'-2"	11	3'-0"	3'-6"					
	A613		3	13'-10"	1	3'-2"	4'-0"	3'-2				
	A614		11	20'-3"	STR.							
	A615		12	15'-4"	4	1'-0"	3'-2"	9'-8"				
	A616		12	15'-4"	3	2'-0"	1'-0"	10'-8"				
	A639		6	27'-6"	5	5	21'-6"					
	A640		2	30'-0"	5	5	24'-0"					
	A644		9	13'-3"	4	1'-0"	3'-2"	7'-7"				
	A645		9	13'-3"	3	2'-0"	1'-0"	8'-7"				
	A646		3	5'-3	2	1'-7"	2'-2"		0'-9"	2'-0"		
	A647		2	22'-6"	STR.							
BREAST WALL	A502		4	4'-0"	STR.							
	A604	23	21	4'-0"	STR.							
	A617	22		35'-6"	STR.							
	A619	36	19	4'-3"	STR.							
	A620	72	76	6'-0"	11	1'-6"	3'-4"					
	A621	6	6	4'-10"	5	3'-6"						
	A622	2	2	3'-10"	5	2'-6"						
	A623	2		5'-5"	11	1'-0"	3'-9"					
	A624	2		5'-11"	11	1'-0"	4'-3"					
	A625	2		6'-6"	11	1'-0"	4'-10"					
	A626	2		7'-1"	11	1'-0"	5'-5"					
	A637		8	3'-11"	9	1'-7"	2'-6"		1'-6"	0'-6"		
	A638		24	37'-9"	STR.							
	A641		19	4'-8"	STR.							
	A642	36	38	4'-10"	STR.							
	A660		2	5'-9"	9	1'-0"	3'-11"		0'-11"	0'-4"		
	A661		2	6'-4"	9	1'-0"	4'-6"		0'-11"	0'-4"		
	A662		2	7'-0"	9	1'-0"	5'-2"		0'-11"	0'-4"		
	A663		2	7'-7"	9	1'-0"	5'-9"		0'-11"	0'-4"		
	A664		1	5'-4"	9	1'-0"	3'-6"		0'-11"	0'-4"		
BACK WALL	A501	6		11'-9"	STR.							
	A502	8	8	4'-0"	STR.							
	A503	16		35'-6"	STR.							
	A504	72	74	5'-1"	11	2'-4"	0'-8"					
	A515		16	37'-9"	STR.							
	A516		4	12'-5	STR.							
	A618		38	12'-4"	3	4'-2"	1'-0	7'-6"				
	A627	72	14	12'-0"	3	4'-2"	1'-0"	7'-2"				
	A628	5		9'-6"	5	8'-8"	1'-0"					
	A629	5		9'-7"	15	1'-0"	1'-0"	1'-1"	0'-4"	1'-0"		
	A630	5		10'-7"	5	9'-9"	1'-0"					
	A631	8		15'-10"	11	6'-5	3'-4"					
	A637		10	3'-11"	9	1'-7"	2'-6"		1'-6"	0'-6"		
	A643		11	11'-7"	3	4'-2"	1'-0"	6'-9"				
	A648		13	11'-10"	3	4'-2"	1'-0	7'-0"				

EAST & WEST ABUTMENTS

LOC.	MARK	NO. REQ'D. EAST	NO. REQ'D. WEST	LENGTH	DET.	DIMENSIONS A	B	C	H	K	D	R
S.E. STRUC. SLAB	A632	9		6'-6"	STR.							
	A644	7		8'-8"	16	2'-0"	1'-2"					
N.W. RET. WALL	A650		29	8'-8"	5	7'-10"						
	A656		7	4'-2"	5	3'-6"						
	A633		7	15'-1"	11	3'-9"	6'-8"					
	A634		7	8'-2"	11	1'-0"	6'-6"					
	A635		7	3'-10"	5	5'-0"						
N.W. STRUC. SLAB	A505		2	12'-6"	STR.							
	A506		6	8'-6"	STR.							
	A507		8	7'-3"	STR.							
	A508		7	7'-10"	5	7'-4"						
	A509		7	7'-4"	STR.							
	A510		2	2'-10"	5	2'-4"						
	A511		2	1'-11"	STR.							
S.W. RET. WALL	A512		9	18'-0"	5	16'-2"						
	A513		9	18'-11"	5	16'-0"						
	A514		15	9'-0"	STR.							
	A636		16	9'-0	STR.							
	A901		5	8'-6"	STR.							
	A902		6	9'-0"	5	7'-8"						
	A903		5	5'-10"	5	4'-6"						

EAST & WEST APPROACH SPANS

LOC.	MARK	NO. REQ'D. EAST	NO. REQ'D. WEST	LENGTH	DET.	DIMENSIONS A	B	C	H	K	D	R
	S401	165	142	30'-0"	STR.							
	S402	10		25'-7"	"							
	S403	17		24'-3"	"							
	S404	17		23'-6"	"							
	S405	10		22'-10"	"							
	S406	17		22'-1"	"							
	S407	10		21'-4"	"							
	S408	10		20'-8"	"							
	S409	10		19'-11"	"							
	S410	13		19'-9"	"							
	S411	3		25'-11"	"							
	S412	3		19'-4"	"							
	S413	7	2	26'-2	"							
	S414	7		24'-10	"							
	S415	7		22'-8	"							
	S416	7		21'-2"	"							
	S417	7		20'-6"	"							
	S418	7		20'-4"	"							
	S419	3	1	26'-6"	"							
	S5420		5	22'-0"	"							
	S5421		5	26'-0"	"							
	S5422		5	31'-4"	"							
	S5423		5	36'-5"	"							
	S5424		5	42'-0"	"							
	S5425		5	47'-6"	"							
	S5426		10	52'-10"	"							
	S5427		5	58'-2"	"							
	S428		23	36'-0"	"							
	S429		6	28'-8"	"							
	S430		6	9'-2"	"							
	S5431		7	25'-8"	"							
	S5432		7	34'-6"	"							
	S5433		7	45'-2"	"							
	S5434		7	55'-10"	"							
	S435		1	26'-10"	"							
	S436		1	27'-2"	"							
	S437		2	27'-10"	"							
	S501	32	16	30'-0"	STR.							
	S502	8		20'-7"	"							
	S503	8		20'-0"	"							
	S504	8		25'-10"	"							
	S505	8		26'-6"	"							
	S506	119	118	2'-9"	6	1'-0"	1'-0"					
	S507	126	122	2'-10"	11	1'-0"	1'-1"					
	S508	18	18	8'-9"	7	0'-7"	8'-0"					
	S509	14	14	5'-10"	STR.							
	S5510		8	21'-7"	"							
	S511		16	36'-0"	"							
	S5512		8	53'-1"	"							
	S601	65	66	39'-2"								
	S602	1		39'-4"								
	S603	36	22	7'-2"								
	S604	1		32'-8"								
	S605	1		24'-9"								
	S606	2		17'-5"								
	S607	1		10'-1"								
	S608	139	101	34'-7"								

EAST & WEST APPROACH SPANS

LOC.	MARK	NO. REQ'D. EAST	NO. REQ'D. WEST	LENGTH	DET.	DIMENSIONS A	B	C	H	K	D	R
	S609	1		34'-0"	STR.							
	S610	1		26'-8"	"							
	S611	2		19'-4"	"							
	S612	2		12'-0"	"							
	S613	1		34'-7"	"							
	S614	131	116	11'-8"	"							
	S615	66	67	40'-0"	"							
	S616	1		32'-0"	"							
	S617	1		24'-8"	"							
	S618	1		10'-0"	"							
	S619	2		10'-6"	"							
	S620	1		29'-0"	"							
	S621	1		23'-0"	"							
	S5622		9	44'-9"	"							
	S5623		8	36'-3"	"							
	S624		1	41'-6"	"							
	S625		1	36'-6"	"							
	S626		19	7'-6"	"							
	S5627		9	42'-9"	"							
	S5628		8	34'-4"	"							
	S629		1	9'-4"	"							
	S630		1	41'-10"	"							
	S631	4	5	2'-6"	"							
	S633	2	1	9'-10"	"							
	S634		1	7'-11"	"							
	S635		1	5'-8"	"							
	S636		1	3'-4"	"							
	S632	3		5'-0"	"							

DIMENSIONS FOR CUTTING DIAGRAM – WEST APPROACH SPAN

MARK	"N" BARS/SET	SETS REQ'D	LENGTH	DET.	DIMENSIONS A	B	C	D	E
S5420	SET 1	5	1	22'-0"	STR.	10'-2"	11'-10"	11'-1"	10'-11"	2 3/16"
S5421	"	5	1	26'-0"	"	12'-2"	13'-10"	13'-1"	12'-11"	"
S5422	"	5	1	31'-4"	"	14'-10"	16'-6"	15'-9"	15'-7"	"
S5423	"	5	1	36'-8"	"	17'-6"	19'-2"	18'-5"	18'-3"	"
S5424	"	5	1	42'-0"	"	20'-2"	21'-10"	21'-1"	20'-11"	"
S5425	"	5	1	47'-6"	"	22'-11"	24'-7"	23'-10	23'-8	"
S5426	"	5	2	52'-10"	"	25'-7"	27'-3"	26'-6"	26'-4"	"
S5427	"	5	1	58'-2"	"	28'-3"	29'-11"	29'-2"	29'-0"	"
S5431	"	7	1	25'-8"	"	10'-5"		12'-7"	4 3/8"
	SET 2				"		15'-3"	13'-1"	"
S5432	SET 1	7	1	34'-6"	"	14'-10"		17'-0"	"
	SET 2						19'-8	17'-6"	"
S5433	SET 1	7	1	45'-2"	"	20'-2"		22'-4"	"
	SET 2						25'-0"	22'-10"	"
S5434	SET 1	7	1	55'-10"	"	25'-6"		27'-8"	"
	SET 2				"		30'-4"	28'-2"	"
S5510	SET 1	8	1	21'-7"	"	8'-9"	12'-10"	10'-11"	10'-8"	3 1/4"
S5512	"	8	1	53'-1"	"	24'-6"	28'-7"	26'-8"	26'-5"	3 1/4"
S5622	"	9	1	44'-9"	"	5'-10"	38'-11"	23'-4"	21'-5"	1'-11 3/8"
S5623	"	8	1	36'-3"	"	3'-6"	32'-9"	19'-1"	17'-2"	"
S5627	"	9	1	42'-9"	"	4'-10"	37'-11"	22'-4"	20'-5"	"
S5628	"	8	1	34'-4"	"	2'-7"	31'-9"	18'-2"	16'-2"	"

FOR ADDITIONAL REINFORCING BARS SEE SH.# 25, 26, 54, 75 & 79

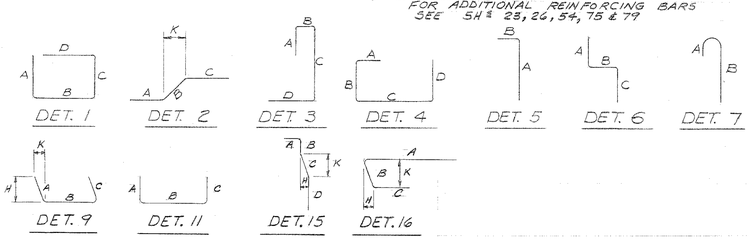

DIMENSIONS FOR CUTTING DIAG.

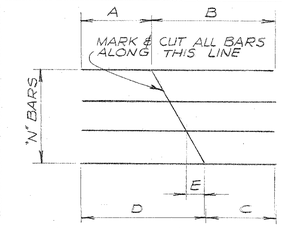

DEPARTMENT OF PUBLIC WORKS
BUREAU OF BRIDGES AND PUBLIC BUILDINGS
CITY OF MILWAUKEE

REVISIONS

MARK	DATE	BY
A		
B		
C		
D		
E		
F		
G		
H		
J		
K		
L		
M		

MICHIGAN ST. VERTICAL LIFT BRIDGE
OVER MILWAUKEE RIVER

BILL OF REINFORCEMENT

DESIGNED BY: TRACED BY: DATE:
DRAWN BY: R.P. CHECKED BY: JTA DATE:
APPROVED:— SCALE: AS NOTED
Norris A. Batalden DATE: 2-2-77 SHEET NUMBER 74
Henry J. Balcerzi DATE: 2-2-77 SET OF 85 SHEETS
DATE: 2-3-77 JOB NO. 505-98

CPS-2

BAR LIST — PIERS 1 & 2

LOC.	MARK	NO. REQ'D. PIER 1	NO. REQ'D. PIER 2	LENGTH	DET.	DIMENSIONS A	B	C	H	K	O	R
FOOTING EL. -23.00 TO -27.00	P601	20	20	17'-0"	STR							
	P602	410	350	5'-6"	STR							
	P603	—	99	27'-10"	STR							
	P604	39	—	32'-10"	STR							
	P605	88	73	13'-4"	STR							
	P606	4	4	12'-0"	STR							
	P607	60	—	35'-6"	STR							
	P608	—	60	30'-6"	STR							
	P609	242	212	4'-10"	5	3'-8"						
	P650	214	184	9'-9"	STR							
	P651	242	212	5'-6"	10	1'-4"	0'-7"	2'-4"				
PIT FLOOR EL. -21.00 TO -23.00	P400	8	8	8'-5"	13						2'-4"	
	P610	83	69	3'-0"	STR							
	P611	—	27	27'-4"	STR							
	P612	83	69	7'-1"	5	1'-9"						
	P613	83	69	2'-5"	5	0'-10"						
	P614	2	2	4'-9"	STR							
	P615	6	6	6'-0"	STR							
	P640	27	—	32'-4"	STR							
	P1001	8	8	9'-8"	5	1'-10"						
PIER WALLS EL. +4.00 TO +23.00	P401	116	116	6'-4"	11	2'-2"	2'-2"					
	P402	57	48	2'-11"	5	1'-4"						
	P403	34	—	5'-8"	2	2'-5"	1'-5½"		0'-4¾"	1'-5"		
	P404	75	—	3'-4"	5	2'-9"						
	P616	73	90	30'-0"	STR							
	P617	269	243	26'-6"	STR							
	P618	123	99	7'-10"	2	3'-6"	1'-7"		0'-3"	1'-5"		
	P619	16	16	17'-1"	STR							
	P620	8	8	3'-0"	STR							
	P621	8	8	5'-10"	STR							
	P622	16	16	3'-10"	5	2'-0"						
	P623	24	24	8'-2"	2	3'-0"	1'-10"		1'-0"	1'-6"		
	P626	2	2	23'-9"	8	2'-2"	18'-4"	3'-3"			11'-8"	5'-10"
	P641	52	—	24'-4"	STR							
	P652	63	—	5'-4"	5	1'-0"						
	P653	63	—	4'-6"	11	1'-0"	2'-10"					
	P701	101	104	21'-3"	8	4'-0"	13'-3"				8'-5¾"	4'-2⅞"
	P702	106	106	30'-8"	8	4'-0"	22'-8"				14'-6"	7'-3"
	P703	—	582	26'-8"	STR							
	P704	564	—	31'-0"	STR							
	P705	14	14	20'-10"	STR							
	P706	14	14	19'-8"	STR							
	P707	14	—	35'-10"	STR							
	P708	36	36	12'-0"	STR							
	P709	—	14	20'-10"	STR							
	P710	18	—	26'-2"	STR							
	P1002	16	16	28'-8"	STR							
	P1003	40	40	10'-6"	STR							
PIER WALLS ABOVE EL. +4.00	P402	9	—	2'-11"	5	1'-4"						
	P405	14	28	5'-6"	11	2'-0"	1'-8"					
	P406	26	—	7'-0"	STR							
	P407	10	—	8'-11"	5	0'-8"						
	P408	4	—	8'-11"	STR							
	P415	7	—	5'-0"	5	1'-6"						
	P457	3	—	2'-4"	11	1'-0"	0'-6"					
	P470	3	—	4'-1"	STR							
	P604	—	28	33'-5"	STR							
	P615	—	4	6'-0"	STR							
	P625	29	58	5'-10"	STR							
	P626	7	14	23'-9"	8	2'-2"	18'-4"	3'-3"			11'-8"	5'-10"
	P627	7	14	18'-7"	8	2'-2"	13'-2"	3'-3"			8'-5½"	4'-2⅞"
	P628	132	136	5'-8"	STR							
	P629	12	—	7'-0"	STR							
	P630	28	—	36'-4"	STR							
PIER ROOF	P409	2	4	10'-0"	STR							
	P410	1	2	8'-0"	STR							
	P411	1	2	6'-0"	STR							
	P412	7	14	4'-0"	STR							

BAR LIST — PIERS 1 & 2

LOC.	MARK	NO. REQ'D. PIER 1	NO. REQ'D. PIER 2	LENGTH	DET.	DIMENSIONS A	B	C	H	K	O	R
EQUIPMENT ROOM ROOF	P413	4	—	4'-2"	STR							
	P414	8	—	6'-0"	5	1'-10"						
	P416	13	—	2'-7"	5	1'-0"						
	P417	8	—	5'-1"	STR							
APPROACH SPAN BEAM & COLUMNS	P500	9	—	11'-8"	STR							
	P501	8	—	7'-8"	STR							
	P502	18	—	3'-0"	STR							
	P418	222	222	5'-0"	11	1'-9"	1'-8"					
	P419	32	32	5'-8"	12	1'-5"	1'-2"					
	P503	6	6	24'-7"	STR							
	P660	2	—	6'-0"	STR							
	P711	8	8	28'-0"	STR							
	P712	4	4	19'-3"	STR							
	P801	12	12	26'-6"	5	1'-4"						
	P802	6	6	32'-9"	STR							
	P1003 - SEE PIER WALLS EL. +4.00 TO -23.00											
12" SLAB AT EL. +4.00	P425	37	—	5'-8"	11	2'-4"	3'-2"					
	P426	4	—	15'-6"	STR							
	P427	18	18	24'-3"	STR							
	P428	5	13	12'-8"	STR							
	P429	8	—	24'-2"	STR							
	P430	1	1	7'-6"	STR							
	P431	2	2	9'-6"	STR							
	P432	35	18	11'-8"	STR							
	P433	1	1	3'-6"	STR							
	P434	2	2	4'-6"	STR							
	P435	2	2	8'-8"	STR							
	P436	1	1	11'-2"	STR							
	P437	6	—	5'-10"	5	2'-0"						
	P438	1	—	7'-10"	5	2'-0"						
	P439	1	—	9'-4"	5	2'-0"						
	P440	113	123	5'-5"	5	5'-2"						
	P441	6	6	6'-7"	5	6'-4"						
	P442	2	2	7'-4"	5	7'-1"						
	P443	2	2	7'-6"	5	7'-3"						
	P444	2	2	7'-8"	5	7'-5"						
	P445	2	2	7'-11"	5	7'-8"						
	P446	2	2	8'-1"	5	7'-10"						
	P477	8	—	3'-11"	5	2'-0"						
	P610	1	1	3'-0"	STR							
	P614	2	2	4'-9"	STR							
	P615	1	—	6'-0"	STR							
	P624	6	—	4'-0"	STR							
	P633	35	18	11'-8"	STR							
	P634	2	2	3'-6"	STR							
	P635	1	1	7'-6	STR							
	P636	5	13	12'-8"	STR							
	P637	2	2	8'-8"	STR							
	P638	8	—	24'-2"	STR							
	P652	1	1	11'-2"	STR							
STAIR LAND. AT EL. +4.00	P440	—	9	5'-5"	5	5'-2"						
	P447	—	3	8'-6"	STR							
LADDER LANDING PLATFORM AT EL. +9.00	P412	14	14	3'-7"	5	1'-0"						
	P463	1	1	5'-4"	STR							
	P464	1	1	6'-8"	STR							
	P465	1	1	7'-8"	STR							
	P466	1	1	3'-10"	STR							

BAR LIST — PIERS 1 & 2

LOC.	MARK	NO. REQ'D. PIER 1	NO. REQ'D. PIER 2	LENGTH	DET.	DIMENSIONS A	B	C	H	K	O	R
OPERATOR'S HOUSE	P302	6		16'-0"	STR							
	P303	6		14'-0"	STR							
	P304	24		3'-0"	STR							
	P409	158		10'-0"	STR							
	P411	2		6'-0"	STR							
	P416	85		2'-7"	5	1'-0"						
	P448	13		22'-0"	8	1'-10"	18'-4"				11'-8"	5'-10"
	P449	13		20'-5"	8	1'-10"	16'-9"				10'-8"	5'-4"
	P450	7		16'-4"	14	1'-10"	14'-6"					5'-10"
	P451	7		15'-1"	14	1'-10"	13'-3"					5'-4"
	P452	20		5'-6"	14	1'-0"	4'-6"					1'-10"
	P453	104		2'-6"	STR							
	P454	10		2'-10"	STR							
	P455	3		4'-4"	11	0'-6"	3'-6					
	P456	16		4'-2"	STR							
	P457	32		2'-4"	11	1'-0"	0'-6"					
	P458	4		6'-4"	11	3'-0"	0'-6"					
	P459	68		2'-3"	5	0'-8"						
	P460	28		11'-8"	STR							
	P461	34		5'-0"	STR							
	P462	48		10'-4"	STR							
	P490	12		13'-0"	STR							
	P491	10		11'-0"	STR							
	P492	16		10'-2"	STR							
	P504	15		4'-6"	5	0'-10"						
	P505	26		10'-8"	STR							
	P506	4		6'-10"	STR							
	P507	4		4'-6"	STR							
	P615	2		6'-0"	STR							
	P633	8		8'-0"	STR							

FOR ADDITIONAL REINFORCING BARS ALSO SEE SHS 23, 26, 54, 74 & 79

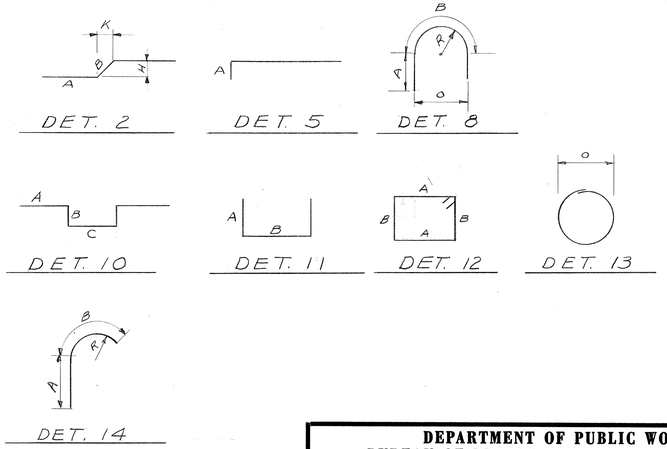

DEPARTMENT OF PUBLIC WORKS
BUREAU OF BRIDGES AND PUBLIC BUILDINGS
CITY OF MILWAUKEE

REVISIONS		
MARK	DATE	BY
A		
B		
C		
D		
E		
F		
G		
H		
I		
J		
K		
L		
M		

MICHIGAN ST. VERTICAL LIFT BRIDGE
OVER MILWAUKEE RIVER

BILL OF REINFORCEMENT

DESIGNED BY: _____ TRACED BY: _____ DATE: _____
DRAWN BY: D.G.H. CHECKED BY: GNR DATE: _____
APPROVED:— SCALE: AS NOTED
Harris A. Batalden, DESIGNER IN CHARGE — DATE: 2-2-77 SHEET NUMBER 75
Henry J. Balcomi, SUPT. OF BRIDGES AND PUBLIC BUILDINGS — DATE: 2-2-77 SET OF 85 SHEETS
F. Wright, COMMISSIONER OF PUBLIC WORKS — DATE: 2-3-77 JOB NO. 505-98

Special Details

CPE-2

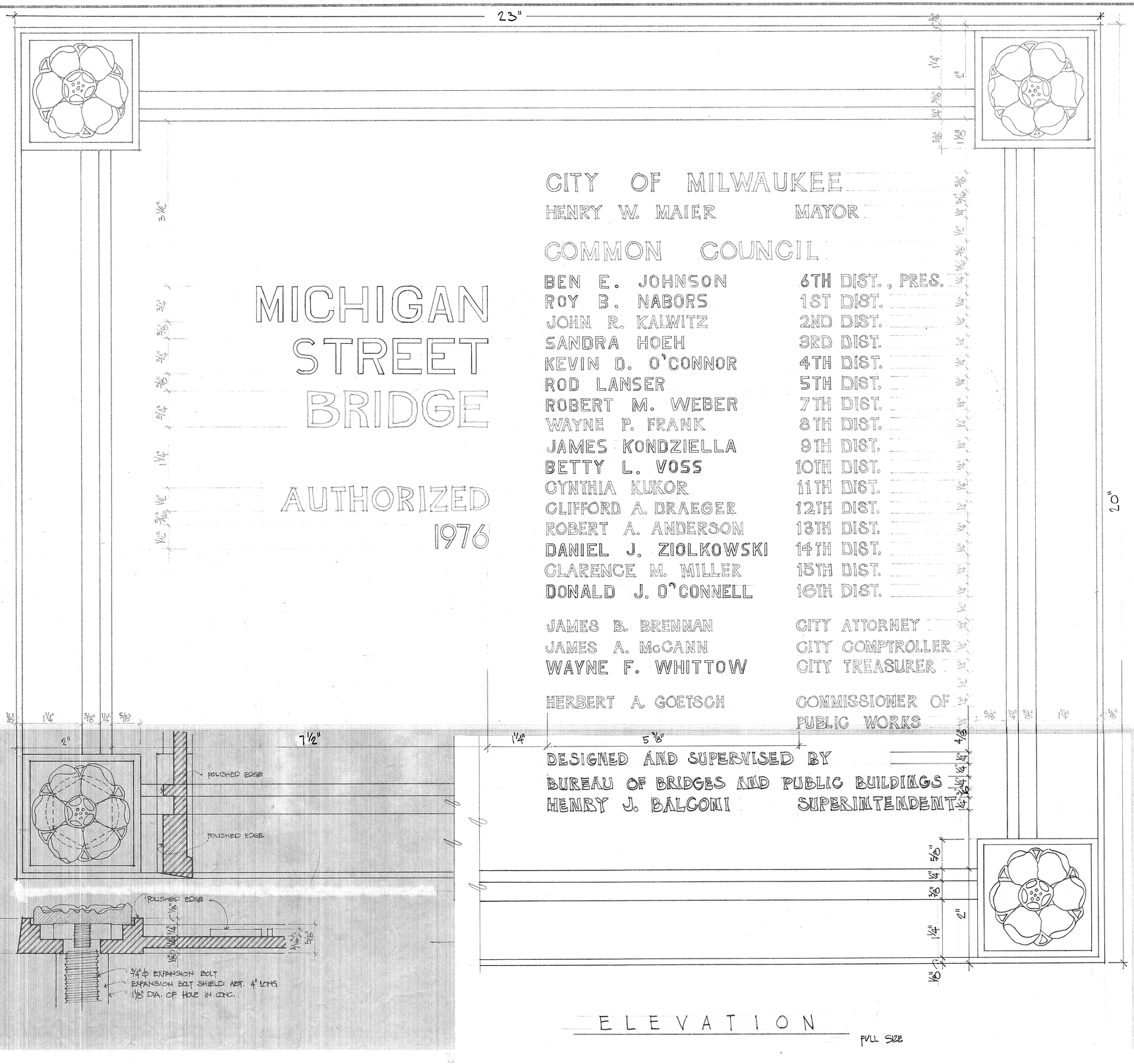

CITY OF MILWAUKEE

HENRY W. MAIER MAYOR

COMMON COUNCIL

BEN E. JOHNSON	6TH DIST., PRES.
ROY B. NABORS	1ST DIST.
JOHN R. KALWITZ	2ND DIST.
SANDRA HOEH	3RD DIST.
KEVIN D. O'CONNOR	4TH DIST.
ROD LANSER	5TH DIST.
ROBERT M. WEBER	7TH DIST.
WAYNE P. FRANK	8TH DIST.
JAMES KONDZIELLA	9TH DIST.
BETTY L. VOSS	10TH DIST.
CYNTHIA KUKOR	11TH DIST.
CLIFFORD A. DRAEGER	12TH DIST.
ROBERT A. ANDERSON	13TH DIST.
DANIEL J. ZIOLKOWSKI	14TH DIST.
CLARENCE M. MILLER	15TH DIST.
DONALD J. O'CONNELL	16TH DIST.
JAMES B. BRENNAN	CITY ATTORNEY
JAMES A. McCANN	CITY COMPTROLLER
WAYNE F. WHITTOW	CITY TREASURER
HERBERT A. GOETSCH	COMMISSIONER OF PUBLIC WORKS

DESIGNED AND SUPERVISED BY
BUREAU OF BRIDGES AND PUBLIC BUILDINGS
HENRY J. BALCONI SUPERINTENDENT

MICHIGAN STREET BRIDGE

AUTHORIZED 1976

ELEVATION

FULL SIZE

SPECIFICATION FOR MICHIGAN AVE. BRIDGE NAME PLATE - ONE (1) REQUIRED:

MATERIAL: CAST BRONZE

BORDER STYLE: SINGLE-LINE BEVELED EDGE

LETTER STYLE: BLOCK

BACKGROUND TEXTURE: LEATHERETTE

BACKGROUND COLOR: MEDIUM STATUARY-MAT

FINISH: LETTER FACES AND RAISED LINE OF BORDER TO BE POLISHED. REMAINING SURFACES LACQUERED TO COLOR ABOVE. GIVE ENTIRE FACE TWO (2) CLEAR CHEMICAL COATINGS.

MOUNTING: AS SHOWN

FURNISH THREE (3) COPIES OF THE RUBBING FOR APPROVAL BEFORE CASTING

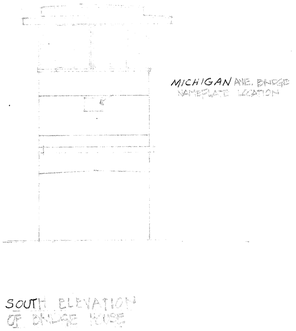

DEPARTMENT OF PUBLIC WORKS
BUREAU OF BRIDGES AND PUBLIC BUILDINGS
CITY OF MILWAUKEE

MICHIGAN ST. VERTICAL LIFT BRIDGE
OVER MILWAUKEE RIVER

NAME PLATE

REVISIONS		
MARK	DATE	BY
A		
B		
C		
D		
E		
F		
G		
H		
I		
J		
K		
L		
M		

DESIGNED BY: B & B TRACED BY: DATE:
DRAWN BY: J.T.A. CHECKED BY: PCB DATE:
APPROVED:— SCALE: AS SHOWN

Norris A. Batalden DATE: 2-2-77 SHEET NUMBER 76
DESIGNER IN CHARGE

Henry J. Balconi DATE: 2-2-77 SET OF 85 SHEETS
DEPT. OF PUBLIC WORKS, BUILDINGS

H. W. Engler DATE: 2-3-77 JOB NO. 505-98
COMMISSIONER OF PUBLIC WORKS

Special Design

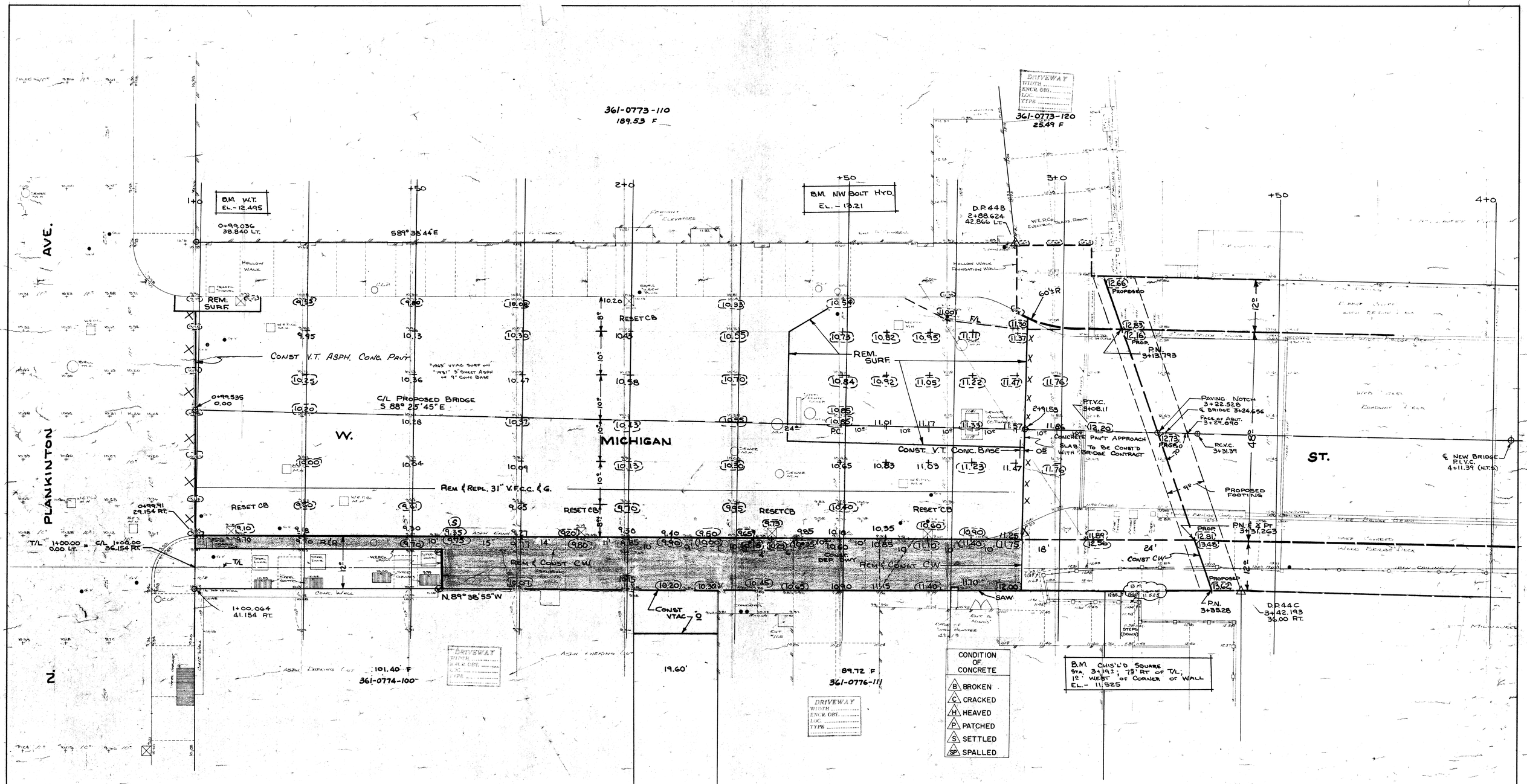

STORM DRAINAGE UNITS	
C.B.W.	–
RESET	5
ABANDON	–

ESTIMATE

REMOVALS	NEW WORK

DATE / TO				
ESTIMATING				
ELEC. CO.				
GAS CO.				
D.P.W.				
PUBL. HEAR.				
ST. CONST.				
SEWER				
WATER				
B.T.E. & E.S.				
HSE. SERV.				
TELE. CO.				
TRANS. CO.				
MEASURING				
FIELD				
DIST. FILE				
DRAW. SIZE	24" x 36"			

DEPARTMENT OF PUBLIC WORKS
BUREAU OF ENGINEERS
PUBLIC WAYS ENGINEERING DIVISION
CENTRAL DISTRICT
MILWAUKEE, WISCONSIN

FILE NO.

PLAN OF E. & W. MICHIGAN ST. – N. WATER ST. TO N. PLANKINTON AVE.

THIS SECTION N. PLANKINTON AVE TO BRIDGE

DRAWN BY	GILBERTSON	DATE	PROJECT NO. 877-078	SHEET 77 OF 85	
DESCRIPTIONS BY	CHMIELEWSKI	DATE 1-10-77			
LEVELS BY	UNRATH	DATE 8-1-75	SCALE 1" = 10'	1/4 SEC. 397	ALD. DIST. 4th
LEVELS TRANSF. BY	GILBERTSON	DATE			
GRADES TRANSF. BY	CHMIELEWSKI	DATE 1-7-77	OBSTRUCTIONS AS SHOWN		
DESIGNED BY	MILLER	DATE 10-10-75	REVISED		
CHECKED BY	[signature]	DATE 1-10-77	REVISED		
APPROVED BY	[signature]	DATE 1-10-77	REVISED		
MICROFILM INDEX			DATE FILMED		

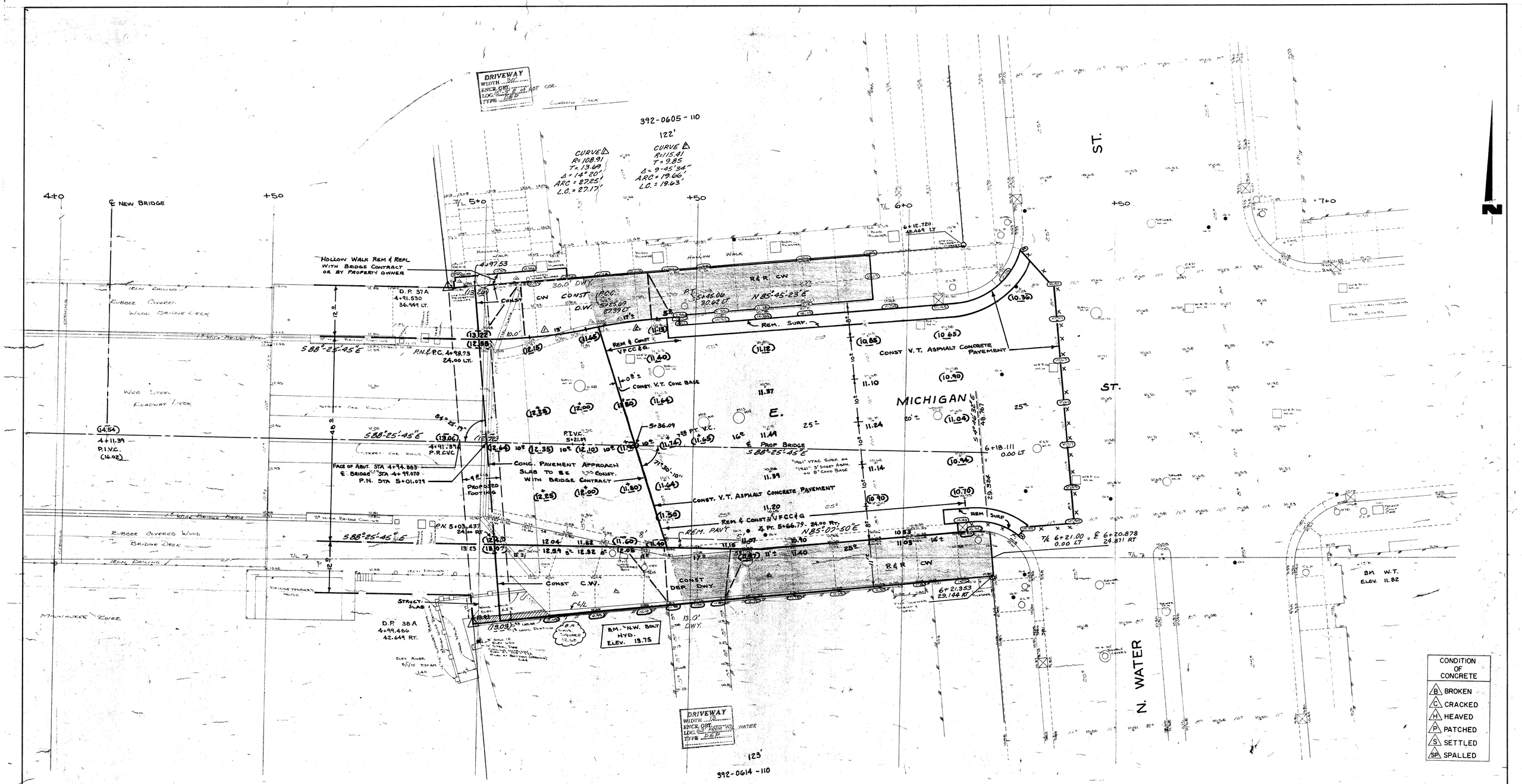

CONDITION OF CONCRETE	
B	BROKEN
C	CRACKED
H	HEAVED
P	PATCHED
S	SETTLED
SP	SPALLED

STORM DRAINAGE UNITS	
C.B.W.	
RESET	
ABANDON	

ESTIMATE

REMOVALS	NEW WORK
CW & Dep. Dwy	CW
CB & Dep. CC&G	VFCC&G
Bit. Surf.	VTAC Pavt
Pavt	VT Conc Base (2-4")
	Conc Dwy

DATE / TO				
ESTIMATING				
ELEC. CO.				
GAS CO.				
D.P.W.				
PUBL. HEAR.				
ST. CONST.				
SEWER				
WATER				
B.T.E. & E.S.				
HSE. SERV.				
TELE. CO.				
TRANS. CO.				
MEASURING				
FIELD				
DIST. FILE				
DRAW. SIZE	24" x 36"			

DEPARTMENT OF PUBLIC WORKS
BUREAU OF ENGINEERS
PUBLIC WAYS ENGINEERING DIVISION
CENTRAL DISTRICT
MILWAUKEE, WISCONSIN

FILE NO.

PLAN OF E. & W. MICHIGAN ST.
N. PLANKINTON AVE. TO N. WATER ST.
THIS SECTION N. WATER ST TO BRIDGE

DRAWN BY	GILBERTSON	DATE	PROJECT NO.	SHEET 78 OF 85	
DESCRIPTIONS BY	CHMIELEWSKI	DATE 1-10-78	877-078		
LEVELS BY	UNRATH	DATE 8-1-75	SCALE 1" = 10'	1/4 SEC. 397	ALD. DIST. 4TH
LEVELS TRANSF. BY	GILBERTSON	DATE			
GRADES TRANSF. BY	TABAKA	DATE 1-7-77	OBSTRUCTIONS As Shown		
DESIGNED BY	MILLER	DATE 10-10-75	REVISED		
CHECKED BY	L. Stellos	DATE /-10-77	REVISED		
APPROVED BY	L. Stellos	DATE /-10-77	REVISED		
MICROFILM INDEX			DATE FILMED		

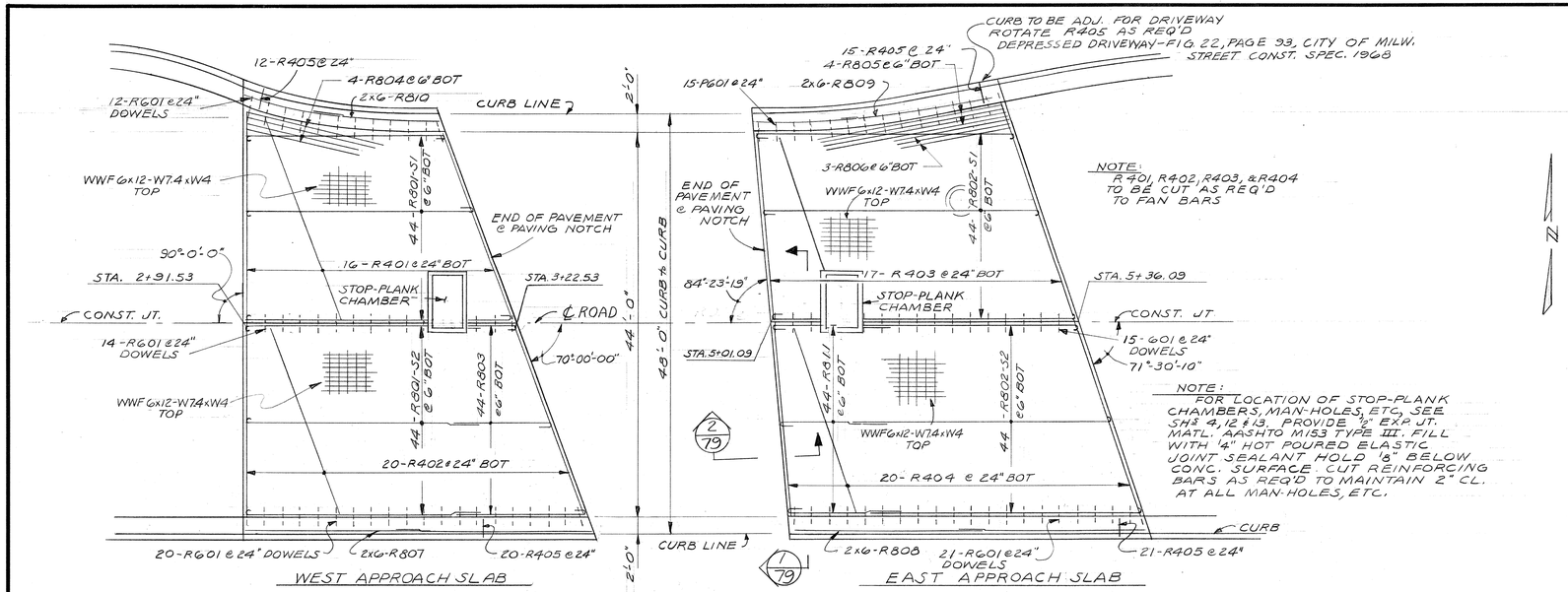

CONCRETE PAVEMENT APPROACH SLAB

SCALE: 1/8" = 1'-0"

BAR LIST							
MARK	NO W	NO E	LENGTH	DET.	A	B	LOCATION
R401	16	–	25'-5"	STR			SLAB-BOT, TRANS.
R402	20	–	22'-11"	STR			SLAB-BOT, TRANS.
R403	–	17	25'-8"	STR			SLAB-BOT, TRANS.
R404	–	20	22'-8"	STR			SLAB-BOT, TRANS.
R405	32	36	3'-8"	17			CURB & GUTTER
R601	46	51	2'-0"	STR			DOWELS
R801	44	–	60'-0"	*	8"	*	SLAB-BOT, LONG.
R802	–	44	60'-0"	*	8"	*	SLAB-BOT, LONG.
R803	44	–	7'-6"	7	8"	6'-7"	SLAB-BOT, LONG.
R804	4	–	16'-11"	7	8"	16'-0"	SLAB-BOT, LONG.
R805	–	4	21'-11"	7	8"	21'-0"	SLAB-BOT, LONG.
R806	–	3	13'-11"	7	8"	13'-0"	SLAB-BOT, LONG.
R807	12	–	22'-0"	7	8"	21'-1"	CURB & GUTTER
R808	–	12	22'-2"	7	8"	21'-3"	CURB & GUTTER
R809	–	12	16'-5"	7	8"	15'-6"	CURB & GUTTER
R810	12	–	12'-10"	7	8"	11'-11"	CURB & GUTTER
R811	–	44	112'-2"	7	8"	11'-3"	SLAB-BOT, LONG.

*CUTTING DETAILS									
MARK		DET.	C	D	E	F	G	N	SETS REQ'D
R801	S1	7	32'-3"	—	60'-0"	—	24'-5"	44	1
	S2	7	—	27'-9"		35'-7"	—		1
R802	S1	7	29'-8"	—	60'-0"	—	34'-7"	44	1
	S2	7	—	30'-6"		25'-5"	—		1

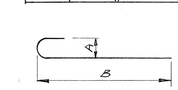

DETAIL 7

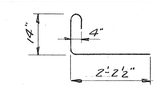

DETAIL 17

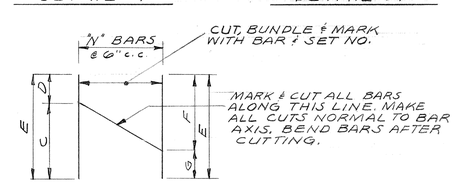

*CUTTING DIAGRAM

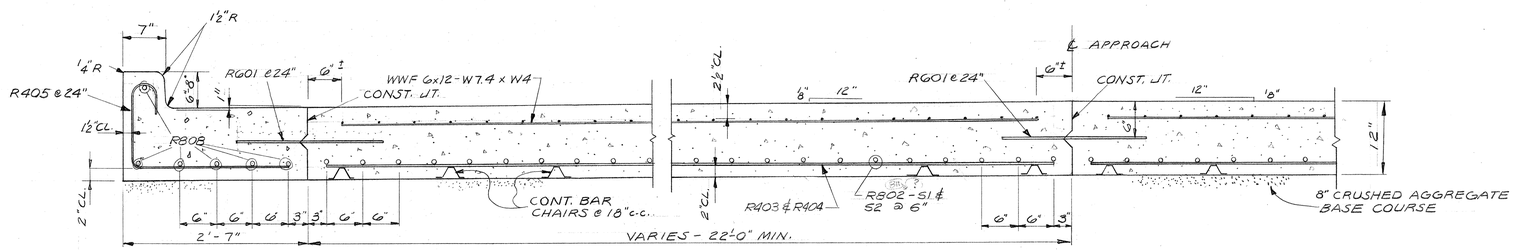

TYPICAL SECTION THRU APPROACH SLAB

SCALE ½" = 1'-0"

1/79

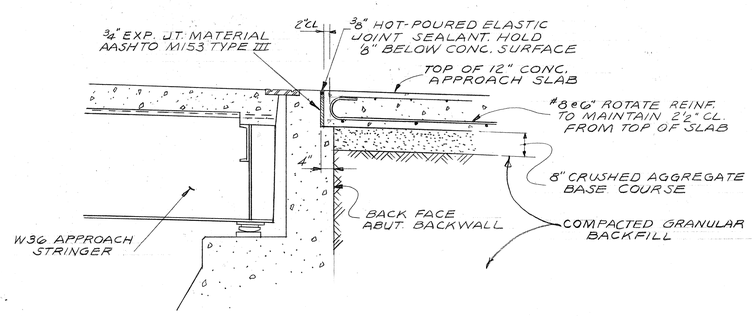

SECTION

2/79

NOTES:

1. WELDED WIRE FABRIC SHALL CONFORM TO THE REQUIREMENTS OF THE STANDARD SPECIFICATION FOR WELDED STEEL WIRE FABRIC FOR CONCRETE REINFORCEMENT A.A.S.H.T.O. DESIGNATION M55 EXCEPT AS SHOWN HEREON.
2. WELDED WIRE FABRIC SPECIFICATIONS:
   APPROXIMATE WEIGHT PER 100 SQ. FT. = 69.0 LBS.
   LONGITUDINAL STEEL - GAGE NO. 0 = 0.3065" D @ 6" c.c.
   TRANSVERSE STEEL - GAGE NO. 4 = 0.225 3" D @ 12" c.c.
3. WELDED STEEL WIRE FABRIC SHALL BE SHIPPED TO THE JOB SITE IN FLAT SHEETS.
4. SIDE LAP OF ADJACENT SHEETS SHALL BE 8" MIN LAP IN LONG. DIRECTION SHALL BE 14" MIN.

DEPARTMENT OF PUBLIC WORKS
BUREAU OF BRIDGES AND PUBLIC BUILDINGS
CITY OF MILWAUKEE

REVISIONS		
MARK	DATE	BY
A		
B		
C		
D		
E		
F		
G		
H		
I		
J		
K		
L		
M		

MICHIGAN ST. VERTICAL LIFT BRIDGE
OVER MILWAUKEE RIVER

CONCRETE PAVEMENT APPROACH SLAB

DESIGNED BY: _____ TRACED BY: _____ DATE: _____
DRAWN BY: D.G.H. CHECKED BY: PCB DATE: _____
APPROVED:— SCALE: AS NOTED
Norris A. Batalden — DESIGNER IN CHARGE — DATE: 2-2-77 SHEET NUMBER 79
Henry J. Balemi — ASST. COMMISSIONER FOR PUBLIC BUILDINGS — DATE: 2-2-77 SET OF 85 SHEETS
Deputy — COMMISSIONER OF PUBLIC WORKS — DATE: 2-3-77 JOB NO. 505-98

CPE-2

Note - Trolley Poles, Arches, Rails, Rail Seats on Approaches, Counterweight to balance Arches and Rails on Bascule are to be furnished & erected by the Street Car Co. Contractor shall make provision for the fastening thereof. New Roadway & Sidewalk is to cover entire Top of old East and new West abutment.

DEPARTMENT OF PUBLIC WORKS
BUREAU OF BRIDGES AND PUBLIC BUILDINGS
CITY OF MILWAUKEE

REVISIONS		
MARK	DATE	BY
A		
B		
C		
D		
E		
F		
G		
H		
I		
J		
K		
L		
M		

MICHIGAN ST. VERTICAL LIFT BRIDGE
OVER MILWAUKEE RIVER

GENERAL PLAN OF BASCULE BRIDGE

DESIGNED BY: ______ TRACED BY: ______ DATE: ______
DRAWN BY: ______ CHECKED BY: ______ DATE: ______
APPROVED: ______ SCALE: ______

Norris A. Batalden, DESIGNER IN CHARGE — DATE: 2-2-77 — SHEET NUMBER 80
Henry J. Balconi, SUPT. OF BRIDGES AND PUBLIC BUILDINGS — DATE: 2-2-77 — SET OF 85 SHEETS
[signature], COMMISSIONER OF PUBLIC WORKS, Special Deputy — DATE: 2-3-77 — JOB NO. 505-98

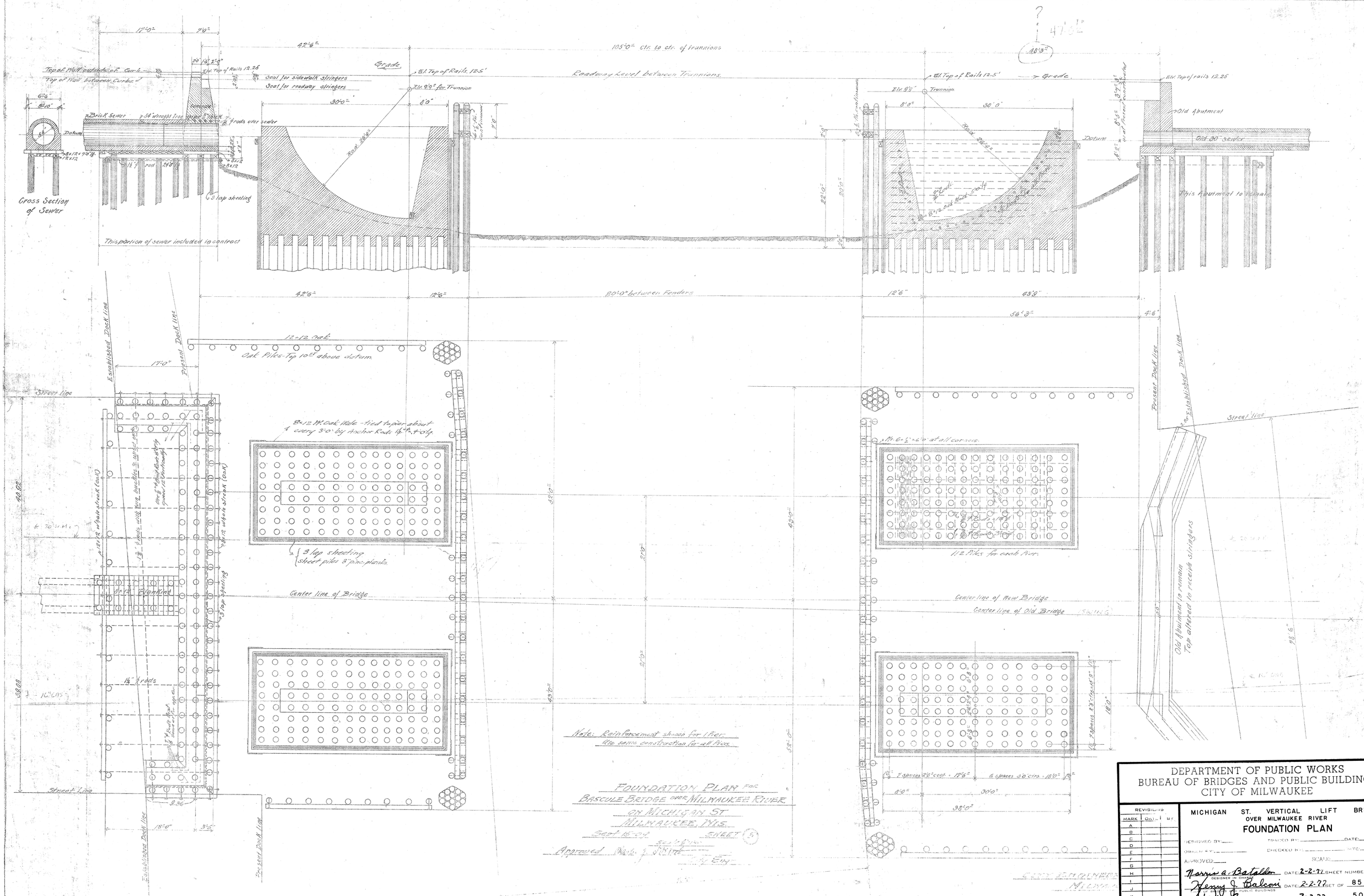

DEPARTMENT OF PUBLIC WORKS
BUREAU OF BRIDGES AND PUBLIC BUILDINGS
CITY OF MILWAUKEE

MICHIGAN ST. VERTICAL LIFT BRIDGE
OVER MILWAUKEE RIVER
FOUNDATION PLAN

REVISIONS		
MARK	DATE	BY
A		
B		
C		
D		
E		
F		
G		
H		
I		
J		
K		
L		
M		

DESIGNED BY: TRACED BY: DATE:
DRAWN BY: CHECKED BY: DATE:
APPROVED: SCALE:

Norris A. Batalden DATE: 2-2-77 SHEET NUMBER 81
DESIGNER IN CHARGE
Henry J. Balconi DATE: 2-2-77 SET OF 85 SHEETS
CITY OF MILWAUKEE PUBLIC BUILDINGS
[signature] DATE: 2-3-77 JOB NO. 505-98
COMMISSIONER OF PUBLIC WORKS
Special Deputy

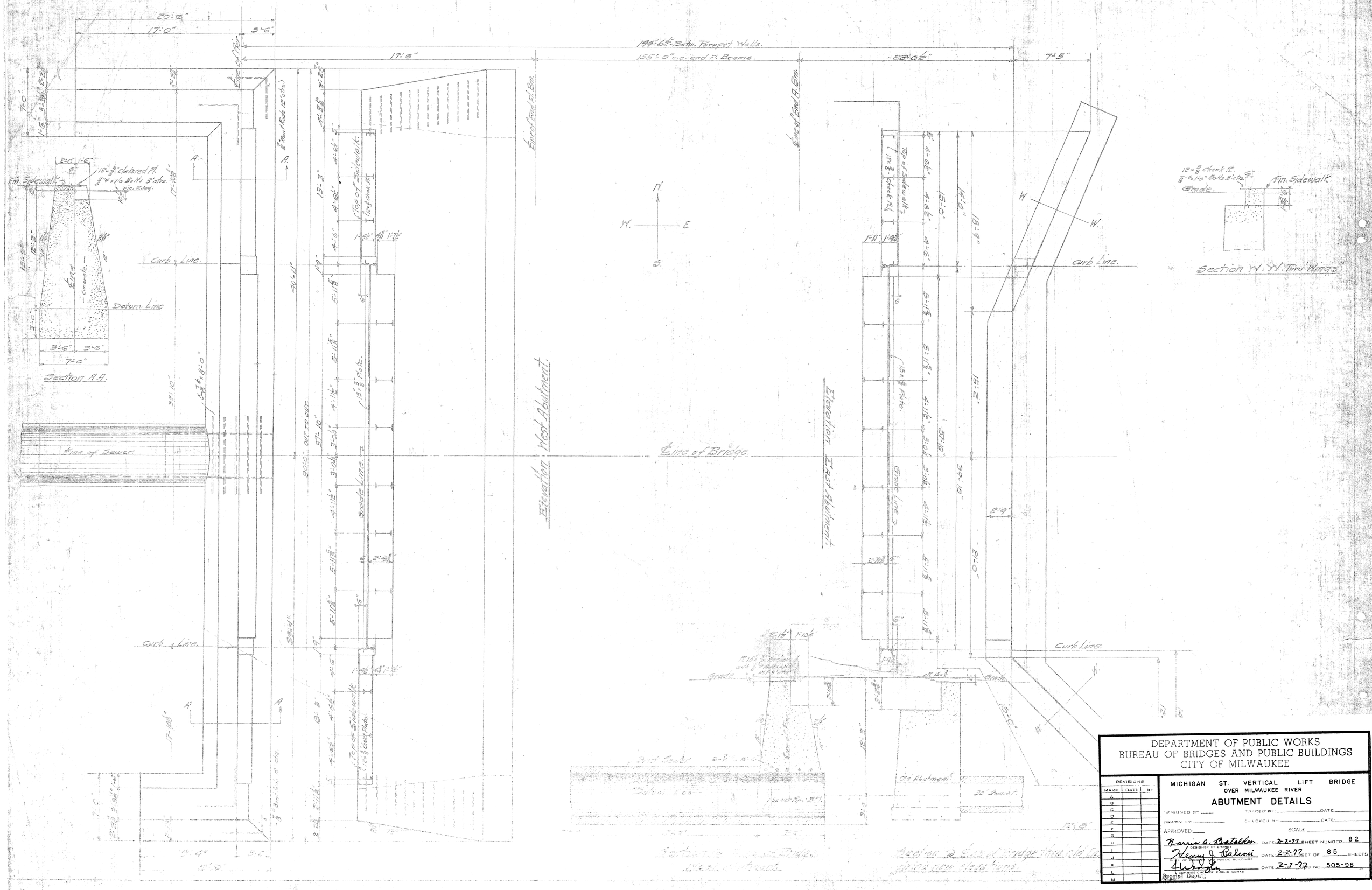

DEPARTMENT OF PUBLIC WORKS
BUREAU OF BRIDGES AND PUBLIC BUILDINGS
CITY OF MILWAUKEE

REVISIONS		
MARK	DATE	BY
A		
B		
C		
D		
E		
F		
G		
H		
I		
J		
K		
L		
M		

MICHIGAN ST. VERTICAL LIFT BRIDGE
OVER MILWAUKEE RIVER

ABUTMENT DETAILS

DESIGNED BY: _____ TRACED BY: _____ DATE: _____
DRAWN BY: _____ CHECKED BY: _____ DATE: _____
APPROVED: _____ SCALE: _____

Harris A. Batalden DATE: 2-2-77 SHEET NUMBER 82
DESIGNER IN CHARGE
Henry J. Balconi DATE: 2-2-77 SET OF 85 SHEETS
CITY OF BRIDGES AND PUBLIC BUILDINGS
[signature] DATE: 2-3-77 JOB NO. 505-98
COMMISSIONER OF PUBLIC WORKS
Special Deputy

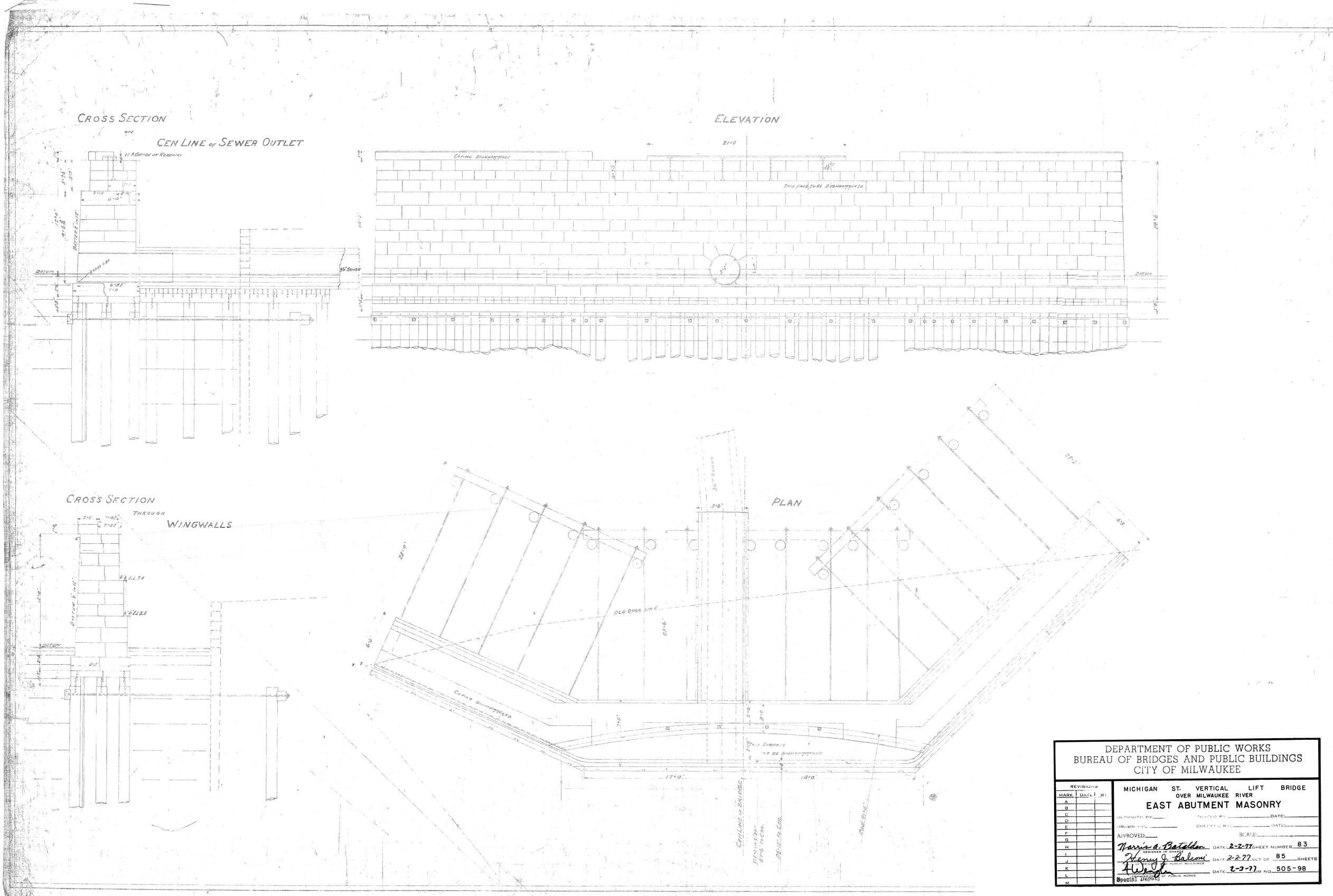

DEPARTMENT OF PUBLIC WORKS
BUREAU OF BRIDGES AND PUBLIC BUILDINGS
CITY OF MILWAUKEE

REVISIONS		
MARK	DATE	BY
A		
B		
C		
D		
E		
F		
G		
H		
I		
J		
K		
L		
M		

MICHIGAN ST. VERTICAL LIFT BRIDGE
OVER MILWAUKEE RIVER
EAST ABUTMENT MASONRY

DESIGNED BY: _____ TRACED BY: _____ DATE: _____
DRAWN BY: _____ CHECKED BY: _____ DATE: _____
APPROVED: _____ SCALE: _____

Norris A. Batalden DATE: 2-2-77 SHEET NUMBER 83
DESIGNER IN CHARGE
Henry J. Balconi DATE: 2-2-77 SET OF 85 SHEETS
DIRECTOR OF PUBLIC BUILDINGS
A Wengler DATE: 2-3-77 JOB NO. 505-98
COMMISSIONER OF PUBLIC WORKS
Special Deputy

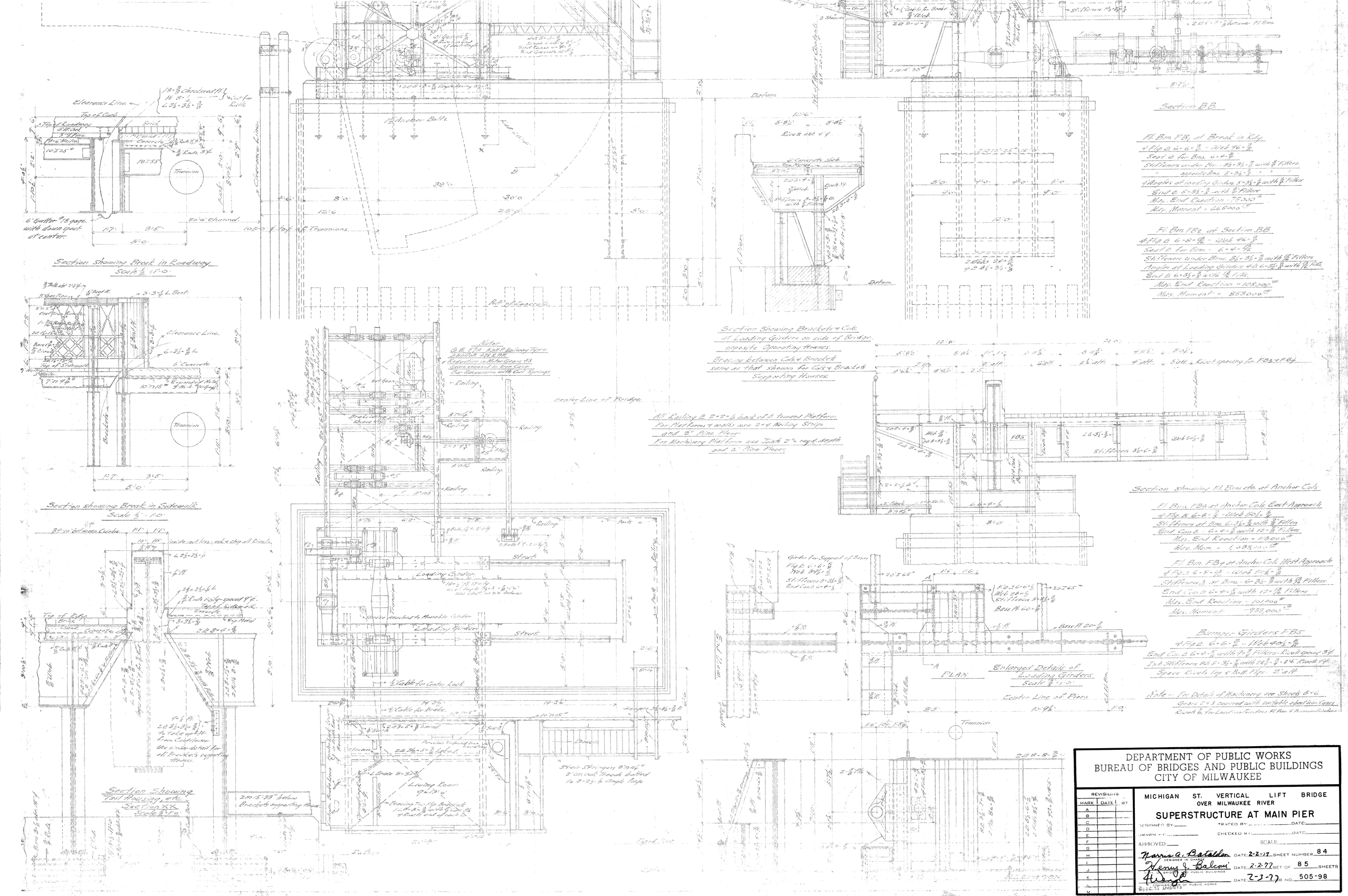

DEPARTMENT OF PUBLIC WORKS
BUREAU OF BRIDGES AND PUBLIC BUILDINGS
CITY OF MILWAUKEE

REVISIONS		
MARK	DATE	BY
A		
B		
C		
D		
E		
F		
G		
H		
I		
J		
K		
L		
M		

MICHIGAN ST. VERTICAL LIFT BRIDGE
OVER MILWAUKEE RIVER

SUPERSTRUCTURE AT MAIN PIER

DESIGNED BY: _____ TRACED BY: _____ DATE: _____
DRAWN BY: _____ CHECKED BY: _____ DATE: _____
APPROVED: _____ SCALE: _____

Norris A. Batalden — DESIGNER IN CHARGE — DATE: 2-2-77 — SHEET NUMBER 84
Henry J. Baloni — BRIDGE ENGINEER — DATE: 2-2-77 — SET OF 85 SHEETS
Commissioner of Public Works — DATE: 2-3-77 — JOB NO. 505-98

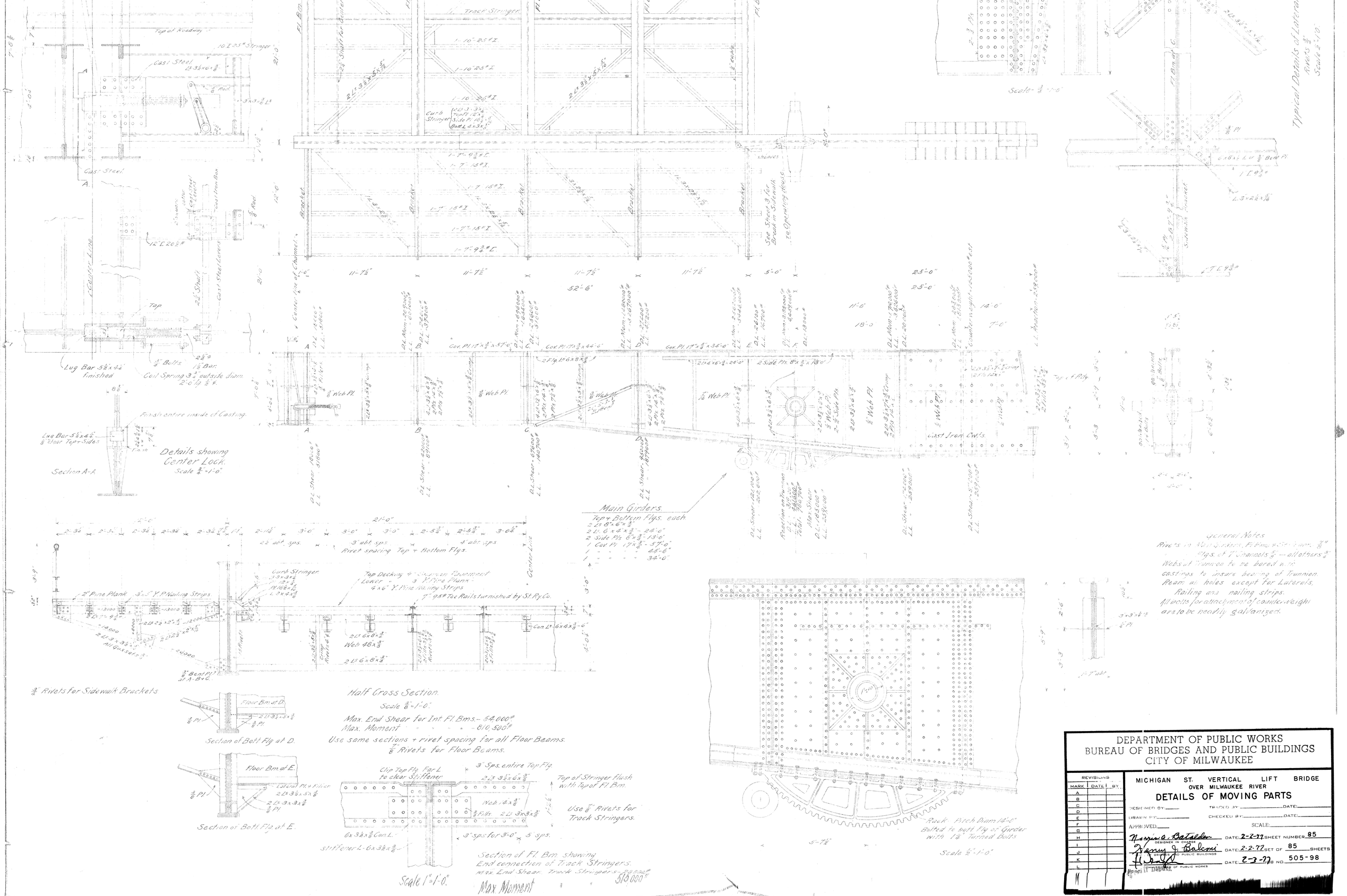

DEPARTMENT OF PUBLIC WORKS
BUREAU OF BRIDGES AND PUBLIC BUILDINGS
CITY OF MILWAUKEE

REVISIONS		
MARK	DATE	BY
A		
B		
C		
D		
E		
F		
G		
H		
I		
J		
K		
L		

MICHIGAN ST. VERTICAL LIFT BRIDGE
OVER MILWAUKEE RIVER

DETAILS OF MOVING PARTS

DESIGNED BY: _____ TRACED BY: _____ DATE: _____
DRAWN BY: _____ CHECKED BY: _____ DATE: _____
APPROVED: _____ SCALE: _____

Norman A. Batalden — DESIGNER IN CHARGE — DATE: 2-2-77 — SHEET NUMBER 85
Henry J. Balcom — BUREAU OF PUBLIC BUILDINGS — DATE: 2-2-77 — SET OF 85 SHEETS
H. J. Gaffey — COMMISSIONER OF PUBLIC WORKS — DATE: 2-3-77 — B NO 505-98

Form 11 12/69/5