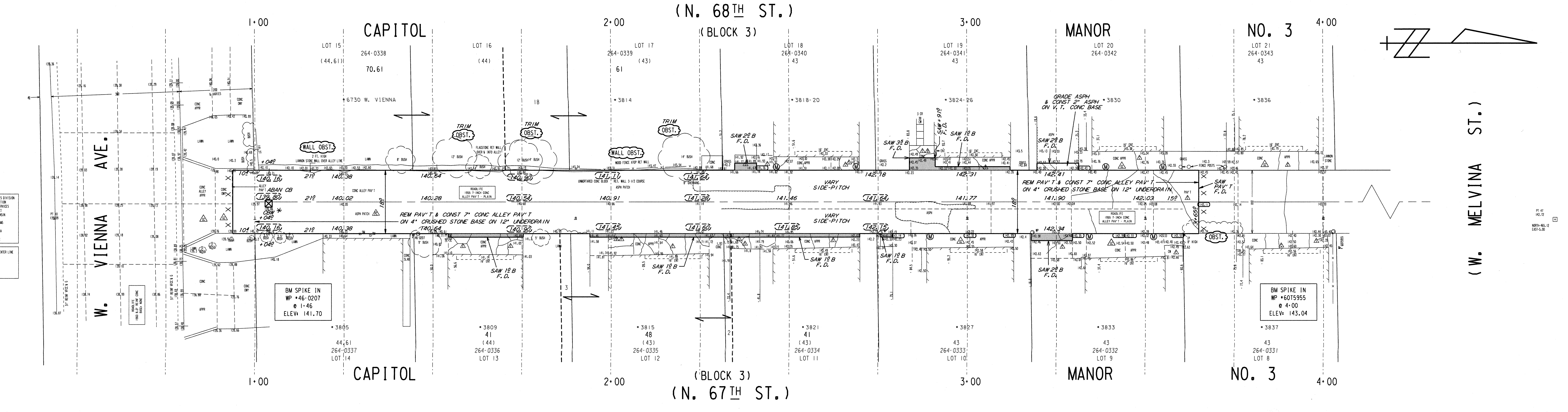

NOTES :

- STATION 1+00 IS THE NORTH R/W LINE IN W. VIENNA AVE. TRANSIT LINE IS THE CENTERLINE OF 18 FT. ALLEY R/W. LINE IS MONUMENTED 5 FT. EAST OF T/L WITH CHIS. T'S AT FOLLOWING STATIONS: 0+43.50 (ON SOUTH CURB VIENNA), 1+90, 3+00, 3+50, 4+00, 4+65.12
- 12" UNDERDRAIN AND ASSOCIATED DRAINAGE STRUCTURE REQUIRED IN THIS ALLEY, SEE TYPICAL BELOW.
- ALL SAWING ACROSS GARAGE APPROACHES SHALL BE FULL DEPTH.
- GRADE AND PLACE 1½ WIDTH TOPSOIL & SOD IN LAWN AREA DISTURBED BY CONSTRUCTION.
- SECTIONS OF THIS PROJECT HAVE 1/2 % GRADIENT IN F/L; SCREED REQUIRED, SIDE PITCH VARIES.

* CONTRACTOR TO CONSTRUCT SPECIAL SUBSURFACE DRAINAGE UNIT.

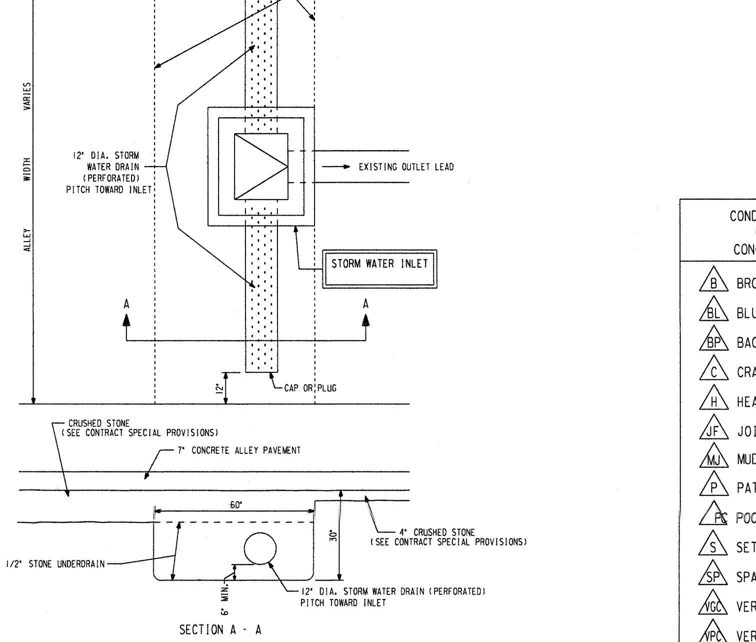

SPECIAL SUBSURFACE DRAINAGE INLET

CONDITION OF CONCRETE

- B BROKEN
- BL BLUE LINED
- BP BACK PITCHED
- C CRACKED
- H HEAVED
- JF JOINT FAILURE
- MJ MUD JACKED
- P PATCHED
- PC POOR CONDITION
- S SETTLED
- SP SPALLED
- VGC VERY GOOD
- VPC VERY POOR

ESTIMATE / CERTIFICATE QUANTITIES

	DESCRIPTION	UNIT	ASSESS.	X-ING			PLAN TOT.	PROJ. TOT.
X	MOBILIZATION	L.S.						
X	FINISHING ROADWAY	L.S.						
X	BARRICADING AND SIGNING	L.S.						
	LINE, GRADE AND STAKING	L.S.						
X	CUTTING	C.Y.						
	ROADWAY CUTTING	C.Y.						
	FILLING	C.Y.						
	ROADWAY FILLING	C.Y.						
X	PAVEMENT REMOVAL	S.Y.						
	BITUMINOUS SURFACE REMOVAL	S.Y.						
	CURB &/OR CURB & GUTTER REMOVAL	L.F.						
X	CONC. WALK &/OR DRIVEWAY REMOVAL	S.F.						
X	SAWING (FULL DEPTH)	L.F.						
	SAWING	L.F.						
	TREES CLEARING	I.D.						
	TREES GRUBBING	I.D.						
	CONCRETE CURB & GUTTER	L.F.						
X	V.T. CONC. WALK &/OR DRIVEWAY	C.Y.						
	5" CONCRETE WALK	S.F.						
	7" CONCRETE DRIVEWAY	S.F.						
	CONCRETE PAVEMENT	S.Y.						
X	7" CONCRETE ALLEY PAVEMENT	S.Y.						
	V.T. CONCRETE BASE	C.Y.						
	CONCRETE BASE	S.Y.						
	TACK COAT	GAL.						
	BASE PREP. FOR ASPHALT SURFACE	L.S.						
(3+25) X	ASPH. CONC. PAV'T. (MAX.)							
X	12" CRUSHED STONE UNDERDRAIN	S.Y.						
X	4" CRUSHED STONE BASE	S.Y.						
	CRUSHED GRAVEL BASE							
	GRAVEL FILLING	TON						
X	SODDING	S.Y.						
X	TOPSOIL	C.Y.						
	PAVEMENT GRINDING (ASPHALT)	S.Y.						
	PAVEMENT GRINDING (CONCRETE)	S.Y.						
X	SEALING PAV'T JOINTS & CRACKS	S.Y.						
	MANHOLE RINGS	EACH						
X	SEWER FRAME ADJUSTMENT	V.F.						
	MANHOLE SEAL (CITY FURNISHED)	EACH						
X	EROSION CONTROL (TYPE M)	EACH						
	JOINT & CRACK REPAIR	L.F.						
	CRACK & SEAT CONC. PAVEMENT	S.Y.						

DEPARTMENT OF PUBLIC WORKS
INFRASTRUCTURE SERVICES DIVISION
FIELD OPERATIONS
FIELD & DESIGN ENGINEERING
MILWAUKEE, WISCONSIN

FILE NO. 292

PLAN OF: ALLEY BETWEEN: W. MELVINA ST., N3800 W6700
W. VIENNA AVE., N. 67TH ST., & N. 68TH ST. (SOUTH HALF)

THIS SECTION:				
DRAWN BY		DATE:	PROJECT NO. ST212120101	SHEET 1 OF 1
DESCRIPTIONS BY	S. BIEGANSKI	DATE: 12/19/11		
LEVELS BY	W. WILLIAMS	DATE: 11/23/11	SCALE 1"=10'	1/4 SEC. 265 / ALD. DIST. 10
LEVELS TRANSF. BY		DATE:		
DESIGNED BY	B. PLAUMANN	DATE: 12/6/11	OBSTRUCTIONS - SEE OBSTRUCTION LIST	
GRADES TRANSF. BY	S. BIEGANSKI	DATE: 12/20/11	REVISED:	
CHECKED BY	[signature]	DATE: 1/12/12	REVISED:	
APPROVED BY	[signature]	DATE: 1/13/12	REVISED:	
FILE: V:\PWELIB\PAVING\29228.FIN				
PLOT DATE: 10-JAN-2012				

STORM DRAINAGE UNITS		
C.B.W. - 1	RESET - 0	ABANDON - 1
PROJECT IN SEPARATED AREA		

TO \ DATE	1-13-12	4/25/14					
ESTIMATING	1						
HOLLOW WALKS							
PUBLIC HEARING	1						
CONSTRUCTION	1	6					
SEWER	1						
WATER							
STREET LIGHTING	2						
BLDG. SERVICES							
MEASURING		1					
FIELD		1					
DISTRICT FILE	2						
FORESTRY	1						
W.E. / G.O.							
WIS. GAS CO.	1						
TRANSIT SYSTEM							
CABLE TV							
UND. GRD. COND.	1						
WATER DIST.	1						
WEPCO N/S	1						
WEPCO S/S							
SEWER SERVICES	3						
UTILITY COOR.	1						
RM 506		15					
PLAN SIZE	12" X 78"						

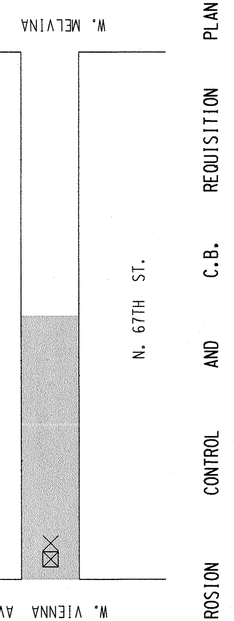

EROSION CONTROL	AND	C.B.	REQUISITION	PLAN
TYPE M	☒ - CBW	☐ - RESET	X - ABANDON	NO WORK
1	1 *	0	1	

ALLEY BETW: W. MELVINA ST., W. VIENNA AVE., N. 67TH ST. & N. 68TH ST (1 OF 1) (SOUTHERLY HALF)

ST212120101 12" X 78" 29228 #292