A	B
18" COMBINED CLASS "C" BEDDING CLASS IV RCP OR PVCP	24" COMBINED CLASS "C" BEDDING CLASS IV RCP OR PVCP

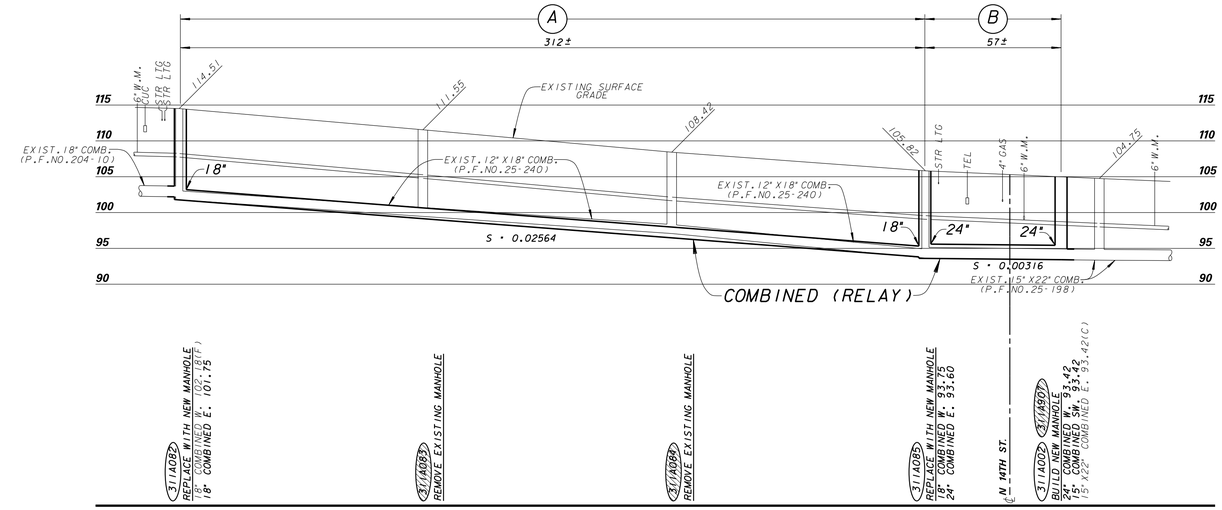

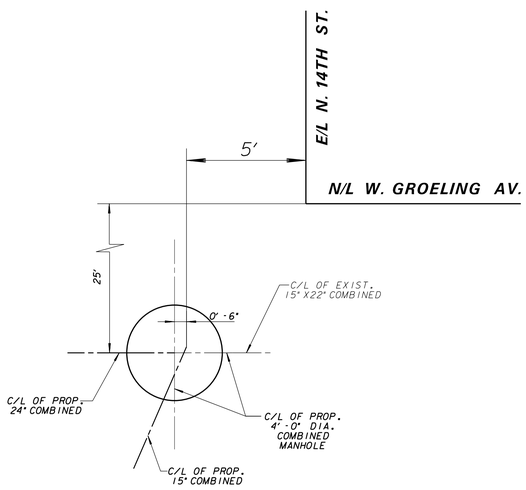

DETAIL OF MANHOLE NO. 311A002

SCALE: 1" = 3'-0"

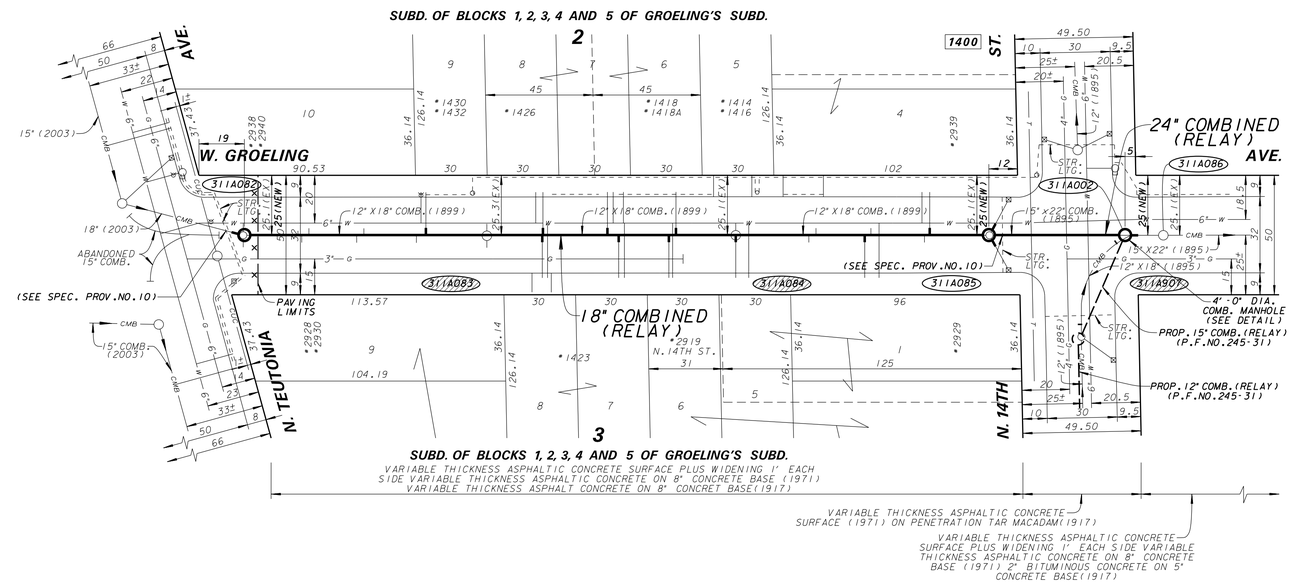

FOR SPECIAL PROVISIONS SEE PLAN FILE NO. 245-31
SHEET 1 OF 7 IS PLAN FILE NO. 244-9
SHEET 2 OF 7 IS PLAN FILE NO. 244-98
SHEET 3 OF 7 IS PLAN FILE NO. 245-86
SHEET 4 OF 7 IS PLAN FILE NO. 244-99
SHEET 5 OF 7 IS PLAN FILE NO. 244-95
SHEET 6 OF 7 IS PLAN FILE NO. 245-31
SHEET 7 OF 7 IS PLAN FILE NO. 244-100

WISCONSIN ZAFAR S. YOUSUF E-30840 MILWAUKEE, WI PROFESSIONAL ENGINEER

SURVEY:
BOOK NO. 811, PP. 178-181
BM: HYDRANT ON NE. CORNER OF W. GROELING AVE. N. 14TH ST. ELEV. 105.88
HYDRANT ON NE. CORNER OF W. GROELING AVE. AND N. TEUTONIA AVE. ELEV. 116.68

LINE CODE LEGEND

GAS	G	SANITARY SEWER	SAN	STREET LIGHTING	
ELECTRIC	E	STORM SEWER	STO	PAVING LIMITS	X X X X
TELEPHONE	T	COMBINED SEWER	CMB	STRUCTURE / BUILDING	
CABLE TELEVISION	TV	SEW. DISTRICT SEWER	MMSD	FENCE	x
FIBER OPTICS	FO	WATER MAIN	W	HYDRANT	
CITY UNDERGROUND CONDUIT	CUC	SEWER/WATER 24" & OVER		ALUMINUM POLE ○ CONCRETE POLE ○ WOOD POLE ○	

BE ADVISED THAT THIS INFORMATION HEREBY GIVEN TO YOU IS BASED UPON THE BEST AVAILABLE RECORDS. THE EXACT LOCATION IS UNKNOWN FOR ALL UTILITIES SHOWN WITHOUT DIMENSIONS. HOWEVER WE CANNOT GUARANTEE THE CORRECTNESS OR ACCURACY OF THE SAME.

CALL DIGGERS HOTLINE
1-800-242-8511
TOLL FREE TO OBTAIN LOCATION OF UNDERGROUND BEFORE YOU DIG. WISCONSIN STATUTE 182.0715 REQUIRES MIN. OF 3 WORK DAYS NOTICE BEFORE YOU EXCAVATE

NO	BY	REVISION	DATE

AS BUILT CONTRACT NO.
DATE ENT'D. ENT'D. BY

ESTIMATE OF QUANTITIES

ITEM NO.	QUANTITY	DESCRIPTION
30181	312 FT.	18" DIA. COMBINED CLASS "C" BEDDING
30241	57 FT.	24" DIA. COMBINED CLASS "C" BEDDING
43400	3	4'-0" DIA. COMBINED MANHOLES
50000	36 FT.	BUILDING SEWERS AND DRAINS
50001	LUMP SUM	BARRICADING
50015	LUMP SUM	EROSION CONTROL
50301	760 FT.	PAVEMENT SAWING
50308	255 SQ.YDS.	4" ASPHALTIC CONCRETE
60002	535 FT.	SEWER EXAMS BY CCTV-POST CONSTRUCTION
90000	100 FT.	COPPER WATER SERVICE TYPE "K"

ENVIRONMENTAL ENGINEERING SECTION
INFRASTRUCTURE SERVICES DIVISION
DEPARTMENT OF PUBLIC WORKS
MILWAUKEE, WISCONSIN

SEWER MAIN PLAN

IN **W. GROELING AVENUE**
FROM N. 14TH STREET
TO N. TEUTONIA AVENUE

		APPROVED	DATE
SCALE HORIZONTAL	1" = 30'	Zafar Yousuf	12/5/2016 DESIGN ENGINEER
SCALE VERTICAL	1" = 10'	Nader Jaber	12/7/2016 ENGINEER IN CHARGE
1/4 SEC. NO.	311		
PLAN DATE	10/5/2016		
DESIGNED BY	B.K.HEARD		
DRAWN BY	J. SEMONS		
CHECKED BY	F.LAWAL		12/7/2016
SYSTEM NO.	3023		CITY ENGINEER & SPECIAL DEPUTY COMMISSIONER OF PUBLIC WORKS
EASEMENT NO.			
CONTRACT NO.		PROJECT NO. 1	C.C. FILE NO. 1605897
PROJ. ID.	SM495160071	OFF. NOTICE NO. 4-2017	DATE ADOPTED 9/20/2016

SHEET NO. 7 OF 7 PLAN FILE NO. 244-100

MMSD _____ SCANNED _____ MICROFILMED _____