MILWAUKEE PUBLIC SCHOOLS
SOLAR PROJECTS
CITY OF MILWAUKEE, WISCONSIN
FEBRUARY 2012

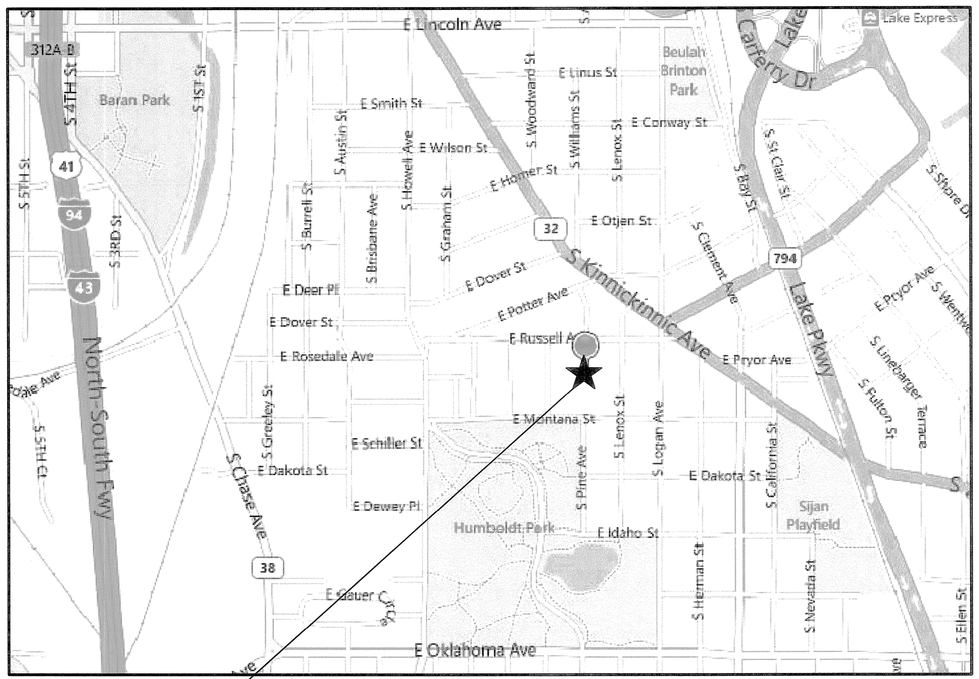

PROJECT LOCATION

BAY VIEW HIGH SCHOOL
SITE NO. 012
2751 S. LENOX STREET
MILWAUKEE, WI 53207

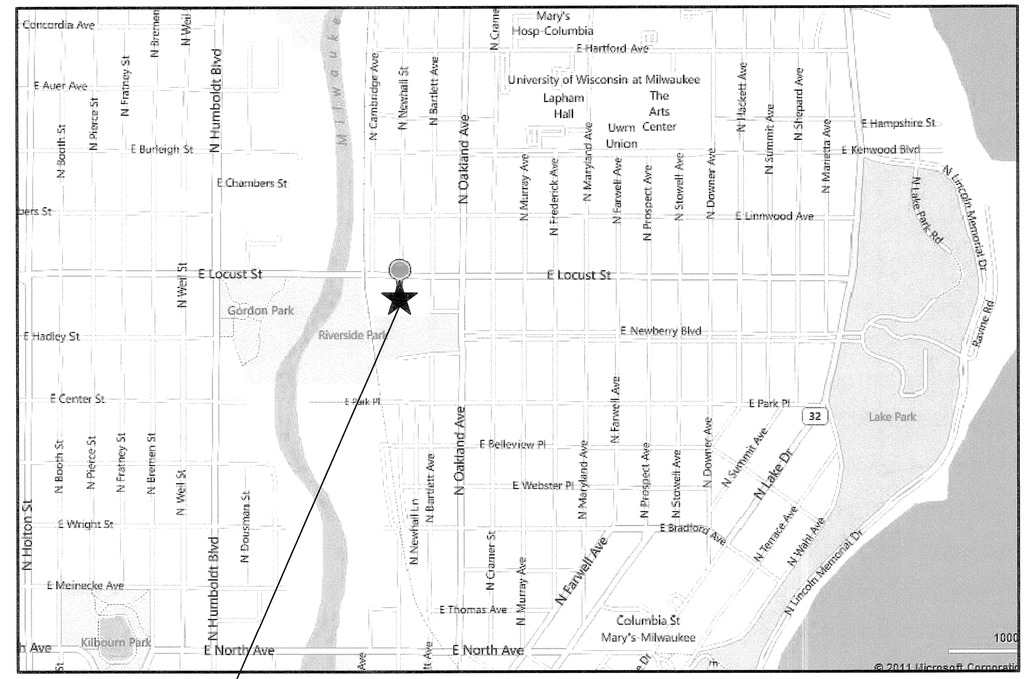

PROJECT LOCATION

RIVERSIDE UNIVERSITY HIGH SCHOOL
SITE NO. 029
1615 E. LOCUST STREET
MILWAUKEE, WI 53211

WISCONSIN MICHAEL BOHLMANN E-35281-006 MILWAUKEE WI PROFESSIONAL ENGINEER
FEB. 2012
PSJ

WISCONSIN KARL E. HOKANSON A-3360 Port Washington, WI ARCHITECT
FEB. 2012
AECOM

60239135

PREPARED FOR:

City of Milwaukee
Department of Public Works

APPROVED:	
SUPERVISOR IN CHARGE:	
SUPERINTENDENT:	
COMMISSIONER OF PUBLIC WORKS:	

PREPARED BY:

Milwaukee Public Schools
Division of Facilities and Maintenance Services
1124 North 11th Street
P.O. BOX 0259
Milwaukee, Wisconsin 53205-0259
Phone : 414 283-4600
Fax : 414 283-4682

AECOM
4135 TECHNOLOGY PARKWAY
SHEBOYGAN, WI 53083-1883
Phone: 920-458-8711
Fax: 920-458-0537
WWW.AECOM.COM

PSJ ENGINEERING, INC.
CONSULTING ENGINEERS
MILWAUKEE: (414)352-2211
MADISON: (608)251-5820
PLUMBING, HVAC, FIRE PROTECTION DOCUMENTS DESIGNED BY MXB

Xrefs:
Images: L:\work\60198094\000_CADD\00-General & 99-Standard Details\Lewis Seal.tif
L:\work\60223648\000_CADD\MPS BAYVIEW 1.jpg
L:\work\60223648\000_CADD\MPS BAYVIEW 2.jpg
L:\work\60223648\000_CADD\MPS BAYVIEW 3.jpg
L:\work\60223648\000_CADD\MPS BAYVIEW 4.jpg
L:\work\60223648\000_CADD\MPS FAIRVIEW 1.jpg
L:\work\60223648\000_CADD\MPS FAIRVIEW 2.jpg
L:\work\60223648\000_CADD\MPS FAIRVIEW 3.jpg
L:\work\60223648\000_CADD\MPS RIVERSIDE 1.jpg
PSLtscale: 0 Ltscale: 0.5
File: L:\work\60223648\000_CADD\Cover.dwg Time: Feb 22, 2012 - 2:47pm

INDEX TO DRAWINGS

GENERAL

SITES – 012 & 029

	COVER SHEET
G–01	INDEX TO DRAWING
G–02	ELECTRICAL ABBREVIATIONS AND PLAN SYMBOLS
G–03	ELECTRICAL ONE–LINE AND SCHEMATIC SYMBOLS

BAY VIEW HIGH SCHOOL

SITE NO: 012 – BAY VIEW HIGH SCHOOL
2751 S. LENOX STREET, MILW., WI 53207–2299

B–A–01	ROOF PLAN
B–P–01	SYMBOLS – PLUMBING
B–P–02	SCHEDULES – BASE – PLUMBING
B–P–03	SCHEDULES – ALTERNATE NO.1 – PLUMBING
B–P–04	BASEMENT FLOOR PLAN – BASE – PLUMBING
B–P–05	BASEMENT FLOOR PLAN – ALTERNATE NO.1 – PLUMBING
B–P–06	TYPICAL FOR 1ST–4TH FLOOR – BASE – PLUMBING
B–P–07	TYPICAL FOR 1ST–4TH FLOOR – ALTERNATE NO.1 – PLUMBING
B–P–08	ATTIC FLOOR PLAN – BASE – PLUMBING
B–P–09	ATTIC FLOOR PLAN – ALTERNATE NO.1 – PLUMBING
B–P–10	ROOF PLAN – BASE – PLUMBING
B–P–11	ROOF PLAN – ALTERNATE NO.1 – PLUMBING
B–P–12	DETAILS – PLUMBING
B–P–13	DETAILS – BASE – PLUMBING
B–P–14	DETAILS – ALTERNATE NO.1 – PLUMBING
B–E–01	BASEMENT PLAN
B–E–02	TYPICAL FIRST – FOURTH FLOOR PLAN
B–E–03	ATTIC PLAN
B–E–04	ATTIC PLAN ALTERNATE
B–E–05	ROOF PLAN ALTERNATE
B–E–06	ONE–LINE DIAGRAM

RIVERSIDE UNIVERSITY HIGH SCHOOL

SITE NO: 029 – RIVERSIDE UNIVERSITY HIGH SCHOOL
1615 E. LOCUST STREET, MILW., WI 53211–3298

R–A–01	ROOF PLAN
R–E–01	SECOND FLOOR PLAN
R–E–02	RISER DIAGRAM AND DETAILS
R–E–03	RISER DIAGRAM AND DETAILS ALTERNATE

WISCONSIN MICHAEL BOHLMANN E-35281-006 MILWAUKEE PROFESSIONAL ENGINEER
FEB. 2012
PSJ

WISCONSIN KARL E. HOKANSON A-3360 Fort Washington, WI ARCHITECT
FEB. 2012
AECOM

NO	REVISIONS	DRN	CHK	DATE

DRN KWB –
DES WRW –
CHK EDM –
APP KEH –

Milwaukee Public Schools
Division of Facilities and Maintenance Services
1124 North 11th Street
P.O. BOX 0259
Milwaukee, Wisconsin 53205–0259
Phone: 414 283–4600
Fax: 414 283–4682

PSJ ENGINEERING, INC.
CONSULTING ENGINEERS
MILWAUKEE: (414)352–2211
MADISON: (608)251–5820
PLUMBING, HVAC, FIRE PROTECTION DOCUMENTS DESIGNED BY MXB

City of Milwaukee Department of Public Works

AECOM
4135 TECHNOLOGY PARKWAY
SHEBOYGAN, WI 53083-1883
T 920.458.8711 F 920.458.0537
WWW.AECOM.COM

MILWAUKEE PUBLIC SCHOOLS
SOLAR PROJECTS
CITY OF MILWAUKEE, WISCONSIN

INDEX TO DRAWINGS
SITES - 012 & 029

DATE	FEBRUARY 2012
PROJECT NO	60239135
FILENAME	G–01.DWG
FILE NO	
SHEET NO	
DRAWING NO	G-01

Xrefs: AE2234bd.dwg
Images:
Plotted By: brendelk
Plot File Date Created: Feb/24/2012 2:00 PM
Layout–Sheet Name: WORK
Filename: L:\WORK\60223648\000_CADD\G–01.DWG

ABBREVIATIONS

1P – ONE POLE
2P – TWO POLE
3P – THREE POLE
4P – FOUR POLE
1P1W – ONE POLE, ONE WIRE
1P2W – ONE POLE, TWO WIRE
2P2W – TWO POLE, TWO WIRE
2P3W – TWO POLE, THREE WIRE
3P2W – THREE POLE, TWO WIRE
3P3W – THREE POLE, THREE WIRE
3P4W – THREE POLE, FOUR WIRE
4P4W – FOUR POLE, FOUR WIRE
A – AMPERE
AC – ALTERNATING CURRENT
AF – AMP FRAME
AFF – ABOVE FINISHED FLOOR
AFG – ABOVE FINISHED GRADE
AIC – AMPERE INTERRUPTING CAPACITY
AL – ALUMINUM
AS – AMP SWITCH
AT – AMP TRIP
ARCH – ARCHITECT
ATS – AUTOMATIC TRANSFER SWITCH
AUD – AUDIOMETER BOX CONNECTION
A/V – AUDIO VISUAL
BFG – BELOW FINISHED GRADE
BLDG – BUILDING
BP – BRANCH PANEL
C – CONDUIT (GENERIC TERM FOR RACEWAY. PROVIDE AS SPECIFIED.)
CAM – CAMERA
CAT – CATALOG
CATV – CABLE TELEVISION
CB – CIRCUIT BREAKER
CKT – CIRCUIT
COL – COLUMN
CP – CONTROL PANEL
CPT – CONTROL POWER TRANSFORMER
CT – CURRENT TRANSFORMER
CU – COPPER
℄ – CENTERLINE
Δ – DELTA
DC – DIRECT CURRENT
DISC – DISCONNECT
DP – DISTRIBUTION PANELBOARD
DT – DUSTTIGHT
DWG – DRAWING

E – WIRED ON EMERGENCY CIRCUIT
EC – ELECTRICAL CONTRACTOR
EMT – ELECTRIC METALLIC TUBING
EOL – END OF LINE
EP – EXPLOSION PROOF
ETM – ELAPSED TIME METER
EWC – ELECTRIC WATER COOLER
EXIST. – EXISTING
F – FLUSH
FA – FIRE ALARM
FBO – FURNISHED BY OTHERS
FC – FIRE PROTECTION CONTRACTOR
FDN – FOUNDATION
FLA – FULL LOAD AMPS
FMC – FLEXIBLE METALLIC CONDUIT
FRE – FIBERGLASS REINFORCED EPOXY CONDUIT
GC – GENERAL CONTRACTOR
GFCI – GROUND FAULT CIRCUIT INTERRUPTER
GFPE – GROUND FAULT PROTECTION EQUIPMENT
GND – GROUNDED
GRC – GALVANIZED RIGID CONDUIT
GRD – GROUND
GRS – GALVANIZED RIGID STEEL
HH – HANDHOLE
HID – HIGH INTENSITY DISCHARGE
HP – HORSEPOWER
HV – HIGH VOLTAGE
HVAC – HEATING, VENTILATING AND AIR CONDITIONING
HZ – HERTZ (CYCLE) PER SECOND
I&C – INSTRUMENTATION & CONTROL
IAM – INDIVIDUAL ADDRESSABLE MODULE
IG – ISOLATED GROUND
IMC – INTERMEDIATE METAL CONDUIT
JB – JUNCTION BOX
KCMIL – THOUSAND CIRCULAR MILS
K/O – KNOCK–OUT
KVA – KILOVOLT AMPERE
KVAR – KILOVOLT AMPERE REACTIVE
KW – KILOWATT
LCP – LOCAL CONTROL PANEL
LFMC – LIQUIDTIGHT FLEXIBLE METALLIC CONDUIT
LFNC – LIQUIDTIGHT FLEXIBLE NONMETALLIC CONDUIT
LP – LIGHTING PANELBOARD
LS – LIMIT SWITCH
LTG – LIGHTING
LV – LOW VOLTAGE

M – METER
MC – METAL CLAD CABLE
MCB – MAIN CIRCUIT BREAKER
MCC – MOTOR CONTROL CENTER
MDP – MAIN DISTRIBUTION PANEL
MH – MANHOLE
MISC – MISCELLANEOUS
MLO – MAIN LUGS ONLY
MOD – MOTOR OPERATED DISCONNECT SWITCH
MTD – MOUNTED
MTG – MOUNTING
MTR, M – MOTOR
MTS – MANUAL TRANSFER SWITCH
N/A – NOT APPLICABLE
NA – NON–AUTOMATIC
NC – NORMALLY CLOSED
NEC – NATIONAL ELECTRICAL CODE
NEUT, N – NEUTRAL
NF – NON FUSED
NIC – NOT IN CONTRACT
NL – NIGHT LIGHT
NM – NONMETALLIC SHEATHED CABLE
NO – NORMALLY OPEN
NRTL – NATIONALLY RECOGNIZED TESTING LAB
– NUMBER
NTS – NOT TO SCALE
OL – OVERLOAD RELAY
P – POLE
PB – PUSHBUTTON / PULL BOX
PC – PHOTOCELL
PSC – PLUMBING SYSTEM CONTRACTOR
PH ϕ – PHASE
PNL – PANEL(BOARD)
PIV – POST INDICATING VALVE
PP – POWER PANEL
PR – PAIR
PRI – PRIMARY
PT – POTENTIAL TRANSFORMER
PVC – POLYVINYL CHLORIDE CONDUIT
PWR – POWER
REC – RECESSED
RMC – RIGID METAL CONDUIT
RT – RAINTIGHT
RTD – RESISTANCE TEMPERATURE DETECTOR
RSC – RIGID STEEL CONDUIT

S – SURFACE MOUNTED
SB – SPLICEBOX
SEC – SECONDARY
SEL – SELECTOR SWITCH
SIG – SIGNAL
SN – SOLID NEUTRAL
SOL – SOLENOID VALVE
SP – SPARE
SPL – SPLICE
SS – STAINLESS STEEL
STP – SHIELDED TWISTED PAIR
STL – CARBON STEEL
SUSP – SUSPENDED
SW – SWITCH
SWBD – SWITCHBOARD
TC – TELEPHONE CABINET
TCI – TELECOMMUNICATIONS CABLING INSTALLER
TEL/DATA – TELEPHONE / DATA
TEL – TELEPHONE
TERM – TERMINAL(S)
TYP – TYPICAL
UG – UNDERGROUND
U.O.I. – UNLESS OTHERWISE INDICATED
UTP – UNSHIELDED TWISTED PAIR
V – VOLT
VFD – VARIABLE FREQUENCY DRIVE
VT – VAPORTIGHT
Y – WYE
W – WATT
WH – WATTHOUR
WP – WEATHERPROOF
WT – WATERTIGHT
XFMR – TRANSFORMER
XP – EXPLOSION PROOF
ZAM – ZONE ADAPTER MODULE
+72 – MOUNTING UNITS TO CENTERLINE ABOVE FINISHED FLOOR OR GRADE

RECEPTACLES AND OUTLETS NOTATIONS

a – SWITCHED OUTLET, a INDICATES SWITCH CONTROL
B – PEDESTAL MOUNTED ON BENCH TOP
BF – BELOW FLOOR
C – MOUNTED 6" ABOVE COUNTER OR 42" AFF COORDINATE EXACT MOUNTING HEIGHT WITH ARCHITECTURAL DRAWINGS.
CLG – CEILING MOUNTED
D – DEDICATED DEVICE ON INDIVIDUAL BRANCH CIRCUIT
E – EMERGENCY
EXIST. – EXISTING DEVICE / EQUIPMENT
F – FLUSH FLOOR BOX WITH FIRE / SMOKE RATED PENETRATION
GFCI – GROUND FAULT CIRCUIT INTERUPTER, PERSONAL PROTECTION
GFPE – GROUND FAULT PROTECTION OF EQUIPMENT
H – HORIZONTALLY MOUNTED
IG – ISOLATED GROUND RECEPTACLE WITH SEPARATE GREEN GROUND CONDUCTOR TO ISOLATED GROUND BUS IN PANEL
M – MODULAR FURNITURE SERVICE – PROVIDE FLEXIBLE CONNECTION, COORDINATE EXACT LOCATION WITH FURNITURE PLANS
PED – PEDESTAL MOUNTED WITH TWO HOUR FIRE / SMOKE RATED PENETRATION
PT – POKE THRU WITH TWO HOUR FIRE / SMOKE RATED PENETRATION
S – SURFACE MOUNTED FLOOR BOX
SP – SURGE PROTECTION RECEPTACLE
T – TAMPER RESISTANT SAFETY RECEPTACLE
TL – TWIST–LOCK
W – WALL MOUNTED DEVICE AT 48" AFF UNLESS OTHERWISE INDICATED
WP – WEATHERPROOF RECEPTACLE WITH "NRTL" LISTED COVERPLATE FOR WET LOCATION WITH PLUG INSTALLED. MTD. 48" AFF UNLESS OTHERWISE INDICATED
+XX – DIMENSIONED HEIGHT

LIGHTING SYMBOLS

OR – SURFACE MOUNTED FIXTURE (LETTER DENOTES TYPE)
OR – WALL MOUNTED FIXTURE (LETTER DENOTES TYPE)
OR – EMERGENCY BACKUP FIXTURE (LETTER DENOTES TYPE)
OR – RECESSED FIXTURE (LETTER DENOTES TYPE)
EXIT LIGHT WITH INDICATING DIRECTIONAL ARROW
SUSPENDED FIXTURE (LETTER DENOTES TYPE)
OR – POLE MOUNTED FIXTURE (LETTER DENOTES TYPE)
DUAL HEAD EMERGENCY BATTERY LIGHT
OR – EMERGENCY BATTERY REMOTE LIGHTING HEADS

DEVICE SYMBOLS

M – OCCUPANCY SENSOR, WALL MOUNTED WITH OFF–AUTO OVERRIDE SWITCH
SINGLE GROUNDED RECEPTACLE – 120V
DUPLEX GROUNDED RECEPTACLE – 120V
C – DUPLEX GROUNDED RECEPTACLE – 120V MOUNTED 6" ABOVE COUNTER
SINGLE GROUNDED RECEPTACLE – 208V NEMA 6–20R OR NEMA 6–30R
SPECIAL PURPOSE RECEPTACLE, NEMA TYPE AND AMPERE RATING AS INDICATED
J OR J – JUNCTION BOX
\$ – SINGLE POLE SWITCH
\$2 – TWO POLE SWITCH
\$3 – 3–WAY SWITCH
\$4 – 4–WAY SWITCH

MOTOR SYMBOLS

MANUAL STARTER WITH PILOT LIGHT
SINGLE PHASE MAGNETIC STARTER
COMBINATION MAGNETIC STARTER AND DISCONNECT SWITCH
30 – NON–FUSED DISCONNECT SWITCH (NUMERAL INDICATES SWITCH RATING)
M – MOTOR
D – DAMPER MOTOR
CONNECTION TO EQUIPMENT
\$M – MOTOR STARTER SWITCH
TOGGLE DISCONNECT SWITCH
R – RELAY
C – MAGNETIC CONTACTOR (SIZE AS INDICATED ON DRAWINGS)
THREE PHASE MAGNETIC STARTER
THREE PHASE COMBINATION MAGNETIC STARTER AND DISCONNECT SWITCH
F 60/40 – FUSED DISCONNECT SWITCH – 3 POLE UNLESS OTHERWISE INDICATED (UPPER NUMERAL INDICATES SWITCH RATING) (LOWER NUMERAL INDICATES FUSE RATING)
PC – PHOTO CELL
PUSH BUTTON
TS – TIME SWITCH
\$P – THERMAL MOTOR SWITCH WITH HANDLE GUARD AND PADLOCK CAPABILITY ("P" INDICATES PILOT LIGHT)

SYSTEM SYMBOLS

SECURITY

C WP – CCTV CAMERA (WP – WEATHERPROOF EXTERIOR CAMERA)
ES – ELECTRIC DOOR STRIKE (DR – ELECTRIC DOOR OPENER) (DS – DOOR SWITCH) (DC – SECURITY DOOR CONTACTS)
K – SECURITY KEYPAD (ML – SECURITY DOOR ALARM MAGNETIC LOCK)
B – LOUD RINGER
CCTV – CCTV COAXIAL CABLE OUTLET AND POWER OUTLET (MTV – CCTV MONITOR OULET) (SCP – SECURITY CONTROL PANEL)
MD – MOTION DETECTOR
MI – MASTER INTERCOM AND DIRECTORY UNIT (IC – INTERCOM UNIT)
CR WP – SECURITY CARD READER (WP – WEATHERPROOF)

FIRE

FACP – FIRE ALARM CONTROL PANEL (FAA INDICATES ANNUNCIATOR PANEL) (EVAC INDICATES VOICE EVACUATION PANEL)
F – HORN AND STROBE (INDOOR)
R – HORN AND STROBE (OUTDOOR)
F – BELL AND STROBE
S – SMOKE DETECTOR
S D – SMOKE DETECTOR (D – DUCT) (A – AREA TYPE USED AT DUCT WORK OPENING) (E – ELEVATOR RECALL) (SC – SELF CONTAINED–SINGLE STATION TYPE) (V – VISUAL AND AUDIBLE SIGNAL)
B R – BEAM SMOKE DETECTOR (R – RECEIVER) (S – SENDING UNIT)
RTS – REMOTE STATION FOR DUCT MOUNTED SMOKE DETECTORS
H – HORN UNIT ONLY (S – STROBE UNIT ONLY)
C – CARBON MONOXIDE DETECTOR
F – FLAME DETECTOR
H F – AUTOMATIC HEAT DETECTOR (RATE OF RISE) (F – FIXED TEMPERATURE)
F – MANUAL PULL STATION
TS – TAMPER SWITCH (FS – WATER FLOW SWITCH) (PS – LOW PRESSURE SWITCH)
T – METHANE GAS TRANSMITTER @ 54"
G – METHANE GAS DETECTOR
I – IONIZATION DETECTOR

COMMUNICATIONS

DATA OUTLET
TELEPHONE/DATA OUTLET
VC – VOLUME CONTROL
IC – MASTER INTERCOM AND DIRECTORY UNIT (IC – INTERCOM UNIT)
TELEPHONE OUTLET (W – WALL MOUNTED)
S – SPEAKER HORN
S – SPEAKER
TERMINAL CABINET

SITE SYMBOLS

HH – HANDHOLE
E – DIRECT BURIAL CABLE
MH – MANHOLE
UNDERGROUND ELECTRICAL DUCT

POWER SYMBOLS

POWER PANEL
MCC SECTION
G – GENERATOR
M – METER
M P – METER AND SOCKET (P – PEDESTAL MOUNT) (S – SURFACE MOUNT)
LIGHTING PANEL
T (W) – TRANSFORMER ("W" – WALL MOUNT)
MTS – TRANSFER SWITCH ("MTS" – MANUAL TRANSFER SWITCH) ("ATS" – AUTOMATIC TRANSFER SWITCH)

RACEWAY SYMBOLS

CONDUIT TURNING DOWN OR AWAY FROM OBSERVER
CONDUIT STUB
HOMERUN CIRCUIT OR CONDUCTORS
CONDUIT TURNING UP OR TO OBSERVER
FLEXIBLE CONDUIT CONNECTION

GROUNDING SYMBOLS

MAIN GROUND LOOP (SIZE PER DRAWING)
GROUND TAP (SIZE PER DRAWING)
CADWELD GROUND CONNECTION
GROUND ROD
GROUND TEST STATION
EQUIPMENT GROUND CABLE STUB–UP

MOTOR CONTROL CENTER

10MCC–1
BUILDING NO.
MCC NO.

PANEL BOARDS

10LP1–4
BUILDING NO.
LIGHTING OR POWER PANEL AS INDICATED
PANEL NO.
CIRCUIT NO.

NOTE:

1. THIS LIST OF ABBREVIATIONS AND SYMBOLS SHOWN IS A STANDARD LIST. NOT ALL ABBREVIATIONS AND SYMBOLS ARE USED IN THESE CONTRACT DRAWINGS.

NO	REVISIONS	DRN	CHK	DATE

DRN KWB
DES WRW
CHK EDM
APP KEH

Milwaukee Public Schools
Division of Facilities and Maintenance Services
1124 North 11th Street
P.O. BOX 0259
Milwaukee, Wisconsin 53205–0259
Phone : 414 283–4600
Fax : 414 283–4682

PSJ ENGINEERING, INC.
CONSULTING ENGINEERS
MILWAUKEE: (414)352–2211
MADISON: (608)251–5820
PLUMBING, HVAC, FIRE PROTECTION DOCUMENTS DESIGNED BY MXB

City of Milwaukee
Department of Public Works

AECOM
4135 TECHNOLOGY PARKWAY
SHEBOYGAN, WI 53083-1883
T 920.458.8711 F 920.458.0537
WWW.AECOM.COM

MILWAUKEE PUBLIC SCHOOLS
SOLAR PROJECTS
CITY OF MILWAUKEE, WISCONSIN

ELECTRICAL ABBREVIATIONS AND PLAN SYMBOLS SITES - 012 & 029

DATE FEBRUARY 2012
PROJECT NO 60239135
FILENAME G–02.DWG
FILE NO
SHEET NO
DRAWING NO **G-02**

Xrefs: AE2234bd.dwg
Images:
Plotted By: brendelk
Plot File Date Created: Feb/14/2012 12:03 PM
Layout–Sheet Name: WORK
Filename: L:\WORK\60223648\000_CADD\G–02.DWG

ONE-LINE SYMBOLS

XXAF / YYAT — MOLDED CASE CIRCUIT BREAKER (OPEN)
(XXAF – FRAME SIZE)
(YYAT – TRIP SIZE)

XXAF / YYAT — MOLDED CASE CIRCUIT BREAKER (ENCLOSED)
WITH THERMAL/MAGNETIC PROTECTION
(XXAF – FRAME SIZE)
(YYAT – TRIP SIZE)

XXAF / YY — MOLDED CASE CIRCUIT BREAKER (OPEN)
WITH THERMAL/MAGNETIC PROTECTION
(XXAF – FRAME SIZE)
(YYAT – TRIP SIZE)

A / M — MOLDED CASE CIRCUIT BREAKER (OPEN)
WITH MAGNETIC PROTECTION ONLY

XXAF / YYAT — LOW VOLTAGE DRAWOUT CIRCUIT BREAKER
WITH THERMAL/MAGNETIC PROTECTION
(XXAF – FRAME SIZE)
(YYAT – TRIP SIZE)

FOR 2a ② 1b REV — 2 (2a,1b)
MAGNETIC STARTER AND MOLDED CASE CIRCUIT
BREAKER IN MOTOR CONTROL CENTER STRUCTURE
(AFD – ADJUSTABLE FREQUENCY DRIVE)
(FVNR – FULL VOLTAGE NON–REVERSING)
(RVNR – REDUCED VOLTAGE NON–REVERSING)
(RVSS – REDUCED VOLTAGE SOLID STATE)
(VSD – VARIABLE SPEED DRIVE)
(2SPD – TWO SPEED)
(AUXILIARY CONTACTS – (2a TWO N.O.)(1b ONE N.C.)
(NUMERAL – NEMA SIZE)
(FOR/REV – FULL VOLTAGE REVERSING)

2 (2a,1b)
COMBINATION MAGNETIC STARTER
WITH MOLDED CASE CIRCUIT BREAKER
IN NEMA RATED ENCLOSURE

52 — XXAF / YYAT
PRIMARY DRAWOUT TYPE CIRCUIT BREAKER
(XXAF – FRAME SIZE)
(YYAT – TRIP SIZE)
(52 – ANSI DEVICE NUMBER)

XXA / YYA
DISCONNECT SWITCH AIR BREAK WITH FUSE
(ENCLOSED)
(XXA – FRAME SIZE)
(YYA – TRIP SIZE)

① (2a,1b)
MAGNETIC STARTER WITH NEMA SIZE INDICATED
(AUXILLIARY CONTACTS–(2a TWO N.O.)(1b ONE N.C.)

A
DISCONNECT SWITCH (ENCLOSED) UNFUSED
(A – AMP SIZE)

A
FUSED CUTOUTS
(A – FUSE RATING)

KVAR
POWER FACTOR CORRECTION
CAPACITOR SIZE AS INDICATED

N E L
AUTO/MANUAL
TRANSFER SWITCH

T1 30 kVA 480–120/208V 3PH, 4W
TRANSFORMER

VFD (2a,1b)
VARIABLE FREQUENCY DRIVE
WITH AUXILARY CONTACTS

RVSS (2a,1b)
REDUCED VOLTAGE SOLID
STATE STARTER WITH
AUXILARY CONTACTS

2S CS L H ① L (2a,1b)
2 SPEED CONSEQUENT
POLE STARTER WITH
AUXILARY CONTACTS

2S 2W L H ① (2a,1b)
2 SPEED 2 WINDING
STARTER WITH AUXILARY
CONTACTS

F ① R (2a,1b)
REVERSING STARTER WITH
AUXILARY CONTACTS

A
FUSE
(A – FUSE RATING)

(3)
POTENTIAL TRANSFORMER
(3 – QUANTITY)

(3)
CURRENT TRANSFORMER
(3 – QUANTITY)

STRESS CONE

GROUND ROD

GROUND

LIGHTNING ARRESTER AND
GROUNDING TO PROTECT ALL
PHASES

RESISTOR OR MOTOR WINDING
ANTI–CONDENSATION HEATER

GENERATOR

THREE PHASE
WYE CONNECTION

THREE PHASE
DELTA CONNECTION

G
PILOT LIGHT
(G – GREEN)
(R – RED)

MPM
MONITORING PROTECTION
METERING RELAY

MP
MOTOR PROTECTION RELAY

TVSS
TRANSIENT VOLTAGE SURGE
SUPPRESSOR

CT
CURRENT
TRANSFORMER CABINET

N E L
AUTO/MANUAL
TRANSFER SWITCH

G — KW STANDBY GEN–SET
GENERATOR AND LABEL
(ENCLOSED)

3 — MOTOR NAME EQUIP. TAG CIRCUIT
MOTOR AND LABEL
(3 INDICATES HORSEPOWER)

20 HP — EQUIP. NAME EQUIP. TAG CIRCUIT
CONNECTION AND LABEL

LP1 — LIGHTING PANEL BOARD LP1
LIGHTING PANEL AND LABEL

A
AMMETER
(AS – AMMETER PHASE SWITCH)
(CM – CUSTOMER METER)
(D – DEMAND METER)
(GD – GROUND DETECTOR)
(HZ – FREQUENCY METER)
(K – KEY INTERLOCK)
(MO – MOTOR OPERATOR)
(P – SYNCHROSCOPE)
(PF – POWER FACTOR METER)
(ST – SHUNT TRIP)
(TWM – TOTALIZING WATT HOUR METER)
(V – VOLTMETER)
(VA – VOLT–AMMETER)
(VAR – VARMETER)
(VS – VOLTMETER PHASE SWITCH)
(W – WATTMETER)
(WM – WATTHOUR METER)

HOA
CONTROL STATION
(AM – AUTO–MANUAL)
(CAM – COMPUTER–AUTO–MANUAL)
(CM – COMPUTER–MANUAL)
(DCS – DISTRIBUTED CONTROL SYSTEM)
(DS – DOOR SWITCH)
(ETM – ELAPSED TIME METER)
(FR – FORWARD–REVERSE)
(HLO – HIGH–LOW–OFF SWITCH)
(HOA – HAND–OFF–AUTO)
(HOR – HAND–OFF–REMOTE)
(LOS – LOCK–OUT–STOP)
(LR – LOCAL–REMOTE)
(MA – MANUAL–REMOTE)
(OC – OPEN–CLOSED)
(OCA – OPEN–CLOSED–AUTO)
(OCS – OPEN–CLOSED–STOP)
(OO – ON–OFF MAINTAINED CONTACT)
(OOA – ON–OFF–AUTO)
(PB – PUSHBUTTON)
(SF – SLOWER–FASTER)
(SS – START–STOP MOMENTARY CONTACT)
(USG – ULTRA SONIC GENERATOR)
(ZS – LIMIT SWITCH)

SCHEMATIC SYMBOLS

A
METER
(A – AMMETER)
(ETM – ELAPSED TIME METER)
(V – VOLTMETER)

CIRCUIT BREAKER

TO BUS L1 L2 L3
3 POLE NON FUSED
DISCONNECT SWITCH

TO BUS L1 L2 L3
3 POLE CIRCUIT BREAKER

TO BUS L1 L2 L3 A
3 POLE FUSED
DISCONNECT SWITCH

T1 T2 T3 3
3 PHASE MOTOR
SINGLE SPEED

T1 T2 T3 T11 T12 T13 3
3 PHASE MOTOR
2 SPEED 2 WINDING

L H H H
2 SPEED CONSEQUENT
POLE STARTER

L H
2 SPEED 2 WINDING
STARTER

F R
FVR STARTER

M
FVNR STARTER

C
COIL

CONTACT
(N.C. – NORMALLY CLOSED)

CONTACT
(N.O. – NORMALLY OPEN)

A
FUSE
(A – FUSE RATING)

OHMS
WATTS
RESISTOR

SOLENOID

GROUND

CURRENT TRANSFORMER

PC
PHOTOCELL

R
PUSH–TO–TEST
PILOT LIGHT

G
PILOT LIGHT
(G – GREEN)
(R – RED)

PUSH BUTTON (START)

PUSH BUTTON (STOP)

T.C.
TIMED DELAY
TIMED CLOSED

T.O.
TIMED DELAY
TIMED OPEN

FLOAT SWITCH

PRESSURE SWITCH

FLOW SWITCH

LIMIT SWITCH

OFF ON
ON–OFF SELECTOR SWITCH

OFF AUTO HAND
HOA SELECTOR SWITCH

H1 H2 H3 H4 TRANSFORMER X1 X2 GND
CONTROL POWER
TRANSFORMER

NOTE:

1. THIS LIST OF ABBREVIATIONS AND SYMBOLS SHOWN IS A STANDARD LIST. NOT ALL ABBREVIATIONS AND SYMBOLS ARE USED IN THESE CONTRACT DRAWINGS.

NO	REVISIONS	DRN	CHK	DATE

DRN KWB
DES WRW
CHK EDM
APP KEH

Milwaukee Public Schools
Division of Facilities and Maintenance Services
1124 North 11th Street
P.O. Box 2032
Milwaukee, Wisconsin 53205–0259
Phone: 414 262–8000
Fax: 414 383–4682

PSJ ENGINEERING, INC.
CONSULTING ENGINEERS
MILWAUKEE: (414)352–2211
MADISON: (608)251–3820
PLUMBING, HVAC, FIRE PROTECTION
DOCUMENTS DESIGNED BY MJB

City of Milwaukee
Department of Public Works

AECOM
4135 TECHNOLOGY PARKWAY
SHEBOYGAN, WI 53083-1883
T 920.458.8711 F 920.458.0537
WWW.AECOM.COM

MILWAUKEE PUBLIC SCHOOLS
SOLAR PROJECTS
CITY OF MILWAUKEE, WISCONSIN

ELECTRICAL ONE-LINE AND SCHEMATIC SYMBOLS
SITES - 012 & 029

DATE	FEBRUARY 2012
PROJECT NO	60239135
FILENAME FILE NO	G–03.DWG
SHEET NO	
DRAWING NO	G-03

Xrefs: AE22345d.dwg
Images:
Plotted By: brendelk
Plot File Date Created: Feb/14/2012 11:30 AM
Layout–Sheet Name: WORK
Filename: L:\WORK\60223648\000_CADD\G–03.DWG

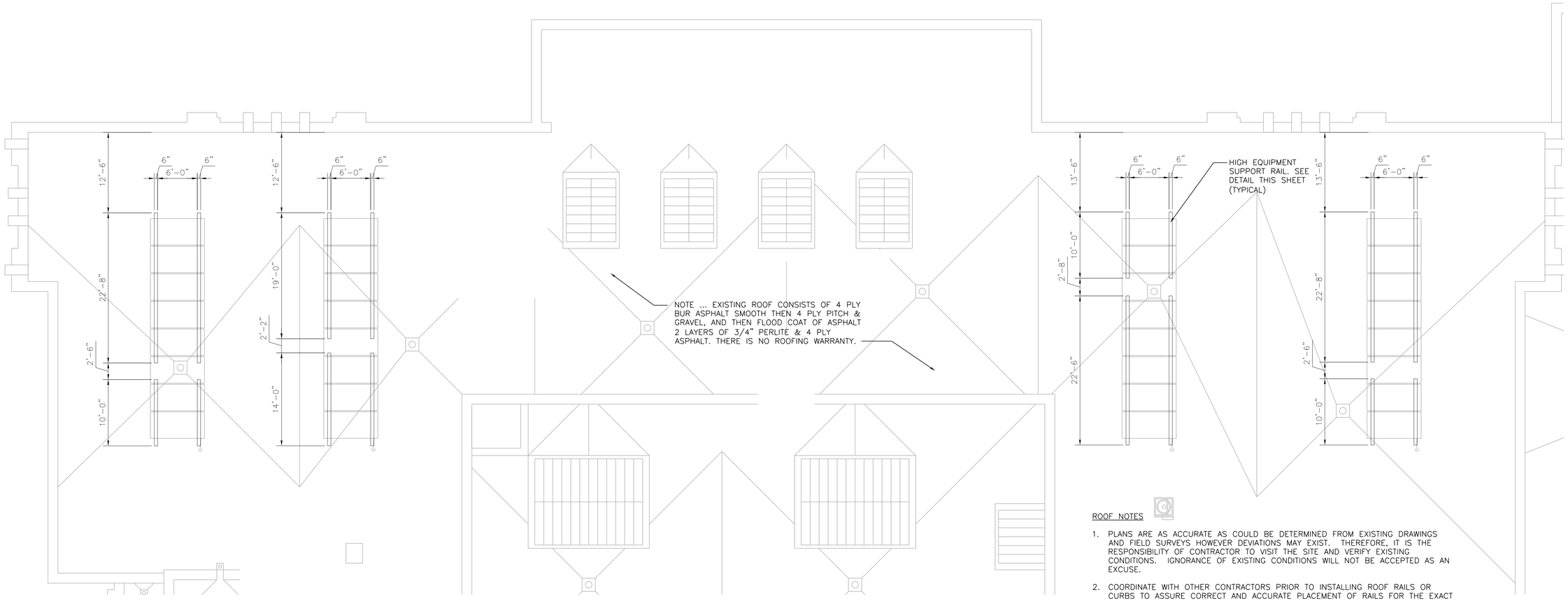

PARTIAL ROOF PLAN - SOUTHWEST BUILDING CORNER

0' 4' 8' 16'
SCALE

ROOF NOTES

1. PLANS ARE AS ACCURATE AS COULD BE DETERMINED FROM EXISTING DRAWINGS AND FIELD SURVEYS HOWEVER DEVIATIONS MAY EXIST. THEREFORE, IT IS THE RESPONSIBILITY OF CONTRACTOR TO VISIT THE SITE AND VERIFY EXISTING CONDITIONS. IGNORANCE OF EXISTING CONDITIONS WILL NOT BE ACCEPTED AS AN EXCUSE.
2. COORDINATE WITH OTHER CONTRACTORS PRIOR TO INSTALLING ROOF RAILS OR CURBS TO ASSURE CORRECT AND ACCURATE PLACEMENT OF RAILS FOR THE EXACT SOLAR PANEL SUPPORT SYSTEM PROVIDED.
3. ROOFING CONTRACTOR DOES NOT NECESSARILY HAVE THE RIGHT-OF-WAY AND MUST COORDINATE WITH OTHER CONTRACTORS AND PRESENT CONDITIONS TO AVOID INTERFERENCE.
4. THERE MAY BE OTHER PROJECT(S) BEING COMPLETED IN THE BUILDING IN CONJUNCTION WITH THIS PROJECT. THEREFORE, CONTRACTOR MAY EXPERIENCE TEMPORARY OUTAGES OF BUILDING SERVICES SUCH AS POWER, WATER, VENTILATION, ETC..
5. INSTALL ROOFING SADDLES AS REQUIRED TO MAINTAIN ROOF DRAINAGE AT EQUIPMENT SUPPORT RAILS AND ROOF PENETRATION CURBS.
6. THERE MAY BE CONDUITS ON THE CONCRETE DECK BELOW THE INSULATION. TAKE CARE WHEN CUTTING ROOF INSULATION SO CONDUITS ARE NOT SEVERED. SEE ROOF RAIL INSTALLATION DETAIL AND INSTALL AND NOTCH PLYWOOD PLATE ON RAIL BOTTOM TO ALLOW CONDUITS TO PASS THRU.
7. FASTEN CURBS AND SUPPORT RAILS WITH ADHESIVE ANCHORS. PROVIDE ANCHORS DESIGNED BY WISCONSIN PROFESSIONAL ENGINEER FOR CURBS, SUPPORT RAILS AND EQUIPMENT CONNECTIONS TO RESIST UPLIFT, SLIDING AND OVERTURNING.

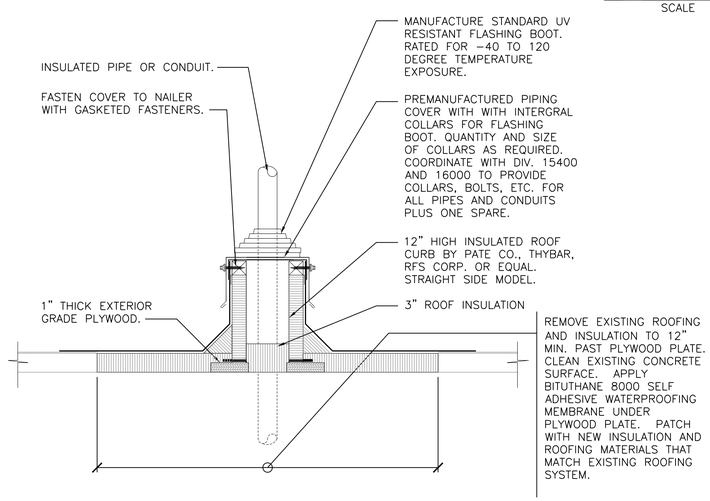

PIPE OR CONDUIT ROOF PENETRATION DETAIL

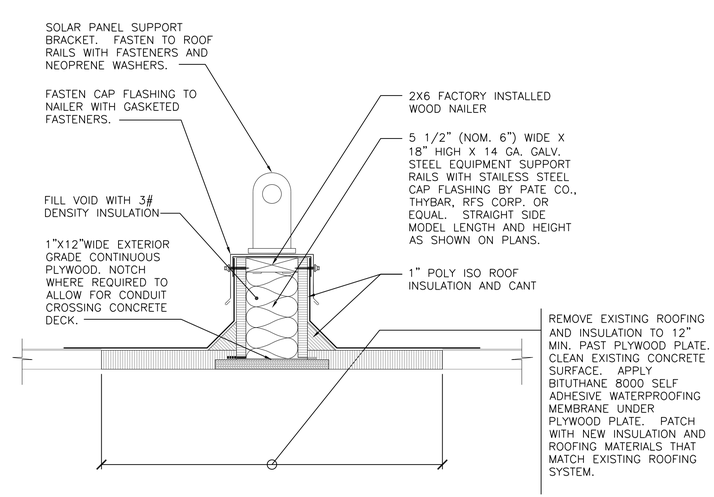

EQUIPMENT SUPPORT RAIL

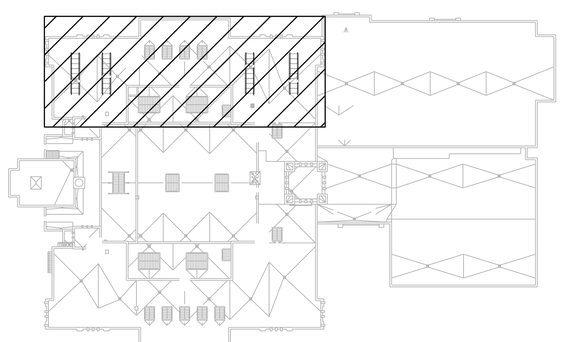

KEY PLAN

NO	REVISIONS	DRN	CHK	DATE

DRN JMK
DES KEH
CHK EDM
APP KEH

Milwaukee Public Schools
Division of Facilities and Maintenance Services
1124 North 11th Street
P.O. Box 2032
Milwaukee, Wisconsin 53205-0259
Phone: 414 383-4682
Fax: 414 383-4682

PSJ ENGINEERING, INC.
CONSULTING ENGINEERS
MILWAUKEE: (414)352-2211
MADISON: (608)251-3820
BUILDING SYSTEMS - FIRE PROTECTION
DOCUMENTS DESIGNED BY MJB

City of Milwaukee
Department of Public Works

AECOM
4135 TECHNOLOGY PARKWAY
SHEBOYGAN, WI 53083-1883
T 920.458.8711 F 920.458.0537
WWW.AECOM.COM

MILWAUKEE PUBLIC SCHOOLS
SOLAR PROJECTS
CITY OF MILWAUKEE, WISCONSIN

BAY VIEW HIGH SCHOOL
ROOF PLAN
SITE 012

DATE FEBRUARY 2012
PROJECT NO 60239135
FILENAME B-A-01.DWG
FILE NO
SHEET NO
DRAWING NO
B-A-01

Xrefs: AE22346d.dwg
bayview-roof-01-x.dwg
L:\work\60223648\000_CADD\sp-07-roof.dwg
Images:
Plotted By: brendelk
Plot File Date Created: Feb/24/2012 4:15 PM
Layout-Sheet Name: WORK
Filename: L:\WORK\60223648\000_CADD\B-A-01.DWG

GENERAL NOTES - PLUMBING

1. COORDINATE ALL WORK WITH OTHER CONTRACTORS PRIOR TO INSTALLATION. ANY WORK THAT IS NOT COORDINATED AND THAT INTERFERES WITH OTHER CONTRACTOR'S WORK SHALL BE REMOVED OR RELOCATED AT THE INSTALLING CONTRACTOR'S EXPENSE. VERIFY THAT ALL DEVICES ARE COMPATIBLE FOR THE TYPE OF CONSTRUCTION AND SURFACES ON WHICH THEY WILL BE USED.

2. INSTALL ALL WORK SUBSTANTIALLY AS SHOWN ON THE DRAWINGS. DEVIATIONS FROM LOCATIONS OF PIPING INDICATED ON THE DRAWINGS MAY HAVE TO BE MADE AT NO ADDITIONAL COST TO THE OWNER IN ORDER TO CLEAR THE WORK OF THE OTHER TRADES. HOWEVER, ALL SUCH DEVIATIONS SHALL BE PREVIOUSLY APPROVED BY THE OWNER'S REPRESENTATIVE.

3. IT IS THE INTENT OF THESE DRAWINGS THAT A COMPLETE WORKING SYSTEM PROPERLY TESTED, WILL BE OPERATIONAL UPON COMPLETION OF INSTALLATION.

4. PLUMBING CONTRACTOR (DIVISION 15600) SHALL BE RESPONSIBLE FOR ALL CUTTING AND PATCHING OF HOLES AND OPENINGS IN EXISTING WALLS AND FLOORS.

5. THE DRAWINGS ARE SCHEMATIC IN NATURE. ALL REQUIRED OFFSETS, FITTINGS, AND SUPPORTS SHALL BE INCLUDED IN THE BASE BID TO ACCOMMODATE ACTUAL FIELD CONDITIONS. FINAL LOCATIONS OF ALL WORK SHALL BE COORDINATED IN THE FIELD AND INSTALLED WHERE DIRECTED BY THE OWNER'S REPRESENTATIVE.

6. PRIOR TO BEGINNING WORK:

   A) SCHEDULE ALL WORK WITH WITH BUILDING ENGINEER AND MPS PROJECT MANAGER (PM) JOSEPH GORECKI AT (414)283-4716 OR (414)588-7906.

   B) COORDINATE ANY SHUTDOWN OF BUILDING SERVICES WITH THE BUILDING ENGINEER, PM AND SCHEDULE WORK TO KEEP DURATION AS SHUTDOWN AS SHORT AS POSSIBLE.

   C) PLANS ARE AS ACCURATE AS COULD BE DETERMINED FROM EXISTING DRAWINGS AND FIELD SURVEYS HOWEVER DEVIATIONS MAY EXIST. THEREFORE, IT IS THE RESPONSIBILITY OF DIVISION 15400 CONTRACTOR TO VISIT THE SITE AND VERIFY EXISTING CONDITIONS. IGNORANCE OF EXISTING CONDITIONS WITH NOT BE ACCEPTED AS AND EXCUSE FOR ADDITIONAL OR EXTRA PAYMENTS.

   D) COORDINATE WITH OTHER DIVISION CONTRACTORS PRIOR TO ORDERING OR INSTALLING EQUIPMENT THAT REQUIRES ELECTRICAL CONNECTIONS TO ASSURE PROPER ELECTRICAL REQUIREMENTS.

   E) ALL WORK MUST BE COMPLETED IN ACCORDANCE WITH THE SPECIFICATIONS ASSOCIATED WITH THIS PROJECT. IF SPECIFICATIONS HAVE NOT BEEN PROVIDED WITH THESE DOCUMENTS, CONTACT JOHN LINN AT (414)283-4703 AND A COPY WITH BE FORWARDED TO YOU.

   F) CONTRACTORS DO NOT NECESSARILY HAVE THE RIGHT-OF-WAY AND MUST COORDINATE WITH OTHER CONTRACTORS AND PRESENT CONDITIONS TO AVOID INTERFERENCE.

   G) THERE MAYBE OTHER PROJECT(S) BEING COMPLETED IN THE BUILDING IN CONJUNCTION WITH THIS PROJECT. THEREFORE, CONTRACTORS MAY EXPERIENCE TEMPORARY OUTAGES OF BUILDING SERVICES SUCH AS POWER, WATER, VENTILATION, ETC.

PLUMBING SYMBOL SCHEDULE

SE	SEWAGE EJECTOR
SP	SUMP PUMP
TT	TEMPERING TANK
ST	STORAGE TANK
ET	EXPANSION TANK
HWX	WATER HEATER STEAM
GWH	WATER HEATER GAS
EWH	WATER HEATER ELECTRIC
WS	WATER SOFTENER
CP	CIRCULATING PUMP
TMV	TEMPERATURE MIXING VALVE
EEW	EMERGENCY EYE WASH
EEWS	EMERGENCY EYE WASH SHOWER
FFD	FLUSHING FLOOR DRAIN
WC	WATER CLOSET
L	LAVATORY
UR	URINAL
S	SINK
BT	BATHTUB
SH	SHOWER
EWC	ELECTRIC WATER COOLER
DF	DRINKING FOUNTAIN
WCL	COMBINATION WATER CLOSET LAVATORY
MB	MOP BASIN
AWC	WASHING MACHINE WALL BOX
LT	LAUNDRY TRAY
DSN	DOWN SPOUT NOZZLE
DBT	DRAINBACK TANK
LI	LINT INTERCEPTOR
FSEC	FOOD SERVICE (DIVISION 11) EQUIPMENT CONTRACTOR
TYP	TYPICAL
HPT	HYDRO PNEUMATIC TANK
IW	INDIRECT WASTE
RV	RELIEF VENT
ANB	ACID NEUTRALIZATION BASIN
DV	DIVERTING VALVE
FC	FLUID COOLER
HX	HEAT EXCHANGER
HOA	HAND OFF AUTO
DISC	DISCONNECT
MSS	MOTOR STARTER SERVICE

NOTE: ALL SYMBOLS MAY NOT BE USED FOR THIS PROJECT

PLUMBING SYMBOL SCHEDULE

FCO	FLOOR CLEANOUT
CO/WCO	CLEANOUT OR WALL CLEANOUT (AS NOTED)
WHA	WATER HAMMER ARRESTOR
	PIPE CAP
PRV	PRESSURE REDUCING VALVE
	BUTTERFLY VALVE
	BALL VALVE
	CHECK VALVE
	CALIBRATED BALANCE VALVE, INLINE FLOW SIGHT INDICATOR & CHECK VALVE
	RISING STEM GATE VALVE
	WATER MAIN VALVE AND BOX
	NATURAL GAS SHUT-OFF VALVE
IE	INVERT ELEVATION OF SEWER OR DRAIN
	DRAINAGE/WATER FIXTURE UNIT TAG
	DETAIL AND ISOMETRIC REFERENCE
	FOOD SERVICE EQUIPMENT TAG
FFE	FINISHED FLOOR ELEVATION
	NEW PIPE CONNECTION TO EXISTING
	CAP EXISTING PIPE
	EQUIPMENT / FIXTURE DEMOLITION
	PIPE DEMOLITION
HB/WH	HOSE BIBB OR WALL HYDRANT (AS NOTED)
BFP/RPBP	BACKFLOW PREVENTER
FD	FLOOR DRAIN
FS	FLOOR SINK
HD	HUB DRAIN
RD/OD	ROOF DRAIN / OVERFLOW DRAIN
DD	DECK DRAIN
AFF	ABOVE FINISHED FLOOR
AP	ACCESS PANEL
CLVTR	CLEAR WATER VENT THRU ROOF
COND	STORM / CLEARWATER CONDUCTOR
SV	STACK VENT
VS	VENT STACK
VTR	VENT THRU ROOF
WS	WASTE STACK
EXIST	EXISTING
HS	HAND SINK
PC	PLUMBING (DIVISION 22) CONTRACTOR

NOTE: ALL SYMBOLS MAY NOT BE USED FOR THIS PROJECT

PLUMBING SYMBOL SCHEDULE

EXISTING	NEW		
AV	AV	AV	ACID VENT ABOVE FLOOR
AV	AV	AV	ACID VENT BELOW GROUND / FLOOR
AW	AW	AW	ACID WASTE ABOVE FLOOR
AW	AW	AW	ACID WASTE BELOW GROUND / FLOOR
D	D	D	DRAIN PIPING
GW	GW	GW	GREASE WASTE
GW	GW	GW	GREASE WASTE BELOW GROUND / FLOOR
PD	PD	PD	PUMP DISCHARGE EFFLUENT / SANITARY
		V	VENT PIPE ABOVE FLOOR
		V	VENT PIPE BELOW GROUND / FLOOR
		W/SAN	WASTE / SANITARY DRAIN ABOVE FLOOR
		W/SAN	WASTE / SANITARY SEWER OR DRAIN BELOW GROUND / FLOOR
CLV	CLV	CLV	CLEAR WATER VENT ABOVE FLOOR
CLV	CLV	CLV	CLEAR WATER VENT BELOW GROUND/FLOOR
CLW	CLW	CLW	CLEAR WATER WASTE ABOVE FLOOR
CLW	CLW	CLW	CLEAR WATER WASTE BELOW GROUND/FLOOR
		STM	STORM DRAIN ABOVE FLOOR
		STM	STORM SEWER OR DRAIN BELOW GROUND / FLOOR
OD	OD	OD	OVERFLOW DRAIN
PD	PD	PD	PUMP DISCHARGE STORM / CLEARWATER
DT	DT	DT	DRAINTILE
CSW	CSW	CSW	COLD SOFT WATER PIPING
		CW	COLD WATER
140°	140°	140°	140° HOT WATER
		HW	HOT WATER
140°	140°	140°	140° HOT WATER RETURN
		HWR	HOT WATER RETURN
TW	TW	TW	TEMPERED WATER
TWR	TWR	TWR	TEMPERED WATER RETURN
NP	NP	NP	NON-POTABLE WATER
G	G	G	NATURAL GAS
A	A	A	COMPRESSED AIR
SS	SS	SS	SOLAR HEAT TRANSFER FLUID PIPING - SUPPLY
SR	SR	SR	SOLAR HEAT TRANSFER FLUID PIPING - RETURN
			FOR NON DESIGNATED BELOW SLAB PIPING
RO	RO	RO	REVERSE OSMOSIS

NOTE: ALL SYMBOLS MAY NOT BE USED FOR THIS PROJECT

SHEET INDEX - PLUMBING

B-P-01 SYMBOLS - PLUMBING
B-P-02 SCHEDULES - BASE - PLUMBING
B-P-03 SCHEDULES - ALTERNATE NO. 1 - PLUMBING
B-P-04 BASEMENT FLOOR PLAN - BASE - PLUMBING
B-P-05 BASEMENT FLOOR PLAN - ALTERNATE NO. 1 - PLUMBING
B-P-06 TYPICAL FOR 1ST-4TH FLOOR - BASE - PLUMBING
B-P-07 TYPICAL FOR 1ST-4TH FLOOR - ALTERNATE NO. 1 - PLUMBING
B-P-08 ATTIC FLOOR PLAN - BASE - PLUMBING
B-P-09 ATTIC FLOOR PLAN - ALTERNATE NO. 1 - PLUMBING
B-P-10 ROOF PLAN - BASE - PLUMBING
B-P-11 ROOF PLAN - ALTERNATE NO. 1 - PLUMBING
B-P-12 DETAILS - PLUMBING
B-P-13 DETAILS - BASE - PLUMBING
B-P-14 DETAILS - ALTERNATE NO. 1 - PLUMBING

NO	REVISIONS	DRN	CHK	DATE

DRN - | DES - | CHK - | APP KEH

Milwaukee Public Schools
Division of Facilities and Maintenance Services
1234 North 11th Street
Milwaukee, Wisconsin 53205-0259
Phone: 414 475-8000
Fax: 414 963-4862

PSJ ENGINEERING, INC.
CONSULTING ENGINEERS
MILWAUKEE: (414)358-2811
WAUKESHA: (262)547-0501
PLUMBING, HVAC, FIRE PROTECTION
DOCUMENTS DESIGNED BY MCD

City of Milwaukee
Department of Public Works

AECOM
4135 TECHNOLOGY PARKWAY
SHEBOYGAN, WI 53083-1883
T 920.458.8711 F 920.458.0537
WWW.AECOM.COM

MILWAUKEE PUBLIC SCHOOLS
CITY OF MILWAUKEE, WISCONSIN
SOLAR PROJECTS

SYMBOLS - PLUMBING

SITE 012

DATE FEBRUARY 2012
PROJECT NO 60239135
FILENAME
FILE NO
SHEET NO
DRAWING NO B-P-01

Xrefs: ..\..\Reference Drawings\2-22x34 to.dwg
Images:
Plotted By: megan
Plot File Date Created: Feb/24/2012 9:57 AM
Layout-Sheet Name: SYMBOLS - PLUMBING
Filename: G:\PROJECTS\2011\11-046\DRAWINGS\01 - DDS\PLOT SHEETS\PLUMBING\P000.DWG

EXPANSION TANK SCHEDULE

TAG	LOCATION	MANUFACTURER	MODEL	MINIMUM OPERATING PRESSSURE	MAXIMUM OPERATING PRESSSURE	ACCEPTANCE VOLUME (GALLONS)	TOTAL VOLUME (GALLONS)	HEIGHT	DIAMETER	REMARKS
ET-1	TUNNEL 3	WESSELS	NVA 200	15	60	53	53	43"	24"	CONTRACTOR TO ADJUST FACTORY PRECHARGE AS REQUIRED

THREE WAY DIVERTING VALVE SCHEDULE

TAG	LOCATION	MANUFACTURER	MODEL	SERVICE	MIN FLOW (GPM)	DESIGN FLOW (GPM)	PRESSURE DIFFERENTIAL (PSI)	INLET (INCHES)	OUTLET (INCHES)	INLET TEMP (°F)	OUTLET TEMP (°F)	OUTLET TEMP (°F)	REMARKS
DV-1	TUNNEL 3	CALEFFI	Z611515	SOLAR COLLECTOR	1.0	30	5	¾	¾	180	180	180	

INLINE PUMP SCHEDULE

TAG	LOCATION	MANUFACTURER	MODEL	SERVICE	FLOW (GPM)	HEAD (PSI)	MOTOR (HP)	RPM	VOLTAGE/HERTZ/PHASE	REMARKS
CP-1	TUNNEL 3	TACO	IL133	SOLAR STORAGE	30	4.33	¾	1725	115/ 60 / 1	ALL BRONZE OR STAINLESS STEEL CONSTRUCTION
CP-2	TUNNEL 3	TACO	0011-F4	SOLAR COLLECTOR	30	12.99	⅛	3250	115 / 60 / 1	

STORAGE TANK SCHEDULE

TAG	LOCATION	MANUFACTURER	MODEL	SERVICE	VOLUME (GALLONS)	DIAMETER (IN)	HEIGHT (IN)	LENGTH (IN)	REMARKS
ST-1	TUNNEL 3	BAGERLAND TANKS	BS-30-111	SOLAR WATER HEATER	320	30	39	111	TO BE INSULATED PER SPECIFICATION SECTION 15426
ST-2	TUNNEL 3	BAGERLAND TANKS	BS-30-111	SOLAR WATER HEATER	320	30	39	111	TO BE INSULATED PER SPECIFICATION SECTION 15426
ST-3	TUNNEL 3	BAGERLAND TANKS	BS-30-111	SOLAR WATER HEATER	320	30	39	111	TO BE INSULATED PER SPECIFICATION SECTION 15426
ST-4	TUNNEL 3	BAGERLAND TANKS	BS-30-111	SOLAR WATER HEATER	320	30	39	111	TO BE INSULATED PER SPECIFICATION SECTION 15426
ST-5	TUNNEL 3	BAGERLAND TANKS	BS-30-111	SOLAR WATER HEATER	320	30	39	111	TO BE INSULATED PER SPECIFICATION SECTION 15426

FLAT PLATE HEAT EXCHANGER SCHEDULE

TAG	LOCATION	MANUFACTURER	MODEL	SERVICE	LOAD (BTU/H)	SURFACE AREA (SQ. FT.)	FOULING FACTOR	SIDE A DATA			SIDE B DATA		
								FLUID	FLOW / PRESSURE DROP	ENT/LEAVING TEMPERATURE	FLUID	FLOW / PRESSURE DROP	ENT/LEAVING TEMPERATURE
HX-1	TUNNEL 3	AIC	LC110-50 DWR	SOLAR WATER HEATER	218000	59	0.0001	40% PROP. GLYCOL	30 GPM / 0.98 PSI	120°F/105°F	WATER	30 GPM / 0.5 PSI	50°F/60°F

PLUMBING MOTOR LOAD COORDINATION SCHEDULE - REFERENCE ONLY

TAG	EQUIPMENT DESCRIPTION	LOCATION	POWER DATA			DISCONNECT			REMARKS
			LOAD	VOLTS	EMERG. POWER	FURNISH BY	INSTALL BY	WIRED BY	
CP-1	INLINE PUMP	TUNNEL 3	¾ HP	115 / 1	NO	DIV 16000	DIV 16000	DIV 16000	
CP-2	INLINE PUMP	TUNNEL 3	⅛ HP	115 / 1	NO	DIV 16000	DIV 16000	DIV 16000	
CONTROL PANEL	SOLAR CONTROL PANEL	TUNNEL 3	15A	115 / 1	NO	DIV 16000	DIV 16000	DIV 16000	
FC-1	FLUID COOLER	ROOF	½ HP	208 / 1	NO	DIV 16000	DIV 16000	DIV 16000	

FLUID COOLER (FC) SCHEDULE

UNIT NO.	SYSTEM SERVED	MODEL NO.	HEAT REJECTION COIL SIDE					AIR HANDLING SIDE					ELECTRICAL		REMARKS
			GPM	EWT °F	LWT °F	AT REJ. MBH	AP (PSI)	FANS #	TOTAL CFM	HP EA.	RPM	MCA	VOLTS	PHASE	
FC-1	SOLAR COLLECTOR	FCV-01S	30	180	160	218	2.88	1	3900	½	1140	15	208V	1 PH	

THERMOSTATIC MIXING VALVE SCHEDULE

TAG	LOCATION	MANUFACTURER	MODEL	SERVICE	MIN FLOW (GPM)	DESIGN FLOW (GPM)	PRESSURE DIFFERENTIAL (PSI)	INLET (INCHES)	OUTLET (INCHES)	INLET TEMP (°F)	INLET TEMP (°F)	OUTLET TEMP (°F)	REMARKS
TMV-1	COORIDOR-B6	BRADLEY	S59-3130	HOT WATER	2.0	30	3	2	2	40	180	120	SURFACE MOUNTED STAINLESS STEEL CABINET

SOLAR THERMAL PANEL SCHEDULE

DRAWINGS ARE BASED ON MANUFACTURES & MODEL NO.	QUANTITY	HOLDING CAPACITY EA. (GAL)	LENGTH (IN)	WIDTH (IN)	DEPTH (IN)	PIPE CONN. SIZE (IN)	PANEL WTR. VOLUME (GAL)	WEIGHT (LBS)	TRANSPARENT AREA (SF)	MBTU/DAY (CLEAR PAR T. CLEAR)*	MIN SOLAR ENERGY TRANS.	REMARKS
SOLARSKIES SS-32	32	3.2	97.25	48	SBV	1	1.2	113	29.93	24/13	91%	NOTE 1
TOTALS		102.4	3112	1536				3616	957.76			

SBV - INFORMATION TO BE SUPPLIED BY VENDER
* - BASED ON SRRCC OG-100 Ti-Ta=90oF (2000 BTU/SF-DAY FOR CLEAR SKY AND 1500 BTU/SF-DAY PART CLEAR DAY)
1 - PROVIDE WITH MATCHING SUPPORT SYSTEM AND HARDWARE

NO	REVISIONS	DRN	CHK	DATE

DRN -
DES -
CHK -
APP KEH

Milwaukee Public Schools
Division of Facilities and Maintenance Services
1336 North 11th Street
Milwaukee, Wisconsin 53205-2659
Phone: 414 475-8000
Fax: 414 383-4882

PSJ ENGINEERING, INC.
CONSULTING ENGINEERS
MILWAUKEE: (414)358-2811
WAUKESHA: (262)542-4900
PLUMBING, HVAC, FIRE PROTECTION
DOCUMENTS DESIGNED BY MCS

City of Milwaukee
Department of Public Works

AECOM
4135 TECHNOLOGY PARKWAY
SHEBOYGAN, WI 53083-1883
T 920.458.8711 F 920.458.0537
WWW.AECOM.COM

MILWAUKEE PUBLIC SCHOOLS
SOLAR PROJECTS
CITY OF MILWAUKEE, WISCONSIN

SCHEDULES - BASE - PLUMBING

SITE 012

DATE FEBRUARY 2012
PROJECT NO 60239135
FILENAME
FILE NO
SHEET NO
DRAWING NO B-P-02

Xrefs: ..\..\Reference Drawings\2-22x34 to.dwg
Images:
Plotted By: megan
Plot File Date Created: Feb/24/2012 9:57 AM
Layout-Sheet Name: SCHEDULES - BASE - PLUMBING
Filename: G:\PROJECTS\2011\11-046\DRAWINGS\01 - DDS\PLOT SHEETS\PLUMBING\P001.DWG

EXPANSION TANK SCHEDULE

TAG	LOCATION	MANUFACTURER	MODEL	MINIMUM OPERATING PRESSSURE	MAXIMUM OPERATING PRESSSURE	ACCEPTANCE VOLUME (GALLONS)	TOTAL VOLUME (GALLONS)	HEIGHT	DIAMETER	REMARKS
ET-1	TUNNEL 3	WESSELS	NVA 130	15	60	35	35	37"	20"	CONTRACTOR TO ADJUST FACTORY PRECHARGE AS REQUIRED

THREE WAY DIVERTING VALVE SCHEDULE

TAG	LOCATION	MANUFACTURER	MODEL	SERVICE	MIN FLOW (GPM)	DESIGN FLOW (GPM)	PRESSURE DIFFERENTIAL (PSI)	INLET (INCHES)	OUTLET (INCHES)	INLET TEMP (°F)cold	INLET TEMP (°F)hot	OUTLET TEMP (°F)	REMARKS
DV-1	TUNNEL 3	CALEFFI	Z611515	SOLAR COLLECTOR	1.0	15	5	¾	¾	180	180	180	

INLINE PUMP SCHEDULE

TAG	LOCATION	MANUFACTURER	MODEL	SERVICE	FLOW (GPM)	HEAD (PSI)	MOTOR (HP)	RPM	VOLTAGE/HERTZ/PHASE	REMARKS
CP-1	TUNNEL 3	TACO	IL133	SOLAR STORAGE	15	12.99	¾	1725	115/ 60 / 1	ALL BRONZE OF STAINLESS STEEL CONSTRUCTION
CP-2	TUNNEL 3	TACO	0011-F4	SOLAR COLLECTOR	15	7.74	⅛	3250	115 / 60 / 1	

STORAGE TANK SCHEDULE

TAG	LOCATION	MANUFACTURER	MODEL	SERVICE	VOLUME (GALLONS)	DIAMETER (IN)	HEIGHT (IN)	LENGTH (IN)	REMARKS
ST-1	TUNNEL 3	BAGERLAND TANKS	BS-30-111	SOLAR WATER HEATER	320	30	39	111	TO BE INSULATED PER SPECIFICATION SECTION 15426
ST-2	TUNNEL 3	BAGERLAND TANKS	BS-30-111	SOLAR WATER HEATER	320	30	39	111	TO BE INSULATED PER SPECIFICATION SECTION 15426
ST-3	TUNNEL 3	BAGERLAND TANKS	BS-30-111	SOLAR WATER HEATER	320	30	39	111	TO BE INSULATED PER SPECIFICATION SECTION 15426

FLAT PLATE HEAT EXCHANGER SCHEDULE

TAG	LOCATION	MANUFACTURER	MODEL	SERVICE	LOAD (BTU/H)	SURFACE AREA (SQ. FT.)	FOULING FACTOR	SIDE A DATA			SIDE B DATA		
								FLUID	FLOW / PRESSURE DROP	ENT/LEAVING TEMPERATURE	FLUID	FLOW / PRESSURE DROP	ENT/LEAVING TEMPERATURE
HX-1	TUNNEL 3	AIC	LB31-70 DWR	SOLAR WATER HEATER	106000	23.1	0.0001	40% PROP. GLYCOL	15 GPM / 0.98 PSI	120°F/105°F	WATER	15 GPM / 0.5 PSI	50°F/60°F

PLUMBING MOTOR LOAD COORDINATION SCHEDULE - REFERENCE ONLY

TAG	EQUIPMENT DESCRIPTION	LOCATION	POWER DATA			DISCONNECT			REMARKS
			LOAD	VOLTS	EMERG. POWER	FURNISH BY	INSTALL BY	WIRED BY	
CP-1	INLINE PUMP	TUNNEL 3	¾ HP	115 / 1	NO	DIV 16000	DIV 16000	DIV 16000	
CP-2	INLINE PUMP	TUNNEL 3	⅛ HP	115 / 1	NO	DIV 16000	DIV 16000	DIV 16000	
CONTROL PANEL	SOLAR CONTROL PANEL	TUNNEL 3	15A	115 / 1	NO	DIV 16000	DIV 16000	DIV 16000	
FC-1	FLUID COOLER	ROOF	½ HP	208 / 1	NO	DIV 16000	DIV 16000	DIV 16000	

FLUID COOLER (FC) SCHEDULE

UNIT NO.	SYSTEM SERVED	MODEL NO.	HEAT REJECTION COIL SIDE					AIR HANDLING SIDE					ELECTRICAL		REMARKS
			GPM	EWT °F	LWT °F	AT REJ. MBH	AP (PSI)	FANS #	TOTAL CFM	HP EA.	RPM	MCA	VOLTS	PHASE	
FC-1	SOLAR COLLECTOR	FCV-01S	30	180	160	218	5.46	1	3900	½	1140	15	208V	1 PH	

THERMOSTATIC MIXING VALVE SCHEDULE

TAG	LOCATION	MANUFACTURER	MODEL	SERVICE	MIN FLOW (GPM)	DESIGN FLOW (GPM)	PRESSURE DIFFERENTIAL (PSI)	INLET (INCHES)	OUTLET (INCHES)	INLET TEMP (°F)	INLET TEMP (°F)	OUTLET TEMP (°F)	REMARKS
TMV-1	COORIDOR-B6	BRADLEY	S59-3130	HOT WATER	2.0	15	3	2	2	40	180	120	SURFACE MOUNTED STAINLESS STEEL CABINET

SOLAR THERMAL PANEL SCHEDULE

DRAWINGS ARE BASED ON MANUFACTURES & MODEL NO.	QUANTITY	HOLDING CAPACITY EA. (GAL)	LENGTH (IN)	WIDTH (IN)	DEPTH (IN)	PIPE CONN. SIZE (IN)	PANEL WTR. VOLUME (GAL)	WEIGHT (LBS)	TRANSPARENT AREA (SF)	MBTU/DAY (CLEAR PAR T. CLEAR)*	MIN SOLAR ENERGY TRANS.	REMARKS
SOLARSKIES SS-32	16	3.2	97.25	48	SBV	1	1.2	113	29.93	24/13	91%	NOTE 1
TOTALS		512	1556	768				1808	478.88			

SBV - INFORMATION TO BE SUPPLIED BY VENDER
* - BASED ON SRRCC OG-100 Ti-Ta=90oF (2000 BTU/SF-DAY FOR CLEAR SKY AND 1500 BTU/SF-DAY PART CLEAR DAY)
1 - PROVIDE WITH MATCHING SUPPORT SYSTEM AND HARDWARE

NO	REVISIONS	DRN	CHK	DATE

DRN - | DES - | CHK - | APP KEH

Milwaukee Public Schools
Division of Facilities and Maintenance Services
1336 North 11th Street
Milwaukee, Wisconsin 53205-2659
Phone: 414 475-8000
Fax: 414 383-4882

PSJ ENGINEERING, INC.
CONSULTING ENGINEERS
MILWAUKEE: (414)358-2811
WAUKESHA: (262)547-0550
PLUMBING, HVAC, FIRE PROTECTION
DOCUMENTS DESIGNED BY MCS

City of Milwaukee
Department of Public Works

AECOM
4135 TECHNOLOGY PARKWAY
SHEBOYGAN, WI 53083-1883
T 920.458.8711 F 920.458.0537
WWW.AECOM.COM

MILWAUKEE PUBLIC SCHOOLS
SOLAR PROJECTS
CITY OF MILWAUKEE, WISCONSIN

SCHEDULES - ALTERNATE NO. 1 -
PLUMBING
SITE 012

DATE FEBRUARY 2012
PROJECT NO 60239135
FILENAME
FILE NO
SHEET NO
DRAWING NO B-P-03

Xrefs: ..\..\Reference Drawings\2-22x34 to.dwg
Images:
Plotted By: megan
Plot File Date Created: Feb/24/2012 9:57 AM
Layout-Sheet Name: SCHEDULES - ALTERNATE NO. 1 - PLUMBING
Filename: G:\PROJECTS\2011\11-046\DRAWINGS\01 - DDS\PLOT SHEETS\PLUMBING\P001A.DWG

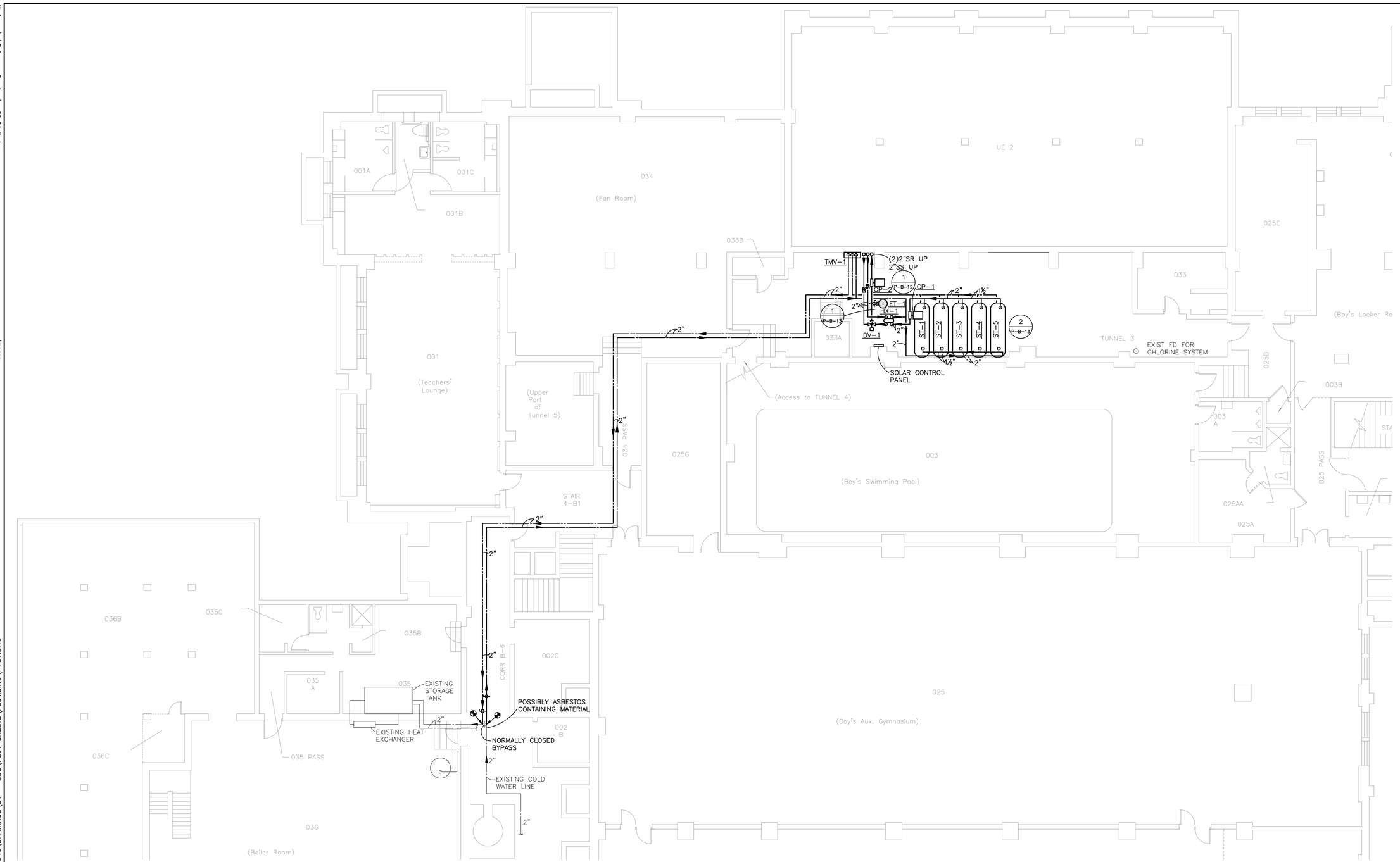

BASEMENT FLOOR PLAN - BASE - PLUMBING

1/8" = 1'-0"

1 INCH

NORTH

NO	REVISIONS	DRN	CHK	DATE

DRN –
DES –
CHK –
APP KEH

Milwaukee Public Schools
Division of Facilities and Maintenance Services
1136 North 11th Street
Milwaukee, Wisconsin 53205-2659
Phone: 414 475-8000
Fax: 414 383-4882

P&J ENGINEERING, INC.
CONSULTING ENGINEERS
MILWAUKEE: (414)358-2811
MADISON: (608)836-0693
PLUMBING, HVAC, FIRE PROTECTION
DOCUMENTS DESIGNED BY MCB

City of Milwaukee
Department of Public Works

AECOM
4135 TECHNOLOGY PARKWAY
SHEBOYGAN, WI 53083-1883
T 920.458.8711 F 920.458.0537
WWW.AECOM.COM

MILWAUKEE PUBLIC SCHOOLS
SOLAR PROJECTS
CITY OF MILWAUKEE, WISCONSIN

BASEMENT FLOOR PLAN - BASE - PLUMBING
SITE 012

DATE	FEBRUARY 2012
PROJECT NO	60239135
FILENAME	
FILE NO	
SHEET NO	
DRAWING NO	B-P-04

Plotted By: megan
Plot File Date Created: Feb/24/2012 9:57 AM
Layout-Sheet Name: BASEMENT FLOOR PLAN - BASE - PLUMBING
Filename: G:\PROJECTS\2011\11-046\DRAWINGS\01 - DDS\PLOT SHEETS\PLUMBING\P101.DWG

Xrefs: ..\..\Reference Drawings\z-22x34 tb.dwg
..\..\Working Drawings\Plumbing\sp-01-base.dwg
..\..\Reference Drawings\z-01-base.dwg

Images:

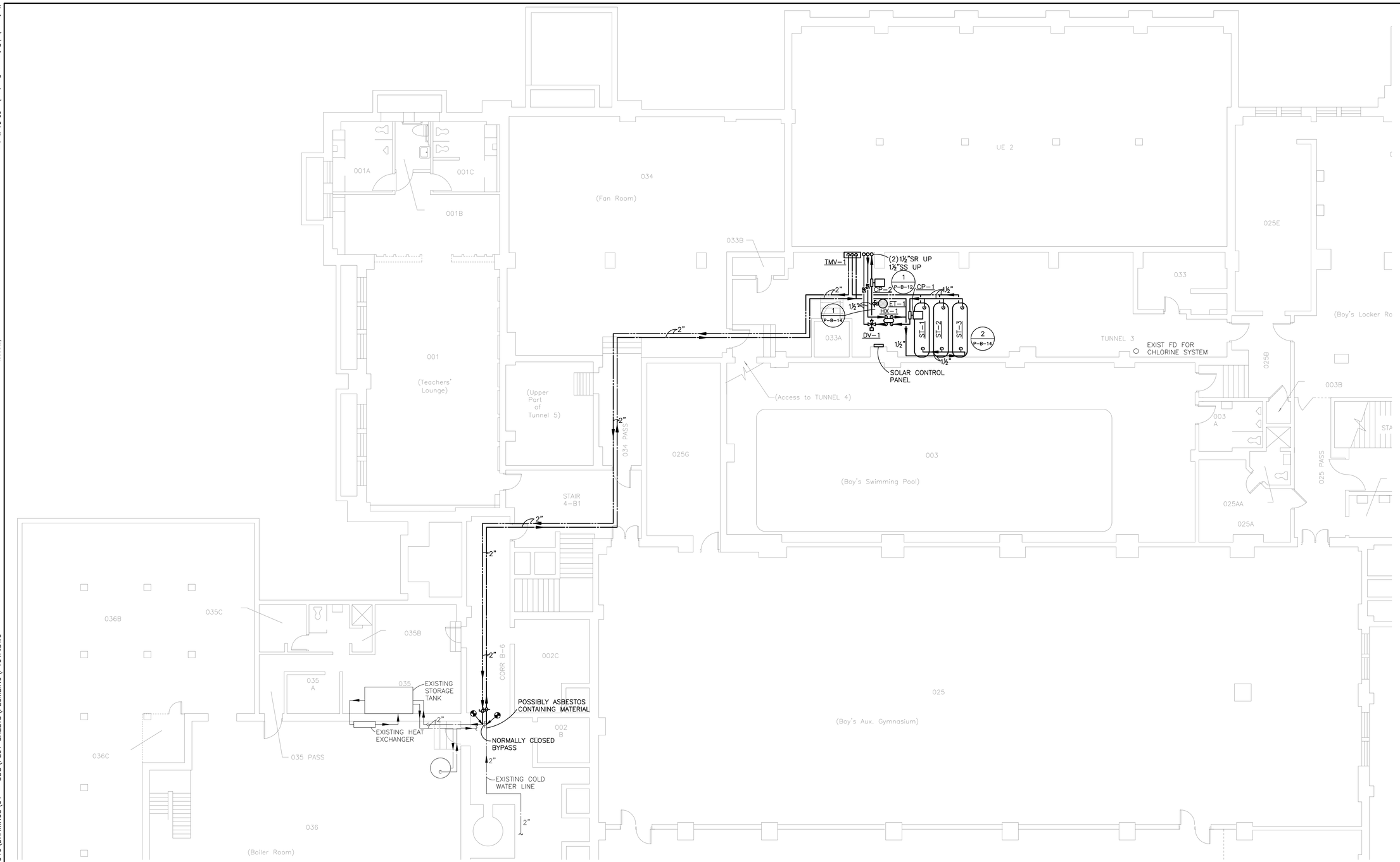

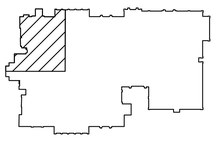

BASEMENT FLOOR PLAN - ALTERNATE NO. 1 - PLUMBING

1/8" = 1'-0"

1 INCH

NORTH

NO	REVISIONS	DRN	CHK	DATE

DRN -
DES -
CHK -
APP KEH

Milwaukee Public Schools
Division of Facilities and Maintenance Services
1136 North 11th Street
P.O. Box 2032
Milwaukee, Wisconsin 53205-0059
Phone: 414 475-8000
Fax: 414 383-4882

PSJ ENGINEERING, INC.
CONSULTING ENGINEERS
MILWAUKEE: (414)358-2811
MADISON: (608)836-9500
PLUMBING, HVAC, FIRE PROTECTION
DOCUMENTS DESIGNED BY MCD

City of Milwaukee
Department of Public Works

AECOM
4135 TECHNOLOGY PARKWAY
SHEBOYGAN, WI 53083-1883
T 920.458.8711 F 920.458.0537
WWW.AECOM.COM

MILWAUKEE PUBLIC SCHOOLS
SOLAR PROJECTS
CITY OF MILWAUKEE, WISCONSIN

BASEMENT FLOOR PLAN -
ALTERNATE NO. 1 - PLUMBING
SITE 012

DATE	FEBRUARY 2012
PROJECT NO	60239135
FILENAME	
FILE NO	
SHEET NO	
DRAWING NO	B-P-05

Plotted By: megan
Plot File Date Created: Feb/24/2012 9:57 AM
Layout-Sheet Name: BASEMENT FLOOR PLAN - ALTERNATE NO. 1 - PLUMBING
Filename: G:\PROJECTS\2011\11-046\DRAWINGS\01 - DDS\PLOT SHEETS\PLUMBING\P101A.DWG

Xrefs: ..\..\Reference Drawings\z-22x34 tb.dwg
G:\PROJECTS\2011\11-046\Drawings\01 - DDs\Working Drawings\Plumbing\xp-01-base1.dwg
..\..\Reference Drawings\z-01-base.dwg

Images:

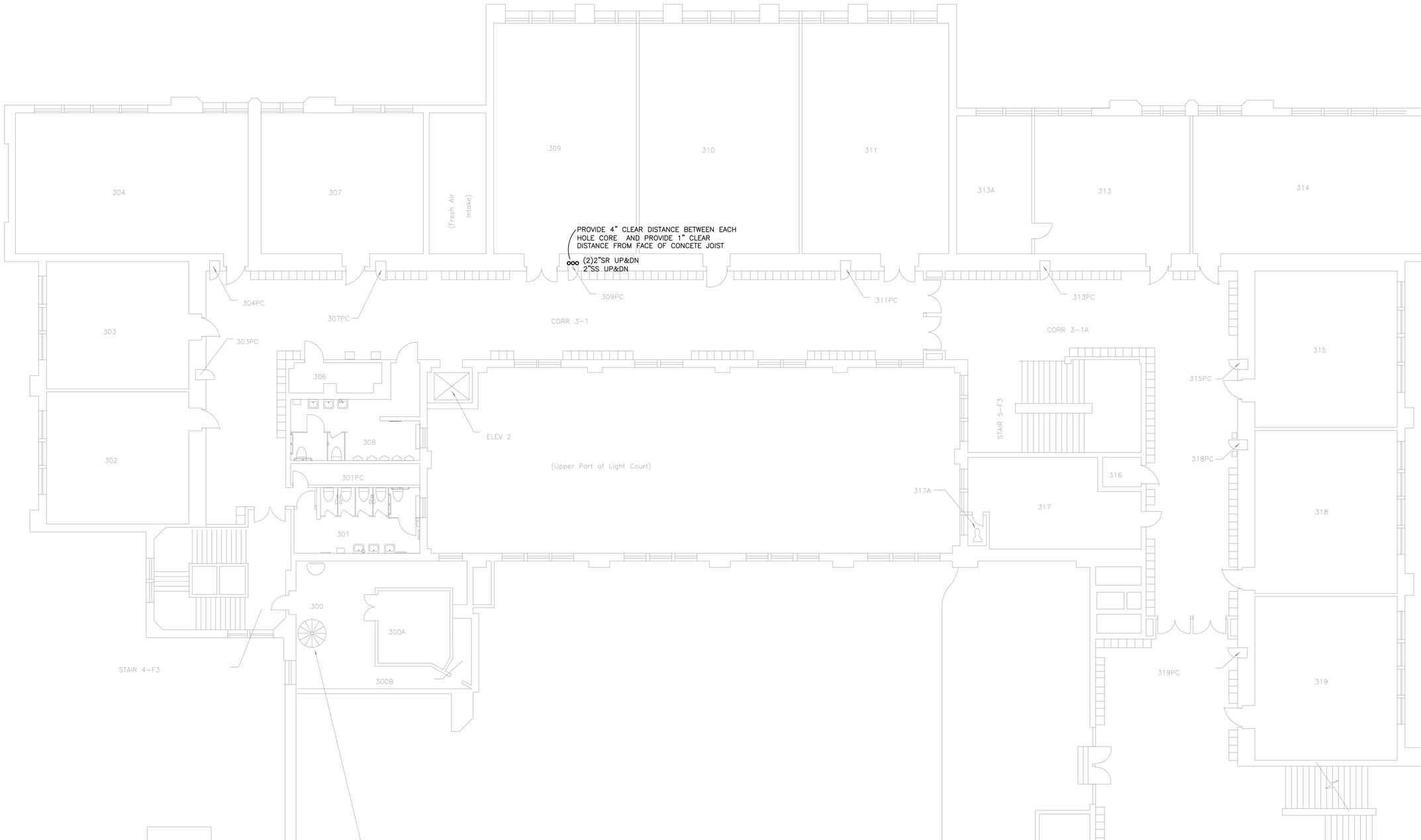

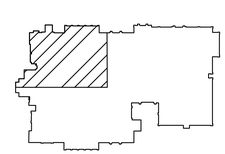

TYPICAL FOR 1ST-4TH FLOOR - BASE - PLUMBING

1/8" = 1'-0"

1 INCH

NORTH

NO	REVISIONS	DRN	CHK	DATE

DRN -
DES -
CHK -
APP KEH -

Milwaukee Public Schools
Division of Facilities and Maintenance Services
1124 North 11th Street
P.O. BOX 2059
Milwaukee, Wisconsin 53205-0259
Phone : 414 283-4600
Fax : 414 283-4682

PSJ ENGINEERING, INC.
CONSULTING ENGINEERS
MILWAUKEE: (414)352-2211
MADISON: (608)251-5520
PLUMBING, HVAC, FIRE PROTECTION
DOCUMENTS DESIGNED BY MKB

City of Milwaukee
Department of Public Works

AECOM
4135 TECHNOLOGY PARKWAY
SHEBOYGAN, WI 53083-1883
T 920.458.8711 F 920.458.0537
WWW.AECOM.COM

MILWAUKEE PUBLIC SCHOOLS
SOLAR PROJECTS
CITY OF MILWAUKEE, WISCONSIN

TYPICAL FOR 1ST-4TH FLOOR - BASE - PLUMBING

SITE 012

DATE FEBRUARY 2012
PROJECT NO 60239135
FILENAME
FILE NO
SHEET NO
DRAWING NO B-P-06

Plotted By: megan
Plot File Date Created: Feb/24/2012 9:57 AM
Layout-Sheet Name: TYPICAL FOR 1ST-4TH FLOOR - BASE - PLUMBING
Filename: G:\PROJECTS\2011\11-046\DRAWINGS\01 - DDS\PLOT SHEETS\PLUMBING\P104.DWG

Xrefs: ..\..\Reference Drawings\z-22x34 tb.dwg
..\..\Working Drawings\Plumbing\xp-04-third.dwg
..\..\Reference Drawings\z-04-third.dwg

Images:

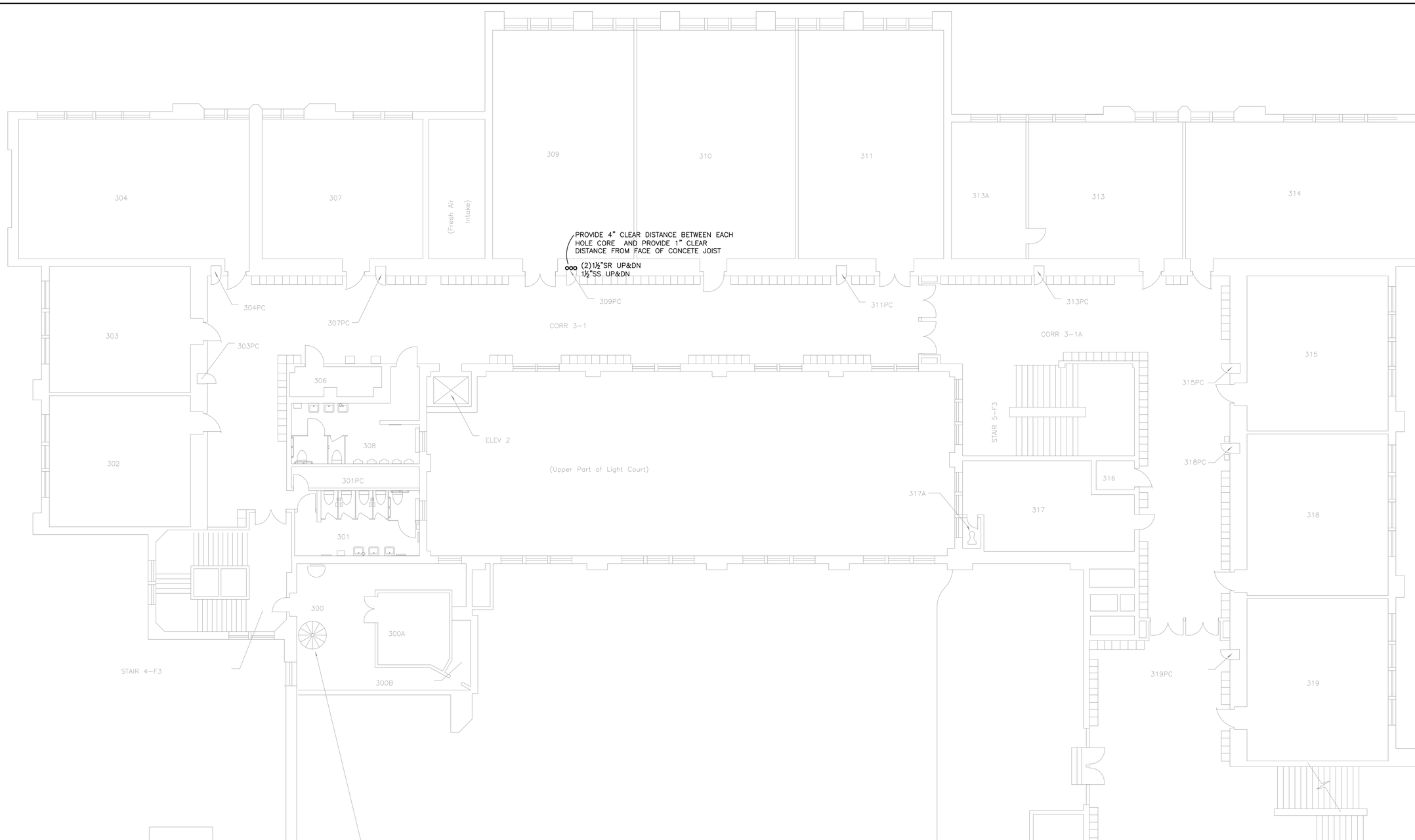

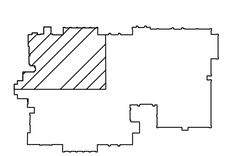

TYPICAL FOR 1ST-4TH FLOOR - ALTERNATE NO. 1 - PLUMBING

1/8" = 1'-0"

1 INCH

NORTH

NO	REVISIONS	DRN	CHK	DATE

DRN –
DES –
CHK –
APP KEH

Milwaukee Public Schools
Division of Facilities and Maintenance Services
1136 North 11th Street
Milwaukee, Wisconsin
Phone: 414 475-8000

P&J ENGINEERING, INC.
CONSULTING ENGINEERS
MILWAUKEE: (414)358-2811
MADISON: (608)251-0850
PLUMBING, HVAC, FIRE PROTECTION
DOCUMENTS DESIGNED BY MCS

City of Milwaukee
Department of Public Works

AECOM
4135 TECHNOLOGY PARKWAY
SHEBOYGAN, WI 53083-1883
T 920.458.8711 F 920.458.0537
WWW.AECOM.COM

MILWAUKEE PUBLIC SCHOOLS
SOLAR PROJECTS
CITY OF MILWAUKEE, WISCONSIN

TYPICAL FOR 1ST-4TH FLOOR - ALTERNATE NO. 1 - PLUMBING

SITE 012

DATE FEBRUARY 2012
PROJECT NO 60239135
FILENAME
FILE NO
SHEET NO
DRAWING NO B-P-07

Plotted By: megan
Plot File Date Created: Feb/24/2012 9:57 AM
Layout-Sheet Name: TYPICAL FOR 1ST-4TH FLOOR - ALTERNATE NO. 1 - PLUMBING
Filename: G:\PROJECTS\2011\11-046\DRAWINGS\01 - DDS\PLOT SHEETS\PLUMBING\P1104A.DWG

Xrefs: ..\..\Reference Drawings\2-22x34 to.dwg
G:\PROJECTS\2011\11-046\Drawings\01 - DDs\Working Drawings\Plumbing\xp-04-third.dwg
..\..\Reference Drawings\2-04-third.dwg

Images:

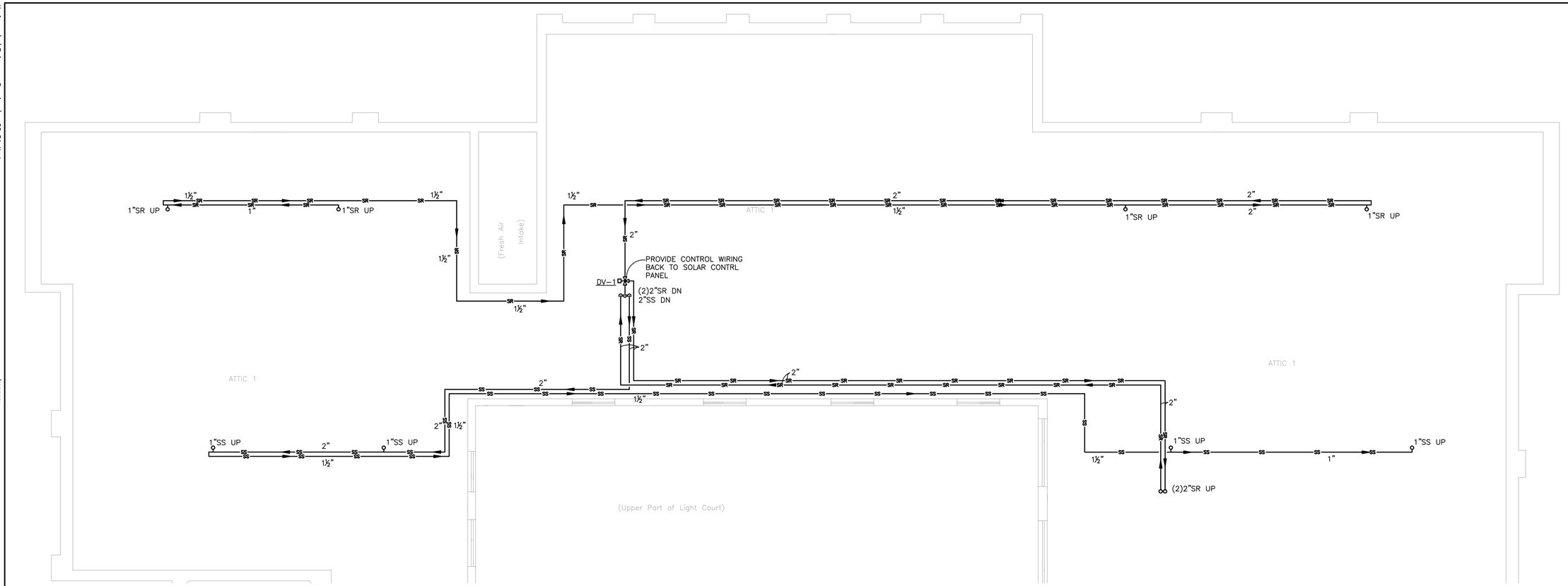

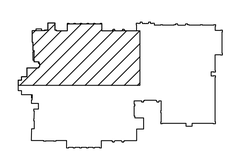

ATTIC FLOOR PLAN - BASE - PLUMBING

1/8" = 1'-0"

1 INCH

NORTH

NO	REVISIONS	DRN	CHK	DATE

DRN – DES – CHK – APP KEH

Milwaukee Public Schools
Division of Facilities and Maintenance Services
7136 North 113th Street
P.O. Box 2085
Milwaukee, Wisconsin 53208-0259
Phone: 414 365-4800
Fax: 414 365-4862

P&J ENGINEERING, INC.
CONSULTING ENGINEERS
MILWAUKEE: (414)358-2811
WAUKESHA: (262)542-9600
PLUMBING, HVAC, FIRE PROTECTION
DOCUMENTS DESIGNED BY MCD

City of Milwaukee
Department of Public Works

AECOM
4135 TECHNOLOGY PARKWAY
SHEBOYGAN, WI 53083-1883
T 920.458.8711 F 920.458.0537
WWW.AECOM.COM

MILWAUKEE PUBLIC SCHOOLS
SOLAR PROJECTS
CITY OF MILWAUKEE, WISCONSIN

ATTIC FLOOR PLAN – BASE – PLUMBING
SITE 012

DATE FEBRUARY 2012
PROJECT NO 60239135
FILENAME
FILE NO
SHEET NO
DRAWING NO B–P–08

Plotted By: megan
Plot File Date Created: Feb/24/2012 9:57 AM
Layout-Sheet Name: ATTIC FLOOR PLAN – BASE – PLUMBING
Filename: G:\PROJECTS\2011\11-046\DRAWINGS\01 – DDS\PLOT SHEETS\PLUMBING\P106.DWG

Xrefs: ..\..\Reference Drawings\z-22x34 to.dwg
..\..\Working Drawings\Plumbing\ap-06-attic.dwg
..\..\Reference Drawings\z-06-attic.dwg

Images:

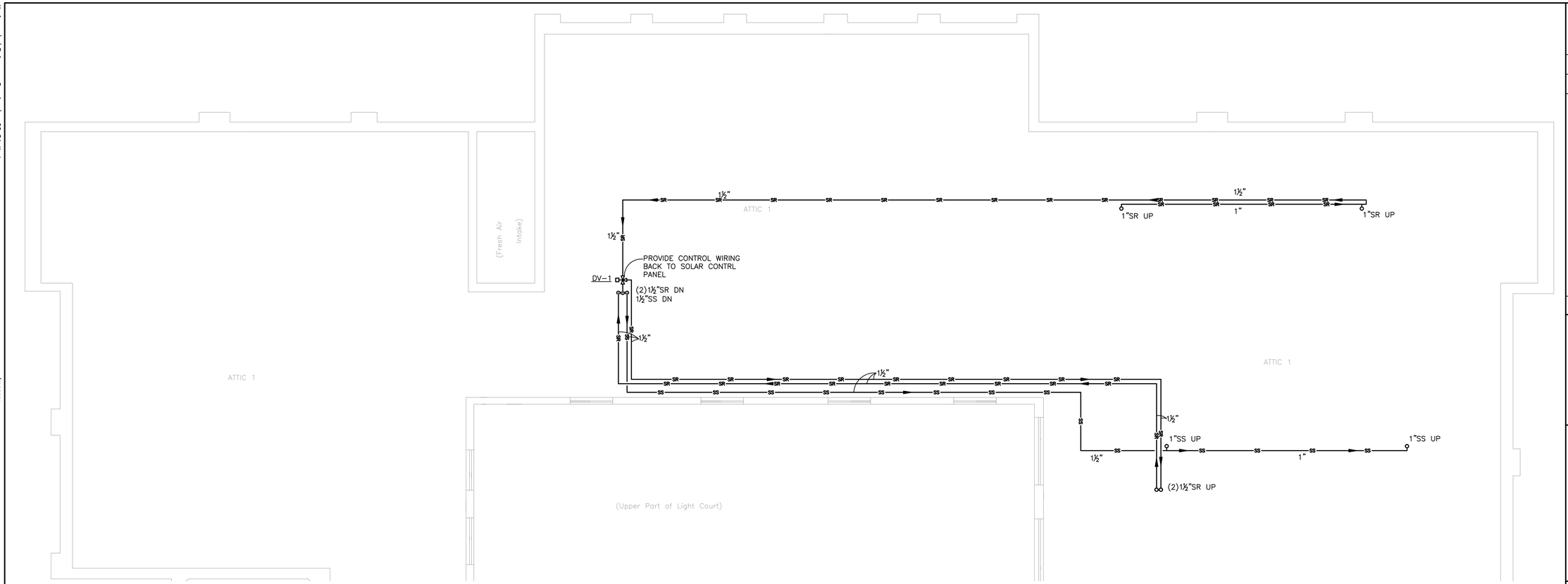

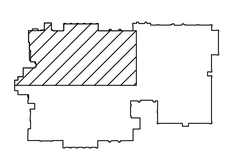

ATTIC FLOOR PLAN - ALTERNATE NO. 1 - PLUMBING

1/8" = 1'-0"

1 INCH

NORTH

NO	REVISIONS	DRN	CHK	DATE

Milwaukee Public Schools
Division of Facilities and Maintenance Services
1336 North 11th Street
Milwaukee, Wisconsin 53205-2659
Phone: 414 267-4800
Fax: 414 267-4882

DRN – | DES – | CHK – | APP KEH

PSJ ENGINEERING, INC.
CONSULTING ENGINEERS
MILWAUKEE: (414)358-2811
WAUKESHA: (262)542-9500
PLUMBING, HVAC, FIRE PROTECTION
DOCUMENTS DESIGNED BY MCB

City of Milwaukee
Department of Public Works

AECOM
4135 TECHNOLOGY PARKWAY
SHEBOYGAN, WI 53083-1883
T 920.458.8711 F 920.458.0537
WWW.AECOM.COM

MILWAUKEE PUBLIC SCHOOLS
SOLAR PROJECTS
CITY OF MILWAUKEE, WISCONSIN

ATTIC FLOOR PLAN – ALTERNATE NO. 1 – PLUMBING

SITE 012

DATE FEBRUARY 2012
PROJECT NO 60239135
FILENAME
FILE NO
SHEET NO
DRAWING NO B-P-09

Plotted By: megan
Plot File Date Created: Feb/24/2012 9:57 AM
Layout-Sheet Name: ATTIC FLOOR PLAN – ALTERNATE NO. 1 – PLUMBING
Filename: G:\PROJECTS\2011\11-046\DRAWINGS\01 – DDS\PLOT SHEETS\PLUMBING\P106A.DWG

Xrefs: ..\..\Reference Drawings\z-22x34 to.dwg
G:\PROJECTS\2011\11-046\Drawings\01 – DDs\Working Drawings\Plumbing\sp-06-attic4.dwg
..\..\Reference Drawings\z-06-attic.dwg

Images:

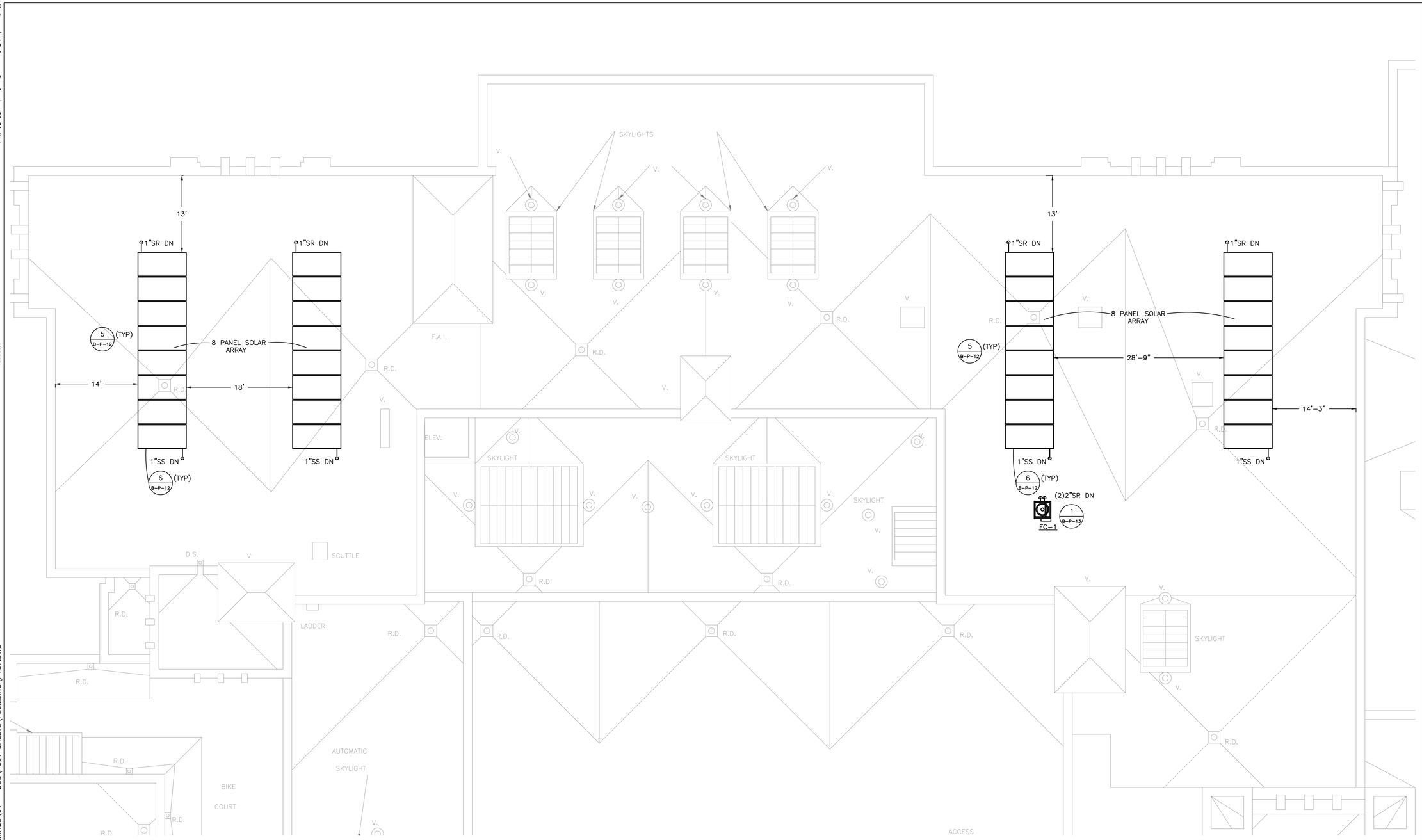

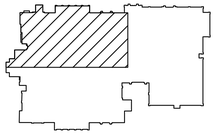

ROOF PLAN - BASE - PLUMBING

1/8" = 1'-0"

1 INCH

NORTH

NO	REVISIONS	DRN	CHK	DATE

DRN –
DES –
CHK –
APP KEH

Milwaukee Public Schools
Division of Facilities and Maintenance Services
1334 North 11th Street
Milwaukee, Wisconsin 53205-0259
Phone: 414 475-8000
Fax: 414 383-1882

PSJ ENGINEERING, INC.
CONSULTING ENGINEERS
MILWAUKEE: (414)358-2811
WAUKESHA: (262)542-0850
PLUMBING, HVAC, FIRE PROTECTION
DOCUMENTS DESIGNED BY MCB

City of Milwaukee
Department of Public Works

AECOM
4135 TECHNOLOGY PARKWAY
SHEBOYGAN, WI 53083-1883
T 920.458.8711 F 920.458.0537
WWW.AECOM.COM

MILWAUKEE PUBLIC SCHOOLS
CITY OF MILWAUKEE, WISCONSIN
SOLAR PROJECTS

ROOF PLAN – BASE – PLUMBING

SITE 012

DATE FEBRUARY 2012
PROJECT NO 60239135
FILENAME
FILE NO
SHEET NO
DRAWING NO B–P–10

Plotted By: megan
Plot File Date Created: Feb/24/2012 9:57 AM
Layout-Sheet Name: ROOF PLAN – BASE – PLUMBING
Filename: G:\PROJECTS\2011\11-046\DRAWINGS\01 – DDS\PLOT SHEETS\PLUMBING\P107.DWG

Xrefs: ..\..\Reference Drawings\z-22x34 to.dwg
..\..\Working Drawings\Plumbing\wp-07-roof.dwg
..\..\Reference Drawings\z-07-roof.dwg

Images:

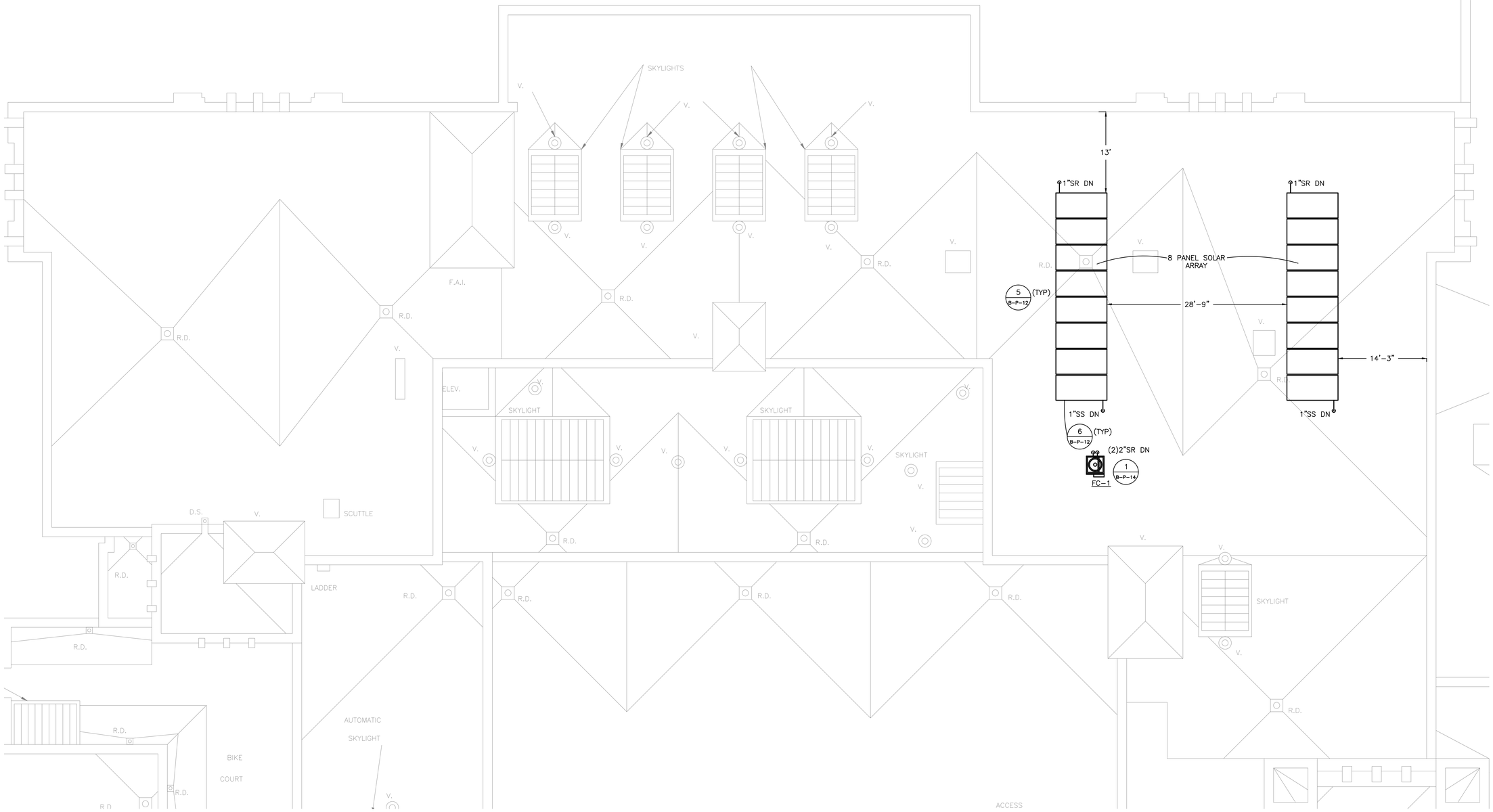

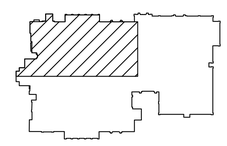

ROOF PLAN - ALTERNATE NO. 1 - PLUMBING

1/8" = 1'-0"

1 INCH

NORTH

NO	REVISIONS	DRN	CHK	DATE

DRN –
DES –
CHK –
APP KEH

Milwaukee Public Schools
Division of Facilities and Maintenance Services
1234 North 11th Street
Milwaukee, Wisconsin 53205-0259
Phone: 414 475-8000
Fax: 414 383-4882

P&J ENGINEERING, INC.
CONSULTING ENGINEERS
MILWAUKEE: (414)358-2811
WAUKESHA: (262)542-0850
PLUMBING, HVAC, FIRE PROTECTION
DOCUMENTS DESIGNED BY MCB

City of Milwaukee
Department of Public Works

AECOM
4135 TECHNOLOGY PARKWAY
SHEBOYGAN, WI 53083-1883
T 920.458.8711 F 920.458.0537
WWW.AECOM.COM

MILWAUKEE PUBLIC SCHOOLS
SOLAR PROJECTS
CITY OF MILWAUKEE, WISCONSIN

ROOF PLAN – ALTERNATE NO. 1 – PLUMBING
SITE 012

DATE FEBRUARY 2012
PROJECT NO 60239135
FILENAME
FILE NO
SHEET NO
DRAWING NO B–P–11

Xrefs: ..\..\Reference Drawings\2-22x34 to.dwg
G:\PROJECTS\2011\11-046\Drawings\01 - DDs\Working Drawings\Plumbing\sp-07-roofA.dwg

Images:

Plotted By: megan
Plot File Date Created: Feb/24/2012 9:57 AM
Layout-Sheet Name: ROOF PLAN - ALTERNATE NO. 1 - PLUMBING
Filename: G:\PROJECTS\2011\11-046\DRAWINGS\01 - DDS\PLOT SHEETS\PLUMBING\P107A.DWG

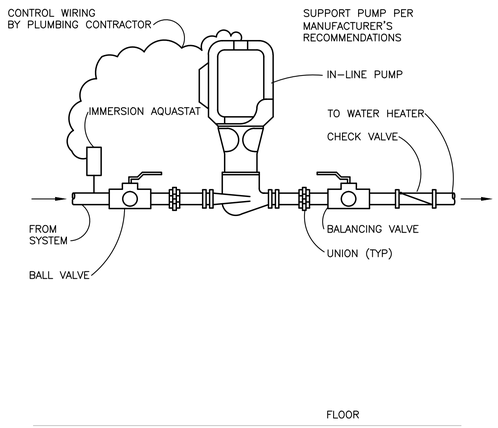

1 INLINE CIRCULATING PUMP DETAIL
SCALE: NONE

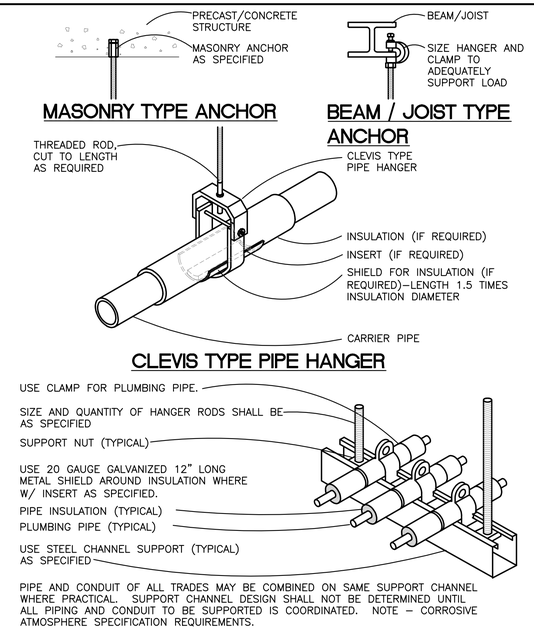

2 PIPE HANGER DETAILS
SCALE: NONE

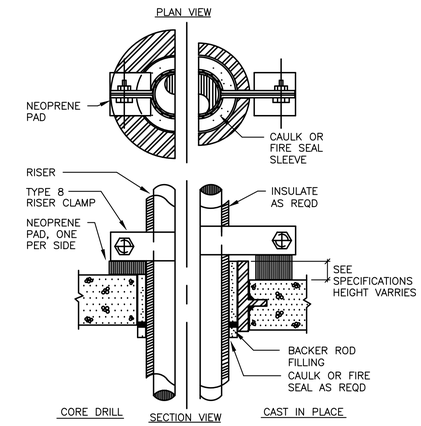

3 RISER CLAMP AT FLOOR DETAIL
SCALE: NONE

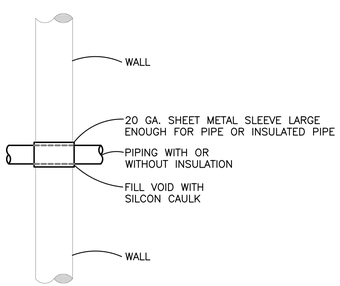

4 NON-FIRE RATED WALL SLEEVE ASSEMBLY DETAIL
SCALE: NONE

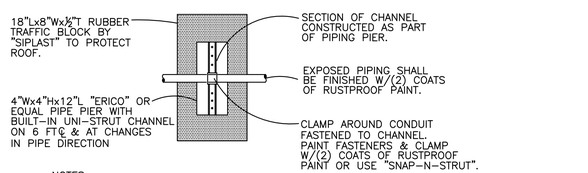

NOTES:
INSTALL A MINIMUM OF (2) SUPPORTS PER PIECE OF ROOFTOP EQUIPMENT.
PAINT ALL EXPOSED PIPING, SUPPORTS, FASTENERS. ETC. WITH (2) COATS OF RUST PROOF PAINT

5 ROOF MOUNTED PIPING SUPPORT DETAIL
SCALE: NONE

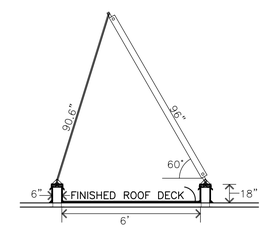

DETAIL NOTES:
1 - VERIFY ROOF SUPPORT RAIL LENGTHS AND LOCATIONS WITH EXACT PANEL MANUFACTURER
2 - RAIL SPACING AND DIMENSIONS ARE BASED ON (8) 48"x96" (32 SF) PANELS

6 SOLAR THERMAL PANEL PANEL ARRAY ELEVATION
SCALE: NONE

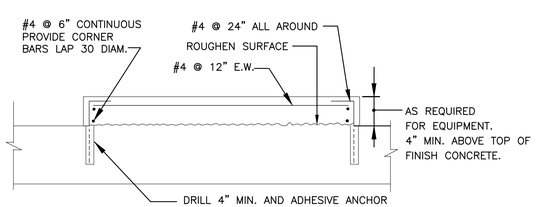

7 CONCRETE EQUIPMENT PADS FOR EXISTING CONSTRUCTION
SCALE: NONE

NO	REVISIONS	DRN	CHK	DATE

DRN -
DES -
CHK -
APP KEH

Milwaukee Public Schools
Division of Facilities and Maintenance Services
1336 North 11th Street
Milwaukee, Wisconsin
Milwaukee, Wisconsin 53205-0259
Phone: 414 475-8000
Fax: 414 383-4882

PSJ ENGINEERING, INC.
CONSULTING ENGINEERS
MILWAUKEE: (414)358-2811
MADISON: (608)836-0500
PLUMBING, HVAC, FIRE PROTECTION
DOCUMENTS DESIGNED BY MCS

City of Milwaukee
Department of Public Works

AECOM
4135 TECHNOLOGY PARKWAY
SHEBOYGAN, WI 53083-1883
T 920.458.8711 F 920.458.0537
WWW.AECOM.COM

MILWAUKEE PUBLIC SCHOOLS
SOLAR PROJECTS
CITY OF MILWAUKEE, WISCONSIN

DETAILS - PLUMBING

SITE 012

DATE FEBRUARY 2012
PROJECT NO 60239135
FILENAME
FILE NO
SHEET NO
DRAWING NO B-P-12

Xrefs: ..\..\Reference Drawings\2-22x34 to.dwg
Images:

Plotted By: megan
Plot File Date Created: Feb/24/2012 9:57 AM
Layout-Sheet Name: DETAILS - PLUMBING
Filename: G:\PROJECTS\2011\11-046\DRAWINGS\01 - DDS\PLOT SHEETS\PLUMBING\P200.DWG

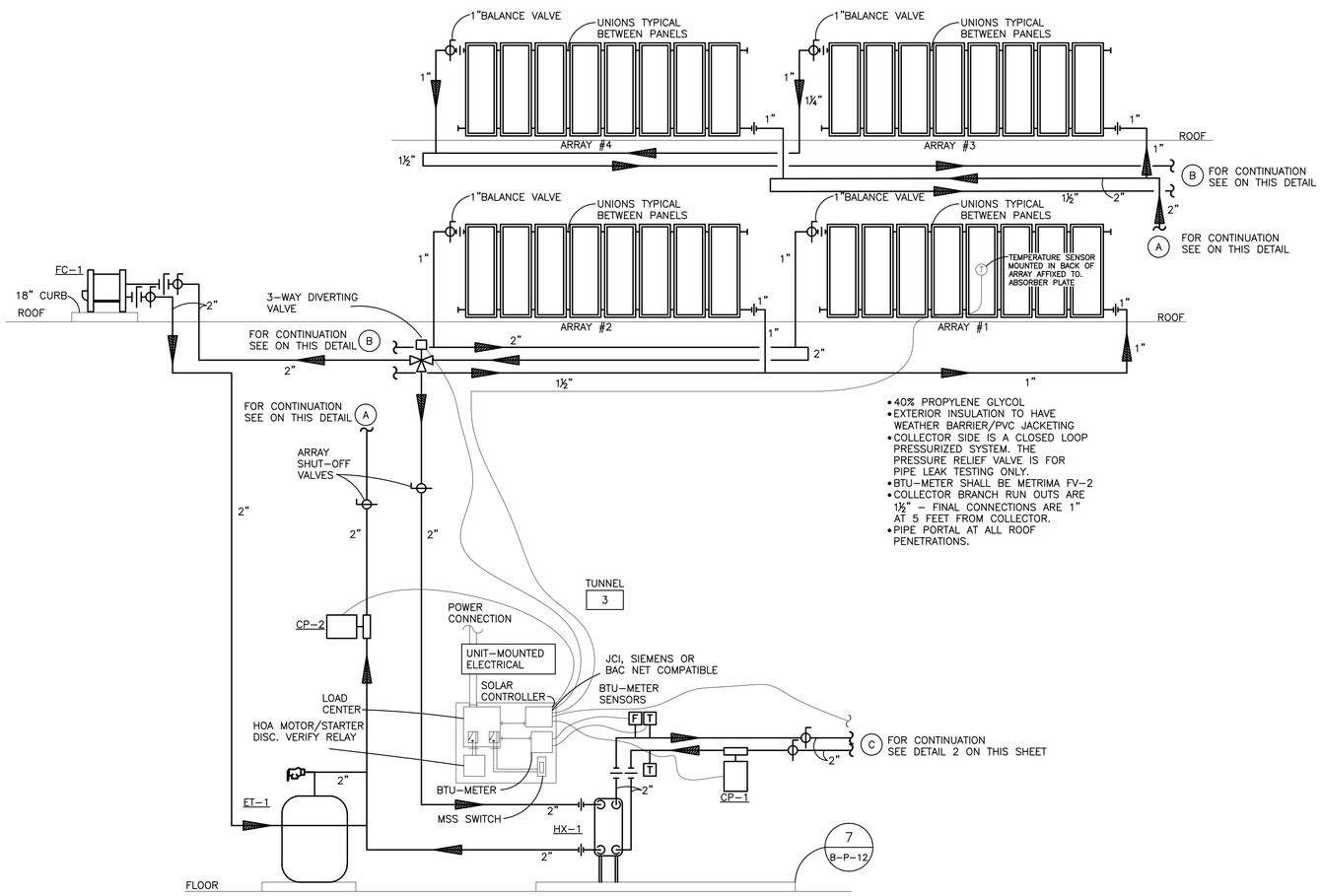

- 40% PROPYLENE GLYCOL
- EXTERIOR INSULATION TO HAVE WEATHER BARRIER/PVC JACKETING
- COLLECTOR SIDE IS A CLOSED LOOP PRESSURIZED SYSTEM. THE PRESSURE RELIEF VALVE IS FOR PIPE LEAK TESTING ONLY.
- BTU-METER SHALL BE METRIMA FV-2
- COLLECTOR BRANCH RUN OUTS ARE 1½" – FINAL CONNECTIONS ARE 1" AT 5 FEET FROM COLLECTOR.
- PIPE PORTAL AT ALL ROOF PENETRATIONS.

1 SOLAR LOOP SCHEMATIC (PRESSURIZED)

SCALE: NONE

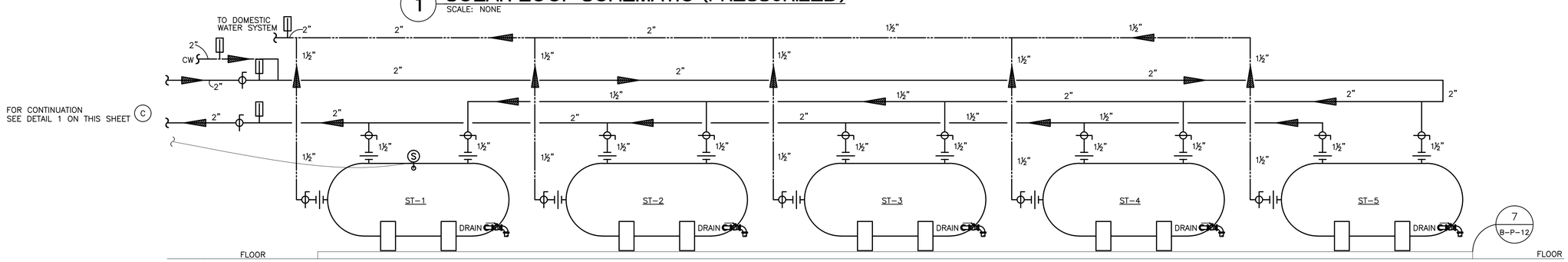

2 HORIZONTAL STORAGE TANK SCHEMATIC

SCALE: NONE

NO	REVISIONS	DRN	CHK	DATE

DRN – DES – CHK – APP KEH

Milwaukee Public Schools
Division of Facilities and Maintenance Services
1336 North 11th Street
Milwaukee, Wisconsin 53205
Milwaukee, Wisconsin 53205-0259
Phone: 414 475-8000
Fax: 414 383-4882

PSJ ENGINEERING, INC.
CONSULTING ENGINEERS
MILWAUKEE: (414)358-2811
WAUKESHA: (262)542-9580
PLUMBING, HVAC, FIRE PROTECTION
DOCUMENTS DESIGNED BY MCS

City of Milwaukee
Department of Public Works

AECOM
4135 TECHNOLOGY PARKWAY
SHEBOYGAN, WI 53083-1883
T 920.458.8711 F 920.458.0537
WWW.AECOM.COM

MILWAUKEE PUBLIC SCHOOLS
SOLAR PROJECTS
CITY OF MILWAUKEE, WISCONSIN

DETAILS – BASE – PLUMBING

SITE 012

DATE FEBRUARY 2012
PROJECT NO 60239135
FILENAME
FILE NO
SHEET NO
DRAWING NO B-P-13

Xrefs: ..\..\Reference Drawings\2-22x34 to.dwg
Images:

Plotted By: megan
Plot File Date Created: Feb/24/2012 9:57 AM
Layout-Sheet Name: DETAILS – BASE – PLUMBING
Filename: G:\PROJECTS\2011\11-046\DRAWINGS\01 – DDS\PLOT SHEETS\PLUMBING\P201.DWG

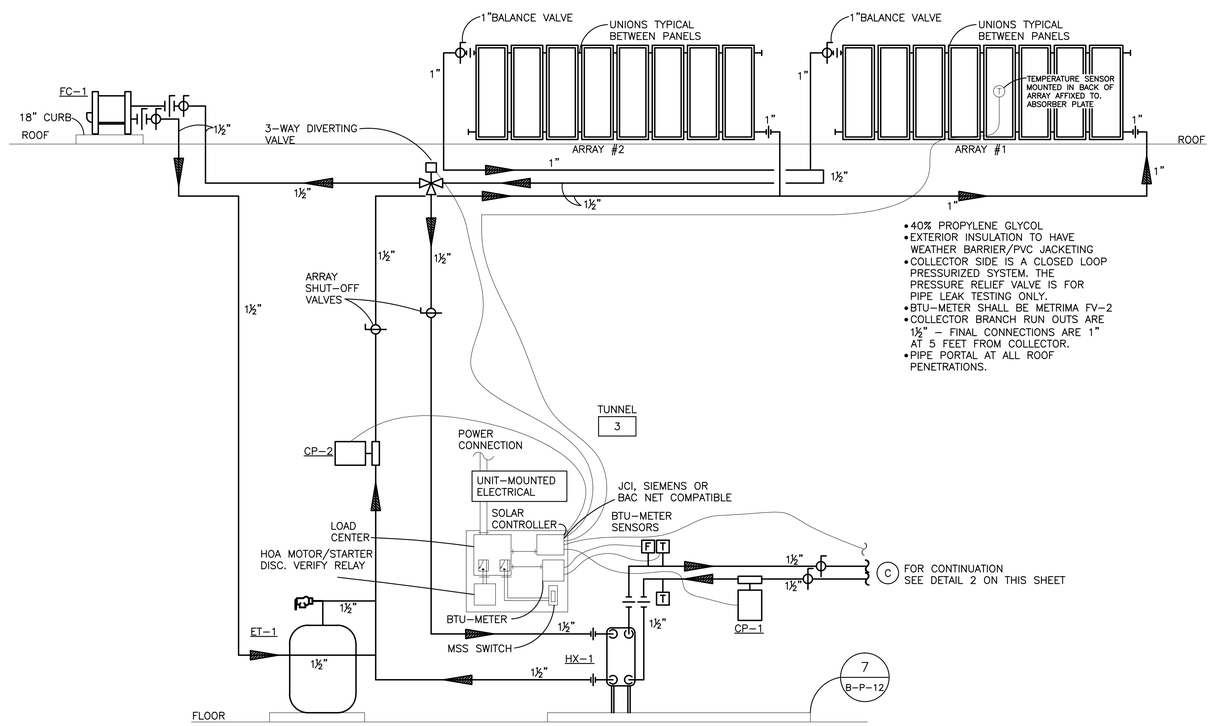

- 40% PROPYLENE GLYCOL
- EXTERIOR INSULATION TO HAVE WEATHER BARRIER/PVC JACKETING
- COLLECTOR SIDE IS A CLOSED LOOP PRESSURIZED SYSTEM. THE PRESSURE RELIEF VALVE IS FOR PIPE LEAK TESTING ONLY.
- BTU-METER SHALL BE METRIMA FV-2
- COLLECTOR BRANCH RUN OUTS ARE 1½" – FINAL CONNECTIONS ARE 1" AT 5 FEET FROM COLLECTOR.
- PIPE PORTAL AT ALL ROOF PENETRATIONS.

1 SOLAR LOOP SCHEMATIC (PRESSURIZED)

SCALE: NONE

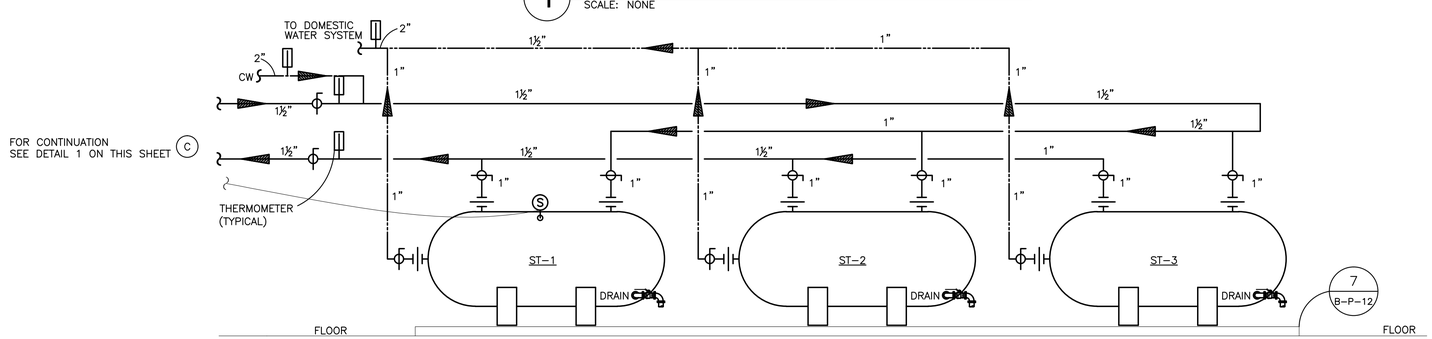

2 HORIZONTAL STORAGE TANK SCHEMATIC

SCALE: NONE

NO	REVISIONS	DRN	CHK	DATE

DRN – DES – CHK – APP KEH

Milwaukee Public Schools
Division of Facilities and Maintenance Services
1336 North 11th Street
Milwaukee, Wisconsin 53205
Phone: 414 475-8000
Fax: 414 265-4862

PSJ ENGINEERING, INC.
CONSULTING ENGINEERS
MILWAUKEE: (414)358-2811
MADISON: (608)256-0563
PLUMBING, HVAC, FIRE PROTECTION
DOCUMENTS DESIGNED BY MCB

City of Milwaukee
Department of Public Works

AECOM
4135 TECHNOLOGY PARKWAY
SHEBOYGAN, WI 53083-1883
T 920.458.8711 F 920.458.0537
WWW.AECOM.COM

MILWAUKEE PUBLIC SCHOOLS
SOLAR PROJECTS
CITY OF MILWAUKEE, WISCONSIN

DETAILS – ALTERNATE NO. 1 – PLUMBING
SITE 012

DATE FEBRUARY 2012
PROJECT NO 60239135
FILENAME
FILE NO
SHEET NO
DRAWING NO B–P–14

Xrefs: ..\..\Reference Drawings\2-22x34 to.dwg
Images:

Plotted By: megan
Plot File Date Created: Feb/24/2012 9:57 AM
Layout-Sheet Name: DETAILS – ALTERNATE NO. 1 – PLUMBING
Filename: G:\PROJECTS\2011\11-046\DRAWINGS\01 – DDS\PLOT SHEETS\PLUMBING\P201A.DWG

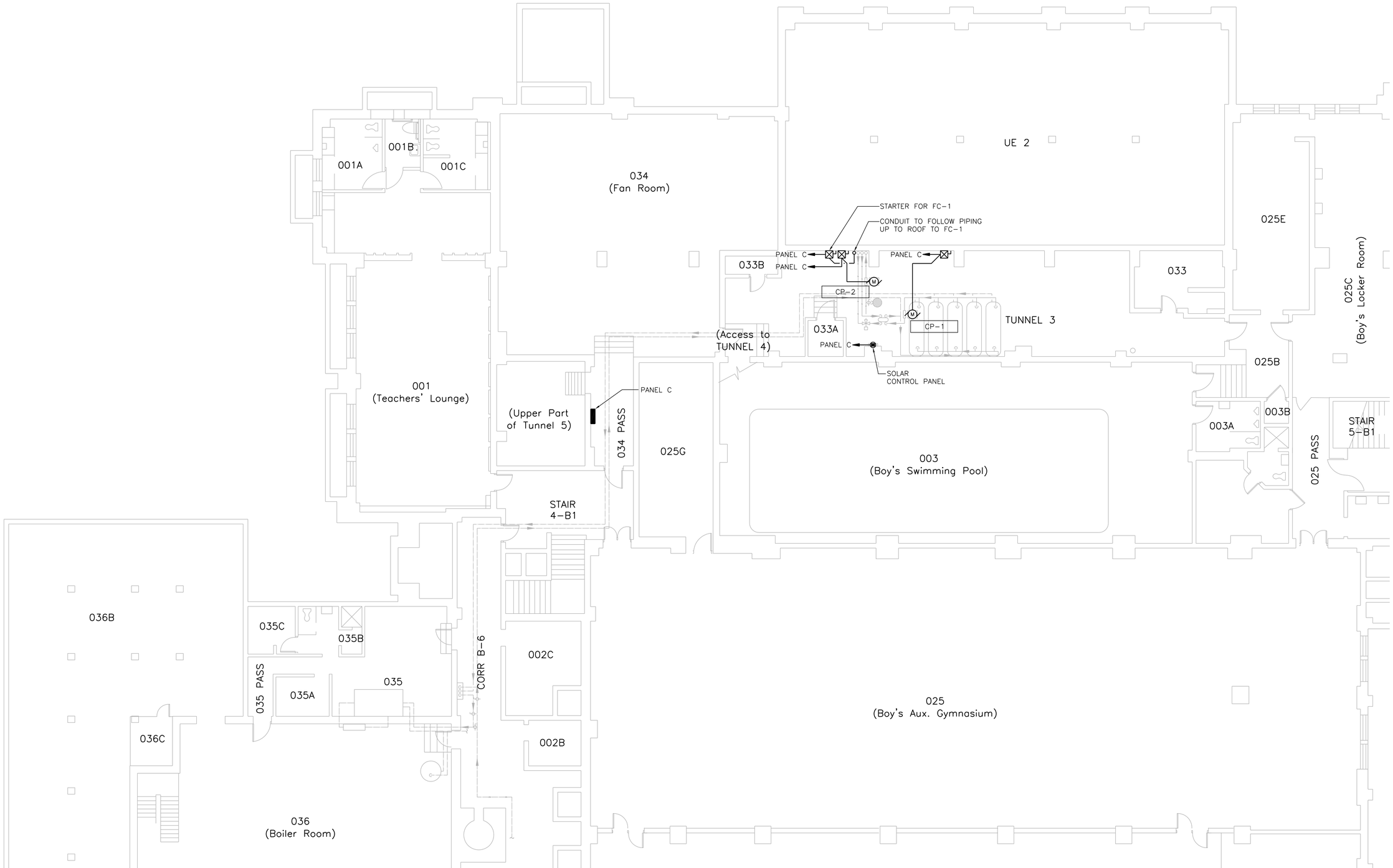

BASEMENT PLAN

SITE NO: 012 – BAY VIEW HIGH SCHOOL
2751 S. LENOX STREET, MILW., WI 53207-2299

NOTE: ELECTRICAL REQUIREMENTS ARE THE SAME FOR THE ALTERNATE BID.

0' 4' 8' 16'
SCALE

NO	REVISIONS	DRN	CHK	DATE

DRN KWB –
DES WRW –
CHK EDM –
APP KEH –

Milwaukee Public Schools
Division of Facilities and Maintenance Services
1124 North 11th Street
P.O. BOX 0259
Milwaukee, Wisconsin 53205-0259
Phone : 414 283-4600
Fax : 414 283-4682

PSJ ENGINEERING, INC.
CONSULTING ENGINEERS
MILWAUKEE: (414)352-2211
MADISON: (608)251-5820
PLUMBING, HVAC, FIRE PROTECTION DOCUMENTS DESIGNED BY MXB

City of Milwaukee
Department of Public Works

AECOM
4135 TECHNOLOGY PARKWAY
SHEBOYGAN, WI 53083-1883
T 920.458.8711 F 920.458.0537
WWW.AECOM.COM

MILWAUKEE PUBLIC SCHOOLS
SOLAR PROJECTS
CITY OF MILWAUKEE, WISCONSIN

BAY VIEW HIGH SCHOOL
BASEMENT PLAN
SITE 012

DATE FEBRUARY 2012
PROJECT NO 60239135
FILENAME B-E-01.DWG
FILE NO
SHEET NO
DRAWING NO
B-E-01

Xrefs: AE2234bd.dwg
bayview-bmt-01-x.dwg
xp-01-base.dwg

Images:

Plotted By: brendelk
Plot File Date Created: Feb/14/2012 11:37 AM
Layout-Sheet Name: WORK
Filename: L:\WORK\60223648\000_CADD\B-E-01.DWG

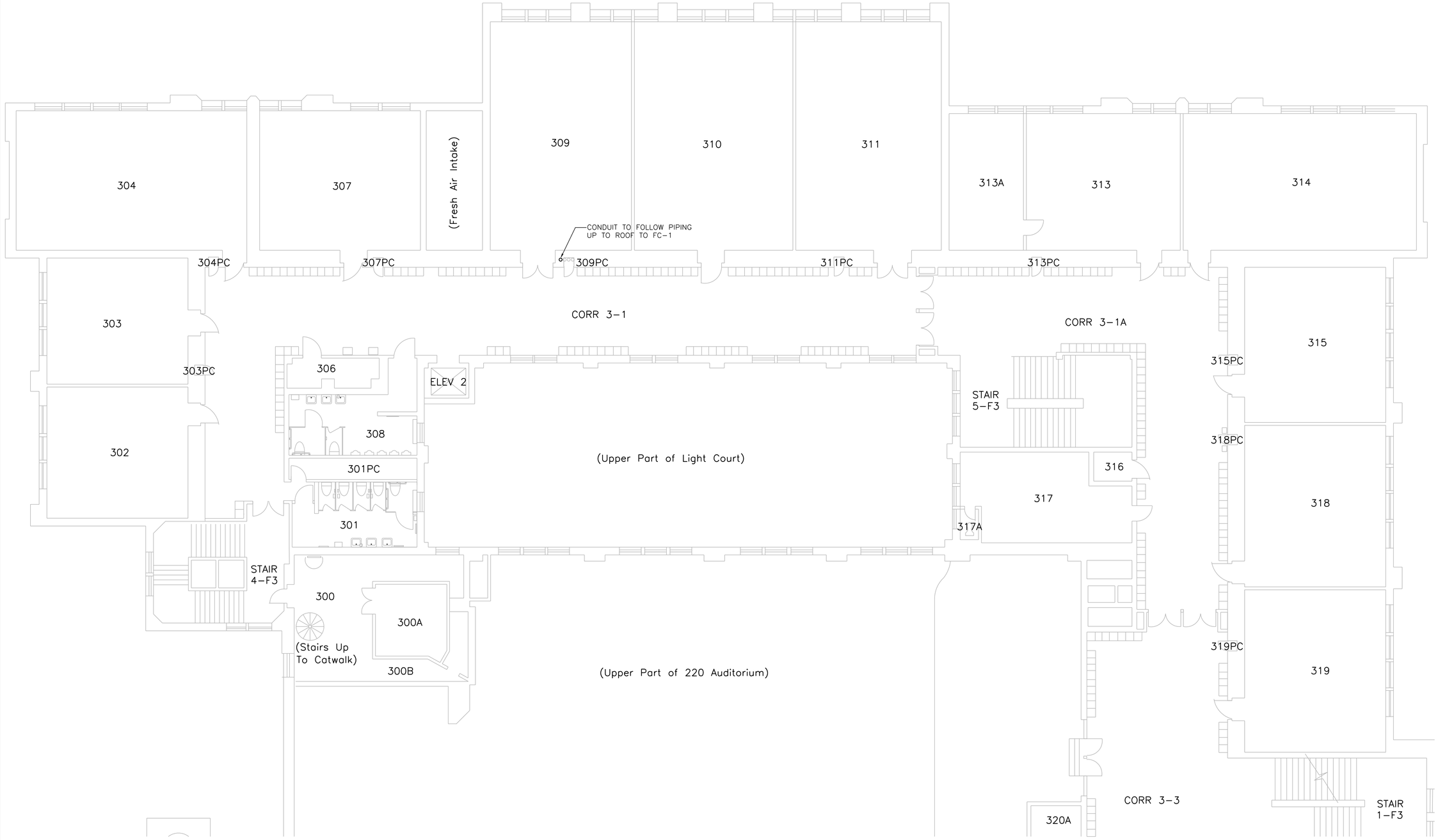

TYPICAL FIRST - FOURTH FLOOR PLAN

SITE NO: 012 – BAY VIEW HIGH SCHOOL
2751 S. LENOX STREET, MILW., WI 53207-2299

0' 4' 8' 16'
SCALE

NO	REVISIONS	DRN	CHK	DATE

DRN KWB
DES WRW
CHK EDM
APP KEH

Milwaukee Public Schools
Division of Facilities and Maintenance Services
1124 North 11th Street
P.O. Box 2032
Milwaukee, Wisconsin 53205-0259
Phone: 414 383-4000
Fax: 414 383-4682

PSJ ENGINEERING, INC.
CONSULTING ENGINEERS
MILWAUKEE: (414)352-2211
MADISON: (608)251-3820
BUILDING SYSTEMS, FIRE PROTECTION
DOCUMENTS DESIGNED BY MSB

City of Milwaukee
Department of Public Works

AECOM
4135 TECHNOLOGY PARKWAY
SHEBOYGAN, WI 53083-1883
T 920.458.8711 F 920.458.0537
WWW.AECOM.COM

MILWAUKEE PUBLIC SCHOOLS
SOLAR PROJECTS
CITY OF MILWAUKEE, WISCONSIN

BAY VIEW HIGH SCHOOL
TYPICAL FIRST - FOURTH FLOOR PLAN
SITE 012

DATE FEBRUARY 2012
PROJECT NO 60239135
FILENAME B-E-02.DWG
FILE NO
SHEET NO
DRAWING NO **B-E-02**

Xrefs: AE2234bd.dwg boyrate-fir-03-x.dwg xp-04-third.dwg
Images:

Plotted By: brendelk
Plot File Date Created: Feb/14/2012 11:35 AM
Layout-Sheet Name: WORK
Filename: L:\WORK\60223648\000_CADD\B-E-02.DWG

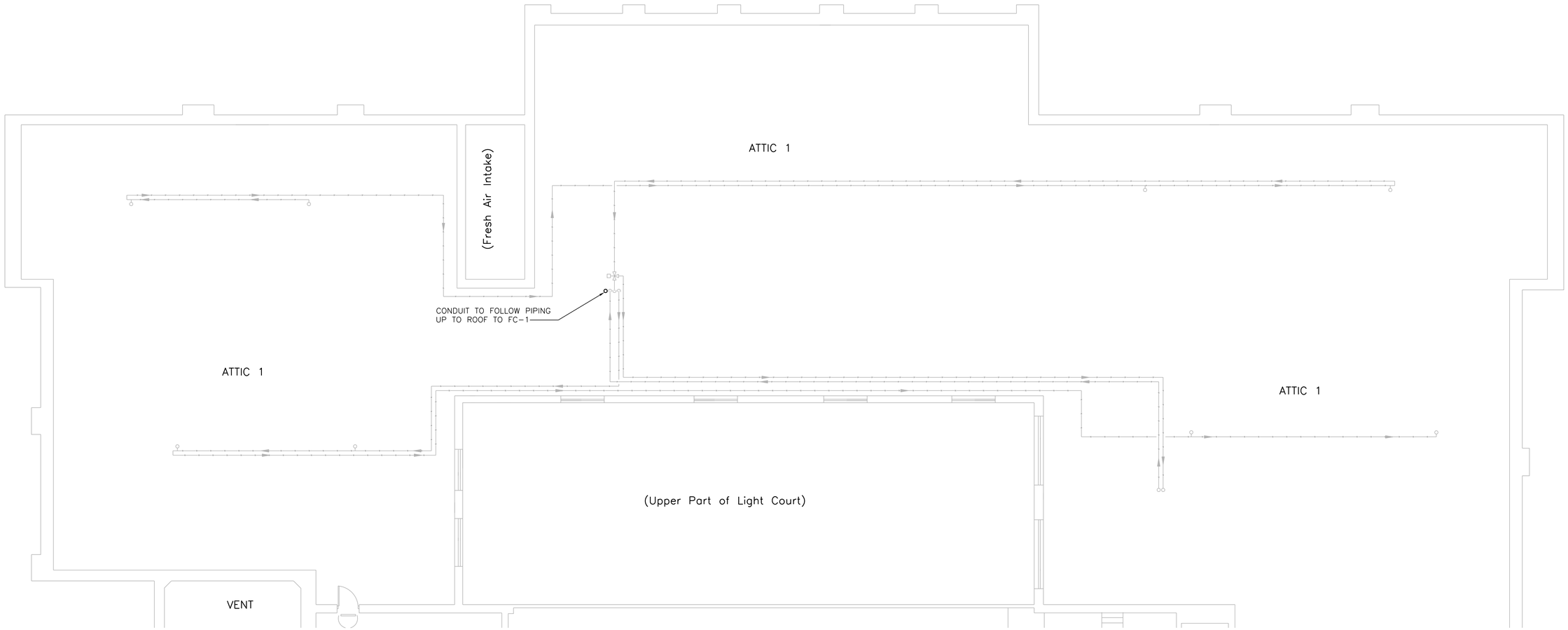

ATTIC FLOOR PLAN

SITE NO: 012 – BAY VIEW HIGH SCHOOL
2751 S. LENOX STREET, MILW., WI 53207-2299

0' 4' 8' 16'
SCALE

NO	REVISIONS	DRN	CHK	DATE

DRN	KWB	–
DES	WRW	–
CHK	EDM	–
APP	KEH	–

Milwaukee Public Schools
Division of Facilities and Maintenance Services
1124 North 11th Street
P.O. BOX 0259
Milwaukee, Wisconsin 53205-0259
Phone : 414 283-4600
Fax : 414 283-4682

PSJ ENGINEERING, INC.
CONSULTING ENGINEERS
MILWAUKEE: (414)352-2211
MADISON: (608)251-5820
PLUMBING, HVAC, FIRE PROTECTION DOCUMENTS DESIGNED BY MXB

City of Milwaukee
Department of Public Works

AECOM
4135 TECHNOLOGY PARKWAY
SHEBOYGAN, WI 53083-1883
T 920.458.8711 F 920.458.0537
WWW.AECOM.COM

MILWAUKEE PUBLIC SCHOOLS
SOLAR PROJECTS
CITY OF MILWAUKEE, WISCONSIN

BAY VIEW HIGH SCHOOL
ATTIC FLOOR PLAN
SITE 012

DATE	FEBRUARY 2012
PROJECT NO	60239135
FILENAME	B-E-03.DWG
FILE NO	
SHEET NO	
DRAWING NO	B-E-03

Plotted By: brendelk
Plot File Date Created: Feb/14/2012 11:41 AM
Layout-Sheet Name: WORK
Filename: L:\WORK\60223648\000_CADD\B-E-03.DWG
Xrefs: AE2234bd.dwg
bayview-att-01-x.dwg
xp-06-attic.dwg
Images:

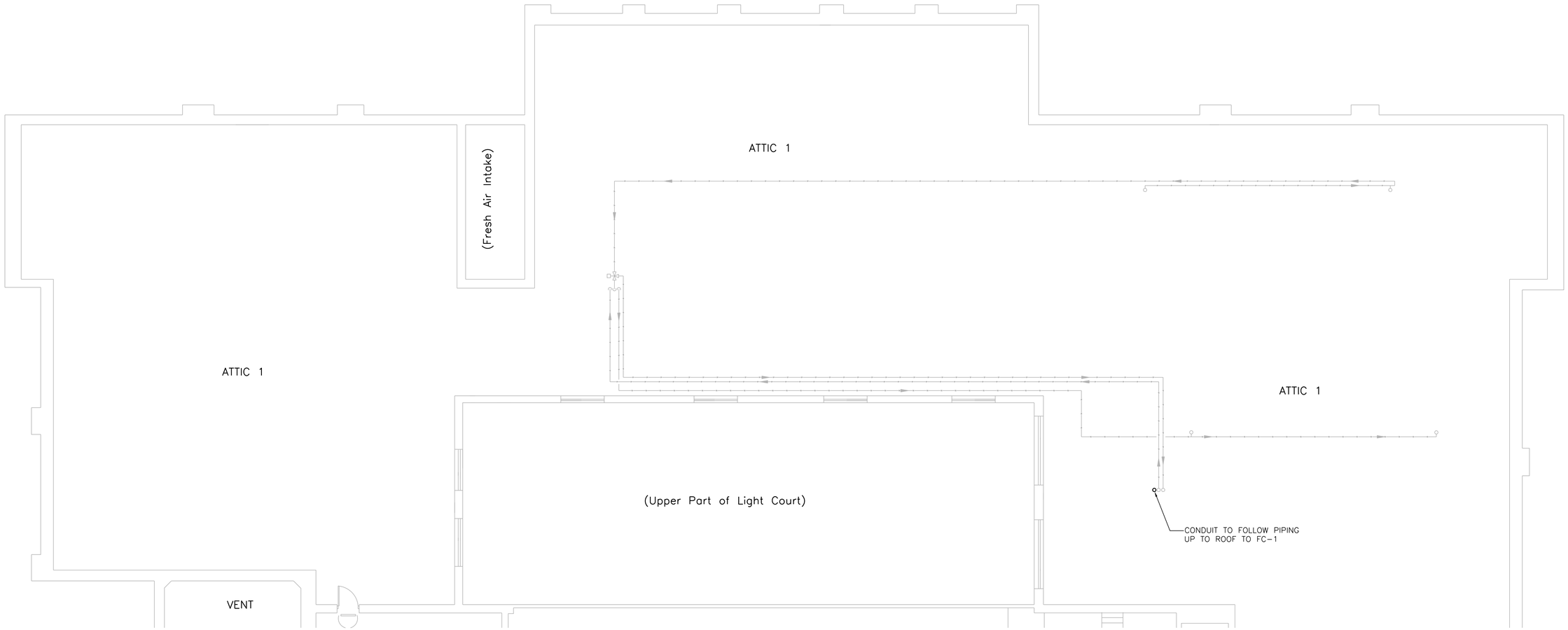

ATTIC PLAN ALTERNATE

SITE NO: 012 – BAY VIEW HIGH SCHOOL
2751 S. LENOX STREET, MILW., WI 53207-2299

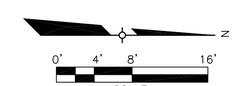

NO	REVISIONS	DRN	CHK	DATE

DRN	KWB	–
DES	WRW	–
CHK	EDM	–
APP	KEH	–

Milwaukee Public Schools
Division of Facilities and Maintenance Services
1124 North 11th Street
P.O. BOX 0259
Milwaukee, Wisconsin 53205-0259
Phone : 414 283-4600
Fax : 414 283-4682

PSJ ENGINEERING, INC.
CONSULTING ENGINEERS
MILWAUKEE: (414)352-2211
MADISON: (608)251-5820
PLUMBING, HVAC, FIRE PROTECTION DOCUMENTS DESIGNED BY MXB

City of Milwaukee
Department of Public Works

AECOM
4135 TECHNOLOGY PARKWAY
SHEBOYGAN, WI 53083-1883
T 920.458.8711 F 920.458.0537
WWW.AECOM.COM

MILWAUKEE PUBLIC SCHOOLS
SOLAR PROJECTS
CITY OF MILWAUKEE, WISCONSIN

BAY VIEW HIGH SCHOOL
ATTIC PLAN ALTERNATE
SITE 012

DATE FEBRUARY 2012
PROJECT NO 60239135
FILENAME B-E-04.DWG
FILE NO
SHEET NO
DRAWING NO
B-E-04

Xrefs: AE2234bd.dwg
bayview-att-01-x.dwg
xp-06-atticA.dwg

Images:

Plotted By: brendelk
Plot File Date Created: Feb/14/2012 11:43 AM
Layout-Sheet Name: WORK
Filename: L:\WORK\60223648\000_CADD\B-E-04.DWG

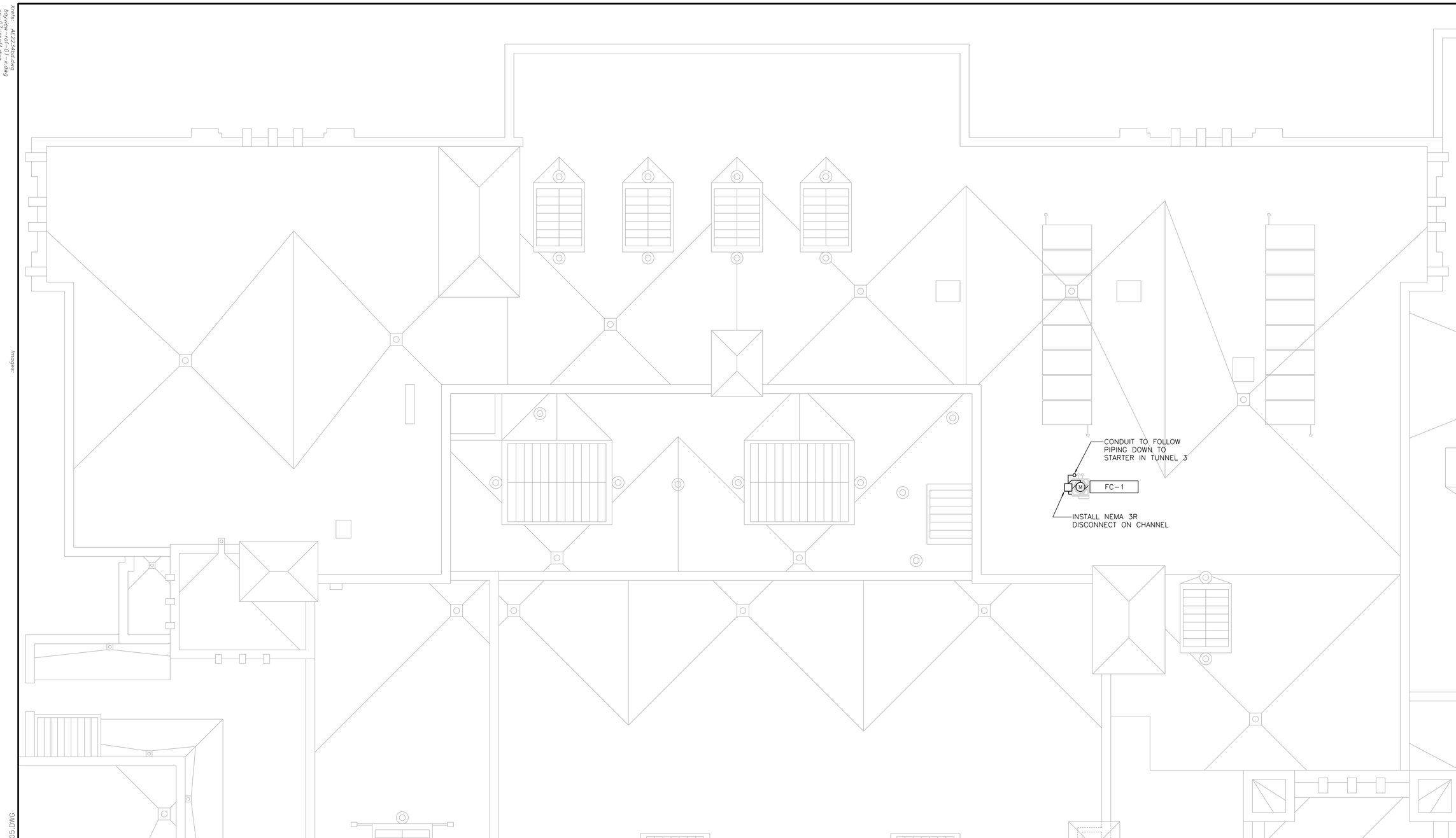

ROOF PLAN ALTERNATE

SITE NO: 012 – BAY VIEW HIGH SCHOOL
2751 S. LENOX STREET, MILW., WI 53207-2299

NO	REVISIONS	DRN	CHK	DATE

DRN	KWB	–
DES	WRW	–
CHK	EDM	–
APP	KEH	–

Milwaukee Public Schools
Division of Facilities and Maintenance Services
1124 North 11th Street
P.O. BOX 0259
Milwaukee, Wisconsin 53205-0259
Phone : 414 283-4600
Fax : 414 283-4682

PSJ ENGINEERING, INC.
CONSULTING ENGINEERS
MILWAUKEE: (414)352-2211
MADISON: (608)251-5820
PLUMBING, HVAC, FIRE PROTECTION DOCUMENTS DESIGNED BY MXB

City of Milwaukee
Department of Public Works

AECOM
4135 TECHNOLOGY PARKWAY
SHEBOYGAN, WI 53083-1883
T 920.458.8711 F 920.458.0537
WWW.AECOM.COM

MILWAUKEE PUBLIC SCHOOLS
SOLAR PROJECTS
CITY OF MILWAUKEE, WISCONSIN

BAY VIEW HIGH SCHOOL
ROOF PLAN ALTERNATE
SITE 012

DATE	FEBRUARY 2012
PROJECT NO	60239135
FILENAME	B-E-05.DWG
FILE NO	
SHEET NO	
DRAWING NO	B-E-05

Xrefs: AE2234bd.dwg
bayview-rof-01-x.dwg
xp-07-roofA.dwg
Images:
Plotted By: brendelk
Plot File Date Created: Feb/14/2012 11:45 AM
Layout-Sheet Name: WORK
Filename: L:\WORK\60223648\000_CADD\B-E-05.DWG

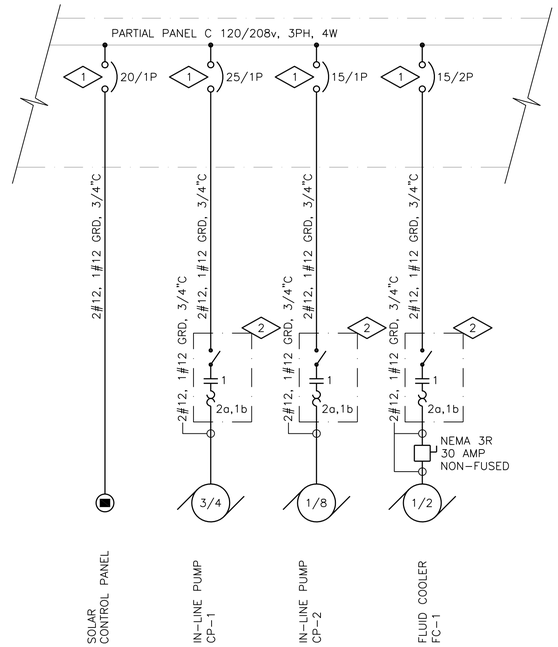

THERMAL SOLAR POWER DISTRIBUTION ONE-LINE DIAGRAM

NTS

NOTE: PROVIDE SAME FOR ALTERNATE BID ITEM.

DIAGRAM NOTES:

1. PROVIDE NEW CIRCUIT BREAKER IN SPACE IN EXISTING SQUARE D NQOB PANEL C. MATCH MANUFACTURER AND AIC RATING.
2. ALLEN BRADLEY SINGLE PHASE COMBINATION (DISCONNECT TYPE) MAGNETIC STARTER WITH 120v CONTROL POWER TRANSFORMER 2 N.O., 1 N.C. AUX CONTACTS, NEMA SIZE 1 MINIMUM, NEMA 12 ENCLOSURE.

NO	REVISIONS	DRN	CHK	DATE

DRN	KWB	-
DES	WRW	-
CHK	EDM	-
APP	KEH	-

Milwaukee Public Schools
Division of Facilities and Maintenance Services
1124 North 11th Street
P.O. BOX 0259
Milwaukee, Wisconsin 53205-0259
Phone : 414 283-4600
Fax : 414 283-4682

PSJ ENGINEERING, INC.
CONSULTING ENGINEERS
MILWAUKEE: (414)352-2211
MADISON: (608)251-5820
PLUMBING, HVAC, FIRE PROTECTION DOCUMENTS DESIGNED BY MXB

City of Milwaukee
Department of Public Works

AECOM
4135 TECHNOLOGY PARKWAY
SHEBOYGAN, WI 53083-1883
T 920.458.8711 F 920.458.0537
WWW.AECOM.COM

MILWAUKEE PUBLIC SCHOOLS
SOLAR PROJECTS
CITY OF MILWAUKEE, WISCONSIN

BAY VIEW HIGH SCHOOL
ONE-LINE DIAGRAM
SITE 012

DATE FEBRUARY 2012
PROJECT NO 60239135
FILENAME B-E-06.DWG
FILE NO
SHEET NO
DRAWING NO
B-E-06

Xrefs: AE2234bd.dwg
Images:
Plotted By: brendelk
Plot File Date Created: Feb/14/2012 11:47 AM
Layout-Sheet Name: WORK
Filename: L:\WORK\60223648\000_CADD\B-E-06.DWG

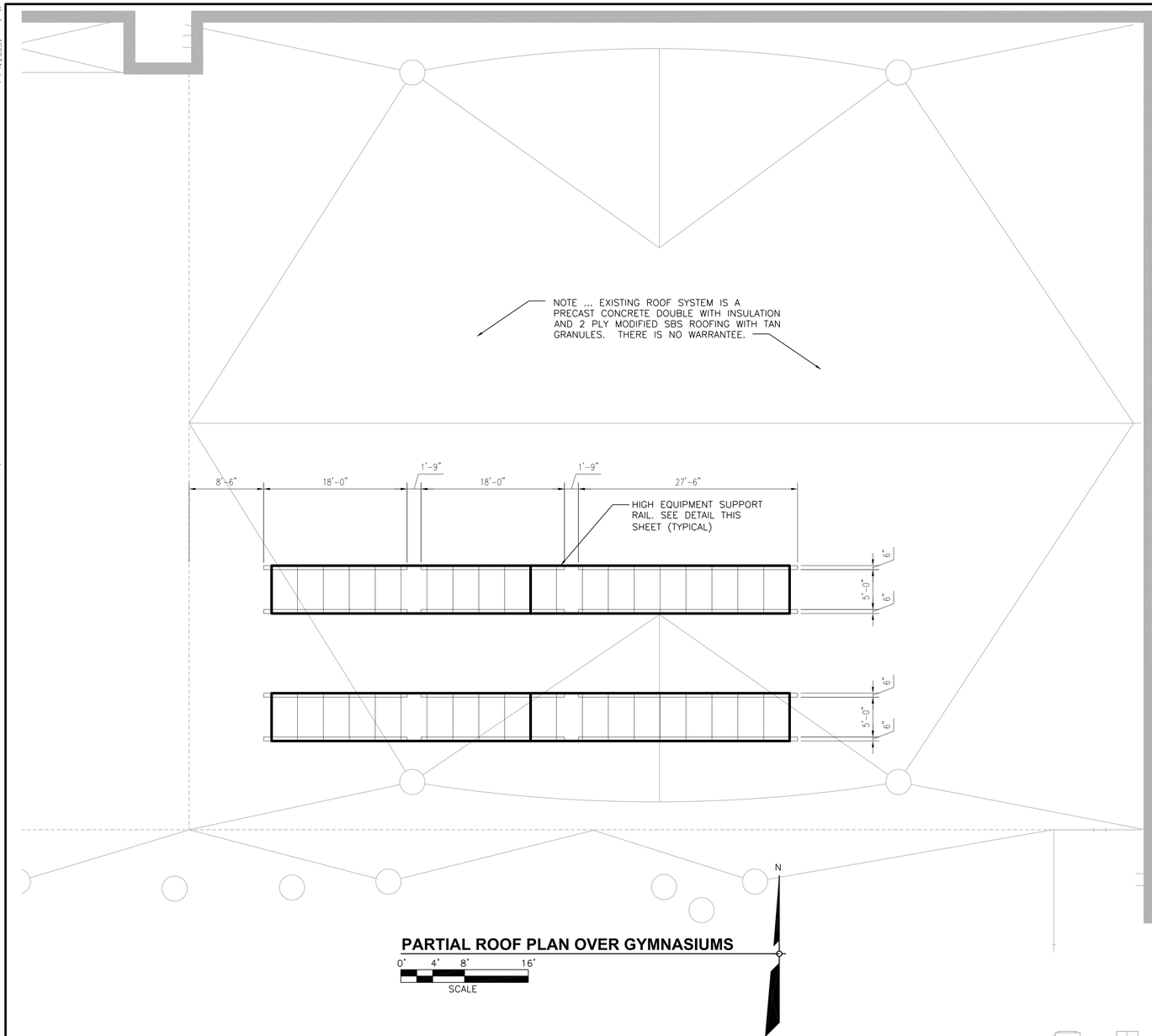

PARTIAL ROOF PLAN OVER GYMNASIUMS

0' 4' 8' 16'
SCALE

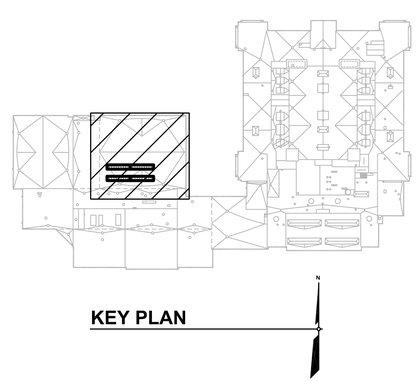

KEY PLAN

ROOF NOTES

1. PLANS ARE AS ACCURATE AS COULD BE DETERMINED FROM EXISTING DRAWINGS AND FIELD SURVEYS HOWEVER DEVIATIONS MAY EXIST. THEREFORE, IT IS THE RESPONSIBILITY OF CONTRACTOR TO VISIT THE SITE AND VERIFY EXISTING CONDITIONS. IGNORANCE OF EXISTING CONDITIONS WILL NOT BE ACCEPTED AS AN EXCUSE.
2. COORDINATE WITH OTHER CONTRACTORS PRIOR TO INSTALLING ROOF RAILS OR CURBS TO ASSURE CORRECT AND ACCURATE PLACEMENT OF RAILS FOR THE EXACT SOLAR PANEL SUPPORT SYSTEM PROVIDED.
3. ROOFING CONTRACTOR DOES NOT NECESSARILY HAVE THE RIGHT-OF-WAY AND MUST COORDINATE WITH OTHER CONTRACTORS AND PRESENT CONDITIONS TO AVOID INTERFERENCE.
4. THERE MAY BE OTHER PROJECT(S) BEING COMPLETED IN THE BUILDING IN CONJUNCTION WITH THIS PROJECT. THEREFORE, CONTRACTOR MAY EXPERIENCE TEMPORARY OUTAGES OF BUILDING SERVICES SUCH AS POWER, WATER, VENTILATION, ETC..
5. INSTALL ROOFING SADDLES AS REQUIRED TO MAINTAIN ROOF DRAINAGE AT EQUIPMENT SUPPORT RAILS AND ROOF PENETRATION CURBS.
6. THERE MAY BE CONDUITS ON THE CONCRETE DECK BELOW THE INSULATION. TAKE CARE WHEN CUTTING ROOF INSULATION SO CONDUITS ARE NOT SEVERED. SEE ROOF RAIL INSTALLATION DETAIL AND INSTALL AND NOTCH PLYWOOD PLATE ON RAIL BOTTOM TO ALLOW CONDUITS TO PASS THRU.
7. FASTEN CURBS AND SUPPORT RAILS WITH ADHESIVE ANCHORS. PROVIDE ANCHORS DESIGNED BY WISCONSIN PROFESSIONAL ENGINEER FOR CURBS, SUPPORT RAILS AND EQUIPMENT CONNECTIONS TO RESIST UPLIFT, SLIDING AND OVERTURNING.

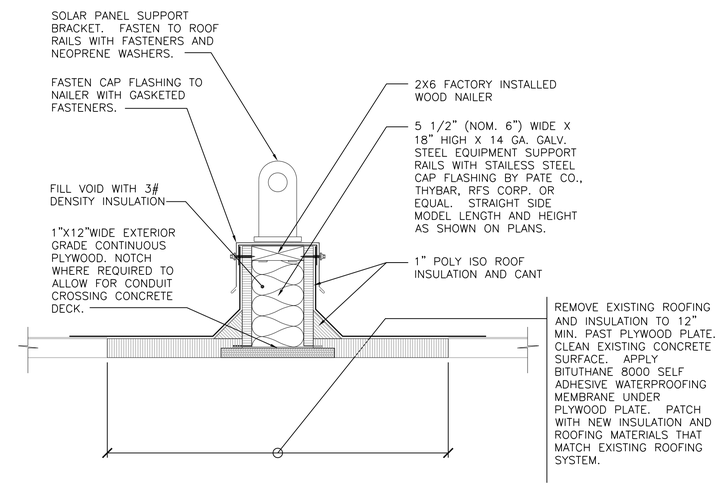

EQUIPMENT SUPPORT RAIL

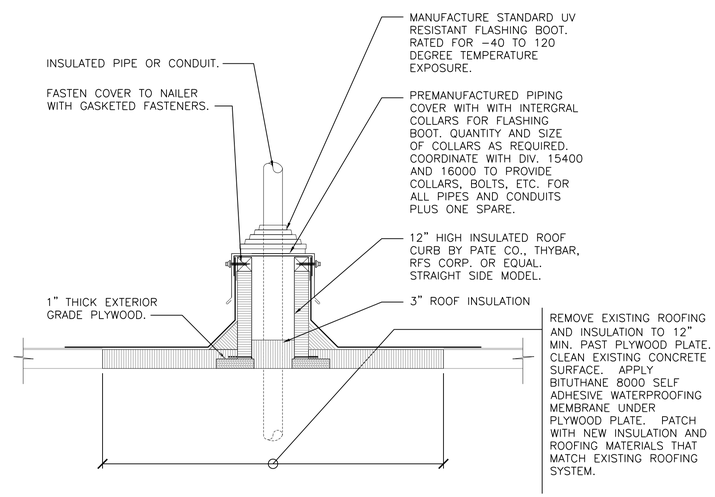

PIPE OR CONDUIT ROOF PENETRATION DETAIL

NO	REVISIONS	DRN	CHK	DATE

DRN	JMK	
DES	KEH	
CHK	EDM	
APP	KEH	

Milwaukee Public Schools
Division of Facilities and Maintenance Services
1124 North 11th Street
P.O. Box 2032
Milwaukee, Wisconsin 53205-0259
Phone: 414 383-4682
Fax: 414 383-4682

PSJ ENGINEERING, INC.
CONSULTING ENGINEERS
MILWAUKEE: (414)352-2211
MADISON: (608)251-3820
ELECTRICAL, MECHANICAL, FIRE PROTECTION
DOCUMENTS DESIGNED BY MJB

City of Milwaukee
Department of Public Works

AECOM
4135 TECHNOLOGY PARKWAY
SHEBOYGAN, WI 53083-1883
T 920.458.8711 F 920.458.0537
WWW.AECOM.COM

MILWAUKEE PUBLIC SCHOOLS
SOLAR PROJECTS
CITY OF MILWAUKEE, WISCONSIN

RIVERSIDE UNIVERSITY HS
ROOF PLAN
SITE 029

DATE	FEBRUARY 2012
PROJECT NO	60239135
FILENAME	R-A-01.DWG
FILE NO	
SHEET NO	
DRAWING NO	**R-A-01**

Xrefs: AE22345bd.dwg
L:\work\60223648\000_CADD\riverside-rf-x.dwg
L:\work\60223648\000_CADD\R-A-01.dwg
L:\work\60223648\000_CADD\R-H-01.dwg
Images:
Plotted By: brendelk
Plot File Date Created: Feb/24/2012 3:49 PM
Layout-Sheet Name: WORK
Filename: L:\WORK\60223648\000_CADD\R-A-01.DWG

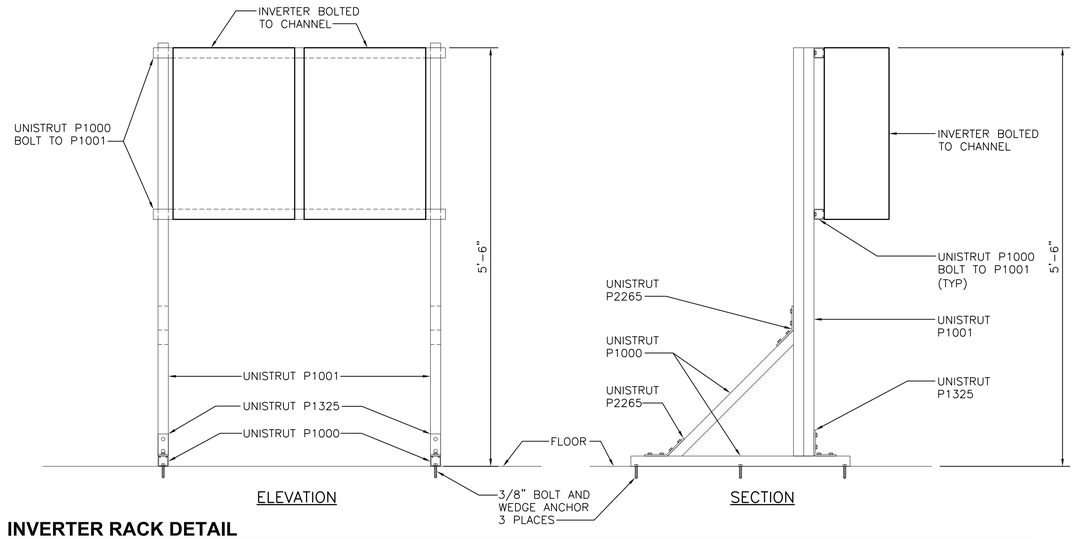

INVERTER RACK DETAIL

NTS

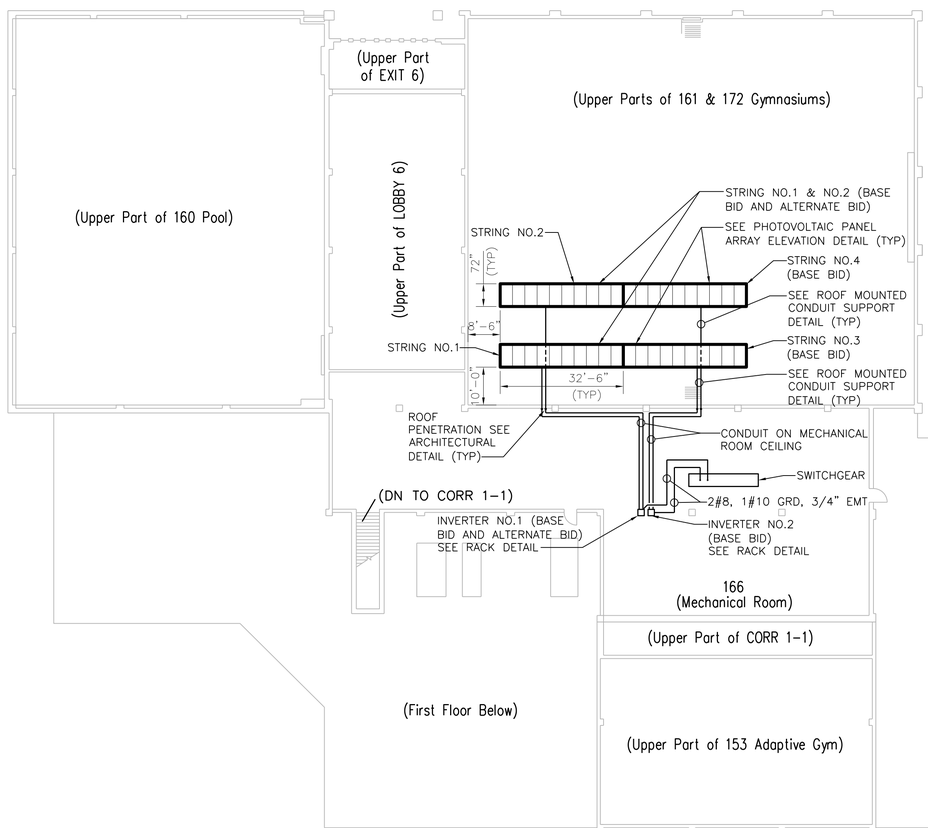

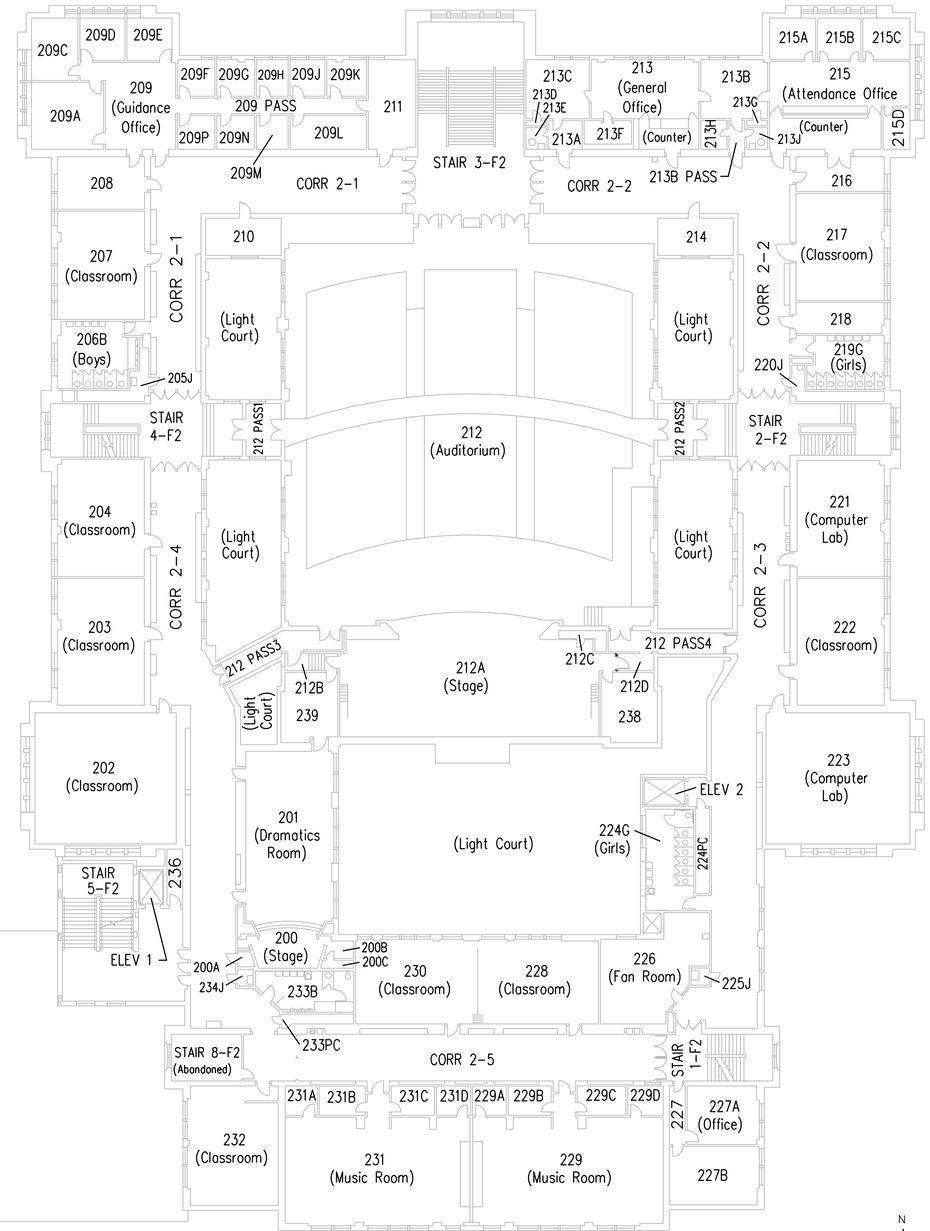

SECOND FLOOR PLAN

SITE NO: 029 – RIVERSIDE UNIVERSITY HIGH SCHOOL
1615 E. LOCUST STREET, MILW., WI 53211-3298

NO	REVISIONS	DRN	CHK	DATE

DRN KWB -
DES WRW -
CHK EDM -
APP KEH -

Milwaukee Public Schools
Division of Facilities and Maintenance Services
1124 North 11th Street
P.O. BOX 0259
Milwaukee, Wisconsin 53205-0259
Phone : 414 283-4600
Fax : 414 283-4682

PSJ ENGINEERING, INC.
CONSULTING ENGINEERS
MILWAUKEE: (414)352-2211
MADISON: (608)251-5820
PLUMBING, HVAC, FIRE PROTECTION DOCUMENTS DESIGNED BY MXB

City of Milwaukee
Department of Public Works

AECOM
4135 TECHNOLOGY PARKWAY
SHEBOYGAN, WI 53083-1883
T 920.458.8711 F 920.458.0537
WWW.AECOM.COM

MILWAUKEE PUBLIC SCHOOLS
SOLAR PROJECTS
CITY OF MILWAUKEE, WISCONSIN

RIVERSIDE UNIVERSITY HS
SECOND FLOOR PLAN
SITE 029

DATE FEBRUARY 2012
PROJECT NO 60239135
FILENAME R-E-01.DWG
FILE NO
SHEET NO
DRAWING NO
R-E-01

Xrefs: AE2234bd.dwg
riverside-ltr-02-x.dwg
Images:
Plotted By: brendelk
Plot File Date Created: Feb/24/2012 2:16 PM
Layout-Sheet Name: WORK
Filename: L:\WORK\60223648\000_CADD\R-E-01.DWG

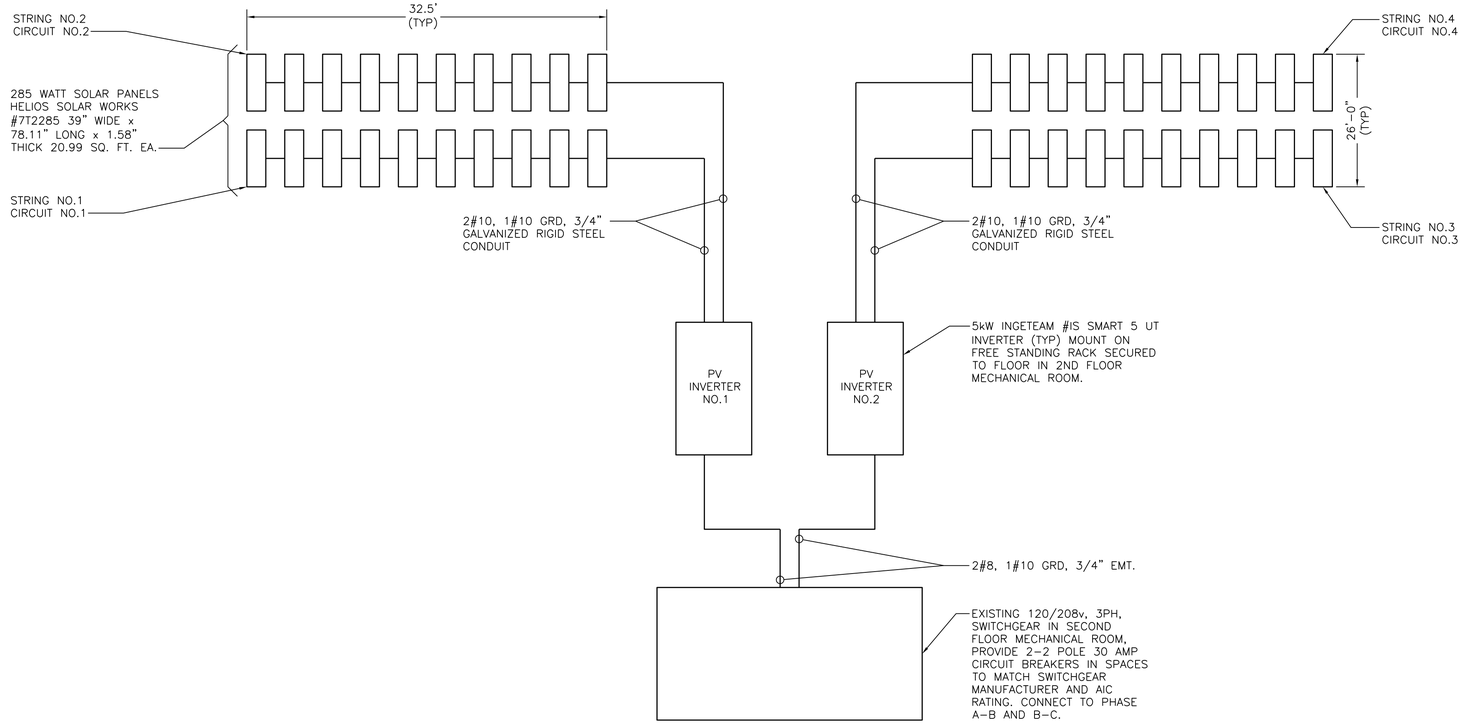

PV ELECTRICAL RISER DIAGRAM (BASE BID)

NTS

NOTE: GROUND AND BOND PER NEC 250 AND 690.

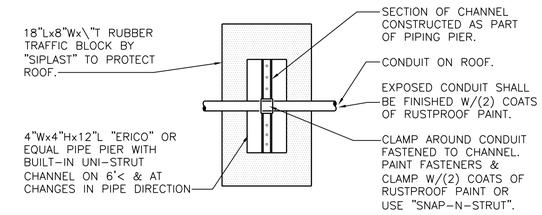

NOTES:
INSTALL SUPPORTS PER NEC. PAINT ALL EXPOSED PIPING, SUPPORTS, FASTENERS, ETC. WITH (2) COATS OF RUST PROOF PAINT.

ROOF MOUNTED CONDUIT SUPPORT DETAIL

NTS

PHOTOVOLTAIC PANEL SCHEDULE

DRAWINGS ARE BASED ON MANUFACTURER & MODEL NO.	QUANTITY	MAX. POWER (WATTS)	TOLERANCE	MAX. POWER VOLTAGE (VOLTS)	MAXIMUM CURRENT (AMPS)	OPEN CURRENT VOLTAGE (VOLTS)	SHORT-CIRCUIT CURRENT (AMPS)	ARRAY WIDTH (IN)	ARRAY LENGTH (IN)	DEPTH (IN)	WEIGHT (LBS)	REMARKS
HELIOS SOLAR WORKS MODEL 7T2285	40	285	+5%/-5%	33.31	6.43	40.97	6.88	78.11	39	1.58	57.2	
CIRCUIT 1	10	2850	+5%/-5%	333.1	6.43	409.7	6.88	78.11	390	1.58	572	RACK #1-10
CIRCUIT 2	10	2850	+5%/-5%	333.1	6.43	409.7	6.88	78.11	390	1.58	572	RACK #11-20
CIRCUIT 3	10	2850	+5%/-5%	333.1	6.43	409.7	6.88	78.11	390	1.58	572	RACK #21-30
CIRCUIT 4	10	2850	+5%/-5%	333.1	6.43	409.7	6.88	78.11	390	1.58	572	RACK #31-40
TOTALS	40							-	-		2288	

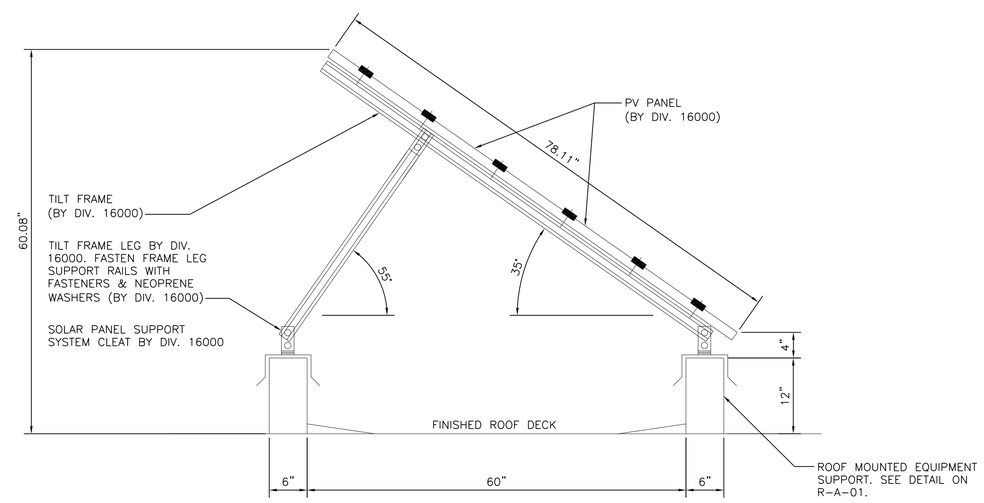

DETAIL NOTES:
1. TILT MOUNTING FRAME MUST BE COMPATIBLE WITH THE PANEL MANUFACTURER.
2. VERIFY ROOF SUPPORT RAIL LENGTHS AND LOCATIONS WITH EXACT PANEL AND FRAME MANUFACTURER.
3. SPACING AND DIMENSIONS BASED ON HELIOS 7T2285 PANELS.

PHOTOVOLTAIC PANEL ARRAY ELEVATION DETAIL

0' 1' 2'
SCALE

NO	REVISIONS	DRN	CHK	DATE

DRN KWB
DES WRW
CHK EDM
APP KEH

Milwaukee Public Schools
Division of Facilities and Maintenance Services
1124 North 11th Street
P.O. Box 2074
Milwaukee, Wisconsin 53205-0259
Phone: 414 383-4682
Fax: 414 383-4682

PSJ ENGINEERING, INC.
CONSULTING ENGINEERS
MILWAUKEE: (414)352-2211
MADISON: (608)251-8820
DUPLICATE SET OF PROTECTION DOCUMENTS DESIGNED BY MJB

City of Milwaukee
Department of Public Works

AECOM
4135 TECHNOLOGY PARKWAY
SHEBOYGAN, WI 53083-1883
T 920.458.8711 F 920.458.0537
WWW.AECOM.COM

MILWAUKEE PUBLIC SCHOOLS
SOLAR PROJECTS
CITY OF MILWAUKEE, WISCONSIN

RIVERSIDE UNIVERSITY HS
RISER DIAGRAM AND DETAILS
SITE 029

DATE FEBRUARY 2012
PROJECT NO 60239135
FILENAME R-E-02.DWG
FILE NO
SHEET NO
DRAWING NO
R-E-02

Xrefs: AE2234bd.dwg
Images:

Plotted By: brendelk
Plot File Date Created: Feb/24/2012 2:23 PM
Layout-Sheet Name: WORK
Filename: L:\WORK\60223648\000_CADD\R-E-02.DWG

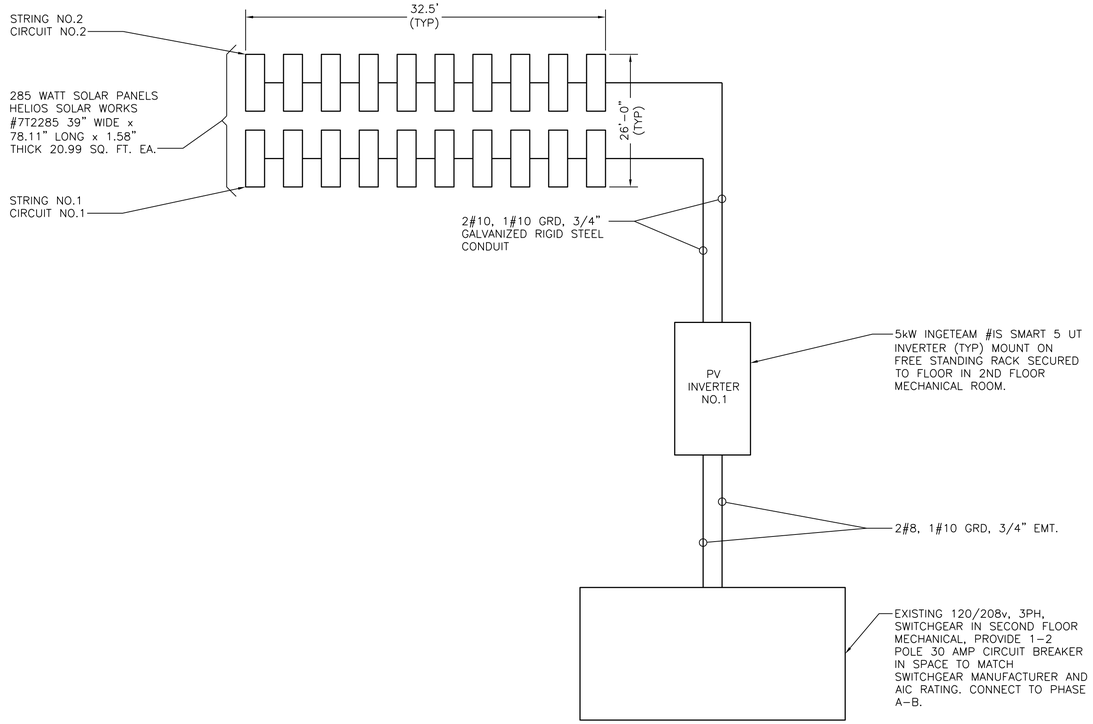

PV ELECTRICAL RISER DIAGRAM (ALTERNATE BID)

NTS

NOTE: GROUND AND BOND PER NEC 250 AND 690.

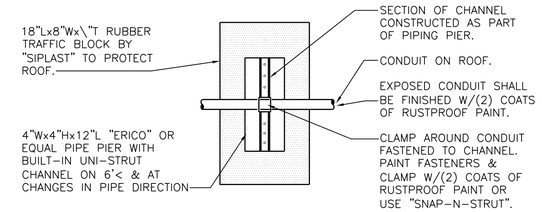

NOTES:
INSTALL SUPPORTS PER NEC. PAINT ALL EXPOSED PIPING, SUPPORTS, FASTENERS, ETC. WITH (2) COATS OF RUST PROOF PAINT.

ROOF MOUNTED CONDUIT SUPPORT DETAIL

NTS

PHOTOVOLTAIC PANEL SCHEDULE

DRAWINGS ARE BASED ON MANUFACTURER & MODEL NO.	QUANTITY	MAX. POWER (WATTS)	TOLERANCE	MAX. POWER VOLTAGE (VOLTS)	MAXIMUM CURRENT (AMPS)	OPEN CURRENT VOLTAGE (VOLTS)	SHORT-CIRCUIT CURRENT (AMPS)	ARRAY WIDTH (IN)	ARRAY LENGTH (IN)	DEPTH (IN)	WEIGHT (LBS)	REMARKS
HELIOS SOLAR WORKS MODEL 7T2285	20	285	+5%/-5%	33.31	6.43	40.97	6.88	78.11	39	1.58	57.2	
CIRCUIT 1	10	2850	+5%/-5%	331.1	6.43	409.7	6.88	78.11	390	1.58	572	RACK #1-10
CIRCUIT 2	10	2850	+5%/-5%	331.1	6.43	409.7	6.88	78.11	390	1.58	572	RACK #11-20
–	–	–	–	–	–	–	–	–	–	–	–	–
–	–	–	–	–	–	–	–	–	–	–	–	–
TOTALS	20							–	–		1144	

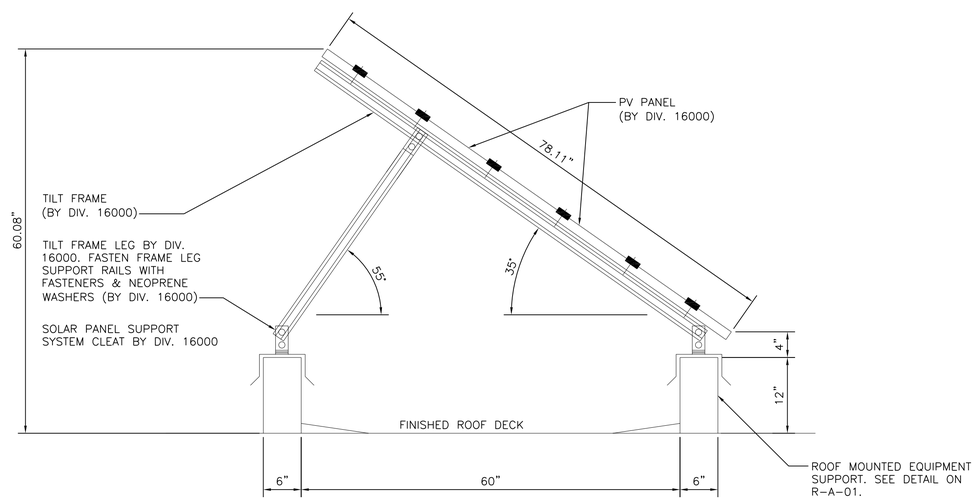

DETAIL NOTES:
1. TILT MOUNTING FRAME MUST BE COMPATIBLE WITH THE PANEL MANUFACTURER.
2. VERIFY ROOF SUPPORT RAIL LENGTHS AND LOCATIONS WITH EXACT PANEL AND FRAME MANUFACTURER.
3. SPACING AND DIMENSIONS BASED ON HELIOS 7T2285 PANELS.

PHOTOVOLTAIC PANEL ARRAY ELEVATION DETAIL

0' 1' 2'
SCALE

NO	REVISIONS	DRN	CHK	DATE

DRN KWB
DES WRW
CHK EDM
APP KEH

Milwaukee Public Schools
Division of Facilities and Maintenance Services
1124 North 11th Street
P.O. Box 2074
Milwaukee, Wisconsin 53205-0259
Phone: 414 383-4682
Fax: 414 383-4682

PSJ ENGINEERING, INC.
CONSULTING ENGINEERS
MILWAUKEE: (414)352-2211
MADISON: (608)251-3820
TELECOMM, POWER, FIRE PROTECTION
DOCUMENTS DESIGNED BY MJB

City of Milwaukee
Department of Public Works

AECOM
4135 TECHNOLOGY PARKWAY
SHEBOYGAN, WI 53083-1883
T 920.458.8711 F 920.458.0537
WWW.AECOM.COM

MILWAUKEE PUBLIC SCHOOLS
SOLAR PROJECTS
CITY OF MILWAUKEE, WISCONSIN

RIVERSIDE UNIVERSITY HS
RISER DIAGRAM AND DETAILS
ALTERNATE
SITE 029

DATE FEBRUARY 2012
PROJECT NO 60239135
FILENAME R-E-03.DWG
FILE NO
SHEET NO
DRAWING NO **R-E-03**

Xrefs: AE2234bd.dwg
Images:
Plotted By: brendelk
Plot File Date Created: Feb/24/2012 2:22 PM
Layout-Sheet Name: WORK
Filename: L:\WORK\60223648\000_CADD\R-E-03.DWG