City Of Milwaukee
Department of Public Works
Room 501 – Frank P. Zeidler Municipal Building
841 North Broadway
Milwaukee, Wisconsin 53202-3684

INVITATION TO BID

Commissioner of Public Works
Phone: 414-286-3314

Specific Official Notice No. 33-1-2016

Sealed bids for the work, material, labor, and services hereinafter described will be received at the Department of Public Works **Contract Office**, Room 506, Frank P. Zeidler Municipal Building, 841 North Broadway, Milwaukee, Wisconsin 53202-3684, no later than Friday, March 4, 2016 at 10:30 A.M.

IMPORTANT

This bid is your offer to perform or supply the subject matter under "DESCRIPTION" below according to the terms and conditions set forth in this Invitation to Bid, Specific Official Notice No. 33-2016, General Specifications, Detailed Specifications, Special Provisions, Plans of this particular project, the proposed contract and Special Conditions when applicable.

Your bid must meet the Detailed Specifications and the Plans for this particular project.

You must agree to comply with all applicable requirements of the Americans with Disabilities Act of 1990, 42 U.S.C. Section 12101, et seq.

The bid must be signed as set forth in the General Specifications and must comply with all the requirements therein set forth, or it will not be considered. If submitted by a corporation, the bid proposal must bear the corporate seal.

Bid security hereinafter specified must be submitted with your bid. If a bid bond is used, it must be sealed by the bonding company and a copy of a power of attorney. Bonding agents must be licensed to do business in the State of Wisconsin.

Bids received after the date and the time above specified will not be opened and read and will be deemed rejected.

NOTE: Also read the General Official Notice to Contractors, General and Detailed Specifications, Special Provisions, and Special Conditions when applicable pertaining to this bid.

FOR WATER MAIN RELAYS IN:

PROJECT NO. 1:

NORTH 80TH STREET (18 Working Days)
FROM: WEST THURSTON AVENUE
TO: WEST CARMEN AVENUE
C.C. RESOLUTION NO.: 151289, ADOPTED 1/19/2016
PLAN FILE NO.2016014
PROJECT NO. WT410160620

NORTH 84TH STREET (20 Working Days)
FROM: WEST CARMEN AVENUE
TO: WEST BOBOLINK AVENUE
C.C. RESOLUTION NO.: 151289, ADOPTED 1/19/2016
PLAN FILE NO.2016015
PROJECT NO. WT410160621

WEST CUSTER AVENUE (27 Working Days)
FROM: NORTH 87TH STREET
TO: NORTH 91ST STREET
C.C. RESOLUTION NO.: 151289, ADOPTED 1/19/2016
PLAN FILE NO.2016016 2016017
PROJECT NO. WT410160624

DETAILED SPECIFICATIONS: Installation Specifications for Water Mains dated January 2, 1987, special provisions and addenda, if any, apply to all of the above water main projects.

BIDS WILL BE OPENED AND PUBLICLY READ AT THE OFFICE OF THE COMMISSIONER OF PUBLIC WORKS ON Friday, March 4, 2016 @ 10:30 A.M.

Bid Security Required: Bond, Certified Check, Cashier's Check, or Cash to accompany bid: 10% of Contractor's Base Bid. For those bids being submitted through BID EXPRESS and using a Paper Bond, the contractor may fax a signed/executed copy of the bid bond to the Department of Public Works Contract Office at 414-286-8110. **HOWEVER, THE FAXED COPY OF THE BOND MUST BE RECEIVED BY NO LATER THAN 10:30 A.M. ON THE SAME DATE THAT THE BIDS ARE DUE FOR THAT SPECIFIC OFFICIAL NOTICE, or the bid will be considered non-responsive.** *The original bid bond document will then need to be submitted by the contractor to the Department of Public Works Contract Office, Rm. 506, Municipal Building, immediately upon being notified that they are the apparent low bidder.*

Schedule notes: No Work will be allowed prior to March 14, 2016. All work including pavement restoration shall be completed by June 24, 2016.

Each project in this contract is assigned an allowable number of project working days. A project working day is defined as any day the contractor is able to work a minimum of four (4) hours towards completion of the project.

Liquidated damages per diem: $445.00
The SBE Requirement for this Project is: 25% of the contract base bid. For a complete listing of City of Milwaukee certified SBE firms, see the Office of Small Business Development's (OSBD) website at www.milwaukee.gov/osbd. If there are any questions regarding SBE firms, please contact the OSBD office at 414-286-5553.
The Residency Requirement for this Project is: 40% of all hours worked on the project.
The apprenticeship requirements for this project are:
Apprentices from 1 of the following trade(s) are to be employed: Construction Craft Laborer.

The contractor shall specifically note the SBE, residency and apprenticeship forms for this project. If the forms are not filled out properly, it will be cause for rejection of the bid.

IMPORTANT NOTICE: The Invitation to Bid, all bid documents and the Plans and Specifications for the listed project(s) are all available electronically on the DPW website AS WELL AS **on the Bid Express Website**. At this time, Bids can be submitted using either Bid Express OR by purchasing and submitting paper bids in the usual manner. However, Bidders are strongly encouraged to utilize the electronic and/or Bid Express methods of obtaining bid documents and Bid Express for submitting bids, as in the near future the Department of Public Works intends to have bid documents available only electronically and through Bid Express, *and to accept bid submittals only via Bid Express.* Electronic documents can be obtained via http://www.mpw.net/bids/docs/33-2016/ The Bid Express website is located at bidexpress.com. Any required addenda or response related to listed projects will be posted on both the DPW and Bid Express websites. At this time there are still a limited number of hard copies of the bid documents available at the address listed below. IF YOU ONLY PRINT THE DOCUMENTS FROM THE DPW WEBSITE PLEASE CALL 414-286-3314 TO HAVE YOUR COMPANY'S NAME AND CONTACT INFORMATION PLACED ON THE PLAN HOLDER'S LIST.

PAYMENT MONITORING REQUIREMENTS: All Contractors awarded a contract valued at $25,000.00 or more are required to participate in training on the City of Milwaukee's B2GNow contract compliance software. Contractors must complete the training no later than 30 days after the date of contract award. Throughout the contract term, Contractors are required to regularly provide timely payment information in the City's contract compliance software.

Please contact the Office of Small Business Development (OSBD) at 414-286-5553 should you have any questions or concerns regarding the training or *reporting process.*

DAVIS BACON COMPLIANCE PROVISIONS: The City of Milwaukee has applied for funding for all projects in this contract through the Safe Drinking Water Loan Program (SDWLP) administered by the Wisconsin Department of Natural Resources. This contract is subject to the Davis Bacon Compliance Provisions. The contractor shall use the higher wage rate table between the prevailing wage rate issued by the State of Wisconsin and the Davis Bacon wage rate tables as issued by the U.S. Department of Labor Wage and Hour Division. The contractor shall submit weekly payroll certification, utilizing the Payroll form included in the contract documents or equivalent.

AMERICAN IRON AND STEEL (AIS): All iron and steel products provided by the contractor shall be produced in the United States and comply with the American Iron and Steel Requirement (AIS).

Plans and project manual will be furnished to the prospective bidders upon payment of a $10.00 non-refundable fee in room 506, Frank P. Zeidler Municipal Building, 841 North Broadway, Milwaukee, Wisconsin 53202. For general questions call 414-286-3314.

A $10.00 per set additional non-refundable fee is required to obtain bid documents by mail. Plans are sent via U.S. mail unless other arrangements are made by the contractor.

Contractor must comply with all provisions of the CITY OF MILWAUKEE GENERAL OFFICIAL NOTICE TO CONTRACTORS, published above and may be found at http://www.mpw.net/services/bids_home.

PAYMENT MONITORING REQUIREMENTS

All Contractors awarded a contract valued at $25,000.00 or more are required to participate in training on the City of Milwaukee's B2GNow contract compliance software. Contractors must complete the training no later than 30 days after the date of contract award. Throughout the contract term, Contractors are required to regularly provide timely payment information in the City's contract compliance software.

Please contact the Office of Small Business Development (OSBD) at 414-286-5553 should you have any questions or concerns regarding the training or *reporting process.*

SAFE DRINKING WATER LOAN PROGRAM

THE CITY OF MILWAUKEE HAS APPLIED FOR FUNDING FOR ALL PROJECTS IN THIS CONTRACT THROUGH THE SAFE DRINKING WATER LOAN PROGRAM (SDWLP) ADMINISTERED BY THE WISCONSIN DEPARTMENT OF NATURAL RESOURCES.

DAVIS – BACON WAGE COMPLIANCE

THIS CONTRACT IS SUBJECT TO THE DAVIS-BACON COMPLIANCE PROVISIONS. PLEASE SEE CONTRACT DOCUMENTS FOR ADDITIONAL INFORMATION. THE CONTRACTOR SHALL USE THE HIGHER WAGE RATE TABLE BETWEEN THE PREVAILING WAGE RATE ISSUED BY THE STATE OF WISCONSIN AND THE DAVIS-BACON WAGE RATE TABLES AS ISSUED BY THE U.S. DEPARTMENT OF LABOR WAGE AND HOUR DIVISION.

AMERICAN IRON AND STEEL REQUIREMENT (AIS)

ALL IRON AND STEEL PRODUCTS PROVIDED BY THE CONTRACTOR SHALL BE PRODUCED IN THE UNITED STATES AND COMPLY WITH THE AMERICAN IRON AND STEEL REQUIREMENT (AIS). CONTRACTOR TO PROVIDE AIS CERTIFICATION FOR ALL IRON AND STEEL PRODUCTS SUPPLIED FOR THIS CONTRACT.

FORM DPW-125 (REV. 01/26/05)

B I D

City of Milwaukee
Department of Public Works
Room 501 - Frank P. Zeidler Municipal Building
841 North Broadway
Milwaukee, Wisconsin 53202

(Bids Close: Friday, March 4, 2016 @ 10:30 A.M. Time and Date)

Submit bids to: City of Milwaukee
Department of Public Works **Contract Office**
Room 506, 841 North Broadway
Milwaukee, Wisconsin 53202.

The undersigned _____
(A Corporation) (A Partnership) (An Individual)
(use one)

of _____
Street City Zip Code Telephone Number

hereby proposes to furnish work, material, labor and services as set forth in the description in the Invitation to Bid at and for the prices hereinafter named according to the provisions in the Official Notice and the Invitation to Bid, Detail Specifications, Special Provisions, Addenda's, if any, and Plans for this particular project on file in the office of the Commissioner of Public Works, and if successful, hereby agrees to enter into a contract with the City of Milwaukee with such sureties as required and set forth in the aforesaid documents for the performance of said contract (said contract form being on file in the office of the Commissioner of Public Works), and in accordance with the terms and conditions set forth in the contract documents, to-wit: written agreement, official notice, invitation to bid, bid, instructions to bidders, detail specifications, special provisions, special conditions when applicable, plans, schedule of fixed prices, supplemental agreements and all addenda.

In case of obtaining the award, the undersigned bidder anticipates using, subject to the approval of the Commissioner, the following subcontractors, with the class of work to be performed by each, which list shall not be added to nor altered without the written consent of the Commissioner:

Name of Proposed Subcontractors	Class of Work	Amount	Check Box If SBE

FOR WATER MAIN RELAYS IN:

PROJECT NO. 1:

NORTH 80TH STREET (18 Working Days)
FROM: WEST THURSTON AVENUE
TO: WEST CARMEN AVENUE
C.C. RESOLUTION NO.: 151289, ADOPTED 1/19/2016
PLAN FILE NO.2016014
PROJECT NO. WT410160620

NORTH 84TH STREET (20 Working Days)
FROM: WEST CARMEN AVENUE
TO: WEST BOBOLINK AVENUE
C.C. RESOLUTION NO.: 151289, ADOPTED 1/19/2016
PLAN FILE NO.2016015
PROJECT NO. WT410160621

WEST CUSTER AVENUE (27 Working Days)
FROM: NORTH 87TH STREET
TO: NORTH 91ST STREET
C.C. RESOLUTION NO.: 151289, ADOPTED 1/19/2016
PLAN FILE NO.2016016 2016017
PROJECT NO. WT410160624

In the City of Milwaukee, according to the plans and specifications and for the unit price bids listed on the following pages:

ALL PRICES MUST BE PRINTED OR TYPED

OFFICIAL NOTICE NO. 33-1-2016

WATER MAIN

Thursday, February 11, 2016

2,421	LIN. FT.	FURN AND INST DI WM, HYD BRANCH, BRANCH PIPE (3"-16" AS EST ON CONST PLANS)

(Bid in figures) $ _____ PER LIN. FT.

(Bid in words) $ _____ PER LIN. FT.

6	HYDRANT	INSTALL HYDRANT

(Bid in figures) $ _____ PER HYDRANT

(Bid in words) $ _____ PER HYDRANT

5	HYDRANT	REMOVE HYDRANT/MINOR

(Bid in figures) $ _____ PER HYDRANT

(Bid in words) $ _____ PER HYDRANT

66	SERVICE	CONNECT ORIGINAL SERVICE (C.O.S.)

(Bid in figures) $ _____ PER SERVICE

(Bid in words) $ _____ PER SERVICE

1,400	BAR	FURNISH & INSTALL DOWEL BARS - PAVEMENT

(Bid in figures) $ _____ PER BAR

(Bid in words) $ _____ PER BAR

570	SQ. YD.	PERMANENT PAVEMENT - 4" ASPHALTIC CONCRETE

(Bid in figures) $ _____ PER SQ. YD.

(Bid in words) $ _____ PER SQ. YD.

775	SQ. YD.	PERMANENT PAVEMENT - 8" CONCRETE

(Bid in figures) $ _____ PER SQ. YD.

(Bid in words) $ _____ PER SQ. YD.

525 LIN. FT. CONCRETE CURB & GUTTER

(Bid in figures) $ _____ PER LIN. FT.

(Bid in words) $ _____ PER LIN. FT.

1 LUMP SUM BARRICADES AND TRAFFIC CONTROL

(Bid in figures) $ _____ LUMP SUM

(Bid in words) $ _____ LUMP SUM

1,100 LIN. FT. SAWCUTTING - ASPHALT

(Bid in figures) $ _____ PER LIN. FT.

(Bid in words) $ _____ PER LIN. FT.

1 LUMP SUM FINISHING OF ROADWAY

(Bid in figures) $ _____ LUMP SUM

(Bid in words) $ _____ LUMP SUM

2,115 LIN. FT. SAWCUTTING - CONCRETE (FULL DEPTH)

(Bid in figures) $ _____ PER LIN. FT.

(Bid in words) $ _____ PER LIN. FT.

1 LUMP SUM FURNISH, INSTALL, AND MAINTAIN EROSION CONTROL

(Bid in figures) $ _____ LUMP SUM

(Bid in words) $ _____ LUMP SUM

TOTAL WATER MAIN

(Bid in figures) $ _____

(Bid in words) $ _____

*** IMPORTANT NOTICE ***

ALL BID PRICES MUST BE ENTERED IN WORDS AND IN NUMERALS. IN CASE OF VARIATION BETWEEN THE TWO, THE WORDS WILL PREVAIL.

IN ADDITION, IF THERE IS A DISCREPANCY BETWEEN THE TOTAL INDICATED IN THE PROPOSAL AND THE AMOUNT OBTAINED BY ADDING THE PRODUCTS OF THE QUANTITIES TIMES THE UNIT PRICES, THE LATTER SHALL GOVERN. ANY ERRORS FOUND IN THE TOTAL INDICATED SHALL BE CORRECTED AND THE CONTRACT AWARD SHALL BE MADE TO THE LOWEST RESPONSIBLE BIDDER BASED ON THE CORRECTED TOTAL.

If DOUBT EXISTS AS TO WHAT IS BID, THE BID WILL BE REJECTED.

ACKNOWLEDGEMENTS PAGE

SMALL BUSINESS ENTERPRISE, RESIDENT PREFERENCE AND APPRENTECESHIP PROGRAM REQUIREMENTS

In submitting this bid, the bidder acknowledges, understands and agrees that submission of a bid shall commit the bidder to comply with the City's requirements as outlined in the SMALL BUSINESS ENTERPRISE PROGRAM, (SBE), the Resident Preference Program and the Apprenticeship Program provisions. The bidder also agrees to comply with the specific requirements as follows:

The bidder's commitment for SBE participation on this project is _25_ %

The bidder's commitment for Resident Preference Program Participation on the project is _40_ %

The bidder's commitment for Apprenticeship Program participation on this project is:

Apprentice(s) from _one_ the following trade are to be employed:

Construction Craft Laborer

In submitting this bid, the bidder understands that the Commissioner of Public Works reserves the right to reject any and all bids. If written notice of the acceptance of the bid is mailed, telegraphed, or delivered to the undersigned within forty-five (45) days after the opening thereof, the undersigned agrees to execute and deliver the contract in the prescribed form (contract form on file in the office of the Commissioner of Public Works) and furnish the required performance and payment bonds, and to meet such insurance requirements as may be required, within ten days after the receipt of the official notice of award.

This bidder understands that if they are the successful bidder and the contract is awarded, that pursuant to Sec. 7.14, Milwaukee City Charter, 1971 Compilation, as amended, failure to execute and to deliver the contract or to furnish the required insurance and the required security within ten (10) days after receipt of the official notice of award or such extension thereto as the Commissioner only may deem reasonable, the City, in addition to any other legal or equitable remedy which it may have, may annul the award and notice of award, and the bid security of this bidder will be forfeited.

Attached hereto is an affidavit in proof that the undersigned has not colluded with any person in respect to this bid or any other bid for the contract for which this bid is submitted.

We acknowledge the receipt of Addenda _____ to _____ inclusive.

Bidder assures the City and acknowledges that the Official Notice, Special Provisions, if any, Special Conditions where applicable, Invitation to Bid and Bid, Detail Specifications, Addenda, if any, and Plans of this particular project have been read and has a full understanding of the provisions therein.

Rev. 2/2012

SIGNATURE PAGE

IMPORTANT – THREE (3) SIGNATURES ARE REQUIRED OR BID WILL BE CONSIDERED NONRESPONSIVE

In signing and submitting this bid, the bidder assures the City of Milwaukee that the Official Notice, Notice to Bidders, Special Conditions where applicable, Invitation to Bid and Bid, Detail Specifications, Special Provisions, Schedule of Fixed Prices, Addenda, and Plans of this particular project have been read and understood and that the furnishing of the subject work, material, labor and services is under bidder's control. If the bidder's performance is contingent upon the acts of another party, the bidder assures that they have the necessary commitments to complete the contract which may be awarded.

Submitted by _____
Name of Bidder (person, firm or corporation)

Telephone No. _____

Fax No. _____

Address _____

_____
(City, State, Zip Code)

MUST BE SIGNED

Signed per _____
(Manual **signature required**)

Official Capacity _____

BID DATED _____ SBE Contractor: Yes/Designation _____
No _____

If a Corporation, answer the following:

Incorporated under laws of what state? _____

If a foreign corporation, are you licensed to do business in Wisconsin? _____

SWORN STATEMENT OF BIDDER
AS REQUIRED BY
SECTION 66.0901 (7) WISCONSIN STATUTES

I, being first duly sworn at _____
(City, State)

on oath state on behalf of said bidder, that I have examined and carefully prepared this proposal from the plans, specifications, and the other contract documents and have checked the same in detail before submitting this proposal; and this sworn statement is hereby made a part of the foregoing proposal.

MUST BE SIGNED

Signature _____

_____
(Title, if any)

Subscribed and sworn to before me this

_____ day of _____, 20_____

Notary Public, _____ County

State of _____

_____
(**Notary Signature**)

My commission expires _____

NON-COLLUSION AFFIDAVIT

State of _____)
) ss.
County of _____)

_____, being first duly sworn, deposes and says that:

(1) He is _____
(owner, partner, officer, representative, or agent)

of _____, the Bidder that has submitted the attached Bid;

(2) He is fully informed respecting the preparation and contents of the attached Bid and of all pertinent circumstances respecting such Bid;

(3) Such Bid is genuine and is not a collusive or sham Bid;

(4) Neither the said Bidder nor any of its officers, partners, owners, agents, representatives, employees, or parties in interest, including this affiant, has in any way colluded, conspired, connived, or agreed, directly or indirectly with any other Bidder, firm, or person to submit a collusive or sham Bid in connection with the Contract for which the attached Bid has been submitted or to refrain from bidding in connection with such Contract, or has in any manner, directly or indirectly, sought by agreement or collusion or communication or conference with any other Bidder, firm, or person to fix the price or prices in the attached Bid or of any other Bidder, or to fix any overhead, profit, or cost element of the Bid price or the Bid price of any other Bidder, or to secure through any collusion, conspiracy, connivance, or unlawful agreement any advantage against the Commissioner of Public Works or any person interested in the proposed Contract; and

(5) The price or prices quoted in the attached Bid are fair and proper and are not tainted by any collusion, conspiracy, connivance, or unlawful agreement on the part of the Bidder or any of its agents, representatives, owners, employees, or parties in interest, including this affiant.

(Check One) _____
Signature of

_____ Bidder if the bidder is an individual;

_____ Partner if the bidder is a partnership;

_____ Officer if the bidder is a corporation.

Subscribed and sworn to before me this

_____ day of _____, 20_____.

_____
Notary Signature

My commission expires _____, 20_____.

State of Wisconsin
Department of Workforce Development
Equal Rights Division

Disclosure of Ownership

The statutory authority for the use of this form is prescribed in Sections 66.0903(12)(d), 66.0904(10)(d) and 103.49(7)(d), Wisconsin Statutes.
The use of this form is mandatory. The penalty for failing to complete this form is prescribed in Section 103.005(12), Wisconsin Statutes.
Personal information you provide may be used for secondary purposes [Privacy Law, s. 15.04(1) (m), Wisconsin Statutes].

(1) On the date a contractor submits a bid to or completes negotiations with a state agency, local governmental unit, or developer, investor or owner on a project subject to Section 66.0903, 66.0904 or 103.49, Wisconsin Statutes, the contractor shall disclose to such state agency, local governmental unit, or developer, investor or owner, the name of any "other construction business," which the contractor, or a shareholder, officer or partner of the contractor, owns or has owned within the preceding three (3) years.

(2) The term "other construction business" means any business engaged in the erection, construction, remodeling, repairing, demolition, altering or painting and decorating of buildings, structures or facilities. It also means any business engaged in supplying mineral aggregate, or hauling excavated material or spoil as provided by Sections 66.0903(3), 66.0904(2), 103.49(2) and 103.50(2), Wisconsin Statutes.

(3) This form must ONLY be filed, with the state agency project owner, local governmental unit project owner, or developer, investor or owner of a publicly funded private construction project that will be awarding the contract, if **both (A) and (B) are met**.

(A) The contractor, or a shareholder, officer or partner of the contractor:

(1) Owns at least a 25% interest in the "other construction business," indicated below, on the date the contractor submits a bid or completes negotiations; or

(2) Has owned at least a 25% interest in the "other construction business" at any time within the preceding three (3) years.

(B) The Wisconsin Department of Workforce Development (DWD) has determined that the "other construction business" has failed to pay the prevailing wage rate or time and one-half the required hourly basic rate of pay, for hours worked in excess of the prevailing hours of labor, to any employee at any time within the preceding three (3) years.

Other Construction Business

Business Name			
Street Address or P O Box	City	State	Zip Code
Business Name			
Street Address or P O Box	City	State	Zip Code
Business Name			
Street Address or P O Box	City	State	Zip Code
Business Name			
Street Address or P O Box	City	State	Zip Code

I hereby state under penalty of perjury that the information, contained in this document, is true and accurate according to my knowledge and belief.

Print the Name of Authorized Officer			
Authorized Officer Signature	Date Signed		
Corporation, Partnership or Sole Proprietorship Name			
Street Address or P O Box	City	State	Zip Code

If you have any questions call (608) 266-6861

PREVAILING WAGE NOTICE

ALL PREVAILING WAGE CONTRACTS AWARDED BY THE DEPARTMENT OF PUBLIC WORKS AFTER THE FIRST OF ANY CALENDAR YEAR ARE SUBJECT TO THE NEW PREVAILING WAGE SCHEDULE THAT GOES INTO EFFECT ON JANUARY 2ND. THE PREVAILING WAGE SCHEDULE INCLUDED IN BID PACKAGES ISSUED LATE IN THE PRECEDING YEAR MAY NOT BE TOTALLY ACCURATE FOR CONTRACTS OFFICIALLY AWARDED AFTER THE TURN OF THE YEAR. THE NEW PREVAILING WAGE WILL BE INCORPORATED INTO THE CONTRACT WHEN AWARDED.

BIDDERS ARE REQUIRED TO UTILIZE THE WISCONSIN DEPARTMENT OF WORKFORCE DEVELOPMENT'S "DICTIONARY OF OCCUPATIONAL CLASSIFICATIONS AND WORK DESCRIPTIONS" TO DETERMINE THE APPROPRIATE JOB CLASSIFICATIONS AND WAGE RATES FOR THEIR EMPLOYEES PRIOR TO BIDDING. THIS DOCUMENT CAN BE FOUND ON THEIR WEBSITE AT DWD.WISCONSIN.GOV; TYPE "DICTIONARY" IN THE SEARCH BOX.

Rev. 06/07

Revised: 7/15/2009
Updated: 5/2013

City of Milwaukee

Department of Public Works

Residents Preference Program Provisions

I. General

A. In accordance with Chapter 309 of the Milwaukee Code of Ordinances, residents preference hiring is required for all construction contracting activities of the Department of Public Works. The ordinance requires that 40% of WORKER HOURS worked on a DPW contract be performed by UNEMPLOYED or UNDEREMPLOYED RESIDENTS of the City, except in special cases where the Commissioner of Public Works determines there is sufficient reason to impose lesser levels of participation. Further, the Commissioner of Public Works may increase the percentage of RESIDENT worker participation to more than 40% on specific contracts. For this contract, bidders are required to show that the minimum percent of WORKER HOURS, as listed in the acknowledgements section/page and/or the Official Notice document will be performed by UNEMPLOYED or UNDEREMPLOYED RESIDENTS of the City. Up to one-third of required worker hours may be achieved by documenting the use of UNEMPLOYED or UNDEREMPLOYED RESIDENTS on projects undertaken by the contractor where such compliance is not required, or by hiring UNEMPLOYED or UNDEREMPLOYED RESIDENTS on a full-time permanent basis for non-construction job categories connected to the project. Such adjustments must be proposed in an affidavit on a form provided by the department setting forth the facts upon which the request for adjustment is based.

B. The contractor, prior to commencing work, shall submit an affidavit (Form I) for proof of residency for all employees utilized by the contractor and subcontractors to meet the Residents Preference Program requirements, stating that each employee is either UNEMPLOYED or UNDEREMPLOYED and is a RESIDENT of the City. The contractor shall prepare and submit accurate and timely resident utilization forms and reports to the Department of Public Works. Time Reports shall be submitted within ten (10) days following completion of work, or every three months, whichever comes first. The reports shall identify the name, address, race, gender, work classification, wage rates and hours worked of all employees utilized on the contract by the contractor and all subcontractors. Failure to submit the required forms and reports to the Department of Public Works may result in disqualification of future bids, delay of payments, or other appropriate sanctions. Final contract payments will not be made until the summary of hours worked on the back of the Prime Contractor's Affidavit of Compliance is completed and on file with the Department of Public Works. Forms shall be submitted to DPW, Room 506, Municipal Building, 841 North Broadway, Milwaukee, WI 53202.

C. During the performance of this contract the Department of Public Works reserves the right to conduct compliance reviews. If the contractor is not in compliance with the specifications, the Commissioner of Public Works will notify the contractor in writing of the corrective action that will bring the contractor into compliance. If the contractor fails or refuses to take corrective action as directed, or if the contractor, prime or sub, submits any documents which contain any false, misleading, or fraudulent information, or if the contractor or subcontractor fail to comply with this ordinance, the Department of Public Works may take one or more of the actions listed below.

1. Withhold payments on the contract.

2. Terminate or cancel the contract, in whole or in part.

3. Consider possible debarment of the contractor from bidding for a period of up to two years.
4. Any other remedy available to the City at law or in equity.

D. The penalty for any person, firm, or corporation knowingly engaging in fraud, misrepresentation, or in any attempt directly or indirectly, to evade the provisions of this ordinance by providing false, misleading, or fraudulent information shall, upon conviction, forfeit not less than $1,000 or more than $5,000 together with the costs of prosecution and, upon default of payment, shall be imprisoned in the county jail or house of correction not to exceed 90 days, or until the forfeiture costs are paid.

II. Definitions

A. RESIDENT – A person who maintains his or her place of permanent abode in the City of Milwaukee. Domiciliary intent is required to establish that a person is maintaining his or her place of permanent abode in the City. Mere ownership of real property is not sufficient to establish domiciliary intent. Evidence of domiciliary intent includes, without limitations, the location where a person votes, pays personal income taxes, or obtains a driver's license.

B. UNEMPLOYED or UNDEREMPLOYED – a RESIDENT that has worked less than 1,200 hours in the preceding 12 months or has not worked in the preceding 30 days or, regardless of employment status, has household income at or below the federal poverty guidelines as adjusted by the Wisconsin Department of Public Instruction to define eligibility for reduced lunch in public schools. A RESIDENT will continue to qualify as unemployed or underemployed for five (5) years from the date he or she first participates in a contract under Chapter 309. If a RESIDENT becomes an apprentice for a contractor or becomes a participant in an on-the-job training program as determined by the City immediately after or in the course of performing on a particular construction contract, he or she shall continue to qualify as unemployed or underemployed for a period not exceeding 5 years from the date the person became an apprentice or participant in such on-the-job training program.

C. WORKER HOURS – means the total hours worked on a construction contract by skilled and unskilled construction trade workers, whether those workers are employed by the contractor or any subcontractor. In determining the total worker hours to be furnished at a construction site, the number of hours devoted to all tasks customarily performed on a construction site shall be included, whether or not such tasks are performed on the construction site. "Worker hours" includes work performed by persons filling apprenticeships and participating in on-the-job training programs and excludes the number of hours of work performed by all non-Wisconsin residents.

III. Residency Utilization Requirements

A. The contractor shall utilize UNEMPLOYED or UNDEREMPLOYED RESIDENTS of the City in a minimum amount equal to the percentage of the WORKER HOURS as stated in paragraph IA above.

B. The contractor, by signing and submitting a bid, certifies that it understands the provisions of Chapter 309 and knows of and intends to comply with them, and shall ensure that all subcontractors are also informed.

C. The contractor shall maintain, and shall ensure that all subcontractors maintain, personnel records listing the name, address, race and gender of all employees utilized for this contract and any records demonstrating that the employees utilized by the contractor in meeting the residency requirements are actual residents of the City. These records shall be maintained for seven (7) years after the contractor has received final payment under the contract and shall be made available to the Commissioner of Public Works upon reasonable notice.

D. Compliance with these residency requirements is an element of bid responsiveness. Failure to meet the specified residency requirements will render the bid unresponsive, and the Commissioner of Public Works may then recommend the award to the next apparent low bidder.

E. The City recognizes the following organization which can be contacted for access to trained or qualified workers from the City. Other organizations or sources of qualified RESIDENTS can be used at the bidder's discretion.

Big Step, located at 3841 West Wisconsin Avenue, Milwaukee, WI 53208. Telephone 414-342-9787, fax number 414-342-3546.

F. If the prime contractor has problems in meeting the residency requirements or if any other problems relative to residency participation arise during the completion of this project, the prime contractor shall immediately contact the Commissioner of Public Works.

G. Right to Appeal – All contracts awarded under ss. 7-14-2 and 7-22 of the City Charter shall be awarded by the Commissioner of Public Works to the lowest responsible bidder determined in accordance with any applicable City ordinances relating to the participation of Small Business Enterprise Programs or requiring participation of City RESIDENTS. Following the opening of any bid where the Commissioner has considered compliance with such City ordinances, the Commissioner shall publish in an official City newspaper his or her determination as to the lowest responsible bidder. Any bidder who objects to the determination based on the consideration of such City Ordinances, may appeal the recommendation by filing a written appeal with the Commissioner within five (5) working days of the date of publication. The appeal shall state the specific objection to the determination, including supporting documentation, and specify an alternative determination. Any appeals that do not conform to this section shall not be considered. The Commissioner shall schedule a hearing before the Public Works Contract Appeals Committee which shall be comprised of the chair of the Economic Development Committee or his or her designee and a member of the Economic Development Committee selected by the chair and the Director of Administration or his or her designee to be held within five days of receipt of the appeal. The Public Works Contract Appeals Committee shall have the authority by majority vote to affirm or set aside the determination of the Commissioner and their decision in this regard shall be final. In the event that a timely appeal meeting the requirements of this paragraph is not filed, or the Committee affirms the Commissioner's determination following a timely appeal, the Commissioner shall make an award in accordance with his or her determination.

FORM I (Rev.2015)

_____
Contractor Name

_____
DPW Contract No.

Employee Affidavit

Residents Preference Program

I certify that I maintain my permanent residence in the City of Milwaukee and that I vote, pay personal income tax, obtain my driver's license, etc. at _____,Milwaukee, WI _____
(Address) (Zip Code)

Residency status:

To verify my resident status, attached please find the following (check ***two***)

_____ Copy of my voter's certification form.
_____ Copy of my last year's Form 1040.
_____ Copy of my current Wisconsin Driver's License or State ID.
_____ Copy of Other (i.e., Utility bill, Lease, etc.)

AND

Unemployment status:

I certify that I have been unemployed as follows: (Check those that apply)

_____ I have worked less than 1,200 hours in the preceding 12 months.
_____ I have not worked in the preceding 30 days.

OR

Underemployed status:

_____I certify that based on the attached chart (Income Eligibility Guidelines), I am underemployed.

.

_____
Print Name

_____
Sign Name

_____
Social Security Number

_____
Home Telephone Number

Subscribed and sworn to me this _____day

Of _____, _____ A.D.

My Commission Expires _____.

_____
Notary Public Milwaukee County

please return completed form and required attachments to:
Barbara Trible | DPW Contracts Office | 841 N Broadway – Room 506 | Milwaukee, WI 53202

Income Eligibility Guidelines
July 1, 2015 to June 30, 2016

Eligibility determination is based on household size and income.
Total income must be *at* or *below* the amounts in this table.

Household Size	Yearly	Monthly	Twice per month	Every 2 weeks	Weekly
1	**21,775**	**1,815**	**908**	**838**	**419**
2	**29,471**	**2,456**	**1,228**	**1,134**	**567**
3	**37,167**	**3,098**	**1,549**	**1,430**	**715**
4	**44,863**	**3,739**	**1,870**	**1,726**	**863**
5	**52,559**	**4,380**	**2,190**	**2,022**	**1,011**
6	**60,255**	**5,022**	**2,511**	**2,318**	**1,159**
7	**67,951**	**5,663**	**2,832**	**2,614**	**1,307**
8	**75,647**	**6,304**	**3,152**	**2,910**	**1,455**
9	**83,343**	**6,946**	**3,473**	**3,206**	**1,603**
10	**91,039**	**7,588**	**3,794**	**3,502**	**1,751**
11	**98,735**	**8,230**	**4,115**	**3,798**	**1,899**
12	**106,431**	**8,872**	**4,436**	**4,094**	**2,047**
For Each Additional Household Member Add	**7,696**	**642**	**321**	**296**	**148**

Source: Wisconsin Department of Public Instruction

City Of Milwaukee

Department Of Public Works

Small Business Enterprise (SBE) Provisions

I. General

A. In accordance with Chapter 370 of the Milwaukee Code of Ordinances, Small Business Enterprise (SBE) participation is required in all contracting activities of the Department of Public Works. The ordinance requires that certified SBEs be utilized for 25% of the total dollars annually expended through prime contracts or subcontracts for Construction and the purchase of Goods and Services. For the purchase of Professional Services the requirement is 18%. To that end, the Commissioner of Public Works, as a contracting officer for the City, requires all bidders to utilize SBEs as subcontractors and material suppliers on all contracts. For this contract, bidders are required to achieve the minimum percent of SBE participation listed in the Acknowledgements page/section and/or the Official Notice document.

B. The prime contractor shall prepare and submit accurate and timely SBE utilization forms and reports to the Department of Public Works. The reports shall include, but not be limited to, Compliance Plan (Form A), monthly utilization (Form D), and SBE subcontractor payment certification (Form E) forms as directed. Failure to submit the required forms and reports to the Department of Public Works may result in disqualification of future bids, delay of payments, or other appropriate sanctions. Final contract payments will not be made until final SBE utilization reports and SBE subcontractor payment certification forms are on file with the Department of Public Works.

C. During the performance of this contract, the Department of Public Works reserves the right to conduct compliance reviews. If the contractor is not in compliance with the specifications, the Commissioner of Public Works will notify the contractor in writing of the corrective action that will bring the contractor into compliance. If the contractor fails or refuses to take corrective action as directed, the Department of Public Works may take one or more of the actions listed below:

1. Terminate or cancel the contract, in whole or in part.

2. Consider possible debarment of the prime contractor from bidding.

3. Withhold payments on the contract.

4. Any other remedy available to the City at law or in equity.

II. Definitions

A. "SMALL BUSINESS ENTERPRISE" (SBE) means a small business concern that is 51% owned, operated and controlled by one or more individuals who are a minority, woman and/or a small business owner (who is at an “economic disadvantage”). The individuals must have day-to-day operational and managerial control and interest in capital, financial risks and earnings commensurate with the percentage of their ownership.

B. "OWNED, OPERATED AND CONTROLLED" means a business which is one of the following:

1. A sole proprietorship legitimately owned and operated and controlled by a minority, women or an individual at a disadvantage as defined in Chapter 370.

2. A partnership or joint venture legitimately owned, operated and controlled by individuals who are minorities, women or individuals who are at a disadvantage and who own at least 51% of the beneficial ownership interests in the enterprise and who hold at least 51% of the voting interests of the enterprise eligible as defined in Chapter 370.

3. A corporation legitimately owned, operated and controlled by one or more individuals who are a minority, woman or individual at a disadvantage and who own at least 51% of the outstanding shares and who hold at least 51% of the voting interests of the corporation eligible as defined in Chapter 370.

III. SBE Utilization Requirements

A. Each prime contractor shall utilize SBE to the minimum percent listed in the Acknowledgements section/page and or Official Notice Document for this contract. Note that the prime contractors shall be required to attain SBE participation on their base bid excluding specified allowances, alternatives, and change orders. SBE commitments relative to contract award shall be based upon the approved SBE Compliance Plan (Form A).

B. The determination of SBE utilization shall be based on the following criteria:

1. The firms identified as SBE by the prime contractor on the SBE Compliance Plan (Form A) must be certified by the Office of Small Business Development prior to bid opening.

2. The prime contractor shall be credited for the entire expenditure to SBE firms only if all of the identified scope of work is performed directly by the certified SBE firm.

3. The prime contractor shall be credited for the entire expenditure to SBE manufacturer only if the manufacturer produces goods from raw materials or substantially alters them for resale. Only 20% of the SBE goals may be expended for SBE suppliers that do not manufacture products they supply.

4. The prime contractor shall count toward the SBE requirement only those payments to SBEs who perform a commercially-useful function in the actual performance of the contract. While that generally means an SBE should be engaged in direct contract work, a “commercially-useful function” may also include management of a third tier subcontractor. For example, while an SBE trucking subcontractor is always expected to perform some direct work on the project, in some cases it may become necessary to subcontract work out to one or more third tier subcontractors. If a third tier subcontractor is also an SBE, the full amount of the work performed by that third tier SBE can be counted toward SBE participation. However, if the third party subcontractor is not an SBE, the prime contractor may only count 20% of the amount being subcontracted to the third tier non-SBE subcontractor. SBEs are required to notify the Department of Public Works if they subcontract out work so that the Department can determine how much, if any, of the subcontracted work can be counted toward the SBE requirement. The Commissioner of Public Works will make the final determination and evaluation of whether the SBE is performing a commercially-useful function.

C. The contractor, by signing and submitting a bid, certifies that the contractor understands the provisions of Chapter 370 and knows of and intends to comply with them. The completed SBE Compliance Plan (Form A) must be submitted by the apparent low bid contractor within three (3) working days after the identification of the “low bidder.”

1. Information on Form A shall include, but not be limited to:

a. The names, addresses, telephone numbers, SBE Certification designation and contact person names for the certified SBE contractors that will participate on the project as subcontractors or suppliers;

b. A description of the scope of work to be performed by the SBE on this project; and

c. The SBE contractor dollar value(s) and corresponding percentages that the dollar values represent of the total contract amount.

2. Listing an SBE on the Compliance Plan (Form A) shall constitute a representation that the contractor has communicated directly with the SBEs listed. If awarded the contract, the bidder will enter into a subcontract with the firm for the portion of the work listed.

3. SBE participation is an element of bid responsiveness. Failure to meet the specified SBE requirements will render the bid unresponsive. The contract may then be awarded to the next apparent low bidder. Under certain circumstances, failure to meet specified SBE requirements after submission of an apparent low bid may result in surrender of the bidder's bid bond.

4. Only SBEs that have been certified by the Office of Small Business Development may be listed on the SBE Compliance Plan (Form A) and counted towards the percentage requirements on this project. A listing of the currently City certified SBE firms is maintained at:

Office of Small Business Development
200 East Wells Street
City Hall, Room 606
Milwaukee, Wisconsin 53202
Phone: (414) 286-5553
FAX: (414) 286-8752
www.milwaukee.gov/osbd

D. After execution of the contract, if for any reason an SBE cannot perform, the prime contractor shall contact the Commissioner of Public Works for approval to substitute another certified SBE firm. The prime contractor must submit a written request for substitution which specifies the reasons for the request. Approval must be obtained prior to making substitutions. Any difference in the cost occasioned by such substitution shall be borne by the prime contractor. If the prime contractor cannot find another certified firm to do the work at a comparable price, a non-SBE firm may be substituted with the approval of the Commissioner of Public Works.

E. If the prime contractor has a problem in meeting the SBE requirements or if any other problems relative to SBE(s) arise during the completion of this project, the prime contractor shall immediately contact the Commissioner of Public Works.

F. Certification from programs other than the Office of Small Business Development is neither accepted by the City of Milwaukee nor do they have any bearing whatsoever on the eligibility criteria established by the City of Milwaukee.

G. Right to Appeal.

All contracts awarded under ss.7-14-2 and 7-22 of the City Charter shall be awarded by the Commissioner of Public Works to the lowest responsible bidder determined in accordance with applicable City ordinances for participation of the Office of Small Business Development. Following the opening of any bid involving a determination under applicable City ordinances for participation of SBE, the Commissioner of Public Works shall make a written recommendation as to the lowest responsible bidder and notify all

bidders by publication in an official City newspaper as to the content of the written recommendation. Any bidder who objects to the recommendation on grounds of determinations made under applicable City ordinances for participation of SBE may appeal the recommendation on such grounds by filing a written appeal with the Commissioner of Public Works within five (5) working days of the date of publication. The appeal shall state the specific objection to the recommendation, include supporting documentation and specify an alternative recommendation. The Commissioner of Public Works shall schedule a hearing before an appeals committee consisting of the Chair of the Economic Development Committee or the Chair's designee, a member of the Economic Development Committee selected by the Chair and the Director of the Office of Small Business Development to be held within five (5) days of receipt of the appeal. The Committee shall have authority by majority vote to affirm or set aside the recommendation of the Commissioner of Public Works and its decision in this regard shall be final. In the event a timely appeal, meeting the requirements above is not filed, or the Committee affirms the Commissioner's recommendation following a timely appeal, meeting the requirements above, the Commissioner shall make an award in accordance with the recommendation.

H. Percentage of Required SBE Participation

Construction 25%
The Purchase of Goods and Services 25%
The Purchase of Professional Services 18%

FORM A – COMPLIANCE PLAN – CITY OF MILWAUKEE – DEPARTMENT OF PUBLIC WORKS
SBE PARTICIPATION FOR SUBCONTRACTORS AND/OR MATERIAL SUPPLIERS

PRIME CONTRACTORS NAME: _____ OFFICIAL NOTICE NUMBER: _____

DATE: _____ TOTAL BID AMOUNT: _____ TOTAL SBE AMOUNT: _____

This Form A must be completed in its entirety and is a **required** submission in conjunction with a Bid or Request for Proposal. Submit either with the bid or within **3** days of being notified as the apparent low bidder. List all proposed SBE subcontractor(s) and/or material supplier(s) for this project. **NOTE:** To receive full credit, SBE's must perform commercially useful work at the job site. ONLY up to twenty percent (20%) credit may be given under certain circumstances to SBE suppliers or other SBE contractors who assist in management of the project. I/We propose to utilize the following SBE subcontractor(s) and/or material supplier(s):

Fill in BID REQUIREMENTS: _____% **SBE**

M/W/SBE FIRM(S) NAME ADDRESS/CONTACT PERSON AND PHONE NUMBER	LIST DESIGNATION: WETHER SUPPLIER OR CONSTRUCTION LABOR	PERCENT OF BID	AMOUNT	EXPLAIN WORK TO BE PERFORMED / MATERIAL SUPPLIED	AUTHORIZED SBE(S) OWNER/ REPRESENTATIVE SIGNATURE OF ACKNOWLEDGEMENT
1.					
2.					
3.					
4.					
5.					

I certify that the information included on this Form A is true and complete to the best of my knowledge. I further understand and agree that this Form A is a condition of my Bid/RFP responsiveness. Failure to submit this form and/or meet the specified SBE requirements may render the Bid/RFP nonresponsive.

CONTRACTOR: _____ DATE: _____/_____/_____
(SIGNATURE & TITLE REQUIRED)

REVIEWED BY OSBD ANALYST: _____ DATE: _____/_____/_____

DEPARTMENT OF PUBLIC WORKS: _____ DATE: _____/_____/_____

DEPARTMENT OF PUBLIC WORKS
SMALL BUSINESS ENTERPRISE PROGRAM

Form D – SBE MONTHLY REPORT

(1) Report for the Month of _____ 20_____ (Final: yes ___ no ___)

(2) Prime Contractor/Firm _____

(3) Full Address & Phone Number: _____

(4) Description of work/service performed and/or material supplied _____

(5) DPW Contract No. **C**_____ (6) Official Notice No./Project Number _____

(7) Start Date: _____ (8) Prime Contractor's Total $: _____

(9) Completion Date: _____ (10) Prime Contractor to date $: _____

(11) Small Business % _____ and Small Business $ amount _____

List all SBE subcontractor firm(s) utilized in connection with the above contract, either as service performed and/or supplier for the month. This form shall be signed and returned**. If this represents the final report, be sure to attach SBE Payment Certification Form (Form E) for each sub listed.**

NAME OF SBE FIRM(s)	WORK/SERVICE PERFORMED or MATERIAL SUPPLIED	AMOUNT PAID FOR THE MONTH	TOTAL $ PAID TO DATE
TOTAL PAID TO SBE(s)			

I/we hereby certify that I/we have read the above and approved this information to be precise and confirmed.

(12) Report Prepared By: _____
(Name) (Title) (Phone Number)

(13) Authorized Signature : _____
(Name) (Title)

(14) Date _____

Note: This form should be submitted no later than the **20th of every month** to the **DEPARTMENT of PUBLIC WORKS CONTRACT ADMINISTRATION, Room 506, Frank P. Zeidler Municipal Building, 841 North Broadway, Milwaukee, WI 53202.**

DIRECTIONS FOR SBE MONTHLY REPORT (FORM D)

1. List the month that the report is being submitted. **Note: If this is the final report, check yes and submit Form E Subcontractor Payment Certification Form.**
2. Prime contractor's or firm's registered company name.
3. List full registered business address to include city/state, zip code and telephone number.
4. Brief description service performed and/or material supplied on this contract.
5. List the DPW Contract Number, as represented on the contract document.
6. List the project number as represented on the front page of the contract.
7. List the start date of the project.
8. List the total dollars awarded to the prime contractor.
9. List the completion date of the project.
10. Total dollars paid to Prime contractor to date.
11. List SBE percentage **REQUIRED** on this project and each SBE dollar amount.
12. List the name, title and phone number of the individual who prepared the report.
13. Provide the authorized signature and title of the individual who approves the report.
14. List the date that the report is completed.

THIS REPORT IS DUE THE 20TH OF EVERY MONTH FOR THE PREVIOUS MONTH'S ACTIVITY. FAILURE TO RETURN THIS FORM BY THE SPECIFIED TIME MAY CAUSE A DELAY IN PAYMENTS.

FORM E
(Rev.05/2013)

City Of Milwaukee

Department Of Public Works

Small Business Enterprise Program (SBE)
Subcontractor Payment Certification

(This form must be completed by the SBE subcontractor and attached to the Prime Contractor's Final SBE Form D Report)

-PRIME CONTRACTOR & SUBCONTRACTOR EXECUTES-

Section A – SBE Company Officer Completes **For Payment That Has Been Received.**

SBE Subcontractor Name: _____

Official Notice No. _____ Project No. _____ DPW Contract No. **C**_____

I hereby certify that I have received $ _____ for subcontract work on the above project.

Dated: _____ Signature of **SBE** Subcontractor: _____

Printed Name & Title of **Certified SBE** Subcontractor:

_____

Acknowledged by **Prime** Contractor Signature: _____

Printed name & Title of **Prime** Contractor: _____

****

-PRIME CONTRACTOR & SUBCONTRACTOR EXECUTE-

Section B - Prime Contractor and SBE Company Officers Complete if **Full Payment Has Not Been Made to the SBE Subcontractor and a balance remains to be paid.**

Prime Contractor: _____

SBE Subcontractor: _____

Official Notice No. _____ Project No. _____ DPW Contract No. **C**_____

I hereby certify that I will pay $_____ to _____
(Name of SBE Firm)

for subcontract work on the above project.

Dated: _____ Signature of **Prime** Contractor: _____

Printed Name & Title of **Prime** Contractor: _____

Acknowledged by **SBE** Subcontractor Signature: _____

Printed Name & Title of **SBE** Subcontractor: _____

CITY OF MILWAUKEE

PRIME CONTRACTOR AFFIDAVIT OF COMPLIANCE

WITH MINIMUM WAGE SCALE AND SPECIAL AREA WORKER HOURS PROVISIONS

STATE OF _____)
) SS.
_____County)

Project Name _____

DPW Contract No. _____

I, _____, being duly sworn, state that:

1. I am the _____ of_____, a _____ (State) corporation, partnership, or individual of _____ (City, Village, Township), _____ (State), and make this affidavit pursuant to the provisions of § 66.0903 (9), Wisconsin Statutes, and Wisconsin Administrative Code section §DWD 290.14 regarding wage and fringe benefit rates for municipal contracts for construction of public works and pursuant to Section 309-41 of the Milwaukee Code of Ordinances.

2. I have recently completed the work required under the terms of the contract dated _____, 20_____, with the City of Milwaukee, Department of Public Works for the construction of all or part of the above-named public works project and make this affidavit in order to obtain my final payment.

3. I have fully complied with the wage and hour requirements as set forth in the above-referenced contract and paid overtime rates (1½ times) for any work over ten (10) hours per day or forty (40) hours per week.

4. I have received similar evidence of compliance with the contract wage rates and special impact area worker hour requirements in the form of completed affidavits from each of my agents and subcontractors who worked on this project and have listed their names on the reverse side of this affidavit along with numbers and percentages of worker hours.

5. I have full and accurate records which clearly show the name, trade or occupation, and home address of every laborer, worker, or mechanic that I employed in connection with the work on this project, as well as the hours worked and actual wage and fringe benefits paid to such employees. These records will be kept at _____ _____ in the custody of _____, who address and telephone number are _____ _____ . These payroll records and the evidence of compliance set in Paragraph 4 will be retained and made available for inspection for a period of at least **seven (7)** years following the completion of the project and will not be removed without prior notification to the commissioner of Public Works.

Title	Officer Name	Address
President	_____	_____
Vice-President	_____	_____
Secretary-Treasure	_____	_____

Subscribed and sworn to before me this _____

day of _____, 20_____

_____

Notary Public, State of _____

My Commission Expires: _____

_____
(Signature)

- OVER -

SUMMARY OF HOURS WORKED
(TARGET RESIDENCY VS TOTAL HOURS)

Name	No. of Hours of Special Impact Area Workers	% of Total Hours	No. of Hours of All Other Workers	% of Total Hours	Total of All Worker Hours
Prime Contractor:					
Subcontractors:					
GRAND TOTAL					

(REV. 01/01/01)

CITY OF MILWAUKEE

SUBCONTRACTOR AFFIDAVIT OF COMPLIANCE

WITH MINIMUM WAGE SCALE AND SPECIAL AREA WORKER HOURS PROVISIONS

STATE OF _____)
) SS.
_____County)

Project Name _____

DPW Contract No. _____

I, _____, being duly sworn, state that:

1. I am the _____ of_____, a _____ (State) corporation, partnership, or individual of _____ (City, Village, Township), _____ (State) and make this affidavit pursuant to the provisions of § 66.0903 (9), Wisconsin Statutes, and Wisconsin Administrative Code section § DWD 290.13 regarding wage and fringe benefit rates for municipal contracts for construction of public works and pursuant to Section 309-41 of the Milwaukee Code of Ordinances.

2. I have recently completed the work required under the terms of the contract dated _____, 20_____ , with the City of Milwaukee, Department of Public Works and _____ (Name of Prime Contractor) for the construction of all or part of the above-named public works project and make this affidavit in order to obtain my final payment.

3. I have fully complied with the wage and hour requirements as set forth in the above-referenced contract and paid overtime rates (1½ times) for any work over ten (10) hours per day or forty (40) hours per week.

4. I have full and accurate records which clearly show the name, trade or occupation, and home address of every laborer, worker, or mechanic that I employed in connection with the work on this project, as well as the hours worked and actual wage and fringe benefits paid to such employees. These records will be kept at _____ _____ in the custody of _____, who address and telephone number are _____ . These payroll records and the evidence of compliance set in Paragraph 4 will be retained and made available for inspection for a period of at least **seven (7)** years following the completion of the project and will not be removed without prior notification to the commissioner of Public Works.

5. I certify that _____ were the total number of hours worked on this project with _____ hours being worked by residents of the special impact area and _____ hours being worked by all other workers.

Title	Officer Name	Address
President	_____	_____
Vice-President	_____	_____
Secretary-Treasure	_____	_____

Subscribed and sworn to before me this _____

day of _____, 20_____

_____

Notary Public, State of _____

My Commission Expires: _____

_____
(Contractor Signature)

To ensure DPW is in compliance with any federal procurement requirements regarding suspension and debarment, CONTRACTOR must sign this "Suspension/Debarment Certification Form".

Please complete and sign below and return this form to:

Department of Public Works Contract Office
Room **506**, Municipal Building
841 North Broadway
Milwaukee, WI 53202

Submittal required prior to start of work on this project.

CERTIFICATION REGARDING SUSPENSION AND DEBARMENT

The CONTRACTOR certifies that all potential sub-recipients, contractors, and any and all of their principals are not debarred, suspended or proposed for debarment for federal assistance (e.g., General Services Administration's List of Parties Excluded from Federal Procurement and Non-Procurement Programs), and that throughout the term of its federally-funded contracts with the City of Milwaukee, the CONTRACTOR will not enter into any transactions with any sub-recipients, contractors, or any of their principals who are debarred, suspended or proposed for debarment.

_____ _____
Signature/Authorized Official Date

_____ C_____
Printed Name Contract Number

_____
Title

_____
Name of Company

AFFIDAVIT OF COMPLIANCE
WITH WISCONSIN STATUTE 103.503
SUBSTANCE ABUSE PREVENTION REQUIREMENTS

STATE OF _____) PROJECT NAME _____
) ss.
_____ COUNTY) DPW Contract No._____

I, _____ , being first duly sworn state that:
(Print name)

1. I am the _____ of _____, a _____.
(Title) (Company Name) (State)

   Corporation, partnership, or individual of _____, _____ ,
(City, Village, Township) (State)
   and make this affidavit pursuant to the provisions of Wis. Stat. § 103.503.
2. I have entered into City of Milwaukee, Department of Public Works' Contract No. _____ , to which the provisions of Wis. Stat. 66.0903 apply.
3. I have in place a substance abuse prevention program that meets the requirements of Wis. Stat. 103.503, and I will fully comply in all respects with the requirements of Wis. Stat. 103.503 during the performance of this Contract.
4. I will include in each subcontract covering work performed under this Contract to which the provisions of Wis. Stat. 66.0903 apply, a provision similar to that in Paragraph 3 above, together with a clause requiring such insertion in further subcontracts that may in turn be made.

Title	Officer Name	Address
President	_____	_____
Vice President	_____	_____
Secretary/Treasurer	_____	_____

Subscribed and sworn before me this _____

day of _____ , 20_____ .

_____ _____
Notary Signature Contractor Signature

Notary Public, State of _____

My Commission Expires: _____

1121-2004-1516/96897

(REV. 04/03/07)

FORM F
(REV. 01/01/01)

PROPOSED RESIDENT / APPRENTICE UTILIZATION FORM

This is a preliminary statement of proposed workforce needs where known.

Official Notice # _____ Project # _____ Contract # _____

Contractor _____

JOB CATEGORY	PROPOSED # OF HOURS ON THIS PROJECT	PROPOSED # OF HOURS FOR SPECIAL IMPACT AREA RESIDENTS	PROPOSED # OF HOURS FOR ALL OTHER WORKERS
TRUCK DRIVERS:		(%)	(%)
OPERATING ENGINEERS:			
JOURNEYMEN		(%)	(%)
APPRENTICES		(%)	(%)
SKILLED TRADES: (Specify)			
JOURNEYMEN		(%)	(%)
APPRENTICES		(%)	(%)
TRAINEES		(%)	(%)
LABORERS: (Specify type)			
		(%)	(%)
		(%)	(%)
		(%)	(%)
		(%)	(%)
		(%)	(%)

NAME and ADDRESS of Target Area Residents: _____ _____

NAME and ADDRESS of Apprentices: _____ _____

City of Milwaukee

Department of Public Works

Apprenticeship Provisions

I. General:

A. In accordance with Section 309-38 of the Milwaukee Code of Ordinances, apprenticeship requirements will be specified on all Department of Public Works construction contracts, where appropriate, which are in excess of $100,000. The ordinance requires that a contractor employ apprentices in the performance of the contract and of all subcontracts entered into by the contractor in accordance with the maximum ratio of apprentices to journeymen as established by the Wisconsin Department of Industry, Labor, and Human Relations. Fair consideration must be given to minorities and women. For this contract, bidders are required to utilize apprentice(s) from **one** of the following trade(s):

Construction Craft Laborer

B. The contractor shall prepare and submit an accurate and timely Apprenticeship Utilization Form (Form F) and other reports to the Department of Public Works. The Apprenticeship Utilization Form shall be returned with the executed contract and shall specifically identify the apprentice(s) that will work on the project. The Contractor Time Report shall be submitted within ten (10) days following completion of work or every three (3) months, whichever comes first. Failure to submit the required forms and reports to the Department of Public Works may result in disqualification of future bids, delay of payments, or other appropriate sanctions. Final contract payments will not be made until all apprenticeship related reports are on file with the Department of Public Works.

C. During the performance of this contract the Department of Public Works reserves the right to conduct compliance reviews. If the contractor is not in compliance with the specifications, the Commissioner of Public Works will notify the contractor in writing of the corrective action that will bring the contractor into compliance. If the contractor fails or refuses to take corrective action as directed, or if the contractor, prime or sub, submits any documents which contain any false, misleading, or fraudulent information, or if the contractor or subcontractor fail to comply with this ordinance, the Department of Public Works may take one or more of the actions listed below:

1. Withhold payments on the contract.

2. Terminate, suspend, or cancel the contract, in whole or in part.

3. After due process, consider debarment of the contractor from bidding for a two-year period.

4. Any other remedy available to the City at law or in equity.

II. Definitions:

A. Apprentice - a person, 16 years of age or over, who shall enter into a written contract of service where he or she is to receive from or through his or her employer in consideration for his or her services, in whole or in part, instruction in any trade, craft, or business. Apprenticeship agreements shall be governed by Ch. 106, Wis. Stats.

B. Construction - Means either new construction work or repair work on any roads, bridges, sewers, streets, alleys, buildings, or any other public works.

III. Apprenticeship Utilization Requirements:

A. The contractor shall utilize apprentices in a minimum amount equal to that stated in paragraph I-A above.

B. The contractor, by signing and submitting a bid, certifies that the contractor understands the provisions of Chapter 309 and knows of and intends to comply with them.

C. The contractor shall maintain personnel records listing the names and addresses of its employees utilized for this contract in meeting apprenticeship requirements. These records shall be maintained for three (3) years after the contractor has received final payment under the contract and shall be made available to the Commissioner of Public Works upon reasonable notice.

D. Compliance with these apprenticeship requirements is an element of bid responsiveness. Failure to meet the specified apprenticeship requirements will render the bid unresponsive, and the Commissioner of Public Works may then recommend award to the next apparent low bidder.

E. If the prime contractor has problems in meeting the apprenticeship requirements or if any other problems relative to apprenticeship participation arise during the completion of this project, the prime contractor shall immediately contact the Commissioner of Public Works.

NOTICE TO CONTRACTORS

PLEASE NOTE: Effective December 28, 2005, the City of Milwaukee adopted an ordinance relative to the disclosure of participation in or profits derived from slavery by contractors. All contractors awarded a contract on behalf of the City of Milwaukee, whether or not subject to a competitive bid, shall complete an affidavit prior to entering into the contract verifying that the contractor has searched any and all records of the company or any predecessor company regarding records of investments or profits from slavery or slaveholder insurance policies during the slavery era. The names of any enslaved persons or slaveholders described in those records must be disclosed in the affidavit.

The City shall make the information contained in the affidavit available to the public. Any contract between the City and a contractor which fails to provide the requisite affidavit or which includes material false information on such affidavit shall be rendered null and void. To reference Milwaukee Code of Ordinances 310-14, please see:

http://cctv25.milwaukee.gov/code/volume3/ch310.pdf

DEPARTMENT OF ADMINISTRATION
BUSINESS OPERATIONS DIVISION
PROCUREMENT SERVICES SECTION

Affidavit of Compliance
Disclosure of Participation in or Profits Derived from Slavery by Contractors

Company Name: _____

Address: _____

City: _____ State: _____ Zip: _____

This affidavit of compliance will be the contractor's sworn statement that publicly discloses any slavery policies sold by any companies, or profits from slavery by industries or their predecessors who are doing business with the City of Milwaukee as defined in the Milwaukee Code of Ordinances 310-14. **NOTE: Effective May 13, 2014, Contractors whose company was established during the slavery era, whether or not subject to competitive bidding, shall complete this Affidavit prior to entering into a contract.**

Please check one:

☐ This business **was** in existence during or prior to the slavery era (1865). I have searched any and all records for records of investments or profits from slavery, and have found no such records.

☐ This business **was** in existence during or prior to the slavery era (1865). I have searched any and all records for records of investments or profits from slavery, and am disclosing the findings below.

Findings being disclosed (please attach additional pages, if necessary):

I hereby declare that all statements are true, accurate and complete as of the date furnished to the City of Milwaukee.

Authorized Signature: _____

Printed Name: _____ Date: _____

Subscribed to before me on this _____ day of _____, 20 _____, at

_____ County, _____ State.

_____
Notary Public Signature

_____
Printed Name

My commission expires: _____

(SEAL)

Please Return to:
DOA-BOD-Procurement Services
200 E. Wells Street, Room 601
Milwaukee, WI 53202

procurement.services@milwaukee.gov

NOTICE TO CONTRACTORS

Effective immediately, the City of Milwaukee has adopted an ordinance relative to Prompt Payment as follows:

2.9.16.b) It is the City's policy to pay all invoices within 30 days. If the City does not make payment within 45 days after receipt of properly completed supporting payment and other required contract documentation, the City shall pay simple interest beginning with the 31st calendar day at the rate of 1% per month (unless the amount due is subject to a good-faith dispute and, before the 45th day of receipt, notice of the dispute is sent to the contractor by first-class mail, personally delivered, or sent in accordance with the notice provisions in the contract). If there are subcontractors, consistent with s.66.0135(3), Wis. Stats., the prime contractor must pay the subcontractors for satisfactory work within seven (7) days of the contractor's receipt of payment from the City of Milwaukee, or seven (7) days from receipt of a properly submitted and approved invoice from the subcontractor, whichever is later. If the contractor fails to make timely payment to a subcontractor, the contractor shall pay interest at the rate of 12% per year, compounded monthly, beginning with the 8th calendar day. Reference Common Council File No. 101137 adopted January 2011.

5/11/2011

PREVAILING WAGE RATE DETERMINATION
Issued by the State of Wisconsin
Department of Workforce Development
Pursuant to s. 66.0903, Wis. Stats.
Issued On: 1/8/2016

DETERMINATION NUMBER: 201600002

EXPIRATION DATE: Prime Contracts MUST Be Awarded or Negotiated On Or Before 12/31/2016. If NOT, You MUST Reapply.

PROJECT NAME: ALL PUBLIC WORKS PROJECTS UNDER SEC. 66.0903, STATS-CITY OF MILWAUKEE

PROJECT LOCATION: MILWAUKEE CITY, MILWAUKEE COUNTY, WI

CONTRACTING AGENCY: CITY OF MILWAUKEE-DEPT OF PUBLIC WORKS

CLASSIFICATION:	Contractors are responsible for correctly classifying their workers. Either call the Department of Workforce Development (DWD) with trade or classification questions or consult DWD's Dictionary of Occupational Classifications & Work Descriptions on the DWD website at: dwd.wisconsin.gov/er/prevailing_wage_rate/Dictionary/dictionary_main.htm.
OVERTIME:	Time and one-half must be paid for all hours worked: - over 10 hours per day on prevailing wage projects - over 40 hours per calendar week - Saturday and Sunday - on all of the following holidays: January 1; the last Monday in May; July 4; the 1st Monday in September; the 4th Thursday in November; December 25; - The day before if January 1, July 4 or December 25 falls on a Saturday; - The day following if January 1, July 4 or December 25 falls on a Sunday. Apply the time and one-half overtime calculation to whichever is higher between the Hourly Basic Rate listed on this project determination or the employee's regular hourly rate of pay. Add any applicable Premium or DOT Premium to the Hourly Basic Rate before calculating overtime. A DOT Premium (discussed below) may supersede this time and one-half requirement.
FUTURE INCREASE:	When a specific trade or occupation requires a future increase, you MUST add the full hourly increase to the "TOTAL" on the effective date(s) indicated for the specific trade or occupation.
PREMIUM PAY:	If indicated for a specific trade or occupation, the full amount of such pay MUST be added to the "HOURLY BASIC RATE OF PAY" indicated for such trade or occupation, whevenever such pay is applicable.
DOT PREMIUM:	This premium only applies to highway and bridge projects owned by the Wisconsin Department of Transportation and to the project type heading "Airport Pavement or State Highway Construction." DO NOT apply the premium calculation under any other project type on this determination.
APPRENTICES:	Pay apprentices a percentage of the applicable journeyperson's hourly basic rate of pay and hourly fringe benefit contributions specified in this determination. Obtain the appropriate percentage from each apprentice's contract or indenture.
SUBJOURNEY:	Subjourney wage rates may be available for some of the trades or occupations indicated below with the exception of laborers, truck drivers and heavy equipment operators. Any employer interested in using a subjourney classification on this project MUST complete Form ERD-10880 and request the applicable wage rate from the Department of Workforce Development PRIOR to using the subjourney worker on this project.

This document **MUST BE POSTED** by the **CONTRACTING AGENCY** in at least one conspicuous and easily accessible place **on the site of the project** . A local governmental unit may post this document at the place normally used to post public notices if there is no common site on the project. This document **MUST** remain posted during the entire time any worker is employed on the project and **MUST** be physically incorporated into the specifications and all contracts and subcontracts. If you have any questions, please write to the Equal Rights Division, Labor Standards Bureau, P.O. Box 8928, Madison, Wisconsin 53708 or call (608) 266-6861.

The following statutory provisions apply to local governmental unit projects of public works and are set forth below pursuant to the requirements of s. 66.0903(8), Stats.

s. 66.0903 (1) (f) & s. 103.49 (1) (c) "PREVAILING HOURS OF LABOR" for any trade or occupation in any area means 10 hours per day and 40 hours per week and may not include any hours worked on a Saturday or Sunday or on any of the following holidays:

1. January 1.
2. The last Monday in May.
3. July 4.
4. The first Monday in September.
5. The 4th Thursday in November.
6. December 25.
7. The day before if January 1, July 4 or December 25 falls on a Saturday.
8. The day following if January 1, July 4 or December 25 falls on a Sunday.

s. 66.0903 (10) RECORDS; INSPECTION; ENFORCEMENT.
(a) Each contractor, subcontractor, or contractor's or subcontractor's agent performing work on a project of public works that is subject to this section shall keep full and accurate records clearly indicating the name and trade or occupation of every person performing the work described in sub. (4) and an accurate record of the number of hours worked by each of those persons and the actual wages paid for the hours worked.

s. 66.0903 (11) LIABILITY AND PENALTIES.
(a) 1. Any contractor, subcontractor, or contractor's or subcontractor's agent who fails to pay the prevailing wage rate determined by the department under sub. (3) or who pays less than 1.5 times the hourly basic rate of pay for all hours worked in excess of the prevailing hours of labor is liable to any affected employee in the amount of his or her unpaid wages or his or her unpaid overtime compensation and in an additional amount as liquidated damages as provided under subd. 2., 3., whichever is applicable.
2. If the department determines upon inspection under sub. (10) (b) or (c) that a contractor, subcontractor, or contractor's or subcontractor's agent has failed to pay the prevailing wage rate determined by the department under sub. (3) or has paid less than 1.5 times the hourly basic rate of pay for all hours worked in excess of the prevailing hours of labor, the department shall order the contractor to pay to any affected employee the amount of his or her unpaid wages or his or her unpaid overtime compensation and an additional amount equal to 100 percent of the amount of those unpaid wages or that unpaid overtime compensation as liquidated damages within a period specified by the department in the order.
3. In addition to or in lieu of recovering the liability specified in subd. 1. as provided in subd. 2., any employee for and in behalf of that employee and other employees similarly situated may commence an action to recover that liability in any court of competent jurisdiction. If the court finds that a contractor, subcontractor, or contractor's or subcontractor's agent has failed to pay the prevailing wage rate determined by the department under sub. (3) or has paid less than 1.5 times the hourly basic rate of pay for all hours worked in excess of the prevailing hours of labor, the court shall order the contractor, subcontractor, or agent to pay to any affected employee the amount of his or her unpaid wages or his or her unpaid overtime compensation and an additional amount equal to 100 percent of the amount of those unpaid wages or that unpaid overtime compensation as liquidated damages.
5. No employee may be a party plaintiff to an action under subd. 3. unless the employee consents in writing to become a party and the consent is filed in the court in which the action is brought. Notwithstanding s. 814.04 (1), the court shall, in addition to any judgment awarded to the plaintiff, allow reasonable attorney fees and costs to be paid by the defendant.

BUILDING OR HEAVY CONSTRUCTION

Includes sheltered enclosures with walk-in access for the purpose of housing persons, employees, machinery, equipment or supplies and non-sheltered work such as canals, dams, dikes, reservoirs, storage tanks, etc. A sheltered enclosure need not be "habitable" in order to be considered a building. The installation of machinery and/or equipment, both above and below grade level, does not change a project's character as a building. On-site grading, utility work and landscaping are included within this definition. Residential buildings of four (4) stories or less, agricultural buildings, parking lots and driveways are NOT included within this definition.

SKILLED TRADES

Fringe Benefits Must Be Paid On All Hours Worked

CODE	TRADE OR OCCUPATION	HOURLY BASIC RATE OF PAY $	HOURLY FRINGE BENEFITS $	TOTAL $
101	Acoustic Ceiling Tile Installer Future Increase(s): Add $1.65/hr on 6/1/2016.	35.28	20.96	56.24
102	Boilermaker	30.21	21.97	52.18
103	Bricklayer, Blocklayer or Stonemason Future Increase(s): Add $1.45 on 06/06/2016 Premium Increase(s): DOT PREMIUM: Pay two times the hourly basic rate on Sunday, New Year’s Day, Memorial Day, Independence Day, Labor Day, Thanksgiving Day & Christmas Day.	36.74	19.26	56.00
104	Cabinet Installer Future Increase(s): Add $1.65/hr on 6/1/2016.	35.28	20.96	56.24
105	Carpenter Future Increase(s): Add $1.65/hr on 6/1/2016. Premium Increase(s): DOT PREMIUM: Pay two times the hourly basic rate on Sunday, New Year's Day, Memorial Day, Independence Day, Labor Day, Thanksgiving Day & Christmas Day.	35.28	20.96	56.24
106	Carpet Layer or Soft Floor Coverer Future Increase(s): Add $1.65/hr on 6/1/2016.	35.28	20.96	56.24
107	Cement Finisher Future Increase(s): Add $1.45 on 05/31/2016	32.88	19.88	52.76
108	Drywall Taper or Finisher Future Increase(s): Add $1.00/hr eff. 06/01/2016; Add $1.05/hr eff. 06/01/2017	30.42	21.19	51.61
109	Electrician Future Increase(s): Add $1.60 on 6/1/16; Add $1.70 on 6/1/17 Premium Increase(s): DOT PREMIUM: Pay two times the hourly basic rate on Sunday, New Year’s Day, Memorial Day, Independence Day, Labor Day, Thanksgiving Day & Christmas Day.	35.13	23.19	58.32

CODE	Fringe Benefits Must Be Paid On All Hours Worked TRADE OR OCCUPATION	HOURLY BASIC RATE OF PAY $	HOURLY FRINGE BENEFITS $	TOTAL $
110	Elevator Constructor	43.84	27.09	70.93
111	Fence Erector	24.73	19.69	44.42
112	Fire Sprinkler Fitter	39.66	21.11	60.77
113	Glazier Future Increase(s): Add $.90/hr eff. 06/01/2016	34.45	18.99	53.44
114	Heat or Frost Insulator	33.53	27.31	60.84
115	Insulator (Batt or Blown)	23.62	11.55	35.17
116	Ironworker	30.77	23.72	54.49
117	Lather	34.13	20.61	54.74
118	Line Constructor (Electrical)	40.81	18.06	58.87
119	Marble Finisher	25.72	18.54	44.26
120	Marble Mason	35.89	18.77	54.66
121	Metal Building Erector	19.00	2.00	21.00
122	Millwright Future Increase(s): Add $1.35/hr on 6/1/2016.	29.78	26.38	56.16
123	Overhead Door Installer	28.73	0.00	28.73
124	Painter Future Increase(s): Add $1.00/hr on 06/01/2016; Add $1.05/hr on 06/01/2017 Premium Increase(s): Add $.20/hr for paperhanging; Add $.35/hr for bridge, iron and drywall; Add $.75/hr for spraying and sandblasting; Add $.60/hr for EIFS work; Add $1.00/hr for lead based paint removal.	30.07	21.19	51.26
125	Pavement Marking Operator	30.00	19.61	49.61
126	Piledriver Future Increase(s): Add $1.60/hr on 6/1/2016. Premium Increase(s): Add $.65/hr for Piledriver Loftsman; Add $.75/hr for Sheet Piling Loftsman. DOT PREMIUM: Pay two times the hourly basic rate on Sunday, New Year's Day, Memorial Day, Independence Day, Labor Day, Thanksgiving Day & Christmas Day.	30.58	27.54	58.12
127	Pipeline Fuser or Welder (Gas or Utility)	41.01	21.54	62.55
129	Plasterer	30.22	20.53	50.75

CODE	Fringe Benefits Must Be Paid On All Hours Worked TRADE OR OCCUPATION	HOURLY BASIC RATE OF PAY $	HOURLY FRINGE BENEFITS $	TOTAL $
130	Plumber Future Increase(s): Add $2/hr on 6/1/16; Add $2/hr on 6/1/17.	39.62	20.12	59.74
132	Refrigeration Mechanic Future Increase(s): Add $2.00 on 6/1/16; Add $2.00 on 6/1/17	42.36	21.99	64.35
133	Roofer or Waterproofer	29.65	18.61	48.26
134	Sheet Metal Worker	37.91	21.05	58.96
135	Steamfitter Future Increase(s): Add $2.00 on 6/1/16; Add $2.00 on 6/1/17	42.36	21.99	64.35
137	Teledata Technician or Installer Premium Increase(s): DOT PREMIUM: Pay two times the hourly basic rate on Sunday, New Year's Day, Memorial Day, Independence Day, Labor Day, Thanksgiving Day & Christmas Day.	26.00	17.74	43.74
138	Temperature Control Installer	41.01	21.54	62.55
139	Terrazzo Finisher	25.72	18.54	44.26
140	Terrazzo Mechanic Future Increase(s): Add $1.45 on 06/06/2016	31.59	19.60	51.19
141	Tile Finisher	30.00	0.00	30.00
142	Tile Setter	30.18	17.34	47.52
143	Tuckpointer, Caulker or Cleaner	34.28	18.60	52.88
144	Underwater Diver (Except on Great Lakes)	36.74	16.00	52.74
146	Well Driller or Pump Installer Future Increase(s): Add $1/hr on 6/1/2016; Add $1/hr on 6/1/2017.	25.32	16.40	41.72
147	Siding Installer	17.00	6.71	23.71
150	Heavy Equipment Operator - ELECTRICAL LINE CONSTRUCTION ONLY	36.73	20.41	57.14
151	Light Equipment Operator -ELECTRICAL LINE CONSTRUCTION ONLY	32.65	14.96	47.61
152	Heavy Truck Driver - ELECTRICAL LINE CONSTRUCTION ONLY	28.57	13.71	42.28
153	Light Truck Driver - ELECTRICAL LINE CONSTRUCTION ONLY	26.53	13.55	40.08
154	Groundman - ELECTRICAL LINE CONSTRUCTION ONLY	25.00	12.55	37.55

TRUCK DRIVERS

CODE	Fringe Benefits Must Be Paid On All Hours Worked TRADE OR OCCUPATION	HOURLY BASIC RATE OF PAY $	HOURLY FRINGE BENEFITS $	TOTAL $
201	Single Axle or Two Axle	34.47	18.70	53.17
203	Three or More Axle	20.00	18.19	38.19
204	Articulated, Euclid, Dumptor, Off Road Material Hauler Future Increase(s): Add $1.60/hr on 5/30/2016.	33.02	19.15	52.17
205	Pavement Marking Vehicle	20.00	18.19	38.19
207	Truck Mechanic	20.00	18.19	38.19

LABORERS

CODE	Fringe Benefits Must Be Paid On All Hours Worked TRADE OR OCCUPATION	HOURLY BASIC RATE OF PAY $	HOURLY FRINGE BENEFITS $	TOTAL $
301	General Laborer	29.01	17.39	46.40
302	Asbestos Abatement Worker	19.00	0.00	19.00
303	Landscaper	14.00	11.63	25.63
310	Gas or Utility Pipeline Laborer (Other Than Sewer and Water)	20.83	18.39	39.22
311	Fiber Optic Laborer (Outside, Other Than Concrete Encased)	18.53	0.00	18.53
314	Railroad Track Laborer	17.00	5.43	22.43
315	Final Construction Clean-Up Worker	29.01	17.39	46.40

HEAVY EQUIPMENT OPERATORS
SITE PREPARATION, UTILITY OR LANDSCAPING WORK ONLY

CODE	Fringe Benefits Must Be Paid On All Hours Worked TRADE OR OCCUPATION	HOURLY BASIC RATE OF PAY $	HOURLY FRINGE BENEFITS $	TOTAL $
501	Air Track, Rotary or Percussion Drilling Machine &/or Hammers, Blaster; Asphalt Milling Machine; Boring Machine (Directional, Horizontal or Vertical); Backhoe (Track Type) Having a Mfgr's Rated Capacity of 130,000 Lbs. or Over; Backhoe (Track Type) Having a Mfgr's Rated Capacity of Under 130,000 Lbs., Backhoe (Mini, 15,000 Lbs. & Under); Bulldozer or Endloader (Over 40 hp); Compactor (Self-Propelled 85 Ft Total Drum Width & Over, or Tractor Mounted, Towed & Light Equipment); Concrete Batch Plant, Batch Hopper; Concrete Breaker (Large, Auto, Vibratory/Sonic, Manual or Remote); Crane, Shovel, Dragline, Clamshells; Forklift (Machinery Moving or Steel Erection, 25 Ft & Over); Gradall (Cruz-Aire Type); Grader or Motor Patrol; Master Mechanic; Mechanic or Welder; Robotic Tool Carrier (With or Without Attachments); Scraper (Self Propelled or Tractor Drawn) 5 cu yds or More Capacity; Tractor or Truck Mounted Hydraulic Backhoe; Tractor or Truck Mounted Hydraulic Crane (10 Tons or Under); Tractor (Scraper, Dozer, Pusher, Loader); Trencher (Wheel Type or Chain Type Having Over 8 Inch Bucket). Future Increase(s): Add $1.60/hr on 5/30/2016.	35.52	19.15	54.67
502	Backfiller; Broom or Sweeper; Bulldozer or Endloader (Under 40 hp); Environmental Burner; Forestry Equipment, Timbco, Tree Shear, Tub Grinder, Processor; Jeep Digger; Screed (Milling Machine); Skid Rig; Straddle Carrier or Travel Lift; Stump Chipper; Trencher (Wheel Type or Chain Type Having 8 Inch Bucket & Under). Future Increase(s): Add $1.60/hr on 5/30/2016.	35.52	19.15	54.67
503	Air Compressor (&/or 400 CFM or Over); Augers (Vertical & Horizontal); Compactor (Self-Propelled 84 Ft Total Drum Width & Under, or Tractor Mounted, Towed & Light Equipment); Crusher, Screening or Wash Plant; Farm or Industrial Type Tractor; Forklift; Generator (&/or 150 KW or Over); Greaser; High Pressure Utility Locating Machine (Daylighting Machine); Mulcher; Oiler; Post Hole Digger or Driver; Pump (3 Inch or Over) or Well Points; Refrigeration Plant or Freeze Machine; Rock, Stone Breaker; Skid Steer Loader (With or Without Attachments); Vibratory Hammer or Extractor, Power Pack. Future Increase(s): Add $1.60/hr on 5/30/2016.	35.22	19.15	54.37
504	Work Performed on the Great Lakes Including Diver; Wet Tender or Hydraulic Dredge Engineer.	41.65	21.71	63.36
505	Work Performed on the Great Lakes Including Crane or Backhoe Operator; Assistant Hydraulic Dredge Engineer; Hydraulic Dredge Leverman or Diver's Tender; Mechanic or Welder; 70 Ton & Over Tug Operator. Future Increase(s): Add $1.25/hr on 1/1/2017. Premium Increase(s): Add $.50/hr for Friction Crane, Lattice Boom or Crane Certification (CCO).	44.05	23.24	67.29

CODE	Fringe Benefits Must Be Paid On All Hours Worked TRADE OR OCCUPATION	HOURLY BASIC RATE OF PAY $	HOURLY FRINGE BENEFITS $	TOTAL $
506	Work Performed on the Great Lakes Including Deck Equipment Operator or Machineryman (Maintains Cranes Over 50 Tons or Backhoes 115,000 Lbs. or More); Tug, Launch or Loader, Dozer or Like Equipment When Operated on a Barge, Breakwater Wall, Slip, Dock or Scow, Deck Machinery. Future Increase(s): Add $1.25/hr on 1/1/2017.	39.20	23.09	62.29
507	Work Performed on the Great Lakes Including Deck Equipment Operator, Machineryman or Fireman (Operates 4 Units or More or Maintains Cranes 50 Tons or Under or Backhoes 115,000 Lbs. or Under); Deck Hand, Deck Engineer or Assistant Tug Operator; Off Road Trucks - Great Lakes ONLY.	36.72	21.15	57.87

HEAVY EQUIPMENT OPERATORS
EXCLUDING SITE PREPARATION, UTILITY, PAVING LANDSCAPING WORK

CODE	Fringe Benefits Must Be Paid On All Hours Worked TRADE OR OCCUPATION	HOURLY BASIC RATE OF PAY $	HOURLY FRINGE BENEFITS $	TOTAL $
508	Boring Machine (Directional); Crane, Tower Crane, Pedestal Tower or Derrick, With or Without Attachments, With a Lifting Capacity of Over 100 Tons, Self-Erecting Tower Crane With a Lifting Capacity of Over 4,000 Lbs., Crane With Boom Dollies; Crane, Tower Crane, Pedestal Tower or Derrick, With Boom, Leads &/or Jib Lengths Measuring 176 Ft or Over; Master Mechanic. Premium Increase(s): Crane Operators with CCO certification add $.50/hr. Cranes with boom length over 200 ft. not exceeding 300 ft. OR lifting capacity over 200 ton not exceeding 300 ton add $.50/hr. Over 300 ton OR 300 ft. add $.01/hr. per foot OR ton whichever is greater.	41.66	20.65	62.31
509	Backhoe (Track Type) Having a Mfgr's Rated Capacity of 130,000 Lbs. or Over; Boring Machine (Horizontal or Vertical); Caisson Rig; Crane, Tower Crane, Portable Tower, Pedestal Tower or Derrick, With or Without Attachments, With a Lifting Capacity of 100 Tons or Under, Self-Erecting Tower Crane With A Lifting Capacity Of 4,000 Lbs. & Under; Crane, Tower Crane, Portable Tower, Pedestal Tower or Derrick, With Boom, Leads &/or Jib Lengths Measuring 175 Ft or Under; Pile Driver; Versi Lifts, Tri-Lifts & Gantrys (20,000 Lbs. & Over). Premium Increase(s): Crane Operators with CCO certification add $.50/hr.	41.16	20.65	61.81
510	Backhoe (Track Type) Having a Mfgr.'s Rated Capacity of Under 130,000 Lbs., Backhoe (Mini, 15,000 Lbs. & Under); Concrete Bump Cutter, Grinder, Planing or Grooving Machine; Concrete Laser/Screed; Concrete Paver (Slipform); Concrete Pump (Over 46 Meter), Concrete Conveyor (Rotec or Bidwell Type); Concrete Slipform Placer Curb & Gutter Machine; Concrete Spreader & Distributor; Dredge (NOT Performing Work on the Great Lakes); Forklift (Machinery Moving or Steel Erection, 25 Ft & Over); Gradall (Cruz-Aire Type); Hydro-Blaster (10,000 PSI or Over); Milling Machine; Skid Rig; Traveling Crane (Bridge Type). Premium Increase(s): Crane Operators with CCO certification add $.50/hr.	40.66	20.65	61.31

CODE	Fringe Benefits Must Be Paid On All Hours Worked TRADE OR OCCUPATION	HOURLY BASIC RATE OF PAY $	HOURLY FRINGE BENEFITS $	TOTAL $
511	Air, Track, Rotary or Percussion Drilling Machine &/or Hammers, Blaster; Bulldozer or Endloader (Over 40 hp); Compactor (Self-Propelled 85 Ft Total Drum Width & Over, or Tractor Mounted, Towed & Light Equipment); Concrete Pump (46 Meter & Under), Concrete Conveyor (Rotec or Bidwell Type); Crane (Carry Deck, Mini) or Truck Mounted Hydraulic Crane (10 Tons or Under); Environmental Burner; Gantrys (Under 20,000 Lbs.); Grader or Motor Patrol; High Pressure Utility Locating Machine (Daylighting Machine); Manhoist; Material or Stack Hoist; Mechanic or Welder; Railroad Track Rail Leveling Machine, Tie Placer, Extractor, Tamper, Stone Leveler or Rehabilitation Equipment; Roller (Over 5 Ton); Scraper (Self Propelled or Tractor Drawn) 5 cu yd or More Capacity; Screed (Milling Machine); Sideboom; Straddle Carrier or Travel Lift; Tining or Curing Machine; Tractor (Scraper, Dozer, Pusher, Loader); Tractor or Truck Mounted Hydraulic Backhoe; Tractor or Truck Mounted Hydraulic Crane (10 Tons or Under); Trencher (Wheel Type or Chain Type Having Over 8-Inch Bucket).	39.97	20.65	60.62
512	Backfiller; Broom or Sweeper; Bulldozer or Endloader (Under 40 hp); Compactor (Self-Propelled 84 Ft Total Drum Width & Under, or Tractor Mounted, Towed & Light Equipment); Concrete Batch Plant, Batch Hopper; Concrete Breaker (Large, Auto, Vibratory/Sonic, Manual or Remote); Concrete Conveyor System; Concrete Finishing Machine (Road Type); Fireman (Pile Driver & Derrick NOT Performing Work on the Great Lakes); Grout Pump; Hoist (Tugger, Automatic); Industrial Locomotives; Jeep Digger; Lift Slab Machine; Mulcher; Roller (Rubber Tire, 5 Ton or Under); Screw or Gypsum Pumps; Stabilizing or Concrete Mixer (Self-Propelled or 14S or Over); Stump Chipper; Trencher (Wheel Type or Chain Type Having 8-Inch Bucket & Under); Winches & A-Frames.	38.09	20.65	58.74
513	Air Compressor (&/or 400 CFM or Over); Air, Electric or Hydraulic Jacking System; Augers (Vertical & Horizontal); Boatmen (NOT Performing Work on the Great Lakes); Boiler (Temporary Heat); Crusher, Screening or Wash Plant; Elevator; Farm or Industrial Type Tractor; Fireman (Asphalt Plant NOT Performing Work on the Great Lakes); Forklift; Generator (&/or 150 KW or Over); Greaser; Heaters (Mechanical); Loading Machine (Conveyor); Oiler; Post Hole Digger or Driver; Prestress Machine; Pump (3 Inch or Over) or Well Points; Refrigeration Plant or Freeze Machine; Robotic Tool Carrier (With or Without Attachments); Rock, Stone Breaker; Skid Steer Loader (With or Without Attachments); Vibratory Hammer or Extractor, Power Pack.	32.94	20.65	53.59
514	Gas or Utility Pipeline, Except Sewer & Water (Primary Equipment). Future Increase(s): Add $1/hr on 5/30/2016.	37.04	22.44	59.48
515	Gas or Utility Pipeline, Except Sewer & Water (Secondary Equipment).	34.76	20.30	55.06
516	Fiber Optic Cable Equipment	21.00	0.00	21.00

SEWER, WATER OR TUNNEL CONSTRUCTION

Includes those projects that primarily involve public sewer or water distribution, transmission or collection systems and related tunnel work (excluding buildings).

SKILLED TRADES

CODE	Fringe Benefits Must Be Paid On All Hours Worked TRADE OR OCCUPATION	HOURLY BASIC RATE OF PAY $	HOURLY FRINGE BENEFITS $	TOTAL $
103	Bricklayer, Blocklayer or Stonemason	35.89	18.77	54.66
105	Carpenter	34.13	20.61	54.74
107	Cement Finisher Future Increase(s): Add $1.75 on 6/1/16. Premium Increase(s): DOT PREMIUMS: 1) Pay two times the hourly basic rate on Sunday, New Year's Day, Memorial Day, Independence Day, Labor Day, Thanksgiving Day & Christmas Day. 2) Add $1.40/hr when the Wisconsin Department of Transportation or responsible governing agency requires that work be performed at night under artificial illumination with traffic control and the work is completed after sunset and before sunrise.	31.44	22.39	53.83
109	Electrician Future Increase(s): Add $1.60 on 6/1/16; Add $1.70 on 6/1/17 Premium Increase(s): DOT PREMIUM: Pay two times the hourly basic rate on Sunday, New Year’s Day, Memorial Day, Independence Day, Labor Day, Thanksgiving Day & Christmas Day.	35.13	23.19	58.32
111	Fence Erector	24.73	19.69	44.42
116	Ironworker	32.50	20.58	53.08
118	Line Constructor (Electrical)	40.81	18.06	58.87
125	Pavement Marking Operator	30.00	19.61	49.61
126	Piledriver	30.11	26.51	56.62
130	Plumber Future Increase(s): Add $1.50 on 6/1/16	39.95	19.45	59.40
135	Steamfitter	41.01	21.54	62.55
137	Teledata Technician or Installer	25.63	17.25	42.88
143	Tuckpointer, Caulker or Cleaner	34.28	18.60	52.88
144	Underwater Diver (Except on Great Lakes)	31.00	20.43	51.43
146	Well Driller or Pump Installer Future Increase(s): Add $1/hr on 6/1/2016; Add $1/hr on 6/1/2017.	25.32	16.40	41.72

CODE	Fringe Benefits Must Be Paid On All Hours Worked TRADE OR OCCUPATION	HOURLY BASIC RATE OF PAY $	HOURLY FRINGE BENEFITS $	TOTAL $
150	Heavy Equipment Operator - ELECTRICAL LINE CONSTRUCTION ONLY	36.73	15.92	52.65
151	Light Equipment Operator -ELECTRICAL LINE CONSTRUCTION ONLY	32.65	14.96	47.61
152	Heavy Truck Driver - ELECTRICAL LINE CONSTRUCTION ONLY	28.57	13.71	42.28
153	Light Truck Driver - ELECTRICAL LINE CONSTRUCTION ONLY	26.53	13.55	40.08
154	Groundman - ELECTRICAL LINE CONSTRUCTION ONLY	22.45	11.84	34.29

TRUCK DRIVERS

CODE	Fringe Benefits Must Be Paid On All Hours Worked TRADE OR OCCUPATION	HOURLY BASIC RATE OF PAY $	HOURLY FRINGE BENEFITS $	TOTAL $
201	Single Axle or Two Axle	19.00	0.00	19.00
203	Three or More Axle	19.00	0.00	19.00
204	Articulated, Euclid, Dumptor, Off Road Material Hauler	33.69	19.78	53.47
205	Pavement Marking Vehicle	19.00	0.00	19.00
207	Truck Mechanic	19.00	0.00	19.00

LABORERS

CODE	Fringe Benefits Must Be Paid On All Hours Worked TRADE OR OCCUPATION	HOURLY BASIC RATE OF PAY $	HOURLY FRINGE BENEFITS $	TOTAL $
301	General Laborer Future Increase(s): Add $1.25/hr eff. 06/06/2016 Premium Increase(s): Add $2.29 for bottomman; Add $2.15 for concrete manhole builder, bracer, jointman, or pipelayer; Add $5.44 for blaster. Add $2.00 for all tunnel work under 15 lbs. compressed air; Add $2.00 for 0-30 lbs. compressed air; Add $3.00 for over 30 lbs. compressed air.	29.73	18.32	48.05
303	Landscaper	41.00	0.00	41.00
304	Flagperson or Traffic Control Person	19.31	15.21	34.52
311	Fiber Optic Laborer (Outside, Other Than Concrete Encased)	18.53	0.00	18.53
314	Railroad Track Laborer	17.00	5.43	22.43

HEAVY EQUIPMENT OPERATORS
SEWER, WATER OR TUNNEL WORK

CODE	Fringe Benefits Must Be Paid On All Hours Worked TRADE OR OCCUPATION	HOURLY BASIC RATE OF PAY $	HOURLY FRINGE BENEFITS $	TOTAL $
521	Backhoe (Track Type) Having a Mfgr.'s Rated Capacity of 130,000 Lbs. or Over; Caisson Rig; Crane, Tower Crane, Pedestal Tower or Derrick, With Boom, Leads &/or Jib Lengths Measuring 176 Ft or Over; Crane, Tower Crane, Pedestal Tower or Derrick, With or Without Attachments, With a Lifting Capacity of Over 100 Tons, Self-Erecting Tower Crane With a Lifting Capacity Of Over 4,000 Lbs., Crane With Boom Dollies; Master Mechanic; Pile Driver. Premium Increase(s): Add $.25/hr for operating tower crane.	38.09	20.80	58.89
522	Backhoe (Track Type) Having a Mfgr.'s Rated Capacity of Under 130,000 Lbs., Backhoe (Mini, 15,000 Lbs. & Under); Boring Machine (Directional); Concrete Bump Cutter, Grinder, Planing or Grooving Machine; Concrete Laser/Screed; Concrete Paver (Slipform); Concrete Pump (Over 46 Meter), Concrete Conveyor (Rotec or Bidwell Type); Concrete Spreader & Distributor; Crane, Tower Crane, Portable Tower, Pedestal Tower or Derrick, With Boom, Leads &/or Jib Lengths Measuring 175 Ft or Under; Crane, Tower Crane, Portable Tower, Pedestal Tower or Derrick, With or Without Attachments, With a Lifting Capacity of 100 Tons or Under, Self-Erecting Tower Crane With a Lifting Capacity of 4,000 Lbs. & Under; Dredge (NOT Performing Work on the Great Lakes); Milling Machine; Skid Rig; Telehandler; Traveling Crane (Bridge Type). Premium Increase(s): Add $.25/hr for operating tower crane.	37.31	20.80	58.11
523	Air Track, Rotary or Percussion Drilling Machine &/or Hammers, Blaster; Boring Machine (Horizontal or Vertical); Bulldozer or Endloader (Over 40 hp); Crane (Carry Deck, Mini) or Truck Mounted Hydraulic Crane (10 Tons or Under); Concrete Pump (46 Meter & Under), Concrete Conveyor (Rotec or Bidwell Type); Concrete Slipform Placer Curb & Gutter Machine; Gradall (Cruz-Aire Type); Grader or Motor Patrol; Hydro-Blaster (10,000 PSI or Over); Manhoist; Material or Stack Hoist; Mechanic or Welder; Roller (Over 5 Ton); Scraper (Self Propelled or Tractor Drawn) 5 cu yd or More Capacity; Screed (Milling Machine); Sideboom; Straddle Carrier or Travel Lift; Tractor (Scraper, Dozer, Pusher, Loader); Tractor or Truck Mounted Hydraulic Backhoe; Tractor or Truck Mounted Hydraulic Crane (10 Tons or Under); Trencher (Wheel Type or Chain Type Having Over 8-Inch Bucket). Premium Increase(s): Add $.25/hr for operating tower crane.	36.36	20.80	57.16

CODE	Fringe Benefits Must Be Paid On All Hours Worked TRADE OR OCCUPATION	HOURLY BASIC RATE OF PAY $	HOURLY FRINGE BENEFITS $	TOTAL $
524	Backfiller; Broom or Sweeper; Bulldozer or Endloader (Under 40 hp); Compactor (Self-Propelled 85 Ft Total Drum Width & Over, or Tractor Mounted, Towed & Light Equipment); Concrete Batch Plant, Batch Hopper; Concrete Breaker (Large, Auto, Vibratory/Sonic, Manual or Remote); Concrete Conveyor System; Concrete Finishing Machine (Road Type); Environmental Burner; Fireman (Pile Driver & Derrick NOT Performing Work on the Great Lakes); Forestry Equipment, Timbco, Tree Shear, Tub Grinder, Processor; Hoist (Tugger, Automatic); Grout Pump; Jeep Digger; Lift Slab Machine; Mulcher; Power Subgrader; Pump (3 Inch or Over) or Well Points; Robotic Tool Carrier (With or Without Attachments); Roller (Rubber Tire, 5 Ton or Under); Screw or Gypsum Pumps; Stabilizing or Concrete Mixer (Self-Propelled or 14S or Over); Stump Chipper; Tining or Curing Machine; Trencher (Wheel Type or Chain Type Having 8-Inch Bucket & Under); Winches & A-Frames.	33.69	21.75	55.44
525	Air Compressor (&/or 400 CFM or Over); Air, Electric or Hydraulic Jacking System; Augers (Vertical & Horizontal); Compactor (Self-Propelled 84 Ft Total Drum Width & Under, or Tractor Mounted, Towed & Light Equipment); Crusher, Screening or Wash Plant; Farm or Industrial Type Tractor; Fireman (Asphalt Plant NOT Performing Work on the Great Lakes); Generator (&/or 150 KW or Over); Heaters (Mechanical); High Pressure Utility Locating Machine (Daylighting Machine); Loading Machine (Conveyor); Post Hole Digger or Driver; Refrigeration Plant or Freeze Machine; Rock, Stone Breaker; Skid Steer Loader (With or Without Attachments); Vibratory Hammer or Extractor, Power Pack. Premium Increase(s): Add $.25/hr for operating tower crane.	33.91	20.80	54.71
526	Boiler (Temporary Heat); Forklift; Greaser; Oiler.	31.89	20.15	52.04
527	Work Performed on the Great Lakes Including Diver; Wet Tender or Hydraulic Dredge Engineer.	41.65	21.71	63.36
528	Work Performed on the Great Lakes Including 70 Ton & Over Tug Operator; Assistant Hydraulic Dredge Engineer; Crane or Backhoe Operator; Hydraulic Dredge Leverman or Diver's Tender; Mechanic or Welder.	41.65	21.71	63.36
529	Work Performed on the Great Lakes Including Deck Equipment Operator or Machineryman (Maintains Cranes Over 50 Tons or Backhoes 115,000 Lbs. or More); Tug, Launch or Loader, Dozer or Like Equipment When Operated on a Barge, Breakwater Wall, Slip, Dock or Scow, Deck Machinery.	36.72	21.15	57.87
530	Work Performed on the Great Lakes Including Deck Equipment Operator; Machineryman or Fireman (Operates 4 Units or More or Maintains Cranes 50 Tons or Under or Backhoes 115,000 Lbs. or Under), Deck Hand, Deck Engineer or Assistant Tug Operator; Off Road Trucks - Great Lakes ONLY.	36.72	21.15	57.87

AIRPORT PAVEMENT OR STATE HIGHWAY CONSTRUCTION

Includes all airport projects (excluding buildings) and all projects awarded by the Wisconsin Department of Transportation (excluding buildings).

SKILLED TRADES

CODE	Fringe Benefits Must Be Paid On All Hours Worked TRADE OR OCCUPATION	HOURLY BASIC RATE OF PAY $	HOURLY FRINGE BENEFITS $	TOTAL $
103	Bricklayer, Blocklayer or Stonemason	31.55	18.52	50.07
105	Carpenter	34.13	20.71	54.84
107	Cement Finisher Future Increase(s): Add $1.75 on 6/1/16. Premium Increase(s): DOT PREMIUMS: 1) Pay two times the hourly basic rate on Sunday, New Year's Day, Memorial Day, Independence Day, Labor Day, Thanksgiving Day & Christmas Day. 2) Add $1.40/hr when the Wisconsin Department of Transportation or responsible governing agency requires that work be performed at night under artificial illumination with traffic control and the work is completed after sunset and before sunrise.	33.95	19.88	53.83
109	Electrician Future Increase(s): Add $1.60 on 6/1/16; Add $1.70 on 6/1/17 Premium Increase(s): DOT PREMIUM: Pay two times the hourly basic rate on Sunday, New Year’s Day, Memorial Day, Independence Day, Labor Day, Thanksgiving Day & Christmas Day.	35.13	23.19	58.32
111	Fence Erector	35.62	0.00	35.62
116	Ironworker	30.77	23.72	54.49
118	Line Constructor (Electrical)	40.81	18.06	58.87
124	Painter	29.87	18.79	48.66
125	Pavement Marking Operator	30.27	19.83	50.10
126	Piledriver	30.11	21.09	51.20
133	Roofer or Waterproofer	30.40	2.23	32.63
137	Teledata Technician or Installer	25.63	17.25	42.88
143	Tuckpointer, Caulker or Cleaner	34.28	18.60	52.88
144	Underwater Diver (Except on Great Lakes)	36.74	16.00	52.74
150	Heavy Equipment Operator - ELECTRICAL LINE CONSTRUCTION ONLY	36.73	15.92	52.65
151	Light Equipment Operator -ELECTRICAL LINE CONSTRUCTION ONLY	32.65	15.67	48.32

CODE	Fringe Benefits Must Be Paid On All Hours Worked TRADE OR OCCUPATION	HOURLY BASIC RATE OF PAY $	HOURLY FRINGE BENEFITS $	TOTAL $
152	Heavy Truck Driver - ELECTRICAL LINE CONSTRUCTION ONLY	28.57	13.71	42.28
153	Light Truck Driver - ELECTRICAL LINE CONSTRUCTION ONLY	26.53	13.09	39.62
154	Groundman - ELECTRICAL LINE CONSTRUCTION ONLY	22.45	11.84	34.29

TRUCK DRIVERS

CODE	Fringe Benefits Must Be Paid On All Hours Worked TRADE OR OCCUPATION	HOURLY BASIC RATE OF PAY $	HOURLY FRINGE BENEFITS $	TOTAL $
201	Single Axle or Two Axle	36.72	21.15	57.87
203	Three or More Axle Premium Increase(s): DOT PREMIUM: Pay two times the hourly basic rate on Sunday, New Year's Day, Memorial Day, Independence Day, Labor Day, Thanksgiving Day & Christmas Day.	25.78	18.96	44.74
204	Articulated, Euclid, Dumptor, Off Road Material Hauler Future Increase(s): Add $1.30/hr on 6/1/2016; Add $1.25/hr on 6/1/2017. Premium Increase(s): DOT PREMIUMS: 1) Pay two times the hourly basic rate on Sunday, New Year's Day, Memorial Day, Independence Day, Labor Day, Thanksgiving Day & Christmas Day. 2) Add $1.50/hr night work premium. See DOT'S website for details about the applicability of this night work premium at: http://wisconsindot.gov/Pages/doing-bus/civil-rights/labornwage/prevailing-wage-compliance.aspx.	30.82	21.85	52.67
205	Pavement Marking Vehicle	23.82	17.72	41.54
206	Shadow or Pilot Vehicle	25.28	18.31	43.59
207	Truck Mechanic	25.28	18.31	43.59

LABORERS

CODE	Fringe Benefits Must Be Paid On All Hours Worked TRADE OR OCCUPATION	HOURLY BASIC RATE OF PAY $	HOURLY FRINGE BENEFITS $	TOTAL $
301	General Laborer Future Increase(s): Add $1.00/hr eff. 06/01/2016; Add $1.00/hr eff. 06/01/2017 Premium Increase(s): Add $.15/hr for air tool operator, joint sawer and filler (pavement), vibrator or tamper operator (mechanical hand operated), chain saw operator and demolition burning torch laborer; Add $.35/hr for bituminous worker (raker and luteman), formsetter (curb, sidewalk and pavement) and strike off man; Add $.50/hr for line and grade specialist; Add $.65/hr for blaster and powderman; Add $2.01/hr for topman; Add $2.46/hr for bottomman; Add $3.23/hr for pipelayer. / DOT PREMIUMS: 1) Pay two times the hourly basic rate on Sunday, New Year's Day, Memorial Day, Independence Day, Labor Day, Thanksgiving Day & Christmas Day. 2) Add $1.25/hr for work on projects involving temporary traffic control setup, for lane and shoulder closures, when work under artificial illumination conditions is necessary as required by the project provisions (including prep time prior to and/or cleanup after such time period).	27.51	20.63	48.14
302	Asbestos Abatement Worker	19.00	0.00	19.00
303	Landscaper Future Increase(s): Add $1.00/hr eff. 06/01/2016; Add $1.00/hr eff. 06/01/2017 Premium Increase(s): DOT PREMIUMS: 1) Pay two times the hourly basic rate on Sunday, New Year's Day, Memorial Day, Independence Day, Labor Day, Thanksgiving Day & Christmas Day. 2) Add $1.25/hr for work on projects involving temporary traffic control setup, for lane and shoulder closures, when work under artificial illumination conditions is necessary as required by the project provisions (including prep time prior to and/or cleanup after such time period).	27.51	20.63	48.14
304	Flagperson or Traffic Control Person	23.55	20.03	43.58
311	Fiber Optic Laborer (Outside, Other Than Concrete Encased)	18.53	0.00	18.53
314	Railroad Track Laborer	17.00	5.43	22.43

HEAVY EQUIPMENT OPERATORS
AIRPORT PAVEMENT OR STATE HIGHWAY CONSTRUCTION

CODE	Fringe Benefits Must Be Paid On All Hours Worked TRADE OR OCCUPATION	HOURLY BASIC RATE OF PAY $	HOURLY FRINGE BENEFITS $	TOTAL $
531	Crane, Tower Crane, Pedestal Tower or Derrick, With Boom, Leads &/or Jib Lengths Measuring 176 Ft or Over; Crane, Tower Crane, Pedestal Tower or Derrick, With or Without Attachments, With a Lifting Capacity of Over 100 Tons, Self-Erecting Tower Crane With a Lifting Capacity Of Over 4,000 Lbs., Crane With Boom Dollies; Traveling Crane (Bridge Type). Future Increase(s): Add $1.30/hr on 6/1/2016; Add $1.25/hr on 6/1/2017. Premium Increase(s): DOT PREMIUMS: 1) Pay two times the hourly basic rate on Sunday, New Year's Day, Memorial Day, Independence Day, Labor Day, Thanksgiving Day & Christmas Day. 2) Add $1.50/hr night work premium. See DOT'S website for details about the applicability of this night work premium at: http://wisconsindot.gov/Pages/doing-bus/civil-rights/labornwage/prevailing-wage-compliance.aspx.	38.27	21.85	60.12
532	Backhoe (Track Type) Having a Mfgr.'s Rated Capacity of 130,000 Lbs. or Over; Caisson Rig; Crane, Tower Crane, Portable Tower, Pedestal Tower or Derrick, With Boom, Leads &/or Jib Lengths Measuring 175 Ft or Under; Crane, Tower Crane, Portable Tower, Pedestal Tower or Derrick, With or Without Attachments, With a Lifting Capacity of 100 Tons or Under, Self-Erecting Tower Crane With A Lifting Capacity Of 4,000 Lbs., & Under; Dredge (NOT Performing Work on the Great Lakes); Licensed Boat Pilot (NOT Performing Work on the Great Lakes); Pile Driver. Future Increase(s): Add $1.30/hr on 6/1/2016; Add $1.25/hr on 6/1/2017. Premium Increase(s): DOT PREMIUMS: 1) Pay two times the hourly basic rate on Sunday, New Year's Day, Memorial Day, Independence Day, Labor Day, Thanksgiving Day & Christmas Day. 2) Add $1.50/hr night work premium. See DOT'S website for details about the applicability of this night work premium at: http://wisconsindot.gov/Pages/doing-bus/civil-rights/labornwage/prevailing-wage-compliance.aspx.	37.77	21.85	59.62

CODE	Fringe Benefits Must Be Paid On All Hours Worked TRADE OR OCCUPATION	HOURLY BASIC RATE OF PAY $	HOURLY FRINGE BENEFITS $	TOTAL $
533	Air Track, Rotary or Percussion Drilling Machine &/or Hammers, Blaster; Asphalt Heater, Planer & Scarifier; Asphalt Milling Machine; Asphalt Screed; Automatic Subgrader (Concrete); Backhoe (Track Type) Having a Mfgr.'s Rated Capacity of Under 130,000 Lbs., Backhoe (Mini, 15,000 Lbs. & Under); Bituminous (Asphalt) Plant & Paver, Screed; Boatmen (NOT Performing Work on the Great Lakes); Boring Machine (Directional, Horizontal or Vertical); Bridge (Bidwell) Paver; Bulldozer or Endloader; Concrete Batch Plant, Batch Hopper; Concrete Breaker (Large, Auto, VIbratory/Sonic, Manual or Remote); Concrete Bump Cutter, Grinder, Planing or Grooving Machine; Concrete Conveyor System; Concrete Laser/Screed; Concrete Paver (Slipform); Concrete Pump, Concrete Conveyor (Rotec or Bidwell Type); Concrete Slipform Placer Curb & Gutter Machine; Concrete Spreader & Distributor; Crane (Carry Deck, Mini) or Truck Mounted Hydraulic Crane (10 Tons or Under); Crane WIth a Lifting Capacity of 25 Tons or Under; Forestry Equipment, Timbco, Tree Shear, Tub Grinder, Processor; Gradall (Cruz-Aire Type); Grader or Motor Patrol; Grout Pump; Hydro-Blaster (10,000 PSI or Over); Loading Machine (Conveyor); Material or Stack Hoist; Mechanic or Welder; Milling Machine; Post Hole Digger or Driver; Roller (Over 5 Ton); Scraper (Self Propelled or Tractor Drawn) 5 cu yds or More Capacity; Shoulder Widener; Sideboom; Skid Rig; Stabilizing or Concrete Mixer (Self-Propelled or 14S or Over); Straddle Carrier or Travel Lift; Tractor (Scraper, Dozer, Pusher, Loader); Tractor or Truck Mounted Hydraulic Backhoe; Trencher (Wheel Type or Chain Type); Tube Finisher; Tugger (NOT Performing Work on the Great Lakes); Winches & A-Frames. Future Increase(s): Add $1.30/hr on 6/1/2016; Add $1.25/hr on 6/1/2017. Premium Increase(s): DOT PREMIUMS: 1) Pay two times the hourly basic rate on Sunday, New Year's Day, Memorial Day, Independence Day, Labor Day, Thanksgiving Day & Christmas Day. 2) Add $1.50/hr night work premium. See DOT'S website for details about the applicability of this night work premium at: http://wisconsindot.gov/Pages/doing-bus/civil-rights/labornwage/prevailing-wage-compliance.aspx.	37.27	21.85	59.12

CODE	Fringe Benefits Must Be Paid On All Hours Worked TRADE OR OCCUPATION	HOURLY BASIC RATE OF PAY $	HOURLY FRINGE BENEFITS $	TOTAL $
534	Belting, Burlap, Texturing Machine; Broom or Sweeper; Compactor (Self-Propelled or Tractor Mounted, Towed & Light Equipment); Concrete Finishing Machine (Road Type); Environmental Burner; Farm or Industrial Type Tractor; Fireman (Asphalt Plant, Pile Driver & Derrick NOT Performing Work on the Great Lakes); Forklift; Greaser; Hoist (Tugger, Automatic); Jeep Digger; Joint Sawer (Multiple Blade); Launch (NOT Performing Work on the Great Lakes); Lift Slab Machine; Mechanical Float; Mulcher; Power Subgrader; Robotic Tool Carrier (With or Without Attachments); Roller (Rubber Tire, 5 Ton or Under); Self Propelled Chip Spreader; Shouldering Machine; Skid Steer Loader (With or WIthout Attachments); Telehandler; Tining or Curing Machine. Future Increase(s): Add $1.30/hr on 6/1/2016; Add $1.25/hr on 6/1/2017. Premium Increase(s): DOT PREMIUMS: 1) Pay two times the hourly basic rate on Sunday, New Year's Day, Memorial Day, Independence Day, Labor Day, Thanksgiving Day & Christmas Day. 2) Add $1.50/hr night work premium. See DOT'S website for details about the applicability of this night work premium at: http://wisconsindot.gov/Pages/doing-bus/civil-rights/labornwage/prevailing-wage-compliance.aspx.	37.01	21.85	58.86
535	Air Compressor (&/or 400 CFM or Over); Air, Electric or Hydraulic Jacking System; Augers (Vertical & Horizontal); Automatic Belt Conveyor & Surge Bin; Boiler (Temporary Heat); Concrete Proportioning Plant; Crusher, Screening or Wash Plant; Generator (&/or 150 KW or Over); Heaters (Mechanical); High Pressure Utility Locating Machine (Daylighting Machine); Mudjack; Oiler; Prestress Machine; Pug Mill; Pump (3 Inch or Over) or Well Points; Rock, Stone Breaker; Screed (Milling Machine); Stump Chipper; Tank Car Heaters; Vibratory Hammer or Extractor, Power Pack. Future Increase(s): Add $1.30/hr on 6/1/2016; Add $1.25/hr on 6/1/2017. Premium Increase(s): DOT PREMIUMS: 1) Pay two times the hourly basic rate on Sunday, New Year's Day, Memorial Day, Independence Day, Labor Day, Thanksgiving Day & Christmas Day. 2) Add $1.50/hr night work premium. See DOT'S website for details about the applicability of this night work premium at: http://wisconsindot.gov/Pages/doing-bus/civil-rights/labornwage/prevailing-wage-compliance.aspx..	36.72	21.85	58.57
536	Fiber Optic Cable Equipment.	21.00	0.00	21.00
537	Work Performed on the Great Lakes Including Diver; Wet Tender or Hydraulic Dredge Engineer.	41.65	21.71	63.36
538	Work Performed on the Great Lakes Including 70 Ton & Over Tug Operator; Assistant Hydraulic Dredge Engineer; Crane or Backhoe Operator; Hydraulic Dredge Leverman or Diver's Tender; Mechanic or Welder.	41.65	21.71	63.36

CODE	Fringe Benefits Must Be Paid On All Hours Worked TRADE OR OCCUPATION	HOURLY BASIC RATE OF PAY $	HOURLY FRINGE BENEFITS $	TOTAL $
539	Work Performed on the Great Lakes Including Deck Equipment Operator or Machineryman (Maintains Cranes Over 50 Tons or Backhoes 115,000 Lbs. or More); Tug, Launch or Loader, Dozer or Like Equipment When Operated on a Barge, Breakwater Wall, Slip, Dock or Scow, Deck Machinery.	36.72	21.15	57.87
540	Work Performed on the Great Lakes Including Deck Equipment Operator, Machineryman or Fireman (Operates 4 Units or More or Maintains Cranes 50 Tons or Under or Backhoes 115,000 Lbs. or Under); Deck Hand, Deck Engineer or Assistant Tug Operator; Off Road Trucks-Great Lakes ONLY.	36.72	21.15	57.87

LOCAL STREET OR MISCELLANEOUS PAVING CONSTRUCTION

Includes roads, streets, alleys, trails, bridges, paths, racetracks, parking lots and driveways (except residential or agricultural), public sidewalks or other similar projects (excluding projects awarded by the Wisconsin Department of Transportation).

SKILLED TRADES

CODE	Fringe Benefits Must Be Paid On All Hours Worked TRADE OR OCCUPATION	HOURLY BASIC RATE OF PAY $	HOURLY FRINGE BENEFITS $	TOTAL $
103	Bricklayer, Blocklayer or Stonemason	35.89	18.77	54.66
105	Carpenter Future Increase(s): Add $1.42/hr on 6/1/2016. Premium Increase(s): DOT PREMIUM: Pay two times the hourly basic rate on Sunday, New Year's Day, Memorial Day, Independence Day, Labor Day, Thanksgiving Day & Christmas Day.	33.02	17.12	50.14
107	Cement Finisher	34.95	19.38	54.33
109	Electrician Future Increase(s): Add $1.60 on 6/1/16; Add $1.70 on 6/1/17 Premium Increase(s): DOT PREMIUM: Pay two times the hourly basic rate on Sunday, New Year’s Day, Memorial Day, Independence Day, Labor Day, Thanksgiving Day & Christmas Day.	35.13	23.19	58.32
111	Fence Erector	24.73	19.69	44.42
116	Ironworker	30.77	23.72	54.49
118	Line Constructor (Electrical)	40.81	18.06	58.87
124	Painter	29.62	20.74	50.36
125	Pavement Marking Operator	30.00	19.61	49.61
126	Piledriver Future Increase(s): Add $1.44/hr on 6/1/2016. Premium Increase(s): DOT PREMIUM: Pay two times the hourly basic rate on Sunday, New Year's Day, Memorial Day, Independence Day, Labor Day, Thanksgiving Day & Christmas Day.	33.56	17.12	50.68
133	Roofer or Waterproofer	29.65	18.61	48.26
137	Teledata Technician or Installer	25.63	17.25	42.88
143	Tuckpointer, Caulker or Cleaner	34.28	18.60	52.88
144	Underwater Diver (Except on Great Lakes)	36.74	16.00	52.74
150	Heavy Equipment Operator - ELECTRICAL LINE CONSTRUCTION ONLY	36.73	15.92	52.65

CODE	Fringe Benefits Must Be Paid On All Hours Worked TRADE OR OCCUPATION	HOURLY BASIC RATE OF PAY $	HOURLY FRINGE BENEFITS $	TOTAL $
151	Light Equipment Operator -ELECTRICAL LINE CONSTRUCTION ONLY	32.65	14.96	47.61
152	Heavy Truck Driver - ELECTRICAL LINE CONSTRUCTION ONLY	28.57	13.71	42.28
153	Light Truck Driver - ELECTRICAL LINE CONSTRUCTION ONLY	26.53	13.55	40.08
154	Groundman - ELECTRICAL LINE CONSTRUCTION ONLY	22.45	11.84	34.29

TRUCK DRIVERS

CODE	Fringe Benefits Must Be Paid On All Hours Worked TRADE OR OCCUPATION	HOURLY BASIC RATE OF PAY $	HOURLY FRINGE BENEFITS $	TOTAL $
201	Single Axle or Two Axle	19.00	0.00	19.00
203	Three or More Axle	19.00	0.00	19.00
204	Articulated, Euclid, Dumptor, Off Road Material Hauler Future Increase(s): Add $1.60/hr on 6/3/2016.	34.69	20.38	55.07
205	Pavement Marking Vehicle	19.00	0.00	19.00
206	Shadow or Pilot Vehicle	19.00	0.00	19.00
207	Truck Mechanic	19.00	0.00	19.00

LABORERS

CODE	Fringe Benefits Must Be Paid On All Hours Worked TRADE OR OCCUPATION	HOURLY BASIC RATE OF PAY $	HOURLY FRINGE BENEFITS $	TOTAL $
301	General Laborer	29.01	17.39	46.40
303	Landscaper Future Increase(s): Add $1.00/hr eff. 06/01/2016; Add $1.00/hr eff. 06/01/2017 Premium Increase(s): DOT PREMIUMS: 1) Pay two times the hourly basic rate on Sunday, New Year's Day, Memorial Day, Independence Day, Labor Day, Thanksgiving Day & Christmas Day. 2) Add $1.25/hr for work on projects involving temporary traffic control setup, for lane and shoulder closures, when work under artificial illumination conditions is necessary as required by the project provisions (including prep time prior to and/or cleanup after such time period).	27.51	20.63	48.14
304	Flagperson or Traffic Control Person	19.31	15.21	34.52
311	Fiber Optic Laborer (Outside, Other Than Concrete Encased)	18.53	0.00	18.53

314	Railroad Track Laborer	17.00	5.43	22.43

HEAVY EQUIPMENT OPERATORS
CONCRETE PAVEMENT OR BRIDGE WORK

Fringe Benefits Must Be Paid On All Hours Worked

CODE	TRADE OR OCCUPATION	HOURLY BASIC RATE OF PAY $	HOURLY FRINGE BENEFITS $	TOTAL $
541	Crane, Tower Crane, Pedestal Tower or Derrick, With or Without Attachments, With a Lifting Capacity of Over 100 Tons, Self-Erecting Tower Crane With a Lifting Capacity Of Over 4,000 Lbs., Crane With Boom Dollies; Crane, Tower Crane, Pedestal Tower or Derrick, With Boom, Leads &/or Jib Lengths Measuring 176 Ft or Over; Master Mechanic. Future Increase(s): Add $1.60/hr on 6/3/2016. Premium Increase(s): Add $.50/hr for >200 Ton; Add $1/hr at 300 Ton; Add $1.50/hr at 400 Ton; Add $2/hr at 500 Ton & Over.	37.67	20.38	58.05
542	Backhoe (Track Type) Having a Mfgr.'s Rated Capacity of 130,000 Lbs. or Over; Caisson Rig; Crane, Tower Crane, Portable Tower, Pedestal Tower or Derrick, With or Without Attachments, With a Lifting Capacity of 100 Tons or Under, Self-Erecting Tower Crane With a Lifting Capacity of 4,000 Lbs. & Under; Crane, Tower Crane Portable Tower, Pedestal Tower or Derrick, With Boom, Leads &/or Jib Lengths Measuring 175 Ft or Under; Dredge (NOT Performing Work on the Great Lakes); Licensed Boat Pilot (NOT Performing Work on the Great Lakes); Pile Driver. Future Increase(s): Add $1.30/hr on 6/1/2016; Add $1.25/hr on 6/1/2017. Premium Increase(s): DOT PREMIUMS: 1) Pay two times the hourly basic rate on Sunday, New Year's Day, Memorial Day, Independence Day, Labor Day, Thanksgiving Day & Christmas Day. 2) Add $1.50/hr night work premium. See DOT'S website for details about the applicability of this night work premium at: http://wisconsindot.gov/Pages/doing-bus/civil-rights/labornwage/prevailing-wage-compliance.aspx.	37.77	21.85	59.62

CODE	Fringe Benefits Must Be Paid On All Hours Worked TRADE OR OCCUPATION	HOURLY BASIC RATE OF PAY $	HOURLY FRINGE BENEFITS $	TOTAL $
543	Air Track, Rotary or Percussion Drilling Machine &/or Hammers, Blaster; Automatic Subgrader (Concrete); Backhoe (Track Type) Having a Mfgr.'s Rated Capacity of Under 130,000 Lbs., Backhoe (Mini, 15,000 Lbs. & Under); Boring Machine (Directional, Horizontal or Vertical); Bridge (Bidwell) Paver; Bulldozer or Endloader; Concrete Batch Plant, Batch Hopper; Concrete Breaker (Large, Auto, Vibratory/Sonic, Manual or Remote); Concrete Bump Cutter, Grinder, Planing or Grooving Machine; Concrete Conveyor System; Concrete Laser/Screed; Concrete Paver (Slipform); Concrete Pump, Concrete Conveyor (Rotec or Bidwell Type); Concrete Slipform Placer Curb & Gutter Machine; Concrete Spreader & Distributor; Crane (Carry Deck, Mini) or Truck Mounted Hydraulic Crane (10 Tons or Under); Crane With a Lifting Capacity of 25 Tons or Under; Forestry Equipment, Timbco, Tree Shear, Tub Grinder, Processor; Gradall (Cruz-Aire Type); Grader or Motor Patrol; Grout Pump; Hydro-Blaster (10,000 PSI or Over); Loading Machine (Conveyor); Manhoist; Material or Stack Hoist; Mechanic or Welder; Milling Machine; Post Hole Digger or Driver; Scraper (Self Propelled or Tractor Drawn) 5 cu yds or More Capacity; Shoulder Widener; Sideboom; Skid Rig; Stabilizing or Concrete Mixer (Self-Propelled or 14S or Over); Straddle Carrier or Travel Lift; Tractor (Scraper, Dozer, Pusher, Loader); Tractor or Truck Mounted Hydraulic Backhoe; Trencher (Wheel Type or Chain Type); Tube Finisher; Tugger (NOT Performing Work on the Great Lakes); Winches & A-Frames. Future Increase(s): Add $1.30/hr on 6/1/2016; Add $1.25/hr on 6/1/2017. Premium Increase(s): DOT PREMIUMS: 1) Pay two times the hourly basic rate on Sunday, New Year's Day, Memorial Day, Independence Day, Labor Day, Thanksgiving Day & Christmas Day. 2) Add $1.50/hr night work premium. See DOT'S website for details about the applicability of this night work premium at: http://wisconsindot.gov/Pages/doing-bus/civil-rights/labornwage/prevailing-wage-compliance.aspx.	37.27	21.85	59.12
544	Backfiller; Belting, Burlap, Texturing Machine; Broom or Sweeper; Compactor (Self-Propelled or Tractor Mounted, Towed & Light Equipment); Concrete Finishing Machine (Road Type); Environmental Burner; Farm or Industrial Type Tractor; Fireman (Pile Driver & Derrick NOT Performing Work on the Great Lakes); Forklift; Greaser; Jeep Digger; Joint Sawer (Multiple Blade); Launch (NOT Performing Work on the Great Lakes); Lift Slab Machine; Mechanical Float; Mulcher; Power Subgrader; Robotic Tool Carrier (WIth or Without Attachments); Self Propelled Chip Spreader; Shouldering Machine; Skid Steer Loader (With or Without Attachments); Telehandler; Tining or Curing Machine. Future Increase(s): Add $1.30/hr on 6/1/2016; Add $1.25/hr on 6/1/2017. Premium Increase(s): DOT PREMIUMS: 1) Pay two times the hourly basic rate on Sunday, New Year's Day, Memorial Day, Independence Day, Labor Day, Thanksgiving Day & Christmas Day. 2) Add $1.50/hr night work premium. See DOT'S website for details about the applicability of this night work premium at: http://wisconsindot.gov/Pages/doing-bus/civil-rights/labornwage/prevailing-wage-compliance.aspx.	37.27	21.85	59.12

CODE	Fringe Benefits Must Be Paid On All Hours Worked TRADE OR OCCUPATION	HOURLY BASIC RATE OF PAY $	HOURLY FRINGE BENEFITS $	TOTAL $
545	Air Compressor (&/or 400 CFM or Over); Air, Electric or Hydraulic Jacking System; Automatic Belt Conveyor & Surge Bin; Boiler (Temporary Heat); Concrete Proportioning Plant; Crusher, Screening or Wash Plant; Generator (&/or 150 KW or Over); Heaters (Mechanical); High Pressure Utility Locating Machine (Daylighting Machine); Mudjack; Oiler; Prestress Machine; Pug Mill; Pump (3 Inch or Over) or Well Points; Rock, Stone Breaker; Screed (Milling Machine); Stump Chipper; Tank Car Heaters; Vibratory Hammer or Extractor, Power Pack.	31.62	19.78	51.40
546	Fiber Optic Cable Equipment.	21.00	0.00	21.00
547	Work Performed on the Great Lakes Including Diver; Wet Tender or Hydraulic Dredge Engineer.	41.65	21.71	63.36
548	Work Performed on the Great Lakes Including 70 Ton & Over Tug Operator; Assistant Hydraulic Dredge Engineer; Crane or Backhoe Operator; Hydraulic Dredge Leverman or Diver's Tender; Mechanic or Welder. Future Increase(s): Add $1.25/hr on 1/1/2017. Premium Increase(s): Add $.50/hr for Friction Crane, Lattice Boom or Crane Certification (CCO).	44.05	23.24	67.29
549	Work Performed on the Great Lakes Including Deck Equipment Operator or Machineryman (Maintains Cranes Over 50 Tons or Backhoes 115,000 Lbs. or more); Tug, Launch or Loader, Dozer or Like Equipment When Operated on a Barge, Breakwater Wall, Slip, Dock or Scow, Deck Machinery.	36.72	21.15	57.87
550	Work Performed on the Great Lakes Including Deck Equipment Operator; Machineryman or Fireman (Operates 4 Units or More or Maintains Cranes 50 Tons or Under or Backhoes 115,000 Lbs. or Under); Deck Hand, Deck Engineer or Assistant Tug Operator; Off Road Trucks - Great Lakes ONLY.	36.72	21.15	57.87

HEAVY EQUIPMENT OPERATORS
ASPHALT PAVEMENT OR OTHER WORK

CODE	Fringe Benefits Must Be Paid On All Hours Worked TRADE OR OCCUPATION	HOURLY BASIC RATE OF PAY $	HOURLY FRINGE BENEFITS $	TOTAL $
551	Crane, Tower Crane, Pedestal Tower or Derrick, With or Without Attachments, With a Lifting Capacity of Over 100 Tons, Self Erecting Tower Crane With a Lifting Capacity of Over 4,000 Lbs., Crane With Boom Dollies; Crane, Tower Crane, Pedestal Tower or Derrick, With Boom, Leads and/or Jib Lengths Measuring 176 Ft or Over; Master Mechanic.	36.67	19.78	56.45

CODE	Fringe Benefits Must Be Paid On All Hours Worked TRADE OR OCCUPATION	HOURLY BASIC RATE OF PAY $	HOURLY FRINGE BENEFITS $	TOTAL $
552	Backhoe (Track Type) Having a Mfgr.'s Rated Capacity of 130,000 Lbs. or Over; Caisson Rig; Crane, Tower Crane, Portable Tower, Pedestal Tower or Derrick, With or Without Attachments, With a Lifting Capacity of 100 Tons or Under, Self-Erecting Tower Crane With a Lifting Capacity Of 4,000 Lbs. & Under; Crane, Tower Crane, Portable Tower, Pedestal Tower or Derrick, With Boom, Leads &/or Jib Lengths Measuring 175 Ft or Under; Dredge (NOT Performing Work on the Great Lakes); Licensed Boat Pilot (NOT Performing Work on the Great Lakes); Pile Driver. Future Increase(s): Add $1.30/hr on 6/1/2016; Add $1.25/hr on 6/1/2017. Premium Increase(s): DOT PREMIUMS: 1) Pay two times the hourly basic rate on Sunday, New Year's Day, Memorial Day, Independence Day, Labor Day, Thanksgiving Day & Christmas Day. 2) Add $1.50/hr night work premium. See DOT'S website for details about the applicability of this night work premium at: http://wisconsindot.gov/Pages/doing-bus/civil-rights/labornwage/prevailing-wage-compliance.aspx.	37.77	21.85	59.62
553	Air, Track, Rotary or Percussion Drilling Machine &/or Hammers, Blaster; Asphalt Heater, Planer & Scarifier; Asphalt Milling Machine; Asphalt Screed; Backhoe (Track Type) Having a Mfgr.'s Rated Capacity of Under 130,000 Lbs., Backhoe (Mini, 15,000 Lbs. & Under); Bituminous (Asphalt) Plant & Paver, Screed; Boring Machine (Directional, Horizontal or Vertical); Bulldozer or Endloader; Concrete Breaker (Large, Auto, Vibratory/Sonic, Manual or Remote); Concrete Conveyor System; Concrete Laser/Screed; Concrete Slipform Placer Curb & Gutter Machine; Crane (Carry Deck, Mini) or Truck Mounted Hydraulic Crane (10 Tons or Under); Crane With a Lifting Capacity of 25 Tons or Under; Forestry Equipment, Timbco, Tree Shear, Tub Grinder, Processor; Gradall (Cruz-Aire Type); Grader or Motor Patrol; Hydro-Blaster (10,000 PSI or Over); Loading Machine (Conveyor); Manhoist; Material or Stack Hoist; Mechanic or Welder; Milling Machine; Post Hole Digger or Driver; Railroad Track Rail Leveling Machine, Tie Placer, Extractor, Tamper, Stone Leveler or Rehabilitation Equipment; Roller (Over 5 Ton); Scraper (Self Propelled or Tractor Drawn) 5 cu yds or More Capacity; Shoulder Widener; Sideboom; Skid Rig; Stabilizing or Concrete Mixer (Self-Propelled or 14S or Over); Tractor (Scraper, Dozer, Pusher, Loader); Tractor or Truck Mounted Hydraulic Backhoe; Trencher (Wheel Type or Chain Type); Tube Finisher; Tugger (NOT Performing Work on the Great Lakes); Winches & A-Frames. Future Increase(s): Add $1.30/hr on 6/1/2016; Add $1.25/hr on 6/1/2017.	36.72	21.50	58.22

CODE	Fringe Benefits Must Be Paid On All Hours Worked TRADE OR OCCUPATION	HOURLY BASIC RATE OF PAY $	HOURLY FRINGE BENEFITS $	TOTAL $
554	Backfiller; Broom or Sweeper; Compactor (Self-Propelled or Tractor Mounted, Towed & Light Equipment); Concrete Finishing Machine (Road Type); Environmental Burner; Farm or Industrial Type Tractor; Fireman (Asphalt Plant, Pile Driver & Derrick NOT Performing Work on the Great Lakes); Forklift; Greaser; Hoist (Tugger, Automatic); Jeep Digger; Joint Sawer (Multiple Blade); Launch (NOT Performing Work on the Great Lakes); Lift Slab Machine; Mechanical Float; Mulcher; Power Subgrader; Robotic Tool Carrier (With or Without Attachments); Roller (Rubber Tire, 5 Ton or Under); Self-Propelled Chip Spreader; Shouldering Machine; Skid Steer Loader (With or Without Attachments); Telehandler. Future Increase(s): Add $1.30/hr on 6/1/2016; Add $1.25/hr on 6/1/2017.	36.72	21.50	58.22
555	Air Compressor (&/or 400 CFM or Over); Air, Electric or Hydraulic Jacking System; Augers (Vertical & Horizontal); Automatic Belt Conveyor & Surge Bin; Boiler (Temporary Heat); Crusher, Screening or Wash Plant; Generator (&/or 150 KW or Over); Heaters (Mechanical); High Pressure Utility Locating Machine (Daylighting Machine); Mudjack; Oiler; Prestress Machine; Pug Mill; Pump (3 Inch or Over) or Well Points; Rock, Stone Breaker; Screed (Milling Machine); Stump Chipper; Tank Car Heaters; Vibratory Hammer or Extractor, Power Pack. Future Increase(s): Add $1.60/hr on 6/3/2016.	32.62	20.38	53.00
556	Fiber Optic Cable Equipment.	21.00	0.00	21.00

RESIDENTIAL OR AGRICULTURAL CONSTRUCTION

Includes single family houses or apartment buildings of no more than four (4) stories in height and all buildings, structures or facilities that are primarily used for agricultural or farming purposes, excluding commercial buildings. For classification purposes, the exterior height of a residential building, in terms of stories, is the primary consideration. All incidental items such as site work, driveways, parking lots, private sidewalks, private septic systems or sewer and water laterals connected to a public system and swimming pools are included within this definition. Residential buildings of five (5) stories and above are NOT included within this definition.

SKILLED TRADES

Fringe Benefits Must Be Paid On All Hours Worked

CODE	TRADE OR OCCUPATION	HOURLY BASIC RATE OF PAY $	HOURLY FRINGE BENEFITS $	TOTAL $
101	Acoustic Ceiling Tile Installer	34.13	20.79	54.92
102	Boilermaker	30.21	21.97	52.18
103	Bricklayer, Blocklayer or Stonemason	30.00	2.54	32.54
104	Cabinet Installer	20.00	0.46	20.46
105	Carpenter	32.80	0.00	32.80
106	Carpet Layer or Soft Floor Coverer	24.04	4.89	28.93
107	Cement Finisher	25.00	12.00	37.00
108	Drywall Taper or Finisher	20.00	0.00	20.00
109	Electrician	27.00	6.24	33.24
110	Elevator Constructor	43.84	27.09	70.93
111	Fence Erector	17.00	0.17	17.17
112	Fire Sprinkler Fitter	39.66	21.11	60.77
113	Glazier	38.27	14.42	52.69
114	Heat or Frost Insulator	17.00	0.00	17.00
115	Insulator (Batt or Blown)	17.12	6.68	23.80
116	Ironworker	24.30	14.25	38.55
117	Lather	32.80	0.00	32.80
119	Marble Finisher	25.72	18.54	44.26
120	Marble Mason	30.00	2.54	32.54
121	Metal Building Erector	13.60	6.57	20.17
123	Overhead Door Installer	26.00	5.11	31.11
124	Painter	28.84	7.83	36.67
125	Pavement Marking Operator	30.00	19.61	49.61

CODE	Fringe Benefits Must Be Paid On All Hours Worked TRADE OR OCCUPATION	HOURLY BASIC RATE OF PAY $	HOURLY FRINGE BENEFITS $	TOTAL $
129	Plasterer	22.00	0.00	22.00
130	Plumber	38.37	5.96	44.33
132	Refrigeration Mechanic	28.50	2.56	31.06
133	Roofer or Waterproofer Future Increase(s): Add $1.25/hr eff. 06/01/2016	30.45	18.60	49.05
134	Sheet Metal Worker	26.13	17.37	43.50
135	Steamfitter	15.00	2.04	17.04
137	Teledata Technician or Installer	22.50	12.74	35.24
138	Temperature Control Installer	21.42	7.84	29.26
139	Terrazzo Finisher	25.72	18.54	44.26
140	Terrazzo Mechanic	31.55	18.26	49.81
141	Tile Finisher	30.00	0.00	30.00
142	Tile Setter	31.00	0.00	31.00
143	Tuckpointer, Caulker or Cleaner	25.00	2.99	27.99
146	Well Driller or Pump Installer	29.00	0.00	29.00
147	Siding Installer	17.00	0.65	17.65

TRUCK DRIVERS

CODE	Fringe Benefits Must Be Paid On All Hours Worked TRADE OR OCCUPATION	HOURLY BASIC RATE OF PAY $	HOURLY FRINGE BENEFITS $	TOTAL $
201	Single Axle or Two Axle	20.00	0.42	20.42
203	Three or More Axle	18.75	2.00	20.75
205	Pavement Marking Vehicle	18.75	2.00	20.75
207	Truck Mechanic	18.75	2.00	20.75

LABORERS

CODE	Fringe Benefits Must Be Paid On All Hours Worked TRADE OR OCCUPATION	HOURLY BASIC RATE OF PAY $	HOURLY FRINGE BENEFITS $	TOTAL $
301	General Laborer	20.00	8.29	28.29
302	Asbestos Abatement Worker	18.00	5.52	23.52

CODE	Fringe Benefits Must Be Paid On All Hours Worked TRADE OR OCCUPATION	HOURLY BASIC RATE OF PAY $	HOURLY FRINGE BENEFITS $	TOTAL $
303	Landscaper	22.61	0.00	22.61
311	Fiber Optic Laborer (Outside, Other Than Concrete Encased)	18.53	0.00	18.53
315	Final Construction Clean-Up Worker	15.00	0.00	15.00

HEAVY EQUIPMENT OPERATORS
RESIDENTIAL OR AGRICULTURAL CONSTRUCTION

CODE	Fringe Benefits Must Be Paid On All Hours Worked TRADE OR OCCUPATION	HOURLY BASIC RATE OF PAY $	HOURLY FRINGE BENEFITS $	TOTAL $
557	Asphalt Heater, Planer & Scarifier; Asphalt Milling Machine; Asphalt Screed; Backhoe (Track Type); Backhoe (Mini, 15,000 Lbs. & Under); Bituminous (Asphalt) Plant & Paver, Screed; Boring Machine (Directional, Horizontal or Vertical); Bulldozer or Endloader; Concrete Breaker (Large, Auto, VIbratory/Sonic, Manual or Remote); Concrete Bump Cutter, Grinder, Planing or Grooving Machine; Concrete Conveyor System; Concrete Laser/Screed; Concrete Paver (Slipform); Concrete Pump, Concrete Conveyor (Rotec or Bidwell Type); Concrete Slipform Placer Curb & Gutter Machine; Concrete Spreader & DIstributor; Crane (Carry Deck, Mini) or Truck Mounted Hydraulic Crane (10 Tons or Under); Crane With a Lifting Capacity of 25 Tons or Under; Crane, Shovel, Dragline, Clamshells; Forestry Equipment, TImbco, Tree Shear, Tub Grinder, Processor; Grader or Motor Patrol; Grout Pump; Hydro-Blaster (10,000 PSI or Over); Loading Machine (Conveyor); Manhoist; Material or Stack Hoist; Mechanic or Welder; Milling Machine; Roller (Over 5 Ton); Scraper (Self Propelled or Tractor Drawn) 5 cu yds or More Capacity; Shoulder Widener; Skid Rig; Stabilizing or Concrete Mixer (Self-Propelled or 14S or Over); Tractor (Scraper, Dozer, Pusher, Loader); Tractor or Truck Mounted Hydraulic Backhoe; Tractor or Truck Mounted Hydraulic Crane (10 Tons or Under); Trencher (Wheel Type or Chain Type); WInches & A-Frames.	25.00	9.78	34.78
558	Air Compressor (&/or 400 CFM or Over); Air, Electric or Hydraulic Jacking System; Backfiller; Belting, Burlap, Texturing Machine; Boiler (Temporary Heat); Broom or Sweeper; Compactor (Self-Propelled or Tractor Mounted, Towed & LIght Equipment); Concrete Finishing Machine (Road Type); Farm or Industrial Type Tractor; Forklift; Generator (&/or 150 KW or Over); Heaters (Mechanical); High Pressure Utility Locating Machine (Daylighting Machine); Jeep Digger; Lift Slab Machine; Mulcher; Oiler; Post Hole Digger or Driver; Power Subgrader; Pump (3 Inch or Over) or Well Points; Robotic Tool Carrier (With or Without Attachments); Rock, Stone Breaker; Roller (Rubber Tire, 5 Tons or Under); Screed (Milling Machine); Self Propelled Chip Spreader; Shouldering Machine; Skid Steer Loader (With or Without Attachments); Stump Chipper; Telehandler; Vibratory Hammer or Extractor, Power Pack. Future Increase(s): Add $1.60/hr on 5/30/2016.	34.17	19.15	53.32

********** END OF RATES **********

EMPLOYEE RIGHTS
UNDER THE DAVIS-BACON ACT

FOR LABORERS AND MECHANICS EMPLOYED ON FEDERAL OR FEDERALLY ASSISTED CONSTRUCTION PROJECTS

THE UNITED STATES DEPARTMENT OF LABOR WAGE AND HOUR DIVISION

PREVAILING WAGES

You must be paid not less than the wage rate listed in the Davis-Bacon Wage Decision posted with this Notice for the work you perform.

OVERTIME

You must be paid not less than one and one-half times your basic rate of pay for all hours worked over 40 in a work week. There are few exceptions.

ENFORCEMENT

Contract payments can be withheld to ensure workers receive wages and overtime pay due, and liquidated damages may apply if overtime pay requirements are not met. Davis-Bacon contract clauses allow contract termination and debarment of contractors from future federal contracts for up to three years. A contractor who falsifies certified payroll records or induces wage kickbacks may be subject to civil or criminal prosecution, fines and/or imprisonment.

APPRENTICES

Apprentice rates apply only to apprentices properly registered under approved Federal or State apprenticeship programs.

PROPER PAY

If you do not receive proper pay, or require further information on the applicable wages, contact the Contracting Officer listed below:

CELESTE JANTZ
DPW CONTRACT COMPLIANCE OFFICER
841 N. BROADWAY
MILWAUKEE, WI 53202
414-286-3314

or contact the U.S. Department of Labor's Wage and Hour Division.

For additional information:

1-866-4-USWAGE

(1-866-487-9243) TTY: 1-877-889-5627

WWW.WAGEHOUR.DOL.GOV

WHD
U.S. Wage and Hour Division

Department of Public Works
Administration

Ghassan Korban
Commissioner of Public Works

Preston D. Cole
Director of Operations

CITY OF MILWAUKEE
DEPARTMENT OF PUBLIC WORKS
DAVIS-BACON COMPLIANCE PROVISIONS

a. The Contractor will be required to conform to the wage requirements prescribed by the federal Davis-Bacon and Related Acts which requires all laborers and mechanics employed by contractors or subcontractors performing on contracts in excess of $2,000 pay their laborers and mechanics not less than the prevailing wage rates and fringe benefits, as determined by the Secretary of Labor, for the corresponding classes of laborers and mechanics employed on similar projects in the area." (U.S. Department of Labor Wage and Hour Division May 29, 2009 Guidance).

b. The Contractor will pay wages and benefits that comply with the Acts and consistent with the Wage Determination. The Wage Determinations are available on the Department of Labor's website: http://www.wdol.gov/dba.aspx. Be sure to use the determination that is specific to the type of project that is being bid.

c. The Contactor must certify and pay wages in conformance with the Acts each week. The Contractor must submit certified payroll information using form WH-347 (copy attached).

d. The Contractor must collect certified payroll documents from sub-contractors each week. The Contractor must certify that subcontractors are paying wages in conformance with the Acts each week. A sample of a DOL approved payroll certification on form WH-347.

e. The Contractor will display the Davis Bacon "Employee Rights" poster in a prominent/accessible place at the work site. Sample posters are being included (copy attached)

f. The Contractor must comply with all of the pay practices outlined in Attachment #4. These practices include but are not limited to; the ratio and payment of apprentices and the payment of overtime wages.

g. The Contractor must not utilize any debarred subcontractor and must certify that the subcontractor was not listed on the "Excluded Parties List" at www.epls.gov.

Room 501, Frank P. Zeidler Municipal Building, 841 N. Broadway, Milwaukee, Wisconsin 53202-3681
Voice: 414-286-3307, Cell: 414-708-6982, Fax: 414-286-0403
Internet Email: dan.thomas@milwaukee.gov

Sincerely,

Dan Thomas, M.P.A., J.D.
Public Works Personnel Administrator
Department of Public Works Administration

c:
File

Room 501, Frank P. Zeidler Municipal Building, 841 N. Broadway, Milwaukee, Wisconsin 53202-3681
Voice: 414-286-3307, Cell: 414-708-6982, Fax: 414-286-0403
Internet Email: dan.thomas@milwaukee.gov

WEEKLY PAYROLL REPORT

City of Milwaukee (comparable to DT1929)

The weekly submittal of this form is required by 29 CFR Part 3. *Full name, address, and scoial security number must appear on the first payroll on which the employee's name appears. The social security number is collected for payroll purposes. **Fringe benefit details MUST be reported on a supplementary page. ***Include private work. ****If Operating Engineer or Laborer, include class of equipment or skill level of laborer.

Payroll #	Employer Name Prime Contractor Subcontractor Hired By:	CITY CONTRACT NUMBER C	Federal Project ID	County	Payroll Period Week Ending:	Sheet #

Enter information below on every individual that you employed on this project during the payroll report period. *

	Residency				DAILY HOURS WORKED S = Straight Time O = Overtime Date:								TOTAL WEEKLY HOURS WORKED	(A) BASIC HOURLY RATE	(B) BENEFITS** HOURLY RATE		(A) + (B) TOTAL HOURLY RATE	PROJECT WAGES	FICA	FED WH	ST WH	OTHER (specify)	NET PAID	CHECK #
	Target	Non-Target	Non-Res. Milw	Race/Gender		SU	M	TU	W	TH	F	SA			FUND PAYMENT	CASH PAYMENT		GROSS WAGES						
Name					REFERENCED PROJECT																			
Address					s									$	$	$	$							
City, State, ZIP Code					o									$	$	$	$	$						
SS #					OTHER PROJECTS***													$	$	$	$	$	$	
Trade/Craft ****					s																			
Apprentice Yes No					o																			
Name					REFERENCED PROJECT																			
Address					s									$	$	$	$							
City, State, ZIP Code					o									$	$	$	$	$						
SS #					OTHER PROJECTS***													$	$	$	$	$	$	
Trade/Craft ****					s																			
Apprentice Yes No					o																			
Name					REFERENCED PROJECT																			
Address					s									$	$	$	$							
City, State, ZIP Code					o									$	$	$	$	$						
SS #					OTHER PROJECTS***													$	$	$	$	$	$	
Trade/Craft ****					s																			
Apprentice Yes No					o																			
Name					REFERENCED PROJECT																			
Address					s									$	$	$	$							
City, State, ZIP Code					o									$	$	$	$	$						
SS #					OTHER PROJECTS***													$	$	$	$	$	$	
Trade/Craft ****					s																			
Apprentice Yes No					o																			
Name					REFERENCED PROJECT																			
Address					s									$	$	$	$							
City, State, ZIP Code					o									$	$	$	$	$						
SS #					OTHER PROJECTS***													$	$	$	$	$	$	
Trade/Craft ****					s																			
Apprentice Yes No					o																			

COMPLIANCE STATEMENT TO ACCOMPANY CONTRACTOR'S WEEKLY PAYROLL

Wisconsin Department of Transportation

DT1816 9/2008 (Replaces EC673)

The willful falsification of any of the statements on this form may subject the contractor or subcontractor to civil or criminal prosecution. See Section 1001 of Title 18 and Section 231 of Title 31 of the United States Code.

Submit one copy to Regional Office

Adapted from U.S. Department of Labor Form WH-348(1)(68).

No.	State Project ID	Federal Project ID	County	Payroll Period
Contractor or Subcontractor				

Authorized Agent Name	Authorized Agent Title	Authorized Agent Phone Number

I, the undersigned, do state that:

1. I pay, or supervise the payment of the persons employed by the above contractor or subcontractor on the above project. During the payroll period designated above all persons employed on said project have been paid the full weekly wages earned, except as noted in Section 1(a) below. No rebates have been or will be made either directly to or indirectly on behalf of said contractor or subcontractor from the full weekly wages earned by any person. No deductions have been made directly or indirectly from the full wages earned by any person, other than permissible deductions as defined in Regulations, Part 3 (29 CFR Subtitle A), issued by the Secretary of Labor under the Copeland Act, as amended (48 Stat. 948; 63 Stat. 108; 72 Stat. 967; 76 Stat. 357; 40 U.S.C. 276c), and described below in Section 1(b).

   (a) **Exceptions** Name Craft Explanation When will this person be paid?

   (b) **Description of Deductions**

2. Any payrolls otherwise under this contract required to be submitted for the above period are correct and complete. The wage rates for laborers or mechanics contained are not less than the applicable wage rates contained in any wage determination incorporated into the contract. The classifications set forth for each laborer or mechanic conform with the work performed.

3. Any apprentices employed in the above period are duly registered in a bona fide apprenticeship program registered with a State apprenticeship agency recognized by the Bureau of Apprenticeship and Training, United States Department of Labor, or if no such recognized agency exists in a State, are registered with the Bureau of Apprenticeship and Training, United States Department of Labor.

4. (a) **Where fringe benefits are paid to approved plans, fund, or programs.**

   ☐ In addition to the basic hourly wage rates paid to each laborer or mechanic listed in the above-referenced payroll, payments of fringe benefits as listed in the contract have been or will be made to appropriate programs for the benefit of such employees, except as noted in Section 4(c) below.

   (b) **Where fringe benefits are paid in cash.**

   ☐ Each laborer or mechanic listed in the above-referenced payroll has been paid as indicated on the payroll an amount not less than the sum of the applicable basic hourly wage rate plus the amount of the required fringe benefits as listed in the contract, except as noted in Section 4(c) below.

   (c) **Exceptions** Craft Explanation

Remarks

X

(Authorized Agent Signature)

3. Contract and Subcontract provisions.

(a) The Recipient shall insure that the **subrecipient** (s) shall insert in full in any contract in excess of $2,000 which is entered into for the actual construction, alteration and/or repair, including painting and decorating, of a public building or public work, or building or work financed in whole or in part from Federal funds or in accordance with guarantees of a Federal agency or financed from funds obtained by pledge of any contract of a Federal agency to make a loan, grant or annual contribution (except where a different meaning is expressly indicated), and which is subject to the labor standards provisions of any of the acts listed in § 5.1, the following clauses:

(1) Minimum wages.

(i) All laborers and mechanics employed or working upon the site of the work will be paid unconditionally and not less often than once a week, and without subsequent deduction or rebate on any account (except such payroll deductions as are permitted by regulations issued by the Secretary of Labor under the Copeland Act (29 CFR part 3)), the full amount of wages and bona fide fringe benefits (or cash equivalents thereof) due at time of payment computed at rates not less than those contained in the wage determination of the Secretary of Labor which is attached hereto and made a part hereof, regardless of any contractual relationship which may be alleged to exist between the contractor and such laborers and mechanics.

Contributions made or costs reasonably anticipated for bona fide fringe benefits under section 1(b)(2) of the Davis-Bacon Act on behalf of laborers or mechanics are considered wages paid to such laborers or mechanics, subject to the provisions of paragraph (a)(1)(iv) of this section; also, regular contributions made or costs incurred for more than a weekly period (but not less often than quarterly) under plans, funds, or programs which cover the particular weekly period, are deemed to be constructively made or incurred during such weekly period. Such laborers and mechanics shall be paid the appropriate wage rate and fringe benefits on the wage determination for the classification of work actually performed, without regard to skill, except as provided in § 5.5(a)(4). Laborers or mechanics performing work in more than one classification may be compensated at the rate specified for each classification for the time actually worked therein: Provided, That the employer's payroll records accurately set forth the time spent in each classification in which work is performed. The wage determination (including any additional classification and wage rates conformed under paragraph (a)(1)(ii) of this section) and the Davis-Bacon poster (WH-1321) shall be posted at all times by the contractor and its subcontractors at the site of the work in a prominent and accessible place where it can be easily seen by the workers.

Subrecipient s may obtain wage determinations from the U.S. Department of Labor's web site, www.wdol.gov.

(ii)(A) The **subrecipient** (s), on behalf of EPA, shall require that any class of laborers or mechanics,

including helpers, which is not listed in the wage determination and which is to be employed under the contract shall be classified in conformance with the wage determination. The EPA award official shall approve an additional classification and wage rate and fringe benefits therefore only when the following criteria have been met:

(1) The work to be performed by the classification requested is not performed by a classification in the wage determination; and

(2) The classification is utilized in the area by the construction industry; and

(3) The proposed wage rate, including any bona fide fringe benefits, bears a reasonable relationship to the wage rates contained in the wage determination.

(B) If the contractor and the laborers and mechanics to be employed in the classification (if known), or their representatives, and the **subrecipient** (s) agree on the classification and wage rate (including the amount designated for fringe benefits where appropriate), a report of the action taken shall be sent by the **subrecipient** (s) to the State award official. The State award official will transmit the report, to the Administrator of the Wage and Hour Division, Employment Standards Administration, U.S. Department of Labor, Washington, DC 20210. The Administrator, or an authorized representative, will approve, modify, or disapprove every additional classification action within 30 days of receipt and so advise the State award official or will notify the State award official within the 30-day period that additional time is necessary.

(C) In the event the contractor, the laborers or mechanics to be employed in the classification or their representatives, and the and the **subrecipient** (s) do not agree on the proposed classification and wage rate (including the amount designated for fringe benefits, where appropriate), the award official shall refer the questions, including the views of all interested parties and the recommendation of the State award official, to the Administrator for determination. The Administrator, or an authorized representative, will issue a determination within 30 days of receipt and so advise the contracting officer or will notify the contracting officer within the 30-day period that additional time is necessary.

(D) The wage rate (including fringe benefits where appropriate) determined pursuant to paragraphs (a)(1)(ii)(B) or (C) of this section, shall be paid to all workers performing work in the classification under this contract from the first day on which work is performed in the classification.

(iii) Whenever the minimum wage rate prescribed in the contract for a class of laborers or mechanics includes a fringe benefit which is not expressed as an hourly rate, the contractor shall either pay the benefit as stated in the wage determination or shall pay another bona fide fringe benefit or an hourly cash equivalent thereof.

(iv) If the contractor does not make payments to a trustee or other third person, the contractor may

consider as part of the wages of any laborer or mechanic the amount of any costs reasonably anticipated in providing bona fide fringe benefits under a plan or program, Provided, That the Secretary of Labor has found, upon the written request of the contractor, that the applicable standards of the Davis-Bacon Act have been met. The Secretary of Labor may require the contractor to set aside in a separate account assets for the meeting of obligations under the plan or program.

(2) Withholding. The **subrecipient** (s), shall upon written request of the EPA Award Official or an authorized representative of the Department of Labor, withhold or cause to be withheld from the contractor under this contract or any other Federal contract with the same prime contractor, or any other federally-assisted contract subject to Davis-Bacon prevailing wage requirements, which is held by the same prime contractor, so much of the accrued payments or advances as may be considered necessary to pay laborers and mechanics, including apprentices, trainees, and helpers, employed by the contractor or any subcontractor the full amount of wages required by the contract. In the event of failure to pay any laborer or mechanic, including any apprentice, trainee, or helper, employed or working on the site of the work, all or part of the wages required by the contract, the (Agency) may, after written notice to the contractor, sponsor, applicant, or owner, take such action as may be necessary to cause the suspension of any further payment, advance, or guarantee of funds until such violations have ceased.

(3) Payrolls and basic records.

(i) Payrolls and basic records relating thereto shall be maintained by the contractor during the course of the work and preserved for a period of three years thereafter for all laborers and mechanics working at the site of the work. Such records shall contain the name, address, and social security number of each such worker, his or her correct classification, hourly rates of wages paid (including rates of contributions or costs anticipated for bona fide fringe benefits or cash equivalents thereof of the types described in section 1(b)(2)(B) of the Davis-Bacon Act), daily and weekly number of hours worked, deductions made and actual wages paid. Whenever the Secretary of Labor has found under 29 CFR 5.5(a)(1)(iv) that the wages of any laborer or mechanic include the amount of any costs reasonably anticipated in providing benefits under a plan or program described in section 1(b)(2)(B) of the Davis-Bacon Act, the contractor shall maintain records which show that the commitment to provide such benefits is enforceable, that the plan or program is financially responsible, and that the plan or program has been communicated in writing to the laborers or mechanics affected, and records which show the costs anticipated or the actual cost incurred in providing such benefits. Contractors employing apprentices or trainees under approved programs shall maintain written evidence of the registration of apprenticeship programs and certification of trainee programs, the registration of the apprentices and trainees, and the ratios and wage rates prescribed in the applicable programs.

(ii)(A) The contractor shall submit weekly, for each week in which any contract work is performed, a copy of all payrolls to the **subrecipient** , that is, the entity that receives the sub-grant or loan from the State capitalization grant recipient. Such documentation shall be available on request of the State

recipient or EPA. As to each payroll copy received, the **subrecipient** shall provide written confirmation in a form satisfactory to the State indicating whether or not the project is in compliance with the requirements of 29 CFR 5.5(a)(1) based on the most recent payroll copies for the specified week. The payrolls shall set out accurately and completely all of the information required to be maintained under 29 CFR 5.5(a)(3)(i), except that full social security numbers and home addresses shall not be included on the weekly payrolls. Instead the payrolls shall only need to include an individually identifying number for each employee (e.g., the last four digits of the employee's social security number). The required weekly payroll information may be submitted in any form desired. Optional Form WH-347 is available for this purpose from the Wage and Hour Division Web site at http://www.dol.gov/esa/whd/forms/wh347instr.htm or its successor site. The prime contractor is responsible for the submission of copies of payrolls by all subcontractors. Contractors and subcontractors shall maintain the full social security number and current address of each covered worker, and shall provide them upon request to the **subrecipient** (s) for transmission to the State or EPA if requested by EPA , the State, the contractor, or the Wage and Hour Division of the Department of Labor for purposes of an investigation or audit of compliance with prevailing wage requirements. It is not a violation of this section for a prime contractor to require a subcontractor to provide addresses and social security numbers to the prime contractor for its own records, without weekly submission to the **subrecipient** (s).

(B) Each payroll submitted shall be accompanied by a "Statement of Compliance," signed by the contractor or subcontractor or his or her agent who pays or supervises the payment of the persons employed under the contract and shall certify the following:

(1) That the payroll for the payroll period contains the information required to be provided under § 5.5 (a)(3)(ii) of Regulations, 29 CFR part 5, the appropriate information is being maintained under § 5.5 (a)(3)(i) of Regulations, 29 CFR part 5, and that such information is correct and complete;

(2) That each laborer or mechanic (including each helper, apprentice, and trainee) employed on the contract during the payroll period has been paid the full weekly wages earned, without rebate, either directly or indirectly, and that no deductions have been made either directly or indirectly from the full wages earned, other than permissible deductions as set forth in Regulations, 29 CFR part 3;

(3) That each laborer or mechanic has been paid not less than the applicable wage rates and fringe benefits or cash equivalents for the classification of work performed, as specified in the applicable wage determination incorporated into the contract.

(C) The weekly submission of a properly executed certification set forth on the reverse side of Optional Form WH-347 shall satisfy the requirement for submission of the "Statement of Compliance" required by paragraph (a)(3)(ii)(B) of this section.

(D) The falsification of any of the above certifications may subject the contractor or subcontractor to civil or criminal prosecution under section 1001 of title 18 and section 231 of title 31 of the United

States Code.

(iii) The contractor or subcontractor shall make the records required under paragraph (a)(3)(i) of this section available for inspection, copying, or transcription by authorized representatives of the State, EPA or the Department of Labor, and shall permit such representatives to interview employees during working hours on the job. If the contractor or subcontractor fails to submit the required records or to make them available, the Federal agency or State may, after written notice to the contractor, sponsor, applicant, or owner, take such action as may be necessary to cause the suspension of any further payment, advance, or guarantee of funds. Furthermore, failure to submit the required records upon request or to make such records available may be grounds for debarment action pursuant to 29 CFR 5.12.

(4) Apprentices and trainees--

(i) Apprentices. Apprentices will be permitted to work at less than the predetermined rate for the work they performed when they are employed pursuant to and individually registered in a bona fide apprenticeship program registered with the U.S. Department of Labor, Employment and Training Administration, Office of Apprenticeship Training, Employer and Labor Services, or with a State Apprenticeship Agency recognized by the Office, or if a person is employed in his or her first 90 days of probationary employment as an apprentice in such an apprenticeship program, who is not individually registered in the program, but who has been certified by the Office of Apprenticeship Training, Employer and Labor Services or a State Apprenticeship Agency (where appropriate) to be eligible for probationary employment as an apprentice. The allowable ratio of apprentices to journeymen on the job site in any craft classification shall not be greater than the ratio permitted to the contractor as to the entire work force under the registered program. Any worker listed on a payroll at an apprentice wage rate, who is not registered or otherwise employed as stated above, shall be paid not less than the applicable wage rate on the wage determination for the classification of work actually performed. In addition, any apprentice performing work on the job site in excess of the ratio permitted under the registered program shall be paid not less than the applicable wage rate on the wage determination for the work actually performed. Where a contractor is performing construction on a project in a locality other than that in which its program is registered, the ratios and wage rates (expressed in percentages of the journeyman's hourly rate) specified in the contractor's or subcontractor's registered program shall be observed. Every apprentice must be paid at not less than the rate specified in the registered program for the apprentice's level of progress, expressed as a percentage of the journeymen hourly rate specified in the applicable wage determination. Apprentices shall be paid fringe benefits in accordance with the provisions of the apprenticeship program. If the apprenticeship program does not specify fringe benefits, apprentices must be paid the full amount of fringe benefits listed on the wage determination for the applicable classification. If the Administrator determines that a different practice prevails for the applicable apprentice classification, fringes shall be paid in accordance with that determination. In the event the Office of Apprenticeship Training, Employer and Labor Services, or a State Apprenticeship Agency recognized by the Office, withdraws approval of an apprenticeship program, the contractor will no longer be permitted to utilize apprentices at less than the applicable predetermined rate for the

work performed until an acceptable program is approved.

(ii) Trainees. Except as provided in 29 CFR 5.16, trainees will not be permitted to work at less than the predetermined rate for the work performed unless they are employed pursuant to and individually registered in a program which has received prior approval, evidenced by formal certification by the U.S. Department of Labor, Employment and Training Administration. The ratio of trainees to journeymen on the job site shall not be greater than permitted under the plan approved by the Employment and Training Administration. Every trainee must be paid at not less than the rate specified in the approved program for the trainee's level of progress, expressed as a percentage of the journeyman hourly rate specified in the applicable wage determination. Trainees shall be paid fringe benefits in accordance with the provisions of the trainee program. If the trainee program does not mention fringe benefits, trainees shall be paid the full amount of fringe benefits listed on the wage determination unless the Administrator of the Wage and Hour Division determines that there is an apprenticeship program associated with the corresponding journeyman wage rate on the wage determination which provides for less than full fringe benefits for apprentices. Any employee listed on the payroll at a trainee rate who is not registered and participating in a training plan approved by the Employment and Training Administration shall be paid not less than the applicable wage rate on the wage determination for the classification of work actually performed. In addition, any trainee performing work on the job site in excess of the ratio permitted under the registered program shall be paid not less than the applicable wage rate on the wage determination for the work actually performed. In the event the Employment and Training Administration withdraws approval of a training program, the contractor will no longer be permitted to utilize trainees at less than the applicable predetermined rate for the work performed until an acceptable program is approved.

(iii) Equal employment opportunity. The utilization of apprentices, trainees and journeymen under this part shall be in conformity with the equal employment opportunity requirements of Executive Order 11246, as amended, and 29 CFR part 30.

(5) Compliance with Copeland Act requirements. The contractor shall comply with the requirements of 29 CFR part 3, which are incorporated by reference in this contract.

(6) Subcontracts. The contractor or subcontractor shall insert in any subcontracts the clauses contained in 29 CFR 5.5(a)(1) through (10) and such other clauses as the EPA determines may by appropriate, and also a clause requiring the subcontractors to include these clauses in any lower tier subcontracts. The prime contractor shall be responsible for the compliance by any subcontractor or lower tier subcontractor with all the contract clauses in 29 CFR 5.5.

(7) Contract termination: debarment. A breach of the contract clauses in 29 CFR 5.5 may be grounds for termination of the contract, and for debarment as a contractor and a subcontractor as provided in 29 CFR 5.12.

(8) Compliance with Davis-Bacon and Related Act requirements. All rulings and interpretations of the

Davis-Bacon and Related Acts contained in 29 CFR parts 1, 3, and 5 are herein incorporated by reference in this contract.

(9) Disputes concerning labor standards. Disputes arising out of the labor standards provisions of this contract shall not be subject to the general disputes clause of this contract. Such disputes shall be resolved in accordance with the procedures of the Department of Labor set forth in 29 CFR parts 5, 6, and 7. Disputes within the meaning of this clause include disputes between the contractor (or any of its subcontractors) and **Subrecipient** (s), State, EPA, the U.S. Department of Labor, or the employees or their representatives.

(10) Certification of eligibility.

(i) By entering into this contract, the contractor certifies that neither it (nor he or she) nor any person or firm who has an interest in the contractor's firm is a person or firm ineligible to be awarded Government contracts by virtue of section 3(a) of the Davis-Bacon Act or 29 CFR 5.12(a)(1).

(ii) No part of this contract shall be subcontracted to any person or firm ineligible for award of a Government contract by virtue of section 3(a) of the Davis-Bacon Act or 29 CFR 5.12(a)(1).

(iii) The penalty for making false statements is prescribed in the U.S. Criminal Code, 18 U.S.C. 1001.

4. **Contract Provision for Contracts in Excess of $100,000.**

(a) Contract Work Hours and Safety Standards Act. The **subrecipient** shall insert the following clauses set forth in paragraphs (a)(1), (2), (3), and (4) of this section in full in any contract in an amount in excess of $100,000 and subject to the overtime provisions of the Contract Work Hours and Safety Standards Act. These clauses shall be inserted in addition to the clauses required by Item 3, above or 29 CFF 4.6 . As used in this paragraph, the terms laborers and mechanics include watchmen and guards.

(1) Overtime requirements. No contractor or subcontractor contracting for any part of the contract work which may require or involve the employment of laborers or mechanics shall require or permit any such laborer or mechanic in any workweek in which he or she is employed on such work to work in excess of forty hours in such workweek unless such laborer or mechanic receives compensation at a rate not less than one and one-half times the basic rate of pay for all hours worked in excess of forty hours in such workweek.

(2) Violation; liability for unpaid wages; liquidated damages. In the event of any violation of the clause set forth in paragraph (a)(1) of this section the contractor and any subcontractor responsible therefor shall be liable for the unpaid wages. In addition, such contractor and subcontractor shall be liable to the United States (in the case of work done under contract for the District of Columbia or a territory, to such District or to such territory), for liquidated damages. Such liquidated damages shall be computed with respect to each individual laborer or mechanic, including watchmen and guards, employed in violation

of the clause set forth in paragraph (a)(1) of this section, in the sum of $10 for each calendar day on which such individual was required or permitted to work in excess of the standard workweek of forty hours without payment of the overtime wages required by the clause set forth in paragraph (a)(1) of this section.

(3) Withholding for unpaid wages and liquidated damages. The **subrecipient,** upon written request of the EPA Award Official or an authorized representative of the Department of Labor, shall withhold or cause to be withheld, from any moneys payable on account of work performed by the contractor or subcontractor under any such contract or any other Federal contract with the same prime contractor, or any other federally-assisted contract subject to the Contract Work Hours and Safety Standards Act, which is held by the same prime contractor, such sums as may be determined to be necessary to satisfy any liabilities of such contractor or subcontractor for unpaid wages and liquidated damages as provided in the clause set forth in paragraph (b)(2) of this section.

(4) Subcontracts. The contractor or subcontractor shall insert in any subcontracts the clauses set forth in paragraph (a)(1) through (4) of this section and also a clause requiring the subcontractors to include these clauses in any lower tier subcontracts. The prime contractor shall be responsible for compliance by any subcontractor or lower tier subcontractor with the clauses set forth in paragraphs (a)(1) through (4) of this section.

(b) In addition to the clauses contained in Item 3, above, in any contract subject only to the Contract Work Hours and Safety Standards Act and not to any of the other statutes cited in 29 CFR 5.1, the **Subrecipient** shall insert a clause requiring that the contractor or subcontractor shall maintain payrolls and basic payroll records during the course of the work and shall preserve them for a period of three years from the completion of the contract for all laborers and mechanics, including guards and watchmen, working on the contract. Such records shall contain the name and address of each such employee, social security number, correct classifications, hourly rates of wages paid, daily and weekly number of hours worked, deductions made, and actual wages paid. Further, the **Subrecipient** shall insert in any such contract a clause providing hat the records to be maintained under this paragraph shall be made available by the contractor or subcontractor for inspection, copying, or transcription by authorized representatives of the (write the name of agency) and the Department of Labor, and the contractor or subcontractor will permit such representatives to interview employees during working hours on the job.

General Decision Number: WI160008 01/29/2016 WI8

Superseded General Decision Number: WI20150008

State: Wisconsin

Construction Types: Heavy (Sewer and Water Line and Tunnel)

Counties: Wisconsin Statewide.

TUNNEL, SEWER & WATER LINE CONSTRUCTION PROJECTS

Note: Under Executive Order (EO) 13658, an hourly minimum wage of $10.15 for calendar year 2016 applies to all contracts subject to the Davis-Bacon Act for which the solicitation was issued on or after January 1, 2015. If this contract is covered by the EO, the contractor must pay all workers in any classification listed on this wage determination at least $10.15 (or the applicable wage rate listed on this wage determination, if it is higher) for all hours spent performing on the contract in calendar year 2016. The EO minimum wage rate will be adjusted annually. Additional information on contractor requirements and worker protections under the EO is available at www.dol.gov/whd/govcontracts.

Modification Number	Publication Date
0	01/08/2016
1	01/29/2016

BRWI0001-002 06/01/2013

CRAWFORD, JACKSON, JUNEAU, LA CROSSE, MONROE, TREMPEALEAU, AND VERNON COUNTIES

	Rates	Fringes
BRICKLAYER	$ 35.94	17.05

BRWI0002-002 06/01/2015

ASHLAND, BAYFIELD, DOUGLAS, AND IRON COUNTIES

	Rates	Fringes
BRICKLAYER	$ 36.10	16.13

BRWI0002-005 06/01/2015

ADAMS, ASHLAND, BARRON, BROWN, BURNETT, CALUMET, CHIPPEWA, CLARK, COLUMBIA, DODGE, DOOR, DUNN, FLORENCE, FOND DU LAC, FOREST, GREEN LAKE, IRON, JEFFERSON, KEWAUNEE, LANGLADE, LINCOLN, MANITOWOC, MARATHON, MARINETTE, MARQUETTE, MENOMINEE, OCONTO, ONEIDA, OUTAGAMIE, POLK, PORTAGE, RUSK, ST CROIX, SAUK, SHAWANO, SHEBOYGAN, TAYLOR, VILAS, WALWORTH, WAUPACA, WAUSHARA, WINNEBAGO, AND WOOD COUNTIES

	Rates	Fringes
CEMENT MASON/CONCRETE FINISHER	$ 34.16	16.38

BRWI0003-002 06/01/2015

BROWN, DOOR, FLORENCE, KEWAUNEE, MARINETTE, AND OCONTO COUNTIES

	Rates	Fringes
BRICKLAYER	$ 31.59	16.39

BRWI0004-002 06/01/2013

KENOSHA, RACINE, AND WALWORTH COUNTIES

	Rates	Fringes
BRICKLAYER	$ 35.10	18.58

BRWI0006-002 06/01/2013

ADAMS, CLARK, FOREST, LANGLADE, LINCOLN, MARATHON, MENOMINEE, ONEIDA, PORTAGE, PRICE, TAYLOR, VILAS AND WOOD COUNTIES

	Rates	Fringes
BRICKLAYER	$ 32.14	16.56

BRWI0007-002 06/01/2015

GREEN, LAFAYETTE, AND ROCK COUNTIES

	Rates	Fringes
BRICKLAYER	$ 32.90	17.01

BRWI0008-002 06/01/2015

MILWAUKEE, OZAUKEE, WASHINGTON, AND WAUKESHA COUNTIES

	Rates	Fringes
BRICKLAYER	$ 36.74	18.19

BRWI0009-001 06/01/2015

GREEN LAKE, MARQUETTE, OUTAGAMIE, SHAWANO, WAUPACA, WASHARA, AND WINNEBAGO COUNTIES

	Rates	Fringes
BRICKLAYER	$ 31.59	16.39

BRWI0011-002 06/01/2015

CALUMET, FOND DU LAC, MANITOWOC, AND SHEBOYGAN COUNTIES

	Rates	Fringes
BRICKLAYER	$ 31.59	16.39

BRWI0013-002 06/01/2015

DANE, GRANT, IOWA, AND RICHLAND COUNTIES

	Rates	Fringes
BRICKLAYER	$ 32.86	17.22

BRWI0019-002 06/01/2015

BARRON, BUFFALO, BURNETT, CHIPPEWA, DUNN, EAU CLAIRE, PEPIN, PIERCE, POLK, RUSK, ST. CROIX, SAWYER AND WASHBURN COUNTIES

	Rates	Fringes
BRICKLAYER	$ 31.36	16.51

BRWI0021-002 06/01/2015

DODGE AND JEFFERSON COUNTIES

	Rates	Fringes
BRICKLAYER	$ 33.58	16.65

BRWI0034-002 06/01/2015

COLUMBIA AND SAUK COUNTIES

	Rates	Fringes
BRICKLAYER	$ 32.86	17.22

CARP0087-001 07/01/2012

BURNETT (W. of Hwy 48), PIERCE (W. of Hwy 29), POLK (W. of Hwys 35, 48 & 65), AND ST. CROIX (W. of Hwy 65) COUNTIES

	Rates	Fringes
Carpenter & Piledrivermen	$ 33.34	16.73

CARP0252-002 07/02/2012

ADAMS, BARRON, BAYFIELD (Eastern 2/3), BROWN, BUFFALO, BURNETT (E. of Hwy 48), CALUMET, CHIPPEWA, CLARK, COLUMBIA, CRAWFORD, DANE, DODGE, DOOR, DUNN, EAU CLAIRE, FLORENCE (except area bordering Michigan State Line), FOND DU LAC, FOREST, GRANT, GREEN, GREEN LAKE, IOWA, IRON, JACKSON, JEFFERSON, JUNEAU, KEWAUNEE, LA CROSSE, LAFAYETTE, LANGLADE, LINCOLN, MANITOWOC, MARATHON, MARINETTE (except N.E. corner), MARQUETTE, MENOMINEE, MONROE, OCONTO, ONEIDA, OUTAGAMIE, PEPIN, PIERCE (E. of Hwys 29 & 65), POLK (E. of Hwys 35, 48 & 65), PORTAGE,

PRICE, RICHLAND, ROCK, RUSK, SAUK, SAWYER, SHAWANO, SHEBOYGAN, ST CROIX (E. of Hwy 65), TAYLOR, TREMPEALEAU, VERNON, VILAS, WALWORTH, WASHBURN, WAUPACA, WAUSHARA, WINNEBAGO, AND WOOD COUNTIES

	Rates	Fringes
CARPENTER		
CARPENTER	$ 30.48	15.80
MILLWRIGHT	$ 32.11	15.80
PILEDRIVER	$ 30.98	15.80

CARP0252-010 07/02/2012

ASHLAND COUNTY

	Rates	Fringes
Carpenters		
Carpenter	$ 30.48	15.80
Millwright	$ 32.11	15.80
Pile Driver	$ 30.98	15.80

CARP0264-003 06/01/2008

KENOSHA, MILWAUKEE, OZAUKEE, RACINE, WAUKESHA, AND WASHINGTON COUNTIES

	Rates	Fringes
CARPENTER	$ 30.52	14.41

CARP0361-004 05/11/2015

BAYFIELD (West of Hwy 63) AND DOUGLAS COUNTIES

	Rates	Fringes
CARPENTER	$ 34.11	17.80

CARP2337-001 06/01/2008

ZONE A: MILWAUKEE, OZAUKEE, WAUKESHA AND WASHINGTON

ZONE B: KENOSHA & RACINE

	Rates	Fringes
PILEDRIVERMAN		
Zone A	$ 27.25	19.46
Zone B	$ 24.47	19.46

CARP2337-003 06/02/2008

	Rates	Fringes
MILLWRIGHT		

Zone A.....$ 27.92 19.08
Zone B.....$ 26.82 19.08

ZONE DEFINITIONS

ZONE A: MILWAUKEE, OZAUKEE, WAUKESHA AND WASHINGTON COUNTIES

ZONE B: KENOSHA & RACINE COUNTIES

ELEC0014-002 06/01/2015

ASHLAND, BARRON, BAYFIELD, BUFFALO, BURNETT, CHIPPEWA, CLARK (except Maryville, Colby, Unity, Sherman, Fremont, Lynn & Sherwood), CRAWFORD, DUNN, EAU CLAIRE, GRANT, IRON, JACKSON, LA CROSSE, MONROE, PEPIN, PIERCE, POLK, PRICE, RICHLAND, RUSK, ST CROIX, SAWYER, TAYLOR, TREMPEALEAU, VERNON, AND WASHBURN COUNTIES

	Rates	Fringes
Electricians:.....	$ 31.21	18.92

ELEC0127-002 06/01/2012

KENOSHA COUNTY

	Rates	Fringes
Electricians:.....	$ 35.25	19.30

ELEC0158-002 06/01/2015

BROWN, DOOR, KEWAUNEE, MANITOWOC (except Schleswig), MARINETTE(Wausuakee and area South thereof), OCONTO, MENOMINEE (East of a ine 6 miles West of the West boundary of Oconto County), SHAWANO (Except Area North of Townships of Aniwa and Hutchins) COUNTIES

	Rates	Fringes
Electricians:.....	$ 29.84	29.50% + 9.37

ELEC0159-003 06/01/2015

COLUMBIA, DANE, DODGE (Area West of Hwy 26, except Chester and Emmet Townships), GREEN, LAKE (except Townships of Berlin, Seneca, and St. Marie), IOWA, MARQUETTE (except Townships of Neshkoka, Crystal Lake, Newton, and Springfield), and SAUK COUNTIES

	Rates	Fringes
Electricians:.....	$ 35.75	19.87

ELEC0219-004 06/01/2015

FLORENCE COUNTY (Townships of Aurora, Commonwealth, Fern, Florence and Homestead) AND MARINETTE COUNTY (Township of Niagara)

	Rates	Fringes
Electricians:		
Electrical contracts over $180,000	$ 31.16	18.34
Electrical contracts under $180,000	$ 28.96	18.26

ELEC0242-005 06/01/2014

DOUGLAS COUNTY

	Rates	Fringes
Electricians:	$ 32.54	24.07

ELEC0388-002 06/01/2013

ADAMS, CLARK (Colby, Freemont, Lynn, Mayville, Sherman, Sherwood, Unity), FOREST, JUNEAU, LANGLADE, LINCOLN, MARATHON, MARINETTE (Beecher, Dunbar, Goodman & Pembine), MENOMINEE (Area West of a line 6 miles West of the West boundary of Oconto County), ONEIDA, PORTAGE, SHAWANO (Aniwa and Hutchins), VILAS AND WOOD COUNTIES

	Rates	Fringes
Electricians:	$ 28.96	24.85% + 9.70

ELEC0430-002 06/01/2015

RACINE COUNTY (Except Burlington Township)

	Rates	Fringes
Electricians:	$ 34.98	19.89

ELEC0494-005 06/01/2015

MILWAUKEE, OZAUKEE, WASHINGTON, AND WAUKESHA COUNTIES

	Rates	Fringes
Electricians:	$ 35.13	23.09

ELEC0494-006 06/01/2014

CALUMET (Township of New Holstein), DODGE (East of Hwy 26 including Chester Township), FOND DU LAC, MANITOWOC (Schleswig), and SHEBOYGAN COUNTIES

	Rates	Fringes

Electricians:.....$ 29.64 20.54

ELEC0577-003 06/01/2015

CALUMET (except Township of New Holstein), GREEN LAKE (N. part including Townships of Berlin, St Marie, and Seneca), MARQUETTE (N. part including Townships of Crystal Lake, Neshkoro, Newton, and Springfield), OUTAGAMIE, WAUPACA, WAUSHARA, AND WINNEBAGO COUNTIES

	Rates	Fringes
Electricians:.....	$ 29.60	26.5%+9.15

ELEC0890-003 06/01/2015

DODGE (Emmet Township only), GREEN, JEFFERSON, LAFAYETTE, RACINE (Burlington Township), ROCK AND WALWORTH COUNTIES

	Rates	Fringes
Electricians:.....	$ 31.90	24.95% + $10.46

ENGI0139-003 06/01/2015

REMAINING COUNTIES

	Rates	Fringes
Power Equipment Operator		
Group 1.....	$ 37.67	20.10
Group 2.....	$ 36.42	20.10
Group 3.....	$ 35.22	20.10
Group 4.....	$ 34.69	20.10
Group 5.....	$ 32.62	20.10
Group 6.....	$ 31.99	20.10

HAZARDOUS WASTE PREMIUMS:
EPA Level "A" Protection: $3.00 per hour
EPA Level "B" Protection: $2.00 per hour
EPA Level "C" Protection: $1.00 per hour

POWER EQUIPMENT OPERATORS CLASSIFICATIONS

GROUP 1: Cranes, Tower Cranes and Derricks with or without attachments with a lifting capacity of over 100 tons; Cranes, Tower Cranes, and Derricks with boom, leads and/or jib lengths 176 ft or longer.

GROUP 2: Backhoes (Excavators) weighing 130,00 lbs and over; Cranes, Tower Cranes and Derricks with or without attachments with a lifting capacity of 100 tons or less; Cranes, Tower Cranes, and Derricks with boom, leads, and/or jib lengths 175 ft or less; Caisson Rigs; Pile Driver

GROUP 3: Backhoes (Excavators) weighing under 130,000 lbs; Travelling Crane (bridge type); Milling Machine; Concrete Paver over 27 E; Concrete Spreader and Distributor;

Concrete Laser Screed; Concrete Grinder and Planing Machine; Slipform Curb and Gutter Machine; Boring Machine (Directional); Dredge Operator; Skid Rigs; over 46 meter Concrete Pump.

GROUP 4: Hydraulic Backhoe (tractor or truck mounted); Hydraulic Crane, 10 tons or less; Tractor, Bulldozer, or End Loader (over 40 hp); Motor Patrol; Scraper Operator; Bituminous Plant and Paver Operator; Screed-Milling Machine; Roller over 5 tons; Concrete pumps 46 meter and under; Grout Pumps; Rotec type machine; Hydro Blaster, 10,000 psi and over; Rotary Drill Operator; Percussion Drilling Machine; Air Track Drill with or without integral hammer; Blaster; Boring Machine (vertical or horizontal); Side Boom; Trencher, wheel type or chain type having 8 inch or larger bucket; Rail Leveling Machine (Railroad); Tie Placer; Tie Extractor; Tie Tamper; Stone Leveler; Straddle Carrier; Material Hoists; Stack Hoist; Man Hoists; Mechanic and Welder; Off Road Material Haulers.

GROUP 5: Tractor, Bulldozer, or Endloader (under 40 hp); Tampers -Compactors, riding type; Stump Chipper, large; Roller, Rubber Tire; Backfiller; Trencher, chain type (bucket under 8 inch); Concrete Auto Breaker, large; Concrete Finishing Machine (road type); Concrete Batch Hopper; Concrete Conveyor Systems; Concrete Mixers, 14S or over; Pumps, Screw Type and Gypsum); Hydrohammers, small; Brooms and Sweeeprs; Lift Slab Machine; Roller under 5 tons; Industrial Locomotives; Fireman (Pile Drivers and Derricks); Pumps (well points); Hoists, automatic; A-Frames and Winch Trucks; Hoists (tuggers); Boats (Tug, Safety, Work Barges and Launches); Assistant Engineer

GROUP 6: Shouldering Machine Operator; Farm or Industrial Tractor mounted equipment; Post Hole Digger; Auger (vertical and horizontal); Skid Steer Loader with or without attachments; Robotic Tool Carrier with or without attachments; Power Pack Vibratory/Ultra Sound Driver and Extractor; Fireman (Asphalt Plants); Screed Operator; Stone Crushers and Screening Plants; Air, Electric, Hydraulic Jacks (Slip Form); Prestress Machines; Air Compressor, 400 CFM or over; Refrigeration Plant/Freese Machine; Boiler Operators (temporary heat); Forklifts; Welding Machines; Generators; Pumps over 3"; Heaters, Mechanical; Combination small equipment operator; Winches, small electric; Oiler; Greaser; Rotary Drill Tender; Conveyor; Elevator Operator

---

ENGI0139-007 06/01/2015

DODGE, FOND DU LAC, JEFFERSON, KENOSHA, MILWAUKEE, OZAUKEE, RACINE, SHEBOYGAN, WALWORTH, WASHINGTON, AND WAUKESHA COUNTIES

	Rates	Fringes
Power Equipment Operator		
Group 1	$ 38.09	20.55
Group 2	$ 37.31	20.55
Group 3	$ 36.36	20.55

Group 4.....$ 35.31 20.55
Group 5.....$ 33.91 20.55

HAZARDOUS WASTE PREMIUMS:
EPA Level "A" Protection: $3.00 per hour
EPA Level "B" Protection: $2.00 per hour
EPA Level "C" Protection: $1.00 per hour

POWER EQUIPMENT OPERATORS CLASSIFICATIONS

GROUP 1: Cranes, Tower Cranes, and Derricks with or without attachments, with a lifting capacity of over 100 tons; or Cranes, Tower Cranes, and Derricks with boom, leads, and/or jib lengths measuring 176 feet or longer; Backhoes (Excavators) 130,000 lbs and over; Caisson Rigs and Pile Drivers

GROUP 2: Cranes, Tower Cranes and Derricks with or without attachments with a lifting capacity of 100 tons or under; or Cranes, Tower Cranes, and Derricks with boom, lead, and\or jib lengths measuring 175 feet or under; Backhoes (Excavators) under 130,000 lbs; Skid Rigs; Dredge Operator: Traveling Crane (Bridge type); Concrete Paver over 27 E; Concrete Spreader and Distributor; Concrete Pumps and Boring Machines (directional)

GROUP 3: Material Hoists; Stack Hoists; Tractor or Truck mounted Hydraulic Backhoe; Tractor or Truck Mounted Hydraulic Crane, 5 tons or under; Manhoist; Tractor over 40 hp; Bulldozer over 40 hp; Endloader over 40 hp; Forklift, 25 ft and over; Motor Patrol; Scraper Operator; Sideboom; Straddle Carrier; Mechanic and Welder; Bituminous Plant and Paver Operator; Roller over 5 tons; Percussion Drill Operator; Rotary Drill Operator; Blaster; Air Track Drill; Trencher (wheel type or chain type having over 8 inch bucket); Elevator; Milling Machine and Boring Machine (horizontal or vertical); Backhoe Mounted Compactor

GROUP 4: Backfiller; Concrete Auto Breaker (large); Concrete Finishing Machine (road type); Roller, Rubber Tire; Concrete Batch Hopper; Concrete Conveyor System; Concrete Mixers (14S or over); Screw type Pumps and Gypsum Pumps; Grout Pumps; Tractor, Bulldozer, End Loader, under 40 hp; Pumps (well points); Trencher (chain type 8 inch or smaller bucket; Industrial Locomotives; Roller under 5 tons; Fireman (Piledrivers and Derricks); Robotic Tool Carrier with or without attachments.

GROUP 5: Hoists (Automatic); Forklift, 12 ft to 25 ft; Tamper-Compactors, riding type; A-Frame andWinch Trucks; Concrete Auto Breaker; Hydrohammer, small; Brooms and Sweepers; Hoist (Tuggers); Stump Chipper, large; Boats (Tug, Safety, Work Barges and Launch); Shouldering Machine Operator; Screed Operator; Farm or Industrial Tractor; Post Hole Digger; Stone Crushers and Screening Plants; Firemen (Asphalt Plants); Air Compressor (400 CFM or over); Augers (vertical and horizontal); Generators, 150 KW and over; Air, Electric Hydraulic Jacks (Slipform); Prestress Machines; Skid Steer Loader with or without attachments; Boiler operators (temporary heat); Forklift, 12 ft and

under; Screed Operator Milling Machine; Refrigeration Plant/Freeze Machine; Power Pack Vibratory/Ultra Sound Driver and Extractor; Generators under 150 KW; Combination small equipment operator; Compressors under 400 CFM; Welding Machines; Heaters, Mechanical; Pumps; Winches, Small Electric; Oiler and Greaser; Conveyor; High pressure utility locating machine (daylighting machine).

IRON0008-002 06/01/2014

BROWN, CALUMET, DOOR, FOND DU LAC, KEWAUNEE, MANITOWOC, MARINETTE, OCONTO, OUTAGAMI, SHAWANO, SHEBOYGAN, AND WINNEBAGO COUNTIES:

	Rates	Fringes
IRONWORKER	$ 29.27	23.96

Paid Holidays: New Year's Day, Memorial Day, July 4th, Labor Day, Thanksgiving Day & Christmas Day.

IRON0008-003 06/01/2015

KENOSHA, MILWAUKEE, OZAUKEE, RACINE, WALWORTH (N.E. 2/3), WASHINGTON, AND WAUKESHA COUNTIES

	Rates	Fringes
IRONWORKER	$ 32.36	24.07

Paid Holidays: New Year's Day, Memorial Day, July 4th, Labor Day, Thanksgiving Day & Christmas Day.

IRON0383-001 06/01/2015

ADAMS, COLUMBIA, CRAWFORD, DANE, DODGE, FLORENCE, FOREST, GRANT, GREENE, (Excluding S.E. tip), GREEN LAKE, IOWA, JEFFERSON, JUNEAU, LA CROSSE, LAFAYETTE, LANGLADE, MARATHON, MARQUETTE, MENOMINEE, MONROE, PORTAGE, RICHLAND, ROCK (Northern area, vicinity of Edgerton and Milton), SAUK, VERNON, WAUPACA, WAUSHARA, AND WOOD COUNTIES

	Rates	Fringes
IRONWORKER	$ 32.85	21.84

IRON0498-005 06/01/2008

GREEN (S.E. 1/3), ROCK (South of Edgerton and Milton), and WALWORTH (S.W. 1/3) COUNTIES:

	Rates	Fringes

IRONWORKER.....$ 34.34 25.72

IRON0512-008 05/01/2015

BARRON, BUFFALO, CHIPPEWA, CLARK, DUNN, EAU CLAIRE, JACKSON, PEPIN, PIERCE, POLK, RUSK, ST CROIX, TAYLOR, AND TREMPEALEAU COUNTIES

	Rates	Fringes
IRONWORKER	$ 35.50	23.45

IRON0512-021 05/01/2015

ASHLAND, BAYFIELD, BURNETT, DOUGLAS, IRON, LINCOLN, ONEIDA, PRICE, SAWYER, VILAS AND WASHBURN COUNTIES

	Rates	Fringes
IRONWORKER	$ 31.04	23.45

LABO0113-004 06/02/2015

MILWAUKEE, OZAUKEE, WASHINGTON, AND WAUKESHA COUNTIES

	Rates	Fringes
Laborers: (Open Cut)		
Group 1	$ 14.83	18.24
Group 2	$ 17.04	18.24
Group 3	$ 20.48	18.24
Group 4	$ 29.60	18.24
Group 5	$ 29.73	18.24
Group 6	$ 29.79	18.24
Group 7	$ 31.94	18.24
Group 8	$ 34.69	18.24
Group 9	$ 35.31	18.24

LABORERS CLASSIFICATIONS [OPEN CUT]

GROUP 1: Yard Laborer

GROUP 2: Landscaper

GROUP 3: Flag Person

GROUP 4: Paving Laborer

GROUP 5: General Laborer on Surface; Top Man

GROUP 6: Mud Mixer

GROUP 7: Mucker; Form Stripper; Bottom Digger and Misc; Bottom Man and Welder on Surface

GROUP 8: Concrete Manhole Builder; Caisson Worker; Miner; Pipe Layer; Rock Driller and Joint Man; Timber Man and Concrete Brusher; Bracer in Trench Behind Machine & Tight

Sheeting; Concrete Formsetter and Shoveler; Jackhammer Operator

GROUP 9: Blaster

LABO0113-005 06/02/2015

SEWER, TUNNEL & UNDERGROUND

KENOSHA AND RACINE COUNTIES

	Rates	Fringes
Laborers:		
Group 1	$ 21.32	18.24
Group 2	$ 27.09	18.24
Group 3	$ 29.58	18.24
Group 4	$ 31.30	18.24

TUNNEL WORK UNDER COMPRESSED AIR: 0-15 lbs add $1.00, 15-30 lbs add $2.00, over 30 lbs add $3.00

LABORERS CLASSIFICATIONS

GROUP 1: Flagperson

GROUP 2: Top Man, General Laborer, Wellpoint Installation, Wire Mesh and Reinforcement, Concrete Worker, Form Stripper, Strike-off Work

GROUP 3: Machine and Equipment Operator, Sheeting, Form Setting, Patch Finisher, Bottom Man, Joint Sawer, Gunnite Man, Manhole Builder, Welder-Torchman, Blaster, Caulker, Bracer, Bull Float, Conduit Worker, Mucker and Car Pusher, Raker and Luteman, Hydraulic Jacking of Shields, Shield Drivers, Mining Machine, Lock Tenders, Mucking Machine Operator, Motor Men & Gauge Tenders and operation of incidental Mechanical Equipment and all Power Driven Tools

GROUP 4: Pipelayer, Miner and Laser Operator

LABO0113-008 06/02/2015

MILWAUKEE, OZAUKEE, WASHINGTON & WAUKESHA COUNTIES

	Rates	Fringes
Laborers: (Tunnel-Free Air)		
Group 1	$ 20.48	18.24
Group 2	$ 29.73	18.24
Group 3	$ 29.79	18.24
Group 4	$ 31.94	18.24
Group 5	$ 32.08	18.24
Group 6	$ 34.69	18.24
Group 7	$ 35.31	18.24

LABORERS CLASSIFICATIONS [TUNNEL - FREE AIR]:

GROUP 1: Flagperson

GROUP 2: General Laborer on surface; Tower Man

GROUP 3: Saw Man; Top Man

GROUP 4: Form Stripper; Car Pusher

GROUP 5: Mucker; Dinkey; Welder (rate on surface)

GROUP 6: Concrete Manhole Builder; Mucking Machine; Miner; Mining Machine; Welder; Rock Driller; Concrete Buster; Jack Hammer Operator; Caisson Worker; Pipelayer and Joint Man; Bracerman

GROUP 7: Blaster

---

* LABO0113-009 06/01/2015

MILWAUKEE, OZAUKEE, WASHINGTON & WAUKESHA COUNTIES

	Rates	Fringes
Laborers: (Tunnel - *COMPRESSED AIR 0 - 15 lbs.)		
Group 1	$ 20.48	18.24
Group 2	$ 29.73	18.24
Group 3	$ 32.47	18.24
Group 4	$ 33.25	18.24
Group 5	$ 33.36	18.24
Group 6	$ 35.99	18.24
Group 7	$ 36.59	18.24

LABORERS CLASSIFICATIONS [TUNNEL - COMPRESSED AIR]:

*Compressed Air 15 - 30 lbs add $2.00 to all classifications
*Compressed Air over 30 lbs add $3.00 to all classifcations

GROUP 1: Flagperson

GROUP 2: General Laborer on surface

GROUP 3: Lock Tender on surface

GROUP 4: Form Stripper; Car Pusher

GROUP 5: Mucker; Dinkey

GROUP 6: Mucking Machine; Miner; Mining Machine; Welder & Rock Driller; Lock Tender in tunnel; Concrete Buster; Jack Hammer Operator; Caisson Worker; Pielayer and Joint Man; Bracerman; Nozzle Man on Gunite; Timber Man; Concrete Brusher

GROUP 7: Blaster

NOTE: Hazardous & Toxic Waste Removal: add $0.15 per hour.

LABO0140-005 06/01/2015

ADAMS, ASHLAND, BARRON, BROWN, BUFFALO, CALUMET, CHIPPEWA, CLARK, COLUMBIA, CRAWFORD, DODGE, DOOR, DUNN, EAU CLAIRE, FLORENCE,FOND DU LAC, FOREST, GRANT, GREEN, GREEN LAKE, IOWA, JACKSON, JEFFERSON, JUNEAU, LACROSSE, LAFAYETTE, LANGLADE, LINCOLN, MANITOWOC, MARATHON, MARINETTE, MARQUETTE, MENOMINEE, MONROE, OCONTO, ONEIDA, OUTAGAMIE, PEPIN, PIERCE, POLK, PORTAGE, PRICE, RICHLAND, ROCK, RUSK, ST CROIX, SAUK, SAWYER, SHAWANO, SHEBOYGAN, TAYLOR, TREMMPEALEAU, VERNON, VILAS, WALWWORTH, WASHBURN, WAUPACA, WAUSHARA, WINNEBAGO, AND WOOD COUNTIES

	Rates	Fringes
LABORER (SEWER & WATER)		
Group 1	$ 25.08	15.40
Group 2	$ 26.93	15.40
Group 3	$ 27.13	15.40
Group 4	$ 27.88	15.40

FOR ALL TUNNEL WORK UNDER COMPRESSED AIR: 0-15 lbs add $1.00, 15-30 lbs add $2.00, over 30 lbs add $3.00

LABORER CLASSIFICATIONS:

GROUP 1: Flagperson

GROUP 2: General Laborer, Wellpoint Installation; Form Stripper; Strike Off worker

GROUP 3: Sheeting Formsetting; Patch Finisher; Bottom Man; Joint Sawer; Gunnite Man; Manhole Builder; Welder; Torchman; Blaster; Caulker Bracer; Bull Float; Mucker and Car Pusher; Raker and Luteman; Hydraulic jacking of shields, Shield Drivers; Mining Machine; Lock Tenders; Mucking Machine Operators; Motor Men and Gauge Tenders; Power Tool Operators

GROUP 4: Pipelayer, Miner, and Laser Operator

LABO0464-002 06/01/2015

DANE AND DOUGLAS COUNTIES

	Rates	Fringes
LABORER		
Group 1	$ 24.98	15.40
Group 2	$ 27.18	15.40
Group 3	$ 27.38	15.40
Group 4	$ 28.13	15.40

FOR ALL TUNNEL WORK UNDER COMPRESSED AIR: 0 - 15 lbs add $1.00, 15- 30 lbs add $2.00, over 30 lbs add $3.00

LABORERS CLASSIFICATIONS:

GROUP 1: Flagperson

GROUP 2: General Laborer; Wellpoint Installation; Concrete Worker; Form Stripper; Strike Off worker

GROUP 3: Sheeting Formsetting; Patch Finisher; Bottom Man; Joint Sawer; Gunnite Man; Manhole Builder; Welder; Torchman; Blaster; Caulker Bracer; Bull Float; Mucker and Car Pusher; Raker and Luteman; Hydraulic jacking of shields, Shield Dirvers; Mining Machine; Lock Tenders; Mucking Machine Operators; Motor Men and Gauge Tenders; Power Tool Operators

GROUP 4: Pipelayer, Miner, and Laser Operator

LABO1091-010 06/01/2015

BAYFIELD, BURNETT, IRON, SAWYER, AND WASHBURN COUNTIES

	Rates	Fringes
Laborers: (SEWER & WATER)		
Group 1	$ 24.77	15.40
Group 2	$ 26.83	15.40
Group 3	$ 27.03	15.40
Group 4	$ 27.78	15.40

FOR ALL TUNNEL WORK UNDER COMPRESSED AIR:
0 - 15 lbs add $1.00, 15-30 lbs add $2.00, over 30 lbs add $3.00

LABORERS CLASSIFICATIONS:

GROUP 1: Flagperson

GROUP 2: Laborers, Wellpoint Installation; Form Stripper; Strike Off worker

GROUP 3: Sheeting Formsetting; Patch Finisher; Bottom Man; Joint Sawer; Gunnite Man; Manhole Builder; Welder; Torchman; Blaster; Caulker Bracer; Bull Float; Mucker and Car Pusher; Raker and Luteman; Hydraulic jacking of shields, Shield Dirvers; Mining Machine; Lock Tenders; Mucking Machine Operators; Motor Men and Gauge Tenders; Power Tool Operators

GROUP 4: Pipelayer, Miner, and Laser Operator

PLAS0599-010 06/01/2012

	Rates	Fringes
CEMENT MASON/CONCRETE FINISHER		
Area 1	$ 32.78	16.80

Area 2 (BAC).....	$ 31.52	16.30
Area 3.....	$ 31.37	16.85
Area 4.....	$ 30.69	17.53
Area 5.....	$ 32.09	16.13
Area 6.....	$ 28.50	19.72

AREA DESCRIPTIONS

AREA 1: BAYFIELD, DOUGLAS, PRICE, SAWYER, AND WASHBURN COUNTIES

AREA 2: ADAMS, ASHLAND, BARRON, BROWN, BURNETT, CALUMET, CHIPPEWA, CLARK, COLUMBIA, DODGE, DOOR, DUNN, FLORENCE, FOND DU LAC, FOREST, GREEN LAKE, IRON, JEFFERSON, KEWAUNEE, LANGLADE, LINCOLN, MANITOWOC, MARATHON, MARINETTE, MARQUETTE, MENOMINEE, OCONTO, ONEIDA, OUTAGAMIE, POLK, PORTAGE, RUSK, ST CROIX, SAUK, SHAWANO, SHEBOYGAN, TAYLOR, VILAS, WALWORTH, WAUPACA, WAUSHARA, WINNEBAGO, AND WOOD COUNTIES

AREA 3: BUFFALO, CRAWFORD, EAU CLAIRE, JACKSON, JUNEAU, LA CROSSE MONROE, PEPIN, PIERCE, RICHLAND, TREMPEALEAU, AND VERNON COUNTIES

AREA 4: MILWAUKEE, OZAUKEE, WASHINGTON, AND WAUKESHA COUNTIES

AREA 5: DANE, GRANT, GREEN, IOWA, LAFAYETTE, AND ROCK COUNTIES

AREA 6: KENOSHA AND RACINE COUNTIES

---

* TEAM0039-001 06/01/2015

	Rates	Fringes
TRUCK DRIVER		
1 & 2 Axles.....	$ 25.63	18.96
3 or more Axles; Euclids Dumptor & Articulated, Truck Mechanic.....	$ 25.63	18.96
WELL DRILLER.....	$ 16.52	3.70

WELDERS - Receive rate prescribed for craft performing operation to which welding is incidental.

==========

Unlisted classifications needed for work not included within the scope of the classifications listed may be added after award only as provided in the labor standards contract clauses (29CFR 5.5 (a) (1) (ii)).

The body of each wage determination lists the classification and wage rates that have been found to be prevailing for the cited type(s) of construction in the area covered by the wage determination. The classifications are listed in alphabetical order of "identifiers" that indicate whether the particular rate is a union rate (current union negotiated rate for local), a survey rate (weighted average rate) or a union average rate (weighted union average rate).

Union Rate Identifiers

A four letter classification abbreviation identifier enclosed in dotted lines beginning with characters other than "SU" or "UAVG" denotes that the union classification and rate were prevailing for that classification in the survey. Example: PLUM0198-005 07/01/2014. PLUM is an abbreviation identifier of the union which prevailed in the survey for this classification, which in this example would be Plumbers. 0198 indicates the local union number or district council number where applicable, i.e., Plumbers Local 0198. The next number, 005 in the example, is an internal number used in processing the wage determination. 07/01/2014 is the effective date of the most current negotiated rate, which in this example is July 1, 2014.

Union prevailing wage rates are updated to reflect all rate changes in the collective bargaining agreement (CBA) governing this classification and rate.

Survey Rate Identifiers

Classifications listed under the "SU" identifier indicate that no one rate prevailed for this classification in the survey and the published rate is derived by computing a weighted average rate based on all the rates reported in the survey for that classification. As this weighted average rate includes all rates reported in the survey, it may include both union and non-union rates. Example: SULA2012-007 5/13/2014. SU indicates the rates are survey rates based on a weighted average calculation of rates and are not majority rates. LA indicates the State of Louisiana. 2012 is the year of survey on which these classifications and rates are based. The next number, 007 in the example, is an internal number used in producing the wage determination. 5/13/2014 indicates the survey completion date for the classifications and rates under that identifier.

Survey wage rates are not updated and remain in effect until a new survey is conducted.

Union Average Rate Identifiers

Classification(s) listed under the UAVG identifier indicate that no single majority rate prevailed for those classifications; however, 100% of the data reported for the classifications was union data. EXAMPLE: UAVG-OH-0010 08/29/2014. UAVG indicates that the rate is a weighted union average rate. OH indicates the state. The next number, 0010 in the example, is an internal number used in producing the wage determination. 08/29/2014 indicates the survey completion date

for the classifications and rates under that identifier.

A UAVG rate will be updated once a year, usually in January of each year, to reflect a weighted average of the current negotiated/CBA rate of the union locals from which the rate is based.

WAGE DETERMINATION APPEALS PROCESS

1.) Has there been an initial decision in the matter? This can be:

* an existing published wage determination
* a survey underlying a wage determination
* a Wage and Hour Division letter setting forth a position on a wage determination matter
* a conformance (additional classification and rate) ruling

On survey related matters, initial contact, including requests for summaries of surveys, should be with the Wage and Hour Regional Office for the area in which the survey was conducted because those Regional Offices have responsibility for the Davis-Bacon survey program. If the response from this initial contact is not satisfactory, then the process described in 2.) and 3.) should be followed.

With regard to any other matter not yet ripe for the formal process described here, initial contact should be with the Branch of Construction Wage Determinations. Write to:

Branch of Construction Wage Determinations
Wage and Hour Division
U.S. Department of Labor
200 Constitution Avenue, N.W.
Washington, DC 20210

2.) If the answer to the question in 1.) is yes, then an interested party (those affected by the action) can request review and reconsideration from the Wage and Hour Administrator (See 29 CFR Part 1.8 and 29 CFR Part 7). Write to:

Wage and Hour Administrator
U.S. Department of Labor
200 Constitution Avenue, N.W.
Washington, DC 20210

The request should be accompanied by a full statement of the interested party's position and by any information (wage payment data, project description, area practice material, etc.) that the requestor considers relevant to the issue.

3.) If the decision of the Administrator is not favorable, an interested party may appeal directly to the Administrative Review Board (formerly the Wage Appeals Board). Write to:

Administrative Review Board

U.S. Department of Labor
200 Constitution Avenue, N.W.
Washington, DC 20210

4.) All decisions by the Administrative Review Board are final.

==========

END OF GENERAL DECISION

1. General

All work shall be in accordance with the City of Milwaukee "Water Main installation Specifications", Dated January 2, 1987. Additionally, all work shall be in accordance with the City of Milwaukee "Special Provisions for Water Main Construction".

The Department of Public Works General Specifications, Dated January 31, 1992, latest revision, applies to this contract and will supersede any part of the specifications which differs therefrom.

2. Safe Drinking Water Loan Program (Provision Applies Only if Specifically Stated in Contract Documents)

The City of Milwaukee has applied for funding for all projects in this contract through the Safe Drinking Water Loan Program (SDWLP) administered by the Wisconsin Department of Natural Resources.

This Contract is subject to the Davis-Bacon compliance provisions. Please see the Contract documents for additional information. The contractor shall use the higher wage rate table between the Prevailing Wage Rate issued by the State of Wisconsin and the Davis-Bacon Wage Rate Tables issued by the U.S. Department of Labor Wage and Hour Division.

All Iron and Steel products provided by the contractor shall be produced in the United States and comply with the American Iron and Steel Requirement (AIS). Contractor to provide AIS certification for all iron and steel products supplied for this contract.

3. Pre-Construction Meeting

Required pre-construction meetings will be held, at least ten (10) working days prior to the anticipated start date, for water main installation contracts. Contractor shall contact Mr. Karl Rohrbach, P.E. at 414-286-8148 following the Notice to Proceed. Project start requests will not be authorized prior to holding a pre-construction meeting. Pre-Construction Meetings will be held at

DPW Field Headquarters
3850 N 35th St
Milwaukee, WI 53216

4. Project Start Request

For each project in a contract the Contractor will request an "Approval to Start" by sending an email to watconst@milwaukee.gov a minimum five (5) working days prior to the anticipated start date. Project start requests will not be authorized without the Contractor providing copies of all permits to MWW.

5. Stake Out

Upon receiving approval to start a project, the Contractor shall contact DAAR Engineering for coordinating stakeout. The City of Milwaukee will pay for all costs for the initial stake out for projects unless otherwise specified on construction plans.

DAAR Engineering
518 W Cherry St, Suite 500
Milwaukee, WI 53202
(414)604-0674

Bill Henrichs
bill.henrichs@daarcorp.com

Peter Ritzman
peter.ritzman@daarcorp.com

6. Materials Request

The contractor shall provide a minimum **five (5) working day notice** prior to the Start Date of any project for material that is to be provided by the City of Milwaukee.

Kevin Gray
City of Milwaukee
Inventory Manager
Office: (414)286-0669
Cell: (414)708-2954

Ricardo Lopez
City of Milwaukee
Inventory Services Manager
Office: (414)286-6123
Cell: (414)708-2150

7. Inspection

The contractor shall allow a minimum **four (4) working day notice** prior to the Start Date of any project for scheduling material inspection and installation inspection prior to the start of construction.

Contact Steve Brengosz at 414-708-2808 or Alejandro Munoz at 414-286-6346 for materials inspection.
Contact Alejandro Munoz, at 414-286-6346 for installation inspection.

8. Water Distribution

The contractor shall provide a minimum **two (2) working day notice (8am)** to the Milwaukee Water Works Distribution when requesting a shut-off, wet connection, safe water sample, pressure testing, and chlorination. The contractor shall coordinate via email watconst@milwaukee.gov.

Tim Singbeil
Water Distribution Construction Manager
Office: (414)286-6305
Cell: (414)708-7176

9. Schedule and Hours of Work

Water main construction will not be allowed between the days of December 15 and March 15 of the following year unless authorized by the City of Milwaukee Commissioner of Public Works or his representative.

MWW Construction Inspector Hours 7:30 am to 3:00 pm. (Inspection outside of these hours will be approved and coordinated by the City of Milwaukee Commissioner of Public Works or his representative.)

In accordance with the City of Milwaukee Code of Ordinances, Chapter 80 Nuisances, Subchapter 2 Noise Control, the contractor shall not be allowed to work prior to 7am, unless authorized by the City of Milwaukee Commissioner of Public Works or his representative.

10. Project Identification

The Contractor shall post City of Milwaukee Project Identification ("Blue") signs as directed on each project in this contract. The Milwaukee Water Works, Engineering Construction Section will provide blank signs for the contractor to fill in contact information and post. The entire cost of this work shall be included in the Lump Sum Bid for Traffic Control and Barricading.

11. Resident and Business Notification

Milwaukee Water Works will provide resident and business notification following the award of the contract.

12. City of Milwaukee Underground Conduit

Contractor to support existing City Underground Conduit. Contractor to use caution during excavation. Contractor shall be responsible for any damage to City of Milwaukee Conduit. Report any damage to City Dispatcher at 414-286-3481.

13. City of Milwaukee Street Lighting

Contractor to support existing City Street Lighting facilities. Contractor to use caution during excavation. Contractor shall be responsible for any damage to City of Milwaukee Street Lighting Facilities. Report any Damage to Street Lighting Shop at 414-286-3015.

For any alterations of City of Milwaukee Street Lighting equipment, the contractor shall contact Mr. Eng-Kie Lee in Engineering at 414-286-2174.

14. City of Milwaukee Forestry

Contractor shall use equipment of a size that will not damage the crowns, trunks or roots of City owned trees. Any damage caused by the Contractor's Negligence shall be repaired by the Forestry Division at the Contractor's expense. Contact Mr. Dwayne Reinhardt, Forestry Section Inspector, at 414-708-2438 regarding all forestry work.

Contractor shall maintain the following clearances for all City owned trees:

- Less than 3-inch Diameter tree – 3 feet of clearance
- 3-inch to 8-inch Diameter tree – 6 feet of clearance
- 8-inch to 14-inch diameter tree – 8 feet of clearance
- Greater than 14-inch diameter tree – 10 feet of clearance

Service Replacements – The contractor shall maintain minimum clearances from trees as detailed above. In instances where more than 4' of offset from the existing service line is necessary to obtain the minimum clearance, trenchless technology shall be utilized to install the service within the clearance limits (a point in the roadway to within 2 feet of the property line). This requirement is reflected in the new service line locations shown on the construction plans.

15. Quality of Materials

Per Section 4.2.1 Quality of Materials. It is the intent of these specifications to secure new first class materials. Any material not meeting this requirement shall be removed from the project. Materials provided by the Contractor that are more than 2 years from the date of manufacture shall not be permitted.

16. Material Handling

Shall be in accordance with
Section 4.2.6 Material Storage on Work Site
Section 4.2.7 Handling and Protecting Pipe and Appurtenances
Section 4.2.8 Repair of Damaged Outer Protective Coating
Section 4.2.9 Storage of Yarning, Rubber Gasket Materials, and Polyethylene Film

All pipe and materials shall be stored on site to prevent contamination. Only materials free from foreign material shall be allowed to be installed by the contractor. If it is determined by the Milwaukee Water Works Engineering Section that the pipe and material is not free of debris then the contractor shall clean the material in accordance with Section 5.3.11 Cleaning Interior of Pipe prior to installation.

17. Hydrant Installation

Hydrants are to be installed with the 4-1/2" Nozzle facing the roadway. Contractor shall rotate the hydrant head following installation. The contractor shall not be paid for the hydrant installation until this rotation is complete. All costs for modifying the hydrant shall be included in the Unit Price Bid for Install Hydrant.

The Contractor shall be responsible for installing the hydrant frangible coupling (flange) within 0.2' of the plan grade. The Contractor shall be responsible for verifying grades prior to installation of hydrants. Hydrant extensions will not be permitted unless the hydrant installed is an 8.5 ft Bury Length. All other hydrants shall be exchanged for the correct size hydrant. Contractor is responsible for returning hydrant to be exchanged and delivery of correct size hydrant. Standard hydrants in stock – 6.5, 7.0, 7.5, 8.0, 8.5. All costs for verifying and/or exchanging hydrants shall be included in the Unit Price Bid for Install Hydrant.

Hydrant Extensions will only be permitted upon the approval of the Milwaukee Water Works Construction Engineer or the Milwaukee Water Works Distribution Construction Manager.

The contractor shall notify the Milwaukee Water Works Distribution Division of any existing hydrant vandal proof devices before removing hydrants.

The contractor shall be responsible for tightening nuts and bolts on all valves and hydrants in this contract.

18. <u>Abandoned Hydrants</u>

The Contractor shall return all abandoned hydrants to the DPW Field Headquarters – Infrastructure, Operations, Water Works. Contact Mr. Ben Glatzel at 414-708-2839 for additional information.

19. <u>Hydrant Permits</u>

A $65.00 hydrant permit/use fee will be part of the hydrant use permit. This fee is per hydrant per week.

It is the intention of the City of Milwaukee to meter and record all water use on this contract. The contractor must obtain a hydrant permit for this contract, which includes the requirement of a meter to measure water usage. This permit can be obtained from the City's Development Center located at 809 N. Broadway.

If it is found that the contractor is not following the standard hydrant permit use rules, the City of Milwaukee will take normal enforcement action.

Milwaukee Water Works only projects issued through DPW

The permit requires the contractor to place a refundable $675.00 deposit for each meter to be used. The contractor will not be required to pay $325.00 for the setup of the meter. The $65.00 hydrant permit/use fee will be waived by the utility. The contractor will not be charged for the volume of water used.

Combined Water/Sewer projects issued through DPW

The permit requires the contractor to place a refundable $675.00 deposit for each meter to be used. The contractor will be required to pay $325.00 for the setup of the meter. The contractor will be charged for the volume of water used to complete the work on the contract. Construction activities directly related to the installation of water main shall be exempt from the usage charge. The contractor shall contact Meter Services before and after the water main installation. Failure to contact Meter Services will subject the contractor to the full water use charges.

All other contracts or water main installations

The permit requires the contractor to place a refundable $675.00 deposit for each meter to be used. The contractor will be required to pay $325.00 for the setup of the meter. The contractor will be charged for the volume of water used and read on the meter(s).

Questions, arranging installations, and readings

MWW Meter Services Dispatcher, 414-286-2865
MWW Meter Services, 414-286-8010

20. Backflow Preventer

In any instance where water is used from a hydrant or other public water supply source, the contractor shall protect the public water supply by means of an appropriate backflow preventer.

Where the hose or outlet will be above the elevation of the water source, the contractor shall use a reduced pressure zone (rpz) backflow preventer. If a ¾" or smaller hose supply is required a vacuum breaker-backflow preventer may be used. Where the hose and outlet will always be below the elevation of the water source, an atmospheric vacuum breaker may be used. The backflow preventer shall be connected to the hydrant in compliance with section 2.8.12 and shall be self-supporting imposing no load on the hydrant.

21. Erosion Control Special Provision

The Contractor shall submit an Erosion Control Implementation Plan (ECIP) to Milwaukee Water Works, Engineering Section; Zeidler Municipal Building, 841 N Broadway, Rm. 403 Milwaukee, WI 53202, at least **ten (10) working days prior** to the scheduled start of work on the contract. A confirmed Start Date will not be provided to the Contractor if an ECIP has not been approved.
The Milwaukee Water Works shall review the ECIP for meeting technical standards and notify the contractor if the plan meets the standard within seven (7) working days. Work shall not start until the ECIP meets technical standards. The contractor shall be required to have a copy of the ECIP on the job site for the entire duration of the contract. The ECIP shall include, but not be limited to:

1) A completed "Erosion Control Implementation Plan" application (Attached)
2) A plan showing all locations of erosion control devices and other Best Management Practices (BMP's).
3) A written description of all erosion control devices and BMP's to be used.
4) A written schedule of installing erosion control devices.
5) A written schedule of construction operations related to implementing erosion control devices and BMP's.
6) A written maintenance schedule for all erosion control devices and BMP's.

All costs associated with implementing the erosion control plan, such as furnishing, installing, maintaining, and removal of erosion control devices shall be included in the unit price bid for erosion control. There shall be no additional compensation for revising the ECIP or utilizing additional BMP's in order to comply with Chapter 290 of the City of Milwaukee Code of Ordinances. If the contractor is found not in compliance with the ECIP, the contractor will be subject to the penalties included in Chapter 290.

The contractor shall clean the storm water inlets prior to placing the inlet baskets. If the inlet drain is clogged, the contractor shall contact Underground Operations (414-286-3731) so that the drain can be cleaned.

22. Water Services – Service Insulator

On each connect original service (C.O.S.), replace original service (R.O.S.) or installation of new service, the contractor shall furnish and install a service insulator (Ford Meter Box Co. Inc. SI-2, SI-4, SI-6, SI-7 or equal). On C.O.S.'s the service insulator shall be installed on the outlet side of the corporation stop. On R.O.S.'s and new services, the service insulator shall be installed on the outlet (private property) side of the curb stop. Cost of furnishing and installing the service insulator shall be included in the unit bid price for the C.O.S., R.O.S. or service, respectively.

23. Water Services – Location

The City shall field locate the approximate location of the corporation stop prior to the start of the water main construction.

Contractor shall field locate using a pipe locator, similar to a Rigid pipe locator, all branches and service prior to tapping the new water main. All costs shall be included in the unit price bid for connect original service.

24. Water Services Tapping

All tapping for services shall be made by the contractor. Taps shall be made and corporation stops installed in the closed position prior to pressure testing. All costs shall be included in the unit price bid for connect original service.

25. Pipe Restraint

Pipe shall be restrained by means of concrete buttresses and anchors as shown on specification drawing no.'s 3 through 12 and no. 17. When adequate concrete buttressing is not possible, strapping and rodding as shown on drawing no.'s 13, 14, and 16 shall be installed for pipe restraint at 4" through 16" bends and offsets. Bell spigot restraints, as shown in drawing no. 15, shall be used only at the direction of the Commissioner,

1) In conjunction with concrete restraints when the water main must be immediately restored to service, or
2) Where other restraints cannot be used.

26. Joint Restraint (MJ Field Lok®, Field Lok®)

Ductile Iron pipe and fittings (except hydrant branches) may be restrained using Fieldlok or MJ Fieldlok restraint. A request submittal will not be required.
Mechanical and push-on joints shall be restrained where required by City specifications or construction plans, either by the use of concrete buttresses, anchors, strapping, Tyton joint restraint gaskets (Field Lok 350®), or MJ Field Lok ® glands and gaskets. *(Note: A combination of restraint alternatives may be required to achieve the proper joint restraint at the mechanical joint fittings as well as the specified restrained length.)*

27. 4" Asphaltic Concrete Pavement Replacement

The bid item for 4" Asphaltic Concrete shall consist of 4" of asphaltic concrete on 2" of ¾" crushed stone (meeting Street Construction Specification 904.2.2) on 7" of no. 2 crushed stone. The cost of the crushed stone base shall be included in the unit price bid for 4" Asphaltic Concrete.

28. Water Main Disinfection Process – Chlorination – Wet Connections

In accordance with the requirements of AWWA C651

1) Sanitary construction practices must be followed during installation of the final connection so that there is no contamination of the new or existing water main with foreign material or groundwater.
2) The new pipe, fittings, and valve(s) required for the connection may be spray disinfected or swabbed with a minimum 1 percent solution of chlorine just before being installed.

29. Water Main Disinfection Process - Chlorination

The contractor shall be required to disinfect all proposed water mains in this contract using one of the following methods:

1) Continuous feed method per AWWA C651
2) Tablet method

If the contractor chooses the continuous feed method, the water main shall be chlorinated following a successful pressure test. After chlorination (>10ppm chlorine residual), the contractor shall flush the super-chlorinated water out of the main and de-chlorinate the discharged water. The contractor shall then flush the water main for a period of 24 hours and begin the sampling process. The sampling process shall be done as detailed in step 6 of the tablet method. After successful water samples are obtained, the contractor shall begin the wet connection process. Following the first wet connection, the contractor shall flush the water main overnight prior to reconnecting services or making the next wet connection.

Tablet Method

1) The contractor shall supply and place calcium hypochlorite tablets in the water main as it is being installed. The placement of the tablets shall be per AWWA C651. The tablets shall be attached to the top of the pipe with a food-grade adhesive (Loctite Gasket Sealant No. 2 or DAP 100% silicone rubber sealant or approved equal). The calcium hypochlorite tablets shall conform to AWWA C651.

2) When installation is complete, the contractor shall fill the main with water at a rate to insure that the water within the main will flow at a velocity no greater than 1 ft/s (160gpm fill rate for an 8" water main). Precautions shall be taken to ensure that air pockets are eliminated. This water shall remain in the pipe for 24 hours.

3) Following the 24-hour waiting period, the construction section shall test for a chlorine residual of at least 5ppm at each end of the water main.

4) The contractor shall flush the super-chlorinated water out of the main. The contractor shall de-chlorinate the discharged water. The de-chlorinator shall be the "H2O Neutralizer" by Measurement Technologies, 704 – 228th Avenue NE, #601, Sammamish, WA 98074, (425) 868-8511, or equal.

5) Whether the chlorine residual was less than or greater than 5ppm, the construction section shall then pressure test the water main.

6) A) If the water main passed the pressure test and the chlorine residual was greater than 5ppm, then the contractor shall flush the water main for a period of 24 hours. Following the 24-hour flushing period, two samples shall be collected from the new main. One sample will be for a bacteriological test. The other sample will be tested for chlorine residual and turbidity. If the first samples are unsuccessful, another set of samples will be collected following an additional 24 hours of flushing. If the second set of samples is unsuccessful, re-chlorination will be required (See step 7). The contractor shall begin the wet connection process after obtaining successful samples. Following the first wet connection, the contractor shall flush the water main overnight prior to reconnecting services or making the next wet connection.

   B) If the water main did not pass the pressure test, then the contractor shall make the necessary repairs and the water main shall be re-pressure tested. Following the successful pressure test, the contractor shall fill the water main. Milwaukee Water Works shall then chlorinate the water main by the continuous feed method per AWWA C651. After successful chlorination (>10ppm chlorine residual), the contractor shall flush the super-chlorinated water out of the main and de-chlorinate the discharged water. The contractor shall then flush the main for a period of 24 hours. Following the 24-hour flushing period, two samples shall be collected from the new main. One sample will be for a bacteriological test. The other sample will be tested for chlorine residual and turbidity. If the first samples are unsuccessful, another set of samples will be collected following an additional 24 hours of flushing. If the second set of samples is unsuccessful, re-chlorination will be required (See Step 7). The contractor shall begin the wet connection process after obtaining successful samples. Following the first wet connection, the contractor shall flush the water main overnight prior to reconnecting services or making the next wet connection.

   C) If the water main passed the pressure test but the chlorine residual was less than 5ppm, then the contractor shall fill the water main and Milwaukee Water Works shall chlorinate the water main by the continuous feed method per AWWA C651. After successful chlorination, the contractor shall flush the super-chlorinated water out of the main and de-chlorinate the discharged water. The contractor shall then flush the main for a period of 24 hours. Following the 24-hour flushing period, two samples shall be collected from the new main. One sample will be for a bacteriological test. The other sample will be tested for chlorine residual and turbidity. If the first samples are unsuccessful, another set of samples will be collected following an additional 24 hours of flushing. If the second set of samples is unsuccessful, re-chlorination will be required (See Step 7). The contractor shall begin the wet connection process after obtaining a successful sample. Following the first wet

connection, the contractor shall flush the water main overnight prior to reconnecting services or making the next wet connection.

7) If acceptable bacteriological, chlorine residual, and turbidity samples cannot be obtained in two attempts, Milwaukee Water Works shall re-chlorinate the water main by the continuous feed method per AWWA C651. After successful chlorination, the contractor shall flush the super-chlorinated water out of the main and de-chlorinate the discharged water. The contractor shall then flush the main for a period of 24 hours. Following the 24-hour flushing period, two samples shall be collected from the new main. One sample will be for a bacteriological test. The other sample will be tested for chlorine residual and turbidity. If the first samples are unsuccessful, another set of samples will be collected following an additional 24 hours of flushing. If the second set of samples is unsuccessful, the contractor will be required to excavate the water main to remedy the problem. If excavation is required, another successful pressure test will be needed prior to re-chlorination. The new water main connections to the distribution system cannot be made until successful samples are obtained.

8) Note: Milwaukee Water Works shall take the samples to the Linnwood Plant testing lab. A Bac-T test shall be run on one of the samples. The other sample shall be tested for a chlorine residual of less than 2ppm and turbidity NTU of less than 5.

30. <u>Bicycle Racks</u>

The City of Milwaukee Street Maintenance Section will be responsible for the removal and replacement of bicycle racks impacted by water main installation. The Contractor, in coordination with City Inspection Staff, must notify Mr. Jeffery Dellemann, Street & Bridge Services Manager, at 414-286-2078, a minimum of five (5) days prior to construction activities impacting the bicycle rack.

The Contractor is responsible for any damage to bicycle racks due to neglecting to have them relocated.

31. <u>Valves</u>

Contractor is responsible for verifying all new water main, hydrant and branch valves (unless valves are required to be closed) are in the open position prior to pressure testing and chlorination.

Contractor is responsible for verifying all new water main, hydrant and branch valves are in the open positions following the final wet connection. All City of Milwaukee Valves are open Right “Clockwise”.

32. <u>Valve Box Base Adapters</u>

All valve boxes shall be installed on gate valves with the use of the valve box base adapters, “Adaptor II” as manufactured by Adaptor Inc. or an approved equal. The adapter shall be installed in addition to the hardwood blocking. Cost of the adapter shall be included in the unit price bid to Furnish and Install Water Main.

Revisions to Water Main Installation Specifications Dated January 2, 1987

The following sections of the Water Main Installation Specifications shall be revised as indicated below.

SECTION 3.2.7 Construction Engineer

DELETE – "Sewer and Water Section of the Construction Division"
ADD – "Milwaukee Water Works Engineering Section"

SECTION 3.2.9 Division

DELETE – "Division"
ADD – "Milwaukee Water Works Engineering"

DELETE – "Water Engineering Division or Construction division, of the Bureau of Engineers. Plans and specifications are prepared and materials are inspected by the Water Engineering Division; Installation Inspection and Construction Supervision are performed by the Construction Division."
ADD – Plans, specifications, material inspection, installation inspection and Construction supervision are performed by the Milwaukee Water Works Engineering Section.

SECTION 3.2.11 Engineer in Charge, Construction Division

DELETE – "Engineering in Charge, Construction Division"
ADD –"Construction Engineer, Milwaukee Water Works Engineering"

DELETE – "The Engineer in Charge of the Construction Division of the Bureau of Engineers."
ADD – "The Engineer in Charge of Construction Management for Milwaukee Water Works."

SECTION 3.2.12 Engineer in Charge, Water Engineering Division

DELETE – "Engineer in Charge, Water Engineering Division"
ADD – "Mains Design Engineer, Milwaukee Water Works Engineering"

DELETE – "The Engineer in Charge of the Water Engineering Division of the Bureau of Engineers."
ADD – "The Engineer in Charge of water main Design for Milwaukee Water Works.

SECTION 3.2.23 Special Layout Engineer

DELETE – SECTION 3.2.23

SECTION 3.4.1 Requests for Primary Line and Grades

DELETE – "The Contractor shall notify the Special Layout Engineer of the Department of Public Works"
ADD – "The Contractor shall notify the Milwaukee Water Works Construction Engineer"

SECTION 3.4.2 Request for Inspector

DELETE – "The Contractor shall notify the Construction Division Office that an inspector is required at least 2 working days before commencing work, or adding another crew after construction has started. See Section 3.4.13."
ADD – "The Contractor shall notify the Milwaukee Water Works, Engineering Construction Section that a construction inspector is required at least four working days prior to commencing work."

SECTION 3.4.3 Request for Materials Furnished by City
SECTION 3.4.4 Request for Water Distribution Division Crew
SECTION 3.4.7 Permit and Notice for State Highways
SECTION 3.4.9 Notice for Arterial Street or Highway
SECTION 3.4.10 Notice to Milwaukee County Transit System
SECTION 5.3.8 Caulker – Joint Assembler

DELETE – "Construction Division"
ADD – "Milwaukee Water Works, Engineering Construction Section"

SECTION 3.4.5 Request for Water Service Taps

DELETE – SECTION 3.4.5

SECTION 3.4.13 Notice to W.E.D. for Material Inspection

DELETE – "Notice to W.E.D. for Material Inspection"
ADD – "Notice to Milwaukee Water Works, Engineering for Material Inspection"

DELETE – "The Contractor shall notify the Water Engineering Division Office for inspection of materials at least 4 working days prior to starting work. See Section 3.4.2."
ADD – "The Contractor shall notify the Milwaukee Water Works, Engineering Construction Section for inspection of materials at least 4 working days prior to starting work. See Section 3.4.2."

SECTION 3.5.9 Primary Line and Grade

DELETE – "Field Engineers"
ADD – "Engineering Consultant"

SECTION 3.5.10 Construction Line and Grade Responsibility

DELETE – "Field Engineers"
ADD – "Engineering Consultant"

SECTION 3.5.11 Time Allowed for Completion of Work

DELETE - "The amount of the per diem charge for inspection as referred to in Section 2.5.11 shall be $210.00."
ADD - "The amount of the per diem charge for inspection as referred to in Section 2.5.11 shall be $325.00."

SECTION 4.1.1 Current Specifications

DELETE – "Specifications for certain materials are not included herein are on file in the Water Engineering Division (W.E.D.) Office as separate documents. Copies are available upon request. These materials are as follows:"
DELETE – "W.E.D Specification No."
ADD – "Milwaukee Water Works maintains material specifications for the following materials:"
ADD – "Current specifications may be found at http://milwaukee.gov/water/business/standardspecs.htm, copies are also available upon request from the Milwaukee Water Works Engineering Construction Section."

SECTION 4.2.4 Cost of Tests

DELETE – "The cost of obtaining and delivering initial samples to W.E.D. or the City of Milwaukee Testing Lab, shall be borne by the Contractor. The cost of initial tests shall be at the City's expense."
ADD – "The costs of obtaining and delivering initial samples to Milwaukee Water Works Engineering Section shall be borne by the Contractor and/or Vendor. Material testing shall be completed by a certified testing laboratory chosen by Milwaukee Water Works. Costs for additional testing following failure of a material shall be the responsibility of the Contractor and/or Vendor and in accordance with Milwaukee Water Works Material testing procedures."

SECTION 4.3.2 City Delivery

DELETE – "City Delivery"
ADD – "Delivery of Material Provided by the City"

DELETE – "The City will deliver all material furnished by the City and specified in Section 4.3.1 unless otherwise noted on the plan(s)."
ADD – "The Contractor shall deliver all material furnished by the City and specified in Section 4.3.1 unless otherwise noted on the plan(s)."

ADD – "It shall be the contractor's responsibility to pick up and transport all material furnished by the City. The contractor's responsibility for this material shall begin on the day the contractor picks up the material, whether this is done before or during construction.

The contractor, upon receipt of the city-furnished material, shall sign the City of Milwaukee, Department of Public Works "Material Requisition and Disbursement Report". The contractor shall also return any city-furnished material that is designated to be returned. All costs for the transportation of city furnished material shall be included in the unit price bid for water main. Contact Mr. Kevin Gray, City of Milwaukee Inventory Manager at 414-286-0669 for additional information."

SECTION 4.3.4 Return of Materials

DELETE – "Stores Division Yard at 3715 W. Lincoln Av."
ADD – "DPW Field Headquarters – Infrastructure, Operations, 3850 N 35th St Milwaukee, WI 53216"

SECTION 4.6.1 Bedding

ADD – "Bedding Chips – 1/4" for mains 16" diameter and smaller"

Sieve Sizes	**Percentage Passing By Weight**
1/2 inch	100
3/8 inch	90 – 100
No. 4	–
No. 8	0 – 50
No. 16	–
No. 30	0 – 5

SECTION 4.6.2 Gravel Backfill

ADD – "Additional options for Backfill of mains 16" diameter and smaller"

Option No. 1	**Crushed Gravel**	**Crushed Stone**
Sieve Size	**Percentage Passing By Weight**	
1 inch	100	100
3/8 inch	50 – 85	40 – 75
No. 4	35 – 65	25 – 60
No. 10	25 – 50	15 – 45
No. 40	10 – 30	–
No. 200	3 – 10	3 – 12

Option No. 2	**1/4" Screenings**
Sieve Size	**Percentage Passing By Weight**
1/2 inch	100
3/8 inch	–
No. 4	75 – 100
No. 8	–
No. 16	–
No. 30	–
No. 100	10 – 25

SECTION 4.6.6 Aggregate Slurry Backfill

DELETE – "Aggregate slurry backfill shall consist of No. 1 and No. 2 coarse aggregate Class "C" concrete mix with the cement deleted.
The material shall be mixed with water to inundate the aggregate sufficient to provide approximately a 3 inch slump. The mix shall be deposited in the trench directly from a concrete transit mix truck."

ADD – "Where specified on the plans, the contractor shall backfill with aggregate slurry per specification 8.43.8 of the Standard Specifications for Sewer & Water Construction in Wisconsin. A bid item for "Slurry Backfill", measured by cubic yards, will be included on the water main construction plans. In addition, if the Construction Engineer determines that slurry backfill is required at a location not specified on the plans, and a bid item has not been included in the contract, the contractor shall be paid the "Fixed Price" extra for aggregate slurry backfill."

SECTION 5.16.1

DELETE – "Gravel Backfill (Type "B")"
ADD – "Gravel Backfill (Type "B") or Option 1, 2, 3, as amended by this document in SECTION 4.6.2"

DELETE – "consolidated by flooding"

SECTION 5.16.10 Consolidation of Backfill

DELETE – "(A) Flooding of Gravel Backfill - Gravel backfill shall be settled by flooding the trench with water from the bottom of the trench to the top of the trench. The hoses used for flooding shall be equipped with a regulating valve which permits the hydrant valve to be fully open during use. The hoses shall have a minimum diameter of 1 1/2 inches, a pipe nozzle a minimum diameter of 1 1/2 inches and a minimum length of 4 feet. A longer nozzle shall be used if deemed necessary by the Commissioner. During the flooding operation the nozzle shall be inserted at various angles and depths into the backfill without damaging the water main, adjacent structures or their foundations, buttresses and anchors or displacing bedding material. The insertions shall be made at intervals of 3 feet or less maintained until the backfill is saturated. Depressions caused by flooding shall be immediately backfilled until there is no further settlement. The Contractor shall provide an adequate supply of water."

DELETE – "(C) Mechanical Compaction of Gravel Material - Where specified, mechanical vibratory compactors shall be used to achieve uniform consolidation of the gravel material. The depth of the initial lift and subsequent horizontal lifts shall be as indicated in (B) above. When gravel aggregate contains sufficient clay fines to form a cohesive soil aggregate, that gravel shall be so compacted so as to result in 100 percent of the density of the existing material in the trench."

DELETE – "(D) Flooding Excavated Material - Where permitted, the flooding of excavated material shall be completed as indicated in (A) above, for flooding of gravel backfill."

ADD – "(C) Mechanical Compaction of Gravel Material - The contractor shall consolidate all backfill by mechanical compaction per specification 2.6.14 (B) of the Standard Specifications for Sewer & Water Construction in Wisconsin. Per the specification, the initial compacted lift shall be two (2) feet. The specification language for subsequent lifts shall be revised to read, "Each subsequent compacted lift of material shall be one (1) foot". Costs are to be included in the unit bid price for water main. Settling the trench by flooding the backfill will not be allowed.

SECTION 5.17.3 Hydrostatic Pressure and Leakage Tests

DELETE – "Allowable leakage shall not exceed the number of gallons per hour (GPH) as determined by the following formula for rubber gasket joints:

$$GPH = \frac{ND\sqrt{P}}{3700}$$

GPH=NDvP/3700
N = Number of Joints under test
D = Nominal Diameter of main in inches
P = Average pressure in pounds per square inch gauge during the test."

ADD – "Allowable leakage shall not exceed the number of gallons per hour (GPH) as determined by the following formula for rubber gasket joints:

$$GPH = \frac{S \times D \times \sqrt{P}}{148{,}000}$$

In which GPH = gallons per hour
D = nominal diameter of main in inches
S = length of pipe tested in feet
P = average pressure in pounds per square inch gauge during leakage test"

SECTION 5.18.1 Bacterial Test

DELETE – "Water from all new mains must successfully pass bacterial tests performed by the City before the main is accepted for use."

ADD – "Water from all new mains must successfully pass turbidity and bacterial tests performed by the City before the main is accepted for use."

SECTION 5.18.2 Flushing Distribution Mains

DELETE – "Shortly after the installation of the main is completed, Water Distribution Division Crews will operate the necessary valves admitting water to the new mains. Contractors are NOT to operate valves under any circumstances. The Contractor, upon notification to proceed with flushing the main, shall attach a valve to the nozzle of a hydrant or air vent as required by the Commissioner. The Contractor shall attach a 1-1/2" hose to the outlet of the valve to direct the flow of water to a point of safe and adequate drainage such as storm sewers or surface drainage. The main shall then be flushed by the contractor by fully opening the hydrant, of air vent, and throttling the installed valve to control the flow."

ADD – "Flushing procedures shall be as specified in the Chlorination Procedures in Milwaukee Water Works Special Provisions."

SECTION 5.18.3 Chlorinating Distribution Mains

DELETE – "When indicated on the plans or when, because of unsatisfactory results by flushing alone, the Commissioner has issued orders to disinfect the main by chlorination, the Contractor shall provide a tight-sheathed excavation around the main at the point of chlorination as directed at no cost to the City. After the excavation is prepared, the City will tap the main and connect and operate a chlorinator without cost to the Contractor.

When a satisfactory chlorine residual has been obtained, the Contractor, after a minimum of 24 hours and a maximum of 72 hours, shall proceed with the flushing of the main as specified in Section 5.18.2."

ADD – "All newly installed water mains require chlorination by the contractor. Chlorination procedures are specified in Milwaukee Water Works Special Provisions."

SECTION 5.18.9 Calcium Hypochlorite Treatment

DELETE – SECTION 5.18.9

This is the "Supplemental Schedule" of FIXED PRICES
Referenced to in Chapter 2.6.0 of the Specifications

1987 Water Specifications	ITEM	UNIT	PRICE
5.1.11	Water Service Alteration:		
	Up to 1" Diameter	Each	1,000.00
	Over 1" Diameter	Each	Agreed Upon
	Water Service Repair	Each	1,000.00
3.5.6	Sawing Concrete Pavements Full Depth With Water Cooled Saw Total Footage		
	0 to 200 feet	Lump Sum	400.00
	Each Additional Foot over 200 feet	Lineal Ft.	2.00
5.1.11	Reconnecting Existing House Sewers and Drains	Lineal Ft.	55.00
5.2.4	Sheathing and Bracing left in place (Includes labor and Material)		Agreed Upon
	Concrete Cap – All Sizes of Pipe	Cubic Yd.	200.00
	Concrete Cradle – All Sizes of Pipe	Cubic Yd.	200.00
5.16.17	3" Asphalt Pavement (Temp Cold Mix)	Square Yd.	30.00
5.16.18	3" Asphalt Pavement (Hot Mix/Temp Hot Mix)	Square Yd.	25.00
5.19.2	8" Thick Class A Concrete Base (Includes Removals)		
	Up to 20 sq. yds.	Square Yd.	45.00
	Over 20 sq. yds.	Square Yd.	35.00
5.19.2	8" Thick Class A Concrete Surface(Includes Removals)		
	Up to 20 sq. yds.	Square Yd.	50.00
	Over 20 sq. yds.	Square Yd.	40.00
5.19.2	5" Thick Class C Concrete Sidewalk (Including Removals)	Square Ft.	7.00
5.19.2	7" Thick Class A Concrete Driveway (Includes Removals)	Square Ft.	9.00
5.19.2	3" Thick Class A Concrete Temporary Pavement Cap	Square Yd.	25.00
5.16.5	Slurry		
	Up to 5 Cu. Yds.	Cubic Yd.	100.00
	Over 5 Cu. Yds.	Cubic Yd.	60.00
	Place all types of Concrete Cub and Gutter (Includes Removals)	Lineal Ft.	40.00
	Dowel Bars	Each	7.00

1987 Water Specifications	ITEM	UNIT	PRICE
	Lawn Replacement		
	Type A	Square Yd.	7.00
	Type B	Square Yd.	4.00
	Type C	Square Yd.	3.00

Repair of Water Main Break During Construction

Contractor shall repair all water main breaks on existing mains, which occur during normal working hours. The Water Dept. will operate the valves for shut-off.

Where repairs are made on mains that will be abandoned, the Contractor shall furnish all repair material. The Contractor shall have a minimum of 2 repair clamps, 2 dual purpose sleeves, and 1 length of ductile iron, cast iron or PVC pipe of the existing pipe size on the job before the job starts and at all times thereafter. This repair material need not conform to Water Main Installation Specifications.

When repairs are required on mains that will remain in service, all repair materials shall be picked up by the Contractor at the pipe yard and their cost to be billed to the Contractor only if the break was caused by his negligence.

All breaks occurring as a result of the negligence of the Contractor shall be repaired at his own expense. Where the break occurs while exercising normal care, the Contractor will be compensated for the repair of each break as follows:

Where the break can be repaired without replacing pipe, the Contractor will be paid.	Each	$ 1,500.00
Where the break can be repaired without replacing pipe And the Contractor must excavate, the Contractor will be paid.	Each	$ 2,500.00
Where a piece of pipe must be removed and replaced the Contractor will be paid	Time and Material	

Water Services or branches damaged as a result of the construction work shall be repaired by the Contractor at his own cost.

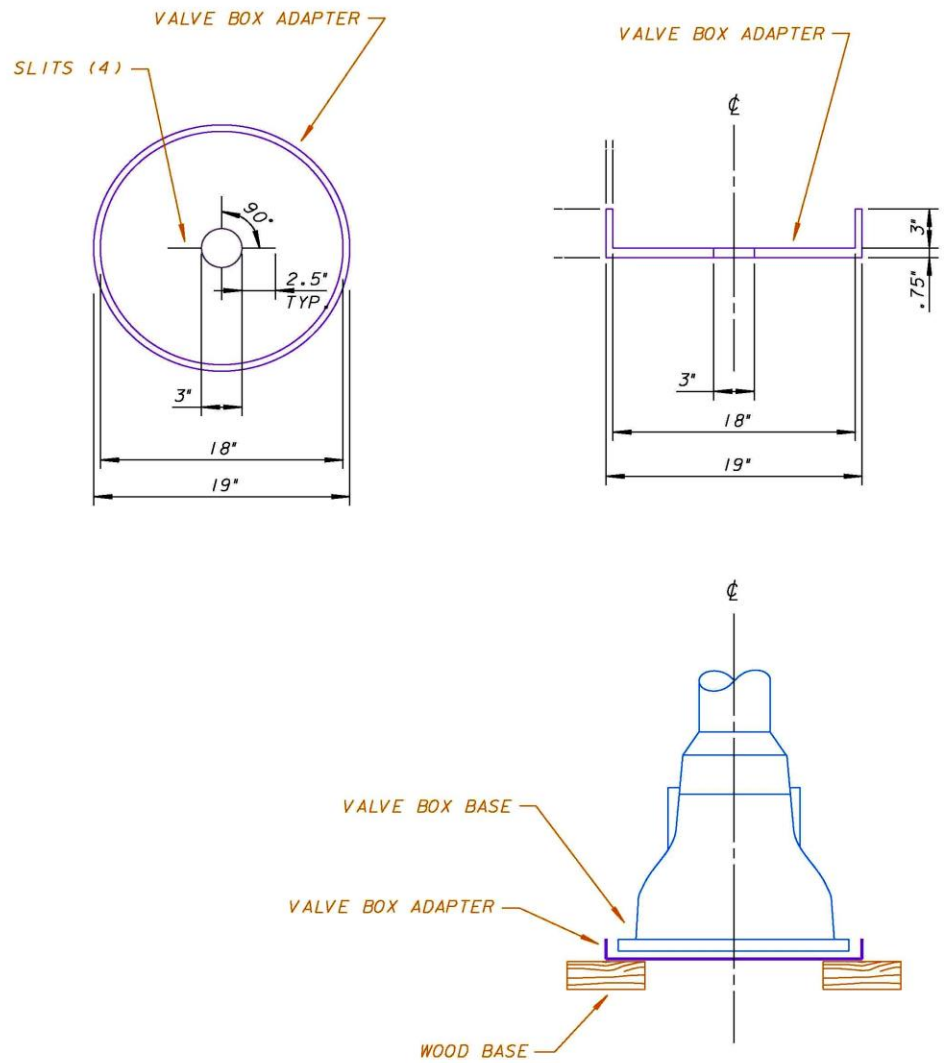

NOTES

- VALVE BOX BASE ADAPTER TO BE FURNISHED AND INSTALLED BY CONTRACTOR UNDER THE VALVE BOX BASE
- VALVE BOX BASE ADAPTER ADAPTOR II AS MANUFACTED BY ADAPTORS INC. OR AN APPOVED EQUIVALENT
- THIS ADAPTER/VALVE BOX ASSEMBLY TO BE USED ONLY WITH GATE VALVES
- ADAPTER/VALVE BOX ASSEMBLY SHALL BE ADJUSTED OVER THE GATE VALVE JUST TO CLEAR THE OPERATING NUT.
- ADAPTER/VALVE BOX ASSEMBLY SHALL HAVE A SNUG FIT WITH THE BONNET ASSEMBLY.

APPROVED	DATE
	6-13-2012
MAYNS DESIGN ENGINEER	6-13-2012
CHIEF DESIGN ENGINEER	6-13-2012
SPECIAL DEPUTY COMMISSIONER OF PUBLIC WORKS	

Milwaukee Water Works — Water Engineering, Department of Public Works

VALVE BOX BASE ADAPTER

CHECKED BY	DRAWN BY	DATE	DRAWING NO.
E.J.F.	K.S.R.	06-13-12	VBBA1

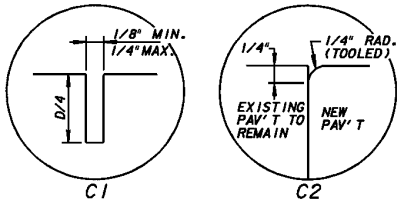

TRANSVERSE JOINTS

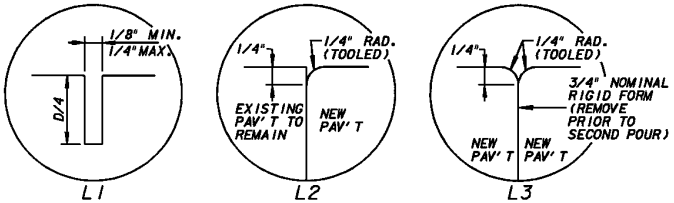

LONGITUDINAL JOINTS

CONCRETE PAVEMENT REPAIR

1. TIE BARS SHALL BE EPOXY COATED IN CONFORMANCE WITH SUBSECTION 505.2.4 OF THE STANDARD SPECIFICATIONS. DOWEL BARS SHALL BE COATED IN CONFORMANCE WITH SUBSECTION 505.2.6 OF THE STANDARD SPECIFICATIONS.
2. DOWELL BARS SHALL BE INSTALLED PARALLEL TO THE PAVEMENT SURFACE.
3. THE C2 JOINTS MAY BE SKEWED (30 DEGREES MAX.) AS DIRECTED BY THE CONSTRUCTION ENGINEER TO FIT THE SKEW OF THE CRACK OR JOINT TO BE REPAIRED.
4. STANDARD SPECIFICATIONS ON THIS DETAIL REFER TO STATE OF WISONCSIN DEPARTMENT OF TRANSPORTATION STANDARD SPECIFICATIONS FOR ROAD AND BRIDGE CONSTRUCTION - LATEST EDITION.
5. THE PREPARATION OF FOUNDATION FOR FULL DEPTH CONCRETE PAVEMENT REPAIR SHALL BE IN ACCORDANCE WITH SUBSECTION 211.4.4 OF THE STANDARD SPECIFICATIONS.
6. PRIOR TO THE PLACEMENT OF CONCRETE PAVEMENT AND/OR CONCRETE BASE IN THE TRENCH AREA, THE EXISTING PAVEMENT SHALL BE DRILLED TO A DEPTH OF 6 INCHES AT TWO FOOT INTERVALS, ON ALL SIDES. EACH HOLE SHALL BE DRILLED AT A MID-POINT OF THE DEPTH OF THE EXISTING CONCRETE PAVEMENT. NO. 6 (3/4 INCH DIAMETER) EPOXY COATED TIE BARS, 12 INCHES LONG, SHALL THEN BE FIRMLY EMBEDDED IN THE PREDRILLED HOLES. THE SUBGRADE SHALL BE RECOMPACTED IMMEDIATELY AFTER THE HOLES ARE DRILLED AND PRIOR TO THE TIE BARS BEING PLACED. ANY BARS THAT ARE DEEMED LOOSE BY THE CONSTRUCTION ENGINEER SHALL BE WEDGED IN TIGHTLY USING CONCRETE NAILS.
7. A QUICK SETTING NON-SHRINKING HIGH STRENGTH MORTAR OR EPOXY SHALL BE USED TO GROUT DOWEL BARS INTO THE DRILL HOLES. THE DRILL HOLES SHALL BE THOUROUGHLY CLEANED OF DRILLING DUST, DEBRIS AND EXCESS MOISTURE PRIOR TO GROUTING. AMPLE MORTAR OR EPOXY SHALL BE PLACED IN THE BACK OF THE HOLE AND THE BAR INSERTED IN SUCH A MANNER THAT IT IS UNIFORMLY COATED WITH MORTAR OR EPOXY AND ALL VOIDS WITHIN THE DRILL HOLE ARE COMPLETELY FILLED. THE MORTAR OR EPOXY CONSISTENCY SHALL BE THICK ENOUGH TO PREVENT EXCESSIVE FLOW FROM THE INSTALLATION.

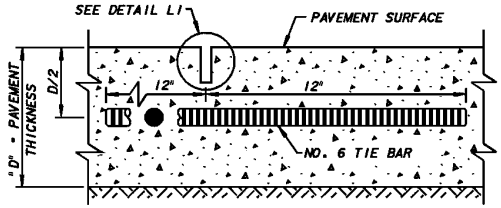

SECTION C - C

SAWED JOINT

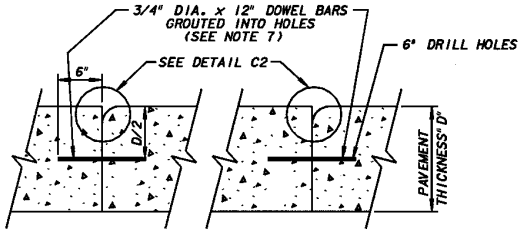

SECTION D - D

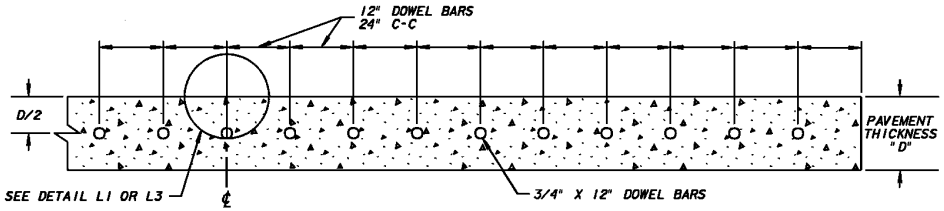

SECTION E - E

DOWEL BAR SPACING ABUTTING EXISTING PAVEMENT

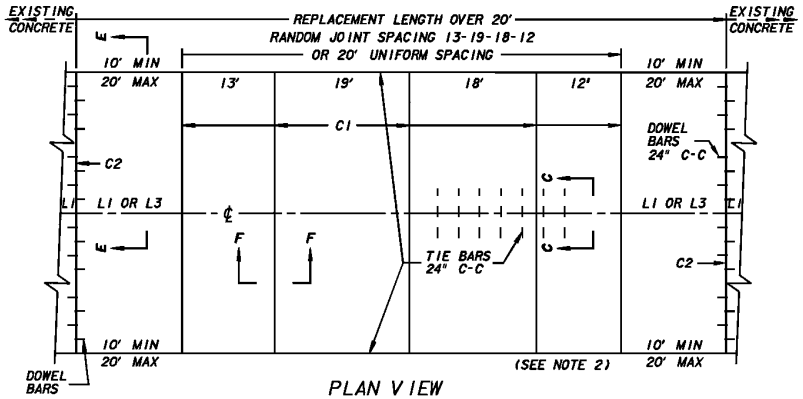

PLAN VIEW

CONCRETE PAVEMENT REPLACEMENT

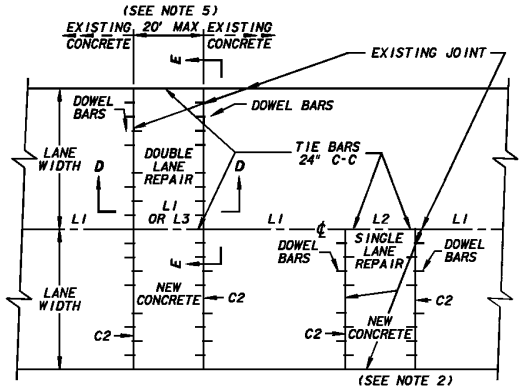

PLAN VIEW

CONCRETE PAVEMENT REPAIR

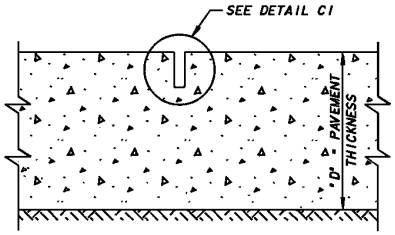

SECTION F - F

CONTRACTION JOINT

CITY OF MILWAUKEE
DEPARTMENT OF PUBLIC WORKS
Erosion Control Implementation Plan

The Erosion Control Implementation Plan (ECIP) is an effort to conform to Chapter 290 of the Code of Ordinances. The ECIP shall be submitted to the City Engineer at least ten (10) working days prior to the start of any construction activity. **NO** construction activity may begin without an ECIP approved by the Department of Public Works.

FOR OFFICE USE ONLY			**Application No.** _____
Meets Technical Standards ☐		**Does Not Meet Technical Standards** ☐	
Date Application Received:	_____	**Date all Information Received:** _____	**Reviewed By:** _____
Fee Paid ☐		**Check No. :**	

	APPLICANT (Contractor)			**Erosion Control Consultant/Engineer**
Name				
Address				
City/State/Zip				
Phone	( )			( )
Relationship to Project				

Principal Contact Responsible for Installation, Maintenance and removal of erosion control measures :			
Name			
Phone	( )	**Fax**	( )
Type of Construction			
Proposed Construction Start Date			
Any public waterway within 1,000 feet of any location.	**YES** ☐	**NO** ☐	

ECIP REQUIREMENTS:

- Attach a description of erosion control devices and other best management practices to be utilized on the project(s). The description should include, but not be limited to: type of products; i.e., *Geotex Fabric*, Manufacturer's Names and Types of Equipment (i.e.; self-contained power broom)
- Attach the intended timetable and sequence of construction activities.
- Attach the intended timetable and sequence of best management practices and devices to be implemented for erosion control.
- Attach a site plan showing approximate locations(s) of erosion control devices. The site plan shall be at a scale of no less than 1" = 100'. The plan shall also indicate the direction of runoff flow, the construction limits, temporary stockpiles and any other significant information.

Upon receipt of all required information, the ECIP will be reviewed within ten (10) working days and all involved parties will be notified whether or not the plan meets technical standards.

Applicant's Signature: _____ **Date:** _____

City of Milwaukee
Department of Public Works
Erosion Control – Simplified Checklist

Site Characteristics

The Contractor may utilize the City of Milwaukee plan set for this contract or provide a site diagram. The following information shall be included:

- The scale of the drawing (not less than 1”=100’)
- A north arrow (towards the top or to the right of the plan)
- The name of all project streets and streets abutting the project
- Approximate location of all existing and proposed drainage structures
- The direction of water runoff (flow arrows)
- The limits of construction
- The approximate location of all erosion control devices
- Areas where vegetation will be disturbed and re-established
- For non right-of-way projects, locate watershed areas of overland and concentrated flow. Include area sizes in acres and representative soil type of disturbed areas.

Erosion Control Practices

- Storm water inlet protection:
  1. Any structure that is connected to the drainage system shall be protected from sediment entering the system.
  2. All storm water inlets adjacent to and on the project site shall have type M inlet protection.
  3. If the frame of any storm water inlet is removed or openings are in the masonry and storm water may enter, the protection device should be changed to a type R.
  4. Any manholes that the frame is removed or openings are in the masonry and storm water may enter shall have a type R erosion control.

- Temporary storage piles:
  1. Storage of erodable materials (i.e. gravel) should not be closer than 25 feet from a roadway or drainage way. If placed in the right-of-way, the stockpiles shall not be placed closer than 100 feet of an unprotected storm drain. Covering or surrounding with straw bales, silt fence or other measures, shall control erosion from stockpiles existing less than ten (10) days. Stockpiles existing longer than ten (10) days shall be seeded and mulched.

- Tracking:
  1. The project and surrounding roadways shall be kept free from materials that may enter the drainage system. Tracked roadways shall be cleaned immediately by means other than flushing with water.
  2. Tracking pads at ingress and egress points may be used to help control tracking of sediment onto roadway surfaces. The pads shall be constructed with a minimum of 2-inch size stone, 8-feet wide and a minimum of 50-feet long.
  3. The project roadways should be cleaned on a daily basis. Cleaning shall be done by means other than flushing with water.

- Location of sediment controls (i.e. silt fence, straw bales, waddles and other planned practices) that minimize the amount of sediment from leaving the site:
  1. The *“Wisconsin Construction Site Best Management Practices Handbook”* should be consulted.

- Dewatering:
  1. Water containing particles of 100 microns or greater shall be treated by use of temporary sediment basins or other devices designed to remove particles of 100 microns or greater.

- Vegetation:
  1. The construction activity should be staged as to limit the amount of time vegetation is stripped and reestablished.

- Maintenance:
  1. A schedule for maintaining all erosion control devices is necessary to maximize the effort of limiting sediment from entering the drainage system.
  2. All devices should be checked and maintained after a rainfall event that totals 0.50 inches.
  3. All devices should be checked and maintained at least once a week.

CITY OF MILWAUKEE
DEPARTMENT OF PUBLIC WORKS
Optional Joint Restraint

MJ Field Lok® application Notes

1) MJ Field Lok® may be utilized in conjunction with standard joint restraint methods currently approved (anchors, buttresses, strapping, Field Lok 350®) for use in the MWW system to achieve the proper joint restraint.

2) The contractor shall complete the "Optional Joint Restraint Application" included in the contract documents, and submit this form at the same time as the Erosion Control Implementation Plan. The intent of requirement is to insure the proper installation of the MJ Field Lok® and Field Lok® products.

3) Pre-Approval (completed form) must be given to the contractor prior to installation.

4) The approval from the City of Milwaukee to use the Field Lok products may require a preconstruction meeting to discuss the intended use and locations.

5) The City of Milwaukee may also require the contractor to submit a restraint plan.

6) The joint restraint gland and gasket shall be suitable for use with AWWA C110 Fittings.

7) The joint restraint system shall be provided as a kit containing all necessary accessories for proper assembly and installed per manufacturer's specifications.

8) The restraint system shall be completely integral to the gasket, requiring only standard mechanical joint assembly techniques.

9) The restraining system for Ductile Iron shall be pressure rated to 350 psi.

10) The restraining system shall be rated in accordance with the performance requirements of ANSI/AWWA C111/A21.11 Rubber Gasket Joints for Ductile-Iron Pressure Pipe and Fittings.

11) MJ Field Lok® is approved for use on Ductile Iron water main only, and shall not be utilized on Cast Iron. MJ Field Lok® is not approved for use on hydrant branches, due to the MWW oversized hydrant shoe.

12) Marking Tape

    A. Description: Marking tape shall be Non-detectable, polyethylene (suitable for direct bury) to be installed when MJ Field Lok® or Field Lok 350 ®restraint is utilized as restraint alternatives.

    B. Material: Marking tape shall be made of virgin polyethylene, non-detectable type. The physical properties of the tape shall be in accordance with ASTM D882, ASTM D671, ASTM D2103, ASTM D2578.

    C. Design: Marking tape shall have the following properties
        a. Color – Blue per APWA color code
        b. Width – 3 inches minimum
        c. Text – "CAUTION RESTRAINED JOINT BURIED BELOW"
        d. Text shall continually repeat every 2 feet
        e. Text color – Black
        f. Text Size – 1 inch minimum
        g. Thickness – 4mil minimum

    D. Installation: Marking tape shall be placed along (longitudinally) the top of the water main following the installation of the required poly wrap for pipe and fittings, and taped to the poly wrap (around the water main) at 4 ft intervals for the limits of the installed joint restraint. The tape shall identify the <u>complete</u> restrained length.

E. Acceptable Brands

a. T. Christy's Enterprises Inc. – Non-Detectable Marking Tape

Contractor to submit documentation on products from manufacturers other than listed above.

Milwaukee Water Works

Water Engineering

Department of Public Works

R-1

REVISED: 02-14-10

MECHANICAL JOINT RESTRAINT (4"–16")

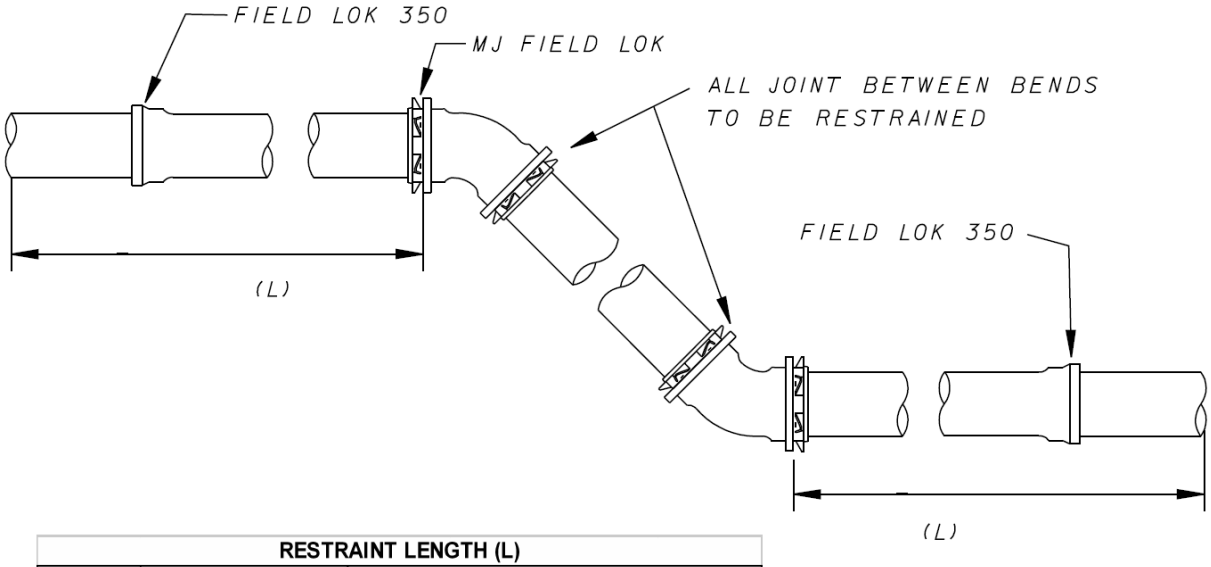

RESTRAINT LENGTH (L)						
	BENDS		OFFSETS			
PIPE	DEGREE OF BEND		OFFSET DIMENSION			
DIA.	22-1/2	45	6"	12"	18"	24"
4"	6'	12'	10'	14'	16'	N/A
6"	8'	16'	12'	16'	20'	35'
8"	12'	20'	16'	22'	24'	35'
12"	15'	26'	18'	24'	27'	35'
16"	18'	36'	19'	26'	30'	N/A

NOTES:

1) MATERIAL: JOINT RESTRAINT FOR MECHANICAL JOINT FITTINGS SHALL BE THE MJ FIELD LOK ® GLAND AND GASKET.

2) THE JOINT RESTRAINT GLAND AND GASKET SHALL BE SUITABLE FOR USE WITH AWWA C110 FITTINGS.

3) NOT TO BE USED ON HYDRANT BRANCHES..

4) THE RESTRAINT SYSTEM SHALL BE COMPLETELY INTEGRAL TO THE GASKET, REQUIRING ONLY STANDARD MECHANICAL JOINT ASSEMBLY TECHNIQUES.

5) THE RESTRAINING SYSTEM FOR DUCTILE IRON SHALL BE PRESSURE RATED TO 350 PSI.

6) THE RESTRAINING SYSTEM SHALL BE RATED IN ACCORDANCE WITH THE PERFORMANCE REQUIREMENTS OF ANSI/AWWA C111/A21.11 RUBBER GASKET JOINTS FOR DUCTILE-IRON PRESSURE PIPE AND FITTINGS.

7) MARKING TAPE REQUIRED "CAUTION RESTRAINED JOINT BURIED BELOW".

8) WHEN CONNECTING TO EXISTING WATER MAIN OR RESTRAINED LENGTH (L) IS NOT ABLE TO BE ACHIEVED, ADDITIONAL RESTRAINT WILL BE NECESSARY. (ANCHOR BLOCKS, BUTTRESSES, STRAPPING)

9) DRAWING NOT TO SCALE

10) FOR ADDITIONAL SPECIFICAITON NOTES SEE THE STANDARD PLAN NOTES REGARDING WATER MAIN CONSTRUCTION.

file - MJ Field Lok.dgn

Milwaukee Water Works

Water Engineering

Department of Public Works

R-2

REVISED: 02-14-10

RESTRAINT STANDARDS (4–16")
WATER MAIN END CONNECTIONS

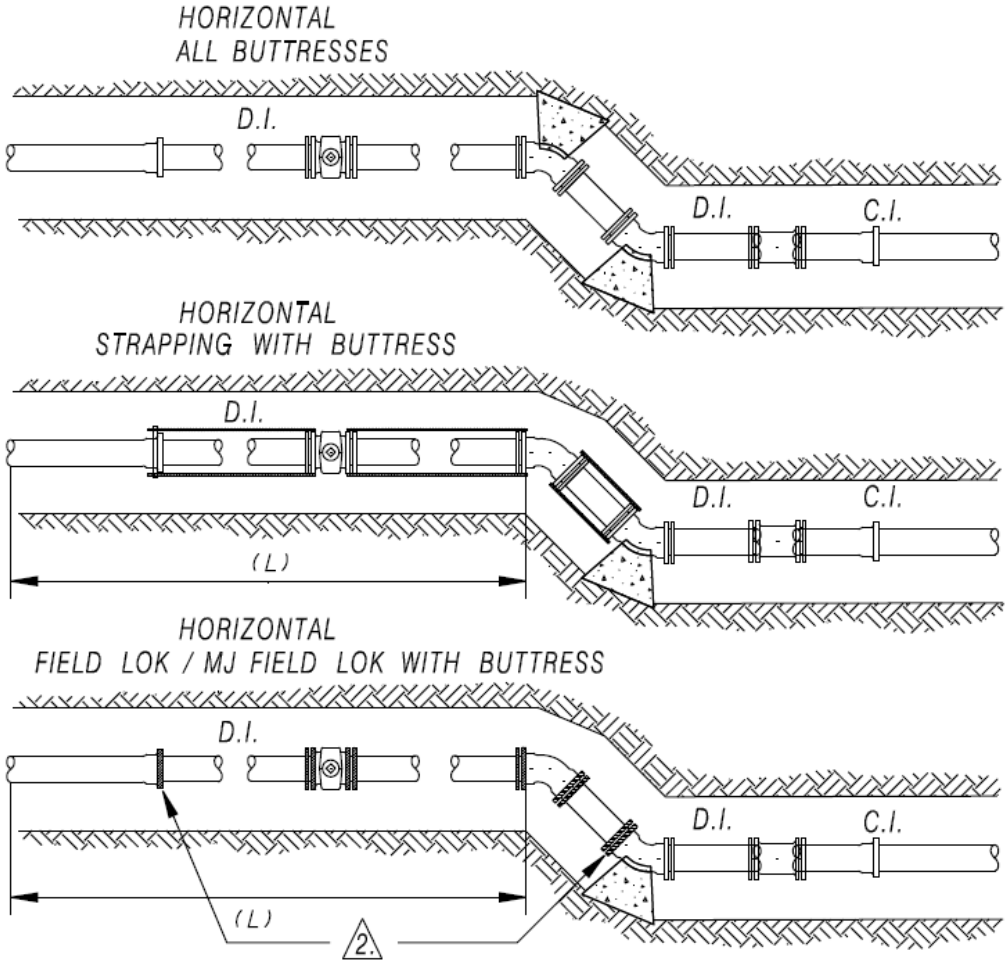

1. ALL BUTTRESSING PER DWG. NO. 7
2. ALL ANCHOR BLOCKS PER DWG. NO. 10
3. RESTRAINED LENGTH "L" PER DWG. NO. 16

2. ALL JOINTS WITHIN LIMITS TO BE RESTRAINED WITH FIELD LOK 350® OR MJ FIELD LOK®

file = MJ Field Lok.dgn

Milwaukee Water Works

Water Engineering

Department of Public Works

R-3

REVISED: 02-24-10

RESTRAINT STANDARDS (4–16")
WATER MAIN END CONNECTIONS

VERTICAL #1 (4–8")

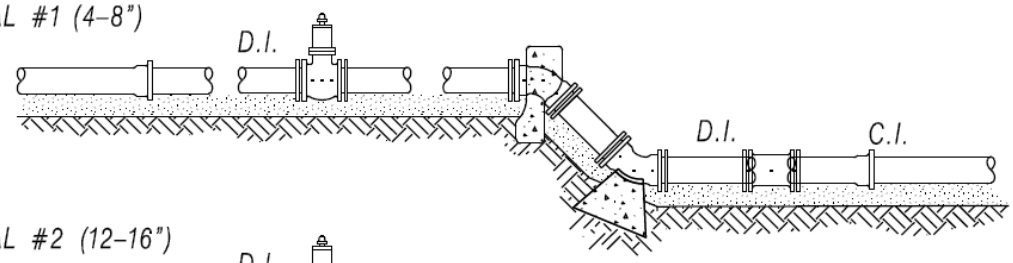

VERTICAL #2 (12–16")

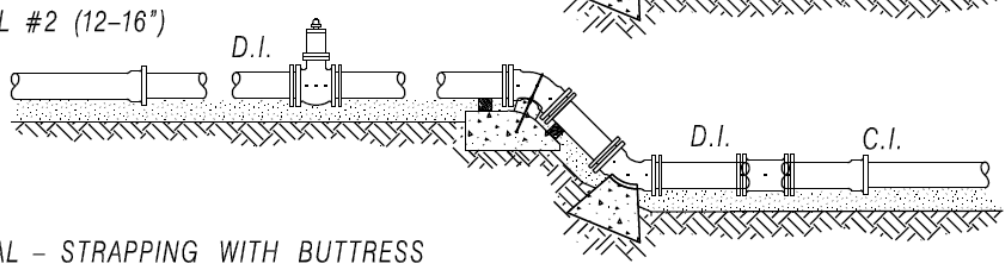

VERTICAL – STRAPPING WITH BUTTRESS

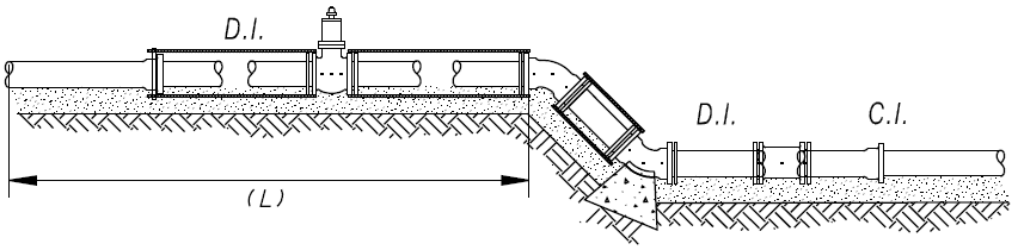

VERTICAL – FIELD LOK / MJ FIELD LOK WITH BUTTRESS

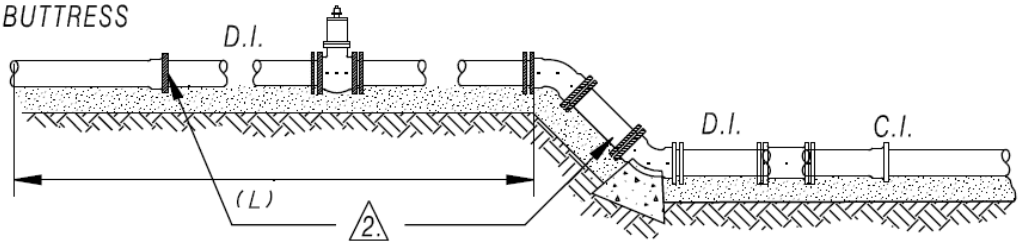

1. ALL BUTTRESSING PER DWG. NO. 7
2. ALL ANCHOR BLOCKS PER DWG. NO. 10
3. RESTRAINED LENGTH "L" PER DWG. NO. 16

2. ALL JOINTS WITHIN LIMITS TO BE RESTRAINED WITH FIELD LOK 350® OR MJ FIELD LOK®

file = MJ Field Lok.dgn

Milwaukee Water Works

Water Engineering
Department of Public Works

R-4
REVISED: 02-24-10

RESTRAINT STANDARDS (4–16")
DUCTILE IRON WATER MAIN

HORIZONTAL ALL FIELD LOK /MJ FIELD LOK

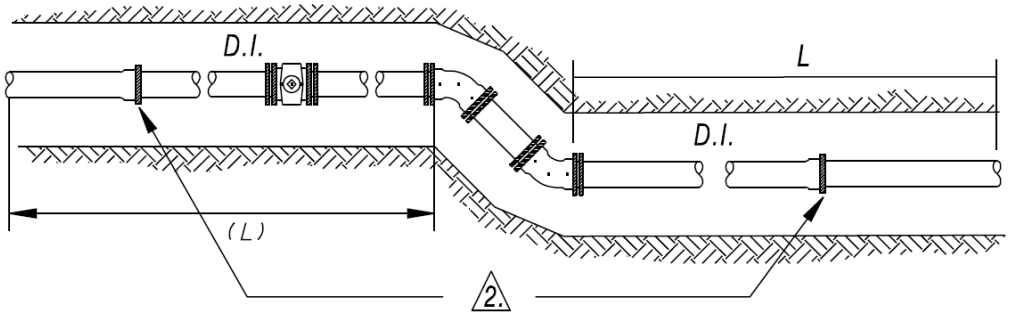

VERTICAL – ALL FIELD LOK /MJ FIELD LOK

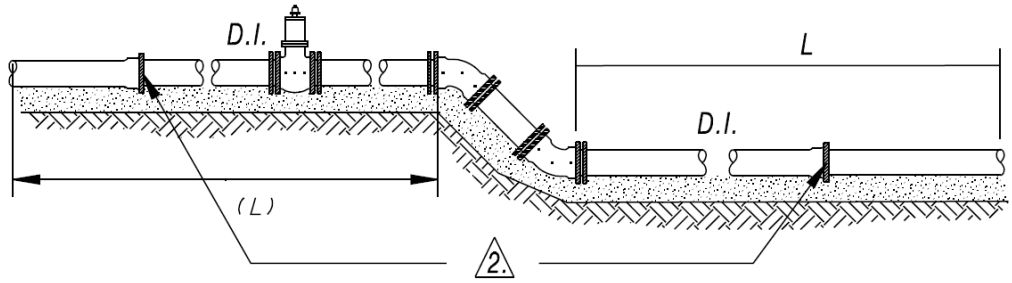

1. ALL BUTTRESSING PER DWG. NO. 7
2. ALL ANCHOR BLOCKS PER DWG. NO. 10
3. RESTRAINED LENGTH "L" PER DWG. NO. 16

2. ALL JOINTS WITHIN LIMITS TO BE RESTRAINED WITH FIELD LOK 350® OR MJ FIELD LOK®

file = MJ Field Lok.dgn

Milwaukee Water Works

Water Engineering

Department of Public Works

R-5

REVISED: 02-24-10

RESTRAINT STANDARDS (4–16")
VERTICAL OFFSET

VERTICAL #1 (4–8")

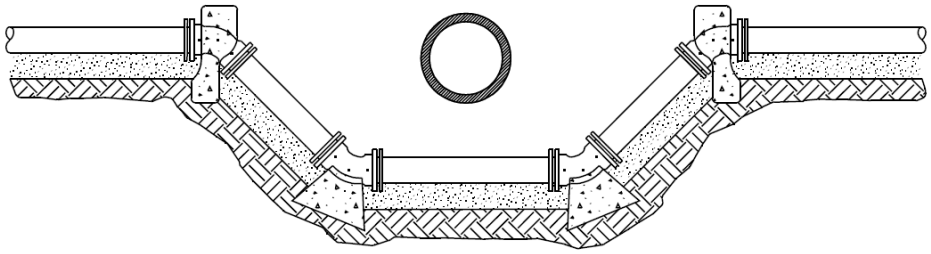

VERTICAL #2 (12–16")

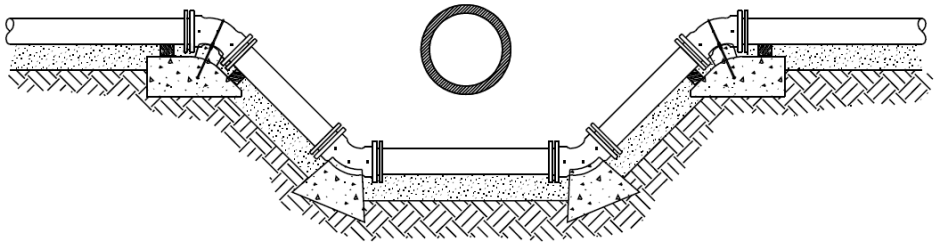

VERTICAL – STRAPPING WITH BUTTRESS

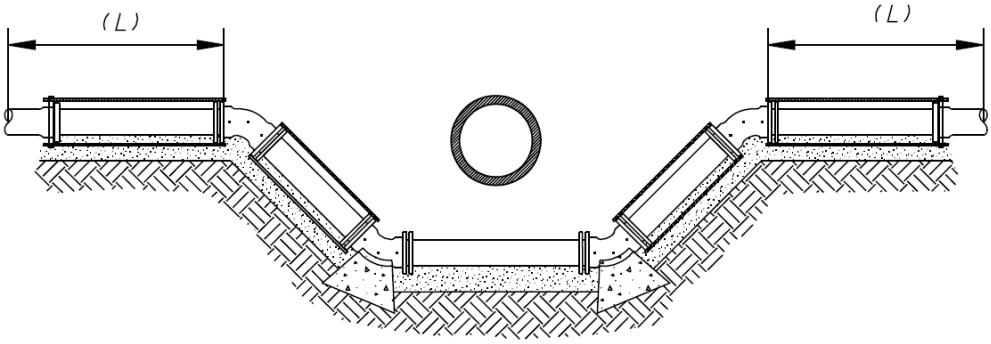

1. ALL BUTTRESSING PER DWG. NO. 7
2. ALL ANCHOR BLOCKS PER DWG. NO. 10
3. RESTRAINED LENGTH "L" PER DWG. NO. 16

2. ALL JOINTS WITHIN LIMITS TO BE RESTRAINED WITH FIELD LOK 350® OR MJ FIELD LOK®

file = MJ Field Lok.dgn

Milwaukee Water Works

Water Engineering

Department of Public Works

R-6

REVISED: 02-24-10

RESTRAINT STANDARDS (4–16")
VERTICAL OFFSET

VERTICAL – FIELD LOK / MJ FIELD LOK WITH BUTTRESS

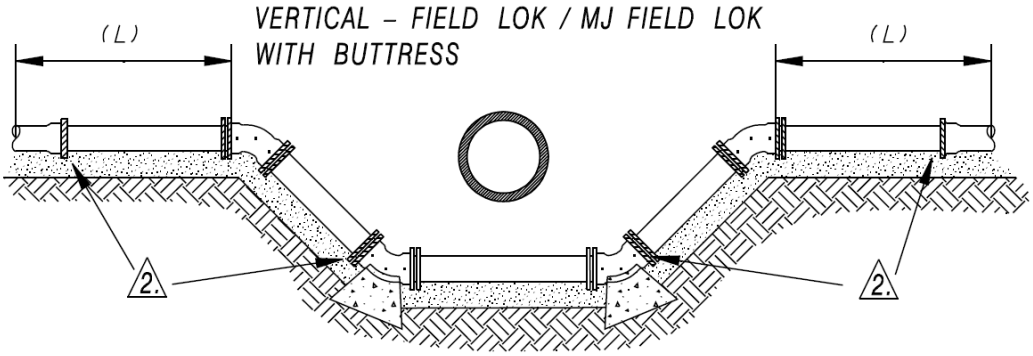

VERTICAL – ALL FIELD LOK /MJ FIELD LOK

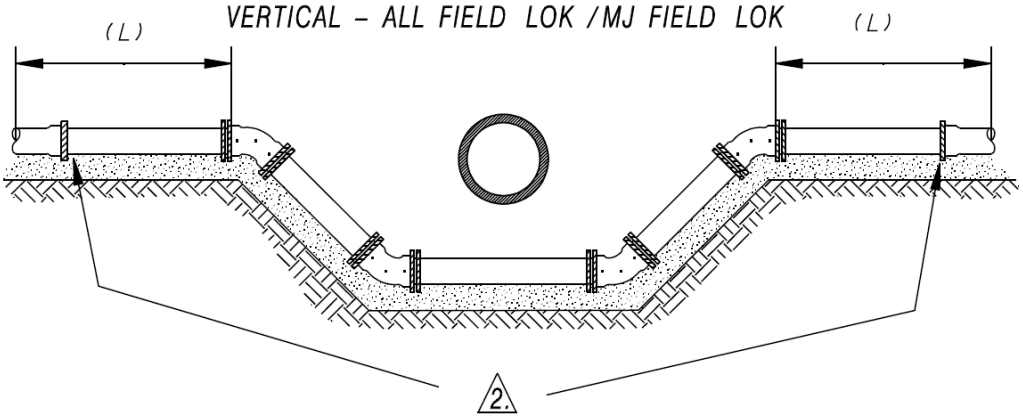

1. ALL BUTTRESSING PER DWG. NO. 7
2. ALL ANCHOR BLOCKS PER DWG. NO. 10
3. RESTRAINED LENGTH "L" PER DWG. NO. 16

2. ALL JOINTS WITHIN LIMITS TO BE RESTRAINED WITH FIELD LOK 350® OR MJ FIELD LOK®

file = MJ Field Lok.dgn

Example Post Contract Award Letter

Contractor X
XXXXXXXXX, INC
(XXX)XXX-XXXX
XXXX Street
Somewhere, WI 5XXXX

City of Milwaukee - Milwaukee Water Works
Water Main Replacements

Project Locations

The City of Milwaukee has recently awarded our firm a water main replacement contract which includes the above projects. The City will provide you with another notice prior to work starting on your block.

This work will include removing pavement, excavating a trench, and installing a new water main. After pressure testing for leaks and disinfecting the pipe, the new water main will be connected to the system and your water service will be transferred.

Your water supply should be unaffected for the majority of the construction activities, but will be out of service when the new main is connected to the system and when your service pipe is connected to the new main. The Milwaukee Water Works will deliver notices prior to these planned “out of water” occurences.

You will experience some disruption of your daily traffic patterns due to the project, but we will do our best to minimize them. We expect there to be no closures of either the street or access to driveways, however there will be special parking restrictions.

All of the work we will be performing is to be funded by the Milwaukee Water Works Capital Improvement budget, which is financed by water revenues. There will be no special assessments made to the abutting properties. The Milwaukee Water Works’ primary mission is to protect customer health by delivering safe, potable water to your tap at an affordable price. Managing the assests of the utility is one of the methods of meeting our mission and water main replacement is necessary when a water main has reached the end of its useful life.

If you or someone in your household is in need of special accommodations or have any questions please call us at the number listed above.

Form DPW-126 (Rev.1/14)

CITY OF MILWAUKEE, WISCONSIN
DEPARTMENT OF PUBLIC WORKS
LICENSED SURETY CORPORATION BID BOND

KNOW ALL MEN BY THESE PRESENTS, That we, ……

……

of ……..
(Street and Number) (City) (State)

as principal and ……. of ……
(Home Office)

as surety are held and firmly bound unto the City of Milwaukee, Wisconsin, hereinafter called City in

the penal sum of ……..

…….. Dollars,

to be paid to the City: its successors and assigns, for which payment well and truly to be made, we bind ourselves, and our heirs, executors, and, administrators, or successors and assigns, as the case may be, jointly and severally, firmly by these presents.

WHEREAS, the above bounden principal is making a proposal in writing dated …….

20 ....., to the Commissioner of Public Works of the City, according to Official Notice No .....

20 ....., of said Commissioner for furnishing all material, equipment, labor and everything necessary

for the completion of the work of...

according to plans, specifications and the other contract documents on file in the office of said Commissioner, a copy of which proposal is by reference made a part hereof, and the said proposal is accompanied with this bond.

NOW, THE CONDITION OF THIS OBLIGATION IS SUCH, that if the above bounden principal shall execute the contract in quadruplicate, in accordance with the proposal as accepted, with approved licensed surety corporation bound thereto for the faithful performance and proper fulfillment

of such contract, and return the same to the office of the said Commissioner within the time limit specified in said proposal, then the above obligation shall be void, otherwise it shall be and remain in full force and effect.

In witness whereof, the above bounden parties have executed this instrument under their several seals at Milwaukee, Wisconsin, this ..... day of ..... 20 ....., the name and corporate seal of each corporate party being hereto affixed and this instrument signed by its duly authorized representative.

Bidder Witnesses …….. (Seal)
(Bidder)

.....

By .....
(Name and Title)

.....

Surety Witnesses ……...……
(Surety)

……

…… By ……..
(Attorney-in-Fact or Agent)

(Seal of Surety)

Name of Surety Contact Person _____and Phone Number _____
(Please Print)