W:\STR\B0202\PLANS\PLANS\ C1_TITLE.DGN 01-28-2015

DRAWING INDEX	
SHEET NO.	SHEET TITLE
C1	TITLE SHEET
C2	SILT FENCE
C3	CONCRETE PAVEMENT APPROACH SLAB
C4	NAME PLATE
C5	CITY UNDERGROUND CONDUIT PLAN
C6	CITY UNDERGROUND CONDUIT DETAILS SHEET 1
C7	CITY UNDERGROUND CONDUIT DETAILS SHEET 2
T1	TRAFFIC CONTROL - STAGE 1
T2	TRAFFIC CONTROL - STAGE 1
T3	TRAFFIC CONTROL - STAGE 2
T4	TRAFFIC CONTROL - STAGE 2
T5	PAVEMENT MARKING
T6	TRAFFIC QUANTITIES
1	SITE PLAN AND ELEVATION
2	SECTION AND PLAN QUANTITIES
3	DECK PLAN WEST SPAN
4	DECK PLAN CENTER SPAN
5	DECK PLAN EAST SPAN AND DETAILS
6	STAGE 1 CONSTRUCTION CROSS SECTION
7	STAGE 2 CONSTRUCTION CROSS SECTION
8	DECK BILL OF BARS AND SHEAR STUD DETAILS
9	DECK GRADES
10	WEST ABUTMENT ELEVATION AND PLAN VIEW
11	WEST ABUTMENT SECTIONS
12	WEST ABUTMENT AND WING WALL BILL OF BARS
13	NORTHWEST AND SOUTHWEST WING WALLS PLAN, SECTION AND ELEVATION
14	EAST ABUTMENT ELEVATION AND PLAN VIEW
15	EAST ABUTMENT SECTIONS
16	EAST ABUTMENT, WING WALL BILL OF BARS AND MEDIAN PLAN
17	NORTHEAST AND SOUTHEAST WING WALLS PLAN, SECTION AND ELEVATION
18	3-LINE ALUMINUM RAILING POST SPACING
19	3-LINE ALUMINUM RAILING DETAILS
20	ALUMINUM RAILING CABLE DETAILS
21	MODIFIED GIRDER END DIAPHRAGMS
22	STRIP SEAL EXPANSION JOINTS
23	ELASTOMERIC BEARING REPLACEMENT DETAILS FOR TRANSVERSE GIRDER AT WEST ABUTMENT
24	ELASTOMERIC BEARING REPLACEMENT DETAILS
25	LIGHT POLE BASE WALK REINFORCEMENT DETAILS
26	WING WALL CONCRETE SURFACE REPAIRS

CITY OF MILWAUKEE

REHABILITATION OF

WEST BECHER STREET BRIDGE

OVER KINNICKINNIC RIVER

LOCAL STREET

MILWAUKEE COUNTY

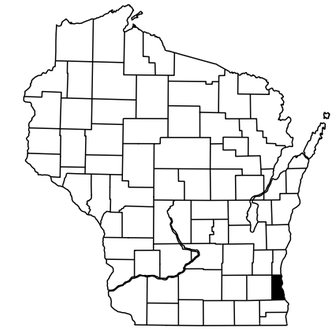

STRUCTURE P-40-794
STA. 5+29.61

BEGIN PROJECT
STA. 3+23

END PROJECT
STA. 7+24

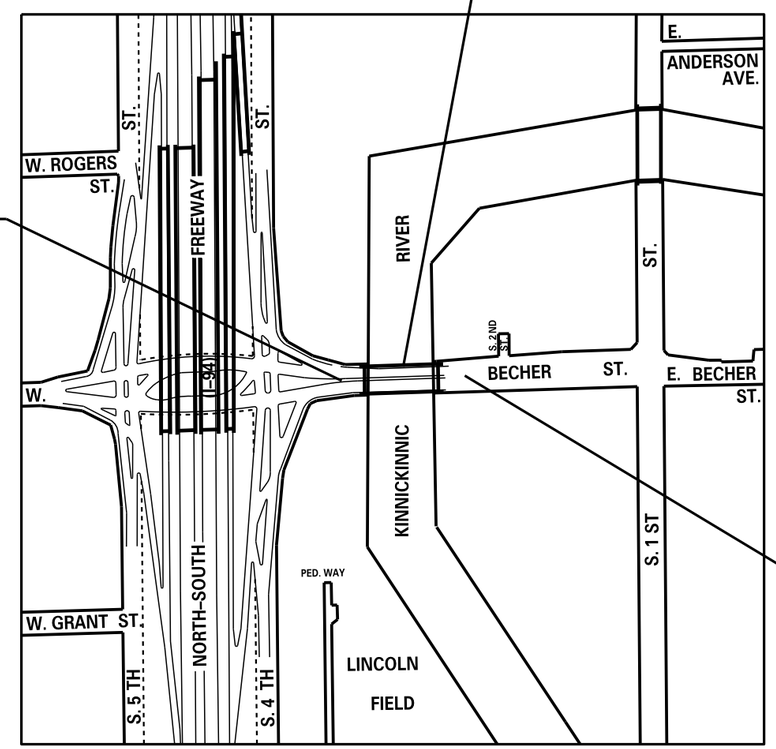

N

SCALE 0 200 400 FEET

TOTAL NET LENGTH OF CENTERLINE = 0.076 MI. (URBAN)

City of Milwaukee
Department of Public Works
Infrastructure Services Division

APPROVED BY:
FACILITIES OPERATIONS MANAGER — DATE 1-29-15
CITY ENGINEER/SPECIAL DEPUTY COMMISSIONER OF PUBLIC WORKS — DATE 2/5/15

WEST BECHER STREET BRIDGE OVER THE KINNICKINNIC RIVER
TITLE SHEET

REVISIONS

DESIGNED BY J.P.H.
DRAWN BY S.D.B.
CHECKED BY A.R.
DATE 02/2015 | SCALE NONE
JOB NUMBER BR100-15-0105
SHEET NUMBER C1 OF C7
OF 39

W:\STR\B0202\PLANS\PLANS\ C2_SILT FENCE.DGN 01-16-2015

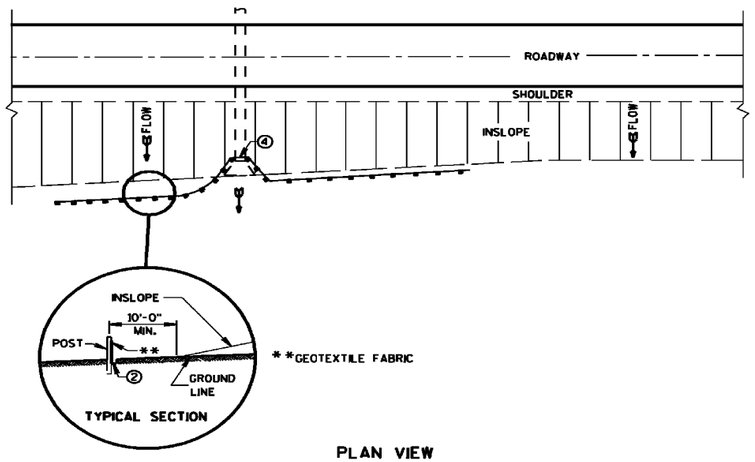

PLAN VIEW

TYPICAL APPLICATION OF SILT FENCE

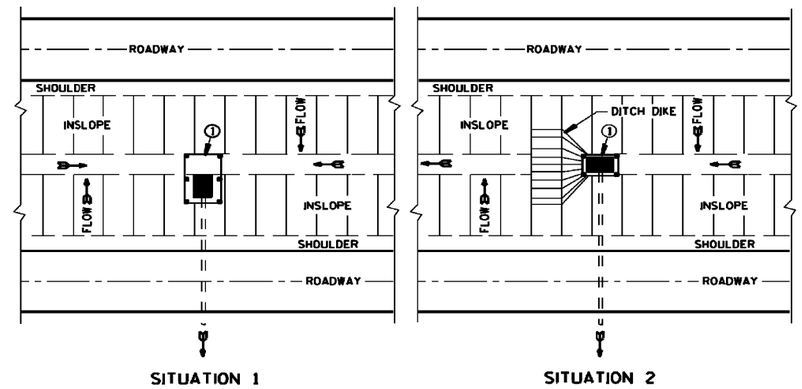

PLAN VIEW

SILT FENCE AT MEDIAN SURFACE DRAINS

GENERAL NOTES

DETAILS OF CONSTRUCTION NOT SHOWN ON THIS DRAWING SHALL CONFORM TO THE PERTINENT REQUIREMENTS OF THE STANDARD SPECIFICATIONS AND APPLICABLE SPECIAL PROVISIONS.

1. HORIZONTAL BRACE REQUIRED WITH 2" X 4" WOODEN FRAME OR EQUIVALENT AT TOP OF POSTS.
2. FOR MANUAL INSTALLATIONS THE TRENCH SHALL BE A MINIMUM OF 4" WIDE & 6" DEEP TO BURY AND ANCHOR THE GEOTEXTILE FABRIC. FOLD MATERIAL TO FIT TRENCH AND BACKFILL & COMPACT TRENCH WITH EXCAVATED SOIL.
3. WOOD POSTS SHALL BE A MINIMUM SIZE OF 1 1/8" X 1 1/8" OF OAK OR HICKORY.
4. SILT FENCE TO EXTEND ACROSS THE TOP OF THE PIPE.
5. CONSTRUCT SILT FENCE FROM A CONTINUOUS ROLL IF POSSIBLE BY CUTTING LENGTHS TO AVOID JOINTS. IF A JOINT IS NECESSARY USE ONE OF THE FOLLOWING TWO METHODS: A) OVERLAP THE END POSTS AND TWIST, OR ROTATE, AT LEAST 180 DEGREES. B) HOOK THE END OF EACH SILT FENCE LENGTH.

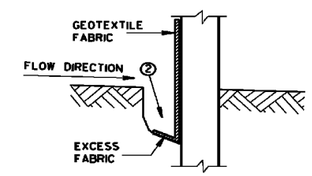

TRENCH DETAIL

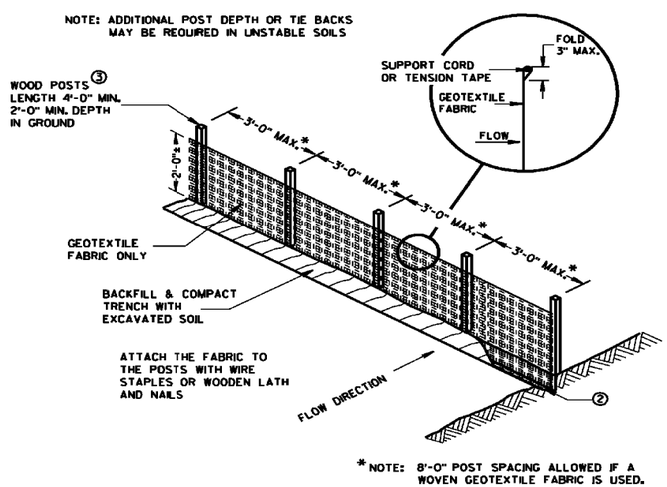

SILT FENCE

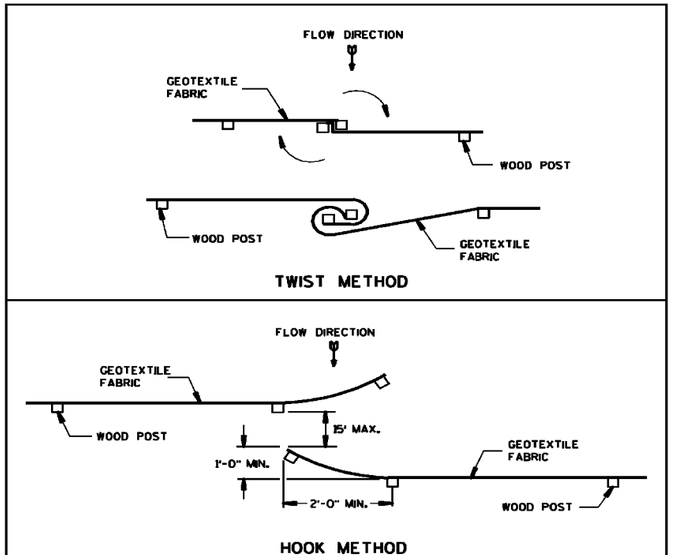

JOINING TWO LENGTHS OF SILT FENCE

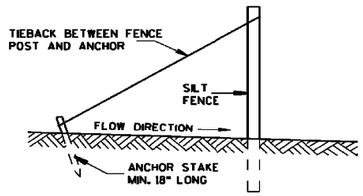

SILT FENCE TIE BACK

(WHEN REQUIRED BY THE ENGINEER)

City of Milwaukee

Department of Public Works

Infrastructure Services Division

WEST BECHER STREET BRIDGE OVER THE KINNICKINNIC RIVER

SILT FENCE

REVISIONS

DESIGNED BY J.P.H.	
DRAWN BY S.J.S.	
CHECKED BY A.R.	
DATE 02/2015	SCALE NONE
JOB NUMBER BR100-15-0105	
SHEET NUMBER C2 OF C7	
OF 39	

W:\STR\B0202\PLANS\PLANS\ C3_CONC PAVE APPR.DGN 01-16-2015

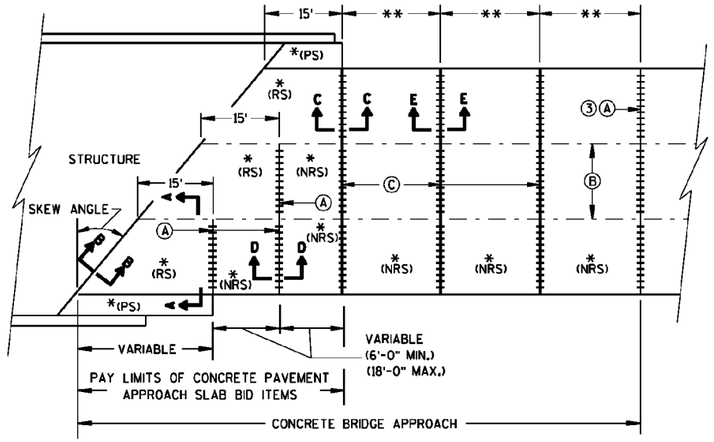

SKEWED APPROACH
(PAVEMENT MORE THAN 2 LANES)

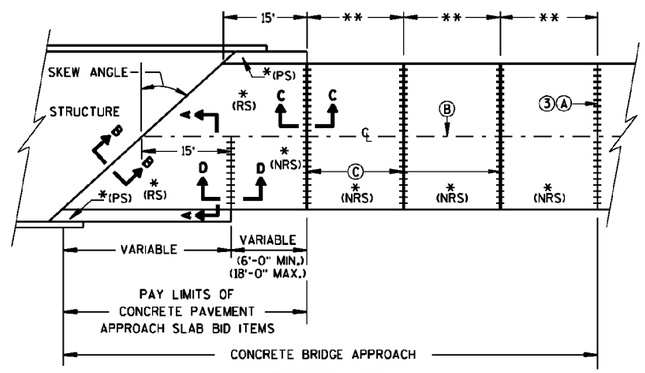

SKEWS >30°
(PAVEMENT WIDTH ≤30')

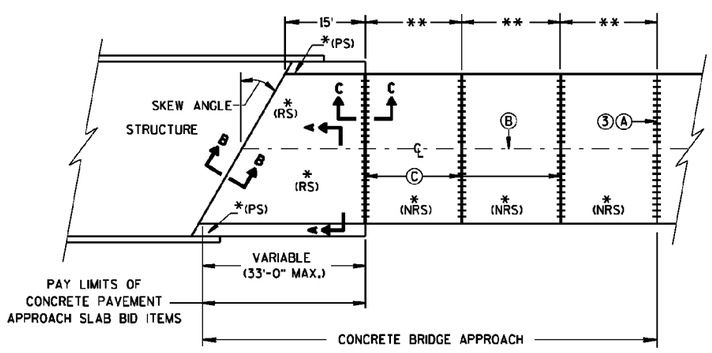

SKEWS ≤30°
(PAVEMENT WIDTH ≤30')

APPROACH SLAB AND ADJACENT PAVEMENT

*(RS) = REINFORCED CONCRETE SLAB
*(PS) = PAVED CONCRETE SHOULDER: CONCRETE PAVEMENT, OR CONCRETE SURFACE DRAIN (SEE DETAILS ELSEWHERE IN THE PLAN)
*(NRS) = NON-REINFORCED CONCRETE SLAB

**STANDARD TRANSVERSE JOINT SPACING (SEE SDD 13C4, SDD 13C11, & SDD 13C13)
***STANDARD DOWEL BAR DIAMETER (SEE SDD 13C11, & SDD 13C13)

Ⓐ STANDARD CONTRACTION JOINT NORMAL TO ℄ OR ℄
Ⓑ STANDARD LONGITUDINAL JOINT AND TIE BARS.
Ⓒ 1½" EXPANSION JOINT WITH DOWEL BARS NORMAL TO ℄ OR ℄

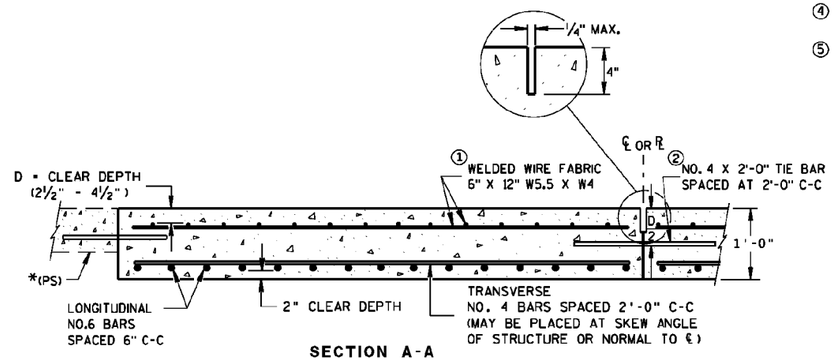

SECTION A-A
REINFORCEMENT POSITIONING DETAIL

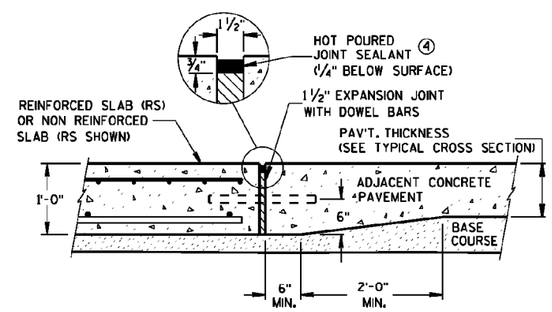

SECTION C-C
TRANSITION DETAIL
APPROACH SLAB TO ADJACENT PAVEMENT

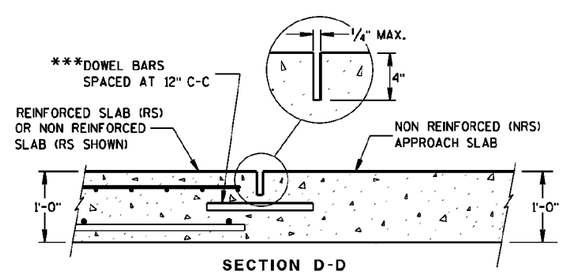

SECTION D-D
CONTRACTION JOINT

GENERAL NOTES

THE CONTRACTOR MAY SPLICE NO. 6 BARS IN THE APPROACH SLAB FOR SKEWED STRUCTURES ONLY. STAGGER SPLICES WITH A MAXIMUM OF ONE SPLICE PER BAR. THE LENGTH OF LAP IS 20 INCHES.

TACK WELD DOWEL BARS TO THE BASKETS ON ALTERNATE ENDS.

① THE CONTRACTOR MAY USE NO. 4 BARS SPACED AT 2'-0" C-C IN BOTH THE LONGITUDINAL AND TRANSVERSE DIRECTIONS FOR TOP REINFORCEMENT AS AN ALTERNATIVE TO THE WELDED WIRE FABRIC.

② THE CONTRACTOR MAY OMIT TIE BARS BETWEEN REINFORCED SLABS WHERE SLAB REINFORCEMENT BARS EXTEND ACROSS THE CENTERLINE OR REFERENCE LINE.

③ DO NOT DOWEL A CONTRACTION JOINT THAT ABUTS AN HMA PAVEMENT.

④ USE A JOINT SEALANT MEETING THE REQUIREMENTS OF ASTM D6690.

⑤ PLACE EXPANSION CAP ON THE END OF THE DOWEL THAT IS NOT TACK WELDED TO THE BASKET. DO NOT FORCE DOWEL BAR PAST THE DOWEL STOP.

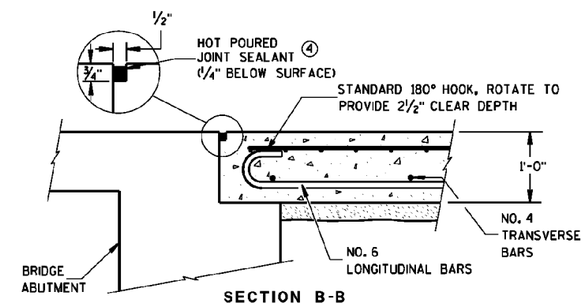

SECTION B-B
BEND DETAIL
BOTTOM REINFORCEMENT

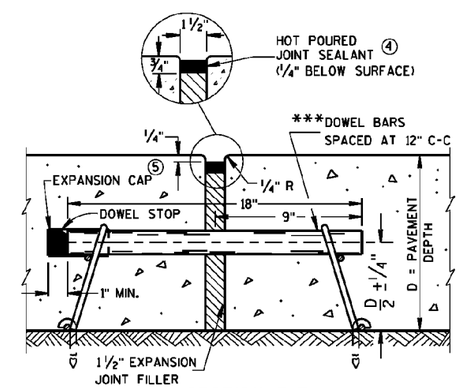

SECTION E-E
EXPANSION JOINT

City of Milwaukee
Department of Public Works
Infrastructure Services Division

WEST BECHER STREET BRIDGE OVER THE KINNICKINNIC RIVER
CONCRETE PAVEMENT APPROACH SLAB

REVISIONS

DESIGNED BY J.P.H.	
DRAWN BY S.J.S.	
CHECKED BY A.R.	
DATE 02/2015	SCALE NONE
JOB NUMBER BR100-15-0105	
SHEET NUMBER C3 OF C7	
OF 39	

W:\STR\B0202\PLANS\PLANS\ C4_NAME PLATE.DGN 01-28-2015

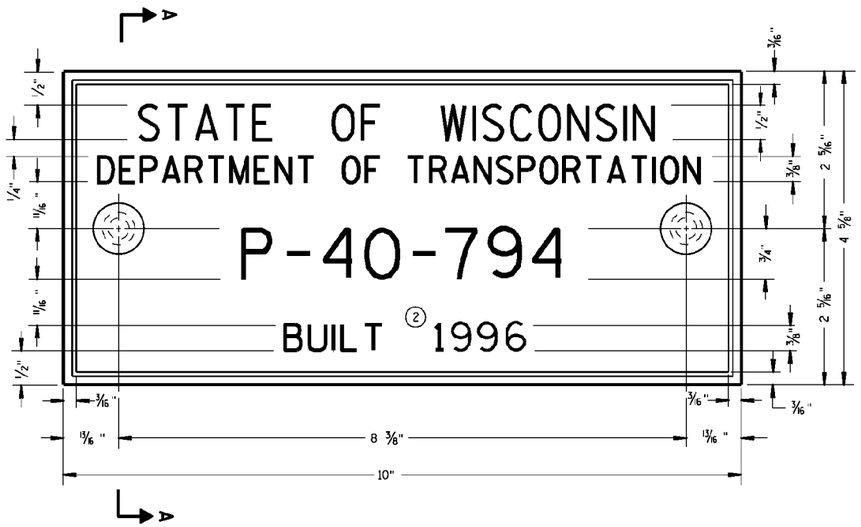

NAME PLATE
(BRIDGES, CULVERTS, AND RETAINING WALLS)

NOTE:

EXISTING BRIDGE NUMBER P-40-794 AND YEAR BUILT 1966

GENERAL NOTES

NAME PLATES TO BE INSTALLED ON BRIDGES, CULVERTS, AND RETAINING WALLS SHALL CONFORM TO THE REQUIREMENTS OF SECTION 502.3.11 OF THE STANDARD SPECIFICATIONS.

THE BRIDGE NUMBER AND YEAR BUILT SHOWN ON THIS DRAWING ARE EXAMPLES ONLY. SEE CONSTRUCTION PLANS FOR INDIVIDUAL NUMBERING AND YEAR BUILT.

① EPOXY RESIN SHALL BE FROM AN APPROVED MANUFACTURER AND USED IN ACCORDANCE WITH MANUFACTURER'S RECOMMENDATIONS.

② REHABILITATION OF AN EXISTING STRUCTURE SHOULD USE THE DATE OF ORIGINAL STRUCTURE CONSTRUCTION.

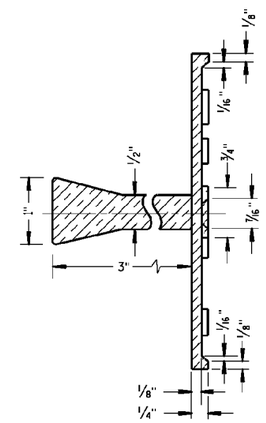

SECTION A-A

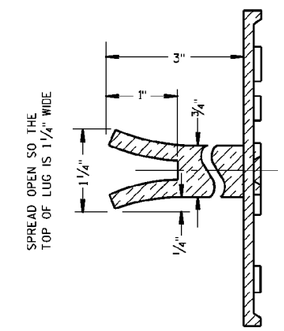

ALTERNATE LUG

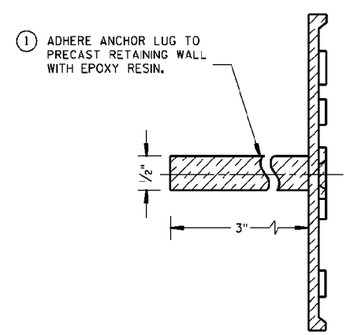

ALTERNATE LUG
(FOR ATTACHMENT TO PRECAST STRUCTURES)

City of Milwaukee
Department of Public Works
Infrastructure Services Division

WEST BECHER STREET BRIDGE
OVER THE KINNICKINNIC RIVER
NAME PLATE

REVISIONS

DESIGNED BY J.P.H.
DRAWN BY S.J.S.
CHECKED BY A.R.
DATE 02/2015 | SCALE NONE
JOB NUMBER BR100-15-0105
SHEET NUMBER C4 OF C7
OF 39

W:\STR\B0202\PLANS\PLANS\C-5 CITY UG COND PLAN.DGN \ 02-04-2015

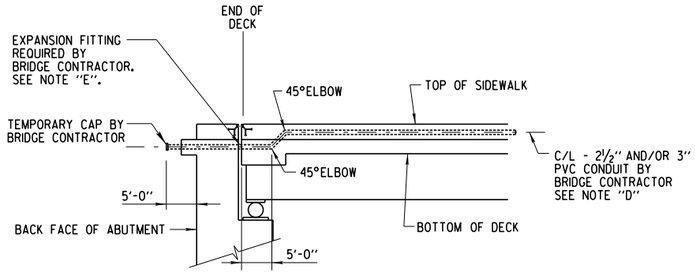

SECTION OF WALK AT ABUTMENT (TYPICAL)

NOTE:

THE EXPANSION COUPLINGS ARE TO BE MADE FROM PVC (CLARION E945K OR EQUIVALENT). COUPLINGS SHALL NOT BE MADE OF METALLIC MATERIALS.

ALL CONDUITS SHALL HAVE PULL WIRE INSTALLED AT TIME OF INSTALLATION.

QUANTITIES FOR APPROACH CONDUIT AND VAULT ARE INCLUDED IN ESTIMATE OF QUANTITIES TABLE LOCATED ON SHEET 2.

NOTE "D":

AFTER INSTALLING 2½" AND/OR 3" CONDUIT AND PRIOR TO POURING BRIDGE DECK AND SIDEWALK CONCRETE, THE BRIDGE CONTRACTOR SHALL CONTACT MR. DENNIS MILLER OF THE CITY OF MILWAUKEE STREET LIGHTING FIELD OPERATIONS AT (414)286-5942 (OFFICE) OR (414)708-4251 (CELL) THREE (3) WORKING DAYS IN ADVANCE TO PROPERLY INSPECT THE INSTALLATION. IF MR. MILLER IS NOT AVAILABLE CALL DISPATCHER AT (414)286-5944.

NOTE "E":

EXPANSION COUPLING SHALL PROVIDE A "T" FITTING, OR SIMILAR DEVICE, TO PROVIDE FOR DRAINAGE IN ADDITION TO EXPANSION/CONTRACTION. CALL MR. ENG-KIE LEE, CITY OF MILWAUKEE STREET LIGHT DESIGN ENGINEER, AT (414)286-2174 FOR QUESTIONS REGARDING THIS TYPE OF DEVICE.

N

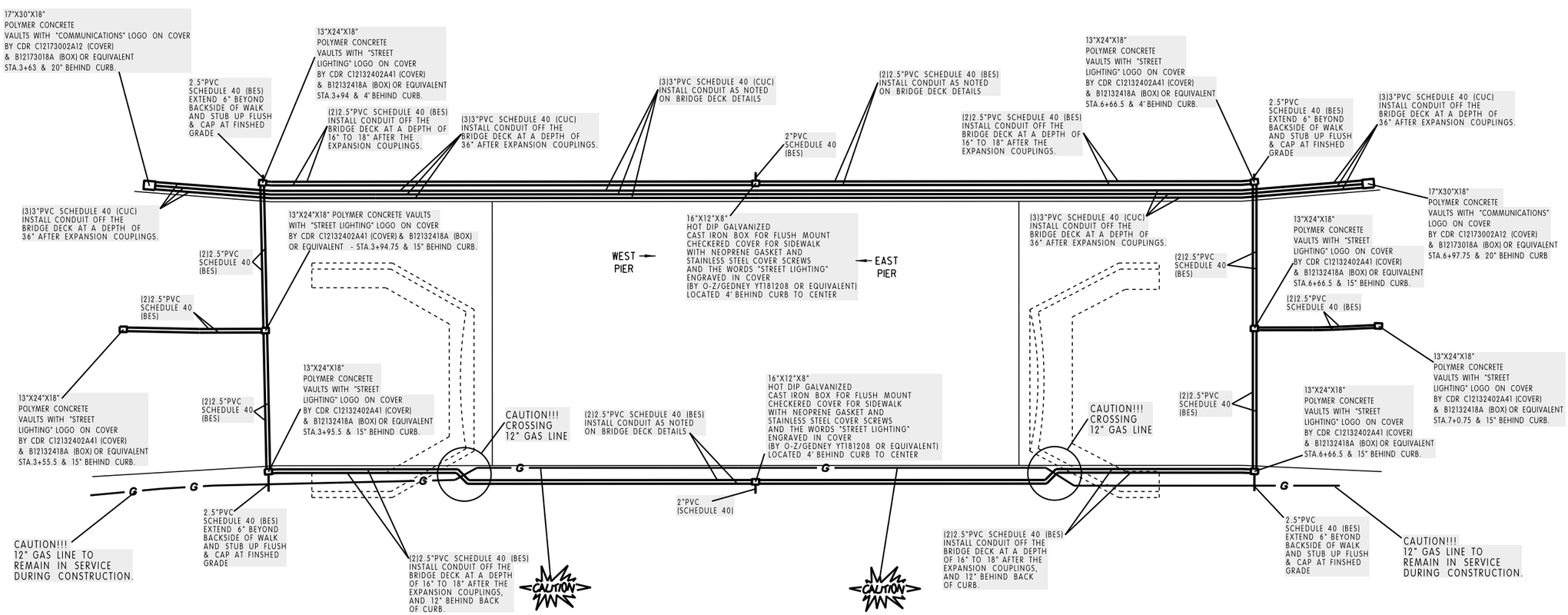

REQUIRED IN EVERY CONDUIT A 3/8" NYLON PULL WIRE / ROPE MINIMUM.

ANCHOR BOLTS MUST BE PERPENDICULAR TO THE HORIZON.

BLISTER LOCATIONS SHOULD HAVE A 1/8' PITCH FROM OUTSIDE OF PARAPET WALL TO THE OUTSIDE EDGE OF BLISTER FOR SURFACE DRAINAGE.

REQUIRE SIX (6) - 3" EXPANSION COUPLINGS

REQUIRE EIGHT (8) - 2.5" EXPANSION COUPLINGS

City of Milwaukee

Department of Public Works

Infrastructure Services Division

WEST BECHER STREET BRIDGE OVER THE KINNICKINNIC RIVER CITY UNDERGROUND CONDUIT PLAN

REVISIONS

DESIGNED BY D.K.	
DRAWN BY S.D.B.	
CHECKED BY	
DATE 02/2015	SCALE NONE
JOB NUMBER BR100-15-0105	
SHEET NUMBER C5 OF C7	
OF 39	

W:\STR\B0202\PLANS\PLANS\ C6 CITY UG COND DETAILS SHT 1.DGN 01-16-2015

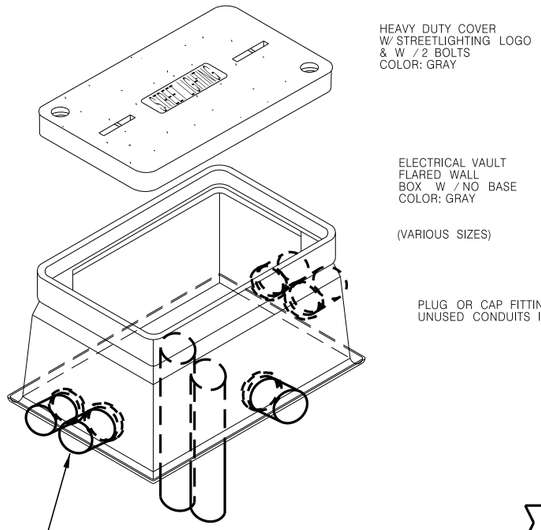

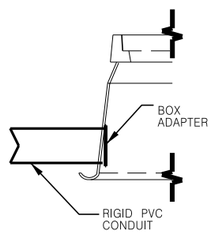

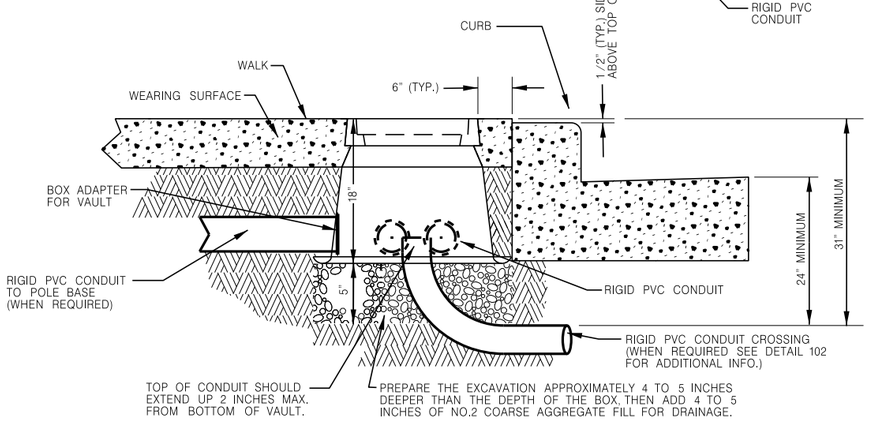

112 DETAIL
TYPICAL VAULT INSTALLATION IN WALK

NOT TO SCALE

ANY DEVIATIONS FROM DETAIL WILL REQUIRE PERMISSION FROM STREET LIGHTING FORCES.
CONTACT DISPATCHER AT (414) 286-5944 FOR THE APPROPRIATE SHOP SUPERVISOR.

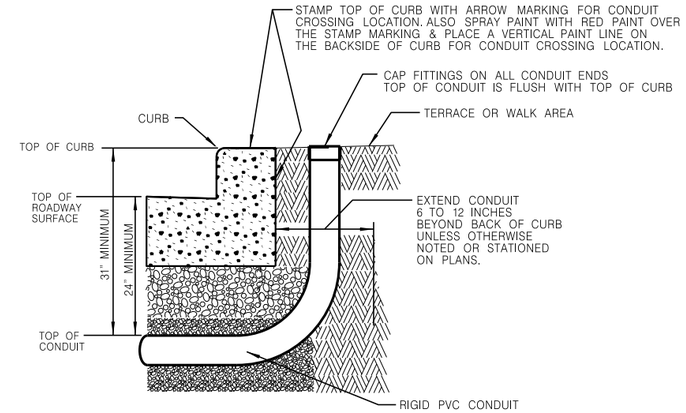

102 DETAIL VERSION #2
TYPICAL CONDUIT INSTALLATION
FOR CROSSING ROADWAYS

NOT TO SCALE

ANY DEVIATIONS FROM DETAIL WILL REQUIRE PERMISSION FROM STREET LIGHTING FORCES.
CONTACT DISPATCHER AT (414) 286-5944 FOR THE APPROPRIATE SHOP SUPERVISOR.

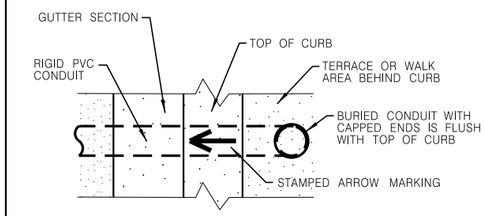

TOP VIEW OF CURB STAMPING

NOT TO SCALE

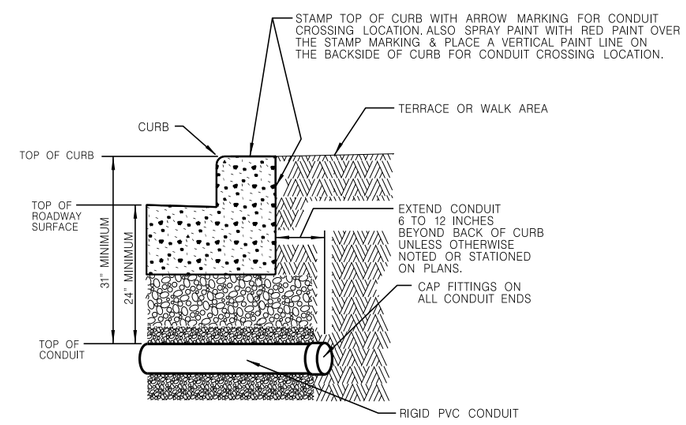

102 DETAIL VERSION #1
TYPICAL CONDUIT INSTALLATION
FOR CROSSING ROADWAYS

NOT TO SCALE

ANY DEVIATIONS FROM DETAIL WILL REQUIRE PERMISSION FROM STREET LIGHTING FORCES.
CONTACT DISPATCHER AT (414) 286-5944 FOR THE APPROPRIATE SHOP SUPERVISOR.

NOTE:

ARROW MARK SHALL BE INSCRIBED IN PAVEMENT SURFACE 1/4-INCH TO 3/8-INCH DEEP AT EACH LOCATION WHERE CONDUITS ARE PLACED UNDER THE PAVEMENT.

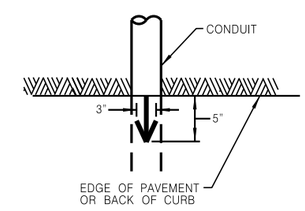

ARROW MARK

NOT TO SCALE

City of Milwaukee

Department of Public Works

Infrastructure Services Division

WEST BECHER STREET BRIDGE
OVER THE KINNICKINNIC RIVER
CITY UNDERGROUND CONDUIT DETAILS SHEET I

REVISIONS

DESIGNED BY D.K.	
DRAWN BY S.J.S.	
CHECKED BY A.R.	
DATE 02/2015	SCALE NONE
JOB NUMBER BR100-15-0105	
SHEET NUMBER C6 OF C7	
OF 39	

W:\STR\B0202\PLANS\PLANS\ C7 CITY UG COND DETAILS SHT 2.DGN 01-16-2015

NOTE: 1.) KEEP AREA BEHIND CURB FREE OF DEBRIS AND CONCRETE OVERPOUR.
2.) CONDUIT TO BE PLACED WITHIN A 6" AREA DIRECTLY BEHIND CURB, UNLESS NOTED OR APPROVED BY ENGINEER.

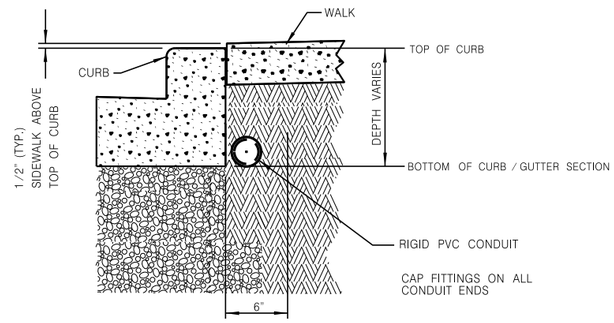

100 DETAIL "A"
TYPICAL CONDUIT INSTALLATION
BEHIND CURB

NOT TO SCALE

ANY DEVIATIONS FROM DETAIL WILL REQUIRE PERMISSION FROM STREET LIGHTING FORCES.
CONTACT DISPATCHER AT (414) 286-5944 FOR THE APPROPRIATE SHOP SUPERVISOR.

NOTE: 1.) KEEP AREA BEHIND CURB FREE OF DEBRIS AND CONCRETE OVERPOUR.

DETAIL "B"

CONDUIT TO BE PLACED WITHIN A 6" AREA DIRECTLY BEHIND CURB, UNLESS NOTED OR APPROVED BY ENGINEER.

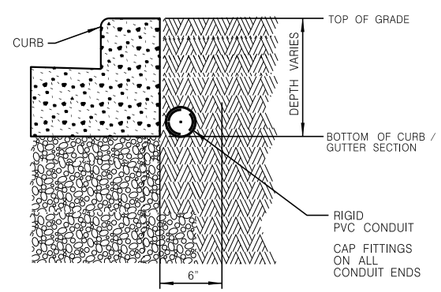

DETAIL "C"

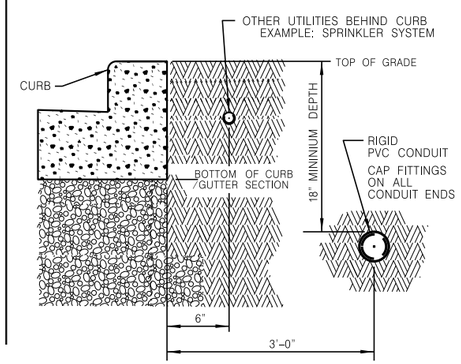

100 DETAIL "B" & "C"
TYPICAL CONDUIT INSTALLATION
BEHIND CURB

NOT TO SCALE

ANY DEVIATIONS FROM DETAIL WILL REQUIRE PERMISSION FROM STREET LIGHTING FORCES.
CONTACT DISPATCHER AT (414) 286-5944 FOR THE APPROPRIATE SHOP SUPERVISOR.

City of Milwaukee
Department of Public Works
Infrastructure Services Division

WEST BECHER STREET BRIDGE
OVER THE KINNICKINNIC RIVER
CITY UNDERGROUND CONDUIT DETAILS SHEET 2

REVISIONS

DESIGNED BY D.K.	
DRAWN BY S.J.S.	
CHECKED BY A.R.	
DATE 02/2015	SCALE NONE
JOB NUMBER BR100-15-0105	
SHEET NUMBER C7 OF C7	
OF 39	

W:\STR\B0202\PLANS\PLANS\ T1_TRAFFIC CONTROL SHT 1.DGN 01-28-2015

STAGE 1

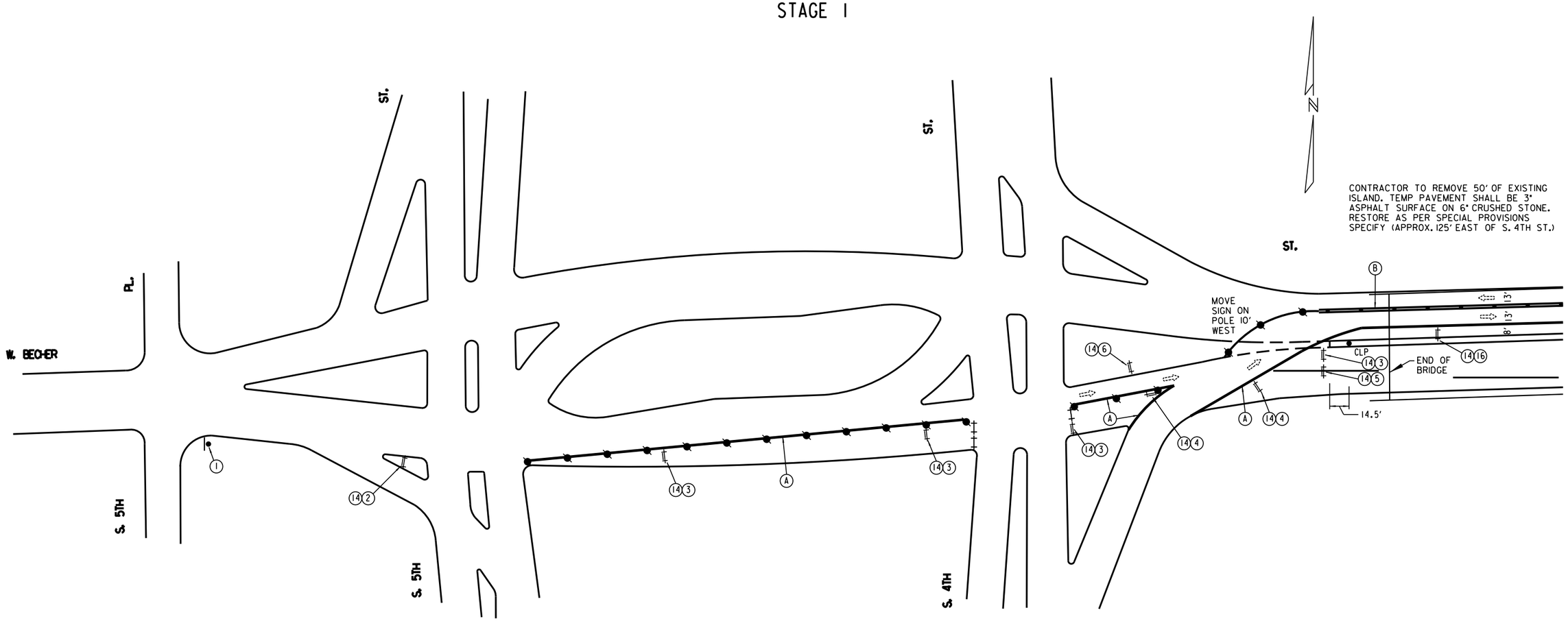

LEGEND

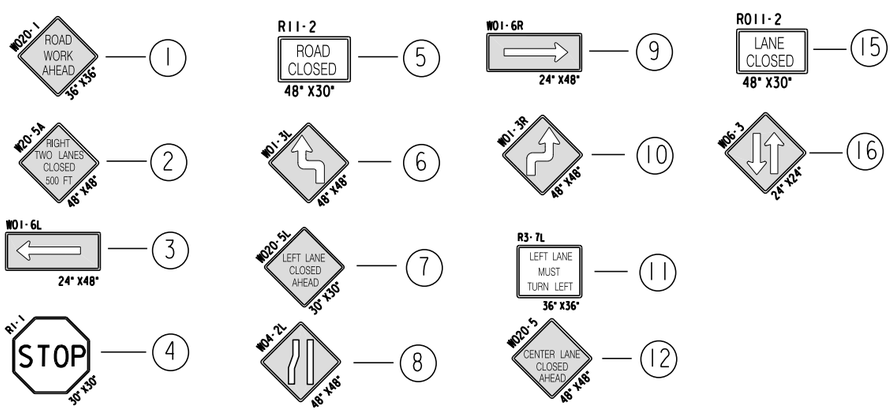

DRUMS W/LIGHTS 30' SPACING — 13

TYPE III BARRICADES — 14

TYPE III BARRICADES W/ SIGN — 14 + X

SIGNS BANDED TO UTILITY POLE — 13 + X

WORK AREA

DIRECTION OF TRAFFIC

TUBULAR MARKERS 25' SPACING

CONCRETE BARRICADES WITH STEADY BURN LIGHTS

A TPM, REMOVABLE TAPE, 4" WHITE

B TPM, REMOVABLE TAPE, 4" DOUBLE YELLOW

C TPM, REMOVABLE TAPE, 4" YELLOW

NOTE: ALL SIGNING SHALL BE THE CONTRACTORS RESPONSIBILITY. ALL SIGNS SHALL BE BANDED TO EXISTING UTILITY POLES UNLESS OTHERWISE NOTED. CONTRACTOR RESPONSIBLE FOR COVERING ALL CONFLICTING PAVEMENT MARKINGS.

City of Milwaukee

Department of Public Works

Infrastructure Services Division

WEST BECHER STREET BRIDGE OVER THE KINNICKINNIC RIVER TRAFFIC CONTROL - STAGE 1

REVISIONS

DESIGNED BY S.B.

DRAWN BY S.D.B.

CHECKED BY J.B.

DATE 02/2015 | SCALE NONE

JOB NUMBER BR100-15-0105

SHEET NUMBER T1 OF T6

OF 39

W:\STR\B0202\PLANS\PLANS\ T2_TRAFFIC CONTROL SHT 2.DGN 01-28-2015

STAGE I

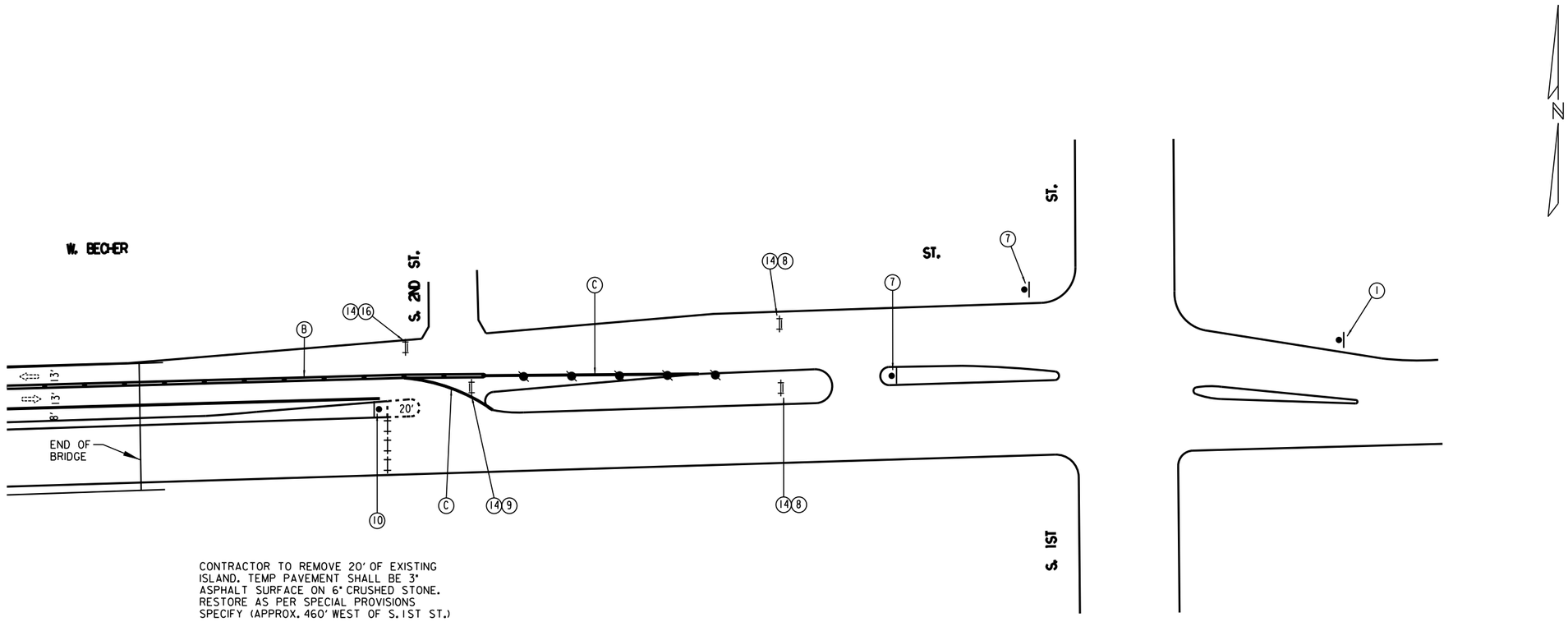

CONTRACTOR TO REMOVE 20' OF EXISTING ISLAND. TEMP PAVEMENT SHALL BE 3" ASPHALT SURFACE ON 6" CRUSHED STONE. RESTORE AS PER SPECIAL PROVISIONS SPECIFY (APPROX. 460' WEST OF S. 1ST ST.)

LEGEND

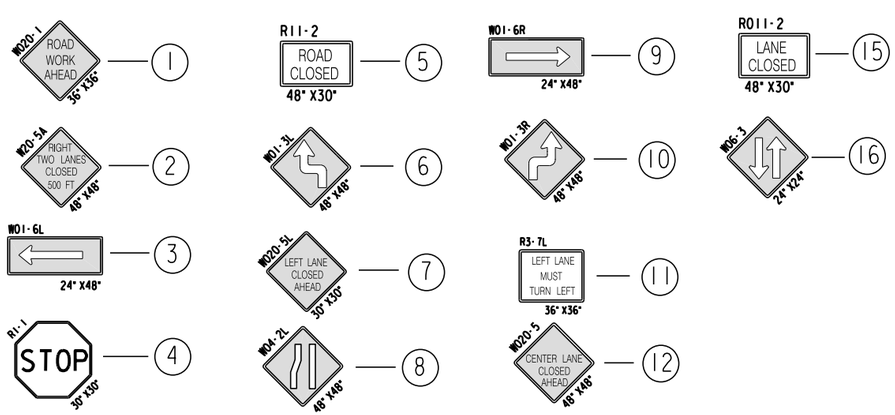

DRUMS W/LIGHTS 30' SPACING — (13)

TYPE III BARRICADES — (14)

TYPE III BARRICADES W/ SIGN — (14) + (X)

SIGNS BANDED TO UTILITY POLE — (13) + (X)

WORK AREA

DIRECTION OF TRAFFIC

TUBULAR MARKERS 25' SPACING

CONCRETE BARRICADES WITH STEADY BURN LIGHTS

(A) TPM, REMOVABLE TAPE, 4" WHITE

(B) TPM, REMOVABLE TAPE, 4" DOUBLE YELLOW

(C) TPM, REMOVABLE TAPE, 4" YELLOW

NOTE: ALL SIGNING SHALL BE THE CONTRACTORS RESPONSIBILITY. ALL SIGNS SHALL BE BANDED TO EXISTING UTILITY POLES UNLESS OTHERWISE NOTED. CONTRACTOR RESPONSIBLE FOR COVERING ALL CONFLICTING PAVEMENT MARKINGS.

City of Milwaukee

Department of Public Works

Infrastructure Services Division

WEST BECHER STREET BRIDGE OVER THE KINNICKINNIC RIVER TRAFFIC CONTROL - STAGE I

REVISIONS

DESIGNED BY S.B.	
DRAWN BY S.D.B.	
CHECKED BY J.B.	
DATE 02/2015	SCALE NONE
JOB NUMBER BR100-15-0105	
SHEET NUMBER T2 OF T6	
OF 39	

W:\STR\B0202\PLANS\PLANS\ T3 TRAFFIC CONTROL SHT 3.DGN 01-28-2015

STAGE 2

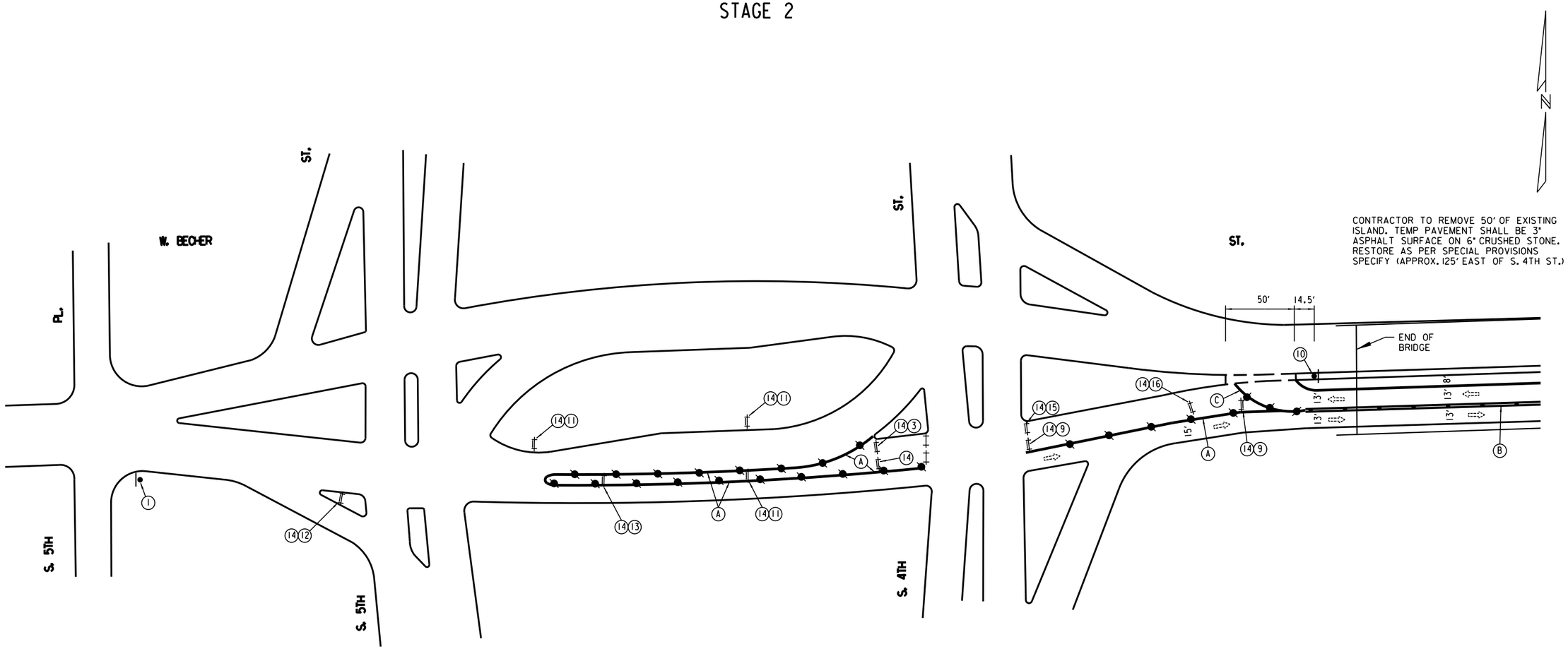

LEGEND

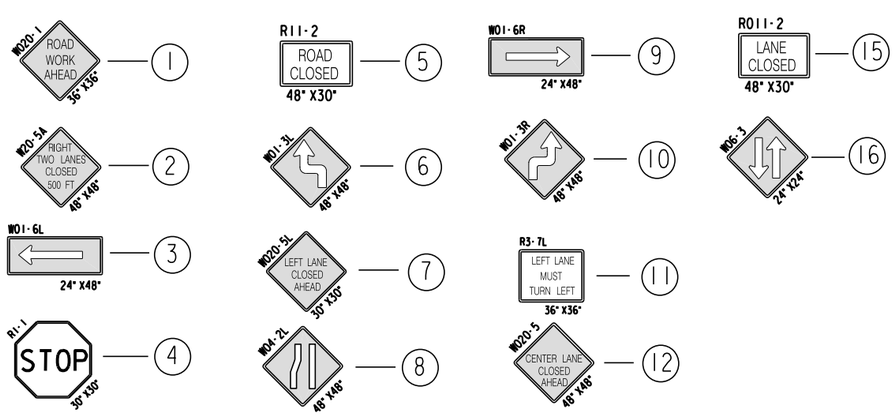

DRUMS W/LIGHTS 30' SPACING — 13

TYPE III BARRICADES — 14

TYPE III BARRICADES W/ SIGN — 14 + X

SIGNS BANDED TO UTILITY POLE — 13 + X

WORK AREA

DIRECTION OF TRAFFIC

TUBULAR MARKERS 25' SPACING

CONCRETE BARRICADES WITH STEADY BURN LIGHTS

A TPM, REMOVABLE TAPE, 4" WHITE

B TPM, REMOVABLE TAPE, 4" DOUBLE YELLOW

C TPM, REMOVABLE TAPE, 4" YELLOW

NOTE: ALL SIGNING SHALL BE THE CONTRACTORS RESPONSIBILITY. ALL SIGNS SHALL BE BANDED TO EXISTING UTILITY POLES UNLESS OTHERWISE NOTED.
CONTRACTOR RESPONSIBLE FOR COVERING ALL CONFLICTING PAVEMENT MARKINGS.

City of Milwaukee

Department of Public Works

Infrastructure Services Division

WEST BECHER STREET BRIDGE OVER THE KINNICKINNIC RIVER TRAFFIC CONTROL - STAGE 2

REVISIONS

DESIGNED BY S.B.	
DRAWN BY S.D.B.	
CHECKED BY J.B.	
DATE 02/2015	SCALE NONE
JOB NUMBER BR100-15-0105	
SHEET NUMBER T3 OF T6	
OF 39	

W:\STR\B0202\PLANS\PLANS\ T4_TRAFFIC CONTROL SHT 4.DGN 01-28-2015

STAGE 2

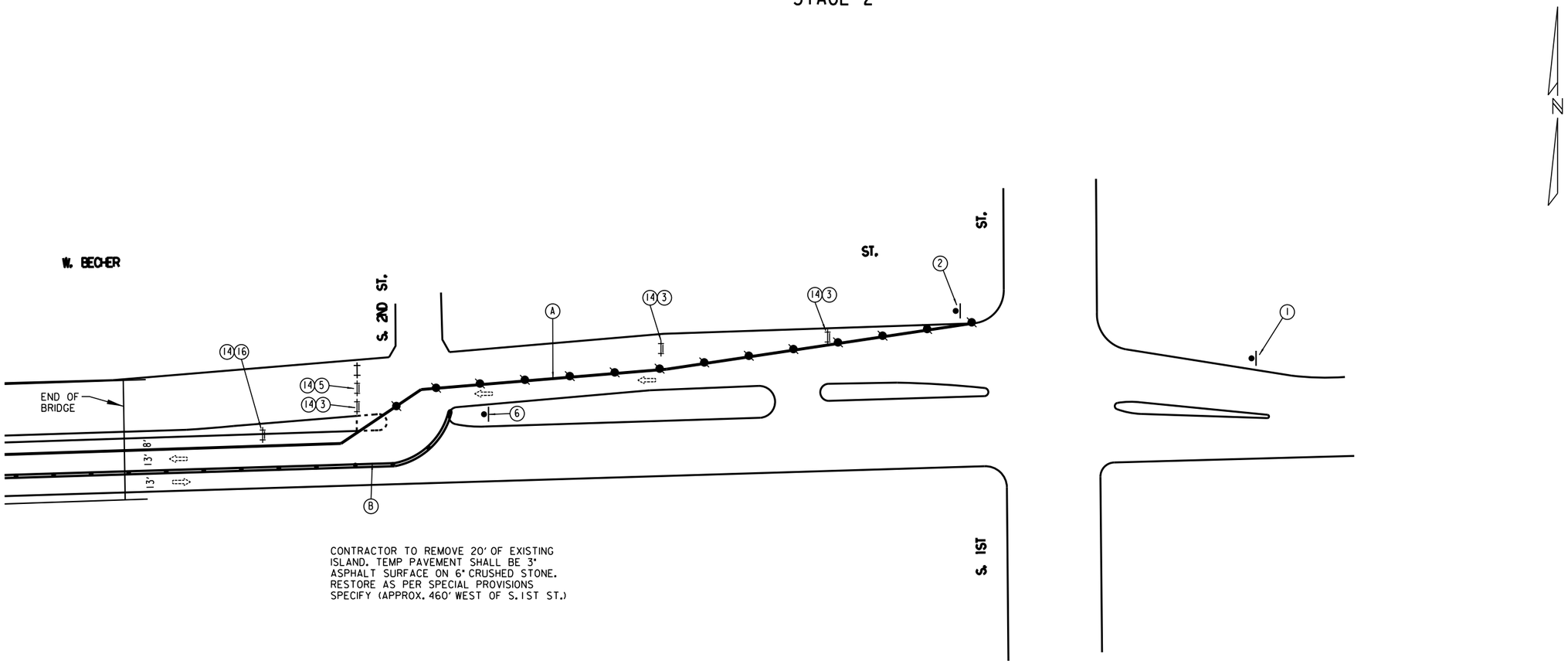

LEGEND

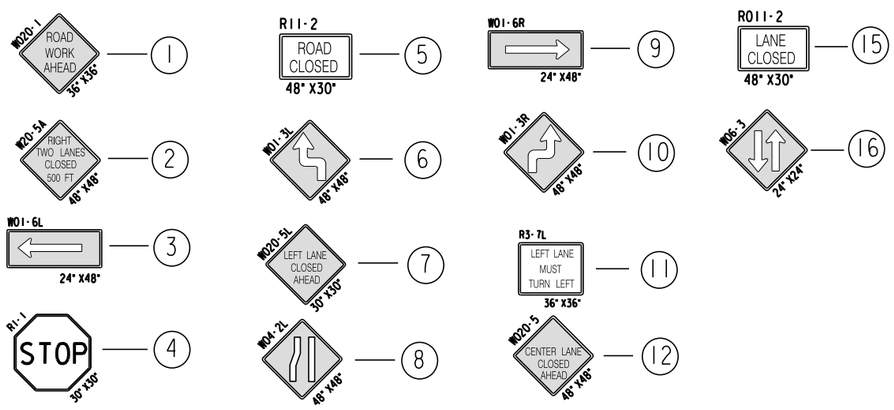

DRUMS W/LIGHTS 30' SPACING — 13

TYPE III BARRICADES — 14

TYPE III BARRICADES W/ SIGN — 14 + X

SIGNS BANDED TO UTILITY POLE — 13 + X

WORK AREA

DIRECTION OF TRAFFIC

TUBULAR MARKERS 25' SPACING

CONCRETE BARRICADES WITH STEADY BURN LIGHTS

A TPM, REMOVABLE TAPE, 4" WHITE

B TPM, REMOVABLE TAPE, 4" DOUBLE YELLOW

C TPM, REMOVABLE TAPE, 4" YELLOW

NOTE: ALL SIGNING SHALL BE THE CONTRACTORS RESPONSIBILITY. ALL SIGNS SHALL BE BANDED TO EXISTING UTILITY POLES UNLESS OTHERWISE NOTED. CONTRACTOR RESPONSIBLE FOR COVERING ALL CONFLICTING PAVEMENT MARKINGS.

City of Milwaukee

Department of Public Works

Infrastructure Services Division

WEST BECHER STREET BRIDGE
OVER THE KINNICKINNIC RIVER
TRAFFIC CONTROL - STAGE 2

REVISIONS

DESIGNED BY S.B.

DRAWN BY S.D.B.

CHECKED BY J.B.

DATE 02/2015 | SCALE NONE

JOB NUMBER BR100-15-0105

SHEET NUMBER T4 OF T6

OF 39

W:\STR\B0202\PLANS\PLANS\T5_PAVMARK.DGN 01-28-2015

PAVEMENT MARKING

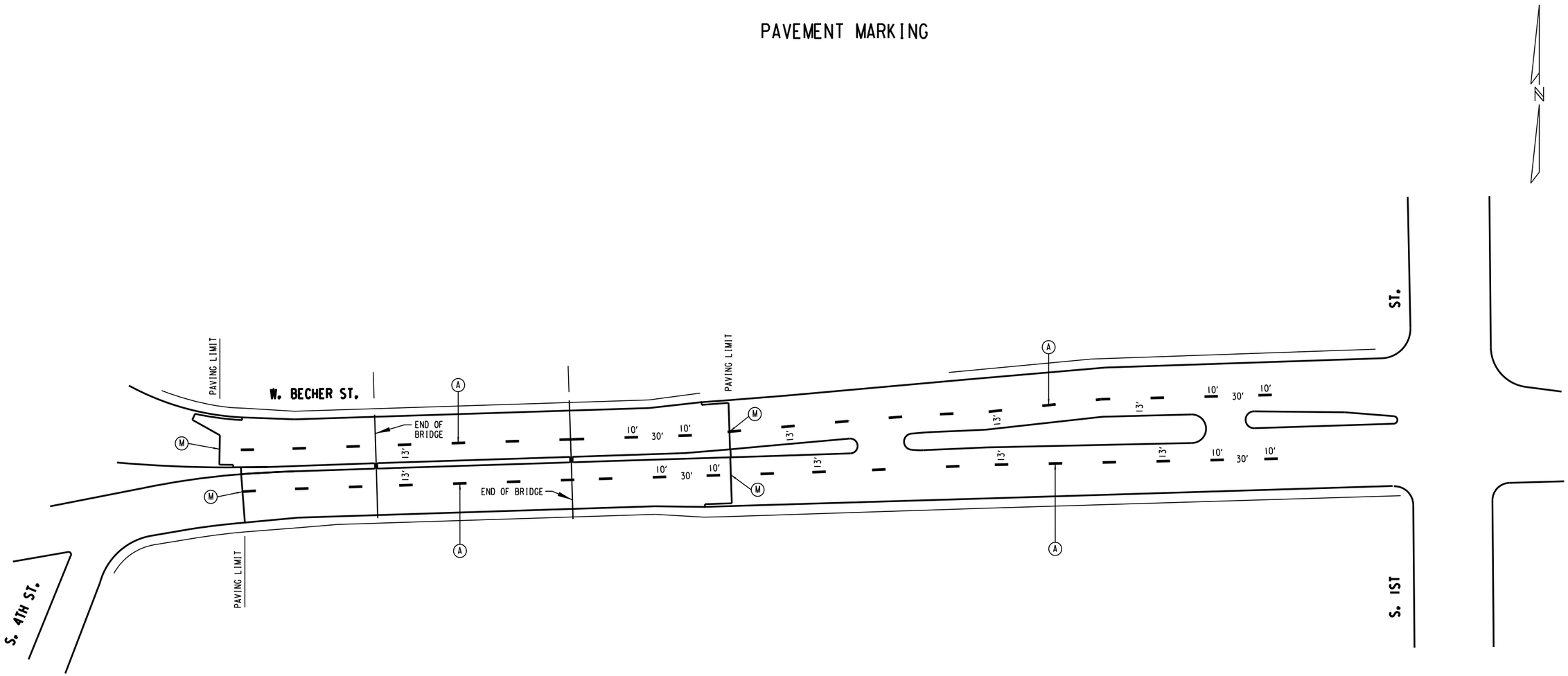

(A) PAVEMENT MARKING, 4-INCH WHITE

(M) MATCH

City of Milwaukee

Department of Public Works

Infrastructure Services Division

WEST BECHER STREET BRIDGE
OVER THE KINNICKINNIC RIVER
PAVEMENT MARKING

REVISIONS

DESIGNED BY
S. B.

DRAWN BY
G. L.

CHECKED BY
J. B.

DATE	SCALE
02/2015	NONE

JOB NUMBER
BR100-15-0105

SHEET NUMBER
T5 OF T6

OF
39

REVISED: 12-10-2014

W:\STR\B0202\PLANS\PLANS\ T6_TRAFFIC QUANTITIES SHT 6.DGN 01-16-2015

ESTIMATE OF TRAFFIC CONTROL ITEMS REQUIRED

	ITEMS	STAGE 1 80 DAYS (EACH)	(DAYS)	STAGE 2 80 DAYS (EACH)	(DAYS)	TOTAL (DAYS)
① 643.0300	TRAFFIC CONTROL, DRUMS	23	2461	40	4280	6,741
② 643.0420	TRAFFIC CONTROL, BARRICADES, TYPE III	19	2033	19	2033	4,066
643.0705	TRAFFIC CONTROL, WARNING LIGHTS, TYPE "A" (FLASHING)	38	4066	38	4066	8,132
643.0715	TRAFFIC CONTROL, WARNING LIGHTS, TYPE "C" (STEADY)	37	3959	54	5778	9,737
643.0900	TRAFFIC CONTROL, SIGNS	17	1819	16	1712	3,531
603.8000	CONCRETE BARRIER TEMPORARY PRECAST DELIVERED	400 L.F.		414 L.F.		814 L.F.
603.8125	CONCRETE BARRIER TEMPORARY PRECAST INSTALLED	404 L.F.		410 L.F.		814 L.F.
643.0500	TRAFFIC CONTROL FLEXIBLE TUBULAR MARKER POSTS	20 EACH		20 EACH		40 EACH
649.0600	TRAFFIC CONTROL FLEXIBLE TUBULAR MARKER BASES	20 EACH		20 EACH		40 EACH
③ 649.0400	TEMPORARY PAVEMENT MARKING REMOVABLE TAPE 4-INCH (WHITE)	620 L.F.		1,200 L.F.		1,820 L.F.
③ 649.0400	TEMPORARY PAVEMENT MARKING REMOVABLE TAPE 4-INCH (YELLOW)	1,160 L.F.		1,900 L.F.		3,060 L.F.

NOTES:

THE EXACT NUMBER, LOCATION AND SPACING OF ALL SIGNS AND DEVICES SHALL BE ADJUSTED TO FIT FIELD CONDITIONS AS APPROVED BY THE ENGINEER.
ALL SIGNS ARE 48" X 48" UNLESS OTHERWISE NOTED.
"WO" SIGNS ARE THE SAME AS "W" SIGNS EXCEPT THE BACKGROUND IS ORANGE.
ANY SIGNS TEMPORARY OR EXISTING, WHICH CONFLICT WITH TRAFFIC CONTOL "IN USE" WILL BE COVERED AS NEEDED AND AS APPROVED BY THE ENGINEER.
THIS WORK WILL BE INCIDENTAL TO THE ITEM OF TRAFFIC CONTROL.

CHANNELIZING DEVICES PLACED ADJACENT TO THE WORK AREA SHALL BE PULLED BACK FROM THE TRAVELED LANE WHEN WORK IS NOT IN PROGRESS.

WARNING SIGNS THAT WILL BE IN PLACE LESS THAN SEVEN CONTINUOUS DAYS AND NIGHTS MAY BE MOUNTED ON PORTABLE SUOPORTS.

① ALL DRUMS HAVE ONE STEADY BURNING YELLOW LIGHT
② ALL TYPE III BARRICADES HAVE 2 FLASHING YELLOW LIGHTS
③ WHEN PLACING TEMPORARY PAVEMENT MARKING REMOVABLE TAPE, THE TAPE SHALL BE SLICED OR CUT ACROSS ITS WIDTH EVERY 25 FEET. THIS WILL LIMIT RAVELING.

ITEMS	STAGE 1	STAGE 2	SIZE (")
R1-1	2	0	30 X 30
R3-7L	0	1	36 X 36
R11-2	1	1	48 X 30
R011-2	0	1	48 X 30
W01-3R	1	1	48 X 48
W01-3L	1	1	48 X 48
W01-6R	1	2	24 X 48
W01-6L	4	4	24 X 48
W04-2L	2	0	48 X 48
W06-3	2	2	24 X 24
W020-1	2	1	36 X 36
W020-5	0	1	48 X 48
W020-5A	1	1	48 X 48
TOTAL	17	16	

PAVEMENT MARKING QUANTITIES

STATION	PAVEMENT MARKING EPOXY 4- INCH ITEM 646.0106	PAVEMENT MARKING EPOXY 6- INCH ITEM 646.0116	PAVEMENT MARKING EPOXY 16- INCH ITEM 646.0146	PAVEMENT MARKING ARROWS EPOXY TYPE 2 ITEM 647.0166	PAVEMENT MARKING ARROWS BIKE LANE EPOXY ITEM 647.0206	PAVEMENT MARKING SYMBOLS BIKE LANE EPOXY ITEM 647.0306	PAVEMENT MARKING WORDS EPOXY ITEM 647.0356	PAVEMENT MARKING STOPLINE EPOXY 24- INCH ITEM 647.0576	PAVEMENT MARKING CROSSWALK EPOXY 12- INCH ITEM 647.0776
	L.F.	L.F.	L.F.	EACH	EACH	EACH	EACH	L.F.	L.F.
03+23.00 TO 07+25.00	440								
TOTAL	440								

City of Milwaukee
Department of Public Works
Infrastructure Services Division

WEST BECHER STREET BRIDGE
OVER THE KINNICKINNIC RIVER
TRAFFIC QUANTITIES

REVISIONS

DESIGNED BY K.M./A.R.
DRAWN BY S.D.B.
CHECKED BY J.H./A.R.
DATE 02/2015
SCALE NONE
JOB NUMBER BR100-15-0105
SHEET NUMBER T6 OF T6
OF 39

WEST BECHER STREET BRIDGE OVER THE KINNICKINNIC RIVER

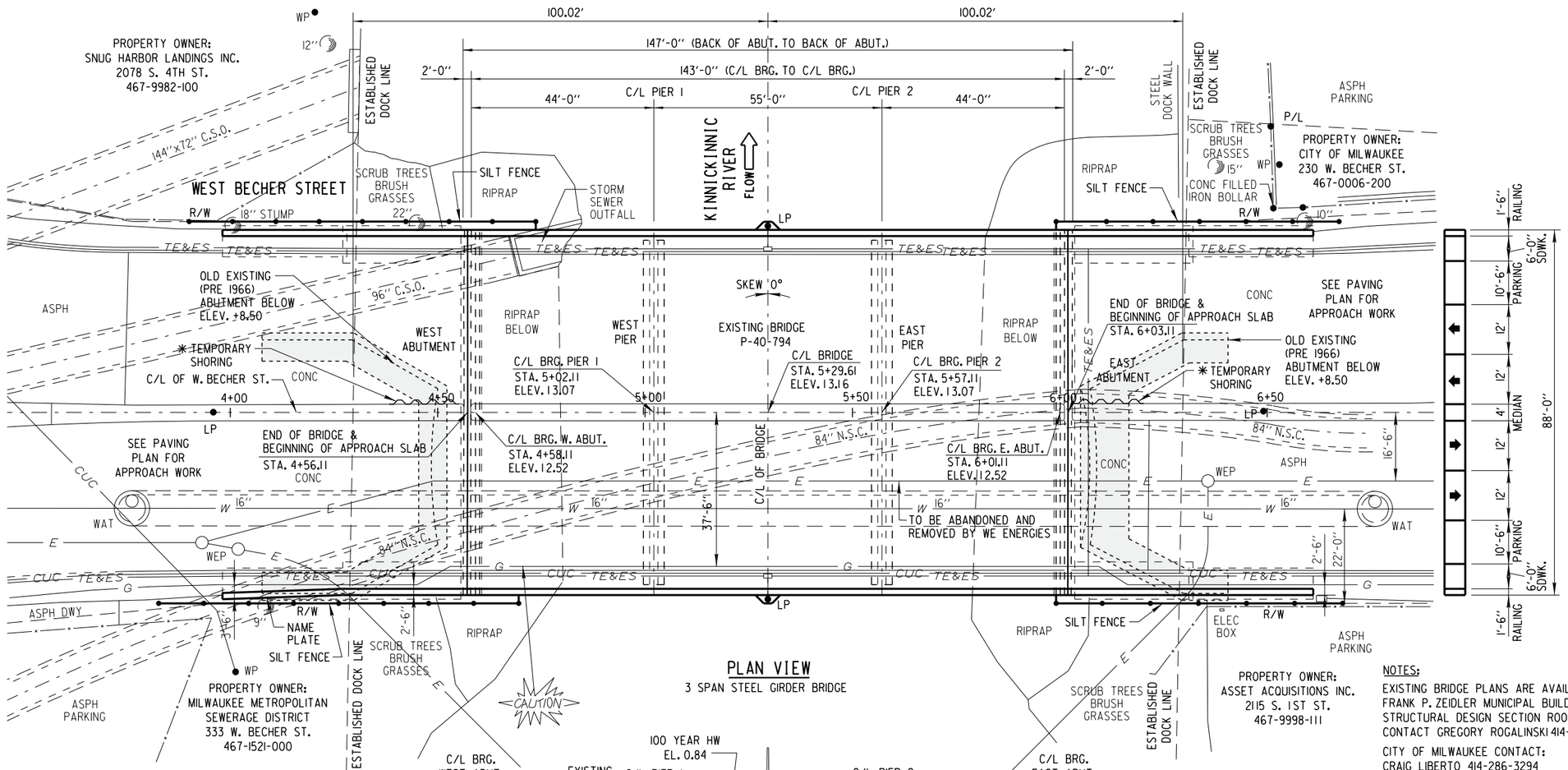

PLAN VIEW

3 SPAN STEEL GIRDER BRIDGE

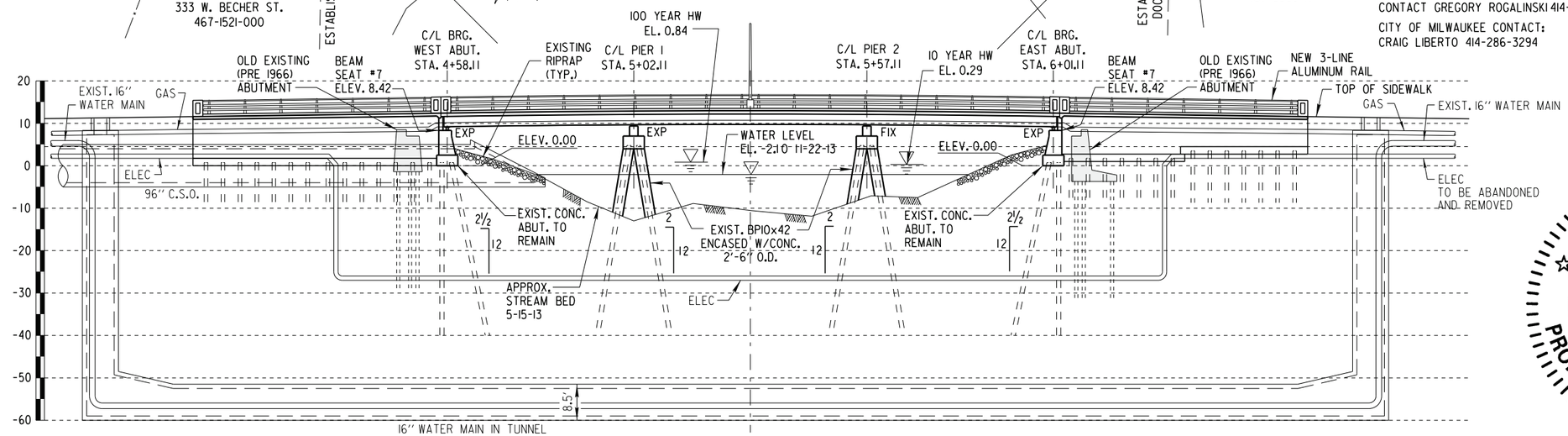

SOUTH ELEVATION

LOOKING NORTH

NOTE:

OLD EXISTING (PRE-1966) ABUTMENT LOCATED AT LOCATION OF TEMPORARY SHORING. SEE LOCATION ON PLAN INDICATED WITH GREY SHADING.

BENCH MARKS:

STANDARD BENCH MARK 304

2011 S. 1ST ST.
WEST SIDE OF S. 1ST ST., SOUTH SIDE OF KINNICKINNIC RIVER (NORTH OF W. BECHER ST.). NORTH END OF EAST SIDE ENTRANCE TO 2011 S. 1ST ST.
ELEV. 6.944

HYDRANT

SOUTH SIDE OF BRIDGE
N.W. BOLT
STA. 7+03 ELEV. 12.46

HYDRANT

NE CORNER OF 4TH & BECHER
N.W. BOLT
ELEV. 11.27

* TEMPORARY SHORING IN BETWEEN EXIST. & OLD ABUTMENT AND EXTENDED BEHIND OLD ABUTMENT AS NEEDED (MIGHT NEED TO BREAK THE HEEL OF OLD ABUTMENT). MAY NEED TIMBER LAGGING/H-PILES MOUNTED ON TOP OF OLD ABUTMENT.

NOTES:

EXISTING BRIDGE PLANS ARE AVAILABLE IN FRANK P. ZEIDLER MUNICIPAL BUILDING STRUCTURAL DESIGN SECTION ROOM 907 CONTACT GREGORY ROGALINSKI 414-286-0483.

CITY OF MILWAUKEE CONTACT:
CRAIG LIBERTO 414-286-3294

WISCONSIN
CRAIG S. LIBERTO
E-23746
MILWAUKEE
WIS.
PROFESSIONAL ENGINEER

Craig S. Liberto 2/5/2015

City of Milwaukee

Department of Public Works

Infrastructure Services Division

WEST BECHER STREET BRIDGE OVER THE KINNICKINNIC RIVER SITE PLAN AND ELEVATION

REVISIONS

DESIGNED BY J.P.H.	
DRAWN BY K.P.S.	
CHECKED BY A.R.	
DATE 02/2015	SCALE NONE
JOB NUMBER BR100-15-0105	
SHEET NUMBER 1 OF 26	
OF 39	

W:\STR\B0202\PLANS\PLANS\ 01_SITE.DGN 02-05-2015

W:\STR\B0202\PLANS\PLANS 02-NOTES AND QUANTITIES.DGN 02-04-2015

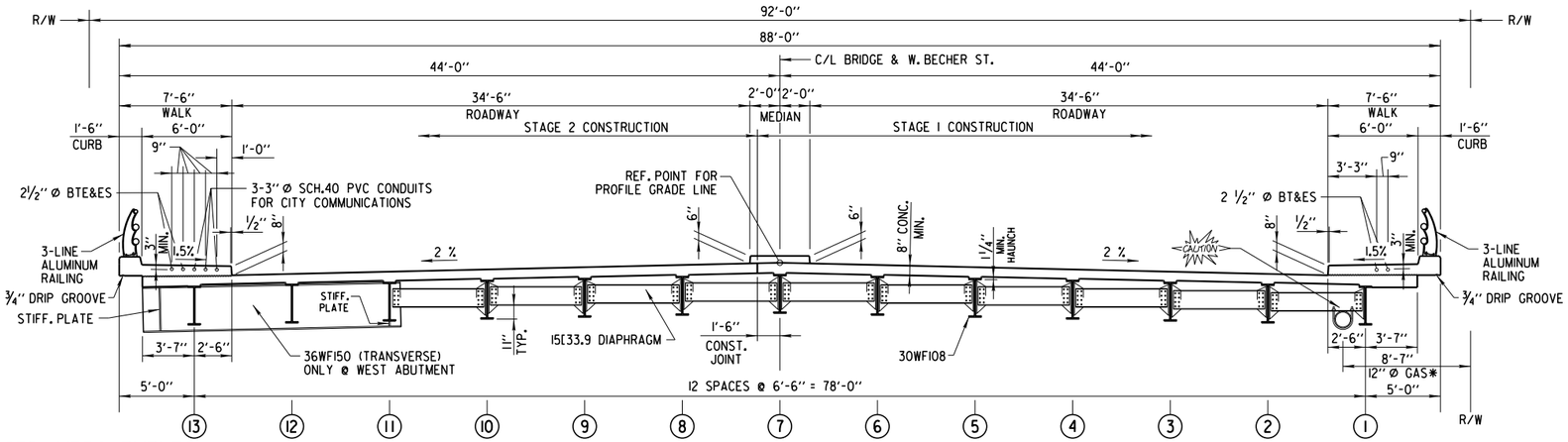

CROSS SECTION THRU C/L OF NEW BRIDGE
(LOOKING EAST)

* NOTE - 12" Ø WE ENERGIES GAS LINE TO REMAIN IN SERVICE DURING BRIDGE CONSTRUCTION.

PROPOSED IMPROVEMENTS

THE PROJECT AS PROPOSED CONSISTS OF: SURFACE REPAIRS TO THE ABUTMENTS AND PIERS, REPAIR & REPLACEMENT OF BEARING ASSEMBLIES AS NEEDED, SAND BLASTING AND PAINTING STEEL GIRDERS, WELDING SHEAR STUDS TO THE TOP FLANGE OF GIRDERS, REPLACING THE CONCRETE DECK, REPLACING EXPANSION JOINTS AT THE ABUTMENTS, CONCRETE STAINING OF ABUTMENTS AND PIERS, AND REPLACING BRIDGE RAILING.

CONSTRUCTION SPECIFICATIONS

WISCONSIN DEPARTMENT OF TRANSPORTATION STANDARD SPECIFICATIONS FOR HIGHWAY AND STANDARD CONSTRUCTION, 2015 EDITION, EXCEPT AS NOTED.

AWS BRIDGE WELDING CODE D1.5, LATEST EDITION.

AWS STRUCTURAL WELDING CODE-STEEL D1.1, LATEST EDITION.

ESTIMATE OF QUANTITIES

ITEM NO.	BID ITEM	UNIT	ABUTMENTS EAST	ABUTMENTS WEST	SUPER-STRUCTURE	TOTAL
201.0120	CLEARING	ID	10	49		59
201.0220	GRUBBING	ID	10	49		59
203.0600.S	REMOVING OLD STRUCTURE OVER WATERWAY WITH MINIMAL DEBRIS STATION 5+29.61	LS				1
206.1000	EXCAVATION FOR STRUCTURES BRIDGES (P-40-794)	LS				1
210.0100	BACKFILL STRUCTURE	CY	195	195		390
502.0100	CONCRETE MASONRY BRIDGES	CY	32	32	406	470
502.3100	EXPANSION DEVICE (P-40-794)	LS			1	1
502.3200	PROTECTIVE SURFACE TREATMENT	SY			1660	1660
502.5005	MASONRY ANCHORS TYPE L NO. 5 BARS	EACH	562	562		1124
505.0605	BAR STEEL REINFORCEMENT HS COATED BRIDGES	LB	6070	5939	92364	104,373
506.0105	STRUCTURAL STEEL CARBON	LB			44	44
506.2610	BEARING PADS ELASTOMERIC LAMINATED (P-40-794)	EACH			25	25
506.3015	WELDED STUD SHEAR CONNECTORS ⅞X 6-INCH	EACH			1716	1716
506.3025	WELDED STUD SHEAR CONNECTORS ⅞x 8-INCH	EACH			1716	1716
506.7050.S	REMOVING BEARINGS (P-40-794)	EACH			25	25
509.1500	CONCRETE SURFACE REPAIR	SF	10	10		20
509.9025.S	EPOXY INJECTION CRACK REPAIR	LF	99	85		184
511.1200	TEMPORARY SHORING (P-40-794)	SF	39	39		78
516.0100	DAMPPROOFING	SY	53	53		106
516.0500	RUBBERIZED MEMBRANE WATERPROOFING	SY	50	50		100
517.0900.S	PREPARATION AND COATING OF TOP FLANGES (P-40-794)	LS			1	1
517.1010.S	CONCRETE STAINING (P-40-794)	SF	463	463	2127	3053
517.1800.S	STRUCTURE REPAINTING RECYCLED ABRASIVE (P-40-794)	LS			1	1
517.4500.S	NEGATIVE PRESSURE CONTAINMENT AND COLLECTION OF WASTE MATERIAL (P-40-794)	LS			1	1
517.6001.S	PORTABLE DECONTAMINATION FACILITY	EACH			1	1
625.0100	TOPSOIL	SY				267
628.1504	SILT FENCE	LF	158	158		316
628.1520	SILT FENCE MAINTENANCE	LF	158	158		316
628.2023	EROSION MAT CLASS II TYPE B	SY				267
630.0120	SEEDING MIXTURE NO. 20	LB				3
642.5201	FIELD OFFICE TYPE C	EACH				1
652.0230	CONDUIT RIGID NONMETALLIC SCHEDULE 40 2 ½-INCH	LF			1554	1554
652.0235	CONDUIT RIGID NONMETALLIC SCHEDULE 40 3-INCH	LF			1005	1005
SPV.0060.01	JUNCTION BOXES 16" X 12" X 8"	EACH				2
SPV.0060.02	RECTANGULAR POLYMER CONC. VAULT (COMMUNICATIONS) 17" X 30" X 18"	EACH				2
SPV.0060.03	RECTANGULAR POLYMER CONC. VAULT (STREET LIGHTING) 13" X 24" X 18"	EACH			8	8
SPV.0060.04	END DIAPHRAGM ADJUSTMENT	EACH			22	22
SPV.0105.01	3-LINE ALUMINUM RAILING (P-40-794)	LS			1	1
SPV.0105.02	ELECTRICAL WORK	LS			1	1
SPV.0105.03	GAS MAIN PROTECTION (P-40-794)	LS			1	1

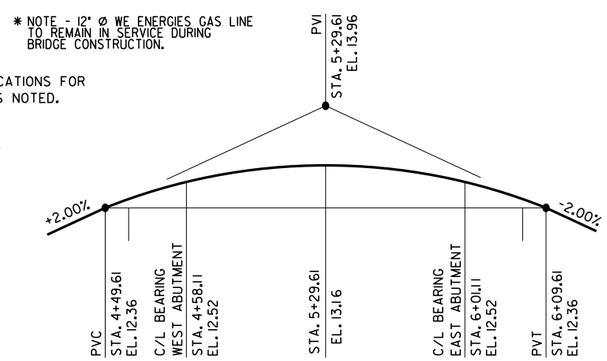

PROFILE GRADE LINE ALONG C/L OF W. BECHER ST.

DESIGN SPECIFICATION

AASHTO STANDARD SPECIFICATION
FOR HIGHWAY BRIDGES, 17TH EDITION

DESIGN DATA

DEAD LOAD

CONCRETE = 150 PCF
FWS = 20 PSF
RAILING W/ CURB = 150 LB/LF

LIVE LOAD

DECK DESIGN RATING: HS-20
SUPERSTRUCTURE INVENTORY RATING: HS-24
SUPERSTRUCTURE OPERATING RATING: HS-30
WISCONSIN STANDARD PERMIT VEHICLE LOAD: 250 KIPS

ULTIMATE DESIGN STRESSES:

CONCRETE MASONRY (SLAB).....f'c = 4,000 PSI
CONCRETE MASONRY (OTHERS).....f'c = 3,500 PSI
BAR STEEL REINFORCEMENT.....fy = 60,000 PSI
ROLLED STEEL BEAMS/SHAPES.....Fy = 50,000 PSI NEW
.....Fy = 36,000 PSI OLD

HYDRAULIC DATA

INSTANTANEOUS PEAK DISCHARGE, 100 YEARS	=	10,400 CFS (SEWRPC)
VELOCITY THRU BRIDGE, 100 YEARS	=	12.4 FPS (SEWRPC)
100 YEAR FLOOD STAGE	=	581.44 NGVD29
10 YEAR FLOOD STAGE	=	580.89 NGVD29 (SEWRPC)
2 YEAR FLOOD STAGE	=	NOT AVAILABLE
WATERWAY AREA THRU BRIDGE	=	842 S.F.
DRAINAGE AREA	=	24 SQ. MI.
SCOUR CRITICAL CODE	=	7

TRAFFIC VOLUME

ADT (2014) = 9,700
ADT (2034) = 11,200
ROADWAY DESIGN SPEED = 30 MPH

GENERAL NOTES

- DRAWINGS SHALL NOT BE SCALED.
- PLACE BAR STEEL REINFORCEMENT WITH 2" OF CLEAR CONCRETE COVER UNLESS OTHERWISE NOTED.
- BEVEL EXPOSED EDGES OF CONCRETE 1" UNLESS OTHERWISE NOTED.
- STATIONS AND ELEVATIONS ARE IN FEET.
- ELEVATIONS ARE REFERENCED TO CITY OF MILWAUKEE DATUM.
- CITY OF MILWAUKEE DATUM = 580.6 NGVD.
- REINFORCING BARS ARE ENGLISH, FIRST DIGIT OF A THREE DIGIT BAR MARK OR FIRST TWO DIGITS OF A FOUR DIGIT BAR MARK SIGNIFY BAR SIZE.
- EXISTING GROUND LINE SHALL BE UPPER LIMIT OF EXCAVATION AT ABUTMENTS.
- ALL SPACES EXCAVATED AND NOT OCCUPIED BY STRUCTURE SHALL BE BACKFILLED WITH BACKFILL STRUCTURE.
- JOINT FILLER SHALL CONFORM TO AASHTO DESIGNATION M153 TYPE I, II, OR III, OR AASHTO DESIGNATION M213.
- DIMENSIONS SHOWN ARE BASED ON THE ORIGINAL STRUCTURE PLANS.
- EXISTING ABUTMENTS, WING WALLS AND PIERS ARE TO REMAIN IN PLACE AS SHOWN AND INCORPORATED INTO NEW CONSTRUCTION.
- VARIATIONS TO EXISTING OR PROPOSED GRADE LINE OVER ¼" MUST BE SUBMITTED TO FIELD ENGINEER FOR REVIEW.
- CLEAN, STRAIGHTEN, EPOXY COAT AND INCORPORATE EXISTING BAR STEEL REINFORCEMENT INTO NEW WORK, WHERE APPLICABLE.
- CONCRETE REMOVALS SHALL BE DEFINED BY A 1" DEEP SAW CUT.
- IF AN ITEM IS LISTED OR DESCRIBED IN SPECIAL PROVISIONS AND IS NOT SPECIFICALLY SHOWN ON DRAWINGS, OR IF AN ITEM IS SHOWN ON THE DRAWINGS AND IS NOT SPECIFICALLY LISTED OR DESCRIBED IN SPECIAL PROVISIONS, THEN IT SHALL BE CONSIDERED A PART OF THE WORK AND NO ADDITIONAL COMPENSATION WILL BE ALLOWED, IF IT IS NOT OBVIOUS AS TO WHICH PAY ITEM IT BELONGS, THEN ENGINEER SHALL BE CONSULTED FOR INTERPRETATION, AND THE ENGINEERS DECISION SHALL GOVERN.
- WELDING NOT SHOWN ON THE PLANS WILL NOT BE PERMITTED, EXCEPT BY WRITTEN PERMISSION FROM THE ENGINEER AND WITH AN APPROVED WELD PROCEDURE PROVIDED BY THE CONTRACTOR.
- ALL EXISTING STEEL SHALL BE SANDBLASTED AND PAINTED UNDER BID ITEMS 517.0900.S "PREPARATION AND COATING OF TOP FLANGES P-40-794", 517.1800.S "STRUCTURE REPAINTING RECYCLED ABRASIVE (STRUCTURE P-40-794)", AND 517.4500.S "NEGATIVE PRESSURE CONTAINMENT AND COLLECTION OF WASTE MATERIALS (P-40-794)".
- PAINTING SHALL BE IN ACCORDANCE WITH SPECIAL PROVISIONS. FINISH COAT COLOR FOR STRUCTURAL STEEL SHALL BE AS SELECTED BY CITY OF MILWAUKEE.
- CONCRETE STAIN COLOR SHALL MATCH EXISTING CONCRETE COLOR PENDING ENGINEER'S APPROVAL OF 24" x 24" SAMPLE.
- EXPANSION JOINT ASSEMBLY, INCLUDING ANCHOR STUDS AND HARDWARE SHALL BE PAID FOR IN THE LUMP SUM PRICE BID AS "EXPANSION DEVICE (P-40-794)".
- THE CONTRACTOR SHALL SUPPLY A NEW NAME PLATE IN ACCORDANCE WITH SECTION 502.3.11 OF THE STANDARD SPECIFICATIONS AND THE STANDARD DETAIL DRAWINGS. NAME PLATE TO SHOW ORIGINAL CONSTRUCTION YEAR OF 1966.
- BENDING DIMENSIONS FOR REINFORCING BARS ARE OUT TO OUT.
- ALL MATERIAL IN BEARINGS, INCLUDING SHIM PLATES, PRECAST CONCRETE BEARING BLOCKS, EPOXY ANCHORS, ¼" GROUT, ANCHOR BOLTS, STEEL PLATES, AND BEARING PADS, SHALL BE PAID FOR AT THE UNIT PRICE BID FOR "BEARING PADS ELASTOMERIC LAMINATED" EACH.
- BACKFILL THE FRONT FACE OF WALLS BEFORE BACK FACE.
- LOCATIONS OF EXISTING AND PROPOSED UTILITY INSTALLATIONS AS SHOWN ON THE PLANS ARE APPROXIMATE. THERE MAY BE OTHER UTILITY INSTALLATIONS WITHIN THE PROJECT AREA THAT ARE NOT SHOWN.
- ALSO SEE ROADWAY PLANS FOR EXISTING AND PROPOSED UTILITY LOCATIONS.

BRIDGE REMOVAL AND CONSTRUCTION NOTES

EXISTING BRIDGE WILL BE REMOVED IN TWO STAGES TO KEEP W. BECHER STREET OPEN FOR 2-WAY TRAFFIC DURING CONSTRUCTION. EXISTING EASTBOUND ROADWAY IS TO BE REMOVED FIRST WHILE 2-WAY TRAFFIC IS TO BE CARRIED BY THE EXISTING WESTBOUND ROADWAY. AFTER PROPOSED EASTBOUND ROADWAY IS COMPLETED TRAFFIC WILL BE DIVERTED TO THE NEWLY FINISHED EASTBOUND ROADWAY AND THE PROPOSED WESTBOUND ROADWAY WILL BE CONSTRUCTED.

REMOVE EXISTING BRIDGE DECK P-40-794 OVER KINNICKINNIC RIVER IN LARGE SECTIONS & CONFORMING TO CONTRACTOR'S APPROVED STRUCTURE REMOVAL & CLEAN-UP PLAN. DURING SUPERSTRUCTURE REMOVAL, PREVENT LARGE PIECES AND MINIMIZE SMALL PIECES FROM ENTERING WATERWAY.

City of Milwaukee
Department of Public Works
Infrastructure Services Division

WEST BECHER STREET BRIDGE OVER THE KINNICKINNIC RIVER SECTION AND PLAN QUANTITIES

REVISIONS

DESIGNED BY J.P.H.
DRAWN BY R.B.M.
CHECKED BY A.R.
DATE 10/2014
SCALE NONE
JOB NUMBER BR100-15-0105
SHEET NUMBER 2 OF 26
OF 39

W:\STR\B0202\PLANS\PLANS\ 03_WESTDECK.DGN 02-05-2015

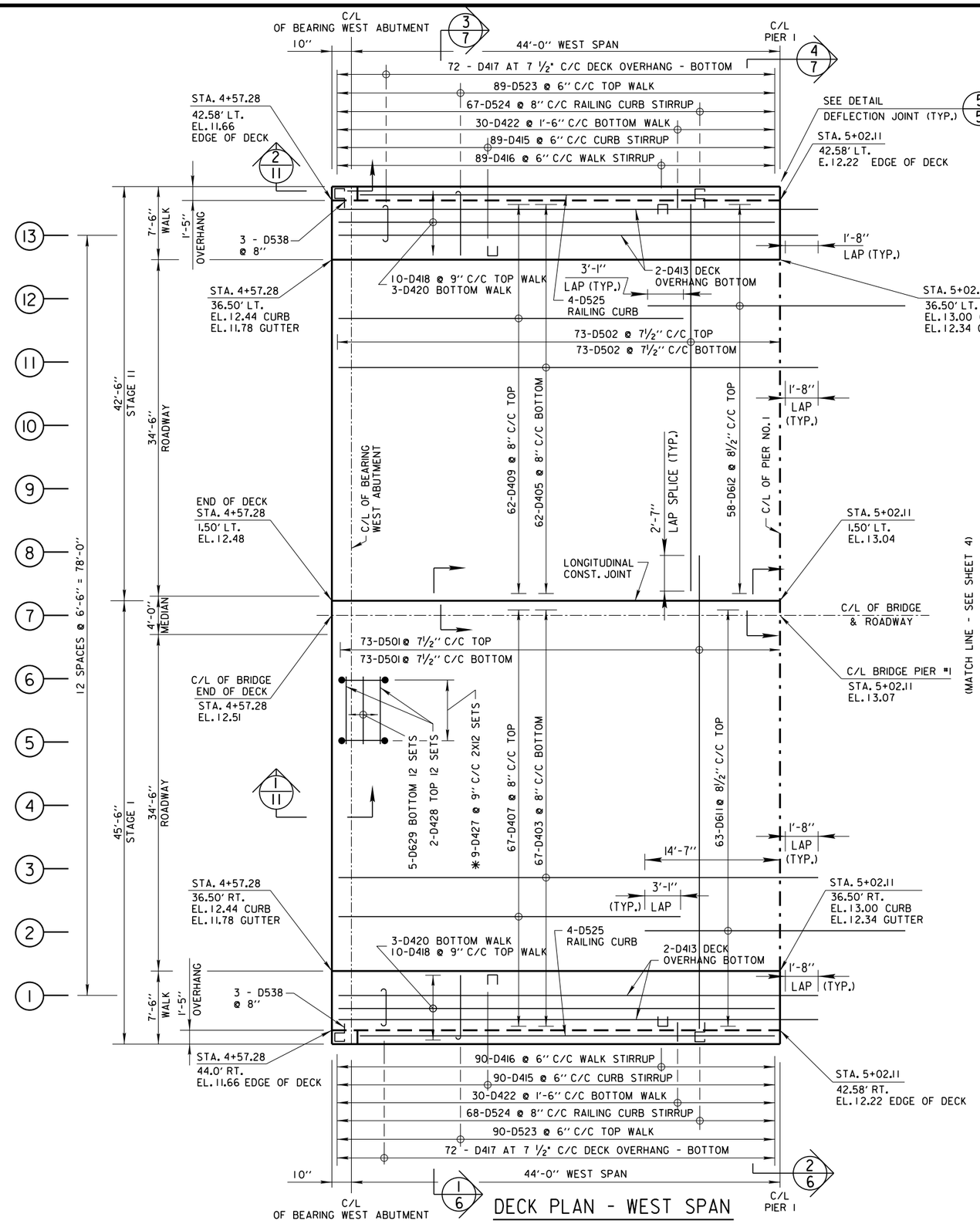

DECK PLAN - WEST SPAN

STEEL PAINT COLOR TO BE FEDERAL NO. 25052.*

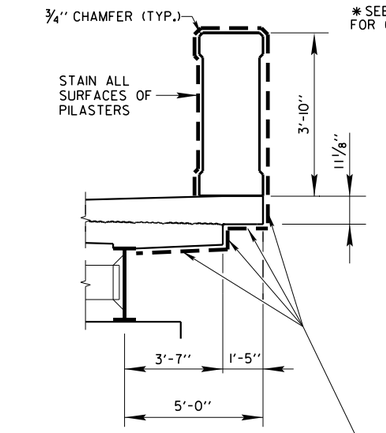

DETAIL CONCRETE STAIN OF SUPERSTRUCTURE AT PILASTER

TYP. FOR SHEETS 6 AND 7

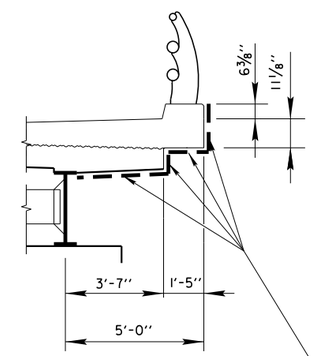

DETAIL CONCRETE STAIN OF SUPERSTRUCTURE AT 3-LINE ALUMINUM RAILING

TYP. FOR SHEETS 6 AND 7

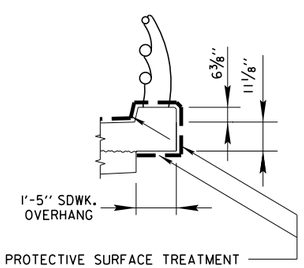

DETAIL PROTECTIVE SURFACE TREATMENT

TYP. FOR SHEETS 6 AND 7

* **NOTE**

CUT D427 (DIAPHRAGM STIRRUP BARS) TO FIT AT 36WF150 BETWEEN GIRDERS 11 & 12 AND 12 & 13.

City of Milwaukee

Department of Public Works

Infrastructure Services Division

WEST BECHER STREET BRIDGE OVER THE KINNICKINNIC RIVER DECK PLAN WEST SPAN

REVISIONS

DESIGNED BY J.P.H.	
DRAWN BY S.J.S.	
CHECKED BY A.R.	
DATE 02/2015	SCALE NONE
JOB NUMBER BR100-15-0105	
SHEET NUMBER 3 OF 26	
OF 39	

W:\STR\B0202\PLANS\PLANS\ 04_CENTERDECK.DGN 1-16-15

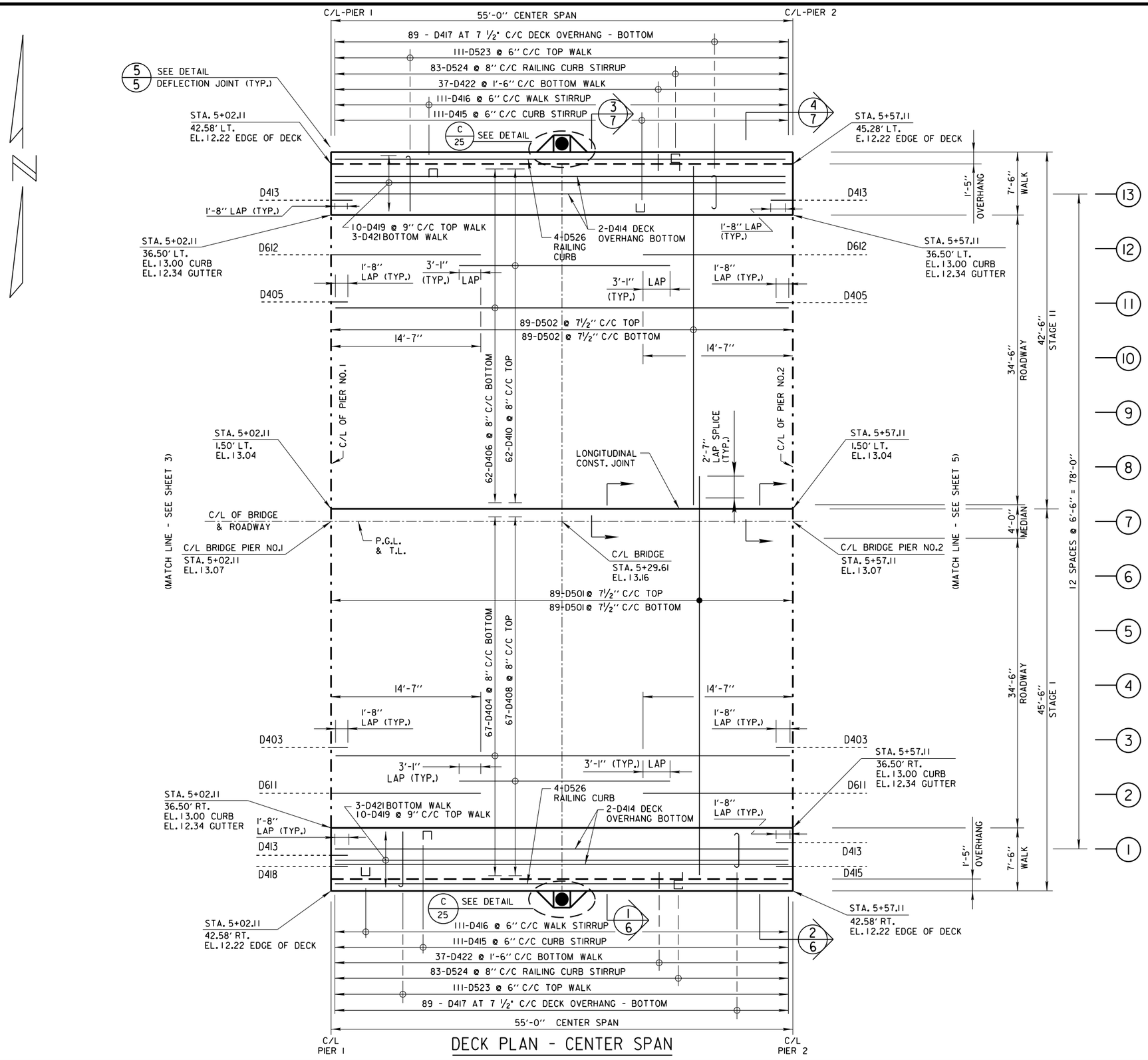

DECK PLAN - CENTER SPAN

City of Milwaukee

Department of Public Works

Infrastructure Services Division

WEST BECHER STREET BRIDGE OVER THE KINNICKINNIC RIVER DECK PLAN CENTER SPAN

REVISIONS

DESIGNED BY J.P.H.	
DRAWN BY S.J.S.	
CHECKED BY A.R.	
DATE 02/2015	SCALE NONE
JOB NUMBER BR100-15-0105	
SHEET NUMBER 4 OF 26	
OF 39	

W:\STR\B0202\PLANS\PLANS 05_EASTDECK.DGN 01-16-2015

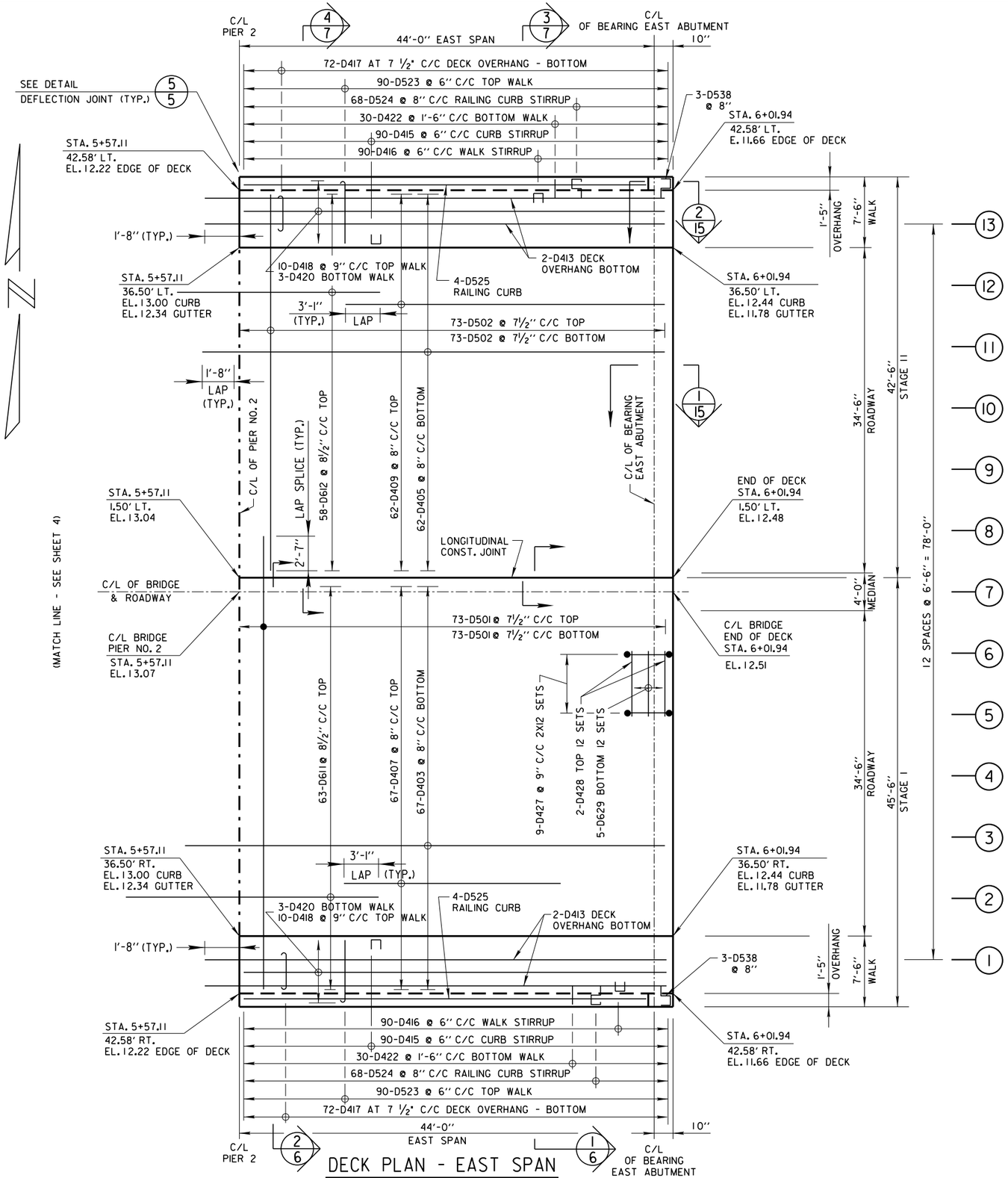

DECK PLAN - EAST SPAN

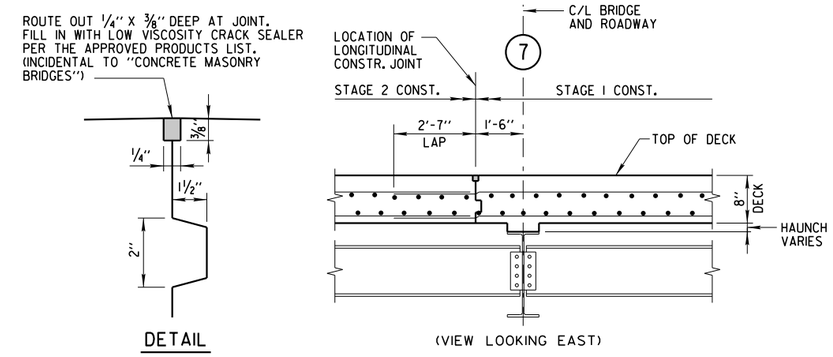

DECK LONGITUDINAL CONSTRUCTION JOINT

PLACED ALONG LONGITUDINAL CONSTRUCTION JOINT OF BRIDGE DECK

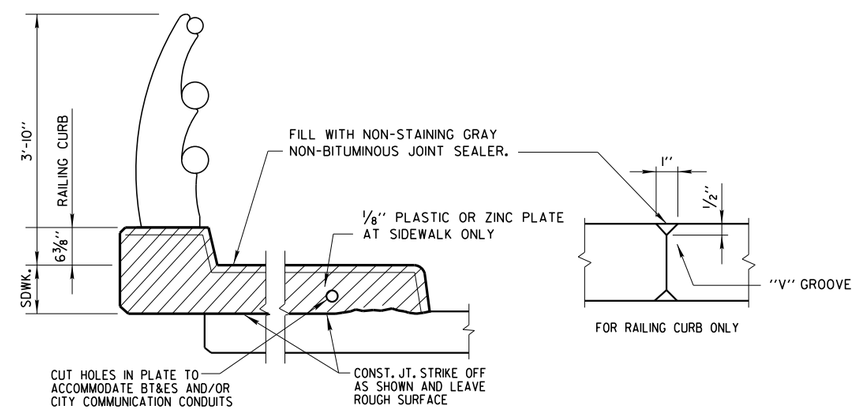

DETAIL 5/3 5/4 5/5

ABOVE PIERS AT DEFLECTION JOINTS

City of Milwaukee

Department of Public Works

Infrastructure Services Division

WEST BECHER STREET BRIDGE OVER THE KINNICKINNIC RIVER DECK PLAN EAST SPAN AND DETAILS

REVISIONS

DESIGNED BY J.P.H.	
DRAWN BY S.J.S.	
CHECKED BY A.R.	
DATE 02/2015	SCALE NONE
JOB NUMBER BR100-15-0105	
SHEET NUMBER 5 OF 26	
OF 39	

W:\STR\B0202\PLANS\PLANS 06_STAGE1SECTION.DGN 01-30-2015

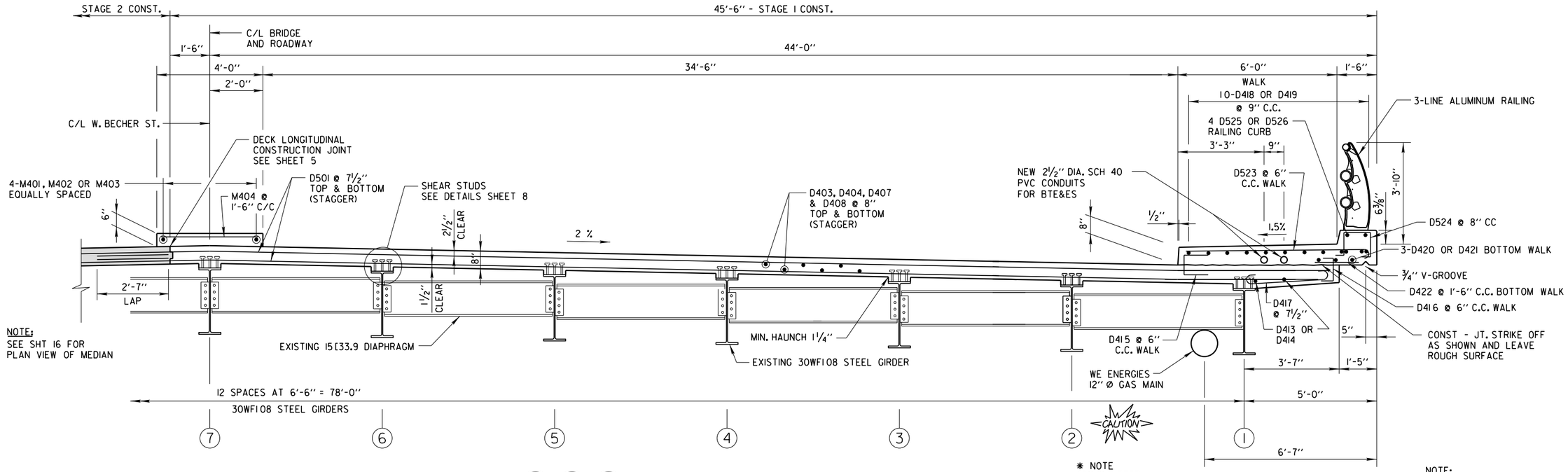

1/3 1/4 1/5 **CROSS SECTION STAGE 1 - ALL SPANS**

LOOKING EAST NEAR MIDSPAN

* NOTE
12" DIAMETER
WE ENERGIES GAS MAIN
TO REMAIN IN-SERVICE
DURING ALL STAGES
OF BRIDGE CONSTRUCTION.

NOTE:
SEE SHT 3 FOR
CONCRETE STAINING LIMITS

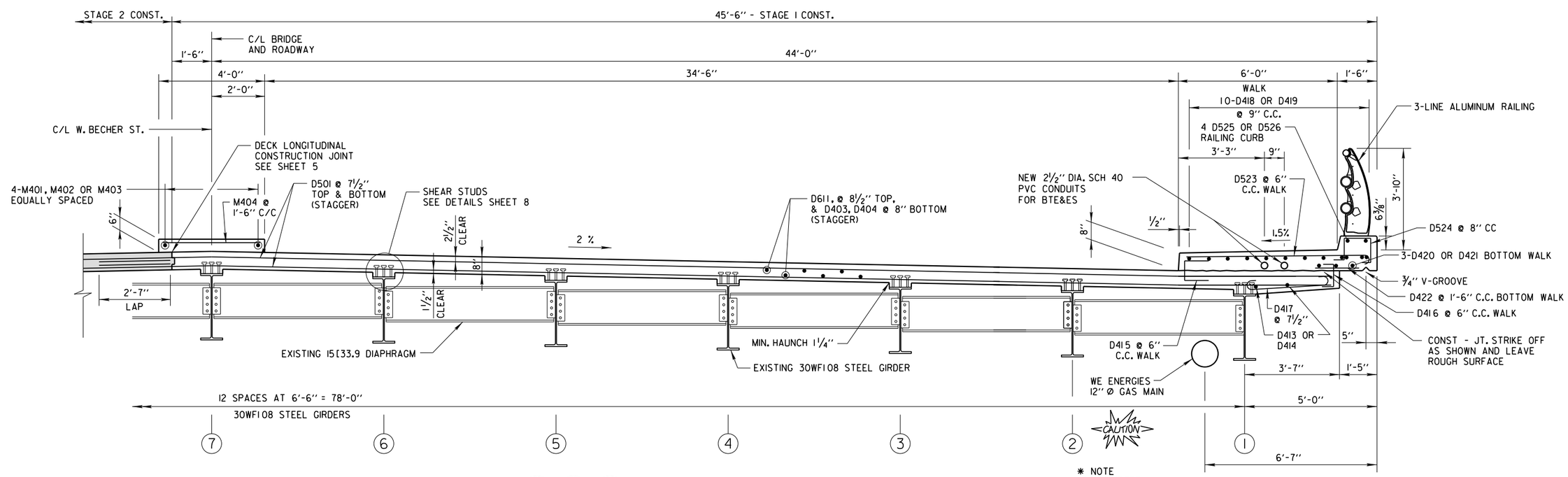

2/3 2/4 2/5 **CROSS SECTION STAGE 1 - ALL SPANS**

LOOKING EAST NEAR PIERS

* NOTE
12" DIAMETER
WE ENERGIES GAS MAIN
TO REMAIN IN-SERVICE
DURING ALL STAGES
OF BRIDGE CONSTRUCTION.

City of Milwaukee

Department of Public Works

Infrastructure Services Division

WEST BECHER STREET BRIDGE OVER THE KINNICKINNIC RIVER
STAGE 1 CONSTRUCTION CROSS SECTION

REVISIONS

DESIGNED BY J.P.H.	
DRAWN BY S.J.S.	
CHECKED BY A.R.	
DATE 02/2015	SCALE NONE
JOB NUMBER BR100-15-0105	
SHEET NUMBER 6 OF 26	
OF 39	

W:\STR\B0202\PLANS\PLANS 07_STAGE2SECTION.DGN 01-29-2015

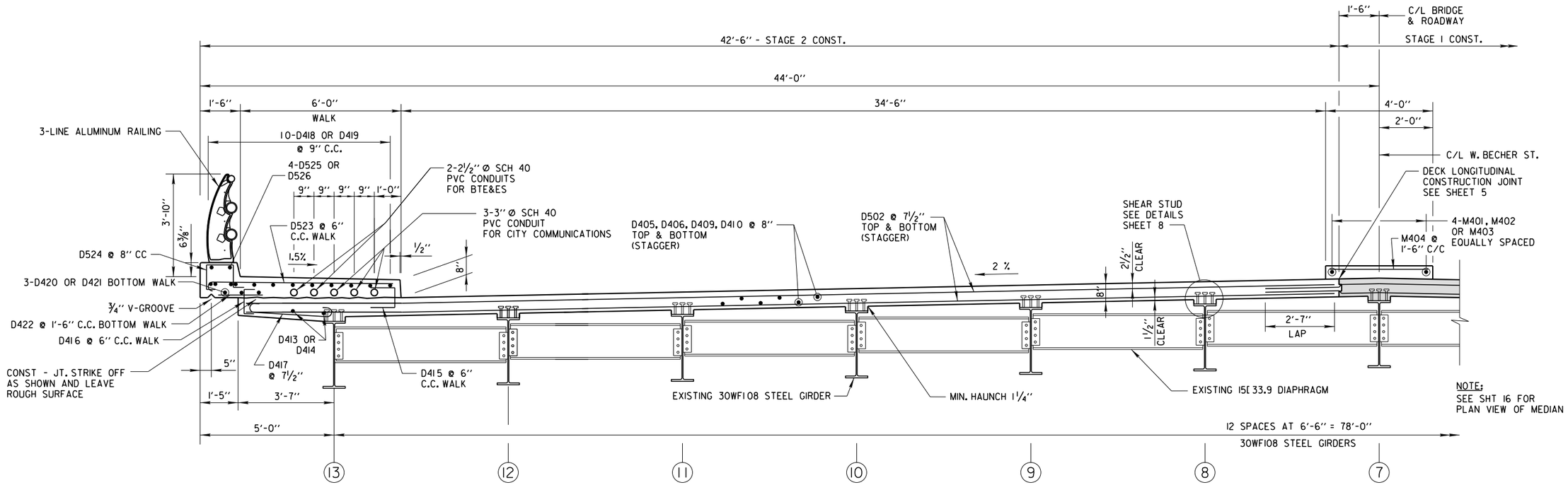

NOTE:
SEE SHT 3 FOR CONCRETE STAINING LIMITS

3/3 3/4 3/5 CROSS SECTION STAGE 2 - ALL SPANS

LOOKING EAST NEAR MIDSPAN

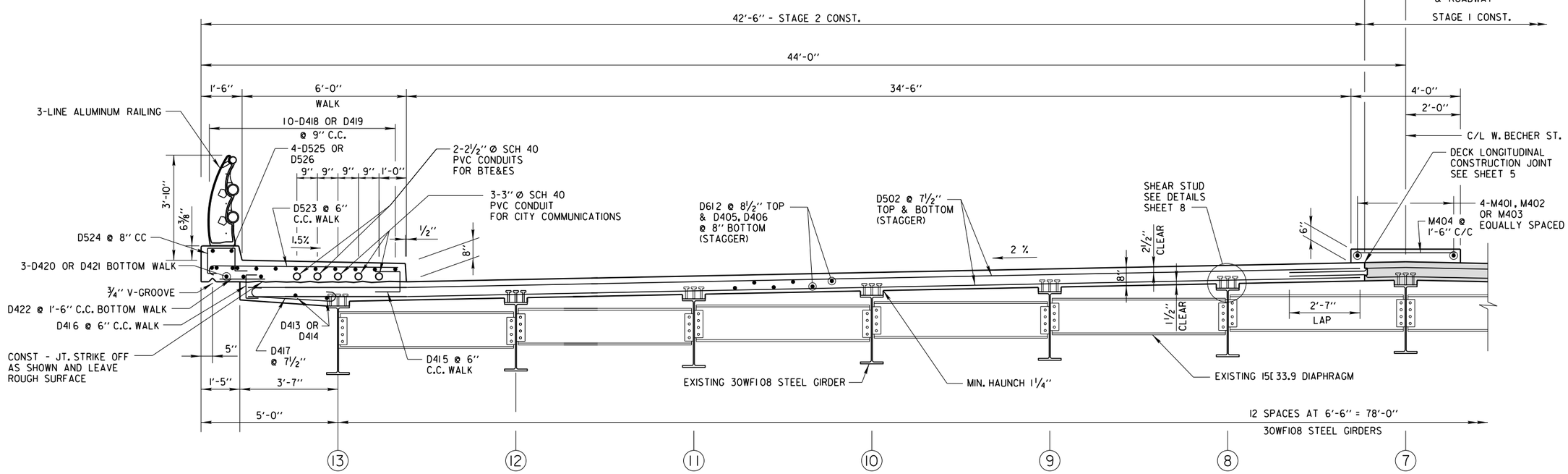

4/3 4/4 4/5 CROSS SECTION STAGE 2 - ALL SPANS

LOOKING EAST NEAR PIERS

City of Milwaukee

Department of Public Works

Infrastructure Services Division

WEST BECHER STREET BRIDGE OVER THE KINNICKINNIC RIVER STAGE 2 CONSTRUCTION CROSS SECTION

REVISIONS

DESIGNED BY J.P.H.	
DRAWN BY S.J.S.	
CHECKED BY A.R.	
DATE 02/2015	SCALE NONE
JOB NUMBER BR100-15-0105	
SHEET NUMBER 7 OF 26	
OF 39	

W:\STR\B0202\PLANS\PLANS 08_DECKBILLOFBARS.DGN 02-02-2015

BILL OF BARS - DECK

BAR MARK	COATED	NO. REQ'D.	LENGTH	BENT	BAR SERIES	LOCATION
D501	×	470	46'-6"			STAGE 1 - TRANSVERSE - TOP & BOTTOM - ALL SPANS
D502	×	470	40'-9"			STAGE 2 - TRANSVERSE - TOP & BOTTOM - ALL SPANS
D403	×	134	46'-4"			STAGE 1 - LONGITUDINAL - BOTTOM - E & W SPANS
D404	×	67	54'-8"			STAGE 1 - LONGITUDINAL - BOTTOM - CENTER SPAN
D405	×	124	46'-4"			STAGE 2 - LONGITUDINAL - BOTTOM - E & W SPANS
D406	×	62	54'-8"			STAGE 2 - LONGITUDINAL - BOTTOM - CENTER SPAN
D407	×	134	33'-2"			STAGE 1 - LONGITUDINAL TOP - E & W SPANS
D408	×	67	32'-0"			STAGE 1 - LONGITUDINAL TOP - CENTER SPAN
D409	×	124	33'-2"			STAGE 2 - LONGITUDINAL TOP - E & W SPANS
D410	×	62	32'-0"			STAGE 2 - LONGITUDINAL TOP - CENTER SPAN
D611	×	164	29'-2"			STAGE 1 - LONGITUDINAL TOP - CONTINUITY STEEL @ PIER 1 & 2
D612	×	126	29'-2"			STAGE 2 - LONGITUDINAL TOP - CONTINUITY STEEL @ PIER 1 & 2
D413	×	8	46'-4"			STAGES 1 & 2 - E & W SPANS - DECK OVERHANG - BOTTOM - (LONGITUDINAL)
D414	×	4	54'-8"			STAGES 1 & 2 - CENTER SPAN - DECK OVERHANG - BOTTOM - (LONGITUDINAL)
D415	×	582	2'-8"	×		STAGES 1 & 2 - ALL SPANS - CURB/DECK STIRRUP BAR
D416	×	582	2'-10"	×		STAGES 1 & 2 - ALL SPANS - WALK/DECK STIRRUP BAR
D417	×	466	4'-0"	×		STAGES 1 & 2 - OVERHANG DECK - (TRANSVERSE) - BOTTOM
D418	×	40	44'-8"			STAGES 1 & 2 - WALK - E & W SPANS - TOP LONGITUDINAL
D419	×	20	54'-8"			STAGES 1 & 2 - WALK - CENTER SPAN - TOP LONGITUDINAL
D420	×	12	44'-8"			STAGES 1 & 2 - WALK - E & W SPANS - BOTTOM LONGITUDINAL
D421	×	6	54'-8"			STAGES 1 & 2 - WALK - CENTER SPAN - BOTTOM LONGITUDINAL
D422	×	194	2'-8"			STAGES 1 & 2 - WALK - BOTTOM TRANSVERSE - ALL SPANS
D523	×	582	7'-9"	×		STAGES 1 & 2 - WALK - TOP - TRANSVERSE - ALL SPANS
D524	×	438	3'-8"	×		STAGES 1 & 2 - WALK - RAILING CURB STIRRUP - ALL SPANS
D525	×	16	44'-8"			STAGES 1 & 2 - WALK - RAILING CURB - LONGITUDINAL - E & W SPANS
D526	×	8	54'-8"			STAGES 1 & 2 - WALK - RAILING CURB - LONGITUDINAL - CENTER SPAN
D427	×	216	4'-6"	×		STAGES 1 & 2 - DIAPHRAGM - STIRRUP BARS - AT ABUTMENTS
D428	×	48	6'-2"			STAGES 1 & 2 - DIAPHRAGM BETWEEN GIRDER - HORIZONTAL TOP - AT ABUTMENTS
D629	×	120	6'-2"			STAGES 1 & 2 - DIAPHRAGM BETWEEN GIRDER - HORIZONTAL BOTTOM - AT ABUTMENTS
D530	×	32	9'-1"	×	△	LIGHT STD. - WALK TRANSVERSE - TOP & BOTTOM
D531	×	16	10'-0"	×		LIGHT STD. - WALK DIAGONAL - TOP & BOTTOM
D532	×	16	5'-7"	×		LIGHT STD. - DECK - CURB Z BARS
D533	×	16	5'-0"			LIGHT STD. - DIAGONAL AT ELECTRICAL JUNCTION BOX
D534	×	8	6'-9"	×		LIGHT STD. - VERTICAL TRANSVERSE
D535	×	8	3'-1"	×		LIGHT STD. - VERTICAL LONGITUDINAL
D436	×	12	4'-10"	×		LIGHT STD. - HORIZONTAL STIRRUP
D437	×	48	8'-0"	×		E & W SPANS - BARS FOR STRIP SEAL EXPANSION JOINT
D538	×	12	9'-9"	×		PILASTER DOWEL
D539	×	20	5'-0"	×		PILASTER STIRRUP

△ LENGTH SHOWN FOR BAR IS AVERAGE LENGTH & SHOULD ONLY BE USED FOR BAR WEIGHT CALCULATIONS. SEE BAR SERIES TABLE FOR ACTUAL LENGTHS.

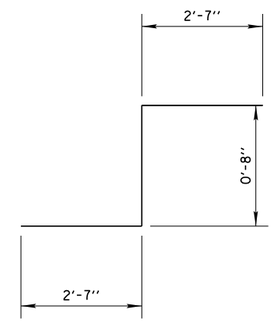

D532

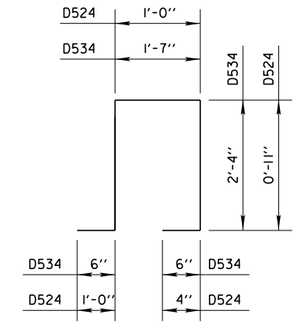

D524, D534

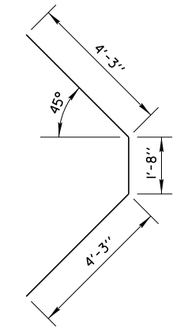

D531

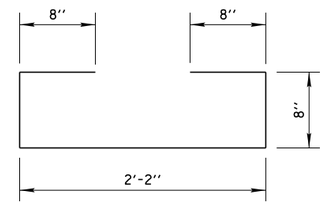

D427

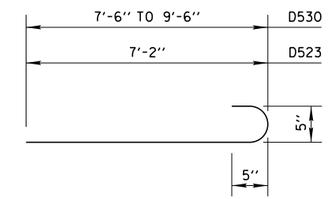

D523, D530

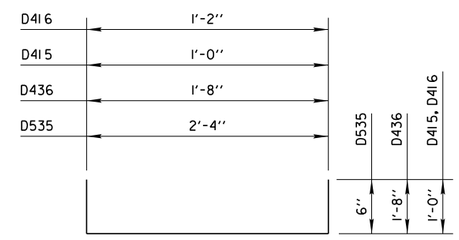

D415, D416, D535, D436

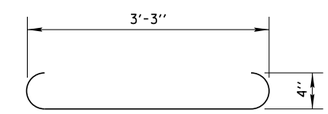

D417

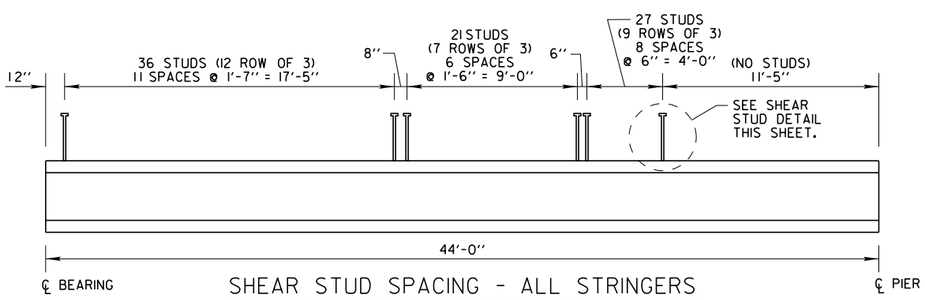

SHEAR STUD SPACING - ALL STRINGERS

END SPANS (WEST SPAN AND EAST SPAN)

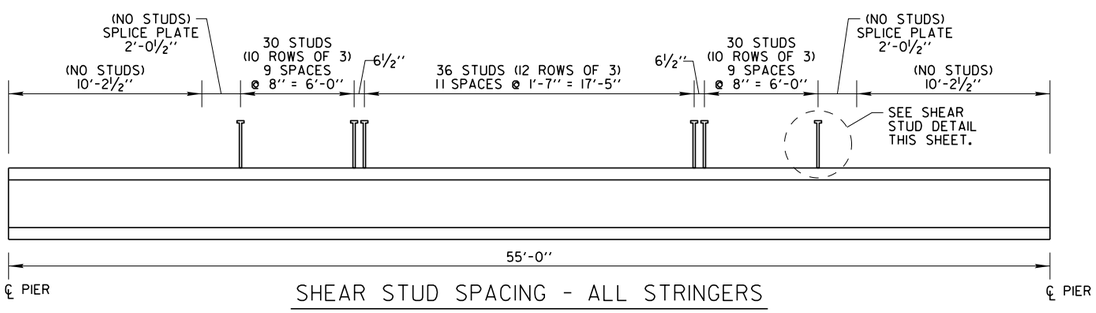

SHEAR STUD SPACING - ALL STRINGERS

CENTER SPAN

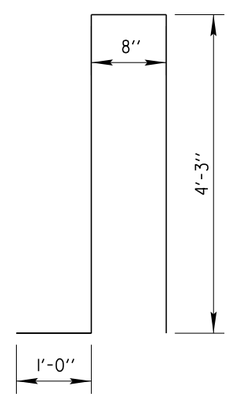

D538

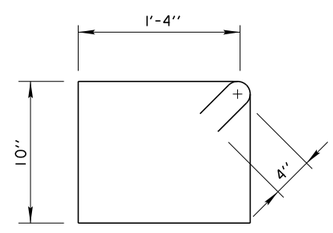

D539

BAR SERIES TABLE		
MARK	NO. REQUIRED	LENGTH
D530	8 SERIES OF 4	7'-6" TO 9'-6"

BUNDLE AND TAG EACH SERIES SEPARATELY

NOTE:
AFTER REMOVAL OF DECK, AND BEFORE ORDERING THE SHEAR STUDS, CONTRACTOR SHALL SHOOT GRADES OF THE TOP OF THE GIRDERS TO DETERMINE HAUNCH HEIGHTS. ORDER APPROPRIATE SIZE STUDS AS NEEDED TO ACHIEVE MINIMUM 2" EMBEDMENT INTO BOTTOM OF NEW DECK SLAB AND MINIMUM OF 2½" CLEARANCE TO TOP OF SLAB.

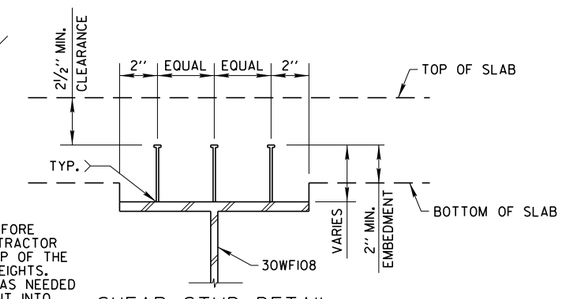

SHEAR STUD DETAIL

City of Milwaukee

Department of Public Works

Infrastructure Services Division

WEST BECHER STREET BRIDGE
OVER THE KINNICKINNIC RIVER
DECK BILL OF BARS AND SHEAR STUD DETAILS

REVISIONS

DESIGNED BY J.P.H.
DRAWN BY S.J.S.
CHECKED BY A.R.
DATE 02/2015
SCALE NONE
JOB NUMBER BR100-15-0105
SHEET NUMBER 8 OF 26
OF 39

W:\STR\B0202\PLANS\PLANS 09_DECK GRADES.DGN 02-04-2015

GRADES COMPUTED FOR POINTS LOCATED AT RIGHT ANGLE TO P.G.L.

WEST SPAN	GIRDER NO.	W. ABUT	0.1 SPAN	0.2 SPAN	0.3 SPAN	0.4 SPAN	0.5 SPAN	0.6 SPAN	0.7 SPAN	0.8 SPAN	0.9 SPAN	PIER 1	GIRDER NO.
TYP. INTERIOR & EXTERIOR TOTAL DEAD LOAD DEFLECTION INCHES		0.00	.08	.14	.18	.20	.19	.16	.11	.06	.02	0.00	
DECK GRADE	NORTH EDGE	11.67	11.75	11.82	11.88	11.95	12.00	12.05	12.10	12.14	12.18	12.21	NORTH EDGE
	13	11.74	11.82	11.89	11.96	12.02	12.07	12.13	12.17	12.22	12.25	12.29	13
	12	11.87	11.95	12.02	12.09	12.15	12.20	12.26	12.30	12.35	12.38	12.42	12
	11	12.00	12.08	12.15	12.22	12.28	12.33	12.39	12.43	12.48	12.51	12.55	11
	10	12.13	12.21	12.28	12.35	12.41	12.46	12.52	12.56	12.61	12.64	12.68	10
	9	12.26	12.34	12.41	12.48	12.54	12.59	12.65	12.69	12.74	12.77	12.81	9
	8	12.39	12.47	12.54	12.61	12.67	12.72	12.78	12.82	12.87	12.90	12.94	8
	CONST. JOINT	12.49	12.57	12.64	12.71	12.77	12.82	12.88	12.92	12.97	13.00	13.04	CONST. JOINT
	7	12.52	12.60	12.67	12.74	12.80	12.85	12.91	12.95	13.00	13.03	13.07	7
	6	12.39	12.47	12.54	12.61	12.67	12.72	12.78	12.82	12.87	12.90	12.94	6
	5	12.26	12.34	12.41	12.48	12.54	12.59	12.65	12.69	12.74	12.77	12.81	5
	4	12.13	12.21	12.28	12.35	12.41	12.46	12.52	12.56	12.61	12.64	12.68	4
	3	12.00	12.08	12.15	12.22	12.28	12.33	12.39	12.43	12.48	12.51	12.55	3
	2	11.87	11.95	12.02	12.09	12.15	12.20	12.26	12.30	12.35	12.38	12.42	2
	1	11.74	11.82	11.89	11.96	12.02	12.07	12.13	12.17	12.22	12.25	12.29	1
	SOUTH EDGE	11.67	11.75	11.82	11.88	11.95	12.00	12.05	12.10	12.14	12.18	12.21	SOUTH EDGE

CROWN RDWY. P.G.L. & T/L

GRADES COMPUTED FOR POINTS LOCATED AT RIGHT ANGLE TO P.G.L.

MIDDLE SPAN	GIRDER NO.	PIER 1	0.1 SPAN	0.2 SPAN	0.3 SPAN	0.4 SPAN	0.5 SPAN	0.6 SPAN	0.7 SPAN	0.8 SPAN	0.9 SPAN	PIER 2	GIRDER NO.
TYP. INTERIOR & EXTERIOR TOTAL DEAD LOAD DEFLECTION INCHES		0.00	.04	.11	.19	.25	.27	.25	.19	.11	.04	0.00	
DECK GRADE	NORTH EDGE	12.21	12.25	12.27	12.29	12.30	12.31	12.30	12.29	12.27	12.25	12.21	NORTH EDGE
	13	12.29	12.32	12.35	12.36	12.38	12.38	12.38	12.36	12.35	12.32	12.29	13
	12	12.42	12.45	12.48	12.49	12.51	12.51	12.51	12.49	12.48	12.45	12.42	12
	11	12.55	12.58	12.61	12.62	12.64	12.64	12.64	12.62	12.61	12.58	12.55	11
	10	12.68	12.71	12.74	12.75	12.77	12.77	12.77	12.75	12.74	12.71	12.68	10
	9	12.81	12.84	12.87	12.88	12.90	12.90	12.90	12.88	12.87	12.84	12.81	9
	8	12.94	12.97	13.00	13.01	13.03	13.03	13.03	13.01	13.00	12.97	12.94	8
	CONST. JOINT	13.04	13.07	13.10	13.11	13.13	13.13	13.13	13.11	13.10	13.07	13.04	CONST. JOINT
	7	13.07	13.10	13.13	13.14	13.16	13.16	13.16	13.14	13.13	13.10	13.07	7
	6	12.94	12.97	13.00	13.01	13.03	13.03	13.03	13.01	13.00	12.97	12.94	6
	5	12.81	12.84	12.87	12.88	12.90	12.90	12.90	12.88	12.87	12.84	12.81	5
	4	12.68	12.71	12.74	12.75	12.77	12.77	12.77	12.75	12.74	12.71	12.68	4
	3	12.55	12.58	12.61	12.62	12.64	12.64	12.64	12.62	12.61	12.58	12.55	3
	2	12.42	12.45	12.48	12.49	12.51	12.51	12.51	12.49	12.48	12.45	12.42	2
	1	12.29	12.32	12.35	12.36	12.38	12.38	12.38	12.36	12.35	12.32	12.29	1
	SOUTH EDGE	12.21	12.25	12.27	12.29	12.30	12.31	12.30	12.29	12.27	12.25	12.21	SOUTH EDGE

CROWN RDWY. P.G.L. & T/L

GRADES COMPUTED FOR POINTS LOCATED AT RIGHT ANGLE TO P.G.L.

EAST SPAN	GIRDER NO.	PIER 2	0.1 SPAN	0.2 SPAN	0.3 SPAN	0.4 SPAN	0.5 SPAN	0.6 SPAN	0.7 SPAN	0.8 SPAN	0.9 SPAN	E. ABUT	GIRDER NO.
TYP. INTERIOR & EXTERIOR TOTAL DEAD LOAD DEFLECTION INCHES		0.00	.02	.06	.11	.16	.19	.20	.18	.14	.08	0.00	
DECK GRADE	NORTH EDGE	12.21	12.18	12.14	12.10	12.05	12.00	11.95	11.88	11.82	11.75	11.67	NORTH EDGE
	13	12.29	12.25	12.22	12.17	12.13	12.07	12.02	11.96	11.89	11.82	11.74	13
	12	12.42	12.38	12.35	12.30	12.26	12.20	12.15	12.09	12.02	11.95	11.87	12
	11	12.55	12.51	12.48	12.43	12.39	12.33	12.28	12.22	12.15	12.08	12.00	11
	10	12.68	12.64	12.61	12.56	12.52	12.46	12.41	12.35	12.28	12.21	12.13	10
	9	12.81	12.77	12.74	12.69	12.65	12.59	12.54	12.48	12.41	12.34	12.26	9
	8	12.94	12.90	12.87	12.82	12.78	12.72	12.67	12.61	12.54	12.47	12.39	8
	CONST. JOINT	13.04	13.00	12.97	12.92	12.88	12.82	12.77	12.71	12.64	12.57	12.49	CONST. JOINT
	7	13.07	13.03	13.00	12.95	12.91	12.85	12.80	12.74	12.67	12.60	12.52	7
	6	12.94	12.90	12.87	12.82	12.78	12.72	12.67	12.61	12.54	12.47	12.39	6
	5	12.81	12.77	12.74	12.69	12.65	12.59	12.54	12.48	12.41	12.34	12.26	5
	4	12.68	12.64	12.61	12.56	12.52	12.46	12.41	12.35	12.28	12.21	12.13	4
	3	12.55	12.51	12.48	12.43	12.39	12.33	12.28	12.22	12.15	12.08	12.00	3
	2	12.42	12.38	12.35	12.30	12.26	12.20	12.15	12.09	12.02	11.95	11.87	2
	1	12.29	12.25	12.22	12.17	12.13	12.07	12.02	11.96	11.89	11.82	11.74	1
	SOUTH EDGE	12.21	12.18	12.14	12.10	12.05	12.00	11.95	11.88	11.82	11.75	11.67	SOUTH EDGE

CROWN RDWY. P.G.L. & T/L

City of Milwaukee

Department of Public Works

Infrastructure Services Division

WEST BECHER STREET BRIDGE OVER THE KINNICKINNIC RIVER DECK GRADES

REVISIONS

DESIGNED BY J.P.H.

DRAWN BY S.J.S.

CHECKED BY A.R.

DATE 02/2015 | SCALE NONE

JOB NUMBER BR100-15-0105

SHEET NUMBER 9 OF 26

OF 39

W:\STR\B0202\PLANS\PLANS 10_ABUTWEST.DGN 01-16-2015

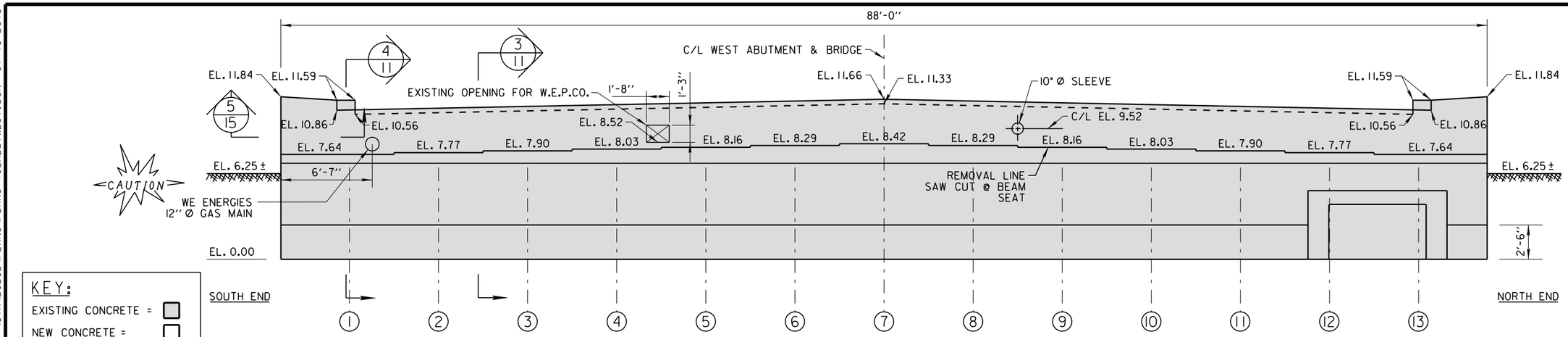

EXISTING WEST ABUTMENT - ELEVATION VIEW

LOOKING WEST

C/L BRIDGE OF W. BECHER ST.

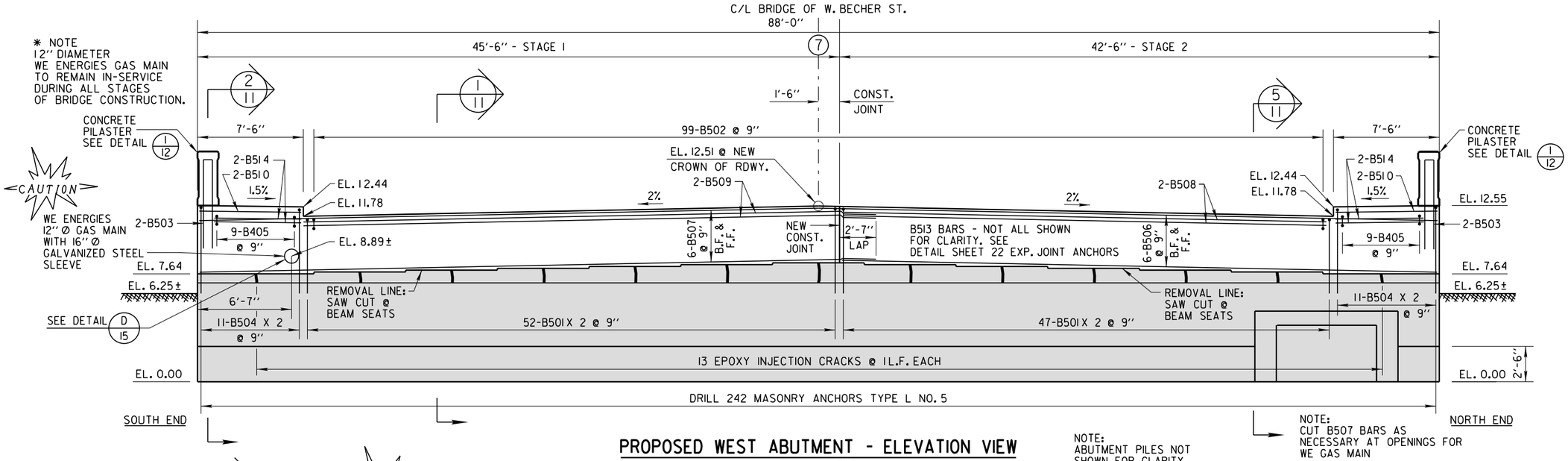

PROPOSED WEST ABUTMENT - ELEVATION VIEW

LOOKING WEST

NOTE:
ABUTMENT PILES NOT
SHOWN FOR CLARITY

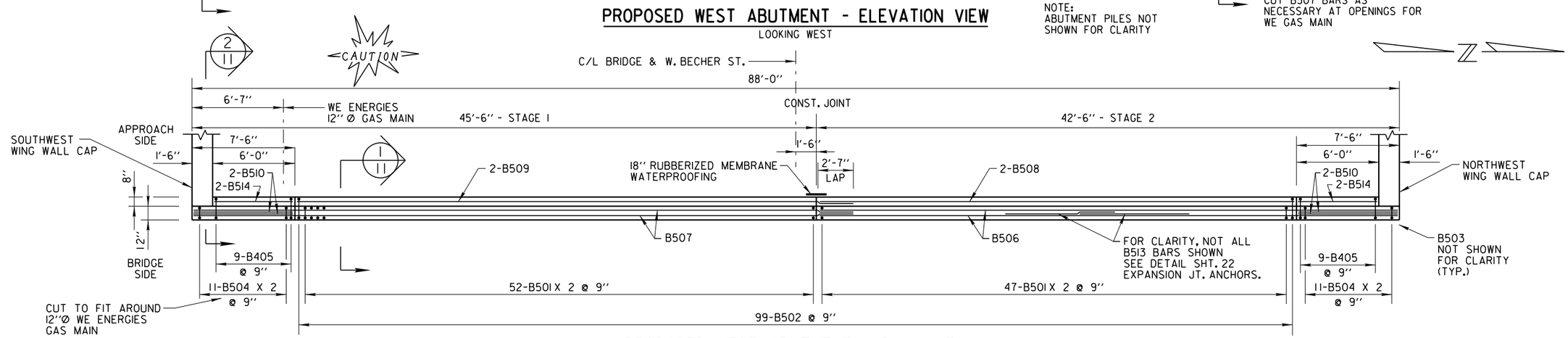

PROPOSED WEST ABUTMENT - PLAN VIEW (N.T.S.)

City of Milwaukee

Department of Public Works

Infrastructure Services Division

WEST BECHER STREET BRIDGE OVER THE KINNICKINNIC RIVER
WEST ABUTMENT ELEVATION AND PLAN VIEW

REVISIONS

DESIGNED BY J.P.H.	
DRAWN BY S.J.S.	
CHECKED BY A.R.	
DATE 02/2015	SCALE NONE
JOB NUMBER BR100-15-0105	
SHEET NUMBER 10 OF 26	
OF 39	

W:\STR\B0202\PLANS\PLANS\ 11_ABUTDET.DGN 01-30-2015

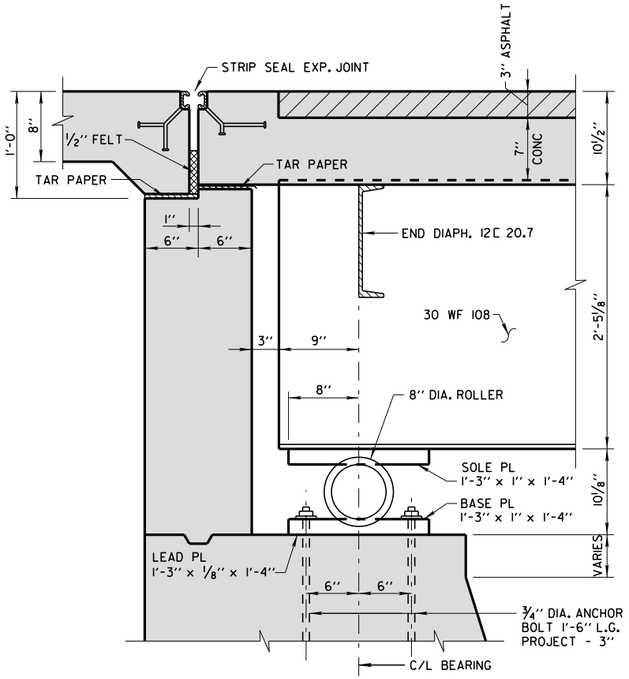

SECTION EXISTING ABUTMENT AT ROADWAY 3/10

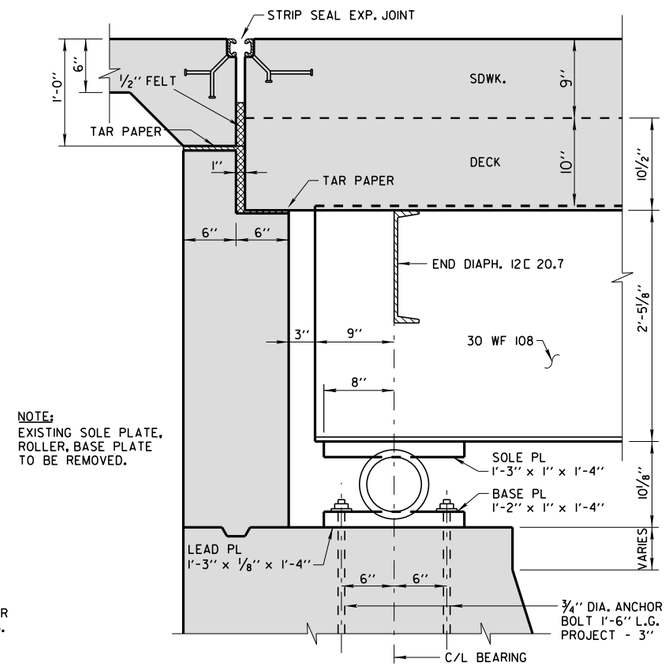

NOTE:
EXISTING SOLE PLATE, ROLLER, BASE PLATE TO BE REMOVED.

SECTION EXISTING ABUTMENT AT SIDEWALK 4/10

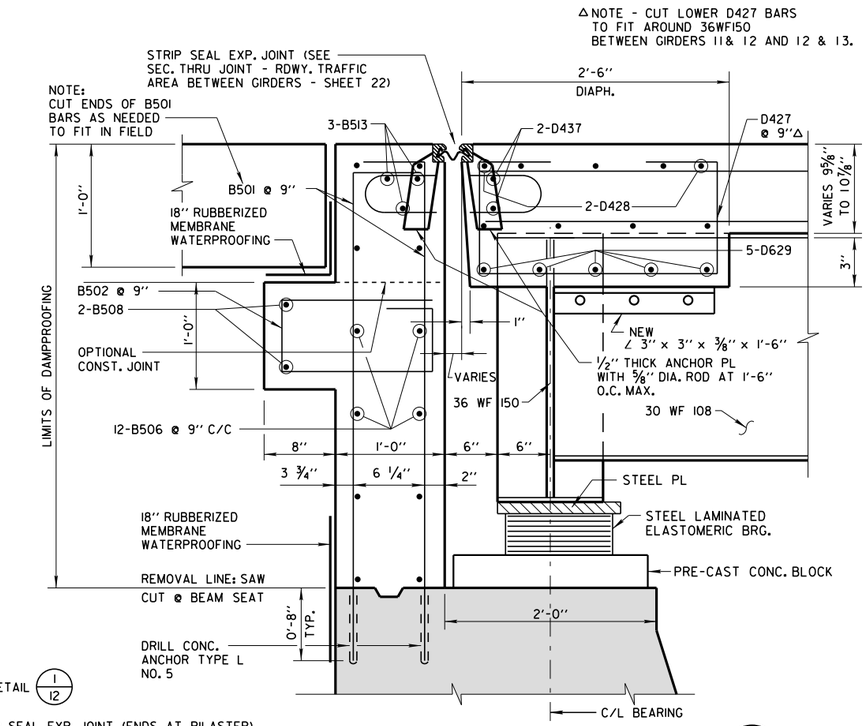

* SECTION PROPOSED ABUTMENT AT ROADWAY (BETWEEN GIRDER 11 & 12 AND 12 & 13) 5/10

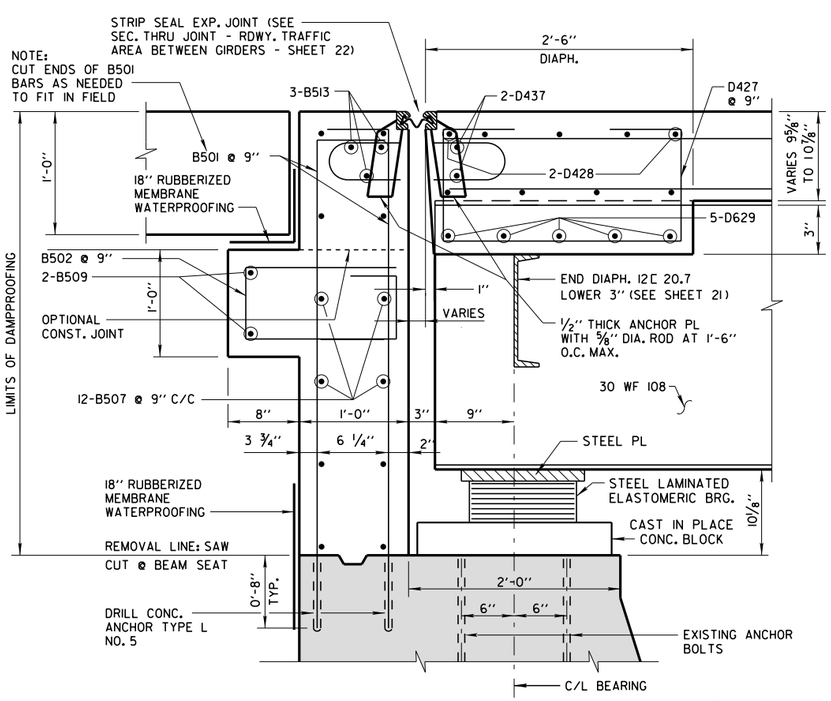

* SECTION PROPOSED ABUTMENT AT ROADWAY 1/3 1/10

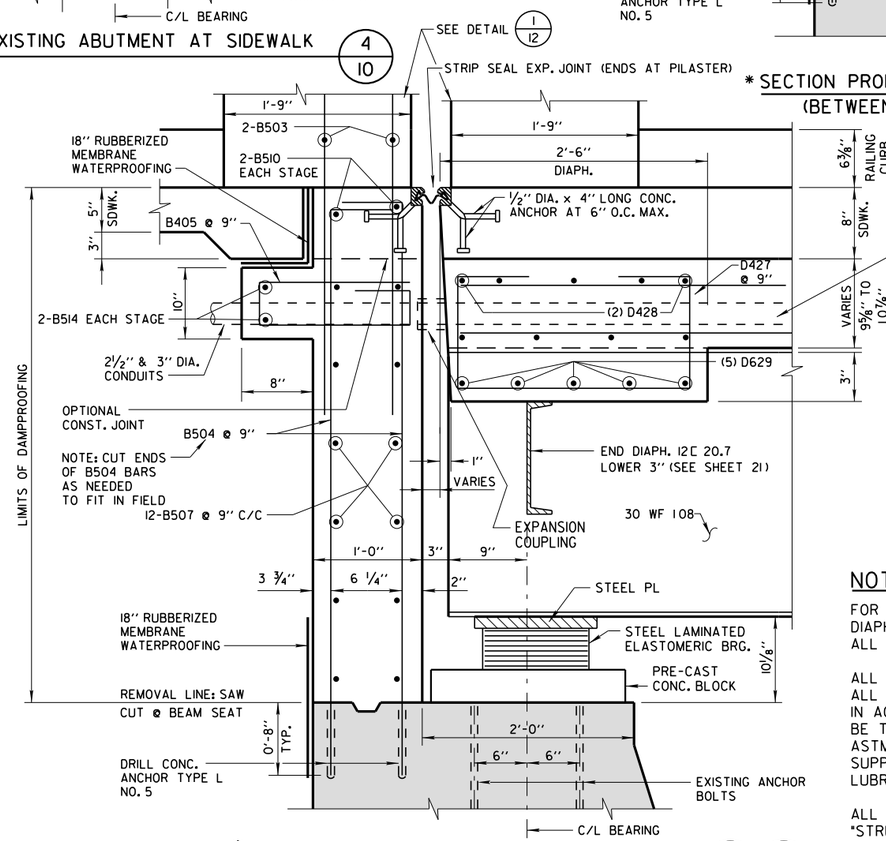

* SECTION PROPOSED ABUTMENT AT SIDEWALK 2/3 2/10

KEY:

* SOME DECK AND SDWK. BARS IN SEC. VIEW HAVE BEEN OMITTED FOR CLARITY.

EXISTING CONC.

NEW CONC.

NOTES:

FOR REHABILITATION PROJECTS:
DIAPHRAGM SUPPORT ANGLES SHALL BE ASTM A709 GRADE 36.
ALL BOLTS, NUTS AND WASHERS SHALL BE ASTM A325

ALL SUPPORT ANGLES SHALL BE HOT-DIPPED GALVANIZED.
ALL BOTS, NUTS AND WASHERS SHALL BE HOT-DIPPED GALVANIZED IN ACCORDANCE WITH ASTM A153 CLASS C, GALVANIZED NUTS SHALL BE TAPPED OVERSIZED IN ACCORDANCE WITH THE REQUIREMENTS OF ASTM A563 AND SHALL MEET THE REQUIREMENTS OF SUPPLEMENTARY REQUIREMENT S1 OF ASTM A563, LUBRICANT AND TEST FOR COATED NUTS.

ALL DIAPHRAGM SUPPORT HARDWARE SHALL BE PAID FOR UNDER "STRUCTURAL CARBON STEEL".

** SEE SHEET 9 FOR NOTES REGARDING 2 1/2" & 3" P.V.C. CONDUITS

City of Milwaukee

Department of Public Works

Infrastructure Services Division

WEST BECHER STREET BRIDGE OVER THE KINNICKINNIC RIVER
WEST ABUTMENT SECTIONS

REVISIONS

DESIGNED BY J.P.H.	
DRAWN BY S.J.S.	
CHECKED BY A.R.	
DATE 02/2015	SCALE NONE
JOB NUMBER BR100-15-0105	
SHEET NUMBER 11 OF 26	
OF 39	

W:\STR\B0202\PLANS\PLANS\ 12_ABUTBILLOFBARS.DGN 02-05-2015

BILL OF BARS - NORTHWEST AND SOUTHWEST WING WALLS

BAR MARK	COATED	NO. REQ'D.	LENGTH	BENT	BAR SERIES	LOCATION
W501	X	4	11'-4"	X		NORTHWEST PILASTER
W502	X	4	6'-0"			NORTHWEST PILASTER
W503	X	75	5'-6"	X		NORTHWEST WING WALL CURB
W504	X	75	2'-10"			NORTHWEST WING WALL CURB
W505	X	4	11'-4"	X		SOUTHWEST PILASTER
W506	X	4	6'-0"			SOUTHWEST PILASTER
W507	X	75	5'-6"	X		SOUTHWEST WING WALL CURB
W508	X	75	2'-10"			SOUTHWEST WING WALL CURB
W509	X	4	55'-0"	X		SOUTHWEST CURB LONGITUDINAL
W510	X	4	57'-6"	X		SOUTHWEST WING WALL CAP
W511	X	10	4'-10"	X		PILASTER STIRRUP
W512	X	4	55'-0"			NORTHWEST CURB LONGITUDINAL
W513	X	4	57'-6"			NORTHWEST WING WALL CAP

BILL OF BARS - WEST ABUTMENT

BAR MARK	COATED	NO. REQ'D.	LENGTH	BENT	BAR SERIES	LOCATION
*B501	X	198	4'-11"	X		BACKWALL DOWEL RDWY.
B502	X	99	4'-1"	X		RDWY. CORBEL
B503	X	4	12'-2"	X		BACKWALL PILASTER DOWEL
*B504	X	44	5'-7"	X		BACKWALL DOWEL WALK
B405	X	18	4'-0"	X		SDWK. CORBEL
B506	X	12	42'-2"			BACKWALL TRAN. STAGE 2
B507	X	12	45'-2"			BACKWALL TRAN. STAGE 1
B508	X	2	34'-8"			TRAN. RDWY. CORBEL STAGE 2
B509	X	2	37'-8"			TRAN. RDWY. CORBEL STAGE 1
B510	X	4	7'-2"			WALK TRANS. STAGE 1 & 2
B511	X	8	4'-0"			DIAGONAL @ 12'' WE ENERGIES GAS MAIN F.F. & B.F.
B612	X	4	5'-6"			HORIZONTAL @ 12'' WE ENERGIES GAS MAIN F.F. & B.F.
B513	X	33	8'-0"			BARS FOR STRIP SEAL ANCHORS
B514	X	4	5'-8"			TRAN. SDWK. CORBEL - N. AND S. SIDE
B515	X	2	8'-6"	X		MODIFIED PILASTER DOWEL
B516	X	10	4'-10"	X		PILASTER STIRRUP

* CUT B501 & B504 BARS AS NECESSARY TO OBTAIN 2'' CLEARANCE TO TOP OF BACKWALL OR WALK

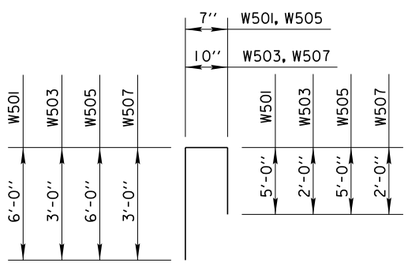

W501, W503, W505, W507

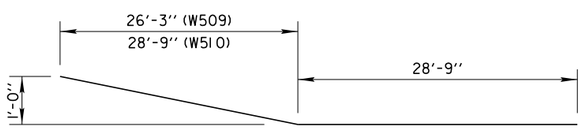

W509, W510

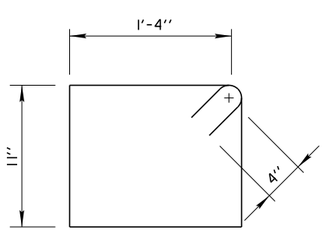

W511

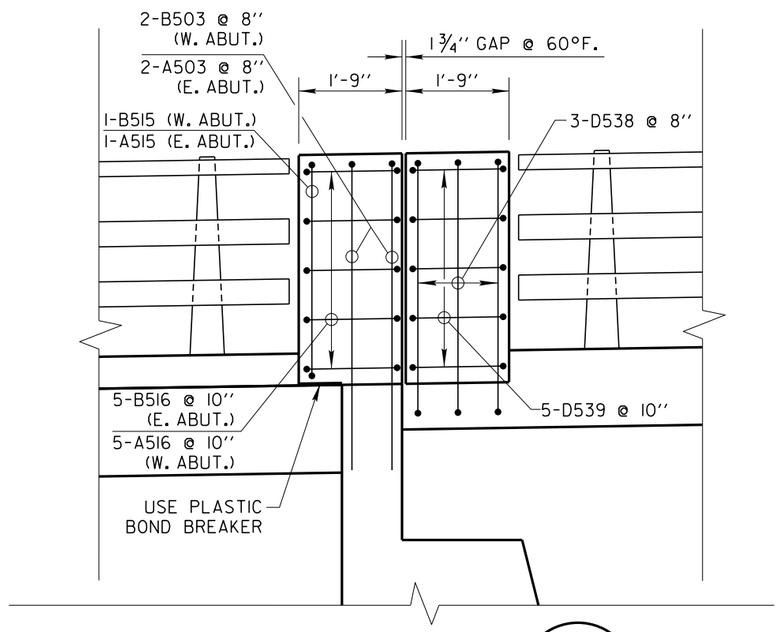

EXPANSION JOINT PILASTER DETAIL 1/12

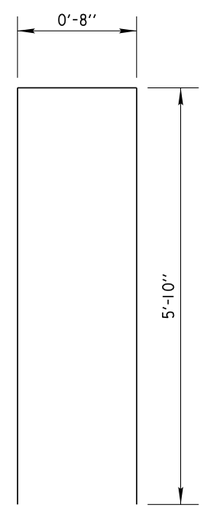

B503

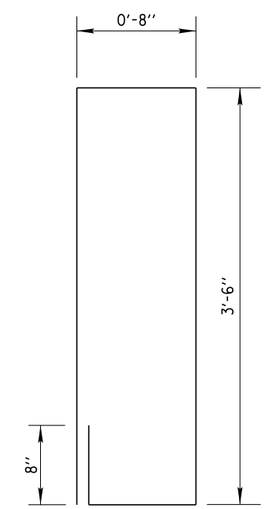

B515

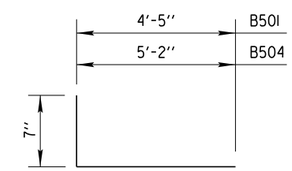

B501, B504

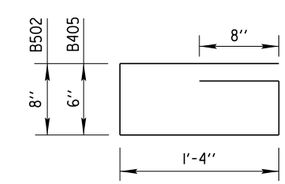

B502, B405

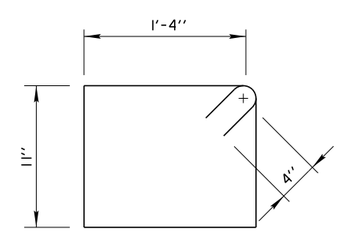

B516

City of Milwaukee

Department of Public Works

Infrastructure Services Division

WEST BECHER STREET BRIDGE OVER THE KINNICKINNIC RIVER

WEST ABUTMENT AND WING WALL BILL OF BARS

REVISIONS

DESIGNED BY J.P.H.	
DRAWN BY S.J.S.	
CHECKED BY A.R.	
DATE 02/2015	SCALE NONE
JOB NUMBER BR100-15-0105	
SHEET NUMBER 12 OF 26	
OF 39	

W:\STR\B0202\PLANS\PLANS\ 13_NW & SW WING WALLS.DGN 02-04-2015

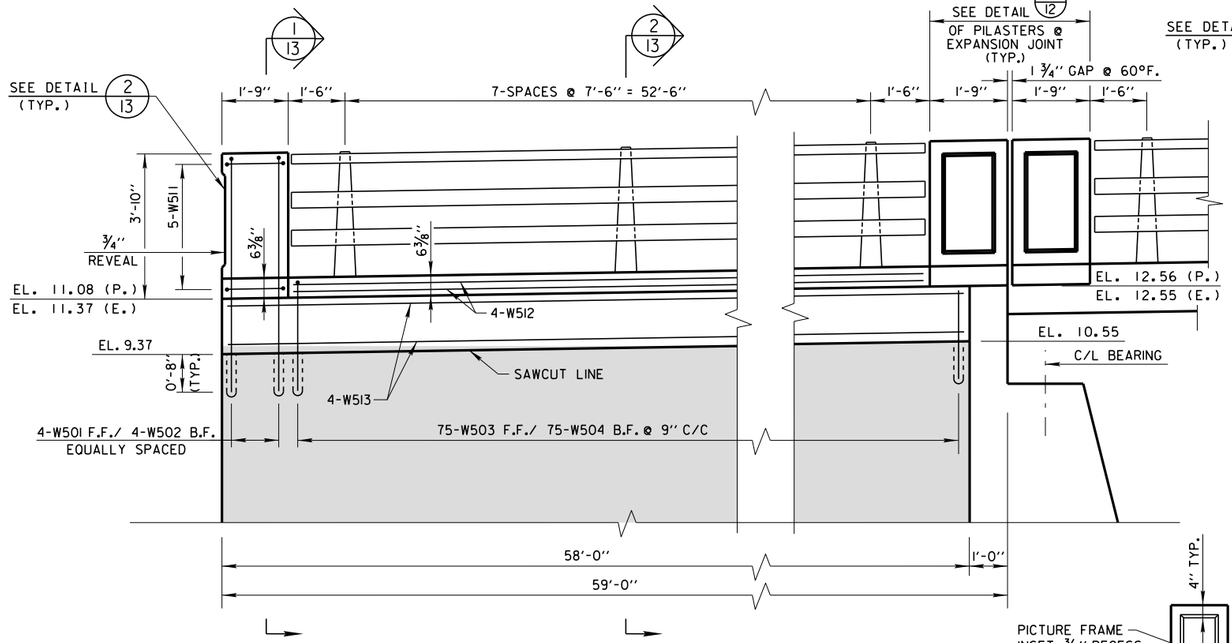

NORTHWEST WING WALL

(INSIDE FACE SHOWN)

NOTE:
SAW CUTTING OF CONCRETE WALL AND REMOVAL OF THE EXISTING RAILING SHALL BE INCLUDED IN BID ITEM: 'REMOVING OLD STRUCTURE'.

CUT W503, W504, W507 & W508 AS NECESSARY FOR PROPER CLEARANCE.

REMOVE TOP OF WALL TO SOUND CONCRETE ESTIMATED QUANTITIES (SHT. 2) ASSUME 2'-0" REMOVAL DEPTH.

APPLY STAIN TO ALL EXPOSED WING WALL CONCRETE SURFACES ON OUTSIDE FACE.

PILASTERS TO BE STAINED ON ALL SURFACES.

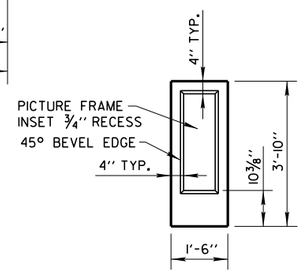

PILASTER END DETAIL 2/13

END RAILING PICTURE FRAME INSET ELEVATION

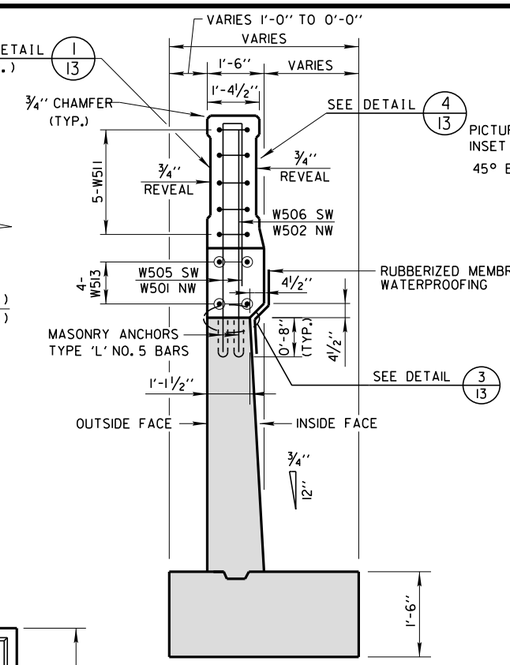

1/13 SECTION

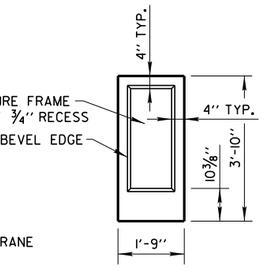

DETAIL 1/13

RAILING PICTURE FRAME INSET ELEVATION OUTSIDE FACE

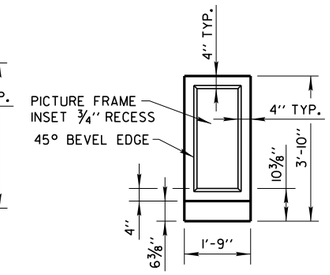

DETAIL 4/13

RAILING PICTURE FRAME INSET ELEVATION INSIDE FACE

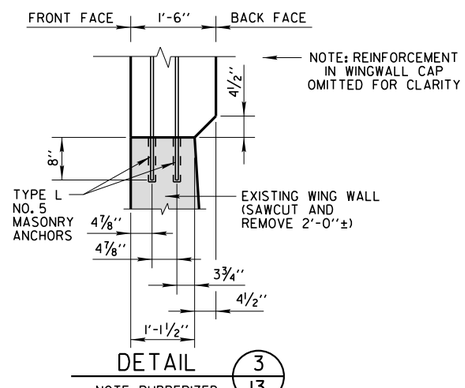

DETAIL 3/13

NOTE: RUBBERIZED MEMBRANE NOT SHOWN FOR CLARITY

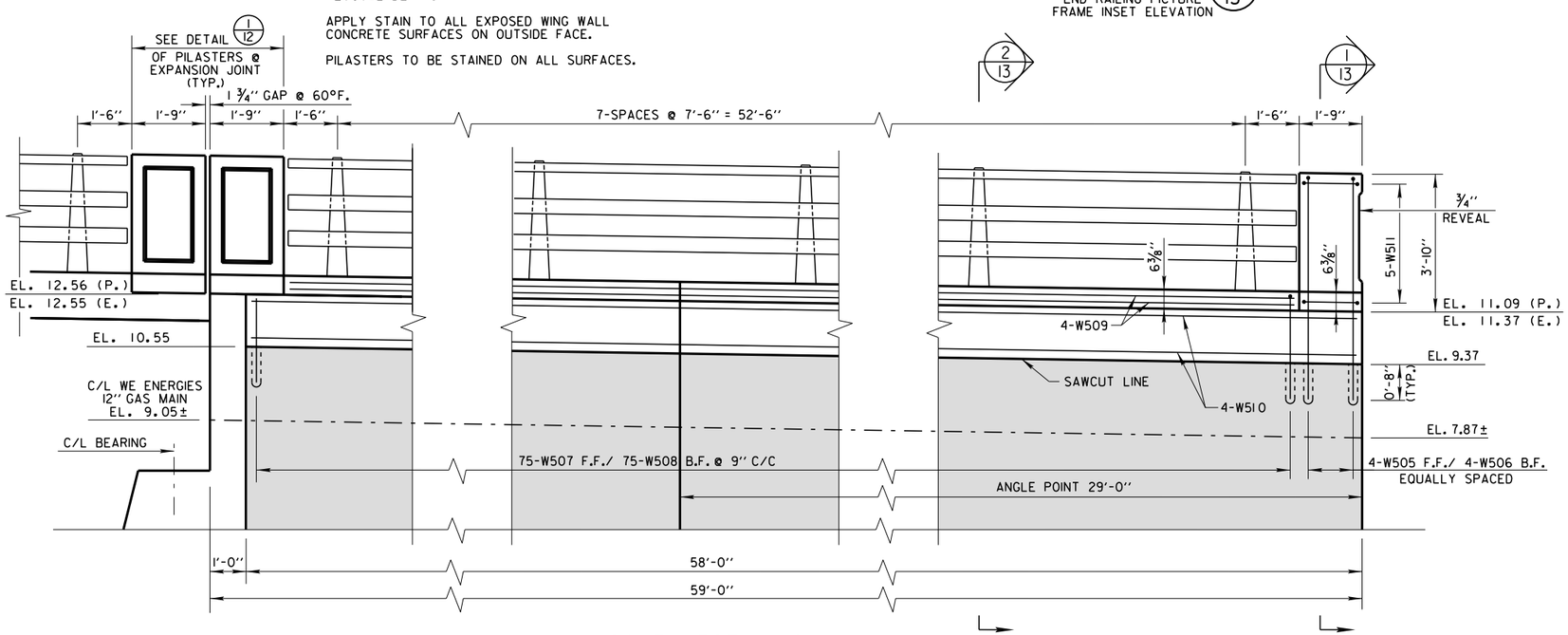

SOUTHWEST WING WALL

(INSIDE FACE SHOWN)

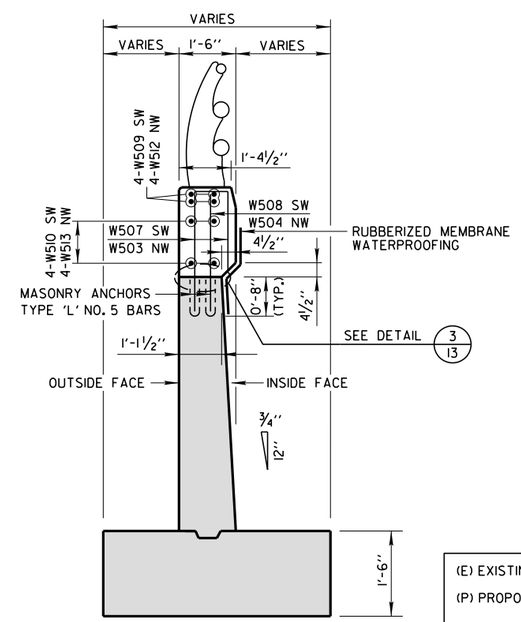

2/13 SECTION

(E) EXISTING ELEV.
(P) PROPOSED ELEV.
EXISTING CONCRETE
NEW CONCRETE

City of Milwaukee
Department of Public Works
Infrastructure Services Division

WEST BECHER STREET BRIDGE OVER THE KINNICKINNIC RIVER NORTHWEST AND SOUTHWEST WING WALLS PLAN, SECTION AND ELEVATION

REVISIONS

DESIGNED BY J.P.H.	
DRAWN BY S.J.S.	
CHECKED BY A.R.	
DATE 02/2015	SCALE NONE
JOB NUMBER BR100-15-0105	
SHEET NUMBER 13 OF 26	
OF 39	

W:\STR\B0202\PLANS\PLANS\ 14_ABUTEAST.DGN 01-16-2015

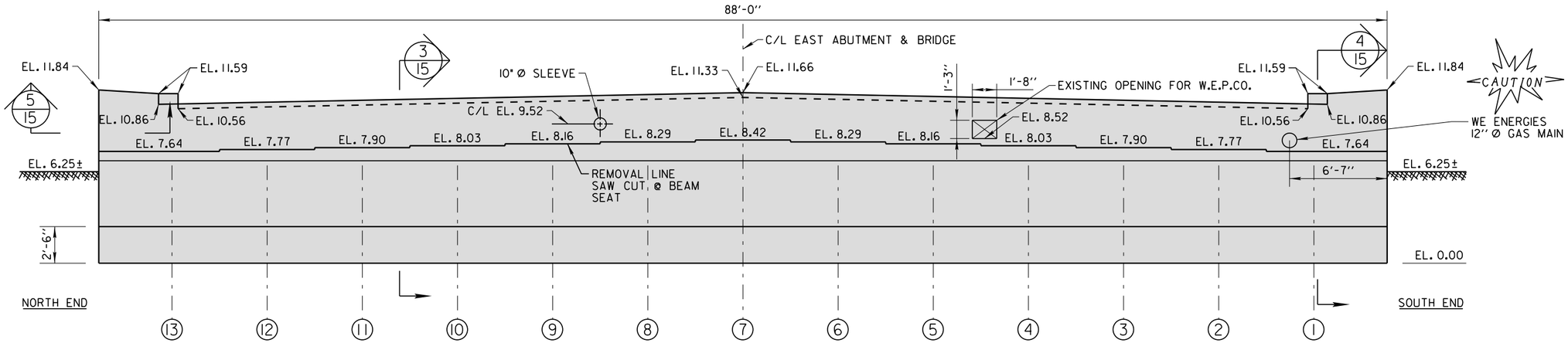

EXISTING EAST ABUTMENT - ELEVATION VIEW

LOOKING EAST

KEY:
EXISTING CONCRETE =
NEW CONCRETE =
CRACK REPAIR =

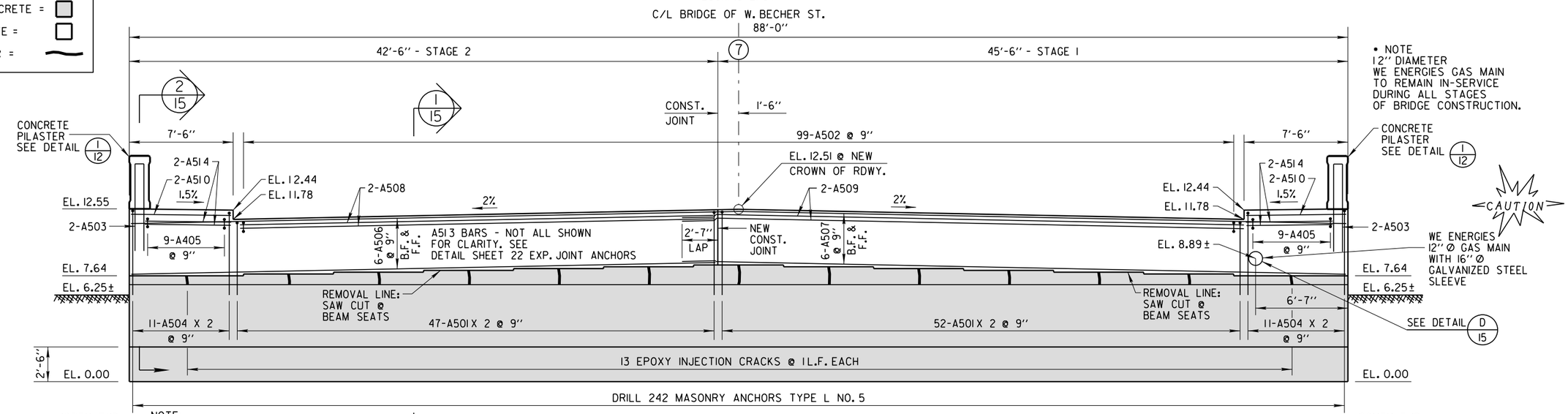

PROPOSED EAST ABUTMENT - ELEVATION VIEW

LOOKING EAST

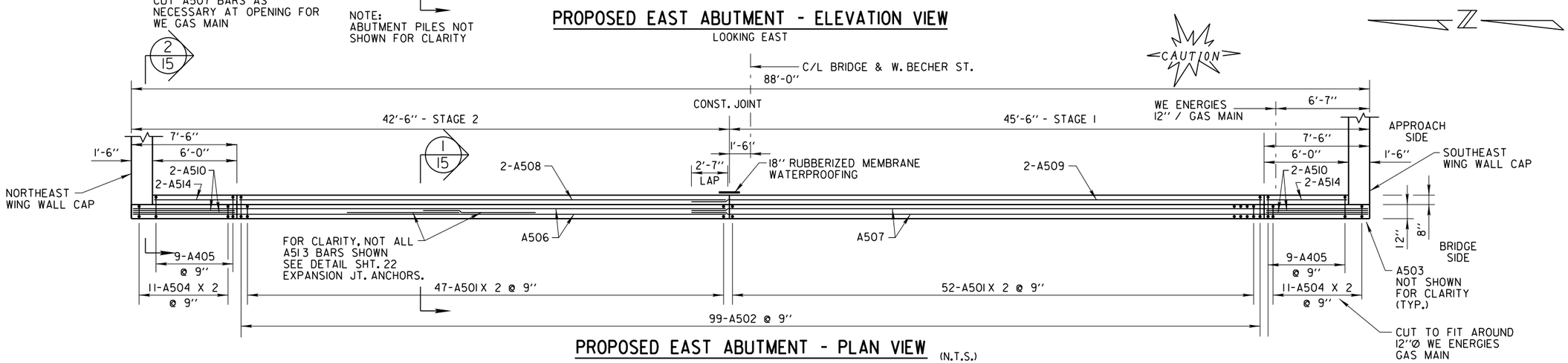

PROPOSED EAST ABUTMENT - PLAN VIEW (N.T.S.)

City of Milwaukee

Department of Public Works

Infrastructure Services Division

WEST BECHER STREET BRIDGE OVER THE KINNICKINNIC RIVER
EAST ABUTMENT ELEVATION AND PLAN VIEW

REVISIONS

DESIGNED BY J.P.H.	
DRAWN BY S.J.S.	
CHECKED BY A.R.	
DATE 02/2015	SCALE NONE
JOB NUMBER BR100-15-0105	
SHEET NUMBER 14 OF 26	
OF 39	

W:\STR\B0202\PLANS\PLANS\ 15_ABUTDET.DGN 01-30-2015

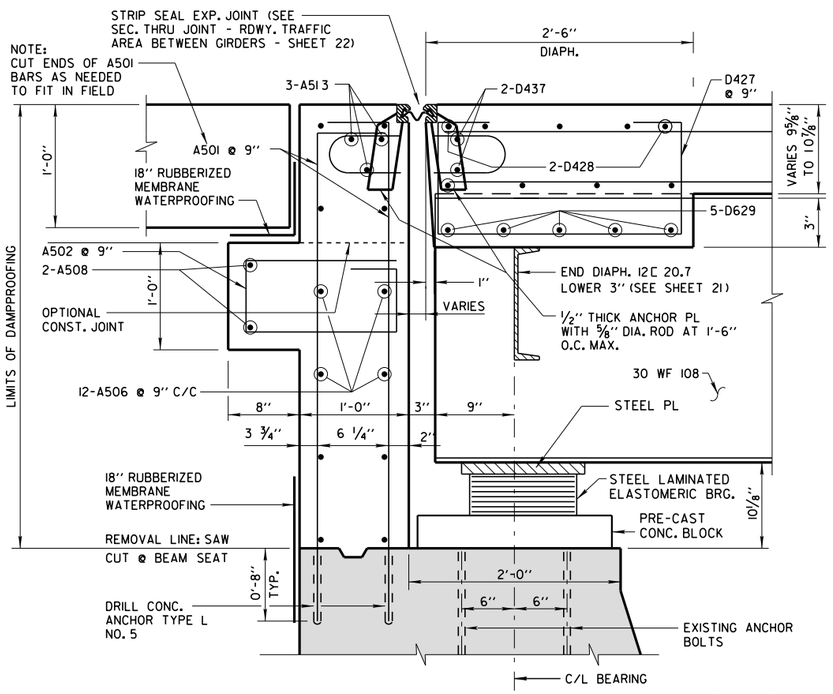

* SECTION PROPOSED ABUTMENT AT ROADWAY (1/14) (1/5)

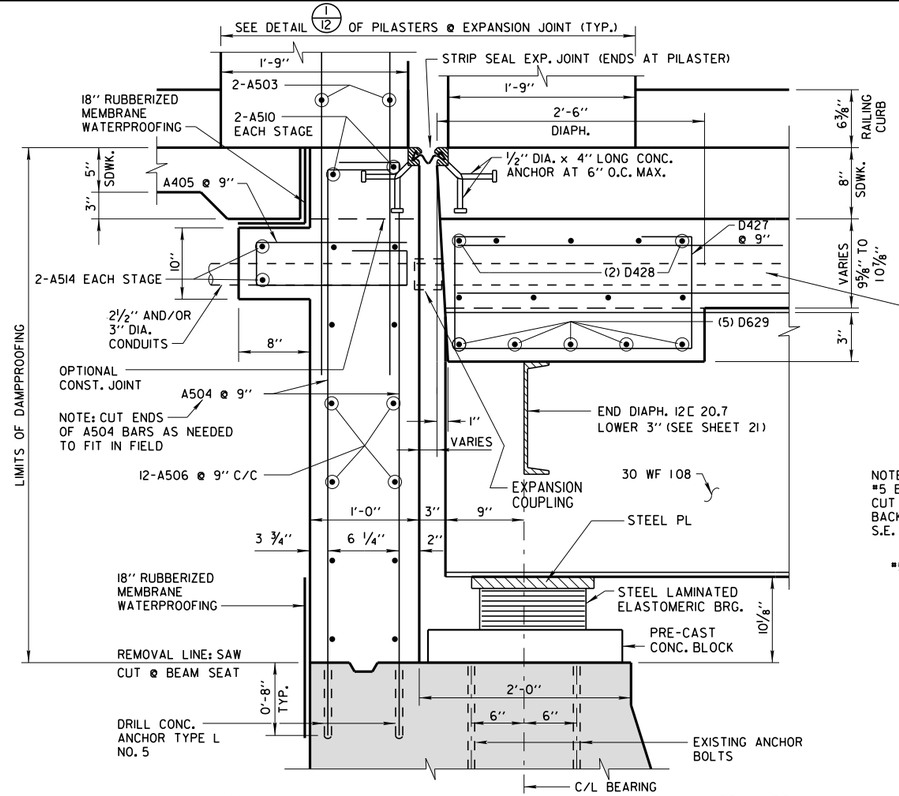

* SECTION PROPOSED ABUTMENT AT SIDEWALK (2/14) (2/5)

KEY:

* SOME DECK AND SDWK. BARS IN SEC. VIEW HAVE BEEN OMITTED FOR CLARITY.

EXISTING CONC.

NEW CONC.

** SEE SHEET 9 FOR NOTES REGARDING 2½" AND/OR 3" P.V.C. CONDUITS

FOR CONDUIT LAYOUT AND EXPANSION COUPLING DETAILS, REFER TO SHEET C5

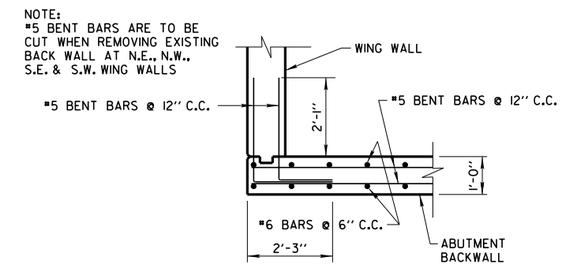

EXISTING SECTION (5/10) (5/14)

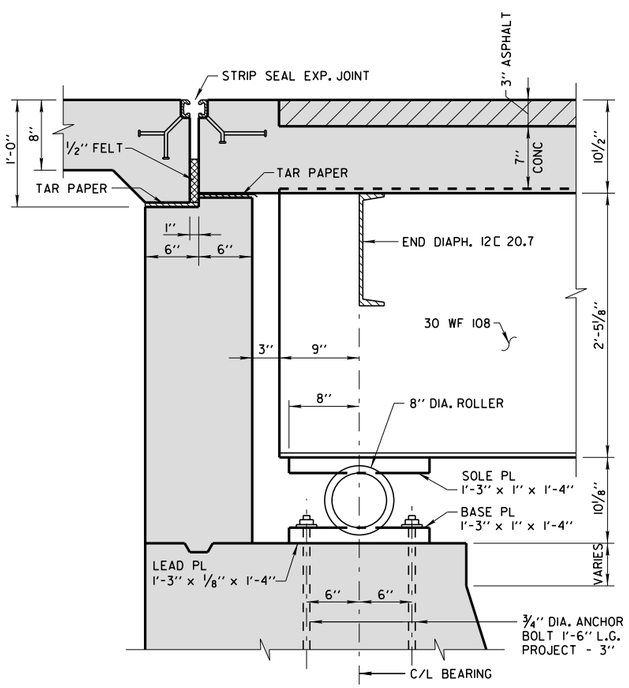

SECTION EXISTING ABUTMENT AT ROADWAY (3/14)

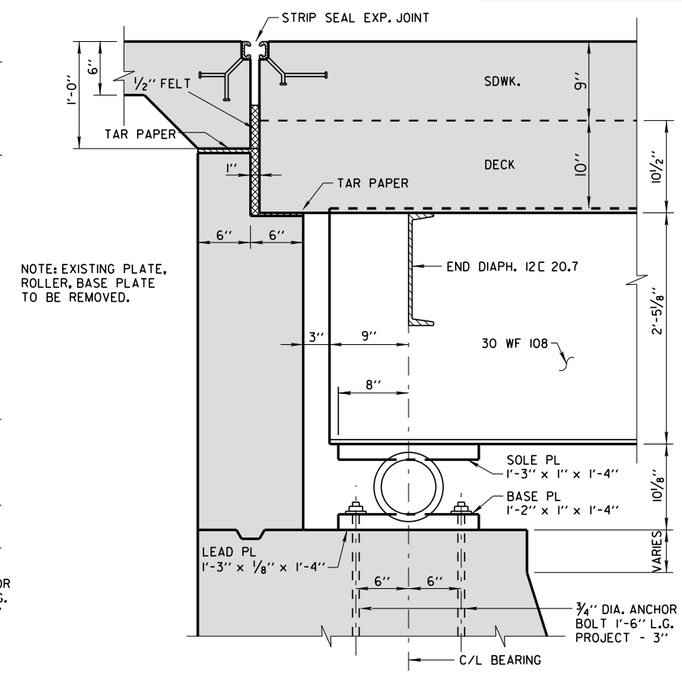

NOTE: EXISTING PLATE, ROLLER, BASE PLATE TO BE REMOVED.

SECTION EXISTING ABUTMENT AT SIDEWALK (4/14)

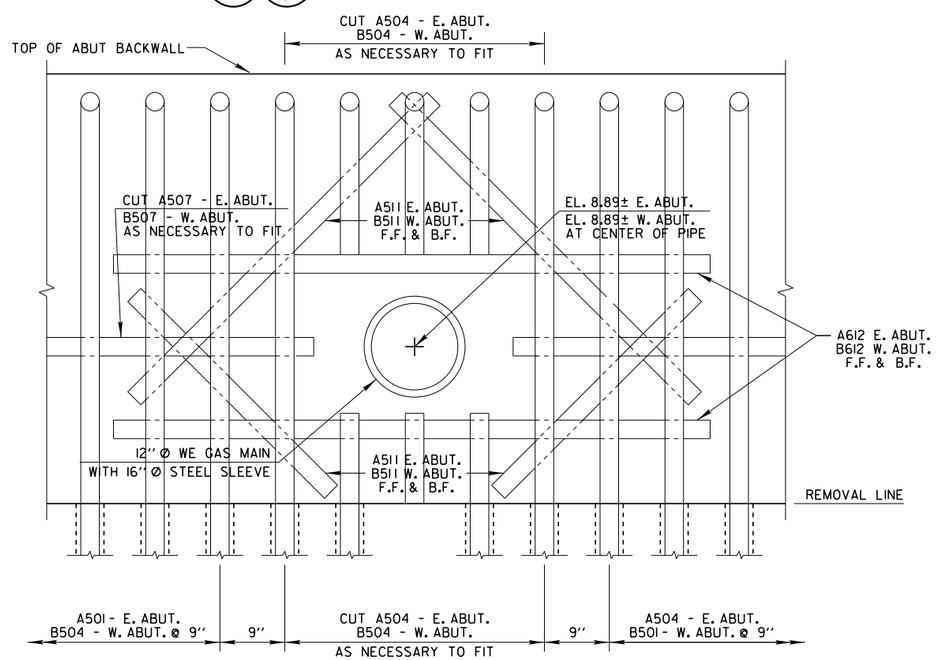

DETAIL FOR WE GAS MAIN OPENING BETWEEN GIRDER 1 & 2 AT EAST & WEST ABUTMENT WALL (D/10) (D/14)

City of Milwaukee

Department of Public Works

Infrastructure Services Division

WEST BECHER STREET BRIDGE OVER THE KINNICKINNIC RIVER
EAST ABUTMENT SECTIONS

REVISIONS

DESIGNED BY J.P.H.	
DRAWN BY S.J.S.	
CHECKED BY A.R.	
DATE 02/2015	SCALE NONE
JOB NUMBER BR100-15-0105	
SHEET NUMBER 15 OF 26	
OF 39	

W:\STR\B0202\PLANS\PLANS\ 16_ABUTBILLOFBARS.DGN 02-05-2015

BILL OF BARS - NORTHEAST AND SOUTHEAST WING WALLS

BAR MARK	COATED	NO. REQ'D.	LENGTH	BENT	BAR SERIES	LOCATION
E501	X	4	12'-6"	X		NORTHEAST PILASTER
E502	X	4	6'-6"			NORTHEAST PILASTER
E503	X	75	6'-2"	X		NORTHEAST WING WALL CURB
E504	X	75	3'-2"			NORTHEAST WING WALL CURB
E505	X	4	11'-9"	X		SOUTHEAST PILASTER
E506	X	4	6'-0"			SOUTHEAST PILASTER
E507	X	75	5'-9"	X		SOUTHEAST WING WALL CURB
E508	X	75	3'-0"			SOUTHEAST WING WALL CURB
E509	X	10	4'-10"	X		PILASTER STIRRUP
E510	X	8	55'-0"			CURB LONGITUDINAL
E511	X	8	57'-6"			WING WALL CAP

BILL OF BARS - MEDIAN

BAR MARK	COATED	NO. REQ'D.	LENGTH	BENT	BAR SERIES	LOCATION
M401	X	8	43'-8"			LONGITUDINAL MEDIAN - EAST AND WEST SPAN
M402	X	4	29'-0"			LONGITUDINAL MEDIAN - CENTER SPAN
M403	X	4	27'-2"			LONGITUDINAL MEDIAN - CENTER SPAN
M404	X	95	3'-8"			TRANSVERSE MEDIAN - ALL SPANS

BILL OF BARS - EAST ABUTMENT

BAR MARK	COATED	NO. REQ'D.	LENGTH	BENT	BAR SERIES	LOCATION
• A501	X	198	4'-11"	X		BACKWALL DOWEL RDWY.
A502	X	99	4'-1"	X		RDWY. CORBEL
A503	X	4	12'-2"	X		BACKWALL PILASTER DOWEL
• A504	X	44	5'-7"	X		BACKWALL DOWEL WALK
A405	X	18	4'-0"	X		SDWK. CORBEL
A506	X	12	42'-2"			BACKWALL TRAN. STAGE 2
A507	X	12	45'-2"			BACKWALL TRAN. STAGE 1
A508	X	2	34'-8"			TRAN. RDWY. CORBEL STAGE 2
A509	X	2	37'-8"			TRAN. RDWY. CORBEL STAGE 1
A510	X	4	7'-2"			WALK TRANS. STAGE 1 & 2
A511	X	8	4'-0"			DIAGONAL @ 12'' WE ENERGIES GAS MAIN F.F. & B.F.
A612	X	4	5'-6"			HORIZONTAL @ 12'' WE ENERGIES GAS MAIN F.F. & B.F.
A513	X	33	8'-0"			BARS FOR STRIP SEAL ANCHORS
A514	X	4	5'-8"			TRAN. SDWK. CORBEL - N. AND S. SIDE
A515	X	2	8'-6"	X		MODIFIED PILASTER DOWEL
A516	X	10	4'-10"	X		PILASTER STIRRUP

• CUT A501 & A504 BARS AS NECESSARY TO OBTAIN 2'' CLEARANCE TO TOP OF BACKWALL OR WALK

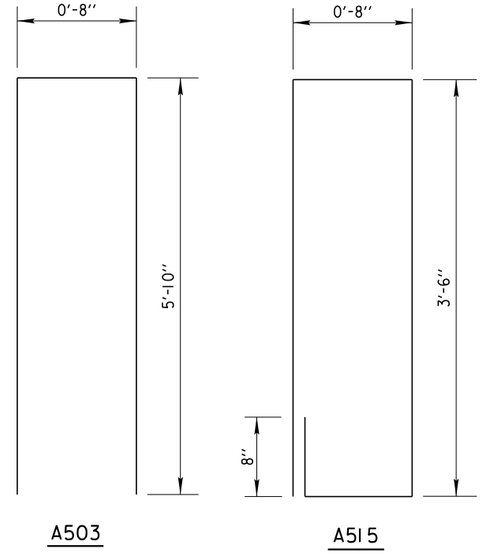

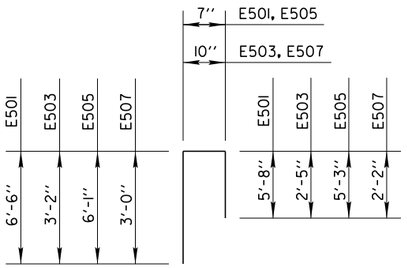

E501, E503, E505, E507

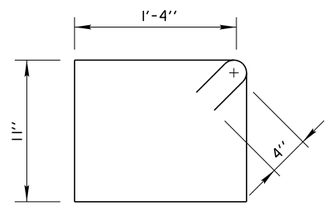

E509

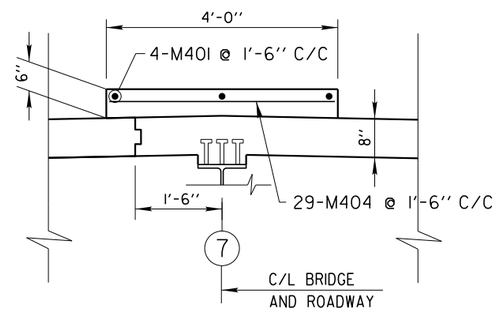

MEDIAN SECTION 1/16

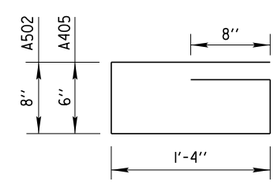

A502, A405

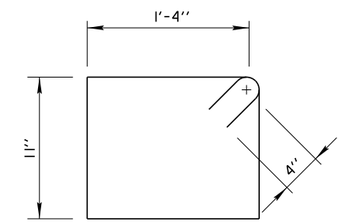

A516

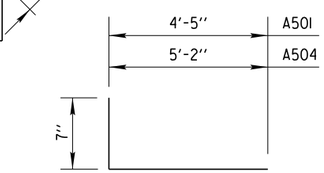

A501, A504

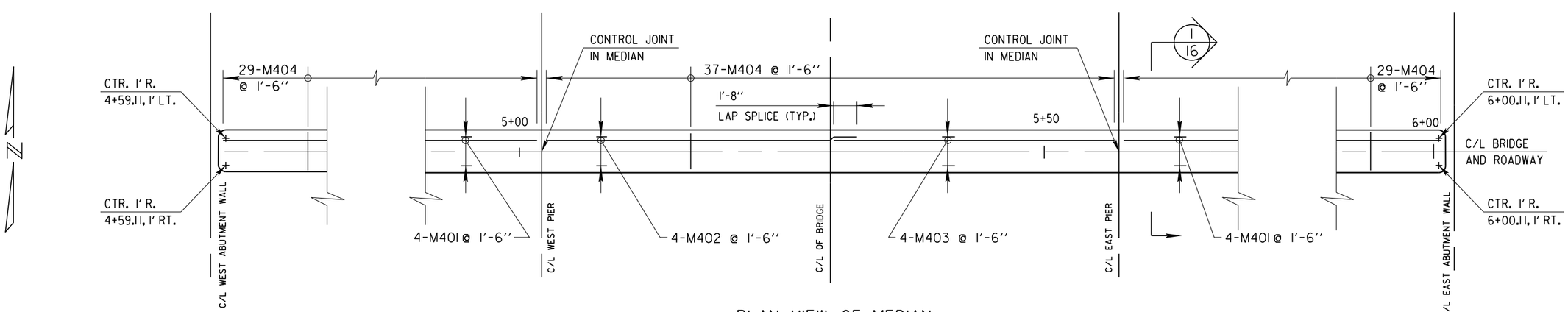

PLAN VIEW OF MEDIAN

City of Milwaukee

Department of Public Works

Infrastructure Services Division

WEST BECHER STREET BRIDGE
OVER THE KINNICKINNIC RIVER
EAST ABUTMENT, WING WALL BILL OF BARS
AND MEDIAN PLAN

REVISIONS

DESIGNED BY J.P.H.	
DRAWN BY S.J.S.	
CHECKED BY A.R.	
DATE 02/2015	SCALE NONE
JOB NUMBER BR100-15-0105	
SHEET NUMBER 16 OF 26	
OF 39	

W:\STR\B0202\PLANS\PLANS\ 17_NE & SE WING WALLS.DGN 02-04-2015

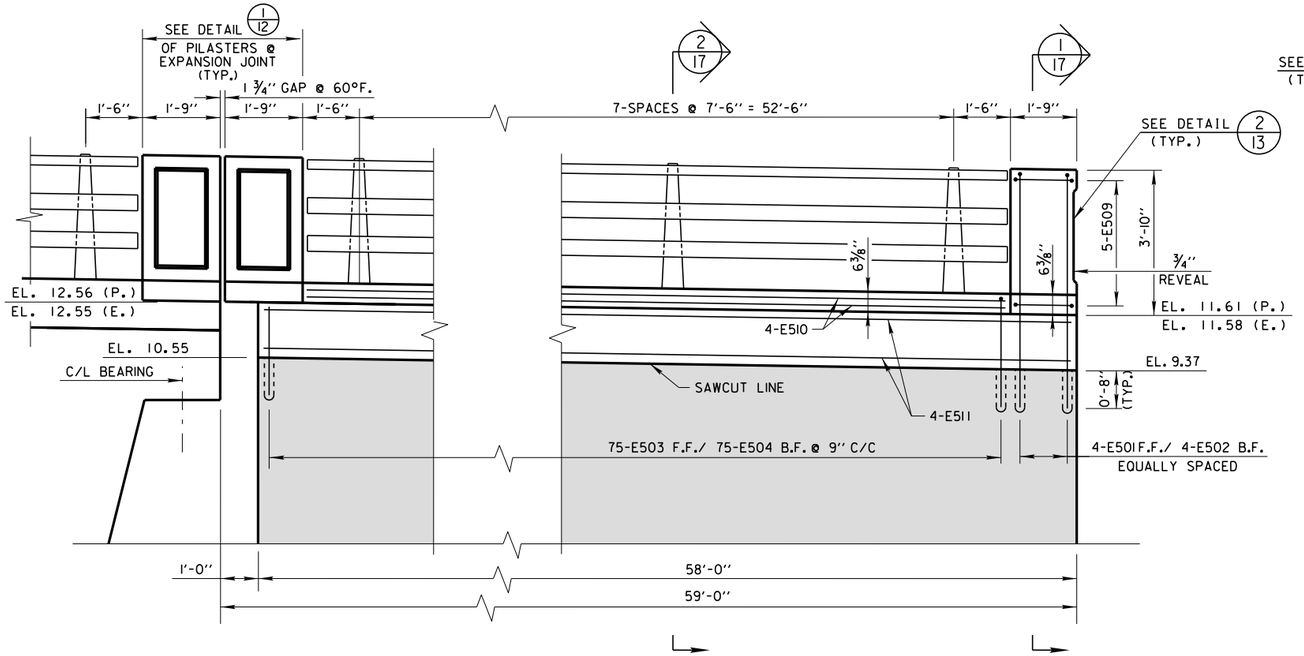

NORTHEAST WING WALL

(INSIDE FACE SHOWN)

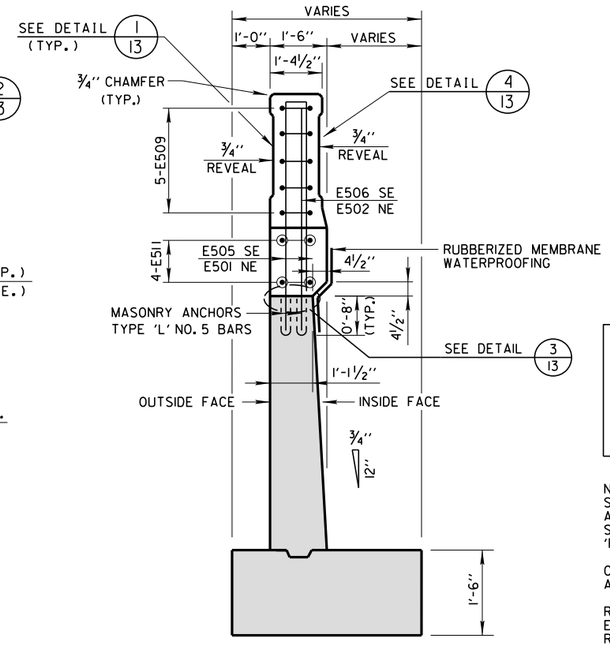

1/17 SECTION

(E) EXISTING ELEV.

(P) PROPOSED ELEV.

EXISTING CONCRETE

NEW CONCRETE

NOTE:
SAW CUTTING OF CONCRETE WALL AND REMOVAL OF THE EXISTING RAILING SHALL BE INCLUDED IN BID ITEM: 'REMOVING OLD STRUCTURE'.

CUT E503, E504, E507 & E508 AS NECESSARY FOR PROPER CLEARANCE.

REMOVE TOP OF WALL TO SOUND CONCRETE ESTIMATED QUANTITIES (SHT. 2) ASSUME 2'-0" REMOVAL DEPTH.

APPLY STAIN TO ALL EXPOSED WING WALL CONCRETE SURFACES ON OUTSIDE FACE.

PILASTERS TO BE STAINED ON ALL SURFACES.

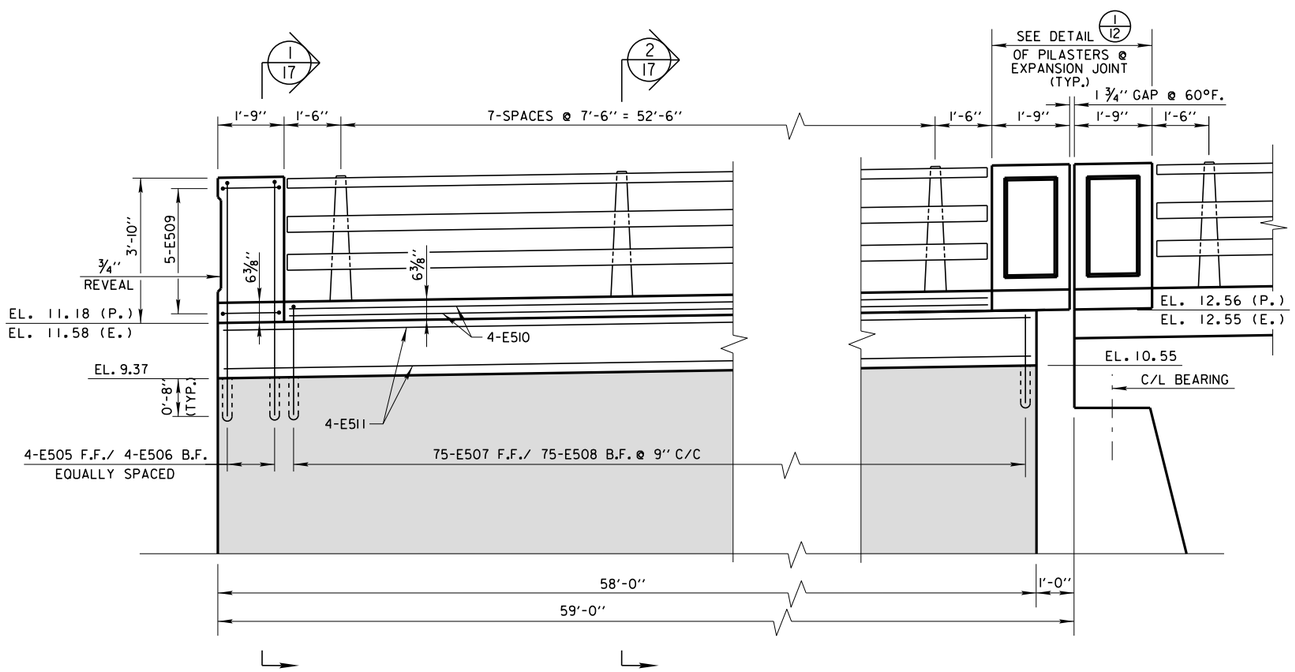

SOUTHEAST WING WALL

(INSIDE FACE SHOWN)

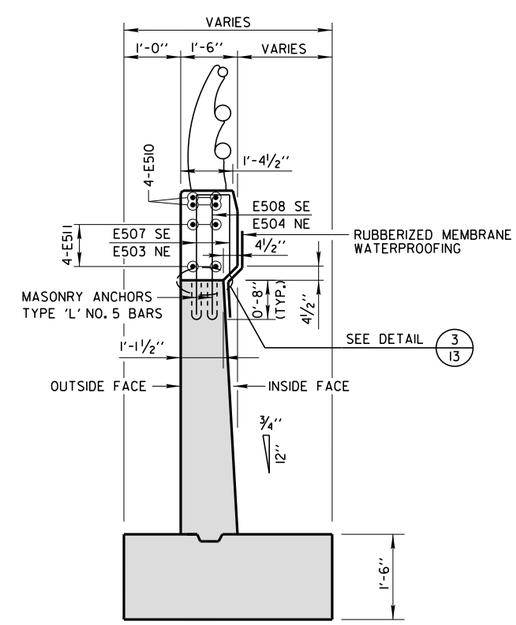

2/17 SECTION

City of Milwaukee

Department of Public Works

Infrastructure Services Division

WEST BECHER STREET BRIDGE OVER THE KINNICKINNIC RIVER NORTHEAST AND SOUTHEAST WING WALLS PLAN, SECTION AND ELEVATION

REVISIONS

DESIGNED BY J.P.H.	
DRAWN BY S.J.S.	
CHECKED BY A.R.	
DATE 02/2015	SCALE NONE
JOB NUMBER BR100-15-0105	
SHEET NUMBER 17 OF 26	
OF 39	

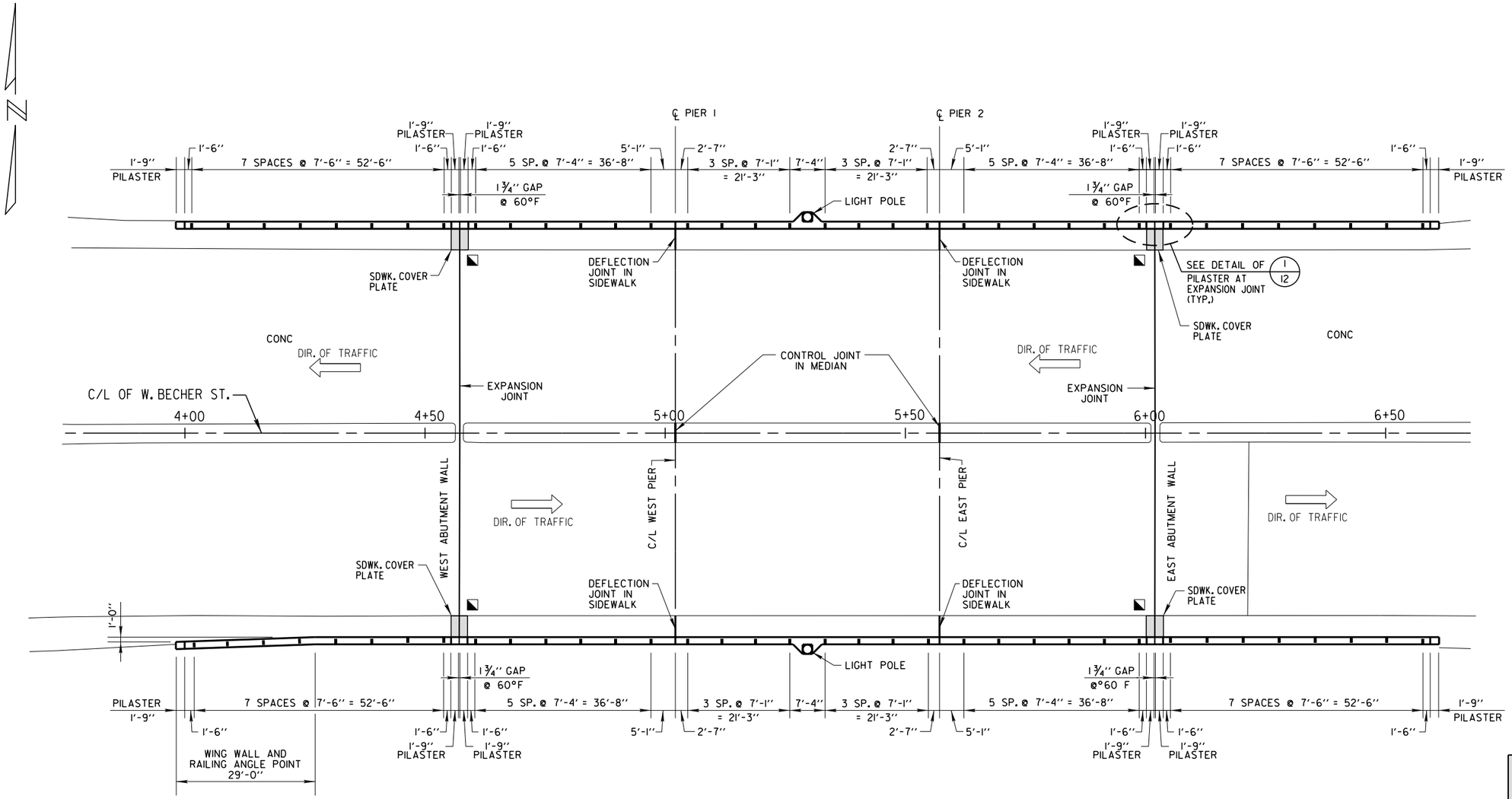

SIDEWALK COVER PLATE DETAIL

◪ = AREA OF MOVEMENT OF THE COVER PLATE. ORIENT TO ALIGN WITH DIRECTION OF TRAFFIC.

NOTE:
SEE SHEET NO. 22 FOR DETAILS REGARDING ORIENTATION OF COVER PLATE MOVEMENT.

City of Milwaukee

Department of Public Works

Infrastructure Services Division

WEST BECHER STREET BRIDGE OVER THE KINNICKINNIC RIVER
3-LINE ALUMINUM RAILING POST SPACING

REVISIONS

DESIGNED BY J.P.H./S.R.	
DRAWN BY S.J.S.	
CHECKED BY A.R.	
DATE 02/2015	SCALE NONE
JOB NUMBER BR100-15-0105	
SHEET NUMBER 18 OF 26	
OF 39	

W:\STR\B0202\PLANS\PLANS 18_RAILING PLAN.DGN 02-02-2015

W:\STR\B0202\PLANS\PLANS 19.3-LINE ALUM RAIL DETS.DGN 01-30-2015

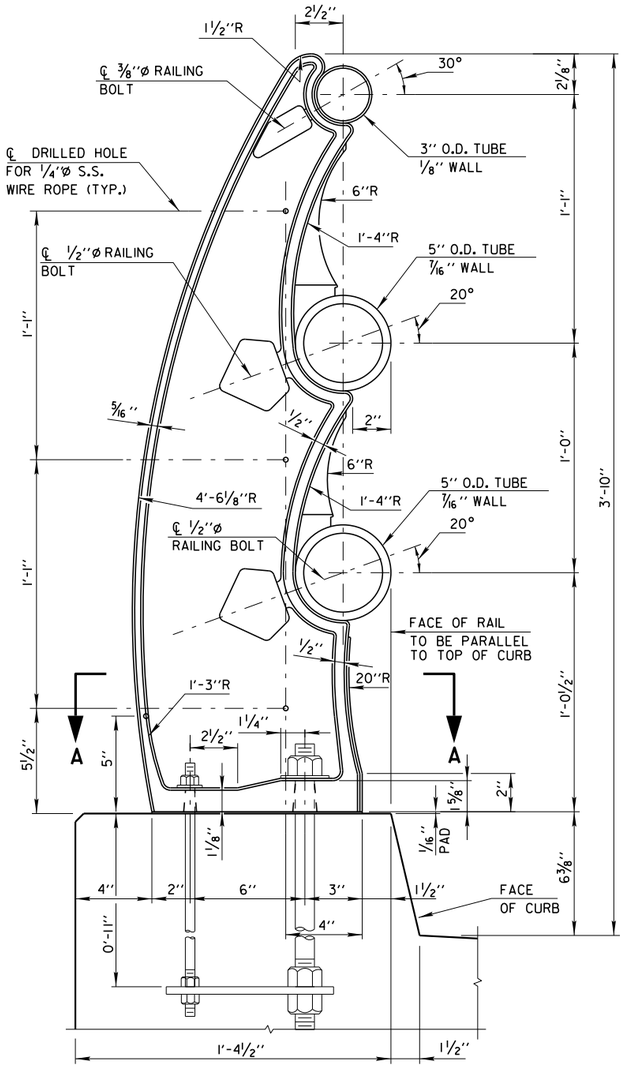

ALUMINUM RAILING POST

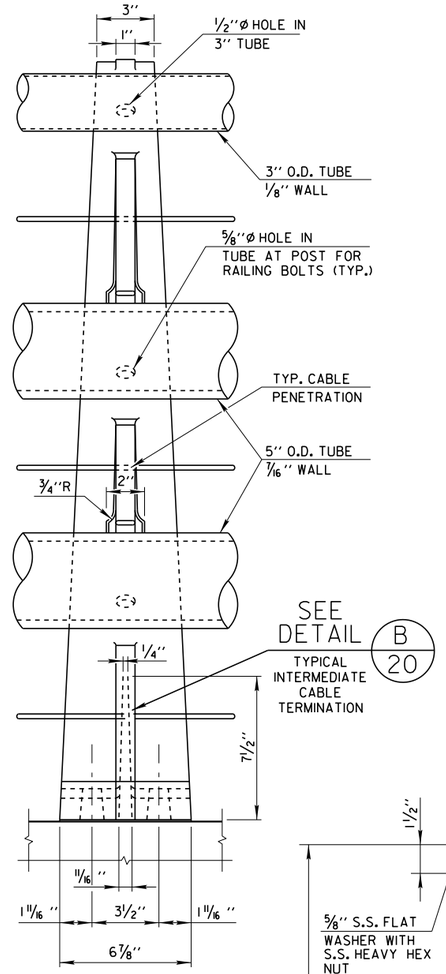

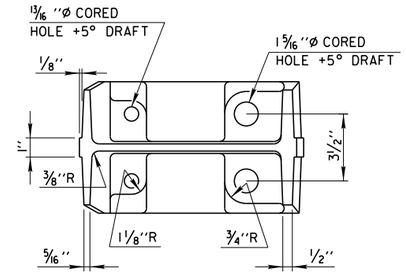

SECTION A-A

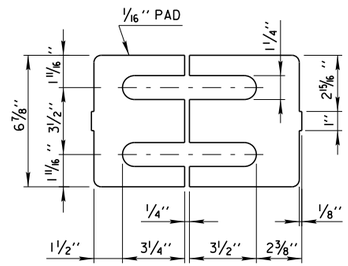

NOTE: PREFORMED PADS SHALL CONSIST OF COTTON FIBERS BONDED WITH NATURAL OR SYNTHETIC RUBBER. WEIGHT OF FIBER SHALL BE APPROX. 50% OF THE TOTAL WEIGHT OF THE PAD. ULTIMATE BREAKDOWN LIMIT OF THE PAD UNDER COMPRESSIVE LOADING SHALL BE AT LEAST 10,000 P.S.I.

RUBBER FIBER PAD

NOTES:

1. THIS RAILING IS BASED ON THE AASHTO CRASH TESTED BR2 TYPE A ALUMINUM RAILING.
2. ELECTRODES FOR WELDING SHALL CONFORM TO AWS A5.10, ALLOY ER.
3. ALL WELDS TO BE SMOOTH AND FREE FROM SHARP EDGES AND/OR BURRS.
4. POST TO BE ALUMINUM ALLOY PERMANENT MOLD CASTING CONFORMING TO AASHTO DESIGNATION M193, ALLOY A444-T4.
5. RAILS AND SPLICE SLEEVES SHALL BE ALUMINUM ALLOY EXTRUDED TUBING 6061-T6 PER ASTM B221.
6. ALL POSTS SHALL BE SET NORMAL TO THE PGL. RAILS SHALL BE ATTACHED TO A MINIMUM OF 4 POSTS.
7. ALL RAILS SHALL BE FREE FROM SHARP EDGES OR BURRS THAT COULD CAUSE INJURY.
8. HOLES FOR BOLTS IN RAILS ARE TO BE FIELD DRILLED TO INSURE PROPER FIT.
9. FOR PEDESTRIAN CABLE DETAILS, SEE THIS SHEET AND SHT. 20.
10. FABRICATE RAILING TO MATCH ALIGNMENT OF BRIDGE WALK AND WING WALL (NOTE - ANGLE JOINT EXISTS IN SOUTHWEST WING WALL)
11. ALL RAILS SHALL HAVE END CAPS AT END OF RAIL TERMINATIONS.
12. SHIMS SHALL CONFORM TO SAME MATERIAL AS POSTS.
13. SHIMS SHALL BE USED UNDER POSTS WHERE REQ'D. FOR ALIGNMENT.
14. FILL ALL EXPOSED OPENINGS BETWEEN SHIMS AND POST ANCHOR BOLT HOLES WITH NON-STAINING GRAY NON-BITUMINOUS JOINT SEALER.

RAIL TO POST HARDWARE:

RAILING BOLT ASSEMBLY MATERIALS SHALL BE AS FOLLOWS:

STAINLESS STEEL THREADED RODS SHALL BE ASTM A276 TYPE 304, ANNEALED COLD FINISHED. MINIMUM TENSILE STRENGTH SHALL BE 90 KSI.

STAINLESS STEEL HEX NUTS AND WASHERS SHALL BE ASTM A276 TYPE 300 SERIES.

ANCHOR HARDWARE:

ALL THREADED RODS SHALL BE STAINLESS STEEL ASTM A276 TYPE 300 OR 400 SERIES WITH A MINIMUM TENSILE STENGTH OF 90 KSI, MINIMUM YIELD STRENGTH OF 35 KSI AND MIN ELONGATION OF 15% IN 2 INCHES.

ALL HEAVY HEX NUTS AND WASHERS SHALL BE STAINLESS STEEL U.N.O.

NEOPRENE PADS SHALL HAVE A NOMINAL DUROMETER HARDNESS OF 60•5

SHIM MATERIAL SHALL BE ASTM B209, ALLOY 1100-0.

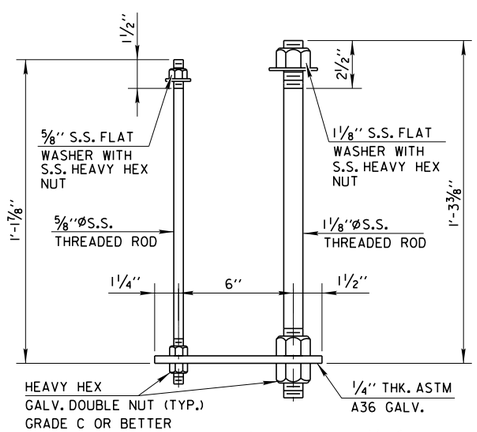

ANCHORAGE DETAIL

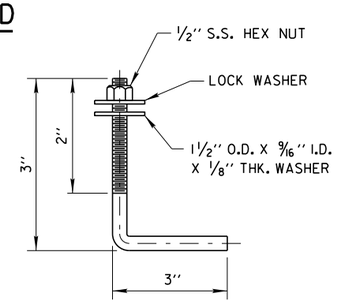

1/2" DIA. RAILING BOLT

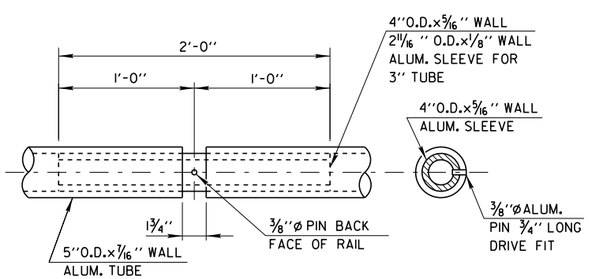

ALUMINUM SLEEVE

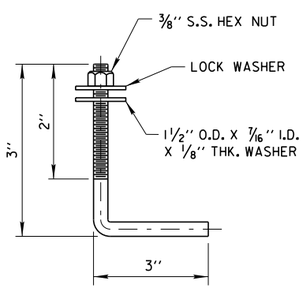

3/8" DIA. RAILING BOLT

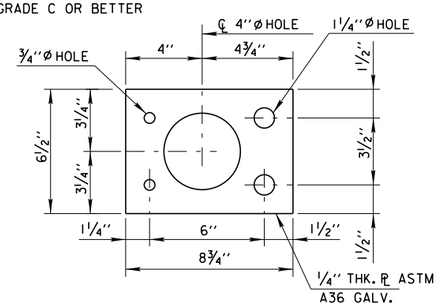

ANCHORAGE DETAIL

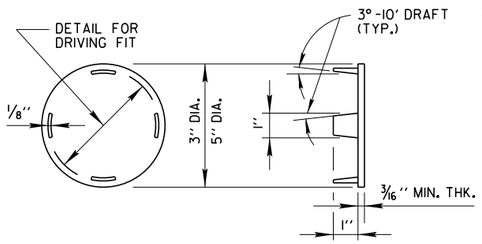

RAIL CLOSURE CAP DETAIL

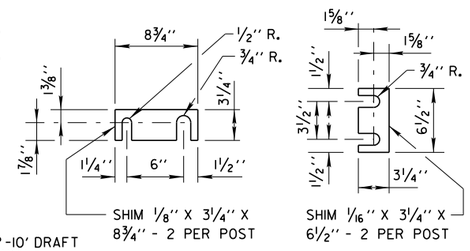

POST SHIM DETAILS

City of Milwaukee

Department of Public Works

Infrastructure Services Division

WEST BECHER STREET BRIDGE OVER THE KINNICKINNIC RIVER
3-LINE ALUMINUM RAILING DETAILS

REVISIONS

DESIGNED BY J.P.H./S.R.	
DRAWN BY S.J.S.	
CHECKED BY A.R.	
DATE 02/2015	SCALE NONE
JOB NUMBER BR100-15-0105	
SHEET NUMBER 19 OF 26	
OF 39	

W:\STR\B0202\PLANS\PLANS 20_ALUM RAIL CABLE DETS.DGN 02-05-2015

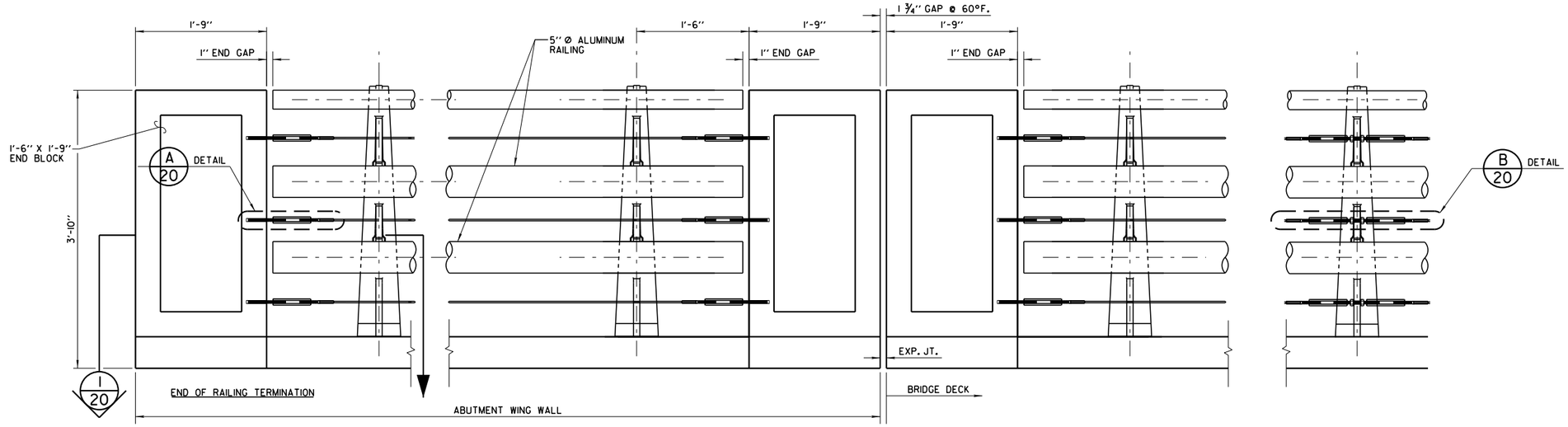

PARTIAL RAILING ELEVATION
INSIDE FACE

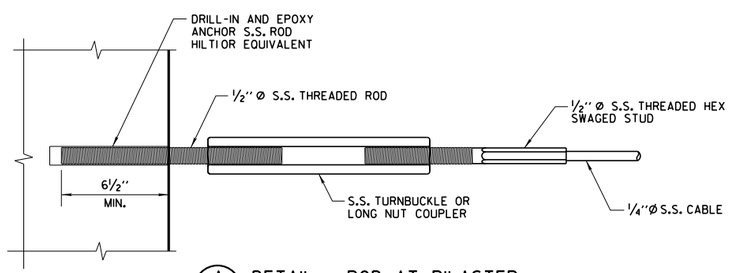

A 20 DETAIL - ROD AT PILASTER

HARDWARE:

CABLE

- 1/4"Ø S.S. 1x19 CLASS
- BREAKING STRENGTH OF 8,200 LBS.

THREADED ROD

- S.S. A276 TYPE 300 OR 400 SERIES
- MIN. TENSILE STRENGTH = 90 KSI

THREADED HEX SWAGED STUD

THREAD SIZE: 1/2- 20
LENGTH OF THREAD : 3" MIN
TOTAL LENGTH : AS MANUFACTURER REQ'D. FOR 1/4- 1x19 SS CABLE
PART NO. H58-50FCC
THE CABLE CONNECTION
5224 HIGHWAY 50E
CARSON CITY, NV 89701
800-851-2961
OR EQUIVALENT

NOTES:

1. CABLES SHALL BE TIGHTENED AFTER RAILING HAS BEEN INSTALLED.
2. INTERMEDIATE CABLE TERMINATORS SHALL BE LOCATED AT ±75'.
3. FITTINGS OF THE CABLES SHOULD BE FIELD SWAGED.

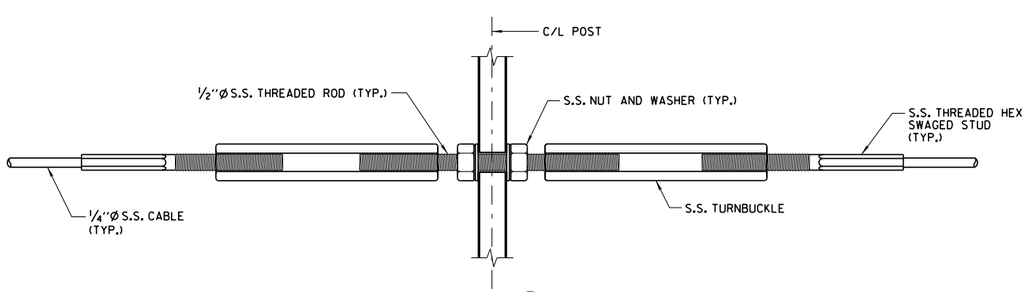

DETAIL B 20
INTERMEDIATE

(FOR LOCATION SEE NOTE 2)

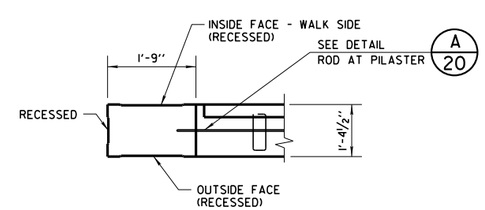

1 20 SECTION

City of Milwaukee
Department of Public Works
Infrastructure Services Division

WEST BECHER STREET BRIDGE OVER THE KINNICKINNIC RIVER ALUMINUM RAILING CABLE DETAILS

REVISIONS

DESIGNED BY J.P.H./S.R.
DRAWN BY S.J.S.
CHECKED BY A.R.
DATE 02/2015
SCALE NONE
JOB NUMBER BR100-15-0105
SHEET NUMBER 20 OF 26
OF 39

W:\STR\B0202\PLANS\PLANS 21_MODIFIED GIRDER END DIAPHRAGMS.DGN 01-29-2015

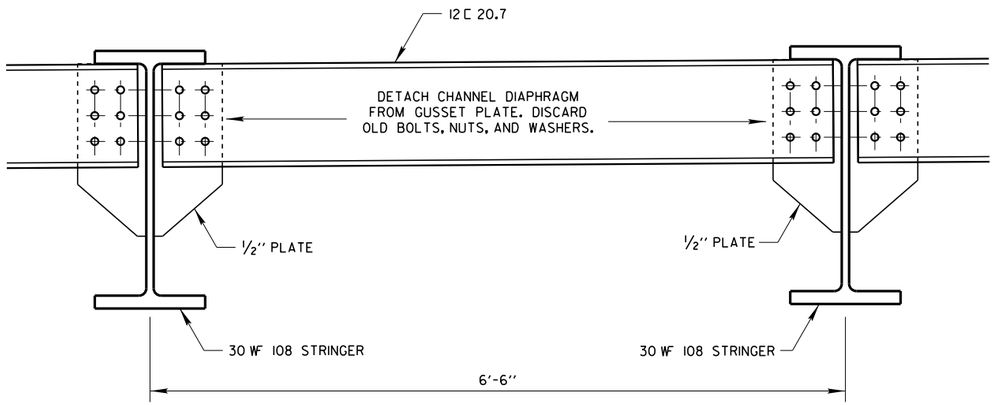

EXISTING GIRDER END DIAPHRAGM

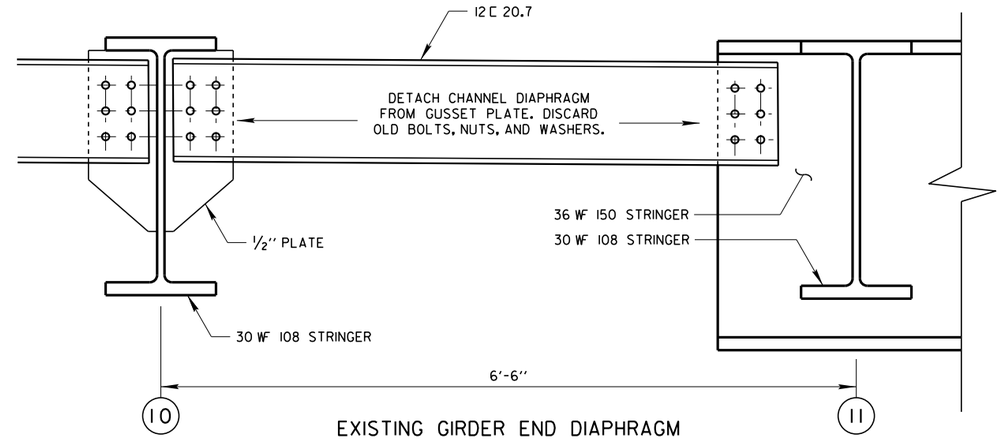

EXISTING GIRDER END DIAPHRAGM

@ WEST ABUTMENT BETWEEN GIRDERS 10 & 11

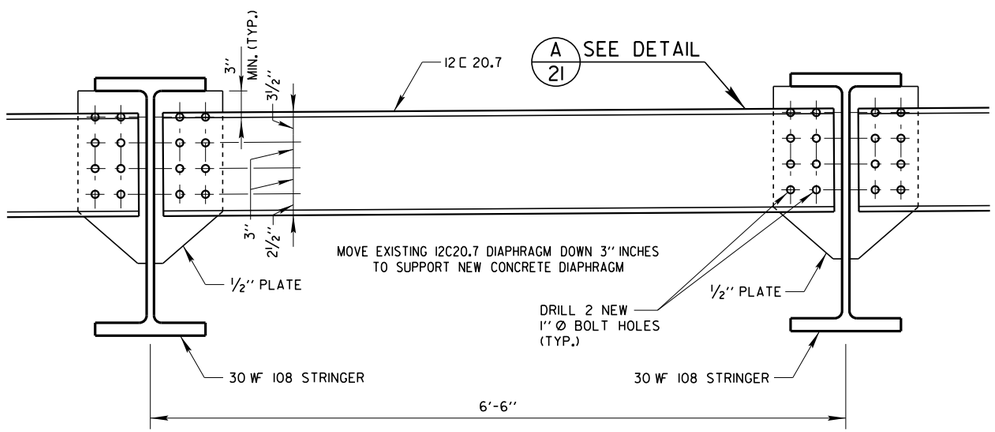

MODIFIED GIRDER END DIAPHRAGM

BETWEEN GIRDERS (TYP. EXCEPT AS NOTED)

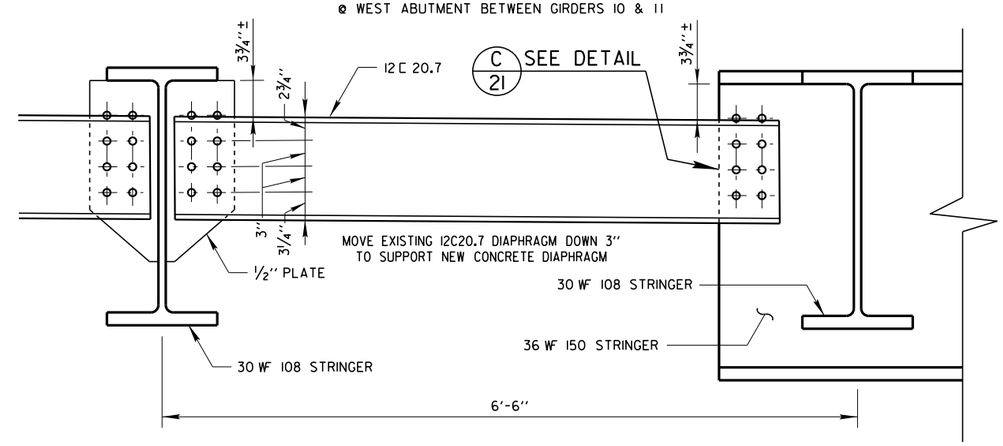

MODIFIED GIRDER END DIAPHRAGM

@ WEST ABUTMENT BETWEEN GIRDERS 10 & 11

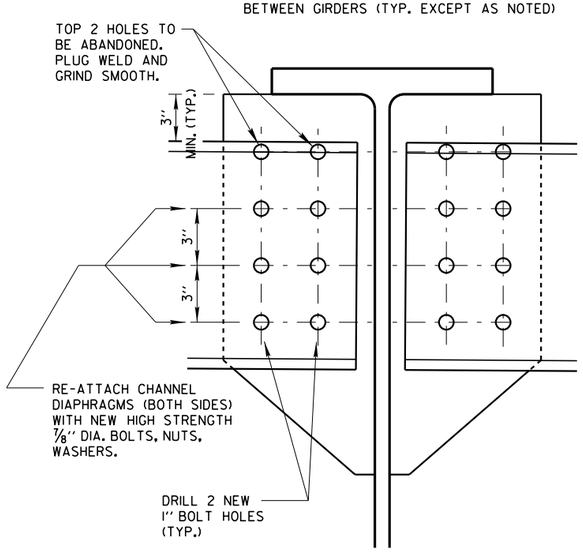

A 21 MODIFIED GIRDER END DIAPHRAGM DETAIL

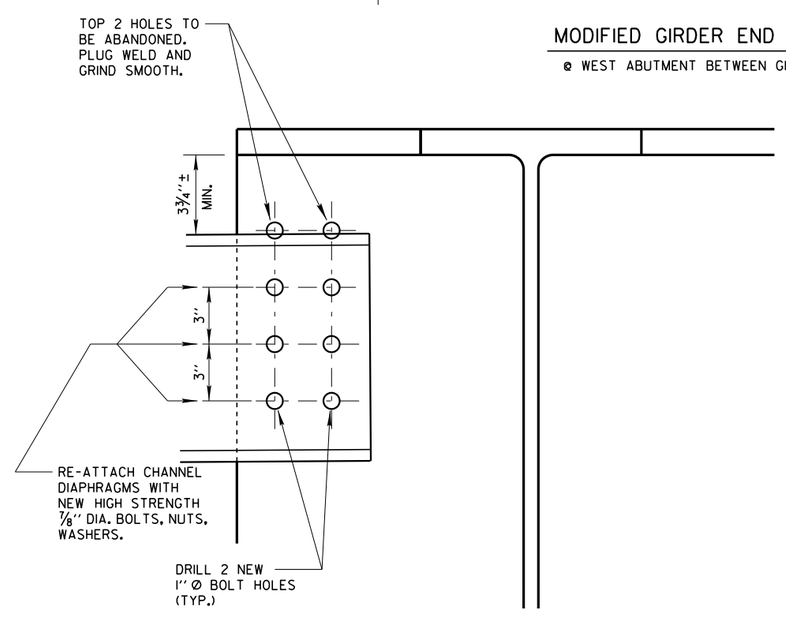

C 21 MODIFIED GIRDER END DIAPHRAGM DETAIL

City of Milwaukee

Department of Public Works

Infrastructure Services Division

WEST BECHER STREET BRIDGE OVER THE KINNICKINNIC RIVER MODIFIED GIRDER END DIAPHRAGMS

REVISIONS

DESIGNED BY J.P.H.	
DRAWN BY S.J.S.	
CHECKED BY A.R.	
DATE 02/2015	SCALE NONE
JOB NUMBER BR100-15-0105	
SHEET NUMBER 21 OF 26	
OF 39	

W:\STR\B0202\PLANS\PLANS\ 22_EXP-JOINT.DGN 01-16-2015

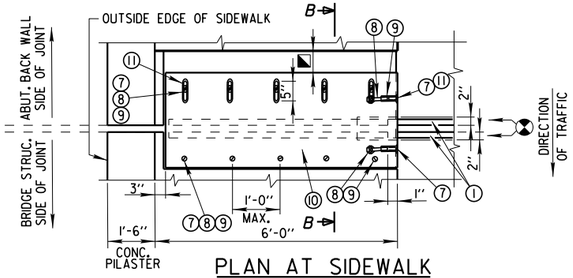

PLAN AT SIDEWALK

AT S.W. CORNER - EASTBOUND TRAFFIC AND N.E. CORNER - WESTBOUND TRAFFIC

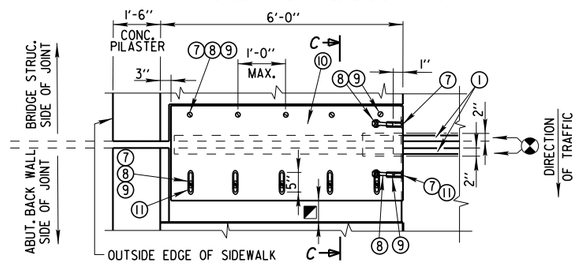

PLAN AT SIDEWALK

AT N.W. CORNER - WESTBOUND TRAFFIC AND S.E. CORNER - EASTBOUND TRAFFIC

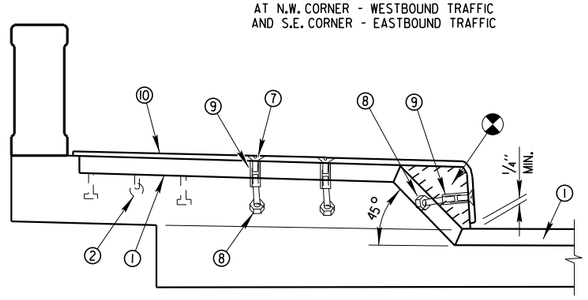

SECTION AT SIDEWALK

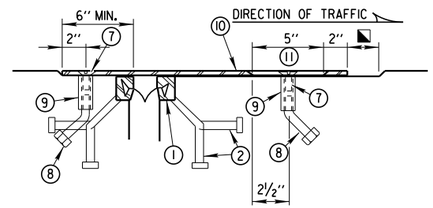

EXPANSION JOINT AT SIDEWALK

SECTION B-B

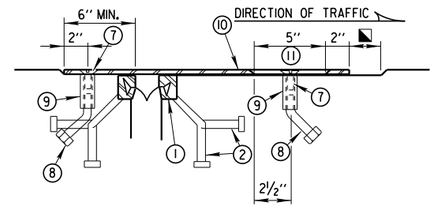

EXPANSION JOINT AT SIDEWALK

SECTION C-C

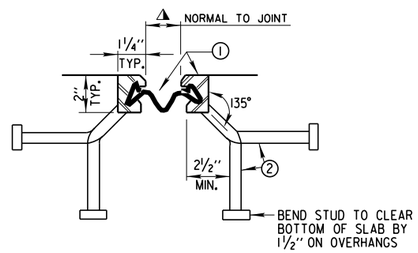

SECTION THRU JOINT

EXTERIOR GIRDER TO EDGE OF SLAB & AT PARAPETS, MEDIUMS & SIDEWALKS

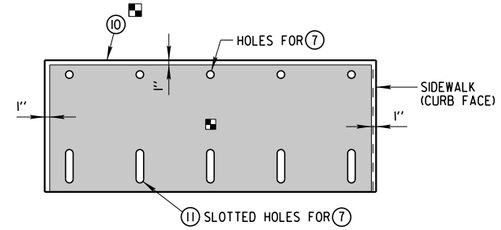

PLAN OF SIDEWALK COVER PLATE WITH SLIP-RESISTANT SURFACE

APPROVED SLIP-RESISTANT APPLIED SURFACES FOR STEEL PLATES		
PRODUCT	MANUFACTURER	CONTACT AT
SLIPNOT GRADE 2, STEEL	W. S. MOLNAR COMPANY	1-800-SLIPNOT
ALGRIP, STEEL	ROSS TECHNOLOGY CORP.	1-800-345-8170

PLACE SLIP-RESISTANT SURFACE ON TOP WALKING SURFACE IN SHADED AREA ONLY (NOT ON CURB FACE). GALVANIZE PLATE AFTER SLIP-RESISTANT SURFACE IS APPLIED.

BLOCK OUT CONCRETE 2" EACH SIDE OF JOINT OPENING.

JOINT OPENING DIMENSION ALONG SKEW PLUS 1/2".

LEGEND:

1. NEOPRENE STRIP SEAL (4-INCH) & STEEL EXTRUSIONS. SET JOINT OPENING AT 1 3/4" WHEN EXPANSION LENGTH ≤ 230'-0". JOINT OPENINGS GIVEN NORMAL TO JOINT.
2. STUDS 5/8" Ø x 6 3/8" LONG AT 6" ALTERNATE CENTERS. WELD TO EXTRUSIONS & BEND AS SHOWN AFTER WELDING.
2A. 1/2" THICK ANCHOR PLATE WITH 5/8" Ø ROD (OR ALTERNATE STRIP SEAL ANCHOR). WELD ROD TO ANCHOR PLATE, WELD ANCHOR PLATE TO NO. 1 AT 1'-6" CTRS. BETWEEN GIRDERS.
3. 3/4" Ø THREADED ROD WITH 2 NUTS AND WASHERS. FOR STEEL GIRDERS WELD THREADED ROD TO TOP FLANGE OR ATTACH BY BOLTING THRU FLANGE. ON ABUTMENT SIDE GROUT THREADED ROD INTO FIELD DRILLED HOLES IN ABUTMENT BACK WALL AS SHOWN.
4. 3/4" Ø THREADED ROD WITH NUT. TACK WELD NUT TO NO. 5.
5. FABRICATE SUPPORT FROM 3" x 1/2" BAR AS SHOWN OR EQUIVALENT. ONE PER GIRDER PER SIDE. SHOP OR FIELD WELD TO NO. 1. IF FIELD WELDED, COVER WELDED AREAS WITH EPOXY-COATING MATERIAL. PROVIDE 1 1/2" Ø HOLE FOR NO. 3 & 1" Ø HOLE FOR NO. 4.
7. 3/4" Ø x 1 1/2" STAINLESS STEEL SOCKET FLAT HEAD SCREWS WITH ANTI-SEIZE LUBRICANT. PLACE IN COUNTERSUNK HOLE. RECESS 1/16" BELOW PLATE SURFACE.
8. 3/4" Ø x 4" GALVANIZED HEX HEAD BOLT. BEND 45°.
9. 3/4" Ø x 2 1/4" GALVANIZED THREADED COUPLING.
10. SIDEWALK COVER PLATE 3/8" x (2'-0" WIDE FOR SKEWS TO 45°) x LIMITS SHOWN. BEND DOWN FACE OF SIDEWALK WITH HOLES FOR NO. 7. GALVANIZE PLATE AFTER SLIP-RESISTANT SURFACE IS APPLIED
11. 1" x 5" SLOTTED COUNTERSUNK HOLE FOR NO. 7. SLOT PARALLEL TO DIRECTION OF MOVEMENT.

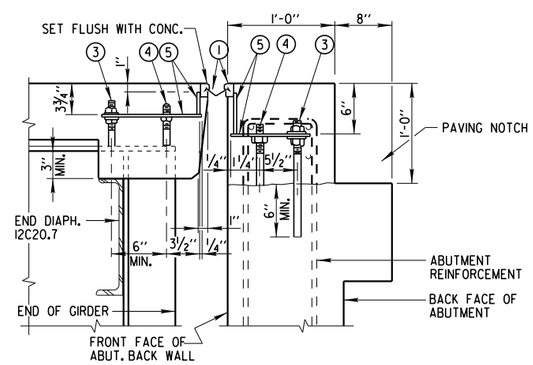

TYPICAL SECTION THRU ROADWAY JOINT AT STEEL GIRDER

NORMAL TO C/L SUBSTRUCTURE

NOTES:

ONE FIELD SPLICE PERMITTED IN STEEL EXTRUSIONS, UNLESS MORE ARE REQUIRED FOR STAGED CONSTRUCTION, HANDLING OR GALVANIZED REQUIREMENTS. IF USED, DETAILS SHALL BE SUBMITTED FOR APPROVAL. NO SPLICING PERMITTED IN NEOPRENE STRIP SEAL.

AFTER FABRICATION, BUT BEFORE SHIPMENT, STRAIGHTEN STEEL EXTRUSIONS SUCH THAT THEY SHALL BE FREE FROM WARP, TWIST & SWEEP.

FABRICATOR SHALL PROVIDE MEANS OF KEEPING GALVANIZED EXTRUSIONS CLEAN AND SMOOTH DURING SHIPMENT AND PRIOR TO APPLYING LUBRICANT ADHESIVE FOR NEOPRENE GLAND INSTALLATION.

SANDBLAST PLATES, SUPPORTS AND EXTRUSIONS AFTER FABRICATION IN ACCORDANCE WITH SSPC SP. #6 "COMMERCIAL BLAST CLEANING". AFTER BLAST CLEANING, THE PLATES, SUPPORTS AND EXTRUSIONS SHALL BE HOT DIPPED GALVANIZED. SLIP-RESISTANT SURFACE IS APPLIED TO SIDEWALK COVER PLATES BY THE MANUFACTURER AND THEN HOT DIPPED GALVANIZED TO THEIR RECOMMENDATIONS TO MAINTAIN THE INTEGRITY OF THIS SURFACE.

ANCHOR SYSTEM NO. 8 AND NO. 9 SHALL CONFORM TO ASTM A307 AND SHALL BE GALVANIZED IN ACCORDANCE WITH ASTM A153 CLASS C & D.

STRIP SEAL EXPANSION JOINT ASSEMBLY, INCLUDING ANCHOR STUDS AND HARDWARE WILL BE PAID FOR AT THE LUMP SUM PRICE BID FOR "EXPANSION DEVICE (P-40-794)".

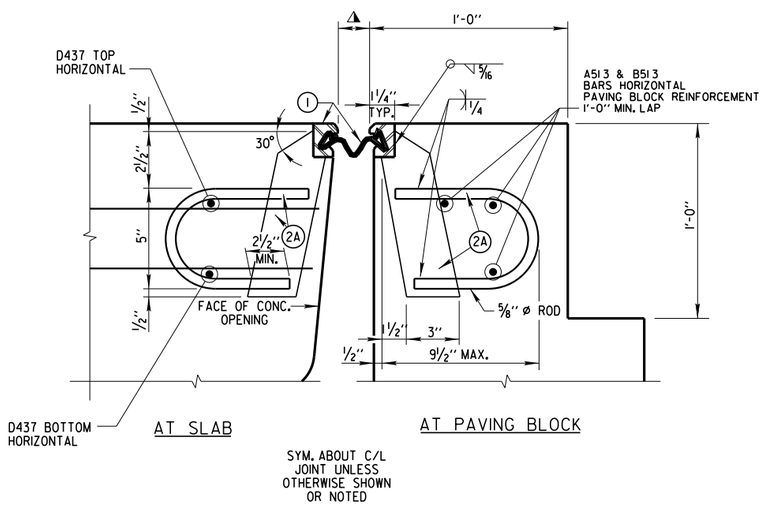

SECTION THRU ROADWAY JOINT

ROADWAY TRAFFIC AREA BETWEEN EXTERIOR GIRDERS

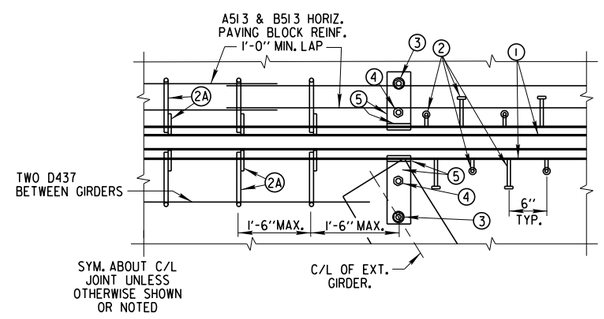

PARTIAL PLAN AT ROADWAY

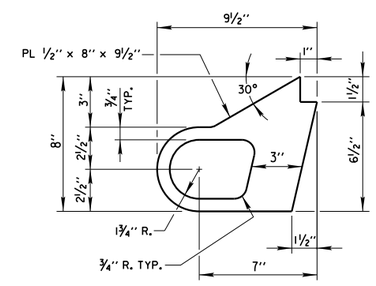

ALTERNATE STRIP SEAL ANCHOR

City of Milwaukee

Department of Public Works

Infrastructure Services Division

W BECHER STREET BRIDGE OVER THE KINNICKINNIC RIVER STRIP SEAL EXPANSION JOINTS

REVISIONS

DESIGNED BY J.P.H.	
DRAWN BY S.D.B.	
CHECKED BY A.R.	
DATE 02/2015	SCALE NONE
JOB NUMBER BR100-15-0105	
SHEET NUMBER 22 OF 26	
OF 39	

W:\STRUCTURE\B0202\PLANS\PLANS\ 23_ELASTOMERIC BEARINGS.DGN 01-30-2015

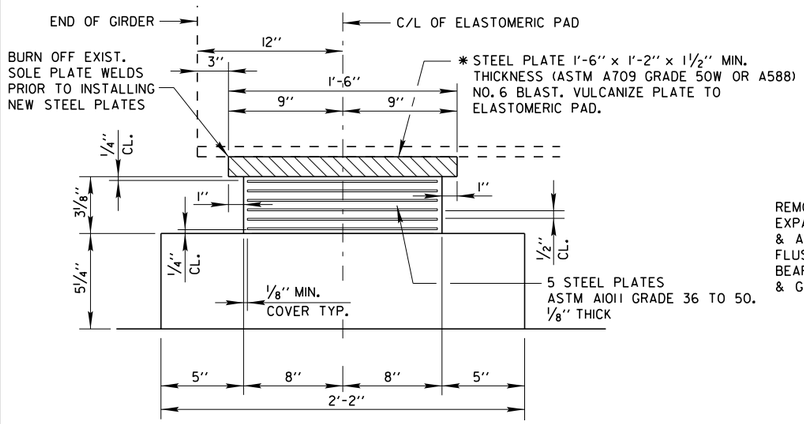

FRONT ELEVATION

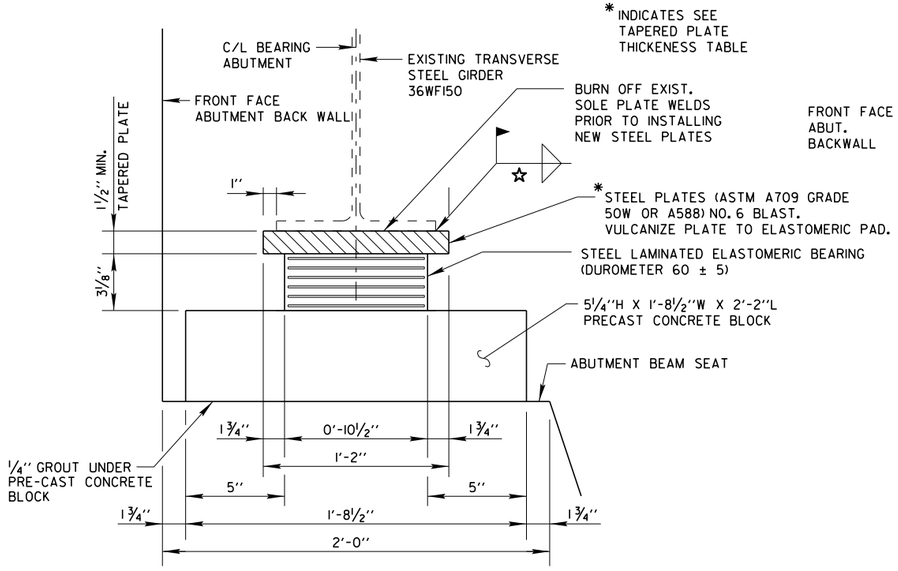

SECTION THRU ELASTOMERIC BEARING

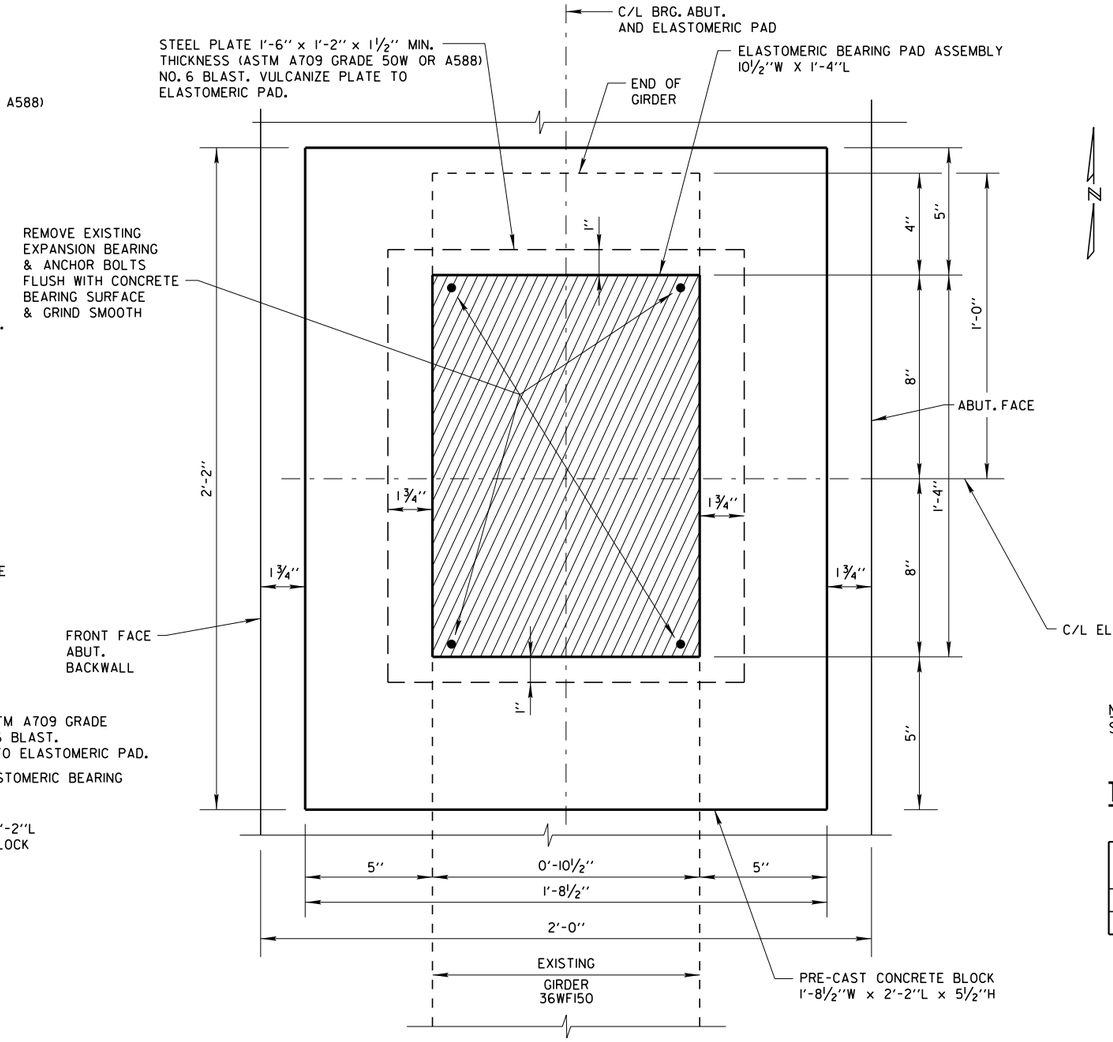

CLEARANCE DIAGRAM AT ABUTMENTS

NOTE:
SEE BEARING NOTES ON SHEET 24

TAPERED TOP PLATE THICKNESS

LOCATION	THICKNESS AT BACK EDGE	THICKNESS AT FRONT EDGE
E. ABUT.	1 ½''	1 ⅝''
W. ABUT.	1 ½''	1 ⅝''

WELDING PROCEDURES SHALL BE ESTABLISHED BY THE CONTRACTOR TO RESTRICT THE MAXIMUM TEMPERATURE REACHED BY SURFACES IN CONTACT WITH ELASTOMER TO 200°F (93°C). TEMPERATURES SHALL BE CONTROLLED BY TEMPERATURE INDICATING WAX PENCILS OR OTHER SUITABLE MEANS APPROVED BY THE ENGINEER.

☆ TABLE OF FILLET WELD SIZES

MATERIAL THICKNESS OF THICKER PART JOINED.	‡ MIN. SIZE OF FILLET WELD
TO ½'' INCLUSIVE	3/16''
OVER ½'' TO ¾''	¼''
OVER ¾'' TO 1½''	△ 5/16''
OVER 1½'' TO 2¼''	△ ⅜''
OVER 2¼'' TO 6''	△ ½''

‡ EXCEPT THAT THE WELD SIZE SHALL NOT EXCEED THE THICKNESS OF THE THINNER PART JOINED.

△ MIN. PASS SIZE IS 5/16''

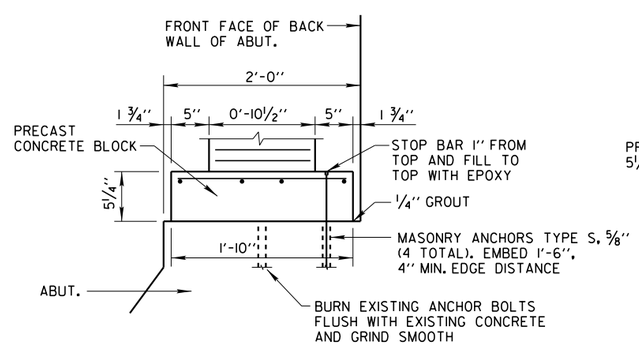

PRECAST CONCRETE BLOCK DETAIL

(SIDE VIEW)

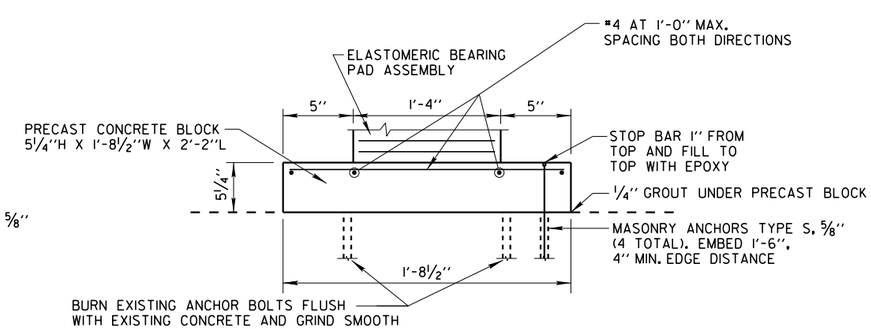

PRECAST CONCRETE BLOCK DETAIL

(ELEVATION VIEW)

City of Milwaukee

Department of Public Works

Infrastructure Services Division

WEST BECHER STREET BRIDGE
OVER THE KINNICKINNIC RIVER
ELASTOMERIC BEARING REPLACEMENT DETAILS
FOR TRANSVERSE GIRDER AT WEST ABUTMENT

REVISIONS

DESIGNED BY J.P.H.
DRAWN BY S.J.S.
CHECKED BY A.R.
DATE 02/2015
SCALE NONE
JOB NUMBER BR100-15-0105
SHEET NUMBER 23 OF 26
OF 39

W:\STRUBO202\PLANS\PLANS\ 24_ELASTOMERIC BEARINGS.DGN 01-30-2015

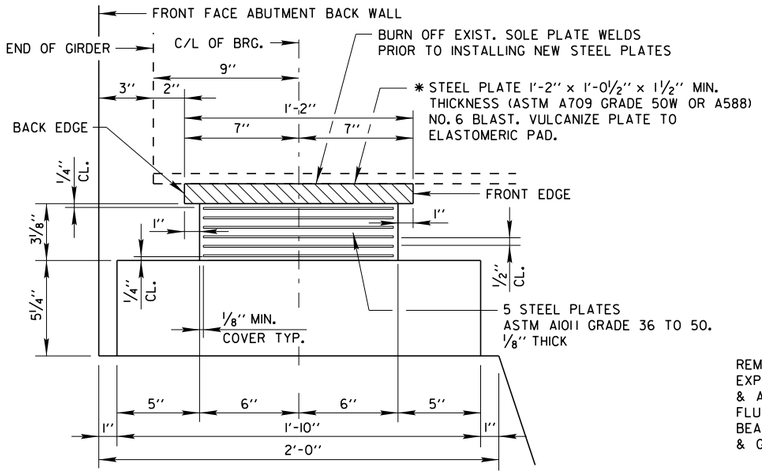

SECTION THRU ELASTOMERIC BEARING

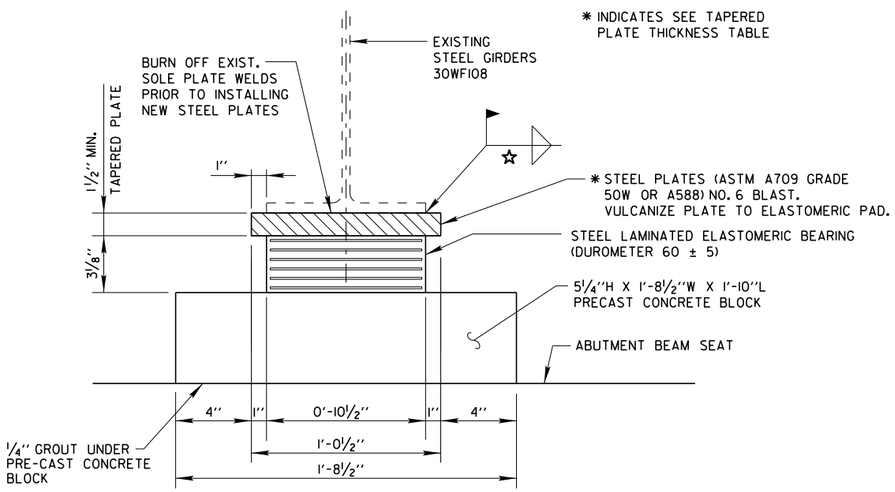

FRONT ELEVATION

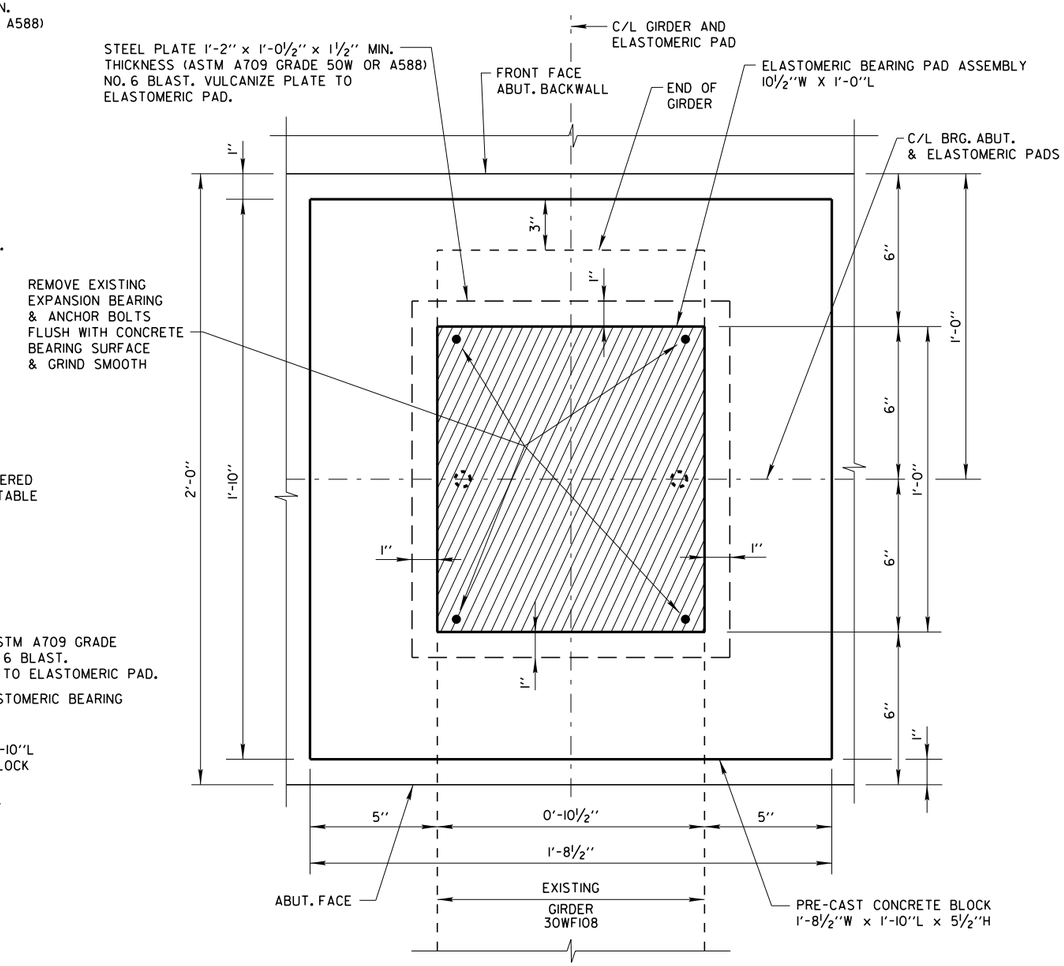

CLEARANCE DIAGRAM AT ABUTMENTS

BEARING NOTES

ALL MATERIAL IN BEARINGS, INCLUDING STEEL PLATES SHALL CONFORM TO ASTM A709 GRADE 50W OR A588.

ALL MATERIAL IN BEARINGS, INCLUDING PRECAST CONCRETE BEARING BLOCKS, MASONRY ANCHORS, ¼" GROUT, STEEL PLATES, AND BEARING PADS, SHALL BE PAID FOR AT THE UNIT PRICE BID FOR "BEARING PADS ELASTOMERIC LAMINATED P-40-0794", EACH.

ALL STRUCTURAL STEEL PLATES SHALL BE FLAT ROLLED WITH ALL SURFACES SMOOTH AND FREE FROM WARP AND ALL EDGES SMOOTH, STRAIGHT AND VERTICAL.

ALL PLATE CUTS SHALL BE MACHINE OR MACHINE FLAME CUTS.

BURN EXISTING ANCHOR BOLTS AT EAST & WEST ABUTMENT OFF FLUSH WITH BEAM SEAT.

NEW ELASTOMERIC BEARINGS TO BE PLACED AT ALL GIRDERS RESTING ON ABUTMENT BEAM SEATS.

23 - ELASTOMERIC BEARING SIZE 1'-0"L X 0'-10½"W X 3⅛"H

2 - ELASTOMERIC BEARING SIZE 1'-4"L X 0'-10½"W X 3⅛"H AT WEST ABUTMENT FOR 36WFX150 TRANSVERSE GIRDER SUPPORTING GIRDERS 11, 12, AND 13.

TAPERED TOP PLATE THICKNESS

LOCATION	THICKNESS AT BACK EDGE	THICKNESS AT FRONT EDGE
E. ABUT.	1 ½"	1 ⅝"
W. ABUT.	1 ½"	1 ⅝"

WELDING PROCEDURES SHALL BE ESTABLISHED BY THE CONTRACTOR TO RESTRICT THE MAXIMUM TEMPERATURE REACHED BY SURFACES IN CONTACT WITH ELASTOMER TO 200°F (93°C). TEMPERATURES SHALL BE CONTROLLED BY TEMPERATURE INDICATING WAX PENCILS OR OTHER SUITABLE MEANS APPROVED BY THE ENGINEER.

☆ TABLE OF FILLET WELD SIZES

MATERIAL THICKNESS OF THICKER PART JOINED.	‡ MIN. SIZE OF FILLET WELD
TO ½" INCLUSIVE	3/16"
OVER ½" TO ¾"	¼"
OVER ¾" TO 1½"	△ 5/16"
OVER 1½" TO 2¼"	△ ⅜"
OVER 2¼" TO 6"	△ ½"

‡ EXCEPT THAT THE WELD SIZE SHALL NOT EXCEED THE THICKNESS OF THE THINNER PART JOINED.

△ MIN. PASS SIZE IS 5/16"

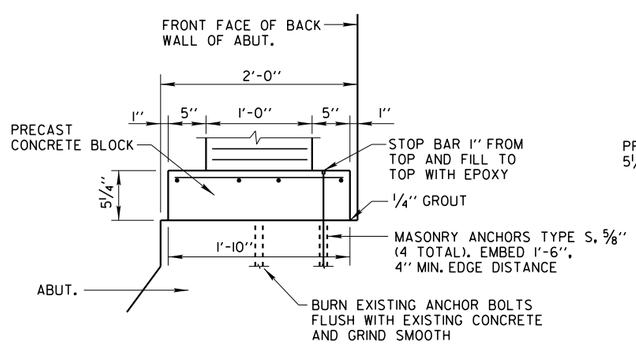

PRECAST CONCRETE BLOCK DETAIL

(SIDE VIEW)

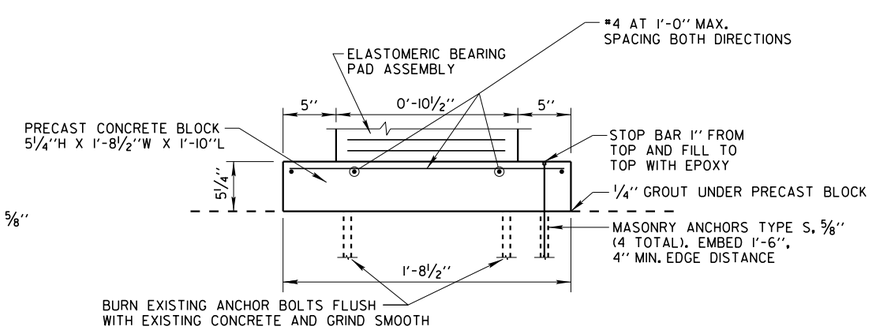

PRECAST CONCRETE BLOCK DETAIL

(ELEVATION VIEW)

City of Milwaukee

Department of Public Works

Infrastructure Services Division

WEST BECHER STREET BRIDGE OVER THE KINNICKINNIC RIVER

ELASTOMERIC BEARING REPLACEMENT DETAILS

REVISIONS

DESIGNED BY J.P.H.

DRAWN BY S.J.S.

CHECKED BY A.R.

DATE 02/2015 | SCALE NONE

JOB NUMBER BR100-15-0105

SHEET NUMBER 24 OF 26

OF 39

W:\STR\B0202\PLANS\PLANS 25_LIGHTDET 02-04-2015

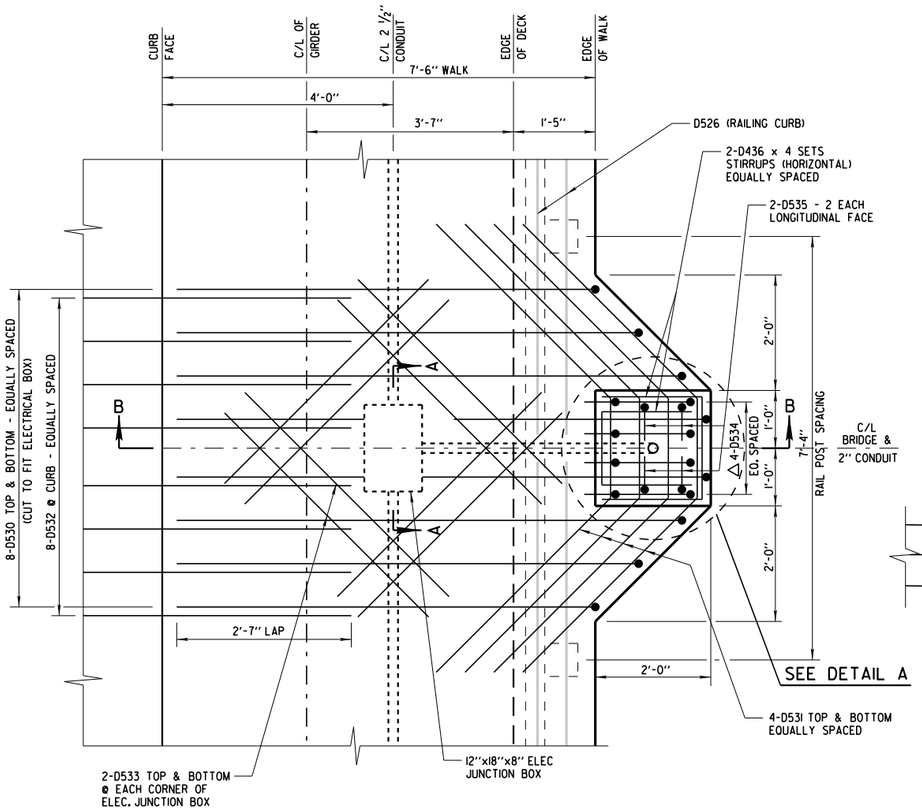

DETAIL C/4 PLAN OF WALK AT LIGHT POLE BASE

(WALK & DECK BARS NOT SHOWN FOR CLARITY)

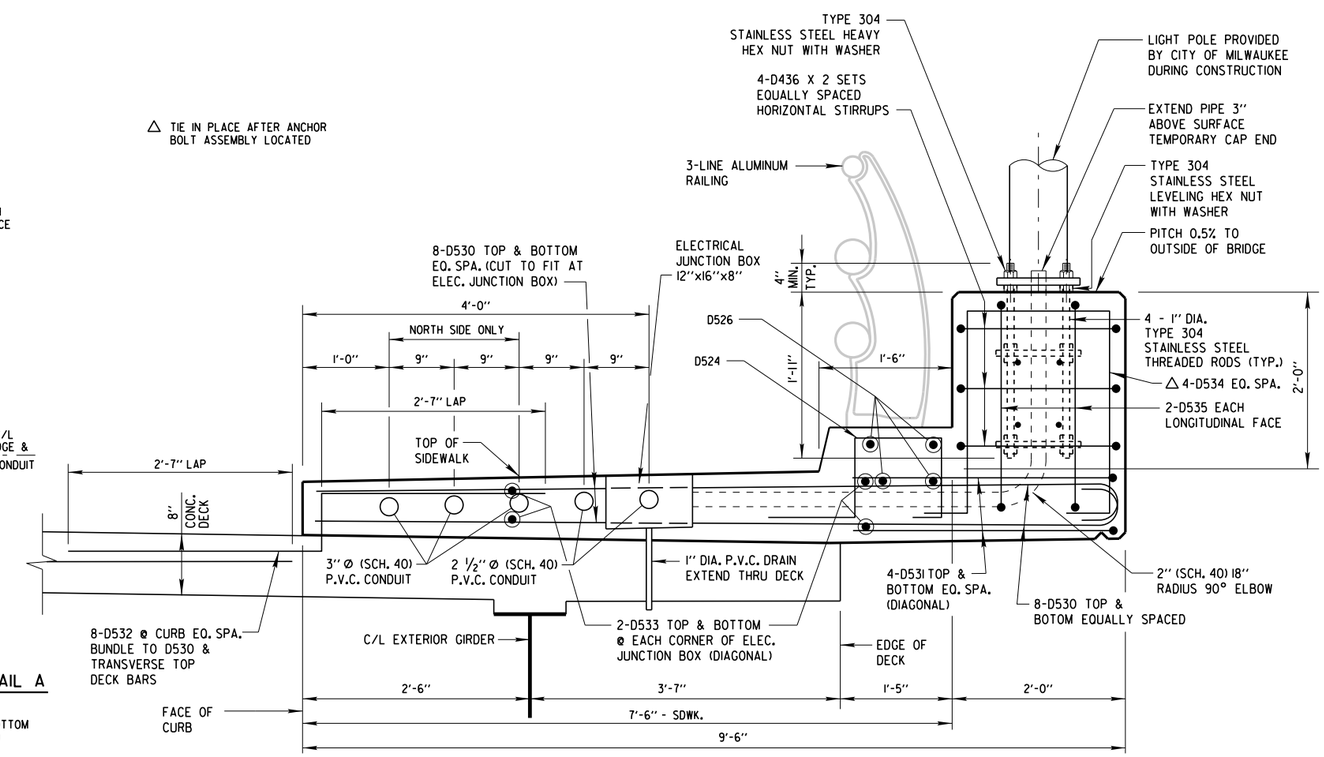

SECTION B-B

THRU WALK AND RAILING AT LIGHTPOLE BASE

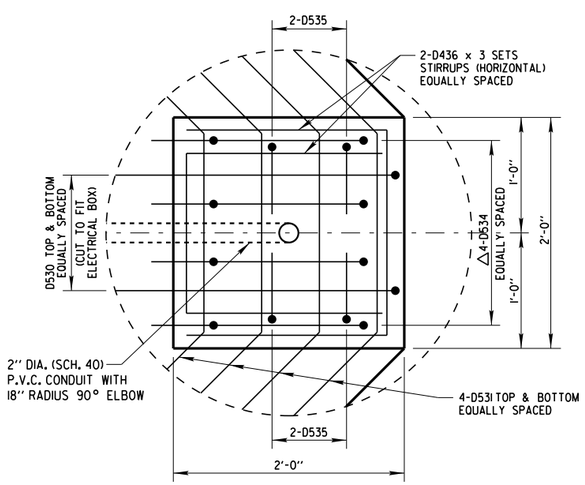

DETAIL A

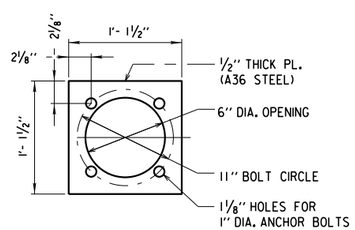

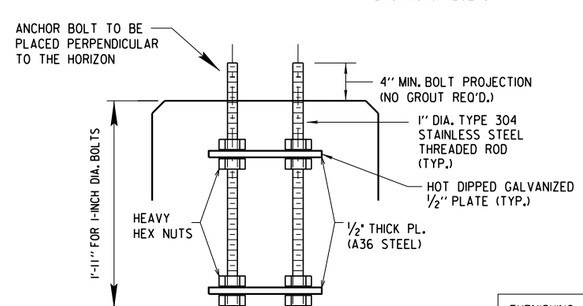

ANCHORAGE DETAIL

(2 REQ'D.)

FURNISHING AND INSTALLATION OF ANCHOR BOLTS FOR LIGHT POLES AND 2" DIA. SCH 40 CONDUIT IS INCLUDED IN BID ITEM SPV.0105.03 ELECTRICAL WORK.

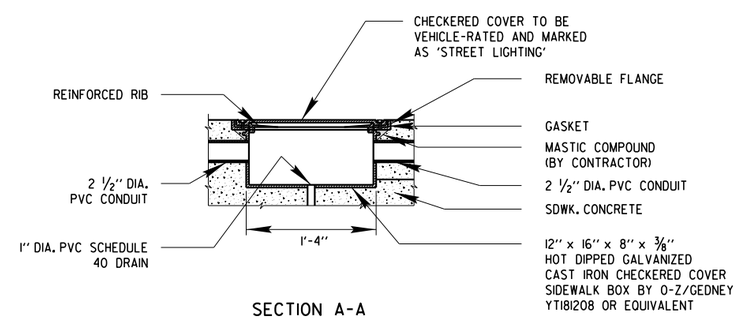

SECTION A-A

City of Milwaukee

Department of Public Works

Infrastructure Services Division

WEST BECHER STREET BRIDGE OVER THE KINNICKINNIC RIVER

LIGHT POLE BASE WALK REINFORCEMENT DETAILS

REVISIONS

DESIGNED BY J.P.H.	
DRAWN BY S.J.S.	
CHECKED BY A.R.	
DATE 02/2015	SCALE NONE
JOB NUMBER BR100-15-0105	
SHEET NUMBER 25 OF 26	
OF 39	

W:\STR\B0202\PLANS\PLANS 26_WINGWALL REPAIRS.DGN 01-16-2015

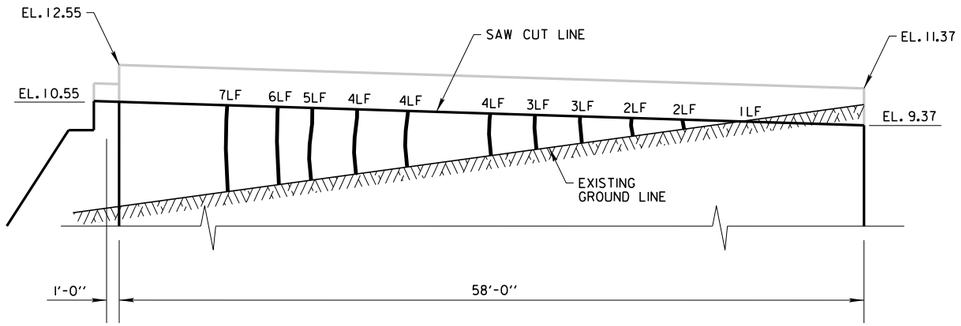

ELEVATION OF NORTHWEST WING WALL

** NOT TO SCALE

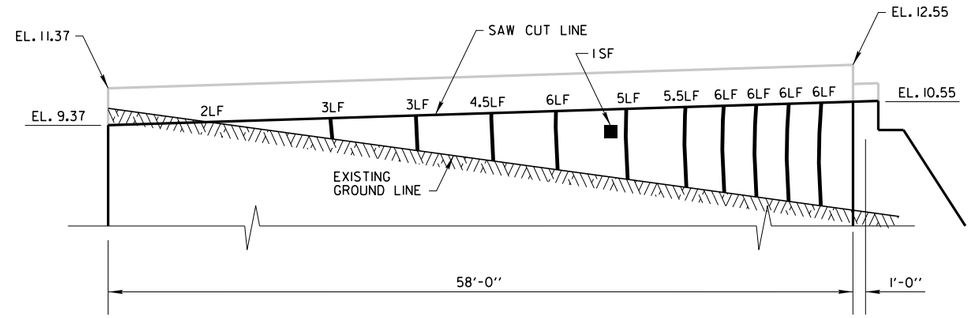

ELEVATION OF NORTHEAST WING WALL

** NOT TO SCALE

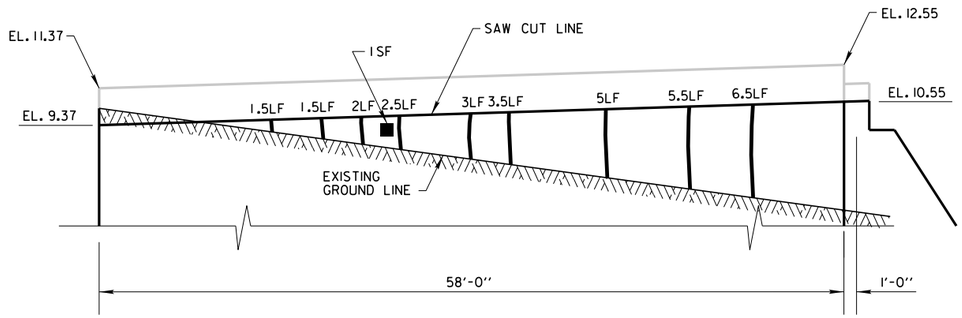

ELEVATION OF SOUTHWEST WING WALL

** NOT TO SCALE

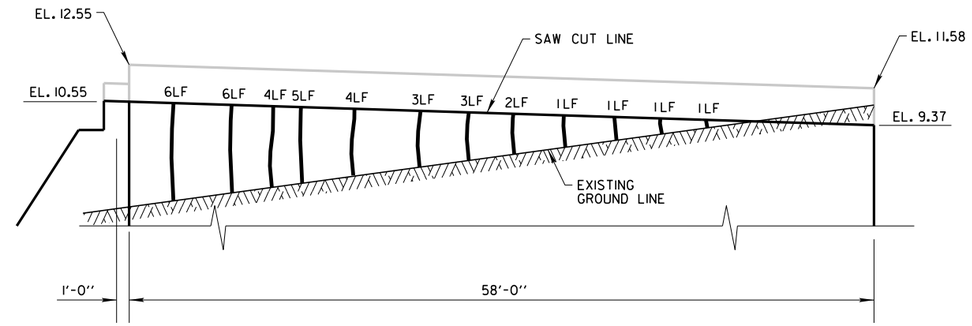

ELEVATION OF SOUTHEAST WING WALL

** NOT TO SCALE

** DUE TO WIDTH OF WING WALL VERTICAL SCALE HAS BEEN ADJUSTED TO FIT VIEWS ON SHEET.

KEY:

CRACK REPAIR =

CONC. SURF. REPAIR =

City of Milwaukee

Department of Public Works

Infrastructure Services Division

WEST BECHER STREET BRIDGE
OVER THE KINNICKINNIC RIVER
WING WALL CONCRETE SURFACE REPAIRS

REVISIONS

DESIGNED BY J.P.H.

DRAWN BY S.J.S.

CHECKED BY A.R.

DATE 02/2015

SCALE NONE

JOB NUMBER BR100-15-0105

SHEET NUMBER 26 OF 26

OF 39