City Of Milwaukee
Department of Public Works
Room 501 – Frank P. Zeidler Municipal Building
841 North Broadway
Milwaukee, Wisconsin 53202-3684

INVITATION TO BID

Commissioner of Public Works
Phone: 414-286-3314

OFFICIAL NOTICE **NO. 30 - 2016**
Project No. **1**

Sealed bids for the work, material, labor, and services hereinafter described will be received at the Department of Public Works **Contract Office**, Room 506, Frank P. Zeidler Municipal Building, 841 North Broadway, Milwaukee, Wisconsin 53202-3684, no later than **Friday, May 6, 2016**, at 10:30 A.M.

IMPORTANT

This bid is your offer to perform or supply the subject matter under "DESCRIPTION" below according to the terms and conditions set forth in this Invitation to Bid, Specific Official Notice No. **30–1- 2016** General Specifications, Detailed Specifications, Special Provisions, Plans of this particular project, the proposed contract and Special Conditions when applicable.

Your bid must meet the Detailed Specifications and the Plans for this particular project.

You must agree to comply with all applicable requirements of the Americans with Disabilities Act of 1990, 42 U.S.C. Section 12101, et seq.

The bid must be signed as set forth in the General Specifications and must comply with all the requirements therein set forth, or it will not be considered. If submitted by a corporation, the bid proposal must bear the corporate seal.

Bid security hereinafter specified must be submitted with your bid. If a bid bond is used, it must be sealed by the bonding company and be accompanied by an affidavit of no interest and a copy of a power of attorney. Bonding agents must be licensed to do business in the State of Wisconsin.

Bids received after the date and the time above specified will not be opened and read and will be deemed rejected.

NOTE: Also read the General Official Notice to Contractors, General and Detailed Specifications, Special Provisions, and Special Conditions when applicable pertaining to this bid.

CITY OF MILWAUKEE
SPECIFIC OFFICIAL NOTICE NO. 30 – 2016

Sealed bids will be opened on Friday, May 6, 2016 at 10:30 A.M. for **PAVING WORK,** in the following location:

CONSTRUCTION OF 7", 8", AND 9" CONCRETE PAVEMENT, VARIABLE THICKNESS ASPHALTIC CONCRETE PAVEMENT, CONCRETE DRIVEWAYS, VARIABLE THICKNESS ASPHALTIC CONCRETE PAVEMENT, CONCRETE CURB AND GUTTER, 5" AND 7" CONCRETE WALKS, CONCRETE REMOVALS, AND SEWER WORK, ETC.;

Located at: (ST211140117) - S. 5th St. - W. Scott St. to W. Virginia St.
(Incl. S. 4th St./S. Polcyn St. - W. Greenfield Ave to W. Scott St.)

Time for Completion: Seventy (70) contract workdays. All work on this contract shall be completed by September 30, 2016.

Liquidated Damages, per diem: $1000.00

The residency requirement for this project is 40% of all hours worked on the project.

The SBE requirement for this project is 25% of the contract base bid.
For a complete listing of City of Milwaukee certified SBE firms, see the Office of Small Business Development's (OSBD) website at http://city.milwaukee.gov/Directory/OSBD. If there are any questions regarding SBE firms, please contact the OSBD office at 414-286-5553.

The apprenticeship requirements for this project are: N/A

The contractor shall specifically note the SBE, residency, and apprenticeship forms for this project. If the forms are not filled out properly, it will be cause for rejection of the bid.

Bid Security Required: Bond (either Electronic thru Bid Express or Paper), Certified Check, Cashier's Check or Cash to accompany bid: 10% of the Contractor's Base Bid. For those bids being submitted through BID EXPRESS and using a Paper Bond, the contractor may fax a signed/executed copy of the bid bond to the Department of Public Works Contract Office at 414-286-8110. **HOWEVER, THE FAXED COPY OF THE BOND MUST BE RECEIVED BY NO LATER THAN 10:30 A.M. ON THE SAME DATE THAT THE BIDS ARE DUE FOR THAT SPECIFIC OFFICIAL NOTICE, or the bid will be considered non-responsive.** *The original bid bond document will then need to be submitted by the contractor to the Department of Public Works Contract Office, Rm. 506, Municipal Building, immediately upon being notified that they are the apparent low bidder*

When the project is part of the Local Road Improvement Program, the contractor is still required to pay not less than the prevailing wage rate as established by the City of Milwaukee.

IMPORTANT NOTICE: The Invitation to Bid, all bid documents and the Plans and Specifications for the listed project(s) are all available electronically on the DPW website AS WELL AS on the **Bid Express Website**. At this time, Bids can be submitted using either Bid Express OR by purchasing and submitting paper bids in the usual manner. However, Bidders are strongly encouraged to

utilize the electronic and/or Bid Express methods of obtaining bid documents and Bid Express for submitting bids, as in the near future the Department of Public Works intends to have bid documents available only electronically and through Bid Express, *and to accept bid submittals only via Bid Express.* Electronic documents can be obtained via http://mpw.milwaukee.gov/bids/docs/30-2016. The Bid Express website is located at bidexpress.com. Any required addenda or response related to listed projects will be posted on both the DPW and Bid Express websites. At this time there are still a limited number of hard copies of the bid documents available at the address listed below. IF YOU ONLY PRINT THE DOCUMENTS FROM THE DPW WEBSITE PLEASE CALL 414-286-3314 TO HAVE YOUR COMPANY'S NAME AND CONTACT INFORMATION PLACED ON THE PLAN HOLDER'S LIST.

PAYMENT MONITORING REQUIREMENTS: All Contractors awarded a contract valued at $25,000.00 or more are required to participate in training on the City of Milwaukee's B2GNow contract compliance software. Contractors must complete the training no later than 30 days after the date of contract award. Throughout the contract term, Contractors are required to regularly provide timely payment information in the City's contract compliance software.

Please contact the Office of Small Business Development (OSBD) at 414-286-5553 should you have any questions or concerns regarding the training or *reporting process.*

PAYROLL MONITORING REQUIREMENTS: The Prime Contractor awarded this project is required to participate in training on the City of Milwaukee's LCP Tracker Labor Compliance Software after the date of contract award. Throughout the contract term, Contractors are required to regularly provide timely payroll information via LCP Tracker.

Please contact the DPW Contracts Office at 414-286-3314 should you have any questions or concerns regarding the training* or *reporting process.

BLANK

ORM DPW-125 (REV. 01/26/05)

OFFICIAL NOTICE NO. **30 - 2016**

Project No. **1**

BID

City of Milwaukee
Department of Public Works
Room 501 - Frank P. Zeidler Municipal Building
841 North Broadway
Milwaukee, Wisconsin 53202

Bids Close: 10:30 A.M. **Friday, May 6, 2016**

Submit bids to: City of Milwaukee
Department of Public Works **Contract Office**
Room 506, 841 North Broadway
Milwaukee, Wisconsin 53202.

The undersigned _____
(A Corporation) (A Partnership) (An Individual)
(use one)

of _____
Street City Zip Code Telephone Number

hereby proposes to furnish work, material, labor and services as set forth in the description in the Invitation to Bid at and for the prices hereinafter named according to the provisions in the Official Notice and the Invitation to Bid, Detail Specifications, Special Provisions, Addenda's, if any, and Plans for this particular project on file in the office of the Commissioner of Public Works, and if successful, hereby agrees to enter into a contract with the City of Milwaukee with such sureties as required and set forth in the aforesaid documents for the performance of said contract (said contract form being on file in the office of the Commissioner of Public Works), and in accordance with the terms and conditions set forth in the contract documents, to-wit: written agreement, official notice, invitation to bid, bid, instructions to bidders, detail specifications, special provisions, special conditions when applicable, plans, schedule of fixed prices, supplemental agreements and all addenda.

In case of obtaining the award, the undersigned bidder plans to use, subject to the approval of the said Commissioner, the following subcontractors, with the class of work to be performed by each, which list shall not be added to nor altered without the written consent of the Commissioner:

Name of Proposed Subcontractors	Class of Work	Amount	Check Box If EBE

BLANK

OFFICIAL NOTICE NO. 30-1-2016

For

(ST211140117)

S. 5th St. - W. Scott St. to W. Virginia St. (Incl. S. 4th St./S. Polcyn St. - W. Greenfield Av. to W. Scott St.)TD08584010

12th Aldermanic District

ALL BIDS MUST BE TYPED OR PRINTED

30500 **MOBILIZATION** 1 Lump Sum

(Bid in figures) $ _____ Lump Sum

(Bid in words) $ _____ Lump Sum

30501 **FINISHING ROADWAY** 1 Lump Sum

(Bid in figures) $ _____ Lump Sum

(Bid in words) $ _____ Lump Sum

30606 **BARRICADING AND SIGNING** 1 Lump Sum

(Bid in figures) $ _____ Lump Sum

(Bid in words) $ _____ Lump Sum

40121 **CUTTING** 389.00 cu. yd.

(Bid in figures) $ _____ per cu. yd.

(Bid in words) $ _____ per cu. yd.

40122 **ROADWAY CUTTING** 1,893.00 cu. yd.

(Bid in figures) $ _____ per cu. yd.

(Bid in words) $ _____ per cu. yd.

40131 **FILLING** 613.00 cu. yd.

(Bid in figures) $ _____ per cu. yd.

(Bid in words) $ _____ per cu. yd.

OFFICIAL NOTICE NO. 30-1-2016

40165	**EXCAVATION AND OFFSITE DISPOSAL**	244.00	cu. yd.
(Bid in figures)	$ _____		per cu. yd.
(Bid in words)	$ _____		per cu. yd.
40192	**ENGINEERED SOIL**	124.00	cu. yd.
(Bid in figures)	$ _____		per cu. yd.
(Bid in words)	$ _____		per cu. yd.
40195	**STRUCTURAL SOIL**	441.00	cu. yd.
(Bid in figures)	$ _____		per cu. yd.
(Bid in words)	$ _____		per cu. yd.
40211	**PAVEMENT REMOVAL**	16,615.00	sq. yd.
(Bid in figures)	$ _____		per sq. yd.
(Bid in words)	$ _____		per sq. yd.
40231	**CURB AND/OR CURB AND GUTTER REMOVAL**	324.00	lin. ft.
(Bid in figures)	$ _____		per lin. ft.
(Bid in words)	$ _____		per lin. ft.
40241	**CONCRETE WALK AND/OR DRIVEWAY REMOVAL**	37,467.00	sq. ft.
(Bid in figures)	$ _____		per sq. ft.
(Bid in words)	$ _____		per sq. ft.
40261	**SAWING (FULL DEPTH)**	3,327.00	lin. ft.
(Bid in figures)	$ _____		per lin. ft.
(Bid in words)	$ _____		per lin. ft.
40262	**SAWING**	311.00	lin. ft.
(Bid in figures)	$ _____		per lin. ft.
(Bid in words)	$ _____		per lin. ft.

OFFICIAL NOTICE NO. 30-1-2016

40411	**TREES CLEARING**	26.00	in. dia.
(Bid in figures)	$ _____		per in. dia.
(Bid in words)	$ _____		per in. dia.
40412	**TREES GRUBBING**	26.00	in. dia.
(Bid in figures)	$ _____		per in. dia.
(Bid in words)	$ _____		per in. dia.
50043	**6" GRANITE COBBLES**	20.00	ton
(Bid in figures)	$ _____		per ton
(Bid in words)	$ _____		per ton
50200	**CONCRETE CURB AND GUTTER**	5,464.00	lin. ft.
(Bid in figures)	$ _____		per lin. ft.
(Bid in words)	$ _____		per lin. ft.
50301	**CONCRETE CURB PEDESTRIAN**	317.00	lin. ft.
(Bid in figures)	$ _____		per lin. ft.
(Bid in words)	$ _____		per lin. ft.
50315	**5 INCH CONCRETE WALK**	45,472.00	sq. ft.
(Bid in figures)	$ _____		per sq. ft.
(Bid in words)	$ _____		per sq. ft.
50317	**7 INCH CONCRETE WALK**	2,877.00	sq. ft.
(Bid in figures)	$ _____		per sq. ft.
(Bid in words)	$ _____		per sq. ft.
50330	**DETECTABLE WARNING FIELD**	416.00	sq. ft.
(Bid in figures)	$ _____		per sq. ft.
(Bid in words)	$ _____		per sq. ft.

OFFICIAL NOTICE NO. 30-1-2016

50377	**7 INCH HIGH EARLY STRENGTH CONCRETE DRIVEWAY**	5,203.00	sq. ft.
(Bid in figures)	$ _____		per sq. ft.
(Bid in words)	$ _____		per sq. ft.
50379	**9 INCH HIGH EARLY STRENGTH CONCRETE DRIVEWAY**	1,284.00	sq. ft.
(Bid in figures)	$ _____		per sq. ft.
(Bid in words)	$ _____		per sq. ft.
50400	**CONCRETE TRAFFIC ISLAND**	113.00	sq. ft.
(Bid in figures)	$ _____		per sq. ft.
(Bid in words)	$ _____		per sq. ft.
50520	**8 INCH HIGH EARLY STRENGTH CONCRETE PAVEMENT**	5,383.00	sq. yd.
(Bid in figures)	$ _____		per sq. yd.
(Bid in words)	$ _____		per sq. yd.
50570	**7 INCH CONCRETE PAVEMENT**	104.00	sq. yd.
(Bid in figures)	$ _____		per sq. yd.
(Bid in words)	$ _____		per sq. yd.
50580	**8 INCH CONCRETE PAVEMENT**	6,924.00	sq. yd.
(Bid in figures)	$ _____		per sq. yd.
(Bid in words)	$ _____		per sq. yd.
50590	**9 INCH CONCRETE PAVEMENT**	49.00	sq. yd.
(Bid in figures)	$ _____		per sq. yd.
(Bid in words)	$ _____		per sq. yd.
50700	**VARIABLE THICKNESS CONCRETE BASE**	4.00	cu. yd.
(Bid in figures)	$ _____		per cu. yd.
(Bid in words)	$ _____		per cu. yd.

OFFICIAL NOTICE NO. 30-1-2016

50760	**6 INCH CONCRETE BASE**	46.00	sq. yd.
(Bid in figures)	$ _____		per sq. yd.
(Bid in words)	$ _____		per sq. yd.
60130	**VARIABLE THICKNESS ASPHALT CONCRETE PAVEMENT (1/2 INCH MAXIMUM)**	111.00	ton
(Bid in figures)	$ _____		per ton
(Bid in words)	$ _____		per ton
60401	**1 INCH TEMPORARY ASPHALT WALK**	23,488.00	sq. ft.
(Bid in figures)	$ _____		per sq. ft.
(Bid in words)	$ _____		per sq. ft.
70061	**6 INCH PERFORATED PIPE SDR 35**	116.00	lin. ft.
(Bid in figures)	$ _____		per lin. ft.
(Bid in words)	$ _____		per lin. ft.
70064	**6-INCH CLEANOUTS**	12.00	each
(Bid in figures)	$ _____		per each
(Bid in words)	$ _____		per each
70102	**1 1/2 INCH CRUSHED STONE**	90.00	cu. yd.
(Bid in figures)	$ _____		per cu. yd.
(Bid in words)	$ _____		per cu. yd.
70203	**3 INCH CRUSHED GRAVEL BASE**	14,025.00	sq. yd.
(Bid in figures)	$ _____		per sq. yd.
(Bid in words)	$ _____		per sq. yd.
70500	**GRAVEL FILLING**	1,466.00	ton
(Bid in figures)	$ _____		per ton
(Bid in words)	$ _____		per ton

OFFICIAL NOTICE NO. 30-1-2016

70716	**3/8" BEDDING CHIPS**	20.00	cu. yd.
(Bid in figures)	$ _____		per cu. yd.
(Bid in words)	$ _____		per cu. yd.
82200	**SODDING**	1,207.00	sq. yd.
(Bid in figures)	$ _____		per sq. yd.
(Bid in words)	$ _____		per sq. yd.
82300	**TOPSOIL**	304.00	cu. yd.
(Bid in figures)	$ _____		per cu. yd.
(Bid in words)	$ _____		per cu. yd.
82361	**MULCH**	134.00	sq. yd.
(Bid in figures)	$ _____		per sq. yd.
(Bid in words)	$ _____		per sq. yd.
83010	**GEOTEXTILE FABRIC, TYPE DF**	36.00	sq. yd.
(Bid in figures)	$ _____		per sq. yd.
(Bid in words)	$ _____		per sq. yd.
83200	**PAVEMENT GRINDING**	641.00	sq. yd.
(Bid in figures)	$ _____		per sq. yd.
(Bid in words)	$ _____		per sq. yd.
83306	**PAVEMENT MARKING, 4" WHITE, COLD PLASTIC FURNISH AND INSTALL**	618.00	lin. ft.
(Bid in figures)	$ _____		per lin. ft.
(Bid in words)	$ _____		per lin. ft.
83324	**PAVEMENT MARKING, CROSSWALK 12" WHITE, COLD PLASTIC, FURNISH AND INSTALL**	1,410.00	lin. ft.
(Bid in figures)	$ _____		per lin. ft.
(Bid in words)	$ _____		per lin. ft.

OFFICIAL NOTICE NO. 30-1-2016

83331	**PAVEMENT MARKING, CROSSWALK 24" WHITE, COLD PLASTIC, FURNISH AND INSTALL**	130.00	lin. ft.
(Bid in figures)	$ _____		per lin. ft.
(Bid in words)	$ _____		per lin. ft.
83336	**PAVEMENT MARKING, ARROWS, COLD PLASTIC, FURNISH AND INSTALL**	1.00	each
(Bid in figures)	$ _____		per each
(Bid in words)	$ _____		per each
83341	**PAVEMENT MARKING, WORDS, COLD PLASTIC, FURNISH AND INSTALL**	1.00	each
(Bid in figures)	$ _____		per each
(Bid in words)	$ _____		per each
83400	**SEALING PAVEMENT JOINTS AND CRACKS**	12,460.00	sq. yd.
(Bid in figures)	$ _____		per sq. yd.
(Bid in words)	$ _____		per sq. yd.
83800	**DRILL AND INSTALL REINFORCING RODS**	10.00	each
(Bid in figures)	$ _____		per each
(Bid in words)	$ _____		per each
84320	**WATER VALVE BOX ADJUSTMENT**	35.00	each
(Bid in figures)	$ _____		per each
(Bid in words)	$ _____		per each
84325	**WATER SERVICE BOX ADJUSTMENT**	64.00	each
(Bid in figures)	$ _____		per each
(Bid in words)	$ _____		per each
84407	**PERFORATED PIPE UNDERDRAIN 6 INCH**	116.00	lin. ft.
(Bid in figures)	$ _____		per lin. ft.
(Bid in words)	$ _____		per lin. ft.

OFFICIAL NOTICE NO. 30-1-2016

84511	**MANHOLE / INLET ADJUSTMENT TYPE I**	61.00	each
(Bid in figures)	$ _____		per each
(Bid in words)	$ _____		per each
84512	**MANHOLE / INLET ADJUSTMENT TYPE II**	12.00	each
(Bid in figures)	$ _____		per each
(Bid in words)	$ _____		per each
92048	**8" DIAMETER OVERFLOW STAND PIPE WITH GRATE**	6.00	each
(Bid in figures)	$ _____		per each
(Bid in words)	$ _____		per each
93205	**5 INCH COLORED CONCRETE WALK**	972.00	sq. ft.
(Bid in figures)	$ _____		per sq. ft.
(Bid in words)	$ _____		per sq. ft.
94398	**PLANT MAINTENANCE AND WARRANTY**	1	Lump Sum
(Bid in figures)	$ _____		Lump Sum
(Bid in words)	$ _____		Lump Sum
94399	**PLANT POT**	463.00	each
(Bid in figures)	$ _____		per each
(Bid in words)	$ _____		per each
97003	**ABANDON STORM WATER INLET OR CATCH BASIN**	32.00	each
(Bid in figures)	$ _____		per each
(Bid in words)	$ _____		per each
97180	**INLET FRAME AND COVER TYPE 57**	39.00	each
(Bid in figures)	$ _____		per each
(Bid in words)	$ _____		per each

OFFICIAL NOTICE NO. 30-1-2016

97181	**MANHOLE FRAME AND COVER TYPE 58A**	25.00	each
(Bid in figures)	$ _____		per each
(Bid in words)	$ _____		per each
97212	**INLET, TYPE 44A**	39.00	each
(Bid in figures)	$ _____		per each
(Bid in words)	$ _____		per each
97220	**MANHOLE/INLET REPAIR**	4.00	vert. ft.
(Bid in figures)	$ _____		per vert. ft.
(Bid in words)	$ _____		per vert. ft.
97290	**STORM WATER INLET FRAME AND GRATE**	7.00	each
(Bid in figures)	$ _____		per each
(Bid in words)	$ _____		per each
97328	**8" PVC PIPE**	1,013.00	lin. ft.
(Bid in figures)	$ _____		per lin. ft.
(Bid in words)	$ _____		per lin. ft.
97808	**8 INCH DIAMETER STORM WATER DRAIN, CLASS "C" BEDDING**	66.00	lin. ft.
(Bid in figures)	$ _____		per lin. ft.
(Bid in words)	$ _____		per lin. ft.
97900	**EROSION CONTROL**	1	Lump Sum
(Bid in figures)	$ _____		Lump Sum
(Bid in words)	$ _____		Lump Sum
98154	**WATER SERVICE INSULATION**	35.00	lin. ft.
(Bid in figures)	$ _____		per lin. ft.
(Bid in words)	$ _____		per lin. ft.

OFFICIAL NOTICE NO. 30-1-2016

99741 **CUC MANHOLE ADJUSTMENT TYPE I** 14.00 each

(Bid in figures) $ _____ per each

(Bid in words) $ _____ per each

99745 **ABANDON CUC MANHOLES** 6.00 each

(Bid in figures) $ _____ per each

(Bid in words) $ _____ per each

TOTAL ESTIMATE:

(Bid in figures) $ _____

(Bid in words) $ _____

IMPORTANT NOTICE

ALL BID PRICES MUST BE ENTERED IN WORDS AND IN NUMERALS. IN CASE OF VARIATION BETWEEN THE TWO, THE WORDS WILL PREVAIL.

IN ADDITION, IF THERE IS A DISCREPANCY BETWEEN THE TOTAL INDICATED IN THE PROPOSAL AND THE AMOUNT OBTAINED BY ADDING THE PRODUCTS OF THE QUANTITIES TIMES THE UNIT PRICES, THE LATTER SHALL GOVERN. ANY ERRORS FOUND IN THE TOTAL INDICATED SHALL BE CORRECTED AND THE CONTRACT AWARD SHALL BE MADE TO THE LOWEST RESPONSIBLE BIDDER BASED ON THE CORRECTED TOTAL.

IF DOUBT EXISTS AS TO WHAT IS BID, THE BID WILL BE REJECTED.

ACKNOWLEDGEMENTS PAGE

Official Notice No. **30 - 2016**
Project No. **1**

SMALL BUSINESS ENTERPRISE PROGRAM, RESIDENT PREFERENCE AND APPRENTICESHIP PROGRAM REQUIREMENTS

In submitting this bid, the bidder acknowledges, understands and agrees that submission of a bid shall commit the bidder to comply with the City's requirements as outlined in the SMALL BUSINESS ENTERPRISE PROGRAM (SBE), the Resident Preference Program and the Apprenticeship Program provisions. The bidder also agrees to comply with the specific requirements as follows:

The bidder's commitment for SBE participation on this project is 25 %

The bidder's commitment for Resident Preference Program Participation on the project is 40 %

The bidder's commitment for Apprenticeship Program participation on this project is:
Apprentice(s) from 0 of the following trade(s) are to be employed.

In submitting this bid, the bidder understands that the Commissioner of Public Works reserves the right to reject any and all bids. If written notice of the acceptance of the bid is mailed, telegraphed, or delivered to the undersigned within forty-five (45) days after the opening thereof, the undersigned agrees to execute and deliver the contract in the prescribed form (contract form on file in the office of the Commissioner of Public Works) and furnish the required performance and payment bonds, and to meet such insurance requirements as may be required, within ten days after the receipt of the official notice of award.

This bidder understands that if they are the successful bidder and the contract is awarded, that pursuant to Sec. 7.14, Milwaukee City Charter, 1971 Compilation, as amended, failure to execute and to deliver the contract or to furnish the required insurance and the required security within ten (10) days after receipt of the official notice of award or such extension thereto as the Commissioner only may deem reasonable, the City, in addition to any other legal or equitable remedy which it may have, may annul the award and notice of award, and the bid security of this bidder will be forfeited.

Attached hereto is an affidavit in proof that the undersigned has not colluded with any person in respect to this bid or any other bid for the contract for which this bid is submitted.

We acknowledge the receipt of Addenda _____to _____inclusive.

Bidder assures the City and acknowledges that the Official Notice, Special Provisions, if any, Special Conditions where applicable, Invitation to Bid and Bid, Detail Specifications, Addenda, if any, and Plans of this particular project have been read and has a full understanding of the provisions therein.

NON-COLLUSION AFFIDAVIT

State of _____)
) ss.
County of _____)

_____, being first duly sworn, deposes and says that:

(1) He is _____
of (owner, partner, officer, representative, or agent)

_____, the Bidder that has submitted the attached Bid;

(2) He is fully informed respecting the preparation and contents of the attached Bid and of all pertinent circumstances respecting such Bid;

(3) Such Bid is genuine and is not a collusive or sham Bid;

(4) Neither the said Bidder nor any of its officers, partners, owners, agents, representatives, employees, or parties in interest, including this affiant, has in any way colluded, conspired, connived, or agreed, directly or indirectly with any other Bidder, firm, or person to submit a collusive or sham Bid in connection with the Contract for which the attached Bid has been submitted or to refrain from bidding in connection with such Contract, or has in any manner, directly or indirectly, sought by agreement or collusion or communication or conference with any other Bidder, firm, or person to fix the price or prices in the attached Bid or of any other Bidder, or to fix any overhead, profit, or cost element of the Bid price or the Bid price of any other Bidder, or to secure through any collusion, conspiracy, connivance, or unlawful agreement any advantage against the Commissioner of Public Works or any person interested in the proposed Contract; and

(5) The price or prices quoted in the attached Bid are fair and proper and are not tainted by any collusion, conspiracy, connivance, or unlawful agreement on the part of the Bidder or any of its agents, representatives, owners, employees, or parties in interest, including this affiant.

(Check One) _____
Signature of :

_____ Bidder if the bidder is an individual;

_____ Partner if the bidder is a partnership;

_____ Officer if the bidder is a corporation.

Subscribed and sworn to before me this

_____ day of _____, 20_____.

_____
Notary Signature

My commission expires _____, 20_____.

SIGNATURE PAGE – IMPORTANT – THREE(3) SIGNATURES ARE REQUIRED OR BID WILL BE CONSIDERED NONRESPONSIVE.

Rev. 2/2012

Official Notice No. _____

Project No. _____

In signing and submitting this bid, the bidder assures the City of Milwaukee that the Official Notice, Notice to Bidders, Special Conditions where applicable, Invitation to Bid and Bid, Detail Specifications, Special Provisions, schedule of fixed prices, Addenda, and Plans of this particular project have been read and understood and that the furnishing of the subject work, material, labor and services is under bidder's control. If the bidder's performance is contingent upon the acts of another party, the bidder assures that they have the necessary commitments to complete the contract which may be awarded.

Submitted by _____
Name of Bidder (person, firm or corporation)

Telephone No. _____
Fax No. _____

Address _____

_____
(City, State, Zip Code)

Signed per _____
(Manual **signature required**)

Official Capacity _____

BID DATED _____ SBE Contractor: Yes _____ No _____

If a Corporation, answer the following:

Incorporated under laws of what state? _____

If a foreign corporation, are you licensed to do business in Wisconsin? _____

SWORN STATEMENT OF BIDDER
AS REQUIRED BY
SECTION 66.0901 (7) WISCONSIN STATUTES

I, being first duly sworn at _____
(City, State)

on oath state on behalf of said bidder, that I have examined and carefully prepared this proposal from the plans, specifications, and the other contract documents and have checked the same in detail before submitting this proposal; and this sworn statement is hereby made a part of the foregoing proposal.

Signature _____

_____
(Title, if any)

Subscribed and sworn to before me this

_____ day of _____, 20___

_____
(**Notary Signature**)

Notary Public, _____ County

State of _____

My commission expires _____

State of Wisconsin
Department of Workforce Development
Equal Rights Division
Labor Standards Bureau

Disclosure of Ownership

Notice required under Section 15.04(1)(m), Wisconsin Statutes. The statutory authority for the use of this form is prescribed in Sections 66.0903(12)(d) and 103.49(7)(d), Wisconsin Statutes. The use of this form is mandatory. The penalty for failing to complete this form is prescribed in Section 103.005(12), Wisconsin Statutes. Personal information you provide may be used for secondary purposes

(1) On the date a contractor submits a bid to or completes negotiations with a state agency or local governmental unit, on a project subject to Section 66.0903 or 103.49, Wisconsin Statutes, the contractor shall disclose to such state agency or local governmental unit the name of any "other construction business", which the contractor, or a shareholder, officer or partner of the contractor, owns or has owned within the preceding three (3) years.

(2) The term "other construction business" means any business engaged in the erection, construction, remodeling, repairing, demolition, altering or painting and decorating of buildings, structures or facilities. It also means any business engaged in supplying mineral aggregate, or hauling excavated material or spoil as provided by Sections 66.0903(3), 103.49(2) and 103.50(2), Wisconsin Statutes.

(3) This form must ONLY be filed, with the state agency or local governmental unit that will be awarding the contract, if **both (A) and (B) are met**.

(A) The contractor, or a shareholder, officer or partner of the contractor:

(1) Owns at least a 25% interest in the "other construction business", indicated below, on the date the contractor submits a bid or completes negotiations.

(2) Or has owned at least a 25% interest in the "other construction business" at any time within the preceding three (3) years.

(B) The Wisconsin Department of Workforce Development (DWD) has determined that the "other construction business" has failed to pay the prevailing wage rate or time and one-half the required hourly basic rate of pay, for hours worked in excess of the prevailing hours of labor, to any employee at any time within the preceding three (3) years.

Other Construction Business

Name of Business			
Street Address or P O Box	City	State	Zip Code
Name of Business			
Street Address or P O Box	City	State	Zip Code
Name of Business			
Street Address or P O Box	City	State	Zip Code
Name of Business			
Street Address or P O Box	City	State	Zip Code

I hereby state under penalty of perjury that the information, contained in this document, is true and accurate according to my knowledge and belief.

Print the Name of Authorized Officer			
Signature of Authorized Officer	Date Signed		
Name of Corporation, Partnership or Sole Proprietorship			
Street Address	City	State	Zip Code

If you have any questions call (608) 266-0028

(Rev. 05/ 2013)

FORM A - COMPLIANCE PLAN - CITY OF MILWAUKEE – DEPARTMENT OF PUBLIC WORKS
SBE PARTICIPATION FOR SUBCONTRACTORS AND/OR MATERIAL SUPPLIERS

PRIME CONTRACTOR'S NAME:_____ OFFICIAL NOTICE NUMBER: _____

DATE:_____ TOTAL BID AMOUNT:_____ TOTAL SBE AMOUNT:_____

This Form A must be completed in its entirety and is a **required** submission in conjunction with a Bid or Request for Proposal. Submit either with the bid or within **3** days of being notified as the apparent low bidder. List all proposed SBE subcontractor(s) and/or material supplier(s) for this project. **NOTE:** To receive full credit, SBE's must perform commercially useful work at the job site. ONLY up to twenty percent (20%) credit may be given under certain circumstances to SBE suppliers or other SBE contractors who assist in management of the project. I/We propose to utilize the following SBE subcontractor(s) and/or material supplier(s):

Fill in BID REQUIREMENTS: _____%**SBE**

SBE FIRM(S) NAME ADDRESS/CONTACT PERSON AND PHONE NUMBER	**LIST DESIGNATION: WHETHER SUPPLIER OR CONSTRUCTION LABOR**	PERCENT OF BID	AMOUNT	EXPLAIN WORK TO BE PERFORMED/MATERIAL SUPPLIED	AUTHORIZED SBE(S) OWNER/REPRESENTATIVE SIGNATURE OF ACKNOWLEDGEMENT
1.					
2.					
3.					
4.					
5.					

I certify that the information included on this Form A is true and complete to the best of my knowledge. I further understand and agree that this Form A is a condition of my Bid/RFP responsiveness. Failure to submit this form and/or meet the specified SBE requirements may render the Bid/RFP nonresponsive.

CONTRACTOR: _____ DATE: _____/_____/_____
(SIGNATURE & TITLE REQUIRED)

REVIEWED BY OSBD ANALYST: _____ DATE: _____/_____/_____

DEPARTMENT OF PUBLIC WORKS: _____ DATE: _____/_____/_____

AFFIDAVIT OF COMPLIANCE
WITH WISCONSIN STATUTE 103.503
SUBSTANCE ABUSE PREVENTION REQUIREMENTS

STATE OF _____) PROJECT NAME _____
) ss.
_____ COUNTY) DPW Contract No._____

I, _____, being first duly sworn state that:
(Print name)

1. I am the _____ of _____, a _____.
(Title) (Company Name) (State)

Corporation, partnership, or individual of _____, _____,
(City, Village, Township) (State)

and make this affidavit pursuant to the provisions of Wis. Stat. § 103.503.

2. I have entered into City of Milwaukee, Department of Public Works' Contract No. _____, to which the provisions of Wis. Stat. 66.0903 apply.

3. I have in place a substance abuse prevention program that meets the requirements of Wis. Stat. 103.503, and I will fully comply in all respects with the requirements of Wis. Stat. 103.503 during the performance of this Contract.

4. I will include in each subcontract covering work performed under this Contract to which the provisions of Wis. Stat. 66.0903 apply, a provision similar to that in Paragraph 3 above, together with a clause requiring such insertion in further subcontracts that may in turn be made.

Title	Officer Name	Address
President	_____	_____
Vice President	_____	_____
Secretary/Treasurer	_____	_____

Subscribed and sworn before me this _____

day of _____, 20___.

_____ _____
Notary Signature Contractor Signature

Notary Public, State of _____

My Commission Expires: _____

1121-2004-1516/96897(04/2007)

To ensure DPW is in compliance with any federal procurement requirements regarding suspension and debarment, CONTRACTOR must sign this "Suspension/Debarment Certification Form".

Please complete and sign below and return this form to:

Department of Public Works Contract Office
Room **506**, Municipal Building
841 North Broadway
Milwaukee, WI 53202

Submittal required prior to start of work on this project.

CERTIFICATION REGARDING SUSPENSION AND DEBARMENT

The CONTRACTOR certifies that all potential sub-recipients, contractors, and any and all of their principals are not debarred, suspended or proposed for debarment for federal assistance (e.g., General Services Administration's List of Parties Excluded from Federal Procurement and Non-Procurement Programs), and that throughout the term of its federally-funded contracts with the City of Milwaukee, the CONTRACTOR will not enter into any transactions with any sub-recipients, contractors, or any of their principals who are debarred, suspended or proposed for debarment.

_____ _____
Signature/Authorized Official Date

_____ ___C_____
Printed Name Contract Number

_____
Title

_____
Name of Company

04/21/2016
11:24:03 AM

PROJECT BREAKDOWN
OFFICIAL NOTICE # 30-1

PROJECT TITLES

PROJECT 873-0401 PROJECT/GRANT ST211140117 ESTIMATE 24050

S. 5th St. - W. Scott St. to W. Virginia St. (Incl. S. 4th St./S. Polcyn St. - W. Greenfield Av. to W. Scott St.)TD08584010

PROJECT BREAKDOWN
OFFICIAL NOTICE # 30-1

Project Number		873-0401	TOTAL
		24050	
Plans Per Project		3	
Roadway Width	FT.	40'	
Approximate Length	FT.	2525'	

ITEM #	ITEM DESCRIPTION	UNIT		
30500	Mobilization	Lump Sum	*	1
30501	Finishing Roadway	Lump Sum	*	1
30606	Barricading and Signing	Lump Sum	*	1
40121	Cutting	cu. yd.	389	389
40122	Roadway Cutting	cu. yd.	1893	1893
40131	Filling	cu. yd.	613	613
40165	Excavation and Offsite Disposal	cu. yd.	244	244
40192	Engineered Soil	cu. yd.	124	124
40195	Structural Soil	cu. yd.	441	441
40211	Pavement Removal	sq. yd.	16615	16615
40231	Curb and/or Curb and Gutter Removal	lin. ft.	324	324
40241	Concrete Walk and/or Driveway Removal	sq. ft.	37467	37467
40261	Sawing (Full Depth)	lin. ft.	3327	3327
40262	Sawing	lin. ft.	311	311
40411	Trees Clearing	in. dia.	26	26
40412	Trees Grubbing	in. dia.	26	26
50043	6" Granite Cobbles	tons	20	20
50200	Concrete Curb and Gutter	lin. ft.	5464	5464
50301	Concrete Curb Pedestrian	lin. ft.	317	317
50315	5 inch Concrete Walk	sq. ft.	45472	45472
50317	7 inch Concrete Walk	sq. ft.	2877	2877
50330	Detectable Warning Field	sq. ft.	416	416
50377	7 Inch High Early Strength Concrete Driveway	sq. ft.	5203	5203
50379	9 Inch High Early Strength Concrete Driveway	sq. ft.	1284	1284
50400	Concrete Traffic Island	sq. ft.	113	113
50520	8 inch High Early Strength Concrete Pavement	sq. yd.	5383	5383
50570	7 inch Concrete Pavement	sq. yd.	104	104
50580	8 inch Concrete Pavement	sq. yd.	6924	6924
50590	9 inch Concrete Pavement	sq. yd.	49	49
50700	Variable Thickness Concrete Base	cu. yd.	4	4
50760	6 inch Concrete Base	sq. yd.	46	46
60130	Variable Thickness Asphalt Concrete Pavement (1/2	tons	111	111
60401	1 Inch Temporary Asphalt Walk	sq. ft.	23488	23488
70061	6 Inch Perforated Pipe SDR 35	lin. ft.	116	116
70064	6-Inch Cleanouts	each	12	12
70102	1 1/2 inch Crushed Stone	cu. yd.	90	90
70203	3 inch Crushed Gravel Base	sq. yd.	14025	14025
70500	Gravel Filling	tons	1466	1466
70716	3/8" Bedding Chips	cu. yd.	20	20
82200	Sodding	sq. yd.	1207	1207
82300	Topsoil	cu. yd.	304	304
82361	Mulch	sq. yd.	134	134
83010	Geotextile Fabric, Type DF	sq. yd.	36	36
83200	Pavement Grinding	sq. yd.	641	641
83306	Pavement Marking, 4" White, Cold Plastic Furnish and	lin. ft.	618	618
83324	Pavement Marking, Crosswalk 12" White, Cold	lin. ft.	1410	1410
83331	Pavement Marking, Crosswalk 24" White, Cold	lin. ft.	130	130
83336	Pavement Marking, Arrows, Cold plastic, Furnish and	each	1	1
83341	Pavement Marking, Words, Cold Plastic, Furnish and	each	1	1
83400	Sealing Pavement Joints and Cracks	sq. yd.	12460	12460

* Combined under one lump sum.

PROJECT BREAKDOWN
OFFICIAL NOTICE # 30-1

	Project Number		873-0401	TOTAL
			24050	
	Plans Per Project		3	
	Roadway Width	FT.	40'	
	Approximate Length	FT.	2525'	
ITEM #	**ITEM DESCRIPTION**	**UNIT**		
83800	Drill and Install Reinforcing Rods	each	10	10
84320	Water Valve Box Adjustment	each	35	35
84325	Water Service Box Adjustment	each	64	64
84407	Perforated Pipe Underdrain 6 Inch	lin. ft.	116	116
84511	Manhole / Inlet Adjustment Type I	each	61	61
84512	Manhole / Inlet Adjustment Type II	each	12	12
92048	8" Diameter Overflow Stand Pipe With Grate	each	6	6
93205	5 inch Colored Concrete Walk	sq. ft.	972	972
94398	Plant Maintenance and Warranty	Lump Sum	*	1
94399	Plant Pot	each	463	463
97003	Abandon Storm Water Inlet or Catch Basin	each	32	32
97180	Inlet Frame and Cover Type 57	each	39	39
97181	Manhole Frame and Cover Type 58A	each	25	25
97212	Inlet, Type 44A	each	39	39
97220	Manhole/Inlet Repair	vert. ft.	4	4
97290	Storm Water Inlet Frame and Grate	each	7	7
97328	8" PVC Pipe	lin. ft.	1013	1013
97808	8 Inch Diameter Storm Water Drain, Class "C" Bedding	in. ft.	66	66
97900	Erosion Control	Lump Sum	*	1
98154	Water Service Insulation	lin. ft.	35	35
99741	CUC Manhole Adjustment Type I	each	14	14
99745	Abandon CUC Manholes	each	6	6

* Combined under one lump sum.

BLANK

Project No. 1 (ST211140117) **Concrete Reconstruct.**

1. The work on this contract is governed by the *City of Milwaukee Street Construction Specifications,* dated July 1, 1992.

2. All work on this contract shall be completed by September 30, 2016.

3. Some delay may be experienced due to underground installations. Such delay, the result of third party operations, shall not change the requirements of this contract or give rise to claim for scheduling problems.

4. The completion of City of Milwaukee CUC conduit installation and Ameritech work is anticipated on or about May 27, 2016. This is an approximate date and the contractor shall determine the exact date by consulting the other contractors and utilities involved. The contractor will need to coordinate work with City CUC and Midwest Fiber Networks conduit, cut-overs and City Street Lighting and Traffic work.

   There are also hydrants and street lighting poles to be moved prior to, or during, construction. This work shall be coordinated with construction activities.

   There are six (6) communication (CUC) manholes to be abandoned by the contractor on the west side of the road. Please see attached abandonment table for locations.

   Contractor shall remove frame and cover, remove rood deck and structure to three (3') below finished grade, break up floor of manhole, bulkhead (plug) ducts, and fill with slurry. This will be paid for under bid item Abandon CUC Manhole.

No.	Location	Abandon Manhole Each
2070	Sta. 11+63.7, 20.0 LT	1
2074	Sta. 16+07.7, 18.4 LT	1
1971	Sta. 19+17.7, 17.9 LT	1
1970	Sta. 19+39.2, 18.2 LT	1
1969	Sta. 23+04.6, 18.7 LT	1
1968	Sta. 26+80.1, 18.7 LT	1
TOTAL		6

5. Work on this contract shall occur in two phases. Phase 1 shall be the removal and replacement of curb, walk, driveway, and pavement on the east side of South 5th Street. During Phase 1, there shall be one 12' (minimum) wide lane in the southbound direction on the west side of the roadway. Traffic will be one-way southbound from W. Virginia Street to W. Washington Street. Traffic from W. Scott Street to W. Washington Street shall be one-way northbound on the west roadway. Some parking along the west curb will be allowed. Once all work on the east side of the roadway is complete, Phase 2 shall begin.

   Phase 2 shall be the removal and replacement of curb, walk, and pavement on the west half of S. 5th Street. During Phase 2, one 12' lane of northbound traffic will be maintained on the east half of

the roadway from W. Scott Street to W. Virginia Street. During Phase 2, no parking will be allowed on S. 5th Street.

6. The contractor shall be required to coordinate construction activities so that all work on an individual project is complete as per *Section 305.6.2 of the Specifications* within the following time limitations:

Project No. ST211140117 S. 5th Street – W. Scott Street to W. Virginia Street	(70) Project Workdays

This is a completion day contract. All work shall be complete by September 30, 2016.

7. This special provision is a substitute for Section 305.7 of the *Street Construction Specifications*, dated 1992. The amount of the per diem charge for inspection as referred to in part two (2) shall be **$325.00**. The contractor should be aware that work on each project is governed by the project workdays, and a per diem inspectional charge of **$325.00** per day will be assessed for each workday after the allotted number. Inspectional charges will be assessed against each project, which exceeds its allotted number of workdays. An inspectional charge, in addition to the project workday charge, will be assessed if the number of workdays for the overall contract exceeds the amount allotted.

8. Within ten (10) business days of the award of this contract, the contractor shall mail a notice of the project to the City of Milwaukee Construction Section at 841 N. Broadway, Room 710, Milwaukee, WI 53202 for review and approval. Within five (5) business days of approval, the contractor shall mail the project notice to all affected area residents and businesses. It shall be the sole responsibility of the contractor to ensure that all notices are conveyed to the public regarding this project. A sample notice is included in the contract documents. The entire cost of this work shall be included in the unit price bid for mobilization. Contract work shall not start prior to completing the notice requirement. Any delay in contract completion as a result of non-compliance shall be the responsibility of the contractor.

9. The contractor shall post City of Milwaukee Project Identification ("BLUE") signs as directed on each project in this contract. The City will provide blank signs for the contractor to fill in contact information and post. The entire cost of this work shall be included in the unit price bid for mobilization. The contractor shall inform Michael Chaneske, of City Sign Shop, (414)286-5965 of any City Signs knocked or taken down by the paving contractors or their sub-contractors during construction.

10. The contractor shall provide a portable toilet or portable toilet service on each project location in the contract for use by construction and City personnel. Facilities shall be promptly removed upon completion of each individual project. Facilities shall be locked and secured during non-working hours. (Location shall be as directed). The entire cost of this work shall be included in the unit price bid for mobilization.

11. The following items are to be retained by the City and shall be delivered by the contractor to Tower/DPW Field Office, 3850 N. 35th Street.

- Bike racks

Please contact Mr. Richard Lacy at (414) 286-5504 to make arrangements for delivery of bike racks.

12. There are hollow walk areas along this project. Contractor shall use caution during sawing and removal operations near the hollow walk areas.

13. **S. 5th Street – W. Scott Street to W. Virginia Street – Hollow Walk Letters**

Address	Tax Key #	Description
#1014 S. 5th	431-0849-000	Improperly abandoned window well
#1100 S. 5th (SEC 5th and Washington)	431-0186-000	Hollow whole abutting sidewalk
#908 S. 5th (arts at Large)	431-0904-000	Trap door
#900 S. 5th	431-0905-000	Entire abutting sidewalk area, stairway, window, and wall
#815 S. 5th (Botanas)	431-1046-100	Trap door
#713 S. 5th	431-1071-000	Trap door
#504 W. National (Peck Bldg.)	431-1076-100	Improperly abandoned window well
#508 S. 5th (NWC 5th and Washington)	431-0146-000	Trap door on Washington

14. Vehicular cross-traffic shall be maintained at all intersections. All intersections shall be constructed in quadrants with high, early-strength concrete pavement.

15. Pedestrian crossing(s) shall be provided at the following locations(s):

- At bus stops – W. National Avenue
- At crosswalks
- At business entrances
- From parking lots to businesses
- As directed by Project Engineer

Concrete walk shall be removed and replaced within 72 hours. Temporary walk shall be placed as needed for access to buildings. This walk shall be 1" asphalt on gravel. Gravel which remains on the job will be paid under bid item, 70500, gravel filling. There is a bid item for the temporary asphalt walk.

16. Driveway owners must be contacted prior to any driveway removals. In order to provide maximum access, driveways shall be removed, forms set, and replaced with high, early-strength concrete. Contractor to make arrangements with owners. A list of owners will be provided to contractor.

East Side

- Driveway Sta. 25+83, Jordan Mfg., must maintain access
- Other driveways can close with owner's permission (Sta. 25+40, 24+50)
- Driveway Sta. 22+45 #606
  - Monday/Wednesday (Closed Monday, open Wednesday)
- La Fuente – 2 driveways (Sta. 21+20, Sta. 21+55)
  - One driveway at a time
  - Monday/Wednesday
- La Perla – driveway (Sta. 16+88)
  - Make arrangements with owner
- Catapult Learning – driveway (Sta. 10+48)
  - Friday/Monday

West Side

- Address 519 (Sta. 24+90)
  - Friday/Monday
- Iron Horse Diner Valet Parking
  - (ABM Parking)
  - Sta. 24+20 (Make arrangements)
- La Fuente driveway (Sta. 23+77)
  - Monday/Wednesday
- La Fuente driveway (Sta. 22+35)
  - Friday/Monday
- La Fuente driveway (Sta. 19+63)
  - Monday/Wednesday (NOTE: Alley access)

- Milwaukee Ballet driveway (Sta. 17+00)
  - Friday/Monday

- Botano's Restaurant driveway (Sta. 13+35)
  - Monday/Wednesday

- TCR Auto Body driveway (Sta. 5+40)
  - Friday/Monday (Make arrangements with owner.)

17. In order to provide access at all times, the following driveway(s) shall be removed and replaced one-half (½) width at a time with high, early-strength concrete:

East Side

- Driveway (Sta. 19+93)

- Botano's Restaurant driveway (Sta. 13+25)
  - Monday-Wednesday

West Side

If the contractor can make other access arrangements, agreed to in writing and signed by the contractor and the property owner, other sequencing will be allowed when approved by the Construction Engineer.

- Mobcraft driveways (Sta. 25+29 to Sta. 25+80)

18. There are City of Milwaukee parking meters within the project limits. To remove and/or hood the parking meters, contact City of Milwaukee, Ms. Natalie Hermann, Parking Operations, (414) 708-8596 - mobile, or (414) 286-3486 - office. Contractor should contact Natalie at least two (2) weeks prior to start of work.

    For traffic signal work or relocation at S. 5th and W. National, contact Mr. Al Nichols, Traffic Engineering, at (414) 708-5148, mobile, or (414) 286-5961, office.

19. A three inch (3") crushed; gravel base course shall be placed under the proposed concrete curb and gutter to be constructed adjacent to the proposed concrete pavement. This work will be paid on a square yard basis at the bid price for three inch (3") crushed gravel base.

20. The erosion control item on this contract shall include an Erosion Control Implementation Plan (ECIP). The ECIP shall be submitted to the City Engineer, at least ten (10) working days prior to the scheduled start of work on the contract. The City Engineer shall review the ECIP for meeting technical standards and notify the contractor if the plan meets the standard within seven (7) working days. Work shall not start until the ECIP meets technical standards. The contractor shall be required to have a copy of the ECIP on the job site for the entire duration of the contract. The ECIP shall include, but not be limited to:

- A plan showing all locations of erosion control devices and other *Best Management Practices (BMP's)*.
- A written description of all erosion control devices and *BMP*'s to be used.
- A written schedule of installing erosion control devices.
- A written schedule of construction operations related to implementing erosion control devices and *BMP's*.
- A written maintenance schedule for all erosion control devices and *BMP's*.

All costs associated with implementing the erosion control plan, such as furnishing, installing, maintaining, and removal of erosion control devices shall be included in the unit price bid for erosion control. There shall be no additional compensation for revising the ECIP or utilizing additional *BMP's* in order to comply with *Chapter 290* of the *City of Milwaukee Code of Ordinances*. If the contractor is found not in compliance with the ECIP, the contractor will be subject to the penalties included in *Chapter 290*.

21. Tack coat shall be included in the price bid for asphalt.

22. The filter fabric for control of surface water, specified in *Section 905.18.1* shall be a filtration *Geotextile®* meeting the following properties in lieu of the properties specified in the above-noted section.

Grab Tensile Strength	200lb	ASTM D-4632
Mullen-Burst Strength	200lb	ASTM D-3786
Equivalent Sieve Size	U.S. No 30 Max	ASTM D-4751
Water Flow Rate	140 gpm/ft^2	ASTM D-4491
Permittivity	1.9 sec^1	ASTM D-4491
Permeability	0.14 cm/sec	ASTM D-4491

23. There will be six (6) bioswale areas constructed as part of this project. Please see Biorentention Plans and Special Provisions (No. 37).

24. Pedestrian ramps at W. National Ave. are to be constructed with "brick-red" colored concrete.

25. No work shall take place in W. National Ave. during Summerfest, which begins June 29, 2016 and ends July 10, 2016.

26. All epoxy, pavement-marking material shall conform to *Section 646* of the *State of Wisconsin Department of Transportation Standard Specifications for Highway and Structure Construction, 1996 Edition*.

All material must be installed per the manufacturer's specification.

If the roadway is to be opened to traffic prior to the placement of permanent pavement markings, a temporary centerline pavement marking shall be installed prior to the roadway being opened to traffic. The spacing of the four-inch by forty-eight-inch (4" x 48") inch temporary pavement marking tape must be forty-six-feet (46'). The cost of such work shall be included in the unit bid price of *Epoxy Pavement Marking*.

When pavement marking layouts are needed, the contractor shall contact Mr. Jim Brown at (414) 286-3276, a minimum of five (5) working days before they are needed.

27. The adjustments of all City manholes (Sewer, CUC, Water, etc.) shall be part of this contract. Contractor shall note Sewer and CUC special provisions, tables, and drawings.

28. The contractor shall furnish and install detectable warning plates as detailed on the attached curb and sidewalk ramp details, at all curb and sidewalk ramps, within the project limits. The detectable warning plates shall be a *Neenah Foundry R-4984,* or an approved equal. The plates shall be unpainted. The installation of the detectable warning plates shall follow the manufacturers' suggested procedures. The installed detectable warning plates shall be measured on a per square foot unit basis, and paid under the item, *50330 Detectable Warning Field.*

29. Contractor shall be aware of **design revisions** made to ***Concrete Driveways***, *(Figures 21A, 21C, 23A, 23B and 26A)***. Design changes** were also made to ***Curb Ramps***, *(Figures 16A, 17A and 18A).* These **changes** are effective immediately and shall be implemented under this contract. *(See attached revised drawings).*

30. **Sewer Special Provisions include:**

    A. The sewer work on this contract is governed by the *Standard Specifications for Sewer & Water Construction in Wisconsin,* Sixth Edition dated December 22, 2003, and all Subsequent Addendums.

    B. The contractor shall be responsible to keep all castings safe and free from damage as part of this paving contract during removal and replacement. Any damaged castings shall be brought to the attention of the construction engineer prior to removal. Any damage to the castings caused by the contractor as a result of removal and replacement shall be the responsibility of the contractor and replaced at the contractor's expense.

    C. The contractor shall furnish new castings on all new manholes and inlets constructed as part of this contract and on existing manholes and inlets as required in the plans. New sewer manhole frames and lids shall be of type MS21 and MS58A, respectively. New inlet frames and grates shall be of type MS51 and MS57, respectively. New alley inlet frames and grates shall be of type MS8A and MS55, respectively. Castings shall be of types supplied by Neenah Foundry or approved equal. The cost of furnishing new castings shall be included in the unit price bid for the respective casting. Salvaged castings shall become the property of the contractor.

    D. Manhole/Inlet Adjustment shall be in accordance with Section 810 of the *City of Milwaukee Street Construction Specifications,* dated July 1, 1992. Section **810.6 Measurement for Payment** shall be revised as follows: the unit of measurement for Manhole/Inlet Adjustment shall be: Each.

    E. Manhole/Inlet Repair shall be the removal and replacement of portions of existing manholes and inlets as required in the plans. Additional manhole/inlet repair may be added to any existing manhole/inlet once construction begins at the discretion of the construction engineer. The cost of removals and furnishing and installing all materials shall be included

in the price bid for Manhole/Inlet Repair. The unit of measurement for Manhole/Inlet Repair shall be: Vertical Foot.

F. The cost of removing any existing manhole/inlet necessary to construct any new manhole/inlet as required in the plans shall be included in the appropriate manhole/inlet bid item.

G. The cost of all materials, including pipe, used to reconnect existing connections to new manholes constructed as part of this contract shall be included in the appropriate manhole bid item.

H. Inlet Type 45A's shall include up to eighteen (18) inches of additional pre-cast riser structure, for a total structure height of up to sixty (60) inches below the top slab, while maintaining a minimum of eight (8) inches of rectangular precast chimney. If the inlet installation requires more than an additional eighteen (18) inches of riser structure over the standard detail forty-two (42) inch tall structure, the additional shall be paid as vertical feet under the Manhole / Inlet Repair bid item.

I. All sewers constructed on this contract shall be PVC, smooth wall, and shall conform to ASTM D 3034 SDR 35.

J. Precast concrete adjusting rings shall be of the type supplied by Concrete Specialties Company, Kenosha, Wisconsin or approved equal.

31. CUC/Communication Manhole Adjustment

A. Description

This special provision describes adjusting the existing chimney of the block, pre- cast, or brick round manholes; and furnishing, installing, and removing protection of the cables in the manholes during adjustment and paving operations. Perform work in accordance with the standard specifications, per *Standard Specifications for Sewer & Water Construction in Wisconsin*, as shown on the attached sketch, and as hereinafter specified.

B. Material

Furnish and install materials that conform to the requirements of *Standard Specifications for Sewer & Water Construction in Wisconsin.* Salvage and re-install existing covers on the manholes. For manhole covers designated for replacement the city will supply the covers. Contact Rico Lopez, Inventory Clerk, at (414) 286-6123 prior to obtaining the frames and lids from the DPW Field Headquarters at 3850 North 35th Street. Contractor must have the "Castings Requisitions Form" which shall be supplied by the city to obtain the covers.

C. Construction

Report any pre-existing problems to Ms. Karen Rogney, Conduit Section, at (414) 286-3243 three working days in advance of any construction on manholes.

Before removing the pavement around the manhole, place a ¾" plywood cover or equal over existing active Street Lighting, Traffic Control, and Communication or private vendor electrical cables. This cover shall be properly supported to/at the manhole floor. Contractor

must place a steel cover plate over the manhole which must remain in place during construction activities until the frame and cover are placed on the manhole.

Remove existing chimney to surface of concrete roof slab. If manhole does not have an existing concrete roof slab, remove sufficient chimney as to provide adequate corbel to fit new larger cast iron frame and cover.

Break out and remove pavement around manhole. Remove existing covers, storing and securing them properly. Any damaged, lost, or stolen covers shall be the responsibility of the contractor and shall be replaced at the contractor's expense.

Adjust manhole cover to proposed grade using brick or concrete rings as necessary. After paving is complete, remove all wedges and shims. Fill voids with grout. Do not back plaster inside walls. After completion of all paving operations, remove the temporary ¾" plywood cover or equal which was placed over the existing electrical cables in the manhole as mentioned above. Remove all construction debris from the manhole.

D. **Measurement and Payment**
The unit of measurement for CUC manhole adjustment shall be each.

Note: CUC Manhole Adjustment shall include up to twelve (12) inches of Adjustment. Payment shall be full compensation for furnishing all required materials, exclusive of frames, grates, or lids available and designated for adjusting; for removing, re-installing and adjusting the covers; and for furnishing all labor, tools, equipment, and incidentals necessary for adjusting each cover, complete in accordance to the requirements of the plans and contract. Covers to be adjusted and which were rendered unfit for use by the contractor, through the contractor's operations will be replaced by the contractor in kind at the contractor's own cost and expense.

32. Five (5) trees are to be removed on Project No. ST211140117 as follows:

Size and Type		Location
5" Elm	(S. 5th Street)	Sta. 9+15 W/S.
3" Maple	(S. 5th Street)	Sta. 9+68 W/S.
3" Elm	(S. 5th Street)	Sta. 10+03 W/S.
3" Maple	(S. 5th Street)	Sta. 10+45 W/S.
12" Maple	(4th & Greenfield – SE Corner)	Sta. 40+17 E/S.

33. The City has retained a consultant for doing line and grade staking on paving contracts. The City needs the project staked five (5) working days before construction starts so the removals can be measured by City field crews. As a result, the contractor must contact the City eight (8) working days in advance so that the City can give the consultant three (3) working days to stake the project. The City will make the initial consultant contact at the time the contractor calls for a start. If the contractor wants the stakeout done in a special way to accommodate a special piece of equipment or a new procedure, it is up to the contractor to communicate this to the consultant. The consultant is required to stake each stage of work one (1) time. The contractor is required to check that the

stakes and grades are acceptable to use before construction starts. Any staking required because the contractor failed to protect the stakes or failed to transfer the grades would be at the contractor's expense. If there are design changes, the consultant will be paid an *extra* for stakeout. Stakes needing replacement due to alleged third party actions will require Construction Supervisor approval if a cost is involved.

34. The contractor shall protect, adjust and maintain accessibility to all Milwaukee Water Works (MWW) facilities (manholes and access boxes which house water appurtenances such as valves, curb stops, air vents and blow offs) within the limits of and for the duration of the paving project. The Contractor shall preserve the location markings of all water facilities by maintaining blue paint markings and installing temporary stakes as necessary. All MWW facilities shall be maintained in clean, properly adjusted and aligned and undamaged condition throughout the paving project and upon completion. Cost for adjustments shall be per each as listed in the bid item quantities.

Prior to the start of the contract start date, MWW will locate, mark, inspect and repair all water manholes and access boxes within the limits of the project to ensure that they are all properly adjusted and aligned for access to the appurtenance below ground. In addition, MWW will ensure that all appurtenances (valve, curb stop, air vent and blow off) are in proper operable condition. Upon completion of the pre-inspection but before construction commences, the MWW will walk through the project with a representative from Infrastructure Services Construction Section to document the condition of the project and ensure all are knowledgeable about the condition of the project prior to the commencement of work by the contractor. The paving contractor will be invited to attend this walk through. Not attending the walk through will not release the contractor from their required obligations and responsibilities.

The contractor will be provided with information identifying the water facilities. The contractor is responsible throughout the duration of the project, to ensure all water facilities are located, identified by maintaining the blue paint markings, accessible for operation and free from damage at ALL times. All appurtenances shall be operable so as to control a leak in the event of water emergency or to accommodate a customer's request for water shut off. Any water appurtenance identified during the duration of the project that cannot be located or operated, must be corrected by the contractor immediately. If the MWW requires the location and/or operation of the appurtenances during the course of the project, and it is not identifiable and/or accessible, the MWW will make the necessary repairs and the cost of those repairs and any associated costs as a result of the delayed shut-off will be billed to the contractor as well as any costs of claims due to an impeded shut-off response. The contractor shall remit payment of the invoice to MWW within 30 days of the invoice date. In addition the bid item(s) payment owed to the contractor for affected items will be disallowed on the contract.

All materials used for the adjustment and or repairs of MWW manholes and access boxes must meet MWW specifications and will be provided by *City of Milwaukee, Milwaukee Water Works' Inventory, 3850 North 35th Street Milwaukee, WI 53216, (414) 286-2827,* or by *contacting Mr. Jesse Hernandez at (414) 286-6306 or (414) 708-2670. Milwaukee Water Works Distribution General Contact Number is (414) 286-3710.* If materials that have been provided by MWW are damaged by the contractor the replaced MWW Specified materials will be charged to the contractor. If existing access boxes are damaged by the contractor or subcontractors, they can only be replaced with MWW specified materials and will be charged to the contractor. If additional MWW materials are needed they will be provided by the City of Milwaukee, MWW Inventory and

may be charged to the contractor depending on the circumstances as determined by the MWW. All MWW materials furnished but not used on the project shall be returned and delivered to the City of Milwaukee, MWW Inventory. The Inspector will provide the contractor a Surplus Material form as well as provide a copy of the form to the City of Milwaukee, MWW Inventory. Materials not returned will be charged and billed to the contractor with payment of the invoice due to the MWW within 30 days of the invoice date.

Infrastructure Services Construction Section will notify MWW of the completion of the paving work and MWW will then inspect all water manholes and access boxes within the project limits to ensure the manholes and boxes are clean, properly adjusted and aligned and the appurtenances are accessible and operable. The contractor will be notified of any defects by the City. The contractor will have fifteen (15) working days from the date of notification to complete corrections. After 15 working days the MWW will re-inspect the identified facilities and appurtenances noted as having defects. Any remaining defects will be corrected by the MWW, and billed to the contractor for immediate payment to the MWW.

35. During construction, it is anticipated that the City of Milwaukee ***street lighting facilities*** will be maintained as follows:

Project	Street Lighting Facilities
ST211140117	***Temporary Overhead*** to be installed

Street Lighting personnel will determine if the lighting facilities will be installed in overhead or left in service to be protected and adjusted. If it is determined that overhead is justified, street lighting personnel will make every effort to install temporary overhead facilities and relocate permanent facilities, as needed, before roadway construction starts. Prior to construction, the contractor will be provided with a street lighting plan identifying the live facilities.

The contractor shall be aware that when ***Temporary Overhead*** is installed, some existing underground street lighting facilities can remain live and must be carefully worked around to avoid any damage to them. The contractor is to be aware that with many paving jobs overhead facilities will be installed at the intersections only while the remainder of the job is to be treated as a protect and adjust project. The contractor will be held responsible for any damages to the portions of the lighting facilities which remain in underground and live. The contractor is not start work until the street lighting overhead circuitry is fully operational. If the contractor starts before the circuitry is fully operational, he will be responsible for all damages to lighting facilities.

During and after roadway construction, *Street Lighting Forces* will install permanent lighting facilities. Once street lighting personnel installs permanent facilities, especially pipes, the contractor is to use caution near these facilities. He will be held responsible for damages to the newly installed facilities.

The contractor shall keep the *Street Lighting Construction Supervisors* informed of the status of the roadway construction. Contact:

Mr. George Berdine (414) 286-5943 / office (414) 708-4245 / cell
Mr. Dennis Miller (414) 286-5942 / office (414) 708-4251 / cell
Mr. Thomas Hughes (414) 286-3457 / office (414) 708-3175 / cell

Note: *If Mr. Berdine, Mr. Miller, or Mr. Hughes is not available, then contact our dispatcher at (414) 286-5944. For damages occurring after hours (not between 7:00 AM to 3:00 PM on holidays and weekends) please use our 24 hour number, (414) 286-3015.*

The contractor must keep the area behind the curb free from over pour and other debris. He will be held responsible for costs incurred by *Street Lighting Forces* for cleaning debris from behind the curb.

If the contractor requests the relocation of any street lighting facilities, *permanent or temporary*, for his convenience, he will be responsible for all costs incurred by *Street Lighting* personnel fulfilling his request.

Any questions regarding the design of the lighting system are to be directed to *Street Lighting Engineering*. Contact Mr. Eng-Kie Lee at (414) 286-2174.

36. ***Forestry***

Forestry Special Provisions include:

When tree roots are encountered, the following shall apply:

1. ***Sidewalk Construction*:**

   A. Sidewalks are to be removed, and roots cut, by use of **hand implements only.**

2. ***Curb, Gutter, and Road Construction***:

   A. Exposed tree roots shall be covered with mulch and watered from a period immediately following curb and gutter removal until the area is backfilled following construction.

3. ***General Requirements***:

   A. All cutting for the removal of sod and soil in order to establish a finished grade within four feet (4') of existing trees must be done manually if necessary.

   B. No construction equipment, cars, trucks or materials shall be parked or stored on any median or tree border on this project or adjacent roadways.

   C. Root foundations must remain adequate to withstand heavy windstorms.

   D Root systems of street trees **shall not be cut** for the installation of any type of cable by the contractor or City Department. Contact **the Forestry Division at (414) 708-2428** for directional boring specifications.

E. Caution should be used during the construction process to avoid damage to the roots, trunks, and branches of all street trees. Damage caused to any street tree or irrigation system will be **repaired by the Forestry Division** and the costs of repair, rejuvenation, and/or value lost will be billed to the contractor or credited against the contract at the option of the City.

F. At locations where the contractor has not complied with the Forestry Special Requirements stated in the Special Provisions above, and the maximum clearance was exceeded, or a thin form was not used, a minimum credit to the City of **fifty dollars ($50.00)** per location will be taken. The credit will increase in proportion to the excess distance beyond clearance allowed. The credit will be (**$50.00)** for each two-inch (2") increment, or part thereof, in excess of the initial clearance allowed. Any damage to the tree's structure totaling fifteen (15%) percent of the tree's value will be billed on a prorata basis. If, in the opinion of the Forestry Division, the tree has been damaged to the point that it warrants removal, the credit that will be taken will be equal to **one-hundred dollars ($100.00)** per inch diameter of the tree. A field measurement will be taken to determine the tree size.

37. **Biorentention Plans and Special Provisions**

SPECIAL PROVISIONS, GENERAL NOTES:

BIOSWALE SPECIAL PROVISIONS
SOUTH 5TH STREET BIOSWALE PROJECT
SOUTH 5TH STREET – WEST VIRGINIA STREET TO WEST SCOTT STREET
PLAN FILE NOS. 198-5-96, 244-11, 244-12, 244-13, 244-14

1. The work on this contract for the bioswales areas is governed by the *Standard Specifications for Sewer & Water Construction in Wisconsin*, Sixth Edition dated December 22, 2003, and all Subsequent Addendums, the *City of Milwaukee Street Construction Specifications,* dated July 1, 1992, and as altered in these special provisions.

2. The Contractor shall contact the owner/residents and businesses affected by the construction of the bioswale areas to inform them of the work, coordinate access to the properties, and provide them with any information deemed necessary for the successful construction of the bioswale areas.

3. The contractor shall be fully responsible for the maintenance and safety of the bioswale areas from the beginning of work at a specific bioswale area until the total project is fully operational and accepted by the City. This includes but is not limited to erosion control, safety barricading, traffic and pedestrian control, protection of utilities (both private and public), site security, watering, weeding, etc. After the project is completed and accepted by the City, the Contractor must also meet additional maintenance requirements for the bioswale areas per the Plants Maintenance and Warranty (bid item no. 95016). The maintenance plan period shall be one (1) year from the date of project completion. The contractor shall coordinate start date with all necessary parties as required by law and indicated in these special provisions.

4. All materials and equipment installed as part of this contract shall be new and first-rate quality unless otherwise noted.

5. The Contractor shall maintain access to adjacent properties during construction of the bioswale areas. Access shall meet all applicable requirements of the Americans with Disabilities Act (ADA). The contractor shall provide all necessary barricading, barriers, etc. per the Manual on Uniform Traffic Design (MUTCD).

6. The Contractor shall protect and support gas lines, water mains, underground conduit (CUC), street lighting cables, conduits, and all other utilities during construction and installation of the bioswale areas constructed per this contract. The cost of supporting and protecting shall be included in the unit price bid for the respective work.

7. The Contractor shall contact Diggers Hotline to verify the locations of existing utilities. The Contractor shall be responsible for all utilities coordination and verifications before commencing any work on this project.

   New utilities are being installed and some existing utilities will be relocated as part of this project. The Contractor shall verify all utility locations with all other plans in the contract documents. New and relocated utilities may not be shown on the bioswale plans. It is the responsibility of the Contractor to field verify the location of all existing and new utilities.

8. For the bioswale facilities located along South 5th Street the existing street lighting cables are to be moved and will run parallel to the proposed curb. Typically the cables are located approximately (1) one foot behind the back of the curb. The depth of the cables varies but is usually 18" inches below the surface. At each location the contractor will either dig or hydrobore the existing ground. The Contractor shall support any street lighting conduits and cable crossings. The contractor shall call diggers hotline to identify and paint utilities. Special care shall be taken when working around the street lighting facilities.

   If the Contractor cannot work around the street lighting facilities in any area of this project and alterations are required, the Contractor shall contact the street lighting engineer Eng-Kie Lee at (414) 286-2174 for an estimate of costs for alterations to street lighting facilities. If street lighting facilities are damaged by the Contractor during the work the Contractor shall report the damages to the Street Lighting Shop at (414) 286-2174.

   If there are any impacts to City of Milwaukee Street Lighting equipment, the Contractor shall pay service fee for alterations required to be done by the City and/or pay for any damages to City Street Lighting facilities.

9. The contractor shall contact Mr. Scott Baran of the Forestry Section at (414) 286-3531 prior to installing any vegetation.

10. Items indicated as "not to scale" on the plans are representational in nature and shall not be used for measurements of any type. The contractor shall be responsible for determining orientations and elevations of all existing utilities, surface grades, etc. prior to coring holes in existing or new structures and ordering and installing new materials per this contract. The contractor shall be responsible for all costs to correct core holes, utilities, structures,

etc. incorrectly placed. Other items requiring field determined locations shall be placed after consultation with the construction engineer and affected utility representatives. The contractor shall be responsible for coordinating these consultations. Reasonable location adjustments shall not raise a claim for an extra.

11. The following special provisions refer to specific bid items from the plans and supplement and/or alter the standard specifications for this contract:

A. STORM CURB INLET WITH GRATE TYPE "A" - BID ITEM NUMBER 44010 (97290)

This item consists of furnishing and installing a Storm Curb Inlet with Grate Type "A" as shown on the plans. The work shall include but is not limited to installation of concrete base and drainage frame and grate. The Storm Curb Inlet with Grate Type "A" shall be constructed according to the details shown on Plan File 244-14.

Concrete and granular base course for the Storm Curb Inlet with Grate Type "A" shall meet the requirements of the Concrete Curb and Gutter per the *City of Milwaukee Street Construction Specifications*.

The frame shall be Neenah R-3228-G modified frame with removed curb box and excess frame per NF-3228-GT01 or approved equal. The grate shall be Neenah Foundry Type "H" or approved equal. Grate is to be lettered "CITY OF MILWAUKEE". Frame and grate shall be set to match exactly the elevation of the adjacent gutter. Contractor shall contact Jene Waters from Neenah Foundry at (414) 943-3500 to obtain all necessary casting information.

All costs associated with this work shall be included in the unit price bid for Storm Curb Inlet with Grate Type "A".

B. 8" DIA. STORM WATER DRAIN, CLASS "C" BEDDING – BID ITEM NUMBER 50039 (97808)

This item consists of furnishing and installing 8" Diameter Storm Water Drain, Class "C" Bedding as shown on the plans. The work shall include but is not limited to excavation, drain disconnection if necessary, furnishing and placing bedding materials, coring new connections to existing storm sewers, storm inlets, and/or structures, making all connections to new and existing work, and all pipe, tees, wyes, fittings, backfilling, etc. necessary to construct the drain per plans and specifications.

8" Dia. Storm Water Drain shall be SDR 35 polyvinyl chloride (PVC) conforming to ASTM D3034.

Class "C" Bedding shall meet the requirements of Section 3.2.6 of the *Standard Specifications for Sewer & Water Construction in Wisconsin*.

It is the Contractor's responsibility to verify the site and elevation of the all new and proposed connections of the piping and to notify the construction engineer if the drain pipe cannot be constructed to plan. The Contractor shall lay install the storm drains in the location, orientation, and slope as indicated on the plans. If a slope is not indicated on the plans the Contractor shall lay the storm drains with no less than 1/8-inch per foot of slope.

The majority of the storm water drain pipe will be placed within the proposed bioswale section. At these locations the pipe bedding materials shall be consistent with the required bioswale section materials as indicated on the plans and in these special provisions. Place Class "C" Bedding from the point where the storm water drain pipe leaves the bioswale area to the point where the pipe connects with a storm water inlet.

The contractor will be required to handle all flow during construction and the reconnection to the sewer drains/inlets. The cost of bypassing and/or pumping flow around the project shall be included in the unit bid price, if necessary.

All costs associated with this work shall be included in the unit price bid for 8" Dia. Storm Water Drain Class "C" Bedding.

C. 6" GRANITE COBBLES - BID ITEM NUMBER 50043

This item consists of furnishing and installing 6" Granite Cobbles at the locations indicated on the plans. The work shall include but is not limited to excavation and furnishing and installing a channel with semi-submerged cobble stones to direct the runoff from the Storm Curb Inlet with Grate Type "A" to the bioswale facility and around the 8" Dia. PVC Stand Pipe and Grate within each bioswale facilities.

The semi-submerged 6" Granite Cobbles shall be placed at the locations and elevations as shown on the plans. Locations generally include the following:

1. At the back of the Storm Curb Inlet with Grate Type "A" (see bid item number 44010) to dissipate the energy of the flow into the bioswale area. A minimum of 4' x 4' area of 6" Granite Cobbles shall be installed at this location.
2. At the top of the engineered soil layer extending one (1) foot in each direction around 8" Dia. Overflow Stand Pipes and Grates covering up to the base of each grate which is mounted on the PVC stand pipes (see bid item number 92034).

The Contractor shall use 6" Granite Cobbles partially submerged which are visually appealing with more than one color.

All costs associated with this work shall be included in the unit price bid for 6" Granite Cobbles.

D. MULCH SURFACE LAYER - BID ITEM NUMBER 56101 (82361)

This item consists of furnishing and installing Mulch Surface Layer in the bioswale facilities as shown on the plans.

Mulch Surface Layer shall be shredded hardwood mulch or chips, aged a minimum of 12 months. The mulch shall be free of foreign material, including other plant material.

Uniformly spread the mulch material directly above the Engineered Soil Layer and between two (2) to three (3) inches in depth. Unless directed otherwise, begin mulching at the top of the slopes and proceed downward.

All costs associated with this work shall be included in the unit price bid for Mulch Surface Layer.

E. 6" DIA. PERFORATED UNDERDRAIN PVC PIPE - BID ITEM NUMBER 70061

This item consists of furnishing and installing 6" Dia. Perforated Underdrain PVC Pipes in the bioswale facilities as show on the plans. The work shall include but not be limited to furnishing and installing 6" dia. perforated underdrain PVC pipes, end caps on all end pieces, and all tees, wyes, fittings necessary and making all connections to storm pipe, overflow structures, and/or to inlets.

Pipe shall be perforated polyvinyl chloride (PVC) plastic pipe conforming to ASTM D3034. The pipe should have 3/8-inch perforations, spaced at 6-inches on center, with a minimum of 4 holes per row.

Lay pipe at the elevation and grade as indicated on the places. Securely connect sections of PVC pipe with solvent-cemented or gasketed joints. Unless directed otherwise, lay perforated drainage pipe with the perforations on the underside of the pipe. All perforated pipes shall be placed at least 3' from the edge/border of the bioswale areas and 1' minimum from the street lighting cables and spaced evenly. Perforated pipes lengths shall extend to a distance 2' minimum from the edges of the facility. Close the dead ends of pipes securely with plugs fabricated from the same material used in the pipe.

All costs associated with this work shall be included in the unit price bid for 6" Dia. Perforated Underdrain PVC Pipe.

F. 6" DIA. PVC CLEANOUT - BID ITEM NUMBER 70064

This item consists of furnishing and installing 6" Dia. PVC Cleanouts as shown on the plans. The work shall include but is not limited to furnishing and installing all pipe, tees, wyes, fittings necessary to construct the cleanout as indicated on the plans.

The 6" Dia. PVC Cleanout piping shall be SDR 35 polyvinyl chloride (PVC) conforming to ASTM D3034. The Contractor shall furnish all materials and

conduct work in accordance with the requirements of the *Standard Specifications for Sewer & Water Construction in Wisconsin*.

Securely connect sections of PVC pipe with solvent-cemented or gasketed joints

All costs associated with this work shall be included in the unit price bid for 6" Dia. PVC Cleanout.

G. ENGINEERED SOIL - BID ITEM NUMBER 91056 (40192)

This item consists of furnishing and installing Engineered Soil in the bioswale facilities as shown on the plans. The work shall include but is not limited to providing all labor, equipment, and materials to supply, mix, and install the engineered soil, which includes sand, compost and topsoil.

The soil mixture shall consist of a mixture of silica sand and compost. The mix shall be designed to approximate the following percentages by volume.

Engineered soil component	Percentage composition (by volume)
Silica sand	70
Compost	30

Compost for bioswale facility basin -the compost shall meet the requirements of the Wisconsin Department of Natural Resources' (WDNR) Technical Standard 1004, Bioretention for Infiltration and WDNR Specification S100, Compost.

Sand for bioswale facility basin – the sand shall be USDA course sand (0.02 to 0.04 inch diameter), pre-washed to remove clay and silt particles, and well-drained or dried prior to mixing. Calcium carbonated, dolomitic sand, and other substitutions are not allowed. Sand shall meet ASTM C-33.

The Engineered Soil mixture shall have a pH between 5.5 and 6.5 and have adequate nutrient content to meet plant growth requirement. The soil mixture shall be free of rocks, stumps, roots, brush, or other material over one (1) inch in diameter. No other materials shall be mixed with the planting soil that may be harmful to plant growth or prove a hindrance to planting or maintenance.

The Contractor shall provide at least one person who shall be present at all times during the preparation and placement of the Engineered Soil, who shall be thoroughly familiar with the type and operation of equipment being used. Said person shall direct all work performed under this section.

All Engineered Soil shall extend at a slope as indicated on the plans from the specified elevation to the bioswale border keeping a minimum of 18-inches of cover for the street lighting cables and extending a horizontal distance from the back of the curb as indicated on the plans.

Prior to placement in the bioswale device, the Engineered Soil shall be pre-mixed and the moisture content shall be low enough to prevent clumping and compaction during placement. The Engineered Soil shall be placed in multiple lights, each approximately 12-inches in depth. Steps may be taken to induce mild settling of the Engineered Soil bed as needed to prepare a stable planting medium and to stabilize the ponding depth. Vibrating plate-style compactors shall not be used to induce settling. Install Engineered Soil to the elevations as indicated on the plans. The surface slope of the Engineered Soil layer shall not exceed 1%.

All costs associated with this work shall be included in the unit price bid for Engineered Soil.

H. GEOTEXTILE FILTER FABRIC, TYPE "DF" - BID ITEM NUMBER 91154 (83010)

This item consists of furnishing and installing the layer of Geotextile Filter Fabric Type "DF" above perforated underdrain pipe as shown on the plans and described in these Special Provisions. The work shall include but is not limited to preparing the area prior to placement of the filter fabric, furnishing and placing the Geotextile Filter Fabric Type "DF", securing the filter fabric to the system, sewing or providing the appropriate seam construction, and any other work or materials to complete the work.

Filter fabric shall be non-woven, needle-punched polypropylene (PP), polyester (PET), stabilized nylon, polyethylene, or polyvinylidene chloride meeting the requirements of Wisconsin Standards and Specifications for Highway and Structures Construction, current edition, Section 645.2.4 for Geotextile Fabric, Type DF (Drainage Filtration), Schedule B Test. Provide US Fabrics Inc. US 180NW, North American Green 130EX, or approved equal. Filter fabric shall be insect free, rodent free, mildew free, and rot resistant. Filter fabric shall be in a wrapping that protects the fabric from ultraviolet radiation and from abrasion due to shipping and hauling. Contractor shall keep the filter fabric dry until installed.

Provide Geotextile Filter Fabric, Type "DF" in locations as shown on the drawings and at the following locations:

Above the 6" perforated storm underdrain PVC Pipe: between the bedding layer and storage layer.

When placing the layers of filter fabric the area must be dry, level, and smooth. After placing the fabric on grade, the contractor shall not allow traffic or construction equipment to travel on the fabric. Roll out the fabric and pull taut manually to remove wrinkles. Join parallel strips of fabric by overlapping or sewing. Sew seams, except ensure a tensile strength equal to or greater than 60 percent of the specified directional tensile strength of the fabric develops. Seams shall be sewn or overlapped per the manufacturer's recommendations. Minimum overlaps at joints shall be 12 inches. Minimum overlaps at butt splices between fabric rolls shall be 36 inches. Provide weights or pins to prevent the wind from

lifting the fabric. Cover all tears, holes, or rips in the fabric with a patch of fabric overlapping the defect 36 inches in all directions. Cover all fabric within 48 hours of placement.

Filter fabric shall cover and be centered over the underdrain pipe and shall not extend laterally from either side of the pipe more than two feet (as shown in plans).

All costs associated with this work shall be included in the unit price bid for Geotextile Filter Fabric, Type "DF".

I. 1 ½" CRUSHED STONE - BID ITEM NUMBER 91180 (70102)

This item consists of furnishing and installing 1 ½" Crushed Stone in the bioswale facility as shown on the plans. The work shall include but is not limited to providing all labor, equipment, and materials to furnish and install the 1 ½" Crushed Stone.

The crushed stone shall be 1 ½" open graded, double washed crushed stone with a minimum porosity of 40% meeting the requirements of Wisconsin Standards and Specifications for Highway and Structures Construction, Section 501.2.5, 2003 edition, for Coarse Aggregate Size No. 2 (AASHTO No. 4[1]) and as modified in these Special Provisions. The required material gradation is as follows:

Sieve Size	Percentage Passing by Weight
2 Inch	100%
1 ½ Inch	90 – 100%
1 Inch	20 – 55%
¾ Inch	0 – 15%
3/8 Inch	0 – 5%

[1] Size No. according to AASHTO M43.

Compaction and smearing of the soils beneath the floor and side slopes of the bioswale area shall be minimized. If compaction occurs at the base of the bioswale device (below the 1 ½" Crushed Stone layer) the soil shall be refractured to a depth of at least twelve (12) inches. If smearing occurs, the smeared areas of the interface shall be correct by raking or roto-tilling.

All costs associated with this work shall be included in the unit price bid for 1 ½" Crushed Stone.

J. EXCAVATION AND OFFSITE DISPOSAL - BID ITEM NUMBER 92005 (40165)

This item consists of excavating, hauling, and disposing of excess material taken from within bioswale area footprints. The work shall include but is not limited excavating materials at locations and to the required depth as shown on the plans or required to acceptably complete the work.

The Contractor shall implement excavation methods to ensure protection of the areas directly adjacent to proposed excavation. If excess materials are disturbed or excavated adjacent to the required areas as shown on the plans or below the elevations shown on the plans the Contractor shall replace them in kind at its own expense.

All costs associated with this work shall be included in the unit price bid for Excavation and Offsite Disposal.

K. 8" DIA. OVERFLOW STAND PIPE WITH GRATE - BID ITEM NUMBER 92034 (92048)

This item consists of furnishing and installing 8" Dia. Overflow Stand Pipes with Grates shown on the plans.

The stand pipe shall be SDR 35 polyvinyl chloride (PVC), schedule 40 piping conforming to ASTM D3034 and fittings conforming to ASTM D2466 or PVC manufactured drain basin. Manufactured drain basin shall be Nyloplast, Harrington Corporation (HARCO), or approved equal.

Provide Neenah Foundry R-2560-A grate with anchor or other approved dome type grate provided per drain basin manufacturer.

8" Dia. Overflow Stand Pipe with Grate shall be placed at the connecting point between the solid drain and perforated pipes. The work shall include a grate cover and all tees, wyes, fittings necessary to construct the stand pipe.

The 8" Dia. Overflow Stand Pipe with Grate shall be placed at the locations and elevations as shown on the plans.

All costs associated with this work shall be included in the unit price bid for 8" Dia. Overflow Stand Pipe with Grate.

L. 3/8" BEDDING CHIPS – BID ITEM NUMBER 92043 (70716)

This item consists of furnishing and installing 3/8" Bedding Chips in the bioswale facilities as shown on the plans. The work shall include but is not limited to providing all labor, equipment, and materials to furnish and install the bedding chip material.

The bedding chips shall be 3/8 inch, double washed, dry pea gravel and meeting the requirements of 3/8 Inch Crushed Stone Chips (ASTM C-33 Size 8) per section 8.43.2 of the *Standard Specifications for Sewer & Water Construction in Wisconsin*. The required material gradation is as follows:

Sieve Size	Percentage Passing by Weight
½ Inch	100%
3/8 Inch	85 – 100%
No. 4	10 – 30%
No. 8	0 – 10%
No. 16	0 – 5%

The bedding chips shall be installed beneath the engineered soil and above the 1 ½" Crushed Stone.

All costs associated with this work shall be included in the unit price bid for 3/8" Bedding Chips.

M. PLANT POT - BID ITEM NUMBER 95009 (94399)

This item consists of furnishing and installing trees and plant pots as shown on the plans. The work shall include supplying and installing all trees, plant pots, removing existing grass area if necessary and supplying and installing mulch.

Bioswale facility plants shall be installed according to the layout as shown in the plans. The contractor shall contact Mr. Scott Baran at (414) 286-3531 to verify the layout of the plants within the designated bioswale facilities. Bioswale facility plants shall be according to the following:

All trees, shrubs, grasses and perennials must meet ANSI standards for nursery stock. Any excess soil or subsoil needs to be removed from the site and shall not be mounded around newly planted trees or plant pots.

The bioswale facilities plants and trees species shall be selected according to the following tables:

BOTANICAL NAME	COMMON NAME	QUANTITY	HEIGHT
GRASSES			
MISCANTHUS SINENSIS	MISCANTHUS GRASS	36	1 GAL.
SHRUBS			
ROSA SPECIES	RUGOSA ROSE	32	2-3 GAL.
PERENNIALS			
HEMEROCALLIS	DAYLILIES-STELLA D'ORO	318	1 GAL.
NEPETA	BLUE WONDER CATMINT	90	1 GAL.

The Contractor is encouraged to solicit bids for all work related to Bid Item No 95009 from the City's Forestry Division. Please contact Mr. Scott Baran at (414) 286-3531.

N. PLANTS MAINTENANCE AND WARRANTY - BID ITEM NUMBER 95016 (94398)

Contractor shall provide one (1) full year warranty on all installed plants under Bid Item Number 95009.

Contractor shall be responsible for the maintenance of the bioswale facility from the starting date of installation and until one (1) full year from the date of completion. The date of completion shall be defined as the date when all required plants, including the grass turf areas, are installed and the project is accepted as complete by the City. The Contractor shall submit to the EES a written notification as of that date. The estimated cost of the plants maintenance and warranty is $10,000. The Contractor shall use this estimated cost for this bid item; however, the Contractor shall be paid for the actual cost of hours worked (see no. 9 below). In addition, the Contractor shall contact the EES prior to performing any maintenance activities to the plants and trees. Any work performed without prior authorization of the EES shall not be paid. In addition, the contractor shall provide to the EES in a monthly basis a detailed report of all bioswale facility maintenance work activities. The maintenance of the bioswale facilities shall be according to the following schedule:

1. Apply pre- emergent to the planting bed during installation
2. Add two to four inches of organic mulch to the entire newly planted bioswale. Do not cover the crowns of the perennials. Replenish mulch in the fall as needed. Avoid fine cut or lighter weight mulches as they tend to float in wet conditions.
3. Prune any dead, diseased, or damaged plants as soon as the problem is noticed. Prune the foliage of perennials when they die back for the winter and ornamental grasses before new growth begins in the spring.
4. Remove weeds as necessary.
5. Water the garden during its establishment and extended dry periods. One inch of water per week is recommended.
6. Remove trash and leaves from beds once per week starting the date of installation and for the entire one (1) year period from the date of completion.
7. Clean overflow structure. It is the contractor responsibility to ensure that the over flow structures are always unclogged during the one (1) year maintenance period.
8. The Contractor shall submit to the City a maintenance schedule in a "check list" format covering the above nine maintenance items. The submittal shall be on a weekly basis via email to nader.jaber@milwaukee.gov. The maintenance schedule shall be considered acceptable when a reply to the weekly email is sent to the contractor by the City.
9. The Contractor shall submit monthly invoices to the EES for actual work performed per item no. 8 above.

O. WATER SERVICE INSULATION– BID ITEM NUMBER 95017

This item consists of all furnishing all work and materials necessary to install the water insulation above water main and services at locations as indicated on the plans.

The Contractor shall insulate water services per Spec. 5.11.1 and Spec. Drawing No. 37 of the City of Milwaukee Water Main Installation Specifications. Insulation shall be two layers of closed cell extruded polystyrene foam boards 4'x 2'x 2" minimum. See Detail on Plan File No. 241-14. The insulation shall be a minimum of five (5) feet in width (centered on the water service/main) within the excavation limits.

All costs associated with this work shall be included in the unit price bid for Water Service Insulation.

S. 5th St. - W. Scott St. to W. Virginia St.

DRAINAGE STRUCTURES							PVC PIPE, STORM SEWER							REPAIR	REMARKS
TYPE OF STRUCTURE	STATION	CENTERLINE OFFSET	COVER ELEV.	NEW STRUCTURE	REPLACEMENT STRUCTURE	FRAME & LID	CONNECTION STRUCTURE	SIZE (IN)	LENGTH (FT)	INVERT ELEV. INLET	INVERT ELEV. OUTLET	PIPE SLOPE	VERTICAL INCHES	
															O.N. 30-1; Est 24050
															ST211140117
CB	2+31	30 R	29.75	-	-	-	-	-	-	-	-	-	-		Abandon
CBW	2+33	27 R	29.86	44A	-	57	SMH 431C002 @ STA 2+52	8	32	25.60	24.80	0.025	-		Caution 6-inch Water & CUC (See PF 233-84)
Comb MH	2+52	0	29.72	-	-	58A	-	-	-	-	-	-	4		431C002
CBW	3+81	16 L	24.94	44A	-	57	SMH 431C030 @ STA 3+89	8	16	20.69	20.29	0.025	-		Caution Gas & Elec
CBW	3+83	22 R	24.63	44A	-	57	SMH 431C030 @ STA 3+89	8	24	20.35	19.75	0.025	-		Caution 6-inch Water, Street Lighting & CUC
CB	3+88	45 L	24.60	-	-	-	-	-	-	-	-	-	X		-
Comb MH	3+89	0	25.01	-	-	58A	-	-	-	-	-	-	9		431C030
CB	3+90	17 L	24.69	-	-	-	-	-	-	-	-	-	-		Abandon
CB	3+95	30 R	23.69	-	-	-	-	-	-	-	-	-	-		Abandon
CB	4+07	43 L	24.36	-	44A	57	SMH @ STA 4+50, 48 L	8	32	20.10	19.30	0.025	-		Caution Elec, CUC, Tel
Comb MH	4+38	48 L	25.00	-	-	58A	-	-	-	-	-	-	-		-
Comb MH	4+39	1 L	24.30	-	-	58A	-	-	-	-	-	-	-		431C040
Comb MH	4+51	70 R	23.39	-	-	58A	-	-	-	-	-	-	-		-
CBW	4+68	80 L	24.19	44A	-	57	SMH @ STA 4+50, 48 L	8	42	19.90	18.85	0.025	-		Caution Gas & 8-inch Water
CB	4+68	43 L	23.96	-	-	-	-	-	-	-	-	-	-		Abandon
Comb MH	4+68	0	23.95	-	-	-	-	-	-	-	-	-	X		431C029
CB	5+94	29 L	22.55	-	-	-	-	-	-	-	-	-	-		Abandon
CBW	5+87	16 R	22.10	44A	-	57	SMH 431B030 @ STA 6+25, 1 R	8	38	17.85	16.90	0.025	-		Field Locate: Caution TEL, 6-inch Water, & CUC
CBW	5+94	24 L	22.46	44A	-	57	SMH 431B030 @ STA 6+25, 1 R	8	34	18.20	17.35	0.025	-		Caution Gas, CUC & Elec (See PF 233-84)
CB	5+97	27 R	22.55	-	-	-	-	-	-	-	-	-	-		Abandon
Comb MH	6+25	1 R	22.45	-	-	58A	-	-	-	-	-	-	-		431B030
CBW	7+38	20 L	20.78	44A	-	57	SMH 431B031 @ STA 7+58	8	28	16.50	15.80	0.025	-		Field Locate: Caution Gas, Elec & CUC
Comb MH	7+58	0	21.28	-	-	58A	-	-	-	-	-	-	X		431B031
CBW	7+60	20 R	20.89	44A	-	57	SMH 431B031 @ STA 7+58	8	18	16.60	16.15	0.025	-		Field Locate: Caution TEL & 6-inch Water
CB	7+66	28 L	20.85	-	-	-	-	-	-	-	-	-	-		Abandon
CB	7+67	28 R	20.77	-	-	-	-	-	-	-	-	-	-		Abandon
CB	7+78	43 L	20.79	-	-	-	-	-	-	-	-	-	-		Abandon
CBW	7+78	54 L	20.80	44A	-	57	Re-use Connection in 98" x 63"@ 8+10, 43L	8	32	16.55	10.50	0.189	-		Caution Gas & CUC (See PF 188-95)
CB	8+37	43 L	20.55	-	44A	57	Re-use Connection in 98" x 63" @ 8+18, 47L	8	20	14.55	10.50	0.203	-		Caution Telephone & 6-inch Water
CB	8+56	28 L	20.68	-	-	-	-	-	-	-	-	-	-		Abandon
CB	8+56	28 R	20.50	-	-	-	-	-	-	-	-	-	-		Abandon
Comb MH	8+57	0	21.10	-	-	58A	-	-	-	-	-	-	3		431B018
CBW	8+63	20 R	20.58	44A	-	57	SMH 431B018 @ STA 8+57	8	20	16.30	15.80	0.025	-		Field Locate: Caution TEL & 6-inch Water (See PF 233-83)
CBW	8+75	20 L	20.48	44A	-	57	SMH 431B018 @ STA 8+57	8	26	16.20	15.55	0.025	-		Field Locate: Caution Gas, Elec & CUC
CBW	9+75	20 R	20.90	44A	-	57	SMH 431B017 @ STA 9+95	8	28	16.65	15.95	0.025	-		Field Locate: Caution TEL & 6-inch Water (See PF 233-83)
Comb MH	9+95	0	21.63	-	-	58A	-	-	-	-	-	-	-		431B017
Comb MH	11+35	0	22.80	-	-	-	-	-	-	-	-	-	X		431B016
CB	11+65	46 L	22.55	-	44A	57	existing drain	8	5	-	-	-	-		-
CB	11+65	51 R	22.30	-	44A	57	existing drain	8	5	-	-	-	-		Caution CUC
Comb MH	11+75	50 L	23.55	-	-	58A	-	-	-	-	-	-	-		-
Comb MH	11+98	43 R	23.04	-	-	58A	-	-	-	-	-	-	-		-
CB	12+06	47 L	22.50	-	44A	57	existing drain	8	5	-	-	-	-		Caution CUC & Water
CB	12+08	45 R	22.55	-	-	-	-	-	-	-	-	-	-		Abandon
CBW	12+08	48 R	22.55	44A	-	57	SMH 11+98, 43 R	8	10	18.30	18.05	0.025	-		Caution 6-inch Water & CUC
CBW	12+26	20 L	22.40	44A	-	57	SMH 431B015 @ STA 12+35	8	22	18.15	17.60	0.025	-		Field Locate: Caution Gas, CUC & Electric
CBW	12+26	20 R	22.30	44A	-	57	SMH 431B015 @ STA 12+35	8	22	18.05	17.50	0.025	-		Field Locate: Caution TELEPHONE & 6-inch Water
CB	12+27	30 L	22.58	-	-	-	-	-	-	-	-	-	-		Abandon
CB	12+28	30 R	22.67	-	-	-	-	-	-	-	-	-	-		Abandon
Comb MH	12+35	0	22.94	-	-	-	-	-	-	-	-	-	10		431B015
Comb MH	13+76	0	23.91	-	-	-	-	-	-	-	-	-	4		431B014
CBW	13+88	20 R	23.47	44A	-	57	SMH 431B014 @ STA 13+76	8	24	19.20	18.60	0.025	-		ld Locate: Caution TELEPHONE, Elec & 6-inch Water (See PF 233-
CB	15+35	45 L	23.70	-	-	-	-	-	-	-	-	-	X		-

S. 5th St. - W. Scott St. to W. Virginia St.

DRAINAGE STRUCTURES							PVC PIPE, STORM SEWER						REPAIR	REMARKS
TYPE OF STRUCTURE	STATION	CENTERLINE OFFSET	COVER ELEV.	NEW STRUCTURE	REPLACEMENT STRUCTURE	FRAME & LID	CONNECTION STRUCTURE	SIZE (IN)	LENGTH (FT)	INVERT ELEV. INLET	INVERT ELEV. OUTLET	PIPE SLOPE	VERTICAL INCHES	
														O.N. 30-1; Est 24050
														ST211140117
Comb MH	15+49	0	24.65	-	-	58A	-	-	-	-	-	-	-	431B013
Comb MH	15+66	49 L	24.67	-	-	58A	-	-	-	-	-	-	-	-
Comb MH	15+66	50 R	24.65	-	-	58A	-	-	-	-	-	-	-	-
CB	15+95	45 L	23.90	-	-	-	-	-	-	-	-	-	X	-
CB	16+10	30 L	24.08	-	-	-	-	-	-	-	-	-	-	Abandon
CB	16+10	30 R	23.53	-	-	-	-	-	-	-	-	-	-	Abandon
Comb MH	16+22	0	24.51	-	-	58A	-	-	-	-	-	-	-	431B012
CBW	16+45	20 R	23.84	44A	-	57	SMH 431B012 @ STA 16+22	8	36	19.55	18.65	0.025	-	Field Locate: Caution TELEPHONE & 6-inch Water
CBW	16+62	20 L	23.59	44A	-	57	Core Connect	8	18	19.30	13.75	0.308	-	Caution CUC & Gas (See PF 232-82)
CB	16+74	30 L	23.86	-	-	-	-	-	-	-	-	-	-	Abandon
CBW	17+07	20 R	23.85	44A	-	57	Core Connect	8	18	17.85	13.75	0.228	-	Caution Gas and 6-inch Water (See PF 232-82)
CB	17+22	30 R	23.95	-	-	-	-	-	-	-	-	-	-	Abandon
CBW	17+50	20 L	23.79	44A	-	57	SMH 431B011 @ STA 17+56	8	18	19.50	19.05	0.025	-	Caution CUC & Gas
Comb MH	17+56	0	24.54	-	-	58A	-	-	-	-	-	-	-	431B011
CBW	17+87	20 R	24.00	44A	-	57	SMH 431B011 @ STA 17+56	8	36	19.75	18.85	0.025	-	Caution Water
CB	17+95	30 L	24.29	-	-	-	-	-	-	-	-	-	-	Abandon
CB	18+15	30 R	24.20	-	-	-	-	-	-	-	-	-	-	Abandon
CBW	18+50	20 L	24.05	44A	-	57	SMH 431B008 @ STA 18+95	8	50	19.80	18.55	0.025	-	Caution CUC & Gas
CBW	18+50	20 R	24.07	44A	-	57	SMH 431B008 @ STA 18+95	8	50	19.80	19.05	0.015	-	Caution 6-inch Water
Comb MH	18+95	0	24.85	-	-	58A	-	-	-	-	-	-	-	431B008
Comb MH	19+25	45 L	24.60	-	-	58A	-	-	-	-	-	-	-	428C023
Comb MH	19+25	45 R	24.65	-	-	58A	-	-	-	-	-	-	-	428C026
CB	19+49	30 L	24.34	-	-	-	-	-	-	-	-	-	-	Abandon
CB	19+51	30 R	24.31	-	-	-	-	-	-	-	-	-	-	Abandon
Comb MH	19+56	0	24.80	-	-	58A	-	-	-	-	-	-	-	428C021
CBW	19+87	20 L	24.05	44A	-	57	SMH 428C021 @ STA 19+56	8	38	19.80	18.85	0.025	-	Caution 12-inch Gas, CUC & Street Lighting
CBW	20+00	20 R	24.05	44A	-	57	SMH 428C021 @ STA 19+56	8	48	19.80	18.60	0.025	-	Caution 6-inch Water & Street Lighting
CB	20+55	30 L	24.51	-	-	-	-	-	-	-	-	-	-	Abandon
Comb MH	21+20	0	25.07	-	-	58A	-	-	-	-	-	-	-	428C020
CBW	21+32	20 R	24.49	44A	-	57	SMH 428C021 @ STA 21+20	8	22	20.20	19.65	0.025	-	Caution 6-inch Water & Street Lighting
CB	21+35	30 R	24.53	-	-	-	-	-	-	-	-	-	-	Abandon
CBW	21+37	20 L	24.43	44A	-	57	SMH 428C021 @ STA 21+20	8	26	20.15	19.50	0.025	-	Caution 12-inch Gas, CUC & Street Lighting (See PF 233-82)
CB	21+90	30 L	24.87	-	-	-	-	-	-	-	-	-	-	Abandon
Comb MH	22+72	0	25.14	-	-	58A	-	-	-	-	-	-	12	428C019
CB	23+01	43 R	25.42	-	44A	57	SMH 23+23, 42 R	8	22	21.15	20.60	0.025	-	CAUTION 12-inch GAS
Comb MH	23+23	42 R	25.91	-	-	58A	-	-	-	-	-	-	-	-
Comb MH	23+23	51 L	25.49	-	-	-	-	-	-	-	-	-	X	-
CB	23+44	43 R	25.35	-	44A	57	SMH 23+23, 42 R	8	22	21.08	20.53	0.025	-	CAUTION 20-inch GAS
Comb MH	23+74	0	26.01	-	-	-	-	-	-	-	-	-	6	428C015
CB	24+05	30 L	25.30	-	-	-	-	-	-	-	-	-	-	Abandon
CBW	24+11	20 R	25.29	44A	-	57	SMH 428C015 @ STA 23+74	8	42	21.00	19.95	0.025	-	Caution 6-inch Water (See PF 234-62)
CBW	24+25	20 L	25.16	44A	-	57	Core in 30" Dia. @ STA 24+25, 0	8	18	20.90	18.25	0.1472	-	Caution Gas, CUC & Elec (See PF 234-62)
CB	24+40	30 R	25.19	-	-	-	-	-	-	-	-	-	-	Abandon
CB	24+50	30 L	25.21	-	-	-	-	-	-	-	-	-	-	Abandon
Comb MH	25+06	0	25.87	-	-	58A	-	-	-	-	-	-	-	428C014
CBW	25+25	20 R	25.00	44A	-	57	SMH 428C014 @ STA 25+06	8	28	20.75	20.05	0.025	-	Caution 6-inch Water & Street Lighting
CB	25+30	30 R	25.10	-	-	-	-	-	-	-	-	-	-	Abandon
CBW	25+70	20 L	25.18	44A	-	57	Core in 30" Dia. @ STA 25+70, 0	8	20	20.90	17.25	0.1825	-	Caution Gas, CUC & Elec (See PF 234-62)
CB	25+95	30 L	25.25	-	-	-	-	-	-	-	-	-	-	Abandon
Comb MH	26+50	0	26.65	-	-	58A	-	-	-	-	-	-	-	428C013
CBW	26+50	20 R	24.84	44A	-	57	SMH 428C013 @ STA 26+50	8	18	20.60	20.15	0.025		Caution 6-inch Water & Street Lighting
CB	26+50	28 R	25.10	-	-	-	-	-	-	-	-	-	-	Abandon
CB	26+55	28 L	25.30	-	-	-	-	-	-	-	-	-	-	Abandon
		Structure	Structure	4'-0" MH	44A	Frame & Lid 58A	Frame & Lid 57		8-inch	Abandon	Repair (in.)	Removal		KRD
			Total	0	39	25	39		1013	32	48	0		

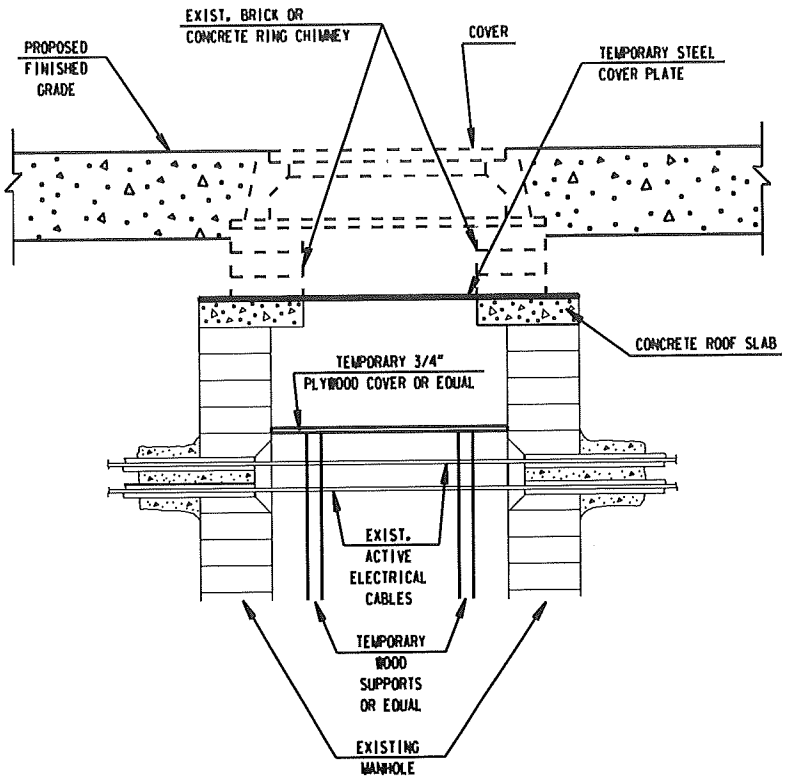

BLOCK OR PRECAST MANHOLE

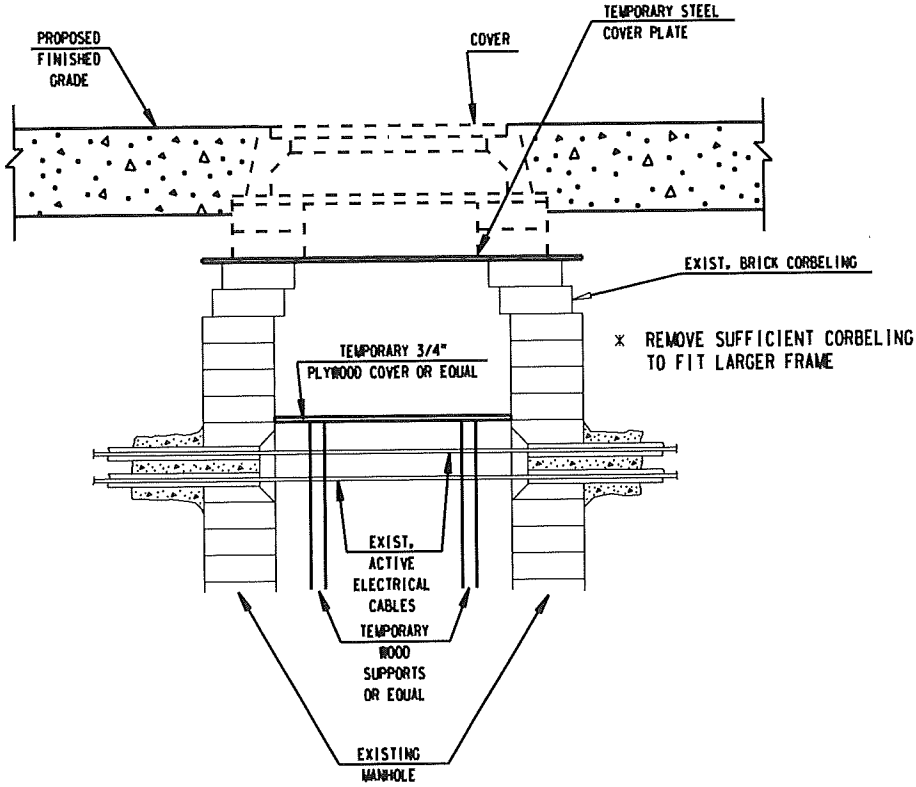

BRICK ROUND MANHOLE

ADJUSTING CUC MANHOLE COVERS

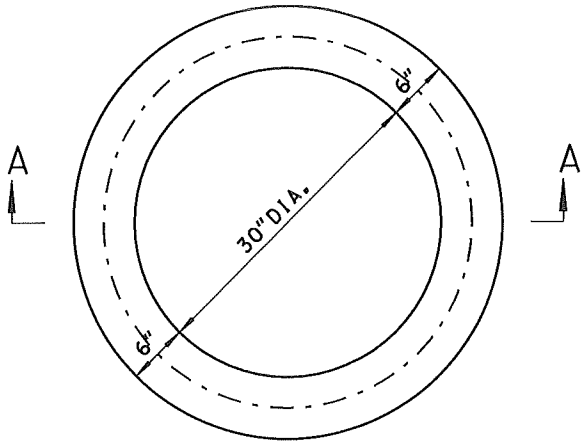

PLAN

CONCRETE ADJUSTING RING

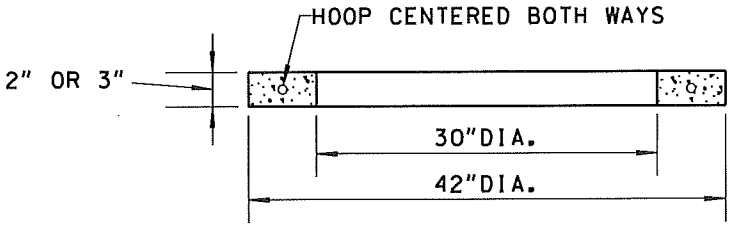

SECTION A-A

THE ADJUSTING RING SHALL BE 2" OR 3" IN HEIGHT.

THE CIRCUMFERENTIAL STEEL SHALL BE CENTERED WITHIN THE RING.

AREA OF CIRCUMFERENTIAL STEEL = 0.07 SQ. INCH PER VERTICAL FOOT WITH A MINIMUM OF .024 SQ. INCH IN ANY ONE RING.

THE MINIMUM COMPRESSIVE STRENGTH OF THE CONCRETE CORE SHALL BE 4000 P.S.I.

CUC MANHOLES CONTAIN LIVE ELECTRICAL AND COMMUNICATIONS CABLES INCLUDING FIBER OPTICS. THE CONTRACTOR WILL FOLLOW ALL OSHA AND NFPA SAFETY REGULATIONS REGARDING WORKING IN CLOSE SPACES AND WORKING AROUND LIVE CABLES.

ADJUSTING CUC MANHOLES

S. 5TH ST. - W. SCOTT ST TO W. VIGINIA ST.				
NO.	LOCATION	MANHOLE ADJUSTMENT EACH	COVER	REMARKS
2068	STA 04+20.4, 6.9 RT	1	NEW COVER	REMOVE CHIMNEY TO ROOF DECK
2069	STA 04+23.7, 16.7 LT	1	NEW COVER	REMOVE CHIMNEY TO ROOF DECK
2069C	STA 07+17.1, 8.4 RT	1	EXISTING	ADJUST MH TO FINISH GRADE
2069B	STA 07+89.4, 4.1 RT	1	EXISTING	ADJUST MH TO FINISH GRADE
2070A	STA 11+63.7, 6.0 RT	1	EXISTING	ADJUST MH TO FINISH GRADE
2071	STA 12+01.7, 7.4 RT	1	NEW COVER	REMOVE CHIMNEY TO ROOF DECK
2072	STA 15+55.4, 45.7 RT	1	EXISTING	ADJUST MH TO FINISH GRADE
2073	STA 15+53.7, 20.4 LT	1	NEW COVER	REMOVE CHIMNEY TO ROOF DECK
2073A	STA 15+59.0, 7.0 RT	1	EXISTING	ADJUST MH TO FINISH GRADE
1970A	STA 19+39.3, 7.0 RT	1	EXISTING	ADJUST MH TO FINISH GRADE
1969A	STA 23+08.2, 7.0 RT	1	EXISTING	ADJUST MH TO FINISH GRADE
1968B	STA 26+71.7, 7.0 RT	1	EXISTING	ADJUST MH TO FINISH GRADE
1968A	STA 26+80.1, 41.2 LT	1	EXISTING	ADJUST MH TO FINISH GRADE
1968C	STA 27+03.7, 18.7 LT	1	EXISTING	ADJUST MH TO FINISH GRADE
TOTAL		14	5	

CUC MANHOLES CONTAIN LIVE ELECTRICAL AND COMMUNICATIONS CABLES INCLUDING FIBER OPTICS. THE CONTRACTOR WILL FOLLOW ALL OSHA AND NFPA SAFETY REGULATIONS REGARDING WORKING IN CLOSE SPACES AND WORKING AROUND LIVE CABLES.

ABANDON CUC MANHOLES

S. 5TH ST. - W. SCOTT ST TO W. VIGINIA ST.		
NO.	LOCATION	ABANDON MANHOLE EACH
2070	STA 11+63.7, 20.0 LT	1
2074	STA 16+07.7, 18.4 LT	1
1971	STA 19+17.7, 17.9 LT	1
1970	STA 19+39.2, 18.2 LT	1
1969	STA 23+04.6, 18.7 LT	1
1968	STA 26+80.1, 18.7 LT	1
TOTAL		6

Example Post Contract Award Letter – Reconstruction

[Fill in Contact Information]
Contractor
Name
Phone Number
Address

City of Milwaukee
Street Reconstruction Project
[Fill in Project Information]
Project Locations

The City of Milwaukee has recently awarded our firm a paving contract which includes the above projects. The City will provide you with another notice prior to work starting on your block.

This work will include reconstruction of the roadway with concrete pavement. In preparation for the new pavement, there will be removal and replacement of curb and gutter, sidewalk and driveway approaches, as well as adjustments and repairs to manholes and storm water inlets.

You will experience disruption of your daily traffic patterns due to the project, but we will do our best to minimize them. There will be a closure of the street for the duration of the project which will require night parking on adjacent streets if there is no alley parking. Any special access accommodations should be made prior to the start of work.

The work being performed is to be funded by both the City of Milwaukee general fund and by special assessments. Property owners will have received separate notice of proposed special assessments.

BLANK

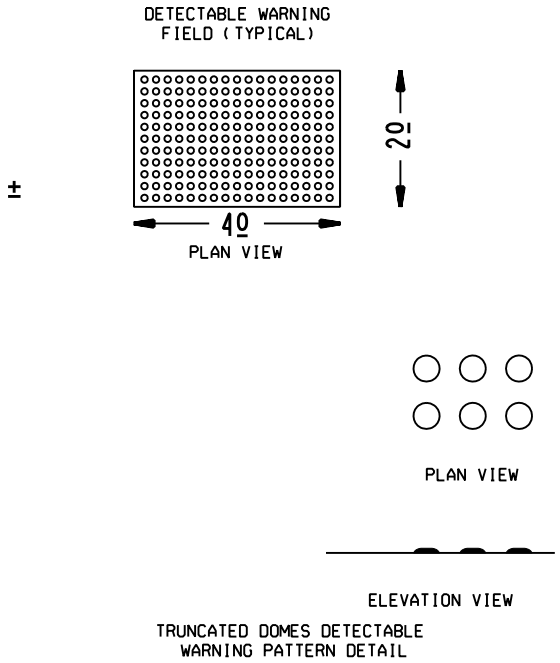

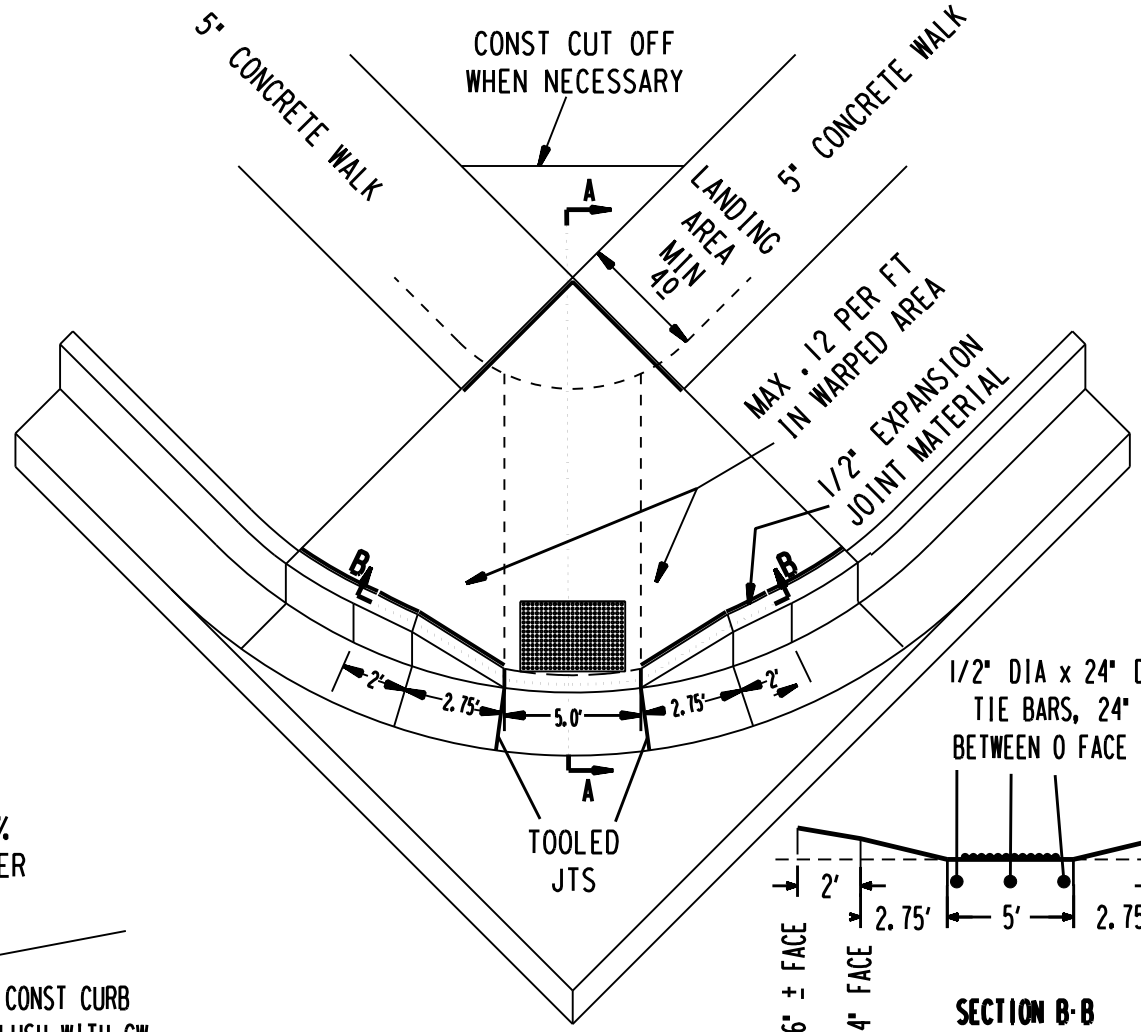

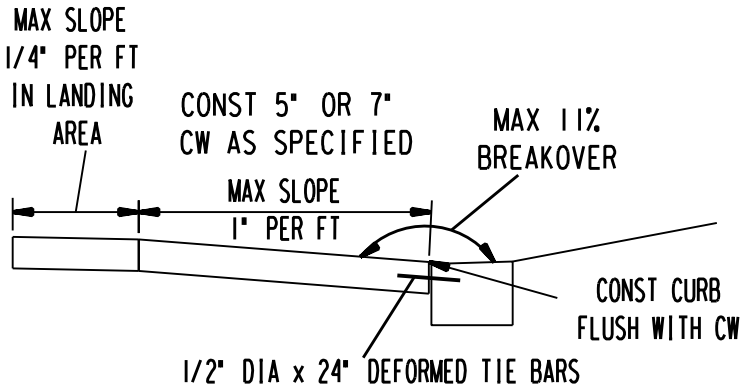

SECTION A-A

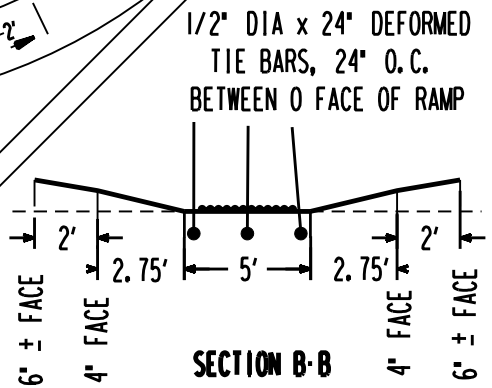

SECTION B-B

CURB AND SIDEWALK RAMP TYPE I

FIGURE - 16 A

CONSTRUCTION SECTION DEPARTMENT OF PUBLIC WORKS MILWAUKEE, WISCONSIN	
Thomas Rach APPROVED BY	SUSAN CULL DRAWN BY
Dale Myjak APPROVED BY	SCOTT STEIN CHECKED BY
APPROVED CITY ENGINEER	JANUARY 10, 2007 DATE

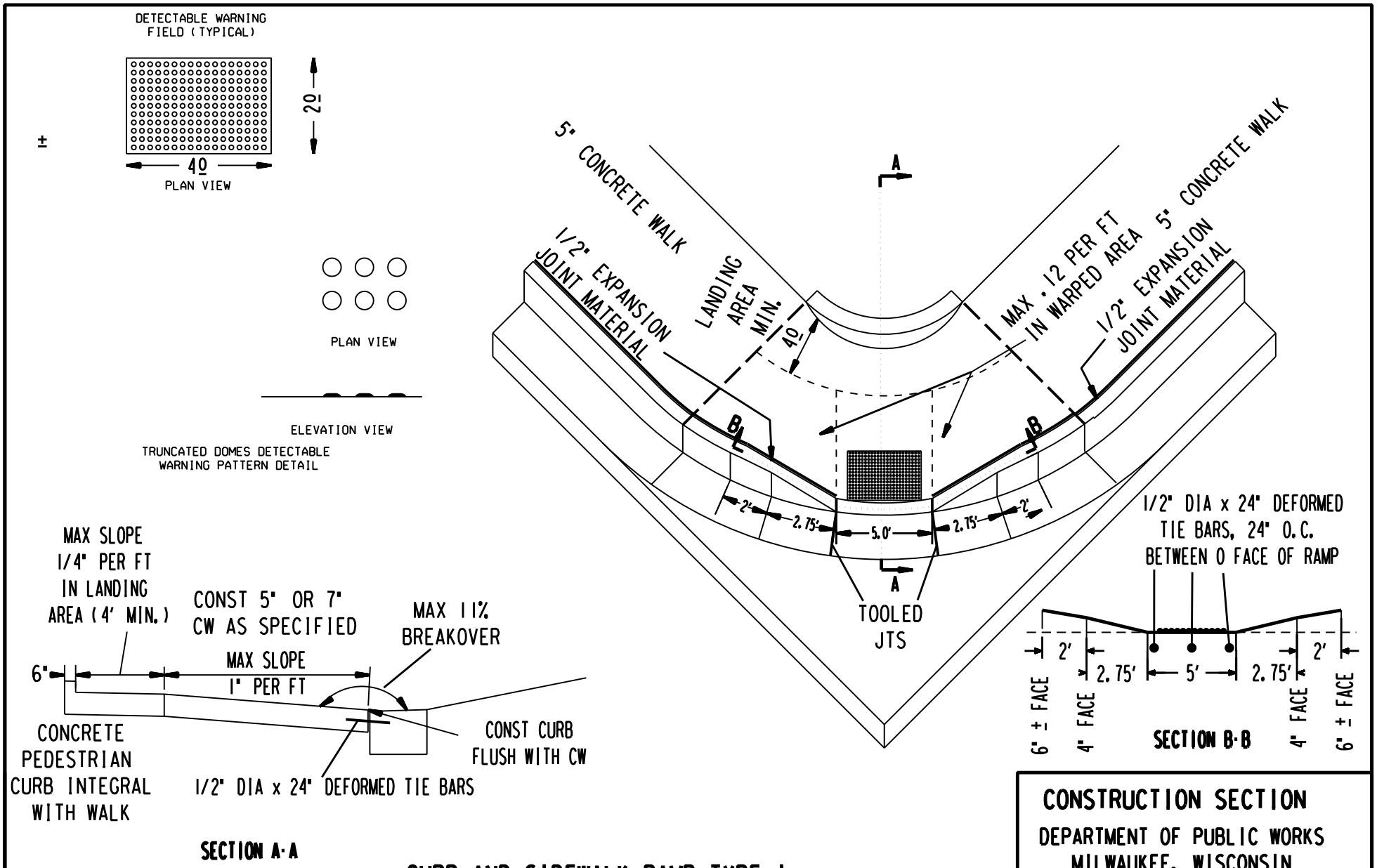

CURB AND SIDEWALK RAMP TYPE I WITH PEDESTRIAN CURB

FIGURE - 16B

CONSTRUCTION SECTION

DEPARTMENT OF PUBLIC WORKS
MILWAUKEE, WISCONSIN

Thomas Rach APPROVED BY	SUSAN CULL DRAWN BY
Dale Myjak APPROVED BY	SCOTT STEIN CHECKED BY
APPROVED CITY ENGINEER	JANUARY 10, 2007 DATE

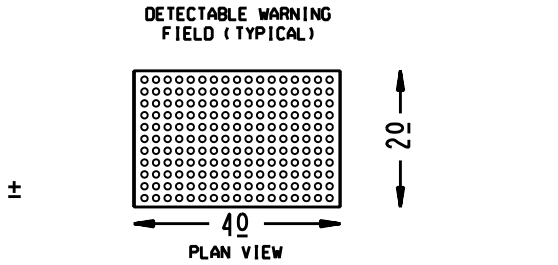

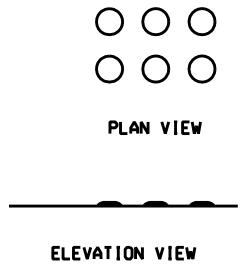

TRUNCATED DOMES DETECTABLE WARNING PATTERN DETAIL

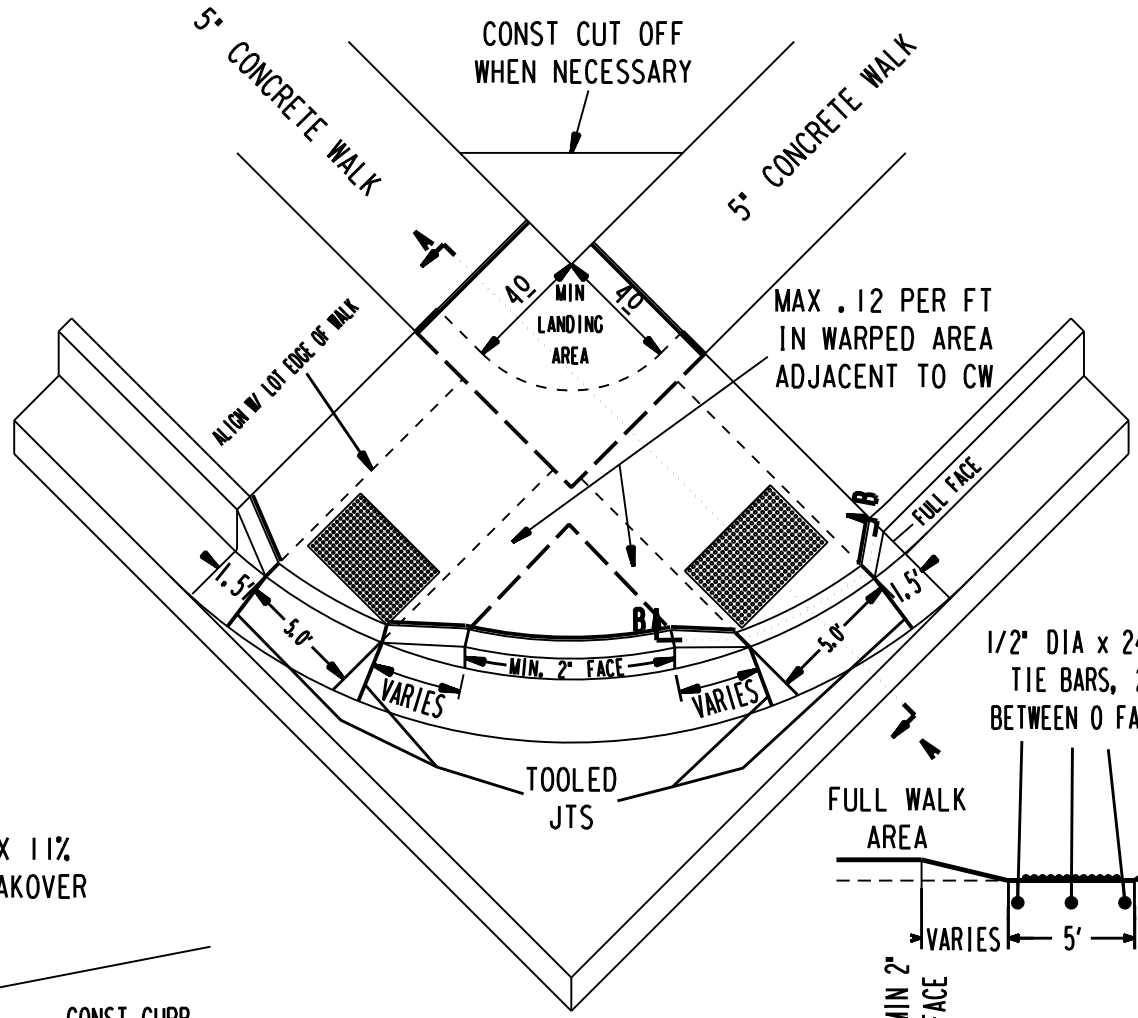

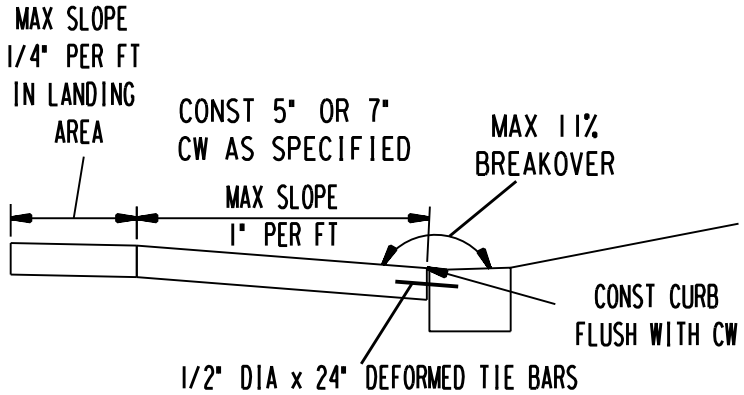

SECTION A-A

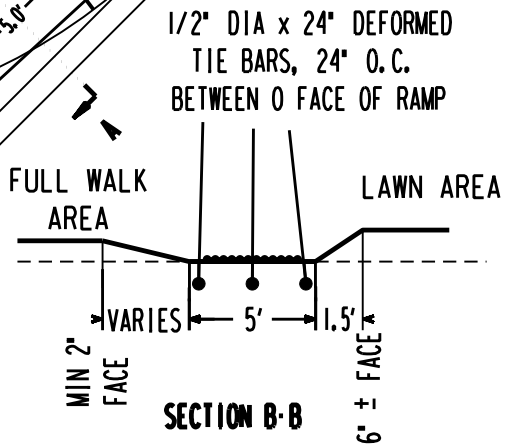

SECTION B-B

CURB AND SIDEWALK RAMP TYPE II

FIGURE - 17 A

CONSTRUCTION SECTION DEPARTMENT OF PUBLIC WORKS MILWAUKEE, WISCONSIN	
Thomas Rach APPROVED BY	SUSAN CULL DRAWN BY
Dale Myjak APPROVED BY	SCOTT STEIN CHECKED BY
APPROVED CITY ENGINEER	JANUARY 10, 2007 DATE

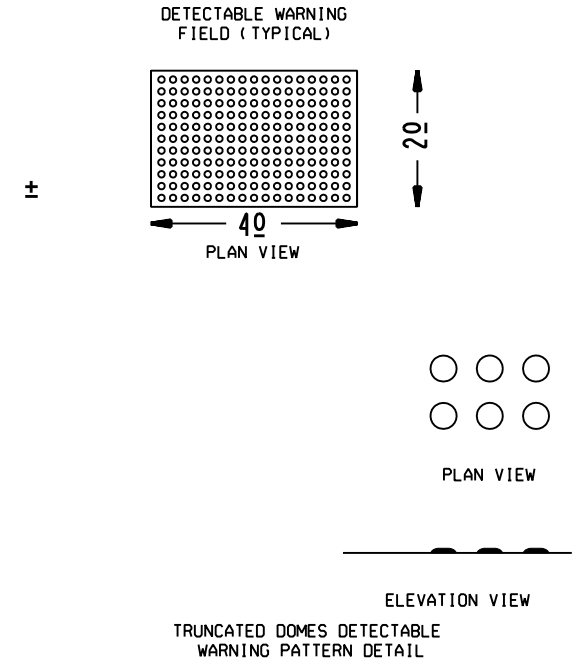

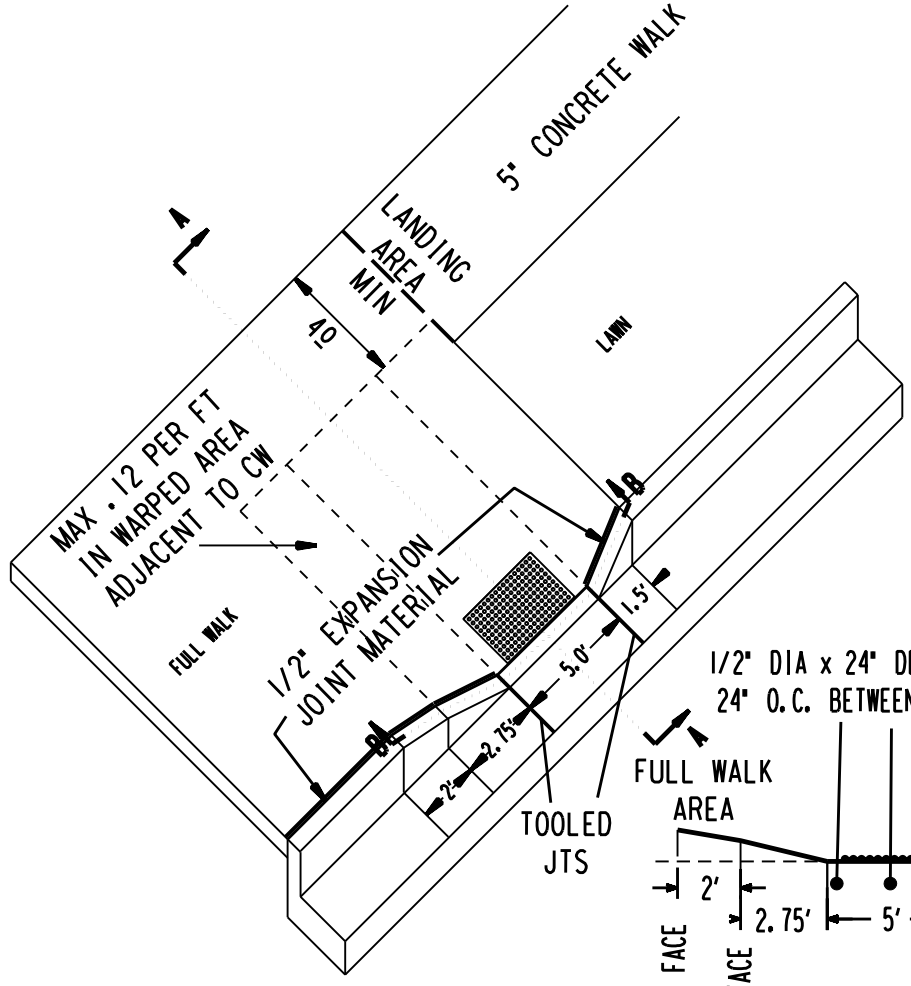

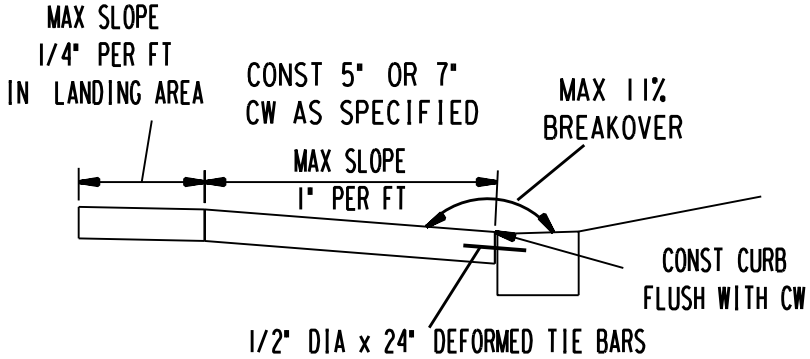

SECTION A-A

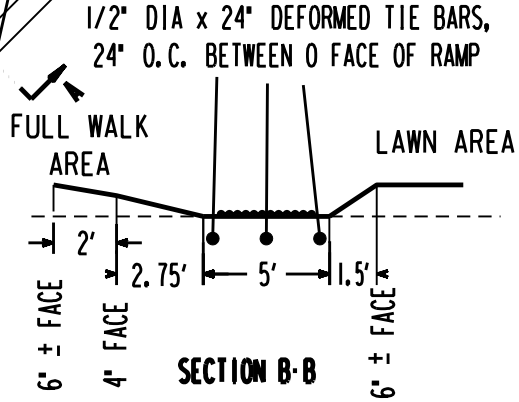

SECTION B-B

CURB AND SIDEWALK RAMP TYPE III

FIGURE - 18 A

CONSTRUCTION SECTION DEPARTMENT OF PUBLIC WORKS MILWAUKEE, WISCONSIN	
Thomas Rach APPROVED BY	SUSAN CULL DRAWN BY
Dale Myjak APPROVED BY	SCOTT STEIN CHECKED BY
APPROVED CITY ENGINEER	JANUARY 10, 2007 DATE

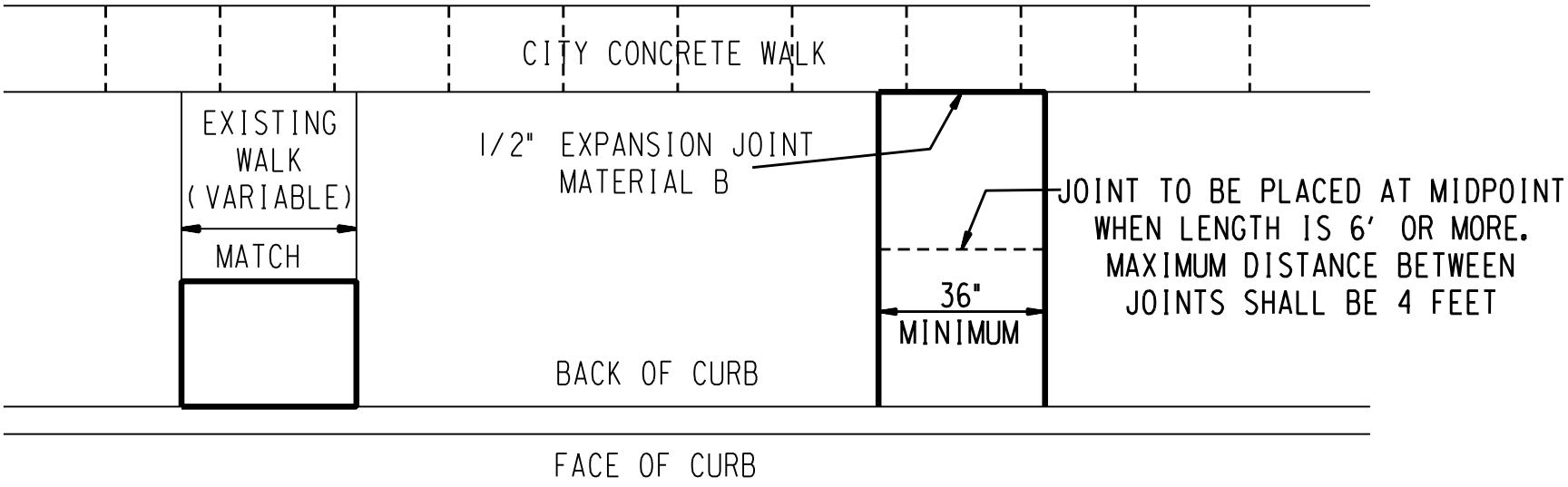

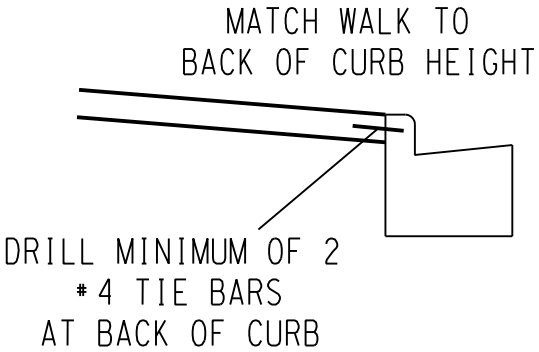

ON RECONSTRUCTION OR CURB AND GUTTER REPLACEMENT PROJECTS, THE WIDTH OF THE CARRIAGE WALK SHALL BE DETERMINED AS FOLLOWS:

(1) IF A CARRIAGE WALK IS TO BE COMPLETELY REMOVED, AND IS 36" WIDE OR LESS - REPLACE WITH 36" WIDE.
(2) IF A CARRIAGE WALK IS TO BE COMPLETELY REMOVED, AND IS WIDER THAN 36" - REPLACE WITH ORIGINAL WIDTH.
(3) IF A CARRIAGE WALK IS ONLY PARTIALLY REMOVED - MATCH EXISTING WIDTH

WIDTH INDICATED MAY CHANGE AS PROPERTY OWNERS REQUEST.
NOTE: THE CONSTRUCTION OF CARRIAGE WALK WHERE NONE EXISTED MAY BE REQUIRED IF REQUESTED BY THE PROPERTY OWNER.

CONCRETE CARRIAGE WALK
FIGURE- 20

CONSTRUCTION SECTION
DEPARTMENT OF PUBLIC WORKS
MILWAUKEE, WISCONSIN

APPROVED BY	SUSAN CULL DRAWN BY
APPROVED BY	SCOTT STEIN CHECKED BY
APPROVED: CITY ENGINEER	FEBRUARY 16, 2006 DATE

5" CONCRETE WALK

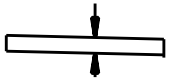

SLOPE ACROSS WALK
NOT TO EXCEED 1/4" PER FT

SECTION A-A

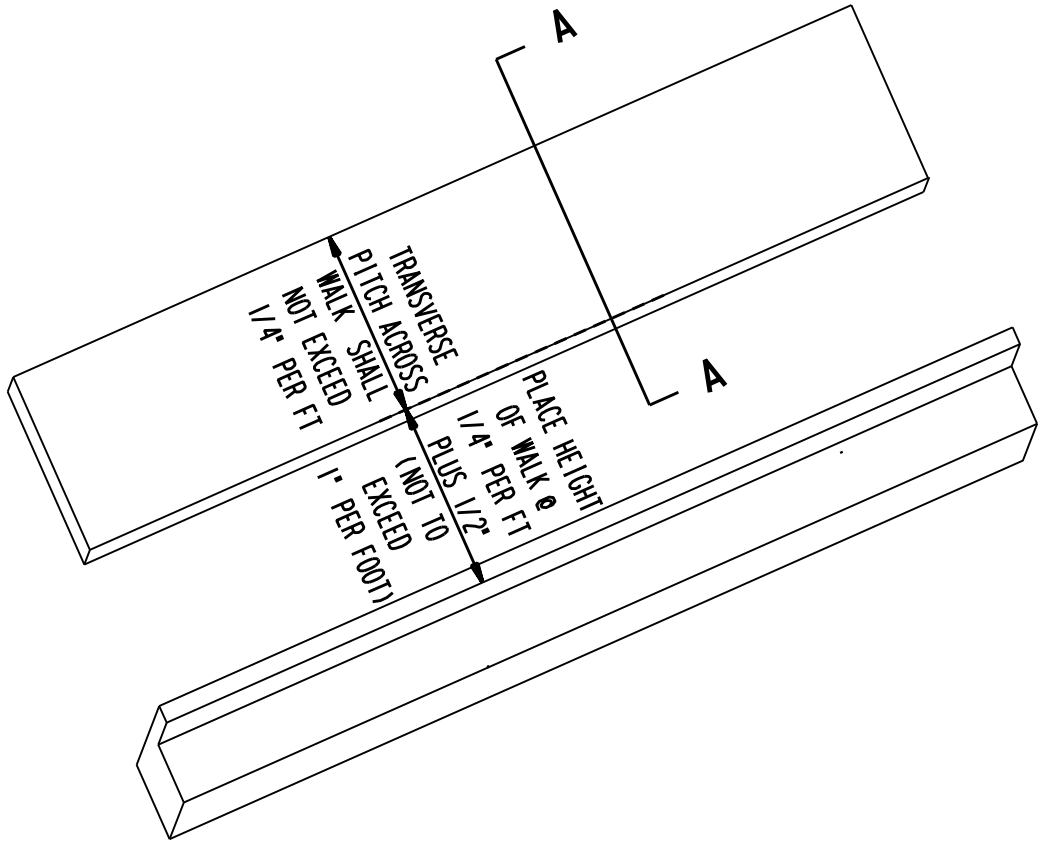

CONCRETE WALK

FIGURE- 20A

CONSTRUCTION SECTION DEPARTMENT OF PUBLIC WORKS MILWAUKEE, WISCONSIN	
APPROVED BY	SUSAN CULL DRAWN BY
APPROVED BY	SCOTT STEIN CHECKED BY
APPROVED: CITY ENGINEER	JANUARY 10, 2007 DATE

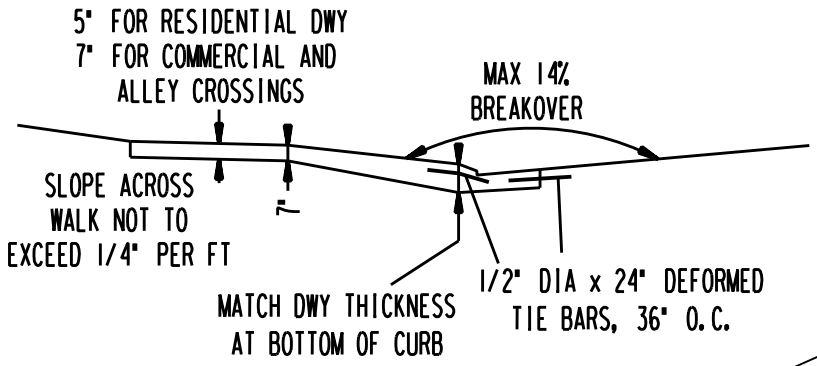

SECTION A-A

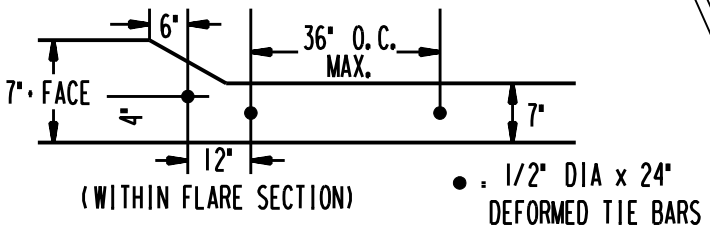

SECTION B-B

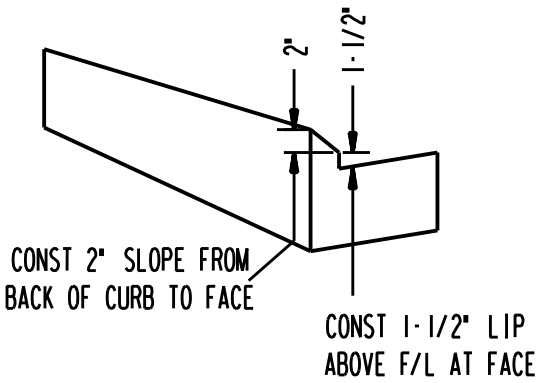

SPECIAL CURB SECTION

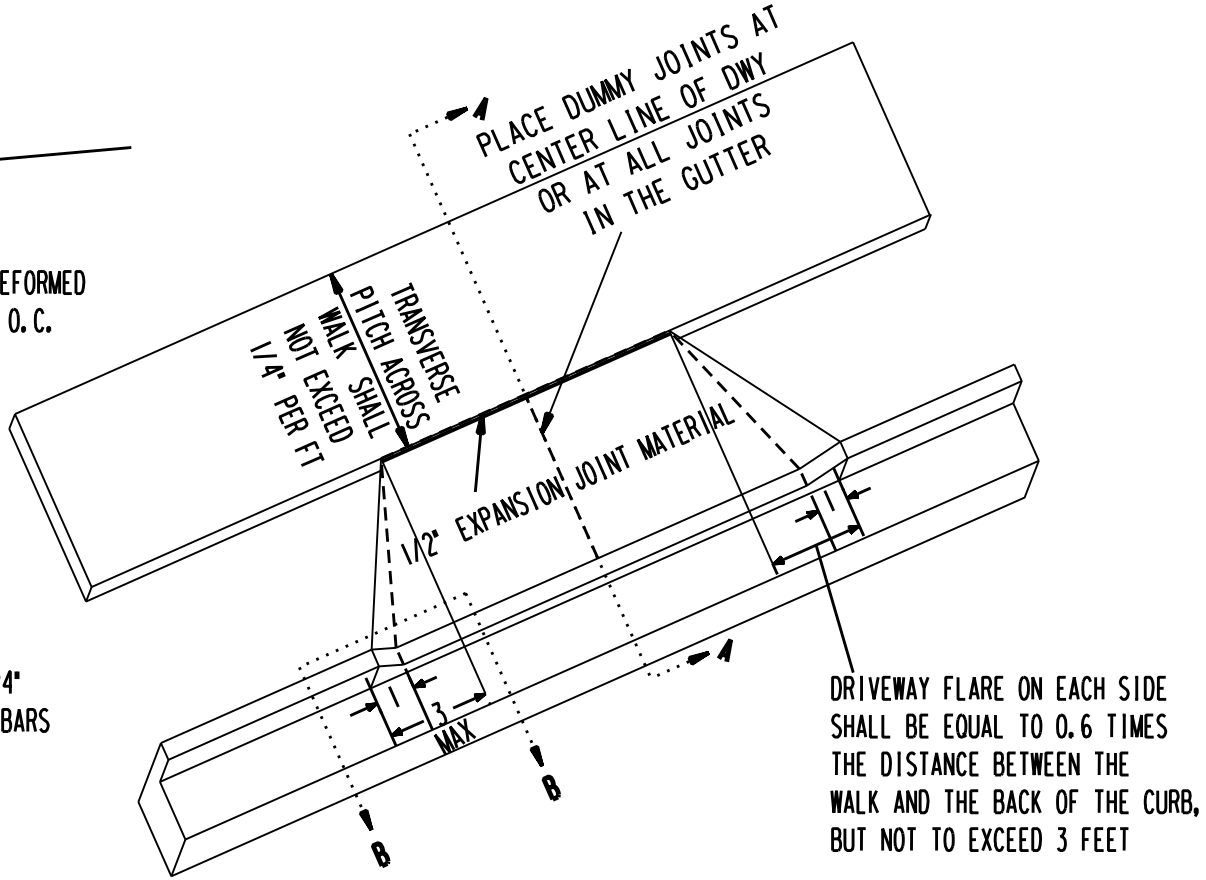

CONCRETE DRIVEWAY TYPE I
(WITH CONCRETE WALK)

FIGURE - 21 A
(SPECIAL CURB SECTION)

CONSTRUCTION SECTION DEPARTMENT OF PUBLIC WORKS MILWAUKEE, WISCONSIN	
Thomas Rock APPROVED BY	SUSAN CULL DRAWN BY
Dale Myjak APPROVED BY	SCOTT STEIN CHECKED BY
APPROVED CITY ENGINEER	JANUARY 10, 2007 DATE

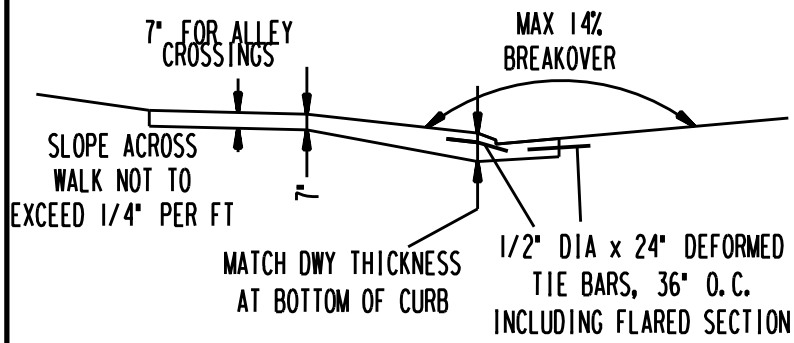

SECTION A-A

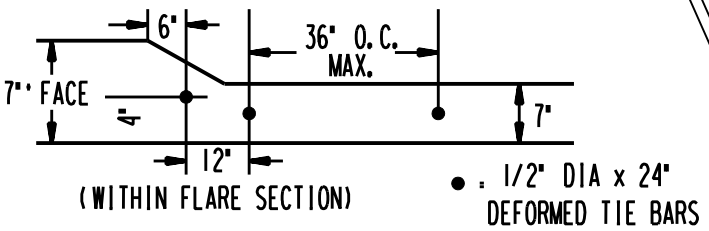

SECTION B-B

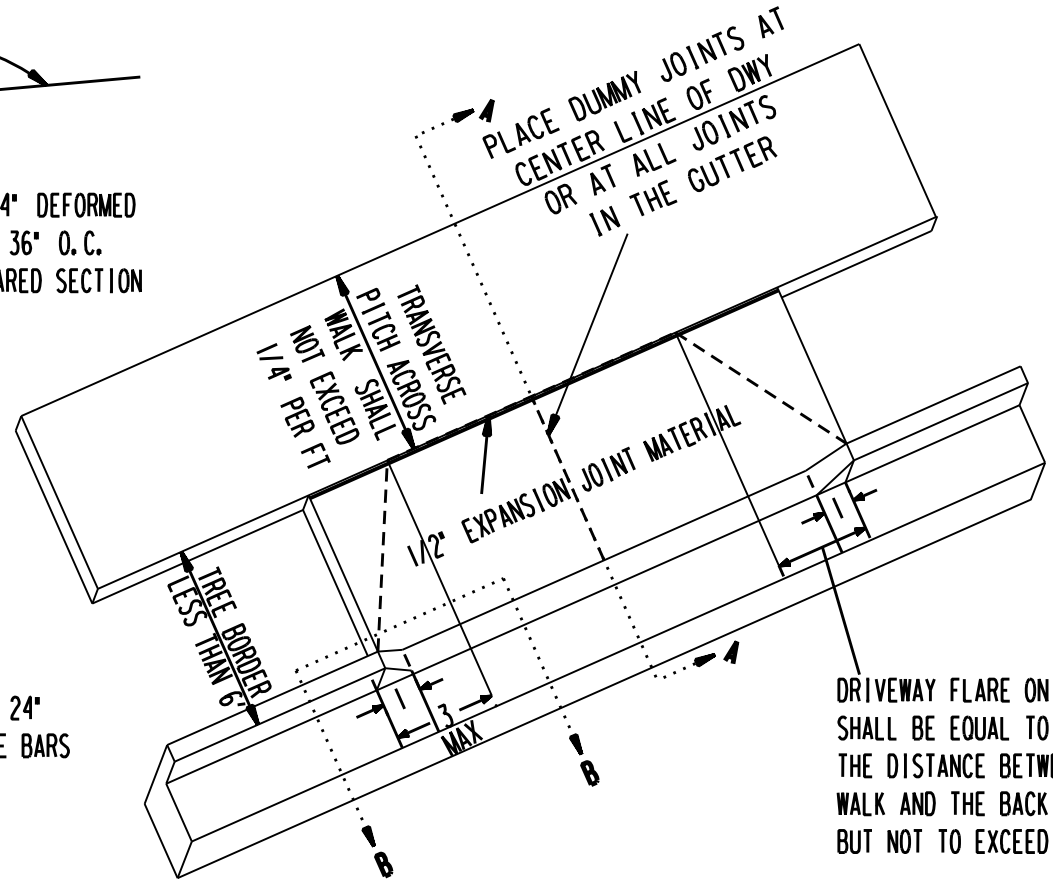

DRIVEWAY APPROACH AT ALLEY WHEN TREE BORDER IS LESS THAN 6' WIDE

FIGURE - 21 B

CONSTRUCTION SECTION DEPARTMENT OF PUBLIC WORKS MILWAUKEE, WISCONSIN	
Thomas Rock APPROVED BY	SUSAN CULL DRAWN BY
Dale Myjak APPROVED BY	SCOTT STEIN CHECKED BY
APPROVED CITY ENGINEER	JANUARY 10, 2007 DATE

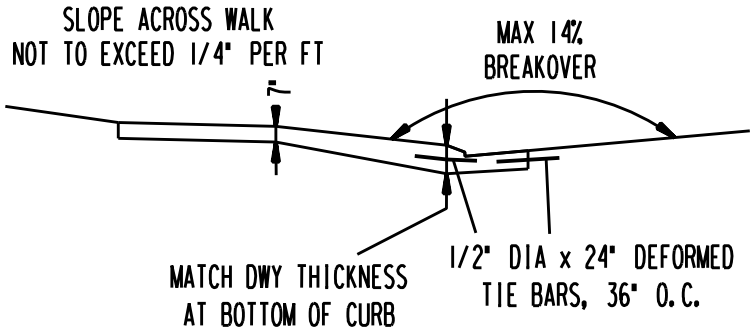

SECTION A-A

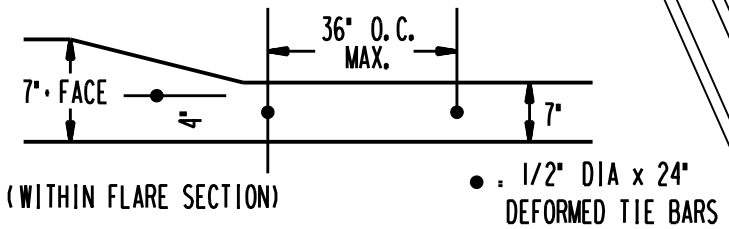

SECTION B-B

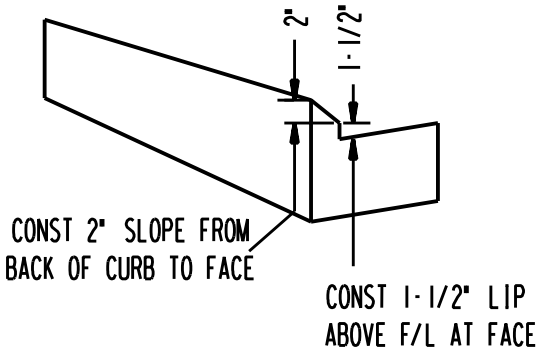

SPECIAL CURB SECTION

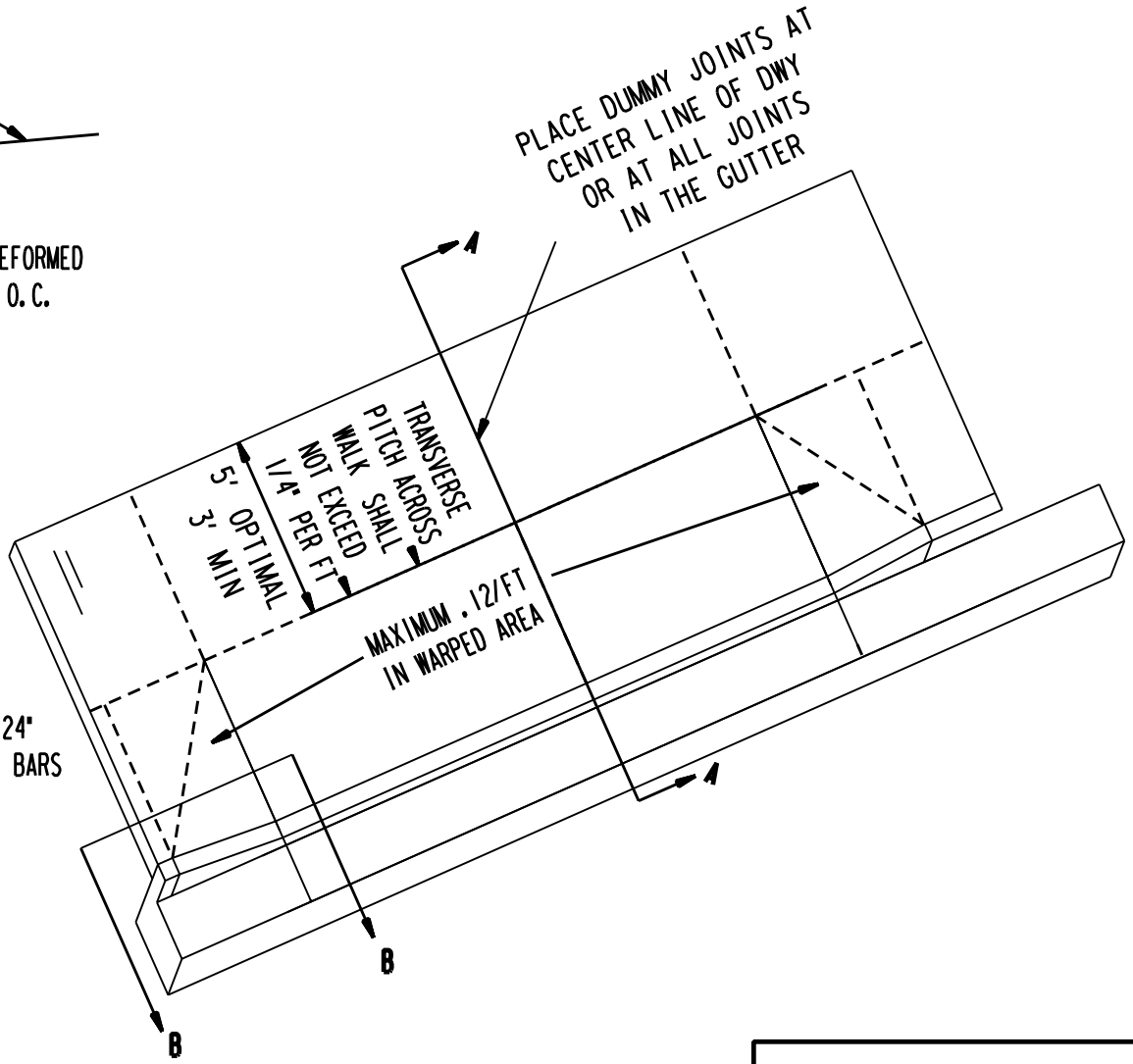

CONCRETE DRIVEWAY TYPE II
(MODIFIED DEPRESSED)

FIGURE - 23 A
(SPECIAL CURB SECTION)

CONSTRUCTION SECTION DEPARTMENT OF PUBLIC WORKS MILWAUKEE, WISCONSIN	
Thomas Rock APPROVED BY	SUSAN CULL DRAWN BY
Dale Myjak APPROVED BY	SCOTT STEIN CHECKED BY
APPROVED CITY ENGINEER	JANUARY 10, 2007 DATE

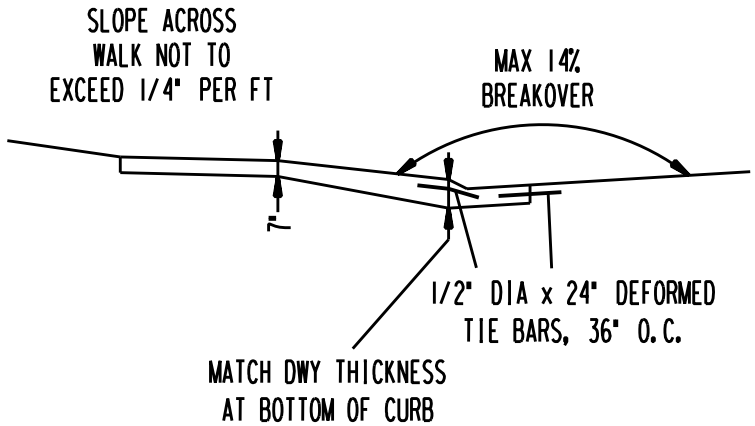

SECTION A-A

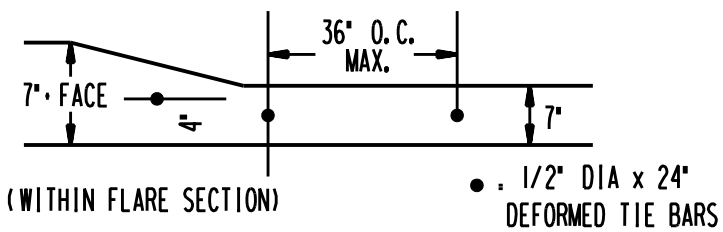

SECTION B-B

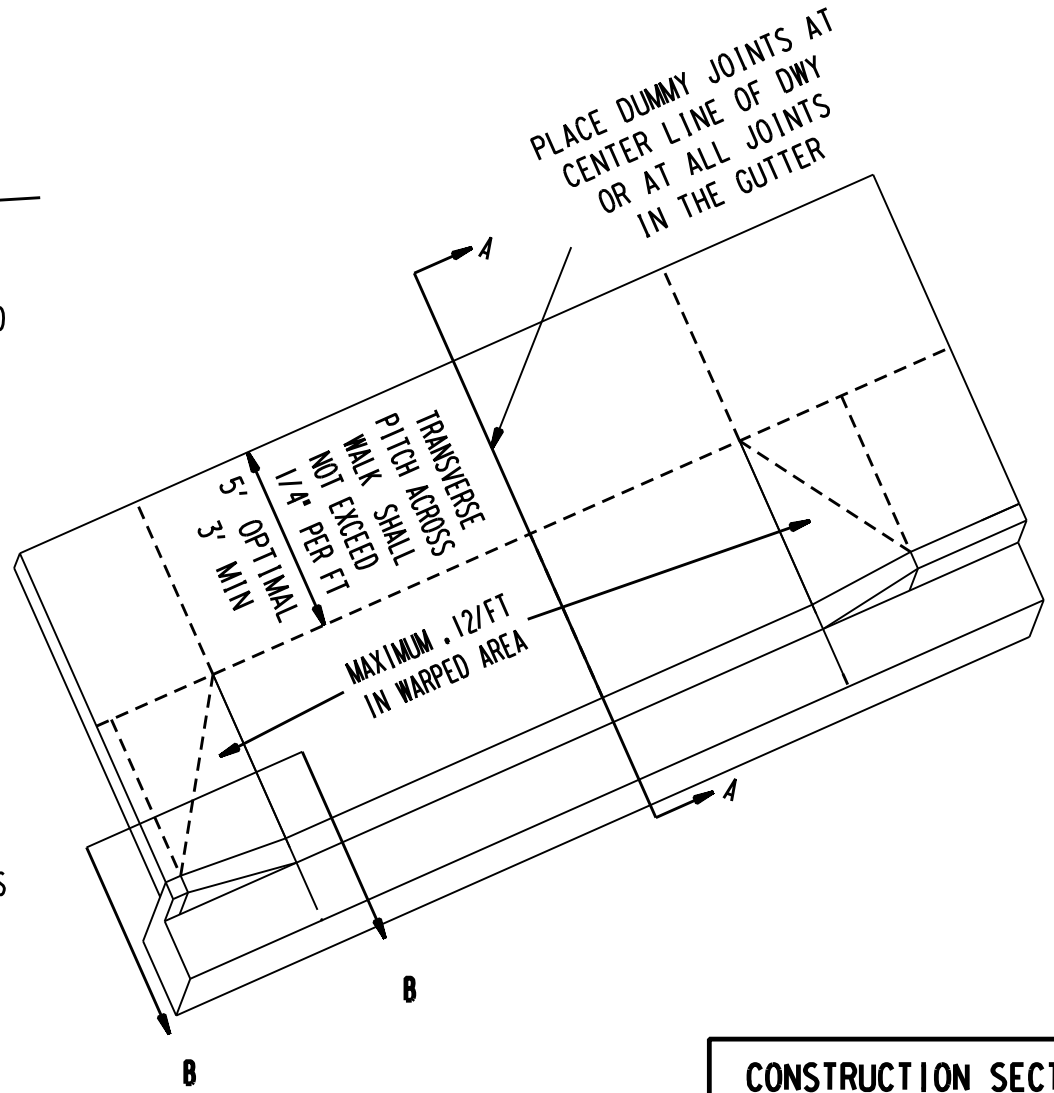

CONCRETE DRIVEWAY TYPE II
(MODIFIED DEPRESSED)

FIGURE - 23 B

CONSTRUCTION SECTION DEPARTMENT OF PUBLIC WORKS MILWAUKEE, WISCONSIN	
Thomas Rock APPROVED BY	SUSAN CULL DRAWN BY
Dale Myjak APPROVED BY	SCOTT STEIN CHECKED BY
APPROVED CITY ENGINEER	JANUARY 10, 2007 DATE

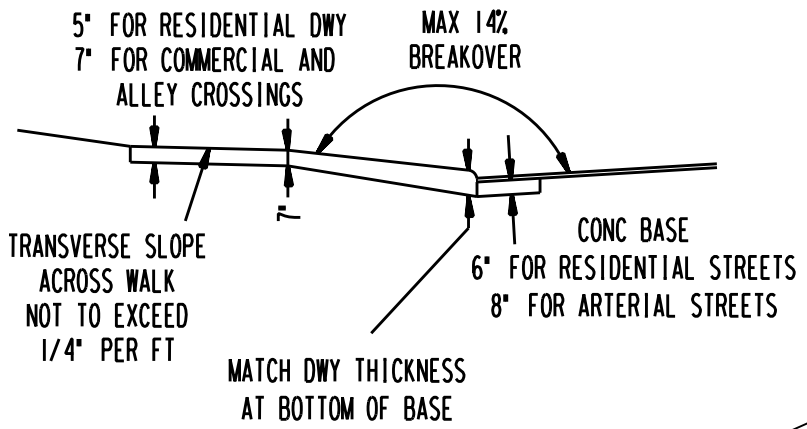

SECTION A-A

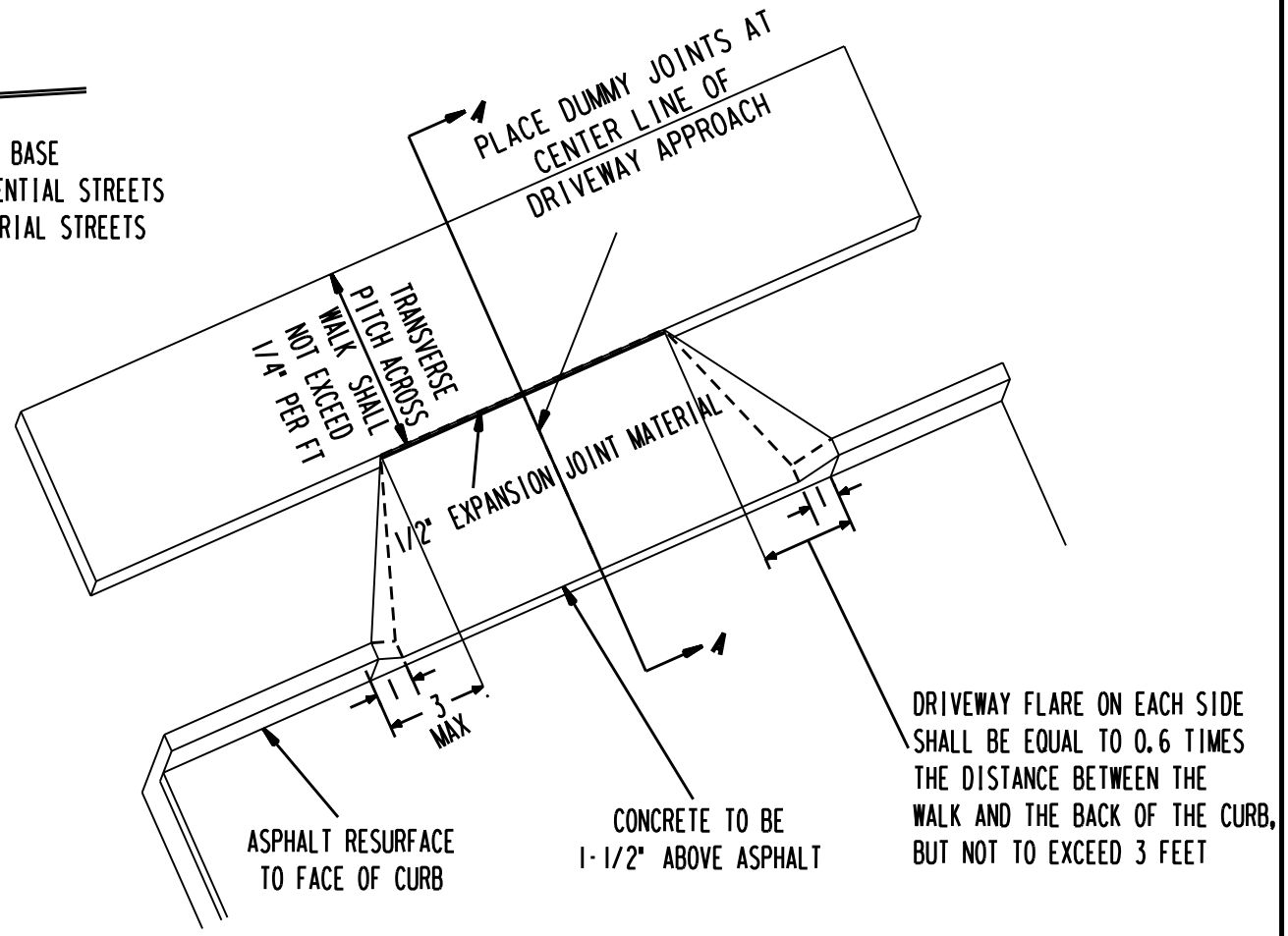

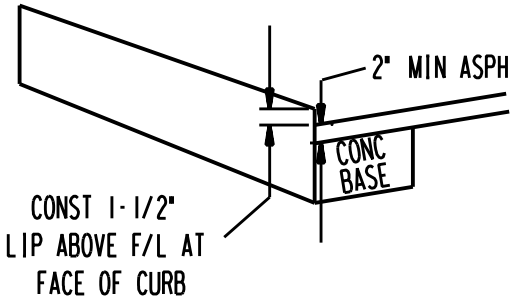

SPECIAL CURB SECTION

CONCRETE DRIVEWAY APPROACH REPLACEMENT
ASPHALT RESURFACE PROJECT

FIGURE - 26 A
(SPECIAL CURB SECTION)

CONSTRUCTION SECTION DEPARTMENT OF PUBLIC WORKS MILWAUKEE, WISCONSIN	
Thomas Rock APPROVED BY	SUSAN CULL DRAWN BY
Dale Myjak APPROVED BY	SCOTT STEIN CHECKED BY
APPROVED CITY ENGINEER	JANUARY 10, 2007 DATE

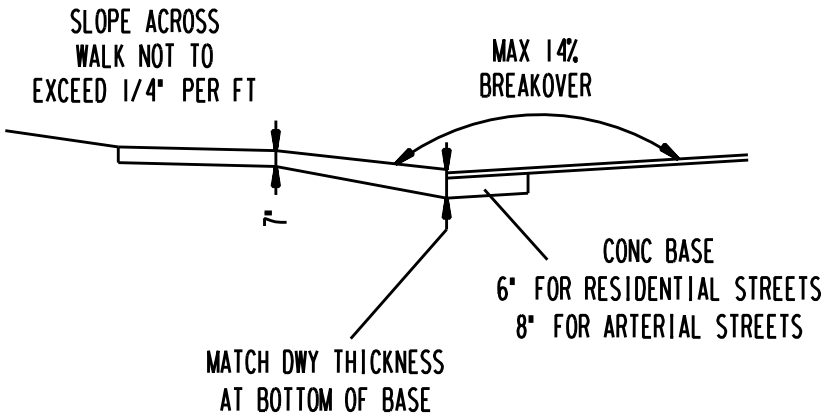

SECTION A-A

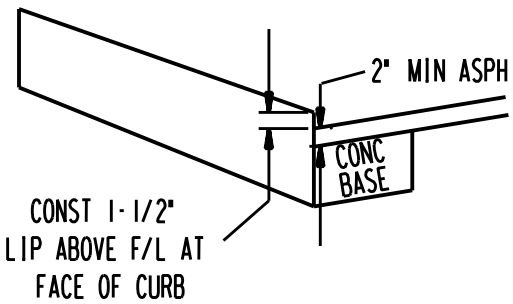

SPECIAL CURB SECTION

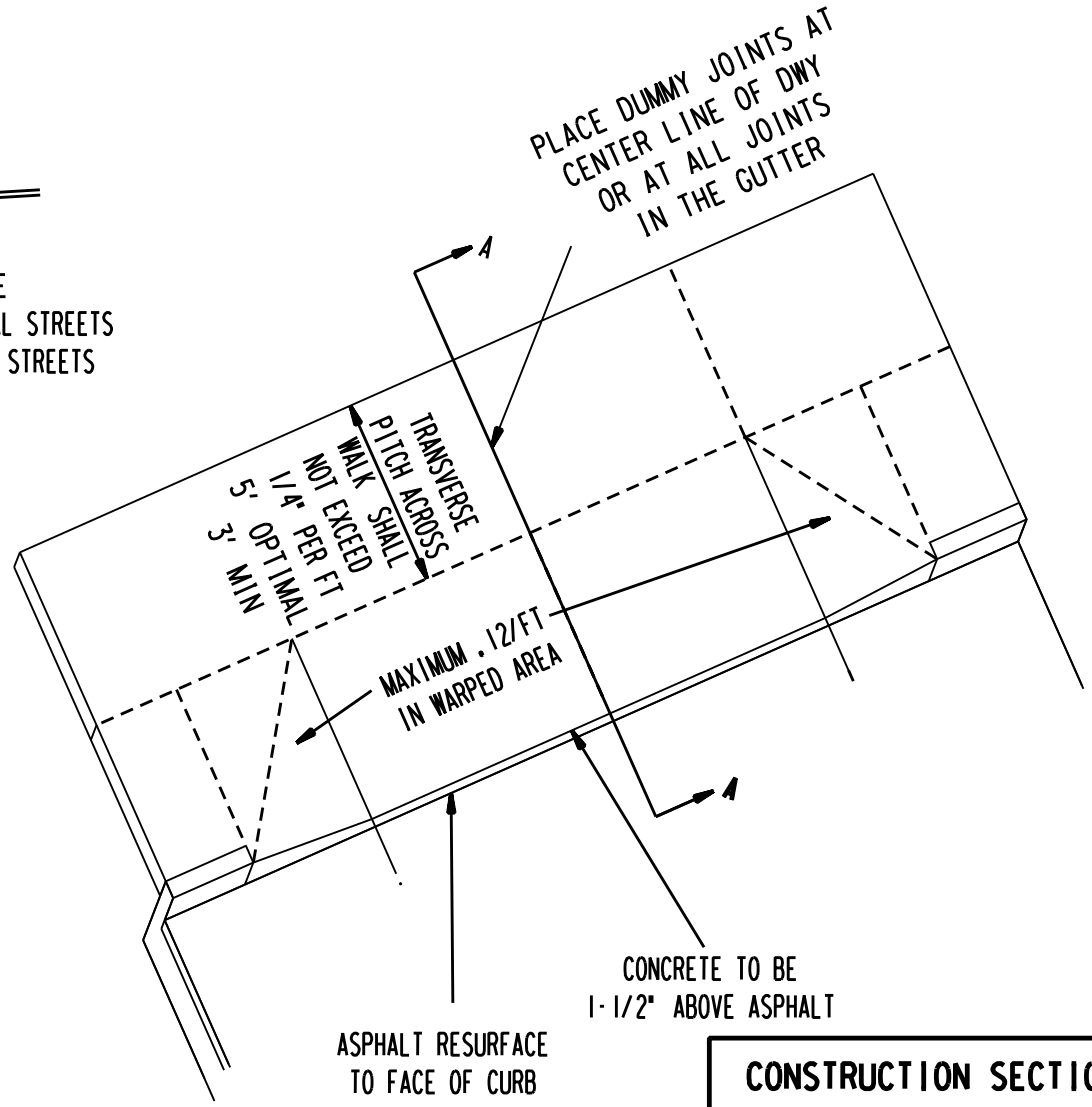

CONCRETE DRIVEWAY TYPE II
(MODIFIED DEPRESSED)
ASPHALT RESURFACE PROJECT

FIGURE - 26B

CONSTRUCTION SECTION **DEPARTMENT OF PUBLIC WORKS** **MILWAUKEE, WISCONSIN**	
Thomas Rock APPROVED BY	SUSAN CULL DRAWN BY
Dale Myjak APPROVED BY	SCOTT STEIN CHECKED BY
APPROVED CITY ENGINEER	JANUARY 10, 2007 DATE

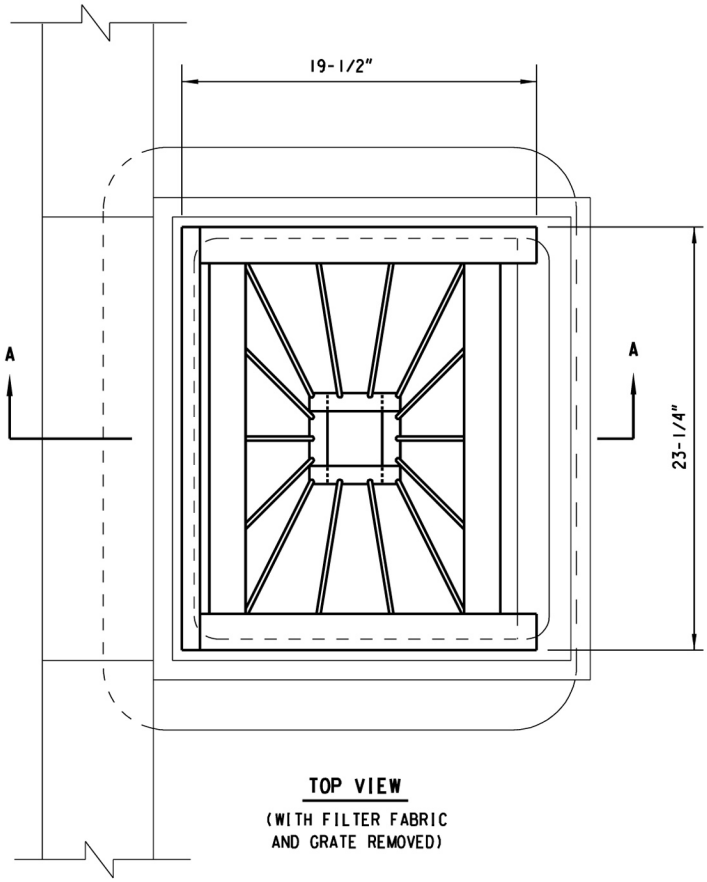

TOP VIEW

(WITH FILTER FABRIC
AND GRATE REMOVED)

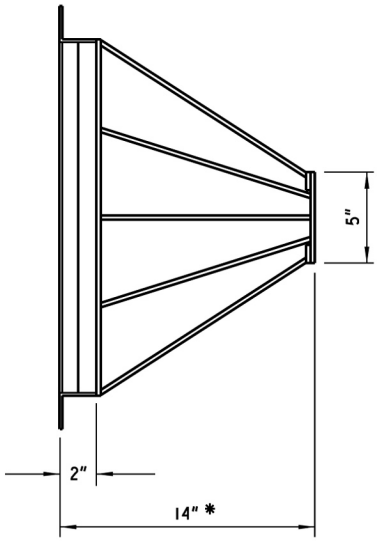

FRONT VIEW

(BASKET ONLY)

* MAY BE DECREASED IF INLET
IS OF INSUFFICIENT DEPTH

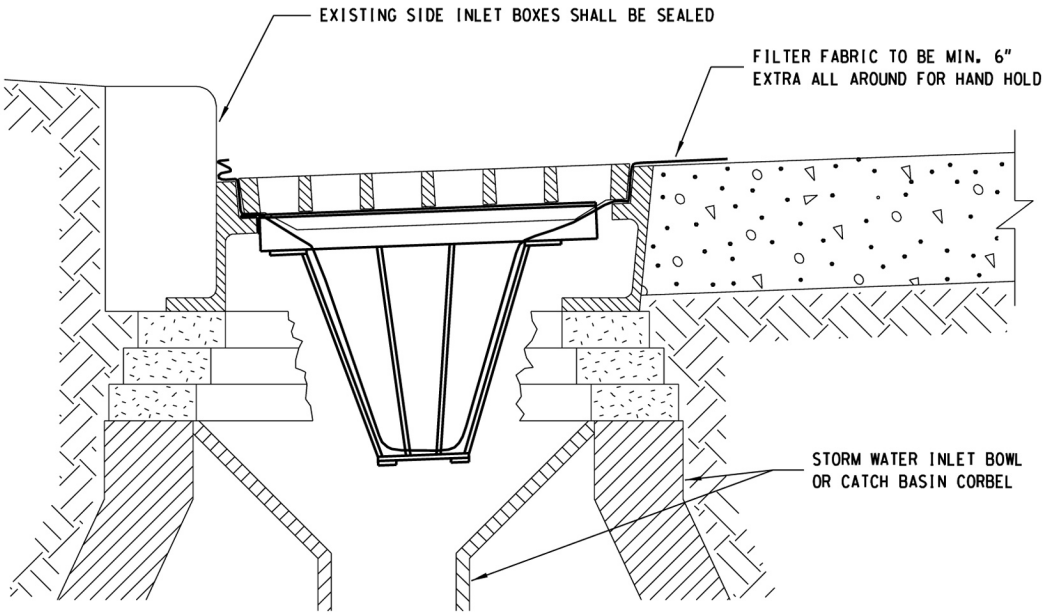

SECTION A-A

TYPE M
INLET / CATCH BASIN BASKET

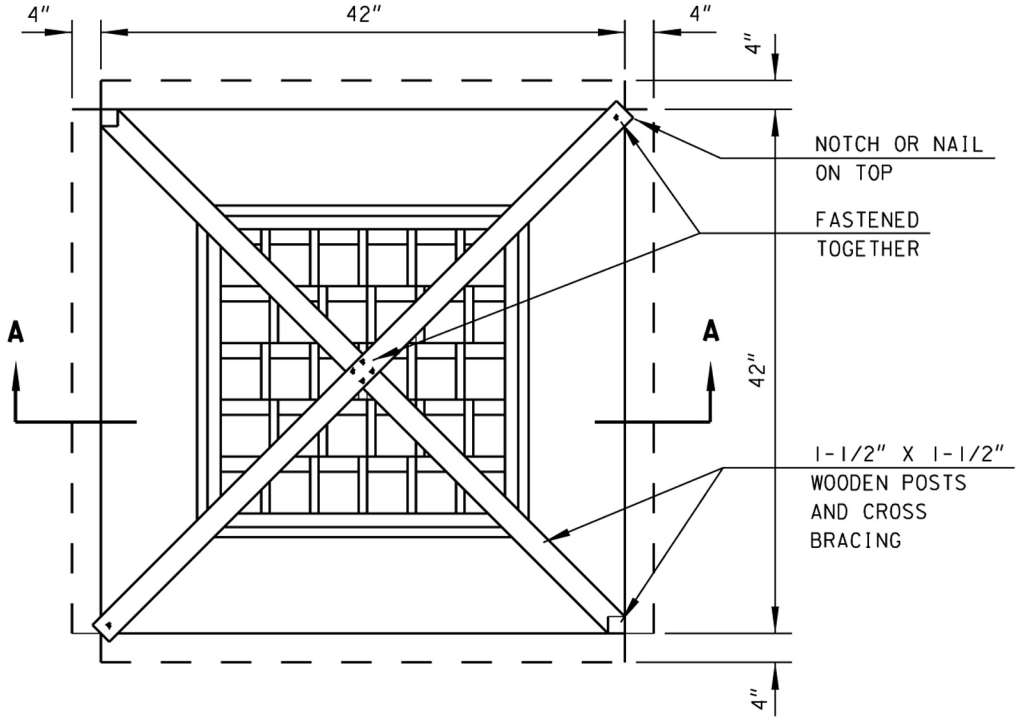

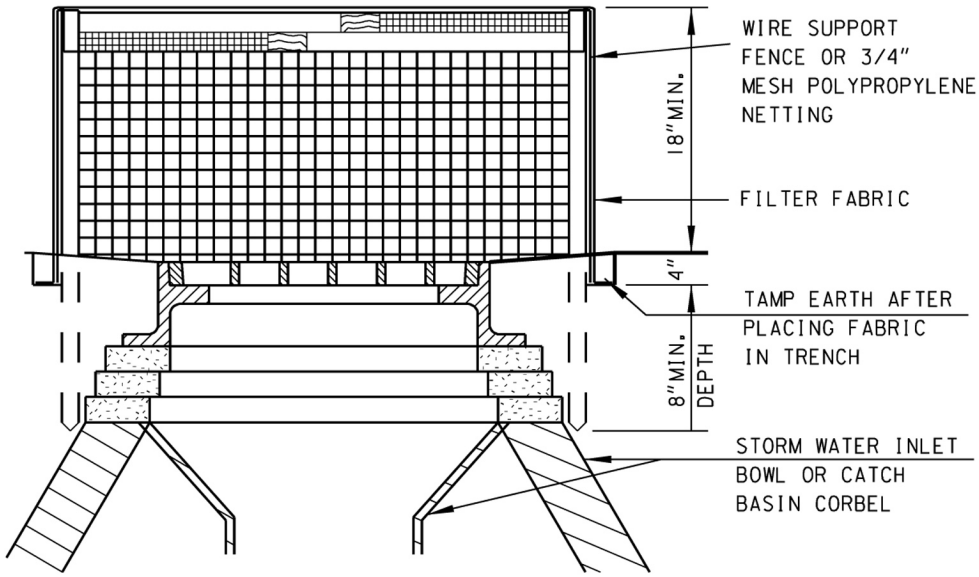

SECTION A-A

INLET SCREEN

(NOT PAVED) (TYPE R)

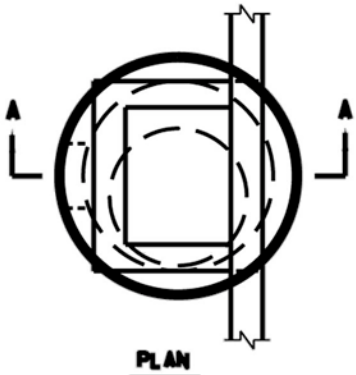

PLAN

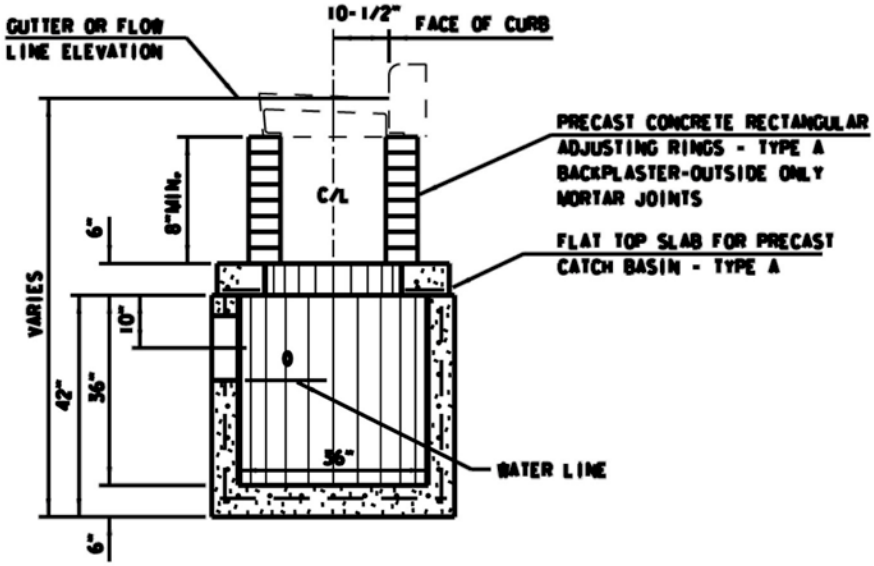

SECTION A-A

CATCH BASIN -TYPE 45A

GENERAL NOTES

1. PRECAST INLET UNITS AND BASES SHALL CONFORM TO THE PERTINENT REQUIREMENTS OF AASHTO DESIGANTION M199 AND ASTM DESIGNATION C-478 AND THESE DETAILED REQUIREMENTS WHICH SHALL GOVERN WHERE THEY ALTER THE AASHTO AND ASTM STANDARDS.

2. ALL REINFORCEMENT STEEL SHALL BE GRADE 60 OR GREATER AND EMBEDDED AT LEAST 1" CLEAR.

3. PRECAST REINFORCED BASES SHALL BE PLACED ON A BED OF MATERIAL AT LEAST 4" DEPTH WHICH MEETS REQUIREMENTS FOR GRANULAR BACKFILL. THIS BEDDING SHALL BE COMPACTED AND PROVIDE UNIFORM SUPPORT FOR THE ENTIRE AREA OF THE BASE.

4. SET FRAME ELEVATION 0.03 FEET LOWER THAN ELEVATION INDICATED ON THE PLAN.

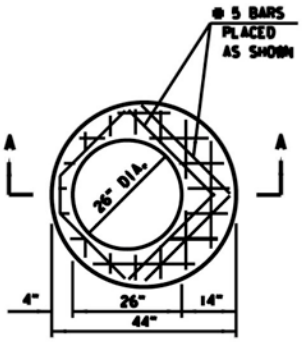

PLAN

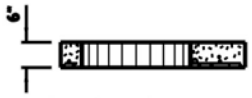

SECTION A-A

FLAT TOP SLAB SHALL BE 6" THICK REINFORCED WITH ONE LAYER OF STEEL WITH A MINIMUM OF 0.32 SQ.IN. PER LINEAL FOOT IN BOTH DIRECTIONS, PLACED NEAR THE BOTTOM OF THE SLAB WITH 1" CLEAR COVER.

ADDITIONALLY, NO. 5 BARS SHALL BE PLACED AROUND THE TOP SLAB OPENING AS SHOWN.

REINFORCEMENT SHALL BE TIED OR WELDED TOGETHER.

THE MINIMUM COMPRESSIVE STRENGTH OF THE CONCRETE SHALL BE 4000 PSI.

TOP SLAB - TYPE A

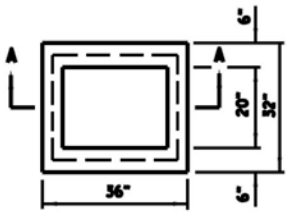

PLAN

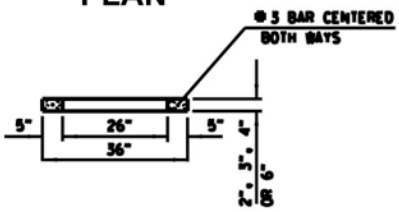

SECTION A-A

THE ADJUSTING RINGS SHALL BE 2", 3", 4" OR 6" IN HEIGHT.

THE MINIMUM COMPRESSIVE STRENGTH OF THE CONCRETE SHALL BE 3500 PSI.

RECTANGULAR ADJUSTING RING TYPE A

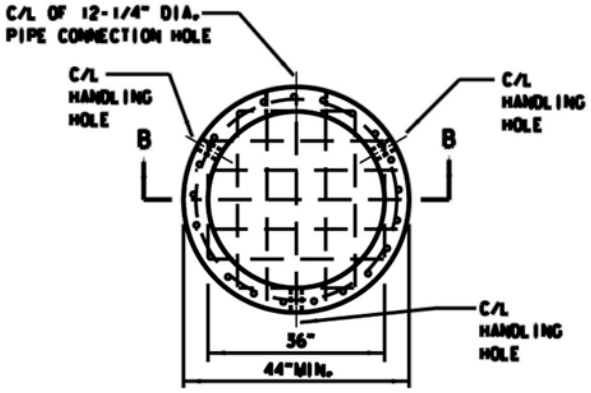

RISER SECTION WITH INTEGRAL BASE PLAN

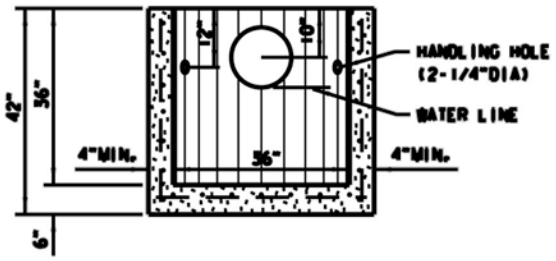

SECTION B-B

CIRCUMFERENTIAL AND LONGITUDINAL REINFORCEMENT SHALL EACH CONSIST OF ONE LAYER OF STEEL NOT LESS THAN 0.12 SQ. IN. PER FOOT AND SHALL BE PLACED IN THE CENTER THIRD OF THE WALL.

THE BASE SLAB SHALL BE REINFORCED WITH ONE LAYER OF STEEL WITH A MINIMUM AREA OF 0.32 SQ. IN. PER FOOT IN BOTH DIRECTIONS, PLACED ABOVE THE MIDPOINT OF THE SLAB.

RISER SECTION AND BASE SLAB REINFORCEMENT SHALL BE TIED OR WELDED TOGETHER.

TWO TO THREE HANDLING HOLES 2-1/4" IN DIAMETER AND A PIPE CONNECTION HOLE 12-1/4" SHALL BE CAST OR CORED IN THE RISER SECTION AT THE LOCATIONS SHOWN. LIFTING DEVICES MAY BE SUBSTITUTED FOR HANDLING HOLES.

NO JOINTS OR HOLES SHALL BE BELOW THE WATERLINE.

THE MINIMUM COMPRESSIVE STRENGTH OF THE CONCRETE SHALL BE 4000 PSI.

RISER SECTION MAY TAPER TO A 33" INTERNAL DIAMETER AT ITS BOTTOM PROVIDED A 44" MINIMUM DISTANCE IS MAINTAINED.

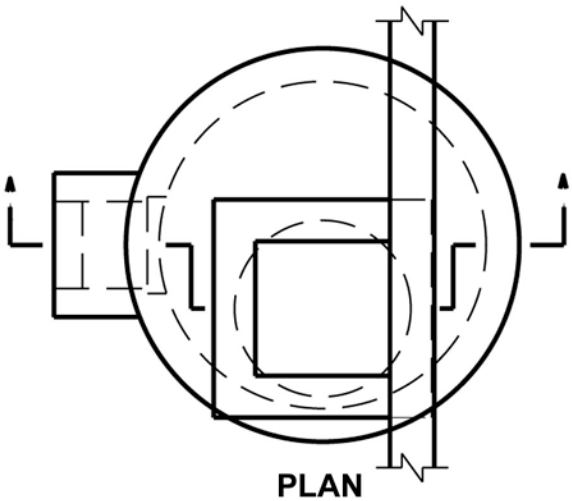

PLAN

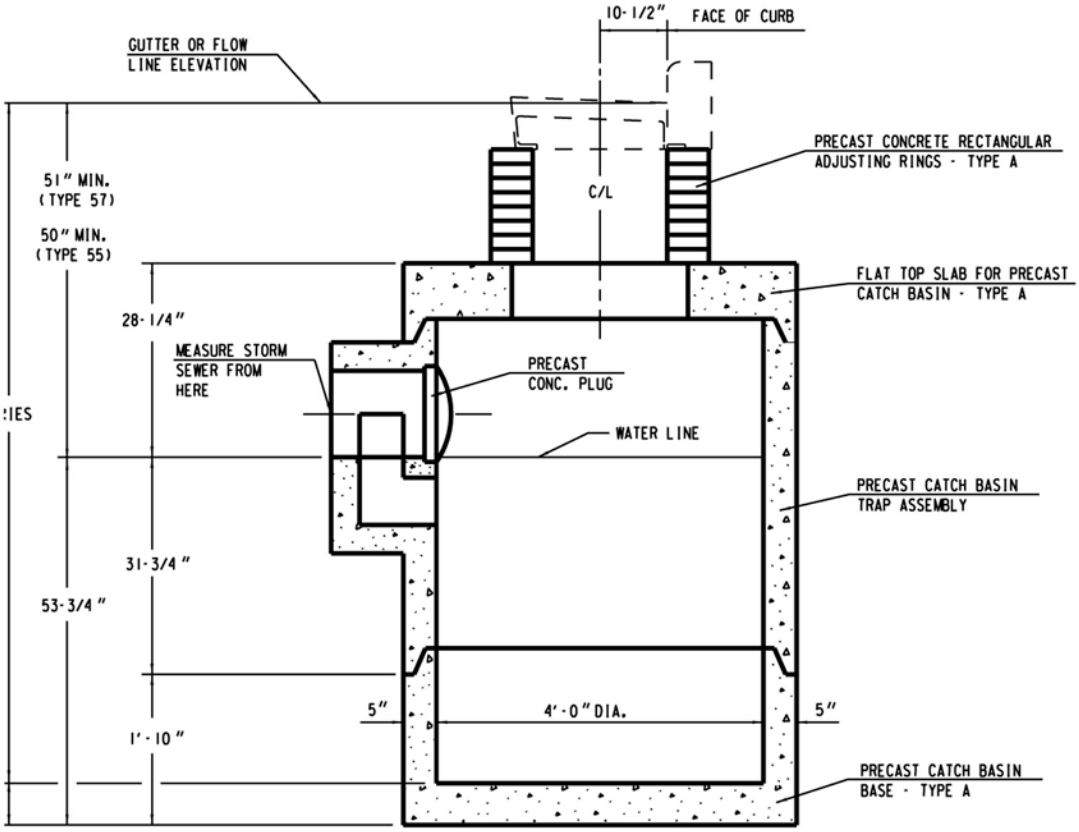

SECTION A-A

CATCH BASIN - TYPE 44A

1. REINFORCEMENT FOR 5" PRECAST REINFORCED CONCRETE SHALL BE 6" X 6" W16 X W16 WELDED STEEL WIRE FABRIC AND SHALL BE EMBEDDED 2" CLEAR.
2. PRECAST INLET UNITS AND BASES SHALL CONFORM TO THE PERTINENT REQUIREMENTS OF AASHTO DESIGNATION M199.
3. PRECAST REINFORCED BASES SHALL BE PLACED ON A BED OF MATERIAL AT LEAST 4" IN DEPTH WHICH MEETS REQUIREMENTS FOR GRANULAR BACKFILL. THIS BEDDING SHALL BE COMPACTED AND PROVIDE UNIFORM SUPPORT FOR THE ENTIRE AREA OF THE BASE.
4. SET FRAME ELEVATION 0.03 FT. LOWER THAN ELEVATION INDICATED ON PLAN.
5. A PRECAST CONCRETE PLUG SHALL BE CEMENTED INTO THE OPENING AT THE INNER FACE OF THE CATCH BASIN TRAP ASSEMBLY.

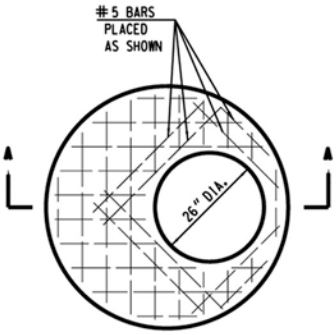

PLAN

FLAT TOP SLAB SHALL BE 8" THICK REINFORCED WITH ONE LAYER OF STEEL WITH A MINIMUM AREA OF 0.12 SQ. IN. PER LINEAL FOOT IN BOTH DIRECTIONS, PLACED IN THE CENTER THIRD OF THE SECTION AS SHOWN.

REINFORCEMENT SHALL BE TIED OR WELDED TOGETHER.

THE MINIMUM COMPRESSIVE STRENGTH OF THE CONCRETE SHALL BE 3300 P.S.I.

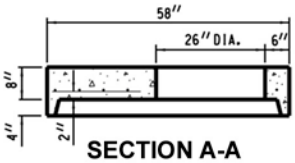

SECTION A-A

TOP SLAB - TYPE A

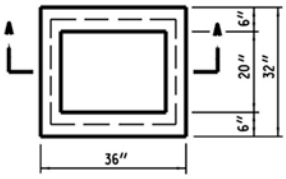

PLAN

THE ADJUSTING RINGS SHALL BE 2", 3", 4" OR 6" IN HEIGHT.

THE MINIMUM COMPRESSIVE STRENGTH OF THE CONCRETE SHALL BE 3300 P.S.I.

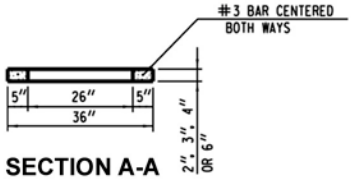

SECTION A-A

RECTANGULAR ADJUSTING RING TYPE A

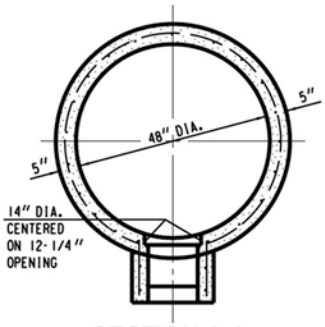

SECTION A-A

CIRCUMFERENTIAL REINFORCEMENT SHALL CONSIST OF ONE LINE OF STEEL NOT LESS THAN 0.12 SQ. IN. PER LINEAL FOOT, AND SHALL BE PLACED IN THE CENTER THIRD OF THE WALL.

TRAP ASSEMBLY SHALL BE REINFORCED WITH ONE LAYER OF STEEL WITH A MINIMUM AREA OF 0.12 SQ. IN. PER LINEAL FOOT IN BOTH DIRECTIONS, PLACED IN THE CENTER THIRD OF THE SECTION AS SHOWN.

CIRCUMFERENTIAL AND TRAP ASSEMBLY REINFORCEMENT SHALL BE TIED OR WELDED TOGETHER.

THE MINIMUM COMPRESSIVE STRENGTH OF THE CONCRETE SHALL BE 3300 P.S.I.

TWO HANDLING HOLES 2 1/4 INCHES IN DIAMETER SHALL BE CAST OR DRILLED IN THE WALL.

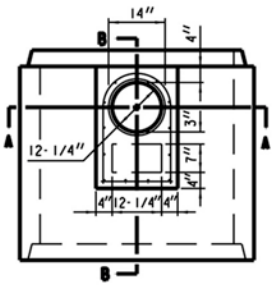

PLAN

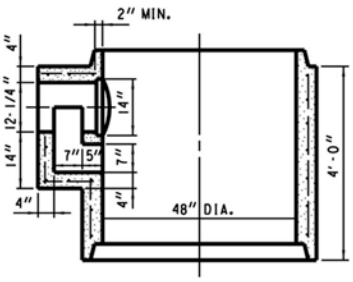

SECTION B-B

TRAP ASSEMBLY

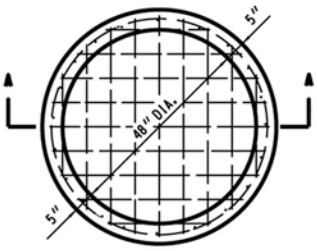

PLAN

CIRCUMFERENTIAL REINFORCEMENT SHALL CONSIST OF ONE LINE OF STEEL NOT LESS THAN 0.12 SQ. IN. PER LINEAL FOOT, AND SHALL BE PLACED IN THE CENTER THIRD OF THE WALL.

BOTTOM SLAB SHALL BE REINFORCED WITH ONE LAYER OF STEEL WITH A MINIMUM AREA OF 0.12 SQ. IN. PER LINEAL FOOT IN BOTH DIRECTIONS, PLACED IN THE CENTER THIRD OF THE SLAB.

CIRCUMFERENTIAL AND BOTTOM SLAB REINFORCEMENT SHALL BE TIED OR WELDED TOGETHER.

THE MINIMUM COMPRESSIVE STRENGTH OF THE CONCRETE SHALL BE 3300 P.S.I.

TWO HANDLING HOLES 2 1/4 INCHES IN DIAMETER SHALL BE CAST OR DRILLED IN THE WALL.

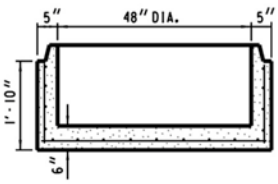

SECTION A-A

BASE - TYPE A

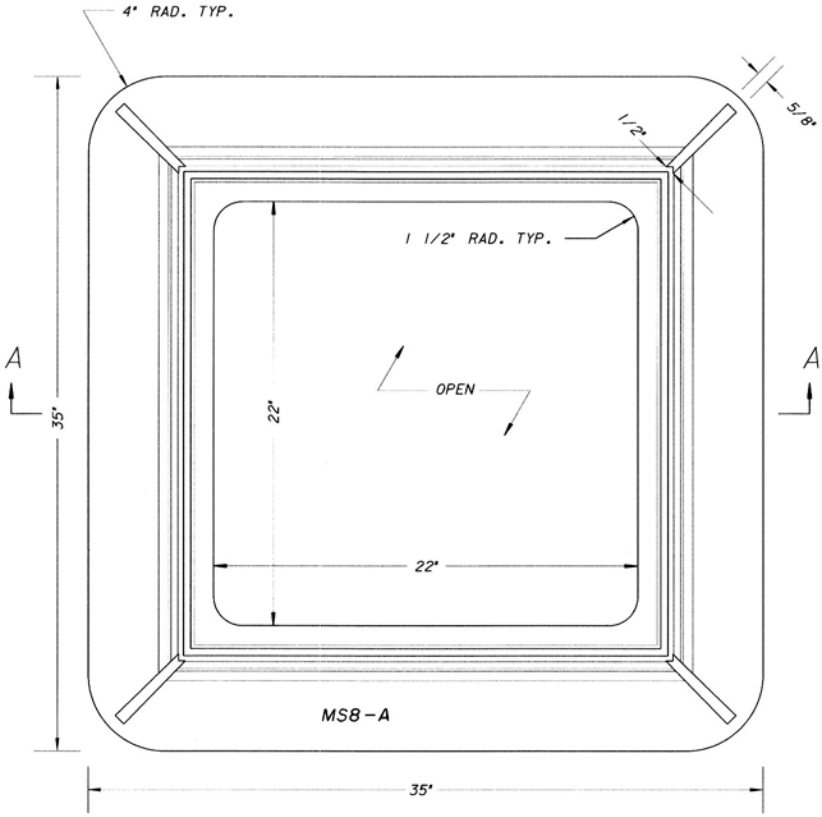

TOP VIEW

SCALE N.T.S.

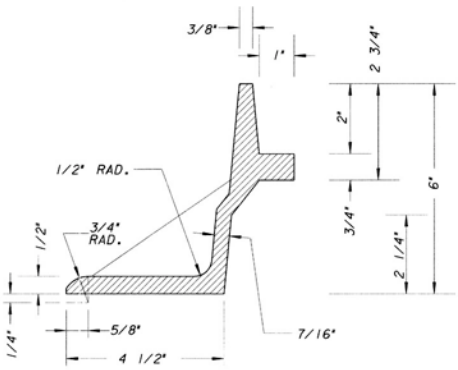

FRAME DETAIL

SCALE N.T.S.

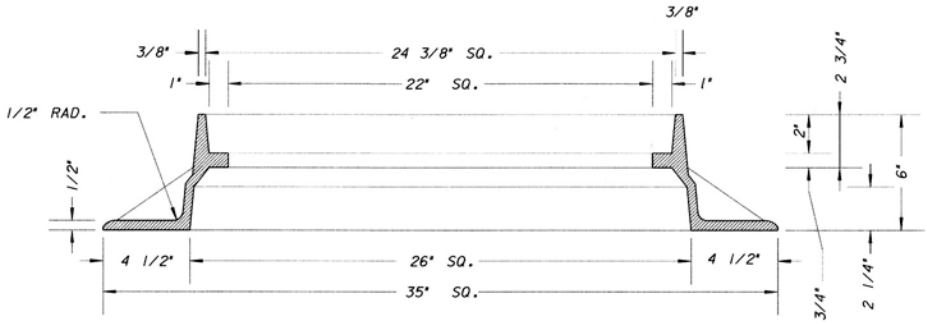

SECTION A-A

SCALE N.T.S.

M.S. 8A
ALLEY INLET FRAME

SCALE N.T.S.

NOTES:

THIS CATCH BASIN FRAME IS AN ACCEPTABLE ALTERNATIVE DESIGN TO CATCH BASIN FRAME M.S. 8 - P.F.# 171-58.

MUST FIT M.S. 55 INLET GRATE.(SEE P.F.# MS-55)

ALL DIMENSIONS ARE SHOWN IN ENGLISH

MATERIAL - CAST GRAY IRON ASTM A-48, CLASS 35B MINIMUM

WEIGHT: APPROX. 165 lbs

ALL CASTINGS SHALL BEAR THE FOLLOWING IDENTIFICATION MARKS IN THE FORM OF LEGIBLE LETTERS OR NUMBERS RAISED 1/8" AND HAVING A DIGIT OR LETTER HEIGHT OF ONE INCH ON THE UPPER FACE OF THE FRAME FLANGE:

1. THE INITIALS OR MONOGRAM OF THE FOUNDRY.
2. THE CONTRACT NUMBER AND YEAR MADE.
3. THE CASTING INDENTIFICATION NUMBER. (MS8-A)
4. THE SERIAL NUMBER OF THE INDIVIDUAL CASTING.

ALL EXTERIOR EDGES SHALL BE GROUND.

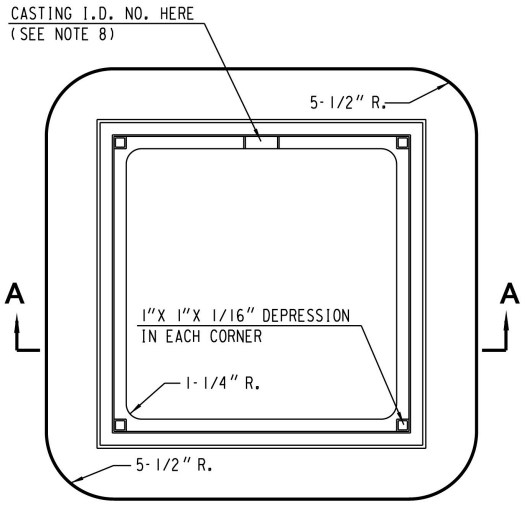

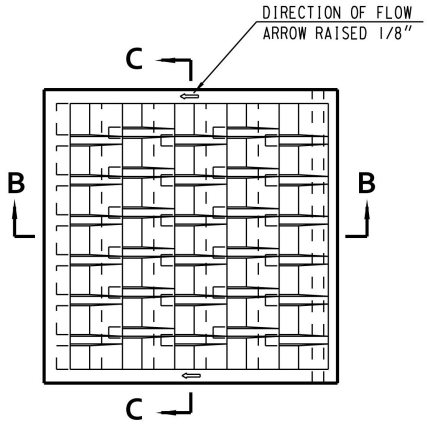

GRATE

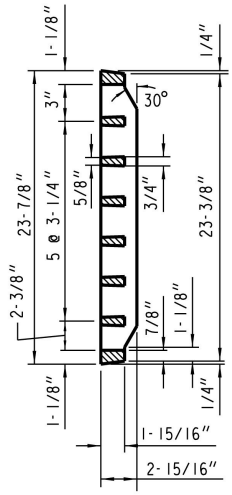

SECTION C-C

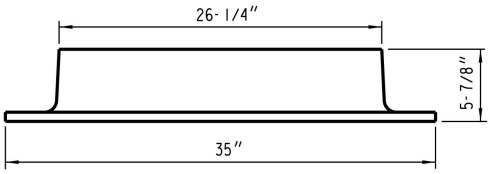

FRAME

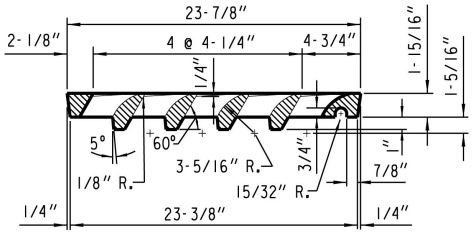

SECTION B-B

INLET COVER TYPE 55

LID-180 LBS., FRAME-315 LBS.

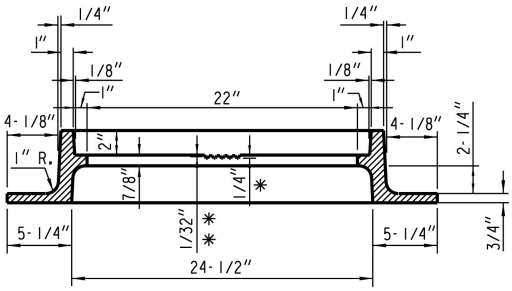

✱ DEPRESSION FOR LETTERS

✱✱ CLEARANCE FROM TOP OF LETTERS TO FACE OF SEAT

SECTION A-A

GENERAL NOTES

ALL EDGES ARE TO BE GROUND.

ALL CASTINGS SHALL BEAR THE FOLLOWING IDENTIFICATION MARKS IN THE FORM OF LEGIBLE LETTERS OR NUMERALS RAISED 1/8 INCH

ON THE FRAME

1. ON THE UPPER FACE OF THE FLANGE IN 1 INCH HIGH LETTERS THE INITIALS OR MONOGRAM OF THE FOUNDRY, THE YEAR MADE AND THE SERIAL NUMBER OF THE INDIVIDUAL CASTING.

2. ON THE SEAT OF THE FRAME IN 3/4 INCH HIGH LETTERS, THE CASTING IDENTIFICATION NUMBER (8).

ON THE GRATE

1. ON THE UPPER SIDE OF THE GRATE IN 1 INCH HIGH LETTERS, THE INITIALS OR MONOGRAM OF THE FOUNDRY, THE YEAR MADE, THE CASTING IDENTIFICATION NUMBER (55) AND THE SERIAL NUMBER OF THE INDIVIDUAL CASTING.

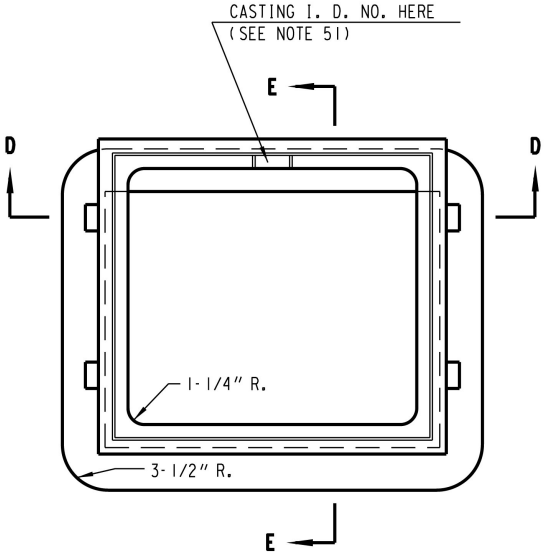

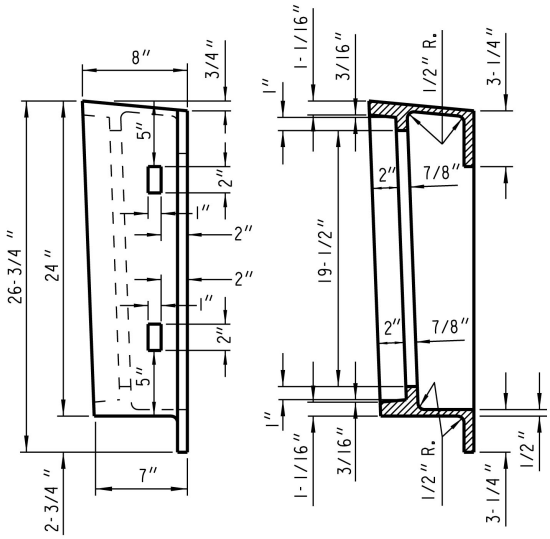

SECTION E-E

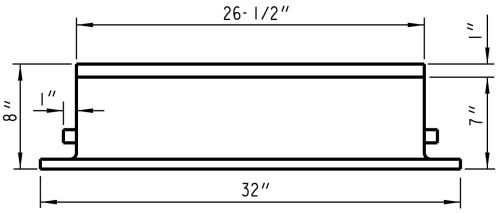

FRAME

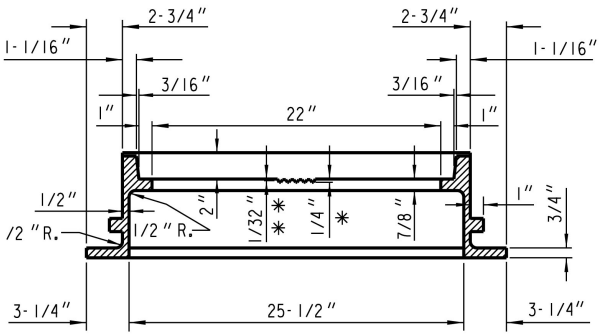

SECTION D-D

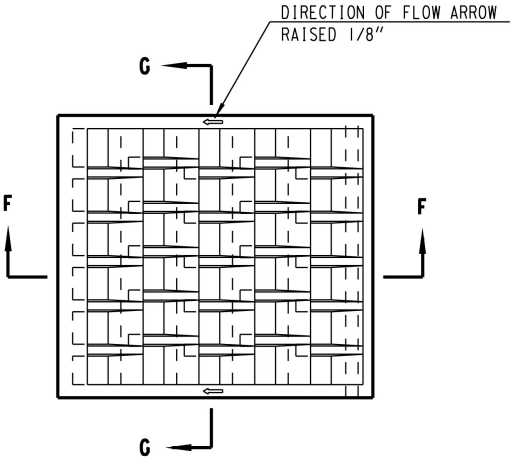

GRATE

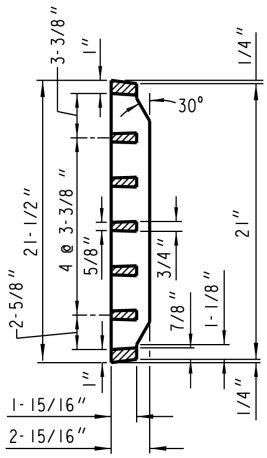

SECTION G-G

✱ DEPRESSION FOR LETTERS

✱ ✱ CLEARANCE FROM TOP OF LETTERS TO FACE OF SEAT

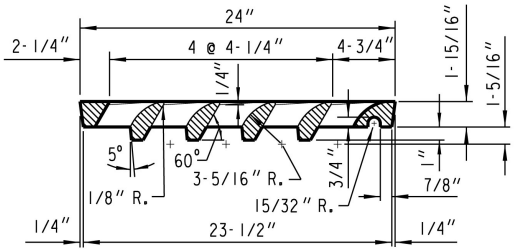

SECTION F-F

GENERAL NOTES

ALL EDGES ARE TO BE GROUND.

ALL CASTINGS SHALL BEAR THE FOLLOWING IDENTIFICATION MARKS IN THE FORM OF LEGIBLE LETTERS OR NUMERALS RAISED 1/8 INCH

ON THE FRAME

1. ON THE UPPER FACE OF THE FLANGE IN 1 INCH HIGH LETTERS THE INITIALS OR MONOGRAM OF THE FOUNDRY, THE YEAR MADE AND THE SERIAL NUMBER OF THE INDIVIDUAL CASTING.

2. ON THE SEAT OF THE FRAME IN 3/4 INCH HIGH LETTERS, THE CASTING IDENTIFICATION NUMBER (51).

ON THE GRATE

1. ON THE UPPER SIDE OF THE GRATE IN 1 INCH HIGH LETTERS, THE INITIALS OR MONOGRAM OF THE FOUNDRY, THE YEAR MADE, THE CASTING IDENTIFICATION NUMBER (55) AND THE SERIAL NUMBER OF THE INDIVIDUAL CASTING.

INLET COVER TYPE 57

LID-145 LBS., FRAME-204 LBS.

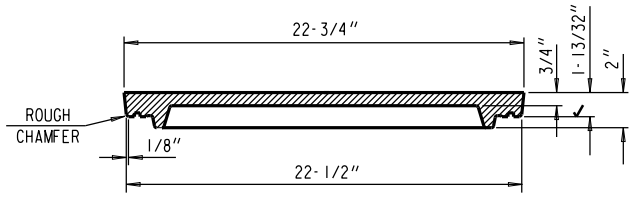

SECTION A-A

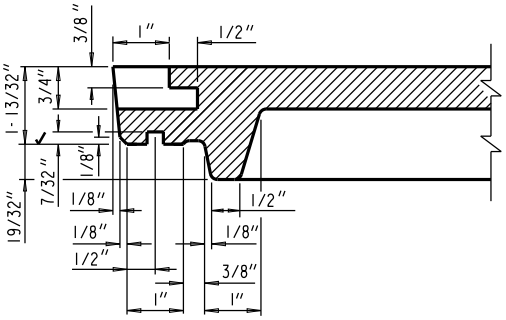

SECTION B-B

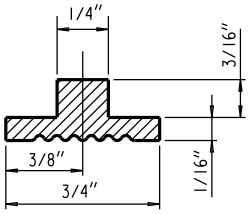

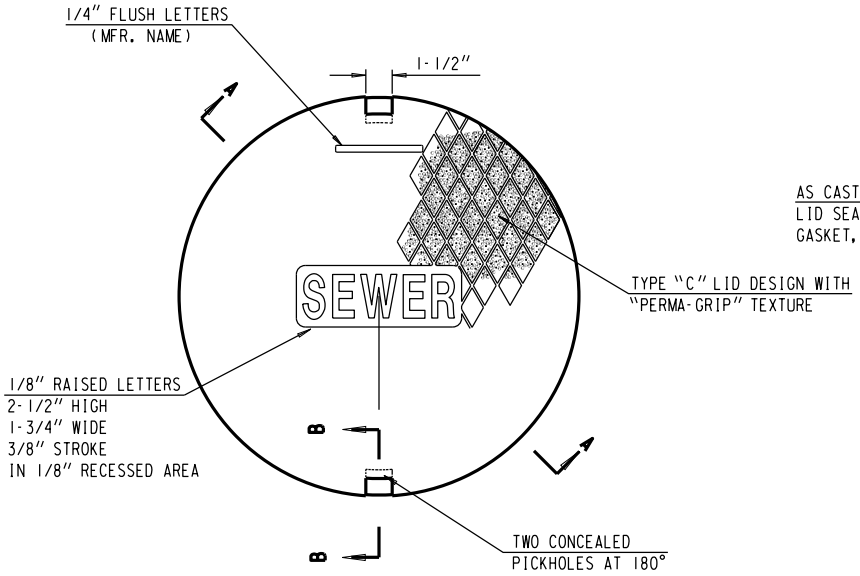

TOP VIEW

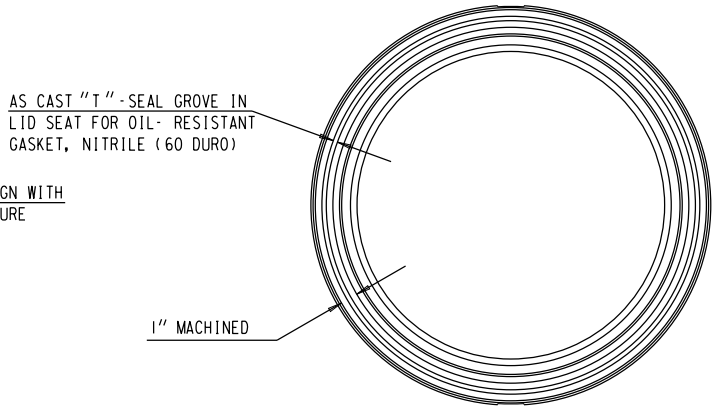

BOTTOM VIEW

MANHOLE COVER - TYPE 58-A

LID - 107 LBS.

NOTE:

ALL CASTINGS SHALL BEAR THE FOLLOWING IDENTIFICATION MARKS IN THE FORM OF LEGIBLE LETTERS OR NUMERALS RAISED 1/8" HAVING A DIGIT OR LETTER HEIGHT OF ONE INCH ON LOWER FACE OF LID:

1. THE INITIALS OR MONOGRAM OF THE FOUNDRY.
2. THE CONTRACT NUMBER AND YEAR MADE.
3. THE CASTING IDENTIFICATION NUMBER.
4. THE SERIAL NUMBER OF THE INDIVIDUAL CASTING.

NOTE: ALL EXTERIOR EDGES SHALL BE GROUND.

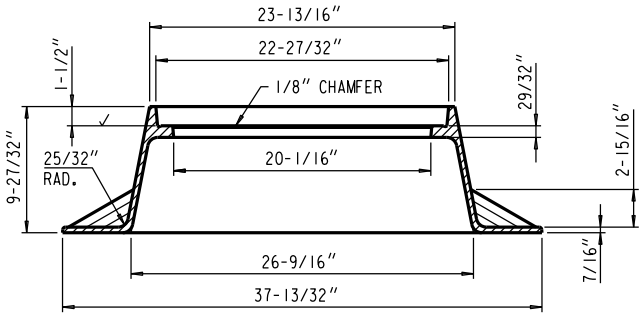

MANHOLE FRAME - TYPE MS21

FRAME - 182 LBS.

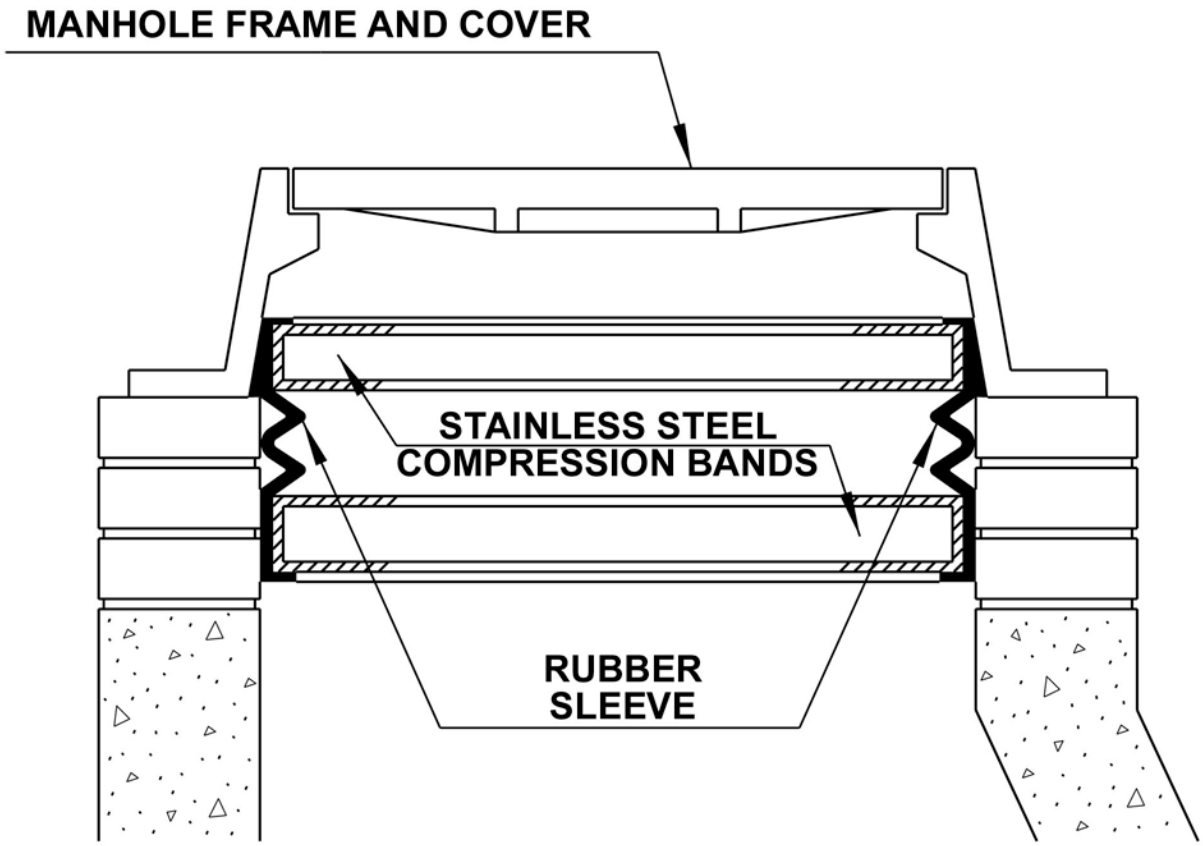

INTERNAL SANITARY MANHOLE SEAL

Pivoted Turnbuckle Manhole Riser

Manhole Riser

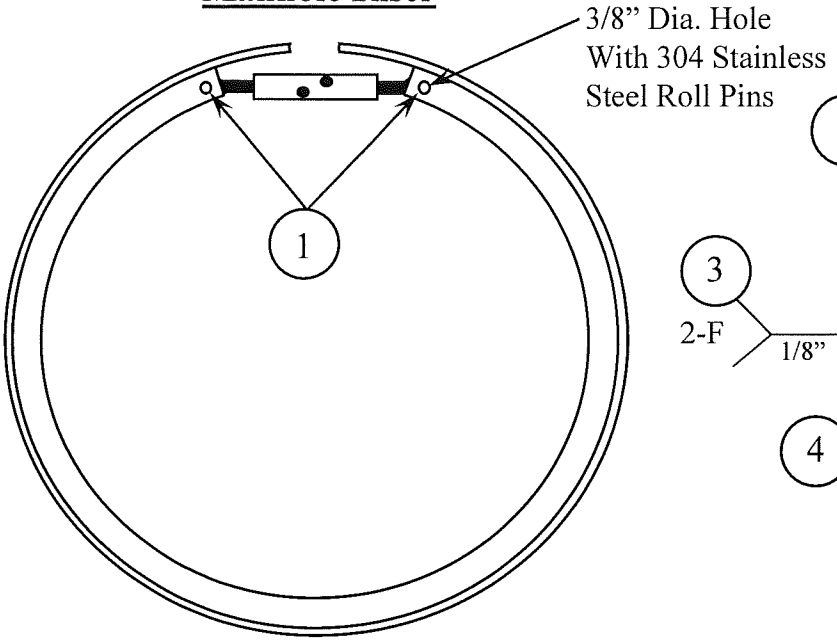

Cross Section view

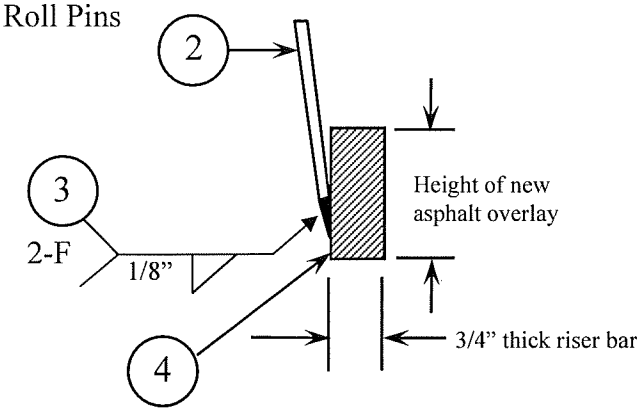

Pivoted Turnbuckle Expanding Linkage

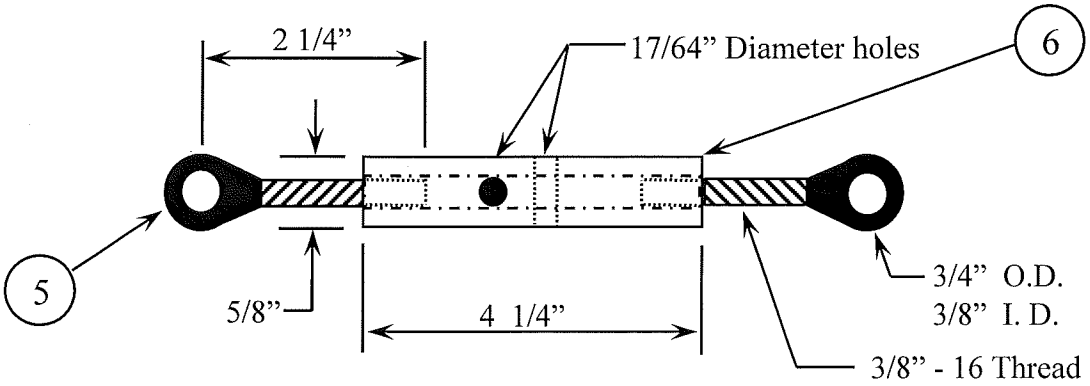

Item Number	Item Description	Material Description	Tensile Yield	Tensile Ultimate
1	3/8" Roll Pins	304 Stainless Steel (14,000 LB Double Sheer Strength)		
2	Steel Skirt	12 or 10 gage A.I.S.I. 1020 Steel (A-36) G-90 Galvanized	33,000 P.S.I.	60,000 P.S.I.
3	Weld	Full circumference welded except on clamp area Lincoln Electric .045 71M Elite Outer Shield Flux Cored	75,000 P.S.I.	85,000 P.S.I.
4	3/4" wide Riser Bar	Hot Rolled Steel A.I.S.I. 1020 (A-36)	33,000 P.S.I.	60,000 P.S.I.
5	Rod Ends	Forging A.I.S.I. C-1030 Steel Heat Treated BHN 240 Zinc Plated with Dichromate Finish	70,000 P.S.I.	92,000 P.S.I.
6	Turnbuckle	A.I.S.I. 12L14 Steel Cold Drawn Zinc Plated with Yellow Dichromate Finish dipped in Linebacker rust inhibitor	60,200 P.S.I.	78,300 P.S.I.

Fixed Extra Unit Prices for Paving		
2014 Program Year		
Item	Unit	Amount
Removals		
Concrete Walk &/or Driveway Removal (100 sq. ft. or less)	sq. ft.	$ 1.00
Concrete Curb &/or Gutter Removal (25 lin. ft. or less)	lin. ft.	$ 6.00
Sawing 150 LF and LESS	lin. ft.	$ 3.50
Sawing OVER 150 LF	lin. ft.	$ 2.00
Sawing Full Depth 140 LF and LESS	lin. ft.	$ 4.00
Sawing Full Depth OVER 140 LF	lin. ft.	$ 2.20
Surface Removal (10 sq. yds.or less)	sq. yd.	$ 8.00
Step Removal	lin. ft.	$ 11.50
Tree Clearing (1 tree or 12 in. dia. or less)	in. dia.	$ 47.00
Tree Grubbing (1 stump or 12 in. dia. or less)	in. dia.	$ 60.00
Wall &/or Footing Removal (one cu. yd. minimum)	cu. yd.	$ 150.00
Masonry Brick or Block	cu. yd.	$ 200.00
Monolithic Concrete	cu yd..	$ 230.00
Reinforced Monolithic Concrete	cu. yd.	$ 250.00
New Work		
Gravel Filling (20 tons or less)	ton	$ 16.50
Crushed Stone (20 tons or less)	ton	$ 16.50
VT Crushed Stone Driveway	ton	$ 29.00
Topsoil	cu. Yd.	$ 35.00
VT Concrete Base (less than 4 cu. yds.)	cu. yd.	$ 200.00
Concrete Traffic Island	sq. ft.	$ 10.00
Concrete Curb & Gutter (25 lin. ft. or less)	lin. ft.	$ 35.00
VT Concrete Walk &/or Driveway	cu. yd.	$ 220.00
5" Concrete Walk (100 sq. ft. or less)	sq. ft.	$ 4.50
7" Concrete Driveway	sq. ft.	$ 5.25
8" Concrete Driveway		120% X BID
High Early Strength		110% X BID
Pavement Dowels	each	$ 10.00
Miscellaneous		
Water Service Box Adjustment	each	$ 50.00
Water Valve Box Adjustment	each	$ 60.00
Cold Weather Protection - Pavement	sq. yd.	$ 1.50
Cold Weather Protection - Curb	lin. ft.	$ 1.00
Cold Weather Protection - Walk &/or Driveway	sq. ft.	$ 0.50

PAYMENT MONITORING REQUIREMENTS

All Contractors awarded a contract valued at $25,000.00 or more are required to participate in training on the City of Milwaukee's B2GNow contract compliance software. Contractors must complete the training no later than 30 days after the date of contract award. Throughout the contract term, Contractors are required to regularly provide timely payment information in the City's contract compliance software.

Please contact the Office of Small Business Development (OSBD) at 414-286-5553 should you have any questions or concerns regarding the training or *reporting process.*

CITY OF MILWAUKEE

DEPARTMENT OF PUBLIC WORKS

Erosion Control Implementation Plan (ECIP)

The Erosion Control Implementation Plan (ECIP) is an effort to conform to Chapter 290 of the Code of Ordinances. The ECIP shall be submitted to the City Engineer at least ten (10) working days prior to the start of any construction activity. NO construction activity may begin without an ECIP approved by the Department of Public Works.

FOR OFFICE USE ONLY		Application No._____
Meets Technical Standards ☐ Date Application Received: _____ Fee Paid ☐	Does Not Meet Technical Standards ☐ Date All Information Received: _____ Check No. _____	Reviewed by: _____

	Applicant (Contractor)			**Erosion Control Consultant/Engineer**		
Name:						
Address:						
City/State/Zip:						
Phone:						
Relationship to Project:						

Principal Contact Responsible for Installation, Maintenance and Removal of Erosion Control Measures:			
Name:			
Phone:		Fax:	
Type of Construction:			
Proposed Construction Start Date:			

ECIP REQUIREMENTS:

- Attach a description of Erosion Control devices and other Best Management Practices to be utilized on the project(s). The description should include, but not be limited to: type of products (i.e. *Geotex Fabric*), manufacturer's names and types of equipment (i.e. self-contained power broom).
- Attach the intended timetable and sequence of construction activities.
- Attach the intended timetable and sequence of Best Management Practices and devices to be implemented for erosion control.
- Attach a site plan showing approximate location(s) of erosion control devices. The site plan shall be at a scale of no less than 1"=100'. The plan shall also indicate the direction of runoff flow, the construction limits, temporary stockpiles and any other significant information.

Upon receipt of all required information, the ECIP will be reviewed within ten (10) working days and all involved parties will be notified as to whether or not the plan meets technical standards.

Applicant's Signature: _____ **Date:** _____

BLANK

CITY OF MILWAUKEE

DEPARTMENT OF PUBLIC WORKS

EROSION CONTROL-SIMPLIFIED CHECKLIST

SITE CHARACTERISTICS

The Contractor may utilize the City of Milwaukee plan set for this contract or provide a site diagram. The following information shall be included:

- The scale of the drawing (not less than 1”=100’)
- A north arrow (towards the top or to the right of the plan)
- The name of all project streets and streets abutting the project
- Approximate location of all existing and proposed drainage structures
- The direction of water runoff (flow arrows)
- The limits of construction
- The approximate location of all erosion control devices
- Areas where vegetation will be disturbed and re-established
- For non right-of-way projects, locate watershed areas of overland and concentrated flow. Include area sizes in acres and representative soil type of disturbed areas.

Erosion Control Practices

- Stormwater inlet protection:
  1. Any structure that is connected to the drainage system shall be protected from sediment entering the system.
  2. All stormwater inlets adjacent to and on the project site shall have type M inlet protection.
  3. If the frame of any stormwater inlet is removed or openings are in the masonry and stormwater may enter, the protection device should be changed to a type R.
  4. Any manholes that the frame is removed or openings are in the masonry and stormwater may enter shall have a type R erosion control.

- Temporary storage piles:
  1. Storage of erodable materials (i.e. gravel) should not be closer than 25 feet from a roadway or drainage way. If placed in the right-of-way, the stockpiles shall not be placed closer than 100 feet of an unprotected storm drain. Covering or surrounding with straw bales, silt fence or other measures, shall control erosion from stockpiles existing less than ten (10) days. Stockpiles existing longer than ten (10) days shall be seeded and mulched.

- Tracking:
  1. The project and surrounding roadways shall be kept free from materials that may enter the drainage system. Tracked roadways shall be cleaned immediately by means other than flushing with water.
  2. Tracking pads at ingress and egress points may be used to help control tracking of sediment onto roadway surfaces. The pads shall be constructed with a minimum of 2-inch size stone, 8-feet wide and a minimum of 50-feet long.
  3. The project roadways should be cleaned on a daily basis. Cleaning shall be done by means other than flushing with water.

- Location of sediment controls (i.e. silt fence, straw bales, waddles and other planned practices) that minimize the amount of sediment from leaving the site:
  1. The *"Wisconsin Construction Site Best Management Practices Handbook"* should be consulted.

- Dewatering:
  1. Water containing particles of 100 microns or greater shall be treated by use of temporary sediment basins or other devices designed to remove particles of 100 microns or greater.

- Vegetation:
  1. The construction activity should be staged as to limit the amount of time vegetation is stripped and re-established.

- Maintenance:
  1. A schedule for maintaining all erosion control devices is necessary to maximize the effort of limiting sediment from entering the drainage system.
  2. All devices should be checked and maintained after a rainfall event that totals 0.50 inches.
  3. All devices should be checked and maintained at least once a week.

NOTICE TO CONTRACTORS

Effective immediately, the City of Milwaukee has adopted an ordinance relative to Prompt Payment as follows:

2.9.16.b) It is the City's policy to pay all invoices within 30 days. If the City does not make payment within 45 days after receipt of properly completed supporting payment and other required contract documentation, the City shall pay simple interest beginning with the 31st calendar day at the rate of one percent per month (unless the amount due is subject to a good-faith dispute and, before the 45th day of receipt, notice of the dispute is sent to the contractor by first-class mail, personally delivered, or sent in accordance with the notice provisions in the contract). If there are subcontractors, consistent with s.66.0135(3), Wis. Stats., the prime contractor must pay the subcontractors for satisfactory work within seven days of the contractor's receipt of payment from the City of Milwaukee, or seven days from receipt of a properly submitted and approved invoice from the subcontractor, whichever is later. If the contractor fails to make timely payment to a subcontractor, the contractor shall pay interest at the rate of 12 percent per year, compounded monthly, beginning with the 8th calendar day. Reference Common Council File No. 101137 adopted January 2011.

City Of Milwaukee

Department Of Public Works

Small Business Enterprise (SBE) Provisions

I. General

A. In accordance with Chapter 370 of the Milwaukee Code of Ordinances, Small Business Enterprise (SBE) participation is required in all contracting activities of the Department of Public Works. The ordinance requires that certified SBEs be utilized for 25% of the total dollars annually expended through prime contracts or subcontracts for Construction and the purchase of Goods and Services. For the purchase of Professional Services the requirement is 18%. To that end, the Commissioner of Public Works, as a contracting officer for the City, requires all bidders to utilize SBEs as subcontractors and material suppliers on all contracts. For this contract, bidders are required to achieve the minimum percent of SBE participation listed in the Acknowledgements page/section and/or the Official Notice document.

B. The prime contractor shall prepare and submit accurate and timely SBE utilization forms and reports to the Department of Public Works. The reports shall include, but not be limited to, Compliance Plan (Form A), monthly utilization (Form D), and SBE subcontractor payment certification (Form E) forms as directed. Failure to submit the required forms and reports to the Department of Public Works may result in disqualification of future bids, delay of payments, or other appropriate sanctions. Final contract payments will not be made until final SBE utilization reports and SBE subcontractor payment certification forms are on file with the Department of Public Works.

C. During the performance of this contract, the Department of Public Works reserves the right to conduct compliance reviews. If the contractor is not in compliance with the specifications, the Commissioner of Public Works will notify the contractor in writing of the corrective action that will bring the contractor into compliance. If the contractor fails or refuses to take corrective action as directed, the Department of Public Works may take one or more of the actions listed below:

1. Terminate or cancel the contract, in whole or in part.

2. Consider possible debarment of the prime contractor from bidding.

3. Withhold payments on the contract.

4. Any other remedy available to the City at law or in equity.

II. Definitions

A. "SMALL BUSINESS ENTERPRISE" (SBE) means a small business concern that is 51% owned, operated and controlled by one or more individuals who are a minority, woman and/or a small business owner (who is at an “economic disadvantage”). The individuals must have day-to-day operational and managerial control and interest in capital, financial risks and earnings commensurate with the percentage of their ownership.

B. "OWNED, OPERATED AND CONTROLLED" means a business which is one of the following:

1. A sole proprietorship legitimately owned and operated and controlled by a minority, women or an individual at a disadvantage as defined in Chapter 370.

2. A partnership or joint venture legitimately owned, operated and controlled by individuals who are minorities, women or individuals who are at a disadvantage and who own at least 51% of the beneficial ownership interests in the enterprise and who hold at least 51% of the voting interests of the enterprise eligible as defined in Chapter 370.

3. A corporation legitimately owned, operated and controlled by one or more individuals who are a minority, woman or individual at a disadvantage and who own at least 51% of the outstanding shares and who hold at least 51% of the voting interests of the corporation eligible as defined in Chapter 370.

III. SBE Utilization Requirements

A. Each prime contractor shall utilize SBE to the minimum percent listed in the Acknowledgements section/page and or Official Notice Document for this contract. Note that the prime contractors shall be required to attain SBE participation on their base bid excluding specified allowances, alternatives, and change orders. SBE commitments relative to contract award shall be based upon the approved SBE Compliance Plan (Form A).

B. The determination of SBE utilization shall be based on the following criteria:

1. The firms identified as SBE by the prime contractor on the SBE Compliance Plan (Form A) must be certified by the Office of Small Business Development prior to bid opening.

2. The prime contractor shall be credited for the entire expenditure to SBE firms only if all of the identified scope of work is performed directly by the certified SBE firm.

3. The prime contractor shall be credited for the entire expenditure to SBE manufacturer only if the manufacturer produces goods from raw materials or substantially alters them for resale. Only 20% of the SBE goals may be expended for SBE suppliers that do not manufacture products they supply.

4. The prime contractor shall count toward the SBE requirement only those payments to SBEs who perform a commercially-useful function in the actual performance of the contract. While that generally means an SBE should be engaged in direct contract work, a "commercially-useful function" may also include management of a third tier subcontractor. For example, while an SBE trucking subcontractor is always expected to perform some direct work on the project, in some cases it may become necessary to subcontract work out to one or more third tier subcontractors. If a third tier subcontractor is also an SBE, the full amount of the work performed by that third tier SBE can be counted toward SBE participation. However, if the third party subcontractor is not an SBE, the prime contractor may only count 20% of the amount being subcontracted to the third tier non-SBE subcontractor. SBEs are required to notify the Department of Public Works if they subcontract out work so that the Department can determine how much, if any, of the subcontracted work can be counted toward the SBE requirement. The Commissioner of Public Works will make the final determination and evaluation of whether the SBE is performing a commercially-useful function.

C. The contractor, by signing and submitting a bid, certifies that the contractor understands the provisions of Chapter 370 and knows of and intends to comply with them. The completed SBE Compliance Plan (Form A) must be submitted by the apparent low bid contractor within three (3) working days after the identification of the "low bidder."

1. Information on Form A shall include, but not be limited to:

a. The names, addresses, telephone numbers, SBE Certification designation and contact person names for the certified SBE contractors that will participate on the project as subcontractors or suppliers;

b. A description of the scope of work to be performed by the SBE on this project; and

c. The SBE contractor dollar value(s) and corresponding percentages that the dollar values represent of the total contract amount.

2. Listing an SBE on the Compliance Plan (Form A) shall constitute a representation that the contractor has communicated directly with the SBEs listed. If awarded the contract, the bidder will enter into a subcontract with the firm for the portion of the work listed.

3. SBE participation is an element of bid responsiveness. Failure to meet the specified SBE requirements will render the bid unresponsive. The contract may then be awarded to the next apparent low bidder. Under certain circumstances, failure to meet specified SBE requirements after submission of an apparent low bid may result in surrender of the bidder's bid bond.

4. Only SBEs that have been certified by the Office of Small Business Development may be listed on the SBE Compliance Plan (Form A) and counted towards the percentage requirements on this project. A listing of the currently City certified SBE firms is maintained at:

Office of Small Business Development
200 East Wells Street
City Hall, Room 606
Milwaukee, Wisconsin 53202
Phone: (414) 286-5553
FAX: (414) 286-8752
www.milwaukee.gov/osbd

D. After execution of the contract, if for any reason an SBE cannot perform, the prime contractor shall contact the Commissioner of Public Works for approval to substitute another certified SBE firm. The prime contractor must submit a written request for substitution which specifies the reasons for the request. Approval must be obtained prior to making substitutions. Any difference in the cost occasioned by such substitution shall be borne by the prime contractor. If the prime contractor cannot find another certified firm to do the work at a comparable price, a non-SBE firm may be substituted with the approval of the Commissioner of Public Works.

E. If the prime contractor has a problem in meeting the SBE requirements or if any other problems relative to SBE(s) arise during the completion of this project, the prime contractor shall immediately contact the Commissioner of Public Works.

F. Certification from programs other than the Office of Small Business Development is neither accepted by the City of Milwaukee nor do they have any bearing whatsoever on the eligibility criteria established by the City of Milwaukee.

G. Right to Appeal.

All contracts awarded under ss.7-14-2 and 7-22 of the City Charter shall be awarded by the Commissioner of Public Works to the lowest responsible bidder determined in accordance with applicable City ordinances for participation of the Office of Small Business Development. Following the opening of any bid involving a determination under applicable City ordinances for participation of SBE, the Commissioner of Public Works shall make a written recommendation as to the lowest responsible bidder and notify all bidders by publication in an official City newspaper as to the content of the written recommendation. Any bidder who objects to the recommendation on grounds of determinations made under applicable City ordinances for participation of SBE may appeal the recommendation on such grounds by filing a written appeal with the Commissioner of Public Works within five (5) working days of the date of publication. The appeal shall state the specific objection to the recommendation, include supporting documentation and specify an alternative recommendation. The Commissioner of Public Works shall schedule a hearing before an appeals committee consisting of the Chair of the Economic Development Committee or the Chair's designee, a member of the Economic Development Committee selected by the Chair and the Director of the Office of Small Business Development to be held within five (5) days of receipt of the appeal. The Committee shall have authority by majority vote to affirm or set aside the recommendation of the Commissioner of Public Works and its decision in this regard shall be final. In the event a timely appeal, meeting the requirements above is not filed, or the Committee affirms

the Commissioner's recommendation following a timely appeal, meeting the requirements above, the Commissioner shall make an award in accordance with the recommendation.

H. **Percentage of Required SBE Participation**

Construction 25%
The Purchase of Goods and Services 25%
The Purchase of Professional Services 18%

BLANK

Form D
(Rev. 5/2013)

DEPARTMENT OF PUBLIC WORKS
SMALL BUSINESS ENTERPRISE PROGRAM

Form D –SBE MONTHLY REPORT

(1) Report for the Month of _____20_____ (Final: yes ___ no ___)

(2)Prime Contractor/Firm_____

(3)Full Address & Phone Number:_____

(4)Description of work/service performed and/or material supplied_____

(5) DPW Contract No. **C**_____ (6) Official Notice No. / Project Number _____

7) Start Date: _____ (8) Prime Contractor's Total $: _____

(9) Completion Date: _____ (10) Prime Contractor paid to date $: _____

(11) Small Business %_____ and Small Business $ amount _____

List all SBE subcontractor firm(s) utilized in connection with the above contract, either as service performed and/or supplier for the month. This form shall be signed and returned. **If this represents the final report, be sure to attach SBE Payment Certification Form (Form E) for each sub listed.**

NAME OF SBE FIRM(s)	WORK/SERVICE PERFORMED or MATERIAL SUPPLIED	AMOUNT PAID FOR THE MONTH	TOTAL $ PAID TO DATE
TOTAL PAID TO SBE(s)			

I/we hereby certify that I/we have read the above and approved this information to be precise and confirmed.

(12) Report Prepared By: _____
(Name) (Title) (Phone Number)

(13) Authorized Signature : _____
(Name) (Title)

(14) Date_____

Note: This form should be submitted no later than the **20th of every month** to **DEPARTMENT of PUBLIC WORKS CONTRACT ADMINISTRATION, Room 506, Municipal Building, 841 North Broadway, Milwaukee, WI 53202.**

DIRECTIONS FOR SBE MONTHLY REPORT (FORM D)

1. List the month and year that the report is being submitted for. **Note: If this is the final report, check yes and submit Form E Subcontractor Payment Certification Form.**
2. Prime contractor's or firm's registered company name.
3. List full registered business address to include city/state, zip code and telephone number.
4. Brief description service performed and/or material supplied on this contract.
5. List the DPW Contract Number, as represented on the contract document.
6. List the official notice & project number as represented on the front page of the contract.
7. List the start date of the project.
8. List the total dollars awarded to the prime contractor.
9. List the completion date of the project.
10. Total dollars paid to Prime contractor to date.
11. List SBE percentage **REQUIRED** on this project and the SBE dollar amount.
12. List the name, title and phone number of the individual who prepared the report.
13. Provide the authorized signature and title of the individual who approves the report.
14. List the date that the report is completed.

THIS REPORT IS DUE THE 20TH OF EVERY MONTH FOR THE PREVIOUS MONTH'S ACTIVITY. FAILURE TO RETURN THIS FORM BY THE SPECIFIED TIME MAY CAUSE A DELAY IN PAYMENTS.

FORM E
(Rev.05/2013)

City Of Milwaukee

Department Of Public Works

Small Business Enterprise Program (SBE)
Subcontractor Payment Certification

(This form must be completed by the SBE subcontractor and attached to the Prime Contractor's Final SBE Form D Report)

-PRIME CONTRACTOR & SUBCONTRACTOR EXECUTE-

Section A - **SBE** Company Officer & Prime Contractor Complete **For Payment That Has Been Received**

SBE Subcontractor Name : _____

Official Notice No.: _____Project No. _____ **DPW Contract No**. **C**_____

I hereby certify that I have received $ _____ for subcontract work on the above project.

Dated: _____Signature of **SBE** Subcontractor: _____

Printed Name & Title of **Certified SBE** Subcontractor:

_____

Acknowledged by **Prime** Contractor Signature: _____

Printed name & Title of **Prime** Contractor: _____

****

-PRIME CONTRACTOR & SUBCONTRACTOR EXECUTE-

Section B – Prime contractor and SBE Company Officers Complete if **Full Payment Has Not Been Made to the SBE Subcontractor and a balance remains to be paid.**

Prime Contractor: _____

SBE Subcontractor: _____

Official Notice No.: _____Project No. _____ **DPW Contract No**. **C**_____

I hereby certify that I will pay $_____ to _____
for subcontract work on the above project. (Name of SBE Firm)

Dated: _____ Signature of **Prime** Contractor: _____

Printed Name & Title of **Prime** Contractor: _____

Acknowledged by: **SBE** Subcontractor Signature: _____

Printed name & Title of **SBE** Subcontractor: _____

City of Milwaukee
Department of Public Works

Residents Preference Program Provisions

I. General

A. In accordance with Chapter 309 of the Milwaukee Code of Ordinances, residents preference hiring is required for all construction contracting activities of the Department of Public Works. The ordinance requires that 40% of WORKER HOURS worked on a DPW contract be performed by UNEMPLOYED or UNDEREMPLOYED RESIDENTS of the City, except in special cases where the Commissioner of Public Works determines there is sufficient reason to impose lesser levels of participation. Further, the Commissioner of Public Works may increase the percentage of RESIDENT worker participation to more than 40% on specific contracts. For this contract, bidders are required to show that the minimum percent of WORKER HOURS, as listed in the acknowledgements section/page and/or the Official Notice document will be performed by UNEMPLOYED or UNDEREMPLOYED RESIDENTS of the City. Up to one-third of required worker hours may be achieved by documenting the use of UNEMPLOYED or UNDEREMPLOYED RESIDENTS on projects undertaken by the contractor where such compliance is not required, or by hiring UNEMPLOYED or UNDEREMPLOYED RESIDENTS on a full-time permanent basis for non-construction job categories connected to the project. Such adjustments must be proposed in an affidavit on a form provided by the department setting forth the facts upon which the request for adjustment is based.

B. The contractor, prior to commencing work, shall submit an affidavit (Form I) for proof of residency for all employees utilized by the contractor and subcontractors to meet the Residents Preference Program requirements, stating that each employee is either UNEMPLOYED or UNDEREMPLOYED and is a RESIDENT of the City. The contractor shall prepare and submit accurate and timely resident utilization forms and reports to the Department of Public Works. Time Reports shall be submitted within ten (10) days following completion of work, or every three months, whichever comes first. The reports shall identify the name, address, race, gender, work classification, wage rates and hours worked of all employees utilized on the contract by the contractor and all subcontractors. Failure to submit the required forms and reports to the Department of Public Works may result in disqualification of future bids, delay of payments, or other appropriate sanctions. Final contract payments will not be made until the summary of hours worked on the back of the Prime Contractor's Affidavit of Compliance is completed and on file with the Department of Public Works. Forms shall be submitted to DPW, Room 506, Municipal Building, 841 North Broadway, Milwaukee, WI 53202.

C. During the performance of this contract the Department of Public Works reserves the right to conduct compliance reviews. If the contractor is not in compliance with the specifications, the Commissioner of Public Works will notify the contractor in writing of the corrective action that will bring the contractor into compliance. If the contractor fails or refuses to take corrective action as directed, or if the contractor, prime or sub, submits any documents which contain any false, misleading, or fraudulent information, or if the contractor or subcontractor fail to comply with this ordinance, the Department of Public Works may take one or more of the actions listed below.

1. Withhold payments on the contract.

2. Terminate or cancel the contract, in whole or in part.

3. Consider possible debarment of the contractor from bidding for a period of up to two years.
4. Any other remedy available to the City at law or in equity.

D. The penalty for any person, firm, or corporation knowingly engaging in fraud, misrepresentation, or in any attempt directly or indirectly, to evade the provisions of this ordinance by providing false, misleading, or fraudulent information shall, upon conviction, forfeit not less than $1,000 or more than $5,000 together with the costs of prosecution and, upon default of payment, shall be imprisoned in the county jail or house of correction not to exceed 90 days, or until the forfeiture costs are paid.

II. Definitions

A. RESIDENT – A person who maintains his or her place of permanent abode in the City of Milwaukee. Domiciliary intent is required to establish that a person is maintaining his or her place of permanent

abode in the City. Mere ownership of real property is not sufficient to establish domiciliary intent. Evidence of domiciliary intent includes, without limitations, the location where a person votes, pays personal income taxes, or obtains a driver's license.

B. UNEMPLOYED or UNDEREMPLOYED – a RESIDENT that has worked less than 1,200 hours in the preceding 12 months or has not worked in the preceding 30 days or, regardless of employment status, has household income at or below the federal poverty guidelines as adjusted by the Wisconsin Department of Public Instruction to define eligibility for reduced lunch in public schools. A RESIDENT will continue to qualify as unemployed or underemployed for five (5) years from the date he or she first participates in a contract under Chapter 309. If a RESIDENT becomes an apprentice for a contractor or becomes a participant in an on-the-job training program as determined by the City immediately after or in the course of performing on a particular construction contract, he or she shall continue to qualify as unemployed or underemployed for a period not exceeding 5 years from the date the person became an apprentice or participant in such on-the-job training program.

C. WORKER HOURS – means the total hours worked on a construction contract by skilled and unskilled construction trade workers, whether those workers are employed by the contractor or any subcontractor. In determining the total worker hours to be furnished at a construction site, the number of hours devoted to all tasks customarily performed on a construction site shall be included, whether or not such tasks are performed on the construction site. "Worker hours" includes work performed by persons filling apprenticeships and participating in on-the-job training programs and excludes the number of hours of work performed by all non-Wisconsin residents.

III. Residency Utilization Requirements

A. The contractor shall utilize UNEMPLOYED or UNDEREMPLOYED RESIDENTS of the City in a minimum amount equal to the percentage of the WORKER HOURS as stated in paragraph IA above.

B. The contractor, by signing and submitting a bid, certifies that it understands the provisions of Chapter 309 and knows of and intends to comply with them, and shall ensure that all subcontractors are also informed.

C. The contractor shall maintain, and shall ensure that all subcontractors maintain, personnel records listing the name, address, race and gender of all employees utilized for this contract and any records demonstrating that the employees utilized by the contractor in meeting the residency requirements are actual residents of the City. These records shall be maintained for seven (7) years after the contractor has received final payment under the contract and shall be made available to the Commissioner of Public Works upon reasonable notice.

D. Compliance with these residency requirements is an element of bid responsiveness. Failure to meet the specified residency requirements will render the bid unresponsive, and the Commissioner of Public Works may then recommend the award to the next apparent low bidder.

E. The City recognizes the following organization which can be contacted for access to trained or qualified workers from the City. Other organizations or sources of qualified RESIDENTS can be used at the bidder's discretion.

Big Step, located at 3841 West Wisconsin Avenue, Milwaukee, WI 53208. Telephone 414-342-9787, fax number 414-342-3546.

F. If the prime contractor has problems in meeting the residency requirements or if any other problems relative to residency participation arise during the completion of this project, the prime contractor shall immediately contact the Commissioner of Public Works.

G. Right to Appeal – All contracts awarded under ss. 7-14-2 and 7-22 of the City Charter shall be awarded by the Commissioner of Public Works to the lowest responsible bidder determined in accordance with any applicable City ordinances relating to the participation of Small Business Enterprise Programs or requiring participation of City RESIDENTS. Following the opening of any bid where the Commissioner has considered compliance with such City ordinances, the Commissioner shall publish in an official City newspaper his or her determination as to the lowest responsible bidder. Any bidder who objects to the determination based on the consideration of such City Ordinances, may appeal the recommendation by filing a written appeal with the Commissioner within five (5) working days of the date of publication. The appeal shall state the specific objection to the determination, including supporting documentation, and specify an alternative determination. Any appeals that do not conform to this section shall not be

considered. The Commissioner shall schedule a hearing before the Public Works Contract Appeals Committee which shall be comprised of the chair of the Economic Development Committee or his or her designee and a member of the Economic Development Committee selected by the chair and the Director of Administration or his or her designee to be held within five days of receipt of the appeal. The Public Works Contract Appeals Committee shall have the authority by majority vote to affirm or set aside the determination of the Commissioner and their decision in this regard shall be final. In the event that a timely appeal meeting the requirements of this paragraph is not filed, or the Committee affirms the Commissioner's determination following a timely appeal, the Commissioner shall make an award in accordance with his or her determination.

FORM I (Rev.2015)

_____
Contractor Name

_____
DPW Contract No.

Employee Affidavit

Residents Preference Program

I certify that I maintain my permanent residence in the City of Milwaukee and that I vote, pay personal income tax, obtain my driver's license, etc. at _____,Milwaukee, WI _____
(Address) (Zip Code)

Residency status:

To verify my resident status, attached please find the following (check ***two***)

_____ Copy of my voter's certification form.
_____ Copy of my last year's Form 1040.
_____ Copy of my current Wisconsin Driver's License or State ID.
_____ Copy of Other (i.e., Utility bill, Lease, etc.)

AND

Unemployment status:

I certify that I have been unemployed as follows: (Check those that apply)

_____ I have worked less than 1,200 hours in the preceding 12 months.
_____ I have not worked in the preceding 30 days.

OR

Underemployed status:

_____I certify that based on the attached chart (Income Eligibility Guidelines), I am underemployed.

.

_____
Print Name

_____
Sign Name

_____
Social Security Number

_____
Home Telephone Number

Subscribed and sworn to me this _____day

Of _____, _____ A.D.

My Commission Expires _____.

_____
Notary Public Milwaukee County

please return completed form and required attachments to:
Barbara Trible | DPW Contracts Office | 841 N Broadway – Room 506 | Milwaukee, WI 53202

Income Eligibility Guidelines
July 1, 2015 to June 30, 2016

Eligibility determination is based on household size and income.
Total income must be *at* or *below* the amounts in this table.

Household Size	Yearly	Monthly	Twice per month	Every 2 weeks	Weekly
1	**21,775**	**1,815**	**908**	**838**	**419**
2	**29,471**	**2,456**	**1,228**	**1,134**	**567**
3	**37,167**	**3,098**	**1,549**	**1,430**	**715**
4	**44,863**	**3,739**	**1,870**	**1,726**	**863**
5	**52,559**	**4,380**	**2,190**	**2,022**	**1,011**
6	**60,255**	**5,022**	**2,511**	**2,318**	**1,159**
7	**67,951**	**5,663**	**2,832**	**2,614**	**1,307**
8	**75,647**	**6,304**	**3,152**	**2,910**	**1,455**
9	**83,343**	**6,946**	**3,473**	**3,206**	**1,603**
10	**91,039**	**7,588**	**3,794**	**3,502**	**1,751**
11	**98,735**	**8,230**	**4,115**	**3,798**	**1,899**
12	**106,431**	**8,872**	**4,436**	**4,094**	**2,047**
For Each Additional Household Member Add	**7,696**	**642**	**321**	**296**	**148**

Source: Wisconsin Department of Public Instruction

City of Milwaukee

Department of Public Works

Apprenticeship Provisions

I. General:

A. In accordance with Section 309-38 of the Milwaukee Code of Ordinances, apprenticeship requirements will be specified on all Department of Public Works construction contracts, where appropriate, which are in excess of $100,000. The ordinance requires that a contractor employ apprentices in the performance of the contract and of all subcontracts entered into by the contractor in accordance with the maximum ratio of apprentices to journeymen as established by the Wisconsin Department of Industry, Labor, and Human Relations. Fair consideration must be given to minorities and women. For this contract, bidders are required to utilize apprentice(s) from _____ of the following trade(s):

(See "Ratio of Apprentices to Journeymen").

B. The contractor shall prepare and submit an accurate and timely Apprenticeship Utilization Form (Form F) and other reports to the Department of Public Works. The Apprenticeship Utilization Form shall be returned with the executed contract and shall specifically identify the apprentice(s) that will work on the project. The Contractor Time Report shall be submitted within ten (10) days following completion of work or every three (3) months, whichever comes first. Failure to submit the required forms and reports to the Department of Public Works may result in disqualification of future bids, delay of payments, or other appropriate sanctions. Final contract payments will not be made until all apprenticeship related reports are on file with the Department of Public Works.

C. During the performance of this contract the Department of Public Works reserves the right to conduct compliance reviews. If the contractor is not in compliance with the specifications, the Commissioner of Public Works will notify the contractor in writing of the corrective action that will bring the contractor into compliance. If the contractor fails or refuses to take corrective action as directed, or if the contractor, prime or sub, submits any documents which contain any false, misleading, or fraudulent information, or if the contractor or subcontractor fail to comply with this ordinance, the Department of Public Works may take one or more of the actions listed below:

1. Withhold payments on the contract.

2. Terminate, suspend, or cancel the contract, in whole or in part.

3. After due process, consider debarment of the contractor from bidding for a two-year period.

4. Any other remedy available to the City at law or in equity.

II. Definitions:

A. Apprentice - a person, 16 years of age or over, who shall enter into a written contract of service where he or she is to receive from or through his or her employer in consideration for his or her services, in whole or in part, instruction in any trade, craft, or business. Apprenticeship agreements shall be governed by Ch. 106, Wis. Stats.

B. Construction - Means either new construction work or repair work on any roads, bridges, sewers, streets, alleys, buildings, or any other public works.

III. Apprenticeship Utilization Requirements:

A. The contractor shall utilize apprentices in a minimum amount equal to that stated in paragraph I-A above.

B. The contractor, by signing and submitting a bid, certifies that the contractor understands the provisions of Chapter 309 and knows of and intends to comply with them.

C. The contractor shall maintain personnel records listing the names and addresses of its employees utilized for this contract in meeting apprenticeship requirements. These records shall be maintained for three (3) years after the contractor has received final payment under the contract and shall be made available to the Commissioner of Public Works upon reasonable notice.

D. Compliance with these apprenticeship requirements is an element of bid responsiveness. Failure to meet the specified apprenticeship requirements will render the bid unresponsive, and the Commissioner of Public Works may then recommend award to the next apparent low bidder.

E. If the prime contractor has problems in meeting the apprenticeship requirements or if any other problems relative to apprenticeship participation arise during the completion of this project, the prime contractor shall immediately contact the Commissioner of Public Works.

FORM F

PROPOSED RESIDENT/APPRENTICE UTILIZATION FORM

This is a preliminary statement of proposed workforce needs where known

Official Notice # _____ Project # _____ Contract # _____

Contractor_____

JOB CATEGORY	PROPOSED # OF HOURS ON THIS PROJECT	PROPOSED # OF HOURS FOR SPECIAL IMPACT AREA RESIDENTS	PROPOSED # OF HOURS FOR ALL OTHER WORKERS
TRUCK DRIVERS:		(%)	(%)
OPERATING ENGINEERS:			
Journeymen		(%)	(%)
Apprentices		(%)	(%)
SKILLED TRADES: (Specify)			
Journeymen		(%)	(%)
Apprentices		(%)	(%)
Trainees		(%)	(%)
LABORERS: (Specify type)			
		(%)	(%)
		(%)	(%)
		(%)	(%)
		(%)	(%)
		(%)	(%)

NAME and ADDRESS of Target Area Residents:

_____ _____
_____ _____
_____ _____

_____ _____ _____
_____ _____ _____
_____ _____ _____

_____ _____ _____
_____ _____ _____
_____ _____ _____

NAME and ADDRESS of Apprentices:

_____ _____
_____ _____
_____ _____

_____ _____ _____
_____ _____ _____
_____ _____ _____

(REV. 10/16/02)

PREVAILING WAGE NOTICE

ALL PREVAILING WAGE CONTRACTS AWARDED BY THE DEPARTMENT OF PUBLIC WORKS AFTER THE FIRST OF ANY CALENDAR YEAR ARE SUBJECT TO THE NEW PREVAILING WAGE SCHEDULE THAT GOES INTO EFFECT ON JANUARY 2ND. THE PREVAILING WAGE SCHEDULE INCLUDED IN BID PACKAGES ISSUED LATE IN THE PRECEDING YEAR MAY NOT BE TOTALLY ACCURATE FOR CONTRACTS OFFICIALLY AWARDED AFTER THE TURN OF THE YEAR. THE NEW PREVAILING WAGE WILL BE INCORPORATED INTO THE CONTRACT WHEN AWARDED.

BIDDERS ARE REQUIRED TO UTILIZE THE WISCONSIN DEPARTMENT OF WORKFORCE DEVELOPMENT'S "DICTIONARY OF OCCUPATIONAL CLASSIFICATIONS AND WORK DESCRIPTIONS" TO DETERMINE THE APPROPRIATE JOB CLASSIFICATIONS AND WAGE RATES FOR THEIR EMPLOYEES PRIOR TO BIDDING. THIS DOCUMENT CAN BE FOUND ON THEIR WEBSITE AT DWD.WISCONSIN.GOV; TYPE "DICTIONARY" IN THE SEARCH BOX.

Rev. 06/07

PREVAILING WAGE RATE DETERMINATION
Issued by the State of Wisconsin
Department of Workforce Development
Pursuant to s. 66.0903, Wis. Stats.
Issued On: 1/8/2016

DETERMINATION NUMBER: 201600002

EXPIRATION DATE: Prime Contracts MUST Be Awarded or Negotiated On Or Before 12/31/2016. If NOT, You MUST Reapply.

PROJECT NAME: ALL PUBLIC WORKS PROJECTS UNDER SEC. 66.0903, STATS-CITY OF MILWAUKEE

PROJECT LOCATION: MILWAUKEE CITY, MILWAUKEE COUNTY, WI

CONTRACTING AGENCY: CITY OF MILWAUKEE-DEPT OF PUBLIC WORKS

CLASSIFICATION:	Contractors are responsible for correctly classifying their workers. Either call the Department of Workforce Development (DWD) with trade or classification questions or consult DWD's Dictionary of Occupational Classifications & Work Descriptions on the DWD website at: dwd.wisconsin.gov/er/prevailing_wage_rate/Dictionary/dictionary_main.htm.
OVERTIME:	Time and one-half must be paid for all hours worked: - over 10 hours per day on prevailing wage projects - over 40 hours per calendar week - Saturday and Sunday - on all of the following holidays: January 1; the last Monday in May; July 4; the 1st Monday in September; the 4th Thursday in November; December 25; - The day before if January 1, July 4 or December 25 falls on a Saturday; - The day following if January 1, July 4 or December 25 falls on a Sunday. Apply the time and one-half overtime calculation to whichever is higher between the Hourly Basic Rate listed on this project determination or the employee's regular hourly rate of pay. Add any applicable Premium or DOT Premium to the Hourly Basic Rate before calculating overtime. A DOT Premium (discussed below) may supersede this time and one-half requirement.
FUTURE INCREASE:	When a specific trade or occupation requires a future increase, you MUST add the full hourly increase to the "TOTAL" on the effective date(s) indicated for the specific trade or occupation.
PREMIUM PAY:	If indicated for a specific trade or occupation, the full amount of such pay MUST be added to the "HOURLY BASIC RATE OF PAY" indicated for such trade or occupation, whevenever such pay is applicable.
DOT PREMIUM:	This premium only applies to highway and bridge projects owned by the Wisconsin Department of Transportation and to the project type heading "Airport Pavement or State Highway Construction." DO NOT apply the premium calculation under any other project type on this determination.
APPRENTICES:	Pay apprentices a percentage of the applicable journeyperson's hourly basic rate of pay and hourly fringe benefit contributions specified in this determination. Obtain the appropriate percentage from each apprentice's contract or indenture.
SUBJOURNEY:	Subjourney wage rates may be available for some of the trades or occupations indicated below with the exception of laborers, truck drivers and heavy equipment operators. Any employer interested in using a subjourney classification on this project MUST complete Form ERD-10880 and request the applicable wage rate from the Department of Workforce Development PRIOR to using the subjourney worker on this project.

This document **MUST BE POSTED** by the **CONTRACTING AGENCY** in at least one conspicuous and easily accessible place **on the site of the project** . A local governmental unit may post this document at the place normally used to post public notices if there is no common site on the project. This document **MUST** remain posted during the entire time any worker is employed on the project and **MUST** be physically incorporated into the specifications and all contracts and subcontracts. If you have any questions, please write to the Equal Rights Division, Labor Standards Bureau, P.O. Box 8928, Madison, Wisconsin 53708 or call (608) 266-6861.

The following statutory provisions apply to local governmental unit projects of public works and are set forth below pursuant to the requirements of s. 66.0903(8), Stats.

s. 66.0903 (1) (f) & s. 103.49 (1) (c) "PREVAILING HOURS OF LABOR" for any trade or occupation in any area means 10 hours per day and 40 hours per week and may not include any hours worked on a Saturday or Sunday or on any of the following holidays:

1. January 1.
2. The last Monday in May.
3. July 4.
4. The first Monday in September.
5. The 4th Thursday in November.
6. December 25.
7. The day before if January 1, July 4 or December 25 falls on a Saturday.
8. The day following if January 1, July 4 or December 25 falls on a Sunday.

s. 66.0903 (10) RECORDS; INSPECTION; ENFORCEMENT.
(a) Each contractor, subcontractor, or contractor's or subcontractor's agent performing work on a project of public works that is subject to this section shall keep full and accurate records clearly indicating the name and trade or occupation of every person performing the work described in sub. (4) and an accurate record of the number of hours worked by each of those persons and the actual wages paid for the hours worked.

s. 66.0903 (11) LIABILITY AND PENALTIES.
(a) 1. Any contractor, subcontractor, or contractor's or subcontractor's agent who fails to pay the prevailing wage rate determined by the department under sub. (3) or who pays less than 1.5 times the hourly basic rate of pay for all hours worked in excess of the prevailing hours of labor is liable to any affected employee in the amount of his or her unpaid wages or his or her unpaid overtime compensation and in an additional amount as liquidated damages as provided under subd. 2., 3., whichever is applicable.
2. If the department determines upon inspection under sub. (10) (b) or (c) that a contractor, subcontractor, or contractor's or subcontractor's agent has failed to pay the prevailing wage rate determined by the department under sub. (3) or has paid less than 1.5 times the hourly basic rate of pay for all hours worked in excess of the prevailing hours of labor, the department shall order the contractor to pay to any affected employee the amount of his or her unpaid wages or his or her unpaid overtime compensation and an additional amount equal to 100 percent of the amount of those unpaid wages or that unpaid overtime compensation as liquidated damages within a period specified by the department in the order.
3. In addition to or in lieu of recovering the liability specified in subd. 1. as provided in subd. 2., any employee for and in behalf of that employee and other employees similarly situated may commence an action to recover that liability in any court of competent jurisdiction. If the court finds that a contractor, subcontractor, or contractor's or subcontractor's agent has failed to pay the prevailing wage rate determined by the department under sub. (3) or has paid less than 1.5 times the hourly basic rate of pay for all hours worked in excess of the prevailing hours of labor, the court shall order the contractor, subcontractor, or agent to pay to any affected employee the amount of his or her unpaid wages or his or her unpaid overtime compensation and an additional amount equal to 100 percent of the amount of those unpaid wages or that unpaid overtime compensation as liquidated damages.
5. No employee may be a party plaintiff to an action under subd. 3. unless the employee consents in writing to become a party and the consent is filed in the court in which the action is brought. Notwithstanding s. 814.04 (1), the court shall, in addition to any judgment awarded to the plaintiff, allow reasonable attorney fees and costs to be paid by the defendant.

BUILDING OR HEAVY CONSTRUCTION

Includes sheltered enclosures with walk-in access for the purpose of housing persons, employees, machinery, equipment or supplies and non-sheltered work such as canals, dams, dikes, reservoirs, storage tanks, etc. A sheltered enclosure need not be "habitable" in order to be considered a building. The installation of machinery and/or equipment, both above and below grade level, does not change a project's character as a building. On-site grading, utility work and landscaping are included within this definition. Residential buildings of four (4) stories or less, agricultural buildings, parking lots and driveways are NOT included within this definition.

SKILLED TRADES

Fringe Benefits Must Be Paid On All Hours Worked

CODE	TRADE OR OCCUPATION	HOURLY BASIC RATE OF PAY $	HOURLY FRINGE BENEFITS $	TOTAL $
101	Acoustic Ceiling Tile Installer Future Increase(s): Add $1.65/hr on 6/1/2016.	35.28	20.96	56.24
102	Boilermaker	30.21	21.97	52.18
103	Bricklayer, Blocklayer or Stonemason Future Increase(s): Add $1.45 on 06/06/2016 Premium Increase(s): DOT PREMIUM: Pay two times the hourly basic rate on Sunday, New Year’s Day, Memorial Day, Independence Day, Labor Day, Thanksgiving Day & Christmas Day.	36.74	19.26	56.00
104	Cabinet Installer Future Increase(s): Add $1.65/hr on 6/1/2016.	35.28	20.96	56.24
105	Carpenter Future Increase(s): Add $1.65/hr on 6/1/2016. Premium Increase(s): DOT PREMIUM: Pay two times the hourly basic rate on Sunday, New Year's Day, Memorial Day, Independence Day, Labor Day, Thanksgiving Day & Christmas Day.	35.28	20.96	56.24
106	Carpet Layer or Soft Floor Coverer Future Increase(s): Add $1.65/hr on 6/1/2016.	35.28	20.96	56.24
107	Cement Finisher Future Increase(s): Add $1.45 on 05/31/2016	32.88	19.88	52.76
108	Drywall Taper or Finisher Future Increase(s): Add $1.00/hr eff. 06/01/2016; Add $1.05/hr eff. 06/01/2017	30.42	21.19	51.61
109	Electrician Future Increase(s): Add $1.60 on 6/1/16; Add $1.70 on 6/1/17 Premium Increase(s): DOT PREMIUM: Pay two times the hourly basic rate on Sunday, New Year’s Day, Memorial Day, Independence Day, Labor Day, Thanksgiving Day & Christmas Day.	35.13	23.19	58.32

CODE	Fringe Benefits Must Be Paid On All Hours Worked TRADE OR OCCUPATION	HOURLY BASIC RATE OF PAY $	HOURLY FRINGE BENEFITS $	TOTAL $
110	Elevator Constructor	43.84	27.09	70.93
111	Fence Erector	24.73	19.69	44.42
112	Fire Sprinkler Fitter	39.66	21.11	60.77
113	Glazier Future Increase(s): Add $.90/hr eff. 06/01/2016	34.45	18.99	53.44
114	Heat or Frost Insulator	33.53	27.31	60.84
115	Insulator (Batt or Blown)	23.62	11.55	35.17
116	Ironworker	30.77	23.72	54.49
117	Lather	34.13	20.61	54.74
118	Line Constructor (Electrical)	40.81	18.06	58.87
119	Marble Finisher	25.72	18.54	44.26
120	Marble Mason	35.89	18.77	54.66
121	Metal Building Erector	19.00	2.00	21.00
122	Millwright Future Increase(s): Add $1.35/hr on 6/1/2016.	29.78	26.38	56.16
123	Overhead Door Installer	28.73	0.00	28.73
124	Painter Future Increase(s): Add $1.00/hr on 06/01/2016; Add $1.05/hr on 06/01/2017 Premium Increase(s): Add $.20/hr for paperhanging; Add $.35/hr for bridge, iron and drywall; Add $.75/hr for spraying and sandblasting; Add $.60/hr for EIFS work; Add $1.00/hr for lead based paint removal.	30.07	21.19	51.26
125	Pavement Marking Operator	30.00	19.61	49.61
126	Piledriver Future Increase(s): Add $1.60/hr on 6/1/2016. Premium Increase(s): Add $.65/hr for Piledriver Loftsman; Add $.75/hr for Sheet Piling Loftsman. DOT PREMIUM: Pay two times the hourly basic rate on Sunday, New Year's Day, Memorial Day, Independence Day, Labor Day, Thanksgiving Day & Christmas Day.	30.58	27.54	58.12
127	Pipeline Fuser or Welder (Gas or Utility)	41.01	21.54	62.55
129	Plasterer	30.22	20.53	50.75

CODE	Fringe Benefits Must Be Paid On All Hours Worked TRADE OR OCCUPATION	HOURLY BASIC RATE OF PAY $	HOURLY FRINGE BENEFITS $	TOTAL $
130	Plumber Future Increase(s): Add $2/hr on 6/1/16; Add $2/hr on 6/1/17.	39.62	20.12	59.74
132	Refrigeration Mechanic Future Increase(s): Add $2.00 on 6/1/16; Add $2.00 on 6/1/17	42.36	21.99	64.35
133	Roofer or Waterproofer	29.65	18.61	48.26
134	Sheet Metal Worker	37.91	21.05	58.96
135	Steamfitter Future Increase(s): Add $2.00 on 6/1/16; Add $2.00 on 6/1/17	42.36	21.99	64.35
137	Teledata Technician or Installer Premium Increase(s): DOT PREMIUM: Pay two times the hourly basic rate on Sunday, New Year's Day, Memorial Day, Independence Day, Labor Day, Thanksgiving Day & Christmas Day.	26.00	17.74	43.74
138	Temperature Control Installer	41.01	21.54	62.55
139	Terrazzo Finisher	25.72	18.54	44.26
140	Terrazzo Mechanic Future Increase(s): Add $1.45 on 06/06/2016	31.59	19.60	51.19
141	Tile Finisher	30.00	0.00	30.00
142	Tile Setter	30.18	17.34	47.52
143	Tuckpointer, Caulker or Cleaner	34.28	18.60	52.88
144	Underwater Diver (Except on Great Lakes)	36.74	16.00	52.74
146	Well Driller or Pump Installer Future Increase(s): Add $1/hr on 6/1/2016; Add $1/hr on 6/1/2017.	25.32	16.40	41.72
147	Siding Installer	17.00	6.71	23.71
150	Heavy Equipment Operator - ELECTRICAL LINE CONSTRUCTION ONLY	36.73	20.41	57.14
151	Light Equipment Operator -ELECTRICAL LINE CONSTRUCTION ONLY	32.65	14.96	47.61
152	Heavy Truck Driver - ELECTRICAL LINE CONSTRUCTION ONLY	28.57	13.71	42.28
153	Light Truck Driver - ELECTRICAL LINE CONSTRUCTION ONLY	26.53	13.55	40.08
154	Groundman - ELECTRICAL LINE CONSTRUCTION ONLY	25.00	12.55	37.55

TRUCK DRIVERS

CODE	Fringe Benefits Must Be Paid On All Hours Worked TRADE OR OCCUPATION	HOURLY BASIC RATE OF PAY $	HOURLY FRINGE BENEFITS $	TOTAL $
201	Single Axle or Two Axle	34.47	18.70	53.17
203	Three or More Axle	20.00	18.19	38.19
204	Articulated, Euclid, Dumptor, Off Road Material Hauler Future Increase(s): Add $1.60/hr on 5/30/2016.	33.02	19.15	52.17
205	Pavement Marking Vehicle	20.00	18.19	38.19
207	Truck Mechanic	20.00	18.19	38.19

LABORERS

CODE	Fringe Benefits Must Be Paid On All Hours Worked TRADE OR OCCUPATION	HOURLY BASIC RATE OF PAY $	HOURLY FRINGE BENEFITS $	TOTAL $
301	General Laborer	29.01	17.39	46.40
302	Asbestos Abatement Worker	19.00	0.00	19.00
303	Landscaper	14.00	11.63	25.63
310	Gas or Utility Pipeline Laborer (Other Than Sewer and Water)	20.83	18.39	39.22
311	Fiber Optic Laborer (Outside, Other Than Concrete Encased)	18.53	0.00	18.53
314	Railroad Track Laborer	17.00	5.43	22.43
315	Final Construction Clean-Up Worker	29.01	17.39	46.40

HEAVY EQUIPMENT OPERATORS
SITE PREPARATION, UTILITY OR LANDSCAPING WORK ONLY

CODE	Fringe Benefits Must Be Paid On All Hours Worked TRADE OR OCCUPATION	HOURLY BASIC RATE OF PAY $	HOURLY FRINGE BENEFITS $	TOTAL $
501	Air Track, Rotary or Percussion Drilling Machine &/or Hammers, Blaster; Asphalt Milling Machine; Boring Machine (Directional, Horizontal or Vertical); Backhoe (Track Type) Having a Mfgr's Rated Capacity of 130,000 Lbs. or Over; Backhoe (Track Type) Having a Mfgr's Rated Capacity of Under 130,000 Lbs., Backhoe (Mini, 15,000 Lbs. & Under); Bulldozer or Endloader (Over 40 hp); Compactor (Self-Propelled 85 Ft Total Drum Width & Over, or Tractor Mounted, Towed & Light Equipment); Concrete Batch Plant, Batch Hopper; Concrete Breaker (Large, Auto, Vibratory/Sonic, Manual or Remote); Crane, Shovel, Dragline, Clamshells; Forklift (Machinery Moving or Steel Erection, 25 Ft & Over); Gradall (Cruz-Aire Type); Grader or Motor Patrol; Master Mechanic; Mechanic or Welder; Robotic Tool Carrier (With or Without Attachments); Scraper (Self Propelled or Tractor Drawn) 5 cu yds or More Capacity; Tractor or Truck Mounted Hydraulic Backhoe; Tractor or Truck Mounted Hydraulic Crane (10 Tons or Under); Tractor (Scraper, Dozer, Pusher, Loader); Trencher (Wheel Type or Chain Type Having Over 8 Inch Bucket). Future Increase(s): Add $1.60/hr on 5/30/2016.	35.52	19.15	54.67
502	Backfiller; Broom or Sweeper; Bulldozer or Endloader (Under 40 hp); Environmental Burner; Forestry Equipment, Timbco, Tree Shear, Tub Grinder, Processor; Jeep Digger; Screed (Milling Machine); Skid Rig; Straddle Carrier or Travel Lift; Stump Chipper; Trencher (Wheel Type or Chain Type Having 8 Inch Bucket & Under). Future Increase(s): Add $1.60/hr on 5/30/2016.	35.52	19.15	54.67
503	Air Compressor (&/or 400 CFM or Over); Augers (Vertical & Horizontal); Compactor (Self-Propelled 84 Ft Total Drum Width & Under, or Tractor Mounted, Towed & Light Equipment); Crusher, Screening or Wash Plant; Farm or Industrial Type Tractor; Forklift; Generator (&/or 150 KW or Over); Greaser; High Pressure Utility Locating Machine (Daylighting Machine); Mulcher; Oiler; Post Hole Digger or Driver; Pump (3 Inch or Over) or Well Points; Refrigeration Plant or Freeze Machine; Rock, Stone Breaker; Skid Steer Loader (With or Without Attachments); Vibratory Hammer or Extractor, Power Pack. Future Increase(s): Add $1.60/hr on 5/30/2016.	35.22	19.15	54.37
504	Work Performed on the Great Lakes Including Diver; Wet Tender or Hydraulic Dredge Engineer.	41.65	21.71	63.36
505	Work Performed on the Great Lakes Including Crane or Backhoe Operator; Assistant Hydraulic Dredge Engineer; Hydraulic Dredge Leverman or Diver's Tender; Mechanic or Welder; 70 Ton & Over Tug Operator. Future Increase(s): Add $1.25/hr on 1/1/2017. Premium Increase(s): Add $.50/hr for Friction Crane, Lattice Boom or Crane Certification (CCO).	44.05	23.24	67.29

CODE	Fringe Benefits Must Be Paid On All Hours Worked TRADE OR OCCUPATION	HOURLY BASIC RATE OF PAY $	HOURLY FRINGE BENEFITS $	TOTAL $
506	Work Performed on the Great Lakes Including Deck Equipment Operator or Machineryman (Maintains Cranes Over 50 Tons or Backhoes 115,000 Lbs. or More); Tug, Launch or Loader, Dozer or Like Equipment When Operated on a Barge, Breakwater Wall, Slip, Dock or Scow, Deck Machinery. Future Increase(s): Add $1.25/hr on 1/1/2017.	39.20	23.09	62.29
507	Work Performed on the Great Lakes Including Deck Equipment Operator, Machineryman or Fireman (Operates 4 Units or More or Maintains Cranes 50 Tons or Under or Backhoes 115,000 Lbs. or Under); Deck Hand, Deck Engineer or Assistant Tug Operator; Off Road Trucks - Great Lakes ONLY.	36.72	21.15	57.87

HEAVY EQUIPMENT OPERATORS
EXCLUDING SITE PREPARATION, UTILITY, PAVING LANDSCAPING WORK

CODE	Fringe Benefits Must Be Paid On All Hours Worked TRADE OR OCCUPATION	HOURLY BASIC RATE OF PAY $	HOURLY FRINGE BENEFITS $	TOTAL $
508	Boring Machine (Directional); Crane, Tower Crane, Pedestal Tower or Derrick, With or Without Attachments, With a Lifting Capacity of Over 100 Tons, Self-Erecting Tower Crane With a Lifting Capacity of Over 4,000 Lbs., Crane With Boom Dollies; Crane, Tower Crane, Pedestal Tower or Derrick, With Boom, Leads &/or Jib Lengths Measuring 176 Ft or Over; Master Mechanic. Premium Increase(s): Crane Operators with CCO certification add $.50/hr. Cranes with boom length over 200 ft. not exceeding 300 ft. OR lifting capacity over 200 ton not exceeding 300 ton add $.50/hr. Over 300 ton OR 300 ft. add $.01/hr. per foot OR ton whichever is greater.	41.66	20.65	62.31
509	Backhoe (Track Type) Having a Mfgr's Rated Capacity of 130,000 Lbs. or Over; Boring Machine (Horizontal or Vertical); Caisson Rig; Crane, Tower Crane, Portable Tower, Pedestal Tower or Derrick, With or Without Attachments, With a Lifting Capacity of 100 Tons or Under, Self-Erecting Tower Crane With A Lifting Capacity Of 4,000 Lbs. & Under; Crane, Tower Crane, Portable Tower, Pedestal Tower or Derrick, With Boom, Leads &/or Jib Lengths Measuring 175 Ft or Under; Pile Driver; Versi Lifts, Tri-Lifts & Gantrys (20,000 Lbs. & Over). Premium Increase(s): Crane Operators with CCO certification add $.50/hr.	41.16	20.65	61.81
510	Backhoe (Track Type) Having a Mfgr.'s Rated Capacity of Under 130,000 Lbs., Backhoe (Mini, 15,000 Lbs. & Under); Concrete Bump Cutter, Grinder, Planing or Grooving Machine; Concrete Laser/Screed; Concrete Paver (Slipform); Concrete Pump (Over 46 Meter), Concrete Conveyor (Rotec or Bidwell Type); Concrete Slipform Placer Curb & Gutter Machine; Concrete Spreader & Distributor; Dredge (NOT Performing Work on the Great Lakes); Forklift (Machinery Moving or Steel Erection, 25 Ft & Over); Gradall (Cruz-Aire Type); Hydro-Blaster (10,000 PSI or Over); Milling Machine; Skid Rig; Traveling Crane (Bridge Type). Premium Increase(s): Crane Operators with CCO certification add $.50/hr.	40.66	20.65	61.31

CODE	Fringe Benefits Must Be Paid On All Hours Worked TRADE OR OCCUPATION	HOURLY BASIC RATE OF PAY $	HOURLY FRINGE BENEFITS $	TOTAL $
511	Air, Track, Rotary or Percussion Drilling Machine &/or Hammers, Blaster; Bulldozer or Endloader (Over 40 hp); Compactor (Self-Propelled 85 Ft Total Drum Width & Over, or Tractor Mounted, Towed & Light Equipment); Concrete Pump (46 Meter & Under), Concrete Conveyor (Rotec or Bidwell Type); Crane (Carry Deck, Mini) or Truck Mounted Hydraulic Crane (10 Tons or Under); Environmental Burner; Gantrys (Under 20,000 Lbs.); Grader or Motor Patrol; High Pressure Utility Locating Machine (Daylighting Machine); Manhoist; Material or Stack Hoist; Mechanic or Welder; Railroad Track Rail Leveling Machine, Tie Placer, Extractor, Tamper, Stone Leveler or Rehabilitation Equipment; Roller (Over 5 Ton); Scraper (Self Propelled or Tractor Drawn) 5 cu yd or More Capacity; Screed (Milling Machine); Sideboom; Straddle Carrier or Travel Lift; Tining or Curing Machine; Tractor (Scraper, Dozer, Pusher, Loader); Tractor or Truck Mounted Hydraulic Backhoe; Tractor or Truck Mounted Hydraulic Crane (10 Tons or Under); Trencher (Wheel Type or Chain Type Having Over 8-Inch Bucket).	39.97	20.65	60.62
512	Backfiller; Broom or Sweeper; Bulldozer or Endloader (Under 40 hp); Compactor (Self-Propelled 84 Ft Total Drum Width & Under, or Tractor Mounted, Towed & Light Equipment); Concrete Batch Plant, Batch Hopper; Concrete Breaker (Large, Auto, Vibratory/Sonic, Manual or Remote); Concrete Conveyor System; Concrete Finishing Machine (Road Type); Fireman (Pile Driver & Derrick NOT Performing Work on the Great Lakes); Grout Pump; Hoist (Tugger, Automatic); Industrial Locomotives; Jeep Digger; Lift Slab Machine; Mulcher; Roller (Rubber Tire, 5 Ton or Under); Screw or Gypsum Pumps; Stabilizing or Concrete Mixer (Self-Propelled or 14S or Over); Stump Chipper; Trencher (Wheel Type or Chain Type Having 8-Inch Bucket & Under); Winches & A-Frames.	38.09	20.65	58.74
513	Air Compressor (&/or 400 CFM or Over); Air, Electric or Hydraulic Jacking System; Augers (Vertical & Horizontal); Boatmen (NOT Performing Work on the Great Lakes); Boiler (Temporary Heat); Crusher, Screening or Wash Plant; Elevator; Farm or Industrial Type Tractor; Fireman (Asphalt Plant NOT Performing Work on the Great Lakes); Forklift; Generator (&/or 150 KW or Over); Greaser; Heaters (Mechanical); Loading Machine (Conveyor); Oiler; Post Hole Digger or Driver; Prestress Machine; Pump (3 Inch or Over) or Well Points; Refrigeration Plant or Freeze Machine; Robotic Tool Carrier (With or Without Attachments); Rock, Stone Breaker; Skid Steer Loader (With or Without Attachments); Vibratory Hammer or Extractor, Power Pack.	32.94	20.65	53.59
514	Gas or Utility Pipeline, Except Sewer & Water (Primary Equipment). Future Increase(s): Add $1/hr on 5/30/2016.	37.04	22.44	59.48
515	Gas or Utility Pipeline, Except Sewer & Water (Secondary Equipment).	34.76	20.30	55.06
516	Fiber Optic Cable Equipment	21.00	0.00	21.00

SEWER, WATER OR TUNNEL CONSTRUCTION

Includes those projects that primarily involve public sewer or water distribution, transmission or collection systems and related tunnel work (excluding buildings).

SKILLED TRADES

CODE	Fringe Benefits Must Be Paid On All Hours Worked TRADE OR OCCUPATION	HOURLY BASIC RATE OF PAY $	HOURLY FRINGE BENEFITS $	TOTAL $
103	Bricklayer, Blocklayer or Stonemason	35.89	18.77	54.66
105	Carpenter	34.13	20.61	54.74
107	Cement Finisher Future Increase(s): Add $1.75 on 6/1/16. Premium Increase(s): DOT PREMIUMS: 1) Pay two times the hourly basic rate on Sunday, New Year's Day, Memorial Day, Independence Day, Labor Day, Thanksgiving Day & Christmas Day. 2) Add $1.40/hr when the Wisconsin Department of Transportation or responsible governing agency requires that work be performed at night under artificial illumination with traffic control and the work is completed after sunset and before sunrise.	31.44	22.39	53.83
109	Electrician Future Increase(s): Add $1.60 on 6/1/16; Add $1.70 on 6/1/17 Premium Increase(s): DOT PREMIUM: Pay two times the hourly basic rate on Sunday, New Year’s Day, Memorial Day, Independence Day, Labor Day, Thanksgiving Day & Christmas Day.	35.13	23.19	58.32
111	Fence Erector	24.73	19.69	44.42
116	Ironworker	32.50	20.58	53.08
118	Line Constructor (Electrical)	40.81	18.06	58.87
125	Pavement Marking Operator	30.00	19.61	49.61
126	Piledriver	30.11	26.51	56.62
130	Plumber Future Increase(s): Add $1.50 on 6/1/16	39.95	19.45	59.40
135	Steamfitter	41.01	21.54	62.55
137	Teledata Technician or Installer	25.63	17.25	42.88
143	Tuckpointer, Caulker or Cleaner	34.28	18.60	52.88
144	Underwater Diver (Except on Great Lakes)	31.00	20.43	51.43
146	Well Driller or Pump Installer Future Increase(s): Add $1/hr on 6/1/2016; Add $1/hr on 6/1/2017.	25.32	16.40	41.72

CODE	Fringe Benefits Must Be Paid On All Hours Worked TRADE OR OCCUPATION	HOURLY BASIC RATE OF PAY $	HOURLY FRINGE BENEFITS $	TOTAL $
150	Heavy Equipment Operator - ELECTRICAL LINE CONSTRUCTION ONLY	36.73	15.92	52.65
151	Light Equipment Operator -ELECTRICAL LINE CONSTRUCTION ONLY	32.65	14.96	47.61
152	Heavy Truck Driver - ELECTRICAL LINE CONSTRUCTION ONLY	28.57	13.71	42.28
153	Light Truck Driver - ELECTRICAL LINE CONSTRUCTION ONLY	26.53	13.55	40.08
154	Groundman - ELECTRICAL LINE CONSTRUCTION ONLY	22.45	11.84	34.29

TRUCK DRIVERS

CODE	Fringe Benefits Must Be Paid On All Hours Worked TRADE OR OCCUPATION	HOURLY BASIC RATE OF PAY $	HOURLY FRINGE BENEFITS $	TOTAL $
201	Single Axle or Two Axle	19.00	0.00	19.00
203	Three or More Axle	19.00	0.00	19.00
204	Articulated, Euclid, Dumptor, Off Road Material Hauler	33.69	19.78	53.47
205	Pavement Marking Vehicle	19.00	0.00	19.00
207	Truck Mechanic	19.00	0.00	19.00

LABORERS

CODE	Fringe Benefits Must Be Paid On All Hours Worked TRADE OR OCCUPATION	HOURLY BASIC RATE OF PAY $	HOURLY FRINGE BENEFITS $	TOTAL $
301	General Laborer Future Increase(s): Add $1.25/hr eff. 06/06/2016 Premium Increase(s): Add $2.29 for bottomman; Add $2.15 for concrete manhole builder, bracer, jointman, or pipelayer; Add $5.44 for blaster. Add $2.00 for all tunnel work under 15 lbs. compressed air; Add $2.00 for 0-30 lbs. compressed air; Add $3.00 for over 30 lbs. compressed air.	29.73	18.32	48.05
303	Landscaper	41.00	0.00	41.00
304	Flagperson or Traffic Control Person	19.31	15.21	34.52
311	Fiber Optic Laborer (Outside, Other Than Concrete Encased)	18.53	0.00	18.53
314	Railroad Track Laborer	17.00	5.43	22.43

HEAVY EQUIPMENT OPERATORS
SEWER, WATER OR TUNNEL WORK

CODE	Fringe Benefits Must Be Paid On All Hours Worked TRADE OR OCCUPATION	HOURLY BASIC RATE OF PAY $	HOURLY FRINGE BENEFITS $	TOTAL $
521	Backhoe (Track Type) Having a Mfgr.'s Rated Capacity of 130,000 Lbs. or Over; Caisson Rig; Crane, Tower Crane, Pedestal Tower or Derrick, With Boom, Leads &/or Jib Lengths Measuring 176 Ft or Over; Crane, Tower Crane, Pedestal Tower or Derrick, With or Without Attachments, With a Lifting Capacity of Over 100 Tons, Self-Erecting Tower Crane With a Lifting Capacity Of Over 4,000 Lbs., Crane With Boom Dollies; Master Mechanic; Pile Driver. Premium Increase(s): Add $.25/hr for operating tower crane.	38.09	20.80	58.89
522	Backhoe (Track Type) Having a Mfgr.'s Rated Capacity of Under 130,000 Lbs., Backhoe (Mini, 15,000 Lbs. & Under); Boring Machine (Directional); Concrete Bump Cutter, Grinder, Planing or Grooving Machine; Concrete Laser/Screed; Concrete Paver (Slipform); Concrete Pump (Over 46 Meter), Concrete Conveyor (Rotec or Bidwell Type); Concrete Spreader & Distributor; Crane, Tower Crane, Portable Tower, Pedestal Tower or Derrick, With Boom, Leads &/or Jib Lengths Measuring 175 Ft or Under; Crane, Tower Crane, Portable Tower, Pedestal Tower or Derrick, With or Without Attachments, With a Lifting Capacity of 100 Tons or Under, Self-Erecting Tower Crane With a Lifting Capacity of 4,000 Lbs. & Under; Dredge (NOT Performing Work on the Great Lakes); Milling Machine; Skid Rig; Telehandler; Traveling Crane (Bridge Type). Premium Increase(s): Add $.25/hr for operating tower crane.	37.31	20.80	58.11
523	Air Track, Rotary or Percussion Drilling Machine &/or Hammers, Blaster; Boring Machine (Horizontal or Vertical); Bulldozer or Endloader (Over 40 hp); Crane (Carry Deck, Mini) or Truck Mounted Hydraulic Crane (10 Tons or Under); Concrete Pump (46 Meter & Under), Concrete Conveyor (Rotec or Bidwell Type); Concrete Slipform Placer Curb & Gutter Machine; Gradall (Cruz-Aire Type); Grader or Motor Patrol; Hydro-Blaster (10,000 PSI or Over); Manhoist; Material or Stack Hoist; Mechanic or Welder; Roller (Over 5 Ton); Scraper (Self Propelled or Tractor Drawn) 5 cu yd or More Capacity; Screed (Milling Machine); Sideboom; Straddle Carrier or Travel Lift; Tractor (Scraper, Dozer, Pusher, Loader); Tractor or Truck Mounted Hydraulic Backhoe; Tractor or Truck Mounted Hydraulic Crane (10 Tons or Under); Trencher (Wheel Type or Chain Type Having Over 8-Inch Bucket). Premium Increase(s): Add $.25/hr for operating tower crane.	36.36	20.80	57.16

CODE	Fringe Benefits Must Be Paid On All Hours Worked TRADE OR OCCUPATION	HOURLY BASIC RATE OF PAY $	HOURLY FRINGE BENEFITS $	TOTAL $
524	Backfiller; Broom or Sweeper; Bulldozer or Endloader (Under 40 hp); Compactor (Self-Propelled 85 Ft Total Drum Width & Over, or Tractor Mounted, Towed & Light Equipment); Concrete Batch Plant, Batch Hopper; Concrete Breaker (Large, Auto, Vibratory/Sonic, Manual or Remote); Concrete Conveyor System; Concrete Finishing Machine (Road Type); Environmental Burner; Fireman (Pile Driver & Derrick NOT Performing Work on the Great Lakes); Forestry Equipment, Timbco, Tree Shear, Tub Grinder, Processor; Hoist (Tugger, Automatic); Grout Pump; Jeep Digger; Lift Slab Machine; Mulcher; Power Subgrader; Pump (3 Inch or Over) or Well Points; Robotic Tool Carrier (With or Without Attachments); Roller (Rubber Tire, 5 Ton or Under); Screw or Gypsum Pumps; Stabilizing or Concrete Mixer (Self-Propelled or 14S or Over); Stump Chipper; Tining or Curing Machine; Trencher (Wheel Type or Chain Type Having 8-Inch Bucket & Under); Winches & A-Frames.	33.69	21.75	55.44
525	Air Compressor (&/or 400 CFM or Over); Air, Electric or Hydraulic Jacking System; Augers (Vertical & Horizontal); Compactor (Self-Propelled 84 Ft Total Drum Width & Under, or Tractor Mounted, Towed & Light Equipment); Crusher, Screening or Wash Plant; Farm or Industrial Type Tractor; Fireman (Asphalt Plant NOT Performing Work on the Great Lakes); Generator (&/or 150 KW or Over); Heaters (Mechanical); High Pressure Utility Locating Machine (Daylighting Machine); Loading Machine (Conveyor); Post Hole Digger or Driver; Refrigeration Plant or Freeze Machine; Rock, Stone Breaker; Skid Steer Loader (With or Without Attachments); Vibratory Hammer or Extractor, Power Pack. Premium Increase(s): Add $.25/hr for operating tower crane.	33.91	20.80	54.71
526	Boiler (Temporary Heat); Forklift; Greaser; Oiler.	31.89	20.15	52.04
527	Work Performed on the Great Lakes Including Diver; Wet Tender or Hydraulic Dredge Engineer.	41.65	21.71	63.36
528	Work Performed on the Great Lakes Including 70 Ton & Over Tug Operator; Assistant Hydraulic Dredge Engineer; Crane or Backhoe Operator; Hydraulic Dredge Leverman or Diver's Tender; Mechanic or Welder.	41.65	21.71	63.36
529	Work Performed on the Great Lakes Including Deck Equipment Operator or Machineryman (Maintains Cranes Over 50 Tons or Backhoes 115,000 Lbs. or More); Tug, Launch or Loader, Dozer or Like Equipment When Operated on a Barge, Breakwater Wall, Slip, Dock or Scow, Deck Machinery.	36.72	21.15	57.87
530	Work Performed on the Great Lakes Including Deck Equipment Operator; Machineryman or Fireman (Operates 4 Units or More or Maintains Cranes 50 Tons or Under or Backhoes 115,000 Lbs. or Under), Deck Hand, Deck Engineer or Assistant Tug Operator; Off Road Trucks - Great Lakes ONLY.	36.72	21.15	57.87

AIRPORT PAVEMENT OR STATE HIGHWAY CONSTRUCTION

Includes all airport projects (excluding buildings) and all projects awarded by the Wisconsin Department of Transportation (excluding buildings).

SKILLED TRADES

CODE	Fringe Benefits Must Be Paid On All Hours Worked TRADE OR OCCUPATION	HOURLY BASIC RATE OF PAY $	HOURLY FRINGE BENEFITS $	TOTAL $
103	Bricklayer, Blocklayer or Stonemason	31.55	18.52	50.07
105	Carpenter	34.13	20.71	54.84
107	Cement Finisher Future Increase(s): Add $1.75 on 6/1/16. Premium Increase(s): DOT PREMIUMS: 1) Pay two times the hourly basic rate on Sunday, New Year's Day, Memorial Day, Independence Day, Labor Day, Thanksgiving Day & Christmas Day. 2) Add $1.40/hr when the Wisconsin Department of Transportation or responsible governing agency requires that work be performed at night under artificial illumination with traffic control and the work is completed after sunset and before sunrise.	33.95	19.88	53.83
109	Electrician Future Increase(s): Add $1.60 on 6/1/16; Add $1.70 on 6/1/17 Premium Increase(s): DOT PREMIUM: Pay two times the hourly basic rate on Sunday, New Year’s Day, Memorial Day, Independence Day, Labor Day, Thanksgiving Day & Christmas Day.	35.13	23.19	58.32
111	Fence Erector	35.62	0.00	35.62
116	Ironworker	30.77	23.72	54.49
118	Line Constructor (Electrical)	40.81	18.06	58.87
124	Painter	29.87	18.79	48.66
125	Pavement Marking Operator	30.27	19.83	50.10
126	Piledriver	30.11	21.09	51.20
133	Roofer or Waterproofer	30.40	2.23	32.63
137	Teledata Technician or Installer	25.63	17.25	42.88
143	Tuckpointer, Caulker or Cleaner	34.28	18.60	52.88
144	Underwater Diver (Except on Great Lakes)	36.74	16.00	52.74
150	Heavy Equipment Operator - ELECTRICAL LINE CONSTRUCTION ONLY	36.73	15.92	52.65
151	Light Equipment Operator -ELECTRICAL LINE CONSTRUCTION ONLY	32.65	15.67	48.32

CODE	Fringe Benefits Must Be Paid On All Hours Worked TRADE OR OCCUPATION	HOURLY BASIC RATE OF PAY $	HOURLY FRINGE BENEFITS $	TOTAL $
152	Heavy Truck Driver - ELECTRICAL LINE CONSTRUCTION ONLY	28.57	13.71	42.28
153	Light Truck Driver - ELECTRICAL LINE CONSTRUCTION ONLY	26.53	13.09	39.62
154	Groundman - ELECTRICAL LINE CONSTRUCTION ONLY	22.45	11.84	34.29

TRUCK DRIVERS

CODE	Fringe Benefits Must Be Paid On All Hours Worked TRADE OR OCCUPATION	HOURLY BASIC RATE OF PAY $	HOURLY FRINGE BENEFITS $	TOTAL $
201	Single Axle or Two Axle	36.72	21.15	57.87
203	Three or More Axle Premium Increase(s): DOT PREMIUM: Pay two times the hourly basic rate on Sunday, New Year's Day, Memorial Day, Independence Day, Labor Day, Thanksgiving Day & Christmas Day.	25.78	18.96	44.74
204	Articulated, Euclid, Dumptor, Off Road Material Hauler Future Increase(s): Add $1.30/hr on 6/1/2016; Add $1.25/hr on 6/1/2017. Premium Increase(s): DOT PREMIUMS: 1) Pay two times the hourly basic rate on Sunday, New Year's Day, Memorial Day, Independence Day, Labor Day, Thanksgiving Day & Christmas Day. 2) Add $1.50/hr night work premium. See DOT'S website for details about the applicability of this night work premium at: http://wisconsindot.gov/Pages/doing-bus/civil-rights/labornwage/prevailing-wage-compliance.aspx.	30.82	21.85	52.67
205	Pavement Marking Vehicle	23.82	17.72	41.54
206	Shadow or Pilot Vehicle	25.28	18.31	43.59
207	Truck Mechanic	25.28	18.31	43.59

LABORERS

CODE	Fringe Benefits Must Be Paid On All Hours Worked TRADE OR OCCUPATION	HOURLY BASIC RATE OF PAY $	HOURLY FRINGE BENEFITS $	TOTAL $
301	General Laborer Future Increase(s): Add $1.00/hr eff. 06/01/2016; Add $1.00/hr eff. 06/01/2017 Premium Increase(s): Add $.15/hr for air tool operator, joint sawer and filler (pavement), vibrator or tamper operator (mechanical hand operated), chain saw operator and demolition burning torch laborer; Add $.35/hr for bituminous worker (raker and luteman), formsetter (curb, sidewalk and pavement) and strike off man; Add $.50/hr for line and grade specialist; Add $.65/hr for blaster and powderman; Add $2.01/hr for topman; Add $2.46/hr for bottomman; Add $3.23/hr for pipelayer. / DOT PREMIUMS: 1) Pay two times the hourly basic rate on Sunday, New Year's Day, Memorial Day, Independence Day, Labor Day, Thanksgiving Day & Christmas Day. 2) Add $1.25/hr for work on projects involving temporary traffic control setup, for lane and shoulder closures, when work under artificial illumination conditions is necessary as required by the project provisions (including prep time prior to and/or cleanup after such time period).	27.51	20.63	48.14
302	Asbestos Abatement Worker	19.00	0.00	19.00
303	Landscaper Future Increase(s): Add $1.00/hr eff. 06/01/2016; Add $1.00/hr eff. 06/01/2017 Premium Increase(s): DOT PREMIUMS: 1) Pay two times the hourly basic rate on Sunday, New Year's Day, Memorial Day, Independence Day, Labor Day, Thanksgiving Day & Christmas Day. 2) Add $1.25/hr for work on projects involving temporary traffic control setup, for lane and shoulder closures, when work under artificial illumination conditions is necessary as required by the project provisions (including prep time prior to and/or cleanup after such time period).	27.51	20.63	48.14
304	Flagperson or Traffic Control Person	23.55	20.03	43.58
311	Fiber Optic Laborer (Outside, Other Than Concrete Encased)	18.53	0.00	18.53
314	Railroad Track Laborer	17.00	5.43	22.43

HEAVY EQUIPMENT OPERATORS
AIRPORT PAVEMENT OR STATE HIGHWAY CONSTRUCTION

CODE	Fringe Benefits Must Be Paid On All Hours Worked TRADE OR OCCUPATION	HOURLY BASIC RATE OF PAY $	HOURLY FRINGE BENEFITS $	TOTAL $
531	Crane, Tower Crane, Pedestal Tower or Derrick, With Boom, Leads &/or Jib Lengths Measuring 176 Ft or Over; Crane, Tower Crane, Pedestal Tower or Derrick, With or Without Attachments, With a Lifting Capacity of Over 100 Tons, Self-Erecting Tower Crane With a Lifting Capacity Of Over 4,000 Lbs., Crane With Boom Dollies; Traveling Crane (Bridge Type). Future Increase(s): Add $1.30/hr on 6/1/2016; Add $1.25/hr on 6/1/2017. Premium Increase(s): DOT PREMIUMS: 1) Pay two times the hourly basic rate on Sunday, New Year's Day, Memorial Day, Independence Day, Labor Day, Thanksgiving Day & Christmas Day. 2) Add $1.50/hr night work premium. See DOT'S website for details about the applicability of this night work premium at: http://wisconsindot.gov/Pages/doing-bus/civil-rights/labornwage/prevailing-wage-compliance.aspx.	38.27	21.85	60.12
532	Backhoe (Track Type) Having a Mfgr.'s Rated Capacity of 130,000 Lbs. or Over; Caisson Rig; Crane, Tower Crane, Portable Tower, Pedestal Tower or Derrick, With Boom, Leads &/or Jib Lengths Measuring 175 Ft or Under; Crane, Tower Crane, Portable Tower, Pedestal Tower or Derrick, With or Without Attachments, With a Lifting Capacity of 100 Tons or Under, Self-Erecting Tower Crane With A Lifting Capacity Of 4,000 Lbs., & Under; Dredge (NOT Performing Work on the Great Lakes); Licensed Boat Pilot (NOT Performing Work on the Great Lakes); Pile Driver. Future Increase(s): Add $1.30/hr on 6/1/2016; Add $1.25/hr on 6/1/2017. Premium Increase(s): DOT PREMIUMS: 1) Pay two times the hourly basic rate on Sunday, New Year's Day, Memorial Day, Independence Day, Labor Day, Thanksgiving Day & Christmas Day. 2) Add $1.50/hr night work premium. See DOT'S website for details about the applicability of this night work premium at: http://wisconsindot.gov/Pages/doing-bus/civil-rights/labornwage/prevailing-wage-compliance.aspx.	37.77	21.85	59.62

CODE	Fringe Benefits Must Be Paid On All Hours Worked TRADE OR OCCUPATION	HOURLY BASIC RATE OF PAY $	HOURLY FRINGE BENEFITS $	TOTAL $
533	Air Track, Rotary or Percussion Drilling Machine &/or Hammers, Blaster; Asphalt Heater, Planer & Scarifier; Asphalt Milling Machine; Asphalt Screed; Automatic Subgrader (Concrete); Backhoe (Track Type) Having a Mfgr.'s Rated Capacity of Under 130,000 Lbs., Backhoe (Mini, 15,000 Lbs. & Under); Bituminous (Asphalt) Plant & Paver, Screed; Boatmen (NOT Performing Work on the Great Lakes); Boring Machine (Directional, Horizontal or Vertical); Bridge (Bidwell) Paver; Bulldozer or Endloader; Concrete Batch Plant, Batch Hopper; Concrete Breaker (Large, Auto, VIbratory/Sonic, Manual or Remote); Concrete Bump Cutter, Grinder, Planing or Grooving Machine; Concrete Conveyor System; Concrete Laser/Screed; Concrete Paver (Slipform); Concrete Pump, Concrete Conveyor (Rotec or Bidwell Type); Concrete Slipform Placer Curb & Gutter Machine; Concrete Spreader & Distributor; Crane (Carry Deck, Mini) or Truck Mounted Hydraulic Crane (10 Tons or Under); Crane WIth a Lifting Capacity of 25 Tons or Under; Forestry Equipment, Timbco, Tree Shear, Tub Grinder, Processor; Gradall (Cruz-Aire Type); Grader or Motor Patrol; Grout Pump; Hydro-Blaster (10,000 PSI or Over); Loading Machine (Conveyor); Material or Stack Hoist; Mechanic or Welder; Milling Machine; Post Hole Digger or Driver; Roller (Over 5 Ton); Scraper (Self Propelled or Tractor Drawn) 5 cu yds or More Capacity; Shoulder Widener; Sideboom; Skid Rig; Stabilizing or Concrete Mixer (Self-Propelled or 14S or Over); Straddle Carrier or Travel Lift; Tractor (Scraper, Dozer, Pusher, Loader); Tractor or Truck Mounted Hydraulic Backhoe; Trencher (Wheel Type or Chain Type); Tube Finisher; Tugger (NOT Performing Work on the Great Lakes); Winches & A-Frames. Future Increase(s): Add $1.30/hr on 6/1/2016; Add $1.25/hr on 6/1/2017. Premium Increase(s): DOT PREMIUMS: 1) Pay two times the hourly basic rate on Sunday, New Year's Day, Memorial Day, Independence Day, Labor Day, Thanksgiving Day & Christmas Day. 2) Add $1.50/hr night work premium. See DOT'S website for details about the applicability of this night work premium at: http://wisconsindot.gov/Pages/doing-bus/civil-rights/labornwage/prevailing-wage-compliance.aspx.	37.27	21.85	59.12

CODE	Fringe Benefits Must Be Paid On All Hours Worked TRADE OR OCCUPATION	HOURLY BASIC RATE OF PAY $	HOURLY FRINGE BENEFITS $	TOTAL $
534	Belting, Burlap, Texturing Machine; Broom or Sweeper; Compactor (Self-Propelled or Tractor Mounted, Towed & Light Equipment); Concrete Finishing Machine (Road Type); Environmental Burner; Farm or Industrial Type Tractor; Fireman (Asphalt Plant, Pile Driver & Derrick NOT Performing Work on the Great Lakes); Forklift; Greaser; Hoist (Tugger, Automatic); Jeep Digger; Joint Sawer (Multiple Blade); Launch (NOT Performing Work on the Great Lakes); Lift Slab Machine; Mechanical Float; Mulcher; Power Subgrader; Robotic Tool Carrier (With or Without Attachments); Roller (Rubber Tire, 5 Ton or Under); Self Propelled Chip Spreader; Shouldering Machine; Skid Steer Loader (With or WIthout Attachments); Telehandler; Tining or Curing Machine. Future Increase(s): Add $1.30/hr on 6/1/2016; Add $1.25/hr on 6/1/2017. Premium Increase(s): DOT PREMIUMS: 1) Pay two times the hourly basic rate on Sunday, New Year's Day, Memorial Day, Independence Day, Labor Day, Thanksgiving Day & Christmas Day. 2) Add $1.50/hr night work premium. See DOT'S website for details about the applicability of this night work premium at: http://wisconsindot.gov/Pages/doing-bus/civil-rights/labornwage/prevailing-wage-compliance.aspx.	37.01	21.85	58.86
535	Air Compressor (&/or 400 CFM or Over); Air, Electric or Hydraulic Jacking System; Augers (Vertical & Horizontal); Automatic Belt Conveyor & Surge Bin; Boiler (Temporary Heat); Concrete Proportioning Plant; Crusher, Screening or Wash Plant; Generator (&/or 150 KW or Over); Heaters (Mechanical); High Pressure Utility Locating Machine (Daylighting Machine); Mudjack; Oiler; Prestress Machine; Pug Mill; Pump (3 Inch or Over) or Well Points; Rock, Stone Breaker; Screed (Milling Machine); Stump Chipper; Tank Car Heaters; Vibratory Hammer or Extractor, Power Pack. Future Increase(s): Add $1.30/hr on 6/1/2016; Add $1.25/hr on 6/1/2017. Premium Increase(s): DOT PREMIUMS: 1) Pay two times the hourly basic rate on Sunday, New Year's Day, Memorial Day, Independence Day, Labor Day, Thanksgiving Day & Christmas Day. 2) Add $1.50/hr night work premium. See DOT'S website for details about the applicability of this night work premium at: http://wisconsindot.gov/Pages/doing-bus/civil-rights/labornwage/prevailing-wage-compliance.aspx..	36.72	21.85	58.57
536	Fiber Optic Cable Equipment.	21.00	0.00	21.00
537	Work Performed on the Great Lakes Including Diver; Wet Tender or Hydraulic Dredge Engineer.	41.65	21.71	63.36
538	Work Performed on the Great Lakes Including 70 Ton & Over Tug Operator; Assistant Hydraulic Dredge Engineer; Crane or Backhoe Operator; Hydraulic Dredge Leverman or Diver's Tender; Mechanic or Welder.	41.65	21.71	63.36

CODE	Fringe Benefits Must Be Paid On All Hours Worked TRADE OR OCCUPATION	HOURLY BASIC RATE OF PAY $	HOURLY FRINGE BENEFITS $	TOTAL $
539	Work Performed on the Great Lakes Including Deck Equipment Operator or Machineryman (Maintains Cranes Over 50 Tons or Backhoes 115,000 Lbs. or More); Tug, Launch or Loader, Dozer or Like Equipment When Operated on a Barge, Breakwater Wall, Slip, Dock or Scow, Deck Machinery.	36.72	21.15	57.87
540	Work Performed on the Great Lakes Including Deck Equipment Operator, Machineryman or Fireman (Operates 4 Units or More or Maintains Cranes 50 Tons or Under or Backhoes 115,000 Lbs. or Under); Deck Hand, Deck Engineer or Assistant Tug Operator; Off Road Trucks-Great Lakes ONLY.	36.72	21.15	57.87

LOCAL STREET OR MISCELLANEOUS PAVING CONSTRUCTION

Includes roads, streets, alleys, trails, bridges, paths, racetracks, parking lots and driveways (except residential or agricultural), public sidewalks or other similar projects (excluding projects awarded by the Wisconsin Department of Transportation).

SKILLED TRADES

CODE	Fringe Benefits Must Be Paid On All Hours Worked TRADE OR OCCUPATION	HOURLY BASIC RATE OF PAY $	HOURLY FRINGE BENEFITS $	TOTAL $
103	Bricklayer, Blocklayer or Stonemason	35.89	18.77	54.66
105	Carpenter Future Increase(s): Add $1.42/hr on 6/1/2016. Premium Increase(s): DOT PREMIUM: Pay two times the hourly basic rate on Sunday, New Year's Day, Memorial Day, Independence Day, Labor Day, Thanksgiving Day & Christmas Day.	33.02	17.12	50.14
107	Cement Finisher	34.95	19.38	54.33
109	Electrician Future Increase(s): Add $1.60 on 6/1/16; Add $1.70 on 6/1/17 Premium Increase(s): DOT PREMIUM: Pay two times the hourly basic rate on Sunday, New Year’s Day, Memorial Day, Independence Day, Labor Day, Thanksgiving Day & Christmas Day.	35.13	23.19	58.32
111	Fence Erector	24.73	19.69	44.42
116	Ironworker	30.77	23.72	54.49
118	Line Constructor (Electrical)	40.81	18.06	58.87
124	Painter	29.62	20.74	50.36
125	Pavement Marking Operator	30.00	19.61	49.61
126	Piledriver Future Increase(s): Add $1.44/hr on 6/1/2016. Premium Increase(s): DOT PREMIUM: Pay two times the hourly basic rate on Sunday, New Year's Day, Memorial Day, Independence Day, Labor Day, Thanksgiving Day & Christmas Day.	33.56	17.12	50.68
133	Roofer or Waterproofer	29.65	18.61	48.26
137	Teledata Technician or Installer	25.63	17.25	42.88
143	Tuckpointer, Caulker or Cleaner	34.28	18.60	52.88
144	Underwater Diver (Except on Great Lakes)	36.74	16.00	52.74
150	Heavy Equipment Operator - ELECTRICAL LINE CONSTRUCTION ONLY	36.73	15.92	52.65

CODE	Fringe Benefits Must Be Paid On All Hours Worked TRADE OR OCCUPATION	HOURLY BASIC RATE OF PAY $	HOURLY FRINGE BENEFITS $	TOTAL $
151	Light Equipment Operator -ELECTRICAL LINE CONSTRUCTION ONLY	32.65	14.96	47.61
152	Heavy Truck Driver - ELECTRICAL LINE CONSTRUCTION ONLY	28.57	13.71	42.28
153	Light Truck Driver - ELECTRICAL LINE CONSTRUCTION ONLY	26.53	13.55	40.08
154	Groundman - ELECTRICAL LINE CONSTRUCTION ONLY	22.45	11.84	34.29

TRUCK DRIVERS

CODE	Fringe Benefits Must Be Paid On All Hours Worked TRADE OR OCCUPATION	HOURLY BASIC RATE OF PAY $	HOURLY FRINGE BENEFITS $	TOTAL $
201	Single Axle or Two Axle	19.00	0.00	19.00
203	Three or More Axle	19.00	0.00	19.00
204	Articulated, Euclid, Dumptor, Off Road Material Hauler Future Increase(s): Add $1.60/hr on 6/3/2016.	34.69	20.38	55.07
205	Pavement Marking Vehicle	19.00	0.00	19.00
206	Shadow or Pilot Vehicle	19.00	0.00	19.00
207	Truck Mechanic	19.00	0.00	19.00

LABORERS

CODE	Fringe Benefits Must Be Paid On All Hours Worked TRADE OR OCCUPATION	HOURLY BASIC RATE OF PAY $	HOURLY FRINGE BENEFITS $	TOTAL $
301	General Laborer	29.01	17.39	46.40
303	Landscaper Future Increase(s): Add $1.00/hr eff. 06/01/2016; Add $1.00/hr eff. 06/01/2017 Premium Increase(s): DOT PREMIUMS: 1) Pay two times the hourly basic rate on Sunday, New Year's Day, Memorial Day, Independence Day, Labor Day, Thanksgiving Day & Christmas Day. 2) Add $1.25/hr for work on projects involving temporary traffic control setup, for lane and shoulder closures, when work under artificial illumination conditions is necessary as required by the project provisions (including prep time prior to and/or cleanup after such time period).	27.51	20.63	48.14
304	Flagperson or Traffic Control Person	19.31	15.21	34.52
311	Fiber Optic Laborer (Outside, Other Than Concrete Encased)	18.53	0.00	18.53

314	Railroad Track Laborer	17.00	5.43	22.43

HEAVY EQUIPMENT OPERATORS
CONCRETE PAVEMENT OR BRIDGE WORK

Fringe Benefits Must Be Paid On All Hours Worked

CODE	TRADE OR OCCUPATION	HOURLY BASIC RATE OF PAY $	HOURLY FRINGE BENEFITS $	TOTAL $
541	Crane, Tower Crane, Pedestal Tower or Derrick, With or Without Attachments, With a Lifting Capacity of Over 100 Tons, Self-Erecting Tower Crane With a Lifting Capacity Of Over 4,000 Lbs., Crane With Boom Dollies; Crane, Tower Crane, Pedestal Tower or Derrick, With Boom, Leads &/or Jib Lengths Measuring 176 Ft or Over; Master Mechanic. Future Increase(s): Add $1.60/hr on 6/3/2016. Premium Increase(s): Add $.50/hr for >200 Ton; Add $1/hr at 300 Ton; Add $1.50/hr at 400 Ton; Add $2/hr at 500 Ton & Over.	37.67	20.38	58.05
542	Backhoe (Track Type) Having a Mfgr.'s Rated Capacity of 130,000 Lbs. or Over; Caisson Rig; Crane, Tower Crane, Portable Tower, Pedestal Tower or Derrick, With or Without Attachments, With a Lifting Capacity of 100 Tons or Under, Self-Erecting Tower Crane With a Lifting Capacity of 4,000 Lbs. & Under; Crane, Tower Crane Portable Tower, Pedestal Tower or Derrick, With Boom, Leads &/or Jib Lengths Measuring 175 Ft or Under; Dredge (NOT Performing Work on the Great Lakes); Licensed Boat Pilot (NOT Performing Work on the Great Lakes); Pile Driver. Future Increase(s): Add $1.30/hr on 6/1/2016; Add $1.25/hr on 6/1/2017. Premium Increase(s): DOT PREMIUMS: 1) Pay two times the hourly basic rate on Sunday, New Year's Day, Memorial Day, Independence Day, Labor Day, Thanksgiving Day & Christmas Day. 2) Add $1.50/hr night work premium. See DOT'S website for details about the applicability of this night work premium at: http://wisconsindot.gov/Pages/doing-bus/civil-rights/labornwage/prevailing-wage-compliance.aspx.	37.77	21.85	59.62

CODE	Fringe Benefits Must Be Paid On All Hours Worked TRADE OR OCCUPATION	HOURLY BASIC RATE OF PAY $	HOURLY FRINGE BENEFITS $	TOTAL $
543	Air Track, Rotary or Percussion Drilling Machine &/or Hammers, Blaster; Automatic Subgrader (Concrete); Backhoe (Track Type) Having a Mfgr.'s Rated Capacity of Under 130,000 Lbs., Backhoe (Mini, 15,000 Lbs. & Under); Boring Machine (Directional, Horizontal or Vertical); Bridge (Bidwell) Paver; Bulldozer or Endloader; Concrete Batch Plant, Batch Hopper; Concrete Breaker (Large, Auto, Vibratory/Sonic, Manual or Remote); Concrete Bump Cutter, Grinder, Planing or Grooving Machine; Concrete Conveyor System; Concrete Laser/Screed; Concrete Paver (Slipform); Concrete Pump, Concrete Conveyor (Rotec or Bidwell Type); Concrete Slipform Placer Curb & Gutter Machine; Concrete Spreader & Distributor; Crane (Carry Deck, Mini) or Truck Mounted Hydraulic Crane (10 Tons or Under); Crane With a Lifting Capacity of 25 Tons or Under; Forestry Equipment, Timbco, Tree Shear, Tub Grinder, Processor; Gradall (Cruz-Aire Type); Grader or Motor Patrol; Grout Pump; Hydro-Blaster (10,000 PSI or Over); Loading Machine (Conveyor); Manhoist; Material or Stack Hoist; Mechanic or Welder; Milling Machine; Post Hole Digger or Driver; Scraper (Self Propelled or Tractor Drawn) 5 cu yds or More Capacity; Shoulder Widener; Sideboom; Skid Rig; Stabilizing or Concrete Mixer (Self-Propelled or 14S or Over); Straddle Carrier or Travel Lift; Tractor (Scraper, Dozer, Pusher, Loader); Tractor or Truck Mounted Hydraulic Backhoe; Trencher (Wheel Type or Chain Type); Tube Finisher; Tugger (NOT Performing Work on the Great Lakes); Winches & A-Frames. Future Increase(s): Add $1.30/hr on 6/1/2016; Add $1.25/hr on 6/1/2017. Premium Increase(s): DOT PREMIUMS: 1) Pay two times the hourly basic rate on Sunday, New Year's Day, Memorial Day, Independence Day, Labor Day, Thanksgiving Day & Christmas Day. 2) Add $1.50/hr night work premium. See DOT'S website for details about the applicability of this night work premium at: http://wisconsindot.gov/Pages/doing-bus/civil-rights/labornwage/prevailing-wage-compliance.aspx.	37.27	21.85	59.12
544	Backfiller; Belting, Burlap, Texturing Machine; Broom or Sweeper; Compactor (Self-Propelled or Tractor Mounted, Towed & Light Equipment); Concrete Finishing Machine (Road Type); Environmental Burner; Farm or Industrial Type Tractor; Fireman (Pile Driver & Derrick NOT Performing Work on the Great Lakes); Forklift; Greaser; Jeep Digger; Joint Sawer (Multiple Blade); Launch (NOT Performing Work on the Great Lakes); Lift Slab Machine; Mechanical Float; Mulcher; Power Subgrader; Robotic Tool Carrier (WIth or Without Attachments); Self Propelled Chip Spreader; Shouldering Machine; Skid Steer Loader (With or Without Attachments); Telehandler; Tining or Curing Machine. Future Increase(s): Add $1.30/hr on 6/1/2016; Add $1.25/hr on 6/1/2017. Premium Increase(s): DOT PREMIUMS: 1) Pay two times the hourly basic rate on Sunday, New Year's Day, Memorial Day, Independence Day, Labor Day, Thanksgiving Day & Christmas Day. 2) Add $1.50/hr night work premium. See DOT'S website for details about the applicability of this night work premium at: http://wisconsindot.gov/Pages/doing-bus/civil-rights/labornwage/prevailing-wage-compliance.aspx.	37.27	21.85	59.12

CODE	Fringe Benefits Must Be Paid On All Hours Worked TRADE OR OCCUPATION	HOURLY BASIC RATE OF PAY $	HOURLY FRINGE BENEFITS $	TOTAL $
545	Air Compressor (&/or 400 CFM or Over); Air, Electric or Hydraulic Jacking System; Automatic Belt Conveyor & Surge Bin; Boiler (Temporary Heat); Concrete Proportioning Plant; Crusher, Screening or Wash Plant; Generator (&/or 150 KW or Over); Heaters (Mechanical); High Pressure Utility Locating Machine (Daylighting Machine); Mudjack; Oiler; Prestress Machine; Pug Mill; Pump (3 Inch or Over) or Well Points; Rock, Stone Breaker; Screed (Milling Machine); Stump Chipper; Tank Car Heaters; Vibratory Hammer or Extractor, Power Pack.	31.62	19.78	51.40
546	Fiber Optic Cable Equipment.	21.00	0.00	21.00
547	Work Performed on the Great Lakes Including Diver; Wet Tender or Hydraulic Dredge Engineer.	41.65	21.71	63.36
548	Work Performed on the Great Lakes Including 70 Ton & Over Tug Operator; Assistant Hydraulic Dredge Engineer; Crane or Backhoe Operator; Hydraulic Dredge Leverman or Diver's Tender; Mechanic or Welder. Future Increase(s): Add $1.25/hr on 1/1/2017. Premium Increase(s): Add $.50/hr for Friction Crane, Lattice Boom or Crane Certification (CCO).	44.05	23.24	67.29
549	Work Performed on the Great Lakes Including Deck Equipment Operator or Machineryman (Maintains Cranes Over 50 Tons or Backhoes 115,000 Lbs. or more); Tug, Launch or Loader, Dozer or Like Equipment When Operated on a Barge, Breakwater Wall, Slip, Dock or Scow, Deck Machinery.	36.72	21.15	57.87
550	Work Performed on the Great Lakes Including Deck Equipment Operator; Machineryman or Fireman (Operates 4 Units or More or Maintains Cranes 50 Tons or Under or Backhoes 115,000 Lbs. or Under); Deck Hand, Deck Engineer or Assistant Tug Operator; Off Road Trucks - Great Lakes ONLY.	36.72	21.15	57.87

HEAVY EQUIPMENT OPERATORS
ASPHALT PAVEMENT OR OTHER WORK

CODE	Fringe Benefits Must Be Paid On All Hours Worked TRADE OR OCCUPATION	HOURLY BASIC RATE OF PAY $	HOURLY FRINGE BENEFITS $	TOTAL $
551	Crane, Tower Crane, Pedestal Tower or Derrick, With or Without Attachments, With a Lifting Capacity of Over 100 Tons, Self Erecting Tower Crane With a Lifting Capacity of Over 4,000 Lbs., Crane With Boom Dollies; Crane, Tower Crane, Pedestal Tower or Derrick, With Boom, Leads and/or Jib Lengths Measuring 176 Ft or Over; Master Mechanic.	36.67	19.78	56.45

CODE	Fringe Benefits Must Be Paid On All Hours Worked TRADE OR OCCUPATION	HOURLY BASIC RATE OF PAY $	HOURLY FRINGE BENEFITS $	TOTAL $
552	Backhoe (Track Type) Having a Mfgr.'s Rated Capacity of 130,000 Lbs. or Over; Caisson Rig; Crane, Tower Crane, Portable Tower, Pedestal Tower or Derrick, With or Without Attachments, With a Lifting Capacity of 100 Tons or Under, Self-Erecting Tower Crane With a Lifting Capacity Of 4,000 Lbs. & Under; Crane, Tower Crane, Portable Tower, Pedestal Tower or Derrick, With Boom, Leads &/or Jib Lengths Measuring 175 Ft or Under; Dredge (NOT Performing Work on the Great Lakes); Licensed Boat Pilot (NOT Performing Work on the Great Lakes); Pile Driver. Future Increase(s): Add $1.30/hr on 6/1/2016; Add $1.25/hr on 6/1/2017. Premium Increase(s): DOT PREMIUMS: 1) Pay two times the hourly basic rate on Sunday, New Year's Day, Memorial Day, Independence Day, Labor Day, Thanksgiving Day & Christmas Day. 2) Add $1.50/hr night work premium. See DOT'S website for details about the applicability of this night work premium at: http://wisconsindot.gov/Pages/doing-bus/civil-rights/labornwage/prevailing-wage-compliance.aspx.	37.77	21.85	59.62
553	Air, Track, Rotary or Percussion Drilling Machine &/or Hammers, Blaster; Asphalt Heater, Planer & Scarifier; Asphalt Milling Machine; Asphalt Screed; Backhoe (Track Type) Having a Mfgr.'s Rated Capacity of Under 130,000 Lbs., Backhoe (Mini, 15,000 Lbs. & Under); Bituminous (Asphalt) Plant & Paver, Screed; Boring Machine (Directional, Horizontal or Vertical); Bulldozer or Endloader; Concrete Breaker (Large, Auto, Vibratory/Sonic, Manual or Remote); Concrete Conveyor System; Concrete Laser/Screed; Concrete Slipform Placer Curb & Gutter Machine; Crane (Carry Deck, Mini) or Truck Mounted Hydraulic Crane (10 Tons or Under); Crane With a Lifting Capacity of 25 Tons or Under; Forestry Equipment, Timbco, Tree Shear, Tub Grinder, Processor; Gradall (Cruz-Aire Type); Grader or Motor Patrol; Hydro-Blaster (10,000 PSI or Over); Loading Machine (Conveyor); Manhoist; Material or Stack Hoist; Mechanic or Welder; Milling Machine; Post Hole Digger or Driver; Railroad Track Rail Leveling Machine, Tie Placer, Extractor, Tamper, Stone Leveler or Rehabilitation Equipment; Roller (Over 5 Ton); Scraper (Self Propelled or Tractor Drawn) 5 cu yds or More Capacity; Shoulder Widener; Sideboom; Skid Rig; Stabilizing or Concrete Mixer (Self-Propelled or 14S or Over); Tractor (Scraper, Dozer, Pusher, Loader); Tractor or Truck Mounted Hydraulic Backhoe; Trencher (Wheel Type or Chain Type); Tube Finisher; Tugger (NOT Performing Work on the Great Lakes); Winches & A-Frames. Future Increase(s): Add $1.30/hr on 6/1/2016; Add $1.25/hr on 6/1/2017.	36.72	21.50	58.22

CODE	Fringe Benefits Must Be Paid On All Hours Worked TRADE OR OCCUPATION	HOURLY BASIC RATE OF PAY $	HOURLY FRINGE BENEFITS $	TOTAL $
554	Backfiller; Broom or Sweeper; Compactor (Self-Propelled or Tractor Mounted, Towed & Light Equipment); Concrete Finishing Machine (Road Type); Environmental Burner; Farm or Industrial Type Tractor; Fireman (Asphalt Plant, Pile Driver & Derrick NOT Performing Work on the Great Lakes); Forklift; Greaser; Hoist (Tugger, Automatic); Jeep Digger; Joint Sawer (Multiple Blade); Launch (NOT Performing Work on the Great Lakes); Lift Slab Machine; Mechanical Float; Mulcher; Power Subgrader; Robotic Tool Carrier (With or Without Attachments); Roller (Rubber Tire, 5 Ton or Under); Self-Propelled Chip Spreader; Shouldering Machine; Skid Steer Loader (With or Without Attachments); Telehandler. Future Increase(s): Add $1.30/hr on 6/1/2016; Add $1.25/hr on 6/1/2017.	36.72	21.50	58.22
555	Air Compressor (&/or 400 CFM or Over); Air, Electric or Hydraulic Jacking System; Augers (Vertical & Horizontal); Automatic Belt Conveyor & Surge Bin; Boiler (Temporary Heat); Crusher, Screening or Wash Plant; Generator (&/or 150 KW or Over); Heaters (Mechanical); High Pressure Utility Locating Machine (Daylighting Machine); Mudjack; Oiler; Prestress Machine; Pug Mill; Pump (3 Inch or Over) or Well Points; Rock, Stone Breaker; Screed (Milling Machine); Stump Chipper; Tank Car Heaters; Vibratory Hammer or Extractor, Power Pack. Future Increase(s): Add $1.60/hr on 6/3/2016.	32.62	20.38	53.00
556	Fiber Optic Cable Equipment.	21.00	0.00	21.00

RESIDENTIAL OR AGRICULTURAL CONSTRUCTION

Includes single family houses or apartment buildings of no more than four (4) stories in height and all buildings, structures or facilities that are primarily used for agricultural or farming purposes, excluding commercial buildings. For classification purposes, the exterior height of a residential building, in terms of stories, is the primary consideration. All incidental items such as site work, driveways, parking lots, private sidewalks, private septic systems or sewer and water laterals connected to a public system and swimming pools are included within this definition. Residential buildings of five (5) stories and above are NOT included within this definition.

SKILLED TRADES

Fringe Benefits Must Be Paid On All Hours Worked

CODE	TRADE OR OCCUPATION	HOURLY BASIC RATE OF PAY $	HOURLY FRINGE BENEFITS $	TOTAL $
101	Acoustic Ceiling Tile Installer	34.13	20.79	54.92
102	Boilermaker	30.21	21.97	52.18
103	Bricklayer, Blocklayer or Stonemason	30.00	2.54	32.54
104	Cabinet Installer	20.00	0.46	20.46
105	Carpenter	32.80	0.00	32.80
106	Carpet Layer or Soft Floor Coverer	24.04	4.89	28.93
107	Cement Finisher	25.00	12.00	37.00
108	Drywall Taper or Finisher	20.00	0.00	20.00
109	Electrician	27.00	6.24	33.24
110	Elevator Constructor	43.84	27.09	70.93
111	Fence Erector	17.00	0.17	17.17
112	Fire Sprinkler Fitter	39.66	21.11	60.77
113	Glazier	38.27	14.42	52.69
114	Heat or Frost Insulator	17.00	0.00	17.00
115	Insulator (Batt or Blown)	17.12	6.68	23.80
116	Ironworker	24.30	14.25	38.55
117	Lather	32.80	0.00	32.80
119	Marble Finisher	25.72	18.54	44.26
120	Marble Mason	30.00	2.54	32.54
121	Metal Building Erector	13.60	6.57	20.17
123	Overhead Door Installer	26.00	5.11	31.11
124	Painter	28.84	7.83	36.67
125	Pavement Marking Operator	30.00	19.61	49.61

CODE	Fringe Benefits Must Be Paid On All Hours Worked TRADE OR OCCUPATION	HOURLY BASIC RATE OF PAY $	HOURLY FRINGE BENEFITS $	TOTAL $
129	Plasterer	22.00	0.00	22.00
130	Plumber	38.37	5.96	44.33
132	Refrigeration Mechanic	28.50	2.56	31.06
133	Roofer or Waterproofer Future Increase(s): Add $1.25/hr eff. 06/01/2016	30.45	18.60	49.05
134	Sheet Metal Worker	26.13	17.37	43.50
135	Steamfitter	15.00	2.04	17.04
137	Teledata Technician or Installer	22.50	12.74	35.24
138	Temperature Control Installer	21.42	7.84	29.26
139	Terrazzo Finisher	25.72	18.54	44.26
140	Terrazzo Mechanic	31.55	18.26	49.81
141	Tile Finisher	30.00	0.00	30.00
142	Tile Setter	31.00	0.00	31.00
143	Tuckpointer, Caulker or Cleaner	25.00	2.99	27.99
146	Well Driller or Pump Installer	29.00	0.00	29.00
147	Siding Installer	17.00	0.65	17.65

TRUCK DRIVERS

CODE	Fringe Benefits Must Be Paid On All Hours Worked TRADE OR OCCUPATION	HOURLY BASIC RATE OF PAY $	HOURLY FRINGE BENEFITS $	TOTAL $
201	Single Axle or Two Axle	20.00	0.42	20.42
203	Three or More Axle	18.75	2.00	20.75
205	Pavement Marking Vehicle	18.75	2.00	20.75
207	Truck Mechanic	18.75	2.00	20.75

LABORERS

CODE	Fringe Benefits Must Be Paid On All Hours Worked TRADE OR OCCUPATION	HOURLY BASIC RATE OF PAY $	HOURLY FRINGE BENEFITS $	TOTAL $
301	General Laborer	20.00	8.29	28.29
302	Asbestos Abatement Worker	18.00	5.52	23.52

CODE	Fringe Benefits Must Be Paid On All Hours Worked TRADE OR OCCUPATION	HOURLY BASIC RATE OF PAY $	HOURLY FRINGE BENEFITS $	TOTAL $
303	Landscaper	22.61	0.00	22.61
311	Fiber Optic Laborer (Outside, Other Than Concrete Encased)	18.53	0.00	18.53
315	Final Construction Clean-Up Worker	15.00	0.00	15.00

HEAVY EQUIPMENT OPERATORS
RESIDENTIAL OR AGRICULTURAL CONSTRUCTION

CODE	Fringe Benefits Must Be Paid On All Hours Worked TRADE OR OCCUPATION	HOURLY BASIC RATE OF PAY $	HOURLY FRINGE BENEFITS $	TOTAL $
557	Asphalt Heater, Planer & Scarifier; Asphalt Milling Machine; Asphalt Screed; Backhoe (Track Type); Backhoe (Mini, 15,000 Lbs. & Under); Bituminous (Asphalt) Plant & Paver, Screed; Boring Machine (Directional, Horizontal or Vertical); Bulldozer or Endloader; Concrete Breaker (Large, Auto, VIbratory/Sonic, Manual or Remote); Concrete Bump Cutter, Grinder, Planing or Grooving Machine; Concrete Conveyor System; Concrete Laser/Screed; Concrete Paver (Slipform); Concrete Pump, Concrete Conveyor (Rotec or Bidwell Type); Concrete Slipform Placer Curb & Gutter Machine; Concrete Spreader & DIstributor; Crane (Carry Deck, Mini) or Truck Mounted Hydraulic Crane (10 Tons or Under); Crane With a Lifting Capacity of 25 Tons or Under; Crane, Shovel, Dragline, Clamshells; Forestry Equipment, TImbco, Tree Shear, Tub Grinder, Processor; Grader or Motor Patrol; Grout Pump; Hydro-Blaster (10,000 PSI or Over); Loading Machine (Conveyor); Manhoist; Material or Stack Hoist; Mechanic or Welder; Milling Machine; Roller (Over 5 Ton); Scraper (Self Propelled or Tractor Drawn) 5 cu yds or More Capacity; Shoulder Widener; Skid Rig; Stabilizing or Concrete Mixer (Self-Propelled or 14S or Over); Tractor (Scraper, Dozer, Pusher, Loader); Tractor or Truck Mounted Hydraulic Backhoe; Tractor or Truck Mounted Hydraulic Crane (10 Tons or Under); Trencher (Wheel Type or Chain Type); WInches & A-Frames.	25.00	9.78	34.78
558	Air Compressor (&/or 400 CFM or Over); Air, Electric or Hydraulic Jacking System; Backfiller; Belting, Burlap, Texturing Machine; Boiler (Temporary Heat); Broom or Sweeper; Compactor (Self-Propelled or Tractor Mounted, Towed & LIght Equipment); Concrete Finishing Machine (Road Type); Farm or Industrial Type Tractor; Forklift; Generator (&/or 150 KW or Over); Heaters (Mechanical); High Pressure Utility Locating Machine (Daylighting Machine); Jeep Digger; Lift Slab Machine; Mulcher; Oiler; Post Hole Digger or Driver; Power Subgrader; Pump (3 Inch or Over) or Well Points; Robotic Tool Carrier (With or Without Attachments); Rock, Stone Breaker; Roller (Rubber Tire, 5 Tons or Under); Screed (Milling Machine); Self Propelled Chip Spreader; Shouldering Machine; Skid Steer Loader (With or Without Attachments); Stump Chipper; Telehandler; Vibratory Hammer or Extractor, Power Pack. Future Increase(s): Add $1.60/hr on 5/30/2016.	34.17	19.15	53.32

********** END OF RATES **********

BLANK

State of Wisconsin
Department of Workforce Development
Equal Rights Division

Disclosure of Ownership

The statutory authority for the use of this form is prescribed in Sections 66.0903(12)(d), 66.0904(10)(d) and 103.49(7)(d), Wisconsin Statutes.
The use of this form is mandatory. The penalty for failing to complete this form is prescribed in Section 103.005(12), Wisconsin Statutes.
Personal information you provide may be used for secondary purposes [Privacy Law, s. 15.04(1) (m), Wisconsin Statutes].

(1) On the date a contractor submits a bid to or completes negotiations with a state agency, local governmental unit, or developer, investor or owner on a project subject to Section 66.0903, 66.0904 or 103.49, Wisconsin Statutes, the contractor shall disclose to such state agency, local governmental unit, or developer, investor or owner, the name of any "other construction business," which the contractor, or a shareholder, officer or partner of the contractor, owns or has owned within the preceding three (3) years.

(2) The term "other construction business" means any business engaged in the erection, construction, remodeling, repairing, demolition, altering or painting and decorating of buildings, structures or facilities. It also means any business engaged in supplying mineral aggregate, or hauling excavated material or spoil as provided by Sections 66.0903(3), 66.0904(2), 103.49(2) and 103.50(2), Wisconsin Statutes.

(3) This form must ONLY be filed, with the state agency project owner, local governmental unit project owner, or developer, investor or owner of a publicly funded private construction project that will be awarding the contract, if **both (A) and (B) are met**.

(A) The contractor, or a shareholder, officer or partner of the contractor:
(1) Owns at least a 25% interest in the "other construction business," indicated below, on the date the contractor submits a bid or completes negotiations; or
(2) Has owned at least a 25% interest in the "other construction business" at any time within the preceding three (3) years.

(B) The Wisconsin Department of Workforce Development (DWD) has determined that the "other construction business" has failed to pay the prevailing wage rate or time and one-half the required hourly basic rate of pay, for hours worked in excess of the prevailing hours of labor, to any employee at any time within the preceding three (3) years.

Other Construction Business

Business Name			
Street Address or P O Box	City	State	Zip Code
Business Name			
Street Address or P O Box	City	State	Zip Code
Business Name			
Street Address or P O Box	City	State	Zip Code
Business Name			
Street Address or P O Box	City	State	Zip Code

I hereby state under penalty of perjury that the information, contained in this document, is true and accurate according to my knowledge and belief.

Print the Name of Authorized Officer			
Authorized Officer Signature	Date Signed		
Corporation, Partnership or Sole Proprietorship Name			
Street Address or P O Box	City	State	Zip Code

If you have any questions call (608) 266-6861

State of Wisconsin
Department of Workforce Development
Equal Rights Division

Prime Contractor Affidavit of Compliance With Prevailing Wage Rate Determination

Authorization for this form is provided under Sections 66.0903(9)(c), 66.0904(7)(c) and 103.49(4r)(c) Wisconsin Statutes.
The use of this form is mandatory. The penalty for failing to complete this form is prescribed in Section 103.005(12), Wisconsin Statutes.
Personal information you provide may be used for secondary purposes [Privacy Law, s. 15.04(1)(m), Wisconsin Statutes].

This form must **ONLY** be filed with the **Awarding Agency** indicated below.

State Of)	Project Name	
	DWD Determination Number	Project Number (if applicable)
)SS	Date Determination Issued	Date of Contract
County Of)	Awarding Agency	
	Date Work Completed	

After being duly sworn, the person whose name and signature appears below hereby states under penalty of perjury that

- **I am** the duly authorized officer of the corporation, partnership, sole proprietorship or business indicated below and have recently completed all of the work required under the terms and conditions of a contract with the above-named awarding agency and make this affidavit in accordance with the requirements set forth in Section 66.0903(9)(c), 66.0904(7)(c) or 103.49(4r)(c), Wisconsin Statutes and Chapter DWD 290 of the Wisconsin Administrative Code in order to obtain FINAL PAYMENT from such awarding agency.
- **I have** fully complied with all the wage and hour requirements applicable to this project, including all of the requirements set forth in the prevailing wage rate determination indicated above which was issued for such project by the Department of Workforce Development on the date indicated above.
- **I have** received the required affidavit of compliance from each of my agents and subcontractors that performed work on this project and have listed each of their names and addresses on page 2 of this affidavit.
- **I have** full and accurate records that clearly indicate the name and trade or occupation of every worker(s) that I employed on this project, including an accurate record of the hours worked and actual wages paid to such worker(s).
- **I will** retain the records and affidavit(s) described above and make them available for inspection for a period of at least three (3) years from the completion date indicated above at the address indicated below and shall not remove such records or affidavit(s) without prior notification to the awarding agency indicated above.

Name of Corporation, Partnership, Sole Proprietorship, Business, State Agency or Local Governmental Unit				
Street Address	City	State	Zip Code	Telephone Number
Print Name of Authorized Officer			Date Signed	
Signature of Authorized Officer				

List of Agents and Subcontractors

Name			Name		
Street Address			Street Address		
City	State	Zip Code	City	State	Zip Code
Telephone Number			Telephone Number		
Name			Name		
Street Address			Street Address		
City	State	Zip Code	City	State	Zip Code
Telephone Number			Telephone Number		
Name			Name		
Street Address			Street Address		
City	State	Zip Code	City	State	Zip Code
Telephone Number			Telephone Number		
Name			Name		
Street Address			Street Address		
City	State	Zip Code	City	State	Zip Code
Telephone Number			Telephone Number		
Name			Name		
Street Address			Street Address		
City	State	Zip Code	City	State	Zip Code
Telephone Number			Telephone Number		
Name			Name		
Street Address			Street Address		
City	State	Zip Code	City	State	Zip Code
Telephone Number			Telephone Number		

If you have any questions call (608) 266-6861

State of Wisconsin
Department of Workforce Development
Equal Rights Division

Agent or Subcontractor Affidavit of Compliance With Prevailing Wage Rate Determination

Authorization for this form is provided under Sections 66.0903(9)(b), 66.0904(7)(b) and 103.49(4r)(9b), Wisconsin Statutes. The use of this form is mandatory. The penalty for failing to complete this form is prescribed in Section 103.005(12), Wisconsin Statutes.
Personal information you provide may be used for secondary purposes [Privacy Law, Section 15.04(1)(m), Wisconsin Statutes].

This form must **ONLY** be filed with the **Awarding Contractor** indicated below.

State Of _____))SS County Of _____)	Project Name	
	DWD Determination Number	Project Number (if applicable)
	Date Determination Issued	Date of Subcontract
	Awarding Contractor	
	Date Work Completed	

After being duly sworn, the person whose name and signature appears below hereby states under penalty of perjury that

- **I am** the duly authorized officer of the corporation, partnership, sole proprietorship or business indicated below. We have recently completed all of the work required under the terms and conditions of a subcontract with the above-named awarding contractor. We make this affidavit in accordance with the requirements set forth in Section 66.0903(9)(b), 66.0904(7)(b) or 103.49(4r)(b), Wisconsin Statutes and Chapter DWD 290 of the Wisconsin Administrative Code in order to obtain FINAL PAYMENT from such awarding contractor.
- **I have** fully complied with the entire wage and hour requirements applicable to this project, including all of the requirements set forth in the prevailing wage rate determination indicated above which was issued for such project by the Department of Workforce Development on the date indicated above.
- **I have** received the required affidavit of compliance from each of my agents and subcontractors that performed work on this project and have listed each of their names and addresses on page 2 of this affidavit.
- **I have** full and accurate records that clearly indicate the name and trade or occupation of every worker(s) that I employed on this project, including an accurate record of the hours worked and actual wages paid to such worker(s).
- **I will** retain the records and affidavit(s) described above and make them available for inspection for a period of at least three (3) years from the completion date indicated above at the address indicated below and shall not remove such records or affidavit(s) without prior notification to the awarding contractor.

Name of Corporation, Partnership, Sole Proprietorship, Business, State Agency or Local Governmental Unit				
Street Address or PO Box	City	State	Zip Code	Telephone Number ( )
Print Name of Authorized Officer			Date Signed	
Authorized Officer Signature				

List of Agents and Subcontractors

Name			Name		
Street Address			Street Address		
City	State	Zip Code	City	State	Zip Code
Telephone Number ( )			Telephone Number ( )		
Name			Name		
Street Address			Street Address		
City	State	Zip Code	City	State	Zip Code
Telephone Number ( )			Telephone Number ( )		
Name			Name		
Street Address			Street Address		
City	State	Zip Code	City	State	Zip Code
Telephone Number ( )			Telephone Number ( )		
Name			Name		
Street Address			Street Address		
City	State	Zip Code	City	State	Zip Code
Telephone Number ( )			Telephone Number ( )		
Name			Name		
Street Address			Street Address		
City	State	Zip Code	City	State	Zip Code
Telephone Number ( )			Telephone Number ( )		
Name			Name		
Street Address			Street Address		
City	State	Zip Code	City	State	Zip Code
Telephone Number ( )			Telephone Number ( )		

If you have any questions call (608) 266-6861

State of Wisconsin
Department of Workforce Development
Equal Rights Division
Labor Standards Bureau

Request to Employ Subjourneyperson

The use of this form is mandatory. The penalty for failing to complete this form is prescribed in Section 103.005(12), Wisconsin Statutes.
Personal information you provide may be used for secondary purposes (Privacy Law, s. 15.04(1)(m), Wisconsin Statutes].
The employer indicated below requests that the Department of Workforce Development (DWD) determine the prevailing wage rate(s) and related qualifications to enable such employer to use a subjourneyperson(s) on the following prevailing wage project, in accordance with the provisions of Section DWD 290.025, Wisconsin Administrative Code.

1. Name of Project Appearing on the Project Determination			
County	City, Village or Town		
DWD Project Determination Number	Project Number (if applicable)		
2. Job Classification(s) for which you request a subjourney rate (i.e., carpenter, electrician, plumber, etc.)			
a.	b.		
c.	d.		
3. Employer Name (Print)	Requester Name (Print)		
Address	City	State	Zip Code
Telephone Number ( )	Requester Title		
Email address (if you prefer to receive your response via email)	Fax Number (if you prefer to receive your response via fax) ( )		

READ CAREFULLY: I understand that this request is ONLY applicable to the project and job classification(s) listed above and that subjourney employees primarily work under the direction of and assist a skilled trade employee by frequently using the tools of a skilled trade and will NOT regularly perform the duties of a general laborer, heavy equipment operator or truck driver. If the subjourney employee regularly performs the work of a different trade or occupation, he/she will be compensated for such work at the applicable journeyperson prevailing wage rate. I agree to compensate subjourney employees in strict accordance with the directions received from the DWD.

Requester Signature	Date Signed

MAIL the completed request to:
EQUAL RIGHTS DIVISION, LABOR STANDARDS BUREAU
PO BOX 8928, MADISON WI 53708
OR
FAX the completed request to: (608) 267-4592 / **DO NOT e-mail your request**.
Call (608) 266-6861 for assistance in completing this form.

ERD-10880 (R. 6/2013)

ADDITIONAL GENERAL PREVAILING WAGE LAW INFORMATION

(This document updated July 2015)

NOTE: Recent prevailing wage law changes enacted by the 2015-17 Budget Bill (2015 Wisconsin Act 55) do not go into effect until calendar year 2017.

For prevailing wage laws and frequently asked questions, refer to the prevailing wage website at: http://dwd.wisconsin.gov/er/prevailing_wage_rate/default.htm

Topic	Who's affected?	Brief description of requirement under §66.0903 or §103.49
Non-applicability	All public entities	Prevailing wage rates do not apply to minor service or maintenance work, warranty work, or work under a supply and installation contract.
Non-applicability: Minor service or maintenance work	Local governmental units & Contractors	Minor service or maintenance work means a project of public works that is limited to • minor crack filling, chip or slurry sealing, or other minor pavement patching, not including overlays, that has a projected life span of no longer than 5 years or that is performed for a TOWN and is not funded under §86.31, regardless of projected life span; • the depositing of gravel on an existing gravel road applied solely to maintain the road; • road shoulder maintenance; • cleaning of drainage or sewer ditches or structures; or • any other limited, minor work on public facilities or equipment that is routinely performed to prevent breakdown or deterioration.
Non-applicability: Minor service or maintenance work	State agencies	Minor service or maintenance work means a project of public works that is limited to • minor crack filling, chip or slurry sealing, or other minor pavement patching, not including overlays, that has a projected life span of no longer than 5 years; • cleaning of drainage or sewer ditches or structures; or • any other limited, minor work on public facilities or equipment that is routinely performed to prevent breakdown or deterioration.
Non-applicability: Supply & installation contract	All public entities	Supply and installation contract means a contract under which the material is installed by means of simple fasteners or connectors such as screws or nuts and bolts and no other work is performed on the site of the project of public works, and the total labor cost to install the material does not exceed 20 percent of the total cost of the contract.
Non-applicability: Work which a contractor or individual donates to a public entity	All public entities	Prevailing wage laws §§66.0903 & 103.49, Stats., do not apply to work performed on a project of public works for which the local governmental unit or the state or the state agency contracting for the project is not required to compensate any contractor, subcontractor, contractor's or subcontractor's agent, or individual for performing the work.

Topic	Who's affected?	Brief description of requirement under §66.0903 or §103.49
Non-applicability: Residential	All public entities	A prevailing wage rate determination is not required for the erection, construction, repair, remodeling, or demolition of a residential property containing 2 dwelling units or less.
Non-applicability: Residential subdivision infrastructure	All public entities	A prevailing wage rate determination is not required for a road, street, bridge, sanitary sewer, or water main project that is a part of a development in which at least 90 percent of the lots contain or will contain 2 dwelling units or less, as determined by the local governmental unit at the time of approval of the development, and that, on completion, is acquired by, or dedicated to, a local governmental unit (including under §236.13(2), Stats.), or the state, for ownership or maintenance by the local governmental unit or the state.
Electronic certified payroll record	Contractors	The requirement that every contractor on a prevailing wage project submit to DWD monthly a certified record of employees who worked on the project and that DWD post these certified records on its Internet website was discontinued effective July 1, 2011. Contractors are still required to maintain payroll records and provide them upon request from DWD &/or the project owner.
Payroll record inspection request by any person	Contractors & Complainants	Any person may request DWD to inspect the payroll records of any contractor working on a prevailing wage project. On receipt of such a request, the contractor must submit to DWD a certified record of its payroll records, other than personally identifiable information relating to an employee of the contractor, for no longer than a 4-week period. DWD may request records from a contractor under this provision no more than once per calendar quarter for each project of public works on which the contractor is performing work. The department may not charge a requester a fee for obtaining that information. DWD must make these certified records available for public inspection.
Statewide uniformity	Local govern-mental units	A local governmental unit may not enact & administer a prevailing wage ordinance/provision for public works or publicly funded private construction projects. Any extant laws to that effect are void.
Substance Abuse Testing	Contractors & Workers	Before commencing work on a prevailing wage project, a contractor must have a written substance abuse testing program in place that complies with §103.503, Wis. Stats. No employee may use, possess, attempt to possess, distribute, deliver, or be under the influence of a drug or under the influence of alcohol while performing work on a prevailing wage project.

Topic	Who's affected	Brief description of requirement under §66.0903 or §103.49
Covered employees	Truck drivers & Other workers & Contractors	A laborer, worker, mechanic, or truck driver who is employed to process, manufacture, pick up, or deliver materials or products from a commercial establishment that has a fixed place of business from which the establishment supplies processed or manufactured materials or products or from a facility that is not dedicated exclusively, or nearly so, to a project of public works is NOT entitled to receive the prevailing wage rate UNLESS any of the following applies: 1) the laborer, worker, mechanic, or truck driver is employed to go to the source of mineral aggregate such as sand, gravel, or stone and deliver that mineral aggregate to the site of a project of public works by depositing the material directly in final place, from the transporting vehicle or through spreaders from the transporting vehicle. 2) the laborer, worker, mechanic, or truck driver is employed to go to the site of a project of public works, pick up excavated material or spoil from the site of the project, and transport that excavated material or spoil away from the site of the project.

DEPARTMENT OF ADMINISTRATION
BUSINESS OPERATIONS DIVISION
PROCUREMENT SERVICES SECTION

Affidavit of Compliance
Disclosure of Participation in or Profits Derived from Slavery by Contractors

Company Name: _____

Address: _____

City: _____ State: _____ Zip: _____

This affidavit of compliance will be the contractor's sworn statement that publicly discloses any slavery policies sold by any companies, or profits from slavery by industries or their predecessors who are doing business with the City of Milwaukee as defined in the Milwaukee Code of Ordinances 310-14. **NOTE: Effective May 13, 2014, Contractors whose company was established during the slavery era, whether or not subject to competitive bidding, shall complete this Affidavit prior to entering into a contract.**

Please check one:

☐ This business **was** in existence during or prior to the slavery era (1865). I have searched any and all records for records of investments or profits from slavery, and have found no such records.

☐ This business **was** in existence during or prior to the slavery era (1865). I have searched any and all records for records of investments or profits from slavery, and am disclosing the findings below.

Findings being disclosed (please attach additional pages, if necessary):

I hereby declare that all statements are true, accurate and complete as of the date furnished to the City of Milwaukee.

Authorized Signature: _____

Printed Name: _____ Date: _____

Subscribed to before me on this _____ day of _____, 20 _____, at

_____ County, _____ State.

_____
Notary Public Signature

_____
Printed Name

My commission expires: _____

(SEAL)

Please Return to:
DOA-BOD-Procurement Services
200 E. Wells Street, Room 601
Milwaukee, WI 53202

procurement.services@milwaukee.gov

CITY OF MILWAUKEE
PRIME CONTRACTOR AFFIDAVIT OF COMPLIANCE
WITH MINIMUM WAGE SCALE AND SPECIAL AREA WORKER HOURS PROVISIONS

STATE OF_____) Project Name_____
) SS.
_____County) DPW Contract No._____

I,_____, being duly sworn, state that:

1. I am the _____ of _____, a _____
(State)
Corporation, partnership, or individual of _____, _____,
(City, Village, Township) (State)
and make this affidavit pursuant to the provisions of § 66.0903 (9), Wisconsin Statutes, and Wisconsin Administrative Code section §DWD 290.14 regarding wage and fringe benefit rates for municipal contracts for construction of public works and pursuant to Section 309-41 of the Milwaukee Code of Ordinances.

2. I have recently completed the work required under the terms of the contract dated _____, With the City of Milwaukee, Department of Public Works for the construction of all or part of the above-named public works project and make this affidavit in order to obtain my final payment.

3. I have fully complied with the wage and hour requirements as set forth in the above-referenced contract and paid overtime rates (1-1/2 times) for any work over ten (10) hours per day or forty (40) hours per week.

4. I have received similar evidence of compliance with the contract wage rates and special impact area worker hour requirements in the form of completed affidavits from each of my agents and subcontractors who worked on this project and have listed their names on the reverse side of this affidavit along with numbers and percentages of worker hours.

5. I have full and accurate records which clearly show the name, trade or occupation, and home address of every laborer, worker, or mechanic that I employed in connection with the work on this project, as well as the hours worked and actual wage and fringe benefits paid to such employees. These records will be kept at _____ in the custody of _____, whose address and telephone number are _____ _____. These payroll records and evidence of compliance set in Paragraph 4 will be retained and made available for inspection for a period of at least **seven (7)** years following the completion of the project and will not be removed without prior notification to the commissioner of Public Works.

Title	Officer Name	Address
President	_____	_____
Vice President	_____	_____
Secretary-Treasurer	_____	_____

Subscribed and sworn to before me this_____
Day of _____, 20_____

_____
(Notary Signature)

Notary Public, State of _____ _____
(Contractor Signature)

My commission Expires: _____

____O V E R ___

SUMMARY OF HOURS WORKED

(TARGET RESIDENCY VS TOTAL HOURS)

Name	No. of Hours of Special Impact Area Workers	% of Total Hours	No. of Hours of All Other Workers	% of Total Hours	Total of All Worker Hours
Prime Contractor:					
Subcontractors:					
GRAND TOTAL					

CITY OF MILWAUKEE
SUBCONTRACTOR AFFIDAVIT OF COMPLIANCE
WITH MINIMUM WAGE SCALE AND SPECIAL AREA WORKER HOURS PROVISIONS

STATE OF_____) Project Name_____
) SS.
_____County) DPW Contract No._____

I,_____, being duly sworn, state that:

1. I am the _____ of _____, a _____
(State)
Corporation, partnership, or individual of _____, _____,
(City, Village, Township) (State)
and make this affidavit pursuant to the provisions of § 66.0903 (9), Wisconsin Statutes, and Wisconsin Administrative Code section § DWD 290.13 regarding wage and fringe benefit rates for municipal contracts for construction of public works and pursuant to Section 309-41 of the Milwaukee Code of Ordinances.

2. I have recently completed the work required under the terms of the contract dated _____, With the City of Milwaukee, Department of Public Works and _____
for the construction of all or part of the above-named public works (Name of Prime Contractor)
project and make this affidavit in order to obtain my final payment.

3. I have fully complied with the wage and hour requirements as set forth in the above-referenced contract and paid overtime rates (1-1/2 times) for any work over ten (10) hours per day or forty (40) hours per week.

4. I have full and accurate records which clearly show the name, trade or occupation, and home address of every laborer, worker, or mechanic that I employed in connection with the work on this project, as well as the hours worked and actual wage and fringe benefits paid to such employees. These records will be kept at _____ in the custody of _____, whose address and telephone number are _____ _____. These payroll records and evidence of compliance set in Paragraph 4 will be retained and made available for inspection for a period of at least **seven (7)** years following the completion of the project and will not be removed without prior notification to the commissioner of Public Works.

5. I certify that _____ were the total number of hours worked on this project with _____ hours being worked by residents of the special impact area and _____ hours being worked by all other workers.

Title	Officer Name	Address
President_____	_____	_____
Vice President__	_____	_____
Secretary-Treasurer	_____	_____

Subscribed and sworn to before me this_____
Day of _____, 20_____

_____
(Notary Signature)

Notary Public, State of _____ _____
(Contractor Signature)

My commission Expires: _____

Form DPW-6(02/07)

CITY OF MILWAUKEE
CONTRACTORS TIME REPORT

Contractor_____ **Contract No. C**_____ **Complete and return to Rm. 506, Dept. of Public Works**
Sub-Contractor_____ **Period Starting**_____ **within 10 days following the completion of work on a**
Work Location_____ **Period Ending**_____ **contract, or every three months, whichever occurs first.**

NAME/ ADDRESS	Job Class.	Appren	RESIDENCY			GENDER	RACE	REGULAR HOURS		OVERTIME HRS.		HOURLY CONTRIBUTIONS TO BE MADE			
			Target Milw.	Non-Target Milw.	Non-Resident Milw.			Total Hours Worked	Hourly Rate*	Total Hours Worked	Hourly Rate*	Welfare Fund	Vacation Fund	Pension Fund	Other

***Exclude Welfare, Vacation, Pension Fund and Other Contributions unless they are paid as wages.**

State of Wisconsin) ss.
County of Milwaukee)

This is to certify that each and every employee was employed by me during the above period on the contract covered by this report as listed above and has been paid in full without rebate the amounts indicated, and that we have conformed with the requirements of Section 309-21 thru 309-37, Milwaukee Code of Ordinances, relating to Minimum Wage Scale, and any amendments thereto.

Subscribed and sworn to before me this _____ day of _____A.D. _____
Company Officer's Signature

My commission Expires_____ _____ _____
Notary Public Milwaukee County Type or Print Officer's Name & Title

BLANK