NOTES :

- (I), (II), (III), DENOTES RAMP TYPE.
- CONSTRUCT ALL CARRIAGE WALKS AND DRIVEWAYS PER CITY OF MILWAUKEE SPECIFICATIONS.
- OFFSET MEASUREMENTS TO TREES, WOOD POLES AND LIGHT POLES ARE TAKEN TO EDGE NEAREST THE CENTERLINE.
- OFFSET MEASUREMENTS TO HYDRANTS ARE TAKEN TO THE OPERATING NUT.
- WHERE GRINDING IS INDICATED, GRIND TO 0.21 AT THE C/L & 1/4 PTS. AND 0.12 ALONG THE FLANGE AND 0.17 AT BUTT JOINTS UNLESS OTHERWISE INDICATED.
- GRADE & PLACE 1½ WIDTH SOD IN LAWN AREAS DISTRUBED BY CONSTRUCTION UNLESS OTHERWISE INDICATED.
- REMOVE ASPHALT PATCHES AS DIRECTED BY CONSTRUCTION SUPERVISOR
- ROADWAY ELEVATIONS ARE ALL 11' LT.& RT. OF C/L, EVEN IF PAVEMENT JOINT IS DIFFERENT.
- PROJECT DESIGNED WITH FOUR-11' PASSES & .02 CROWN.
- INTERNAL MANHOLE SEALS ARE REQUIRED IN ALL MANHOLES MARKED 'SAN' (SANITARY).

CONDITION OF CONCRETE	
B BROKEN	P PATCHED
BL BLUE LINED	PC POOR CONDITION
BP BACK PITCHED	S SETTLED
C CRACKED	SP SPALLED
H HEAVED	VGC VERY GOOD
JOINT FAILURE	VERY POOR
MUD JACKED	

ESTIMATE / CERTIFICATE QUANTITIES

	DESCRIPTION	UNIT	ASSESS.	X-ING			PLAN TOT.	PROJ. TOT.
X	MOBILIZATION	L.S.						
X	FINISHING ROADWAY	L.S.						
X	BARRICADING AND SIGNING	L.S.						
X	CUTTING	C.Y.						
	ROADWAY CUTTING	C.Y.						
	FILLING	C.Y.						
	ROADWAY FILLING	C.Y.						
	PAVEMENT REMOVAL	S.Y.						
X	BITUMINOUS SURFACE REMOVAL	S.Y.						
X	CURB &/OR CURB & GUTTER REMOVAL	L.F.						
X	CONC. WALK &/OR DRIVEWAY REMOVAL	S.F.						
	SAWING (FULL DEPTH)	L.F.						
X	SAWING	L.F.						
	TREES CLEARING	I.D.						
	TREES GRUBBING	I.D.						
X	CONCRETE CURB & GUTTER	L.F.						
	V.T. CONC. WALK &/OR DRIVEWAY	C.Y.						
X	5" CONCRETE WALK	S.F.						
X	7" CONCRETE DRIVEWAY	S.F.						
X	7" DEPRESSED CONCRETE DRIVEWAY	S.F.						
	CONCRETE PAVEMENT	S.Y.						
	7" CONCRETE ALLEY PAVEMENT	S.Y.						
X	V.T. CONCRETE BASE	C.Y.						
X	8" CONCRETE BASE	S.Y.						
X	TACK COAT	GAL.						
X	BASE PREP. FOR ASPHALT SURFACE	L.S.						
X	V.T. ASPH. CONC. PAV'T. (MAX.)	S.Y.						
	CRUSHED STONE BASE							
	CRUSHED GRAVEL BASE							
X	GRAVEL FILLING	TON						
X	SODDING	S.Y.						
X	TOPSOIL	C.Y.						
	PAVEMENT GRINDING (ASPHALT)	S.Y.						
X	PAVEMENT GRINDING (CONCRETE)	S.Y.						
	SEALING PAV'T JOINTS & CRACKS	S.Y.						
	MANHOLE RINGS	EACH						
X	SEWER FRAME ADJUSTMENT	V.F.						
	~~MANHOLE SEAL (CITY FURNISHED)~~	EACH						
X	EROSION CONTROL (TYPE M)	EACH						
X	JOINT AND CRACK REPAIR	L.F.						1500
X	CRACK & SEAT	S.Y.						

PLAN OF: DEPARTMENT OF PUBLIC WORKS
INFRASTRUCTURE SERVICES DIVISION
FIELD OPERATIONS
FIELD & DESIGN ENGINEERING
MILWAUKEE, WISCONSIN

FILE NO. 573

W. WOOLWORTH AVE. (6300N, 5100W)
N. SHERMAN BLVD. TO N. 51 ST ST.
THIS SECTION: A PT. 1890' ± W. OF N. SHERMAN BLVD. TO N. 51 ST ST.

DRAWN BY	M. VOJVODICH	DATE: 2-5-03	PROJECT NO. ST211040107	SHEET 1 OF 4
DESCRIPTIONS BY	M. VOJVODICH	DATE: 2-5-03	SCALE 1" = 10'	1/4 SEC. 157 / ALD. DIST. 9
LEVELS BY	SCHAAFSMA	DATE: 5-8-03		
LEVELS TRANSF. BY	LITZAU	DATE: 5-13-03		
DESIGNED BY	GUZLECKI	DATE: 6-6-03	OBSTRUCTIONS - SEE OBSTRUCTION LIST	
GRADES TRANSF. BY	M. VOJVODICH	DATE: 9-4-03	REVISED: 8-7-14 SCHULTZ	
CHECKED BY	D. [signature]	DATE: 8/18/15	REVISED:	
APPROVED BY	[signature]	DATE: 8/20/15	REVISED:	

FILE: V:\PWELIB\PAVING\28380.FIN
PLOT DATE: 13-AUG-2015

THIS SHEET
STORM DRAINAGE UNITS
C.B.W. - 0 | RESET - 4 | ABANDON - 0
PROJECT IN (SEPARATED) AREA

NOTES :

- Ⓘ, Ⓘ, Ⓘ, DENOTES RAMP TYPE.
- CONSTRUCT ALL CARRIAGE WALKS AND DRIVEWAYS PER CITY OF MILWAUKEE SPECIFICATIONS.
- OFFSET MEASUREMENTS TO TREES, WOOD POLES AND LIGHT POLES ARE TAKEN TO EDGE NEAREST THE CENTERLINE.
- OFFSET MEASUREMENTS TO HYDRANTS ARE TAKEN TO THE OPERATING NUT.

CONDITION OF CONCRETE

- B BROKEN
- BL BLUE LINED
- BP BACK PITCHED
- C CRACKED
- H HEAVED
- JF JOINT FAILURE
- MJ MUD JACKED
- P PATCHED
- PC POOR CONDITION
- S SETTLED
- SP SPALLED
- VG VERY GOOD
- VP VERY POOR

ESTIMATE / CERTIFICATE QUANTITIES

DESCRIPTION	UNIT	ASSESS.	X-ING			PLAN TOT.	PROJ. TOT.
MOBILIZATION	L.S.						
FINISHING ROADWAY	L.S.						
BARRICADING AND SIGNING	L.S.						
CUTTING	C.Y.						
ROADWAY CUTTING	C.Y.						
FILLING	C.Y.						
ROADWAY FILLING	C.Y.						
PAVEMENT REMOVAL	S.Y.						
BITUMINOUS SURFACE REMOVAL	S.Y.						
CURB &/OR CURB & GUTTER REMOVAL	L.F.						
CONC. WALK &/OR DRIVEWAY REMOVAL	S.F.						
SAWING (FULL DEPTH)	L.F.						
SAWING	L.F.						
TREES CLEARING	I.D.						
TREES GRUBBING	I.D.						
CONCRETE CURB & GUTTER	L.F.						
V.T. CONC. WALK &/OR DRIVEWAY	C.Y.						
5" CONCRETE WALK	S.F.						
7" CONCRETE DRIVEWAY	S.F.						
CONCRETE PAVEMENT	S.Y.						
7" CONCRETE ALLEY PAVEMENT	S.Y.						
V.T. CONCRETE BASE	C.Y.						
CONCRETE BASE	S.Y.						
TACK COAT	GAL.						
BASE PREP. FOR ASPHALT SURFACE	L.S.						
V.T. ASPH. CONC. PAV'T. (MAX.)	S.Y.						
CRUSHED STONE BASE							
CRUSHED GRAVEL BASE							
GRAVEL FILLING	TON						
SODDING	S.Y.						
TOPSOIL	C.Y.						
PAVEMENT GRINDING (ASPHALT)	S.Y.						
PAVEMENT GRINDING (CONCRETE)	S.Y.						
SEALING PAV'T JOINTS & CRACKS	S.Y.						
MANHOLE RINGS	EACH						
SEWER FRAME ADJUSTMENT	V.F.						
MANHOLE SEAL (CITY FURNISHED)	EACH						
EROSION CONTROL (TYPE M)	EACH						

THIS SHEET

STORM DRAINAGE UNITS		
C.B. W. - 0	RESET - 2	ABANDON - 0
PROJECT IN (SEPARATED) AREA		

FILE NO. 574

DEPARTMENT OF PUBLIC WORKS
INFRASTRUCTURE SERVICES DIVISION
FIELD OPERATIONS
FIELD & DESIGN ENGINEERING
MILWAUKEE, WISCONSIN

PLAN OF: W. WOOLWORTH AVE. (6300N, 4800W)

N. SHERMAN BLVD. TO N. 51 ST ST.

THIS SECTION: A PT. 1260' ± TO A PT. 1890' ± W. OF N. SHERMAN BLVD.

DRAWN BY	M. VOJVODICH	DATE: 2-5-03	PROJECT NO.	SHEET 2 OF 4
DESCRIPTIONS BY	M. VOJVODICH	DATE: 2-5-03	ST211040107	1/4 SEC. ALD. DIST.
LEVELS BY	SCHAAFSMA	DATE: 5-8-03	SCALE	157 9
LEVELS TRANSF. BY	LITZAU	DATE: 5-13-03	1"=10'	
DESIGNED BY	GUZLECKI	DATE: 5-6-03	OBSTRUCTIONS - SEE OBSTRUCTION LIST	
GRADES TRANSF. BY	M. VOJVODICH	DATE: 9-4-03	REVISED: 8-7-14 SCHULTZ	
CHECKED BY	D. [signature]	DATE: 8/10/15	REVISED:	
APPROVED BY	[signature]	DATE: 8/20/15	REVISED:	

FILE: V:\PWELIB\PAVING\28380.FIN
PLOT DATE: 13-AUG-2015

DATE	TO
3-17-15	ESTIMATING
3-17-16	HOLLOW WALKS
	PUBLIC HEARING
	CONSTRUCTION
	SEWER ENG.
	WATER ENG.
	STREET LIGHTING
	BLDG. SERVICES
	MEASURING
	FIELD
	DISTRICT FILE
	FORESTRY
	W.E. / G.O.
	WIS. GAS CO.
	TRANSIT SYSTEM
	CABLE TV
	UND. GRD. COND.
	WATER DIST.
	WEPCO N/S
	WEPCO S/S
	SEWER SERVICES
	PLAN SIZE 12" X 102"

W. WOOLWORTH AVE.
8+00
14+50

EROSION CONTROL	C.B.	AND	REQUISITION	PLAN
TYPE M 2	☒-CBW 0	☐-RESET 2	X-ABANDON 0	☒ NO WORK

THIS SHEET

W. WOOLWORTH AVE. - N. SHERMAN BLVD. TO N. 51 ST. - A PT. 1260' ± TO A PT. 1890' ± W. OF N. SHERMAN BLVD.

ST211040107 12" X 102" 28380 # (2 OF 4)

NOTES :

- (I), (II), (III), DENOTES RAMP TYPE.
- CONSTRUCT ALL CARRIAGE WALKS AND DRIVEWAYS PER CITY OF MILWAUKEE SPECIFICATIONS.
- OFFSET MEASUREMENTS TO TREES, WOOD POLES AND LIGHT POLES ARE TAKEN TO EDGE NEAREST THE CENTERLINE.
- OFFSET MEASUREMENTS TO HYDRANTS ARE TAKEN TO THE OPERATING NUT.

CONDITION OF CONCRETE
B BROKEN
BL BLUE LINED
BP BACK PITCHED
C CRACKED
H HEAVED
JF JOINT FAILURE
MJ MUD JACKED
P PATCHED
PC POOR CONDITION
S SETTLED
SP SPALLED
VGC VERY GOOD
VPC VERY POOR

ESTIMATE / CERTIFICATE QUANTITIES

DESCRIPTION	UNIT	ASSESS.	X-ING			PLAN TOT.	PROJ. TOT.
MOBILIZATION	L.S.						
FINISHING ROADWAY	L.S.						
BARRICADING AND SIGNING	L.S.						
CUTTING	C.Y.						
ROADWAY CUTTING	C.Y.						
FILLING	C.Y.						
ROADWAY FILLING	C.Y.						
PAVEMENT REMOVAL	S.Y.						
BITUMINOUS SURFACE REMOVAL	S.Y.						
CURB &/OR CURB & GUTTER REMOVAL	L.F.						
CONC. WALK &/OR DRIVEWAY REMOVAL	S.F.						
SAWING (FULL DEPTH)	L.F.						
SAWING	L.F.						
TREES CLEARING	I.D.						
TREES GRUBBING	I.D.						
CONCRETE CURB & GUTTER	L.F.						
V.T. CONC. WALK &/OR DRIVEWAY	C.Y.						
5" CONCRETE WALK	S.F.						
7" CONCRETE DRIVEWAY	S.F.						
CONCRETE PAVEMENT	S.Y.						
7" CONCRETE ALLEY PAVEMENT	S.Y.						
V.T. CONCRETE BASE	C.Y.						
CONCRETE BASE	S.Y.						
TACK COAT	GAL.						
BASE PREP. FOR ASPHALT SURFACE	L.S.						
V.T. ASPH. CONC. PAV'T. (MAX.)	S.Y.						
CRUSHED STONE BASE							
CRUSHED GRAVEL BASE							
GRAVEL FILLING	TON						
SODDING	S.Y.						
TOPSOIL	C.Y.						
PAVEMENT GRINDING (ASPHALT)	S.Y.						
PAVEMENT GRINDING (CONCRETE)	S.Y.						
SEALING PAV'T JOINTS & CRACKS	S.Y.						
MANHOLE RINGS	EACH						
SEWER FRAME ADJUSTMENT	V.F.						
MANHOLE SEAL (CITY FURNISHED)	EACH						
EROSION CONTROL (TYPE M)	EACH						

DEPARTMENT OF PUBLIC WORKS
INFRASTRUCTURE SERVICES DIVISION
FIELD OPERATIONS
FIELD & DESIGN ENGINEERING
MILWAUKEE, WISCONSIN

FILE NO. 575

PLAN OF: W. WOOLWORTH AVE. (6300N, 4500W)
N. SHERMAN BLVD. TO N. 51 ST ST.
THIS SECTION: A PT. 520' ± TO A PT. 1260' ± W. OF N. SHERMAN BLVD.

DRAWN BY M. VOJVODICH	DATE: 2-5-03	PROJECT NO. ST211040107	SHEET 3 OF 4
DESCRIPTIONS BY M. VOJVODICH	DATE: 2-5-03	SCALE 1"=10'	1/4 SEC. 157 / ALD. DIST. 9
LEVELS BY SCHAAFSMA	DATE: 5-8-03		
LEVELS TRANSF. BY LITZAU	DATE: 5-13-03		
DESIGNED BY GUZLECKI	DATE: 6-4-03	OBSTRUCTIONS - SEE OBSTRUCTION LIST	
GRADES TRANSF. BY M. VOJVODICH	DATE: 9-4-03	REVISED: 8-7-14 SCHULTZ	
CHECKED BY [signature]	DATE: 8/10/15	REVISED:	
APPROVED BY [signature]	DATE: 8/20/15	REVISED:	

FILE: V:\PWELIBYPAVING\28380.FIN
PLOT DATE: 14-AUG-2015

THIS SHEET

STORM DRAINAGE UNITS		
C.B.W. - 0	RESET - 12	ABANDON - 0
PROJECT IN (SEPARATED) AREA		

TO / DATE	8-21-15	8-14-16
ESTIMATING	1	
HOLLOW WALKS	1	
PUBLIC HEARING	1	
CONSTRUCTION	1	6
SEWER ENG.	1	
WATER ENG	1	
STREET LIGHTING	1	
BLDG. SERVICES		
MEASURING		1
FIELD		
DISTRICT FILE	2	
FORESTRY	1	
W.E. / G.O.		
WIS. GAS CO.		
TRANSIT SYSTEM		
CABLE TV		
UND. GRD. COND.		
WATER DIST.	1	
WEPCO N/S		
WEPCO S/S		
SEWER SERVICES	1	
Traffic ENG	1	
Utility Coord RM 506	1	6
PLAN SIZE	12" X 112"	

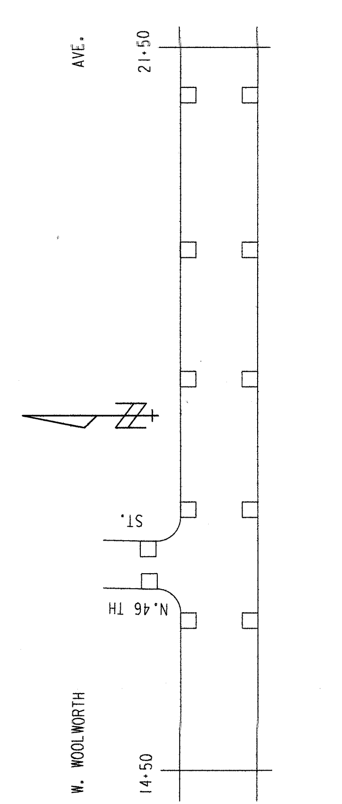

THIS SHEET

EROSION CONTROL	AND C.B.	REQUISITION	PLAN
TYPE M	☒ - CBW	☐ - RESET	X - ABANDON	☒ NO WORK
12	0	12	0	

W. WOOLWORTH AVE. - N. SHERMAN BLVD. TO N. 51 ST ST.
A PT. 520' ± TO A PT. 1260' ± W. OF N. SHERMAN BLVD. ST211040107
(3 OF 4) # 28380 12" X 112"

NOTES :

- Ⓘ, Ⓘ, Ⓘ, DENOTES RAMP TYPE.
- CONSTRUCT ALL CARRIAGE WALKS AND DRIVEWAYS PER CITY OF MILWAUKEE SPECIFICATIONS.
- OFFSET MEASUREMENTS TO TREES, WOOD POLES AND LIGHT POLES ARE TAKEN TO EDGE NEAREST THE CENTERLINE.
- OFFSET MEASUREMENTS TO HYDRANTS ARE TAKEN TO THE OPERATING NUT.

CONDITION OF CONCRETE

- B BROKEN
- BL BLUE LINED
- BP BACK PITCHED
- C CRACKED
- H HEAVED
- JF JOINT FAILURE
- MJ MUD JACKED
- P PATCHED
- PC POOR CONDITION
- S SETTLED
- SP SPALLED
- VG VERY GOOD
- VP VERY POOR

ESTIMATE / CERTIFICATE QUANTITIES

DESCRIPTION	UNIT	ASSESS.	X-ING			PLAN TOT.	PROJ. TOT.
MOBILIZATION	L.S.						
FINISHING ROADWAY	L.S.						
BARRICADING AND SIGNING	L.S.						
CUTTING	C.Y.						
ROADWAY CUTTING	C.Y.						
FILLING	C.Y.						
ROADWAY FILLING	C.Y.						
PAVEMENT REMOVAL	S.Y.						
BITUMINOUS SURFACE REMOVAL	S.Y.						
CURB &/OR CURB & GUTTER REMOVAL	L.F.						
CONC. WALK &/OR DRIVEWAY REMOVAL	S.F.						
SAWING (FULL DEPTH)	L.F.						
SAWING	L.F.						
TREES CLEARING	I.D.						
TREES GRUBBING	I.D.						
CONCRETE CURB & GUTTER	L.F.						
V.T. CONC. WALK &/OR DRIVEWAY	C.Y.						
5" CONCRETE WALK	S.F.						
7" CONCRETE DRIVEWAY	S.F.						
CONCRETE PAVEMENT	S.Y.						
7" CONCRETE ALLEY PAVEMENT	S.Y.						
V.T. CONCRETE BASE	C.Y.						
CONCRETE BASE	S.Y.						
TACK COAT	GAL.						
BASE PREP. FOR ASPHALT SURFACE	L.S.						
V.T. ASPH. CONC. PAV'T. (MAX.)	S.Y.						
CRUSHED STONE BASE							
CRUSHED GRAVEL BASE							
GRAVEL FILLING	TON						
SODDING	S.Y.						
TOPSOIL	C.Y.						
PAVEMENT GRINDING (ASPHALT)	S.Y.						
PAVEMENT GRINDING (CONCRETE)	S.Y.						
SEALING PAV'T JOINTS & CRACKS	S.Y.						
MANHOLE RINGS	EACH						
SEWER FRAME ADJUSTMENT	V.F.						
MANHOLE SEAL (CITY FURNISHED)	EACH						
EROSION CONTROL (TYPE M)	EACH						

DEPARTMENT OF PUBLIC WORKS
INFRASTRUCTURE SERVICES DIVISION
FIELD OPERATIONS
FIELD & DESIGN ENGINEERING
MILWAUKEE, WISCONSIN

PLAN OF: W. WOOLWORTH AVE. (6300N, 4300W)
N. SHERMAN BLVD. TO N. 51 ST ST.
THIS SECTION: N. SHERMAN BLVD. TO A PT. 520' ± W. OF N. SHERMAN BLVD.

DRAWN BY	M. VOJVODICH	DATE: 2-5-03	PROJECT NO. ST211040107
DESCRIPTIONS BY	M. VOJVODICH	DATE: 2-5-03	
LEVELS BY	SCHAAFSMA	DATE: 5-8-03	SCALE 1"=10' / SHEET 4 OF 4
LEVELS TRANSF. BY	LITZAU	DATE: 5-13-03	1/4 SEC. 157 / ALD. DIST. 9
DESIGNED BY	GUZLECKI	DATE: 6-11-03	OBSTRUCTIONS - SEE OBSTRUCTION LIST
GRADES TRANSF. BY	M. VOJVODICH	DATE: 9-4-03	REVISED: 8-7-14 SCHULTZ
CHECKED BY		DATE: 8/6/15	REVISED:
APPROVED BY		DATE: 8/20/15	REVISED:
FILE: V:\PWELIB\PAVING\28380.FTN			
PLOT DATE: 13-AUG-2015			

FILE NO. 576

THIS SHEET STORM DRAINAGE UNITS
C.B.W.- 0 RESET- 8 ABANDON- 0
PROJECT IN (SEPARATED) AREA

EROSION CONTROL AND C.B. REQUISITION PLAN

TYPE M	☒-CBW	□-RESET	X-ABANDON	NO WORK
10	0	8	0	

THIS SHEET

TO	DATE
ESTIMATING	
HOLLOW WALKS	
PUBLIC HEARING	
CONSTRUCTION	
SEWER ENG	
WATER ENG	
STREET LIGHTING	
BLDG. SERVICES	
MEASURING	
FIELD	
DISTRICT FILE	
FORESTRY	
W.E. / G.D.	
WIS. GAS CO.	
TRANSIT SYSTEM	
CABLE TV	
UND. GRD. COND.	
WATER DIST.	
WEPCO N/S	
WEPCO S/S	
SEWER SERVICES	
PLAN SIZE	12" X 103"

W. WOOLWORTH AVE. - N. SHERMAN BLVD. TO N. 51 ST ST.
N. SHERMAN BLVD. TO A PT. 520' ± W. OF N. SHERMAN BLVD.
ST211040107 12" X 103" 28380 #576 (4 OF 4)