ESTIMATE OF QUANTITIES

FOR BIDDING

FURNISH PIPE AND INSTALL

(DUCTILE IRON PUSH-ON RUBBER GASKET JOINT)

312 FT. - 8" WATER MAIN
31 FT. - 6" HYDRANT BRANCH

INSTALL

1 - HYDRANT

REMOVE

1- HYDRANT / MINOR

SERVICES

6 - CONNECT ORIGINAL SERVICE (C.O.S. - SHORT)
2 - CONNECT ORIGINAL SERVICE (C.O.S. - LONG)

PERMANENT PAVEMENT

159 SQ. YDS. - 4" ASPHALT

BARRICADES AND TRAFFIC CONTROL

LUMP SUM

SAWCUTTING

446 LIN. FT. - IN ASPHALT (FULL DEPTH)

FINISHING OF ROADWAY

LUMP SUM

FURNISH, INSTALL, AND MAINTAIN EROSION CONTROL

LUMP SUM

252 CU.YDS. EXCESS EXCAVATED MATERIAL

FOLLOWING IS A LIST OF THE FITTINGS SHOWN ON THIS CONSTRUCTION PLAN THAT WILL BE PROVIDED BY THE CITY.

1 - AT 8x6
1 - V6
1 - V8
2 - VB-DD
1 - H (7.0)
4 - BB - 45
8 - 1" CORPORATION STOP

PAVEMENT TYPE

EXISTING PAVEMENT IN W. HARVEST LA. IS 2.5" ASPHALT (1965)

EXISTING PAVEMENT IN W. FAIRMOUNT AVE. IS 2.5" ASPHALT (1965)

EXISTING PAVEMENT IN N. 104TH ST. IS 2.5" ASPHALT (1965)

ABANDONMENT OF WATER MAINS, VALVES, AND HYDRANT BRANCHES

308' - 8"-1957-L WATER MAIN
1 - 8" VALVE
1 - HYDRANT

FOR START OF PLAN NOTES, SEE N. 105TH ST. , PLAN FILE NO. 2015001

BENCHMARKS

HYDRANT - N/W COR @ HARVEST - ELEV: 170.13
HYDRANT - S/W COR @ FAIRMOUNT- ELEV: 174.26

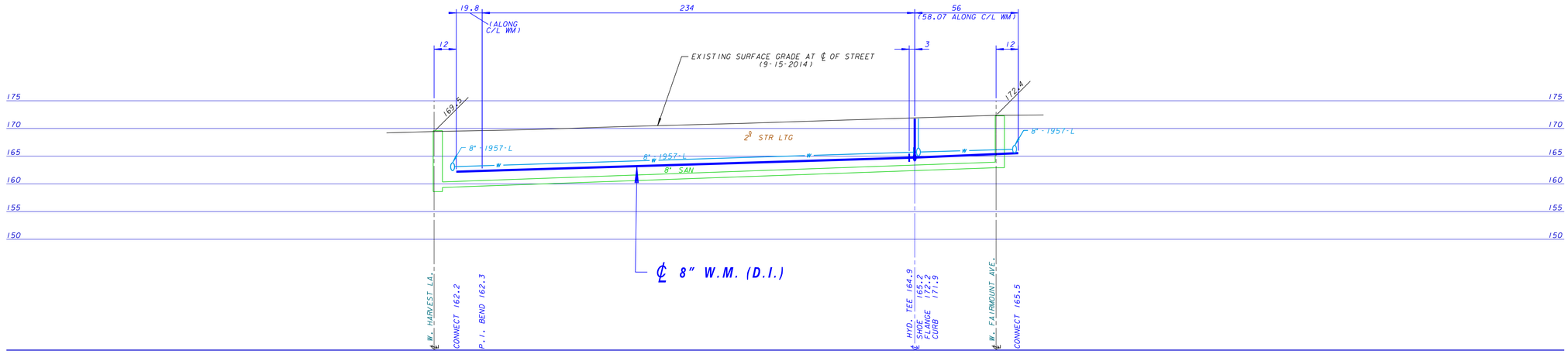

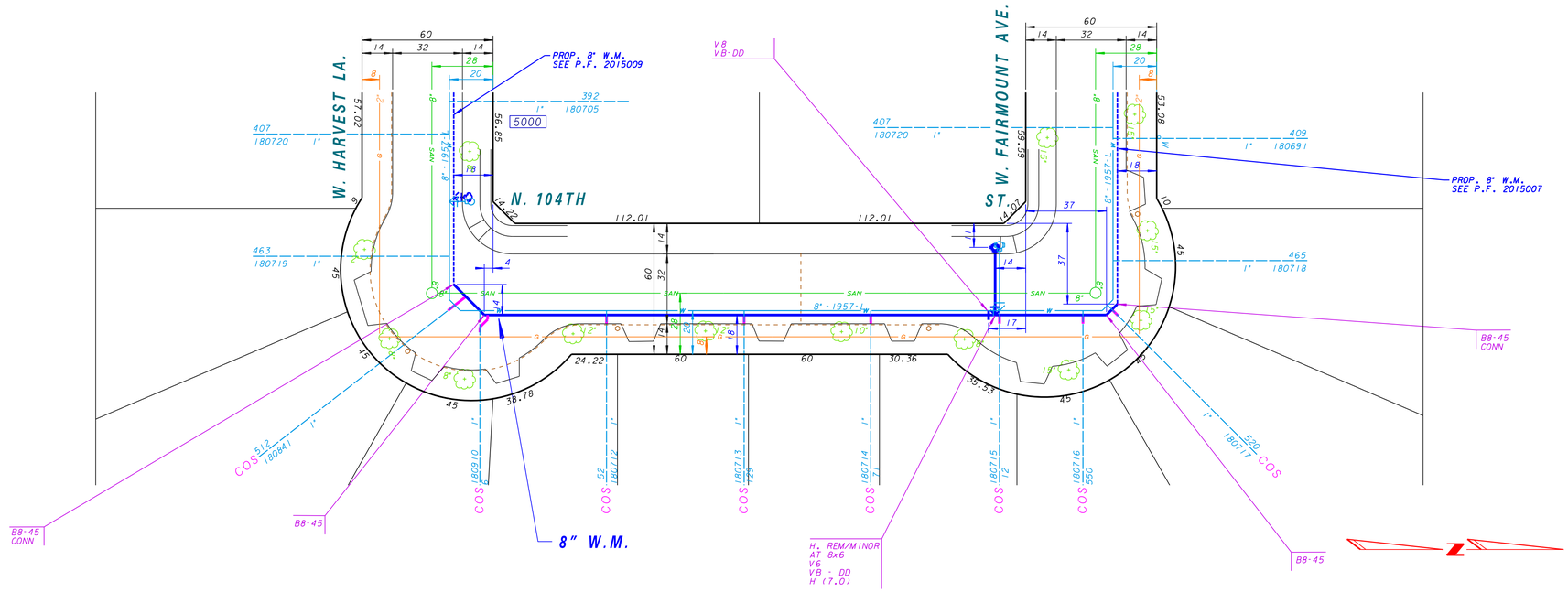

TRAFFIC PROVISIONS

MAINTAIN ACCESS.

TEMPORARY NO PARKING ANY TIME EAST SIDE N 104TH ST.

PAVEMENT MARKINGS MUST BE RETURNED TO ORIGINAL MATERIAL AND CONDITION.

PROVIDE SEVEN (7) DAYS ADVANCED NOTICE TO TRAFFIC ENGINEERING AT 286-3632 FOR THE INSTALLATION OF TEMPORARY "NO PARKING" SIGNS OR IF THERE ARE ANY QUESTIONS CONCERNING THESE COMMENTS.

ANY PERSON WORKING IN THE PUBLIC WAY SHALL COMPLY WITH THE CITY OF MILWAUKEE, DEPARTMENT OF PUBLIC WORKS BOOKLET, TRAFFIC CONTROL FOR CONSTRUCTION AND MAINTENANCE WORK AND PART VI OF THE STATE OF WISCONSIN "MANUAL ON UNIFORM TRAFFIC CONTROL DEVICES".

STREET LIGHTING NOTE

STREET LIGHTING HAS PIPES AND CABLES CROSSING WITHIN THE PROJECT LIMITS. THESE PIPES AND CABLES SHALL BE SUPPORTED IF OPEN CUT TRENCHING IS USED. DAMAGES SHALL BE REPORTED TO THE STREET LIGHTING SHOP AT 414-286-3015.

IF THERE ARE ANY IMPACTS TO CITY OF MILWAUKEE STREET LIGHTING EQUIPMENT, THE CONTRACTOR SHALL CONTACT ENG-KIE LEE IN ENGINEERING AT 414-286-2174 FOR NECESSARY ALTERATIONS.

TRAFFIC SIGNAL NOTE

IF THERE ARE ANY IMPACTS TO CITY OF MILWAUKEE TRAFFIC SIGNAL EQUIPMENT, THE CONTRACTOR SHALL CONTACT SIGNAL ENGINEERING AT 414-286-5162 FOR NECESSARY ALTERATIONS. A FIVE WORKING DAY NOTICE IS REQUIRED. REPORT DAMAGE TO THE SIGNAL SHOP AT 414-286-3687.

WISCONSIN RICHARD W. BLAUVELT E-21239 WAUKESHA, WI PROFESSIONAL ENGINEER

PLAN LINE & UTILITY LEGEND

GAS ..... G	SANITARY SEWER ..... SAN	STREET LIGHTING .....
ELECTRIC ..... E	STORM SEWER ..... STO	CITY UNDERGROUND CONDUIT ..... CUC
TELEPHONE ..... T	COMBINED SEWER ..... CMB	PROPOSED CURB / PVMT
CABLE TELEVISION ..... TV	WATER MAIN ..... W	PAVING LIMITS ..... X X X X
FIBER OPTICS ..... FO	WATER SERVICE	STRUCTURE / BUILDING
PROPOSED UTILITY	PRESSURE DISTRICT ..	FENCE x

POWER POLES ○-CONCRETE ⬡-ALUMINUM ⬡-WOOD WATER MAIN VALVES -GATE -BUTTERFLY W-SERVICE

UTILITIES ⊠-TRAFFIC SIGNAL ⊠-TRAFFIC CONTROL BOX G-GAS VALVE HYDRANTS -1 NOZZLE -3 NOZZLE

CALL DIGGERS HOTLINE 1-800-242-8511
TOLL FREE TO OBTAIN LOCATION OF UNDERGROUND BEFORE YOU DIG. WISCONSIN STATUTE 182.0715 REQUIRES MIN. OF 3 WORK DAYS NOTICE BEFORE YOU EXCAVATE

OTIE Oneida Total Integrated Enterprises

NO.	BY	REVISION	DATE
	KSR	MBW REVIEW	12-15-14

Milwaukee Water Works — Water Engineering, Department of Public Works

WATER MAIN

IN: N. 104TH STREET
FROM: W. HARVEST LA.
TO: W. FAIRMOUNT AVE.

SCALE: HORIZONTAL 1" = 30' VERTICAL 1" = 10'
14 SEC. NO. 216
PLAN DATE 1-16-15
DRAWN BY MJP
CHECKED BY RWB
SURVEY BY OTIE, LLC.

APPROVED	DATE
Robert W. Pauly, MAIN DESIGN ENGINEER	1-21-15
Mark J. Schlitt, CHIEF DESIGN ENGINEER	1-21-15
C. M. Lewis, SPECIAL DEPUTY COMMISSIONER OF PUBLIC WORKS	1-21-15

PROGRAM NO. 2015-681 | C.C. FILE NO. 141400
PROJECT NO. WT410150681 | OFFICIAL NOTICE NO. 28-1-2015 | DATE ADOPTED 1-21-15

SHEET NO. 1 OF 1 PLAN FILE NO. 2015008