CITY OF MILWAUKEE

REHABILITATION OF

ST. PAUL AVENUE

VERTICAL LIFT BRIDGE

OVER MILWAUKEE RIVER

LOCAL STREET

MILWAUKEE COUNTY

DRAWING INDEX

SHEET NO.	SHEET TITLE	SHEET NO.	SHEET TITLE
T1	TITLE SHEET	S37	FIXED SPAN SUPERSTRUCTURE DETAILS (1 OF 3)
T2	DRAWING INDEX (CONT'D)	S38	FIXED SPAN SUPERSTRUCTURE DETAILS (2 OF 3)
		S39	FIXED SPAN SUPERSTRUCTURE DETAILS (3 OF 3)
	ROADWAY PLANS	S40	DIAPHRAGM REINFORCEMENT DETAILS
1	GENERAL NOTES	S41	FIXED SPAN SUPERSTRUCTURE BILL OF BARS
2	TYPICAL EXISTING SECTIONS	S42	FIXED SPAN EXPANSION JOINT PLAN
3	TYPICAL FINISHED SECTIONS	S43	FIXED SPAN EXPANSION JOINT DETAILS
4	CONSTRUCTION DETAILS	S44	ELASTOMERIC BEARING
5	PAVING DETAILS	S45	LIGHT POLE BASE (1 OF 2)
6	PAVING GRADES	S46	LIGHT POLE BASE (2 OF 2)
7	EROSION CONTROL	S47	FLOOR DRAIN TYPE 'GC'
8	UTILITY PLAN	S48	UNDERDECK GUTTER AT ABUTMENTS
9	PAVEMENT MARKING	S49	UNDERDECK GUTTER AT LIFT SPAN PIERS
10	PAVEMENT MARKING	S50	PIER RAILING
11	DETOUR PLAN	S51	PIER 2 ELECTRICAL PLATFORM
12	TRAFFIC CONTROL	S52	CIRCULAR STAIR REPAIR
13	MISCELLANEOUS QUANTITIES	S53	PIER 3 STAIR
14	MISCELLANEOUS QUANTITIES	S54	BRIDGE HOUSE STAIR (1 OF 2)
15	BENCHMARKS	S55	BRIDGE HOUSE STAIR (2 OF 2)
16	PLAN AND PROFILE	S56	MISCELLANEOUS DETAILS
17	SILT FENCE	S57	BRIDGE HOUSE ROOF FRAMING PLAN
18	INLET PROTECTION TYPE A, B, C, AND D	S58	BRIDGE HOUSE ROOF FRAMING DETAILS (1 OF 2)
19	CONCRETE PAVEMENT APPROACH SLAB	S59	BRIDGE HOUSE ROOF FRAMING DETAILS (2 OF 2)
20	URBAN DOWELED CONCRETE PAVEMENT	S60	NAME PLATE
21	PAVEMENT MARKING WORDS		
22	PAVEMENT MARKING ARROWS		
23	PAVEMENT MARKING (ISLANDS, STOP LINE & CROSSWALK)		
		LS1	LIFT SPAN FRAMING PLAN
		LS2	LIFT SPAN DECK PLAN
	STRUCTURAL	LS3	LIFT SPAN LONGITUDINAL SECTION
S1	STRUCTURE P-40-523 GENERAL PLAN AND ELEVATION	LS4	GIRDER DETAILS (1 OF 2)
S2	GENERAL NOTES AND DESIGN DATA	LS5	GIRDER DETAILS (2 OF 2)
S3	ESTIMATE OF QUANTITIES	LS6	GIRDER EXTENSIONS
S4	TYPICAL SECTION FIXED SPAN	LS7	GIRDER DEFLECTIONS
S5	TYPICAL SECTION LIFT SPAN	LS8	FLOORBEAM DETAILS (1 OF 2)
S6	ABUTMENT CONCRETE REPAIRS	LS9	FLOORBEAM DETAILS (2 OF 2)
S7	WEST ABUTMENT RECONSTRUCTION	LS10	STRINGER DETAILS (1 OF 2)
S8	WEST WING WALL RECONSTRUCTION	LS11	STRINGER DETAILS (2 OF 2)
S9	EAST ABUTMENT RECONSTRUCTION	LS12	LIFTING GIRDER
S10	EAST WING WALLS RECONSTRUCTION	LS13	LIFTING LEG
S11	EAST AND WEST ABUTMENTS GIRDER SEATS	LS14	END DIAPHRAGM DETAILS (1 OF 3)
S12	EAST AND WEST ABUTMENTS BILL OF BARS	LS15	END DIAPHRAGM DETAILS (2 OF 3)
S13	PIER 2 CONCRETE REPAIRS (1 OF 3)	LS16	END DIAPHRAGM DETAILS (3 OF 3)
S14	PIER 2 CONCRETE REPAIRS (2 OF 3)	LS17	SIDEWALK FRAMING PLAN
S15	PIER 2 CONCRETE REPAIRS (3 OF 3)	LS18	SIDEWALK DETAILS (1 OF 2)
S16	PIER 2 COLUMN RECONSTRUCTION	LS19	SIDEWALK DETAILS (2 OF 2)
S17	PIER 3 CONCRETE REPAIRS (1 OF 3)	LS20	CANTILEVER BRACKET AND FASCIA (1 OF 2)
S18	PIER 3 CONCRETE REPAIRS (2 OF 3)	LS21	CANTILEVER BRACKET AND FASCIA (2 OF 2)
S19	PIER 3 CONCRETE REPAIRS (3 OF 3)	LS22	LIFT SPAN JOINT DETAILS (1 OF 2)
S20	PIER 3 COLUMN RECONSTRUCTION	LS23	LIFT SPAN JOINT DETAILS (2 OF 2)
S21	PIER BILL OF BARS	LS24	LIFT SPAN BEARINGS
S22	WEST FIXED SPAN FRAMING PLAN	LS25	TRAFFIC RAILING
S23	EAST FIXED SPAN FRAMING PLAN	LS26	PEDESTRIAN RAILING
S24	WEST FIXED SPANS GIRDER REPAIRS	LS27	RAILING POST LAYOUT
S25	EAST FIXED SPANS GIRDER REPAIRS	LS28	COUNTERWEIGHT
S26	FIXED SPAN GIRDERS REPAIR DETAILS (1 OF 2)	LS29	COUNTERWEIGHT DETAILS
S27	FIXED SPAN GIRDERS REPAIR DETAILS (2 OF 2)	LS30	BUMPER BEAM
S28	FIXED SPAN FLOORBEAMS AND DIAPHRAGMS (1 OF 2)	LS31	BUMPER BEAM DETAILS
S29	FIXED SPAN FLOORBEAMS AND DIAPHRAGMS (2 OF 2)	LS32	STRINGER BEARING PLATES
S30	FIXED SPAN GIRDER DETAILS (1 OF 2)	LS33	RAILING DETAILS
S31	FIXED SPAN GIRDER DETAILS (2 OF 2)		
S32	TOP OF DECK ELEVATION		
S33	WEST FIXED SPANS PLAN (1 OF 2)		
S34	WEST FIXED SPANS PLAN (2 OF 2)		
S35	EAST FIXED SPANS PLAN (1 OF 2)		SEE SHEET T2 FOR CONTINUATION
S36	EAST FIXED SPANS PLAN (2 OF 2)		

R-22-E

T-7-N

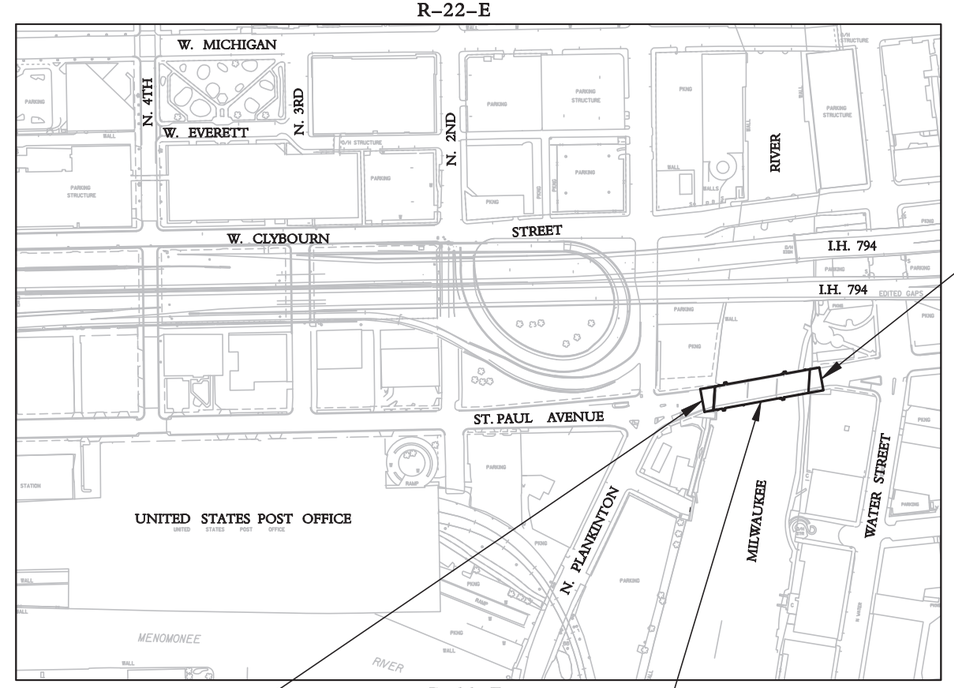

T-7-N

R-22-E

N

END PROJECT
STA 30+13.04
Y = 384213.69
X = 2559094.83

BEGIN PROJECT
STA 26+94.61
Y = 384155.97
X = 2558781.67

STRUCTURE P-40-523
STA 28+53.00

TOTAL NET LENGTH OF CENTERLINE = 0.060 MI. (URBAN)

APPROVED BY:

Craig S. Ribeiro 2/18/2013
STRUCTURAL DESIGN MANAGER DATE

Dale E. Myatt 2/18/2013
INFRASTRUCTURE OPERATIONS MANAGER DATE

2/18/13
CITY ENGINEER & SPECIAL DEPUTY COMMISSIONER OF PUBLIC WORKS DATE

WISCONSIN
MATHEW P. THARANIYIL
E-31143
MILWAUKEE
WI
PROFESSIONAL ENGINEER
Mathew P. Tharaniyil 02/18/2013

GROUND COORDINATES ON THIS PLAN ARE BASED ON THE WISCONSIN STATE PLANE COORDINATE SYSTEM SOUTH ZONE, NAD 83 (91) DATUM.

TO CONVERT GROUND COORDINATES (N & E) TO GRID COORDINATES (X & Y) MULTIPLY BY 0.99992362.

ELEVATIONS SHOWN ON THIS PLAN ARE REFERENCED TO THE CITY OF MILWAUKEE DATUM.

TO CONVERT ELEVATIONS SHOWN ON THIS PLAN TO NATIONAL GEODEDIC VERTICAL DATUM OF 1929, ADD 580.603 TO ELEVATIONS SHOWN ON THIS PLAN.

City of Milwaukee
Department of Public Works
Infrastructure Services Division

BLOOM COMPANIES, LLC
Infrastructure Innovation and Ingenuity
10501 W. Research Drive • Milwaukee, WI 53226
Phone: (414) 771-3380 Fax: (414) 771-4490

ST PAUL AVE. LIFT BRIDGE
OVER THE MILWAUKEE RIVER
TITLE SHEET

REVISIONS

DESIGNED BY BDT	
DRAWN BY TAL	
CHECKED BY JRS	
DATE FEB 2013	SCALE
JOB NUMBER BR100-10-0106	
SHEET NUMBER T1 OF T2	
OF 198	

DRAWING INDEX

SHEET NO.	SHEET TITLE	SHEET NO.	SHEET TITLE
	MECHANICAL		ARCHITECTURAL
M1	MECHANICAL DEMOLITION (1 OF 2)	A01	EQUIPMENT ROOF (1ST) LEVEL PLAN
M2	MECHANICAL DEMOLITION (2 OF 2)	A02	ENTRY / STREET (2ND) LEVEL PLAN
M3	LIFT SPAN - GENERAL MECHANICAL PLAN	A03	CONTROL ROOM (3RD) LEVEL PLAN
M4	COUNTERWEIGHT SHEAVE AND TRUNNION	A04	ROOF PLAN
M5	TRUNNION BEARING	A05	WEST ELEVATION
M6	COUNTERWEIGHT ROPE AND CONNECTIONS	A06	EAST ELEVATION
M7	GUIDE ROLLER ASSEMBLY	A07	NORTH ELEVATION
M8	GUIDE ROLLER SUPPORTS (1 OF 4)	A08	BUILDING SECTION
M9	GUIDE ROLLER SUPPORTS (2 OF 4)	A09	RAILING & PLANTER DETAILS
M10	GUIDE ROLLER SUPPORTS (3 OF 4)	A10	DETAILS
M11	GUIDE ROLLER SUPPORTS (4 OF 4)		
M12	BUMPER BEAM GUIDES		
M13	CENTERING DEVICE		BRIDGE HOUSE HVAC
		BH1	EQUIPMENT ROOM (1ST) LEVEL HVAC PLANS
		BH2	ENTRY / STREET (2ND) LEVEL HVAC PLANS
	HYDRAULIC	BH3	CONTROL ROOM (3RD) LEVEL HVAC PLANS
H1	NEW HYDRAULIC SYSTEM	BH4	ROOF HVAC PLANS
H2	HYDRAULIC SCHEMATIC	BH5	HVAC SECTION
H3	HPU AND FLEX ENCLOSURE	BH6	HVAC GENERAL NOTES, LEGEND AND SCHEDULES
H4	HYDRAULIC DEMOLITION I		
H5	HYDRAULIC DEMOLITION II		
H6	HYDRAULIC NOTES		BRIDGE HOUSE ELECTRICAL
		BE1	EQUIPMENT ROOM (1ST) LEVEL ELECTRICAL PLANS
		BE2	ENTRY / STREET (2ND) LEVEL ELECTRICAL PLANS
	ELECTRICAL	BE3	CONTROL ROOM (3RD) LEVEL ELECTRICAL PLANS
E1	ONE LINE DIAGRAM	BE4	ROOF ELECTRICAL PLAN
E2	CONTROL HOUSE POWER WIRING	BE5	PIER ELECTRICAL PLANS
E3	WEST APPROACH SPAN AND LIFT SPAN POWER WIRING	BE6	PIER PIT ELECTRICAL PLANS
E4	EAST APPROACH SPAN AND LIFT SPAN POWER WIRING	BE7	BRIDGE ELECTRICAL PLANS
E5	WEST AND EAST PIER POWER WIRING		
E6	DECORATIVE LIGHTING PLAN		
E7	LIMIT SWITCH DETAILS		BRIDGE HOUSE PLUMBING
E8	GROUNDING SYSTEM DETAILS	BP1	EQUIPMENT ROOM (1ST) LEVEL PLUMBING PLANS
E9	TRAFFIC GATE AND TRAFFIC SIGNAL DETAILS	BP2	ENTRY / STREET (2ND) LEVEL PLUMBING PLANS
E10	NAVIGATION LIGHTING	BP3	CONTROL ROOM (3RD) LEVEL PLUMBING PLANS
E11	LIMIT SW/RESOLVER DETAILS	BP4	ROOF PLUMBING PLANS
E12	PANELBOARD SCHEDULES	BP5	PLUMBING GENERAL NOTES, LEGEND, SCHEDULES & DETAILS
E13	CONTROL CONSOLE LAYOUT		
E14	CONTROL CONSOLE RELAY CABINET DETAILS		
E15	SWITCHBOARD CABINET DETAILS		
E16	SCHEMATIC LEGEND AND SYMBOL LIST		
E17	SCHEMATIC 1		
E18	SCHEMATIC 2		
E19	SCHEMATIC 3		
E20	SCHEMATIC 4		
E21	SCHEMATIC 5		
E22	WIRING SCHEDULE		
E23	WIRING SCHEDULE		
E24	CIRCUIT SCHEDULE		
E25	CIRCUIT SCHEDULE		
E26	RACEWAY SCHEDULE		
E27	RACEWAY SCHEDULE		
E28	ST. PAUL CCTV SYSTEM		
E29	CCTV SYSTEM DETAILS		
E30	ST. PAUL INTERCOM SYSTEM		
E31	MICHIGAN ST. REMOTE CONTROL PANEL LAYOUT & DETAILS		
E32	CCTV SYSTEM DETAILS		
E33	MICHIGAN ST. TO ST. PAUL INTERCOM SYSTEM		

City of Milwaukee

Department of Public Works

Infrastructure Services Division

BLOOM COMPANIES, LLC
Infrastructure Innovation and Ingenuity
10501 W. Research Drive • Milwaukee, WI 53226
Phone: (414) 771-3380 Fax: (414) 771-4490

ST PAUL AVE. LIFT BRIDGE
OVER THE MILWAUKEE RIVER
DRAWING INDEX (CONT'D)

REVISIONS

DESIGNED BY BDT

DRAWN BY TAL

CHECKED BY JRS

DATE FEB 2013

SCALE

JOB NUMBER BR100-10-0106

SHEET NUMBER T2 OF T2

OF 198

UTILITY AND PROJECT CONTACTS

AT&T CORPORATION
MR. JAY BULANEK
7721 W. FOND DU LAC AVE.
MILWAUKEE, WI 53218
PHONE: (414) 535-7407
jb5175@att.com

MIDWEST FIBER NETWORKS
MR. RICHARD TRGOVEC
3701 W. BURNHAM ST., SUITE C
MILWAUKEE, WI 53215
PHONE: (414) 349-2979
rtrgovec@midwestfibernetworks.com

MILWAUKEE, CITY OF (CONDUIT)
MS. KAREN ROGNEY
841 N. BROADWAY
MILWAUKEE, WI 53202
PHONE: (414) 286-3243
karen.rogney@milwaukee.gov

MILWAUKEE, CITY OF (LIGHTING/SIGNALS)
MR. ROBERT BRYSON
841 N. BROADWAY, ROOM 920
MILWAUKEE, WI 53202
PHONE: (414) 286-3244
robert.bryson@milwaukee.gov

MILWAUKEE, CITY OF (COMMUNICATIONS)
MR. DAVID HENKE
841 N. BROADWAY
MILWAUKEE, WI 53202
PHONE: (414) 286-3248
david.henke@milwaukee.gov

MILWAUKEE WATER WORKS
MR. DAVE GOLDAPP
841 N. BROADWAY, ROOM 409
MILWAUKEE, WI 53202
PHONE: (414) 286-6301
CELL: (414) 708-2695
dave.goldapp@milwaukee.gov

DNR AREA LIAISON
MS. KRISTINA BETZOLD
WISCONSIN DNR SOUTHEAST REGION
2300 N. DR. MARTIN LUTHER KING JR. DRIVE
MILWAUKEE, WI 53212
(414) 263-8517
kristina.betzold@wisconsin.gov

CITY OF MILWAUKEE (SEWERS)
MR.TIMOTHY J. THUR
841 N. BROADWAY ROOM 501
MILWAUKEE, WI 53202
(414) 286-2489
timothy.thur@milwaukee.gov

MILWAUKEE METRO SEWERAGE DIST.
MS. DEBRA JENSEN,
PLANNING SERVICES SUPERVISOR
260 W. SEEBOTH ST.
MILWAUKEE, WI 53204-1446
PHONE: (414) 272-5100
Djensen@mmsd.com

TDS METROCOM
MR. MICHAEL JOHNSON, OPS ENGINEER
20875 CROSSROADS CIRCLE, SUITE 800
WAUKESHA, WI 53186
PHONE: (262) 754-3052
michael.johnson@tdstelecom.com

TIME WARNER CABLE
MR. STEVE CRAMER, UTILITY COORDINATOR
1320 N. MARTIN LUTHER KING JR. DR.
MILWAUKEE, WI 53212
PHONE: (414) 277-4045
steve.cramer@twcable.com

WE ENERGIES (GAS, ELECTRIC, STEAM)
MR. JOHN HARVIE
333 W. EVERETT ST. - A299
MILWAUKEE, WI 53203
PHONE: (414) 221-4045
john.harvie@we-energies.com

MCLEOD USA COMMUNICATIONS
MR. DICK HAMMETTER
731 N. JACKSON ST., SUITE 400
MILWAUKEE, WI 53202
PHONE: (414) 406-0722
dhammetter@mcleodusa.com

CITY OF MILWAUKEE (STRUCTURES)
MR. CRAIG LIBERTO
841 N. BROADWAY
MILWAUKEE, WI 53202
(414) 286-3294
craig.liberto@milwaukee.gov

US COAST GUARD
MR. LEE SOULE
9TH COAST GUARD DISTRICT (DPB)
1240 EAST 9TH ST
CLEVELAND, OH 44199-2060
(216) 902-6085
lee.d.soule@uscg.mil

TO OBTAIN LOCATION OF PARTICIPANTS' UNDERGROUND FACILITIES BEFORE YOU DIG IN WISCONSIN

WIS. STATUETE 182.0175 (1974) REQUIRES MIN. OF 3 WORK DAYS NOTICE BEFORE YOU EXCAVATE

DIGGERS HOTLINE

Call 811 3 Work Days Before You Dig
or Toll Free (800) 242-8511
Hearing Impaired TDD (800) 542-2289
www.DiggersHotline.com

GENERAL NOTES

THE CONTRACTOR SHALL CONTACT THE UTILITIES AND DIGGERS HOTLINE TO LOCATE AND FIELD VERIFY UTILITIES PRIOR TO THE START OF WORK. THE LOCATIONS OF EXISTING AND PROPOSED UTILITY INSTALLATIONS AS SHOWN ON THE PLANS ARE APPROXIMATE. THERE MAY BE OTHER UTILITY INSTALLATIONS WITHIN THE PROJECT AREA THAT ARE NOT SHOWN. ANY LOCAL, MUNICIPAL OR OTHER UTILITY THAT IS NOT A MEMBER OF DIGGERS HOTLINE SHALL BE CONTACTED SEPERATELY.

RIGHT OF WAY LINES SHOWN ARE APPROXIMATE.

PROTECT INLETS WITH PROPER INLET PROTECTION AT LOCATIONS EXHIBITING RISK OF BEING IMPACTED BY CONSTRUCTION OPERATIONS AS SHOWN ON THE PLANS, OR AS DIRECTED BY THE ENGINEER.

THE CONTRACTOR WILL BE RESPONSIBLE FOR RESHAPING AND SODDING ANY PREVIOUSLY GRASSED AREAS WHICH ARE DISTURBED BY ANY OPERATION OUTSIDE OF THE NORMAL CONSTRUCTION LIMITS AT THE CONTRACTORS EXPENSE.

ALL HOLES OR OPENINGS BELOW SUBGRADE RESULTING FROM ABANDONMENT OR REMOVAL OF EXISTING STRUCTURES SHALL BE FILLED WITH COMPACTED GRANULAR BACKFILL OR AS DIRECTED BY THE ENGINEER.

TRAFFIC CONTROL DEVICES SHALL BE ADJUSTED TO FIT FIELD CONDITIONS AS DIRECTED BY THE ENGINEER.

CURB RADII SHOWN ARE TO THE FACE OF CURB, UNLESS OTHERWISE NOTED.

CURB AND GUTTER GRADES ARE GIVEN AT THE FLANGE.

WHEN PORTIONS OF THE EXISTING ROADWAYS, DRIVEWAYS, AND SIDEWALKS ARE TO BE REMOVED TO ACCOMODATE NEW CONSTRUCTION, THE LINE OF REMOVAL SHALL BE NEATLY DELINEATED WITH A SAW CUT THROUGH THE ASPHALTIC AND/OR CONCRETE PAVEMENT SUCH THAT REMOVAL OF THE PAVEMENT WILL BE ACCOMPLISHED WITHOUT DAMAGE TO THE REMAINING PORTIONS OR REMOVED TO THE NEXT JOINT AS DIRECTED BY THE ENGINEER.

THE CONTRACTOR SHALL NOTIFY THE CITY TRAFFIC UNIT TWO WEEKS PRIOR TO PROJECT COMPLETION TO ALLOW FOR THE PLACEMENT OF ANY PERMANENT SIGNING WHICH WAS REMOVED OR MOVED DURING CONSTRUCTION OPERATIONS.

ALL COORDINATES SHOWN ON THIS PLAN ARE BASED ON THE WISCONSIN STATE PLANE COORDINATE SYSTEM (WSPCS), SOUTH ZONE, NAD 83 DATUM. TO CONVERT GROUND (N,E) COORDINATES TO GRID (X,Y) COORDINATES, MULTIPLY GROUND BY 0.99992362.

WISCONSIN
TRACY J. BROWN
E-28756
WEST ALLIS, WI
PROFESSIONAL ENGINEER

SHEETS COVERED UNDER THIS SEAL INCLUDE
SHEETS 1 - 23, H1 - H6 AND E1 - E33

ABBREVIATIONS

AGG	AGGREGATE
BAD	BASE AGGREGATE DENSE
BM	BENCH MARK
C&G	CURB AND GUTTER
C/L	CENTER OR CONSTRUCTION LINE
CONC	CONCRETE
CP	CONTROL POINT
CY	CUBIC YARD
CS	POINT OF CURVE TO SPIRAL
D	DEGREE OF CURVE
Δ	DELTA
E	EASTING
HMA	HOT MIX ASPHALT
INV	INVERT
L	LENGTH OF CURVE
MH	MAN HOLE
N	NORTHING
NC	NORMAL CROWN
O.C.	ON CENTER
OCS	OVERHEAD CONTACT SYSTEM
PAVT	PAVEMENT
PC	POINT OF CURVE
PCC	POINT OF COMPOUND CURVE
PE	PRIVATE ENTRANCE
PI	POINT OF INTERSECTION
PLE	PERMANENT LIMITED EASEMENT
PT	POINT OF TANGENT
R	RADIUS OF CURVE
R/L	REFERENCE LINE
R/W	RIGHT OF WAY
RC	REVERSE CROWN
REQD	REQUIRED
RT	RIGHT
SALC	SALVAGED
SB	SOUTH BOUND
SC	POINT OF SPIRAL TO CURVE
SDD	STANDARD DETAIL DRAWINGS
SE	SUPER ELEVATION
SF	SQUARE FOOT
SSPRC	STORM SEWER PIPE REINFORCED CONCRETE
STA	STATION
SY	SQUARE YARD
ST	POINT OF SPIRAL TO TANGENT
T	TANGENT LENGTH
TLE	TEMPORARY LIMITED EASEMENT
TS	POINT OF TANGENT TO SPIRAL
V	VELOCITY
VCL	VERTICAL CURVE LENGTH

INDEX OF CIVIL SHEETS

GENERAL NOTES
TYPICAL SECTIONS
CONSTRUCTION DETAILS
PAVING DETAILS
PAVING GRADES
EROSION CONTROL
UTILITY PLAN
PAVEMENT MARKING
DETOUR PLANS
TRAFFIC CONTROL
MISCELLANEOUS QUANTITIES
BENCHMARKS
PLAN AND PROFILE
STANDARD DETAIL DRAWINGS

City of Milwaukee
Department of Public Works
Infrastructure Services Division

HNTB
11414 West Park Place, Suite 300
Milwaukee, WI 53224
414-359-2300

ST PAUL AVE. LIFT BRIDGE
OVER THE MILWAUKEE RIVER
GENERAL NOTES

REVISIONS

DESIGNED BY JTS	
DRAWN BY JTS	
CHECKED BY TJB	
DATE FEB 2013	SCALE 15:1
JOB NUMBER BR100-10-0106	
SHEET NUMBER 1 OF 23	
OF 198	

FILE NAME: ss:mil400sing$proj$58635$BR100-10-0106$tlcds$020101_gn.dgn PEN TABLE: EPlan.tbl
DATE: 2/1/2013 9:52:49 AM Plotted by: jschafer

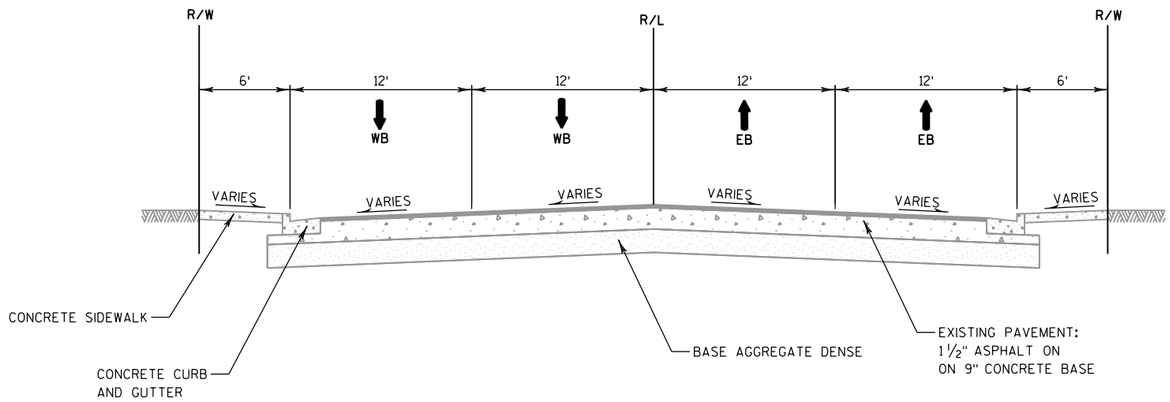

TYPICAL EXISTING SECTION

W. ST. PAUL AVE.

N. PLANKINTON AVE. TO MILWAUKEE RIVER

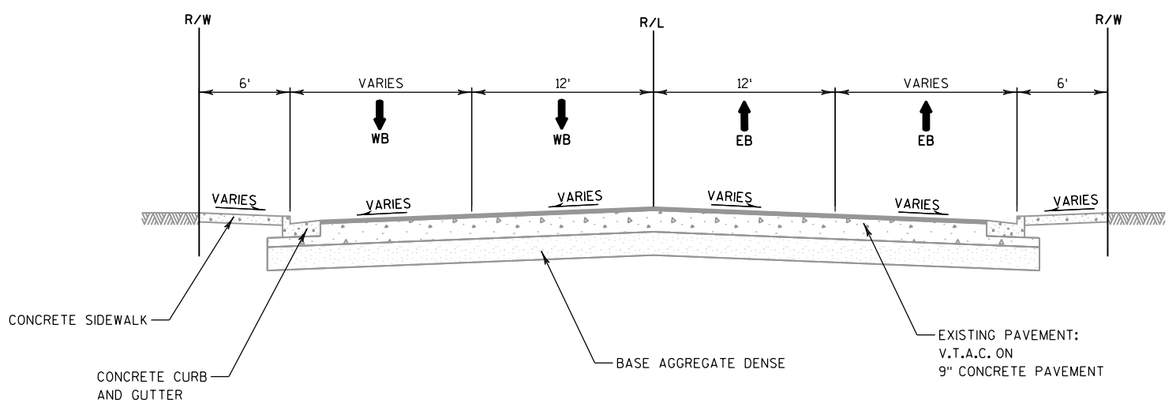

TYPICAL EXISTING SECTION

E. ST. PAUL AVE.

MILWAUKEE RIVER TO N. WATER ST.

City of Milwaukee

Department of Public Works

Infrastructure Services Division

HNTB

11414 West Park Place, Suite 300
Milwaukee, WI 53224
414-359-2300

ST PAUL AVE. LIFT BRIDGE
OVER THE MILWAUKEE RIVER
TYPICAL EXISTING SECTIONS

REVISIONS

DESIGNED BY JTS	
DRAWN BY JTS	
CHECKED BY TJB	
DATE FEB 2013	SCALE 15:1
JOB NUMBER BR100-10-0106	
SHEET NUMBER 2 OF 23	
OF 198	

FILE NAME: t:\milw00sirvg\proj\5863\BR100-10-0106\tlcds\020301_ts.dgn PEN TABLE: EPlan.tbl
DATE: 1/29/2013 10:58:49 AM Plotted by: jschafer

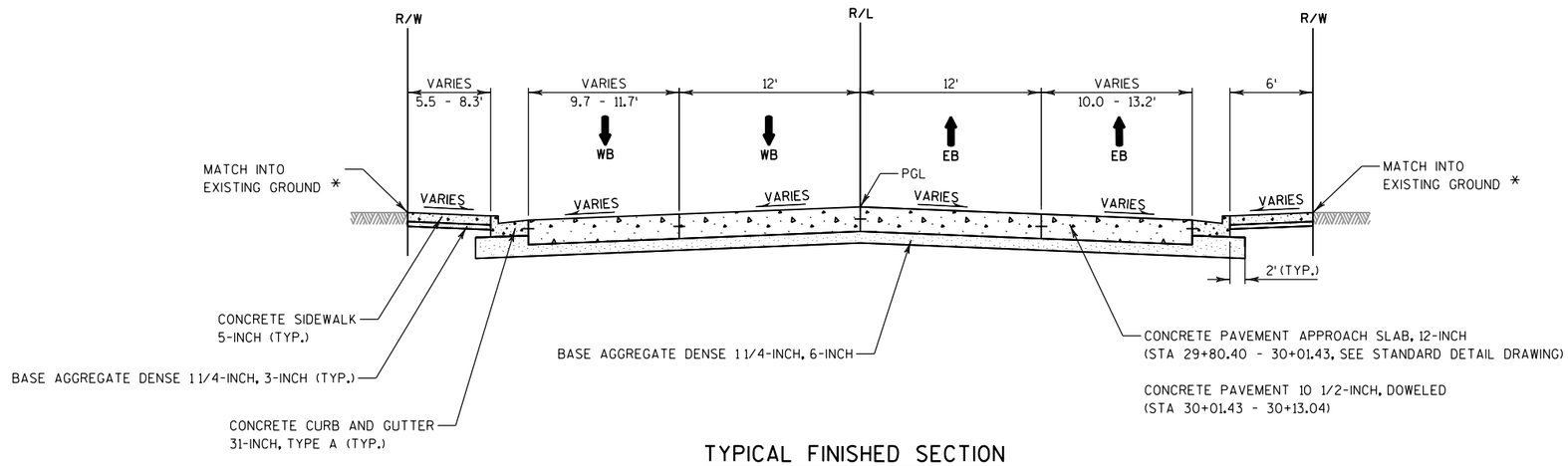

TYPICAL FINISHED SECTION

W. ST. PAUL AVE.

STA 26+94.61 TO STA 27+25.59
(N. PLANKINTON AVE. TO MILWAUKEE RIVER)

* SIDEWALK EXTENDS TO THE WINGWALL FACE

PROVIDE FELT EXPANSION MATERIAL BETWEEN WINGWALL AND SIDEWALK.

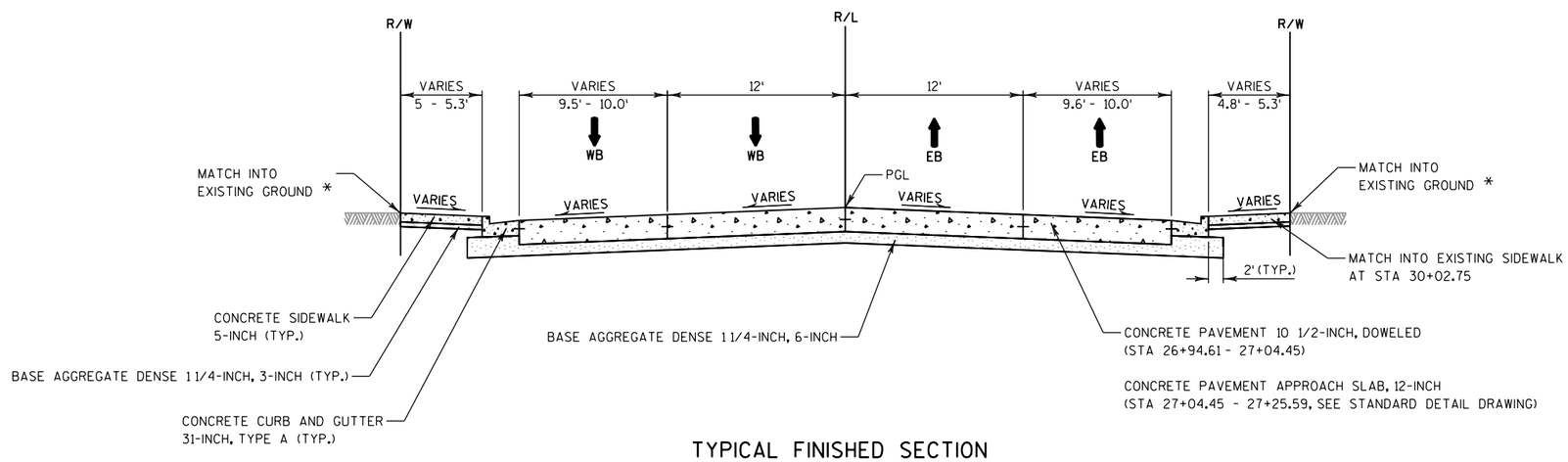

TYPICAL FINISHED SECTION

E. ST. PAUL AVE.

STA 29+80.40 TO STA 30+13.04
(MILWAUKEE RIVER TO N. WATER ST.)

* SIDEWALK EXTENDS TO THE WINGWALL FACE

PROVIDE FELT EXPANSION MATERIAL BETWEEN WINGWALL AND SIDEWALK.

City of Milwaukee
Department of Public Works
Infrastructure Services Division

HNTB
11414 West Park Place, Suite 300
Milwaukee, WI 53224
414-359-2300

ST PAUL AVE. LIFT BRIDGE
OVER THE MILWAUKEE RIVER
TYPICAL FINISHED SECTIONS

REVISIONS

DESIGNED BY JTS	
DRAWN BY JTS	
CHECKED BY TJB	
DATE FEB 2013	SCALE 15:1
JOB NUMBER BR100-10-0106	
SHEET NUMBER 3 OF 23	
OF 198	

FILE NAME: s:\milw00air\proj\58635\BR100-10-0106\tlcds\02040_ts.dgn PEN TABLE: EPlan.tbl
DATE: 1/29/2013 10:58:51 AM Plotted by: jschafer

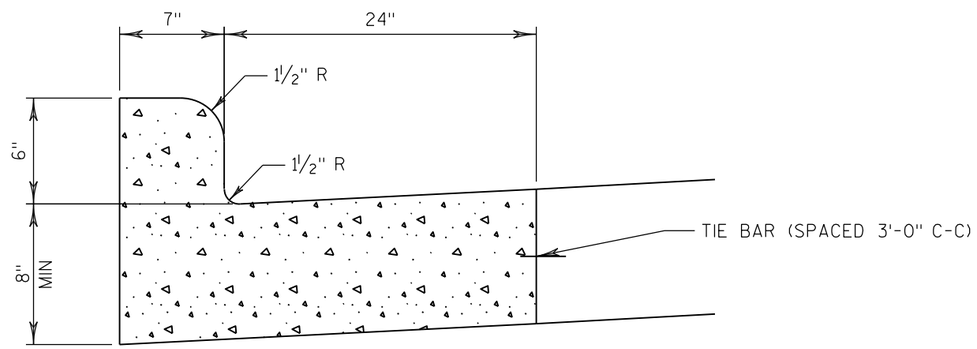

CONCRETE CURB & GUTTER 31-INCH

City of Milwaukee

Department of Public Works

Infrastructure Services Division

HNTB
11414 West Park Place, Suite 300
Milwaukee, WI 53224
414-359-2300

ST PAUL AVE. LIFT BRIDGE
OVER THE MILWAUKEE RIVER
CONSTRUCTION DETAILS

REVISIONS

DESIGNED BY JTS	
DRAWN BY JTS	
CHECKED BY TJB	
DATE FEB 2013	SCALE 1:5:1
JOB NUMBER BR100-10-0106	
SHEET NUMBER 4 OF 23	
OF 198	

FILE NAME: $$$mlw00sinrgrproj$$$635$BR100-10-0106$$$1$$$cds$$$02001.cd.dgn
DATE: 1/31/2013 3:46:43 PM Plotted by: jschafer PEN TABLE: EPlan.tbl

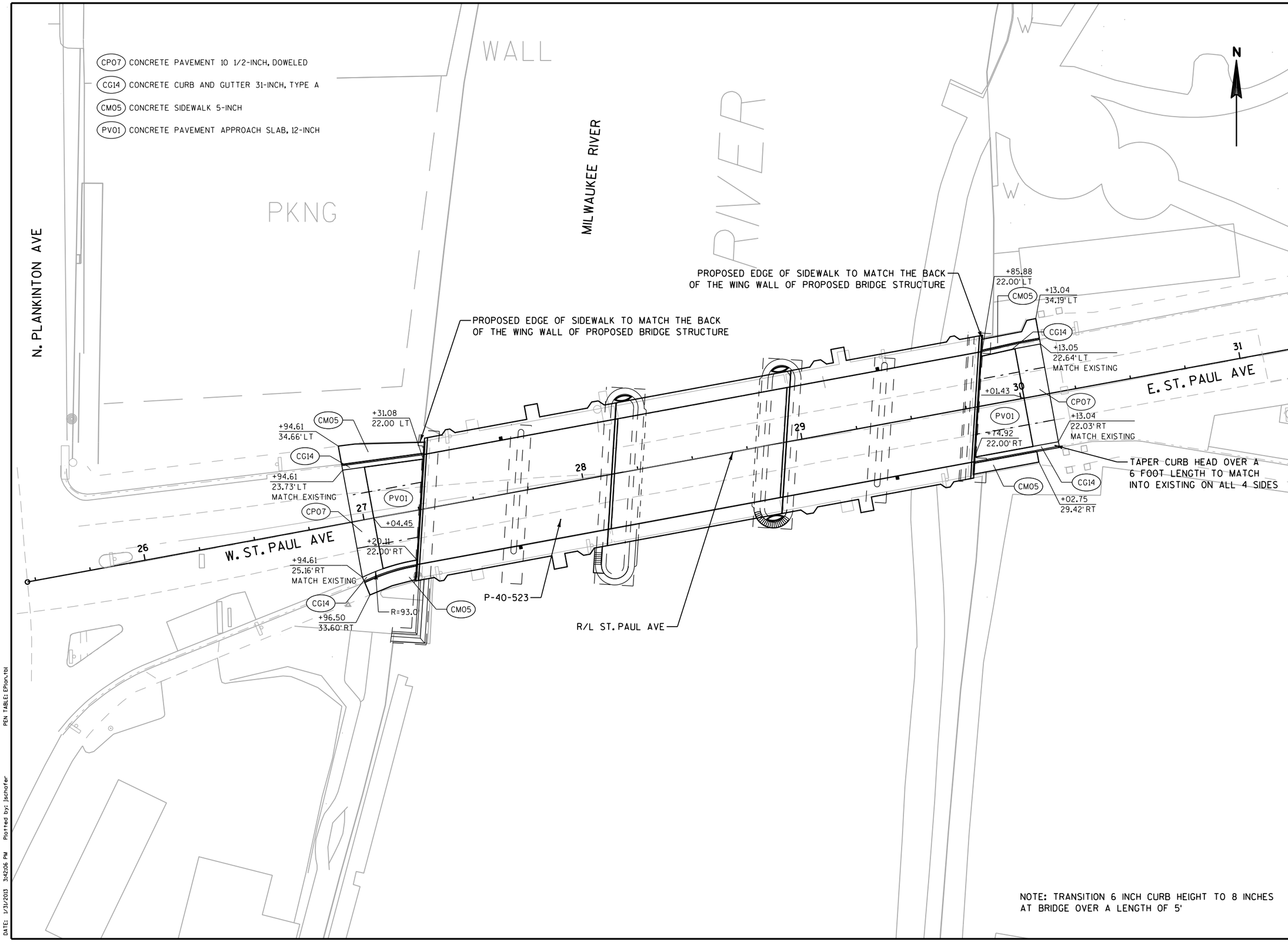

NOTE: TRANSITION 6 INCH CURB HEIGHT TO 8 INCHES AT BRIDGE OVER A LENGTH OF 5'

City of Milwaukee

Department of Public Works

Infrastructure Services Division

HNTB
11414 West Park Place, Suite 300
Milwaukee, WI 53224
414-359-2300

ST PAUL AVE. LIFT BRIDGE OVER THE MILWAUKEE RIVER PAVING DETAILS

REVISIONS

DESIGNED BY JTS	
DRAWN BY JTS	
CHECKED BY TJB	
DATE FEB 2013	SCALE 40:1
JOB NUMBER BR100-10-0106	
SHEET NUMBER 5 OF 23	
OF 198	

FILE NAME: ±smiw00airgroj±58635±BR100-10-0106±±tacds±02201.pd.dgn PEN TABLE: EPlan.tbl
DATE: 1/31/2013 3:42:06 PM Plotted by: jschafer

NOTES:
SEE P-40-523 PLANS FOR GRADES ON THE STRUCTURE

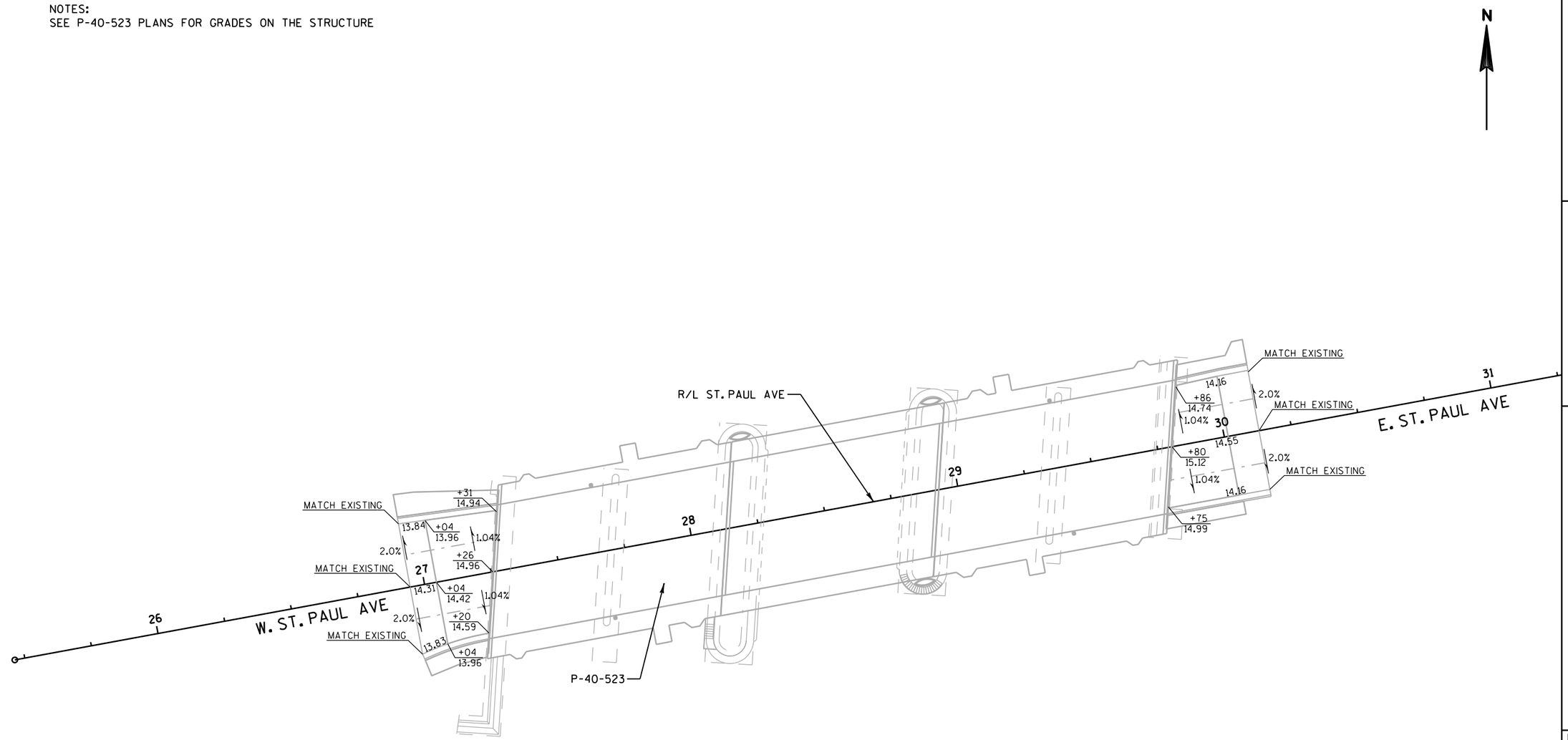

City of Milwaukee

Department of Public Works

Infrastructure Services Division

HNTB
11414 West Park Place, Suite 300
Milwaukee, WI 53224
414-359-2300

ST PAUL AVE. LIFT BRIDGE
OVER THE MILWAUKEE RIVER
PAVING GRADES

REVISIONS

DESIGNED BY JTS	
DRAWN BY JTS	
CHECKED BY TJB	
DATE FEB 2013	SCALE 40:1
JOB NUMBER BR100-10-0106	
SHEET NUMBER 6 OF 23	
OF 198	

FILE NAME: $$$mlw00sinrgrproj$$$635$BR100-10-0106$$$tlscds$$$02130l.gr.dgn PEN TABLE: EPlan.tbl
DATE: 1/29/2013 10:59:00 AM Plotted by: jschafer

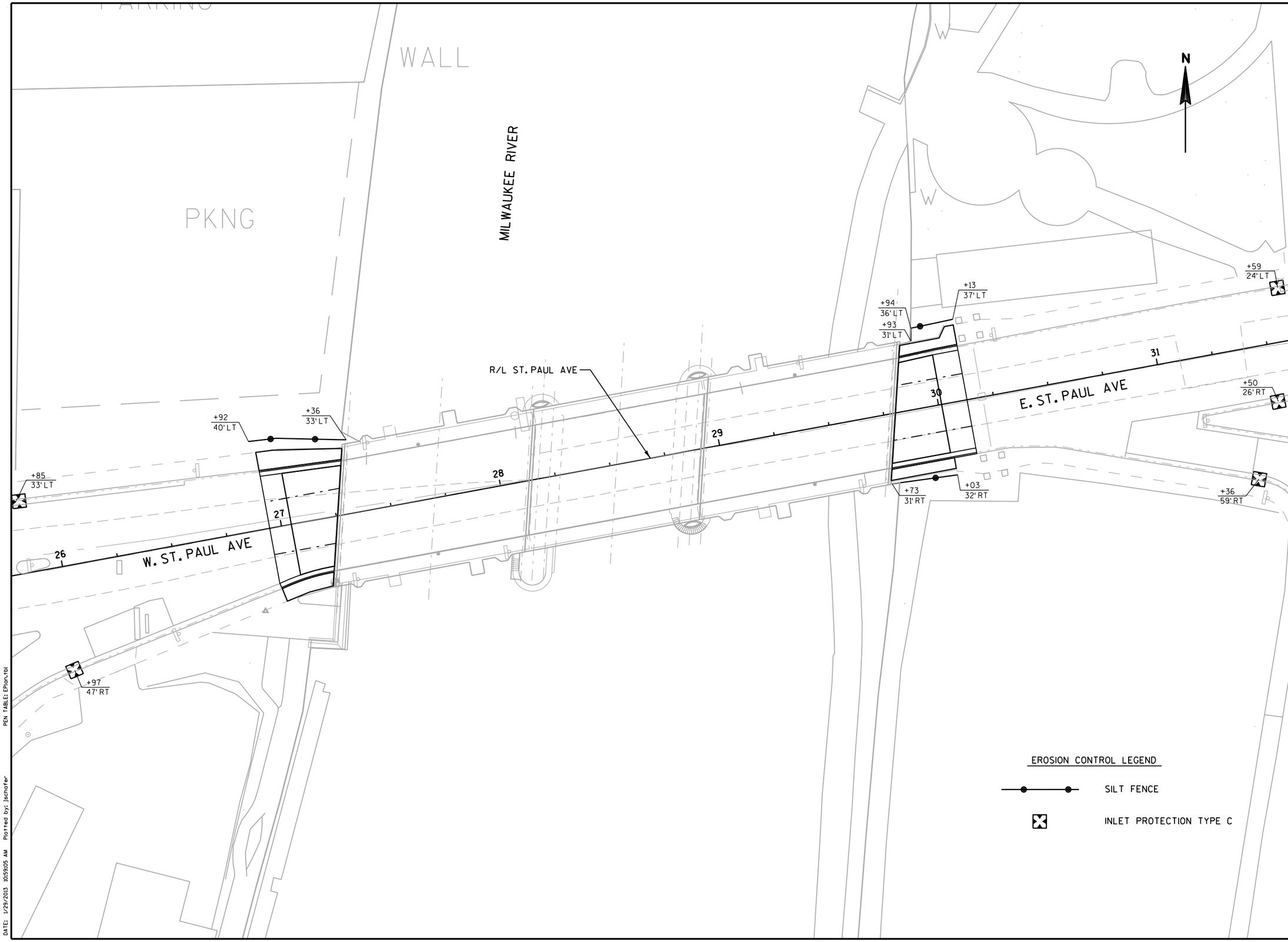

City of Milwaukee

Department of Public Works

Infrastructure Services Division

HNTB
11414 West Park Place, Suite 300
Milwaukee, WI 53224
414-359-2300

ST PAUL AVE. LIFT BRIDGE
OVER THE MILWAUKEE RIVER
EROSION CONTROL

REVISIONS

DESIGNED BY JTS	
DRAWN BY JTS	
CHECKED BY TJB	
DATE FEB 2013	SCALE 40:1
JOB NUMBER BR100-10-0106	
SHEET NUMBER 7 OF 23	
OF 198	

FILE NAME: ±±milw00±ringrproj±58635±BR100-10-0106±11±cds±022001.ec.dgn PEN TABLE: EPlan.tbl
DATE: 1/29/2013 10:59:05 AM Plotted by: jschafer

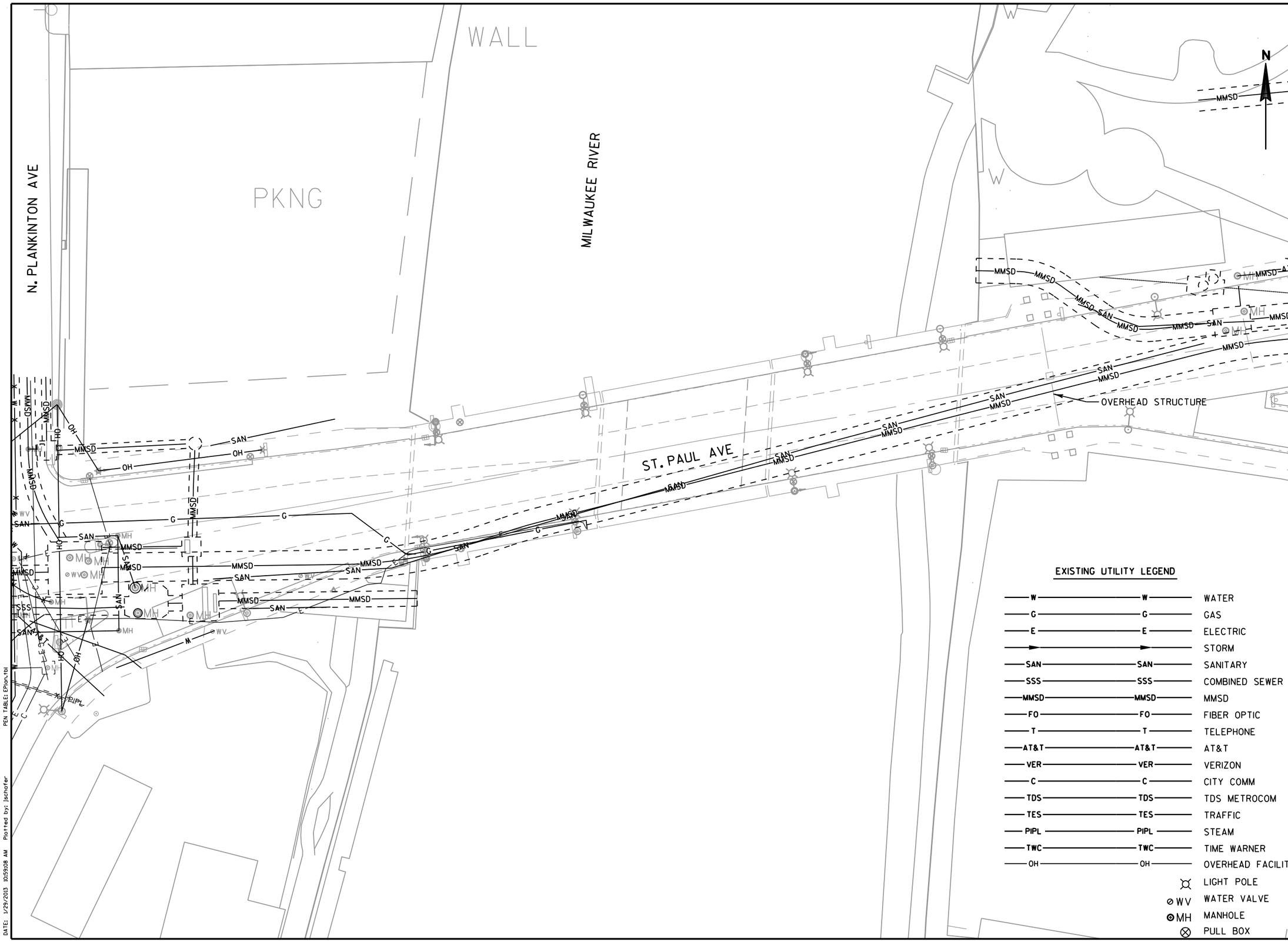

City of Milwaukee

Department of Public Works

Infrastructure Services Division

HNTB

11414 West Park Place, Suite 300
Milwaukee, WI 53224
414-359-2300

ST PAUL AVE. LIFT BRIDGE OVER THE MILWAUKEE RIVER UTILITY PLAN

REVISIONS

DESIGNED BY JTS	
DRAWN BY JTS	
CHECKED BY TJB	
DATE FEB 2013	SCALE 40:1
JOB NUMBER BR100-10-0106	
SHEET NUMBER 8 OF 23	
OF 198	

FILE NAME: ss:mil=00:ingrproj:58635:BR100-10-0106:tlscds:02300_up.dgn PEN TABLE: EPlan.tbl
DATE: 1/29/2013 10:59:08 AM Plotted by: jschafer

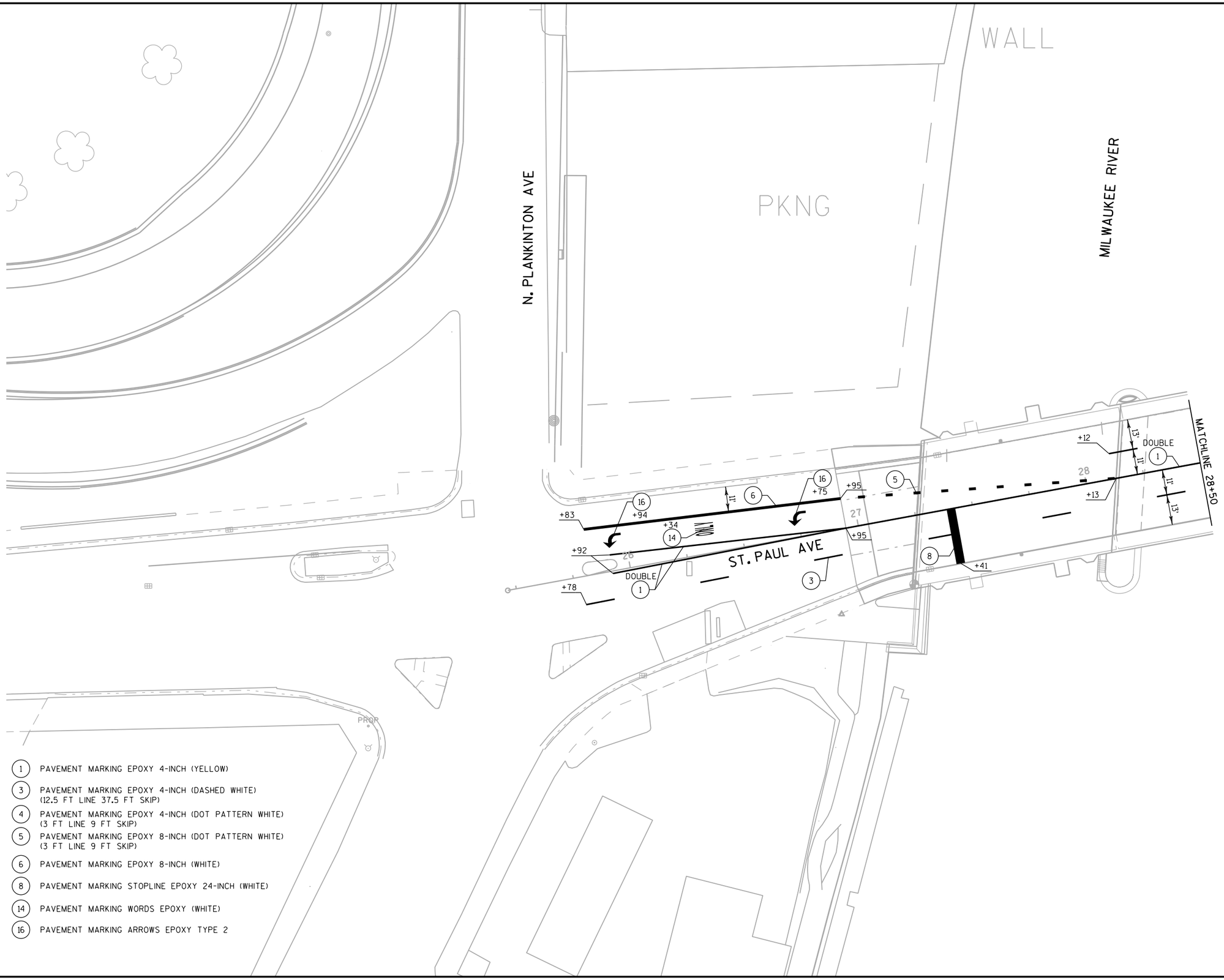

1. PAVEMENT MARKING EPOXY 4-INCH (YELLOW)
3. PAVEMENT MARKING EPOXY 4-INCH (DASHED WHITE) (12.5 FT LINE 37.5 FT SKIP)
4. PAVEMENT MARKING EPOXY 4-INCH (DOT PATTERN WHITE) (3 FT LINE 9 FT SKIP)
5. PAVEMENT MARKING EPOXY 8-INCH (DOT PATTERN WHITE) (3 FT LINE 9 FT SKIP)
6. PAVEMENT MARKING EPOXY 8-INCH (WHITE)
8. PAVEMENT MARKING STOPLINE EPOXY 24-INCH (WHITE)
14. PAVEMENT MARKING WORDS EPOXY (WHITE)
16. PAVEMENT MARKING ARROWS EPOXY TYPE 2

City of Milwaukee
Department of Public Works
Infrastructure Services Division

HNTB
11414 West Park Place, Suite 300
Milwaukee, WI 53224
414-359-2300

ST PAUL AVE. LIFT BRIDGE OVER THE MILWAUKEE RIVER PAVEMENT MARKING

REVISIONS

DESIGNED BY JTS	
DRAWN BY JTS	
CHECKED BY TJB	
DATE FEB 2013	SCALE 40:1
JOB NUMBER BR100-10-0106	
SHEET NUMBER 9 OF 23	
OF 198	

FILE NAME: ss:mil=00:ingr:proj:58635:BR100-10-0106:tlcds:02450_pm.dgn
DATE: 1/29/2013 10:59:10 AM Plotted by: jschafer PEN TABLE: EPlan.tbl

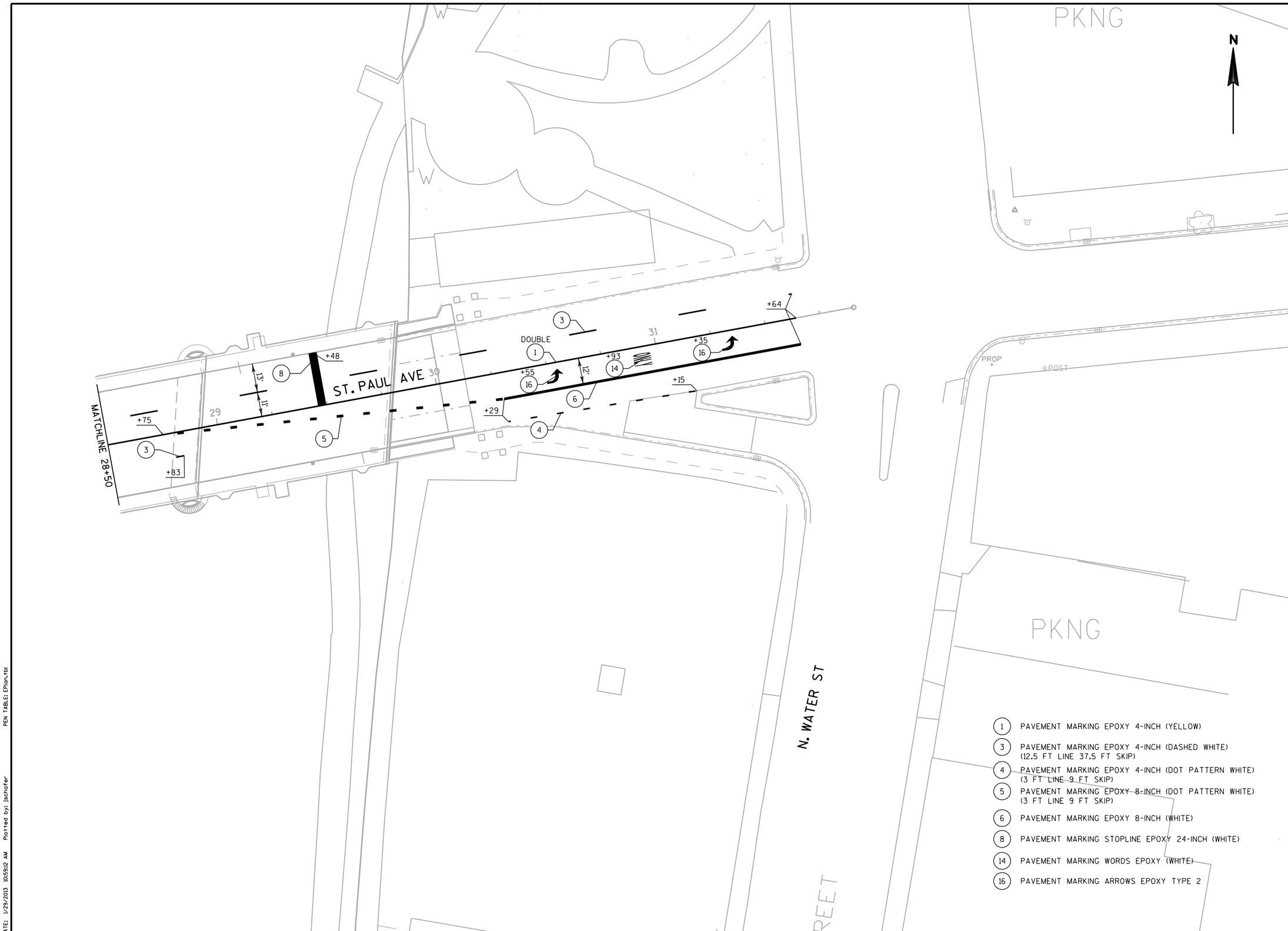

City of Milwaukee

Department of Public Works

Infrastructure Services Division

HNTB
11414 West Park Place, Suite 300
Milwaukee, WI 53224
414-359-2300

ST PAUL AVE. LIFT BRIDGE OVER THE MILWAUKEE RIVER PAVEMENT MARKING

REVISIONS

DESIGNED BY JTS	
DRAWN BY JTS	
CHECKED BY TJB	
DATE FEB 2013	SCALE 40:1
JOB NUMBER BR100-10-0106	
SHEET NUMBER 10 OF 23	
OF 198	

FILE NAME: $smilw00$sirvg$proj$58635$BR100-10-0106$tlcds$024502_pm.dgn
DATE: 1/29/2013 10:59:12 AM Plotted by: jschafer PEN TABLE: EPlan.tbl

X ROAD CLOSED

DETOUR ROUTE

W. MICHIGAN ST.

W. CLYBOURN ST.

N. WATER ST.

N. BROADWAY ST.

N. MILWAUKEE ST.

N

STH 794 WB

STH 794 EB

N. 2ND ST.

N. PLANKINTON AVE.

MILWAUKEE RIVER

E. ST. PAUL AVE

200'

200'

DETOUR AHEAD W20-2

DETOUR AHEAD W20-2

R11-2B 48" X 30"

BRIDGE OUT

TYPE III BARRICADE

TYPE III BARRICADE

TYPE III BARRICADE

TYPE III BARRICADE

TYPE III BARRICADE

E. BUFFALO ST.

1	2	3	4	5	6	7	8
DETOUR M4-8 24" X 12"	DETOUR M4-8 24" X 12"	DETOUR M4-8 24" X 12"	DETOUR M4-8 24" X 12"	DETOUR M4-8 24" X 12"	DETOUR M4-8 24" X 12"	DETOUR M4-8 24" X 12"	DETOUR M4-8 24" X 12"
WEST M3-4 24" X 12"	WEST M3-4 24" X 12"	WEST M3-4 24" X 12"	WEST M3-4 24" X 12"	EAST M3-2 24" X 12"	EAST M3-2 24" X 12"	EAST M3-2 24" X 12"	EAST M3-2 24" X 12"
ST. PAUL AVE M1-94 XX" X 15"	ST. PAUL AVE M1-94 XX" X 15"	ST. PAUL AVE M1-94 XX" X 15"	ST. PAUL AVE M1-94 XX" X 15"	ST. PAUL AVE M1-94 XX" X 15"	ST. PAUL AVE M1-94 XX" X 15"	ST. PAUL AVE M1-94 XX" X 15"	ST. PAUL AVE M1-94 XX" X 15"
M5-1R 21" X 21"	M 6-1 21" X 21"	M 5-1L 21" X 21"	M 6-1 21" X 21"	M5-1R 21" X 21"	M 6-1 21" X 21"	M 5-1L 21" X 21"	M 6-1 21" X 21"

City of Milwaukee

Department of Public Works

Infrastructure Services Division

HNTB

11414 West Park Place, Suite 300
Milwaukee, WI 53224
414-359-2300

ST PAUL AVE. LIFT BRIDGE OVER THE MILWAUKEE RIVER DETOUR PLAN

REVISIONS

DESIGNED BY JTS

DRAWN BY JTS

CHECKED BY TJB

DATE FEB 2013

SCALE 200:1

JOB NUMBER BR100-10-0106

SHEET NUMBER 11 OF 23

OF 198

FILE NAME: s:\milw00s\ingpro\j\586353\BR100-10-0106\tlacds\027001.dt.dgn PEN TABLE: EPlan.tbl

DATE: 1/29/2013 10:59:15 AM Plotted by: jschafer

NOTES:

1. CROSSWALKS TO REMAIN OPEN FOR PROJECT DURATION EXCEPT AS PROVIDED IN SPECIAL PROVISIONS.

2. RIVERWALK TO REMAIN OPEN UDER THE BRIDGE EXCEPT DURING CONSTRUCTION ACTIVITIES FOR THE EAST BRIDGE SPAN OR EAST ABUTMENT.

3. PLACE SAFETY FENCE WHERE NEEDED TO KEEP PEDESTRIANS OUT OF CONSTRUCTION AREA

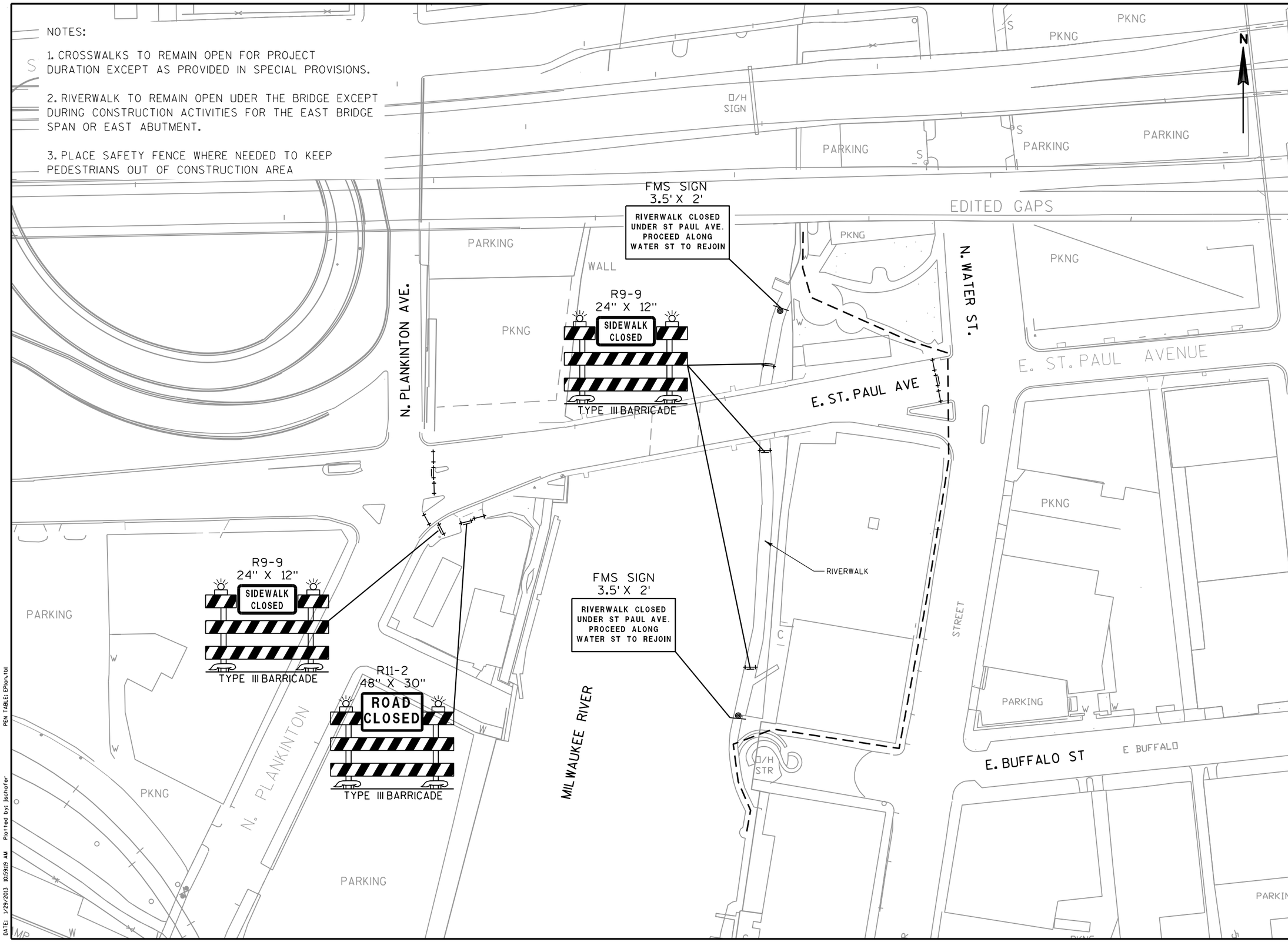

City of Milwaukee

Department of Public Works

Infrastructure Services Division

HNTB
11414 West Park Place, Suite 300
Milwaukee, WI 53224
414-359-2300

ST PAUL AVE. LIFT BRIDGE
OVER THE MILWAUKEE RIVER
TRAFFIC CONTROL

REVISIONS

DESIGNED BY JTS	
DRAWN BY JTS	
CHECKED BY TJB	
DATE FEB 2013	SCALE 100:1
JOB NUMBER BR100-10-0106	
SHEET NUMBER 12 OF 23	
OF 198	

FILE NAME: s:\milw00s\prgrproj\58635\BR100-10-0106\tlcds\027002.dt.dgn PEN TABLE: EPlan.tbl
DATE: 1/29/2013 10:59:19 AM Plotted by: jschafer

REMOVAL QUANTITIES

STATION	LOC.	204.0100 REMOVING PAVEMENT SY	204.0155 REMOVING CONCRETE SIDEWALK SY	646.0600 REMOVING PAVEMENT MARKINGS LF
26+94.61 - 27+31.60	LT	--	30	--
26+94.61 - 27+30.96	LT/RT	157	--	--
26+95.24 - 27+19.48	RT	--	16	--
29+86.41 - 30+13.04	LT	--	17	--
29+75.03 - 30+13.04	LT/RT	159	--	--
29+74.38 - 30+02.75	RT	--	16	--
25+75.00 - 26+94.61	LT/RT	--	--	564
30+13.04 - 31+60.00	LT/RT	--	--	499
TOTAL		315	80	1,063

MISCELLANEOUS QUANTITIES

STATION	205.0100 EXCAVATION COMMON CY	213.0100 FINISHING ROADWAY EACH	616.0700.S FENCE SAFETY LF	619.1000 MOBILIZATION EACH	642.5201 FIELD OFFICE TYPE C EACH
PROJECT	76	1	100	1	1
TOTAL	76	1	100	1	1

ROADWAY QUANTITIES

STATION	LOC.	305.0120 BASE AGGREGATE DENSE 1 1/4-INCH TON	415.0105 CONCRETE PAVEMENT 10 1/2-INCH (DOWELED) SY	415.0410 CONCRETE PAVEMENT APPROACH SLAB SY	416.0620 DRILLED DOWEL BARS EACH	601.0331 CONCRETE CURB AND GUTTER 31-INCH LF	602.0410 CONCRETE SIDEWALK 5-INCH SY	690.0250 SAWING CONCRETE LF
26+94.61 - 27+31.60	LT	5	--	--	--	--	29	--
26+94.61 - 27+30.96	LT	4	--	--	--	37	--	--
26+94.61 - 27+04.45	LT/RT	17	52	--	--			
27+04.45 - 27+30.96	LT/RT	35	--	106	--	--	--	--
26+95.24 - 27+19.48	RT	3	--	--	--	--	16	--
26+94.61 - 27+20.12	RT	2	--	--	--	25	--	--
29+86.41 - 30+13.04	LT	3	--	--	--	--	16	--
29+85.76 - 30+13.04	LT	3	--	--	--	27	--	--
29+75.03 - 30+01.43	LT/RT	34	--	103	--	--	--	--
29+75.03 - 30+13.04	RT	4	--	--	--	39	--	--
29+74.38 - 30+02.75	RT	3	--	--	--	--	16	--
31+01.43 - 30+13.04	LT/RT	19	57	--	--	--	--	--
WEST PROJECT LIMITS	LT/RT	--	--	--	45	--	--	68
EAST PROJECT LIMITS	LT/RT	--	--	--	45	--	--	74
TOTAL		131	109	209	90	128	76	142

EROSION CONTROL QUANTITIES

STATION	LOC.	628.1504 SILT FENCE LF	628.1520 SILT FENCE MAINTENANCE LF	628.7015 INLET PROTECTION TYPE C LF
25+85	33' LT	--	--	1
25+97	47' RT	--	--	1
26+92 - 27+36	LT	45	45	--
29+93 - 30+13	LT	25	25	--
29+73 - 30+03	RT	30	30	--
31+36	59' RT	--	--	1
31+50	26' RT	--	--	1
31+59	24' LT	--	--	1
TOTAL		100	100	5

City of Milwaukee
Department of Public Works
Infrastructure Services Division

HNTB
11414 West Park Place, Suite 300
Milwaukee, WI 53224
414-359-2300

ST PAUL AVE. LIFT BRIDGE
OVER THE MILWAUKEE RIVER
MISCELLANEOUS QUANTITIES

REVISIONS

DESIGNED BY JTS
DRAWN BY JTS
CHECKED BY TJB
DATE 12/27/12
SCALE 40:1.
JOB NUMBER BR100-10-0106
SHEET NUMBER 13 OF 23
OF 198

FILE NAME: s:\milw00sinrgrproj\58635\BR100-10-0106\tscds\030201_mq.dgn
PEN TABLE: EPlan.tbl
DATE: 1/29/2013 11:26:08 AM Plotted by: jschafer

TRAFFIC CONTROL QUANTITIES

	643.0100 TRAFFIC CONTROL (PROJECT)	643.0200 TRAFFIC CONTROL SURVEILLANCE AND MAINTENANCE (PROJECT)	643.0420 TRAFFIC CONTROL BARRICADES TYPE III	643.0715 TRAFFIC CONTROL WARNING LIGHTS TYPE C	643.0900 TRAFFIC CONTROL SIGNS	643.1000 TRAFFIC CONTROL SIGNS FIXED MESSAGE	643.2000 TRAFFIC CONTROL DETOUR (PROJECT)	643.3000 TRAFFIC CONTROL DETOUR SIGNS
	EACH	DAY	DAY	DAY	DAY	SF	EACH	DAY
PROJECT	1	335	5,695	11,390	2,345	14	1	21,440
TOTAL	1	335	5,695	11,390	2,345	14	1	21,440

PAVEMENT MARKING QUANTITIES

STATION	LOC.	646.0106 PAVEMENT MARKING EPOXY 4-INCH YELLOW LF	646.0106 PAVEMENT MARKING EPOXY 4-INCH 3 FT LINE 9 FT SKIP WHITE LF	646.0106 PAVEMENT MARKING EPOXY 4-INCH 12.5 FT LINE 37.5 FT SKIP WHITE LF	646.0126 PAVEMENT MARKING EPOXY 8-INCH WHITE LF	646.0126 PAVEMENT MARKING EPOXY 8-INCH 3 FT LINE 9 FT SKIP WHITE LF	647.0166 PAVEMENT MARKING ARROWS EPOXY TYPE 2 EACH	647.0356 PAVEMENT MARKING WORDS EPOXY EACH	647.0576 PAVEMENT MARKING STOP LINE EPOXY 24-INCH LF
25+78 - 28+83	RT	--	--	76	--	--	--	--	--
25+83 - 26+95	LT	--	--	--	112	--	--	--	--
25+92 - 31+64	LT / CL	1,350	--	--	--	--	--	--	--
25+94	LT	--	--	--	--	--	1		--
26+34	LT	--	--	--	--	--	--	1	--
26+75	LT	--	--	--	--	--	1	--	--
26+95 - 28+13	LT / CL	--	--	--	--	30	--	--	--
27+41	CL / RT	--	--	--	--	--	--	--	24
28+12 - 31+64	LT	--	--	88	--	--	--	--	--
28+75 - 30+29	CL / RT	--	--	--	--	39	--	--	--
29+48	CL / LT	--	--	--	--	--	--	--	24
30+29 - 31+15	RT	--	22	--	--	--	--	--	--
30+29 - 31+64	RT	--	--	--	135	--	--	--	--
30+55	RT	--	--	--	--	--	1	--	--
30+93	RT	--	--	--	--	--	--	1	--
31+35	RT	--	--	--	--	--	1		--
TOTAL		1,350	22	164	247	68	4	2	48

City of Milwaukee

Department of Public Works

Infrastructure Services Division

HNTB
11414 West Park Place, Suite 300
Milwaukee, WI 53224
414-359-2300

ST PAUL AVE. LIFT BRIDGE
OVER THE MILWAUKEE RIVER
MISCELLANEOUS QUANTITIES

REVISIONS

DESIGNED BY JTS
DRAWN BY JTS
CHECKED BY TJB
DATE 12/27/12
SCALE 40:1
JOB NUMBER BR100-10-0106
SHEET NUMBER 14 OF 23
OF 198

FILE NAME: s:\milw00\ingproj\58635\BR100-10-0106\tlcds\030201_ma.dgn
DATE: 1/29/2013 10:59:23 AM Plotted by: jschafer PEN TABLE: EPlan.tbl

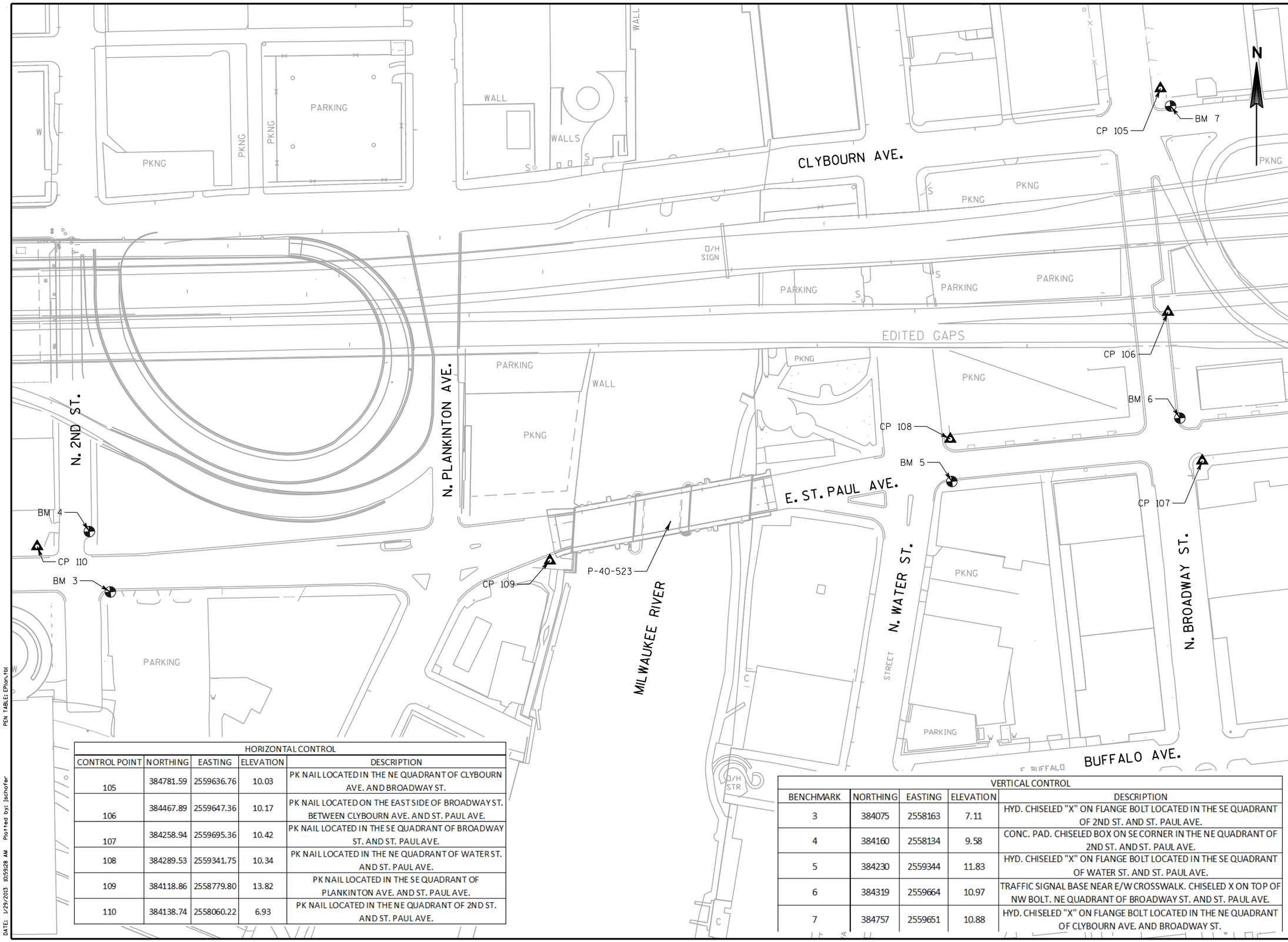

HORIZONTAL CONTROL				
CONTROL POINT	NORTHING	EASTING	ELEVATION	DESCRIPTION
105	384781.59	2559636.76	10.03	PK NAIL LOCATED IN THE NE QUADRANT OF CLYBOURN AVE. AND BROADWAY ST.
106	384467.89	2559647.36	10.17	PK NAIL LOCATED ON THE EAST SIDE OF BROADWAY ST. BETWEEN CLYBOURN AVE. AND ST. PAUL AVE.
107	384258.94	2559695.36	10.42	PK NAIL LOCATED IN THE SE QUADRANT OF BROADWAY ST. AND ST. PAUL AVE.
108	384289.53	2559341.75	10.34	PK NAIL LOCATED IN THE NE QUADRANT OF WATER ST. AND ST. PAUL AVE.
109	384118.86	2558779.80	13.82	PK NAIL LOCATED IN THE SE QUADRANT OF PLANKINTON AVE. AND ST. PAUL AVE.
110	384138.74	2558060.22	6.93	PK NAIL LOCATED IN THE NE QUADRANT OF 2ND ST. AND ST. PAUL AVE.

VERTICAL CONTROL				
BENCHMARK	NORTHING	EASTING	ELEVATION	DESCRIPTION
3	384075	2558163	7.11	HYD. CHISELED "X" ON FLANGE BOLT LOCATED IN THE SE QUADRANT OF 2ND ST. AND ST. PAUL AVE.
4	384160	2558134	9.58	CONC. PAD. CHISELED BOX ON SE CORNER IN THE NE QUADRANT OF 2ND ST. AND ST. PAUL AVE.
5	384230	2559344	11.83	HYD. CHISELED "X" ON FLANGE BOLT LOCATED IN THE SE QUADRANT OF WATER ST. AND ST. PAUL AVE.
6	384319	2559664	10.97	TRAFFIC SIGNAL BASE NEAR E/W CROSSWALK. CHISELED X ON TOP OF NW BOLT. NE QUADRANT OF BROADWAY ST. AND ST. PAUL AVE.
7	384757	2559651	10.88	HYD. CHISELED "X" ON FLANGE BOLT LOCATED IN THE NE QUADRANT OF CLYBOURN AVE. AND BROADWAY ST.

City of Milwaukee
Department of Public Works
Infrastructure Services Division

HNTB
11414 West Park Place, Suite 300
Milwaukee, WI 53224
414-359-2300

ST PAUL AVE. LIFT BRIDGE OVER THE MILWAUKEE RIVER BENCHMARKS

REVISIONS

DESIGNED BY JTS
DRAWN BY JTS
CHECKED BY TJB
DATE FEB 2013
SCALE 1:25:1
JOB NUMBER BR100-10-0106
SHEET NUMBER 15 OF 23
OF 198

FILE NAME: ss:mil=00:ingrproj:586358BR100-10-0106:tlecds050000_bm.dgn PEN TABLE: EPlan.tbl
DATE: 1/29/2013 10:59:28 AM Plotted by: jschafer

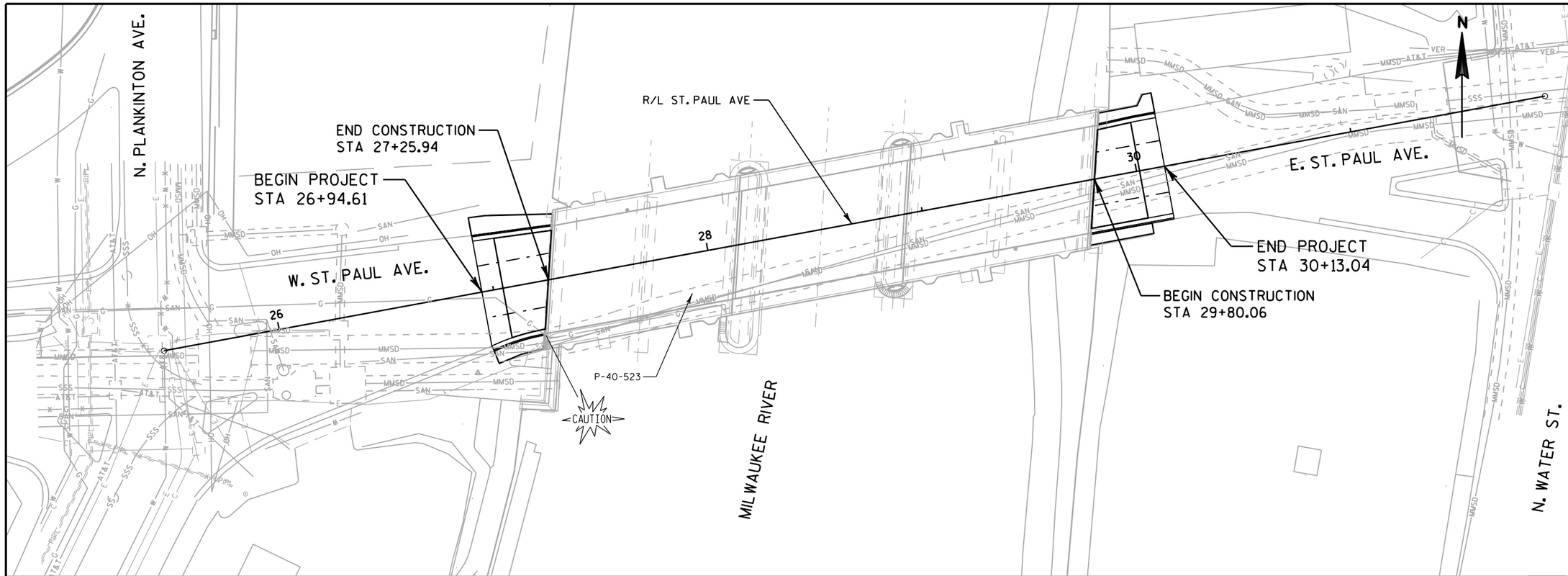

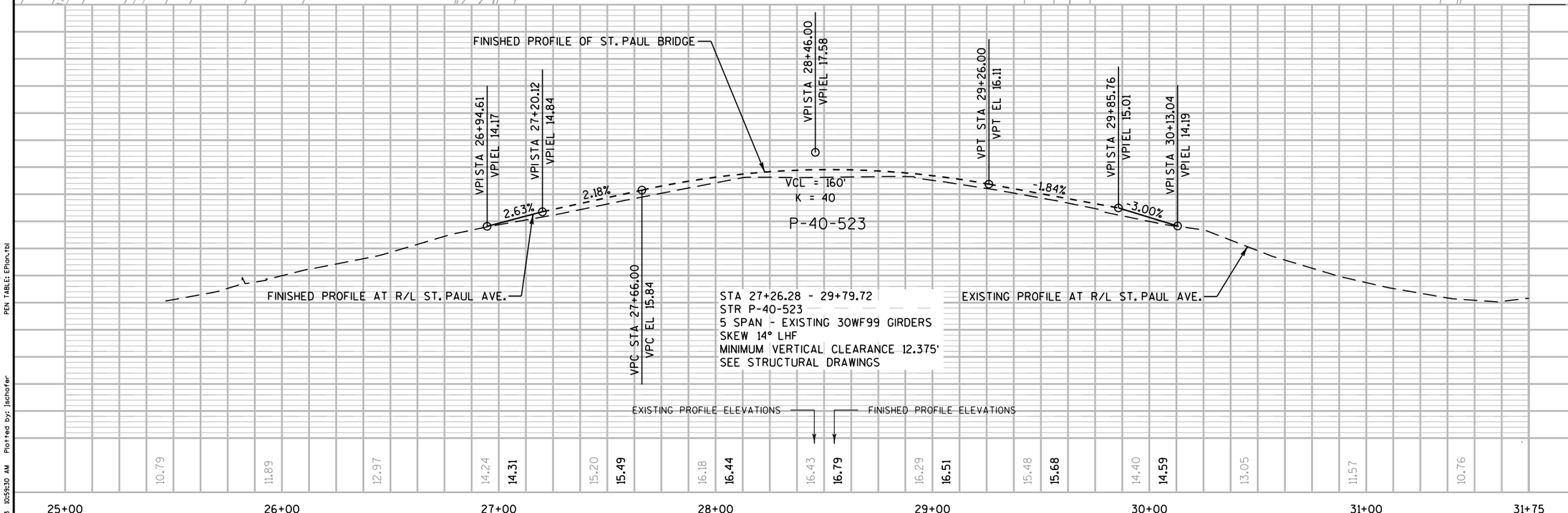

City of Milwaukee

Department of Public Works

Infrastructure Services Division

HNTB

11414 West Park Place, Suite 300
Milwaukee, WI 53224
414-359-2300

ST PAUL AVE. LIFT BRIDGE OVER THE MILWAUKEE RIVER PLAN AND PROFILE

REVISIONS

DESIGNED BY JTS	
DRAWN BY JTS	
CHECKED BY TJB	
DATE FEB 2013	SCALE 50:1
JOB NUMBER BR100-10-0106	
SHEET NUMBER 16 OF 23	
OF 198	

FILE NAME: t:\milw00sir\proj\5863\5BR100-10-0106\tlcds\05001_pp.dgn PEN TABLE: EPlan.tbl
DATE: 1/29/2013 10:59:30 AM Plotted by: jschafer

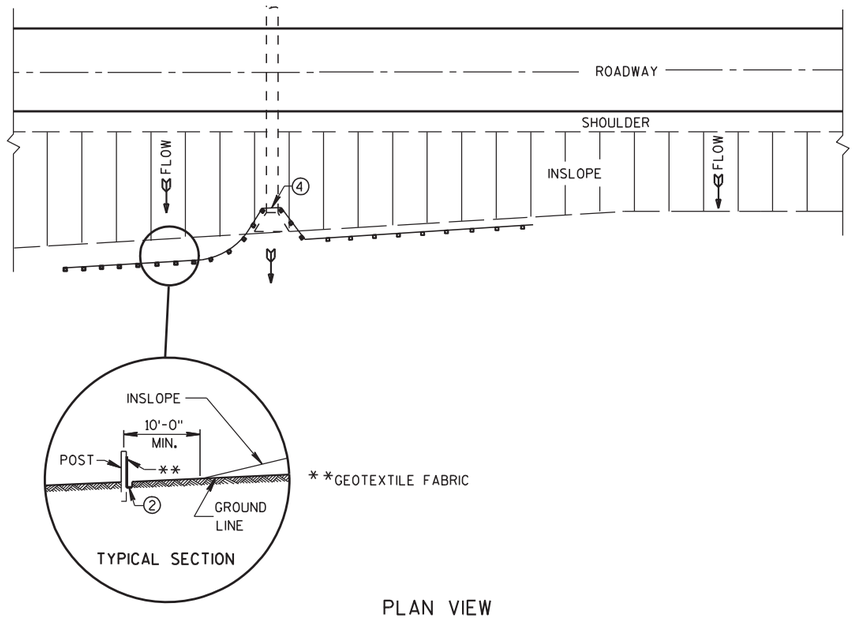

PLAN VIEW

TYPICAL APPLICATION OF SILT FENCE

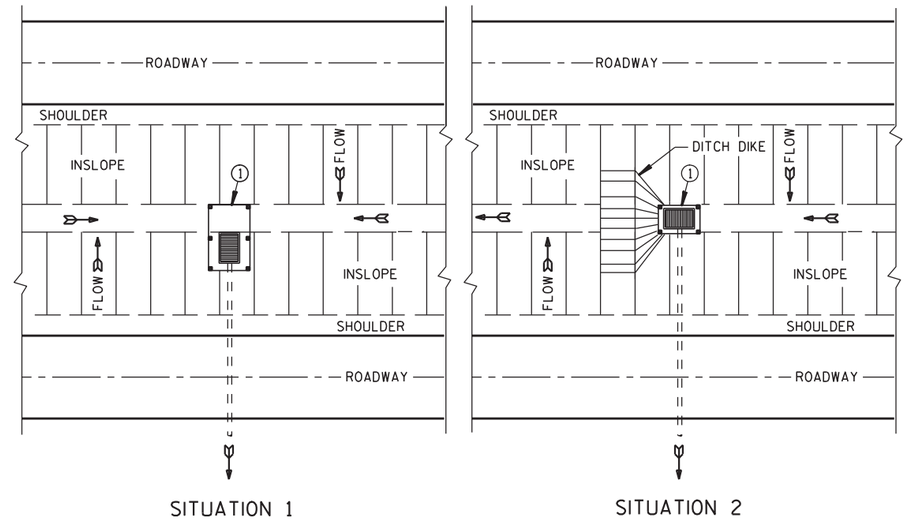

PLAN VIEW

SILT FENCE AT MEDIAN SURFACE DRAINS

GENERAL NOTES

DETAILS OF CONSTRUCTION NOT SHOWN ON THIS DRAWING SHALL CONFORM TO THE PERTINENT REQUIREMENTS OF THE STANDARD SPECIFICATIONS AND APPLICABLE SPECIAL PROVISIONS.

① HORIZONTAL BRACE REQUIRED WITH 2" X 4" WOODEN FRAME OR EQUIVALENT AT TOP OF POSTS.

② FOR MANUAL INSTALLATIONS THE TRENCH SHALL BE A MINIMUM OF 4" WIDE & 6" DEEP TO BURY AND ANCHOR THE GEOTEXTILE FABRIC. FOLD MATERIAL TO FIT TRENCH AND BACKFILL & COMPACT TRENCH WITH EXCAVATED SOIL.

③ WOOD POSTS SHALL BE A MINIMUM SIZE OF 1⅛" X 1⅛" OF OAK OR HICKORY.

④ SILT FENCE TO EXTEND ACROSS THE TOP OF THE PIPE.

⑤ CONSTRUCT SILT FENCE FROM A CONTINUOUS ROLL IF POSSIBLE BY CUTTING LENGTHS TO AVOID JOINTS. IF A JOINT IS NECESSARY USE ONE OF THE FOLLOWING TWO METHODS; A) OVERLAP THE END POSTS AND TWIST, OR ROTATE, AT LEAST 180 DEGREES, B) HOOK THE END OF EACH SILT FENCE LENGTH.

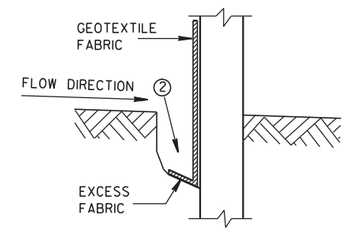

TRENCH DETAIL

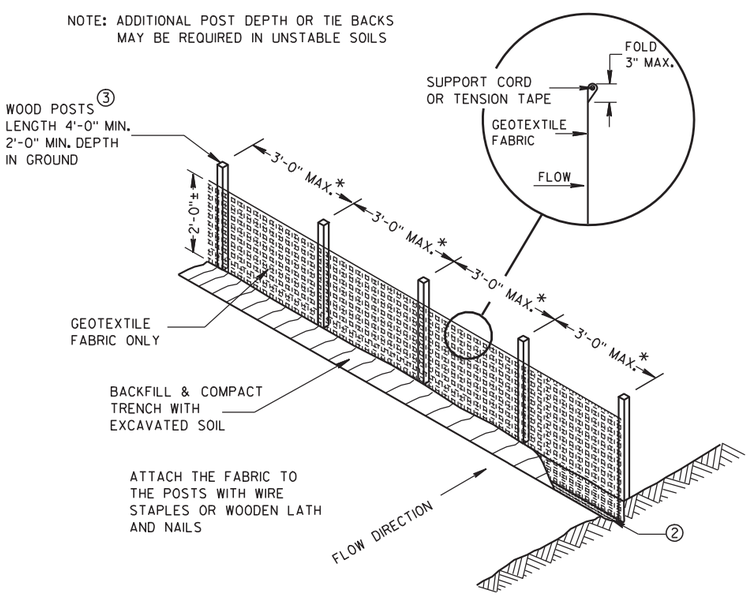

*NOTE: 8'-0" POST SPACING ALLOWED IF A WOVEN GEOTEXTILE FABRIC IS USED.

SILT FENCE

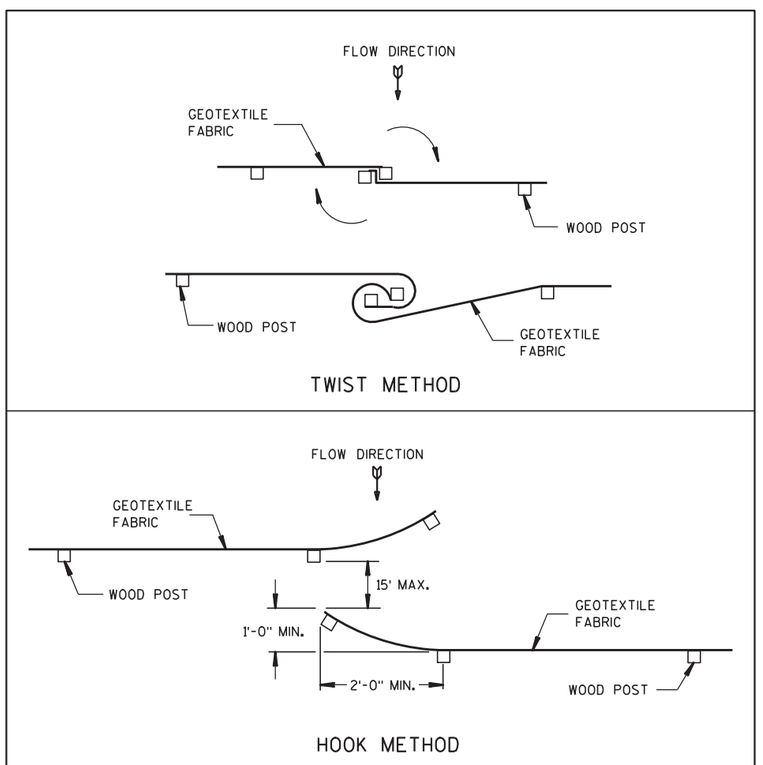

JOINING TWO LENGTHS OF SILT FENCE ⑤

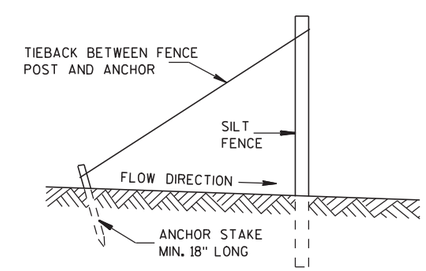

SILT FENCE TIE BACK

(WHEN REQUIRED BY THE ENGINEER)

SILT FENCE

STATE OF WISCONSIN
DEPARTMENT OF TRANSPORTATION

APPROVED
4-29-05 /S/ Beth Cannestra
DATE CHIEF ROADWAY DEVELOPMENT ENGINEER
FHWA

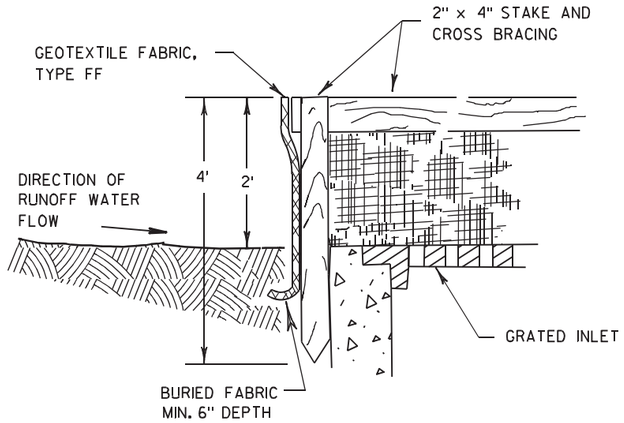

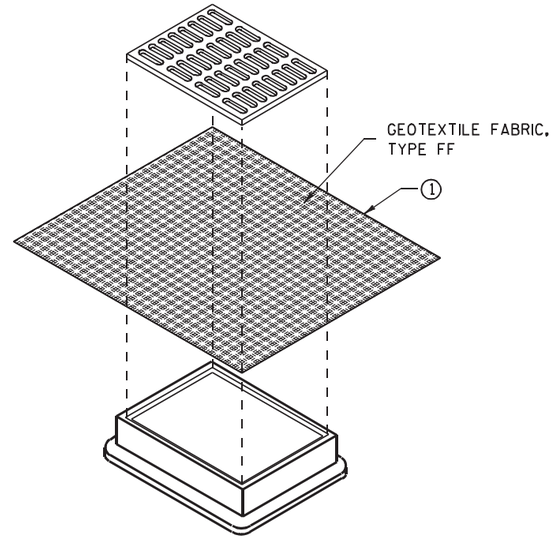

INLET PROTECTION, TYPE B
(WITHOUT CURB BOX)

(CAN BE INSTALLED IN ANY INLET WITHOUT A CURB BOX)

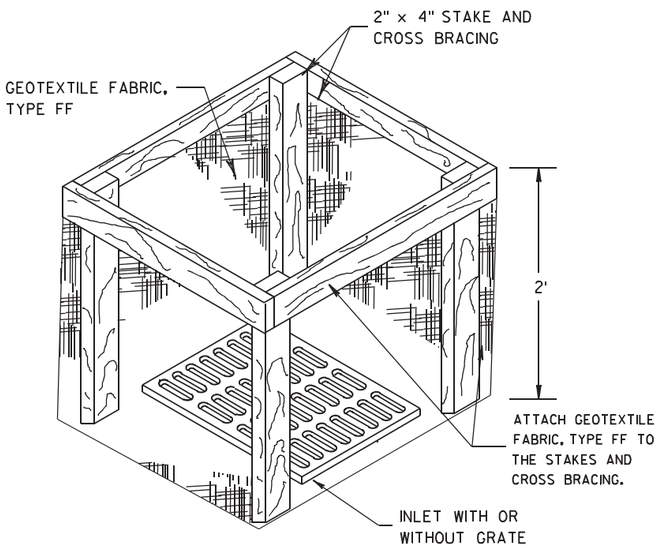

INLET PROTECTION, TYPE A

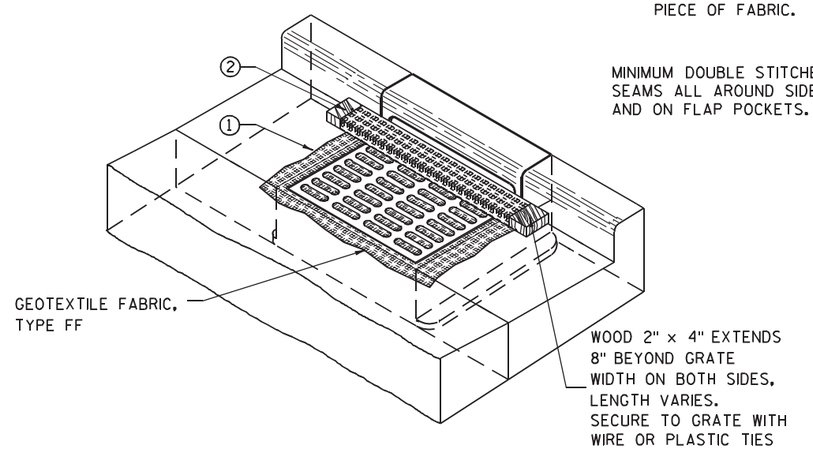

INLET PROTECTION, TYPE C (WITH CURB BOX)

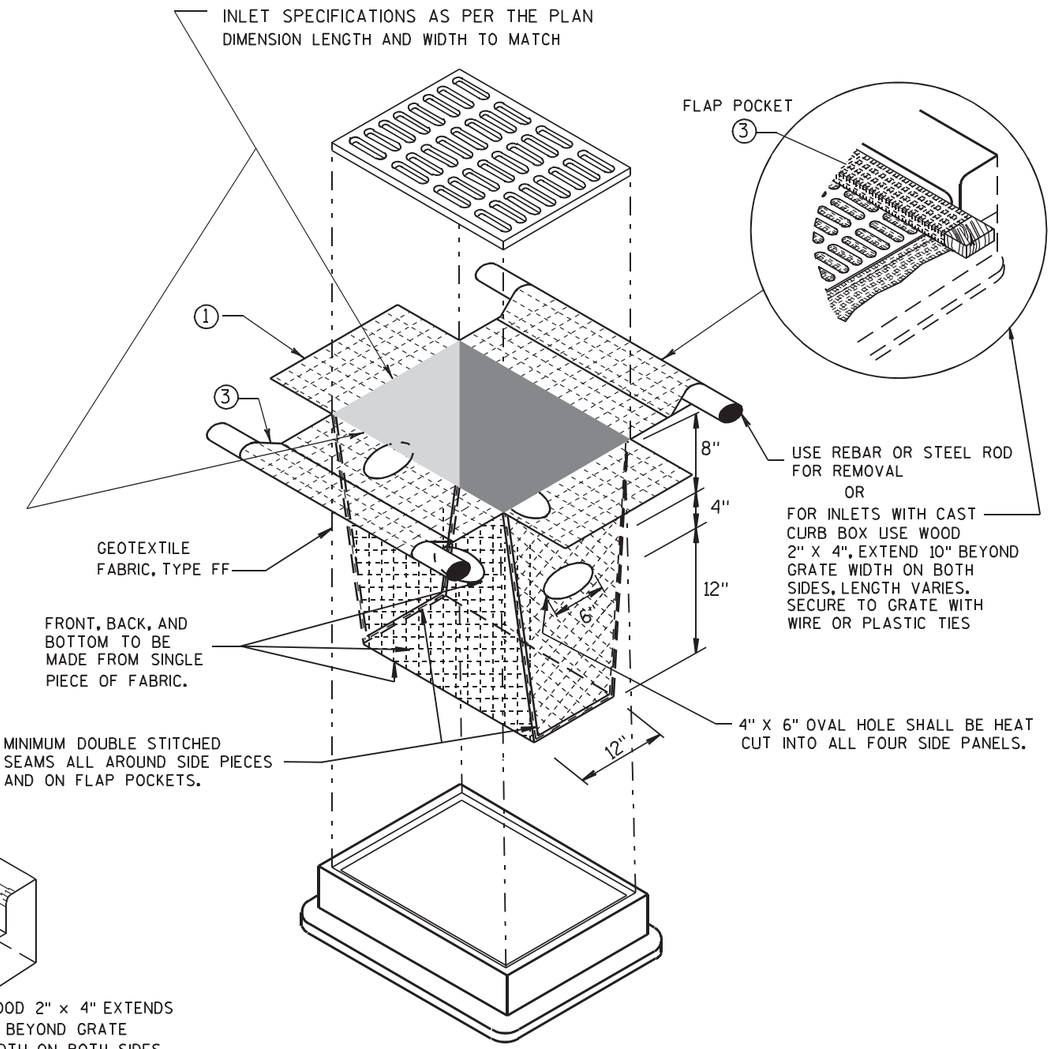

INLET PROTECTION, TYPE D

(CAN BE INSTALLED IN ANY INLET TYPE WITH OR WITHOUT A CURB BOX AS PER NOTE 2)

GENERAL NOTES

INLET PROTECTION DEVICES SHALL BE MAINTAINED OR REPLACED AT THE DIRECTION OF THE ENGINEER.

MANUFACTURED ALTERNATIVES APPROVED AND LISTED ON THE DEPARTMENT'S EROSION CONTROL PRODUCT ACCEPTABILITY LIST MAY BE SUBSTITUTED.

WHEN REMOVING OR MAINTAINING INLET PROTECTION, CARE SHALL BE TAKEN SO THAT THE SEDIMENT TRAPPED ON THE GEOTEXTILE FABRIC DOES NOT FALL INTO THE INLET. ANY MATERIAL FALLING INTO THE INLET SHALL BE REMOVED IMMEDIATELY.

1. FINISHED SIZE, INCLUDING FLAP POCKETS WHERE REQUIRED, SHALL EXTEND A MINIMUM OF 10" AROUND THE PERIMETER TO FACILITATE MAINTENANCE OR REMOVAL.
2. FOR INLET PROTECTION, TYPE C (WITH CURB BOX), AN ADDITIONAL 18" OF FABRIC IS WRAPPED AROUND THE WOOD AND SECURED WITH STAPLES. THE WOOD SHALL NOT BLOCK THE ENTIRE HEIGHT OF THE CURB BOX OPENING.
3. FLAP POCKETS SHALL BE LARGE ENOUGH TO ACCEPT WOOD 2X4.

INSTALLATION NOTES

TYPE B & C

TRIM EXCESS FABRIC IN THE FLOW LINE TO WITHIN 3" OF THE GRATE.

THE CONTRACTOR SHALL DEMONSTRATE A METHOD OF MAINTENANCE, USING A SEWN FLAP, HAND HOLDS OR OTHER METHOD TO PREVENT ACCUMULATED SEDIMENT FROM ENTERING THE INLET.

TYPE D

DO NOT INSTALL INLET PROTECTION TYPE D IN INLETS SHALLOWER THAN 30", MEASURED FROM THE BOTTOM OF THE INLET TO THE TOP OF THE GRATE.

TRIM EXCESS FABRIC IN THE FLOW LINE TO WITHIN 3" OF THE GRATE.

THE INSTALLED BAG SHALL HAVE A MINIMUM SIDE CLEARANCE, BETWEEN THE INLET WALLS AND THE BAG, MEASURED AT THE BOTTOM OF THE OVERFLOW HOLES, OF 3". WHERE NECESSARY THE CONTRACTOR SHALL CINCH THE BAG, USING PLASTIC ZIP TIES, TO ACHIEVE THE 3" CLEARANCE. THE TIES SHALL BE PLACED AT A MAXIMUM OF 4" FROM THE BOTTOM OF THE BAG.

INLET PROTECTION
TYPE A, B, C, AND D

STATE OF WISCONSIN
DEPARTMENT OF TRANSPORTATION

APPROVED
10/16/02 — DATE
/S/ Beth Cannestra
CHIEF ROADWAY DEVELOPMENT ENGINEER
FHWA

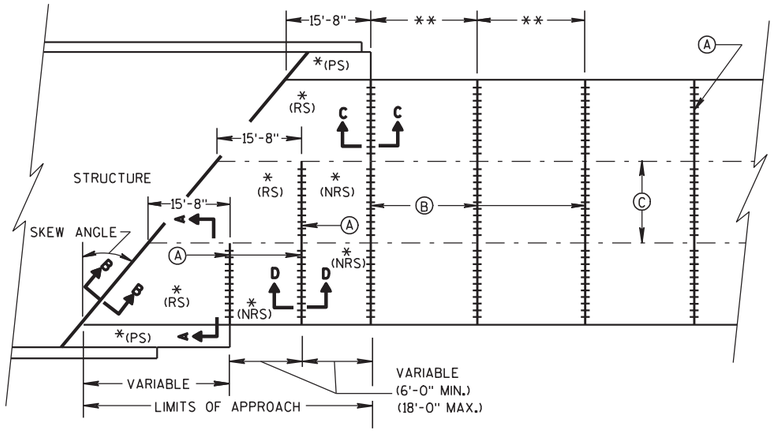

SKEWED APPROACH
(PAVEMENT MORE THAN 2 LANES)

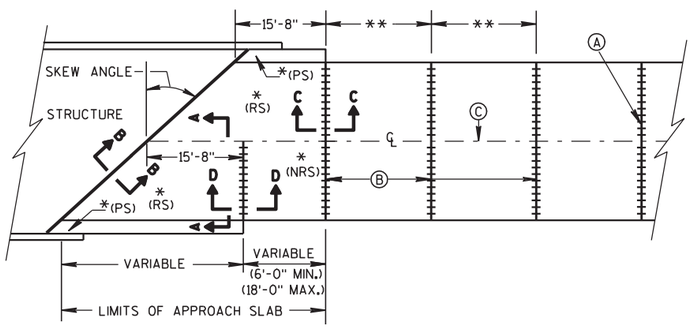

SKEWS >30°
(PAVEMENT WIDTH ≤30')

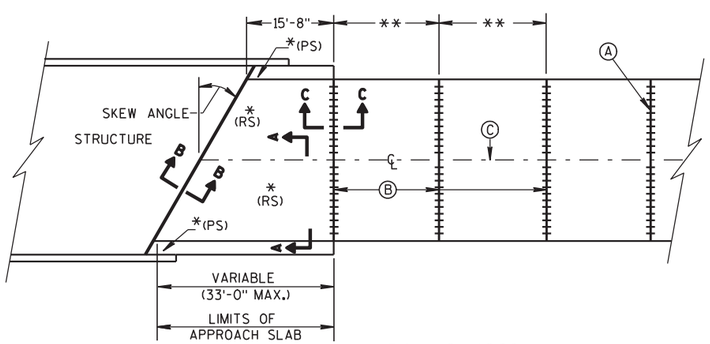

SKEWS ≤30°
(PAVEMENT WIDTH ≤30')

APPROACH SLAB AND ADJACENT PAVEMENT

*(RS) = REINFORCED CONCRETE SLAB
*(PS) = PAVED CONCRETE SHOULDER: CONCRETE PAVEMENT, OR CONCRETE SURFACE DRAIN (SEE DETAILS ELSEWHERE IN THE PLAN)
*(NRS) = NON-REINFORCED CONCRETE SLAB

**STANDARD TRANSVERSE JOINT SPACING (SEE SDD 13C4, SDD 13C11, & SDD 13C13)

Ⓐ STANDARD CONTRACTION JOINT NORMAL TO ℄ OR ℄
Ⓑ 1½" EXPANSION JOINT WITH DOWEL BARS NORMAL TO ℄ OR ℄
Ⓒ STANDARD LONGITUDINAL JOINT AND TIE BARS.

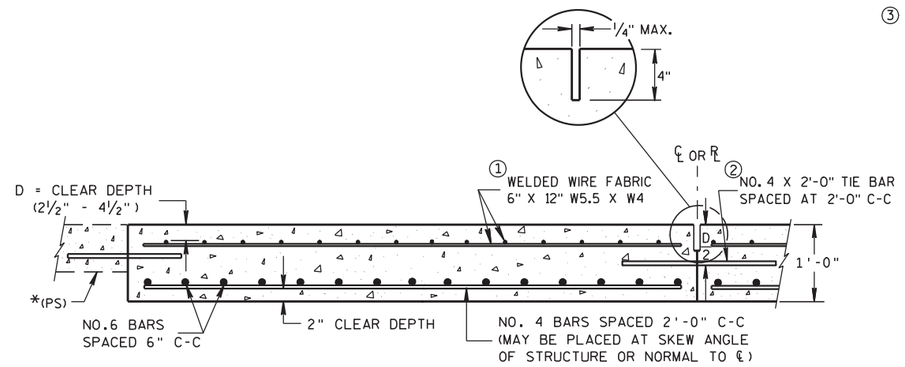

SECTION A-A
REINFORCEMENT POSITIONING DETAIL

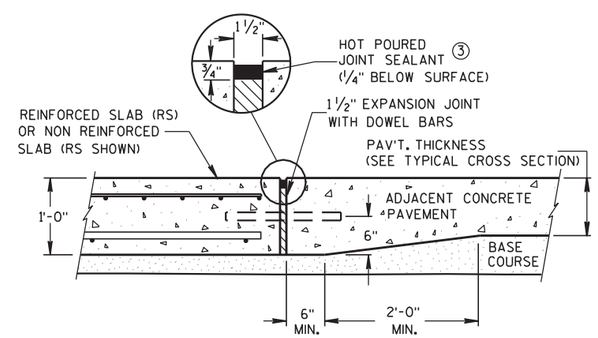

SECTION C-C
TRANSITION DETAIL
APPROACH SLAB TO ADJACENT PAVEMENT

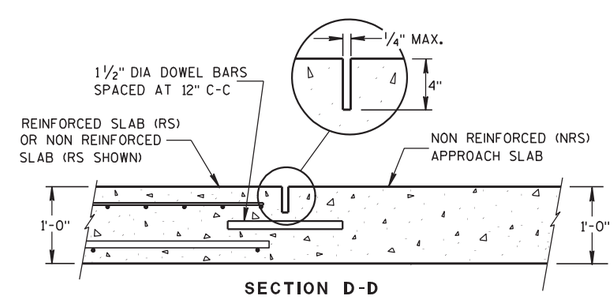

SECTION D-D
CONTRACTION JOINT

GENERAL NOTES

APPROACH SLABS ABUTTING AN HMA PAVEMENT OVER BASE COURSE DO NOT NEED TO BE DOWELED.

THE CONTRACTOR MAY SPLICE NO. 6 BARS IN THE APPROACH SLAB FOR SKEWED STRUCTURES ONLY. STAGGER SPLICES WITH A MAXIMUM OF ONE SPLICE PER BAR. THE LENGTH OF LAP IS 20 INCHES.

① THE CONTRACTOR MAY USE NO. 4 BARS SPACED AT 2'-0" C-C IN BOTH THE LONGITUDINAL AND TRANSVERSE DIRECTIONS FOR TOP REINFORCEMENT AS AN ALTERNATIVE TO THE WELDED WIRE FABRIC.

② THE CONTRACTOR MAY OMIT TIE BARS BETWEEN REINFORCED SLABS WHERE SLAB REINFORCEMENT BARS EXTEND ACROSS THE CENTERLINE OR REFERENCE LINE.

③ USE A JOINT SEALANT MEETING THE REQUIREMENTS OF ASTM D6690.

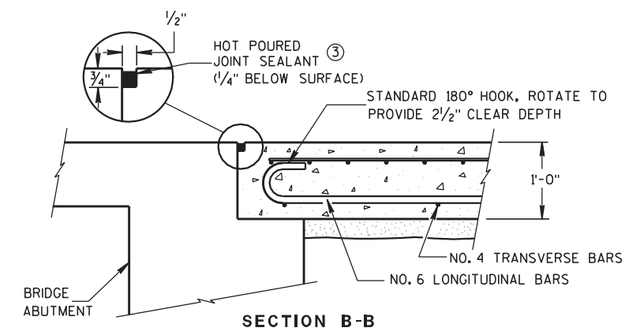

SECTION B-B
BEND DETAIL
BOTTOM REINFORCEMENT

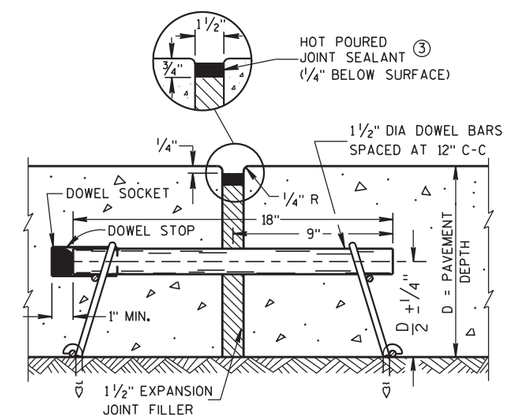

EXPANSION JOINT

CONCRETE PAVEMENT APPROACH SLAB	
STATE OF WISCONSIN DEPARTMENT OF TRANSPORTATION	
19 of 23	APPROVED 12/11/2009 DATE /S/ Deb Bischoff PAVEMENT POLICY & DESIGN ENGINEER FHWA

6

S.D.D. 13 B 2-6

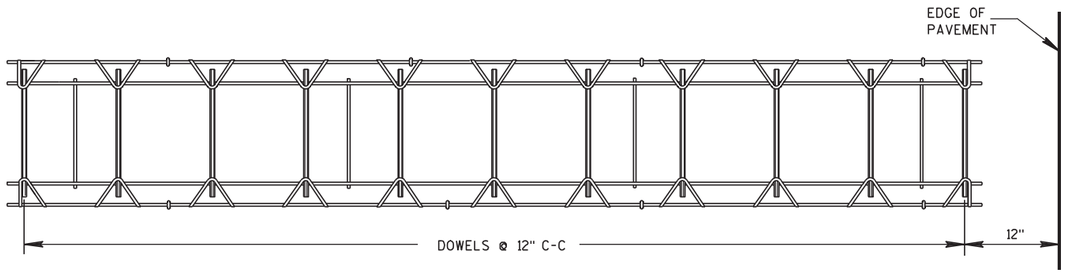

PLAN VIEW

SIDE VIEW

CONTRACTION JOINT DOWEL ASSEMBLY 1

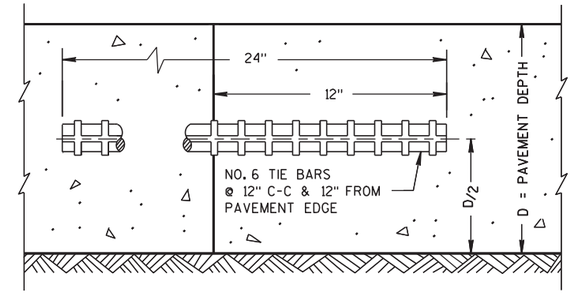

TRANSVERSE CONSTRUCTION JOINT

GENERAL NOTES

CONTRACTION JOINTS

CONSTRUCT CONTRACTION JOINTS NORMAL TO THE CENTERLINE. SHOW THE LOCATION OF CONTRACTION JOINTS THROUGH INTERSECTIONS ON THE PLANS OR AS DIRECTED BY THE ENGINEER.

DO NOT SEAL OR FILL CONTRACTION JOINTS.

INSTALL DOWEL BARS PARALLEL TO THE PAVEMENT CENTERLINE AND PAVEMENT SURFACE.

FOR PAVEMENT SLABS OF VARYING WIDTHS, CENTER THE DOWEL ASSEMBLY ACROSS THE LANES. LOCATE THE INNER AND OUTER MOST DOWEL BARS SO THAT THE CENTER OF THE BARS ARE A MINIMUM OF 6 INCHES AND A MAXIMUM OF 12 INCHES FROM THE LONGITUDINAL JOINT AND THE EDGE OF PAVEMENT.

CONSTRUCTION JOINTS

LOCATE CONSTRUCTION JOINTS A MINIMUM OF 4 FEET FROM THE NEAREST CONTRACTION JOINT AND ALIGN PARALLEL TO CONTRACTION JOINTS.

THE CONTRACTOR MAY INSERT TIE BARS THROUGH THE HEADER BOARD AFTER THE CONCRETE HAS BEEN PLACED.

1. THE ENGINEER MAY APPROVE THE USE OF ALTERNATIVE DESIGNS OF THE DOWEL ASSEMBLY. THE CONTRACTOR MAY USE MECHANICAL DOWEL BAR INSERTERS INSTEAD OF DOWEL ASSEMBLIES.
2. ANCHOR DOWEL BARS INTO DRILLED HOLES WITH AN EPOXY.
3. APPLY A THIN UNIFORM COATING OF SURFACE TREATMENT TO THE FREE END OF DOWEL BARS TO PREVENT BONDING.
4. SPACE DOWEL BARS INSTALLED BY DRILLING 1'-3" ON CENTER. CENTER THE GROUPING OF DOWEL BARS INSIDE THE SLAB BASED ON ALL THE FOLLOWING SITUATIONS:

   BETWEEN THE EDGES OF PAVEMENTS WITHOUT LONGITUDINAL JOINTS OR BETWEEN THE EDGE OF PAVEMENT AND NEAREST LONGITUDINAL JOINT OR BETWEEN TWO ADJACENT LONGITUDINAL JOINTS.
5. SECURE BASKETS WITH ANCHORS TO HOLD DOWEL BARS IN THE CORRECT POSITION AND ALIGNMENT. TYPE, LOCATION, NUMBER AND LENGTH OF ANCHORS ARE DEPENDENT UPON FIELD CONDITIONS.

PAVEMENT DEPTH, DOWEL BAR SIZE AND JOINT SPACING TABLE

PAVEMENT DEPTH (D)	DOWEL BAR DIAMETER	CONTRACTION JOINT SPACING
5 1/2", 6", 6 1/2"	NONE	12'
7", 7 1/2"	1"	14'
8", 8 1/2"	1 1/4"	15'
9", 9 1/2"	1 1/4"	15'
10" & ABOVE	1 1/2"	15'

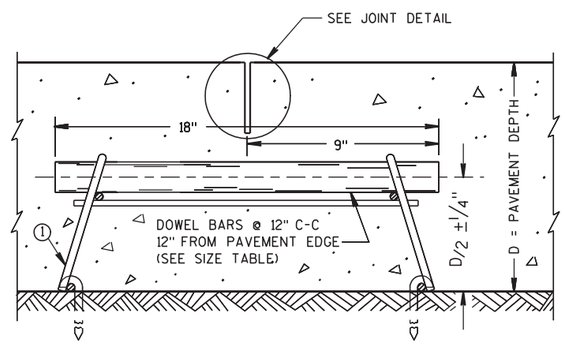

DOWELED CONTRACTION JOINT

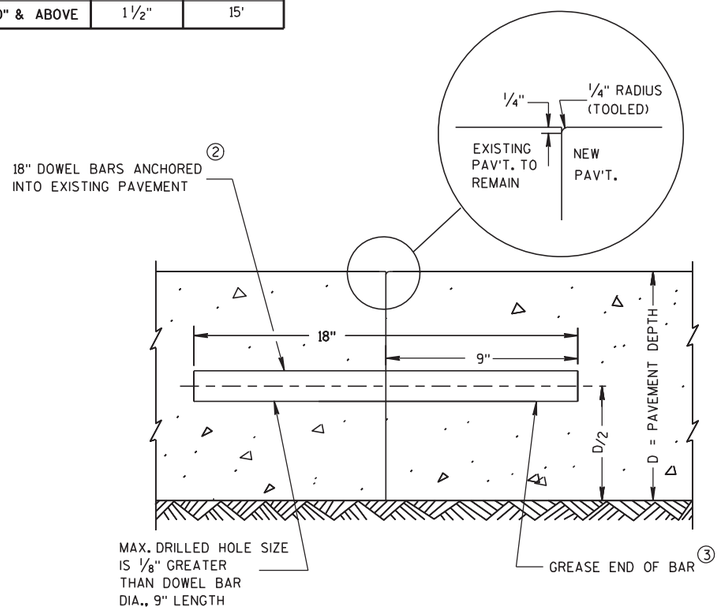

TRANSVERSE CONTRACTION JOINTS ABUTTING EXISTING PAVEMENT

4 DOWEL BAR DETAIL

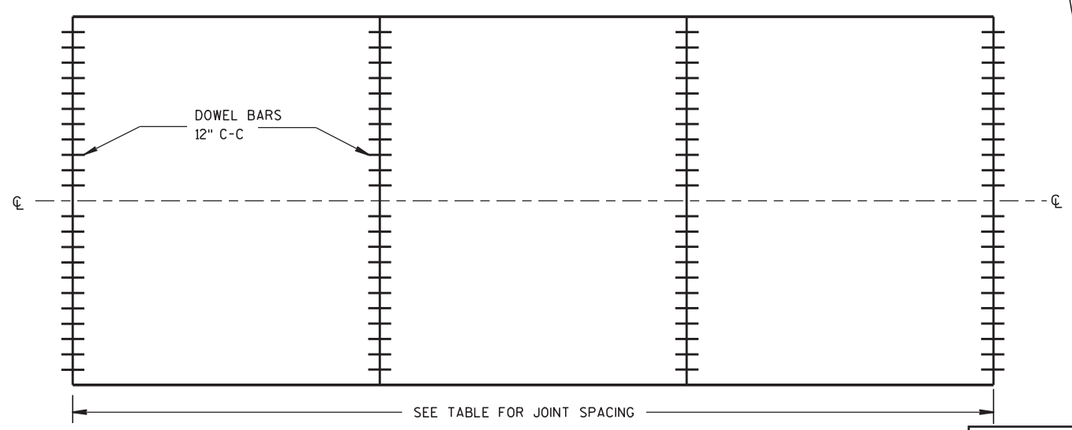

CONTRACTION JOINT LOCATIONS

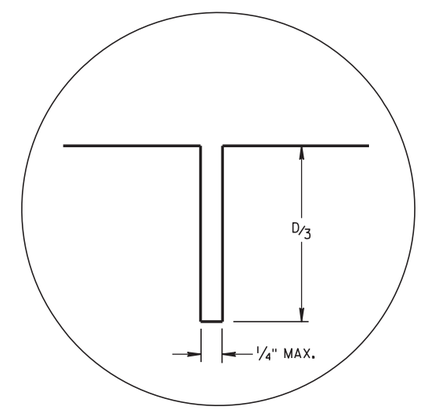

JOINT DETAIL

URBAN DOWELED CONCRETE PAVEMENT

STATE OF WISCONSIN
DEPARTMENT OF TRANSPORTATION

APPROVED
12/11/2009 — DATE
/S/ Deb Bischoff — PAVEMENT POLICY & DESIGN ENGINEER
FHWA

GENERAL NOTES

DETAILS OF INSTALLATION, MATERIALS AND WORKMANSHIP NOT SHOWN ON THIS DRAWING SHALL CONFORM TO THE PERTINENT REQUIREMENTS OF THE STANDARD SPECIFICATIONS AND APPLICABLE SPECIAL PROVISIONS.

ALL LETTERS, ARROWS AND SYMBOLS SHALL BE IN CONFORMANCE WITH REQUIREMENTS INCLUDED IN "STANDARD ALPHABETS FOR HIGHWAY SIGNS AND PAVEMENT MARKING" BOOK BY THE FEDERAL HIGHWAY ADMINISTRATION. ALL LETTERS, ARROWS AND SYMBOLS SHALL BE WHITE AND REFLECTORIZED. SMALL DIFFERENCES IN DIMENSIONS WITHIN THE TOLERANCES OF THAT BOOK ARE ACCEPTABLE.

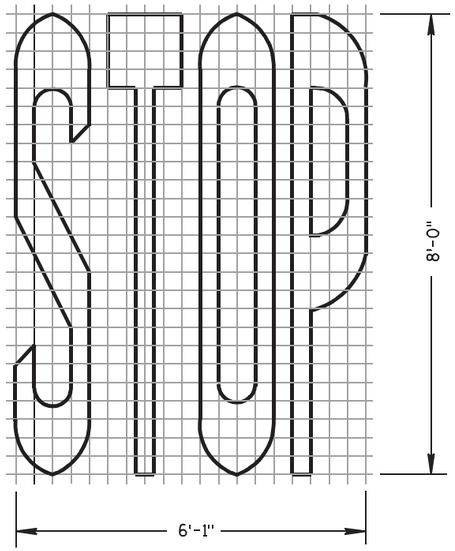

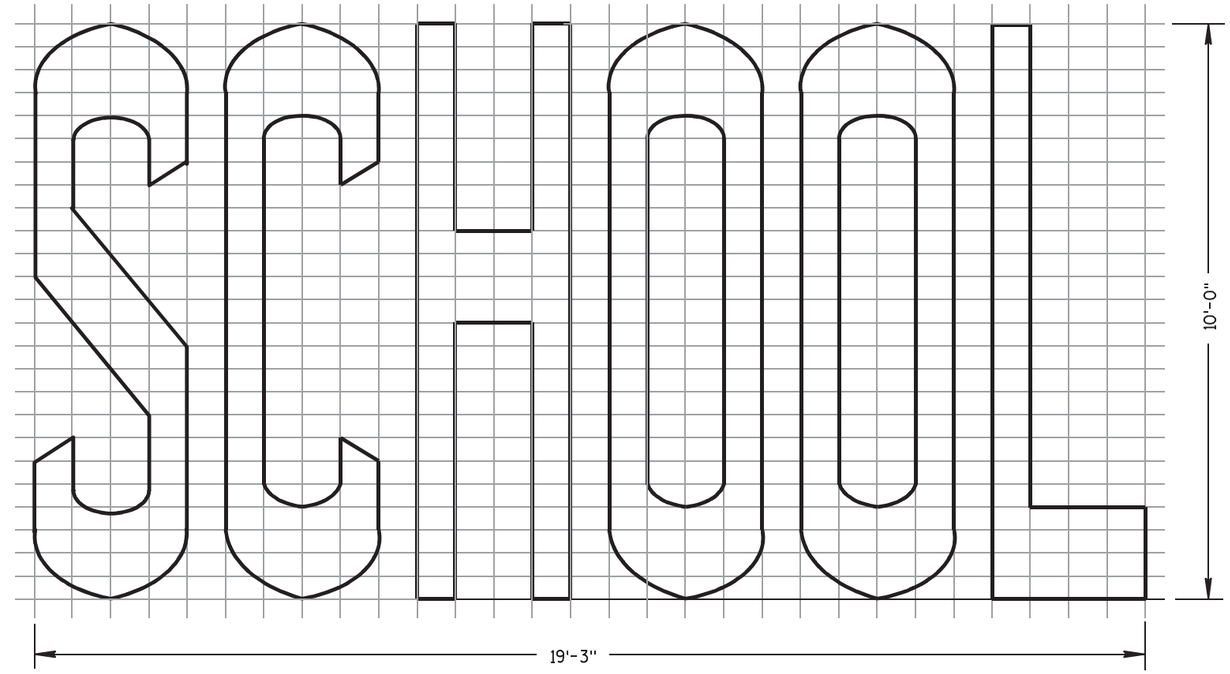

TWO-LANE

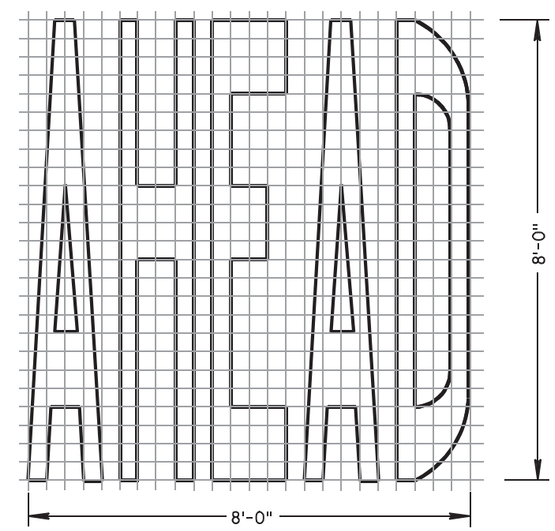

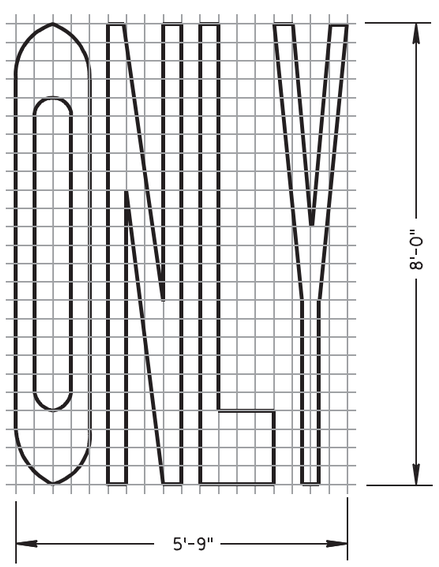

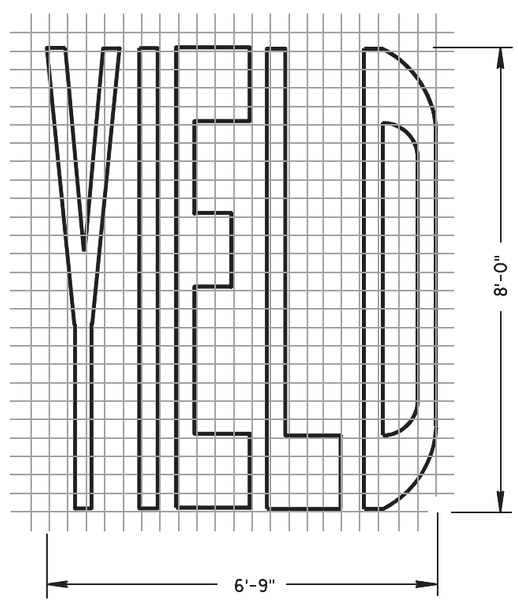

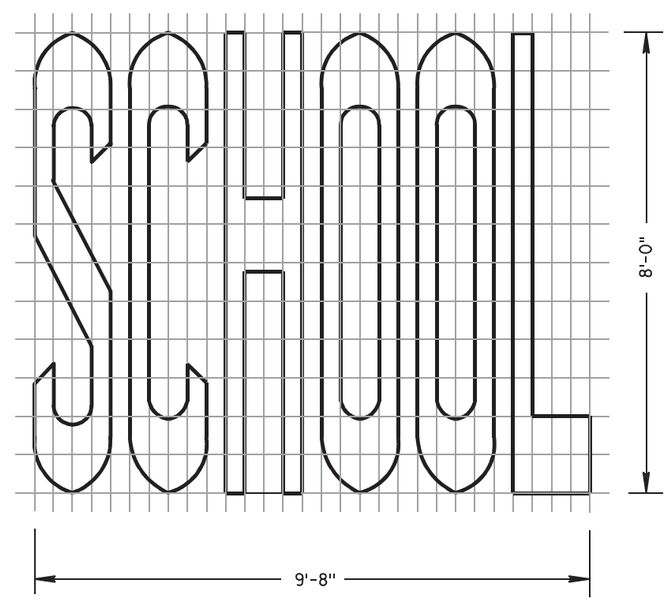

SINGLE-LANE

6

6

S.D.D. 15 C 7-12b

S.D.D. 15 C 7-12b

PAVEMENT MARKING WORDS

STATE OF WISCONSIN
DEPARTMENT OF TRANSPORTATION

APPROVED

7-1-11 — DATE

/S/ Thomas N. Notbohm — STATE TRAFFIC ENGINEER OF DESIGN

FHWA

GENERAL NOTES

DETAILS OF INSTALLATION, MATERIALS AND WORKMANSHIP NOT SHOWN ON THIS DRAWING SHALL CONFORM TO THE PERTINENT REQUIREMENTS OF THE STANDARD SPECIFICATIONS AND APPLICABLE SPECIAL PROVISIONS.

ALL LETTERS, ARROWS AND SYMBOLS SHALL BE IN CONFORMANCE WITH REQUIREMENTS INCLUDED IN "STANDARD ALPHABETS FOR HIGHWAY SIGNS AND PAVEMENT MARKING" BOOK BY THE FEDERAL HIGHWAY ADMINISTRATION. ALL LETTERS, ARROWS AND SYMBOLS SHALL BE WHITE AND REFLECTORIZED. SMALL DIFFERENCES IN DIMENSIONS WITHIN THE TOLERANCES OF THAT BOOK ARE ACCEPTABLE.

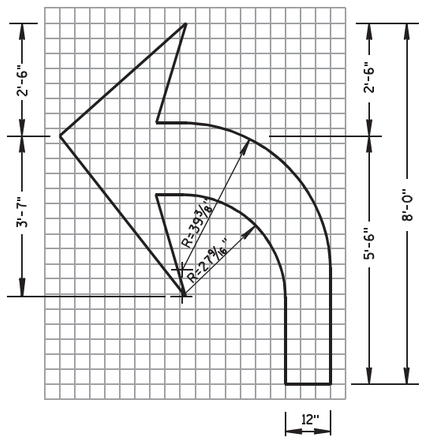

TYPE 2

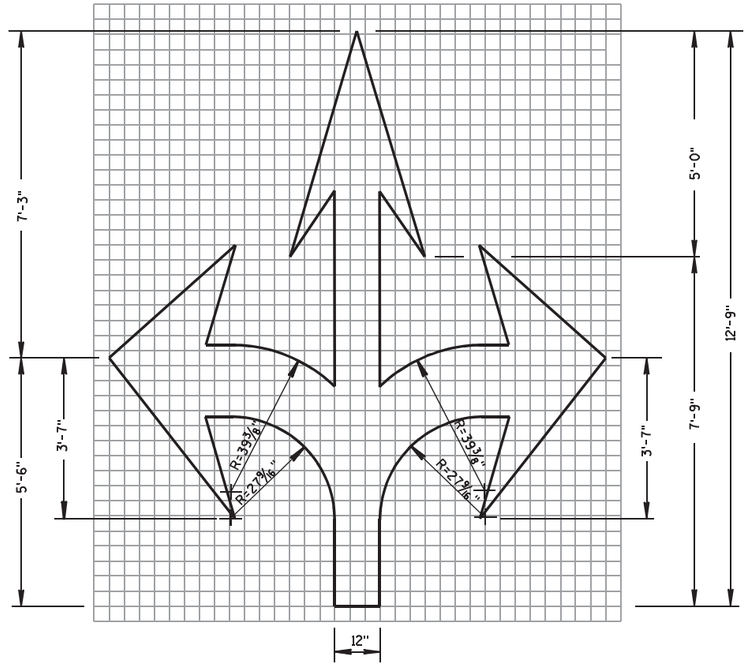

TYPE 6

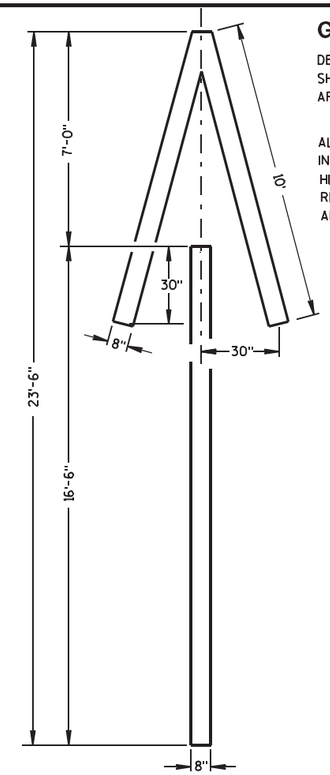

TYPE 4

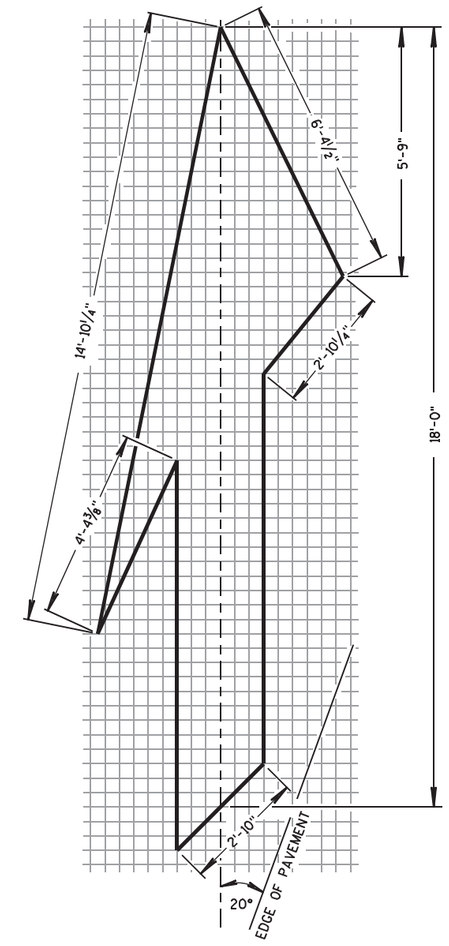

TYPE 5 LANE DROP ARROW

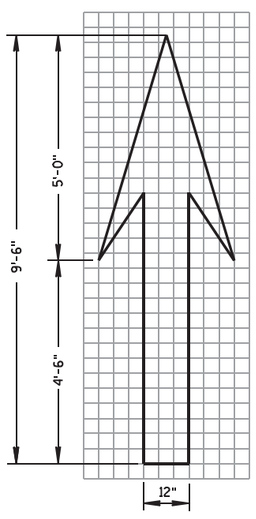

TYPE 1

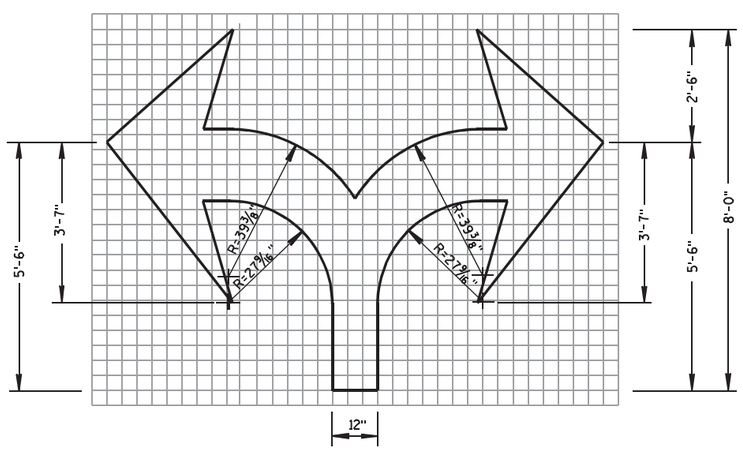

TYPE 7

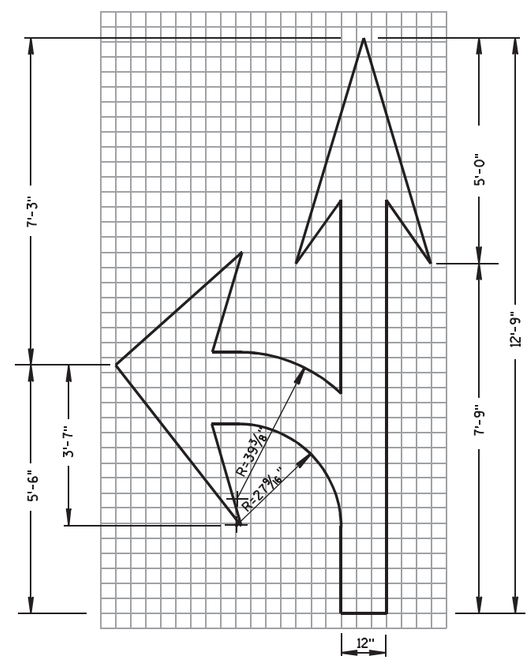

TYPE 3

6

6

S.D.D. 15 C 7-12c

S.D.D. 15 C 7-12c

PAVEMENT MARKING ARROWS

STATE OF WISCONSIN
DEPARTMENT OF TRANSPORTATION

APPROVED

7/1/11 — DATE

/S/ Thomas N. Notbohm — STATE TRAFFIC ENGINEER OF DESIGN

FHWA

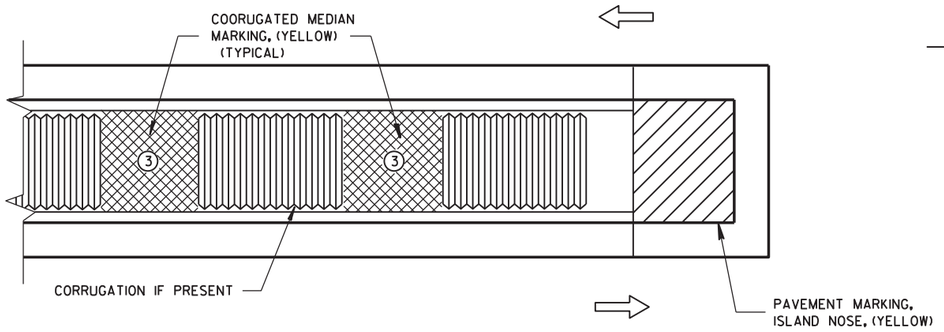

MEDIAN ISLAND WITH SQUARE BLUNT NOSE

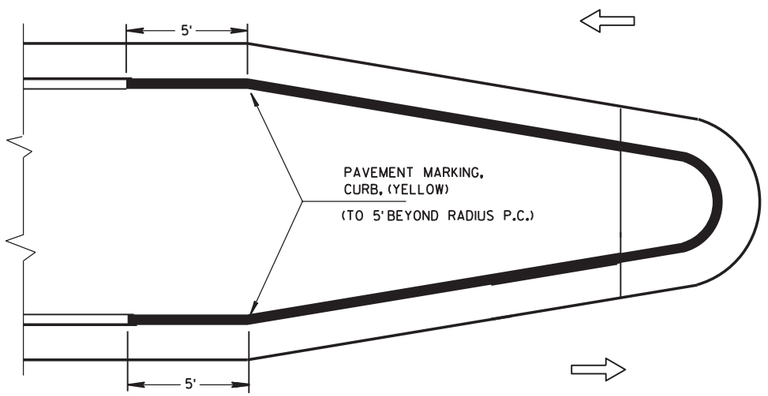

MEDIAN ISLAND WITH ROUND BLUNT NOSE

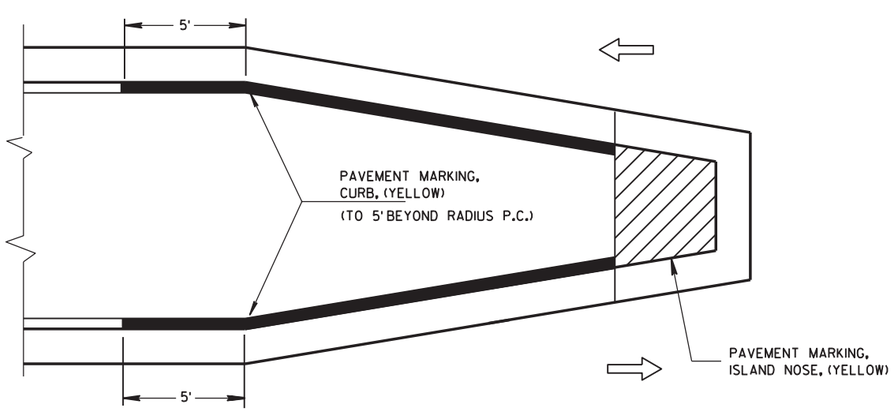

MEDIAN ISLAND WITH SLOPED NOSE

TYPICAL PLACEMENT OF
PAVEMENT MARKING ON MEDIAN ISLANDS

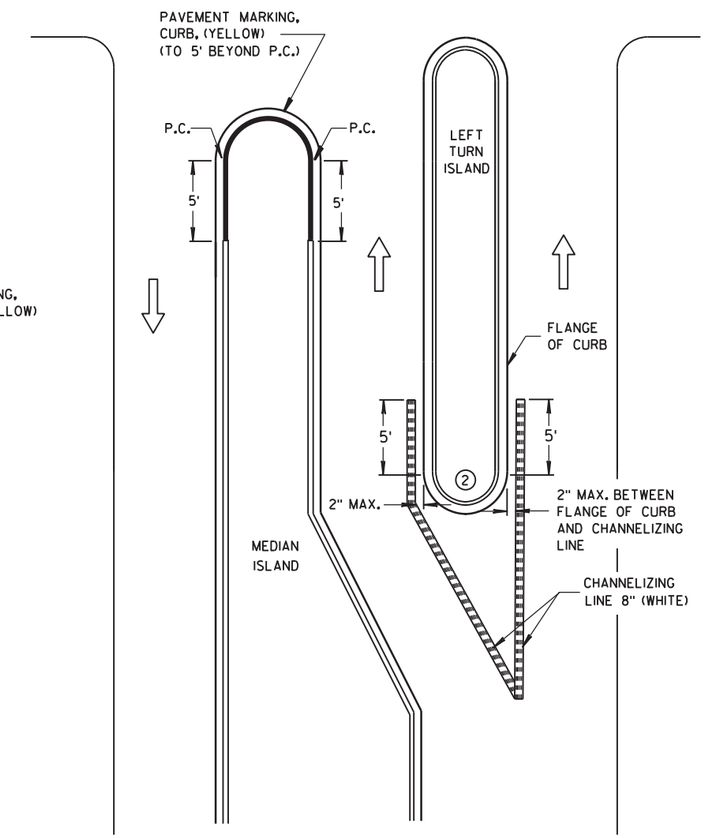

LEFT TURN & MEDIAN ISLAND

GENERAL NOTES

1. STOP LINE IS REQUIRED ONLY WHEN SPECIFIED IN THE CONTRACT.
2. DO NOT MARK CURB NOSES THAT SEPARATE LANES OF TRAFFIC TRAVELING IN THE SAME DIRECTION.
3. WHEN CONCRETE CORRUGATED MEDIAN IS CONSTRUCTED TO SEPARATE TRAFFIC OPERATING IN THE OPPOSING DIRECTION YELLOW PAVEMENT MARKING SHALL BE APPLIED TO THE FLAT PORTION OF THE CONCRETE CORRUGATED MEDIAN. THE ITEM OF PAVEMENT MARKING, CONCRETE CORRUGATED MEDIAN, WILL BE MEASURED IN PLACE AND AND ACCEPTED IN ACCORDANCE WITH THE CONTRACT AND PAID FOR AT THE CONTRACT UNIT PRICE PER SQUARE FOOT.

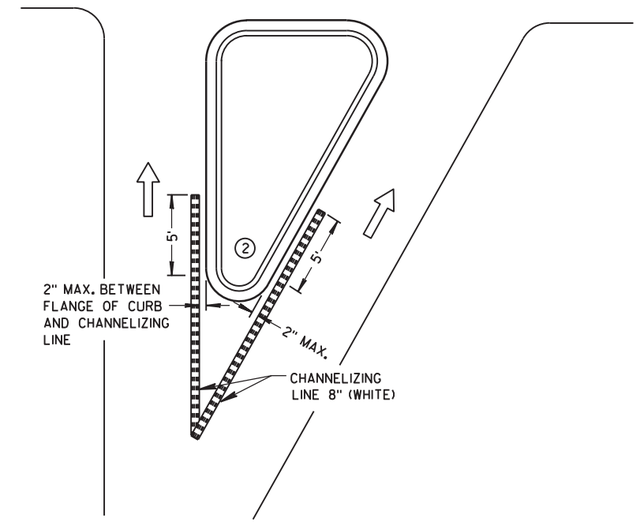

RIGHT TURN ISLAND

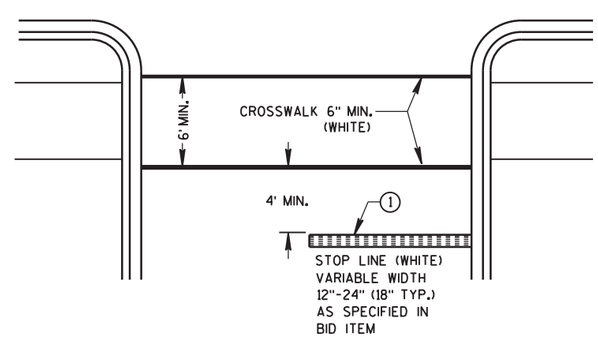

STOP LINE AND CROSSWALK

LEGEND

- ISLAND NOSE MARKING
- CURB MARKING
- CORRUGATED MEDIAN MARKING
- DIRECTION OF TRAVEL

PAVEMENT MARKING
(ISLANDS, STOP LINE &
CROSS WALK)

STATE OF WISCONSIN
DEPARTMENT OF TRANSPORTATION

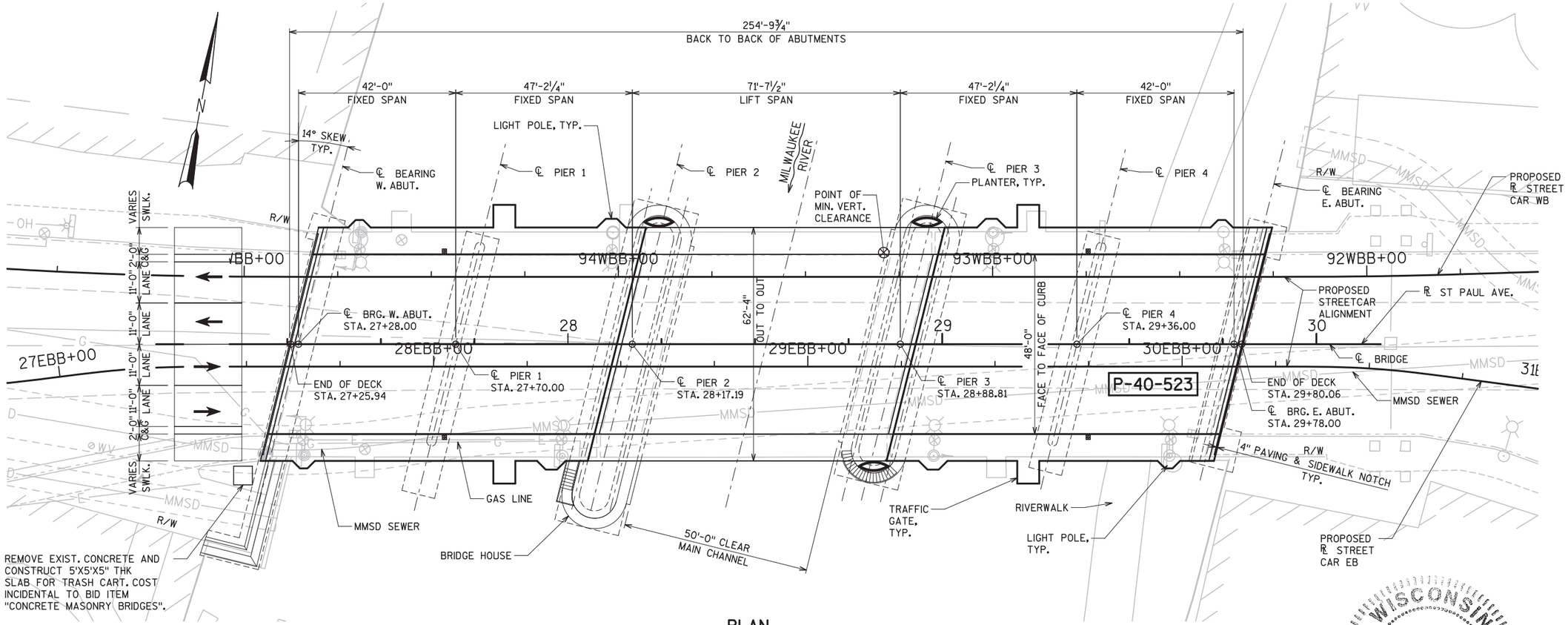

PLAN

5 SPAN STEEL GIRDER LIFT BRIDGE

BENCH MARKS

NO.	COORDINATES	DESCRIPTION	ELEVATION
BM 4	N = 384160 E = 2558134	CONC. PAD CHISELED BOX ON SE CORNER IN THE NE QUADRANT OF 2ND ST. AND ST. PAUL AVE.	9.58
BM 5	N = 384230 E = 2559344	HYD. CHISELED "X" ON FLANGE BOLT LOCATED IN THE SE QUADRANT OF WATER ST. AND ST. PAUL AVE.	11.83
BM 5	N = 384319 E = 2559664	TRAFFIC SIGNAL BASE NEAR E/W CROSSWALK. CHISELED X ON TOP OF NW BOLT. NE QUADRANT OF BROADWAY ST. AND ST. PAUL AVE.	10.97

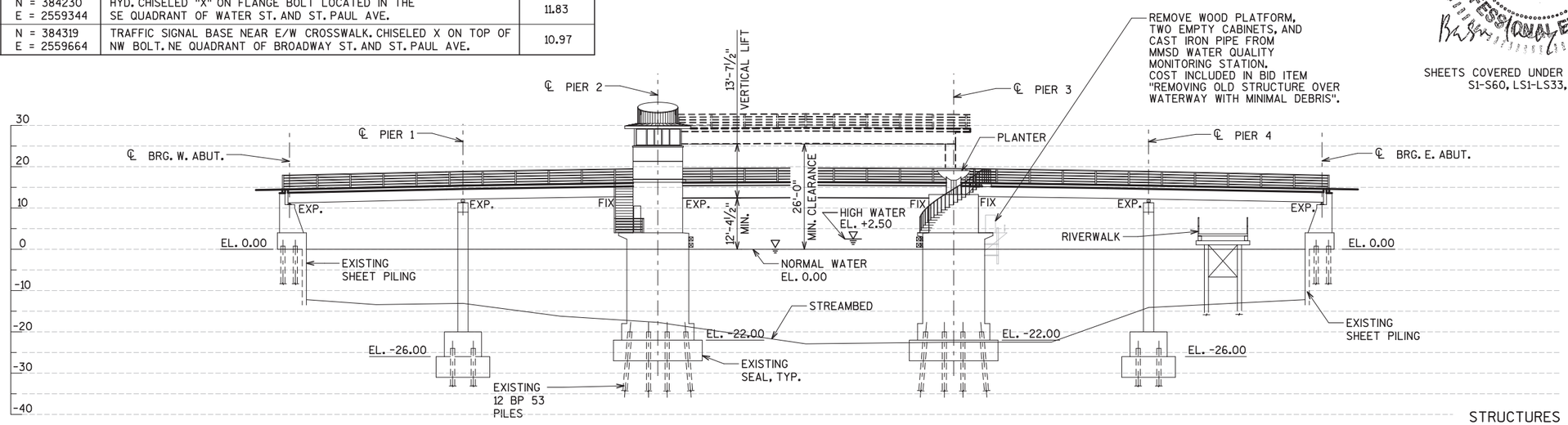

ELEVATION

LOOKING NORTH

WISCONSIN PROFESSIONAL ENGINEER BABU D. THENGANAKUNNEL E-35905 MILWAUKEE, WI

2-18-2013

SHEETS COVERED UNDER THIS SEAL INCLUDE S1-S60, LS1-LS33, AND M1-M13

STRUCTURES DESIGN CONTACTS

CITY OF MILWAUKEE:
CRAIG LIBERTO (414) 286-3294

CONSULTANT:
BABU THENGANAKUNNEL (414) 771-3390

City of Milwaukee
Department of Public Works
Infrastructure Services Division

BLOOM COMPANIES, LLC
Infrastructure Innovation and Ingenuity
10501 W. Research Drive • Milwaukee, WI 53226
Phone: (414) 771-3390 Fax: (414) 771-4490

ST PAUL AVE. LIFT BRIDGE OVER THE MILWAUKEE RIVER STRUCTURE P-40-523 GENERAL PLAN AND ELEVATION

REVISIONS

DESIGNED BY BDT	
DRAWN BY TAL	
CHECKED BY JRS	
DATE FEB 2013	SCALE NTS
JOB NUMBER BR100-10-0106	
SHEET NUMBER S1 OF S60	
OF 198	

GENERAL NOTES

DRAWINGS SHALL NOT BE SCALED.

ALL COORDINATES SHOWN ON THIS PLAN ARE BASED ON THE WISCONSIN STATE PLANE COORDINATE GRID SYSTEM (WSPCS) (X,Y) SOUTH ZONE, NAD 83(91) DATUM. TO CONVERT GROUND COORDINATES (N,E), TO GRID COORDINATES (X,Y), MULTIPLY BY 0.99992362.

SURVEY CONTROL POINTS SHOWN ON THESE PLANS USE THE SAME COORDINATES BEING USED FOR THE STREETCAR PROJECT. DETERMINE THE ST. PAUL AVENUE ALIGNMENT USING THE SURVEY CONTROL POINTS AND VERIFY THE LOCATION OF STREETCAR RAILS AND EXISTING GIRDERS WITH RESPECT TO THE ST. PAUL AVENUE ALIGNMENT THUS DETERMINED. REPORT ANY DISCREPANCIES TO THE ENGINEER FOR RESOLUTION.THE PLAN DETAILS ARE PREPARED BASED ON TH LOCATION OF STREETCAR RAILS SHOWN ON SHEETS S4 AND S5.

ELEVATIONS SHOWN ON THIS PLAN ARE REFERENCED TO THE CITY OF MILWAUKEE DATUM. TO CONVERT ELEVATIONS SHOWN ON THIS PLAN TO NATIONAL GEODETIC VERTICAL DATUM OF 1929, ADD 580.603 TO ELEVATION SHOWN ON THIS PLAN.

ALL STATIONS AND ALL ELEVATIONS ARE IN FEET.

PORTIONS OF EXISTING STRUCTURE P-40-523 ARE TO REMAIN AND BE INCORPORATED INTO NEW WORK. DIMENSIONS SHOWN FOR EXISTING PORTIONS ARE BASED ON THE ORIGINAL STRUCTURE PLANS AND SHOP DRAWINGS, WHICH ARE AVAILABLE UPON REQUEST FROM THE CITY OF MILWAUKEE.

BAR STEEL REINFORCEMENT SHALL BE EMBEDDED 2" CLEAR UNLESS OTHERWISE SHOWN OR NOTED.

ALL REINFORCING BARS ARE ENGLISH DESIGNATION AND THE FIRST DIGIT OF A 3-DIGIT BAR MARK OR FIRST TWO DIGITS OF A 4-DIGIT BAR MARK SIGNIFY THE BAR SIZE.

BENDING DIMENSIONS FOR REINFORCING BARS ARE OUT TO OUT.

ALL REINFORCING BARS IN THE FIXED SPAN DECK SLAB, LIFT SPAN EXODERMIC DECK, AND THE PAVING BLOCK SHALL BE EPOXY COATED.

BEVEL ALL EXPOSED EDGES OF CONCRETE ¾" UNLESS NOTED OTHERWISE.

JOINT FILLER SHALL CONFORM TO THE REQUIREMENTS OF AASHTO M153 TYPE 1, 2, OR 3, OR AASHTO M213. JOINT FILLER COST IS INCIDENTAL TO BID ITEM "CONCRETE MASONRY BRIDGES".

SEAL ALL EXPOSED HORIZONTAL AND VERTICAL EDGES OF ½" JOINT FILLER WITH NON-STAINING GRAY NON-BITUMINOUS JOINT SEALER (1" DEEP & HOLD ⅛" BELOW SURFACE OF CONCRETE.). COST IS INCIDENTAL TO BID ITEM "CONCRETE MASONRY BRIDGES".

ALL BOLTED CONNECTIONS SHALL BE FRICTION TYPE MADE WITH ¾" DIAMETER HOT DIPPED GALVANIZED HIGH-TENSILE STRENGTH BOLTS (ASTM A325) UNLESS SHOWN OR NOTED OTHERWISE.

ALL NEW STRUCTURAL STEEL, EXCEPT STIFFENERS WELDED TO EXISTING FIXED SPAN GIRDERS, SHALL BE HOT DIP GALVANIZED AND SHOP PAINTED WITH A TWO COAT SYSTEM FOLLOWING ASTM D6386.

APPLY PROTECTIVE SURFACE TREATMENT TO TOP OF CONCRETE DECK SURFACES, TOPS OF CONCRETE SIDEWALKS, VERTICAL FACES OF CONCRETE CURBS AND EDGE OF SIDEWALK, AND UNDERSIDE OF CONCRETE SIDEWALK FOR A DISTANCE OF ONE FOOT FROM THE EDGE OF THE SIDEWALK.

THE UTILITY INFORMATION SHOWN ON THESE DRAWINGS CONCERNING TYPE AND LOCATION OF UNDERGROUND UTILITIES IS NOT GUARANTEED TO BE ACCURATE OR ALL INCLUSIVE. THE CONTRACTOR IS RESPONSIBLE FOR MAKING HIS OWN DETERMINATIONS AS TO THE TYPE AND LOCATION OF UNDERGROUND UTILITIES AS MAY BE NECESSARY TO AVOID DAMAGE.

CLEAN, STRAIGHTEN AND EPOXY COAT EXISTING BAR STEEL REINFORCEMENT THAT IS TO BE INCORPORATED INTO THE NEW WORK. COST INCIDENTAL TO BID ITEM "BAR STEEL REINFORCEMENT BRIDGES COATED".

IF THERE IS A CONFLICT BETWEEN THE STANDARD SPECIFICATIONS AND DRAWINGS OR SPECIAL PROVISIONS, DRAWINGS OR SPECIAL PROVISIONS SHALL GOVERN.

FOR BENT PLATES, CONFORM TO ASTM A143 TO PREVENT EMBRITTLEMENT CAUSED BY THE GALVANIZING PROCESS.

ALL EXISTING STRUCTURAL STEEL, RAILINGS, AND BEARINGS THAT ARE TO REMAIN SHALL BE SANDBLASTED, PRIMED AND PAINTED UNLESS NOTED OTHERWISE.

PAINTING SHALL BE IN ACCORDANCE WITH SPECIAL PROVISIONS. FINISH COAT COLOR FOR STRUCTURAL STEEL SHALL BE SELECTED BY THE CITY OF MILWAUKEE.

GALVANIZED PARTS THAT ARE TO BE SHOP ASSEMBLED WITH BOLTS SHALL BE GALVANIZED BEFORE SHOP ASSEMBLY.

FIELD WELDING WILL NOT BE PERMITTED UNLESS SHOWN ON THE PLANS OR AUTHORIZED IN WRITING BY THE ENGINEER.

COMPLY WITH ALL OSHA REQUIREMENTS WHERE WELDING TO GALVANIZED STEEL IS AUTHORIZED.

NATURAL CAMBER OF THE ROLLED SECTIONS SHALL BE UP.

ALL INTERIOR AND RE-ENTRANT CUTS ON STRUCTURAL STEEL SHALL HAVE A MINIMUM RADIUS OF 1 INCH UNLESS NOTED OTHERWISE ON THE PLANS, AND SHALL BE NOTED ON THE SHOP DRAWINGS WHERE THEY OCCUR.

ALL FLAME CUT EDGES OF PLATES THAT WILL BE PAINTED SHALL BE GROUND OR PLANED TO REMOVE THE HARDENED SURFACE CAUSED BY THE FLAME. REMOVAL OF THIS SURFACE IS NECESSARY TO OBTAIN A PROPER BLASTED SURFACE FOR THE ADHESION OF THE PAINT.

NEW RAILINGS SHALL BE GALVANIZED AND SHOP PAINTED WITH A TWO COAT SYSTEM.

NEW STRUCTURAL STEEL AND GALVANIZING SHALL BE PAID FOR UNDER THE BID ITEM " BRIDGE STRUCTURAL STEEL", PAINTING SHALL BE PAID FOR UNDER BID ITEM "PAINTING EPOXY SYSTEM P-40-523.

REMOVAL OF THE EXISTING LIFT SPAN BEARINGS IS INCLUDED IN THE BID ITEM "REMOVING OLD STRUCTURE OVER WATERWAY WITH MINIMAL DEBRIS STA 28+53."

THE QUANTITY FOR BID ITEM "CONDUIT NONMETALLIC SCHEDULE 40 2½-INCH" IS APPLICABLE ONLY FOR THE STREET LIGHTING CONDUITS.

DESIGN SPECIFICATIONS

AASHTO STANDARD SPECIFICATIONS FOR HIGHWAY BRIDGES, 17TH EDITION, FOR STRUCTURAL DESIGN.

AASHTO LRFD MOVABLE HIGHWAY BRIDGE DESIGN SPECIFICATIONS, SECOND EDITION 2007, AND INTERIMS THRU 2012, FOR MECHANICAL, HYDRAULIC, AND ELECTRICAL DESIGN.

CONSTRUCTION SPECIFICATIONS

WISCONSIN DEPARTMENT OF TRANSPORTATION STANDARD SPECIFICATIONS FOR HIGHWAY AND STRUCTURE CONSTRUCTION, 2013 EDITION, EXCEPT AS NOTED.

A.W.S. BRIDGE WELDING CODE D1.5, LATEST EDITION.

A.W.S. STRUCTURAL WELDING CODE- STEEL D1.1, LATEST EDITION.

DESIGN DATA

LIVE LOAD:

DESIGN LOADING: HS-20
INVENTORY RATING: HS 24
OPERATING RATING: HS 40
WISCONSIN STANDARD PERMIT VEHICLE (WIS-SPV) = 250 KIPS
INVENTORY RATING FACTOR (STREETCAR): 1.05

THE STRUCTURE IS NOT DESIGNED FOR ANY FUTURE WEARING COURSE LOAD.

THE STRUCTURE IS DESIGNED FOR FUTURE STREETCAR AXLE LOADING AND AXLE SPACING SHOWN BELOW.:

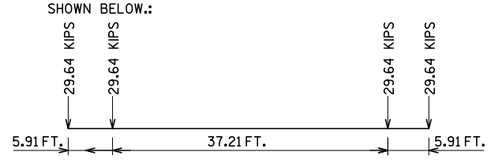

ULTIMATE DESIGN STRESSES:

CONCRETE MASONRY
SLAB (NORMAL WT. CONCRETE) ——— f'c = 4,000 psi
SLAB (LIGHT WT. CONCRETE) ——— f'c = 4,000 psi
ALL OTHER ——— f'c =4,000 psi

BAR STEEL REINFORCEMENT
HIGH STRENGTH, GRADE 60 ——— fy = 60,000 psi

NEW W SECTIONS, WT SECTIONS, CHANNEL SECTIONS, ANGLE SECTIONS, BARS, AND PLATES -ASTM A709, GR 50 ——— Fy = 50,000 psi

NEW RECTANGULAR AND SQUARE HOLLOW STRUCTURAL SECTIONS, ASTM A500, GR B ——— Fy = 46,000 psi

NEW ROUND HSS SECTIONS, ASTM A500, GR B ——— Fy = 42,000 psi

NEW PIPE SECTIONS, ASTM A53 GR B ——— Fy = 35,000 psi

EXISTING STRUCTURAL STEEL
ASTM A709, GR 36 ——— Fy = 35,000 psi

TRAFFIC DATA

ST. PAUL AVENUE

ADT (2009).....5,800
ADT (2032).....7,000
RDS.....35 MPH

HYDRAULIC DATA

Q100.....14,800 CFS
V100.....3.0 FPS
HW100.....581.0 (NGVD 1929)
WATERWAY AREA.....4874SF
Q10.....8,790 CFS
V10.....1.90 FPS
H10.....579.86 (NGVD 1929)
DRAINAGE AREA.....703 SQ.MI.
SCOUR CRITICAL CODE = 5
ROADWAY OVERTOPPING = N/A

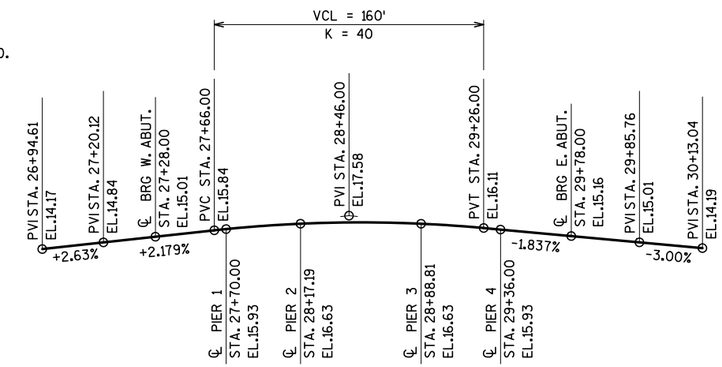

PROFILE GRADE LINE ST. PAUL AVE.

City of Milwaukee
Department of Public Works
Infrastructure Services Division

BLOOM COMPANIES, LLC
Infrastructure Innovation and Ingenuity
10501 W. Research Drive • Milwaukee, WI 53226
Phone: (414) 771-3380 Fax: (414) 771-4490

ST PAUL AVE. LIFT BRIDGE OVER THE MILWAUKEE RIVER
GENERAL NOTES AND DESIGN DATA

REVISIONS

DESIGNED BY BDT	
DRAWN BY TAL	
CHECKED BY JRS	
DATE FEB 2013	SCALE NTS
JOB NUMBER BR100-10-0106	
SHEET NUMBER S2 OF S60	
OF 198	

TOTAL ESTIMATED QUANTITIES

ITEM NUMBER	BID ITEMS	UNIT	SUBSTRUCTURE						SUPERSTRUCTURE				TOTAL
			WEST ABUTMENT	PIER 1	PIER 2	PIER 3	PIER 4	EAST ABUTMENT	WEST FIXED SPANS	EAST FIXED SPANS	LIFT SPAN	BRIDGE HOUSE	
203.0600.S	REMOVING OLD STRUCTURE OVER WATERWAY WITH MINIMAL DEBRIS STATION 28+53	LS											1
502.0100	CONCRETE MASONRY BRIDGES	CY	5		15	15		7	165	165			372
502.3100	EXPANSION DEVICE P-40-523	LS											1
502.3200	PROTECTIVE SURFACE TREATMENT	SY							663	663	412		1738
502.5020	MASONRY ANCHORS TYPE L NO. 8 BARS	EACH			16	16							32
502.6102	MASONRY ANCHORS TYPE S 1/2-INCH	EACH	90		60	81		167					398
502.6105	MASONRY ANCHORS TYPE S 5/8-INCH	EACH	126		152	164		126					568
502.6110	MASONRY ANCHORS TYPE S 3/4-INCH	EACH			52	52							104
505.0605	BAR STEEL REINFORCEMENT HS COATED BRIDGES	LB	1200		3500	3600		1500	36200	36200			82200
506.3003	WELDED STUD SHEAR CONNECTORS 5/8X4-INCH	EACH									312		312
506.3005	WELDED STUD SHEAR CONNECTORS 7/8X4-INCH	EACH									86		86
506.3010	WELDED STUD SHEAR CONNECTORS 7/8X5-INCH	EACH									1644		1644
506.3015	WELDED STUD SHEAR CONNECTORS 7/8X6-INCH	EACH							2441	2441			4882
506.3020	WELDED STUD SHEAR CONNECTORS 7/8X7-INCH	EACH							85	85			170
506.5000	BEARING ASSEMBLIES FIXED P-40-523	EACH				4							4
506.6000	BEARING ASSEMBLIES EXPANSION P-40-523	EACH			4								4
506.7000.S	BEARING REPLACEMENT P-40-523	EACH	8					8					16
509.1500	CONCRETE SURFACE REPAIR	SF	24		440	310							774
514.0445	FLOOR DRAINS TYPE GC	EACH							2	2			4
517.0600	PAINTING EPOXY SYSTEM P-40-523	LS											1
517.0900.S	PREPARATION AND COATING OF TOP FLANGES	LS											1
517.1010.S	CONCRETE STAINING P-40-523	SF	660		2100	1400	1350	680					7540
517.1800.S	STRUCTURE REPAINTING RECYCLED ABRASIVE P-40-523	LS		1350									1
517.4500.S	NEGATIVE PRESSURE CONTAINMENT AND COLLECTION OF WASTE MATERIALS P-40-523	LS											1
517.6001.S	PORTABLE DECONTAMINATION FACILITY	LS											1
650.6500	CONSTRUCTION STAKING STRUCTURE LAYOUT P-40-523	LS											1
652.0230	CONDUIT RIGID NONMETALLIC SCHEDULE 40 2 1/2- INCH	LF							190	190			380
657.6005.S	ANCHOR ASSEMBLIES LIGHT POLES ON STRUCTURES	EACH							8	8			16
715.0502	INCENTIVE STRENGTH CONCRETE STRUCTURES	DOL	30		90	90		42	990	990			2232
SPV.0035.174	LIGHTWEIGHT CONCRETE MASONRY	CY									8		8
SPV.0060.159	WEEP DRAIN CLEANING	EACH	12					10					22
SPV.0060.162	BEARING MAINTENANCE P-40-523	EACH			8	8							16
SPV.0060.170	JUNCTION BOXES 12X12X6 -INCH	EACH							4	4			8
SPV.0085.151	BRIDGE STRUCTURAL STEEL	LB			1200	1200			64500	64500	294700		427800
SPV.0085.171	BRIDGE HOUSE STRUCTURAL STEEL	LB										1000	1000
SPV.0090.150	MARINE DOCK FENDER	LF			142	120							262
SPV.0090.163	EPOXY CRACK SEALING	LF	98	37	675	480	32	106					1428
SPV.0105.152	COUNTERWEIGHT BALLAST	LS											1
SPV.0105.153	PEDESTRIAN RAILING	LS											1
SPV.0105.154	TUBULAR STEEL RAILING, TYPE F MODIFIED	LS											1
SPV.0105.155	PIER RAILING	LS											1
SPV.0105.158	REHABILITATING PIER CIRCULAR STAIR AND LADDERS	LS											1
SPV.0105.161	FIELD VERIFICATION SURVEY	LS											1
SPV.0105.164	LIFT SPAN ROADWAY JOINTS	LS											1
SPV.0105.165	LIFT SPAN SIDEWALK JOINTS	LS											1
SPV.0105.166	REFURBISHING EXISTING NAME PLATES	LS											1
SPV.0105.167	TEMPORARY LIFT SPAN SHORING	LS											1
SPV.0105.168	UNDERDECK GUTTER SYSTEM P-40-523	LS											1
SPV. 0105.169	STAINLESS STEEL PLATFORM FOR ELECTRICAL CABINETS	LS											1
SPV.0105.172	NAMEPLATE	LS											1
SPV.0105.173	REFURBISH AND REINSTALL BRIDGE HOUSE BELL	LS											1
SPV.0105.200	COUNTERWEIGHT MACHINERY	LS											1
SPV.0105.201	SPAN GUIDES	LS											1
SPV.0105.202	BUMPER BEAM	LS											1
SPV.0105.203	CENTERING DEVICE	LS											1
SPV.0105.250	BRIDGE HYDRAULIC SYSTEM	LS											1
SPV.0105.300	BRIDGE ELECTRICAL WORK	LS											1
SPV.0105.350	BRIDGE OPERATOR'S HOUSE	LS											1
SPV.0105.360	PRECAST CONCRETE PLANTERS	LS											1
SPV.0105.400	HEATING VENTILATING & AIR CONDITIONING (HVAC) SYSTEMS	LS											1
SPV.0105.410	PLUMBING SYSTEMS	LS											1
SPV.0105.420	BRIDGE HOUSE ELECTRICAL SYSTEMS	LS											1
SPV.0165.156	EXODERMIC DECK	SF									3437		3437
SPV.0165.157	FIBERGLASS SIDEWALK FLOOR PLATES	SF									1120		1120

City of Milwaukee

Department of Public Works

Infrastructure Services Division

BLOOM COMPANIES, LLC
Infrastructure Innovation and Ingenuity
10501 W. Research Drive • Milwaukee, WI 53226
Phone: (414) 771-3380 Fax: (414) 771-4490

ST PAUL AVE. LIFT BRIDGE
OVER THE MILWAUKEE RIVER
ESTIMATE OF QUANTITIES

REVISIONS

DESIGNED BY BDT
DRAWN BY TAL
CHECKED BY JRS
DATE FEB 2013 | SCALE NTS
JOB NUMBER BR100-10-0106
SHEET NUMBER S3 OF S60
OF 198

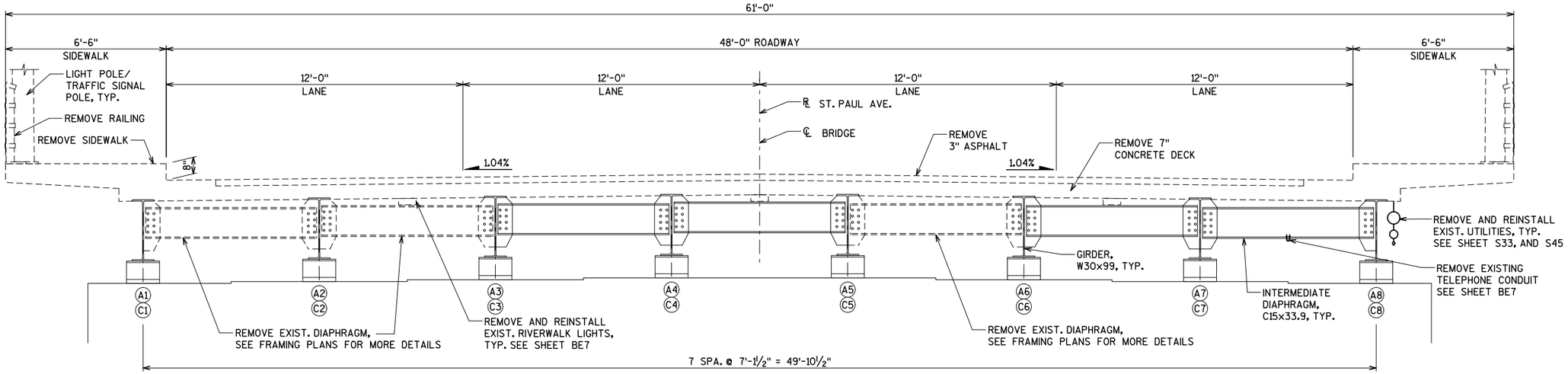

EXISTING SECTION THRU FIXED SPAN-REMOVALS

(LOOKING EAST)

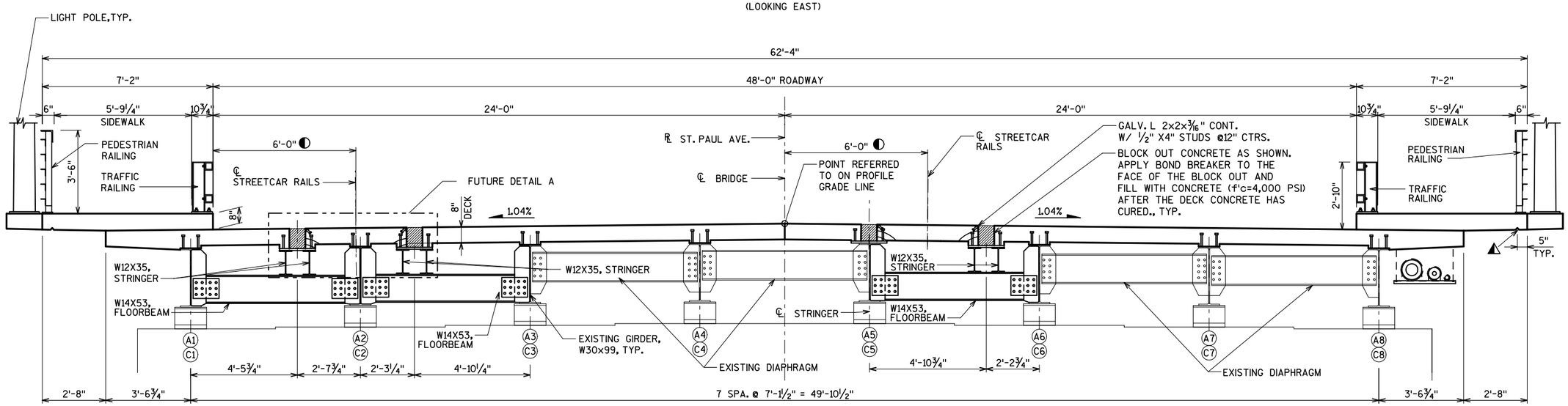

PROPOSED SECTION THRU FIXED SPAN

(LOOKING EAST)

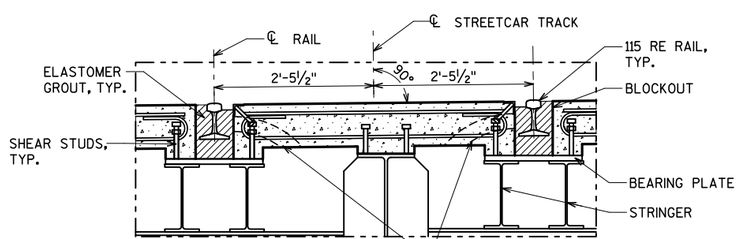

INSTALL 3 INCH DIA FLEXIBLE PVC CONDUIT AS SHOWN FOR FUTURE STREETCAR PROJECT.
SEE SHEET S33 AND S35 FOR LOCATION.

FUTURE DETAIL A

(FUTURE TYPICAL SECTION THRU STREETCAR TRACKS)

NOTE: ALL ITEMS SHOWN, EXCEPT FOR STREETCAR RAIL AND ELASTOMER GROUT, ARE PART OF THIS CONTRACT.

LEGEND

◭ ¾" CONTINUOUS V-GROOVE TO TERMINATE 2'-0" FROM FACE OF ABUTMENTS

◐ MEASURED AT THE POINT OF INTERSECTION OF ℄ STREETCAR RAIL TRACK AND TOP OF DECK.

City of Milwaukee

Department of Public Works

Infrastructure Services Division

BLOOM COMPANIES, LLC
Infrastructure Innovation and Ingenuity
10501 W. Research Drive • Milwaukee, WI 53226
Phone: (414) 771-3380 Fax: (414) 771-4490

ST PAUL AVE. LIFT BRIDGE
OVER THE MILWAUKEE RIVER
TYPICAL SECTION
FIXED SPAN

REVISIONS

DESIGNED BY BDT	
DRAWN BY TAL	
CHECKED BY JRS	
DATE FEB 2013	SCALE NTS
JOB NUMBER BR100-10-0106	
SHEET NUMBER S4 OF S60	
OF 198	

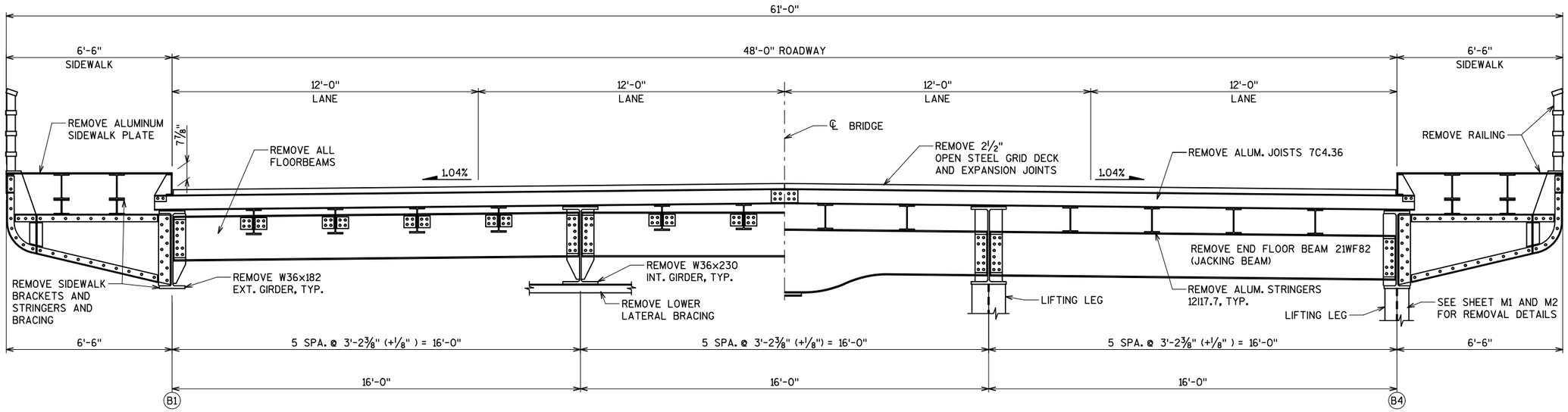

EXISTING SECTION THRU LIFT SPAN - REMOVALS

(LOOKING EAST)

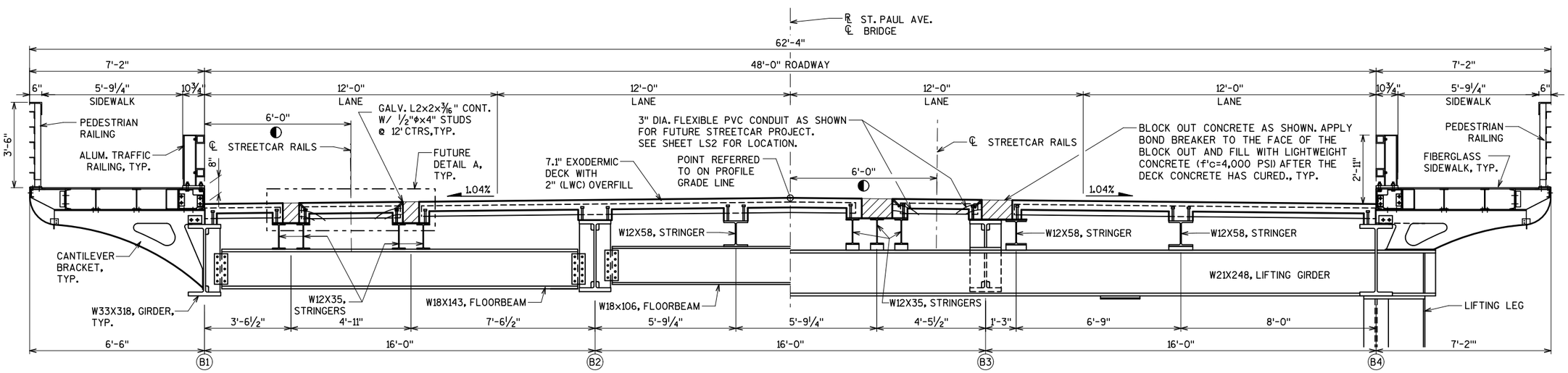

PROPOSED SECTION THRU LIFT SPAN

(LOOKING EAST)

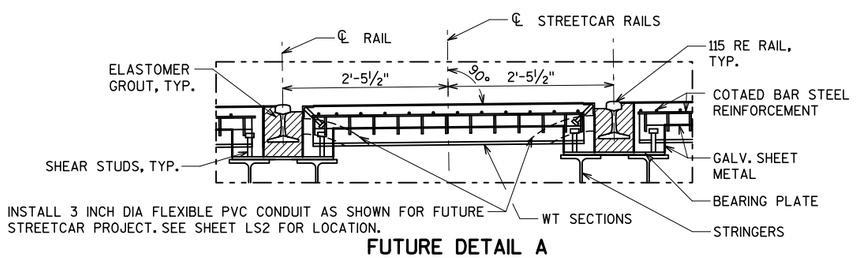

FUTURE DETAIL A

(FUTURE TYPICAL SECTION THRU STREETCAR TRACKS)

NOTE: ALL ITEMS SHOWN, EXCEPT STREETCAR RAILS AND ELASTOMER GROUT, ARE PART OF THIS CONTRACT

LEGEND

◐ MEASURED AT THE POINT OF INTERSECTION OF ℄ STREETCAR RAIL TRACK AND TOP OF DECK.

City of Milwaukee

Department of Public Works

Infrastructure Services Division

BLOOM COMPANIES, LLC
Infrastructure Innovation and Ingenuity
10501 W. Research Drive • Milwaukee, WI 53226
Phone: (414) 771-3380 Fax: (414) 771-4490

ST PAUL AVE. LIFT BRIDGE OVER THE MILWAUKEE RIVER
TYPICAL SECTION
LIFT SPAN

REVISIONS

DESIGNED BY BDT	
DRAWN BY TAL	
CHECKED BY JRS	
DATE FEB 2013	SCALE NTS
JOB NUMBER BR100-10-0106	
SHEET NUMBER S5 OF S60	
OF 198	

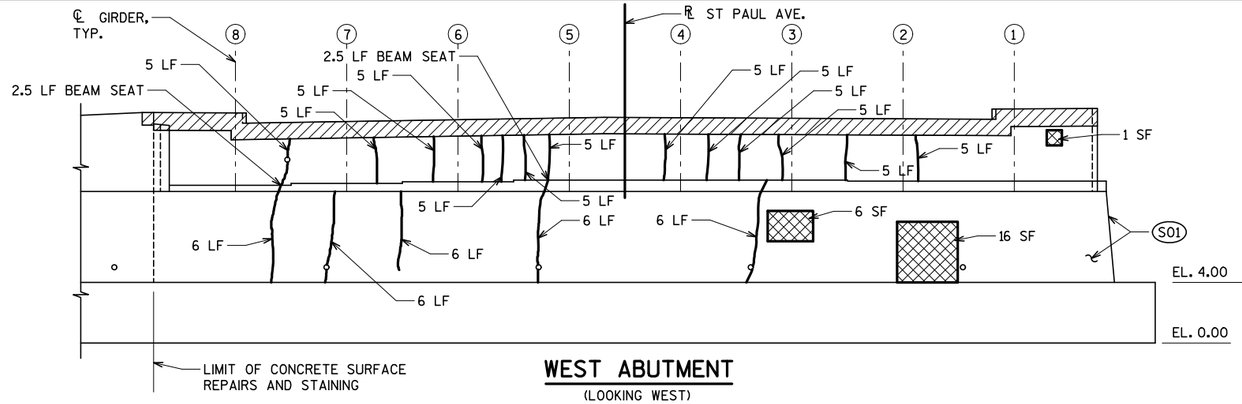

WEST ABUTMENT
(LOOKING WEST)

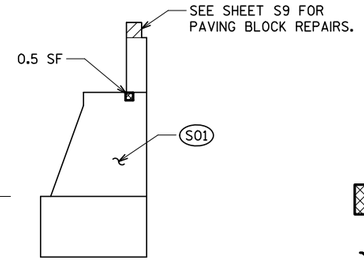

END VIEW
(LOOKING SOUTH)

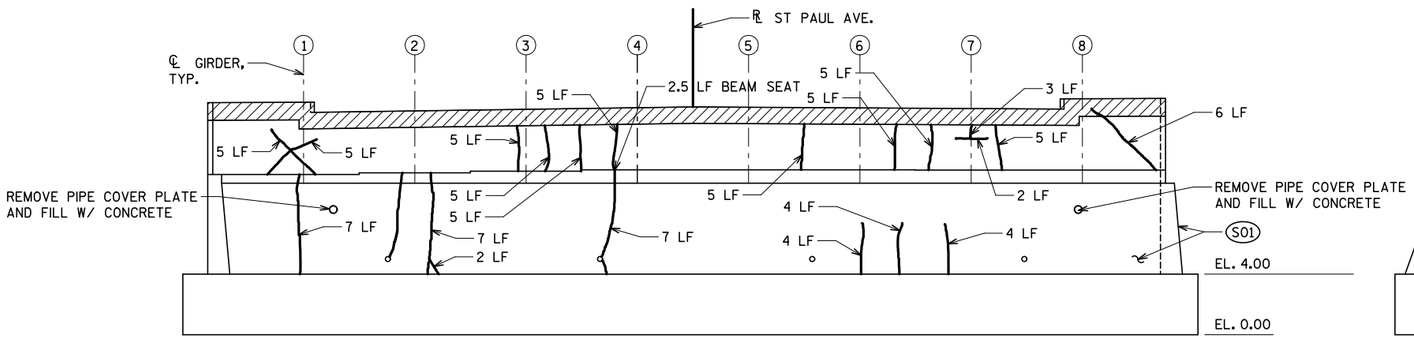

EAST ABUTEMENT
(LOOKING EAST)

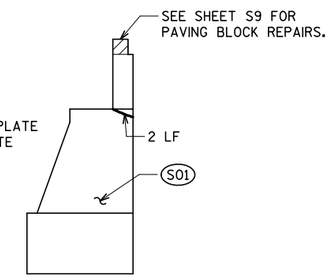

END VIEW
(LOOKING NORTH)

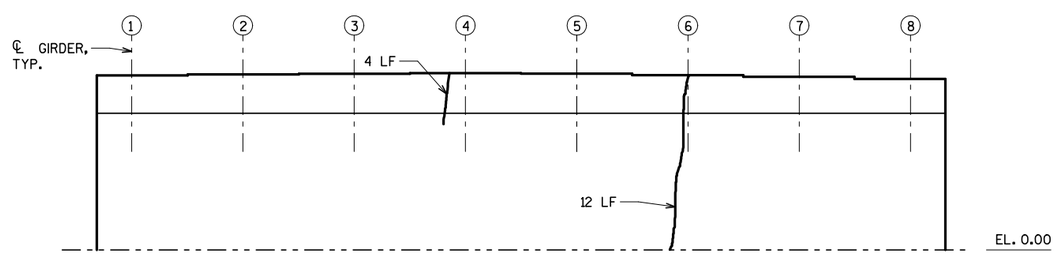

PIER 1
(LOOKING EAST)

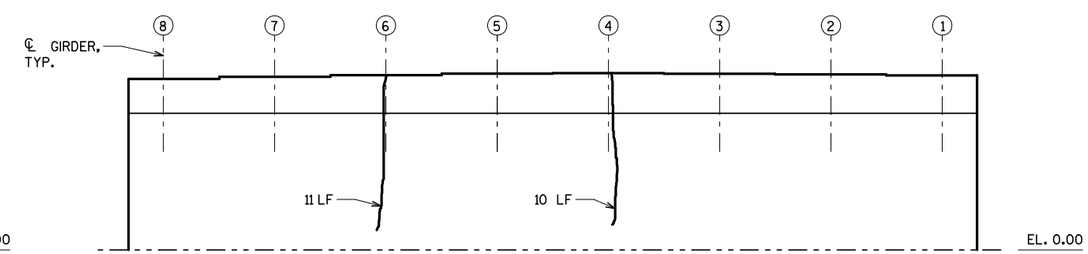

PIER 1
(LOOKING WEST)

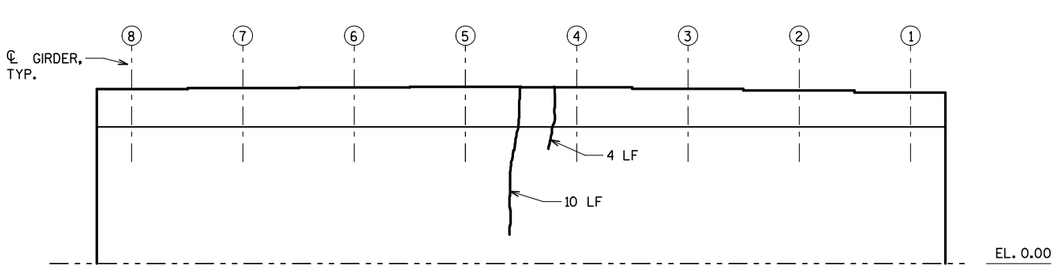

PIER 4
(LOOKING WEST)

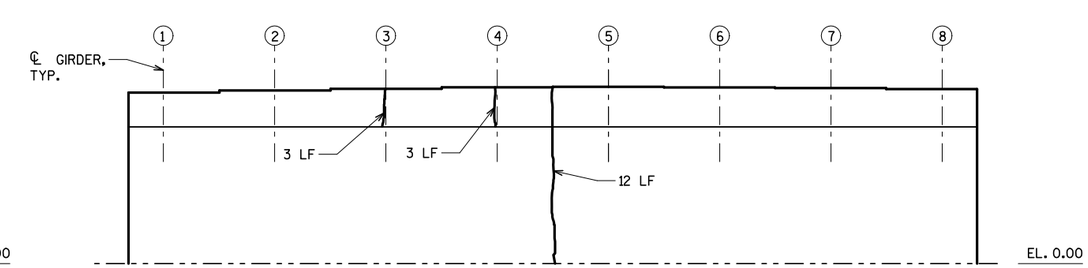

PIER 4
(LOOKING EAST)

NOTES

ALL QUANTITIES SHOWN ON THIS SHEET ARE FOR INFORMATION ONLY.

EXACT LIMITS OF THE CONCRETE SURFACE REPAIR SHALL BE DETERMINED BY THE CONSTRUCTION ENGINEER IN THE FIELD.

EXACT LIMITS OF EPOXY INJECTION SHALL BE DETERMINED BY THE CONSTRUCTION ENGINEER IN THE FIELD.

LIMITS OF CONCRETE SURFACE REPAIR. APPROXIMATE AREA LISTED FOR INFORMATION ONLY.

CRACK FOR EPOXY INJECTION. APPROXIMATE LENGTH LISTED FOR INFORMATION ONLY.

REMOVE CONCRETE AND REINFORCING TO THE LIMITS SHOWN. PERFORM CONCRETE SURFACE REPAIR ON THE SURFACES EXPOSED BY CONCRETE REMOVAL. *

* COST OF REMOVALS INCLUDED IN BID ITEM "REMOVING OLD STRUCTURE OVER WATERWAY WITH MINIMAL DEBRIS".

S01 - APPLY CONCRETE STAIN TO ALL EXPOSED VERTICAL SURFACES OF ABUTMENT BODY AND BACKWALL ELEVATION ABOVE ELEVATION 4.00 BACKFACE OF ABUTMENT NEED NOT BE STAINED.

City of Milwaukee
Department of Public Works
Infrastructure Services Division

BLOOM COMPANIES, LLC
Infrastructure Innovation and Ingenuity
10501 W. Research Drive • Milwaukee, WI 53226
Phone: (414) 771-3380 • Fax: (414) 771-4490

ST PAUL AVE. LIFT BRIDGE
OVER THE MILWAUKEE RIVER
ABUTMENT CONCRETE REPAIRS

REVISIONS

DESIGNED BY BDT	
DRAWN BY TAL	
CHECKED BY JRS	
DATE FEB 2013	SCALE NTS
JOB NUMBER BR100-10-0106	
SHEET NUMBER S6 OF S60	
OF 198	

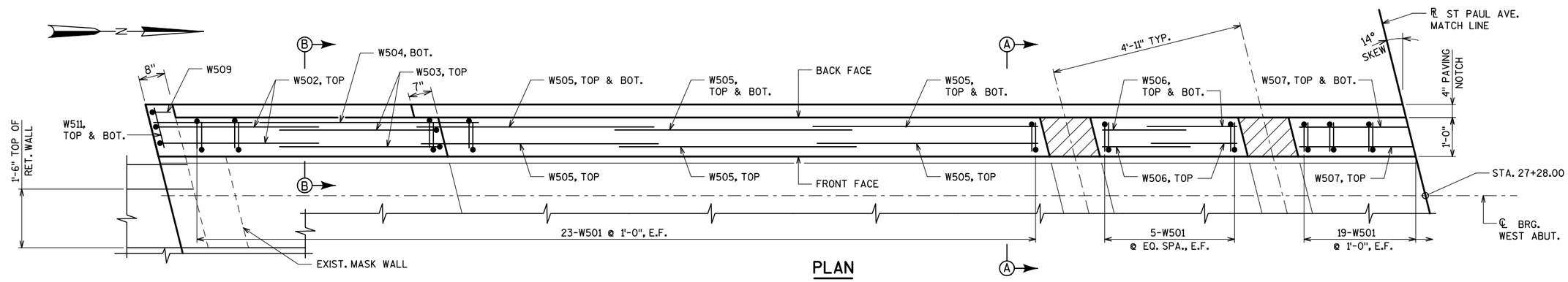

PLAN

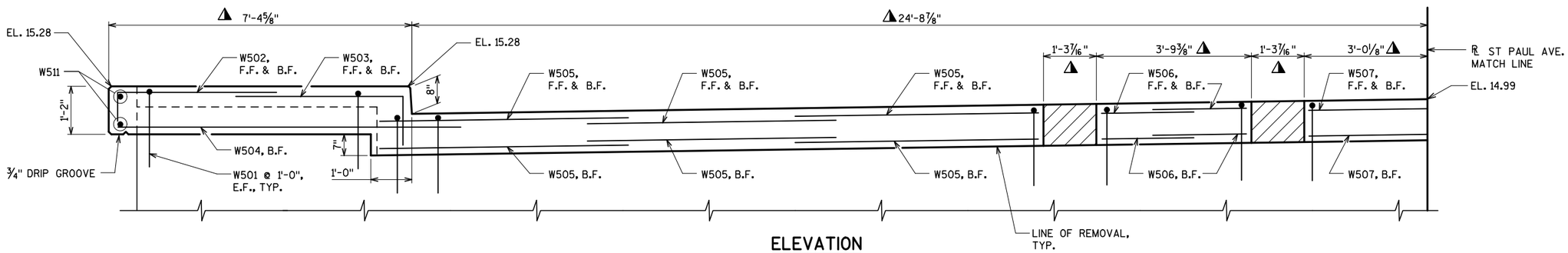

ELEVATION

(LOOKING WEST)

▲ MEASURED ALONG FRONT FACE OF ABUTMENT BACKWALL

▨ BLOCKOUT FOR FUTURE STREETCAR RAIL. APPLY BOND BREAKER TO THE FACE OF THE BLOCKOUT AND FILL WITH CONCRETE AFTER THE ABUTMENT CONCRETE IS CURED.

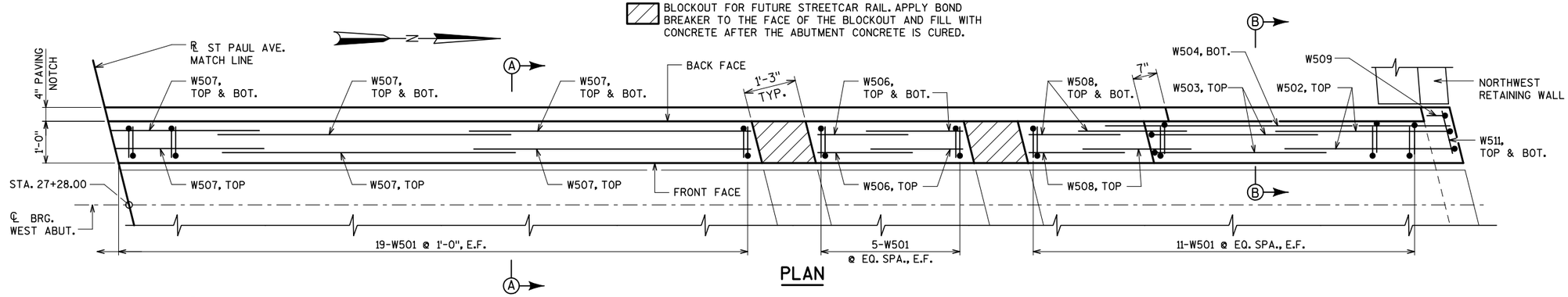

PLAN

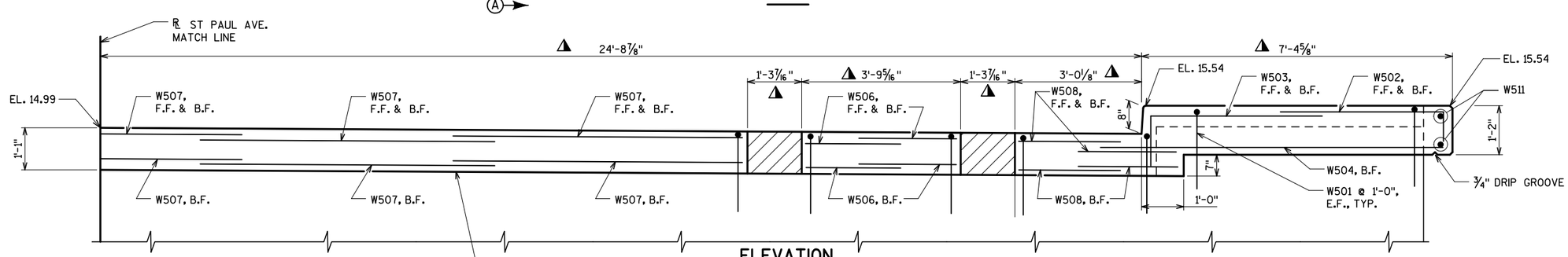

ELEVATION

(LOOKING WEST)

▲ MEASURED ALONG FRONT FACE OF ABUTMENT BACKWALL

▨ BLOCKOUT FOR FUTURE STREETCAR RAIL. APPLY BOND BREAKER TO THE FACE OF THE BLOCKOUT AND FILL WITH CONCRETE AFTER THE ABUTMENT CONCRETE IS CURED.

NOTES

POUR ABUTMENT CONCRETE AFTER THE SUPERSTRUCTURE IS IN PLACE.

SEE SHEET S8 FOR SECTION A-A, AND B-B.

ANY EXCAVATION AND BACKFILL REQUIRED FOR RECONSTRUCTING THE ABUTMENT AND RETAINING WALLS IS INCIDENTAL TO THE BID ITEM "CONCRETE MASONRY BRIDGES".

City of Milwaukee

Department of Public Works

Infrastructure Services Division

BLOOM COMPANIES, LLC
Infrastructure Innovation and Ingenuity
10501 W. Research Drive • Milwaukee, WI 53226
Phone: (414) 771-3380 Fax: (414) 771-4490

ST PAUL AVE. LIFT BRIDGE OVER THE MILWAUKEE RIVER WEST ABUTMENT RECONSTRUCTION

REVISIONS

DESIGNED BY BDT	
DRAWN BY TAL	
CHECKED BY JRS	
DATE FEB 2013	SCALE NTS
JOB NUMBER BR100-10-0106	
SHEET NUMBER S7 OF S60	
OF 198	

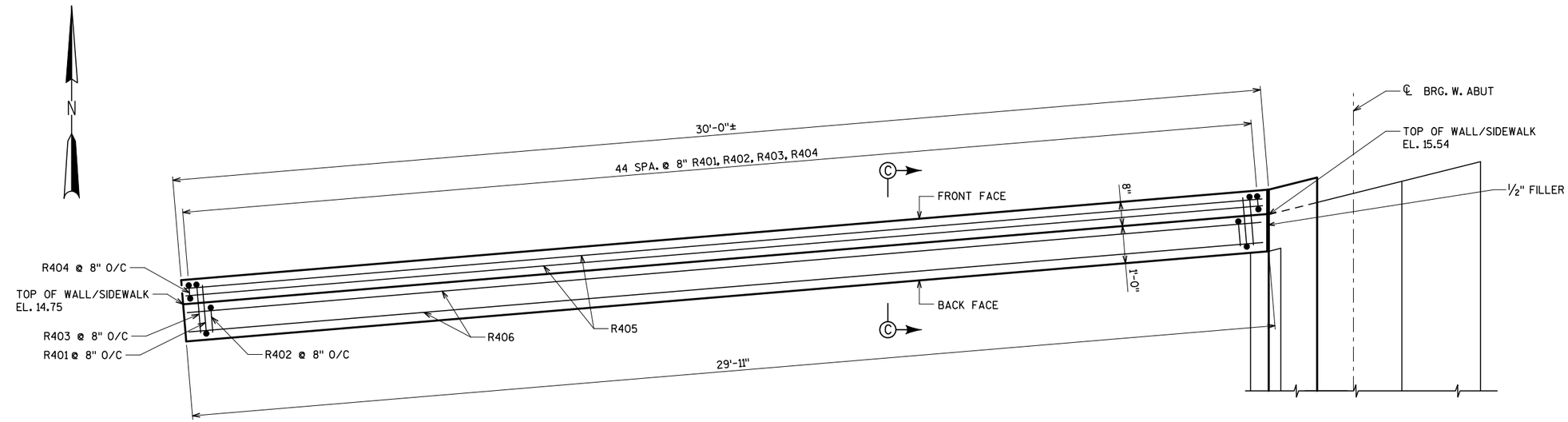

PLAN NORTHWEST RETAINING WALL

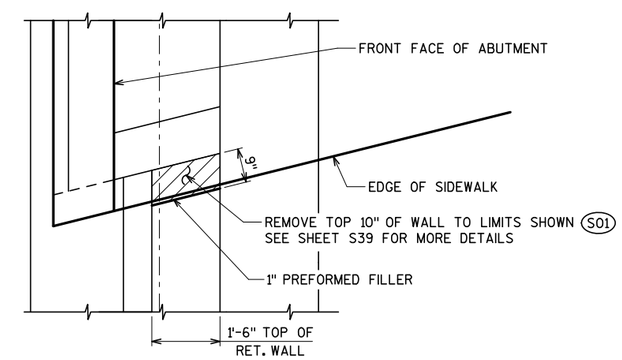

PARTIAL PLAN SOUTHWEST RETAINING WALL

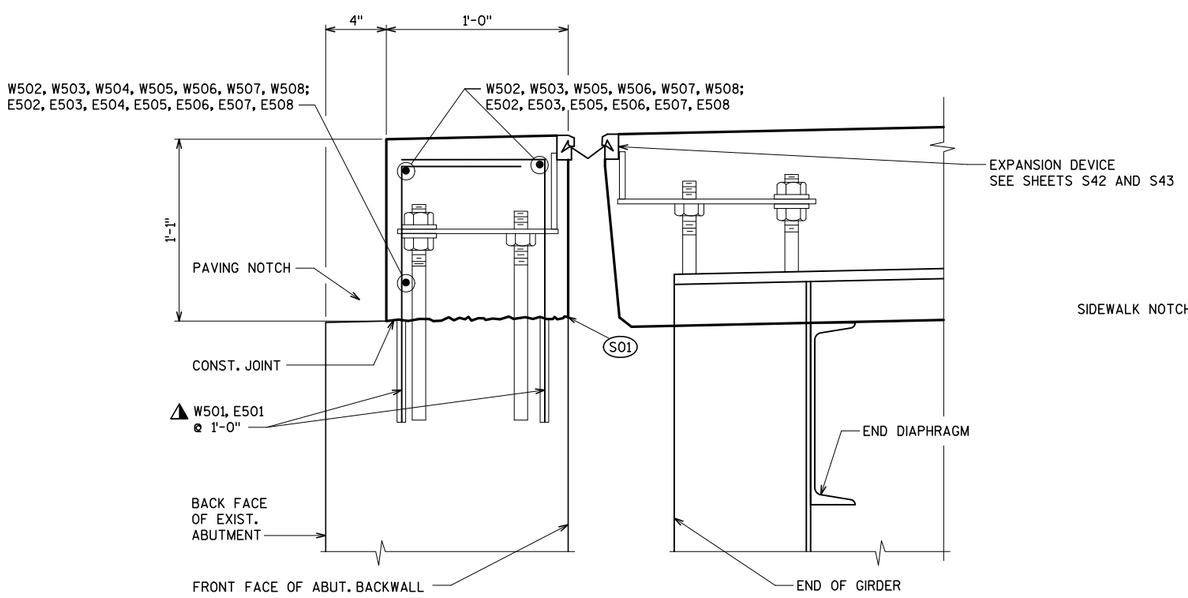

SECTION A-A

SEE SHEETS S7, S9

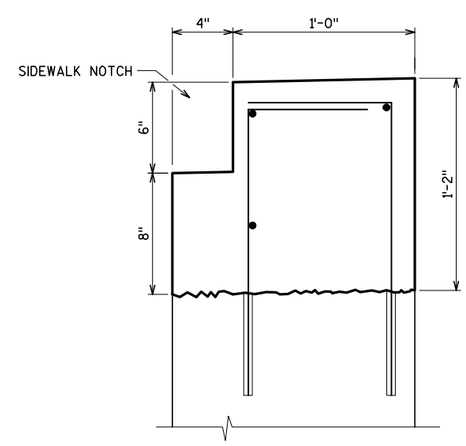

SECTION B-B

SEE SHEETS S7, S9

LEGEND

S01 LINE OF REMOVAL. DEFINE LINE OF REMOVAL BY A ½ INCH DEEP SAW CUT. COST OF REMOVAL IS INCLUDED IN BID ITEM "REMOVING OLD STRUCTURE OVER WATERWAY WITH MINIMAL DEBRIS".

⚠ CONCRETE MASONRY ANCHOR TYPE S. EMBED #4 BARS 5", AND #5 BARS 6" INTO EXISTING CONCRETE. MINIMUM PULLOUT CAPACITY OF 12 KIPS FOR #4 BARS AND 19 KIPS FOR #5 BARS.

NOTES

SEE SHEET S10 FOR SECTION C-C.

ANY EXCAVATION AND BACKFILL REQUIRED FOR RECONSTRUCTING THE ABUTMENT AND RETAINING WALLS IS INCIDENTAL TO THE BID ITEM "CONCRETE MASONRY BRIDGES".

City of Milwaukee
Department of Public Works
Infrastructure Services Division

BLOOM COMPANIES, LLC
Infrastructure Innovation and Ingenuity
10501 W. Research Drive • Milwaukee, WI 53226
Phone: (414) 771-3380 Fax: (414) 771-4490

ST PAUL AVE. LIFT BRIDGE
OVER THE MILWAUKEE RIVER
WEST WINGWALL
RECONSTRUCTION

REVISIONS

DESIGNED BY BDT	
DRAWN BY TAL	
CHECKED BY JRS	
DATE FEB 2013	SCALE NTS
JOB NUMBER BR100-10-0106	
SHEET NUMBER S8 OF S60	
OF 198	

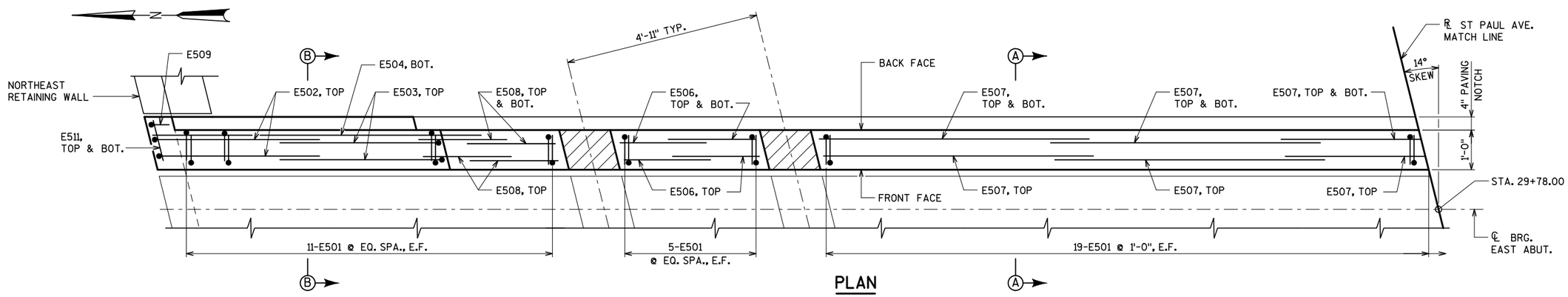

PLAN

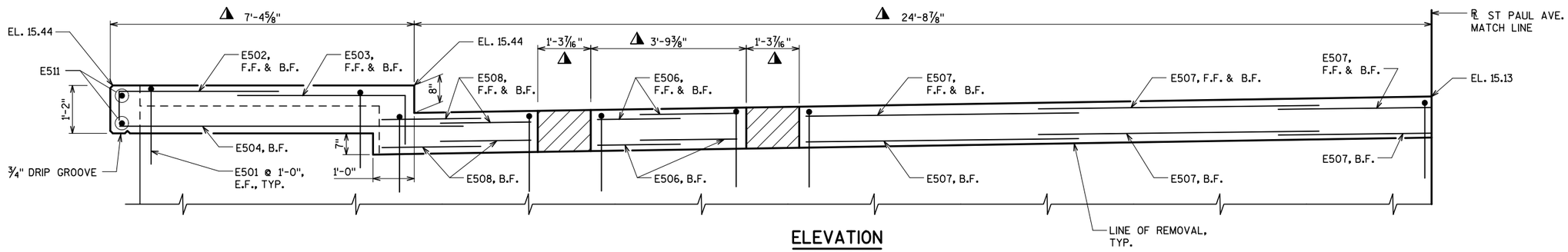

ELEVATION

(LOOKING EAST)

▲ MEASURED ALONG FRONT FACE OF ABUTMENT BACKWALL

▨ BLOCKOUT FOR FUTURE STREETCAR RAIL. APPLY BOND BREAKER TO THE FACE OF THE BLOCKOUT AND FILL WITH CONCRETE AFTER THE ABUTMENT CONCRETE IS CURED.

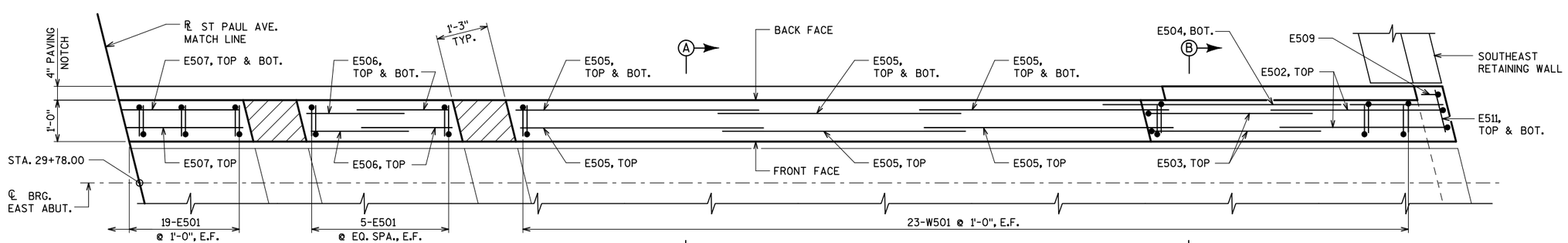

PLAN

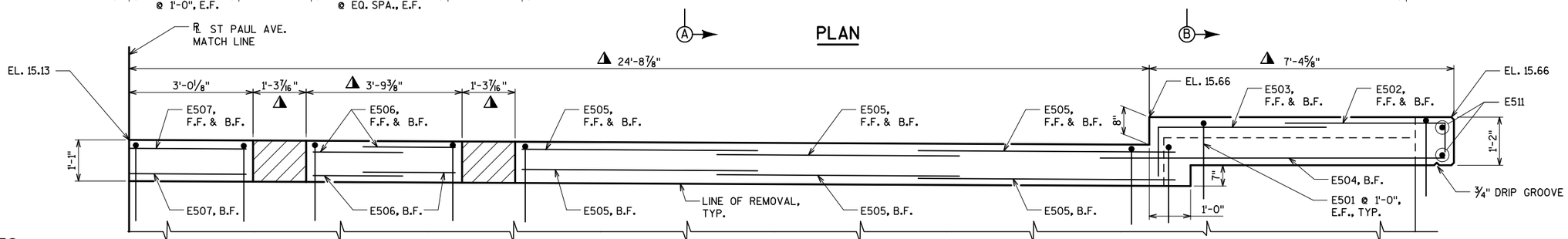

ELEVATION

(LOOKING EAST)

▲ MEASURED ALONG FRONT FACE OF ABUTMENT BACKWALL

▨ BLOCKOUT FOR FUTURE STREETCAR RAIL. APPLY BOND BREAKER TO THE FACE OF THE BLOCKOUT AND FILL WITH CONCRETE AFTER THE ABUTMENT CONCRETE IS CURED.

NOTES

POUR ABUTMENT CONCRETE AFTER THE SUPERSTRUCTURE IS IN PLACE.

SEE SHEET S8 FOR SECTION A-A, AND B-B.

ANY EXCAVATION AND BACKFILL REQUIRED FOR RECONSTRUCTING THE ABUTMENT AND RETAINING WALLS IS INCIDENTAL TO THE BID ITEM "CONCRETE MASONRY BRIDGES".

City of Milwaukee

Department of Public Works

Infrastructure Services Division

BLOOM COMPANIES, LLC
Infrastructure Innovation and Ingenuity
10501 W. Research Drive • Milwaukee, WI 53226
Phone: (414) 771-3380 Fax: (414) 771-4490

ST PAUL AVE. LIFT BRIDGE OVER THE MILWAUKEE RIVER EAST ABUTMENT RECONSTRUCTION

REVISIONS

DESIGNED BY BDT	
DRAWN BY TAL	
CHECKED BY JRS	
DATE FEB 2013	SCALE NTS
JOB NUMBER BR100-10-0106	
SHEET NUMBER S9 OF S60	
OF 198	

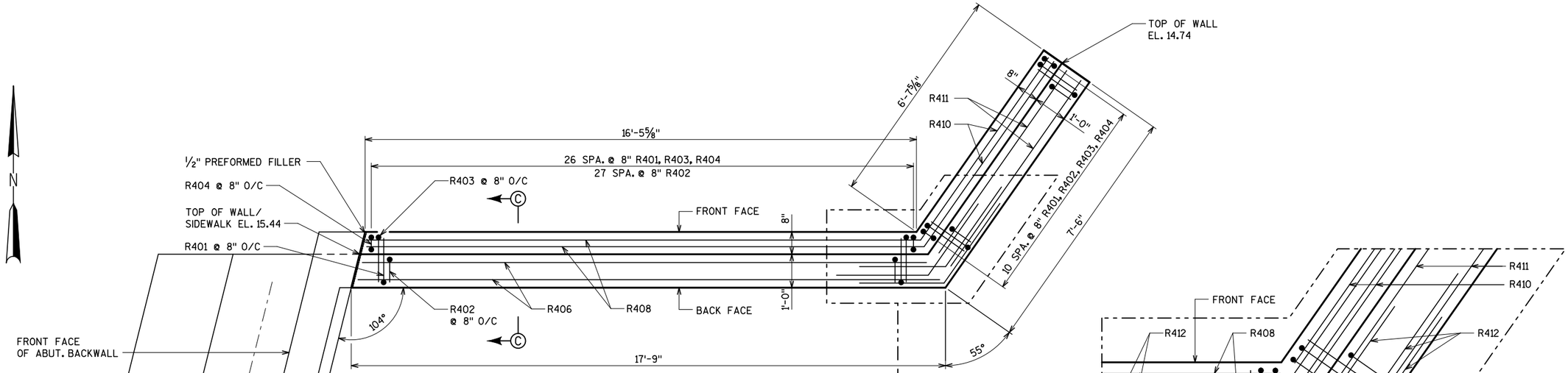

PLAN NORTHEAST RETAINING WALL

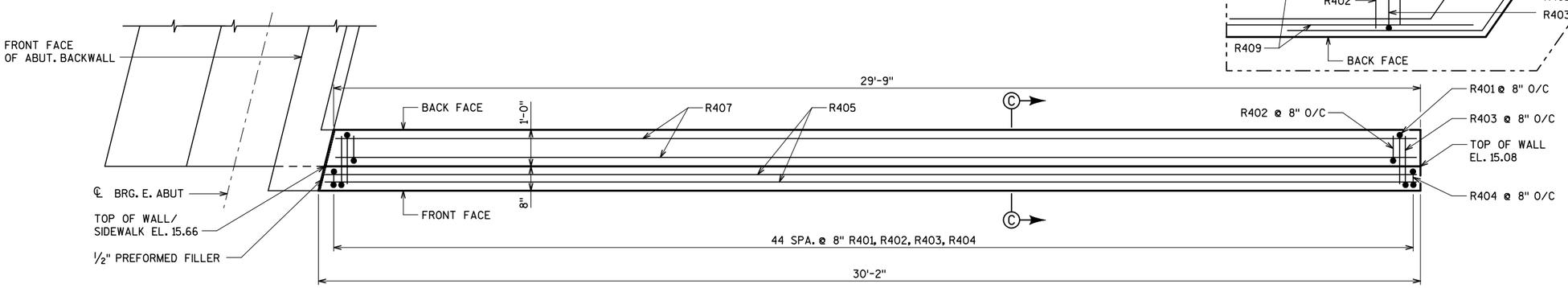

PLAN SOUTHEAST RETAINING WALL

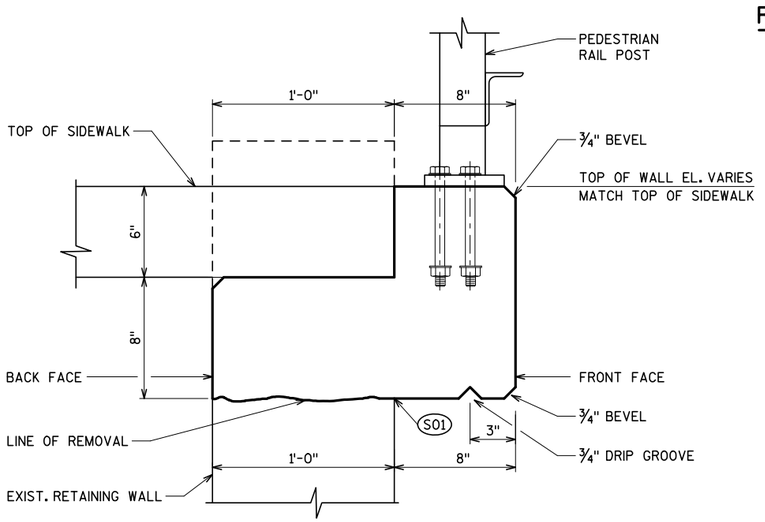

SECTION C-C

SEE THIS SHEET AND SHEET S8
(SHOWING DIMENSIONS)

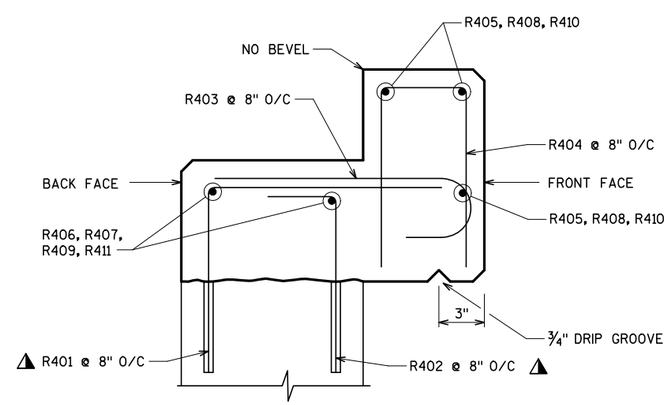

SECTION C-C

SEE THIS SHEET AND SHEET S8
(SHOWING REINFORCEMENT)

LEGEND

S01 LINE OF REMOVAL. DEFINE LINE OF REMOVAL BY A 1/2" DEEP SAW CUT. COST OF REMOVAL IS INCLUDED IN BID ITEM "REMOVING OLD STRUCTURE OVER WATERWAY WITH MINIMAL DEBRIS".

▲ CONCRETE MASONRY ANCHOR TYPE S. EMBED #4 BARS 5", AND #5 BARS 6" INTO EXISTING CONCRETE. MINIMUM PULLOUT CAPACITY OF 12 KIPS FOR #4 BARS AND 19 KIPS FOR #5 BARS.

NOTES

ANY EXCAVATION AND BACKFILL REQUIRED FOR RECONSTRUCTING THE ABUTMENT AND RETAINING WALLS IS INCIDENTAL TO THE BID ITEM "CONCRETE MASONRY BRIDGES".

City of Milwaukee
Department of Public Works
Infrastructure Services Division

BLOOM COMPANIES, LLC
Infrastructure Innovation and Ingenuity
10501 W. Research Drive • Milwaukee, WI 53226
Phone: (414) 771-3380 Fax: (414) 771-4490

ST PAUL AVE. LIFT BRIDGE
OVER THE MILWAUKEE RIVER
EAST WINGWALLS
RECONSTRUCTION

REVISIONS

DESIGNED BY BDT	
DRAWN BY TAL	
CHECKED BY JRS	
DATE FEB 2013	SCALE NTS
JOB NUMBER BR100-10-0106	
SHEET NUMBER S10 OF S60	
OF 198	

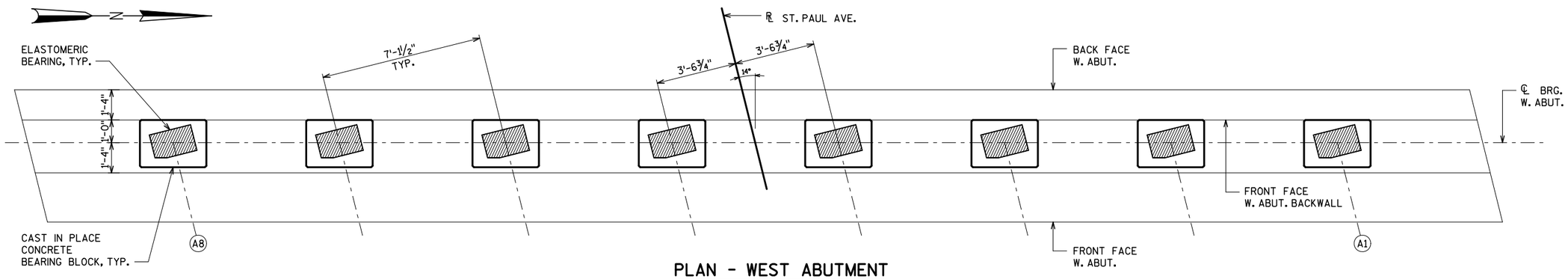

PLAN - WEST ABUTMENT

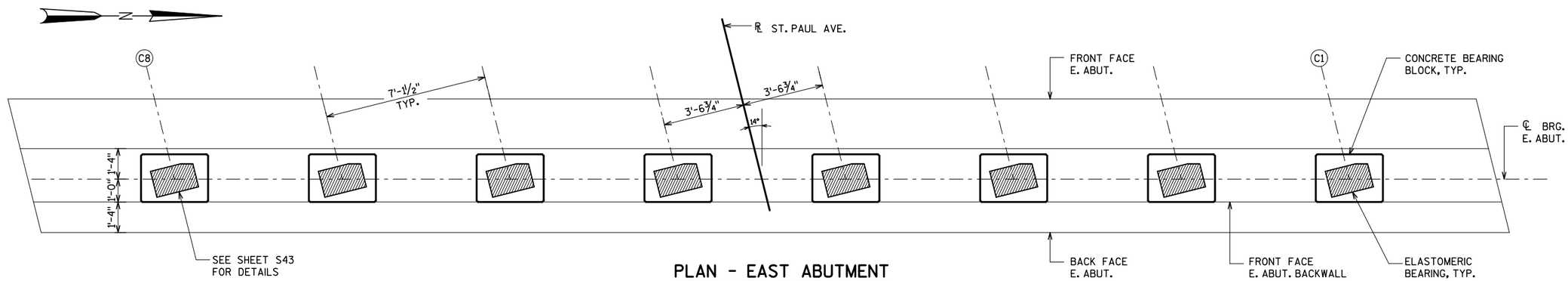

PLAN - EAST ABUTMENT

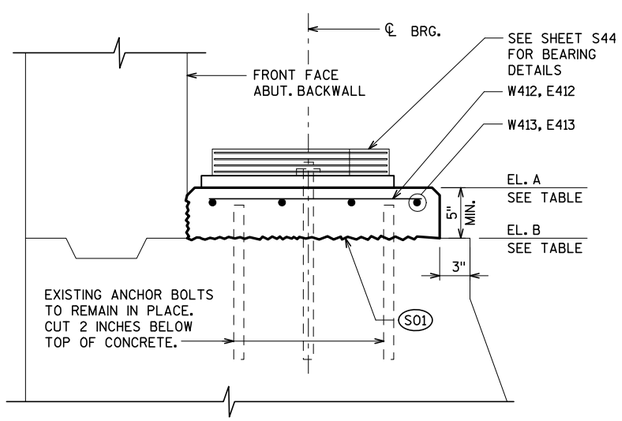

ELEVATION

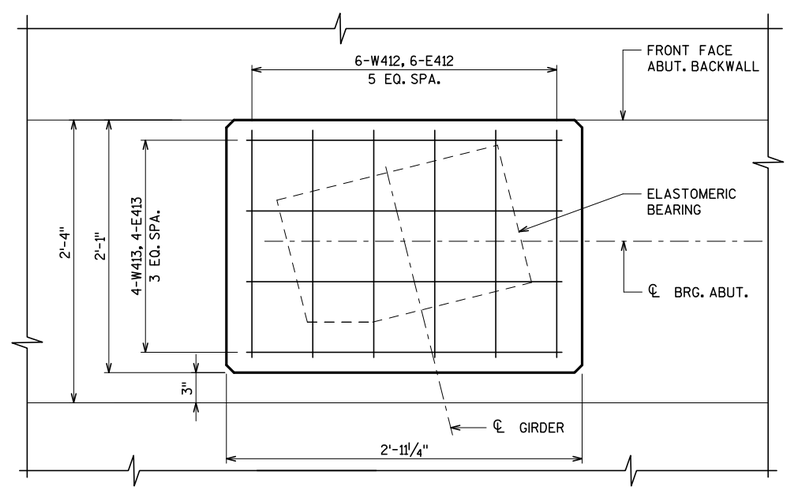

PLAN

CONCRETE BEARING BLOCK DETAIL

TOP OF SEAT ELEVATION

	ELEVATION A	ELEVATION B
A1	10.68	11.094
A2	10.68	11.136
A3	10.75	11.174
A4	10.75	11.206
A5	10.75	11.164
A6	10.64	11.054
A7	10.53	10.944
A8	10.41	10.824
G1	10.58	10.997
G2	10.69	11.107
G3	10.80	11.217
G4	10.89	11.317
G5	10.89	11.348
G6	10.89	11.307
G7	10.81	11.268
G8	10.81	11.227

LEGEND

(S01) - ROUGHEN EXISTING CONCRETE SURFACE TO ¼ INCH AMPLITUDE. COST INCIDENTAL TO BID ITEM "CONCRETE MASONRY BRIDGES".

City of Milwaukee
Department of Public Works
Infrastructure Services Division

BLOOM COMPANIES, LLC
Infrastructure Innovation and Ingenuity
10501 W. Research Drive • Milwaukee, WI 53226
Phone: (414) 771-3380 Fax: (414) 771-4490

ST PAUL AVE. LIFT BRIDGE OVER THE MILWAUKEE RIVER EAST AND WEST ABUTMENTS GIRDER SEATS

REVISIONS

DESIGNED BY BDT
DRAWN BY TAL
CHECKED BY JRS
DATE FEB 2013
SCALE NTS
JOB NUMBER BR100-10-0106
SHEET NUMBER S11 OF S60
OF 198

BILL OF BARS - WEST ABUTMENT

BAR MARK	COAT	NO.	LENGTH	BENT	BAR SERIES	LOCATION
◭ W501	X	126	2'-0"	X	-	VERTICAL, EACH FACE
W502	X	4	4'-9"	X	-	HORIZ., TOP, SIDEWALKS
W503	X	4	5'-4"	X	-	HORIZ., TOP, SIDEWALKS
W504	X	2	8'-0"	-	-	HORIZ., BOTTOM, SIDEWALKS, BACK FACE
W505	X	9	6'-1"	-	-	HORIZ., TOP AND BOTTOM, EACH FACE
W506	X	12	2'-3"	-	-	HORIZ., TOP AND BOTTOM, EACH FACE
W507	X	9	6'-8"	-	-	HORIZ., TOP AND BOTTOM, EACH FACE
W508	X	6	2'-6"	-	-	HORIZ., TOP AND BOTTOM, EACH FACE
W509	X	2	1'-3"	X	-	TIES, CORNERS
						NOT USED
W511	X	4	1'-0"	-	-	TOP AND BOTTOM, AT ENDS
W412	X	48	1'-9"	-	-	BEARING BLOCK
W413	X	32	2'-7"	-	-	BEARING BLOCK

BILL OF BARS - EAST ABUTMENT

BAR MARK	COAT	NO.	LENGTH	BENT	BAR SERIES	LOCATION
◭ E501	X	126	2'-0"	X	-	VERTICAL, EACH FACE
E502	X	4	4'-9"	X	-	HORIZ., TOP, SIDEWALKS
E503	X	4	5'-4"	X	-	HORIZ., TOP, SIDEWALKS
E504	X	2	8'-0"	-	-	HORIZ., BOTTOM, SIDEWALKS, BACK FACE
E505	X	9	6'-1"	-	-	HORIZ., TOP AND BOTTOM, EACH FACE
E506	X	12	2'-3"	-	-	HORIZ., TOP AND BOTTOM, EACH FACE
E507	X	9	6'-8"	-	-	HORIZ., TOP AND BOTTOM, EACH FACE
E508	X	6	2'-6"	-	-	HORIZ., TOP AND BOTTOM, EACH FACE
E509	X	2	1'-3"	X	-	TIES, CORNERS
						NOT USED
E511	X	4	1'-0"	-	-	TOP AND BOTTOM, AT ENDS
E412	X	48	1'-9"	-	-	BEARING BLOCK
E413	X	32	2'-7"	-	-	BEARING BLOCK

BILL OF BARS - RETAINING WALLS

BAR MARK	COAT	NO.	LENGTH	BENT	BAR SERIES	LOCATION
◭ R401	X	127	2'-2"	X	-	VERTICAL, BACK FACE
◭ R402	X	128	1'-6"	X	-	VERTICAL, FRONT FACE
R403	X	128	1'-10"	X	-	HORIZ., TOP
R404	X	128	2'-2"	X	-	VERTICAL
R405	X	6	29'-8"	-	-	HORIZ., TOP AND F. F., NW AND SE WALLS
R406	X	2	29'-7"	-	-	HORIZ., TOP , NW WALL
R407	X	2	29'-5"	-	-	HORIZ., TOP , SE WALL
R408	X	3	16'-2"	-	-	HORIZ., TOP AND FRONT FACE, NE WALL
R409	X	2	17'-5"	-	-	HORIZ., TOP , NE WALL
R410	X	3	6'-4"	-	-	HORIZ., TOP AND FRONT FACE, NE WALL
R411	X	2	6'-7"	-	-	HORIZ., TOP , NE WALL
R412	X	6	5'-6"	X	-	HORIZ.,, AT CORNER, NE WALL

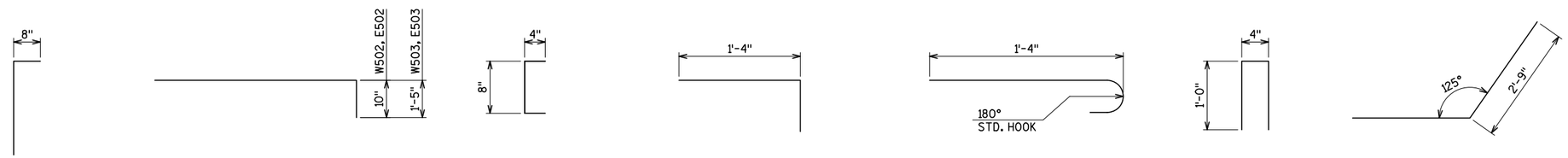

W501
E501
R402

W502, W503
E502, E503

W509
E509

R401

R403

R404

R412

BENDING DIAGRAMS

LEGEND

◭ CONCRETE MASONRY ANCHOR TYPE S. EMBED #4 BARS 5", AND #5 BARS 6" INTO EXISTING CONCRETE. MINIMUM PULLOUT CAPACITY OF 12 KIPS FOR #4 BARS AND 19 KIPS FOR #5 BARS.

City of Milwaukee

Department of Public Works

Infrastructure Services Division

BLOOM COMPANIES, LLC
Infrastructure Innovation and Ingenuity
10501 W. Research Drive • Milwaukee, WI 53226
Phone: (414) 771-3380 Fax: (414) 771-4490

ST PAUL AVE. LIFT BRIDGE
OVER THE MILWAUKEE RIVER
EAST AND WEST ABUTMENTS
BILL OF BARS

REVISIONS

DESIGNED BY BDT
DRAWN BY TAL
CHECKED BY JRS
DATE FEB 2013
SCALE NTS
JOB NUMBER BR100-10-0106
SHEET NUMBER S12 OF S60
OF 198

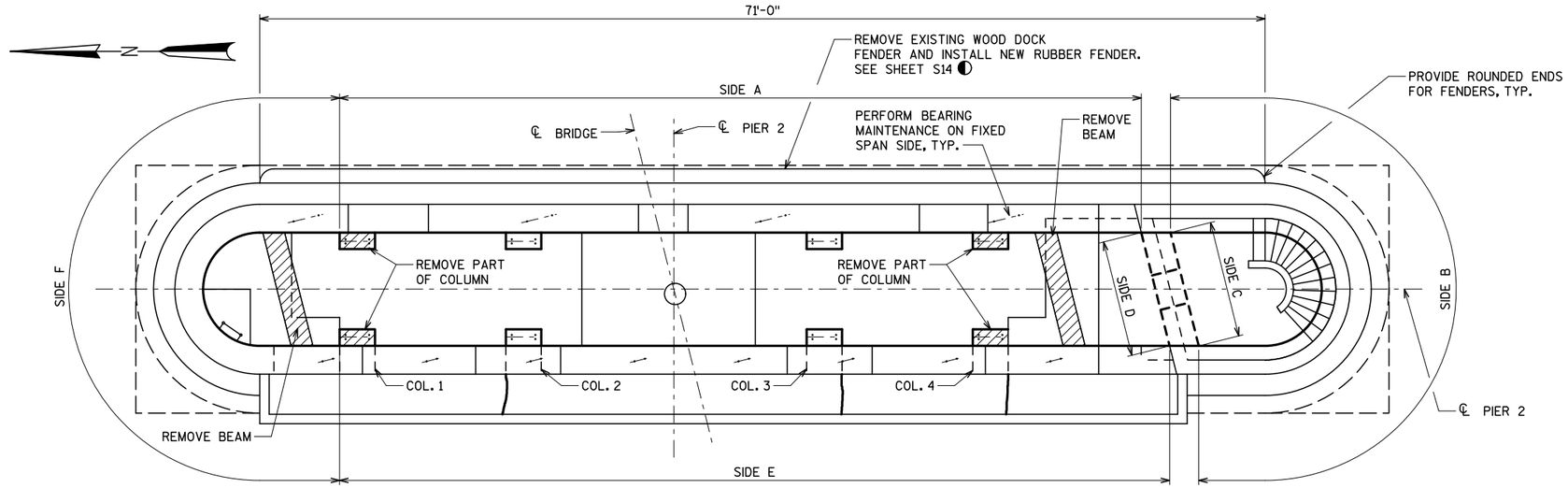

PLAN

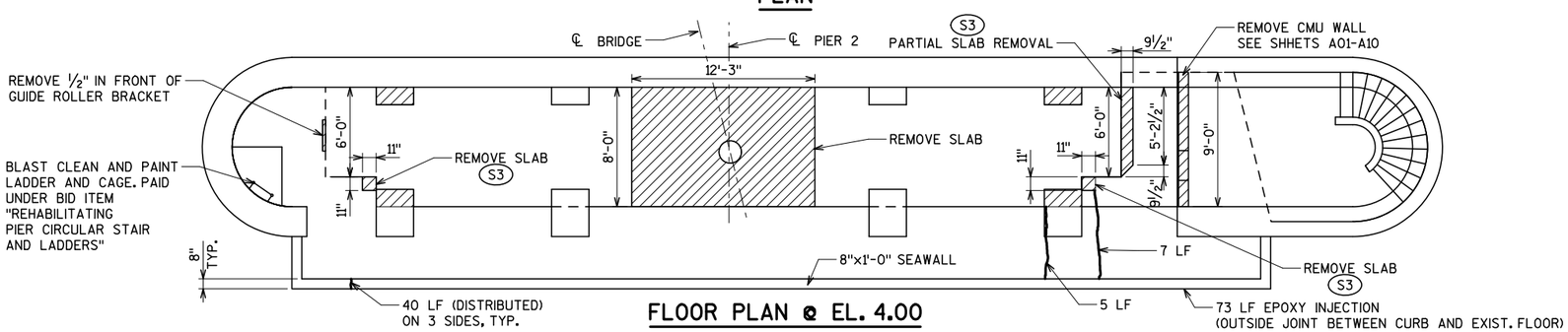

FLOOR PLAN @ EL. 4.00

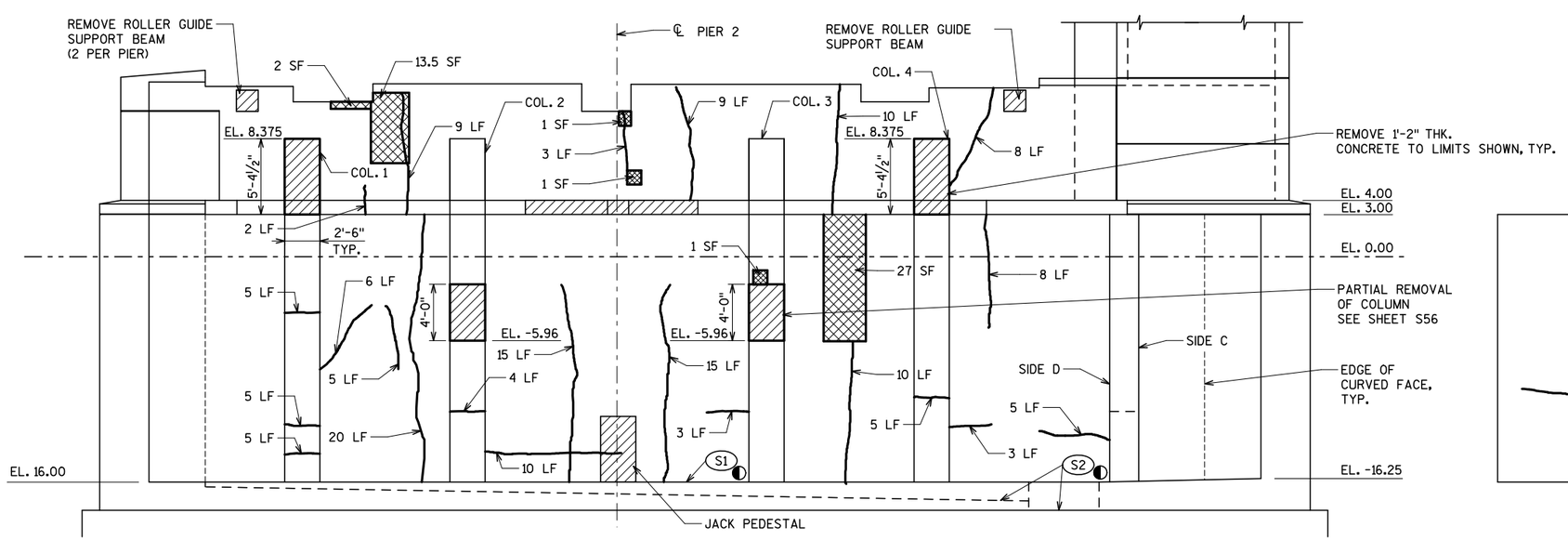

SIDE A

(INTERIOR FACE LOOKING EAST)

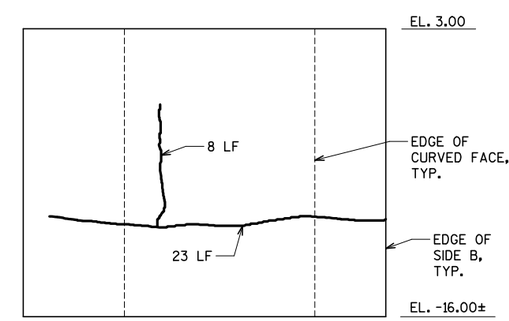

SIDE B

(INTERIOR FACE LOOKING SOUTH)

NOTES

ALL QUANTITIES SHOWN ON THIS SHEET ARE FOR INFORMATION ONLY.

EXACT LIMITS OF THE CONCRETE SURFACE REPAIR SHALL BE DETERMINED BY THE CONSTRUCTION ENGINEER IN THE FIELD.

EXACT LIMITS OF EPOXY INJECTION SHALL BE DETERMINED BY THE CONSTRUCTION ENGINEER IN THE FIELD.

LIMITS OF CONCRETE SURFACE REPAIR. APPROXIMATE AREA LISTED FOR INFORMATION ONLY.

CRACK FOR EPOXY INJECTION. APPROXIMATE LENGTH LISTED FOR INFORMATION ONLY.

REMOVE CONCRETE AND REINFORCING TO THE LIMITS SHOWN. ◐

PERFORM CONCRETE SURFACE REPAIR ON THE SURFACES THAT REMAIN EXPOSED AFTER CONCRETE REMOVAL. APPLY EPOXY REPAIR PAINT TO THE ENDS OF EXPOSED REBAR.

◐ COST OF REMOVAL AND DEBRIS CLEANING INCLUDED IN BID ITEM "REMOVING OLD STRUCTURE OVER WATERWAY WITH MINIMAL DEBRIS".

(S1) REMOVE DEBRIS FROM THE PIER PIT FLOOR. PERFORM CONCRETE SURFACE REPAIR OF THE PIT FLOOR FOR AN APPROXIMATE AREA OF 120 SF (DISTRIBUTED).

(S2) REMOVE DEBRIS FROM THE DRAIN AND SUMP.

(S3) CORE 3" DIA. HOLE AT CORNERS WHERE TWO SAWCUT LINES MEET, BEFORE SAW CUTTING. DO NOT EXTEND SAW CUT INTO EXISTING FLOOR TO REMAIN.

APPLY EPOXY REPAIR PAINT TO ENDS OF EXISTING REINFORCEMENT THAT REMAIN EXPOSED AFTER CONCRETE REMOVAL.

SEE SHEET S14 FOR CONCRETE STAINING LIMITS.

City of Milwaukee
Department of Public Works
Infrastructure Services Division

BLOOM COMPANIES, LLC
Infrastructure Innovation and Ingenuity
10501 W. Research Drive • Milwaukee, WI 53226
Phone: (414) 771-3380 Fax: (414) 771-4490

ST PAUL AVE. LIFT BRIDGE
OVER THE MILWAUKEE RIVER
PIER 2
CONCRETE REPAIRS (1 OF 3)

REVISIONS

DESIGNED BY BDT	
DRAWN BY TAL	
CHECKED BY JRS	
DATE FEB 2013	SCALE NTS
JOB NUMBER BR100-10-0106	
SHEET NUMBER S13 OF S60	
OF 198	

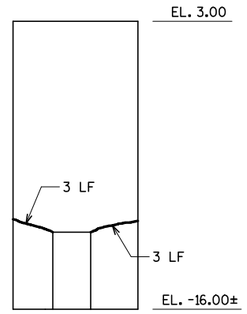

SIDE C
(NTERIOR FACE LOOKING NORTH)

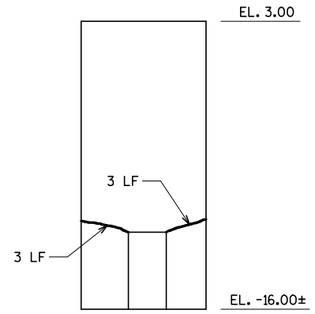

SIDE D
(NTERIOR FACE LOOKING SOUTH)

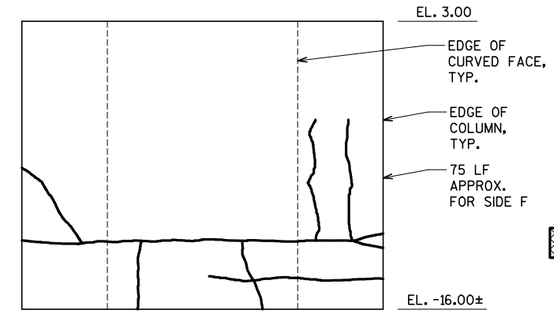

SIDE F
(NTERIOR FACE LOOKING NORTH)

NOTES

ALL QUANTITIES SHOWN ON THIS SHEET ARE FOR INFORMATION ONLY.

EXACT LIMITS OF THE CONCRETE SURFACE REPAIR SHALL BE DETERMINED BY THE CONSTRUCTION ENGINEER IN THE FIELD.

EXACT LIMITS OF EPOXY INJECTION SHALL BE DETERMINED BY THE CONSTRUCTION ENGINEER IN THE FIELD.

LIMITS OF CONCRETE SURFACE REPAIR. APPROXIMATE AREA LISTED FOR INFORMATION ONLY.

CRACK FOR EPOXY INJECTION. APPROXIMATE LENGTH LISTED FOR INFORMATION ONLY.

REMOVE CONCRETE AND REINFORCEMENT TO THE LIMITS SHOWN. ◐

PERFORM CONCRETE SURFACE REPAIR ON THE SURFACES EXPOSED BY CONCRETE REMOVAL.

◐ COST OF REMOVAL AND DEBRIS CLEANING INCLUDED IN BID ITEM "REMOVING OLD STRUCTURE OVER WATERWAY WITH MINIMAL DEBRIS".

S4 APPLY CONCRETE STAIN COLORS AS FOLLOWS:
CONCRETE WALL - OUTSIDE FACE ABOVE EL. 4.00

COLUMNS - EAST, NORTH AND SOUTH FACES ABOVE EL. 4.00

BEAMS - BOTTOM AND EXTERIOR SIDE OF ALL BEAMS ABOVE EL. 4.00

BRIDGE HOUSE - OUTSIDE FACE FROM EL. 4.00 TO EL. 25.06 (BOTTOM OF WINDOW SILL)

APPLY EPOXY REPAIR PAINT TO ENDS OF EXISTING REINFORCEMENT THAT REMAIN EXPOSED AFTER CONCRETE REMOVAL.

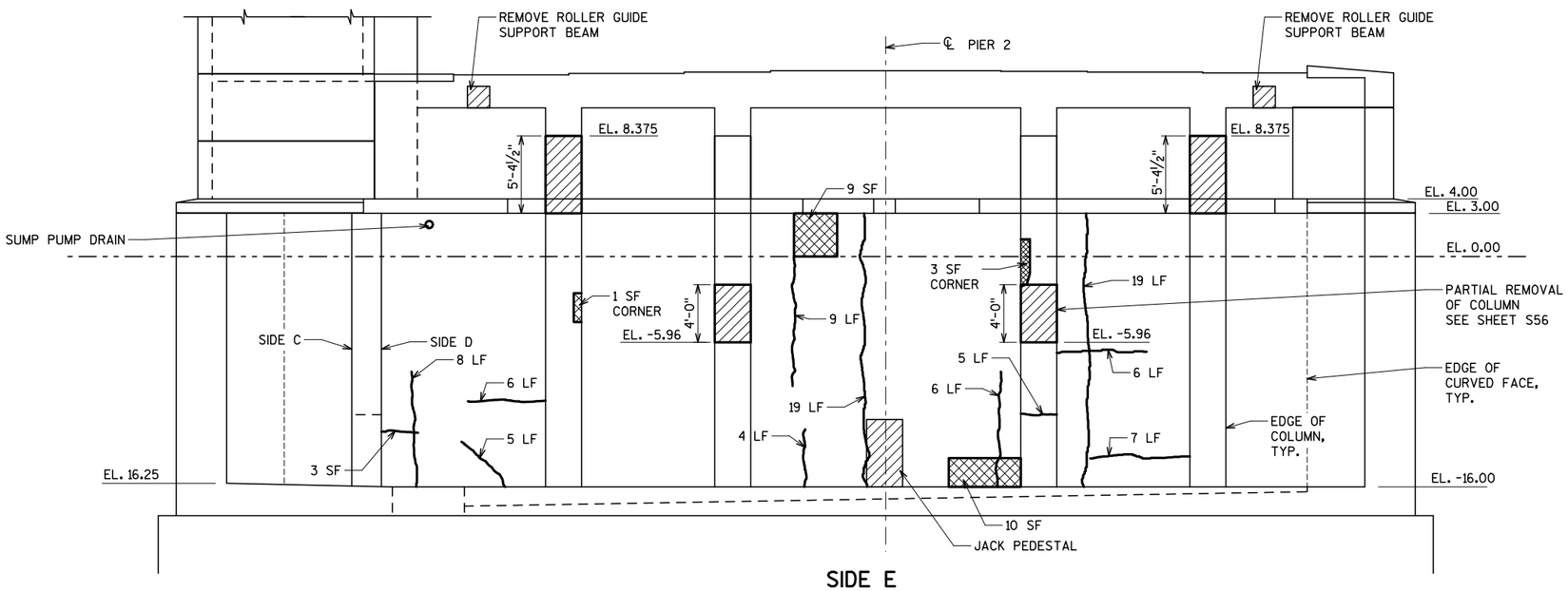

SIDE E
(INTERIOR FACE LOOKING WEST)

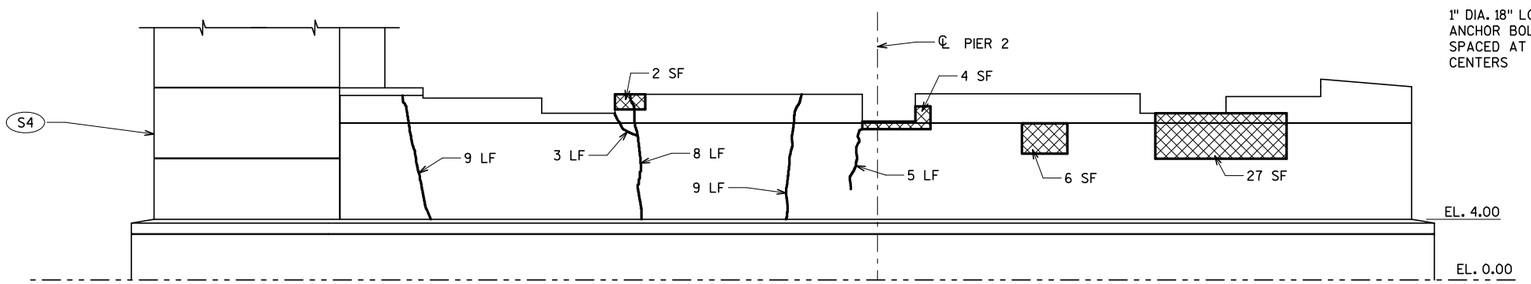

EAST WALL
(EXTERIOR LOOKING WEST)

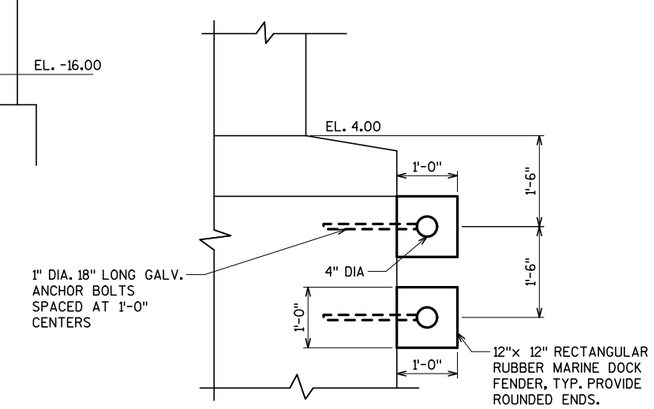

MARINE DOCK FENDER
(PIER 2, EAST SIDE)

City of Milwaukee
Department of Public Works
Infrastructure Services Division

BLOOM COMPANIES, LLC
Infrastructure Innovation and Ingenuity
10501 W. Research Drive • Milwaukee, WI 53226
Phone: (414) 771-3380 Fax: (414) 771-4490

ST PAUL AVE. LIFT BRIDGE
OVER THE MILWAUKEE RIVER
PIER 2
CONCRETE REPAIRS (2 OF 3)

REVISIONS

DESIGNED BY BDT	
DRAWN BY TAL	
CHECKED BY JRS	
DATE FEB 2013	SCALE NTS
JOB NUMBER BR100-10-0106	
SHEET NUMBER S14 OF S60	
OF 198	

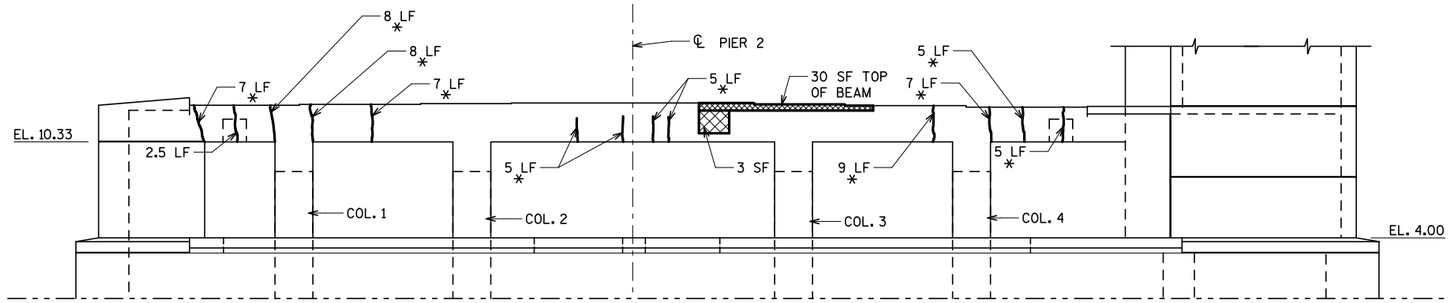

PIER 2 BEAM & COLUMN REPAIR

(LOOKING EAST)

* CRACK ON MULTIPLE FACES.

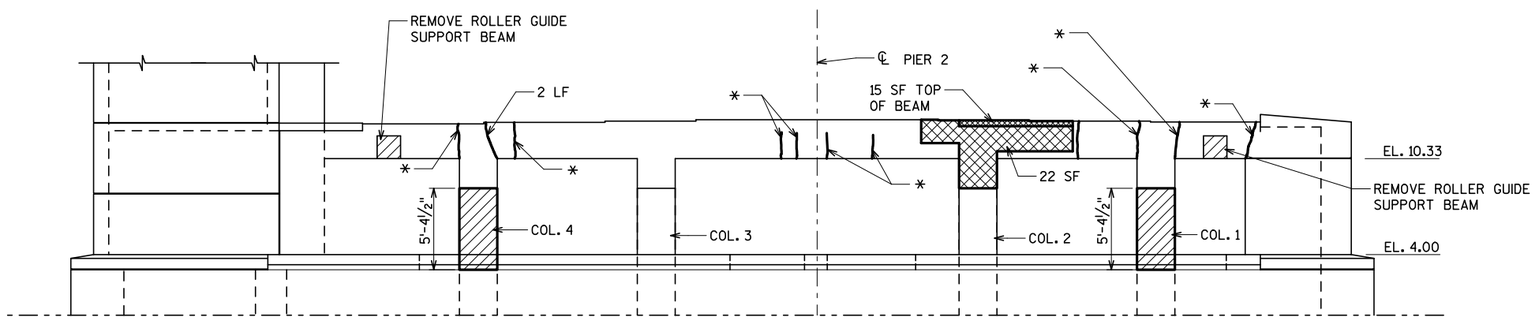

PIER 2 BEAM & COLUMN REPAIR

(LOOKING WEST)

* CRACK ON MULTIPLE FACES.

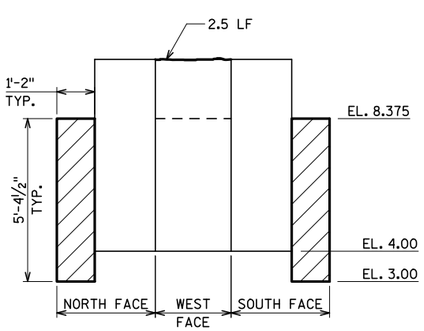

COLUMN 1

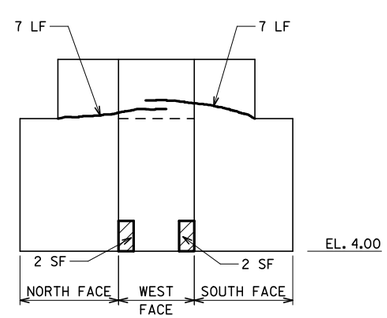

COLUMN 2

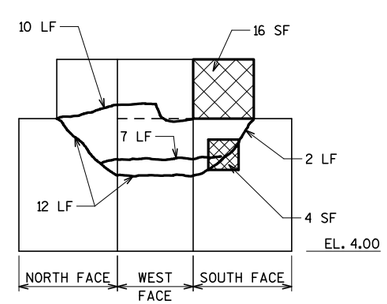

COLUMN 3

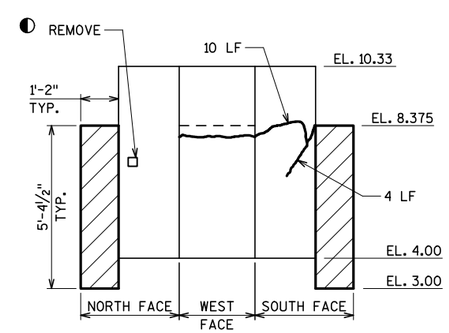

COLUMN 4

NOTES

ALL QUANTITIES SHOWN ON THIS SHEET ARE FOR INFORMATION ONLY.

EXACT LIMITS OF THE CONCRETE SURFACE REPAIR SHALL BE DETERMINED BY THE CONSTRUCTION ENGINEER IN THE FIELD.

EXACT LIMITS OF EPOXY INJECTION SHALL BE DETERMINED BY THE CONSTRUCTION ENGINEER IN THE FIELD.

LIMITS OF CONCRETE SURFACE REPAIR. APPROXIMATE AREA LISTED FOR INFORMATION ONLY.

CRACK FOR EPOXY INJECTION. APPROXIMATE LENGTH LISTED FOR INFORMATION ONLY.

REMOVE CONCRETE AND REINFORCING TO THE LIMITS SHOWN. ◐

PERFORM CONCRETE SURFACE REPAIR ON THE SURFACES EXPOSED BY CONCRETE REMOVAL.

◐ COST OF REMOVAL AND DEBRIS CLEANING INCLUDED IN BID ITEM "REMOVING OLD STRUCTURE OVER WATERWAY WITH MINIMAL DEBRIS".

APPLY EPOXY REPAIR PAINT TO ENDS OF EXISTING REINFORCEMENT THAT REMAIN EXPOSED AFTER CONCRETE REMOVAL.

SEE SHEET S14 FOR CONCRETE STAINING LIMITS.

City of Milwaukee
Department of Public Works
Infrastructure Services Division

BLOOM COMPANIES, LLC
Infrastructure Innovation and Ingenuity
10501 W. Research Drive • Milwaukee, WI 53226
Phone: (414) 771-3380 • Fax: (414) 771-4490

ST PAUL AVE. LIFT BRIDGE
OVER THE MILWAUKEE RIVER
PIER 2
CONCRETE REPAIRS (3 OF 3)

REVISIONS

DESIGNED BY BDT	
DRAWN BY TAL	
CHECKED BY JRS	
DATE FEB 2013	SCALE NTS
JOB NUMBER BR100-10-0106	
SHEET NUMBER S15 OF S60	
OF 198	

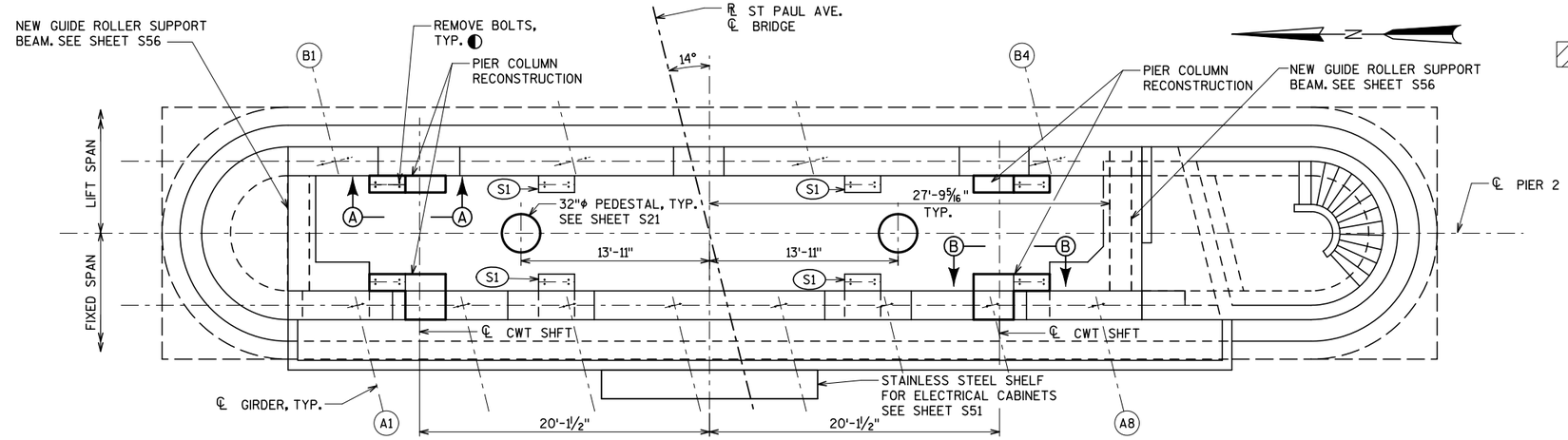

KEY PLAN - PIER 2 COLUMN RECONSTRUCTION

LEGEND

DENOTES LIMITS OF CONCRETE REMOVAL. SEE SHEET S13 THRU S15.

CONCRETE MASONRY ANCHOR TYPE S. EMBED #4 BARS 5", AND #5 BARS 6" INTO EXISTING CONCRETE. MINIMUM PULLOUT CAPACITY OF 12 KIPS FOR #4 BARS AND 19 KIPS FOR #5 BARS.

COST OF REMOVAL IS INCLUDED IN BID ITEM "REMOVING OLD STRUCTURE OVER WATERWAY WITH MINIMAL DEBRIS".

S1 CONSTRUCT LEDGE FOR TEMPORARY SUPPORT FOR COUNTERWEIGHT. SEE SHEET S56.

TOP OF CONCRETE AT GIRDER SEATS

GIRDER	ELEVATION
A1	12.75
A2	12.81
A3	12.86
A4	12.90
A5	12.90
A6	12.81
A7	12.72
A8	12.62
B1	12.10
B2	12.28
B3	12.25
B4	12.00

ELEVATIONS ARE BASED ON EXISTING PLANS

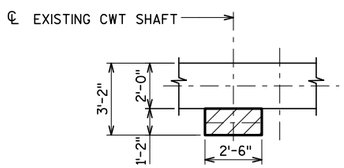

REMOVAL PLAN

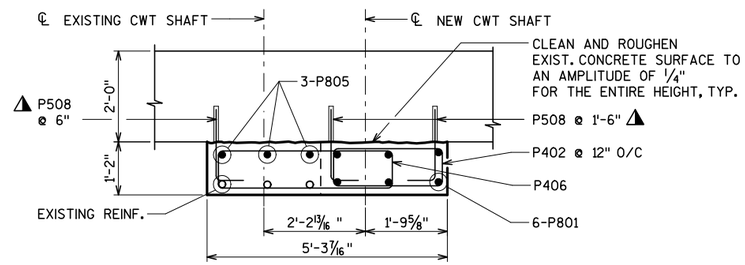

SECTION C-C

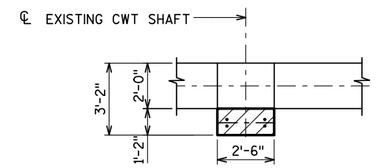

REMOVAL PLAN

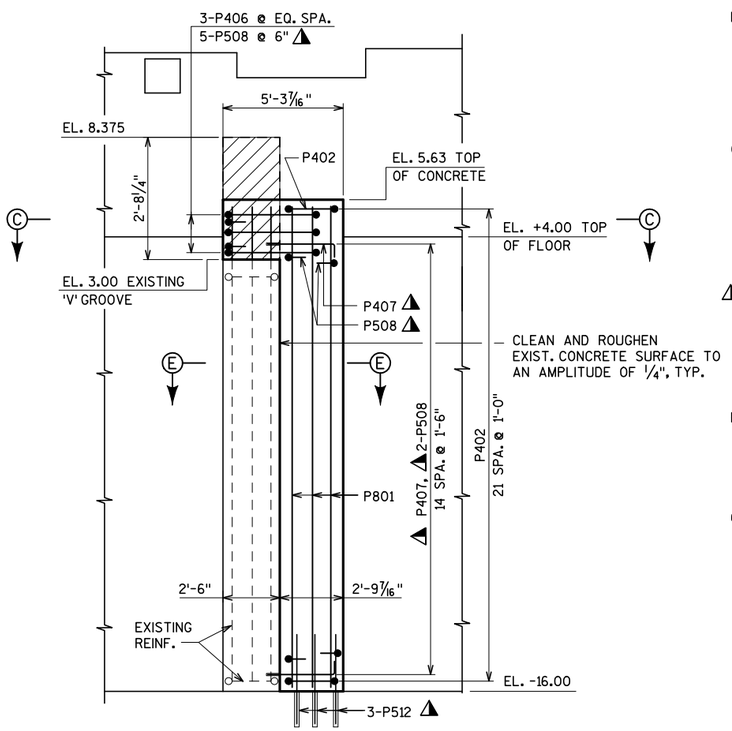

VIEW A-A (EAST COLUMNS)

(NORTH COLUMN SHOWN. SOUTH COLUMN OPPOSITE)

REMOVE EXISTING COLUMN TO LIMITS SHOWN. INCORPORATE EXISTING VERTICAL BARS INTO NEW CONSTRUCTION.

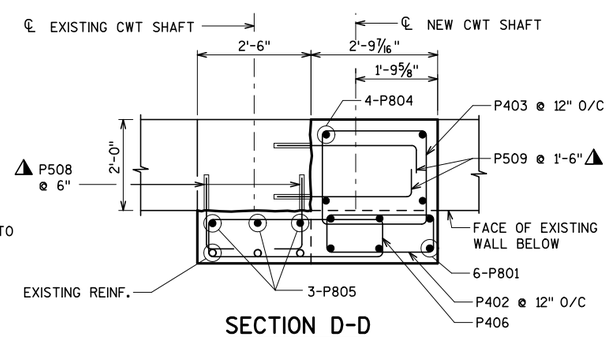

SECTION D-D

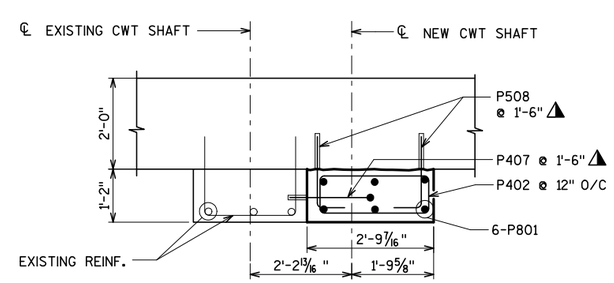

SECTION E-E

(NORTH COLUMN SHOWN. SOUTH COLUMN OPPOSITE)

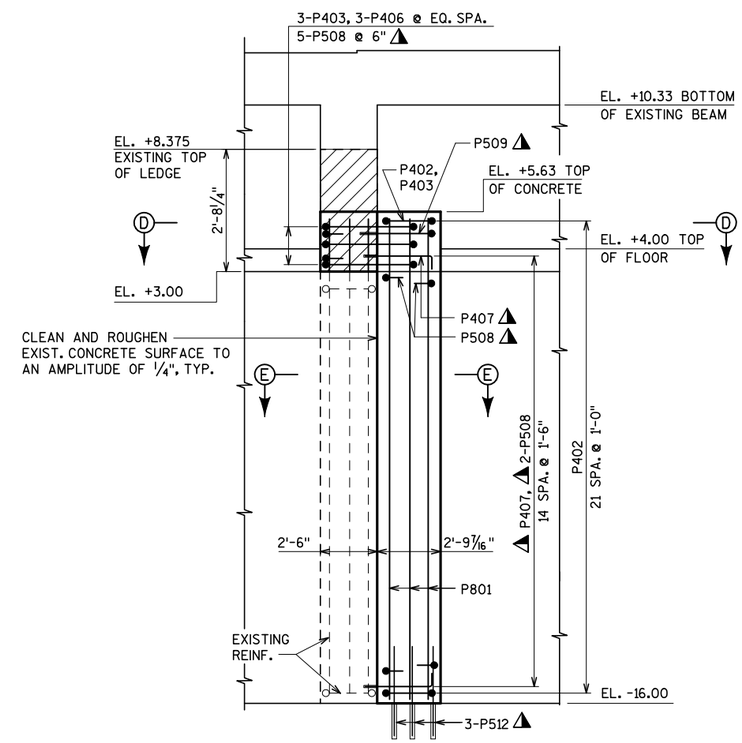

VIEW B-B (WEST COLUMNS)

(SOUTH COLUMN SHOWN. NORTH COLUMN OPPOSITE)

REMOVE EXISTING COLUMN TO LIMITS SHOWN. INCORPORATE EXISTING VERTICAL BARS INTO NEW CONSTRUCTION.

City of Milwaukee

Department of Public Works

Infrastructure Services Division

BLOOM COMPANIES, LLC
Infrastructure Innovation and Ingenuity
10501 W. Research Drive • Milwaukee, WI 53226
Phone: (414) 771-3380 Fax: (414) 771-4490

ST PAUL AVE. LIFT BRIDGE OVER THE MILWAUKEE RIVER
PIER 2 COLUMN RECONSTRUCTION

REVISIONS

DESIGNED BY BDT
DRAWN BY TAL
CHECKED BY JRS
DATE FEB 2013
SCALE NTS
JOB NUMBER BR100-10-0106
SHEET NUMBER S16 OF S60
OF 198

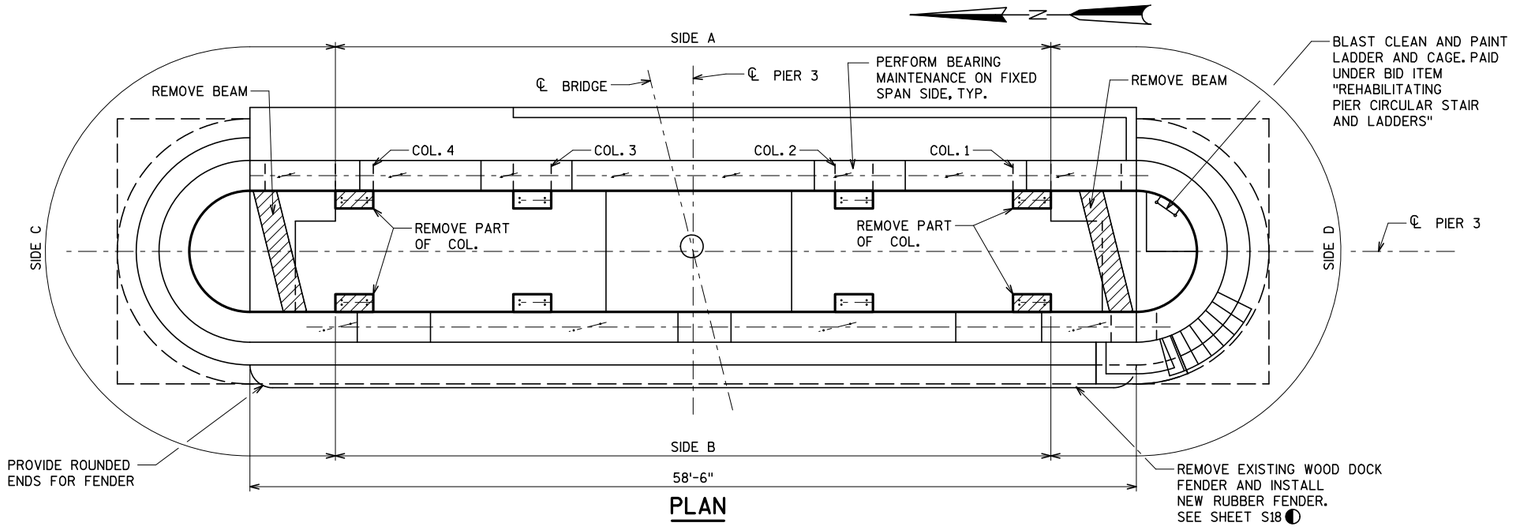

PLAN

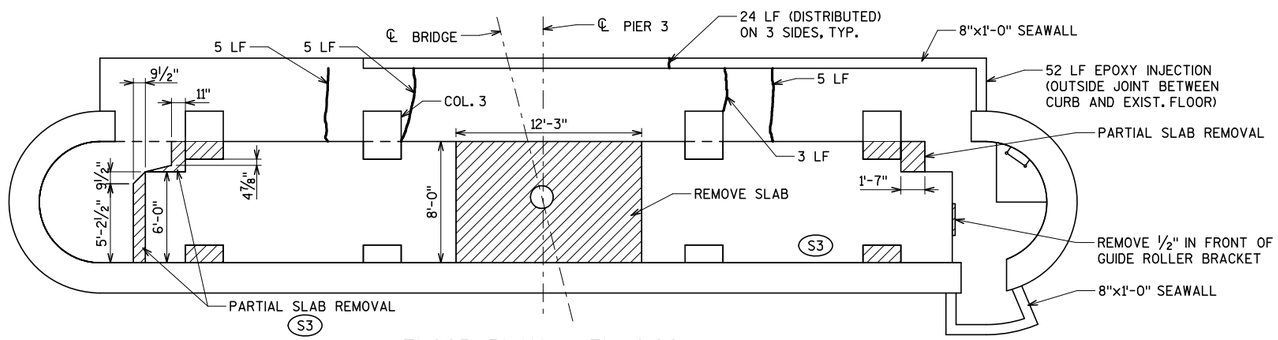

FLOOR PLAN @ EL. 4.00

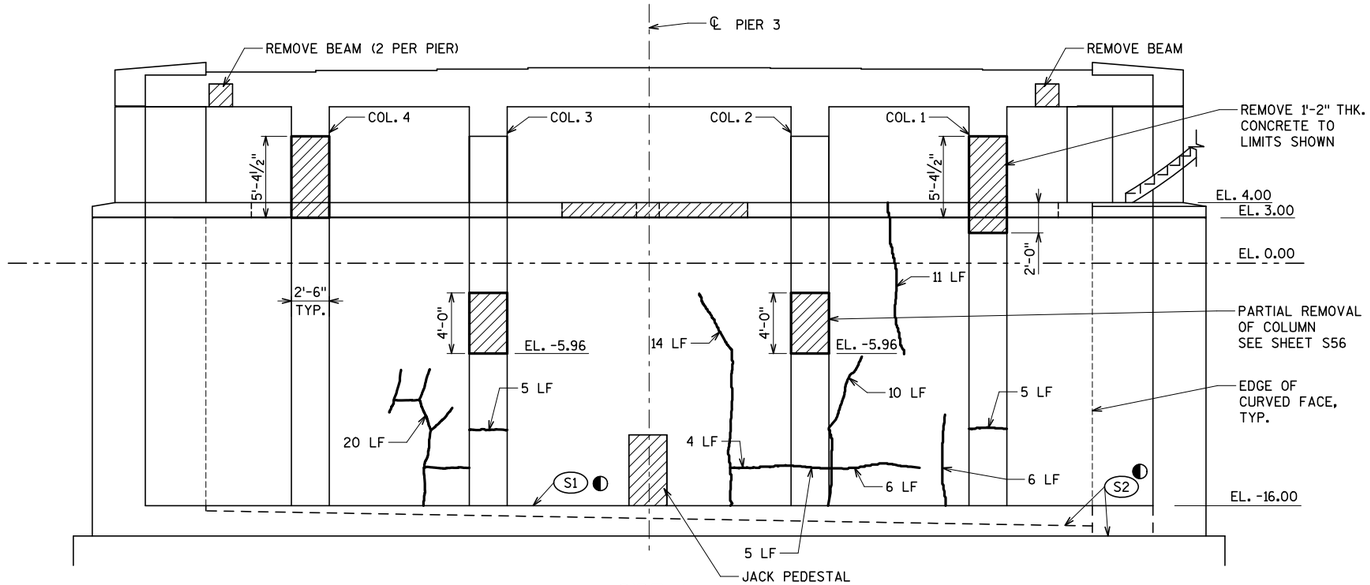

SIDE A

(INTERIOR FACE LOOKING EAST)

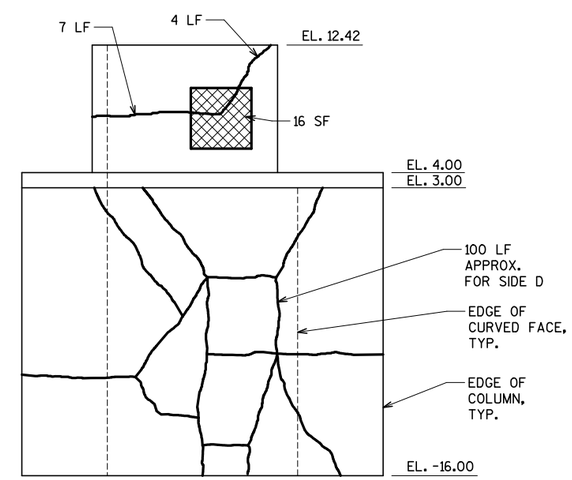

SIDE D

(INTERIOR FACE LOOKING SOUTH)

NOTES

ALL QUANTITIES SHOWN ON THIS SHEET ARE FOR INFORMATION ONLY.

EXACT LIMITS OF THE CONCRETE SURFACE REPAIR SHALL BE DETERMINED BY THE CONSTRUCTION ENGINEER IN THE FIELD.

EXACT LIMITS OF EPOXY INJECTION SHALL BE DETERMINED BY THE CONSTRUCTION ENGINEER IN THE FIELD.

LIMITS OF CONCRETE SURFACE REPAIR. APPROXIMATE AREA LISTED FOR INFORMATION ONLY.

CRACK FOR EPOXY INJECTION. APPROXIMATE LENGTH LISTED FOR INFORMATION ONLY.

REMOVE CONCRETE AND REINFORCING TO THE LIMITS SHOWN. ◐

PERFORM CONCRETE SURFACE REPAIR ON THE SURFACES EXPOSED BY CONCRETE REMOVAL.

◐ COST OF REMOVAL AND DEBRIS CLEANING INCLUDED IN BID ITEM "REMOVING OLD STRUCTURE OVER WATERWAY WITH MINIMAL DEBRIS".

(S1) REMOVE DEBRIS FROM THE PIER PIT FLOOR. PERFORM CONCRETE SURFACE REPAIR OF THE PIT FLOOR FOR AN APPROXIMATE AREA OF 120 SF (DISTRIBUTED).

(S2) REMOVE DEBRIS FROM THE DRAIN AND SUMP.

(S3) CORE 3" DIA. HOLE AT CORNERS WHERE TWO SAWCUT LINES MEET, BEFORE SAW CUTTING. DO NOT EXTEND SAW CUT INTO EXISTING FLOOR TO REMAIN.

APPLY EPOXY REPAIR PAINT TO ENDS OF EXISTING REINFORCEMENT THAT REMAIN EXPOSED AFTER CONCRETE REMOVAL.

SEE SHEET S18 FOR CONCRETE STAINING LIMITS.

City of Milwaukee
Department of Public Works
Infrastructure Services Division

BLOOM COMPANIES, LLC
Infrastructure Innovation and Ingenuity
10501 W. Research Drive • Milwaukee, WI 53226
Phone: (414) 771-3380 • Fax: (414) 771-4490

ST PAUL AVE. LIFT BRIDGE
OVER THE MILWAUKEE RIVER
PIER 3
CONCRETE REPAIRS (1 OF 3)

REVISIONS

DESIGNED BY BDT	
DRAWN BY TAL	
CHECKED BY JRS	
DATE FEB 2013	SCALE NTS
JOB NUMBER BR100-10-0106	
SHEET NUMBER S17 OF S60	
OF 198	

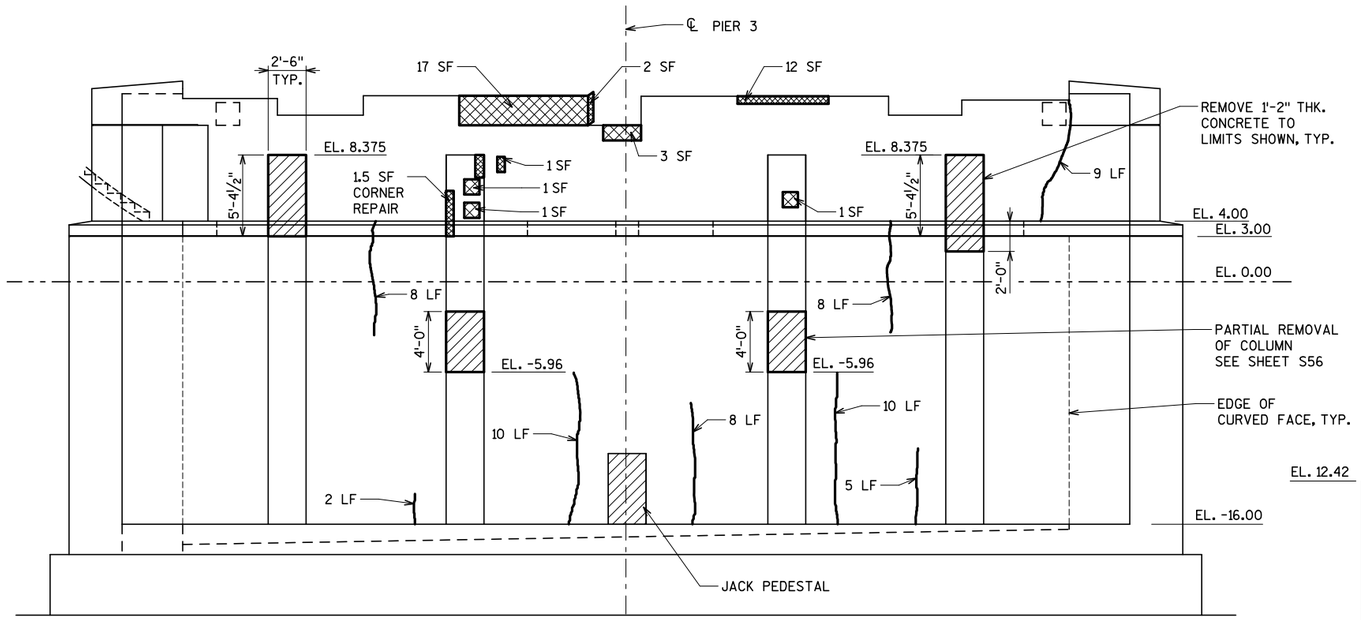

SIDE B

(INTERIOR FACE LOOKING WEST)

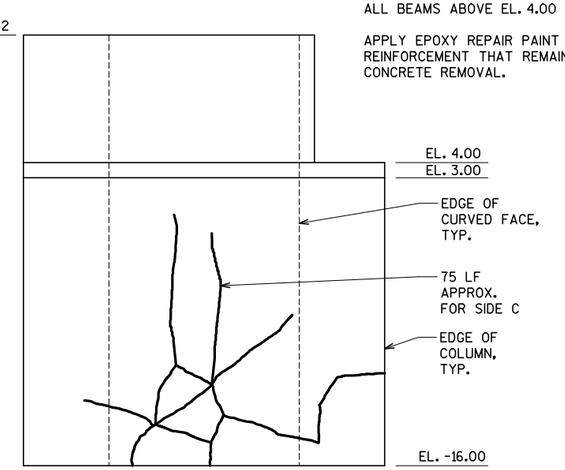

SIDE C

(INTERIOR FACE LOOKING NORTH)

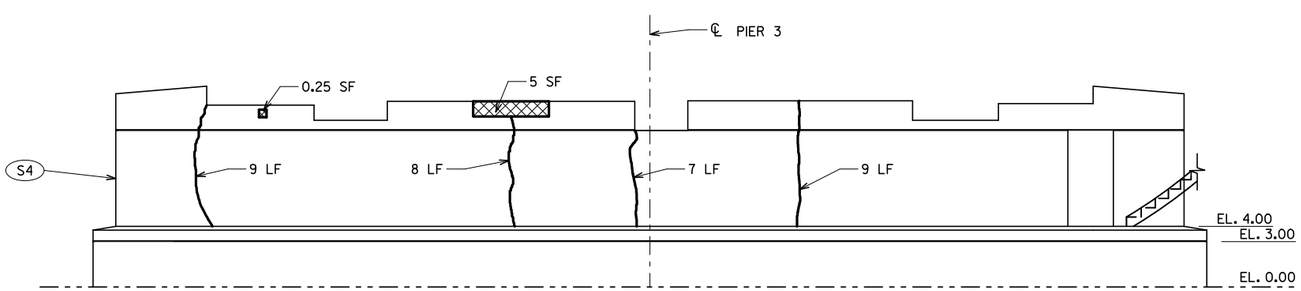

OUTSIDE WALL

(EXTERIOR FACE LOOKING WEST)

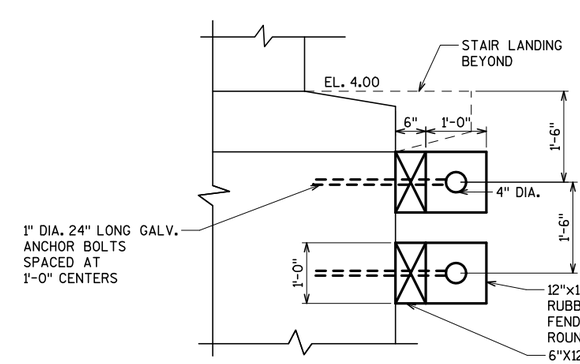

MARINE DOCK FENDER

(PIER 3, WEST SIDE)

NOTES

ALL QUANTITIES SHOWN ON THIS SHEET ARE FOR INFORMATION ONLY.

EXACT LIMITS OF THE CONCRETE SURFACE REPAIR SHALL BE DETERMINED BY THE CONSTRUCTION ENGINEER IN THE FIELD.

EXACT LIMITS OF EPOXY INJECTION SHALL BE DETERMINED BY THE CONSTRUCTION ENGINEER IN THE FIELD.

LIMITS OF CONCRETE SURFACE REPAIR. APPROXIMATE AREA LISTED FOR INFORMATION ONLY.

CRACK FOR EPOXY INJECTION. APPROXIMATE LENGTH LISTED FOR INFORMATION ONLY.

REMOVE CONCRETE AND REINFORCEMENT TO THE LIMITS SHOWN. ◐

PERFORM CONCRETE SURFACE REPAIR ON THE SURFACES EXPOSED BY CONCRETE REMOVAL.

◐ COST OF REMOVAL AND DEBRIS CLEANING INCLUDED IN BID ITEM "REMOVING OLD STRUCTURE OVER WATERWAY WITH MINIMAL DEBRIS".

S4 APPLY CONCRETE STAIN COLORS AS FOLLOWS: CONCRETE WALL - OUTSIDE FACE ABOVE EL. 4.00

COLUMNS - EAST, NORTH AND SOUTH FACES ABOVE EL. 4.00

BEAMS - BOTTOM AND EXTERIOR SIDE OF ALL BEAMS ABOVE EL. 4.00

APPLY EPOXY REPAIR PAINT TO ENDS OF EXISTING REINFORCEMENT THAT REMAIN EXPOSED AFTER CONCRETE REMOVAL.

City of Milwaukee

Department of Public Works

Infrastructure Services Division

BLOOM COMPANIES, LLC
Infrastructure Innovation and Ingenuity
10501 W. Research Drive • Milwaukee, WI 53226
Phone: (414) 771-3380 Fax: (414) 771-4490

ST PAUL AVE. LIFT BRIDGE
OVER THE MILWAUKEE RIVER
PIER 3
CONCRETE REPAIRS (2 OF 3)

REVISIONS

DESIGNED BY BDT	
DRAWN BY TAL	
CHECKED BY JRS	
DATE FEB 2013	SCALE NTS
JOB NUMBER BR100-10-0106	
SHEET NUMBER S18 OF S60	
OF 198	

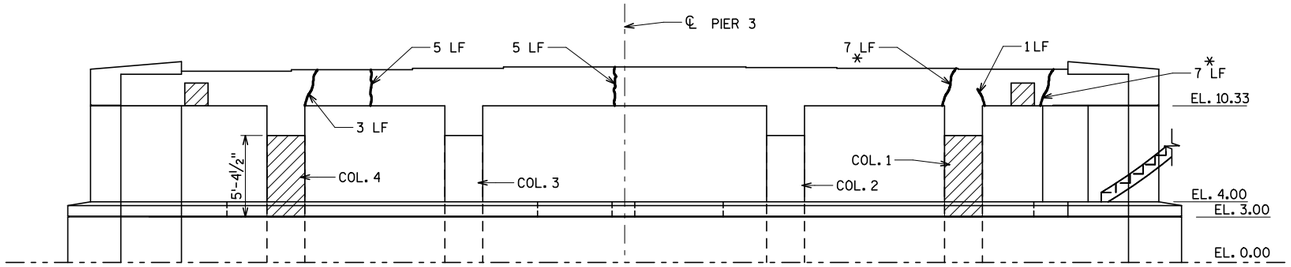

PIER 2 BEAM REPAIR

(LOOKING EAST)

* CRACK ON MULTIPLE FACES.

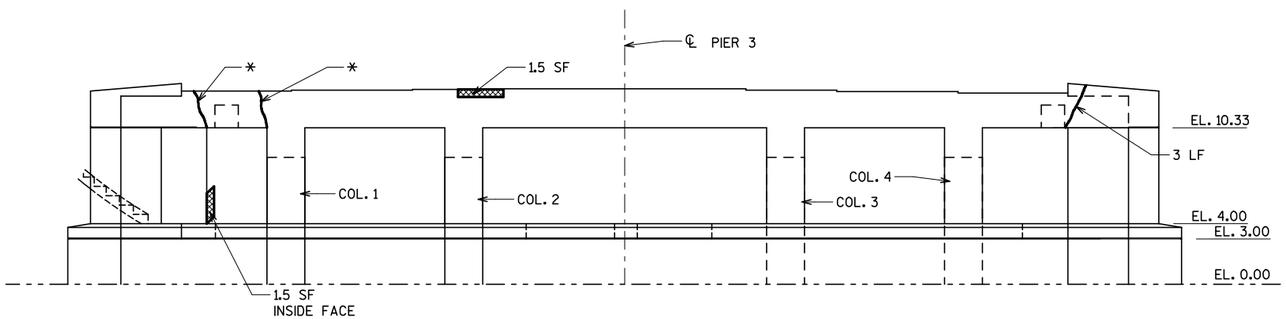

PIER 2 BEAM REPAIR

(LOOKING WEST)

* CRACK ON MULTIPLE FACES.

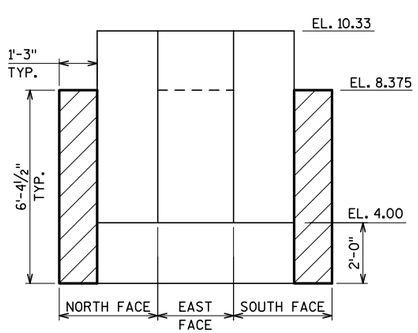

COLUMN 1

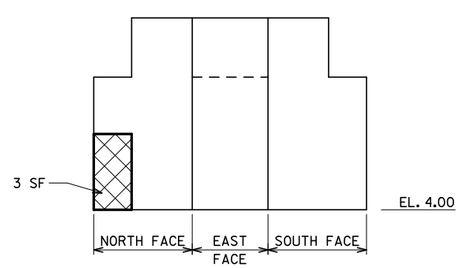

COLUMN 2

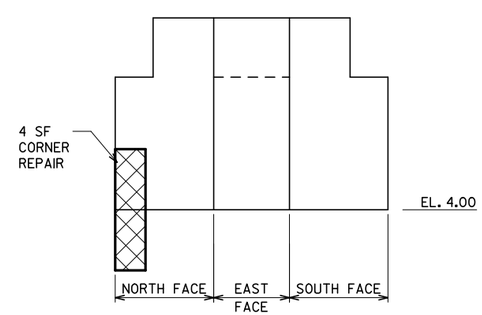

COLUMN 3

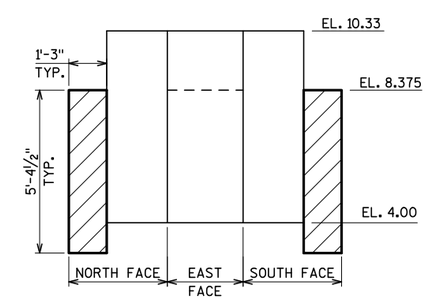

COLUMN 4

NOTES

ALL QUANTITIES SHOWN ON THIS SHEET ARE FOR INFORMATION ONLY.

EXACT LIMITS OF THE CONCRETE SURFACE REPAIR SHALL BE DETERMINED BY THE CONSTRUCTION ENGINEER IN THE FIELD.

EXACT LIMITS OF EPOXY INJECTION SHALL BE DETERMINED BY THE CONSTRUCTION ENGINEER IN THE FIELD.

LIMITS OF CONCRETE SURFACE REPAIR. APPROXIMATE AREA LISTED FOR INFORMATION ONLY.

CRACK FOR EPOXY INJECTION. APPROXIMATE LENGTH LISTED FOR INFORMATION ONLY.

REMOVE CONCRETE AND REINFORCING TO THE LIMITS SHOWN. ◐

PERFORM CONCRETE SURFACE REPAIR ON THE SURFACES EXPOSED BY CONCRETE REMOVAL.

◐ COST OF REMOVAL AND DEBRIS CLEANING INCLUDED IN BID ITEM "REMOVING OLD STRUCTURE OVER WATERWAY WITH MINIMAL DEBRIS".

APPLY EPOXY REPAIR PAINT TO ENDS OF EXISTING REINFORCEMENT THAT REMAIN EXPOSED AFTER CONCRETE REMOVAL.

SEE SHEET S18 FOR CONCRETE STAINING LIMITS.

City of Milwaukee
Department of Public Works
Infrastructure Services Division

BLOOM COMPANIES, LLC
Infrastructure Innovation and Ingenuity
10501 W. Research Drive • Milwaukee, WI 53226
Phone: (414) 771-3380 Fax: (414) 771-4490

ST PAUL AVE. LIFT BRIDGE
OVER THE MILWAUKEE RIVER
PIER 3
CONCRETE REPAIRS (3 OF 3)

REVISIONS

DESIGNED BY BDT	
DRAWN BY TAL	
CHECKED BY JRS	
DATE FEB 2013	SCALE NTS
JOB NUMBER BR100-10-0106	
SHEET NUMBER S19 OF S60	
OF 198	

TOP OF CONCRETE GIRDER SEATS

GIRDER	ELEVATION
C1	12.75
C2	12.81
C3	12.86
C4	12.90
C5	12.90
C6	12.81
C7	12.72
C8	12.62
B1	12.10
B2	12.28
B3	12.25
B4	12.00

ELEVATIONS ARE BASED ON EXISTING PLANS

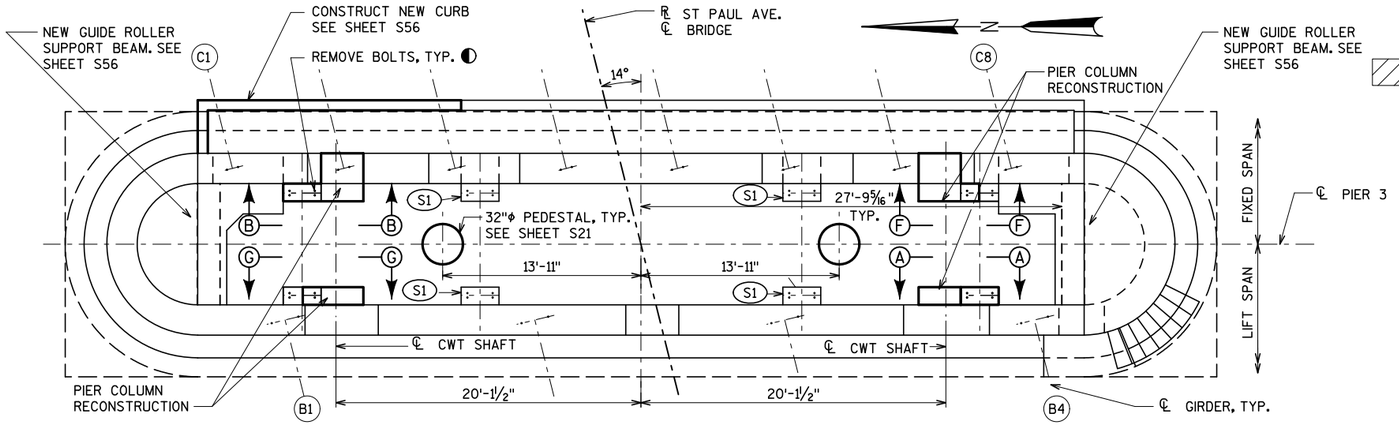

KEY PLAN - PIER 3 COLUMN RECONSTRUCTION

LEGEND

DENOTES LIMITS OF CONCRETE REMOVAL. ◐ SEE SHEET S17 THRU S19.

▲ CONCRETE MASONRY ANCHOR TYPE S. EMBED #4 BARS 5", AND #5 BARS 6" INTO EXISTING CONCRETE. MINIMUM PULLOUT CAPACITY OF 12 KIPS FOR #4 BARS AND 19 KIPS FOR #5 BARS.

◐ COST OF REMOVAL IS INCLUDED IN BID ITEM "REMOVING OLD STRUCTURE OVER WATERWAY WITH MINIMAL DEBRIS".

(S1) CONSTRUCT LEDGE FOR TEMPORARY SUPPORT OF COUNTERWEIGHT. SEE SHEET S56.

NOTES

SEE SHEET S16 FOR VIEW A-A AND B-B.

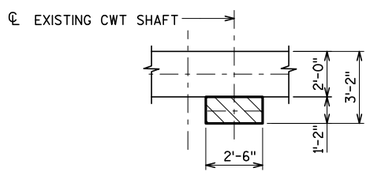

REMOVAL PLAN

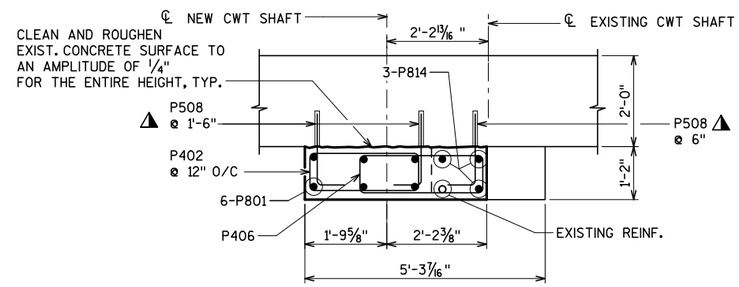

SECTION C-C

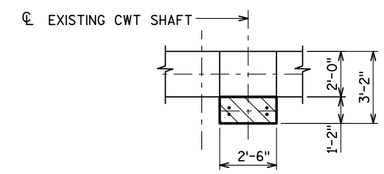

REMOVAL PLAN

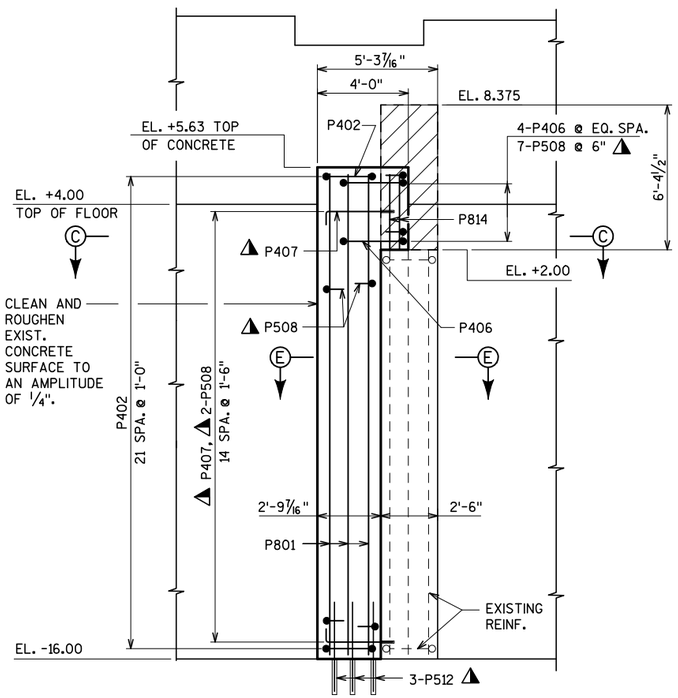

VIEW G-G

REMOVE EXISTING COLUMN TO LIMITS SHOWN. INCORPORATE EXISTING VERTICAL BARS INTO NEW CONSTRUCTION.

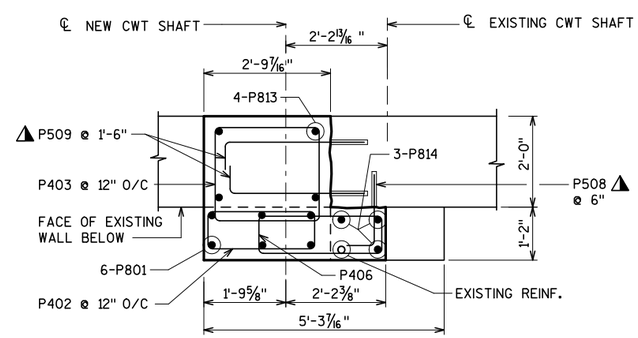

SECTION D-D

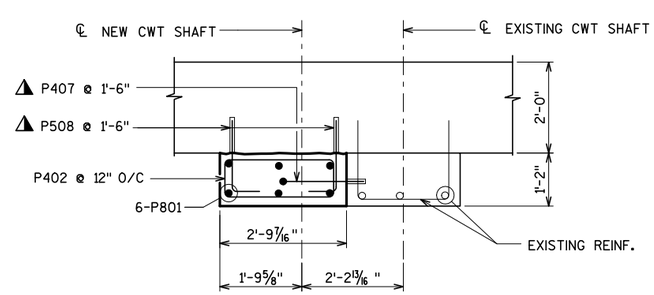

SECTION E-E

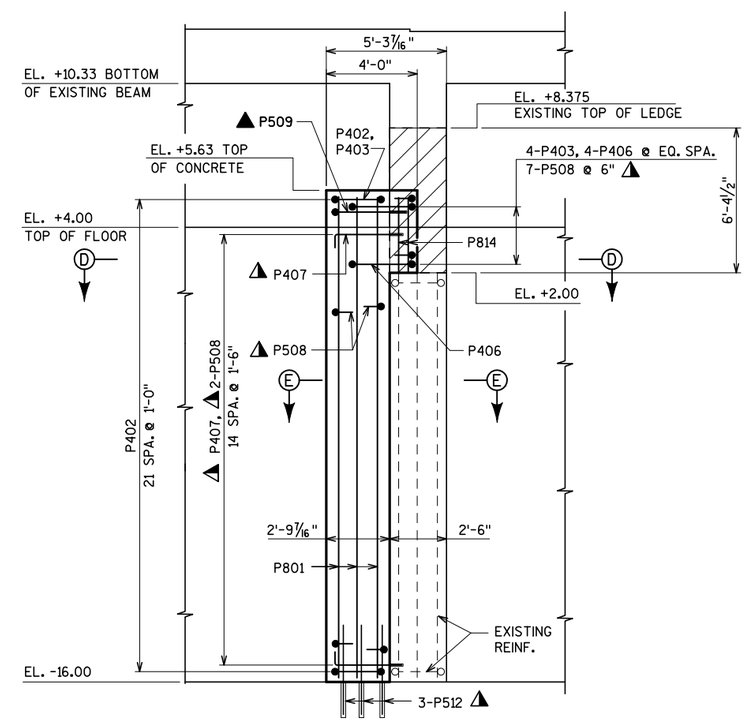

VIEW F-F

REMOVE EXISTING COLUMN TO LIMITS SHOWN. INCORPORATE EXISTING VERTICAL BARS INTO NEW CONSTRUCTION.

City of Milwaukee

Department of Public Works

Infrastructure Services Division

BLOOM COMPANIES, LLC
Infrastructure Innovation and Ingenuity
10501 W. Research Drive • Milwaukee, WI 53226
Phone: (414) 771-3380 Fax: (414) 771-4490

ST PAUL AVE. LIFT BRIDGE OVER THE MILWAUKEE RIVER PIER 3 COLUMN RECONSTRUCTION

REVISIONS

DESIGNED BY BDT	
DRAWN BY TAL	
CHECKED BY JRS	
DATE FEB 2013	SCALE NTS
JOB NUMBER BR100-10-0106	
SHEET NUMBER S20 OF S60	
OF 198	

BILL OF BARS

	BAR MARK	COAT	NO.	LENGTH	BENT	BAR SERIES	LOCATION
	P801	X	48	21'-3"	-	-	PIER-VERTICAL
	P402	X	176	7'-0"	X	-	PIER-TIES
	P403	X	14	9'-10"	X	-	PIER-STIRRUPS
	P804	X	12	2'-3"	-	-	PIER-VERTICAL
	P805	X	18	2'-3"	-	-	PIER-VERTICAL
	P406	X	26	9'-8"	X	-	PIER-HORIZONTAL
◭	P407	X	120	2'-2"	X	-	PIER-HORIZONTAL
◭	P508	X	293	1'-11"	X	-	PIER-HORIZONTAL
◭	P509	X	28	3'-6"	X	-	PIER-HORIZONTAL
◐	P810	X	32	6'-6"	-	-	PIER VERTICAL, HYDR. CYLINDER PEDESTAL
	P411	X	24	8'-4"	X	-	HOOPS, HYDR. CYLINDER PEDESTAL
	P512	X	24	3'-0"	-	-	PIER VERTICAL
◭	P813	X	4	3'-3"	-	-	PIER VERTICAL PIER 3
◭	P814	X	6	3'-3"	-	-	PIER VERTICAL PIER 3
	G601	X	40	7'-10"	-	-	GUIDE ROLLER SUPPORT BEAM, HORIZ.
◭	G602	X	80	4'-0"	-	-	GUIDE ROLLER SUPPORT BEAM, HORIZ.
	G403	X	64	5'-2"	-	-	GUIDE ROLLER SUPPORT BEAM, STIRRUPS
◭	G604	X	24	2'-0"	-	-	TEMP. SUPPORT FOR COUNTERWEIGHT, HORIZ.
◭	G505	X	16	3'-0"	-	-	TEMP. SUPPORT FOR COUNTERWEIGHT, HORIZ.
	G406	X	3	17'-0"	-	-	CURB, PIER 3, HORIZ.
◭	G407	X	21	1'-3"	-	-	CURB, PIER 3, VERTICAL
	G408	X	3	3'-2"	-	-	CURB, PIER 3, HORIZ.

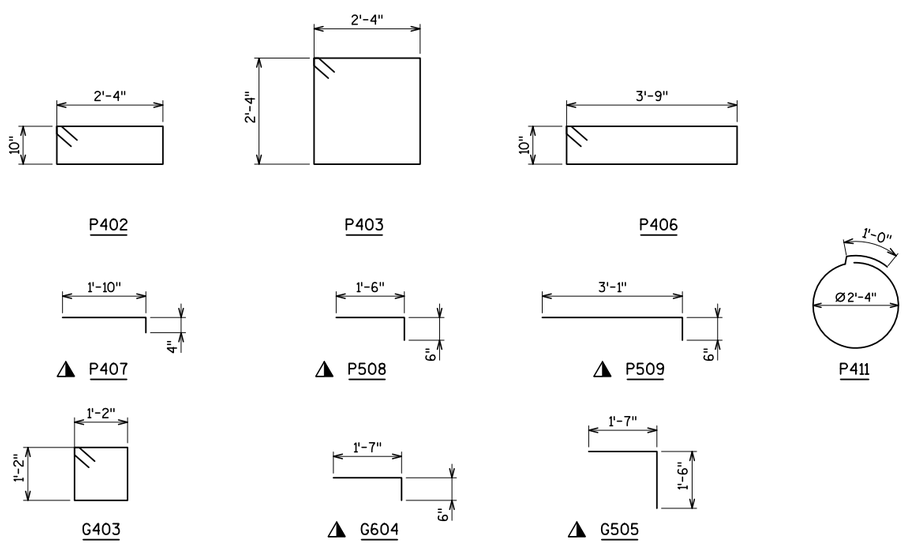

BENDING DIAGRAMS

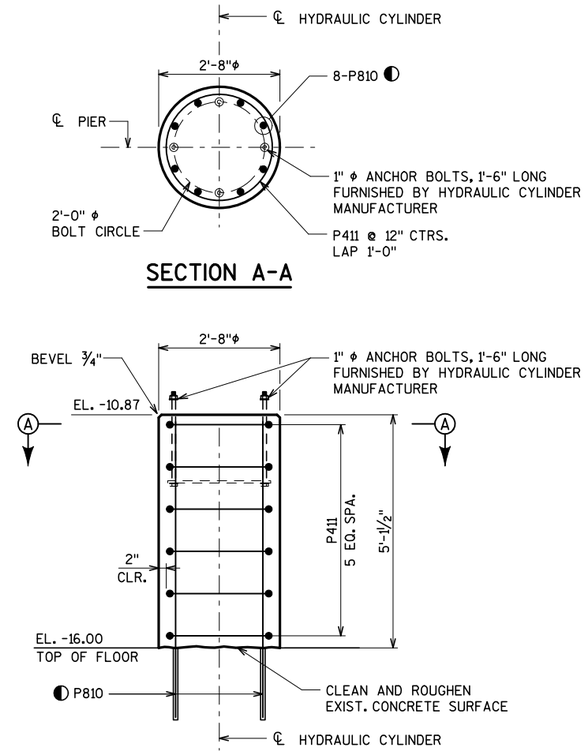

HYDRAULIC CYLINDER PEDESTAL DETAIL

FOR HYDRAULIC CYLINDER PEDESTAL LOCATIONS SEE PIER PLANS

LEGEND

◭ CONCRETE MASONRY ANCHOR TYPE S. EMBED #4 BARS 5", #5 BARS 6", AND #6 BARS 7 INCHES INTO EXISTING CONCRETE. MINIMUM PULLOUT CAPACITY OF 12 KIPS FOR #4 BARS, 19 KIPS FOR #5 BARS, AND 26 KIPS FOR #6 BARS.

◐ CONCRETE MASONRY ANCHOR TYPE L. EMBED #8 BARS 19" INTO EXISTING CONCRETE. MINIMUM PULLOUT CAPACITY OF 33 KIPS.

City of Milwaukee

Department of Public Works

Infrastructure Services Division

BLOOM COMPANIES, LLC
Infrastructure Innovation and Ingenuity
10501 W. Research Drive • Milwaukee, WI 53226
Phone: (414) 771-3380 • Fax: (414) 771-4490

ST PAUL AVE. LIFT BRIDGE
OVER THE MILWAUKEE RIVER
PIER BILL OF BARS

REVISIONS

DESIGNED BY BDT
DRAWN BY TAL
CHECKED BY JRS
DATE FEB 2013
SCALE NTS
JOB NUMBER BR100-10-0106
SHEET NUMBER S21 OF S60
OF 198

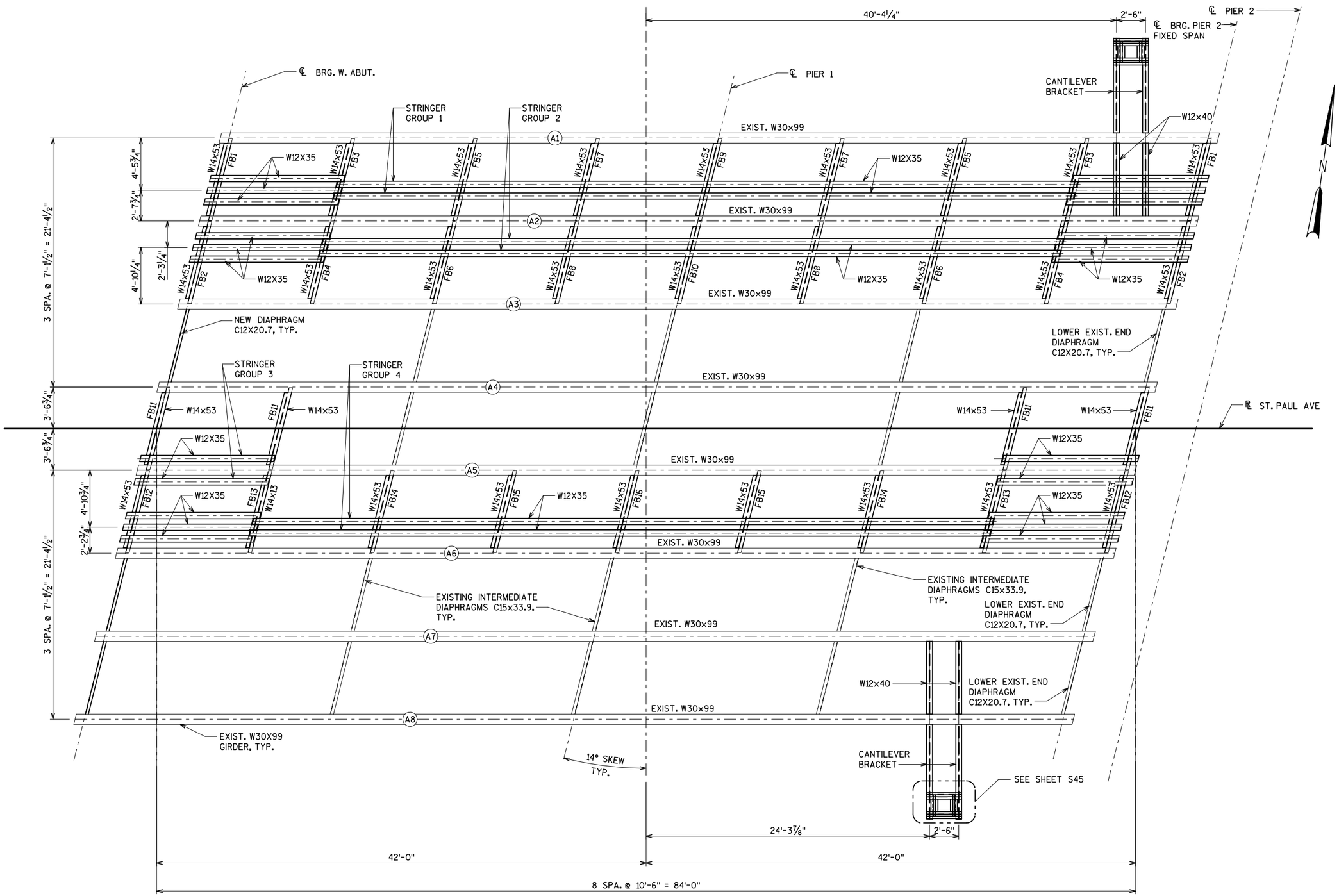

WEST FIXED SPAN FRAMING PLAN

NOTES

ALL EXISTING STEEL IS AASHTO GRADE 36.

ALL NEW STRUCTURAL STEEL SHALL BE AASHTO M270 GRADE 50.
FILL PLATES AND SHIM PLATES MAY BE GRADE 36.

City of Milwaukee

Department of Public Works

Infrastructure Services Division

BLOOM COMPANIES, LLC
Infrastructure Innovation and Ingenuity
10501 W. Research Drive • Milwaukee, WI 53226
Phone: (414) 771-3380 • Fax: (414) 771-4490

ST PAUL AVE. LIFT BRIDGE
OVER THE MILWAUKEE RIVER
WEST FIXED SPAN
FRAMING PLAN

REVISIONS

DESIGNED BY BDT	
DRAWN BY TAL	
CHECKED BY JRS	
DATE FEB 2013	SCALE NTS
JOB NUMBER BR100-10-0106	
SHEET NUMBER S22 OF S60	
OF 198	

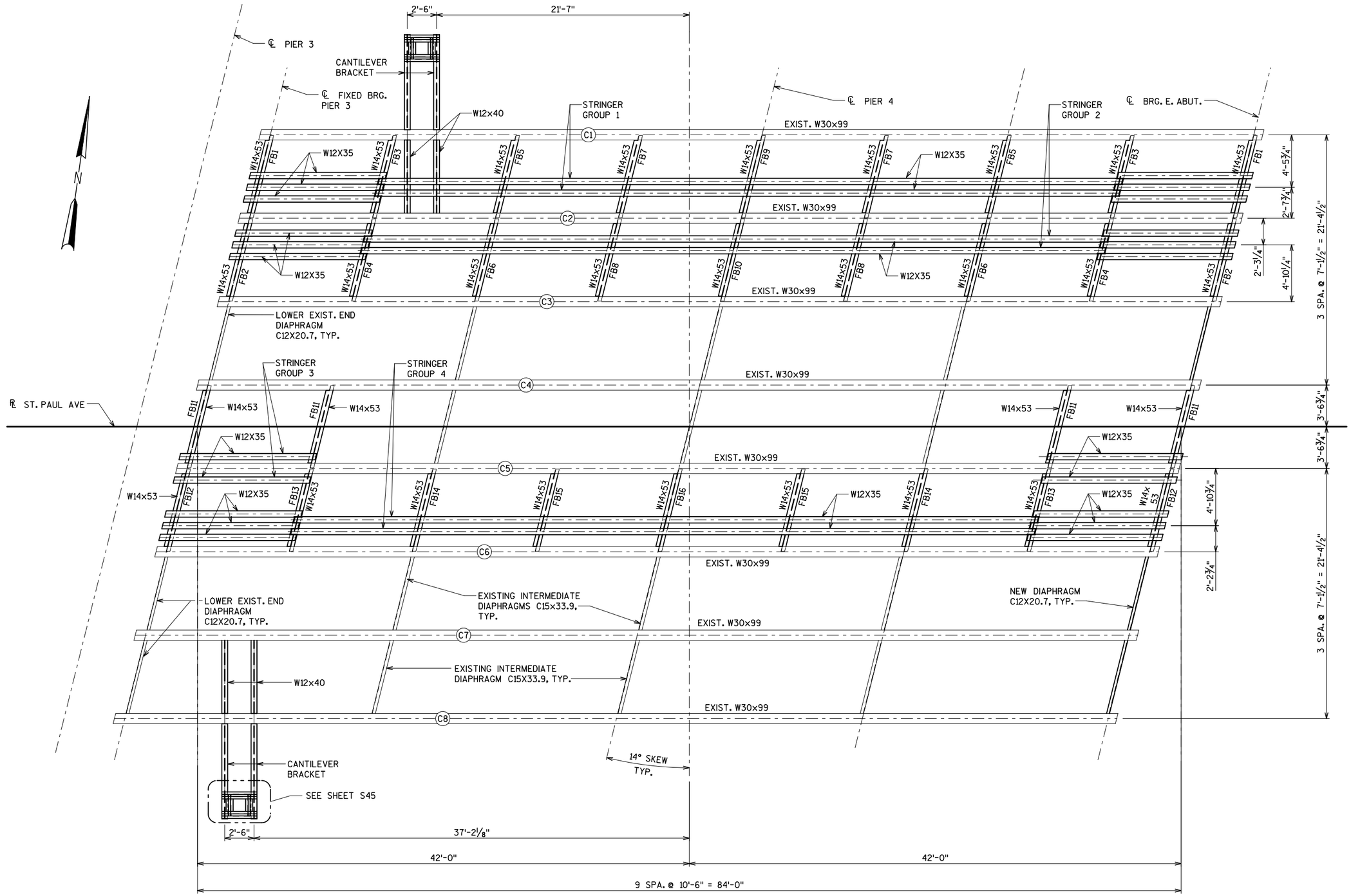

EAST FIXED SPAN FRAMING PLAN

NOTES

ALL EXISTING STEEL IS AASHTO GRADE 36.

ALL NEW STRUCTURAL STEEL SHALL BE AASHTO M270 GRADE 50.
FILL PLATES AND SHIM PLATES MAY BE GRADE 36.

City of Milwaukee

Department of Public Works

Infrastructure Services Division

BLOOM COMPANIES, LLC
Infrastructure Innovation and Ingenuity
10501 W. Research Drive • Milwaukee, WI 53226
Phone: (414) 771-3380 Fax: (414) 771-4490

ST PAUL AVE. LIFT BRIDGE
OVER THE MILWAUKEE RIVER
EAST FIXED SPAN
FRAMING PLAN

REVISIONS

DESIGNED BY BDT	
DRAWN BY TAL	
CHECKED BY JRS	
DATE FEB 2013	SCALE NTS
JOB NUMBER BR100-10-0106	
SHEET NUMBER S23 OF S60	
OF 198	

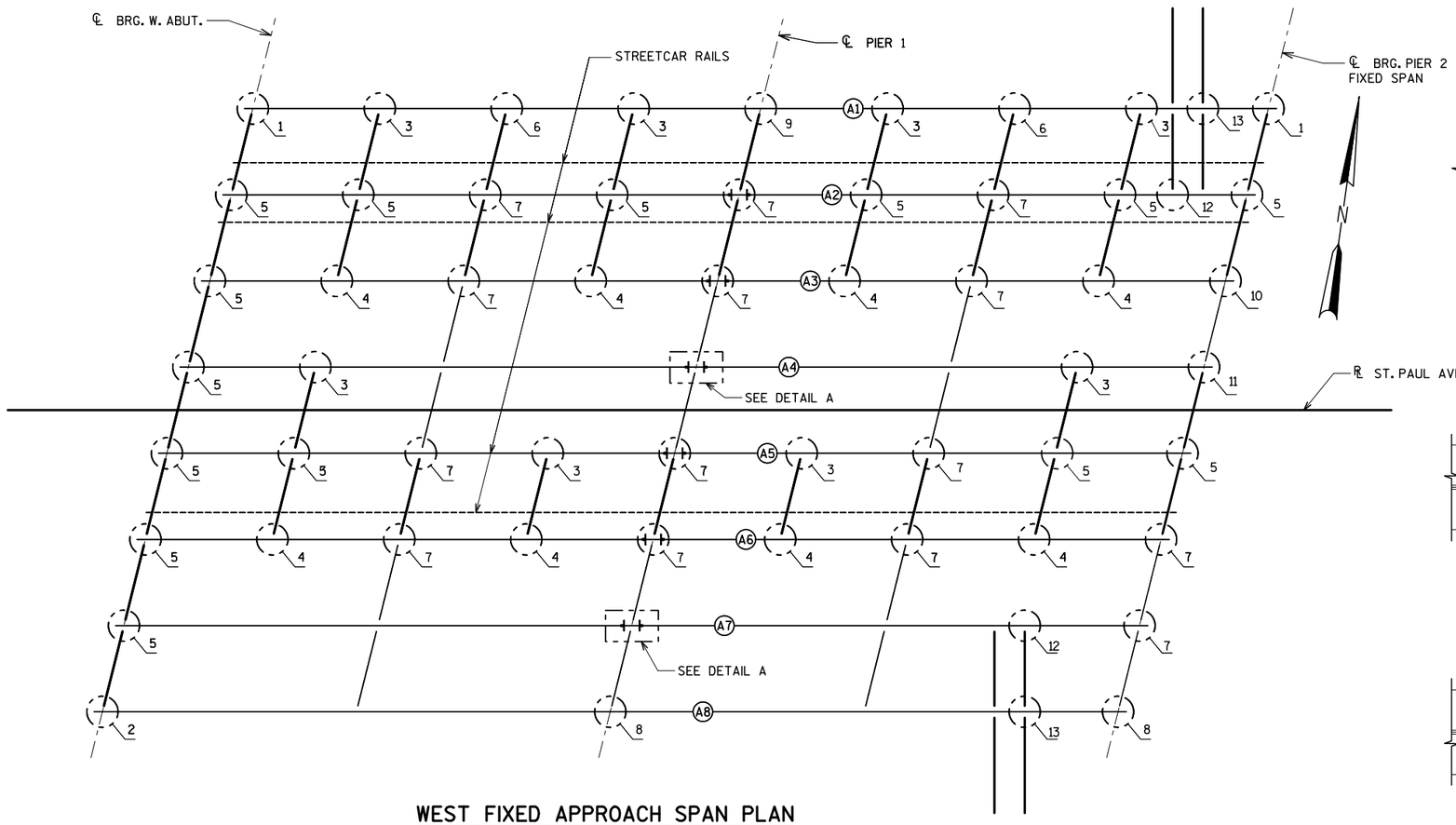

WEST FIXED APPROACH SPAN PLAN

(STRINGERS NOT SHOWN FOR CLARITY)

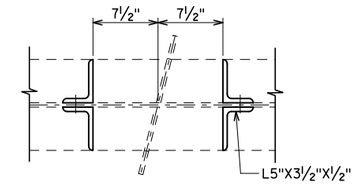

DETAIL A

ADDITIONAL STIFFENERS REQUIRED AT ALL INTERIOR GIRDERS ABOVE PIER 1.

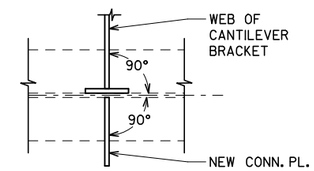

DETAIL 13

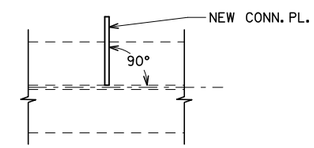

DETAIL 12

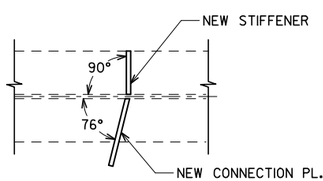

DETAIL 1

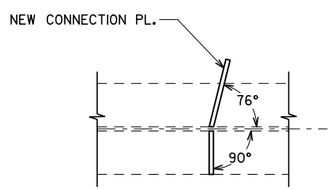

DETAIL 2

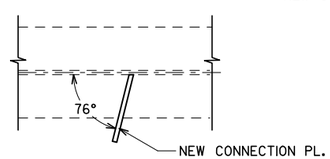

DETAIL 3

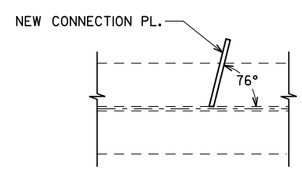

DETAIL 4

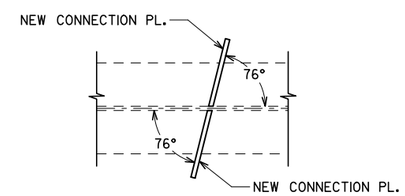

DETAIL 5

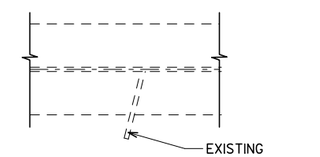

DETAIL 6

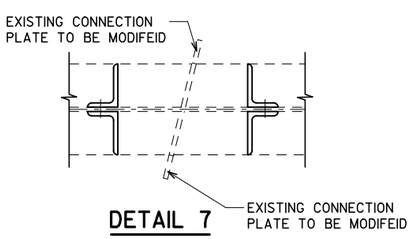

DETAIL 7

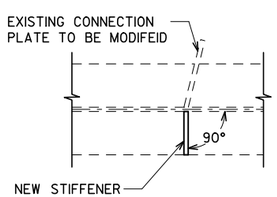

DETAIL 8

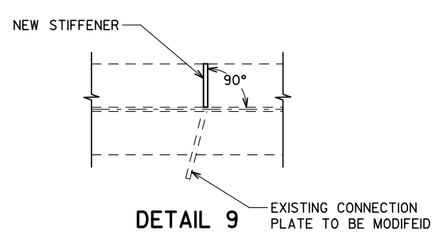

DETAIL 9

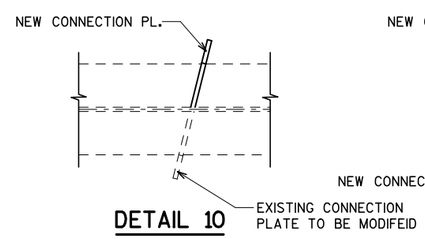

DETAIL 10

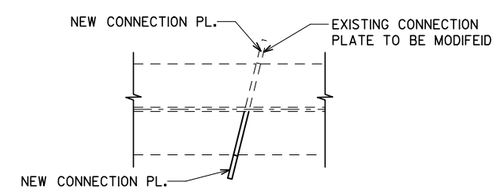

DETAIL 11

NOTE: SEE SHEETS S26 AND S27 FOR MORE DETAILS.

City of Milwaukee

Department of Public Works

Infrastructure Services Division

BLOOM COMPANIES, LLC
Infrastructure Innovation and Ingenuity
10501 W. Research Drive • Milwaukee, WI 53226
Phone: (414) 771-3380 Fax: (414) 771-4490

ST PAUL AVE. LIFT BRIDGE
OVER THE MILWAUKEE RIVER
WEST FIXED SPANS
GIRDER REPAIRS

REVISIONS

DESIGNED BY BDT	
DRAWN BY TAL	
CHECKED BY JRS	
DATE FEB 2013	SCALE NTS
JOB NUMBER BR100-10-0106	
SHEET NUMBER S24 OF S60	
OF 198	

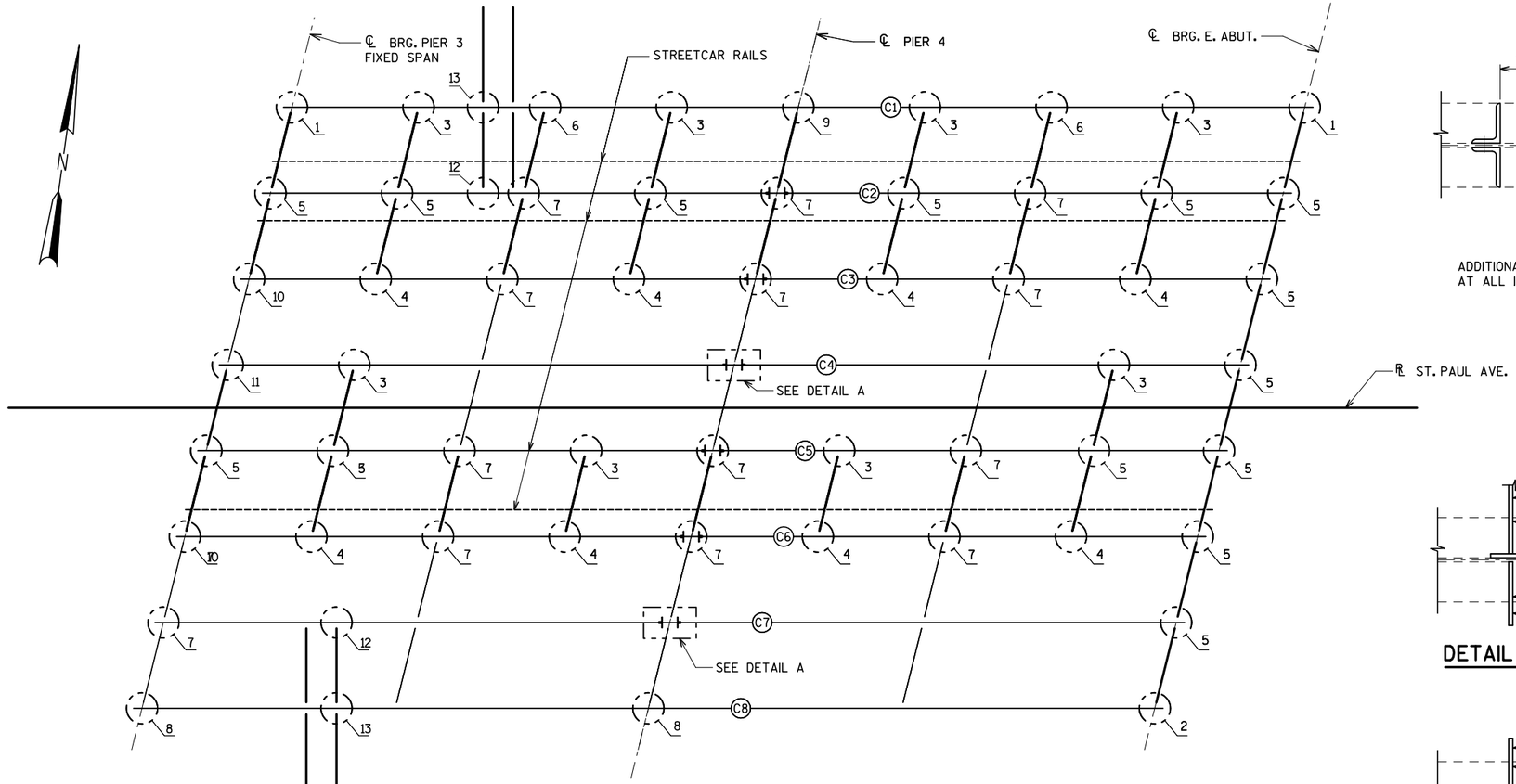

EAST FIXED APPROACH SPAN PLAN

(STRINGERS NOT SHOWN FOR CLARITY)

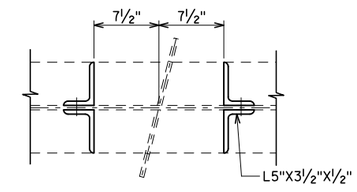

DETAIL A

ADDITIONAL STIFFENERS REQUIRED AT ALL INTERIOR GIRDERS ABOVE PIER 4.

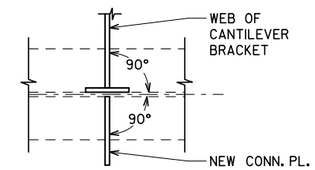

DETAIL 13

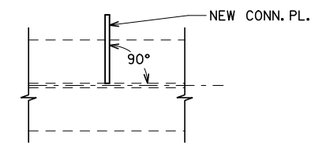

DETAIL 12

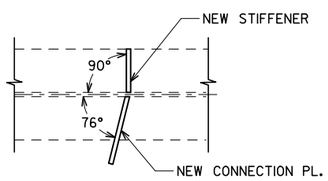

DETAIL 1

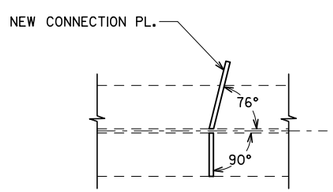

DETAIL 2

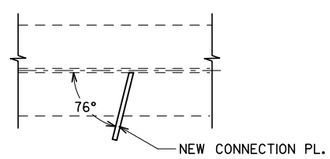

DETAIL 3

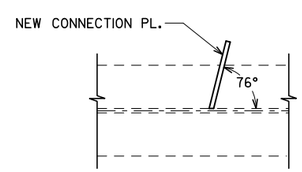

DETAIL 4

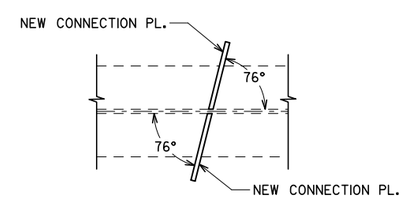

DETAIL 5

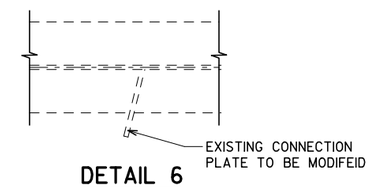

DETAIL 6

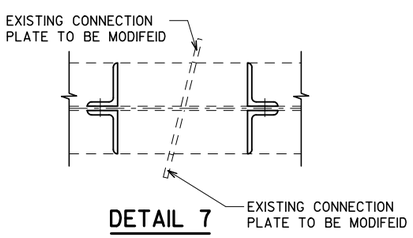

DETAIL 7

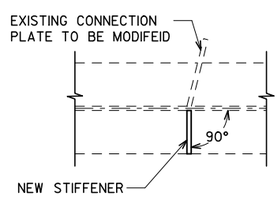

DETAIL 8

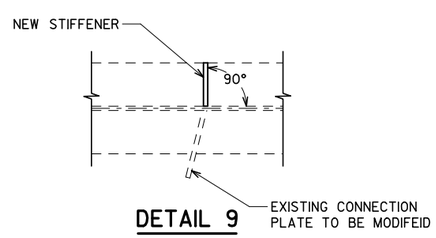

DETAIL 9

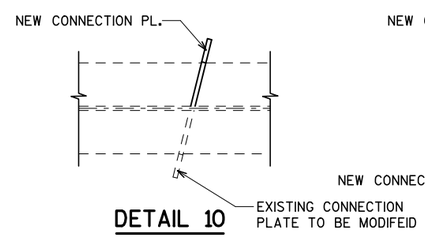

DETAIL 10

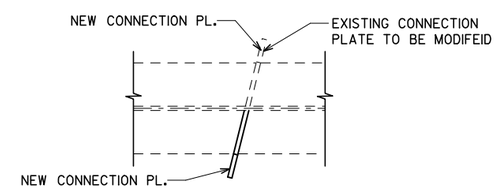

DETAIL 11

NOTE: SEE SHEETS S26 AND S27 FOR MORE DETAILS.

City of Milwaukee

Department of Public Works

Infrastructure Services Division

BLOOM COMPANIES, LLC
Infrastructure Innovation and Ingenuity
10501 W. Research Drive • Milwaukee, WI 53226
Phone: (414) 771-3380 Fax: (414) 771-4490

ST PAUL AVE. LIFT BRIDGE
OVER THE MILWAUKEE RIVER
EAST FIXED SPANS
GIRDER REPAIRS

REVISIONS

DESIGNED BY BDT	
DRAWN BY TAL	
CHECKED BY JRS	
DATE FEB 2013	SCALE NTS
JOB NUMBER BR100-10-0106	
SHEET NUMBER S25 OF S60	
OF 198	

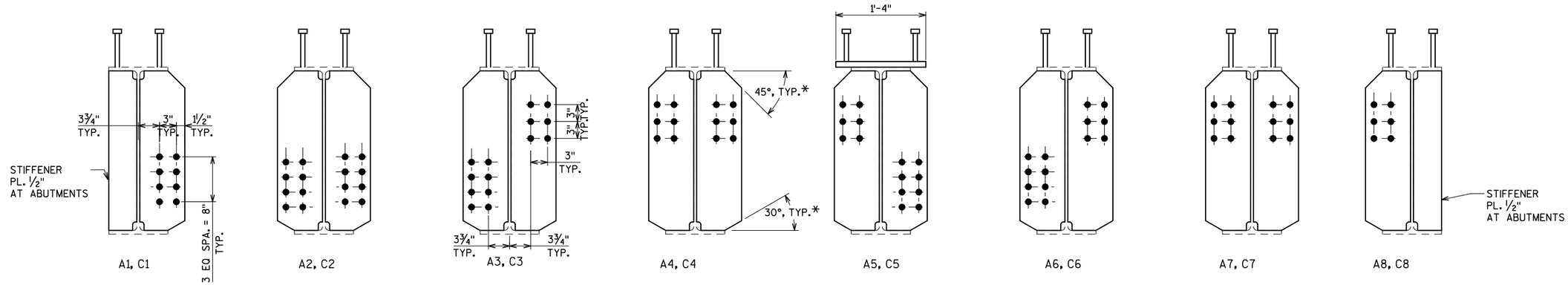

STIFFENERS AND CONNECTION PLATES AT ABUTMENTS (A1)

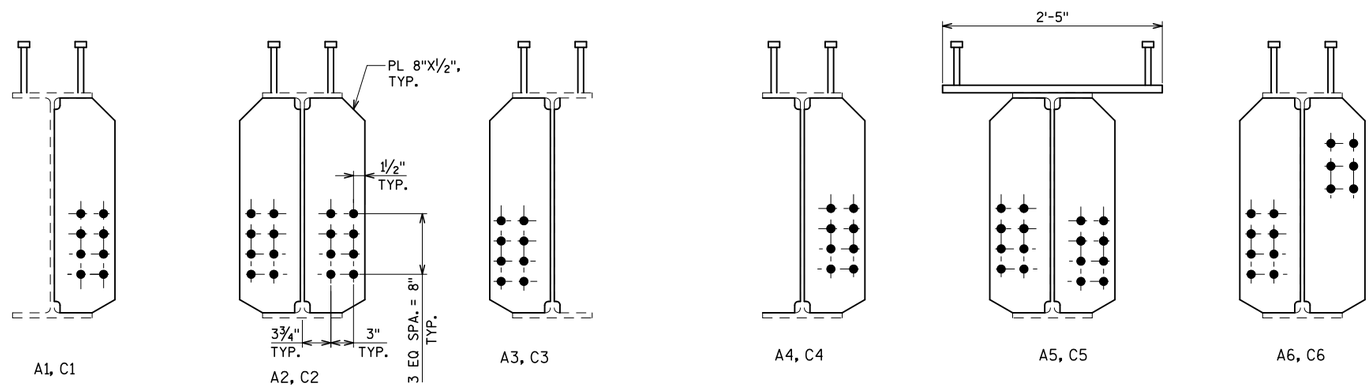

CONNECTION PLATES AT 0.25 OF SPANS 1, 4 AND 0.75 OF SPANS 2, 5

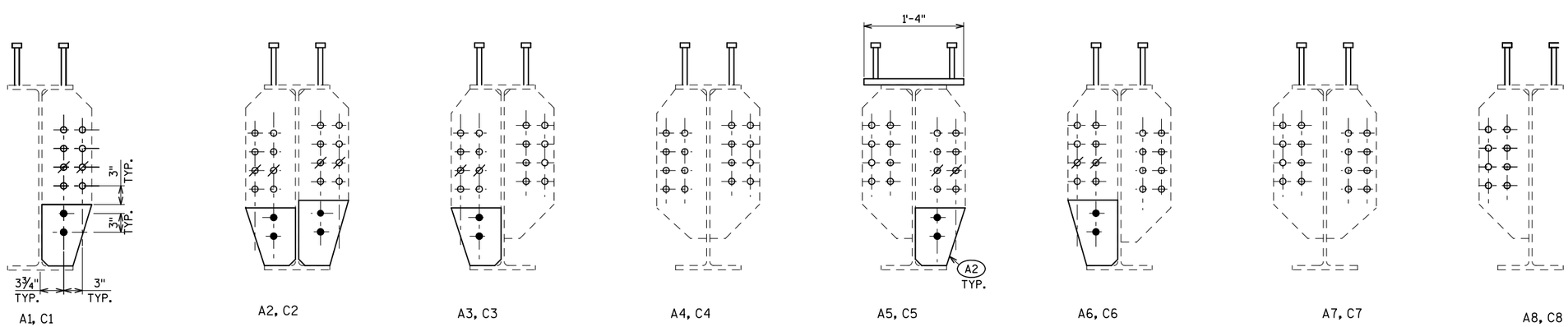

CONNECTION PLATES AT 0.5 SPAN

NOTE

COORDINATE ALL NEW HOLES LOCATION WITH HOLES IN FLOOR BEAMS AND DIAPHRAGMS.

COST OF REMOVING EXISTING STIFFENERS IS INCIDENTAL TO BID ITEM "BRIDGE STRUCTURAL STEEL".

STIFFENERS WELDED TO EXISTING GIRDERS NEED NOT BE GALVANIZED.

LEGEND

* - TYPICAL CHAMFERS FOR ALL NEW CONNECTION PLATES

● NEW HOLES FOR 7/8" ϕ GALV. A325 BOLTS

○ EXISTING HOLES USED FOR NEW CONNECTION (7/8"ϕ BOLTS)

⌀ EXISTING HOLES NOT USED. CLOSE WITH GALV. A325 BOLTS. CAULK AND FILL THE OPENING WHERE IT IS NOT POSSIBLE TO PLACE BOLTS.

(A1) REMOVE ALL EXISTING STIFFENERS AT ABUTMENT, GRIND THE SURFACE SMOOTH AND WELD NEW STIFFENERS.

(A2) REMOVE PART OF EXISTING PARTIAL DEPTH STIFFENER AND GRIND THE SURFACE SMOOTH. WELD NEW STIFFENERS AS SHOWN.

City of Milwaukee

Department of Public Works

Infrastructure Services Division

BLOOM COMPANIES, LLC
Infrastructure Innovation and Ingenuity
10501 W. Research Drive • Milwaukee, WI 53226
Phone: (414) 771-3380 Fax: (414) 771-4490

ST PAUL AVE. LIFT BRIDGE
OVER THE MILWAUKEE RIVER
FIXED SPAN GIRDERS
REPAIR DETAILS (1 OF 2)

REVISIONS

DESIGNED BY BDT	
DRAWN BY TAL	
CHECKED BY JRS	
DATE FEB 2013	SCALE NTS
JOB NUMBER BR100-10-0106	
SHEET NUMBER S26 OF S60	
OF 198	

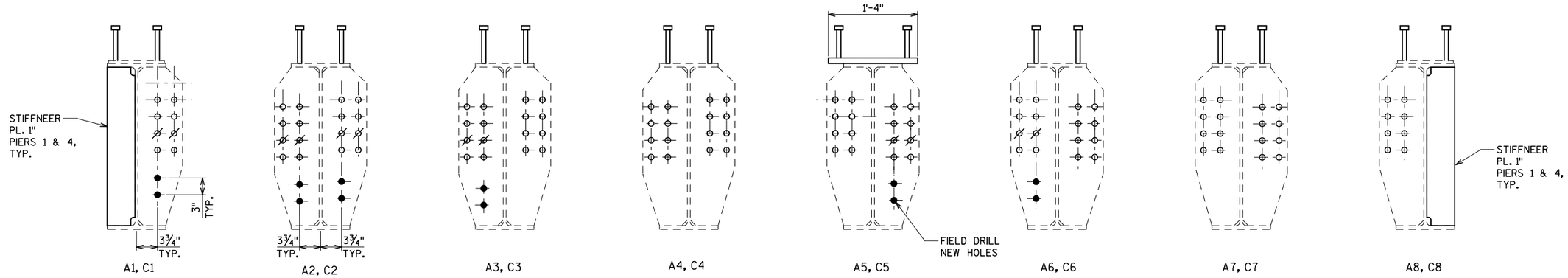

STIFFENERS AND CONNECTION PLATES AT PIERS 1, 4

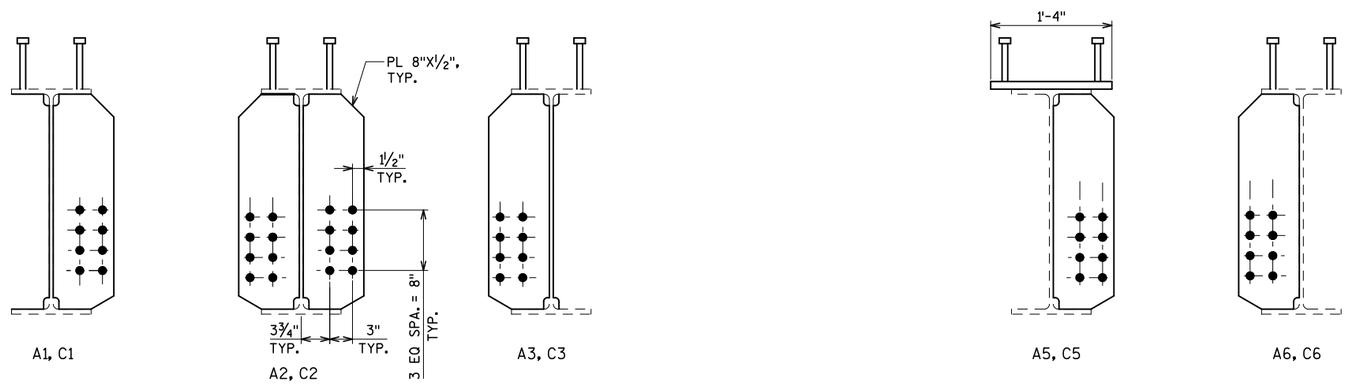

CONNECTION PLATES AT 0.75 OF SPANS 1, 4 AND 0.25 OF SPANS 2, 5

NOTE

COORDINATE ALL NEW HOLES LOCATION WITH HOLES IN FLOOR BEAMS AND DIAPHRAGMS.

COST OF REMOVING EXISTING STIFFENERS IS INCIDENTAL TO BID ITEM "BRIDGE STRUCTURAL STEEL". GRIND SMOOTH THE GIRDER WEB BEFORE WELDING NEW STIFFENERS.

STIFFENERS WELDED TO EXISTING GIRDERS NEED NOT BE GALVANIZED.

LEGEND

* - TYPICAL CHAMFERS FOR ALL NEW CONNECTION PLATES

● NEW HOLES FOR ⅞"Φ GALV. A325 BOLTS

○ EXISTING HOLES USED FOR NEW CONNECTION (7/8"Φ BOLTS)

⌀ EXISTING HOLES NOT USED. CLOSE WITH GALV. A325 BOLTS. CAULK AND FILL THE OPENING WHERE IT IS NOT POSSIBLE TO PLACE BOLTS.

(A1) REMOVE ALL EXISTING STIFFENERS AT ALL LOCATIONS WHERE NEW STIFFENER IS SHOWN. THERE IS NO EXISTING EXTERIOR STIFFENER FOR EXTERIOR BEAMS.

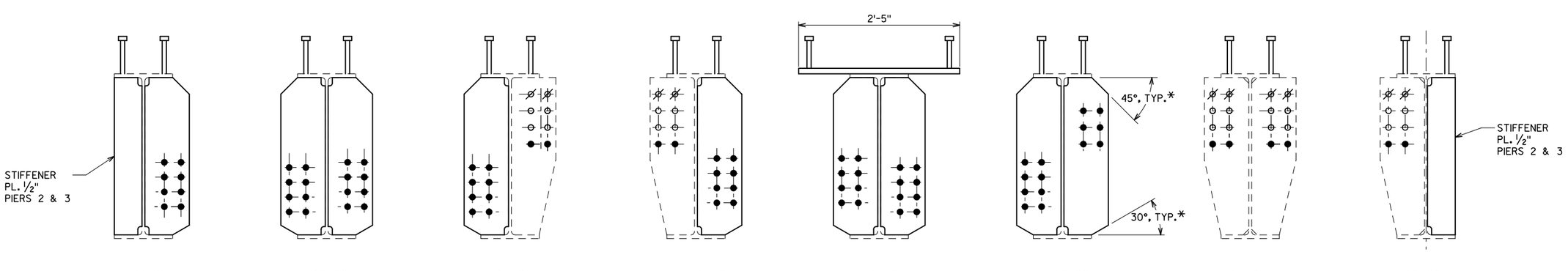

STIFFENERS AND CONNECTION PLATES AT PIERS 2, 3 (A1)

City of Milwaukee

Department of Public Works

Infrastructure Services Division

BLOOM COMPANIES, LLC
Infrastructure Innovation and Ingenuity
10501 W. Research Drive • Milwaukee, WI 53226
Phone: (414) 771-3380 Fax: (414) 771-4490

ST PAUL AVE. LIFT BRIDGE
OVER THE MILWAUKEE RIVER
FIXED SPAN GIRDERS
REPAIR DETAILS (2 OF 2)

REVISIONS

DESIGNED BY BDT	
DRAWN BY TAL	
CHECKED BY JRS	
DATE FEB 2013	SCALE NTS
JOB NUMBER BR100-10-0106	
SHEET NUMBER S27 OF S60	
OF 198	

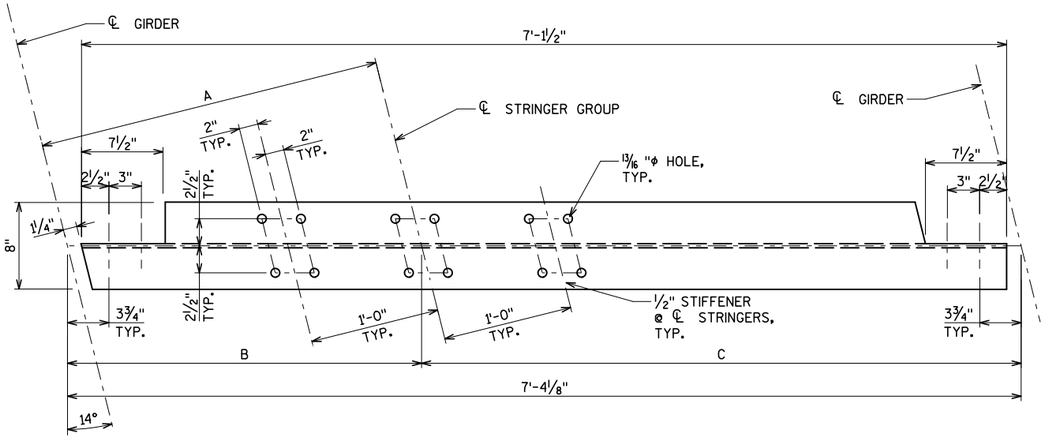

FLOORBEAM PLAN

(FLOORBEAM FB1, FB2)

DIMENSIONS	FLOORBEAM	
	FB1	FB2
A	2'-7¾"	4'-10¼"
B	2'-8¾"	5'-0 1/16"
C	4'-7⅜"	2'-4 1/16"

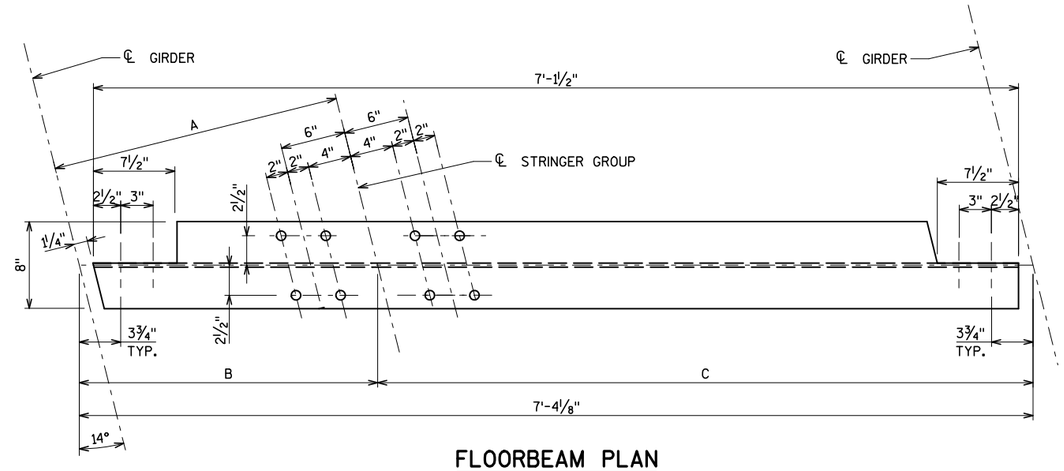

FLOORBEAM PLAN

(FLOORBEAMS FB5-10, 14-16)

DIMENSIONS	FLOORBEAM		
	FB5, FB7, FB9	FB6, FB8, FB10	FB14, FB15, FB16
A	2'-7¾"	4'-10¼"	2'-2¾"
B	2'-8¾"	5'-0 1/16"	2'-3 9/16"
C	4'-7⅜"	2'-4 1/16"	5'-0 9/16"

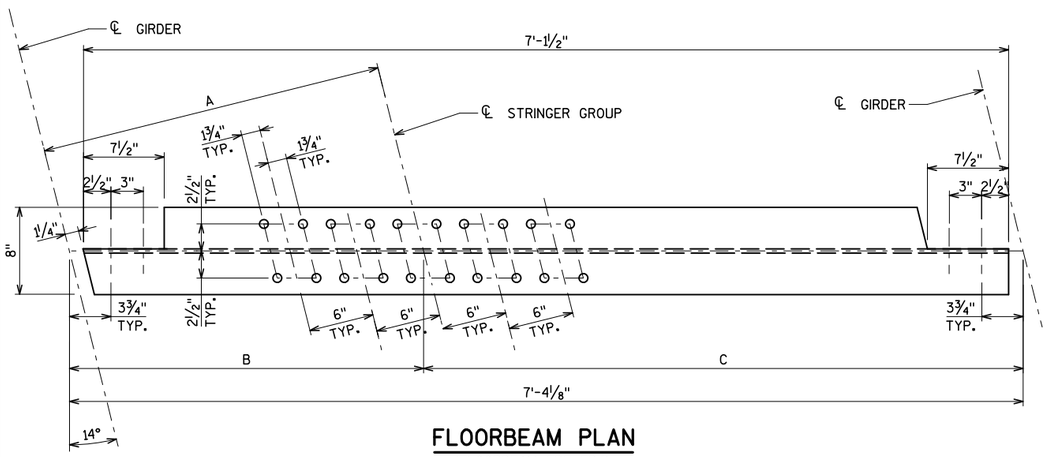

FLOORBEAM PLAN

(FLOORBEAM FB3, FB4)

DIMENSIONS	FLOORBEAM	
	FB3	FB4
A	2'-7¾"	4'-10¼"
B	2'-8¾"	5'-0 1/16"
C	4'-7⅜"	2'-4 1/16"

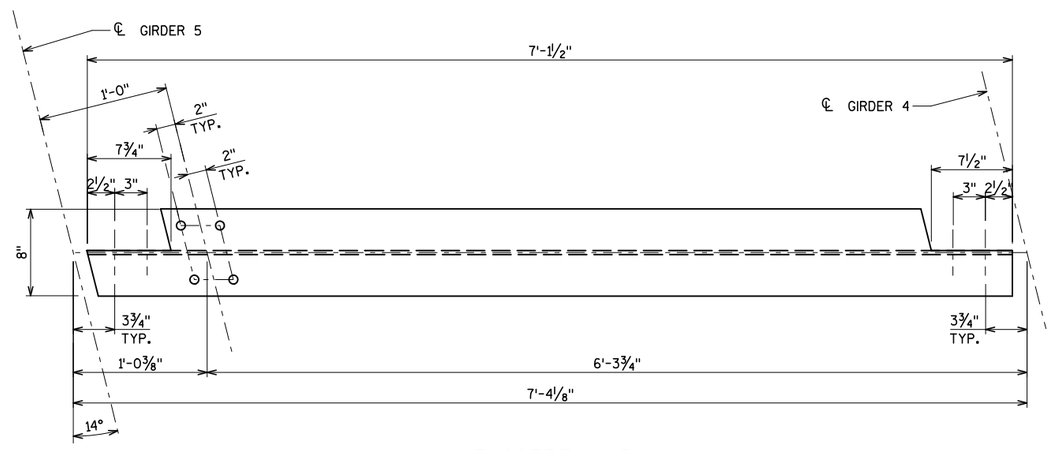

FLOORBEAM PLAN

(FLOORBEAM FB11)

NOTE

13/16 "ϕ HOLES IN TOP FLANGE, TYP.

15/16 "ϕ HOLES IN THE WEB, TYP.

GRIND THE FLANGE-WEB FILLET FLUSH WITH THE WEB AT FLOORBEAM END COPINGS.

City of Milwaukee

Department of Public Works

Infrastructure Services Division

BLOOM COMPANIES, LLC
Infrastructure Innovation and Ingenuity
10501 W. Research Drive • Milwaukee, WI 53226
Phone: (414) 771-3380 Fax: (414) 771-4490

ST PAUL AVE. LIFT BRIDGE
OVER THE MILWAUKEE RIVER
FIXED SPAN FLOORBEAMS
AND DIAPHRAGMS (1 OF 2)

REVISIONS

DESIGNED BY BDT
DRAWN BY TAL
CHECKED BY JRS
DATE FEB 2013
SCALE NTS
JOB NUMBER BR100-10-0106
SHEET NUMBER S28 OF S60
OF 198

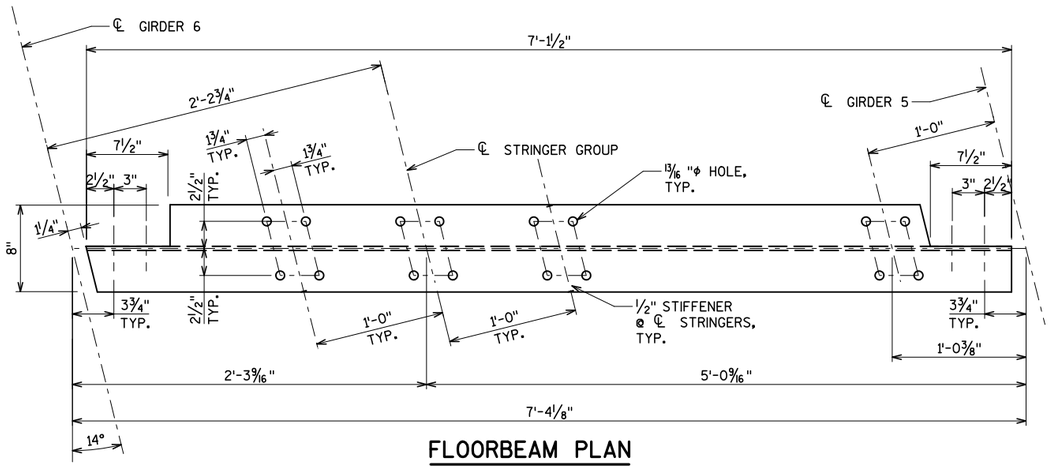

FLOORBEAM PLAN

(FLOORBEAM FB12)

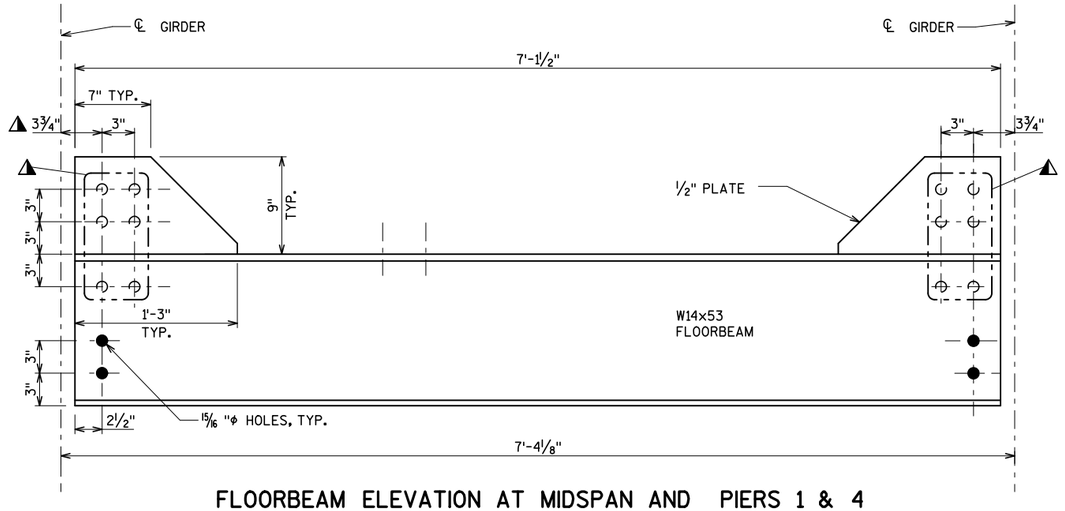

FLOORBEAM ELEVATION AT MIDSPAN AND PIERS 1 & 4

▲ LOCATION OF THESE HOLES TO BE VERIFIED.
HOLES TO BE DRILLED IN THE FIELD TO MATCH EXISTING HOLE LOCATIONS IN CONNECTION PLATE.

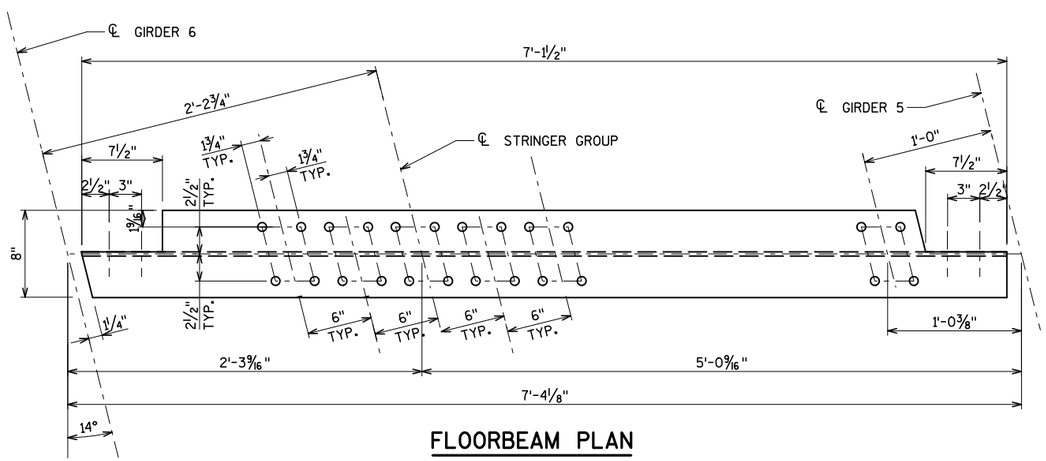

FLOORBEAM PLAN

(FLOORBEAM FB13)

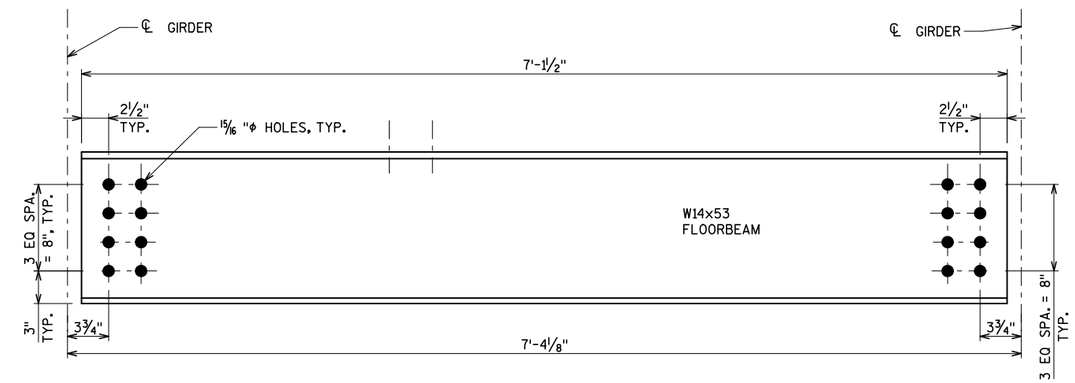

FLOORBEAM ELEVATION AT ABUTMENTS, 0.25 & 0.75 SPAN, AND PIERS 2 & 3

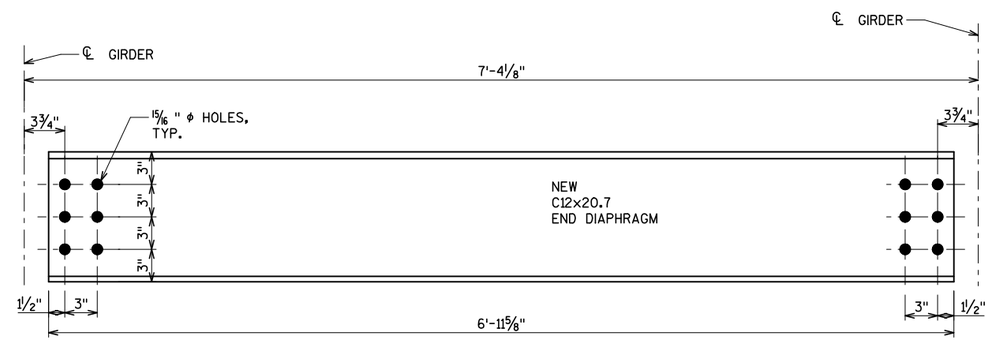

DIAPHRAGMS AT ABUTMENTS

C12X20.7 TO REPLACE EXISTING END DIAPHRAGMS

NOTE

13/16 "ϕ HOLE IN TOP FLANGE, TYP.

15/16 "ϕ HOLES IN THE WEB, TYP.

GRIND THE FLANGE-WEB FILLET FLUSH WITH THE WEB AT FLOORBEAM END COPINGS.

City of Milwaukee

Department of Public Works

Infrastructure Services Division

BLOOM COMPANIES, LLC
Infrastructure Innovation and Ingenuity
10501 W. Research Drive • Milwaukee, WI 53226
Phone: (414) 771-3380 Fax: (414) 771-4490

ST PAUL AVE. LIFT BRIDGE OVER THE MILWAUKEE RIVER
FIXED SPAN FLOORBEAMS AND DIAPHRAGMS (2 OF 2)

REVISIONS

DESIGNED BY BDT	
DRAWN BY TAL	
CHECKED BY JRS	
DATE FEB 2013	SCALE NTS
JOB NUMBER BR100-10-0106	
SHEET NUMBER S29 OF S60	
OF 198	

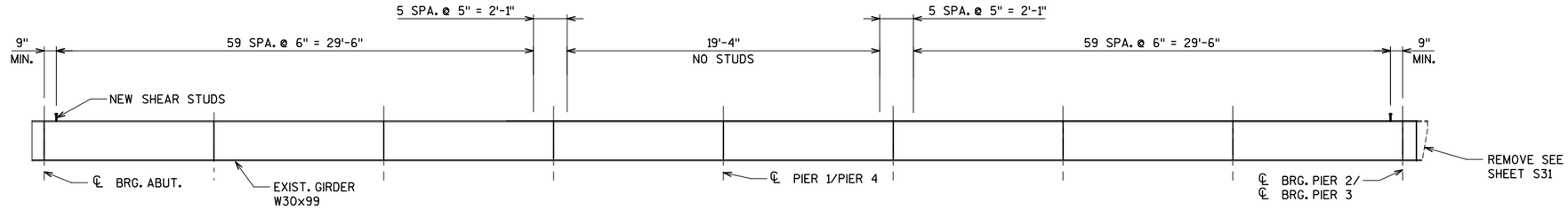

GIRDER ELEVATION - SHEAR CONNECTORS

(APPROACH SPAN INTERIOR GIRDERS)

☒ 6" MAX IS TO THE EDGE OF COVER PLATE.

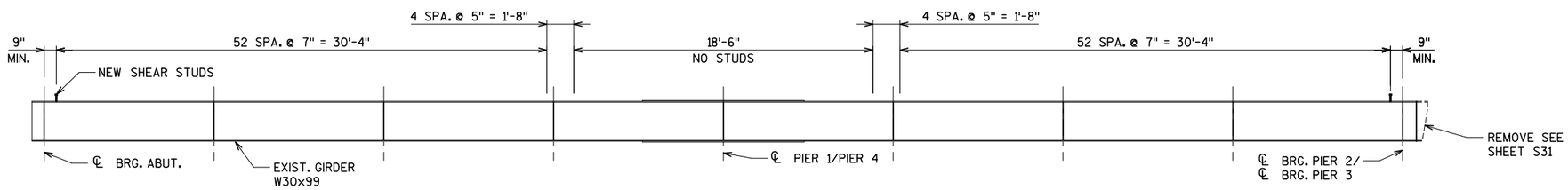

GIRDER ELEVATION - SHEAR CONNECTORS

(APPROACH SPAN EXTERIOR GIRDERS)

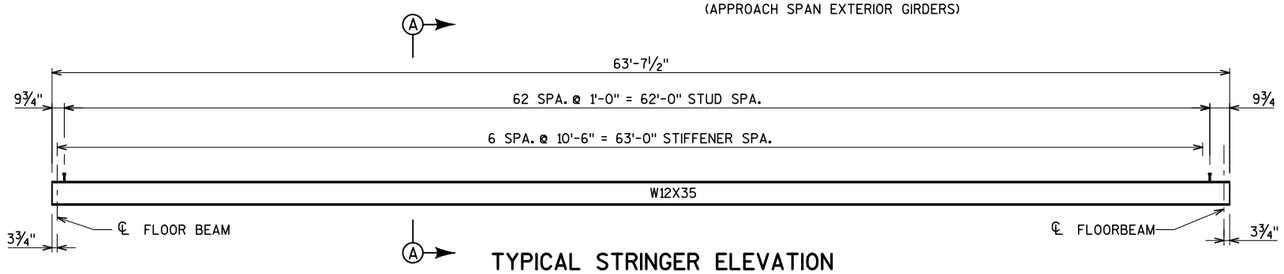

TYPICAL STRINGER ELEVATION

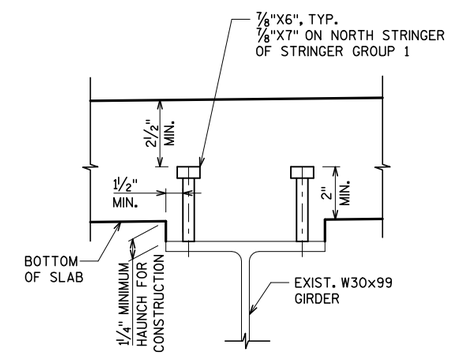

SHEAR CONNECTOR DETAIL

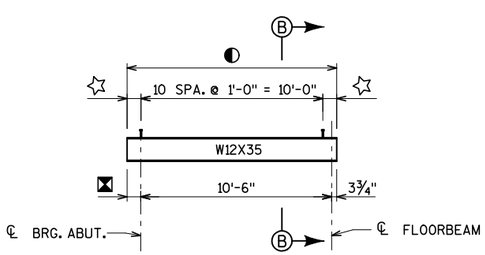

END STRINGER ELEVATION

☒ 9" AT ABUTMENTS
10¼" AT PIERS 2, 3

◐ 11'-6¾" AT ABUTMENTS
11'-8" AT PIERS 2, 3

☆ 9⅜" AT ABUTMENTS
10" AT PIERS 2, 3

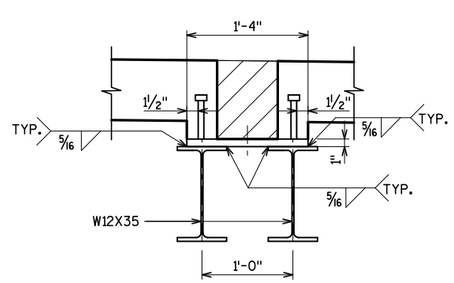

SECTION A-A

RAIL GUARD ANGLE NOT SHOWN FOR CLARITY

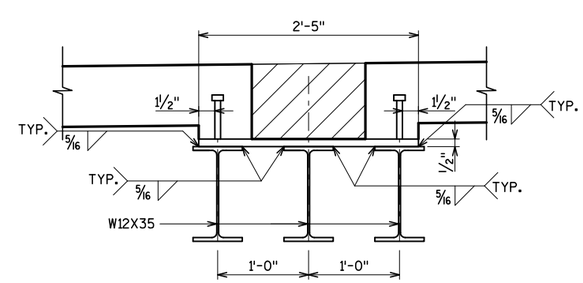

SECTION B-B

RAIL GUARD ANGLE NOT SHOWN FOR CLARITY

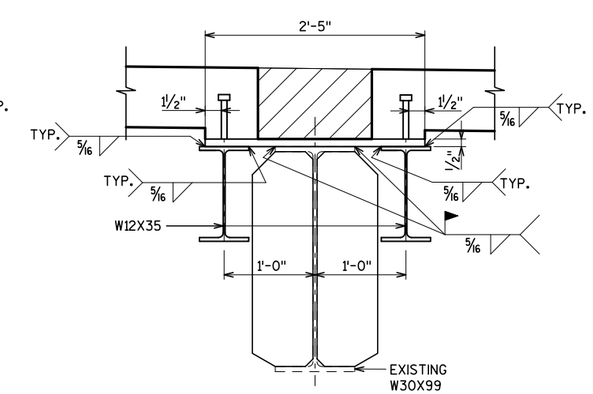

SECTION B-B

(GIRDER 5)
RAIL GUARD ANGLE NOT SHOWN FOR CLARITY

City of Milwaukee

Department of Public Works

Infrastructure Services Division

BLOOM COMPANIES, LLC
Infrastructure Innovation and Ingenuity
10501 W. Research Drive • Milwaukee, WI 53226
Phone: (414) 771-3380 Fax: (414) 771-4490

ST PAUL AVE. LIFT BRIDGE
OVER THE MILWAUKEE RIVER
FIXED SPAN
GIRDER DETAILS (1 OF 2)

REVISIONS

DESIGNED BY BDT	
DRAWN BY TAL	
CHECKED BY JRS	
DATE FEB 2013	SCALE NTS
JOB NUMBER BR100-10-0106	
SHEET NUMBER S30 OF S60	
OF 198	

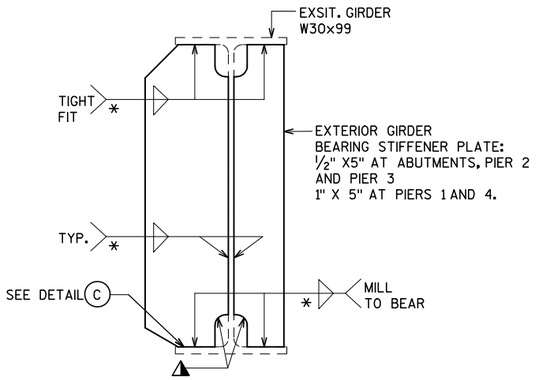

BEARING STIFFENER DETAIL

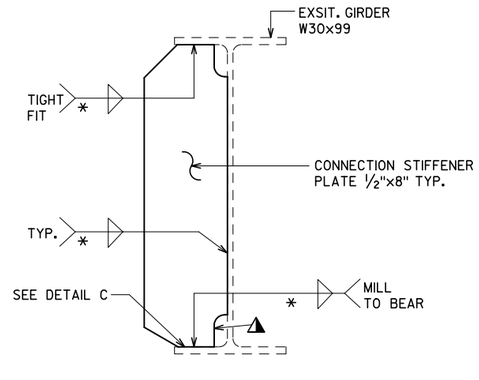

CONNECTION STIFFENER DETAIL

FOR LOCATION OF TENSION FLANGE, SEE GIRDER ELEVATION

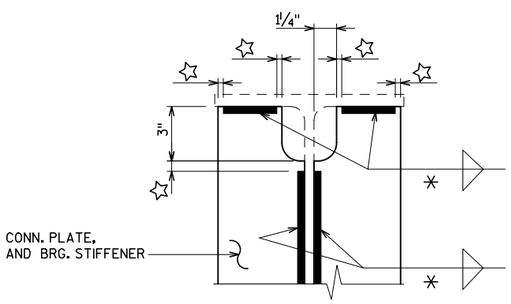

STIFFENER AND CONNECTION STIFFENER TO WEB/ FLANGE CONNECTION WELDS

☆ 1/4" MIN., 1/2" MAX. TYP.

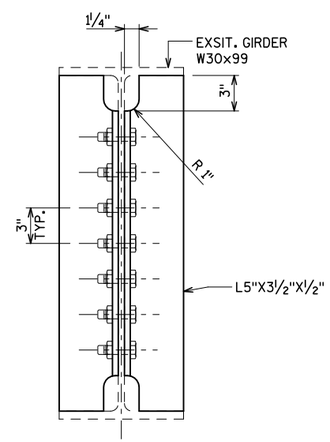

ADDITIONAL STIFFENER DETAIL

LOCATED ABOVE PEIR 1 AND 4, FOR INTERIOR GIRDERS ONLY.

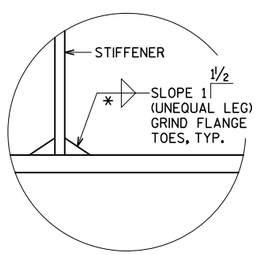

❸ DETAIL C

(CONNECTION STIFFENER DETAIL @ TENSION FLANGE)

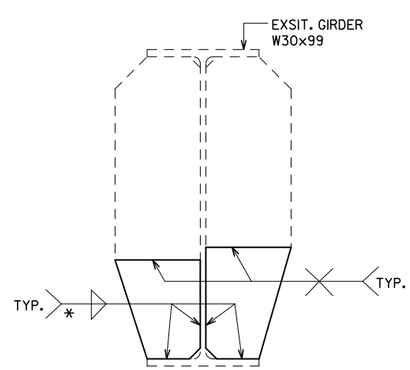

MODIFIED CONNECTION STIFFENER DETAIL

SEE SHEET S26

TABLE OF FILLET WELD SIZES

MATERIAL THICKNESS OF THICKER PART JOINED	‡ MIN. SIZE OF FILLET WELD
TO 1/2" INCLUSIVE	3/16"
OVER 1/2" TO 3/4"	1/4"
OVER 3/4" TO 1 1/2"	△ 5/16"
OVER 1 1/2" TO 2 1/4"	△ 3/8"
OVER 2 1/4" TO 6"	△ 1/2"

‡ EXCEPT THAT THE WELD SIZE SHALL NOT EXCEED THE THICKNESS OF THE THINNER PART JOINED.

△ MIN. PASS SIZE IS 5/16"

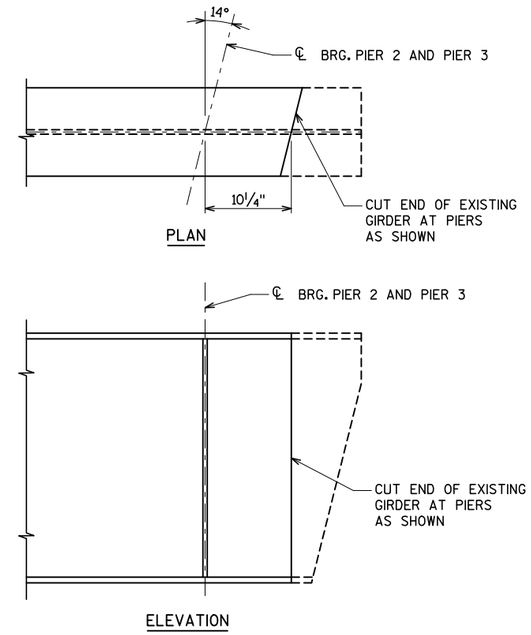

CUTTING END OF FIXED SPAN GIRDERS

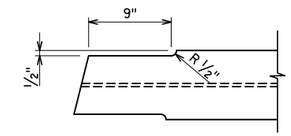

COPING AT END OF INTERIOR STRINGER

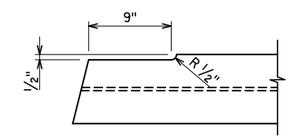

COPING AT END OF EXTERIOR STRINGER

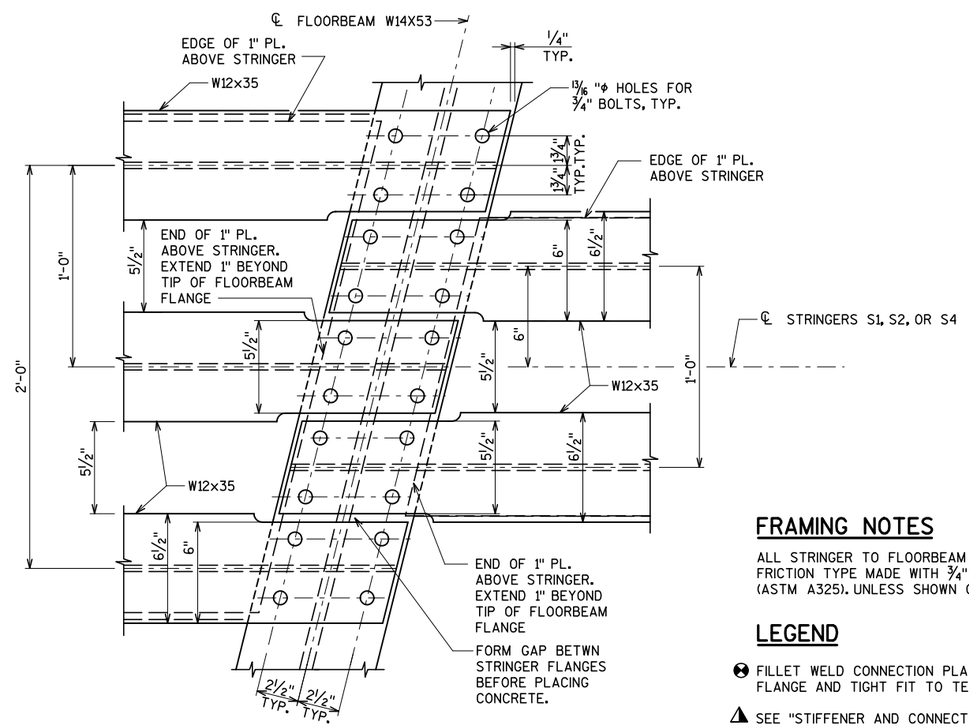

BOLT PATTERN AT FB4, FB5

FRAMING NOTES

ALL STRINGER TO FLOORBEAM CONNECTIONS SHALL BE FRICTION TYPE MADE WITH 3/4" DIA. HIGH STRENGTH BOLTS (ASTM A325). UNLESS SHOWN OTHERWISE.

LEGEND

❸ FILLET WELD CONNECTION PLATE TO COMPRESSION FLANGE AND TIGHT FIT TO TENSION FLANGE.

▲ SEE "STIFFENER AND CONNECTION STIFFENER TO WEB/FLANGE CONNECTION WELDS" ON THIS SHEET.

* SEE "TABLE OF FILLET WELD SIZES" ON THIS SHEET. ALL WELDS ON EXISTING GIRDERS ARE FIELD WELDS.

City of Milwaukee

Department of Public Works

Infrastructure Services Division

BLOOM COMPANIES, LLC
Infrastructure Innovation and Ingenuity
10501 W. Research Drive • Milwaukee, WI 53226
Phone: (414) 771-3380 Fax: (414) 771-4490

ST PAUL AVE. LIFT BRIDGE
OVER THE MILWAUKEE RIVER
FIXED SPAN
GIRDER DETAILS (2 OF 2)

REVISIONS

DESIGNED BY BDT	
DRAWN BY TAL	
CHECKED BY JRS	
DATE FEB 2013	SCALE NTS
JOB NUMBER BR100-10-0106	
SHEET NUMBER S31 OF S60	
OF 198	

TOP OF DECK ELEVATIONS - SPAN 1

	℄ BRG. W. ABUT.	0.25 PT	0.5 PT	0.75 PT	℄ PIER 1
N. EDGE	14.87	15.10	15.33	15.56	15.77
A1	14.89	15.12	15.35	15.57	15.79
N. CURB	14.89	15.12	15.35	15.58	15.79
C/L ST. CAR RAIL	14.91	15.14	15.37	15.60	15.81
A2	14.92	15.15	15.38	15.61	15.83
C/L ST. CAR RAIL	14.93	15.16	15.39	15.62	15.84
A3	14.96	15.19	15.42	15.64	15.87
A4	14.99	15.22	15.45	15.68	15.91
PGL	15.01	15.24	15.47	15.70	15.93
A5	14.96	15.18	15.41	15.64	15.87
C/L ST. CAR RAIL	14.88	15.11	15.34	15.56	15.79
A6	14.84	15.07	15.30	15.53	15.76
A7	14.73	14.96	15.19	15.42	15.64
S. CURB	14.63	14.86	15.09	15.32	15.55
A8	14.62	14.85	15.07	15.30	15.53
S. EDGE	14.56	14.79	15.02	15.25	15.48

TOP OF DECK ELEVATIONS - SPAN 2

	℄ PIER 1	0.25 PT	0.5 PT	0.75 PT	℄ BRG. PIER 2	EXP. JT.
N. EDGE	15.77	15.95	16.11	16.24	16.35	16.35
A1	15.79	15.98	16.14	16.27	16.37	16.38
N. CURB	15.79	15.98	16.14	16.28	16.38	16.39
C/L ST. CAR RAIL	15.81	16.01	16.17	16.30	16.41	16.42
A2	15.83	16.02	16.19	16.32	16.43	16.44
C/L ST. CAR RAIL	15.84	16.04	16.20	16.34	16.45	16.46
A3	15.87	16.07	16.23	16.38	16.49	16.50
A4	15.91	16.11	16.28	16.43	16.55	16.56
PGL	15.93	16.13	16.31	16.45	16.58	16.59
A5	15.87	16.08	16.25	16.41	16.53	16.54
C/L ST. CAR RAIL	15.79	16.00	16.18	16.34	16.47	16.48
A6	15.76	15.97	16.15	16.31	16.44	16.45
A7	15.64	15.86	16.05	16.21	16.34	16.36
S. CURB	15.55	15.77	15.96	16.12	16.26	16.27
A8	15.53	15.75	15.94	16.11	16.25	16.26
S. EDGE	15.48	15.70	15.89	16.06	16.20	16.21

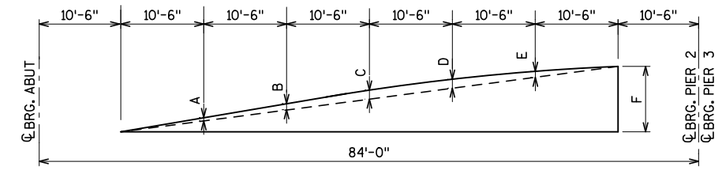

BLOCKING AND CAMBER DIAGRAM

STRINGER	A	B	C	D	E	F
WEST FIXED SPANS						
STRINGER GROUP 1	0.41	0.83	1.12	1.07	0.71	13.98
STRINGER GROUP 2	0.39	0.78	1.08	1.04	0.70	14.13
STRINGER GROUP 4	0.28	0.56	0.84	0.89	0.61	14.79
EAST FIXED SPANS						
STRINGER GROUP 1	0.07	0.14	0.21	0.27	0.29	13.51
STRINGER GROUP 2	0.08	0.16	0.24	0.32	0.32	13.44
STRINGER GROUP 4	0.14	0.28	0.42	0.55	0.45	13.07

ALL DIMENSIONS ARE IN INCHES

TOP OF DECK ELEVATIONS - SPAN 4

	EXP. JT.	℄ BRG. PIER 3	0.25 PT	0.5 PT	0.75 PT	℄ PIER 4
N. EDGE	16.21	16.19	16.05	15.88	15.69	15.50
C1	16.25	16.24	16.10	15.94	15.74	15.55
N. CURB	16.27	16.25	16.12	15.95	15.76	15.57
C/L ST. CAR RAIL	16.31	16.30	16.16	16.00	15.81	15.62
C2	16.35	16.34	16.20	16.04	15.85	15.66
C/L ST. CAR RAIL	16.38	16.37	16.23	16.07	15.89	15.69
C3	16.44	16.43	16.30	16.14	15.96	15.77
C4	16.54	16.52	16.40	16.25	16.07	15.87
PGL	16.58	16.57	16.45	16.30	16.12	15.93
C5	16.55	16.54	16.42	16.27	16.10	15.91
C/L ST. CAR RAIL	16.51	16.50	16.39	16.24	16.07	15.88
C6	16.50	16.49	16.37	16.23	16.06	15.86
C7	16.44	16.43	16.32	16.18	16.01	15.82
S. CURB	16.39	16.38	16.27	16.14	15.97	15.79
C8	16.38	16.37	16.26	16.13	15.97	15.78
S. EDGE	16.35	16.34	16.24	16.11	15.95	15.76

TOP OF DECK ELEVATIONS - SPAN 5

	℄ PIER 4	0.25 PT	0.5 PT	0.75 PT	℄ BRG. E. ABUT.
N. EDGE	15.50	15.31	15.11	14.92	14.73
C1	15.55	15.36	15.17	14.97	14.78
N. CURB	15.57	15.37	15.18	14.99	14.79
C/L ST. CAR RAIL	15.62	15.43	15.23	15.04	14.85
C2	15.66	15.47	15.27	15.08	14.89
C/L ST. CAR RAIL	15.69	15.50	15.31	15.11	14.92
C3	15.77	15.57	15.38	15.19	14.99
C4	15.87	15.68	15.49	15.29	15.10
PGL	15.93	15.73	15.54	15.35	15.15
C5	15.91	15.71	15.52	15.33	15.13
C/L ST. CAR RAIL	15.88	15.68	15.49	15.30	15.10
C6	15.86	15.67	15.48	15.28	15.09
C7	15.82	15.63	15.44	15.24	15.05
S. CURB	15.79	15.59	15.40	15.21	15.01
C8	15.78	15.59	15.39	15.20	15.01
S. EDGE	15.76	15.57	15.37	15.18	14.99

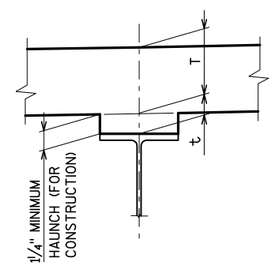

HAUNCH DETAIL

NOTES

t = HAUNCH HEIGHT AT CENTERLINE OF GIRDER.
(TO DETERMINE "t": AFTER ALL STRUCTURAL STEEL HAS BEEN ERECTED ELEVATIONS OF THE TOP FLANGES, TOP OF SPLICE PLATES, OR TOP OF COVER PLATES, WHICHEVER APPLIES, SHALL BE TAKEN AT CENTERLINE OF BEARINGS AND AT 0.25 POINTS.

TOP OF DECK ELEV. AT FINAL GRADE.

\- TOP OF STEEL ELEV. AFTER PLACEMENT.

\+ NCDL; DOWNWARD DEFLECTION IS ADDED, UPWARD DEFLECTION IS SUBTRACTED.

\- SLAB THICKNESS ('T')

= "t" VALUE FOR SETTING HAUNCH.

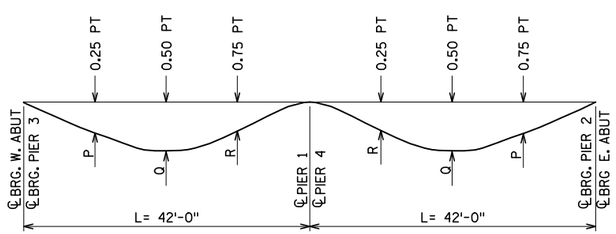

DEFLECTION DIAGRAM

SEE TABLE FOR DEAD LOAD DEFLECTION AT 0.25 POINTS

GIRDER	DEAD LOAD DEFLECTIONS (INCHES) ALL SPANS		
	P	Q	R
EXT. GIRDERS			
STEEL	0.04	0.06	0.03
NCDL	0.17	0.20	0.10
CDL	0.03	0.03	0.03
INT. GIRDERS			
STEEL	0.04	0.06	0.03
NCDL	0.17	0.20	0.10
CDL	0.03	0.03	0.03

DISTANCE FROM TOP OF FLOORBEAM TO BOTTOM OF TOP FLANGE OF GIRDER (IN)

STRINGER AND GIRDER	SPAN 1					SPAN 2				SPAN 4					SPAN 5			
	W. ABUT.	0.25 PT	0.50 PT	0.75 PT	PIER 1	0.25 PT	0.50 PT	0.75 PT	PIER 2	PIER 3	0.25 PT	0.50 PT	0.75 PT	PIER 4	0.25 PT	0.50 PT	0.75 PT	E. ABUT.
STRINGER GROUP 1 AND GIRDER 2	13.02	12.99	12.98	12.99	13.07	13.08	12.99	13.05	13.10	13.34	13.37	13.34	13.33	13.30	13.27	13.26	13.27	13.30
STRINGER GROUP 2 AND GIRDER 2	12.72	12.70	12.70	12.70	12.75	12.72	12.58	12.61	12.61	12.56	12.55	12.48	12.44	12.42	12.39	12.38	12.38	12.41
STRINGER GROUP 4 AND GIRDER 6	12.42	12.40	12.40	12.42	12.37	12.46	12.45	12.29	12.46	12.57	12.51	12.59	12.59	12.62	12.62	12.61	12.60	12.61

SLOPE OF TAPERED SHIM BETWEEN TOP OF FLOORBEAM AND BOTTOM OF STRINGER (%)

THICKNESS OF SHIM AT ℄ OF FLOORBEAM = ¼"

STRINGER AND GIRDER	SPAN 1					SPAN 2				SPAN 4					SPAN 5			
	W. ABUT.	0.25 PT	0.50 PT	0.75 PT	PIER 1	0.25 PT	0.50 PT	0.75 PT	PIER 2	PIER 3	0.25 PT	0.50 PT	0.75 PT	PIER 4	0.25 PT	0.50 PT	0.75 PT	E. ABUT.
STRINGER GROUP 1 AND GIRDER 2	2.18	2.18	2.18	2.18	1.95	1.69	1.37	1.16	0.95	1.21	1.42	1.74	1.83	1.84	1.84	1.84	1.84	1.84
STRINGER GROUP 2 AND GIRDER 2	2.18	2.18	2.18	2.18	1.98	1.72	1.40	1.19	0.98	1.18	1.39	1.71	1.84	1.84	1.84	1.83	1.83	1.84
STRINGER GROUP 4 AND GIRDER 6	2.18	2.18	2.18	2.18	2.12	1.87	1.55	1.34	1.13	1.03	1.24	1.56	1.77	1.84	1.83	1.84	1.84	1.83

City of Milwaukee
Department of Public Works
Infrastructure Services Division

BLOOM COMPANIES, LLC
Infrastructure Innovation and Ingenuity
10501 W. Research Drive • Milwaukee, WI 53226
Phone: (414) 771-3380 Fax: (414) 771-4490

ST PAUL AVE. LIFT BRIDGE
OVER THE MILWAUKEE RIVER
TOP OF DECK ELEVATION

REVISIONS

DESIGNED BY BDT
DRAWN BY TAL
CHECKED BY JRS
DATE FEB 2013
SCALE NTS
JOB NUMBER BR100-10-0106
SHEET NUMBER S32 OF S60
OF 198

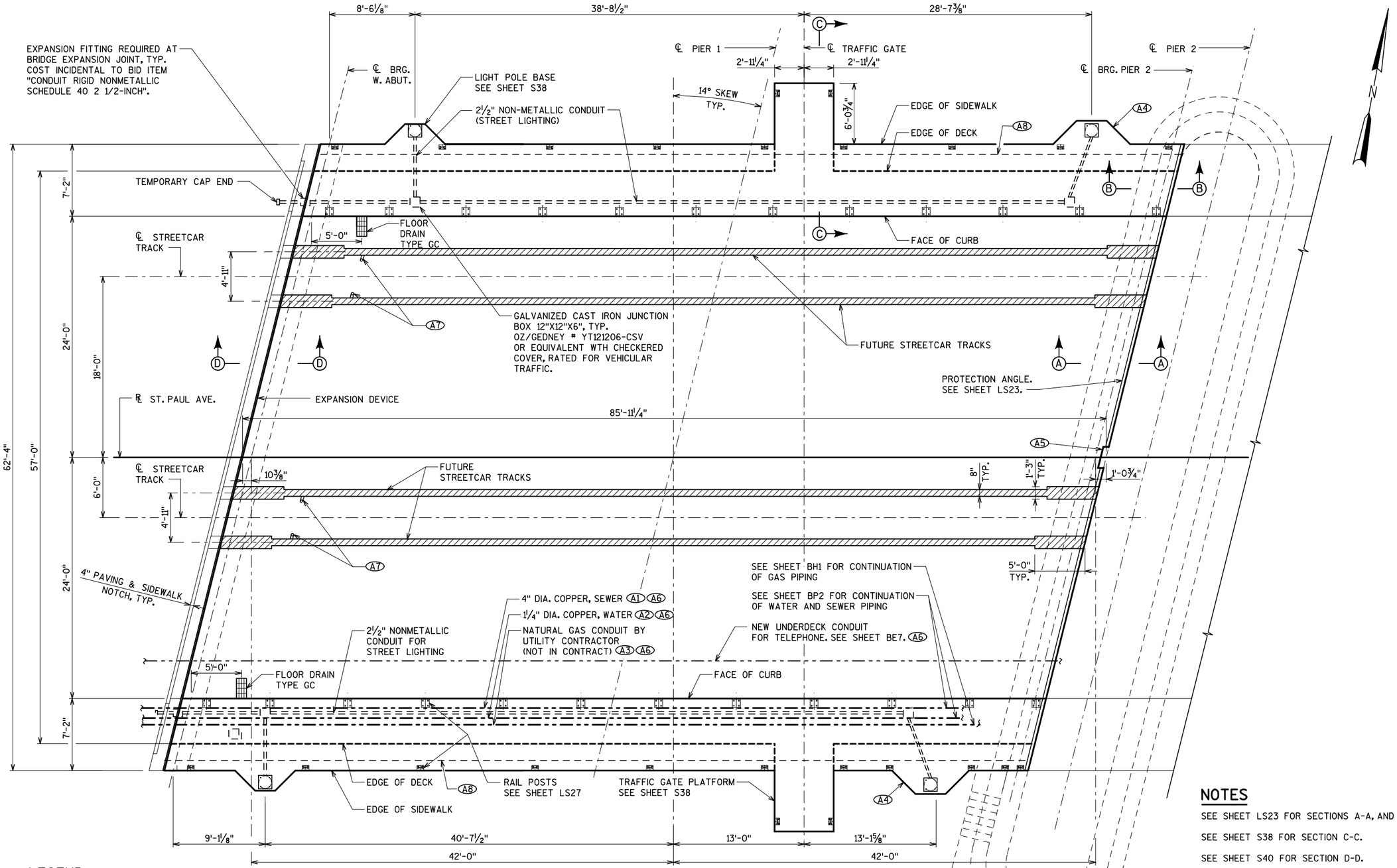

WEST FIXED SPAN PLAN

LEGEND

A1 EXISTING 4" SANITARY SEWER PIPING TO BE REMOVED AND SAVED FOR REINSTALLATION WHEN BRIDGE WORK IS COMPLETED. ALL EXISTING PIPING INSULATION AND ELECTRIC HEAT TRACING TO BE REPLACED WITH NEW. UPON COMPLETION OF BRIDGE WORK, SANITARY SEWER PIPING SHALL BE REINSTALLED AS REQUIRED TO MAINTAIN ALL CLEANOUTS AND PROPER PITCH FOR COMPLETE DRAINAGE. PROVIDE NEW ELECTRIC HEAT TRACE AND NEW INSULATION WITH PROTECTIVE JACKET ON ALL EXTERIOR SANITARY SEWER PIPING. COORDINATE ALL WORK WITH GENERAL CONTRACTOR.

A2 EXISTING 1 1/4" WATER SERVICE PIPING TO BE REMOVED AND SAVED FOR REINSTALLATION WHEN BRIDGE WORK IS COMPLETED. ALL EXISTING PIPING INSULATION AND ELECTRIC HEAT TRACING TO BE REPLACED WITH NEW. UPON COMPLETION OF BRIDGE WORK, WATER SERVICE PIPING SHALL BE REINSTALLED. PROVIDE NEW ELECTRIC HEAT TRACE AND NEW INSULATION WITH PROTECTIVE JACKET ON ALL EXTERIOR WATER SERVICE PIPING. COORDINATE ALL WORK WITH GENERAL CONTRACTOR.

A3 EXISTING NATURAL GAS SERVICE PIPING TO BE REMOVED BY LOCAL UTILITY COMPANY AND SAVED FOR REINSTALLATION WHEN BRIDGE WORK IS COMPLETED. UPON COMPLETION OF BRIDGE WORK, THE NATURAL GAS PIPING SHALL BE REINSTALLED BY LOCAL UTILITY COMPANY. GENERAL CONTRACTOR SHALL COORDINATE WORK WITH LOCAL UTILITY COMPANY.

A4 LIGHT POLE FUTURE OCS POLE BASE. SEE SHEET S45 FOR DETAILS.

A5 RECESS IN END DIAPHRAGM FOR CENTERING DEVICE. SEE SHEET M13.

A6 COST INCLUDED IN BRIDGE HOUSE HUAC, PLUMBING AND ELECTRICAL BID ITEMS.

A7 3" DIA. FLEXIBLE PVC CONDUIT FOR FUTURE STREETCAR PROJECT. COST INCIDENTAL TO BID ITEM "CONCRETE MASONRY BRIDGES". SEE SHEET S4 FOR DETAIL.

A8 STRIP LIGHT ATTACHMENT. SEE SHEET S38

NOTES

SEE SHEET LS23 FOR SECTIONS A-A, AND B-B.

SEE SHEET S38 FOR SECTION C-C.

SEE SHEET S40 FOR SECTION D-D.

SEE SHEETS E3 AND E4 FOR CONDUITS EMBEDDED IN SIDEWALK.

City of Milwaukee

Department of Public Works

Infrastructure Services Division

BLOOM COMPANIES, LLC
Infrastructure Innovation and Ingenuity
10501 W. Research Drive • Milwaukee, WI 53226
Phone: (414) 771-3380 Fax: (414) 771-4490

ST PAUL AVE. LIFT BRIDGE
OVER THE MILWAUKEE RIVER
WEST FIXED SPANS
PLAN (1 OF 2)

REVISIONS

DESIGNED BY BDT	
DRAWN BY TB	
CHECKED BY JRS	
DATE FEB 2013	SCALE NTS
JOB NUMBER BR100-10-0106	
SHEET NUMBER S33 OF S60	
OF 198	

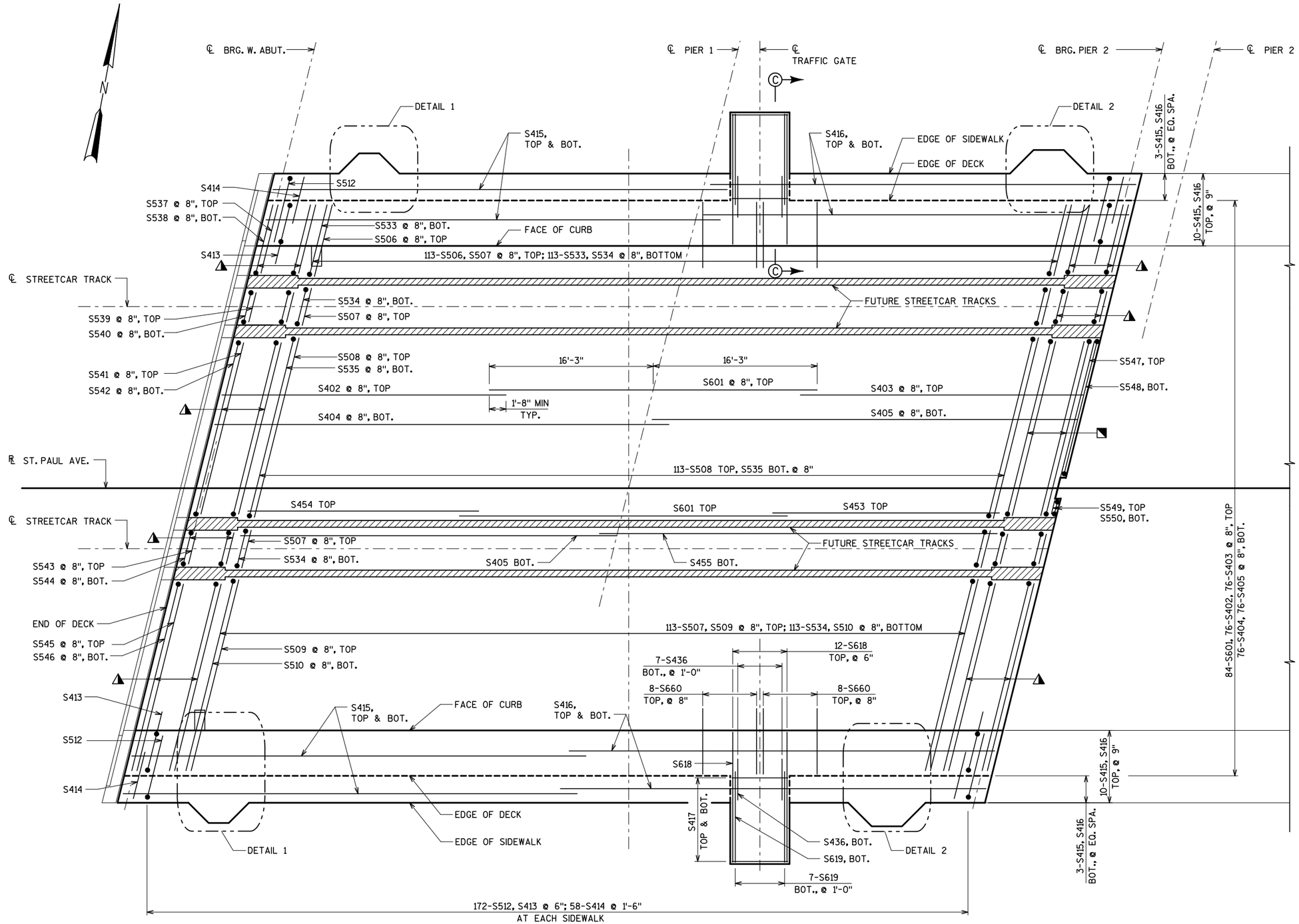

LEGEND

◭ 8 - S537, S539, S543, S545 @ 8", TOP
8 - S538, S540, S544, S546 @ 8", BOTTOM
AT EACH END

◥ 8 - S541 @ 8", TOP
8 - S542 @ 8", BOTTOM - WEST END
7 - S541 @ 8", TOP
7 - S542 @ 8", BOTTOM - EAST END

WEST FIXED SPAN PLAN

NOTES

SEE SHEET S33 FOR GENERAL PLAN OF WEST FIXED SPANS.

SEE SHEET S38 FOR DETAIL 1 AND SECTION C-C.

SEE SHEET S39 FOR DETAIL 2.

City of Milwaukee

Department of Public Works

Infrastructure Services Division

BLOOM COMPANIES, LLC
Infrastructure Innovation and Ingenuity
10501 W. Research Drive • Milwaukee, WI 53226
Phone: (414) 771-3380 Fax: (414) 771-4490

ST PAUL AVE. LIFT BRIDGE
OVER THE MILWAUKEE RIVER
WEST FIXED SPANS
PLAN (2 OF 2)

REVISIONS

DESIGNED BY BDT	
DRAWN BY TB	
CHECKED BY JRS	
DATE FEB 2013	SCALE NTS
JOB NUMBER BR100-10-0106	
SHEET NUMBER S34 OF S60	
OF 198	

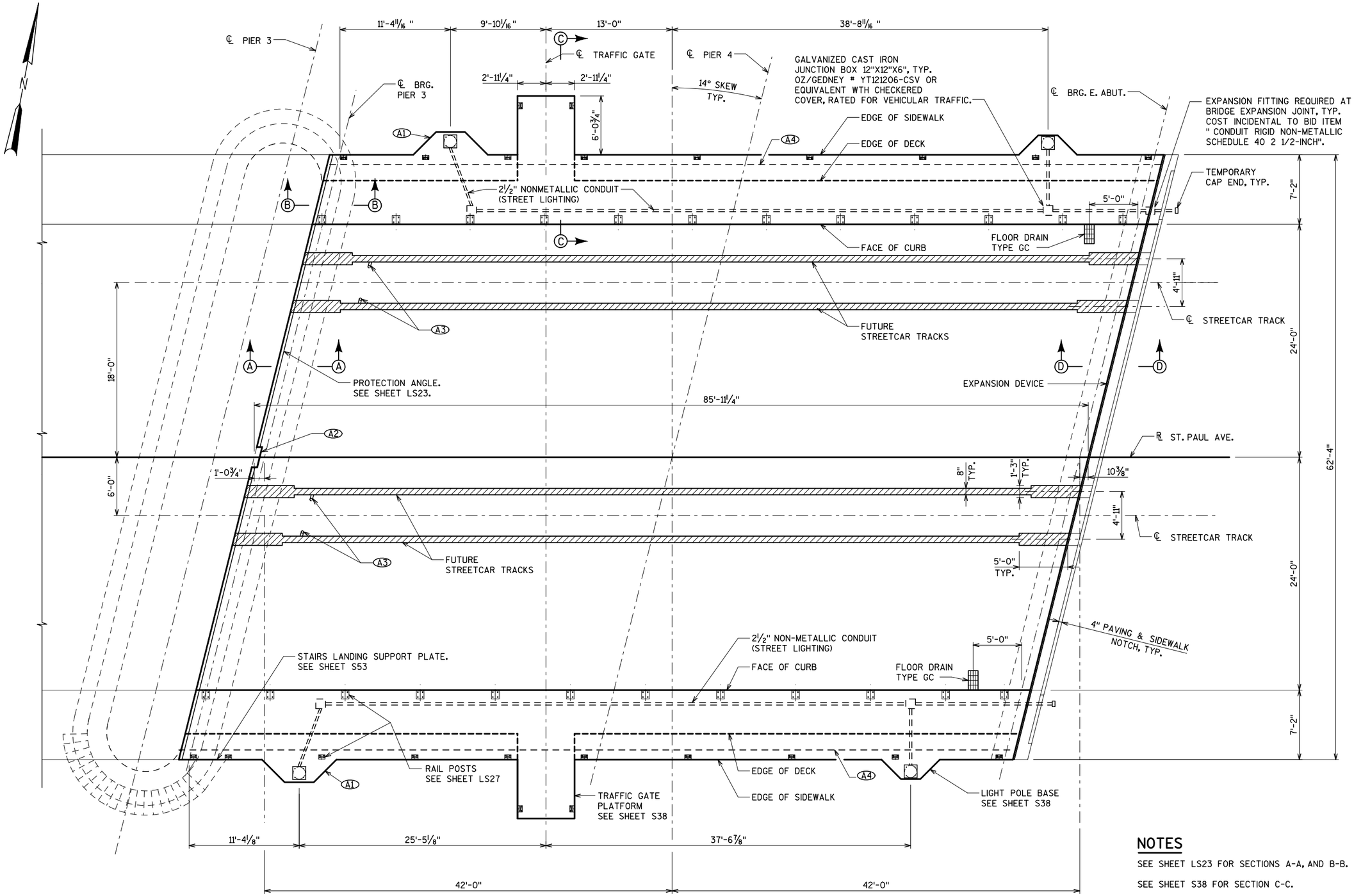

EAST FIXED SPAN PLAN

LEGEND

(A1) LIGHT POLE FUTURE OCS POLE BASE. SEE SHEET S45 FOR DETAILS.

(A2) RECESS IN END DIAPHRAGM FOR CENTERING DEVICE. SEE SHEET M13.

(A3) 3" DIA. FLEXIBLE PVC CONDUIT FOR FUTURE STREETCAR PROJECT. COST INCIDENTAL TO BID ITEM "CONCRETE MASONRY BRIDGES". SEE SHEET S4 FOR DETAIL.

(A4) STRIP LIGHT ATTACHMENT. SEE SHEET S38.

NOTES

SEE SHEET LS23 FOR SECTIONS A-A, AND B-B.

SEE SHEET S38 FOR SECTION C-C.

SEE SHEET S40 FOR SECTION D-D.

SEE SHEETS E3 AND E4 FOR CONDUITS EMBEDDED IN SIDEWALK.

City of Milwaukee

Department of Public Works

Infrastructure Services Division

BLOOM COMPANIES, LLC
Infrastructure Innovation and Ingenuity
10501 W. Research Drive • Milwaukee, WI 53226
Phone: (414) 771-3380 Fax: (414) 771-4490

ST PAUL AVE. LIFT BRIDGE OVER THE MILWAUKEE RIVER EAST FIXED SPANS PLAN (1 OF 2)

REVISIONS

DESIGNED BY BDT	
DRAWN BY TB	
CHECKED BY JRS	
DATE FEB 2013	SCALE NTS
JOB NUMBER BR100-10-0106	
SHEET NUMBER S35 OF S60	
OF 198	

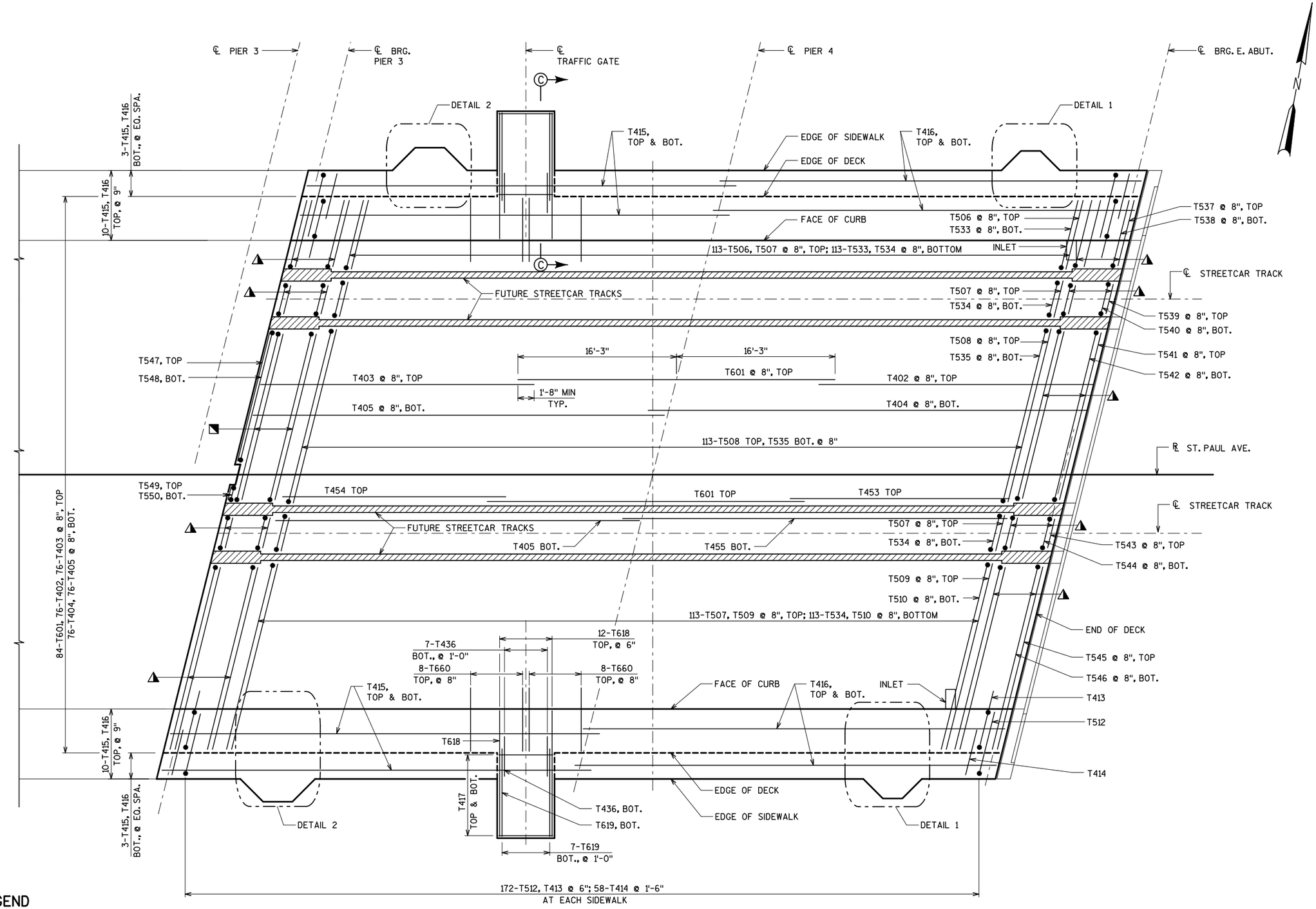

EAST FIXED SPAN PLAN

LEGEND

◭ 8 - S537, S539, S543, S545 @ 8", TOP
8 - S538, S540, S544, S546 @ 8", BOTTOM
AT EACH END

◪ 8 - S541 @ 8", TOP
8 - S542 @ 8", BOTTOM - EAST END
7 - S541 @ 8", TOP
7 - S542 @ 8", BOTTOM - WEST END

NOTES

SEE SHEET S35 FOR GENERAL PLAN OF EAST FIXED SPANS.

SEE SHEET S38 FOR DETAIL 1 AND SECTION C-C.

SEE SHEET S39 FOR DETAIL 2.

City of Milwaukee

Department of Public Works

Infrastructure Services Division

BLOOM COMPANIES, LLC
Infrastructure Innovation and Ingenuity
10501 W. Research Drive • Milwaukee, WI 53226
Phone: (414) 771-3380 Fax: (414) 771-4490

ST PAUL AVE. LIFT BRIDGE
OVER THE MILWAUKEE RIVER
EAST FIXED SPANS
PLAN (2 OF 2)

REVISIONS

DESIGNED BY BDT	
DRAWN BY TB	
CHECKED BY JRS	
DATE FEB 2013	SCALE NTS
JOB NUMBER BR100-10-0106	
SHEET NUMBER S36 OF S60	
OF 198	

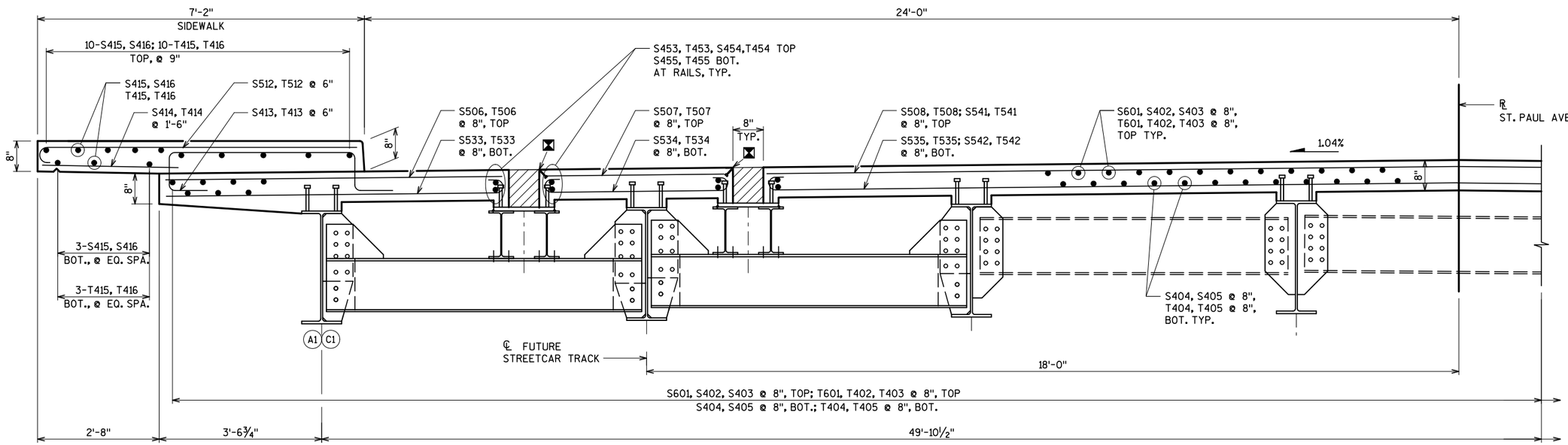

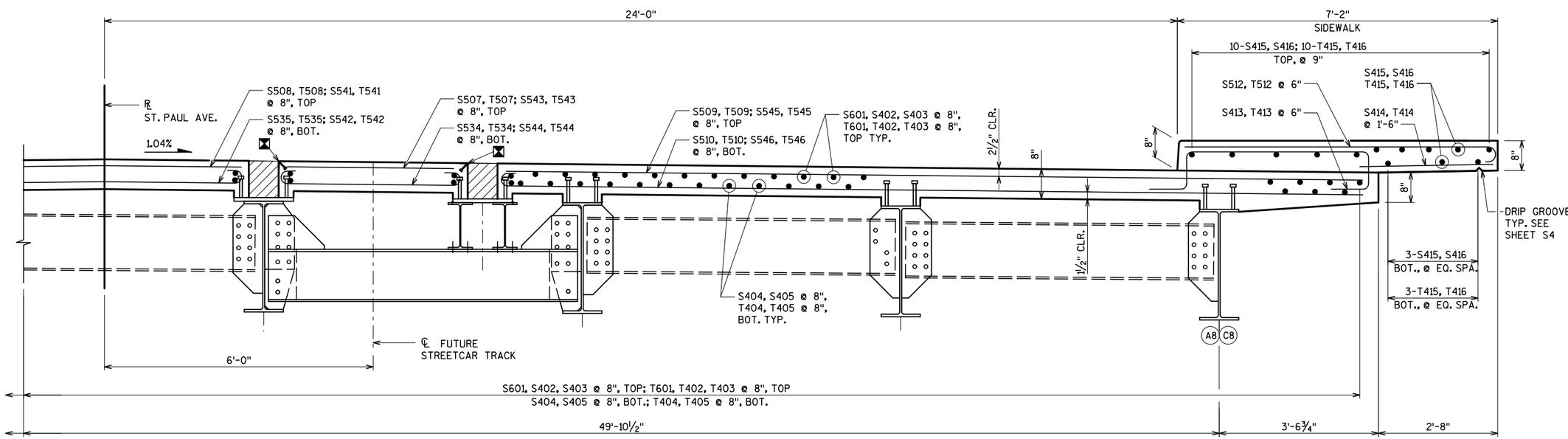

CROSS SECTION THRU SUPERSTRUCTURE

(LOOKING EAST)

LEGEND

☒ L2x2x3/16" W/ 1/2"ϕx4" STUDS @ 12" CTRS,TYP. ANGLE AND STUDS PAID UNDER BID ITEM "BRIDGE STRUCTURAL STEEL".

City of Milwaukee

Department of Public Works

Infrastructure Services Division

BLOOM COMPANIES, LLC
Infrastructure Innovation and Ingenuity
10501 W. Research Drive • Milwaukee, WI 53226
Phone: (414) 771-3380 Fax: (414) 771-4490

ST PAUL AVE. LIFT BRIDGE
OVER THE MILWAUKEE RIVER
FIXED SPAN SUPERSTRUCTURE
DETAILS (1 OF 3)

REVISIONS

DESIGNED BY BDT	
DRAWN BY TB	
CHECKED BY JRS	
DATE FEB 2013	SCALE NTS
JOB NUMBER BR100-10-0106	
SHEET NUMBER S37 OF S60	
OF 198	

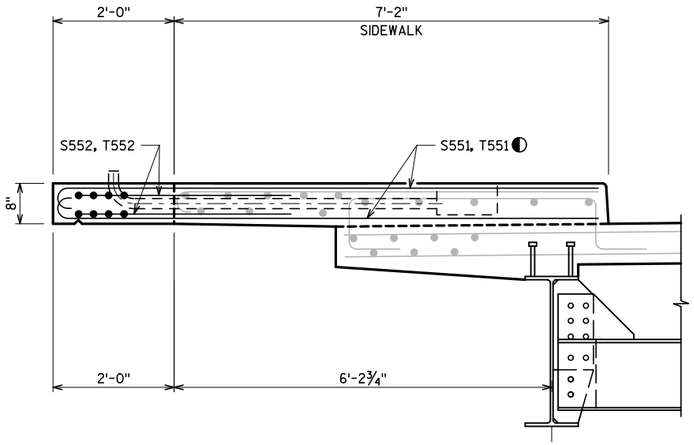

SECTION A-A

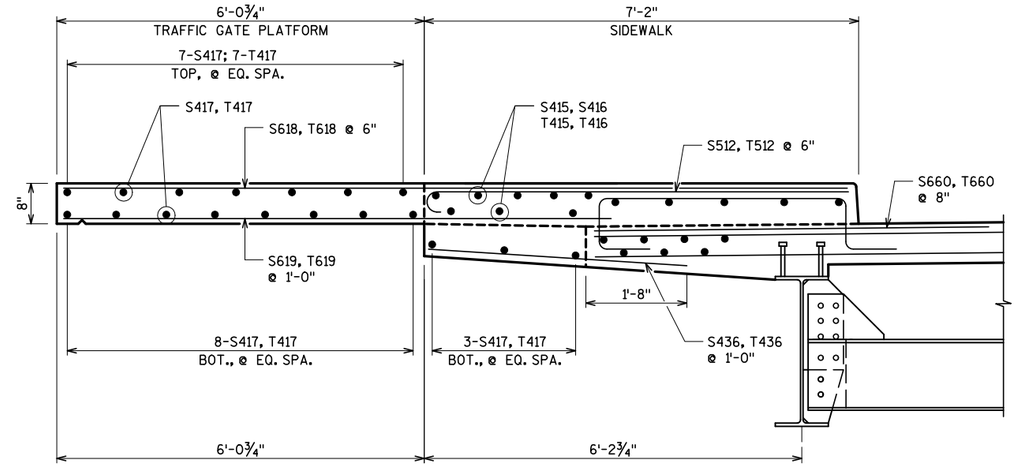

SECTION C-C
SECTION THRU TRAFFIC GATE PLATFORM

SEE SHEETS S33-S36

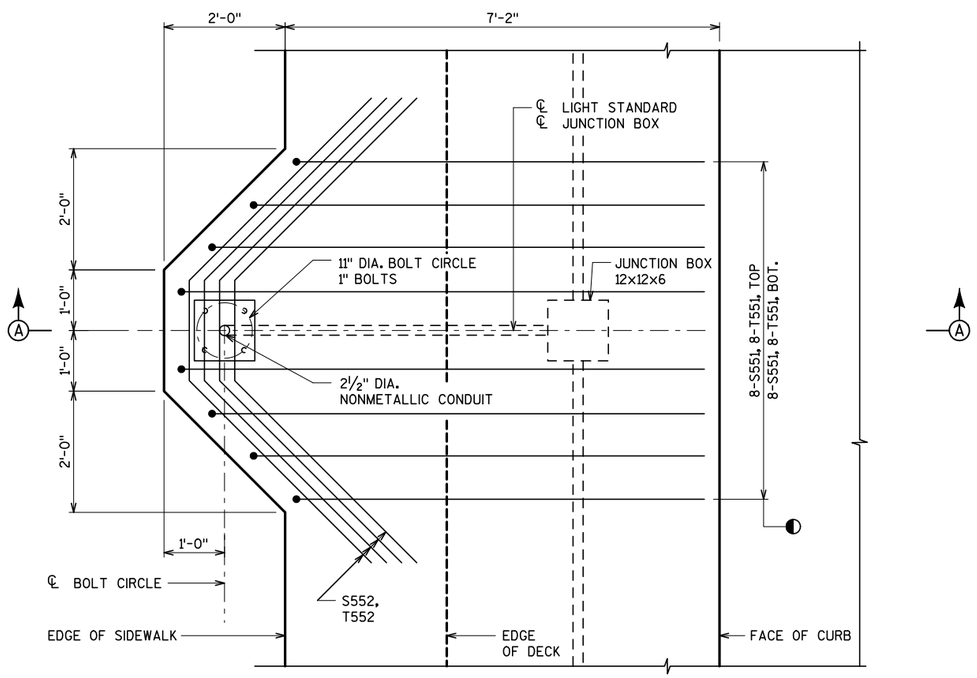

DETAIL 1

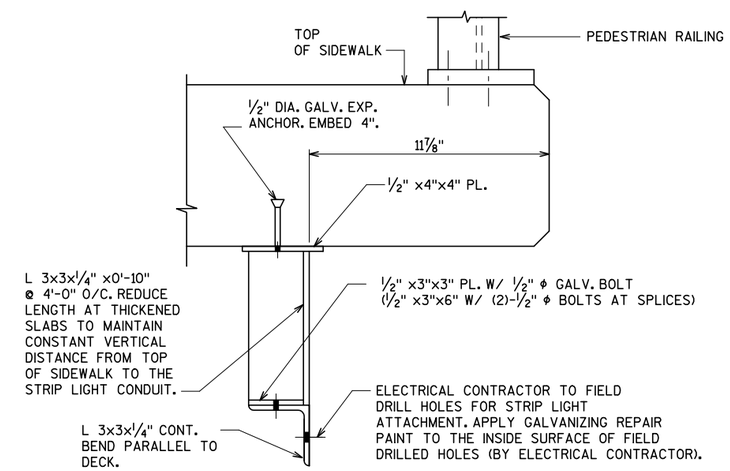

STRIP LIGHT ATTACHMENT- FIXED SPAN

NOTE: ALL STRUCTURAL STEEL TO BE HOT DIP GALVANIZED AND PAINTED.
DETAIL APPLICABLE FOR NORTH AND SOUTH EDGES OF FIXED SPANS.

SEE SHEET E6 FOR ADDITIONAL DETAILS

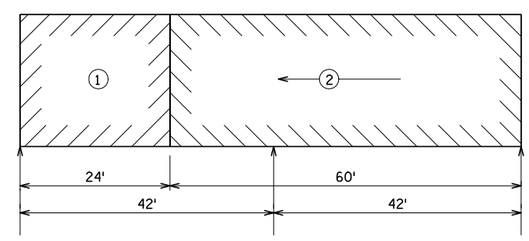

POURING DIAGRAM

(FOR WEST AND EAST FIXED SPANS)

(2) INDICATES POUR NUMBER AND DIRECTION OF POUR

THE RATE OF PLACING CONCRETE SHALL EQUAL OR EXCEED ½ SPAN LENGTH PER HOUR BUT NEED NOT EXCEED 100 CU. YDS. PER HOUR.

TWO OR MORE ALTERNATE POURS MAY BE PLACED ON THE SAME DAY.

THE CONTRACTOR MAY SUBMIT AN ALTERNATE POURING SEQUENCE SUBJECT TO THE APPROVAL OF THE ENGINEER.

LEGEND

◐ THESE BARS ARE IN ADDITION TO TRANSVERSE BARS IN DECK.

City of Milwaukee

Department of Public Works

Infrastructure Services Division

BLOOM COMPANIES, LLC
Infrastructure Innovation and Ingenuity
10501 W. Research Drive • Milwaukee, WI 53226
Phone: (414) 771-3380 Fax: (414) 771-4490

ST PAUL AVE. LIFT BRIDGE
OVER THE MILWAUKEE RIVER
FIXED SPAN SUPERSTRUCTURE
DETAILS (2 OF 3)

REVISIONS

DESIGNED BY BDT	
DRAWN BY TB	
CHECKED BY JRS	
DATE FEB 2013	SCALE NTS
JOB NUMBER BR100-10-0106	
SHEET NUMBER S38 OF S60	
OF 198	

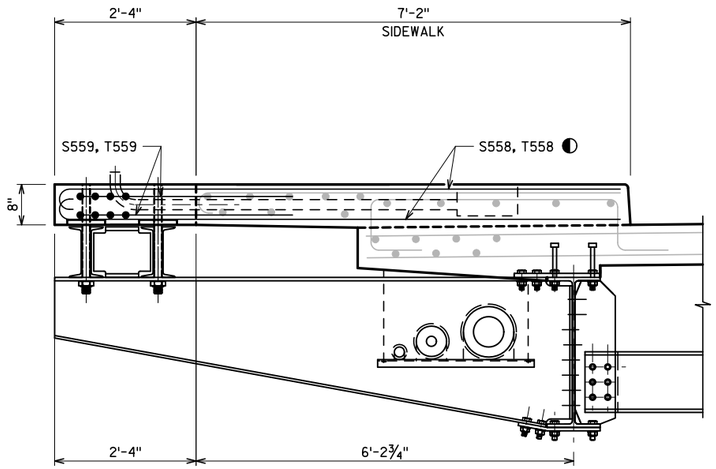

SECTION A-A

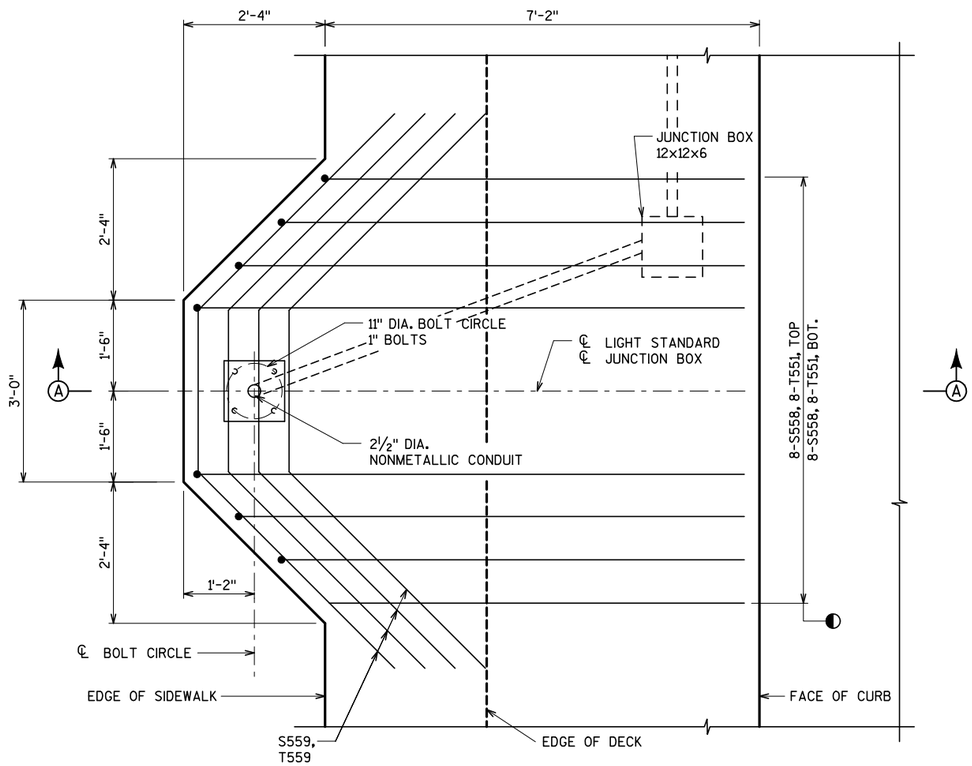

DETAIL 2

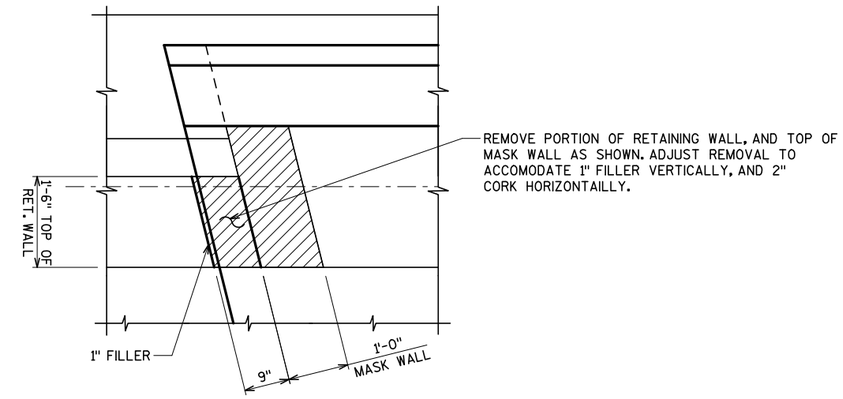

REMOVAL PLAN SOUTHWEST CORNER OF BRIDGE

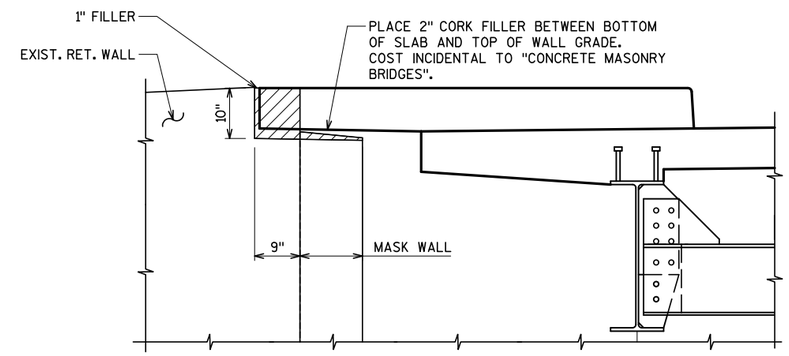

REMOVAL ELEVATION SOUTHWEST CORNER OF BRIDGE

LEGEND

◐ THESE BARS ARE IN ADDITION TO TRANSVERSE BARS IN DECK.

City of Milwaukee

Department of Public Works

Infrastructure Services Division

BLOOM COMPANIES, LLC
Infrastructure Innovation and Ingenuity
10501 W. Research Drive • Milwaukee, WI 53226
Phone: (414) 771-3380 Fax: (414) 771-4490

ST PAUL AVE. LIFT BRIDGE
OVER THE MILWAUKEE RIVER
FIXED SPAN SUPERSTRUCTURE
DETAILS (3 OF 3)

REVISIONS

DESIGNED BY BDT
DRAWN BY
CHECKED BY JRS
DATE FEB 2013
SCALE NTS
JOB NUMBER BR100-10-0106
SHEET NUMBER S39 OF S60
OF 198

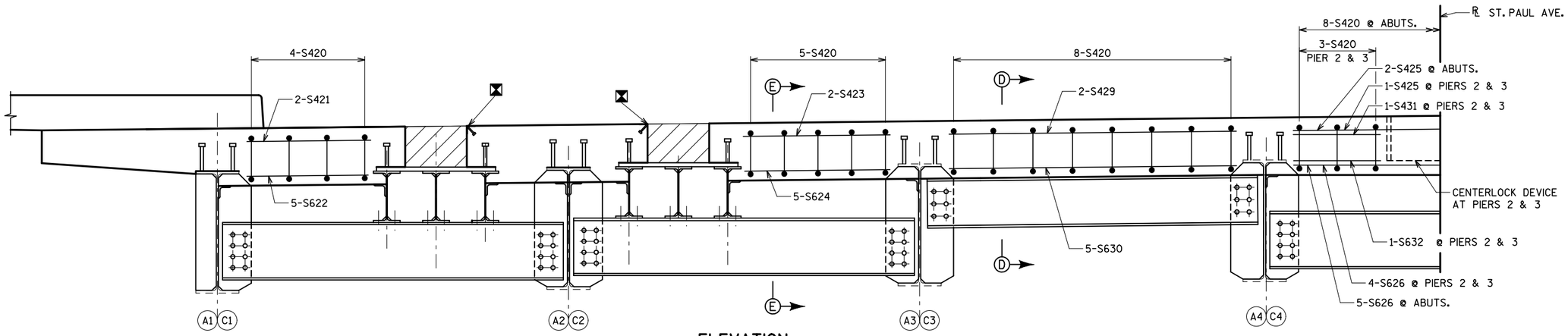

ELEVATION

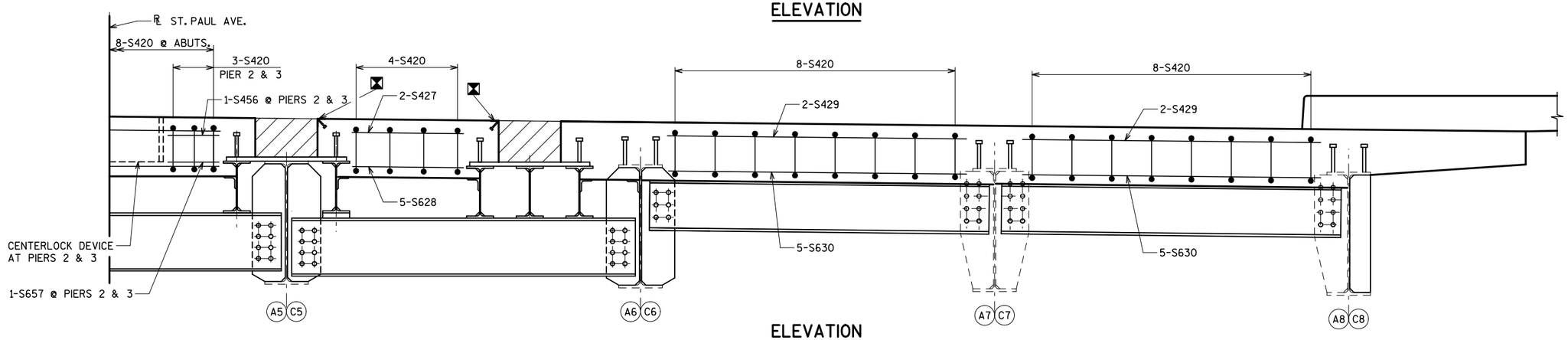

ELEVATION

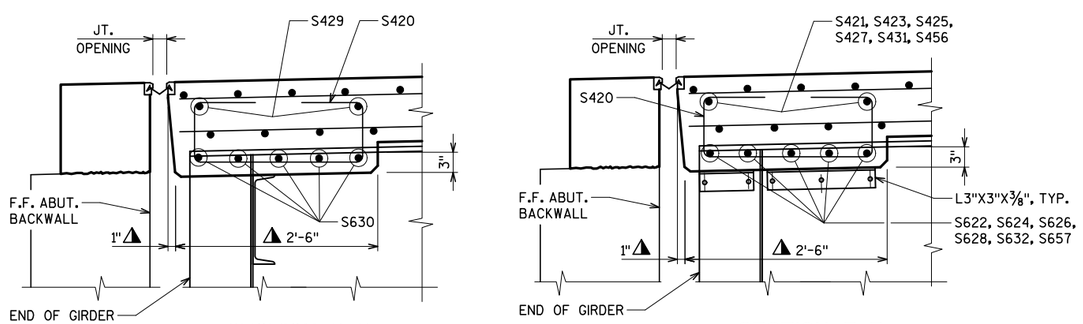

SECTION D-D SECTION E-E

▲ DIMENSION IS TAKEN NORMAL TO ℄ ABUTMENT

TYPICAL DIAPHRAGM SECTIONS AT ABUTMENTS

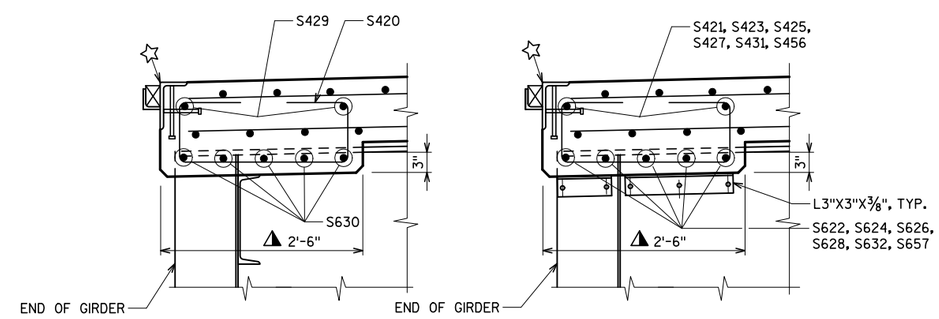

SECTION D-D SECTION E-E

▲ DIMENSION IS TAKEN NORMAL TO ℄ PIER

TYPICAL DIAPHRAGM SECTIONS AT PIERS

NOTES

DIAPHRAGM SUPPORT ANGLES SHALL BE ASTM A709 GRADE 36.
ALL BOLTS, NUTS AND WASHERS SHALL BE ASTM A325 TYPE 1.

ALL SUPPORT ANGLES SHALL BE HOT-DIPPED GALVANIZED.
ALL BOLTS, NUTS AND WASHERS SHALL BE HOT-DIPPED GALVANIZED IN ACCORDANCE WITH ASTM A153 CLASS C. GALVANIZED NUTS SHALL BE TAPPED OVERSIZED IN ACCORDANCE WITH THE REQUIREMENTS OF ASTM A563 AND SHALL MEET THE REQUIREMENT OF SUPPLEMENTARY REQUIREMENT S1 OF ASTM A563, LUBRICANT AND TEST FOR COATED NUTS.

ALL DIAPHRAGM SUPPORT HARDWARE SHALL BE INCIDENTAL TO "CONCRETE MASONRY BRIDGES".

LEGEND

⊠ L2x2x3/16" W/ 1/2"ΦX4" STUDS @ 12" CTRS, TYP. PAID UNDER BID ITEM "BRIDGE STRUCTURAL STEEL".

☆ LIFT SPAN ROADWAY JOINT, TYP. SEE SHEET LS23. PAID UNDER BID ITEM "LIFT SPAN ROADWAY JOINT".

City of Milwaukee
Department of Public Works
Infrastructure Services Division

BLOOM COMPANIES, LLC
Infrastructure Innovation and Ingenuity
10501 W. Research Drive • Milwaukee, WI 53226
Phone: (414) 771-3380 Fax: (414) 771-4490

ST PAUL AVE. LIFT BRIDGE
OVER THE MILWAUKEE RIVER
DIAPHRAGM REINFORCEMENT
DETAILS

REVISIONS

DESIGNED BY BDT	
DRAWN BY TAL	
CHECKED BY JRS	
DATE FEB 2013	SCALE NTS
JOB NUMBER BR100-10-0106	
SHEET NUMBER S40 OF S60	
OF 198	

BILL OF BARS- WEST FIXED SPANS

BAR MARK	COAT	NO.	LENGTH	BENT	BAR SERIES	LOCATION
S601	X	84	32'-6"			LONGITUDINAL TOP OVER PIER 1
S402	X	76	28'-1"			LONGITUDINAL TOP AT ABUTMENT
S403	X	76	28'-5"			LONGITUDINAL TOP AT PIER 2
S404	X	76	45'-0"			LONGITUDINAL BOTTOM
S405	X	76	42'-3"			LONGITUDINAL BOTTOM
S506	X	113	7'-7"			TRANSVERSE TOP, NORTH
S507	X	226	4'-0"			TRANSVERSE TOP, BETWEEN RAILS
S508	X	113	18'-8"	X		TRANSVERSE TOP
S509	X	113	19'-11"			TRANSVERSE TOP, SOUTH
S510	X	113	20'-6"	X		TRANSVERSE BOTTOM, SOUTH
S511	X	8	5'-0"			LONGITUDINAL AT DRAINS
S512	X	344	7'-4"	X		TRANSVERSE VERTICAL, SIDEWALKS
S413	X	344	7'-8"	X		TRANSVERSE VERTICAL, SIDEWALKS
S414	X	116	4'-0"			TRANSVERSE BOTTOM, SIDEWALKS
S415	X	26	45'-0"			LONGITUDINAL TOP AND BOTTOM, SIDEWALKS
S416	X	26	42'-3"			LONGITUDINAL TOP AND BOTTOM, SIDEWALKS
S417	X	36	5'-6"			LONGITUDINAL TOP AND BOTTOM, PLATFORMS
S618	X	24	12'-8"			TRANSVERSE TOP, PLATFORMS
S619	X	14	8'-11"			TRANSVERSE BOTTOM, PLATFORMS
S420	X	88	4'-2"	X		STIRRUPS AT DIAPHRAGMS
S421	X	6	2'-8"			HORIZ TOP, DIAPHRAGMS AND EXP. JOINTS
S622	X	10	2'-8"			HORIZ BOTTOM, DIAPHRAGMS
S423	X	6	3'-1"			HORIZ TOP, DIAPHRAGMS AND EXP. JOINTS
S624	X	10	3'-1"			HORIZ BOTTOM, DIAPHRAGMS
S425	X	5	5'-5"			HORIZ TOP, DIAPHRAGMS AND EXP. JOINTS
S626	X	9	5'-5"			HORIZ BOTTOM, DIAPHRAGMS
S427	X	6	2'-6"			HORIZ TOP, DIAPHRAGMS AND EXP. JOINTS
S628	X	10	2'-6"			HORIZ BOTTOM, DIAPHRAGMS
S429	X	18	6'-0"			HORIZ TOP, DIAPHRAGMS AND EXP. JOINTS
S630	X	30	6'-0"			HORIZ BOTTOM, DIAPHRAGMS
S431	X	1	1'-11"			HORIZ TOP, DIAPHRAGM, PIER 2
S632	X	1	1'-11"			HORIZ BOTTOM, DIAPHRAGM, PIER 2
S533	X	113	8'-2"	X		TRANSVERSE BOTTOM
S534	X	226	5'-2"	X		TRANSVERSE BOTTOM, BETWEEN RAILS
S535	X	113	19'-9"	X		TRANSVERSE BOTTOM
S436	X	14	4'-2"			TRANSVERSE BOTTOM, PLATFORMS
S537	X	16	7'-3"			TRANSVERSE TOP, ENDS
S538	X	16	7'-10"	X		TRANSVERSE BOTTOM, ENDS
S539	X	16	3'-5"			TRANSVERSE TOP, ENDS
S540	X	16	4'-7"	X		TRANSVERSE BOTTOM, ENDS
S541	X	15	18'-0"			TRANSVERSE TOP, ENDS
S542	X	15	19'-2"	X		TRANSVERSE BOTTOM, ENDS
S543	X	16	3'-5"			TRANSVERSE TOP, ENDS
S544	X	16	4'-7"	X		TRANSVERSE BOTTOM, ENDS
S545	X	16	19'-8"			TRANSVERSE TOP, ENDS
S546	X	16	20'-10"	X		TRANSVERSE BOTTOM, ENDS
S547	X	1	13'-9"			TRANSVERSE TOP, AT PIER 2
S548	X	1	14'-11"	X		TRANSVERSE BOTTOM, AT PIER 2
S549	X	1	1'-5"			TRANSVERSE TOP, AT PIER 2
S550	X	1	2'-7"	X		TRANSVERSE BOTTOM, AT PIER 2
S551	X	32	8'-4"	X	X	TRANSV., TOP & BOT., LIGHT STD.
S552	X	16	10'-2"	X		HORIZ., TOP & BOT., LIGHT STD.
S453	X	8	23'-3"			LONGITUDINAL, TOP, RAILS, AT ABUTMENT
S454	X	8	23'-5"			LONGITUDINAL, TOP, RAILS, AT PIER 2
S455	X	8	32'-7"			LONGITUDINAL, BOTTOM, RAILS
S456	X	1	1'-2"			HORIZ TOP, DIAPHRAGM, PIER 2
S657	X	1	1'-2"			HORIZ BOTTOM, DIAPHRAGM, PIER 2
S558	X	32	8'-6"	X	X	TRANSV., TOP & BOT., LIGHT STD.
S559	X	16	12'-0"	X		HORIZ., TOP & BOT., LIGHT STD.
S660	X	32	6'-6"	-	-	TRANSVERSE TOP, PLATFORMS

BILL OF BARS- EAST FIXED SPANS

BAR MARK	COAT	NO.	LENGTH	BENT	BAR SERIES	LOCATION
T601	X	84	32'-6"			LONGITUDINAL TOP OVER PIER 4
T402	X	76	28'-1"			LONGITUDINAL TOP AT ABUTMENT
T403	X	76	28'-5"			LONGITUDINAL TOP AT PIER 3
T404	X	76	45'-0"			LONGITUDINAL BOTTOM
T405	X	76	42'-3"			LONGITUDINAL BOTTOM
T506	X	113	7'-7"			TRANSVERSE TOP, NORTH
T507	X	226	4'-0"			TRANSVERSE TOP, BETWEEN RAILS
T508	X	113	18'-8"	X		TRANSVERSE TOP
T509	X	113	19'-11"			TRANSVERSE TOP, SOUTH
T510	X	113	21'-6"	X		TRANSVERSE BOTTOM, SOUTH
T511	X	8	5'-0"			LONGITUDINAL AT DRAINS
T512	X	344	7'-7"	X		TRANSVERSE VERTICAL, SIDEWALKS
T413	X	344	7'-4"	X		TRANSVERSE VERTICAL, SIDEWALKS
T414	X	116	4'-0"			TRANSVERSE BOTTOM, SIDEWALKS
T415	X	26	45'-0"			LONGITUDINAL TOP AND BOTTOM, SIDEWALKS
T416	X	26	42'-3"			LONGITUDINAL TOP AND BOTTOM, SIDEWALKS
T417	X	36	5'-6"			LONGITUDINAL TOP AND BOTTOM, PLATFORMS
T618	X	24	12'-8"			TRANSVERSE TOP, PLATFORMS
T619	X	14	8'-11"			TRANSVERSE BOTTOM, PLATFORMS
T420	X	88	4'-2"	X		STIRRUPS AT DIAPHRAGMS
T421	X	6	2'-8"			HORIZ TOP, DIAPHRAGMS AND EXP. JOINTS
T622	X	10	2'-8"			HORIZ BOTTOM, DIAPHRAGMS
T423	X	6	3'-1"			HORIZ TOP, DIAPHRAGMS AND EXP. JOINTS
T624	X	10	3'-1"			HORIZ BOTTOM, DIAPHRAGMS
T425	X	5	5'-5"			HORIZ TOP, DIAPHRAGMS AND EXP. JOINTS
T626	X	9	5'-5"			HORIZ BOTTOM, DIAPHRAGMS
T427	X	6	2'-6"			HORIZ TOP, DIAPHRAGMS AND EXP. JOINTS
T628	X	10	2'-6"			HORIZ BOTTOM, DIAPHRAGMS
T429	X	18	6'-0"			HORIZ TOP, DIAPHRAGMS AND EXP. JOINTS
T630	X	30	6'-0"			HORIZ BOTTOM, DIAPHRAGMS
T431	X	1	1'-11"			HORIZ TOP, DIAPHRAGM, PIER 3
T632	X	1	1'-11"			HORIZ BOTTOM, DIAPHRAGM, PIER 3
T533	X	113	8'-2"	X		TRANSVERSE BOTTOM
T534	X	226	5'-2"	X		TRANSVERSE BOTTOM, BETWEEN RAILS
T535	X	113	19'-9"	X		TRANSVERSE BOTTOM
T436	X	14	4'-2"			TRANSVERSE BOTTOM, PLATFORMS
T537	X	16	7'-3"			TRANSVERSE TOP, ENDS
T538	X	16	7'-10"	X		TRANSVERSE BOTTOM, ENDS
T539	X	16	3'-5"			TRANSVERSE TOP, ENDS
T540	X	16	4'-7"	X		TRANSVERSE BOTTOM, ENDS
T541	X	15	18'-0"	X		TRANSVERSE TOP, ENDS
T542	X	15	19'-2"	X		TRANSVERSE BOTTOM, ENDS
T543	X	16	3'-5"			TRANSVERSE TOP, ENDS
T544	X	16	4'-7"	X		TRANSVERSE BOTTOM, ENDS
T545	X	16	19'-8"			TRANSVERSE TOP, ENDS
T546	X	16	20'-10"	X		TRANSVERSE BOTTOM, ENDS
T547	X	1	13'-9"			TRANSVERSE TOP, AT PIER 3
T548	X	1	14'-11"	X		TRANSVERSE BOTTOM, AT PIER 3
T549	X	1	1'-5"			TRANSVERSE TOP, AT PIER 3
T550	X	1	2'-7"	X		TRANSVERSE BOTTOM, AT PIER 3
T551	X	32	8'-4"	X	X	TRANSV., TOP & BOT., LIGHT STD.
T552	X	16	10'-2"	X		HORIZ., TOP & BOT., LIGHT STD.
T453	X	8	23'-3"			LONGITUDINAL, TOP, RAILS, AT ABUTMENT
T454	X	8	23'-5"			LONGITUDINAL, TOP, RAILS, AT PIER 3
T455	X	8	32'-7"			LONGITUDINAL, BOTTOM, RAILS
T456	X	1	1'-2"			HORIZ TOP, DIAPHRAGM, PIER 3
T657	X	1	1'-2"			HORIZ BOTTOM, DIAPHRAGM, PIER 3
T558	X	32	8'-6"	X		TRANSV., TOP & BOT., LIGHT STD.
T559	X	16	12'-0"	X		HORIZ., TOP & BOT., LIGHT STD.
T660	X	32	6'-6"	-		TRANSVERSE TOP, PLATFORMS

BAR MARK	L
S534, T534	4'-0"
S540, T540	3'-5"
S544, T544	3'-5"
S548, T548	13'-9"
S550, T550	1'-5"

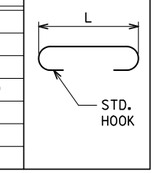

BAR MARK	L
S510, T510	19'-11"
S512, T512	7'-0"
S533, T533	7'-7"
S538, T538	7'-3"
S546, T546	19'-8"

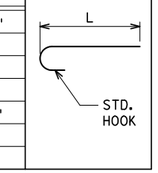

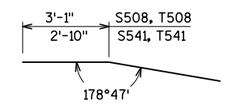

S508, T508
S541, T541

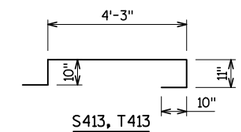

S413, T413

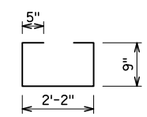

S420, T420

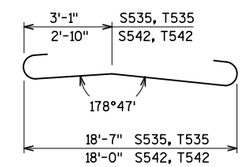

S535, S542
T535, T542

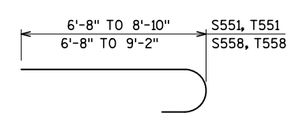

S551, T551
S558, T558

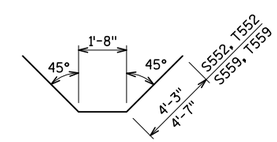

S552, T552
S559, T559

BENDING DIAGRAMS

BAR SERIES TABLE

BAR MARK	NO. REQ'D	LENGTH
S551	8 SERIES OF 4	7'-3" TO 9'-5"
S558	8 SERIES OF 4	7'-3" TO 9'-9"
T551	8 SERIES OF 4	7'-3" TO 9'-5"
T558	8 SERIES OF 4	7'-3" TO 9'-9"

BUNDLE AND TAG EACH SERIES SEPARATELY

City of Milwaukee

Department of Public Works

Infrastructure Services Division

BLOOM COMPANIES, LLC
Infrastructure Innovation and Ingenuity
10501 W. Research Drive • Milwaukee, WI 53226
Phone: (414) 771-3380 Fax: (414) 771-4490

ST PAUL AVE. LIFT BRIDGE
OVER THE MILWAUKEE RIVER
FIXED SPAN SUPERSTRUCTURE
BILL OF BARS

REVISIONS

DESIGNED BY BDT
DRAWN BY TB
CHECKED BY JRS
DATE FEB 2013
SCALE NTS
JOB NUMBER BR100-10-0106
SHEET NUMBER S41 OF S60
OF 198

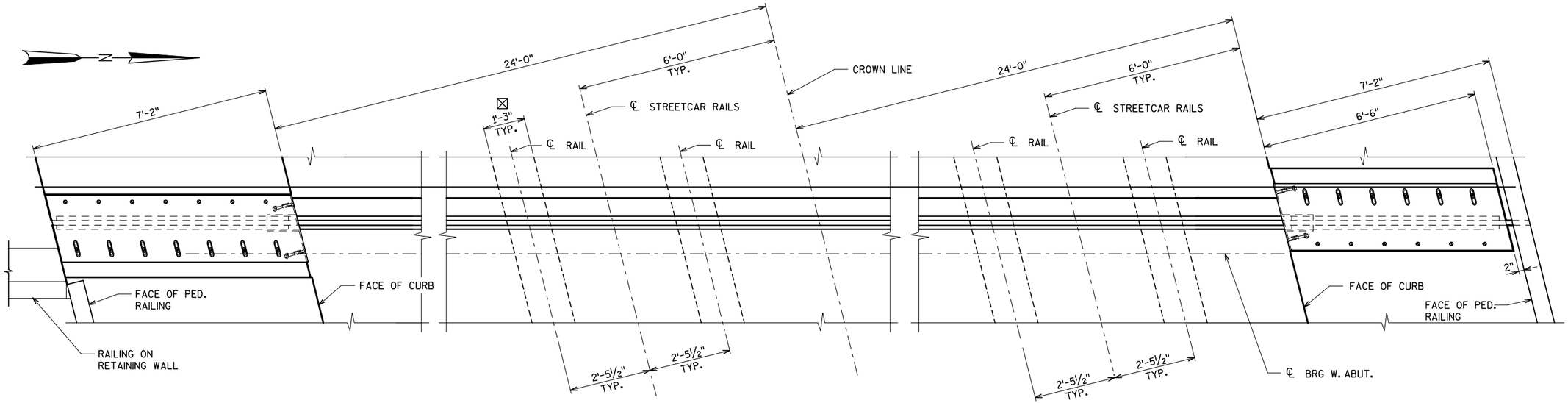

WEST ABUTMENT

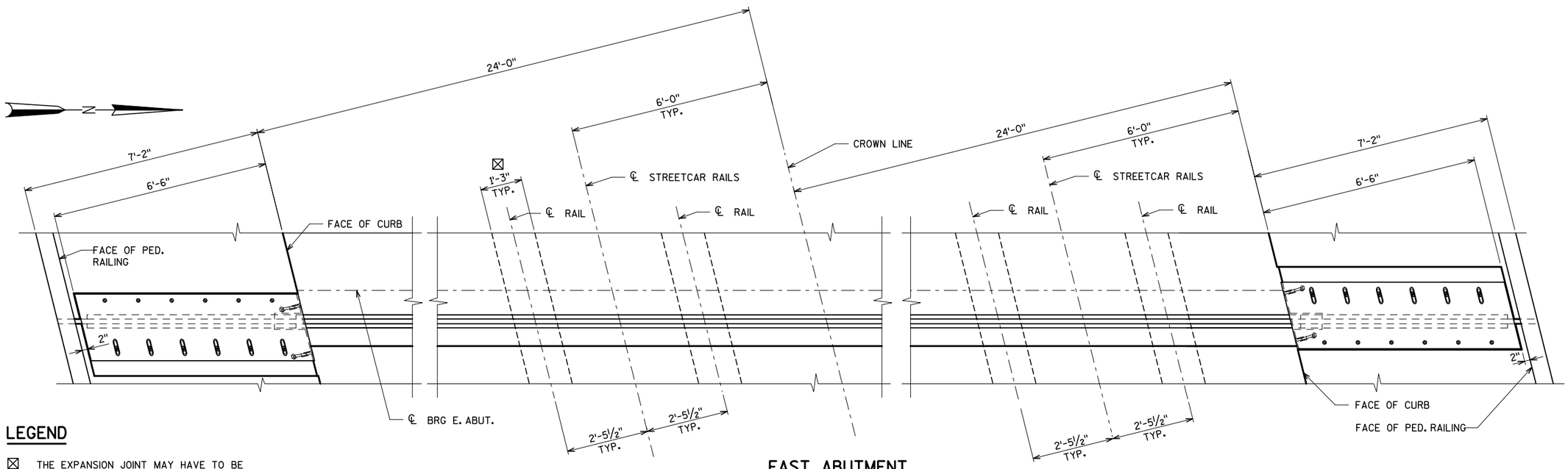

EAST ABUTMENT

LEGEND

☒ THE EXPANSION JOINT MAY HAVE TO BE FABRICATED IN MULTIPLE SEGMENTS DEPENDING UPON THE STATUS OF CONSTRUCTION OF THE STREETCAR PROJECT. BEFORE FABRICATION, VERIFY WITH THE ENGINEER IF THE EXPANSION JOINT HAS TO BE CONTINUOUS ACROSS THE RAIL BLCOK OUT. BID PRICE SHALL INCLUDE THE COST OF FABRICATION OF EXPANSION JOINT IN MULTIPLE SEGMENTS BETWEEN THE STREETCAR RAILS.

NOTE

SEE SHEET S43 FOR DETAILS.

City of Milwaukee

Department of Public Works

Infrastructure Services Division

BLOOM COMPANIES, LLC
Infrastructure Innovation and Ingenuity
10501 W. Research Drive • Milwaukee, WI 53226
Phone: (414) 771-3380 Fax: (414) 771-4490

ST PAUL AVE. LIFT BRIDGE
OVER THE MILWAUKEE RIVER
FIXED SPAN
EXPANSION JOINT PLAN

REVISIONS

DESIGNED BY BDT	
DRAWN BY TAL	
CHECKED BY JRS	
DATE FEB 2013	SCALE NTS
JOB NUMBER BR100-10-0106	
SHEET NUMBER S42 OF S60	
OF 198	

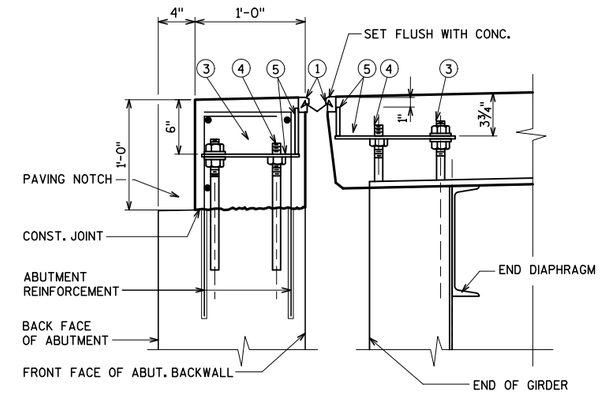

SECTION THRU JOINT

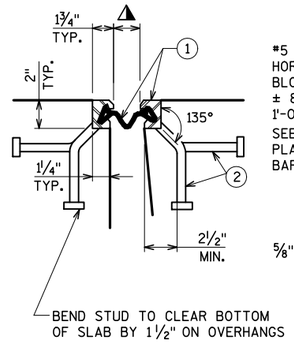

SECTION THRU JOINT

EXTERIOR GIRDER TO EDGE OF SLAB & SIDEWALKS

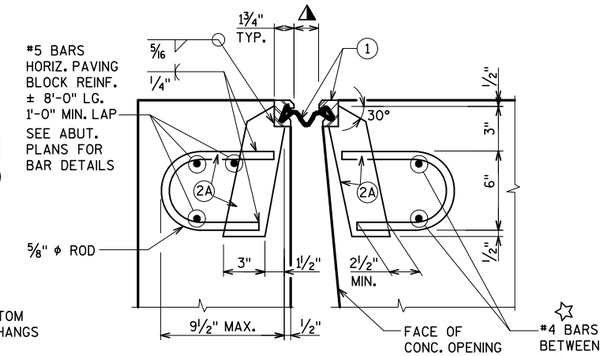

SECTION THRU JOINT

ROADWAY TRAFFIC AREA BETWEEN EXTERIOR GIRDERS

☆ S421, S423, S425, S427, S429 - WEST ABUT.
T421, T423, T425, T427, T429 - EAST ABUT.

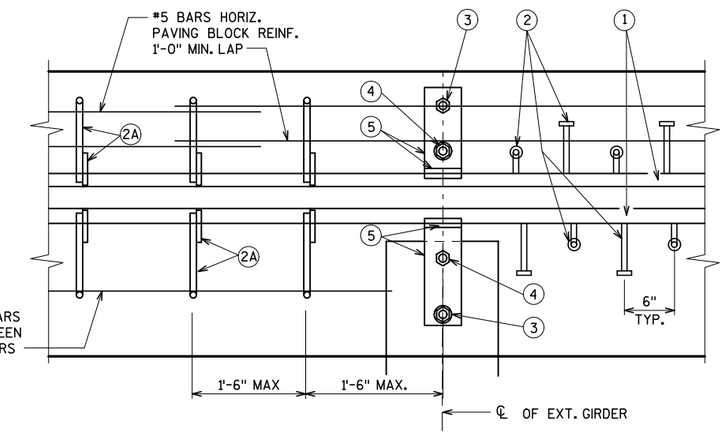

PART PLAN

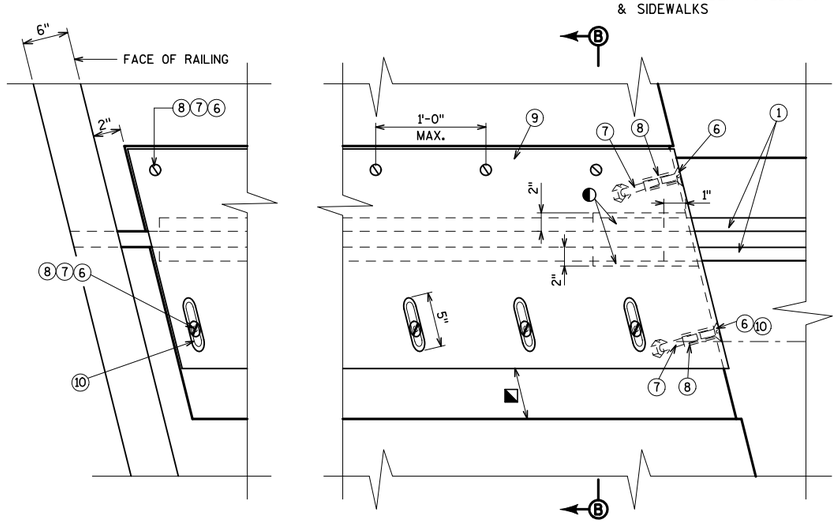

PLAN AT SIDEWALK

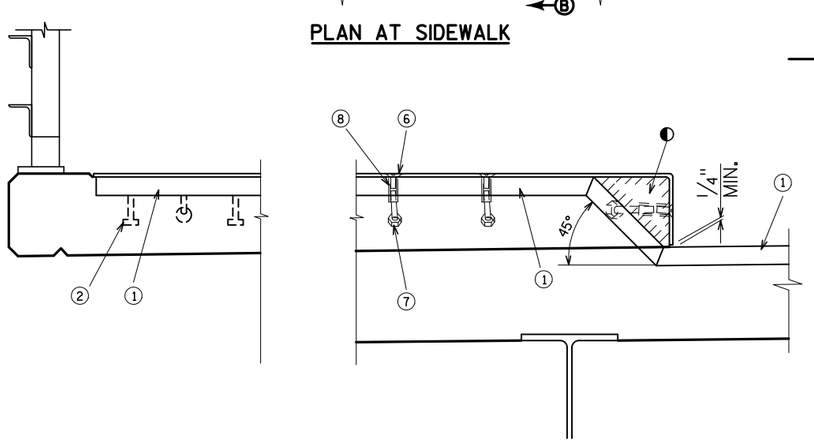

SECTION AT SIDEWALK

TRAFFIC RAILING NOT SHOWN FOR CLARITY

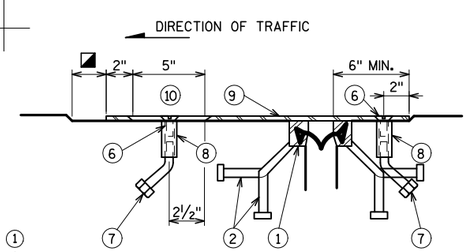

SECTION B-B

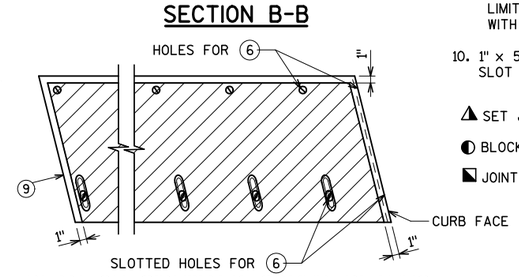

PLAN OF SIDEWALK COVER PLATES WITH SLIP- RESISTANT SURFACE

PLACE SLIP RESISTANT SURFACE ON TOP WALKING SURFACE IN HATCH AREA ONLY (NOT ON CURB FACE).

LEGEND

1. NEOPRENE STRIP SEAL 4-INCH, AND STEEL EXTRUSIONS.
2. STUDS 5/8" ϕ x 6 3/8" LONG AT 6" ALTERNATE CENTERS. WELD TO EXTRUSIONS & BEND AS SHOWN AFTER WELDING.

2A. 1/2" THICK ANCHOR PLATE WITH 5/8" ϕ ROD (OR ALTERNATE STRIP SEAL ANCHOR). WELD ROD TO ANCHOR PLATE, WELD ANCHOR PLATE TO NO.1 AT 1'-6" CTRS. BETWEEN GIRDERS.

3. 3/4" ϕ THREADED ROD WITH 2 NUTS AND WASHERS. WELD THREADED ROD TO TOP FLANGE OR ATTACH BY BOLTING THRU FLANGE. ON ABUTMENT SIDE GROUT THREADED ROD INTO FIELD DRILLED HOLES IN ABUTMENT BACKWALL AS SHOWN.
4. 3/4" ϕ THREADED ROD WITH NUT. TACK WELD NUT TO NO. 5.
5. FABRICATE SUPPORT FROM 3" x 1/2" BAR AS SHOWN OR EQUIVALENT, ONE PER GIRDER PER SIDE. FIELD OR SHOP WELD TO NO. 1. IF FIELD WELDED, COVER WELDED AREAS WITH EPOXY-COATING MATERIAL. PROVIDE 1 1/2" ϕ HOLE FOR NO. 3 & 1" ϕ HOLE FOR NO. 4.
6. 3/4" ϕ x 1 1/2" STAINLESS STEEL SOCKET FLAT HEAD SCREWS WITH ANTI-SEIZE LUBRICANT. RECESS 1/16" BELOW PLATE SURFACE.
7. 3/4" ϕ x 4" GALV. HEX HEAD BOLT. BEND 45°.
8. 3/4" ϕ x 2 1/4" GALV. THREADED COUPLING.
9. GALVANIZED SIDEWALK PLATE 3/8" x 2'-0" WIDE x LIMITS SHOWN. BEND DOWN FACE OF SIDEWALK WITH HOLES FOR NO. 7.
10. 1" x 5" SLOTTED CSK. HOLE FOR NO. 7. SLOT PARALLEL TO DIRECTION OF MOVEMENT.

◭ SET JOINT OPENING AT 1¾" MEASURED NORMAL TO JOINT.

◐ BLOCK OUT CONCRETE 2" EACH SIDE FOR JOINT OPENING.

◪ JOINT OPENING DIM. ALONG SKEW PLUS 1/2"= 2 1/4"

GENERAL NOTES

ONE FIELD SPLICE PERMITTED IN STEEL EXTRUSIONS. IF USED, DETAILS SHALL BE SUBMITTED FOR APPROVAL. NO SPLICING PERMITTED IN NEOPRENE STRIP SEAL.

AFTER FABRICATION, BUT BEFORE SHIPMENT, STRAIGHTEN STEEL EXTRUSIONS SUCH THAT THEY SHALL BE FREE FROM WARP, TWIST & SWEEP.

FABRICATOR SHALL PROVIDE MEANS OF KEEPING GALVANIZED EXTRUSIONS CLEAN & SMOOTH DURING SHIPMENT AND PRIOR TO APPLYING LUBRICANT ADHESIVE FOR NEOPRENE GLAND INSTALLATION.

SANDBLAST PLATES & EXTRUSIONS AFTER FABRICATION IN ACCORDANCE WITH SSPC SP. #6 "COMERCIAL BLAST CLEANING". AFTER BLAST CLEANING THE PLATES & EXTRUSIONS, INCLUDING THREADED RODS, SHALL BE HOT DIPPED GALVANIZED.

ANCHOR SYSTEM NO. 8 & NO. 9 SHALL CONFORM TO ASTM A307 AND SHALL BE GALVANIZED IN ACCORDANCE WITH ASTM A153 CLASS C & D.

STRIP SEAL EXPANSION JOINT ASSEMBLY, INCLUDING ANCHOR STUDS & HARDWARE WILL BE PAID FOR AT THE LUMP SUM PRICE BID FOR "EXPANSION DEVICE".

SLIP RESISTANT SURFACE IS APPLIED TO SIDEWALK COVER PLATES BY THE MANUFACTURER AND THEN HOT-DIPPED GALVANIZED TO THEIR RECOMMENDATIONS TO MAINTAIN THE INTEGRITY OF THIS SURFACE.

City of Milwaukee
Department of Public Works
Infrastructure Services Division

BLOOM COMPANIES, LLC
Infrastructure Innovation and Ingenuity
10501 W. Research Drive • Milwaukee, WI 53226
Phone: (414) 771-3380 • Fax: (414) 771-4490

ST PAUL AVE. LIFT BRIDGE
OVER THE MILWAUKEE RIVER
FIXED SPAN
EXPANSION JOINT DETAILS

REVISIONS

DESIGNED BY BDT	
DRAWN BY TAL	
CHECKED BY JRS	
DATE FEB 2013	SCALE NTS
JOB NUMBER BR100-10-0106	
SHEET NUMBER S43 OF S60	
OF 198	

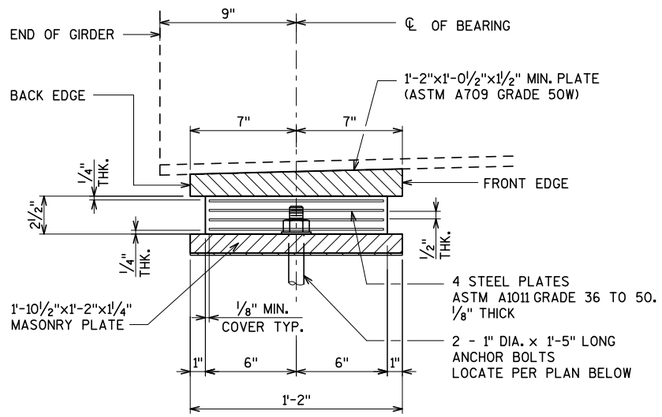

SECTION THRU ELASTOMERIC BEARING

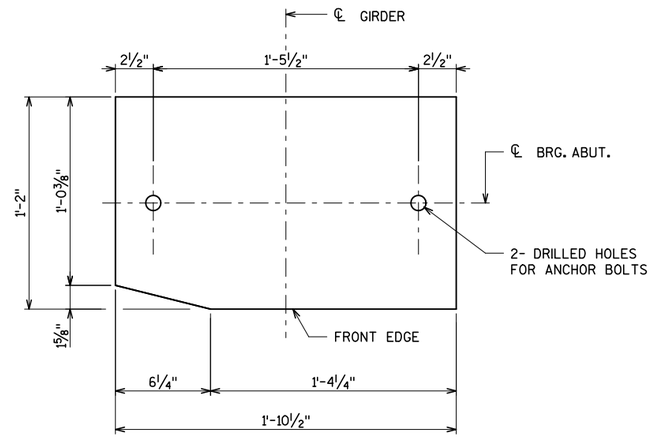

ANCHOR BOLT PLAN AT EXIST. GIRDERS

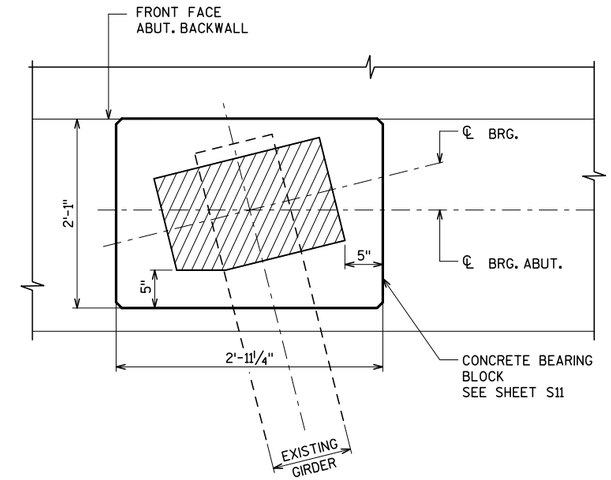

CLEARANCE DIAGRAM AT ABUTMENTS

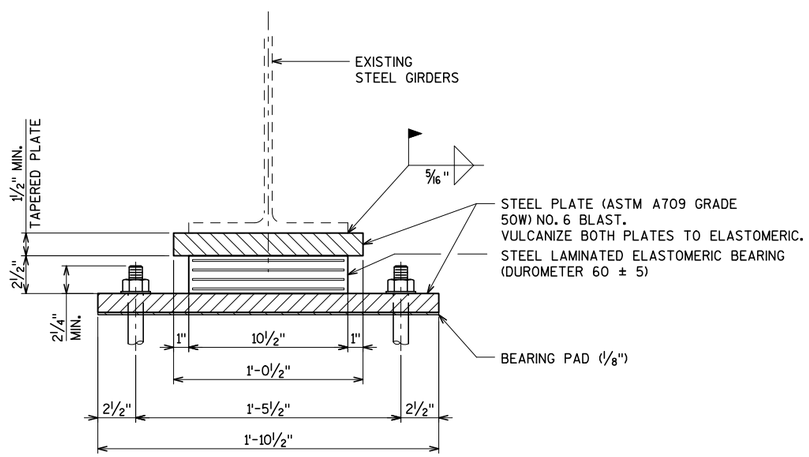

FRONT ELEVATION

TAPERED TOP PLATE THICKNESS

LOCATION	THICKNESS AT BACK EDGE	THICKNESS AT FRONT EDGE
WEST ABUTMENT	1½"	1 13/16 "
EAST ABUTMENT	1½"	1¾"

NOTES

ALL MATERIAL USED FOR BEARINGS INCLUDING ANCHOR BOLTS, STEEL PLATES & BEARING PADS SHALL BE PAID FOR AT THE UNIT PRICE BID FOR "BEARING REPLACEMET".

ALL STRUCTURAL STEEL PLATES SHALL BE FLAT ROLLED WITH ALL SURFACES SMOOTH AND FREE FROM WARP AND ALL EDGES SMOOTH, STRAIGHT AND VERTICAL.

ALL PLATE CUTS SHALL BE MACHINE OR MACHINE FLAME CUTS.

ANCHOR BOLTS FOR BEARINGS SHALL BE THREADED 3", PROVIDE ONE STANDARD WROUGHT WASHERND ONE HEX NUT PER BOLT.

PROVIDE ⅛" THICK BEARING PAD SAME SIZE AS MASONRY PLATE FOR BEARINGS.

CHAMFER ANCHOR BOLTS PRIOR TO THREADING.

DRILLED HOLES FOR ANCHOR BOLTS IN MASONRY PLATE SHALL HAVE A DIAMETER ⅜" LARGER THAN ANCHOR BOLT.

ALL ANCHOR BOLTS, NUTS AND WASHERS SHALL CONFORM TO ASTM A709 GRADE 36, OR MATERIAL OF EQUIVALENT YIELD STRENGTH AND ELONGATION.

ANCHOR BOLTS, NUTS AND WASHERS SHALL BE GALVANIZED AS REQUIRED BY ASTM DESIGNATION A153, CLASS C.

NEW ELASTOMERIC BEARINGS TO BE PLACED AT ALL GIRDERS ON WEST AND EAST ABUTMENTS.

City of Milwaukee
Department of Public Works
Infrastructure Services Division

BLOOM COMPANIES, LLC
Infrastructure Innovation and Ingenuity
10501 W. Research Drive • Milwaukee, WI 53226
Phone: (414) 771-3380 • Fax: (414) 771-4490

ST PAUL AVE. LIFT BRIDGE
OVER THE MILWAUKEE RIVER
ELASTOMERIC BEARING

REVISIONS

DESIGNED BY BDT
DRAWN BY TAL
CHECKED BY JRS
DATE FEB 2013
SCALE NTS
JOB NUMBER BR100-10-0106
SHEET NUMBER S44 OF S60
OF 198

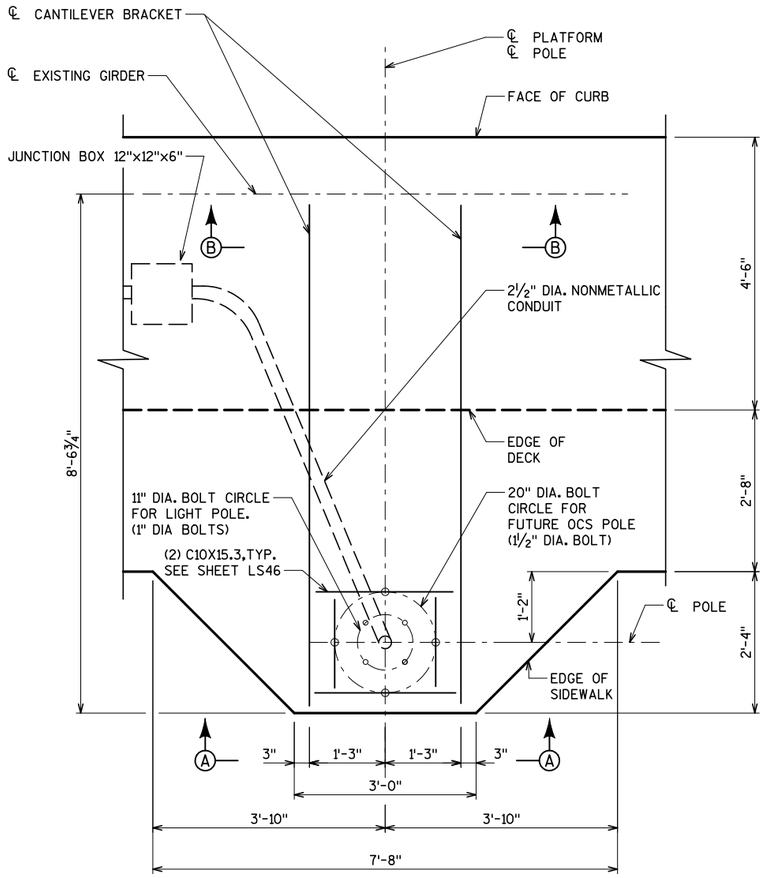

CANTILEVER BRACKET- PLAN

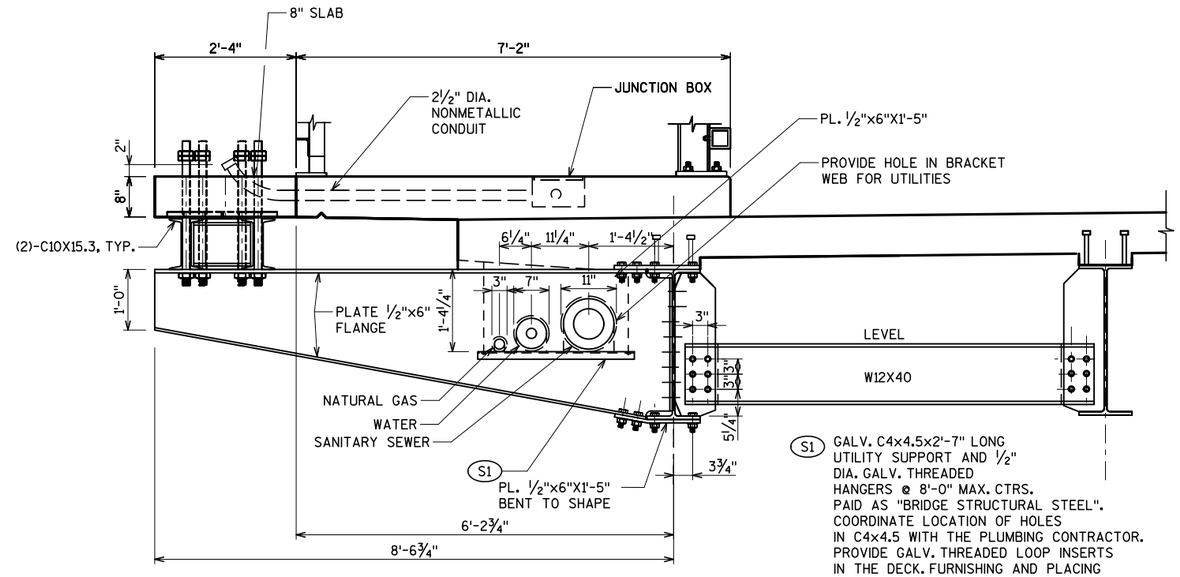

CANTILEVER BRACKET- ELEVATION

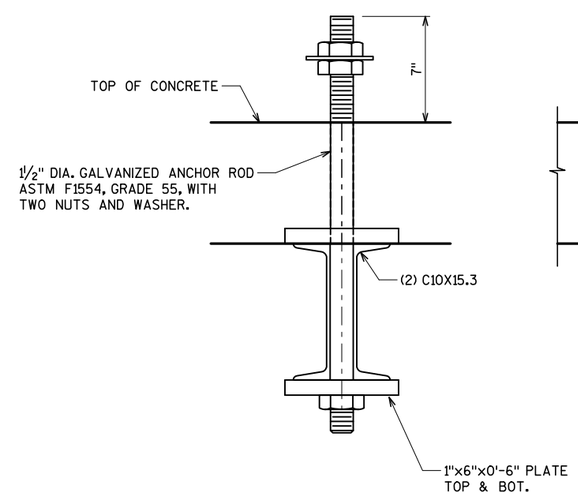

ANCHOR BOLT DETAIL

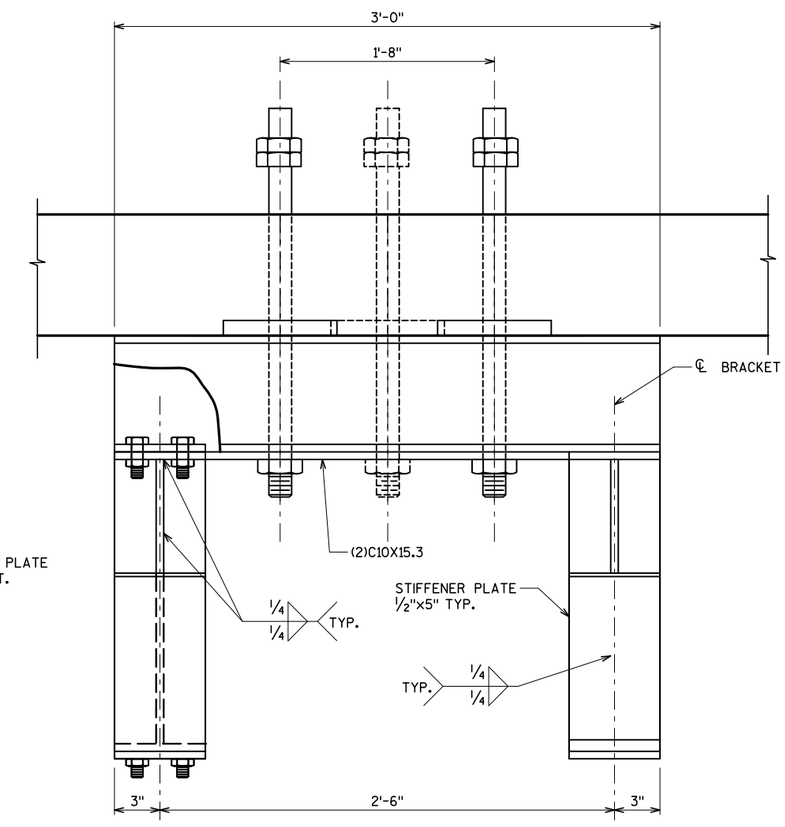

VIEW A-A

(LIGHT POLE ANCHORS NOT SHOWN FOR CLARITY)

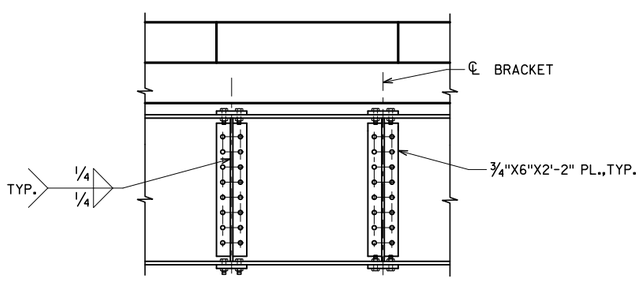

SECTION B-B

City of Milwaukee

Department of Public Works

Infrastructure Services Division

BLOOM COMPANIES, LLC
Infrastructure Innovation and Ingenuity
10501 W. Research Drive • Milwaukee, WI 53226
Phone: (414) 771-3380 Fax: (414) 771-4490

ST PAUL AVE. LIFT BRIDGE OVER THE MILWAUKEE RIVER LIGHT POLE BASE (1 OF 2)

REVISIONS

DESIGNED BY BDT	
DRAWN BY TAL	
CHECKED BY JRS	
DATE FEB 2013	SCALE NTS
JOB NUMBER BR100-10-0106	
SHEET NUMBER S45 OF S60	
OF 198	

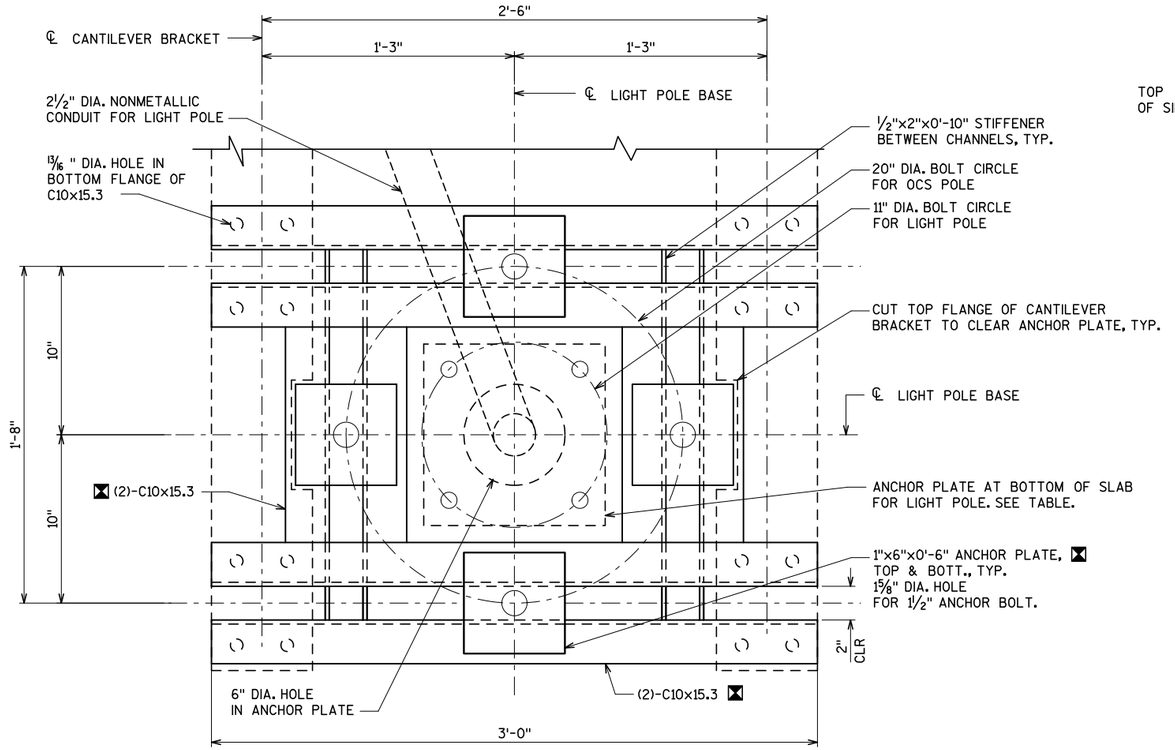

LIGHT POLE BASE FRAMING PLAN

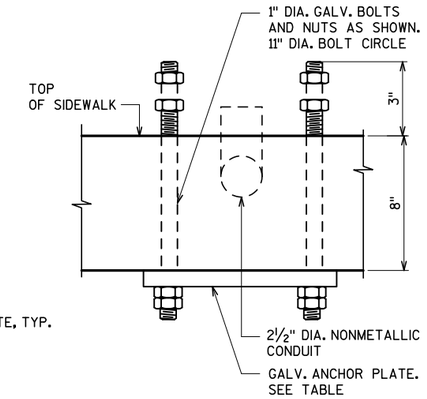

ANCHORAGE FOR LIGHT POLE

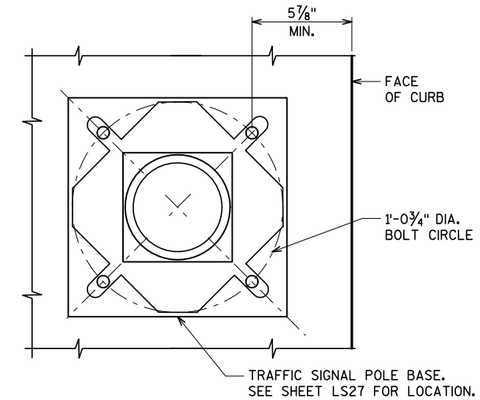

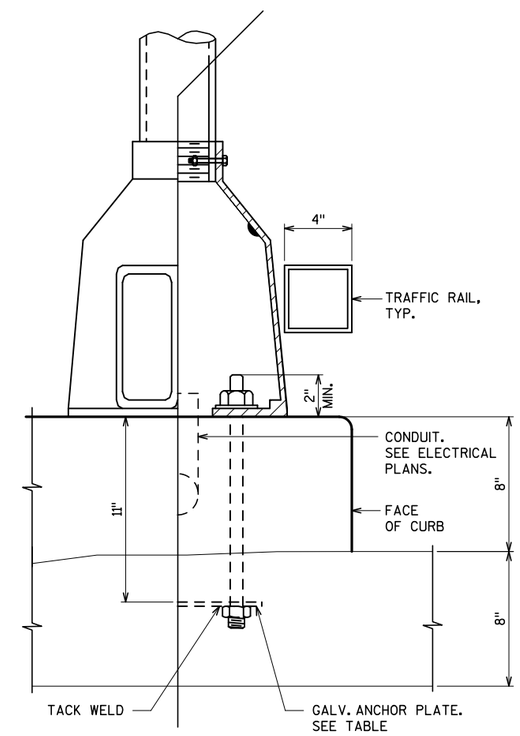

ANCHORAGE FOR TRAFFIC SIGNAL POLE

* CHECK FOR CLEARANCE OF POLE BASE TO TRAFFIC RAILING BEFORE SETTING THE ANCHOR BOLTS.

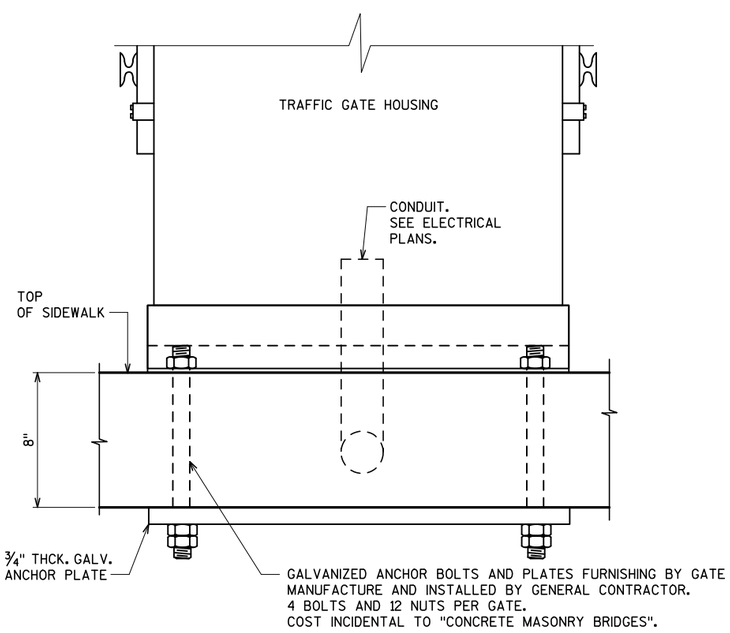

ANCHORAGE FOR TRAFFIC GATE

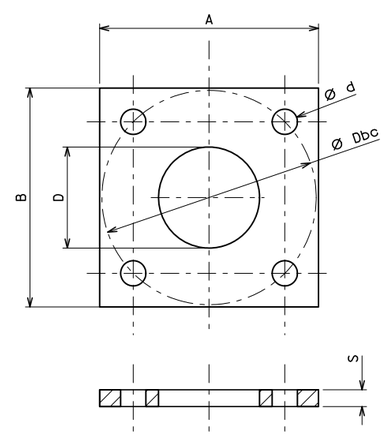

	A	B	Dbc	D	d	S
LIGHT POLE	10¾"	10¾"	11"	6"	1⅛"	1"
TRAFFIC SIGNAL*	1'-0"	1'-0"	1'-0¾"	6"	1"	¼"

* TACK WELD NUT TO ANCHOR PLATE AT 3 PLACES.

ANCHOR PLATES

NOTE:
ALL ANCHOR PLATES TO BE HOT DIPPED GALVANIZED.

LEGEND

☒ PAID UNDER BID ITEM "BRIDGE STRUCTURAL STEEL".

NOTES

ANCHOR ASSEMBLY FOR OCS POLE IS PAID UNDER BID ITEM "ANCHOR ASSEMBLIES LIGHT POLES ON STRUCTURES".

ANCHOR ASSEMBLY FOR LIGHT POLE IS PAID UNDER BID ITEM "ANCHOR ASSEMBLIES LIGHT POLES ON STRUCTURES".

City of Milwaukee
Department of Public Works
Infrastructure Services Division

BLOOM COMPANIES, LLC
Infrastructure Innovation and Ingenuity
10501 W. Research Drive • Milwaukee, WI 53226
Phone: (414) 771-3380 Fax: (414) 771-4490

ST PAUL AVE. LIFT BRIDGE
OVER THE MILWAUKEE RIVER
LIGHT POLE BASE (2 OF 2)

REVISIONS

DESIGNED BY BDT
DRAWN BY TAL
CHECKED BY JRS
DATE FEB 2013
SCALE NTS
JOB NUMBER BR100-10-0106
SHEET NUMBER S46 OF S60
OF 198

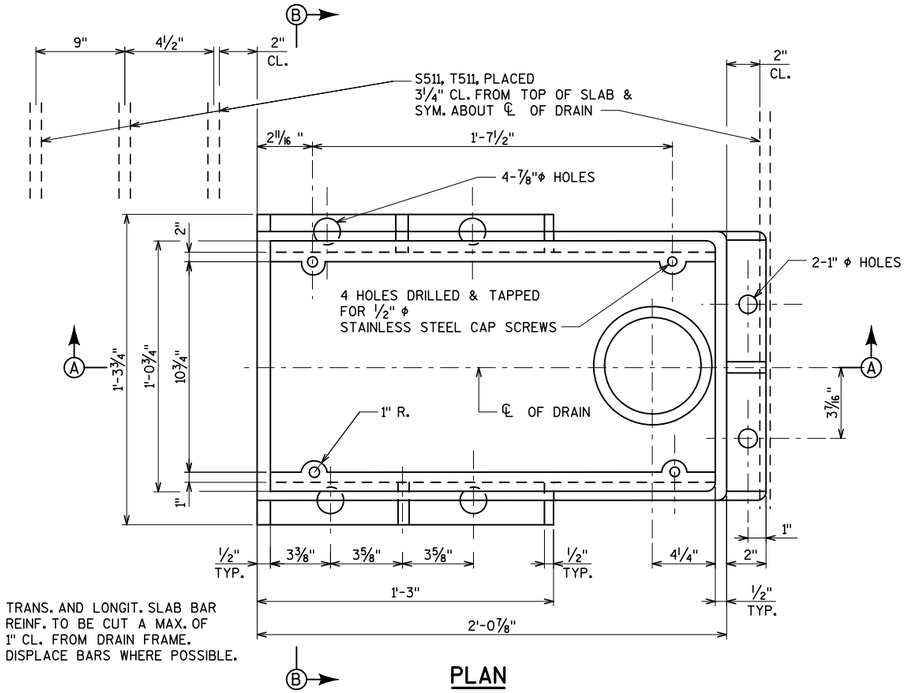

PLAN

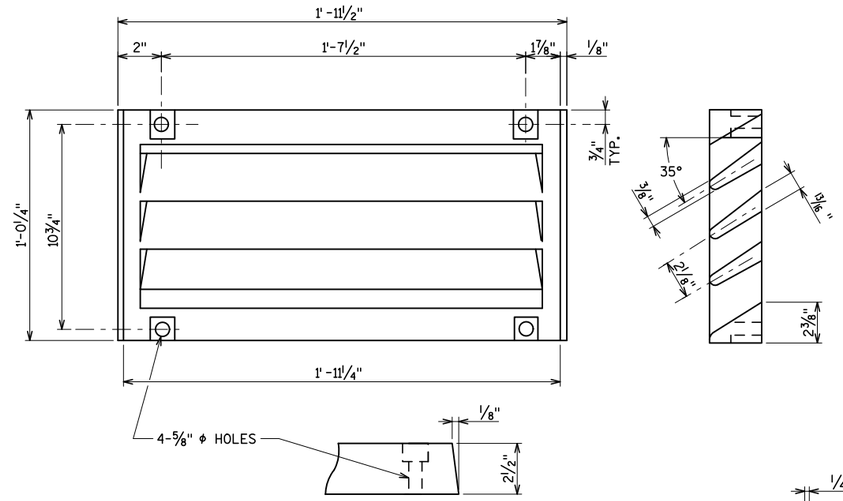

GRATE CASTING DETAIL

ATTACH GRATE TO FRAME FOR SHIPMENT

NOTES

ALL MATERIAL FOR TYPE "GC" CASTING, EXCLUDING GRATE HOLD DOWN SCREWS, SHALL BE GRAY IRON CONFORMING TO ASTM A48, CLASS 30. (APPROXIMATE WEIGHT = 225#)

MATERIAL FOR BRACKETS SHALL CONFORM TO ASTM A36.

THE CONTRACTOR MAY PROPOSE AN ALTERNATE TYPE OF BRACKET. THE PROPOSED ALTERNATE DETAILS SHALL BE SUBMITTED AND SUBJECT TO THE APPROVAL OF THE ENGINEER.

FLANGED 6" DIA. DOWNSPOUTS SHALL BE EITHER CAST MATERIAL OR FIBERGLASS CONFORMING TO ASTM D2996, GRADE 1, CLASS A.

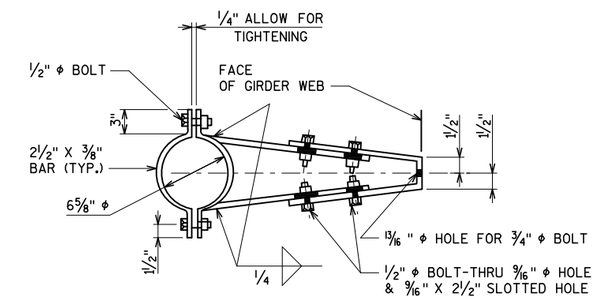

BRACKET DETAIL

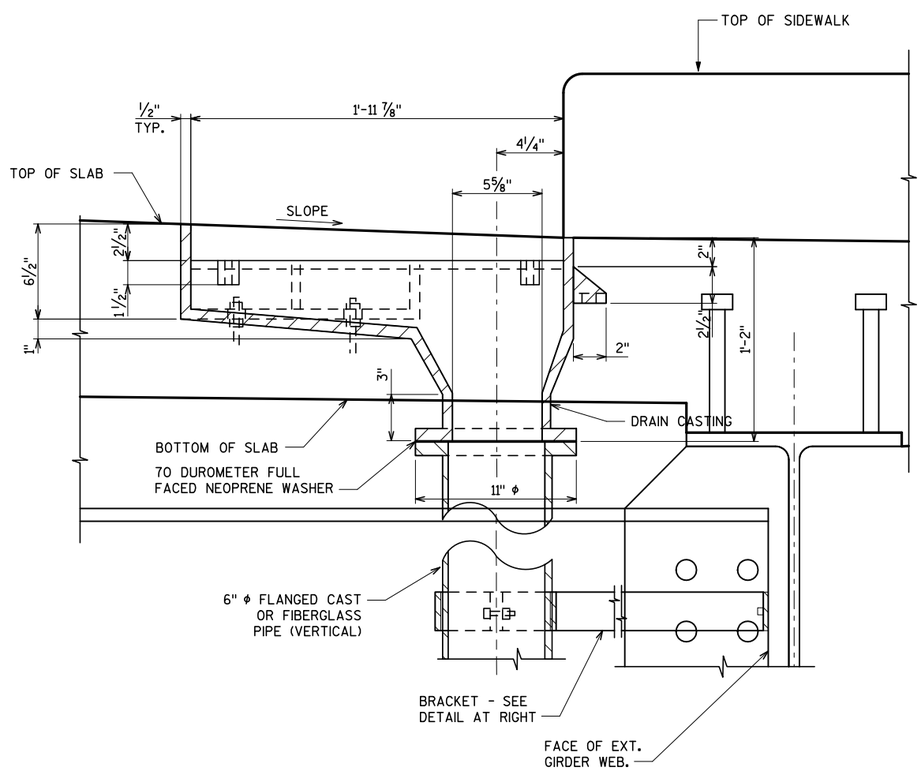

SECTION A-A

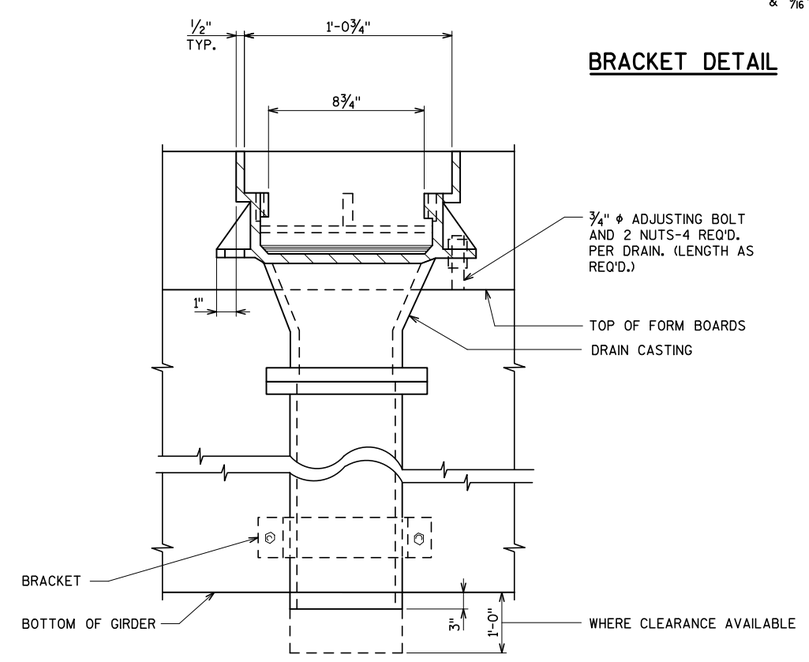

SECTION B-B

City of Milwaukee

Department of Public Works

Infrastructure Services Division

BLOOM COMPANIES, LLC
Infrastructure Innovation and Ingenuity
10501 W. Research Drive • Milwaukee, WI 53226
Phone: (414) 771-3380 Fax: (414) 771-4490

ST PAUL AVE. LIFT BRIDGE
OVER THE MILWAUKEE RIVER
FLOOR DRAIN TYPE 'GC'

REVISIONS

DESIGNED BY BDT	
DRAWN BY TAL	
CHECKED BY JRS	
DATE FEB 2013	SCALE NTS
JOB NUMBER BR100-10-0106	
SHEET NUMBER S47 OF S60	
OF 198	

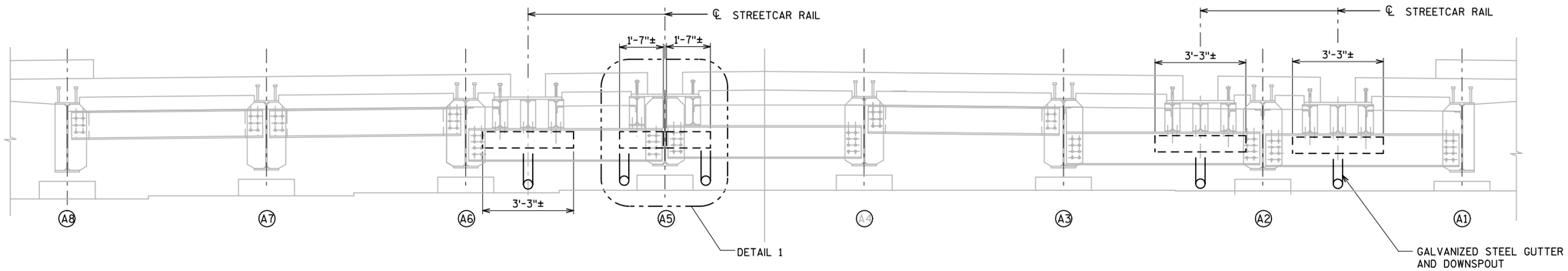

ELEVATION

(LOOKING WEST)

WEST ABUTMENT SHOWN. EAST ABUTMENT OPPOSITE.
ALL DIMENSIONS SHOWN NORMAL TO RDWY

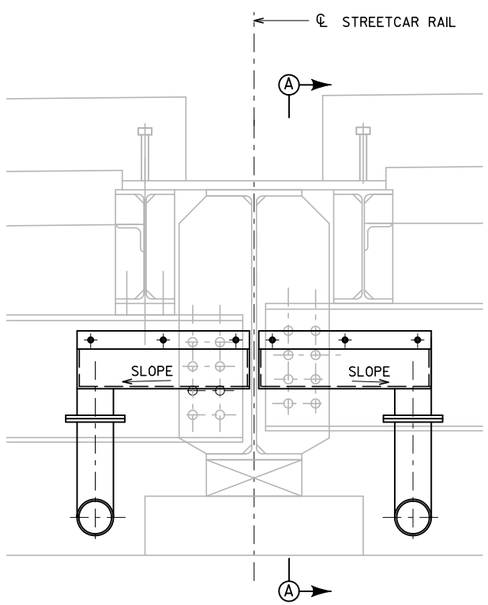

DETAIL 1

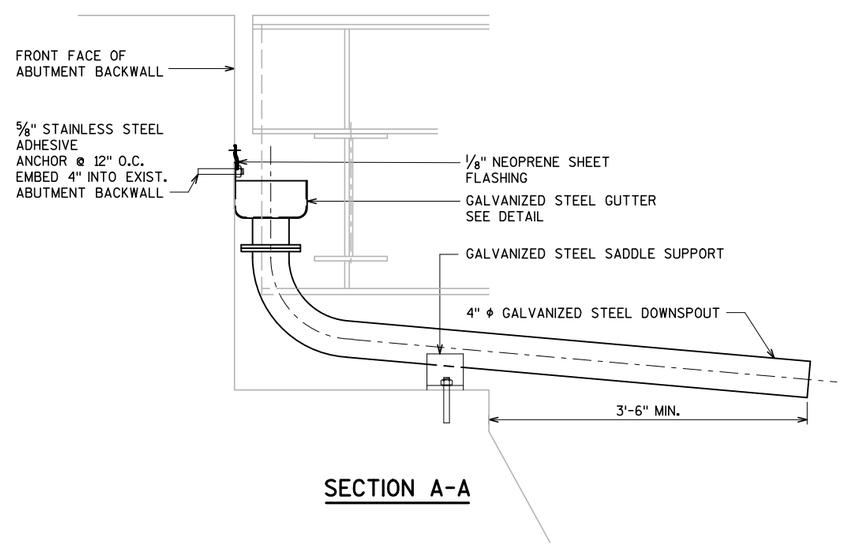

SECTION A-A

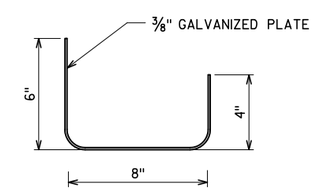

TYPICAL SECTION OF GUTTER

NOTES

BID ITEM IS "UNDERDECK GUTTER SYSTEM P-40-523" AND SHALL INCLUDE ALL ITEMS SHOWN.

GALVANIZED GUTTER ASSEMBLY SHALL BE PAINTED WITH THE APPROVED TWO COAT PAINT SYSTEM.

SLOPE ALL GUTTERS ¼" PER FOOT TOWARDS THE DISCHARGE END.

SUBMIT SHOP DRAWINGS WITH FIELD VERIFIED DIMENSIONS

SEE SHEET S56 FOR GUTTER IN FRONT OF THE BRIDGE HOUSE, BELOW THE SIDEWALK, WHICH IS INCLUDED IN THE COST FOR BID ITEM "UNDERDECK GUTTER SYSTEM P-40-523"

City of Milwaukee

Department of Public Works

Infrastructure Services Division

BLOOM COMPANIES, LLC
Infrastructure Innovation and Ingenuity
10501 W. Research Drive • Milwaukee, WI 53226
Phone: (414) 771-3380 Fax: (414) 771-4490

ST PAUL AVE. LIFT BRIDGE
OVER THE MILWAUKEE RIVER
UNDERDECK GUTTER
AT ABUTMENTS

REVISIONS

DESIGNED BY BDT	
DRAWN BY TAL	
CHECKED BY JRS	
DATE FEB 2013	SCALE NTS
JOB NUMBER BR100-10-0106	
SHEET NUMBER S48 OF S60	
OF 198	

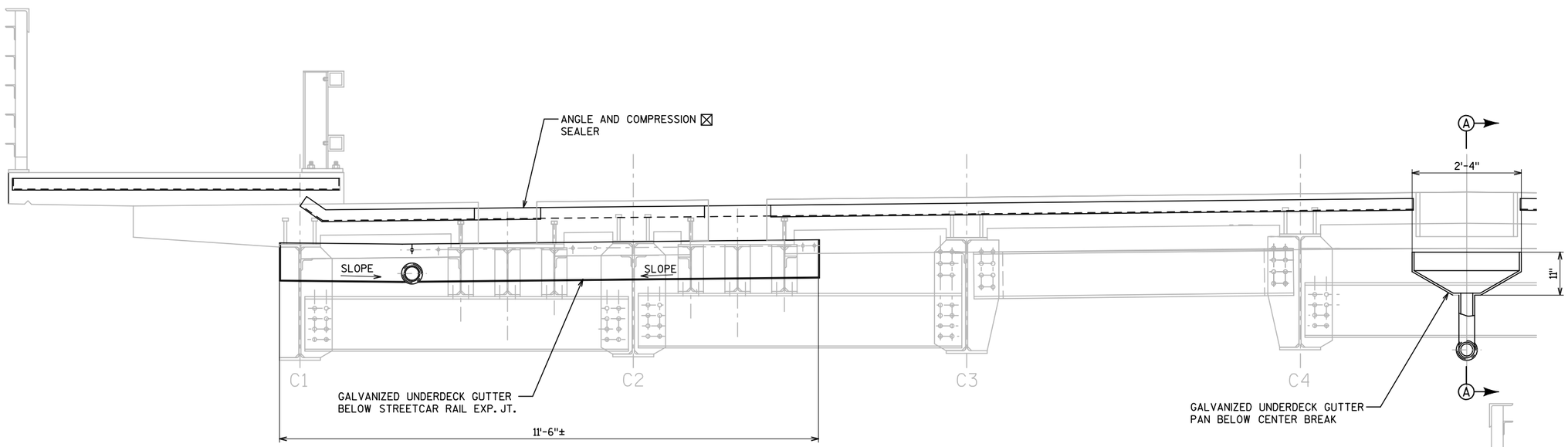

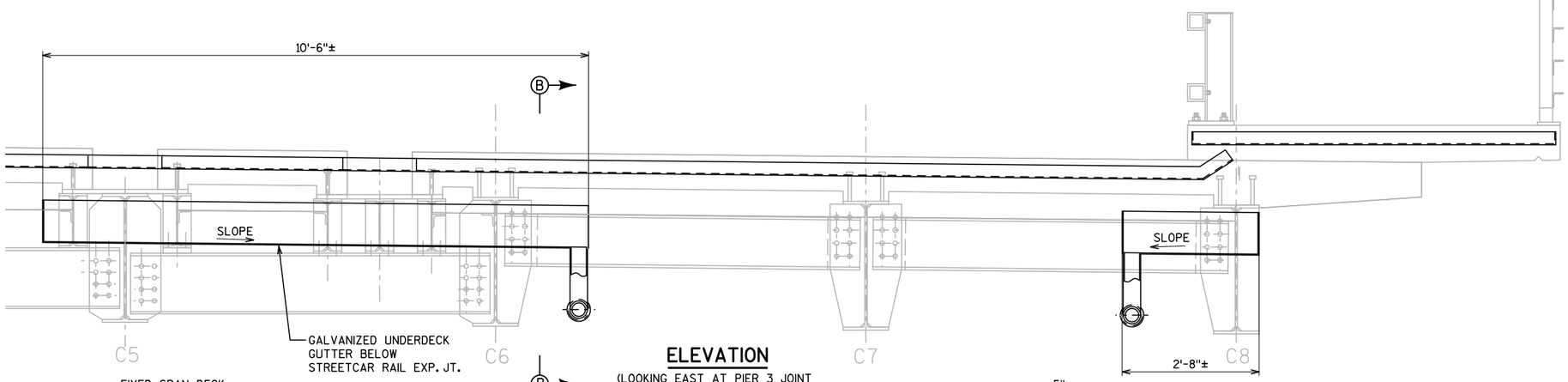

ELEVATION

(LOOKING EAST AT PIER 3 JOINT
PIER 2 OPPOSITE)
(ALL DIMENSIONS SHOWN NORMAL TO RDWY)

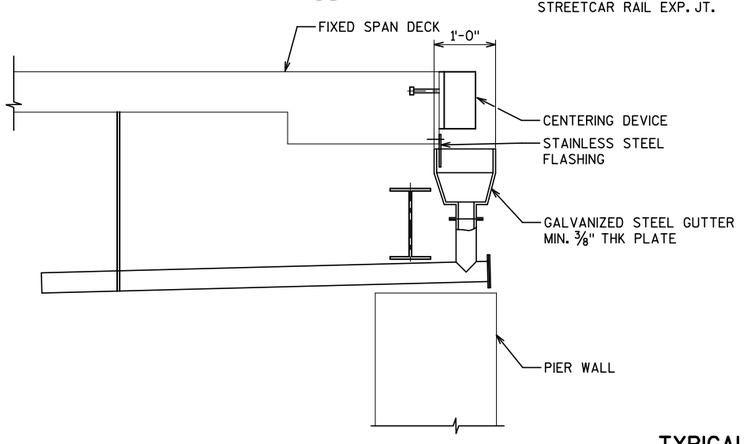

SECTION A-A

(AT CENTERING DEVICE)

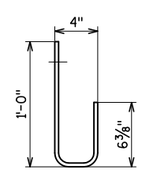

TYPICAL GUTTER SECTION

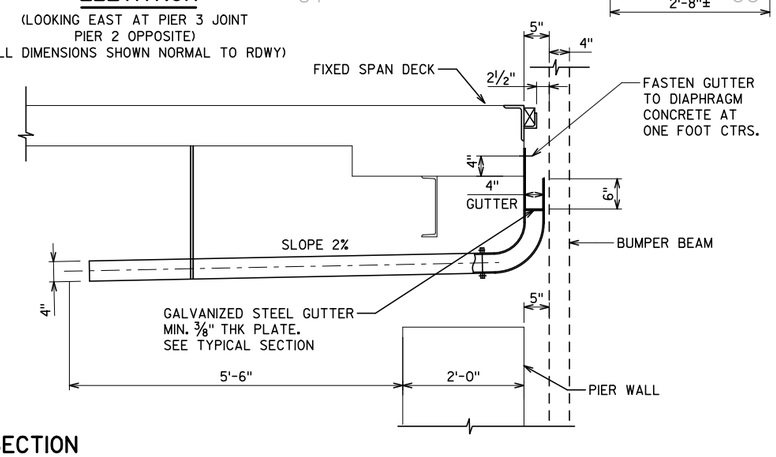

SECTION B-B

(AT STREETCAR RAIL EXP. JT.)

LEGEND

⊠ THE LIFT SPAN ROADWAY JOINT MAY HAVE TO BE FABRICATED IN MULTIPLE SEGMENTS DEPENDING UPON THE STATUS OF CONSTRUCTION OF THE STREETCAR PROJECT. BEFORE FABRICATION, VERIFY WITH THE ENGINEER IF THE JOINT HAS TO BE CONTINUOUS ACROSS THE BLCOK OUT FOR RAIL EXPANSION JOINT. BID PRICE SHALL INCLUDE THE COST OF FABRICATION OF LIFT SPAN ROADWAY JOINT IN MULTIPLE SEGMENTS BETWEEN THE STREETCAR RAILS.

NOTES

BID ITEM IS "UNDERDECK GUTTER SYSTEM P-40-523" AND SHALL INCLUDE ALL ITEMS SHOWN.

GALVANIZED GUTTER ASSEMBLY SHALL BE PAINTED WITH THE APPROVED TWO COAT PAINT SYSTEM.

SLOPE ALL GUTTERS 1/4" PER FOOT TOWARDS THE DISCHARGE END.

SUBMIT SHOP DRAWINGS WITH FIELD VERIFIED DIMENSIONS

City of Milwaukee
Department of Public Works
Infrastructure Services Division

BLOOM COMPANIES, LLC
Infrastructure Innovation and Ingenuity
10501 W. Research Drive • Milwaukee, WI 53226
Phone: (414) 771-3380 Fax: (414) 771-4490

ST PAUL AVE. LIFT BRIDGE OVER THE MILWAUKEE RIVER UNDERDECK GUTTER AT LIFT SPAN PIERS

REVISIONS

DESIGNED BY BDT	
DRAWN BY TAL	
CHECKED BY JRS	
DATE FEB 2013	SCALE NTS
JOB NUMBER BR100-10-0106	
SHEET NUMBER S49 OF S60	
OF 198	

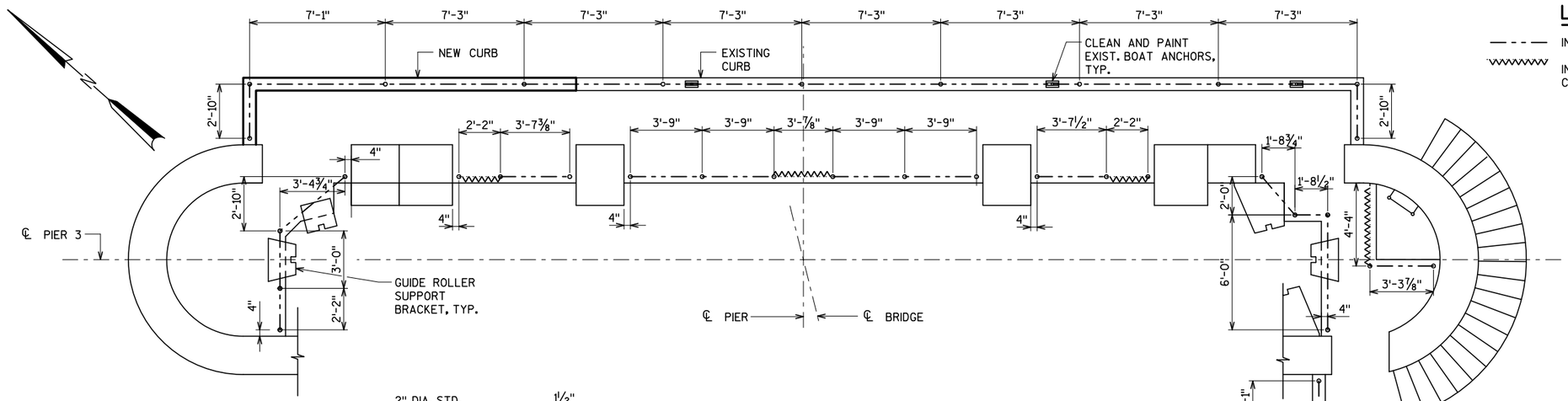

LEGEND

- — — — INDICATES NEW PIPE RAIL
- ⋀⋀⋀ INDICATES GALVANIZED/ STAINLESS STEEL CHAIN GUARD

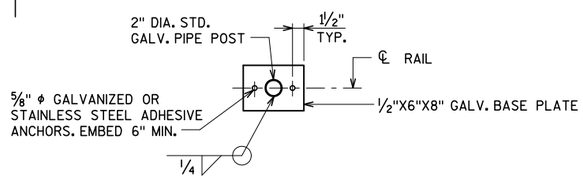

BASE PLATE DETAIL

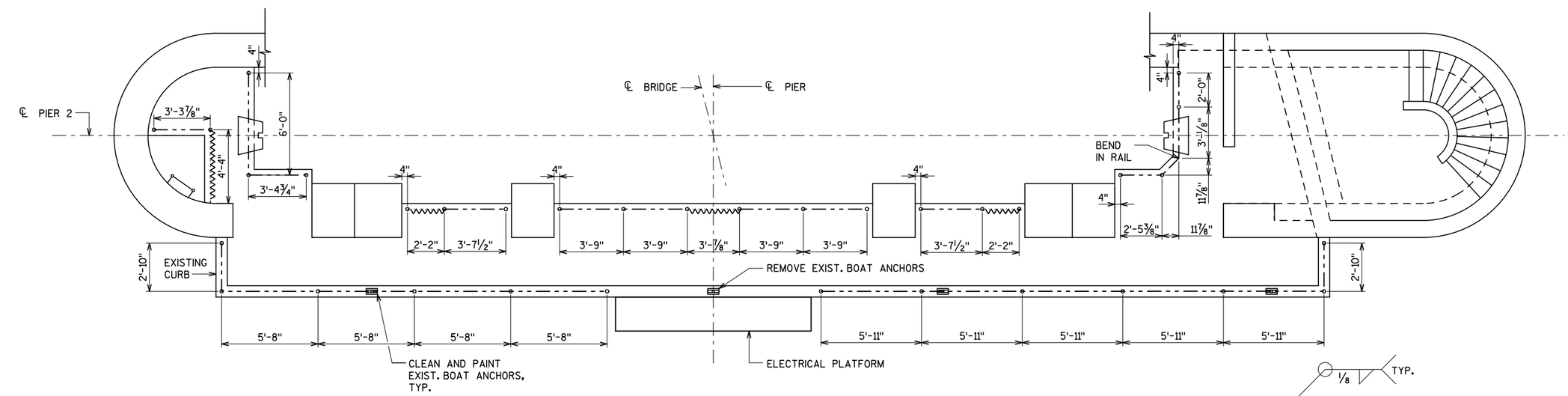

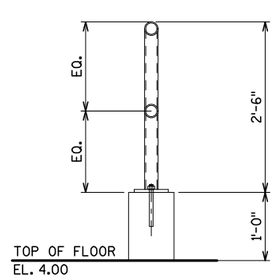

PIPERAIL OVER CURB

NOTE

REMOVE EXIST. RAIL, ANCHOR BOLTS, AND GRIND SMOOTH.

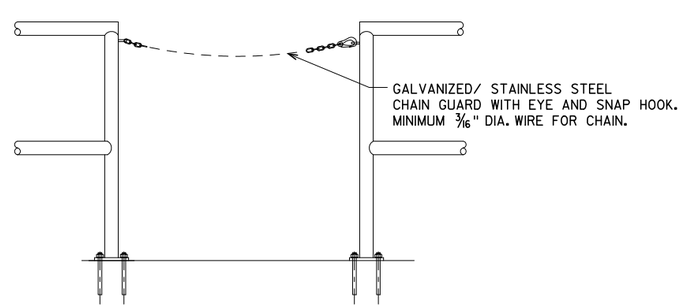

TYPICAL CHAIN GUARD

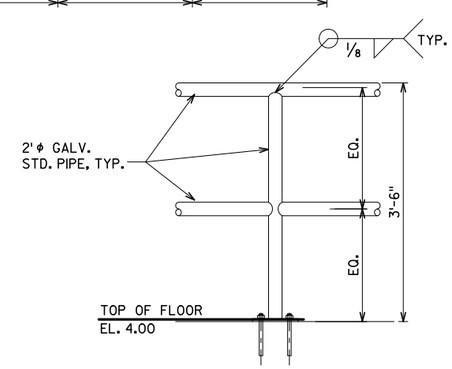

TYPICAL PIPE RAIL

NOTES:

REMOVAL OF EXIST. PIER RAILING IS INCLUDED IN BID ITEM "REMOVING OLD STRUCTURE OVER WATERWAY WITH MINIMAL DEBRIS".

EXISTING ANCHOR BOLTS TO BE CUT FLUSH WITH THE TOP OF CONCRETE AND GROUND SMOOTH. APPLY EPOXY REPAIR PAINT TO THE EXPOSED ENDS AFTER GRINDING.

FIELD VERIFY THE LOCATION OF ANCHOR BOLTS OF EXISTING RAILING AND ADJUST THE LOCATION OF NEW RAILING POSTS TO MISS EXISTING ANCHOR BOLTS.

City of Milwaukee

Department of Public Works

Infrastructure Services Division

BLOOM COMPANIES, LLC
Infrastructure Innovation and Ingenuity
10501 W. Research Drive • Milwaukee, WI 53226
Phone: (414) 771-3380 Fax: (414) 771-4490

ST PAUL AVE. LIFT BRIDGE OVER THE MILWAUKEE RIVER PIER RAILING

REVISIONS

DESIGNED BY BDT	
DRAWN BY TAL	
CHECKED BY JRS	
DATE FEB 2013	SCALE NTS
JOB NUMBER BR100-10-0106	
SHEET NUMBER S50 OF S60	
OF 198	

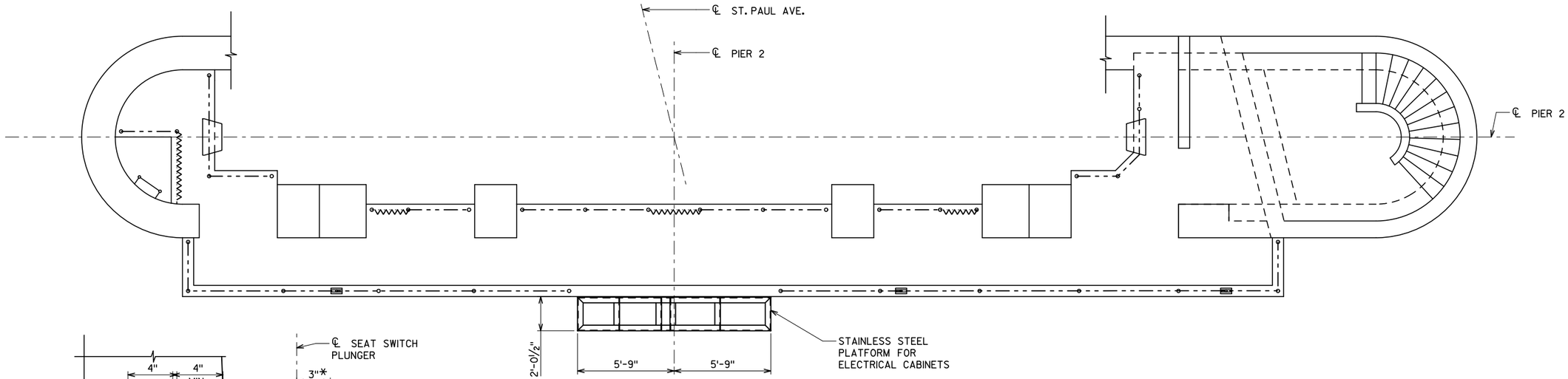

PLAN

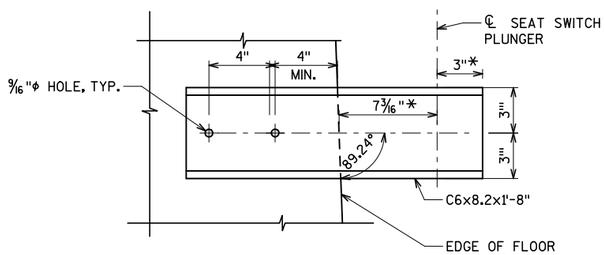

STRIKER CHANNEL DETAILS

(FOR NE & SW SEAT SWITCHES)

* COORDINATE DIMENSION WITH SEAT SWITCH MANUFACTURER.

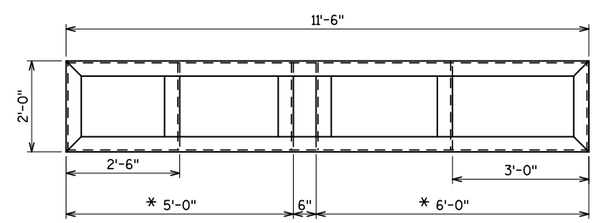

PLAN OF PLATFORM

* VERIFY THIS DIMENSION WITH ELECTRICAL CONTRACTOR BEFORE FABRICATION

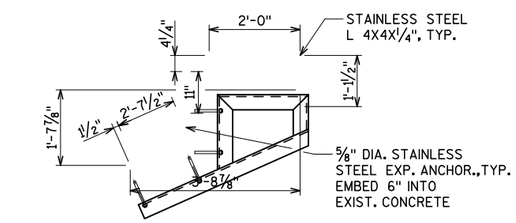

TYPICAL STAINLESS STEEL BRACKET

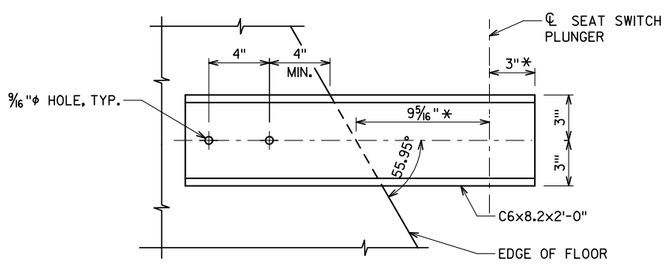

STRIKER CHANNEL DETAILS

(FOR NW & SE SEAT SWITCHES)

* COORDINATE DIMENSION WITH SEAT SWITCH MANUFACTURER.

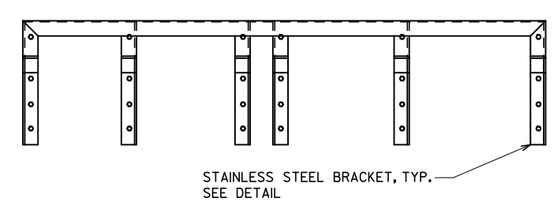

ELEVATION OF PLATFORM

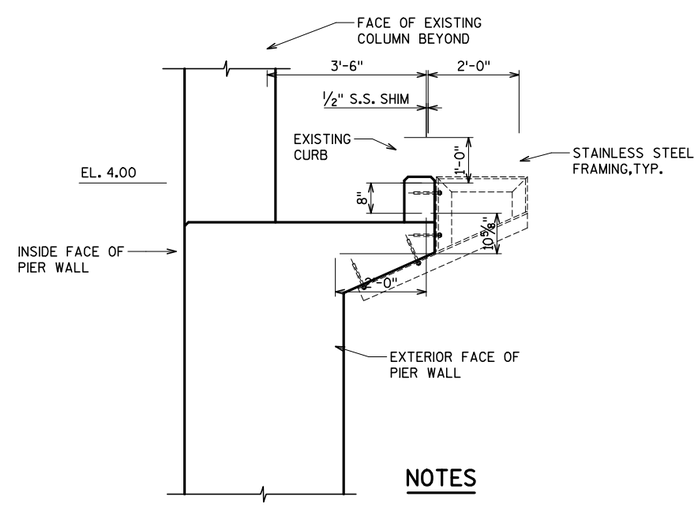

SECTION A-A

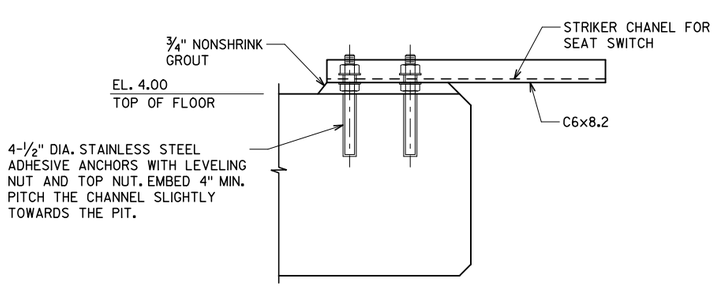

STRIKER CHANNEL DETAILS

NOTES

ELECTRICAL CONTRACTOR TO FIELD DRILL HOLES IN THE STAINLESS STEEL ANGLES FOR MOUNTING THE ELECTRICAL CABINETS.

SEE SHEET E5 FOR LOCATION OF ELECTRICAL CABINETS.

SEE SHEET E7 FOR STRIKER CHANNEL DETAILS

City of Milwaukee
Department of Public Works
Infrastructure Services Division

BLOOM COMPANIES, LLC
Infrastructure Innovation and Ingenuity
10501 W. Research Drive • Milwaukee, WI 53226
Phone: (414) 771-3380 Fax: (414) 771-4490

ST PAUL AVE. LIFT BRIDGE OVER THE MILWAUKEE RIVER PIER 2 ELECTRICAL PLATFORM

REVISIONS

DESIGNED BY BDT	
DRAWN BY TAL	
CHECKED BY JRS	
DATE FEB 2013	SCALE NTS
JOB NUMBER BR100-10-0106	
SHEET NUMBER S51 OF S60	
OF 198	

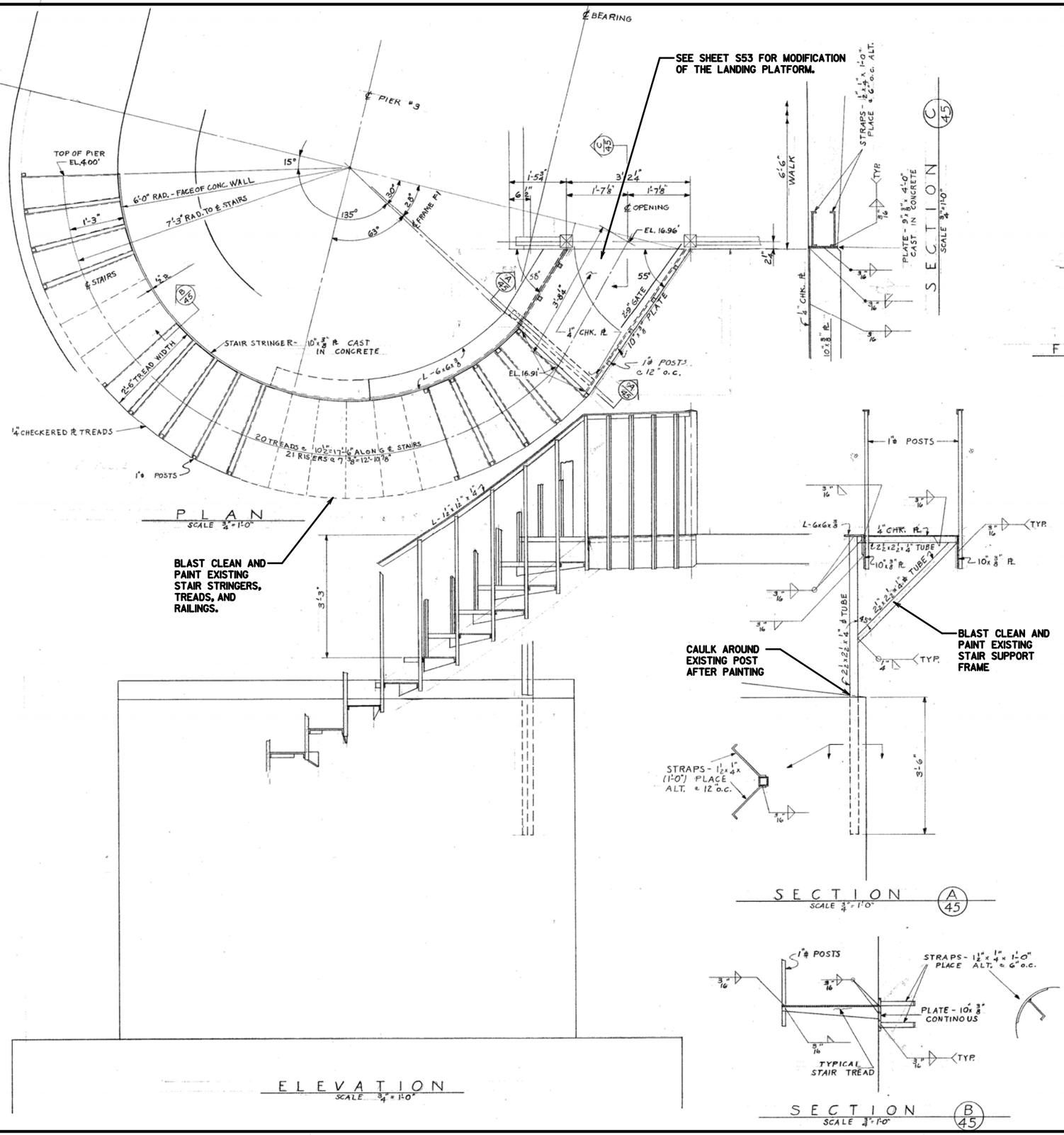

NOTES

DETAIL SHOWN ON THIS SHEET ARE FROM ORIGINAL CONSTRUCTION PLANS AND SHOULD BE FIELD VERIFIED BEFORE FABRICATION OF NEW COMPONENTS.

City of Milwaukee

Department of Public Works

Infrastructure Services Division

BLOOM COMPANIES, LLC
Infrastructure Innovation and Ingenuity
10501 W. Research Drive • Milwaukee, WI 53226
Phone: (414) 771-3380 • Fax: (414) 771-4490

ST PAUL AVE. LIFT BRIDGE
OVER THE MILWAUKEE RIVER
CIRCULAR STAIR REPAIR

REVISIONS

DESIGNED BY BDT	
DRAWN BY TAL	
CHECKED BY JRS	
DATE FEB 2013	SCALE NTS
JOB NUMBER BR100-10-0106	
SHEET NUMBER S52 OF S60	
OF 198	

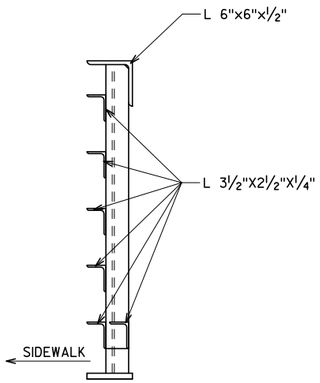

SECTION D-D

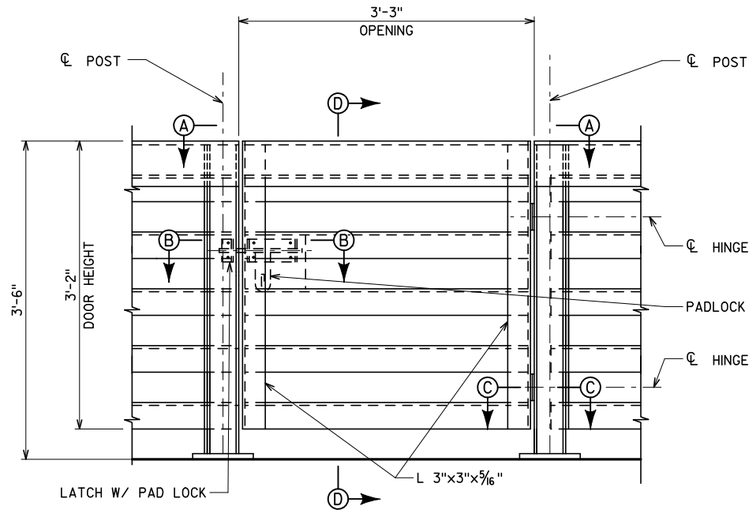

ELEVATION

(LOOKING SOUTH)

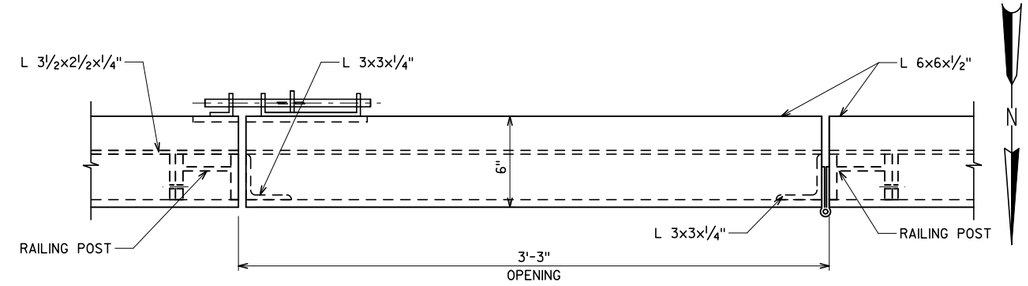

SECTION A-A

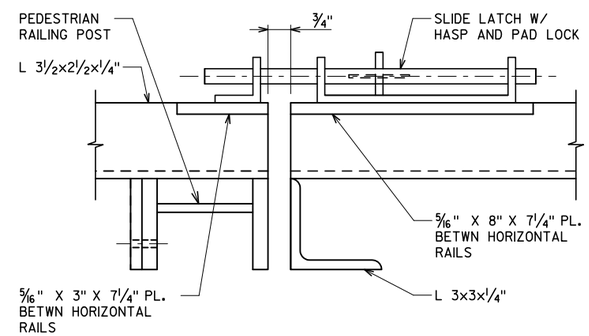

SECTION B-B

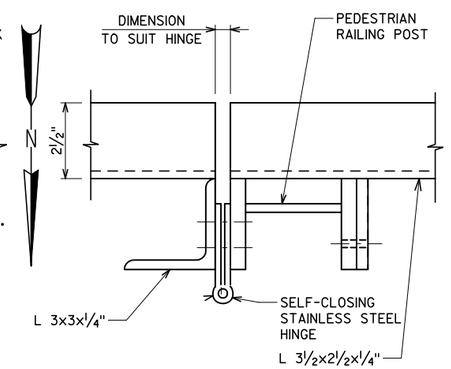

SECTION C-C

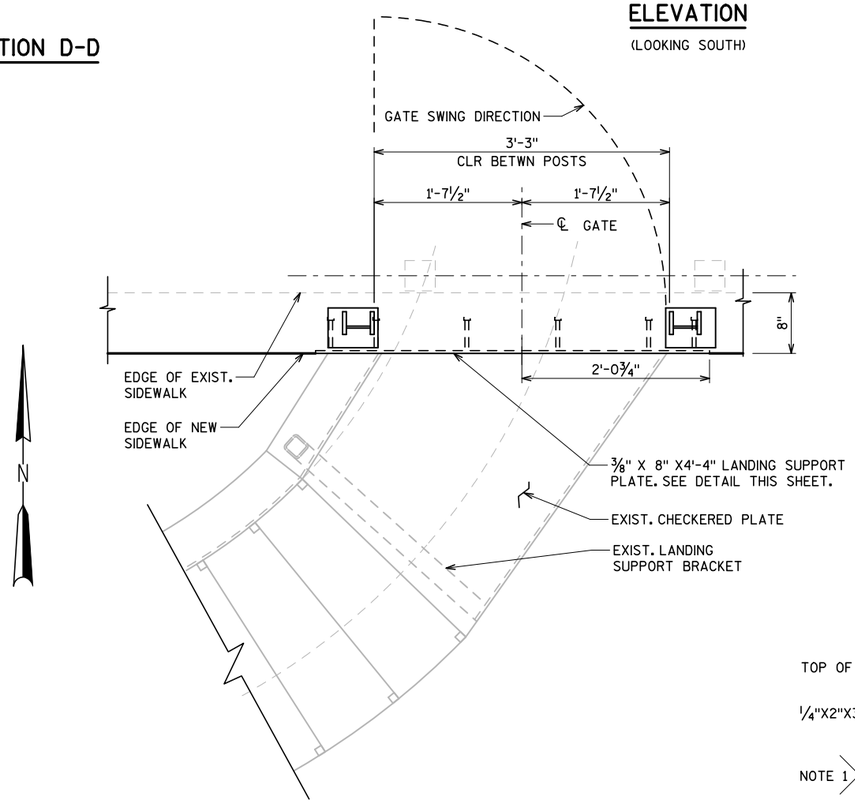

LANDING PLAN PIER 3

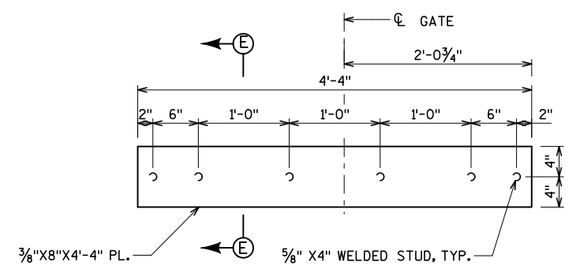

LANDING SUPPORT PLATE

(LOOKING NORTH)

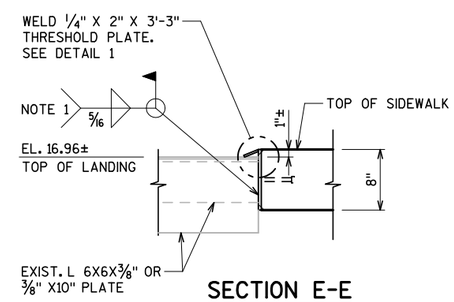

SECTION E-E

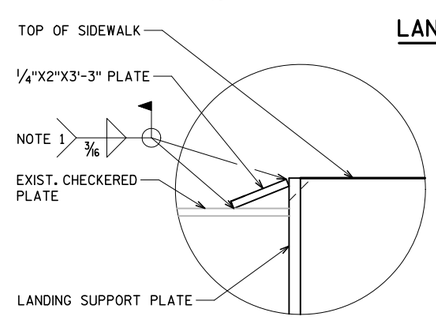

DETAIL 1

NOTES

1. APPLY GALVANIZE REPAIR PAINT TO FIELD WELDED AREAS
2. BID ITEM IS "REHABILITATING PIER CIRCULAR STAIR AND LADDERS". SEE SHEETS S13 AND S17 FOR LADDER LOCATION.

City of Milwaukee

Department of Public Works

Infrastructure Services Division

BLOOM COMPANIES, LLC
Infrastructure Innovation and Ingenuity
10501 W. Research Drive • Milwaukee, WI 53226
Phone: (414) 771-3380 Fax: (414) 771-4490

ST PAUL AVE. LIFT BRIDGE
OVER THE MILWAUKEE RIVER
PIER 3 STAIR

REVISIONS

DESIGNED BY BDT	
DRAWN BY TAL	
CHECKED BY JRS	
DATE FEB 2013	SCALE NTS
JOB NUMBER BR100-10-0106	
SHEET NUMBER S53 OF S60	
OF 198	

NOTE:

ALL STAIR PLATFORMS SHALL BE IRVING CO. X-BAR PRESS LOCKED TYPE A-A WITH 1"x1/8" BARS AND CHECKERED PL NOSING UNLESS OTHERWISE CALLED FOR.

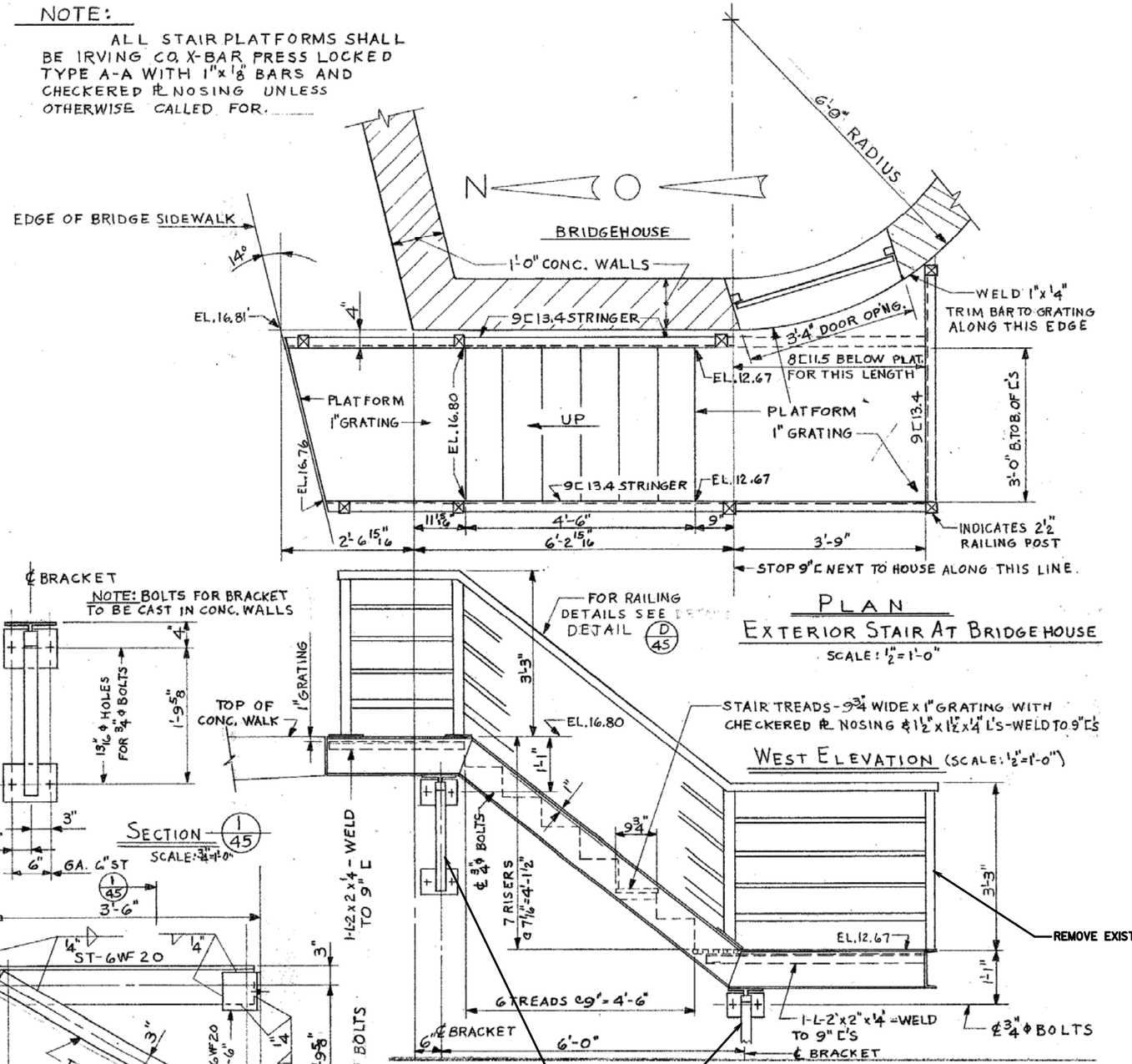

PLAN

EXTERIOR STAIR AT BRIDGEHOUSE

SCALE: 1/2" = 1'-0"

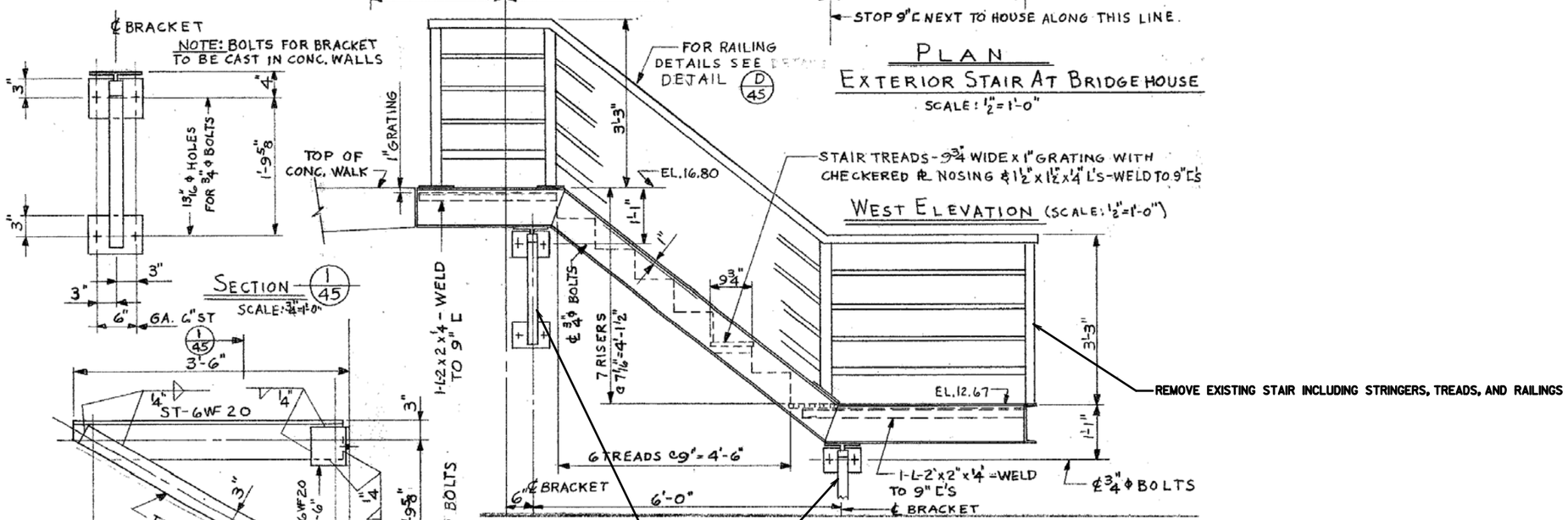

STAIR BRACKET DETAIL

SCALE: 3/4" = 1'-0"

NOTES

REMOVE EXISTING STAIR EXCEPT FOR THE BRACKETS SUPPORTING THE STAIR.

COST OF THE STAIR IS INLCUDED IN THE BID ITEM "BRIDGE OPERATOR'S HOUSE.". SEE SHEETS A01-A10 FOR ADDITIONAL DETAILS.

City of Milwaukee

Department of Public Works

Infrastructure Services Division

BLOOM COMPANIES, LLC
Infrastructure Innovation and Ingenuity
10501 W. Research Drive • Milwaukee, WI 53226
Phone: (414) 771-3380 Fax: (414) 771-4490

ST PAUL AVE. LIFT BRIDGE OVER THE MILWAUKEE RIVER
BRIDGE HOUSE STAIR
(1 OF 2)

REVISIONS

DESIGNED BY BDT	
DRAWN BY TAL	
CHECKED BY JRS	
DATE FEB 2013	SCALE NTS
JOB NUMBER BR100-10-0106	
SHEET NUMBER S54 OF S60	
OF 198	

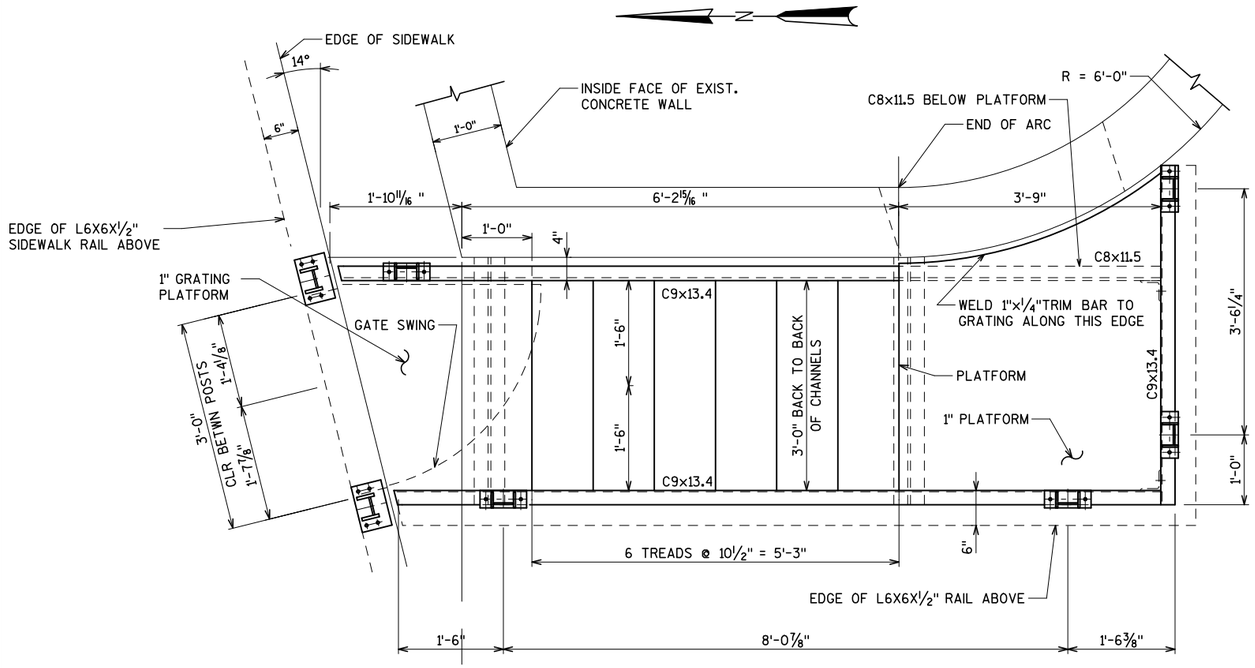

PLAN

(EXTERIOR STAIR AT BRIDGE HOUSE)

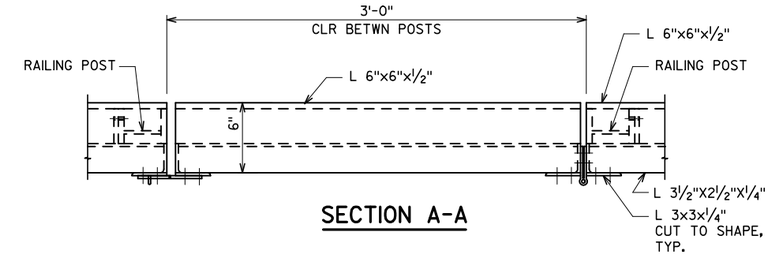

SECTION A-A

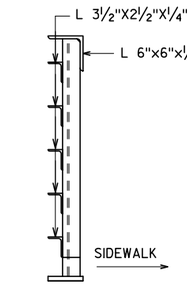

SECTION D-D

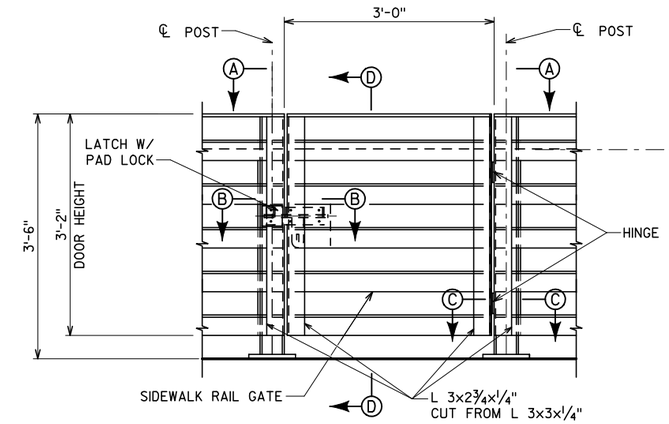

SECTION E-E

(LOOKING NORTH)

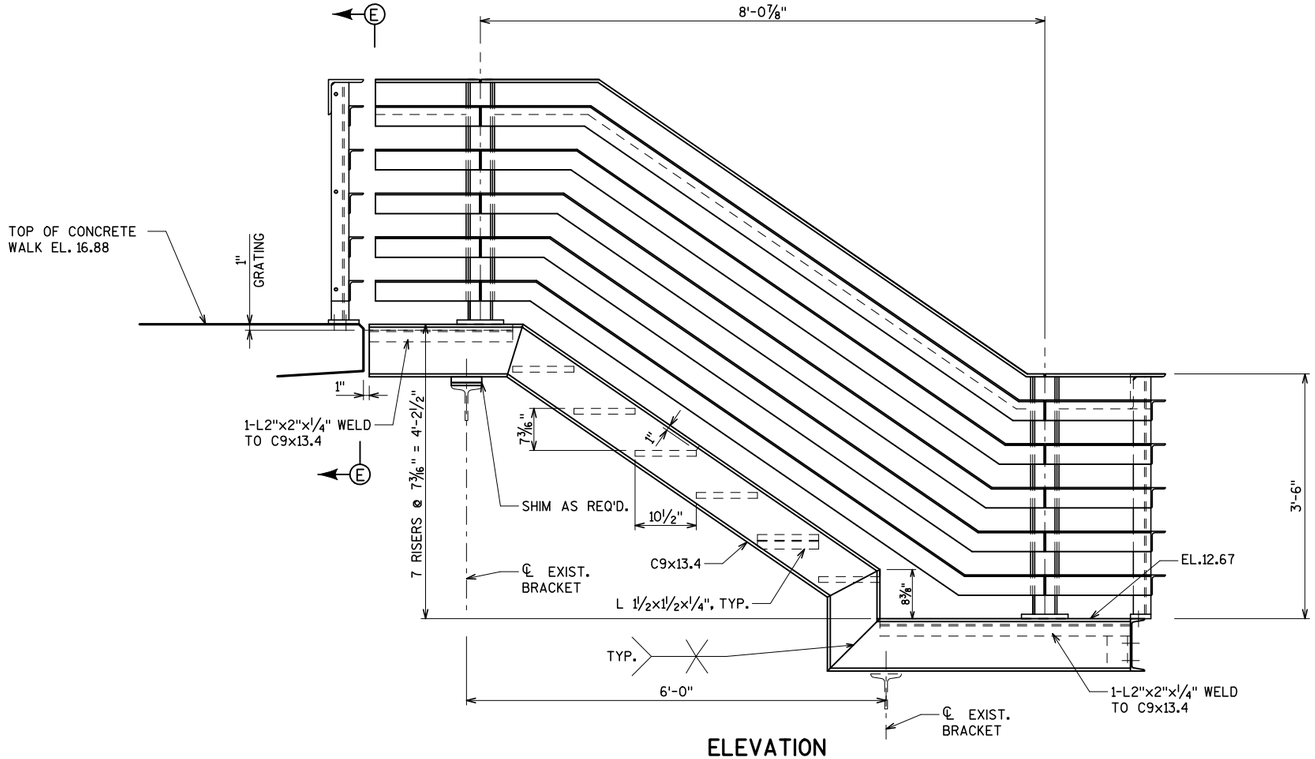

ELEVATION

(LOOKING EAST)

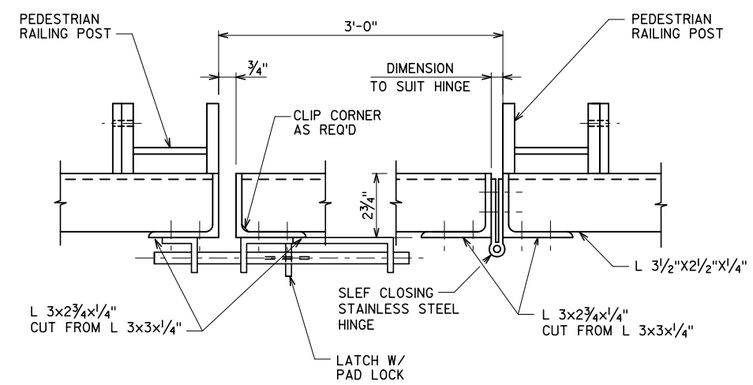

SECTION B-B

SECTION C-C

NOTES

FIELD WELD STRINGER TO EXIST. SUPPORTS. APPLY GALVANIZE REPAIR PAINT TO FIELD WELDED AREAS.

COST OF STAIR IS INCLUDED IN THE BID ITEM "BRIDGE OPERATOR'S HOUSE". SEE SHEETS A01-A10 FOR ADDITIONAL DETAILS.

City of Milwaukee

Department of Public Works

Infrastructure Services Division

BLOOM COMPANIES, LLC
Infrastructure Innovation and Ingenuity
10501 W. Research Drive • Milwaukee, WI 53226
Phone: (414) 771-3380 Fax: (414) 771-4490

ST PAUL AVE. LIFT BRIDGE
OVER THE MILWAUKEE RIVER
BRIDGE HOUSE STAIR
(2 OF 2)

REVISIONS

DESIGNED BY BDT	
DRAWN BY TAL	
CHECKED BY JRS	
DATE FEB 2013	SCALE NTS
JOB NUMBER BR100-10-0106	
SHEET NUMBER S55 OF S60	
OF 198	

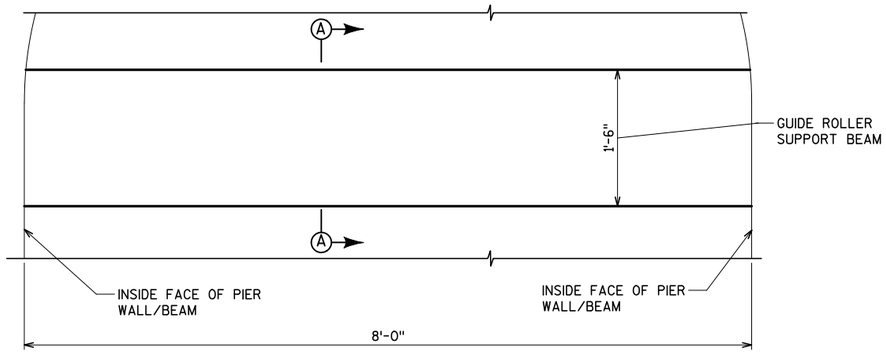

PLAN

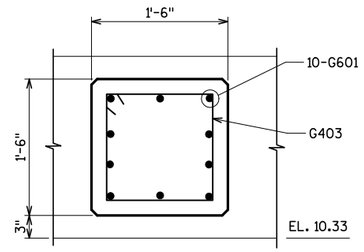

SECTION A-A

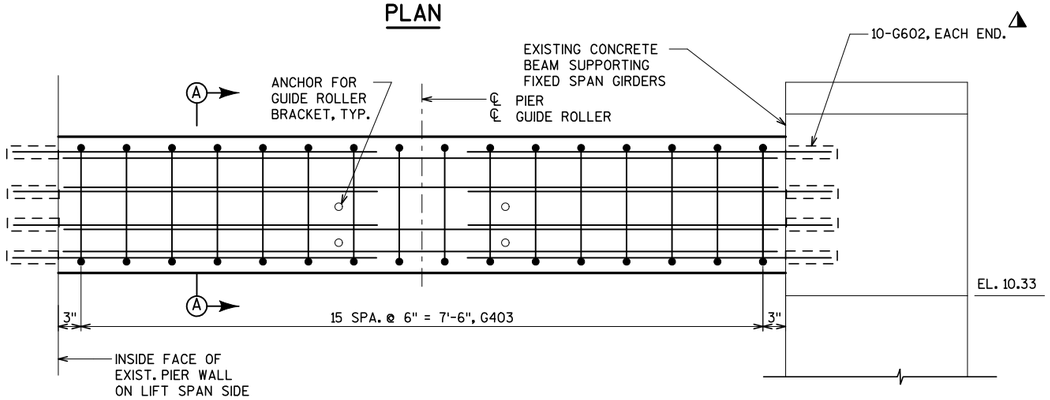

ELEVATION

GUIDE ROLLER ASSEMBLY SUPPORT BEAM

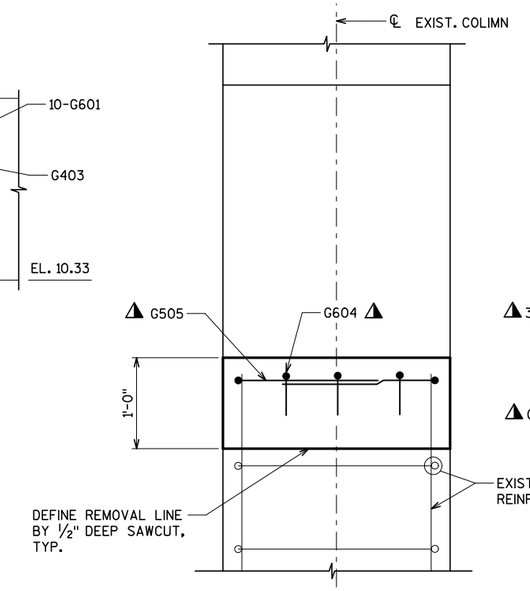

VIEW B-B

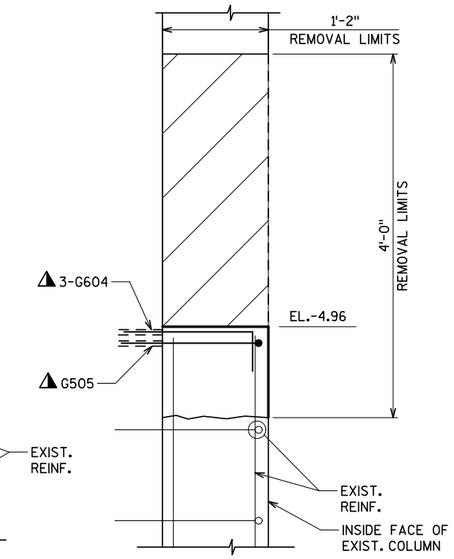

VIEW C-C

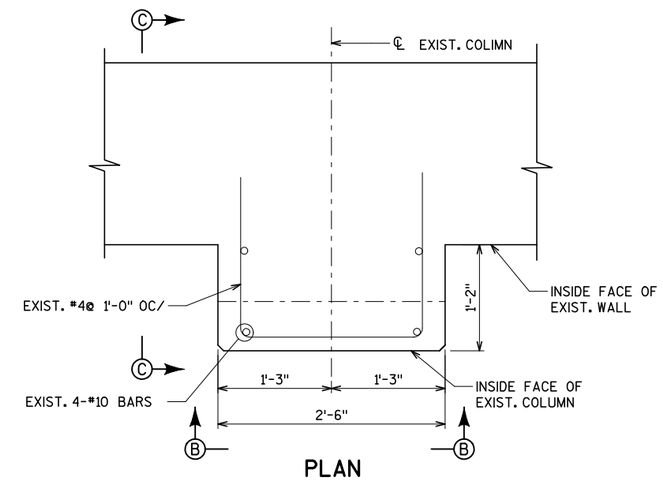

PLAN

TEMPORARY SUPPORT FOR COUNTERWEIGHT

(PIER MODIFICATION TO TEMPORARILY SUPPORT COUNTERWEIGHT)

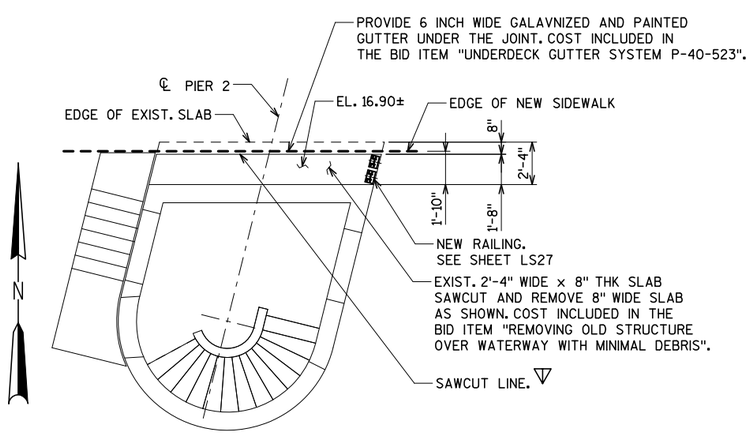

SLAB REMOVAL IN FRONT OF BRIDGE HOUSE

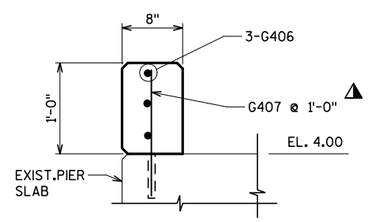

NEW CURB ON WEST SIDE OF PIER 3

LEGEND

◭ CONCRETE MASONRY ANCHOR TYPE S. EMBED #4 BARS 5", #5 BARS 6", AND #6 BARS 7 INCHES INTO EXISTING CONCRETE. MINIMUM PULLOUT CAPACITY OF 12 KIPS FOR #4 BARS, 19 KIPS FOR #5 BARS, AND 26 KIPS FOR #6 BARS.

▽ APPLY EPOXY REPAIR PAINT TO ENDS OF EXPOSED REINFORCEMENT.

NOTES

NOTES ON SHEETS S13 AND S17 ARE APLLICABLE FOR ALL REMOVALS AND CONCRETE SURFACE REPAIRS SHOWN ON THIS SHEET.

SEE SHEET S16 AND S20 FOR LOCATION OF GUIDE ROLLER SUPPORT BEAM.

SEE SHEET S16 AND S20 FOR LOCATION OF TEMPORARY COUNTERWEIGHT SUPPORTS.

SEE SHEET S21 FOR BILL OF BARS.

SEE SHEET M7 FOR GUIDE ROLLER DETAILS.

City of Milwaukee

Department of Public Works

Infrastructure Services Division

BLOOM COMPANIES, LLC
Infrastructure Innovation and Ingenuity
10501 W. Research Drive • Milwaukee, WI 53226
Phone: (414) 771-3380 Fax: (414) 771-4490

ST PAUL AVE. LIFT BRIDGE
OVER THE MILWAUKEE RIVER
MISCELLANEOUS DETAILS

REVISIONS

DESIGNED BY BDT	
DRAWN BY TAL	
CHECKED BY JRS	
DATE FEB 2013	SCALE NTS
JOB NUMBER BR100-10-0106	
SHEET NUMBER S56 OF S60	
OF 198	

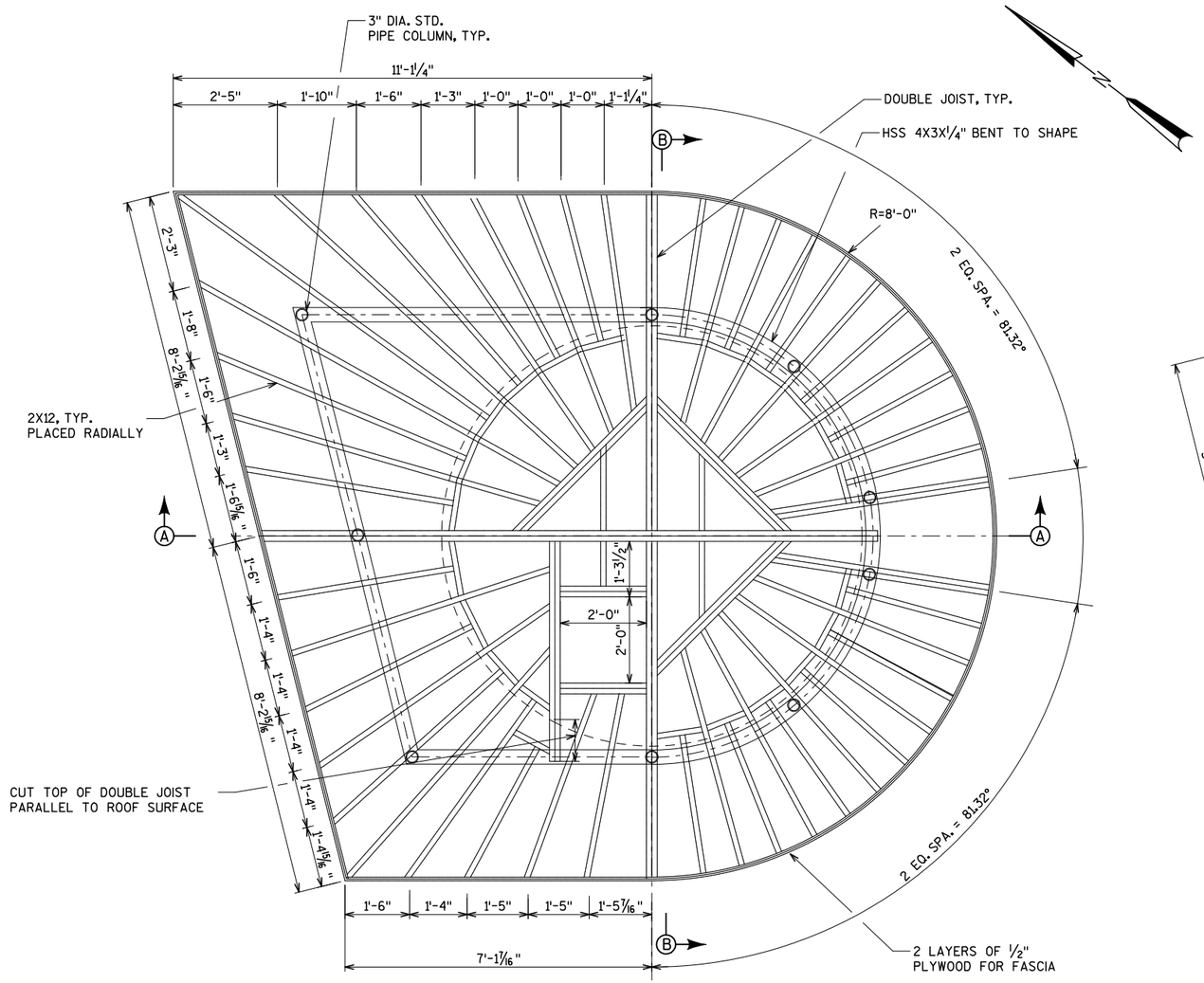

ROOF FRAMING PLAN

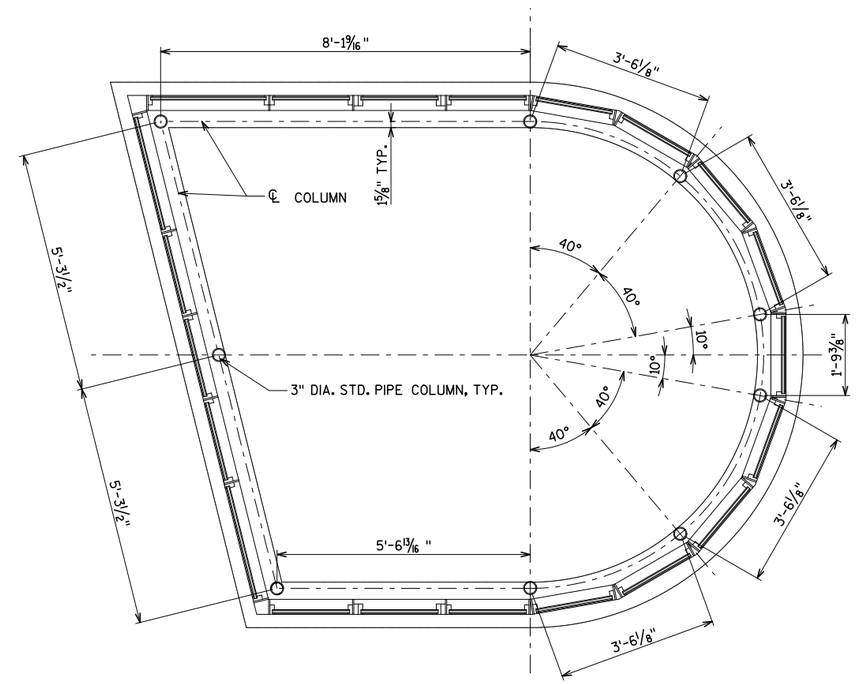

COLUMN LAYOUT

City of Milwaukee

Department of Public Works

Infrastructure Services Division

BLOOM COMPANIES, LLC
Infrastructure Innovation and Ingenuity
10501 W. Research Drive • Milwaukee, WI 53226
Phone: (414) 771-3380 Fax: (414) 771-4490

ST PAUL AVE. LIFT BRIDGE
OVER THE MILWAUKEE RIVER
BRIDGE HOUSE ROOF
FRAMING PLAN

REVISIONS

DESIGNED BY BDT	
DRAWN BY TAL	
CHECKED BY JRS	
DATE FEB 2013	SCALE NTS
JOB NUMBER BR100-10-0106	
SHEET NUMBER S57 OF S60	
OF 198	

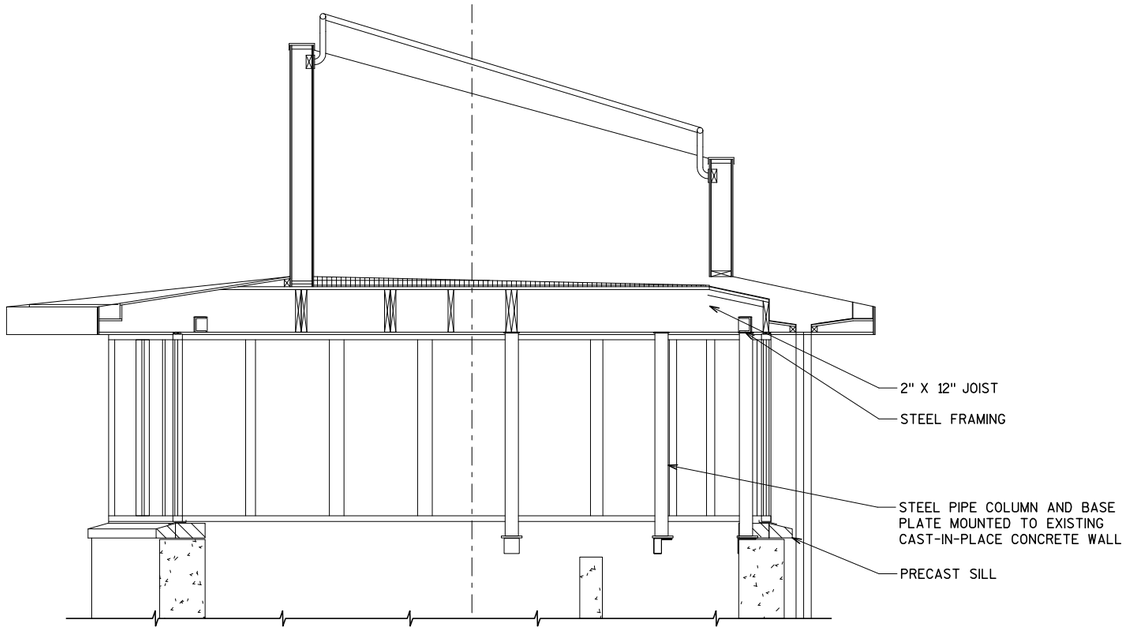

SECTION A-A

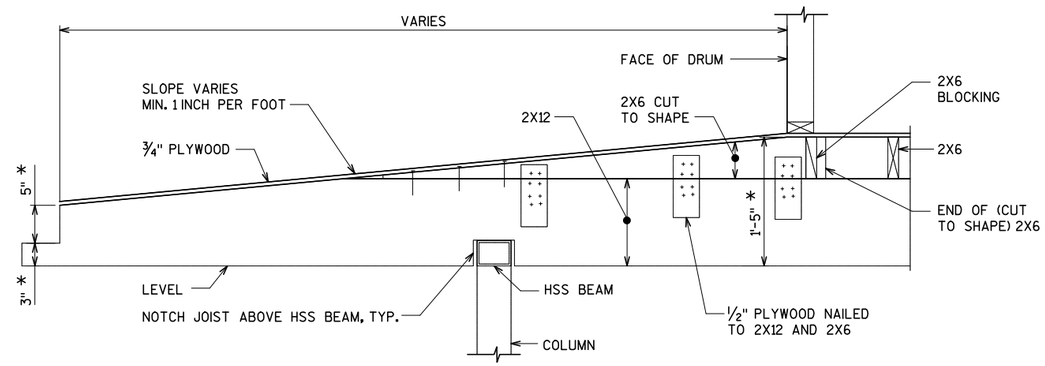

TYPICAL JOIST ELEVATION

* THESE DIMENSIONS ARE SAME FOR ALL THE JOISTS

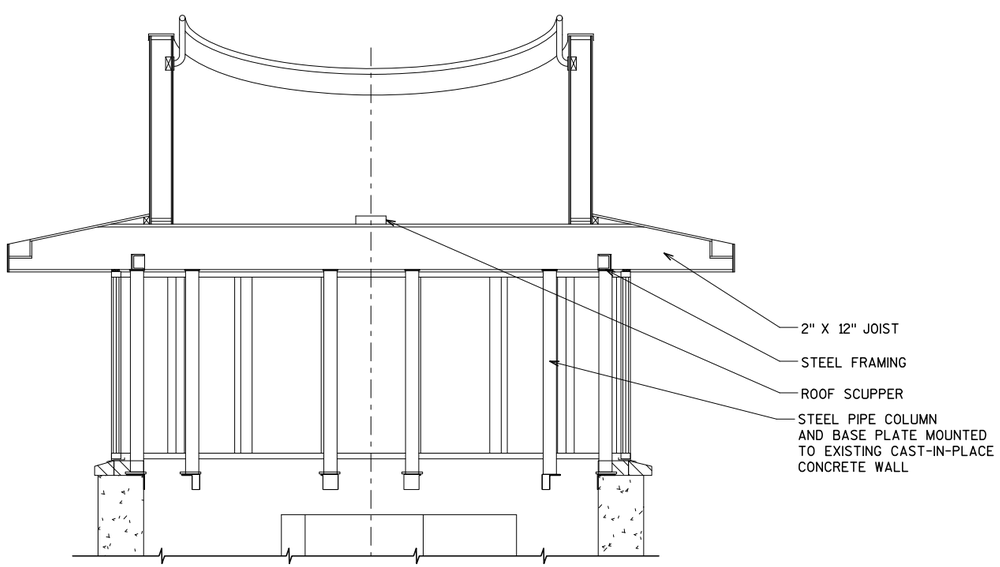

SECTION B-B

NOTES

BID ITEMS ARE "BRIDGE OPERATOR'S HOUSE" AND "BRIDGE STRUCTURAL STEEL".

SEE SHEET A01-A10 FOR ARCHITECTURAL DETAILS.

City of Milwaukee

Department of Public Works

Infrastructure Services Division

BLOOM COMPANIES, LLC
Infrastructure Innovation and Ingenuity
10501 W. Research Drive • Milwaukee, WI 53226
Phone: (414) 771-3380 Fax: (414) 771-4490

ST PAUL AVE. LIFT BRIDGE
OVER THE MILWAUKEE RIVER
BRIDGE HOUSE
FRAMING DETAILS (1 OF 2)

REVISIONS

DESIGNED BY BDT	
DRAWN BY TAL	
CHECKED BY JRS	
DATE FEB 2013	SCALE NTS
JOB NUMBER BR100-10-0106	
SHEET NUMBER S58 OF S60	
OF 198	

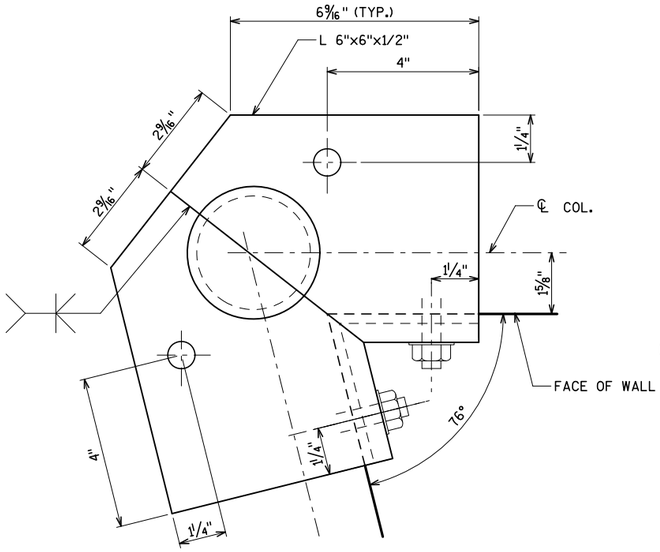

CORNER COLUMN BASE PLATE

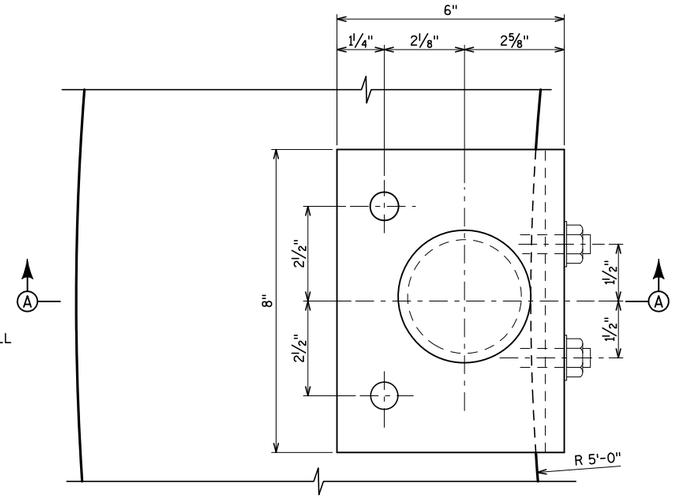

COLUMN BASE PLATE

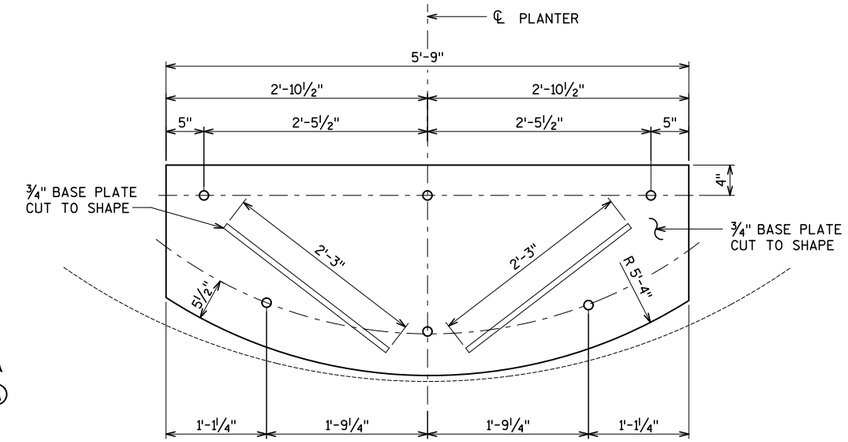

PLAN

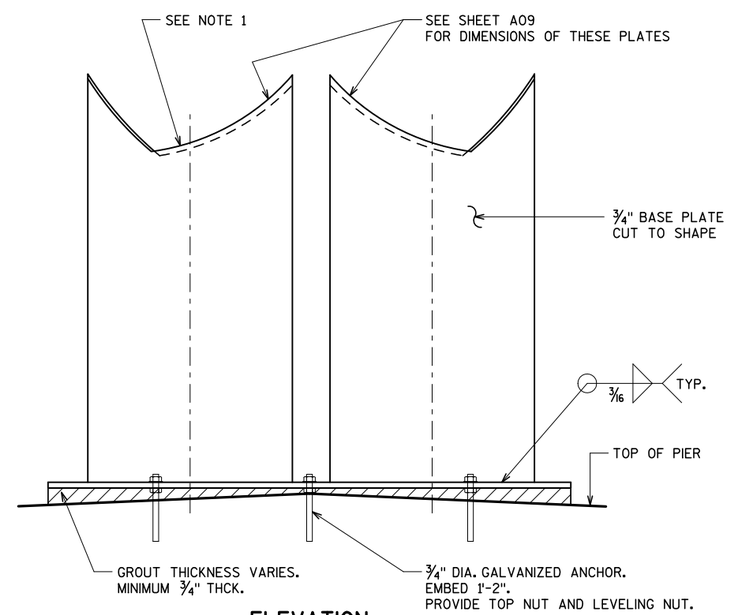

ELEVATION

NOTES

1. COORDINATE THE PROFILE OF THE TOP OF PLATE WITH THE PLANTER MANUFACURER.
2. HOT DIP GALVANIZE AND APPLY THE APPROVED TWO COAT PAINT SYSTEM TO ALL STRUCTURAL STEEL IN PLANTER SUPPORT GRADLE.
3. PROVIDE GROUT HOLES IN THE BASE PLATE AS REQUIRED.

PLANTER SUPPORT CRADLE

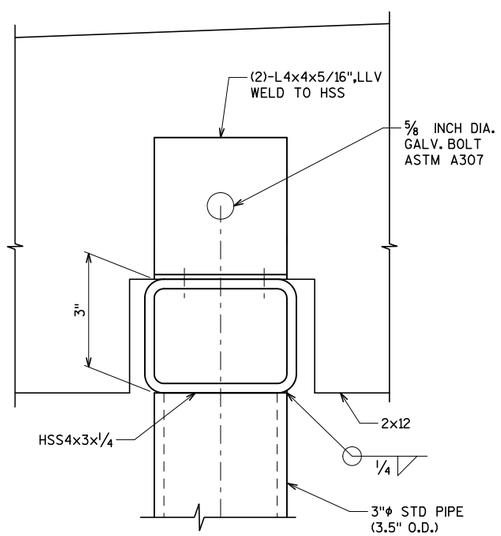

DETAIL AT TOP OF COLUMN

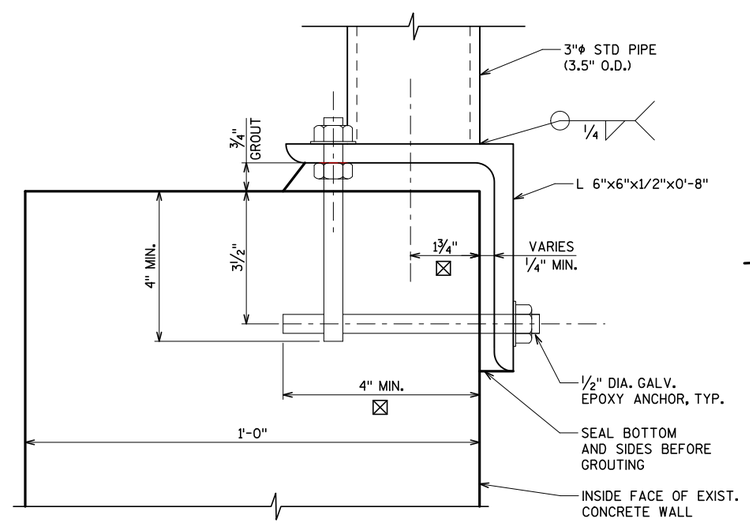

SECTION A-A

☒ MEASURED RADIALLY

NOTES

BID ITEMS ARE "BRIDGE OPERATOR'S HOUSE" AND "BRIDGE STRUCTURAL STEEL".

SEE SHEET A01-A10 FOR ARCHITECTURAL DETAILS.

City of Milwaukee

Department of Public Works

Infrastructure Services Division

BLOOM COMPANIES, LLC
Infrastructure Innovation and Ingenuity
10501 W. Research Drive • Milwaukee, WI 53226
Phone: (414) 771-3380 Fax: (414) 771-4490

ST PAUL AVE. LIFT BRIDGE
OVER THE MILWAUKEE RIVER
BRIDGE HOUSE ROOF
FRAMING DETAILS (2 OF 2)

REVISIONS

DESIGNED BY BDT	
DRAWN BY TAL	
CHECKED BY JRS	
DATE FEB 2013	SCALE NTS
JOB NUMBER BR100-10-0106	
SHEET NUMBER S59 OF S60	
OF 198	

SPECIFICATION FOR NAME PLATE - ONE (1) REQUIRED :

CONFORM TO 506.2.4 OF THE WISCONSIN DEPARTMENT OF TRANSPORTATION STANDARD SPECIFICATIONS FOR HIGHWAY AND STRUCTURE CONSTRUCTION AND AS HEREIN MODIFIED.
MATERIAL : CAST BRONZE
BORDER STYLE : SINGLE-LINE BEVELED EDGE
LETTER STYLE : BLOCK
BACKGROUND TEXTURE : LEATHERETTE
BACKGROUND COLOR : MEDIUM STATUARY-MAT
FINISH : LETTER FACES AND RAISED LINE OF BORDER TO BE POLISHED.
REMAINING SURFACES LACQUERED TO COLOR ABOVE.
GIVE ENTIRE FACE TWO (2) CLEAR CHEMICAL COATINGS.
MOUNTING : AS SHOWN
FURNISH THREE (3) COPIES OF RUBBING FOR APPROVAL BEFORE CASTING.

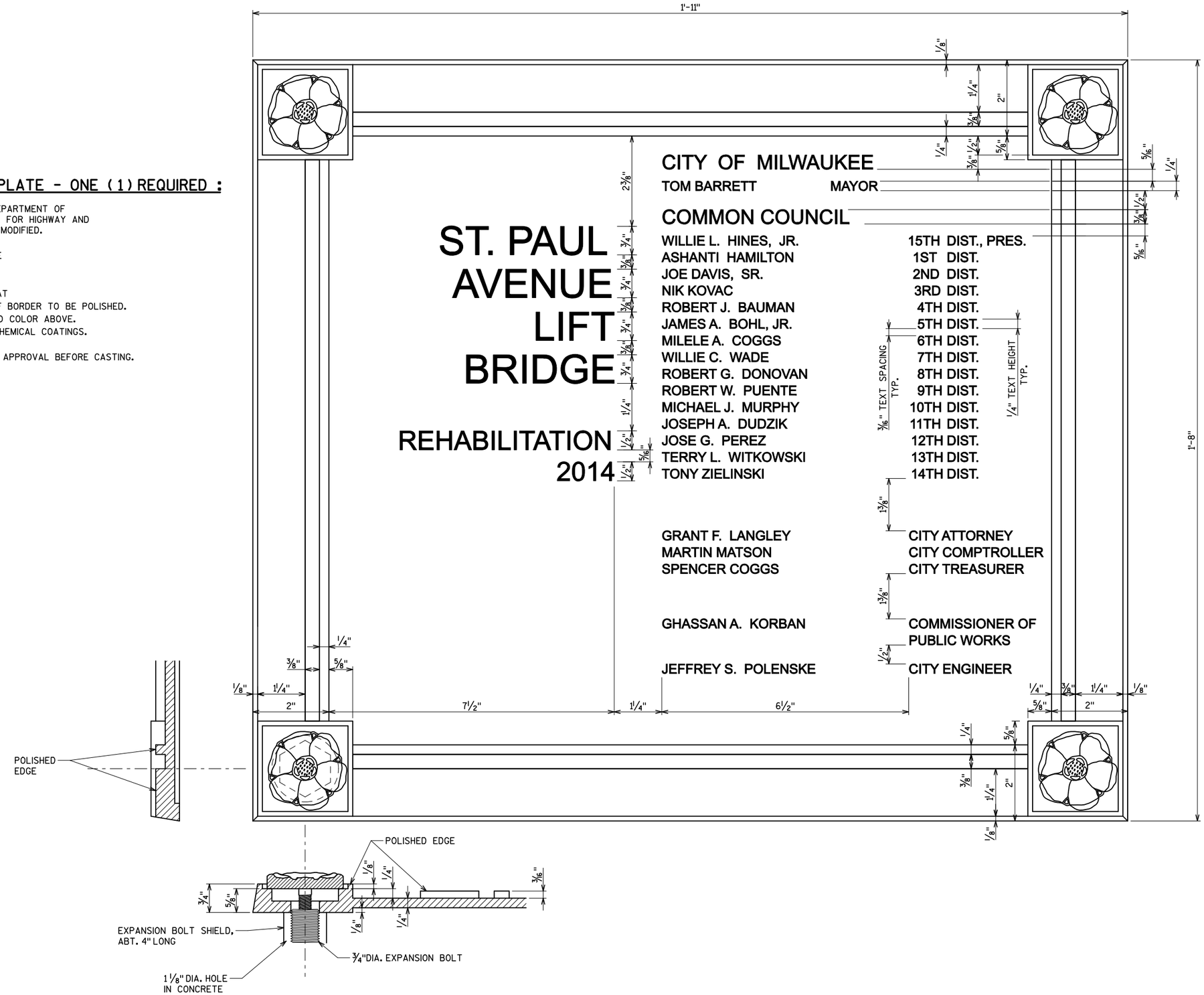

City of Milwaukee
Department of Public Works
Infrastructure Services Division

BLOOM COMPANIES, LLC
Infrastructure Innovation and Ingenuity
10501 W. Research Drive • Milwaukee, WI 53226
Phone: (414) 771-3380 Fax: (414) 771-4490

ST PAUL AVE. LIFT BRIDGE OVER THE MILWAUKEE RIVER NAME PLATE

REVISIONS

DESIGNED BY GJR	
DRAWN BY GJR	
CHECKED BY CSL	
DATE FEB 2013	SCALE NTS
JOB NUMBER BR100-10-0106	
SHEET NUMBER S60 OF S60	
OF 198	

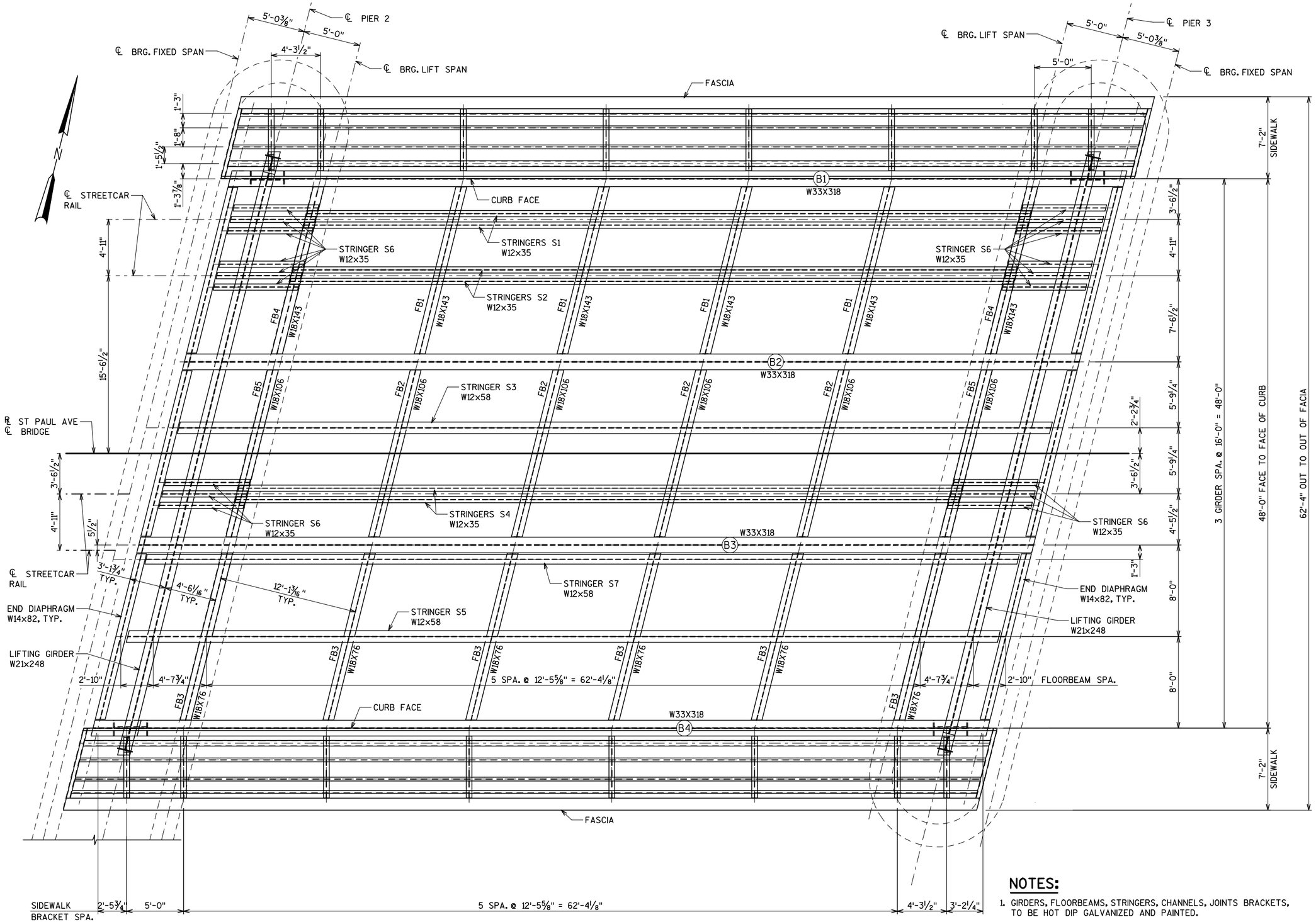

PLAN

NOTES:

1. GIRDERS, FLOORBEAMS, STRINGERS, CHANNELS, JOINTS BRACKETS, TO BE HOT DIP GALVANIZED AND PAINTED.
2. SEE SHEET LS17 FOR FRAMING DETAILS AT SIDEWALK.
3. ALL MEMBERS SHALL BE ASTM A709 GRADE 50 UNLESS NOTED OTHERWISE.

City of Milwaukee

Department of Public Works

Infrastructure Services Division

BLOOM COMPANIES, LLC
Infrastructure Innovation and Ingenuity
10501 W. Research Drive • Milwaukee, WI 53226
Phone: (414) 771-3380 Fax: (414) 771-4490

ST PAUL AVE. LIFT BRIDGE OVER THE MILWAUKEE RIVER LIFT SPAN FRAMING PLAN

REVISIONS

DESIGNED BY JRS	
DRAWN BY TAL	
CHECKED BY BDT	
DATE FEB 2013	SCALE NTS
JOB NUMBER BR100-10-0106	
SHEET NUMBER LS1 OF LS33	
OF 198	

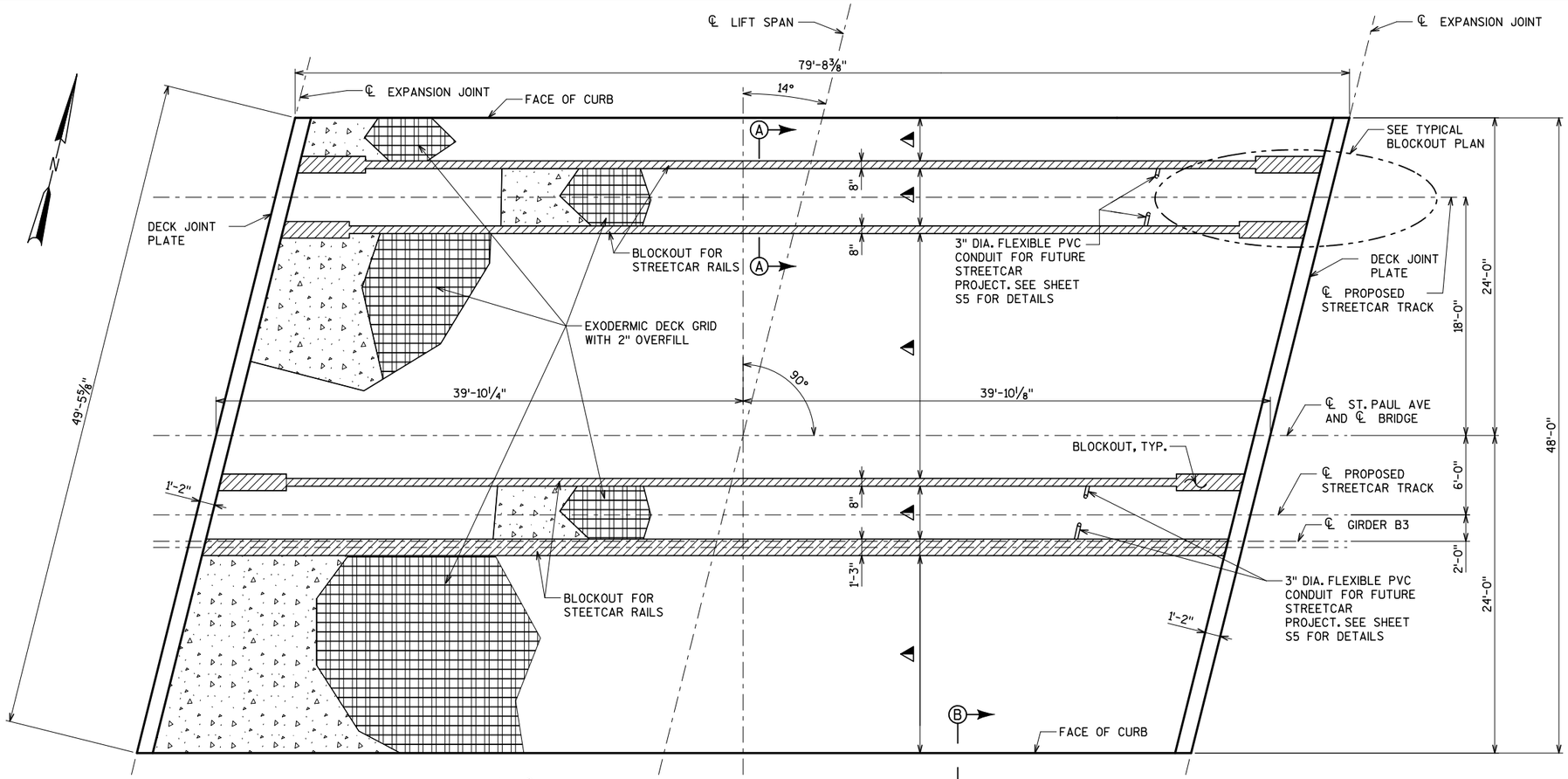

EXODERMIC DECK PLAN

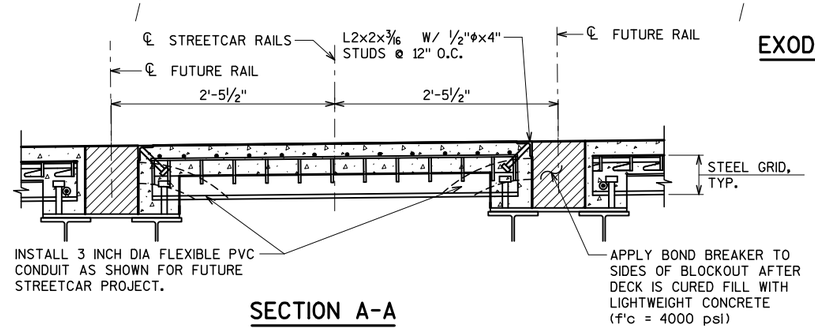

SECTION A-A

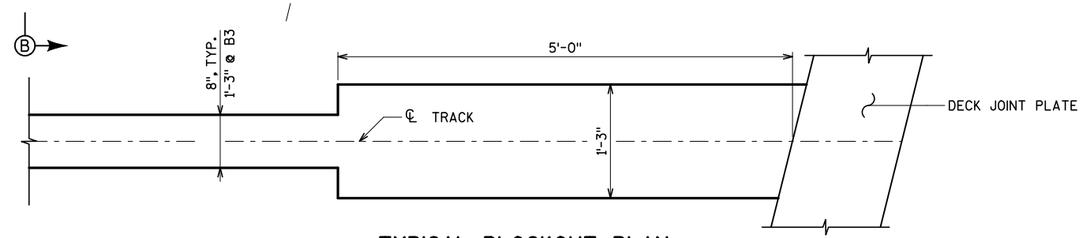

TYPICAL BLOCKOUT PLAN

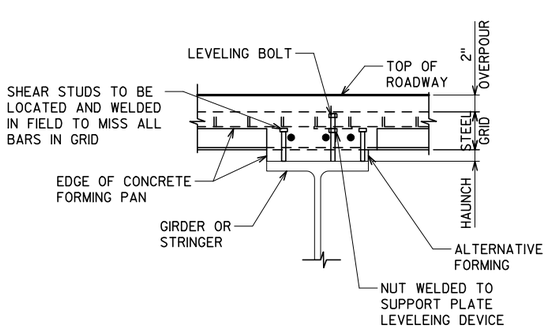

GRID CONNECTION WITH HAUNCH

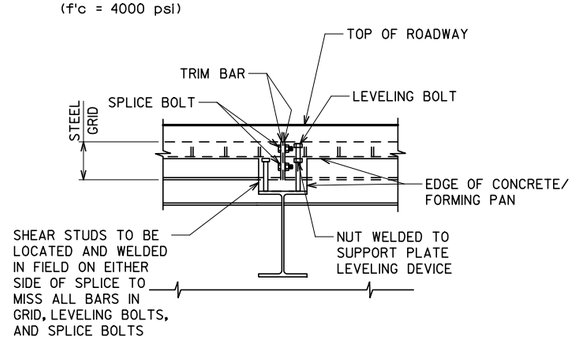

GRID SPLICE OPTION

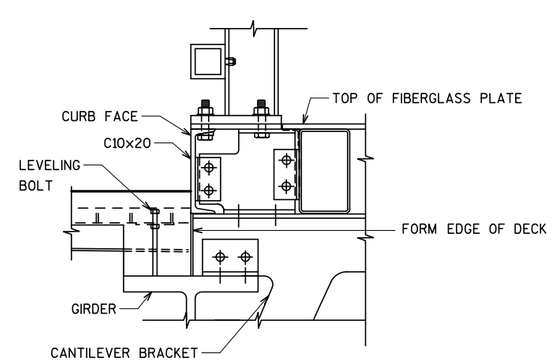

SECTION B-B AT CURB

SEE SHEET LS18 FOR OTHER HARDWARE DETAILS

LEGEND

▲ LIMITS OF EXODERMIC DECK

City of Milwaukee

Department of Public Works

Infrastructure Services Division

BLOOM COMPANIES, LLC
Infrastructure Innovation and Ingenuity
10501 W. Research Drive • Milwaukee, WI 53226
Phone: (414) 771-3380 Fax: (414) 771-4490

ST PAUL AVE. LIFT BRIDGE OVER THE MILWAUKEE RIVER LIFT SPAN DECK PLAN

REVISIONS

DESIGNED BY JRS	
DRAWN BY TAL	
CHECKED BY BDT	
DATE FEB 2013	SCALE NTS
JOB NUMBER BR100-10-0106	
SHEET NUMBER LS2 OF LS33	
OF 198	

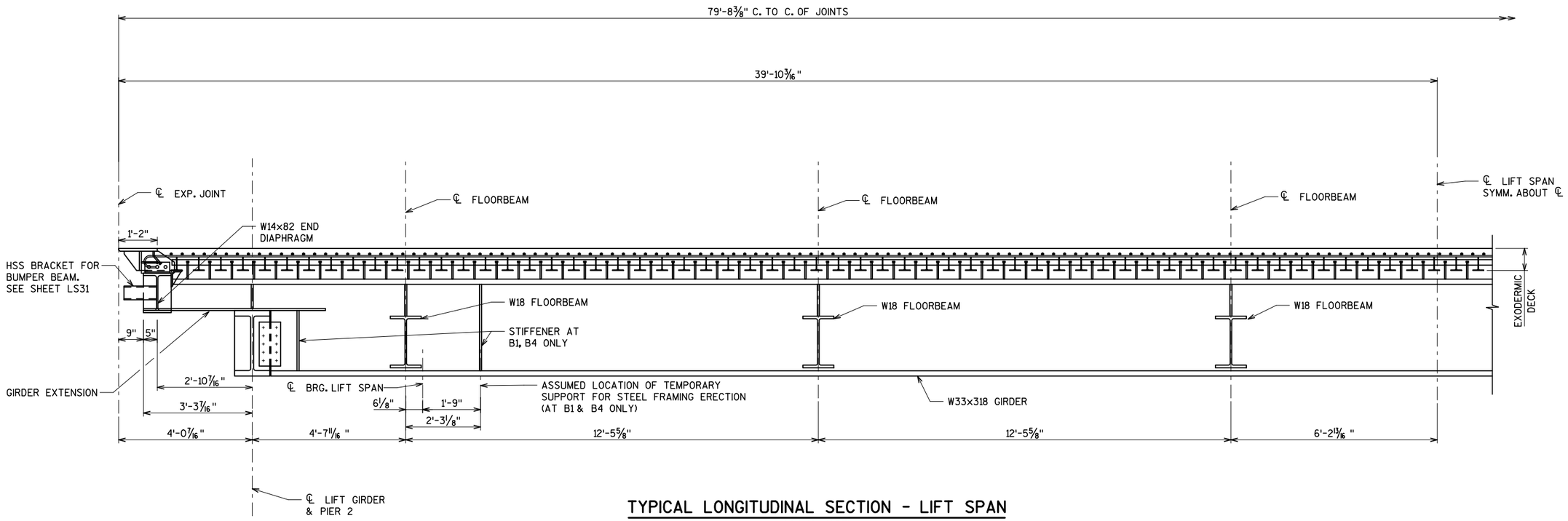

TYPICAL LONGITUDINAL SECTION - LIFT SPAN

(LOOKING NORTH)

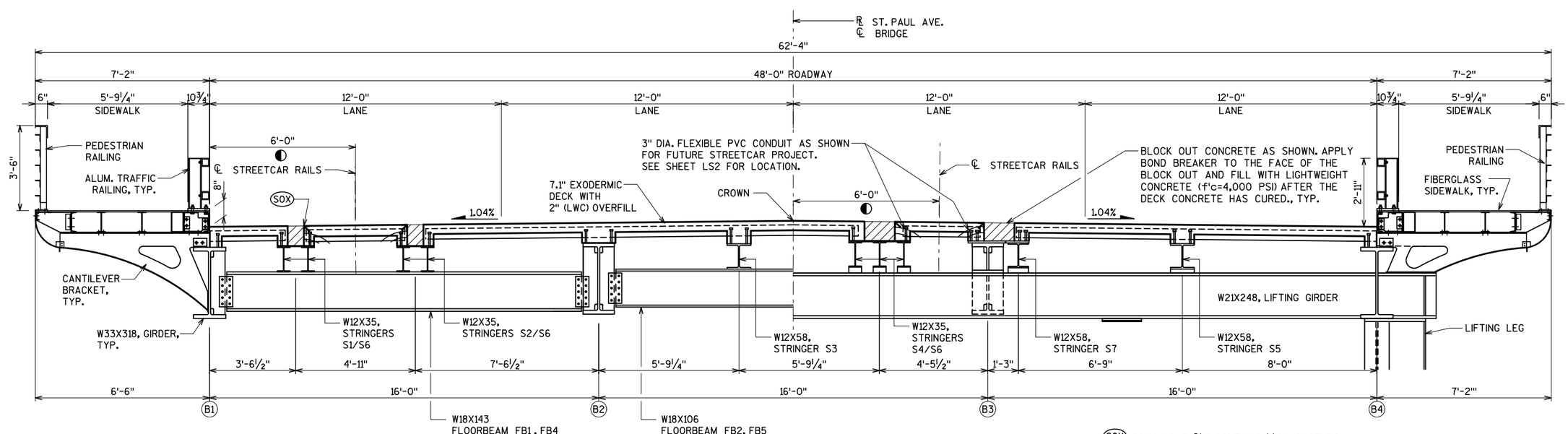

TYPICAL SECTION THRU LIFT SPAN

(LOOKING EAST)

SOX GALV. L2x2x3/16" CONT. W/ 1/2"Φx4" STUDS @ 12" O/C MAX. SPA. PLACE STUDS TO MISS EXODERMIC DECK GRID MEMBERS. ANGLE AND STUDS PAID UNDER BID ITEM " BRIDGE STRUCTURAL STEEL".

City of Milwaukee

Department of Public Works

Infrastructure Services Division

BLOOM COMPANIES, LLC
Infrastructure Innovation and Ingenuity
10501 W. Research Drive • Milwaukee, WI 53226
Phone: (414) 771-3380 Fax: (414) 771-4490

ST PAUL AVE. LIFT BRIDGE OVER THE MILWAUKEE RIVER
LIFT SPAN TYPICAL SECTIONS

REVISIONS

DESIGNED BY JRS	
DRAWN BY TAL	
CHECKED BY BDT	
DATE FEB 2013	SCALE NTS
JOB NUMBER BR100-10-0106	
SHEET NUMBER LS3 OF LS33	
OF 198	

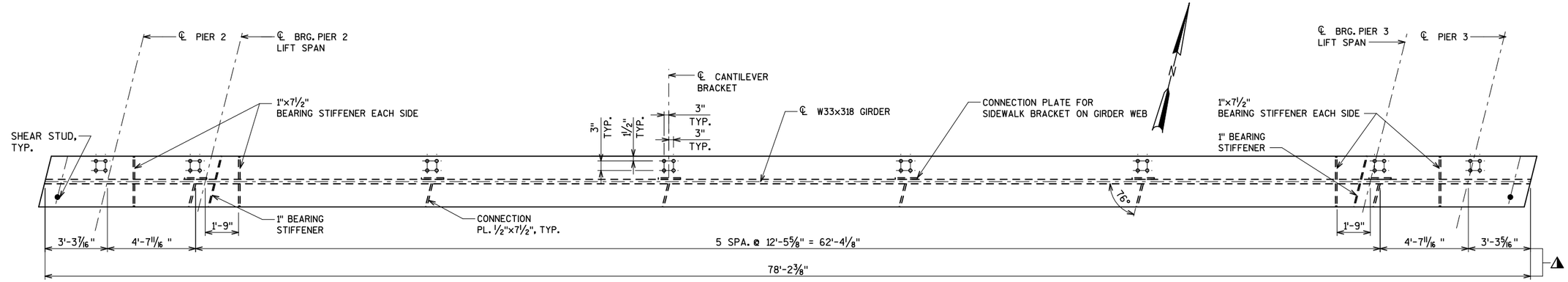

PLAN GIRDER B1 & B4

(GIRDER B1 SHOWN, B4 OPPOSITE)

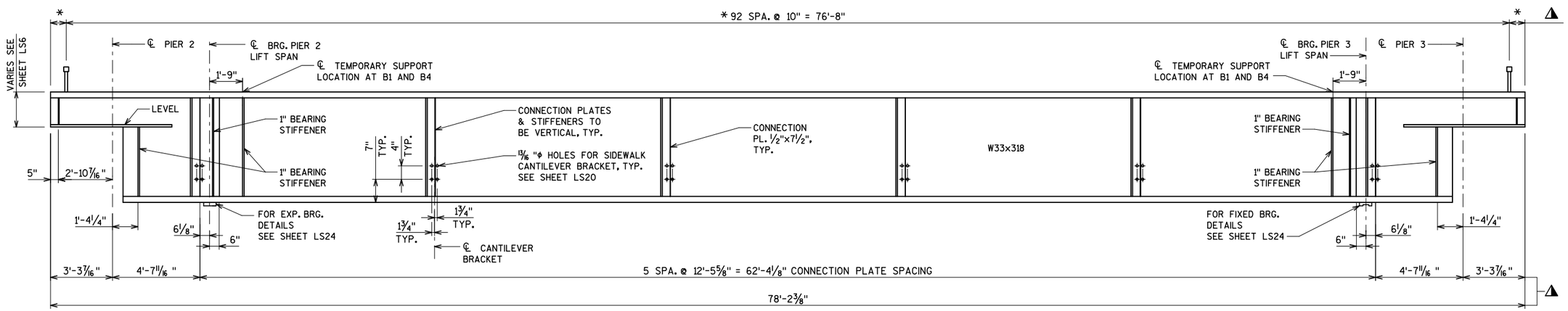

GIRDER B1 & B4 ELEVATION

(LOOKING NORTH)

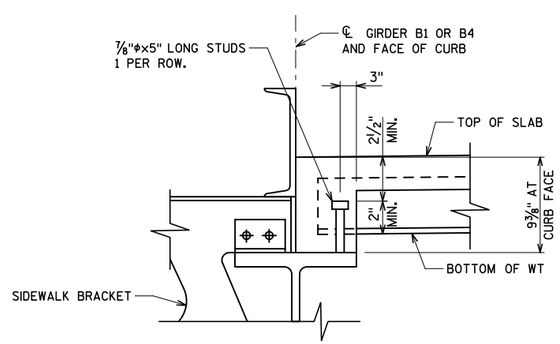

SECTION AT GIRDER B1 & B4

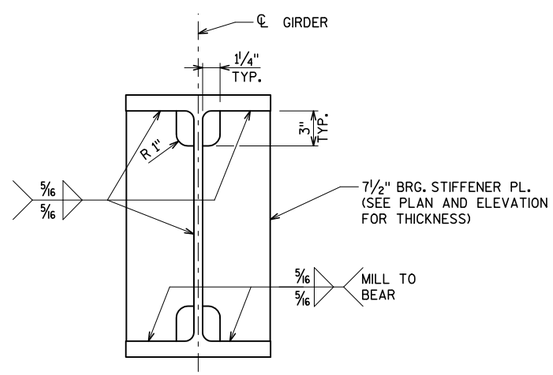

BEARING STIFFENER DETAIL

NOTES

* COORDINATE SHEAR CONNECTOR SPACING WITH EXODERMIC DECK MANUFACTURER.

SEE SHEETS LS8 & LS9 FOR CONNECTION PLATE DETAILS.

SEE SHEET LS6 FOR DETAILS AT GIRDER ENDS.

GIRDERS SHALL BE ASTM A709 GRADE 50 STEEL GALVANIZED, AND PAINTED WITH A TWO COAT PAINT SYSTEM PER WISDOT STANDARD SPECIFICATION.

◭ ALL HORIZONTAL DIMENSIONS MEASURED ALONG ℄ GIRDER UNLESS NOTED OTHERWISE.

City of Milwaukee

Department of Public Works

Infrastructure Services Division

BLOOM COMPANIES, LLC
Infrastructure Innovation and Ingenuity
10501 W. Research Drive • Milwaukee, WI 53226
Phone: (414) 771-3380 Fax: (414) 771-4490

ST PAUL AVE. LIFT BRIDGE
OVER THE MILWAUKEE RIVER
GIRDER DETAILS
(1 OF 2)

REVISIONS

DESIGNED BY JRS	
DRAWN BY TAL	
CHECKED BY BDT	
DATE FEB 2013	SCALE NTS
JOB NUMBER BR100-10-0106	
SHEET NUMBER LS4 OF LS33	
OF 198	

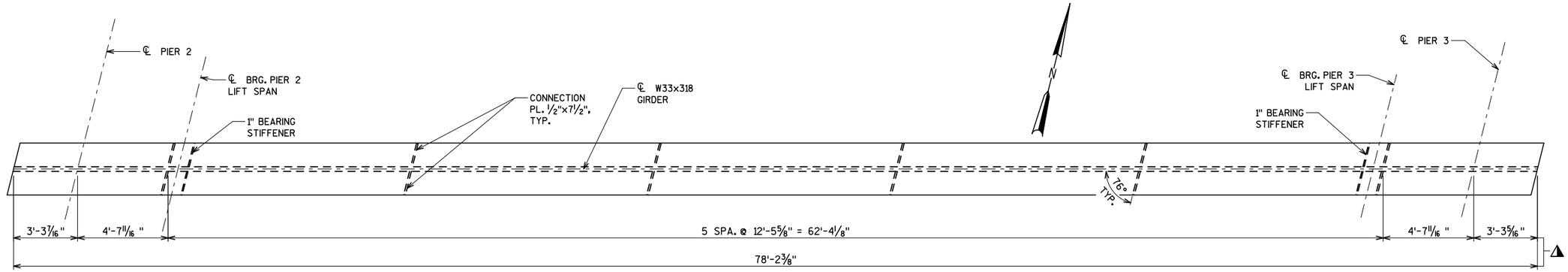

PLAN GIRDER B2 & B3

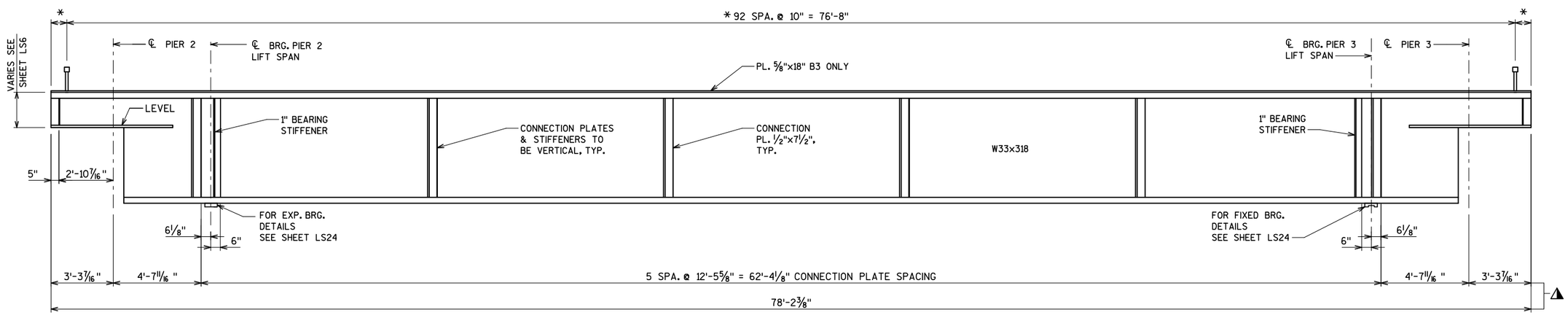

GIRDER B2 & B3 ELEVATION

(LOOKING NORTH)

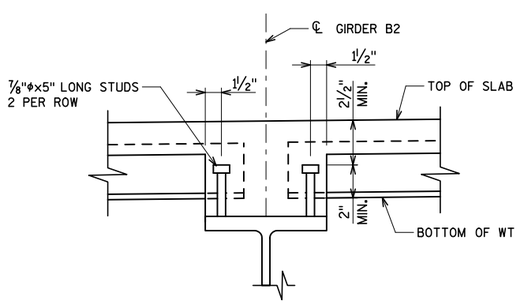

SECTION AT GIRDER B2

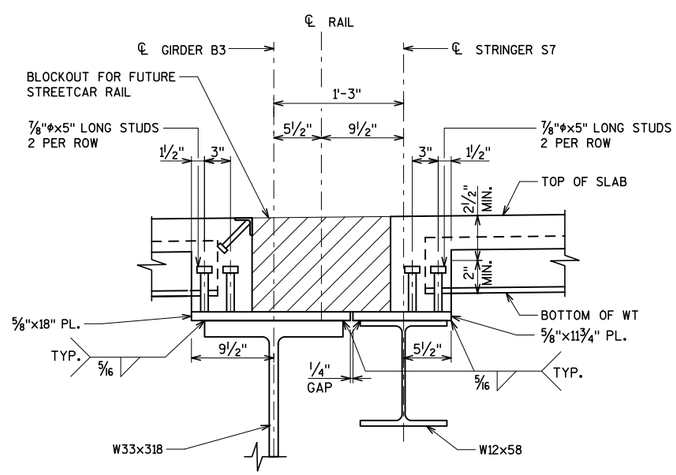

SECTION AT GIRDER B3, STRINGER 7

(LOOKING EAST)

NOTES

* COORDINATE SHEAR CONNECTOR SPACING WITH EXODERMIC DECK MANUFACTURER.

SEE SHEETS LS8 AND LS9 FOR CONNECTION PLATE DETAILS.

SEE SHEET LS6 FOR DETAILS AT GIRDER ENDS.

GIRDERS SHALL BE ASTM A709 GRADE 50 STEEL GALVANIZED, AND PAINTED WITH A TWO COAT PAINT SYSTEM PER WISDOT STANDARD SPECIFICATION.

△1 ALL HORIZONTAL DIMENSIONS MEASURED ALONG ℄ GIRDER UNLESS NOTED OTHERWISE.

SEE SHEET LS4 FOR BEARING STIFFENER DETAIL.

City of Milwaukee

Department of Public Works

Infrastructure Services Division

BLOOM COMPANIES, LLC
Infrastructure Innovation and Ingenuity
10501 W. Research Drive • Milwaukee, WI 53226
Phone: (414) 771-3380 Fax: (414) 771-4490

ST PAUL AVE. LIFT BRIDGE
OVER THE MILWAUKEE RIVER
GIRDER DETAILS
(2 OF 2)

REVISIONS

DESIGNED BY JRS	
DRAWN BY TAL	
CHECKED BY BDT	
DATE FEB 2013	SCALE NTS
JOB NUMBER BR100-10-0106	
SHEET NUMBER LS5 OF LS33	
OF 198	

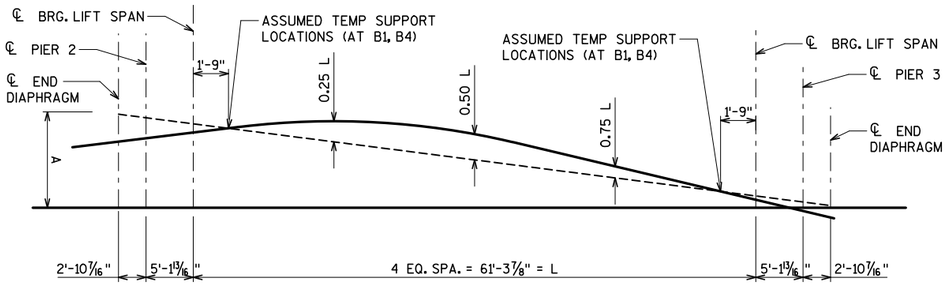

CAMBER & BLOCKING (B1, B2, S1/S6, S2/S6, S3)

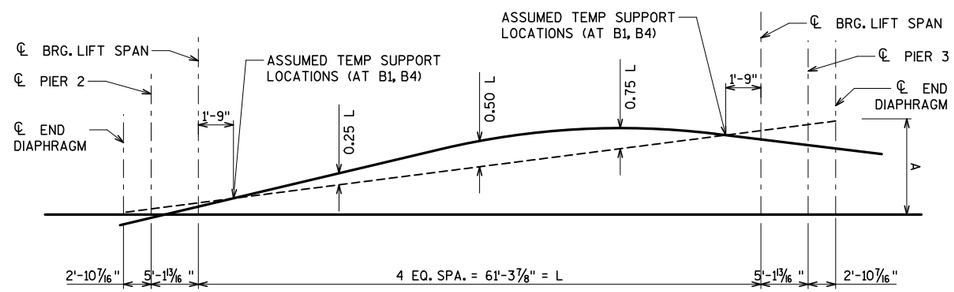

CAMBER & BLOCKING (B3, B4, S4/S6, S5, S7)

CAMBER AND BLOCKING DIMENSIONS - LIFT SPAN

	'A'	C/L END DIAPH	C/L PIER 2	0.25L	0.5L	0.75L	C/L PIER 3	C/L END DIAPH
B1	1.42	-0.89	-0.51	1.21	1.67	1.21	-0.52	-0.91
S1/S6	0.44	-0.92	-0.50	1.48	2.01	1.49	-0.52	-0.95
S2/S6	0.48	-0.97	-0.50	1.82	2.44	1.84	-0.50	-0.99
B2	0.14	-1.04	-0.48	2.04	3.08	2.06	-0.49	-1.07
S3	0.00	-1.04	-0.47	2.32	3.08	2.34	-0.48	-0.98
S4/S6	0.20	-1.03	-0.46	2.30	3.04	2.31	-0.46	-1.05
B3	0.46	-1.01	-0.45	2.27	3.00	2.29	-0.46	-1.03
S7	0.53	-1.00	-0.45	2.19	2.89	2.20	-0.46	-1.01
S5	0.93	-0.92	-0.44	1.70	2.27	1.71	-0.44	-0.92
B4	1.40	-0.78	-0.43	1.09	1.49	1.08	-0.44	-0.77

VALUES GIVEN ARE IN INCHES. NEGATIVE VALUES INDICATE DOWNWARD CAMBER.
'L' IS THE SPAN LENGTH BETWEEN LIFT SPAN BEARINGS

GIRDER EXTENSION DIMENSIONS

GIRDER	PIER 2		PIER 3	
	'A'	'B'	'A'	'B'
B1	1'-2 1/8"	1/4"	1'-0 3/4"	1/8"
B2	1'-3 5/8"	3/8"	1'-3 1/4"	1/4"
B3	1'-3 1/4"	1/4"	1'-3 5/8"	1/4"
B4	1'-0 3/4"	1/8"	1'-2 1/8"	1/4"

SEE SHEET LS7 FOR TOP OF STEEL ELEVATIONS

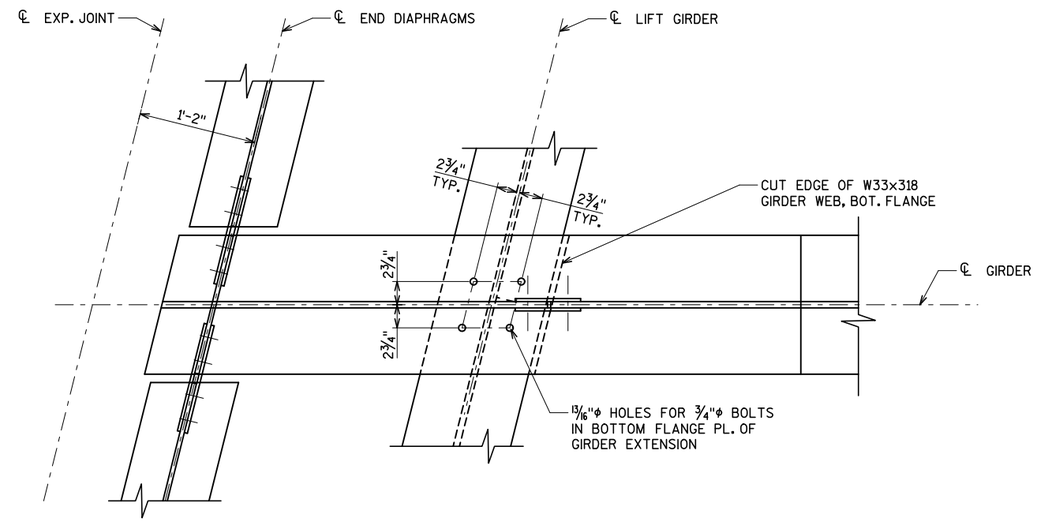

SECTION A-A

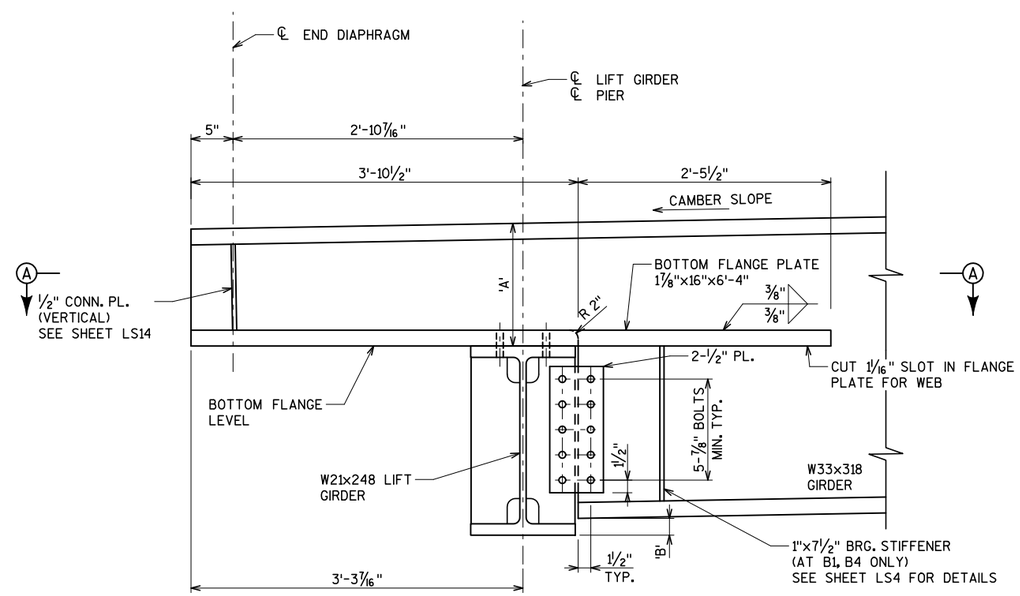

GIRDER EXTENSION ELEVATION

(INTERIOR GIRDER SHOWN, SEE SHEET LS13 FOR CONNECTION DETAILS AT B1 & B4)

City of Milwaukee
Department of Public Works
Infrastructure Services Division

BLOOM COMPANIES, LLC
Infrastructure Innovation and Ingenuity
10501 W. Research Drive • Milwaukee, WI 53226
Phone: (414) 771-3380 • Fax: (414) 771-4490

ST PAUL AVE. LIFT BRIDGE OVER THE MILWAUKEE RIVER
GIRDER EXTENSIONS AND CAMBER

REVISIONS

DESIGNED BY JRS
DRAWN BY TAL
CHECKED BY BDT
DATE FEB 2013
SCALE NTS
JOB NUMBER BR100-10-0106
SHEET NUMBER LS6 OF LS33
OF 198

TOP OF DECK AND TOP OF STEEL ELEVATIONS - LIFT SPAN

		C/L END DIAPH	C/L PIER 2	C/L BRG	0.1L	0.2L	0.3L	0.4L	0.5L	0.6L	0.7L	0.8L	0.9L	C/L BRG	C/L PIER 3	C/L END DIAPH
B1	TOD	16.40	16.43	16.46	16.50	16.52	16.54	16.54	16.54	16.52	16.50	16.46	16.42	16.37	16.32	16.29
	TOS			15.68										15.59		
S1/S6	TOD	16.43	16.46	16.49	16.53	16.56	16.57	16.58	16.57	16.56	16.54	16.51	16.46	16.41	16.37	16.33
	TOS			15.71										15.63		
S2/S6	TOD	16.47	16.50	16.54	16.57	16.60	16.62	16.63	16.63	16.62	16.60	16.56	16.52	16.47	16.43	16.40
	TOS			15.76										15.70		
B2	TOD	16.54	16.56	16.60	16.64	16.67	16.69	16.71	16.71	16.70	16.68	16.65	16.62	16.57	16.53	16.50
	TOS			15.82										15.79		
S3	TOD	16.58	16.61	16.65	16.69	16.73	16.75	16.76	16.77	16.76	16.75	16.72	16.69	16.64	16.60	16.57
	TOS			15.87										15.86		
Crown	TOD	16.60	16.63	16.67	16.71	16.75	16.77	16.79	16.79	16.79	16.77	16.75	16.71	16.67	16.63	16.60
S4/S6	TOD	16.55	16.59	16.63	16.67	16.71	16.73	16.75	16.75	16.75	16.74	16.71	16.68	16.64	16.60	16.57
	TOS			15.85										15.86		
B3	TOD	16.50	16.53	16.57	16.62	16.65	16.68	16.70	16.71	16.71	16.69	16.67	16.64	16.60	16.56	16.53
	TOS			15.79										15.82		
S7	TOD	16.48	16.51	16.55	16.60	16.64	16.67	16.69	16.69	16.69	16.68	16.66	16.63	16.59	16.55	16.52
	TOS			15.77										15.81		
S5	TOD	16.39	16.43	16.47	16.52	16.56	16.59	16.61	16.62	16.62	16.62	16.60	16.57	16.53	16.50	16.47
	TOS			15.69										15.75		
B4	TOD	16.29	16.32	16.37	16.42	16.46	16.50	16.52	16.54	16.54	16.54	16.52	16.50	16.46	16.43	16.40
	TOS			15.59										15.68		

VALUES GIVEN ARE IN FEET. REMAINING TOP OF STEEL ELEVATIONS TO BE DETERMINED IN THE FIELD.

DEAD LOAD DEFLECTIONS - LIFT SPAN

		C/L END DIAPH	C/L PIER 2	C/L BRG	0.1L	0.2L	0.3L	0.4L	0.5L	0.6L	0.7L	0.8L	0.9L	C/L BRG	C/L PIER 3	C/L END DIAPH
B1	STEEL	-0.13	-0.10	-0.02	0.03	0.05	0.06	0.06	0.06	0.06	0.06	0.05	0.03	-0.02	-0.08	-0.11
	NCDL	-0.14	-0.10	-0.02	0.04	0.07	0.08	0.09	0.09	0.09	0.08	0.07	0.04	-0.02	-0.09	-0.13
	CDL	0.28	0.20	0.05	-0.09	-0.18	-0.25	-0.28	-0.30	-0.29	-0.25	-0.19	-0.09	0.05	0.21	0.29
S1/S6	STEEL	-0.32	-0.30	-0.26	-0.26	-0.26	-0.28	-0.29	-0.29	-0.29	-0.27	-0.26	-0.25	-0.24	-0.27	-0.29
	NCDL	-0.38	-0.36	-0.34	-0.35	-0.37	-0.39	-0.40	-0.41	-0.40	-0.39	-0.36	-0.34	-0.32	-0.34	-0.35
	CDL	0.27	0.20	0.09	-0.03	-0.12	-0.18	-0.21	-0.22	-0.21	-0.18	-0.12	-0.04	0.09	0.21	0.28
S2/S6	STEEL	-0.56	-0.56	-0.57	-0.63	-0.69	-0.73	-0.76	-0.77	-0.76	-0.72	-0.67	-0.61	-0.54	-0.52	-0.52
	NCDL	-0.69	-0.71	-0.75	-0.87	-0.96	-1.03	-1.08	-1.10	-1.08	-1.02	-0.94	-0.84	-0.72	-0.67	-0.64
	CDL	0.24	0.20	0.12	0.05	-0.02	-0.06	-0.09	-0.10	-0.09	-0.07	-0.03	0.04	0.12	0.20	0.26
B2	STEEL	-0.81	-0.89	-1.03	-1.19	-1.32	-1.42	-1.48	-1.50	-1.47	-1.40	-1.30	-1.15	-0.99	-0.83	-0.76
	NCDL	-1.02	-1.14	-1.37	-1.62	-1.84	-2.00	-2.10	-2.13	-2.09	-1.98	-1.80	-1.58	-1.31	-1.07	-0.94
	CDL	0.20	0.19	0.17	0.15	0.13	0.12	0.11	0.11	0.11	0.12	0.13	0.15	0.17	0.19	0.20
S3	STEEL	-0.93	-0.99	-1.07	-1.19	-1.31	-1.41	-1.47	-1.48	-1.46	-1.39	-1.28	-1.15	-1.01	-0.93	-0.86
	NCDL	-1.16	-1.27	-1.41	-1.62	-1.82	-1.98	-2.07	-2.11	-2.06	-1.95	-1.78	-1.57	-1.34	-1.19	-1.07
	CDL	0.19	0.18	0.16	0.13	0.11	0.09	0.07	0.07	0.07	0.08	0.10	0.13	0.16	0.18	0.20
S4/S6	STEEL	-0.93	-0.99	-1.06	-1.19	-1.30	-1.39	-1.44	-1.46	-1.43	-1.36	-1.26	-1.14	-1.01	-0.92	-0.86
	NCDL	-1.17	-1.27	-1.40	-1.61	-1.79	-1.93	-2.03	-2.05	-2.01	-1.91	-1.75	-1.56	-1.33	-1.18	-1.08
	CDL	0.20	0.17	0.14	0.11	0.08	0.06	0.04	0.04	0.04	0.06	0.08	0.11	0.14	0.17	0.19
B3	STEEL	-0.85	-0.91	-1.04	-1.17	-1.28	-1.37	-1.42	-1.43	-1.41	-1.35	-1.25	-1.13	-0.98	-0.85	-0.78
	NCDL	-1.06	-1.17	-1.36	-1.58	-1.76	-1.89	-1.98	-2.00	-1.96	-1.87	-1.72	-1.52	-1.29	-1.08	-0.97
	CDL	0.18	0.16	0.13	0.09	0.06	0.03	0.02	0.01	0.02	0.03	0.06	0.09	0.13	0.16	0.18
S7	STEEL	-0.81	-0.88	-0.97	-1.08	-1.18	-1.26	-1.30	-1.31	-1.29	-1.24	-1.15	-1.04	-0.91	-0.81	-0.74
	NCDL	-1.01	-1.11	-1.27	-1.46	-1.62	-1.75	-1.82	-1.84	-1.81	-1.72	-1.58	-1.41	-1.20	-1.03	-0.92
	CDL	0.18	0.16	0.13	0.08	0.05	0.02	0.00	0.00	0.01	0.02	0.05	0.08	0.12	0.16	0.18
S5	STEEL	-0.56	-0.58	-0.57	-0.58	-0.60	-0.63	-0.65	-0.66	-0.65	-0.62	-0.59	-0.55	-0.53	-0.53	-0.51
	NCDL	-0.67	-0.72	-0.75	-0.81	-0.86	-0.92	-0.95	-0.97	-0.95	-0.91	-0.84	-0.78	-0.70	-0.66	-0.60
	CDL	0.18	0.15	0.10	0.03	-0.02	-0.06	-0.08	-0.08	-0.08	-0.06	-0.02	0.03	0.10	0.15	0.18
B4	STEEL	-0.18	-0.13	-0.03	0.05	0.09	0.12	0.13	0.13	0.13	0.12	0.09	0.05	-0.02	-0.11	-0.15
	NCDL	-0.17	-0.12	-0.03	0.05	0.09	0.12	0.13	0.13	0.13	0.11	0.09	0.05	-0.02	-0.10	-0.15
	CDL	0.23	0.17	0.04	-0.07	-0.14	-0.18	-0.21	-0.21	-0.20	-0.18	-0.13	-0.06	0.04	0.15	0.21

VALUES GIVEN ARE IN INCHES. NEGATIVE VALUES INDICATE DOWNWARD DEFLECTION.

'L' IS THE SPAN LENGTH BETWEEN LIFT SPAN BEARINGS

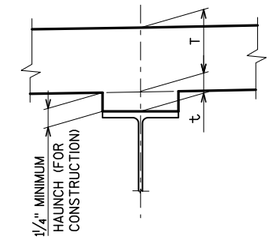

HAUNCH DETAIL

NOTES

t = HAUNCH HEIGHT AT CENTERLINE OF GIRDER.
(TO DETERMINE "t": AFTER ALL STRUCTURAL STEEL HAS BEEN ERECTED. ELEVATIONS OF THE TOP FLANGES, TOP OF SPLICE PLATES, OR TOP OF COVER PLATES, WHICHEVER APPLIES, SHALL BE TAKEN AT CENTERLINE OF BEARINGS, CENTERLINE OF FIELD SPLICES, AND AT 0.1 POINTS.

TOP OF DECK ELEV. AT FINAL GRADE.

\- TOP OF STEEL ELEV. AFTER PLACEMENT.

\+ NCDL+CDL DEFLECTION; DOWNWARD DEFLECTION IS ADDED, UPWARD DEFLECTION IS SUBTRACTED.

\- SLAB THICKNESS ('T')

= "t" VALUE FOR SETTING HAUNCH.

DEFLECTION ASSUMPTIONS

NCDL = WEIGHT OF STEEL DECK, CONCRETE INFILL, AND HAUNCH, AND SIDEWALK FRAMING.
CDL = WEIGHT OF RAILING, COUNTERWEIGHT, HYDRAULIC CYLINDERS, AND SIDEWALK PLATES.

ASSUMED CONSTRUCTION SEQUENCE FOR CALCULATIONS DEAD LOADS:

1. ERECT STRUCTURAL STEEL ON TEMPORARY SUPPORTS, SUPPORT AT GIRDERS B1 & B4 ONLY.
2. PLACE EXODERMIC DECK AND POUR CONCRETE INFILL.
3. TRANSFER COUNTERWEIGHT LOAD TO LIFTING LEG.
4. FULLY TENSION FLOORBEAM BOLTS AT SLOTTED HOLES.
5. LIFT BRIDGE SLIGHTLY FROM TEMPORARY SUPPORTS AND REMOVE TEMPORARY SUPPORTS.
6. LOWER BRIDGE ONTO PERMANENT BEARINGS, AT ALL FOUR GIRDERS.

DEAD LOAD DEFLECTION IS BASED ON AN ASSUMED EXODERMIC DECK WEIGHT OF 55 psf, WHICH IS THE INSTALLED WEIGHT WITH 2" CONCRETE OVERFILL.

City of Milwaukee
Department of Public Works
Infrastructure Services Division

BLOOM COMPANIES, LLC
Infrastructure Innovation and Ingenuity
10501 W. Research Drive • Milwaukee, WI 53226
Phone: (414) 771-3380 Fax: (414) 771-4490

ST PAUL AVE. LIFT BRIDGE
OVER THE MILWAUKEE RIVER
GIRDER DEFLECTIONS

REVISIONS

DESIGNED BY JRS
DRAWN BY TAL
CHECKED BY BDT
DATE FEB 2013 | SCALE NTS
JOB NUMBER BR100-10-0106
SHEET NUMBER LS7 OF LS33
OF 198

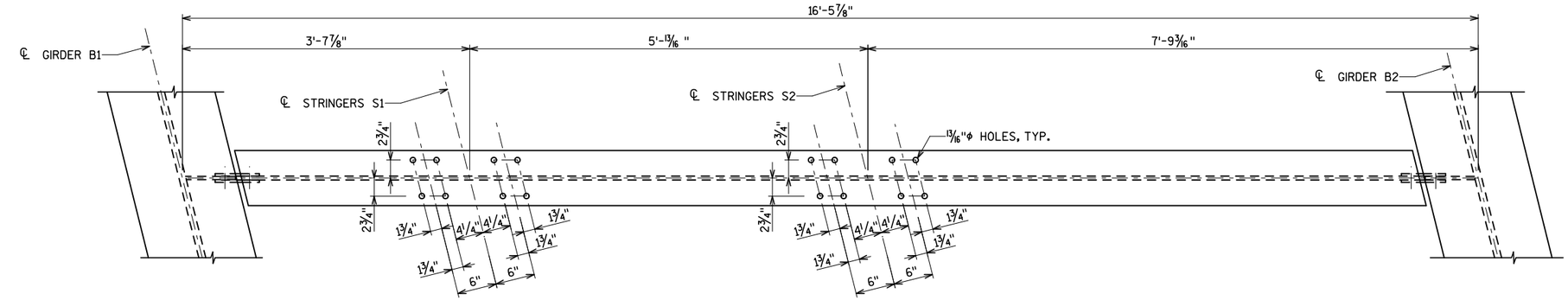

PLAN FLOORBEAM FB1

(FB4 SIMILAR, SEE SHEET LS9 FOR BOLT PATTERN)

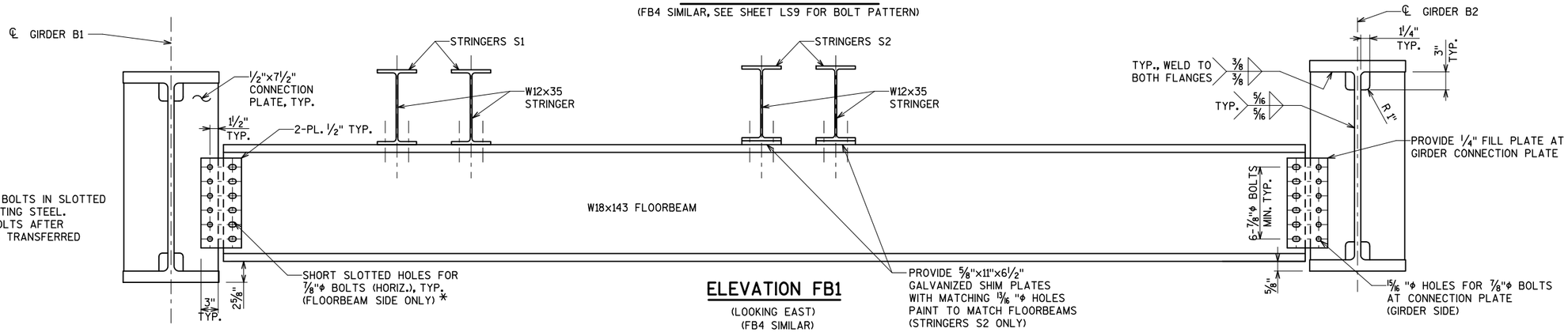

NOTE:

* SNUG TIGHTEN BOLTS IN SLOTTED HOLES WHEN ERECTING STEEL. FULLY TENSION BOLTS AFTER COUNTERWEIGHT IS TRANSFERRED TO LIFTING LEG.

ELEVATION FB1

(LOOKING EAST)
(FB4 SIMILAR)

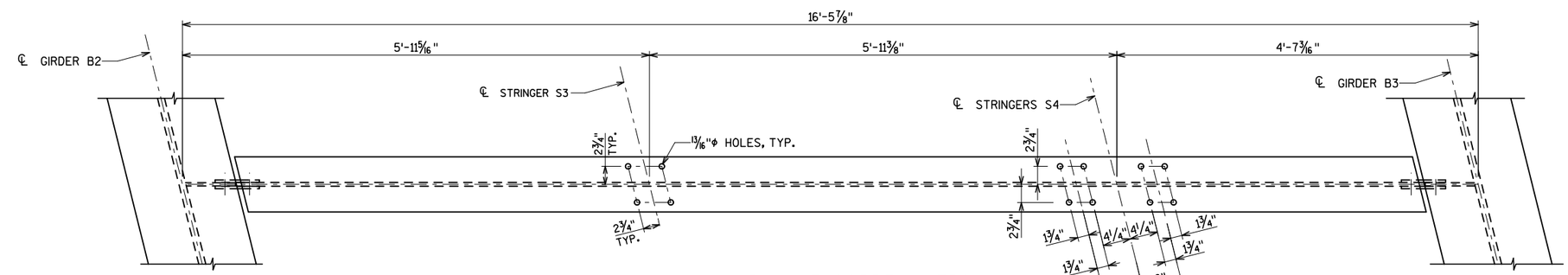

PLAN FLOORBEAM FB2

(FB5 SIMILAR, SEE SHEET LS9 FOR BOLT PATTERN)

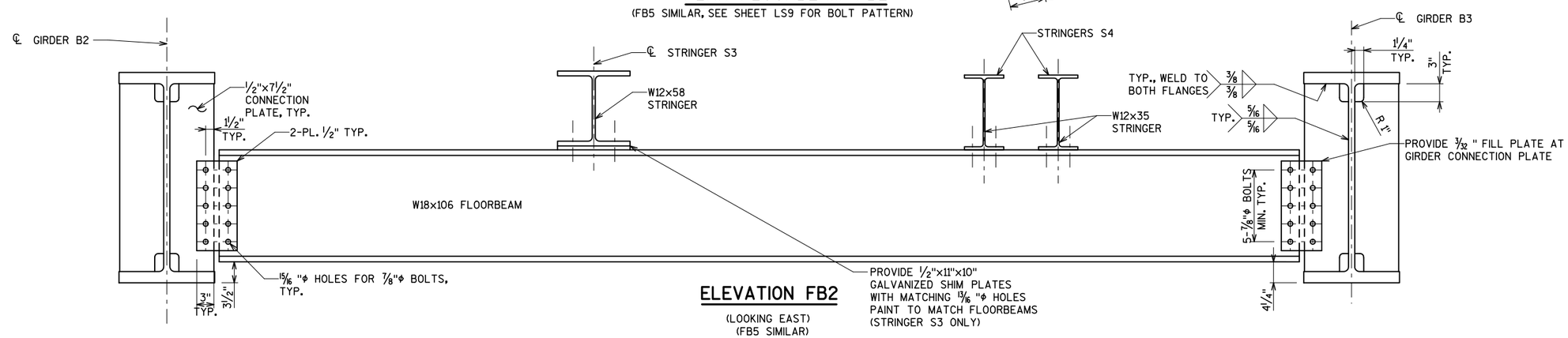

ELEVATION FB2

(LOOKING EAST)
(FB5 SIMILAR)

City of Milwaukee

Department of Public Works

Infrastructure Services Division

BLOOM COMPANIES, LLC
Infrastructure Innovation and Ingenuity
10501 W. Research Drive • Milwaukee, WI 53226
Phone: (414) 771-3380 Fax: (414) 771-4490

ST PAUL AVE. LIFT BRIDGE
OVER THE MILWAUKEE RIVER
FLOORBEAM DETAILS
(1 OF 2)

REVISIONS

DESIGNED BY JRS	
DRAWN BY TAL	
CHECKED BY	
DATE FEB 2013	SCALE NTS
JOB NUMBER BR100-10-0106	
SHEET NUMBER LS8 OF LS33	
OF 198	

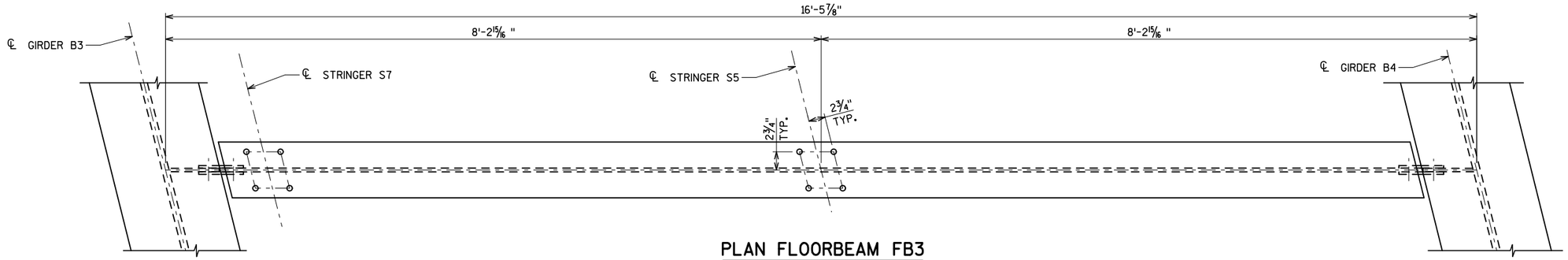

PLAN FLOORBEAM FB3

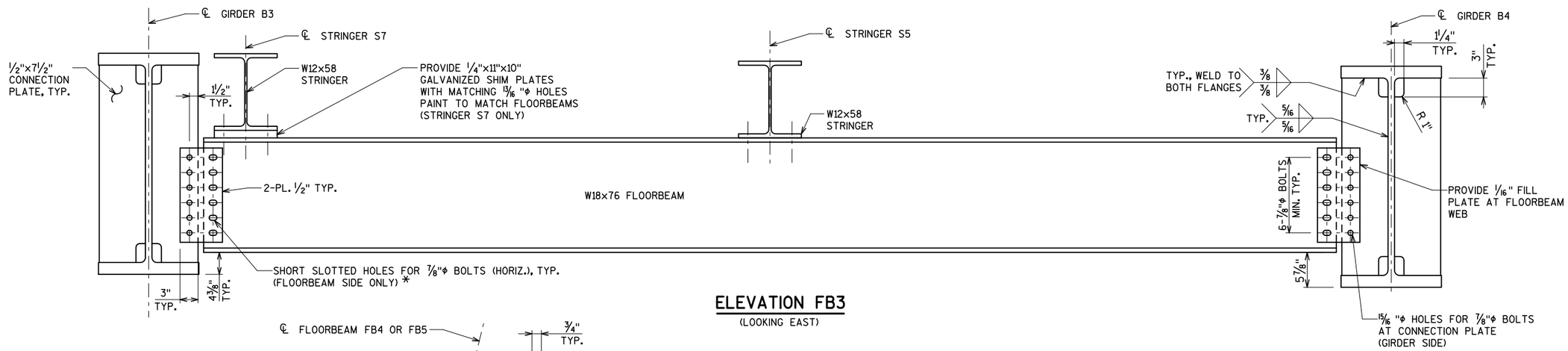

ELEVATION FB3

(LOOKING EAST)

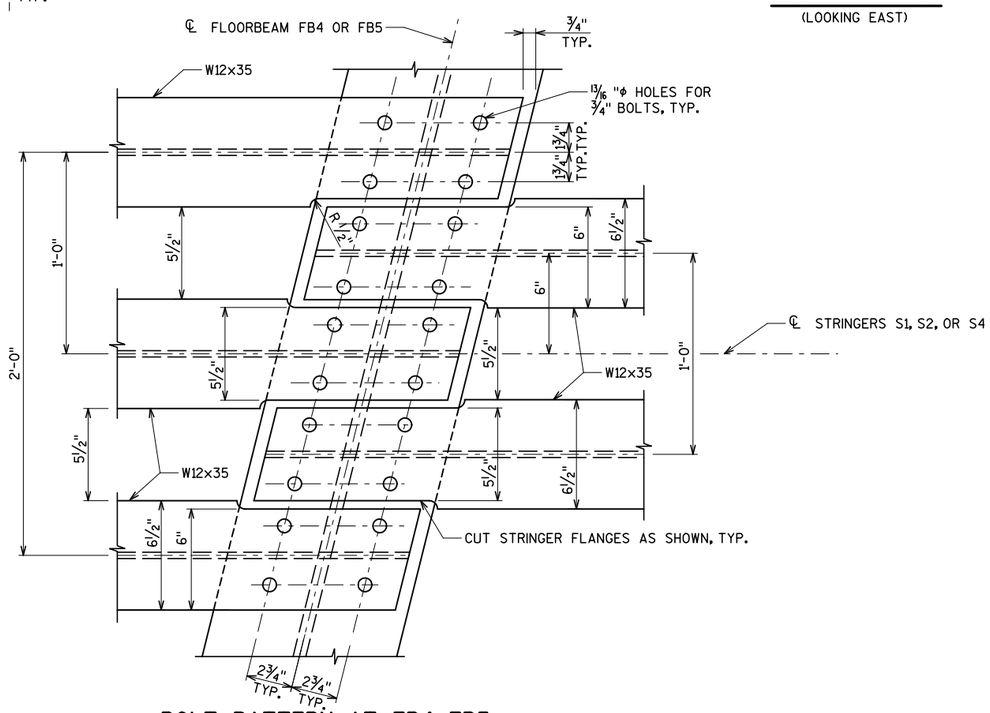

BOLT PATTERN AT FB4, FB5

NOTE: SEE SHEET S31 FOR LAYOUT OF 1" PLATE ABOVE THE STRINGERS.

NOTES

ALL FLOORBEAMS AND CONNECTION PLATES SHALL BE ASTM A709, GRADE 50 STEEL, GALVANIZED, AND PAINTED WITH A TWO COAT PAINT SYSTEM PER WISDOT STANDARD SPECIFICATION.

SHIM PLATES AND FILL PLATES MAY BE ASTM A709, GRADE 36 STEEL GALVANIZED, AND PAINTED WITH A TWO COAT PAINT SYSTEM PER WISDOT STANDARD SPECIFICATION.

* SNUG TIGHTEN BOLTS IN SLOTTED HOLES WHEN ERECTING STEEL.
FULLY TENSION BOLTS AFTER COUNTERWEIGHT IS TRANSFERRED TO LIFTING LEG.

FLOORBEAM FB4, FB5 ARE SIMILAR TO FB1, FB2 AS SHOWN ON SHEET LS8. EXCEPT FOR THE BOLT HOLE PATTERN.

City of Milwaukee
Department of Public Works
Infrastructure Services Division

BLOOM COMPANIES, LLC
Infrastructure Innovation and Ingenuity
10501 W. Research Drive • Milwaukee, WI 53226
Phone: (414) 771-3380 Fax: (414) 771-4490

ST PAUL AVE. LIFT BRIDGE
OVER THE MILWAUKEE RIVER
FLOORBEAM DETAILS
(2 OF 2)

REVISIONS

DESIGNED BY JRS	
DRAWN BY TAL	
CHECKED BY BDT	
DATE FEB 2013	SCALE NTS
JOB NUMBER BR100-10-0106	
SHEET NUMBER LS9 OF LS33	
OF 198	

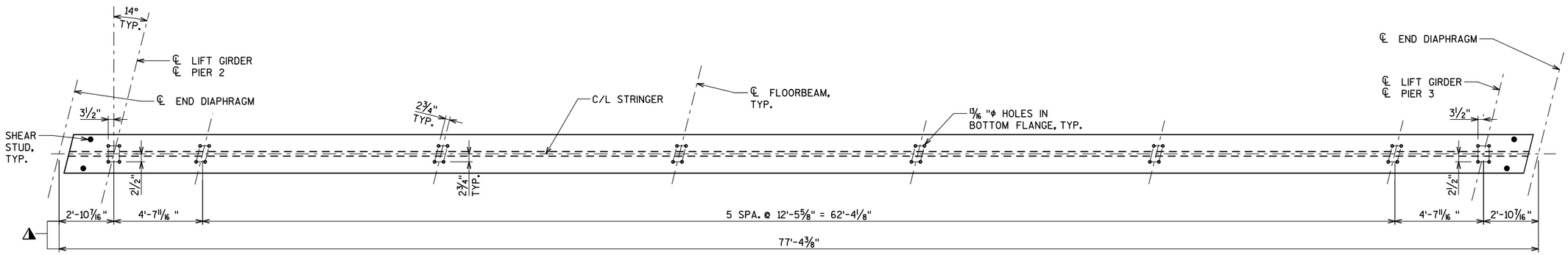

STRINGER S3, S5, & S7 PLAN

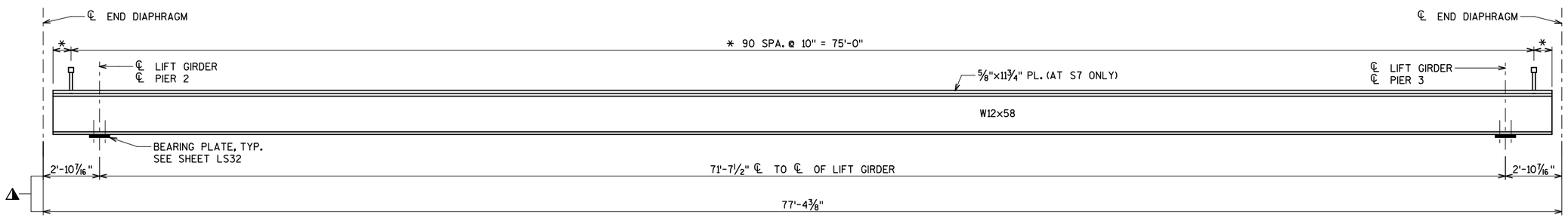

STRINGER S3, S5, & S7 ELEVATION

(LOOKING NORTH)

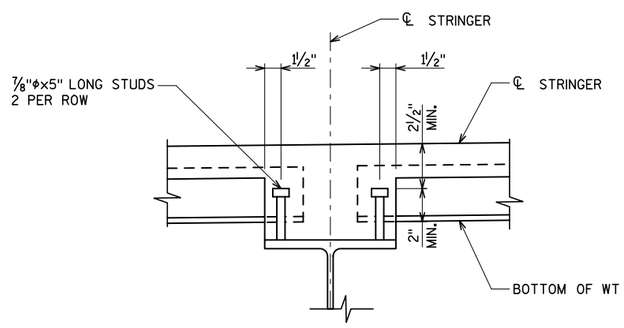

SECTION AT STRINGER S3 & S5

(NOT APPLICABLE AT S7)

NOTES

* COORDINATE SHEAR CONNECTOR SPACING WITH EXODERMIC DECK MANUFACTURER.

STRINGERS SHALL BE ASTM A709 GRADE 50 STEEL, GALVANIZED, AND PAINTED WITH A TWO COAT PAINT SYSTEM PER WISDOT STANDARD SPECIFICATION.

SEE SHEETS LS6 & LS7 SHEET FOR ELEVATIONS AND CAMBER.

SEE SHEET LS5 FOR STRINGER S7 SECTION.

⚠ MEASURED ALONG ℄ STRINGER.

City of Milwaukee
Department of Public Works
Infrastructure Services Division

BLOOM COMPANIES, LLC
Infrastructure Innovation and Ingenuity
10501 W. Research Drive • Milwaukee, WI 53226
Phone: (414) 771-3380 Fax: (414) 771-4490

ST PAUL AVE. LIFT BRIDGE
OVER THE MILWAUKEE RIVER
STRINGER DETAILS
(1 OF 2)

REVISIONS

DESIGNED BY JRS	
DRAWN BY TAL	
CHECKED BY BDT	
DATE FEB 2013	SCALE NTS
JOB NUMBER BR100-10-0106	
SHEET NUMBER LS10 OF LS33	
OF 198	

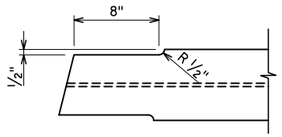

COPING AT END OF INTERIOR STRINGER

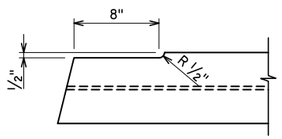

COPING AT END OF EXTERIOR STRINGER

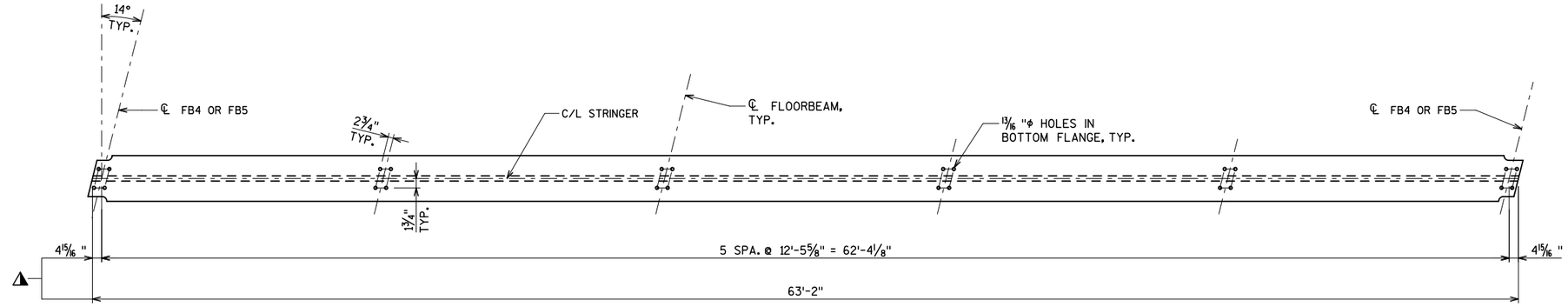

STRINGER S1, S2, & S4 PLAN

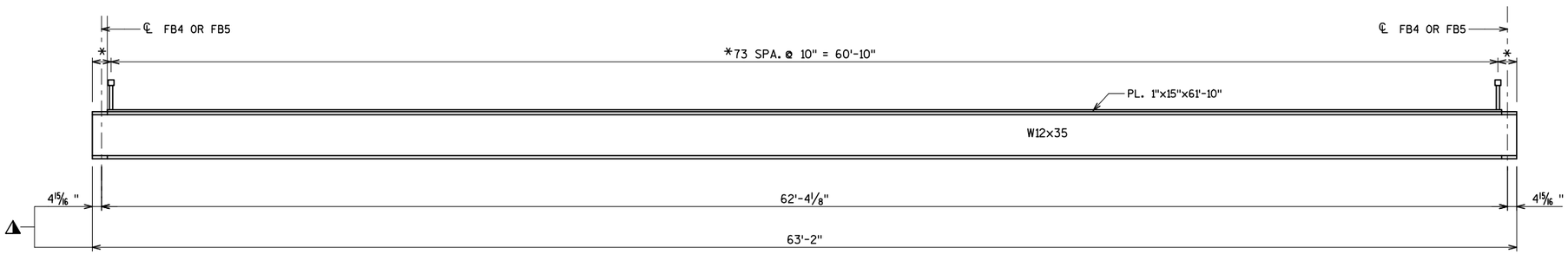

STRINGER S1, S2, & S4 ELEVATION

(LOOKING NORTH)

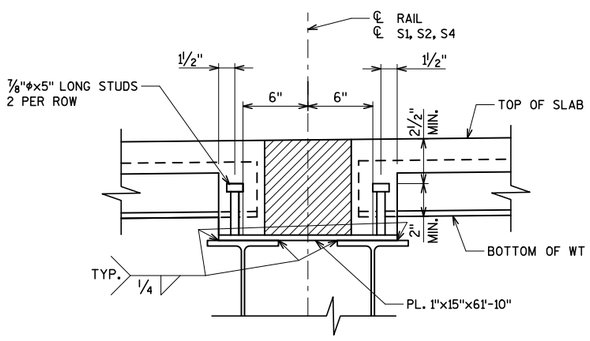

SECTION AT STRINGER S1, S2, & S4

SEE SHEET LS2 FOR STREETCAR TRACK BLOCKOUT DETAILS.

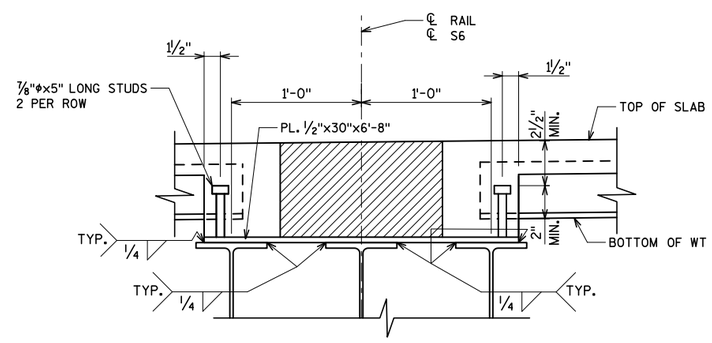

SECTION AT STRINGER S6

SEE SHEET LS2 FOR STREETCAR TRACK BLOCKOUT DETAILS.

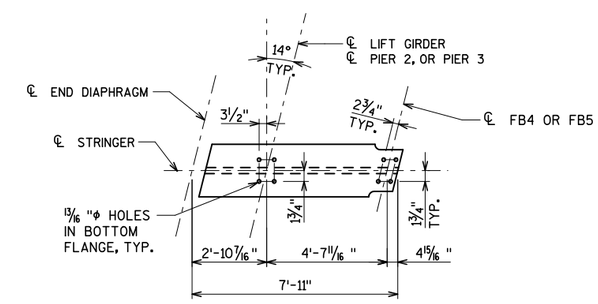

STRINGER S6 PLAN

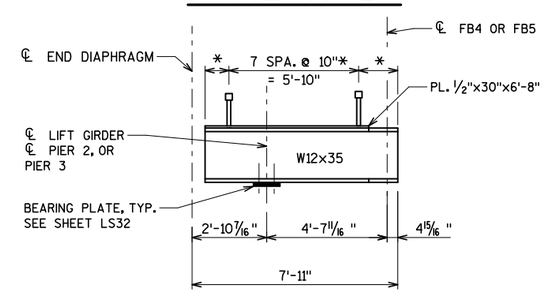

STRINGER S6 ELEVATION

(LOOKING NORTH)

NOTES

* COORDINATE SHEAR CONNECTOR SPACING WITH EXODERMIC DECK MANUFACTURER.

STRINGERS SHALL BE ASTM A709 GRADE 50 STEEL, GALVANIZED, AND PAINTED WITH A TWO COAT PAINT SYSTEM PER WISDOT STANDARD SPECIFICATION.

SEE SHEETS LS6 & LS7 FOR ELEVATIONS AND CAMBER.

△ MEASURED ALONG ℄ STRINGER.

City of Milwaukee
Department of Public Works
Infrastructure Services Division

BLOOM COMPANIES, LLC
Infrastructure Innovation and Ingenuity
10501 W. Research Drive • Milwaukee, WI 53226
Phone: (414) 771-3380 Fax: (414) 771-4490

ST PAUL AVE. LIFT BRIDGE OVER THE MILWAUKEE RIVER
STRINGER DETAILS
(2 OF 2)

REVISIONS

DESIGNED BY JRS	
DRAWN BY TAL	
CHECKED BY BDT	
DATE FEB 2013	SCALE NTS
JOB NUMBER BR100-10-0106	
SHEET NUMBER LS11 OF LS33	
OF 198	

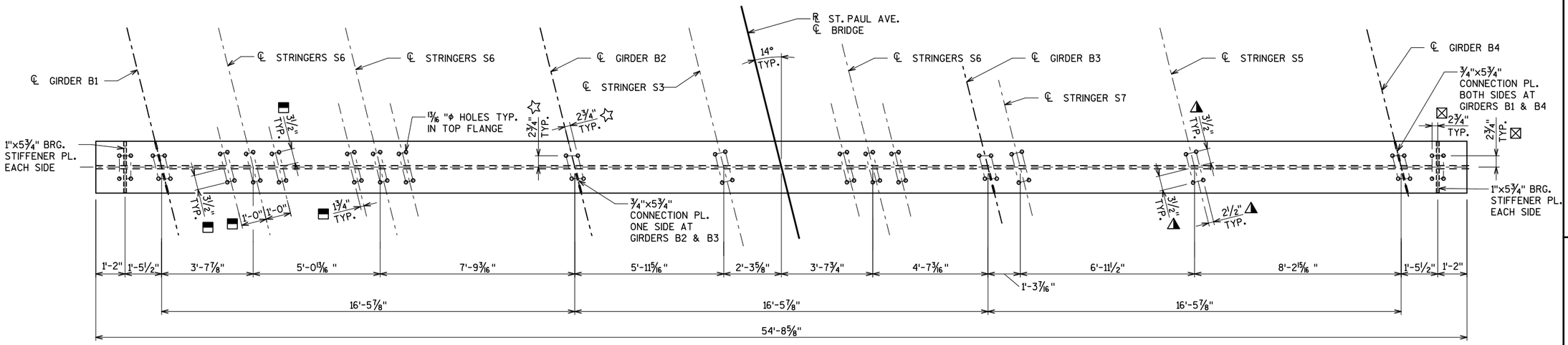

PLAN LIFTING GIRDER

- ▬ DIMENSIONS TYPICAL FOR STINGERS S1, S2, & S4.
- ◭ DIMENSIONS TYPICAL FOR STINGER S3, S5, & S7.
- ☆ DIMENSIONS AT GIRDERS B1, B2, B3, & B4.
- ⊠ DIMENSION TYPICAL FOR CANTILEVER BRKT. SEE SHEET LS21

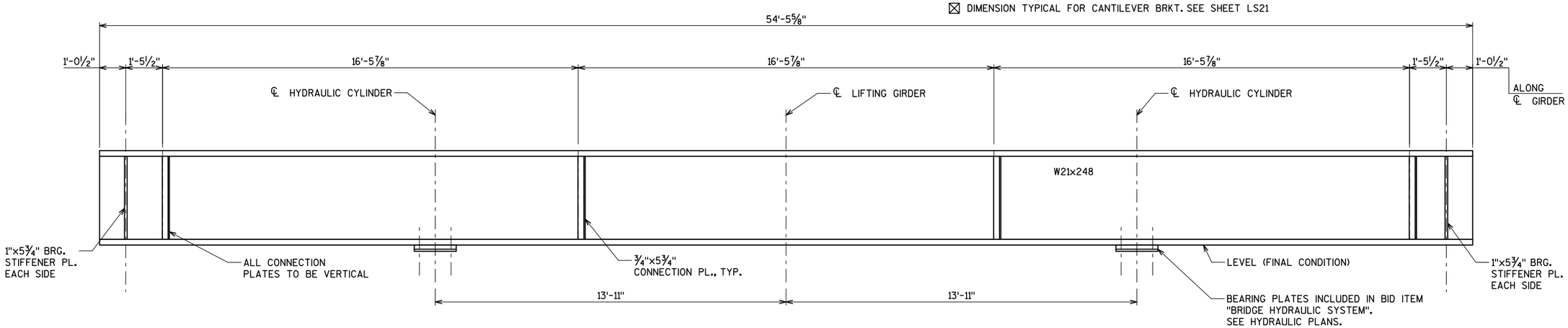

ELEVATION LIFTING GIRDER

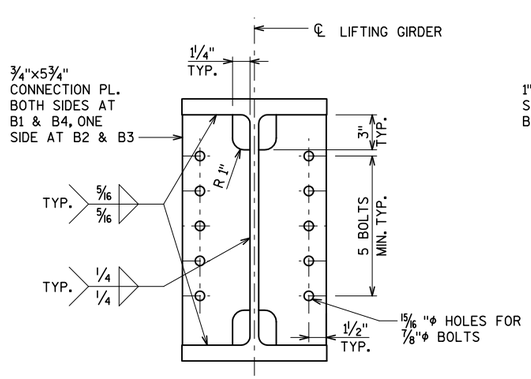

CONNECTION PLATE DETAIL

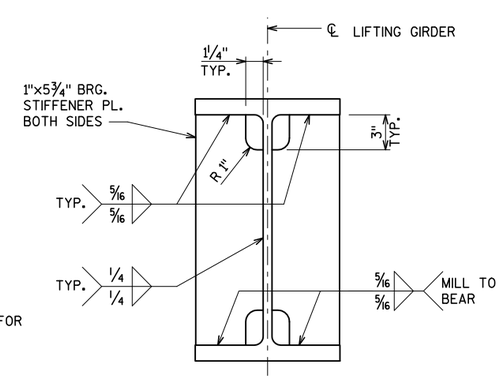

STIFFENER PLATE DETAIL

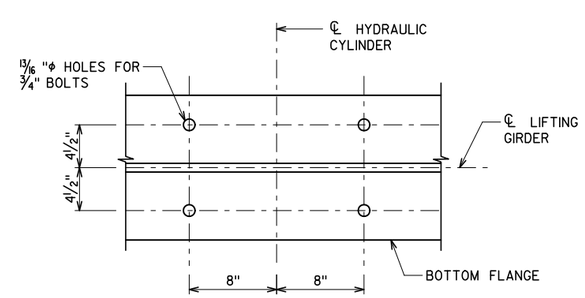

BOLT HOLE LAYOUT AT HYDRAULIC CYLINDER

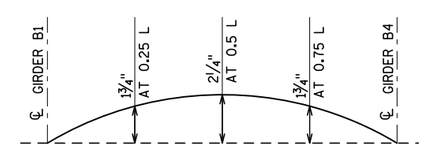

LIFTING GIRDER CAMBER

NOTES

LIFTING GIRDER AND PLATES SHALL BE ASTM A709 GRADE 50 STEEL, GALVANIZED, AND PAINTED WITH A TWO COAT PAINT SYSTEM PER WISDOT STANDARD SPECIFICATION.

City of Milwaukee

Department of Public Works

Infrastructure Services Division

BLOOM COMPANIES, LLC
Infrastructure Innovation and Ingenuity
10501 W. Research Drive • Milwaukee, WI 53226
Phone: (414) 771-3380 Fax: (414) 771-4490

ST PAUL AVE. LIFT BRIDGE OVER THE MILWAUKEE RIVER LIFTING GIRDER

REVISIONS

DESIGNED BY JRS	
DRAWN BY TAL	
CHECKED BY BDT	
DATE FEB 2013	SCALE NTS
JOB NUMBER BR100-10-0106	
SHEET NUMBER LS12 OF LS33	
OF 198	

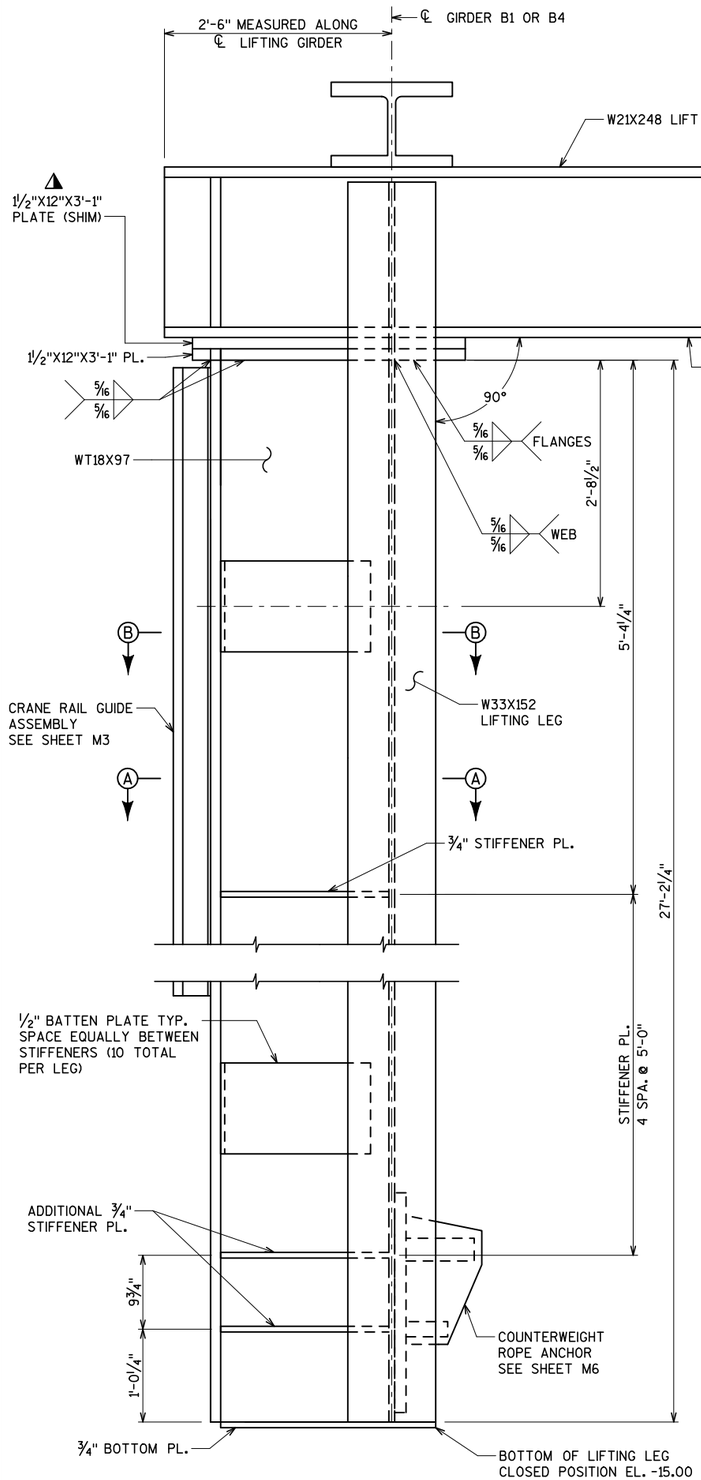

LIFTING LEG ELEVATION

ALL HORIZONTAL DIMENSIONS ARE ALONG ℄ LIFTING GIRDER UNLESS NOTED OTHERWISE

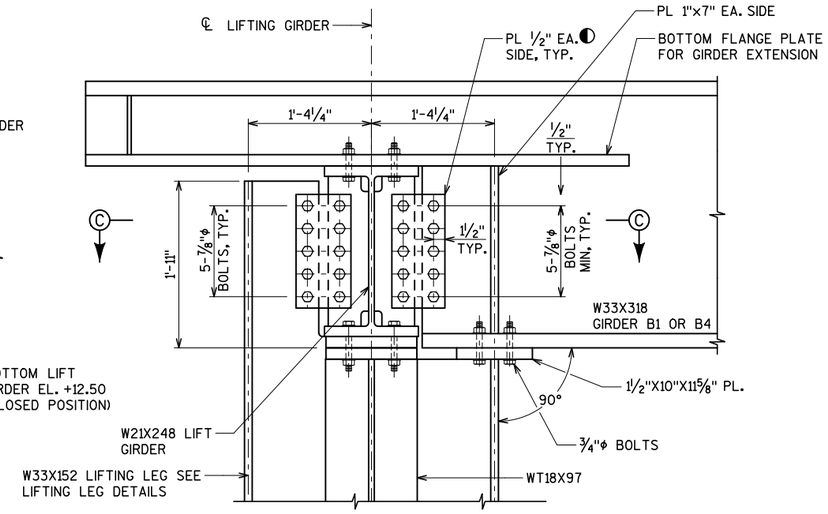

LIFT LEG CONNECTION ELEVATION

ALL HORIZONTAL DIMENSIONS ARE ALONG ℄ LIFTING LEG UNLESS NOTED OTHERWISE

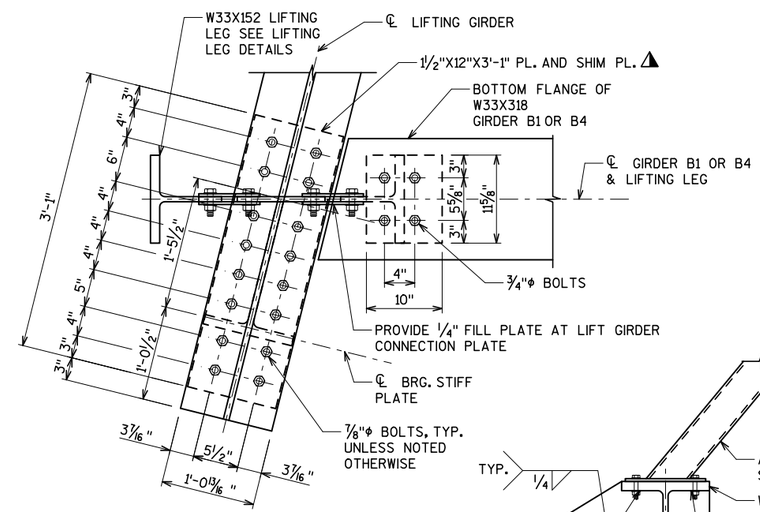

SECTION C-C

SOUTHWEST LIFT LEG SHOWN

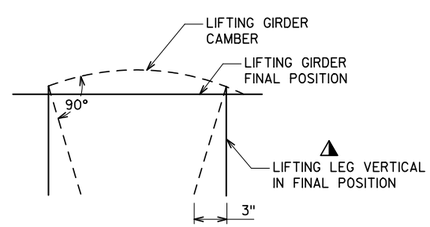

LIFTING LEG DEFLECTION DIAGRAM

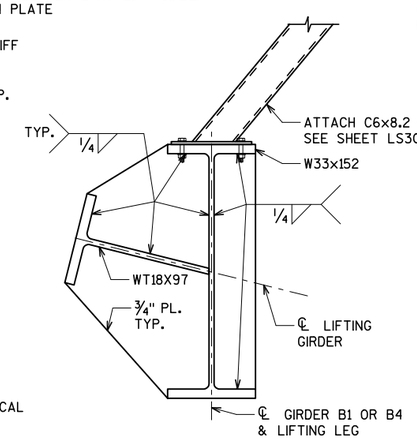

BOTTOM PLATE DETAIL

SOUTHWEST CORNER SHOWN

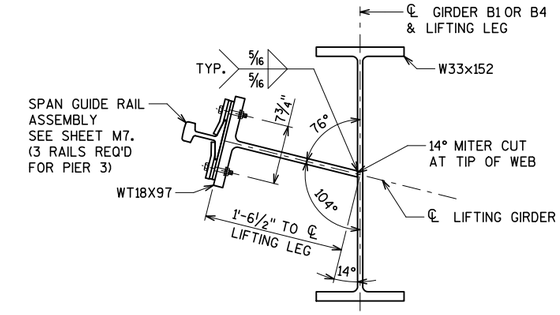

LIFTING LEG SECTION A-A

SOUTHWEST CORNER SHOWN

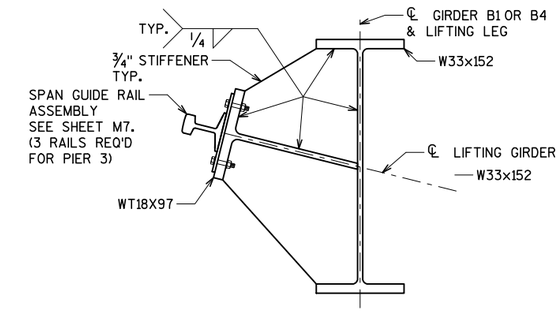

STIFFENER PLATE DETAIL

SOUTHWEST CORNER SHOWN

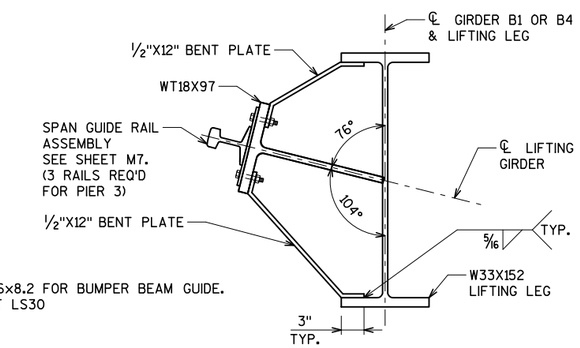

BATTEN PLATE SECTION B-B

SOUTHWEST CORNER SHOWN
SPACE EQUALLY BETWEEN STIFFENERS

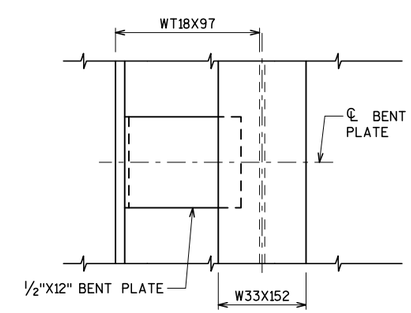

BATTEN PLATE ELEVATION

◭ IF LIFTING LEG IS NOT VERTICAL IN FINAL POSITION AFTER ATTACHING COUNTERWEIGHT, FABRICATE AND PROVIDE TAPERED SHIM PLATE

◐ IF LIFTING LEG IS NOT VERTICAL IN FINAL POSITION AFTER ATTACHING COUNTERWEIGHT, FABRICATE AND PROVIDE NEW CONNECTION PLATES TO ALLOW ADJUSTMENT.

City of Milwaukee

Department of Public Works

Infrastructure Services Division

BLOOM COMPANIES, LLC
Infrastructure Innovation and Ingenuity
10501 W. Research Drive • Milwaukee, WI 53226
Phone: (414) 771-3380 • Fax: (414) 771-4490

ST PAUL AVE. LIFT BRIDGE OVER THE MILWAUKEE RIVER
LIFTING LEG

REVISIONS

DESIGNED BY JRS	
DRAWN BY TAL	
CHECKED BY BDT	
DATE FEB 2013	SCALE NTS
JOB NUMBER BR100-10-0106	
SHEET NUMBER LS13 OF LS33	

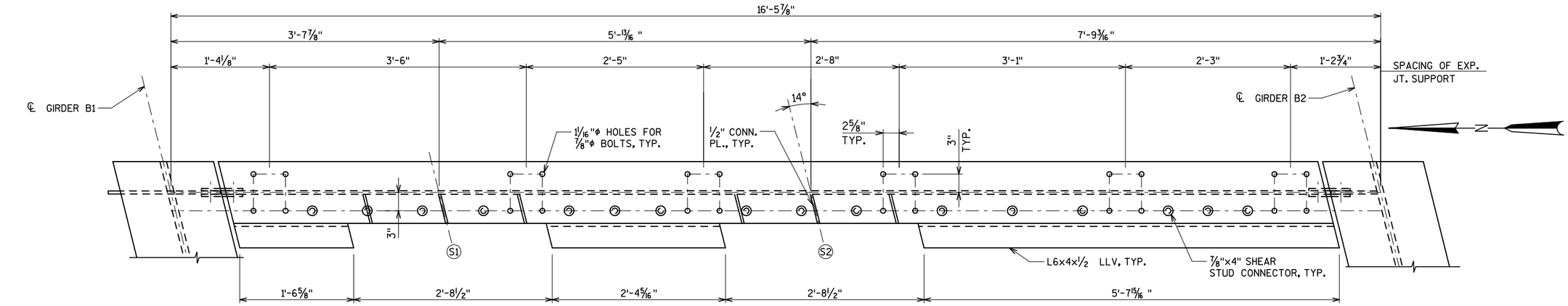

PLAN END DIAPHRAGM BETWEEN B1 & B2

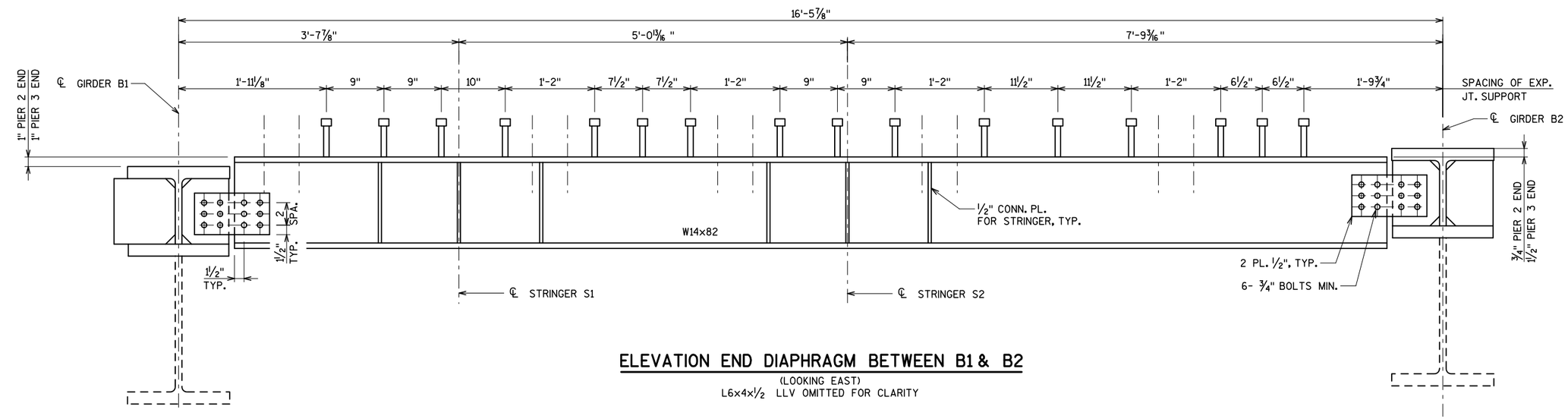

ELEVATION END DIAPHRAGM BETWEEN B1 & B2

(LOOKING EAST)
L6x4x½ LLV OMITTED FOR CLARITY

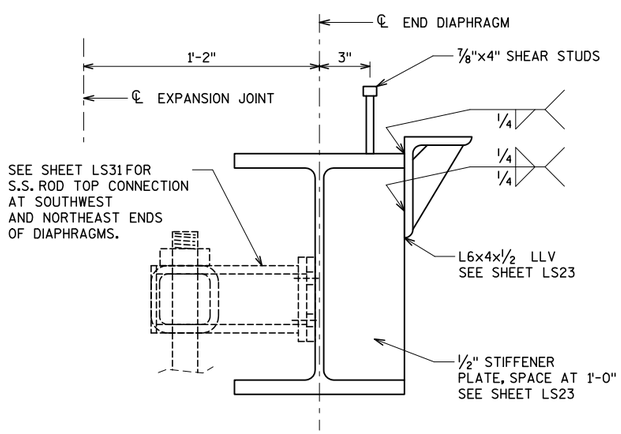

END DIAPHRAGM SECTION

(AT GIRDERS)

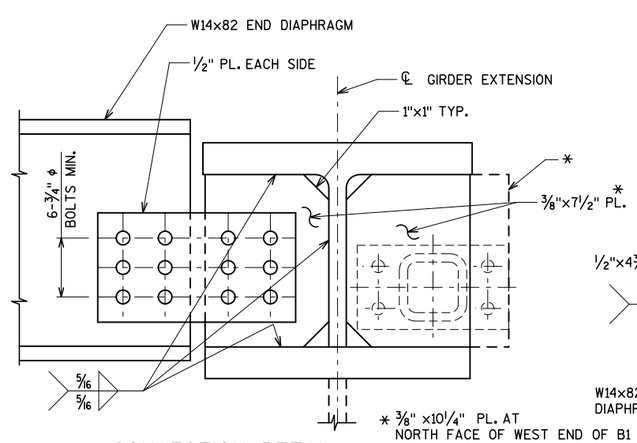

CONNECTION DETAIL

(AT GIRDERS)

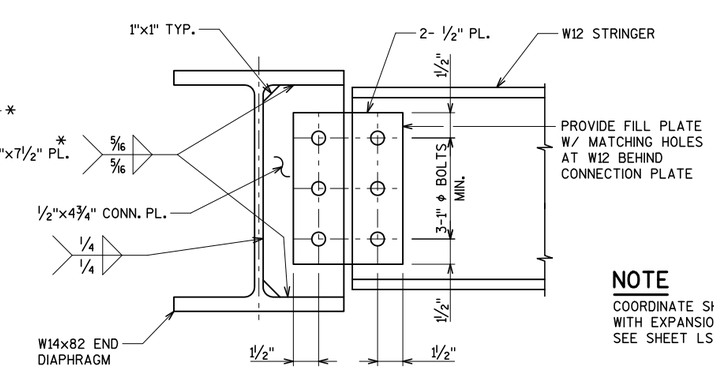

CONNECTION DETAIL

(AT STRINGERS)

NOTE

COORDINATE SHEAR STUD SPACING WITH EXPANSION JOINT HARDWARE, SEE SHEET LS22 FOR DETAILS.

City of Milwaukee

Department of Public Works

Infrastructure Services Division

BLOOM COMPANIES, LLC
Infrastructure Innovation and Ingenuity
10501 W. Research Drive • Milwaukee, WI 53226
Phone: (414) 771-3380 Fax: (414) 771-4490

ST PAUL AVE. LIFT BRIDGE OVER THE MILWAUKEE RIVER END DIAPHRAGM DETAILS (1 OF 3)

REVISIONS

DESIGNED BY JRS	
DRAWN BY TAL	
CHECKED BY BDT	
DATE FEB 2013	SCALE NTS
JOB NUMBER BR100-10-0106	
SHEET NUMBER LS14 OF LS33	
OF 198	

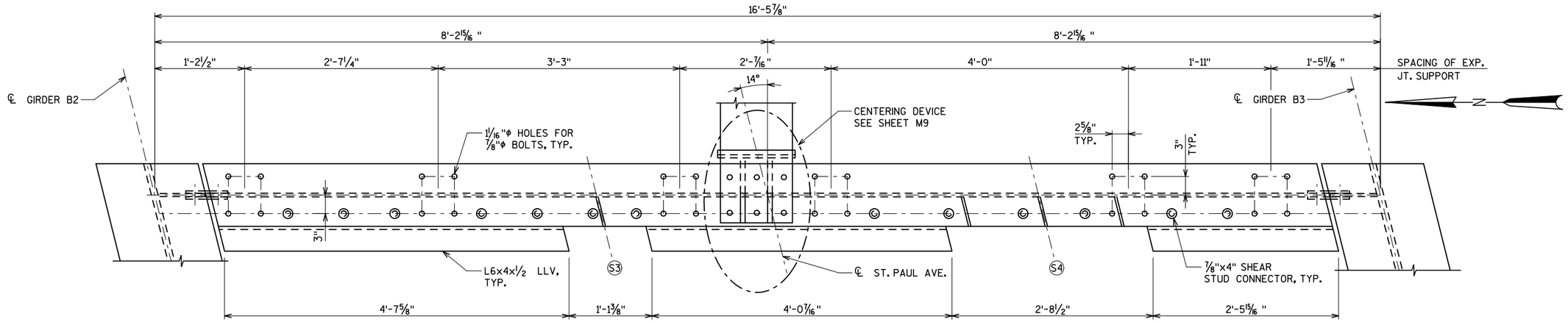

PLAN END DIAPHRAGM BETWEEN B2 & B3

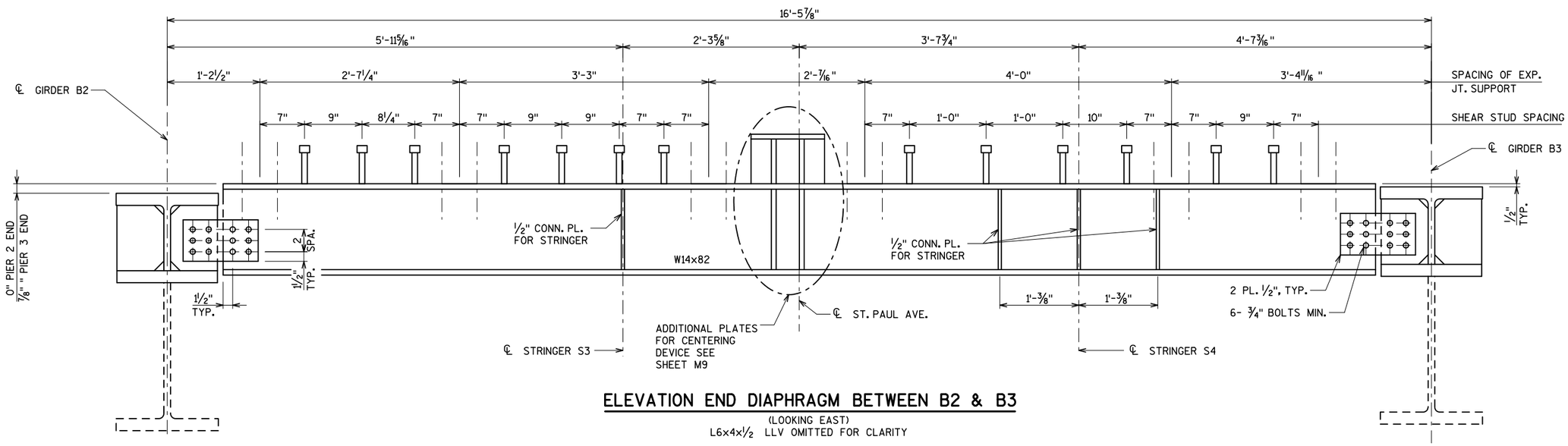

ELEVATION END DIAPHRAGM BETWEEN B2 & B3

(LOOKING EAST)
L6x4x1/2 LLV OMITTED FOR CLARITY

NOTES

COORDINATE SHEAR STUD SPACING WITH EXPANSION JOINT HARDWARE, SEE SHEET LS22 FOR DETAILS.

SEE SHEET LS14 FOR END DIAPHRAGM SECTION AND CONNECTOR DETAILS.

END DIAPHRAGMS AT EAST END OF LIFT SPAN ARE SHOWN, WEST END IS OPPOSITE.

City of Milwaukee

Department of Public Works

Infrastructure Services Division

BLOOM COMPANIES, LLC
Infrastructure Innovation and Ingenuity
10501 W. Research Drive • Milwaukee, WI 53226
Phone: (414) 771-3380 Fax: (414) 771-4490

ST PAUL AVE. LIFT BRIDGE
OVER THE MILWAUKEE RIVER
END DIAPHRAGM DETAILS
(2 OF 3)

REVISIONS

DESIGNED BY JRS	
DRAWN BY TAL	
CHECKED BY BDT	
DATE FEB 2013	SCALE NTS
JOB NUMBER BR100-10-0106	
SHEET NUMBER LS15 OF LS33	
OF 198	

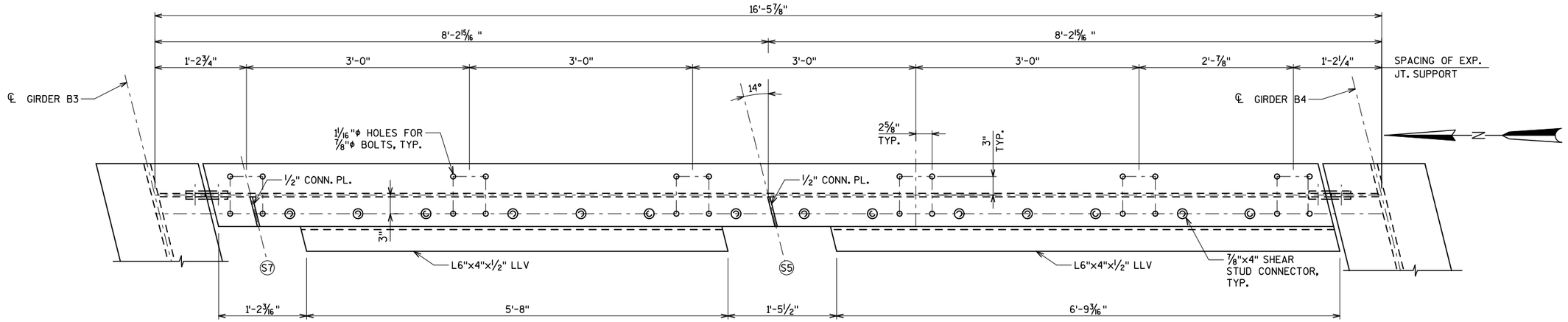

PLAN END DIAPHRAGM BETWEEN B3 & B4

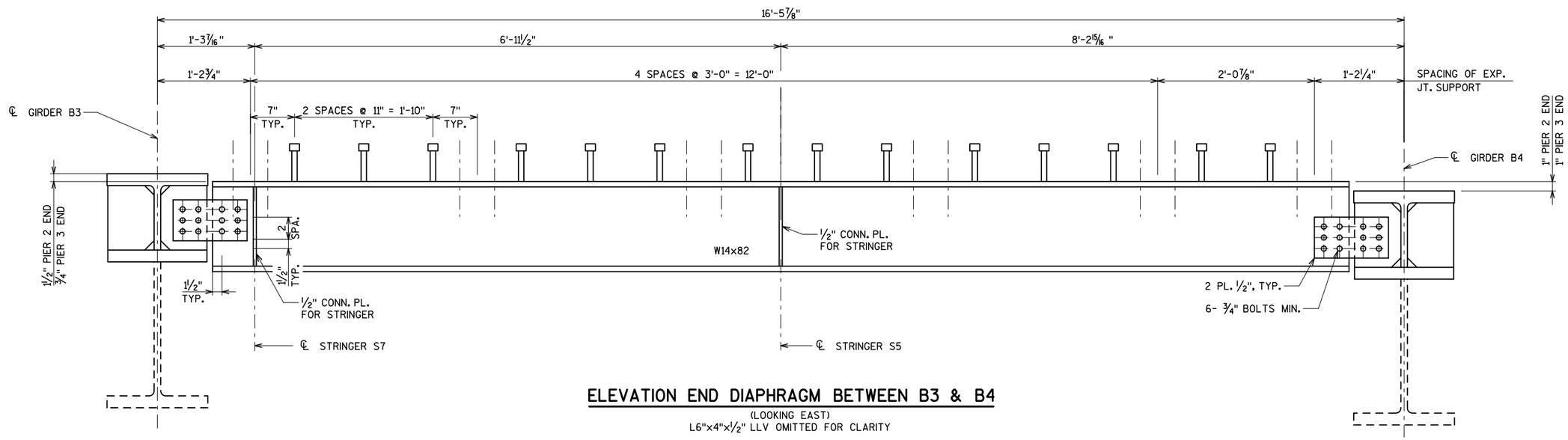

ELEVATION END DIAPHRAGM BETWEEN B3 & B4

(LOOKING EAST)
L6"x4"x½" LLV OMITTED FOR CLARITY

NOTES

COORDINATE SHEAR STUD SPACING WITH EXPANSION JOINT HARDWARE, SEE SHEET LS22 FOR DETAILS.

SEE SHEET LS14 FOR END DIAPHRAGM SECTION AND CONNECTOR DETAILS.

END DIAPHRAGMS AT EAST END OF LIFT SPAN ARE SHOWN, WEST END IS OPPOSITE.

City of Milwaukee

Department of Public Works

Infrastructure Services Division

BLOOM COMPANIES, LLC
Infrastructure Innovation and Ingenuity
10501 W. Research Drive • Milwaukee, WI 53226
Phone: (414) 771-3380 Fax: (414) 771-4490

ST PAUL AVE. LIFT BRIDGE
OVER THE MILWAUKEE RIVER
END DIAPHRAGM DETAILS
(3 OF 3)

REVISIONS

DESIGNED BY JRS	
DRAWN BY TAL	
CHECKED BY BDT	
DATE FEB 2013	SCALE NTS
JOB NUMBER BR100-10-0106	
SHEET NUMBER LS16 OF LS33	
OF 198	

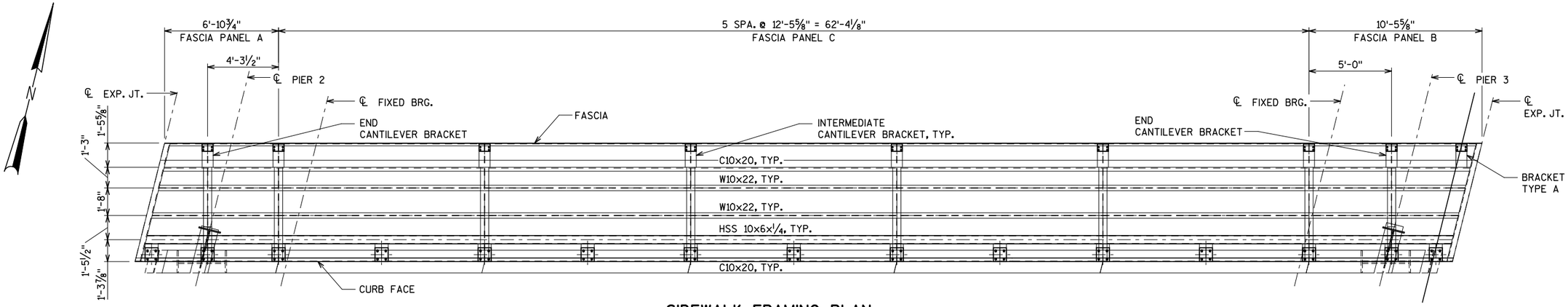

SIDEWALK FRAMING PLAN

(NORTH SIDEWALK)

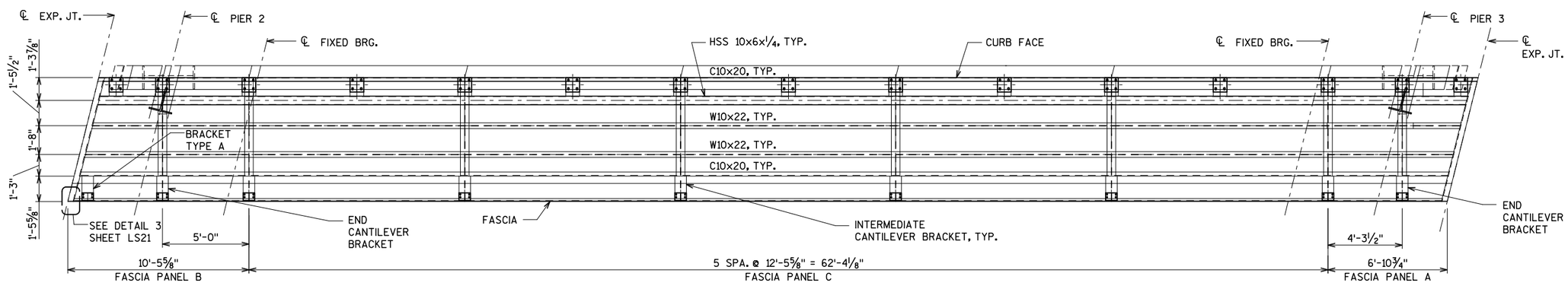

SIDEWALK FRAMING PLAN

(SOUTH SIDEWALK)

NOTES

CAMBER SIDEWALK STRINGERS TO MATCH THE CAMBER OF THE EXTERIOR GIRDER SUPPORTING THE SIDEWALK.

PROVIDE GALVANIZED TAPERED WASHERS AT ALL BOLT CONNECTIONS TO STRUCTURAL CHANNEL SECTIONS.

PROVIDE VENT HOLES IN THE BOTTOM OF HSS STRINGER BEFORE GALVANIZING.

SEE SHEETS LS18 AND LS19 FOR ENLARGED DETAILS.

SEE SHEETS LS21 AND LS22 FOR CANTILEVER BRACKET AND FASCIA DETAILS.

SEE SHEET LS27 FOR RAILING POST SPACING.

City of Milwaukee
Department of Public Works
Infrastructure Services Division

BLOOM COMPANIES, LLC
Infrastructure Innovation and Ingenuity
10501 W. Research Drive • Milwaukee, WI 53226
Phone: (414) 771-3380 Fax: (414) 771-4490

ST PAUL AVE. LIFT BRIDGE OVER THE MILWAUKEE RIVER SIDEWALK FRAMING PLAN

REVISIONS

DESIGNED BY BDT	
DRAWN BY TAL	
CHECKED BY JRS	
DATE FEB 2013	SCALE NTS
JOB NUMBER BR100-10-0106	
SHEET NUMBER LS17 OF LS33	
OF 198	

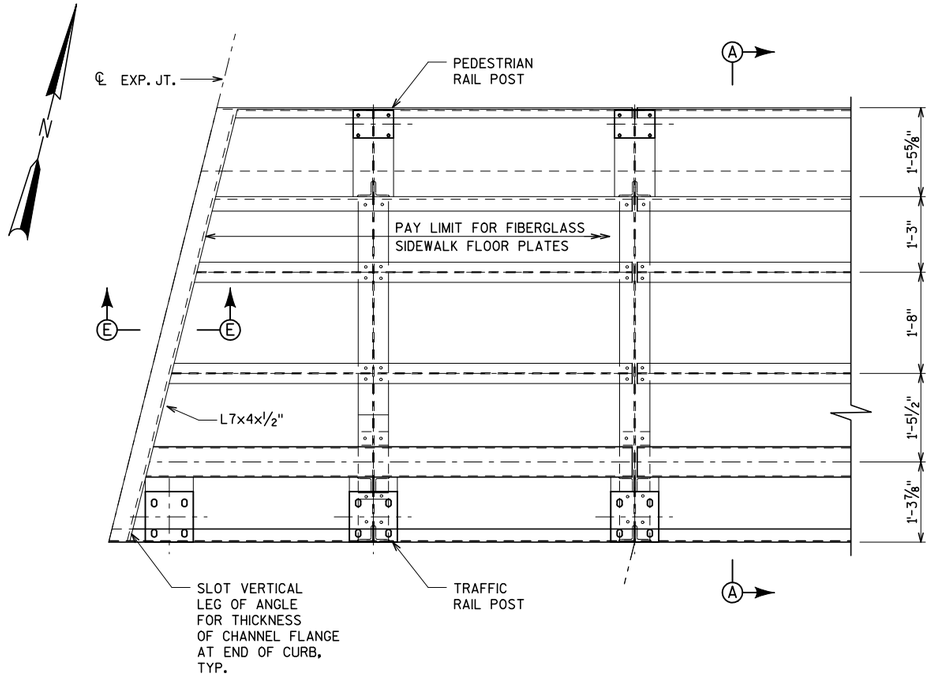

PARTIAL SIDEWALK FRAMING PLAN AT DECK END

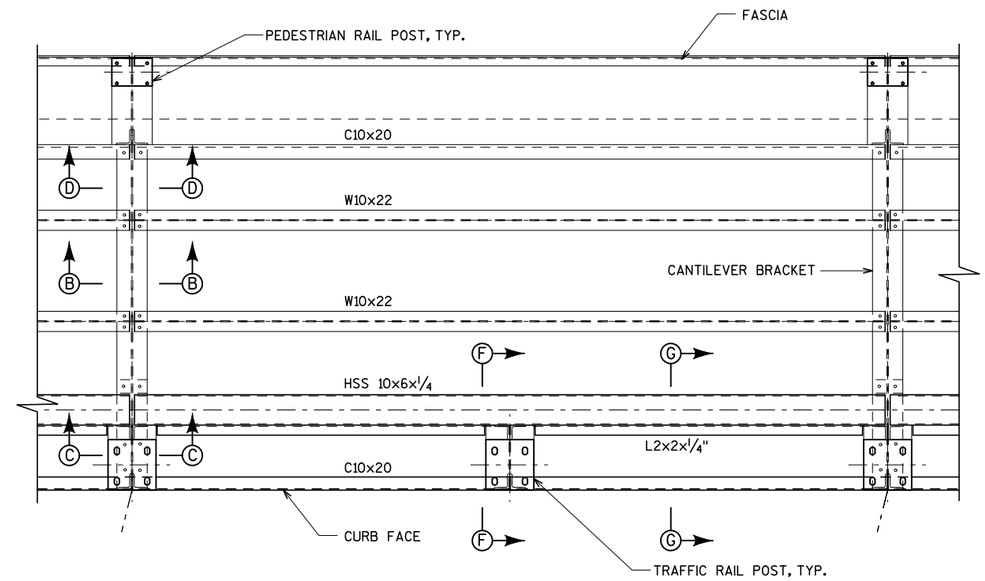

TYPICAL SIDEWALK FRAMING PLAN

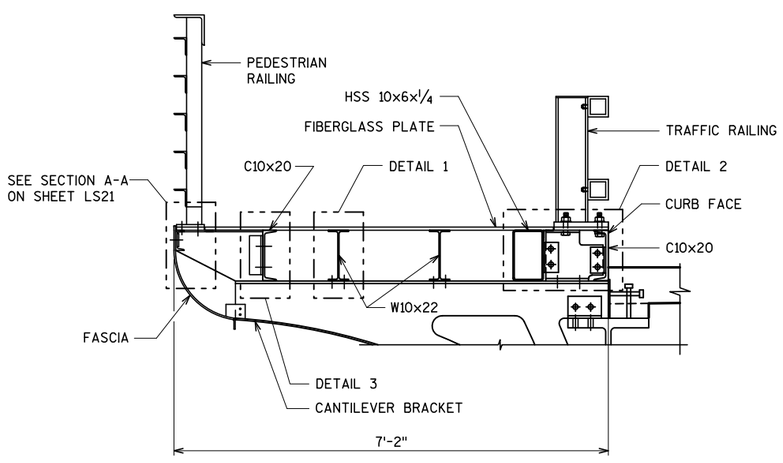

SECTION A-A

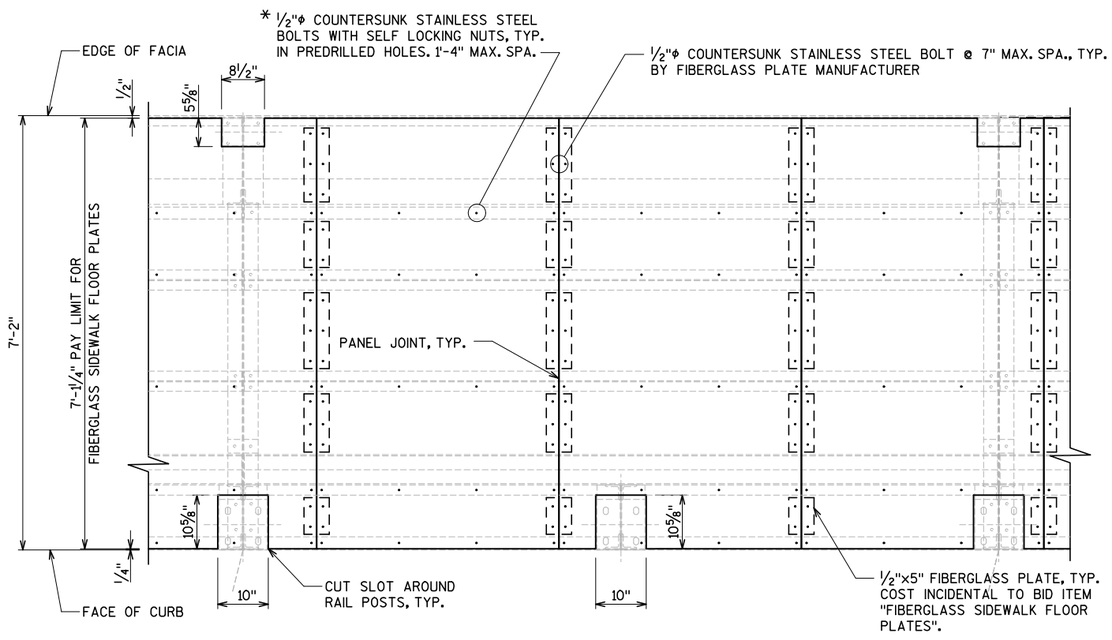

TYPICAL FIBERGLASS PANEL LAYOUT

* COORDINATE WITH FIBERGLASS PLATE MANUFACTURER FOR LOCATION OF BOLT HOLES IN STRINGERS

NOTES

SEE SHEET LS19 FOR SECTIONS

City of Milwaukee

Department of Public Works

Infrastructure Services Division

BLOOM COMPANIES, LLC
Infrastructure Innovation and Ingenuity
10501 W. Research Drive • Milwaukee, WI 53226
Phone: (414) 771-3380 Fax: (414) 771-4490

ST PAUL AVE. LIFT BRIDGE OVER THE MILWAUKEE RIVER
SIDEWALK DETAILS
(1 OF 2)

REVISIONS

DESIGNED BY BDT	
DRAWN BY TAL	
CHECKED BY JRS	
DATE FEB 2013	SCALE NTS
JOB NUMBER BR100-10-0106	
SHEET NUMBER LS18 OF LS33	
OF 198	

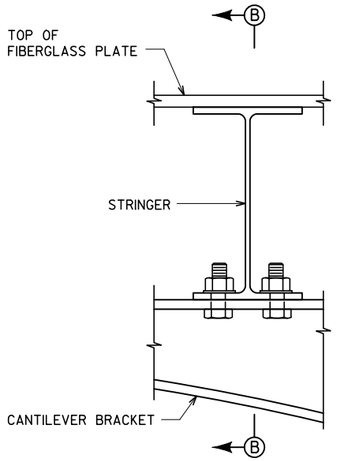

DETAIL 1

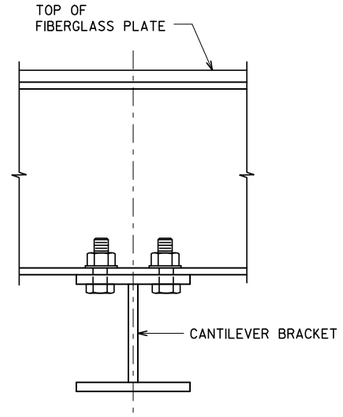

SECTION B-B

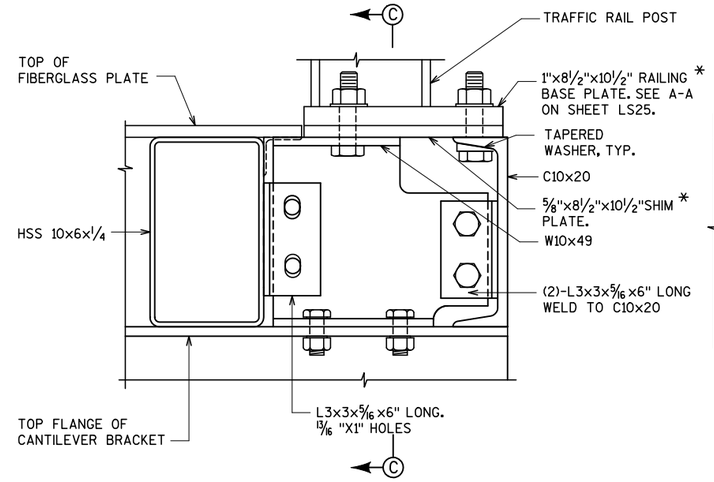

DETAIL 2

* COST INCLUDED IN BID ITEM "TUBULAR RAILING TYPE F MODIFIED".

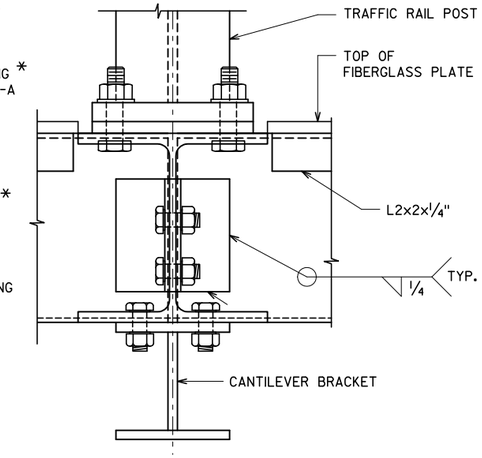

SECTION C-C

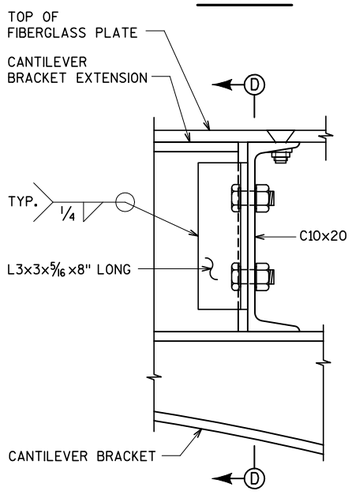

DETAIL 3

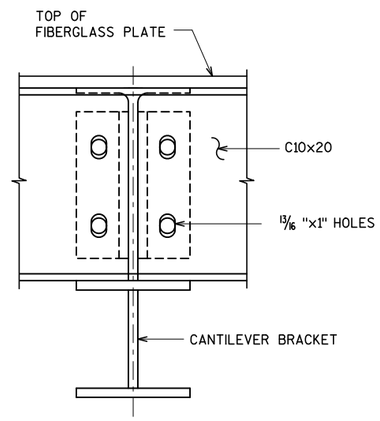

SECTION D-D

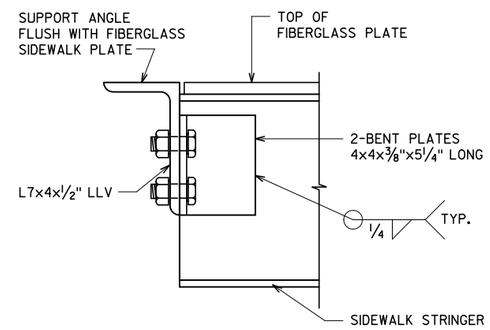

SECTION E-E

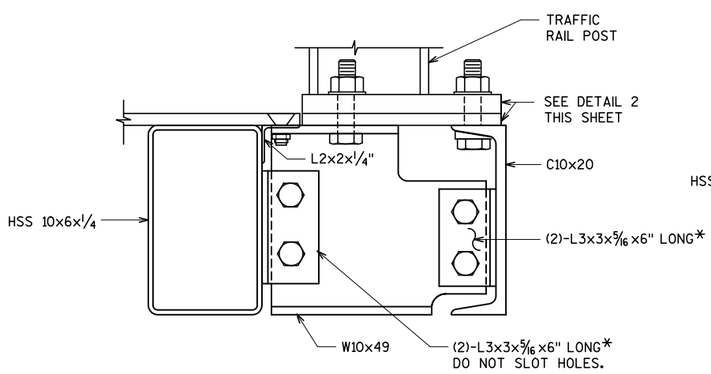

SECTION F-F

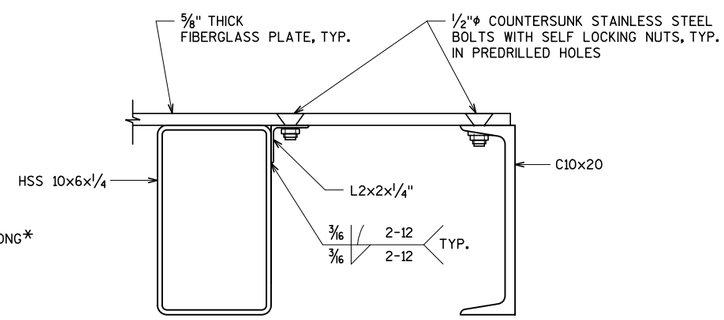

SECTION G-G

* WELD ANGLE TO STRINGER. PROVIDE 1/16" SHIM ON EITHER SIDE OF W10x49 WEB.

City of Milwaukee

Department of Public Works

Infrastructure Services Division

BLOOM COMPANIES, LLC
Infrastructure Innovation and Ingenuity
10501 W. Research Drive • Milwaukee, WI 53226
Phone: (414) 771-3380 Fax: (414) 771-4490

ST PAUL AVE. LIFT BRIDGE
OVER THE MILWAUKEE RIVER
SIDEWALK DETAILS
(2 OF 2)

REVISIONS

DESIGNED BY BDT	
DRAWN BY TAL	
CHECKED BY JRS	
DATE FEB 2013	SCALE NTS
JOB NUMBER BR100-10-0106	
SHEET NUMBER LS19 OF LS33	
OF 198	

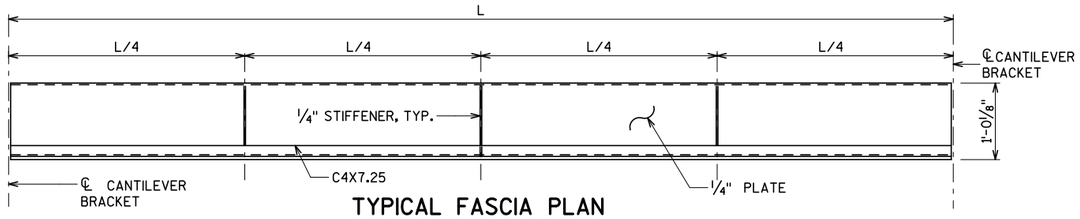

TYPICAL FASCIA PLAN

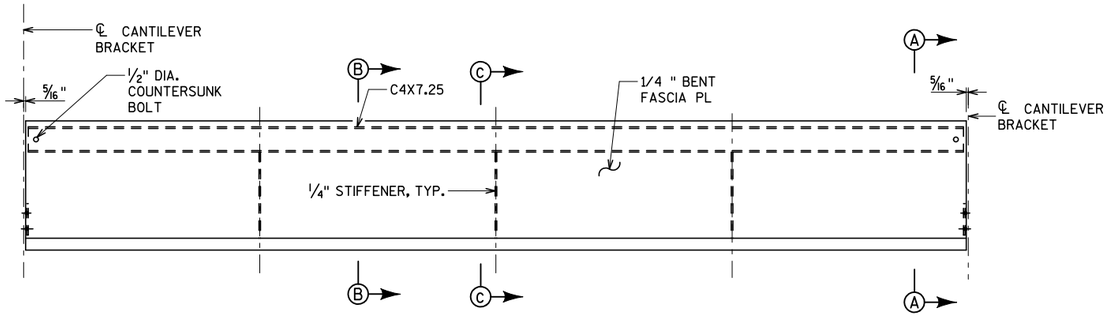

TYPICAL FASCIA ELEVATION

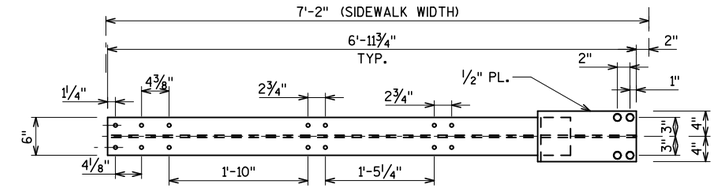

PLAN

INTERMEDIATE CANTILEVERS

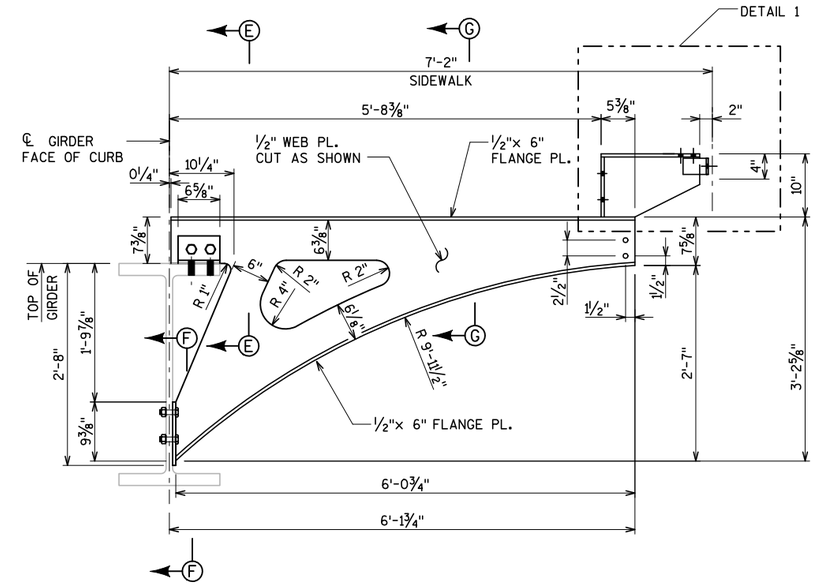

INTERMEDIATE CANTILEVER BRACKET ELEVATION

12 REQD

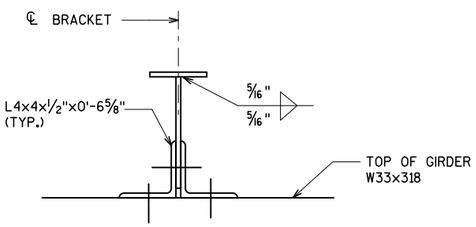

SECTION E-E

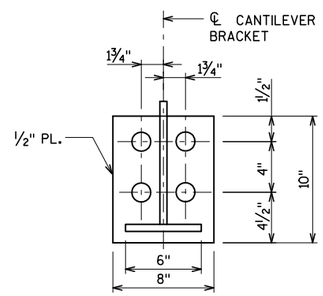

SECTION F-F

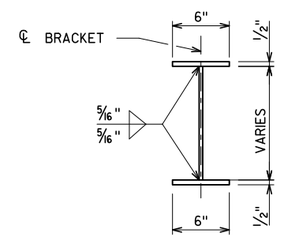

SECTION G-G

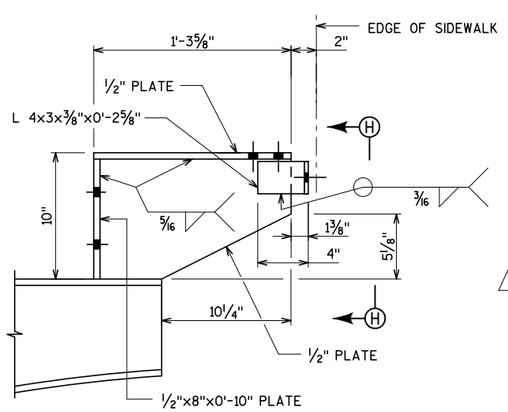

DETAIL 1

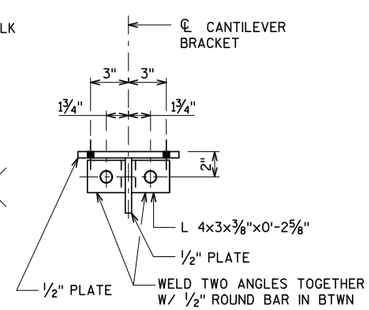

VIEW H-H

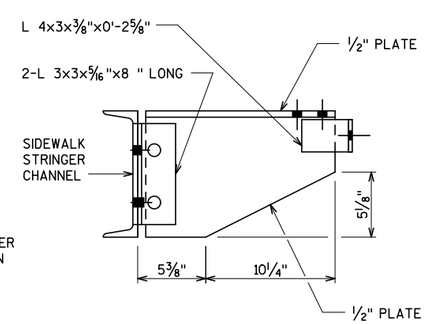

BRACKET TYPE A

2 REQ'D.
SEE DETAIL 1 FOR ADDITIONAL DIMENSIONS

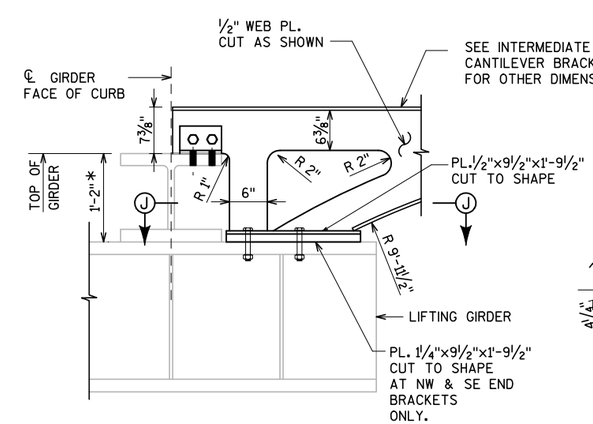

END CANTILEVER BRACKET ELEVATION

4 REQ'D

* 1'-0 3/4" AT SW AND NE END BRACKETS.

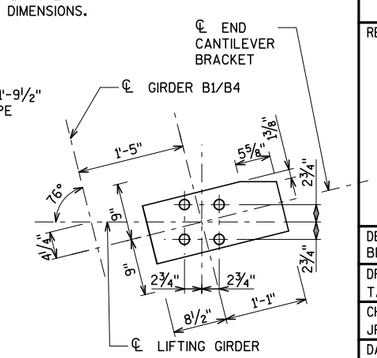

SECTION J-J

NOTES

SEE SHEET LS17 FOR LAYOUT OF CANTILEVER BRACKETS AND FASCIA PANELS.

City of Milwaukee

Department of Public Works

Infrastructure Services Division

BLOOM COMPANIES, LLC
Infrastructure Innovation and Ingenuity
10501 W. Research Drive • Milwaukee, WI 53226
Phone: (414) 771-3380 Fax: (414) 771-4490

ST PAUL AVE. LIFT BRIDGE OVER THE MILWAUKEE RIVER CANTILEVER BRACKET AND FASCIA (1 OF 2)

REVISIONS

DESIGNED BY BDT	
DRAWN BY TAL	
CHECKED BY JRS	
DATE FEB 2013	SCALE NTS
JOB NUMBER BR100-10-0106	
SHEET NUMBER LS20 OF LS33	

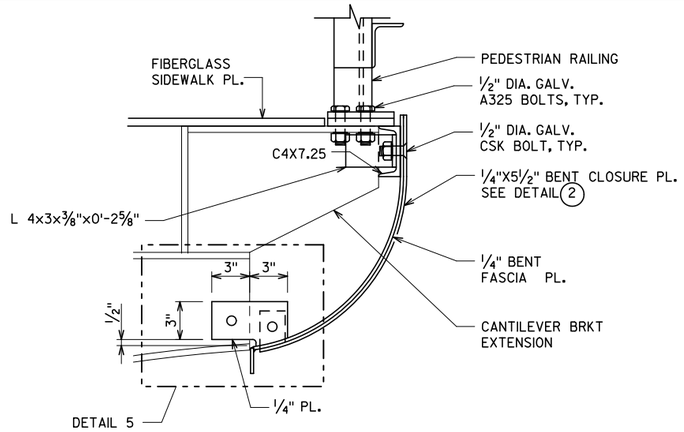

SECTION A-A

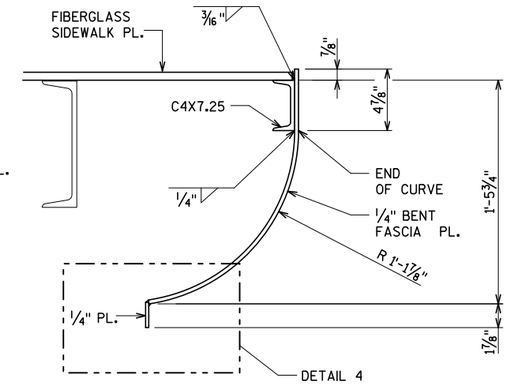

SECTION B-B

TYPICAL FASCIA SECTION

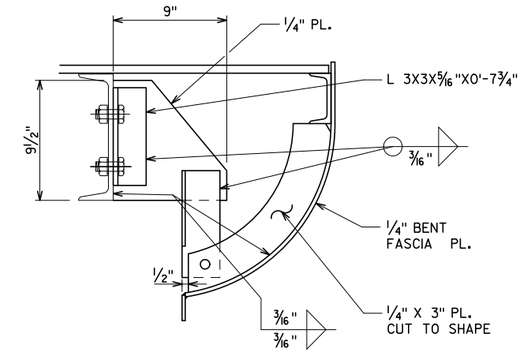

SECTION C-C

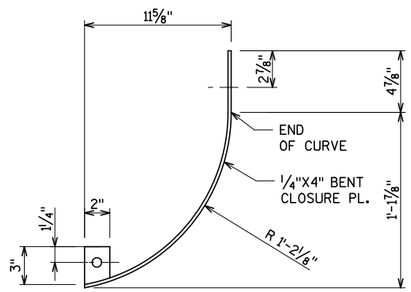

DETAIL 2

(REF. SECTION A-A)

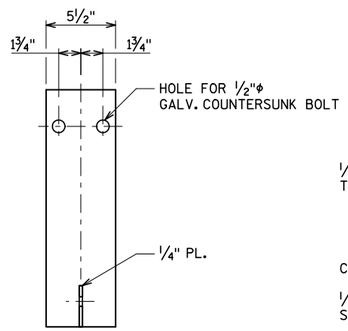

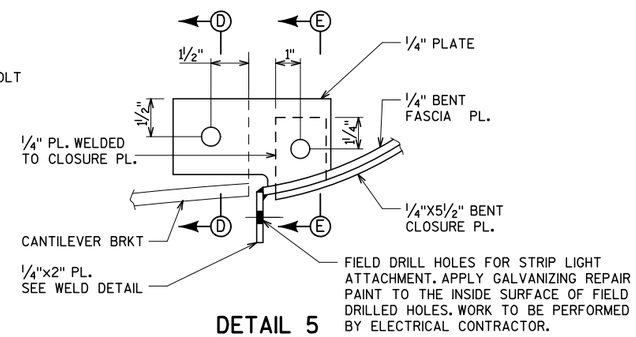

DETAIL 5

(REF. SECTION A-A)

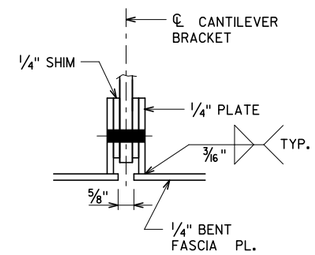

SECTION D-D

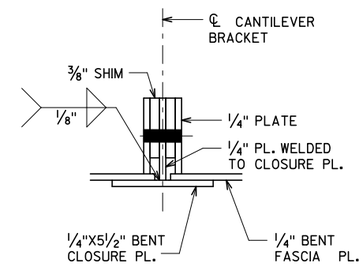

SECTION E-E

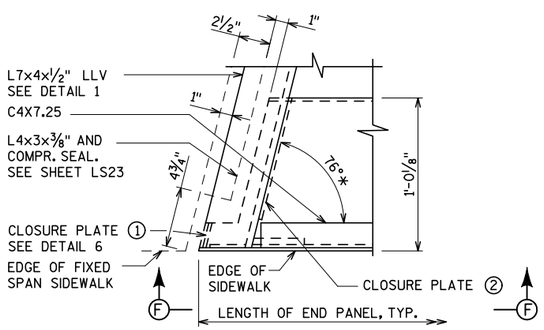

DETAIL 3

(REF. SHEET LS17)

PLAN AT END OF SIDEWALK

* 76° AT SW AND NE CORNERS
104° AT NW AND SE CORNERS

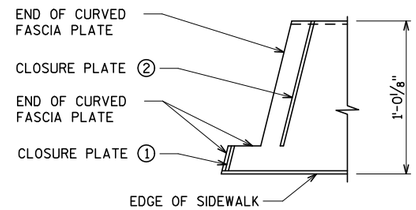

DETAIL 6

(REF. DETAIL 3)

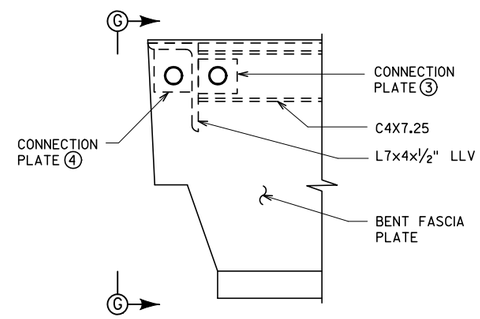

VIEW F-F

(REF. DETAIL 3)

OUTSIDE ELEVATION OF END OF FSCIA

FASCIA CLOSURE PLATES 1 AND 2
NOT SHOWN FOR CLARITY.

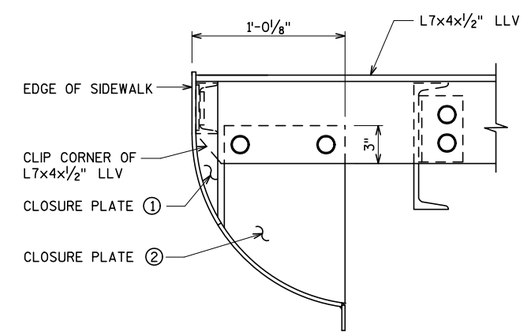

VIEW G-G

(REF. VIEW F-F)

END VIEW OF FASCIA

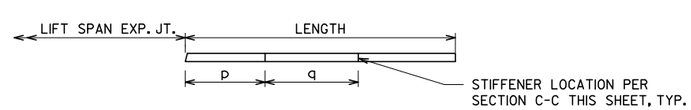

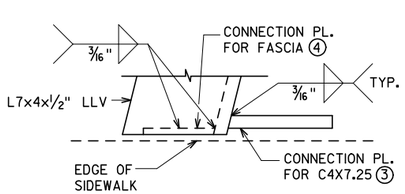

DETAIL 1

(REF. PLAN AT END OF SIDEWALK)

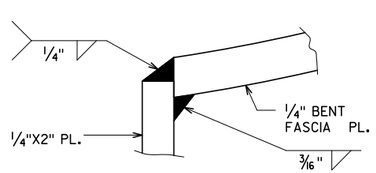

DETAIL 4

(REF. SECTION B-B)

FASCIA PANEL LENGTH

FASCIA PANEL	LENGTH	p	q	
PANEL A	6'-10 3/4"	1'-6"	3'-0"	
PANEL B	10'-5 5/8"	3'-0"	4'-0"	
PANEL C	12'-5 5/8"	NOTE 1	NOTE 1	

NOTE 1: SEE TYPICAL FASCIA PLAN ON SHEET LS20

NOTES

SEE SHEET LS17 FOR FASCIA PANEL LAYOUT

City of Milwaukee

Department of Public Works

Infrastructure Services Division

BLOOM COMPANIES, LLC
Infrastructure Innovation and Ingenuity
10501 W. Research Drive • Milwaukee, WI 53228
Phone: (414) 771-3380 • Fax: (414) 771-4490

ST PAUL AVE. LIFT BRIDGE
OVER THE MILWAUKEE RIVER
CANTILEVER BRACKET
AND FASCIA (2 OF 2)

REVISIONS

DESIGNED BY BDT

DRAWN BY TAL

CHECKED BY JRS

DATE FEB 2013 | SCALE NTS

JOB NUMBER BR100-10-0106

SHEET NUMBER LS21 OF LS33

OF 198

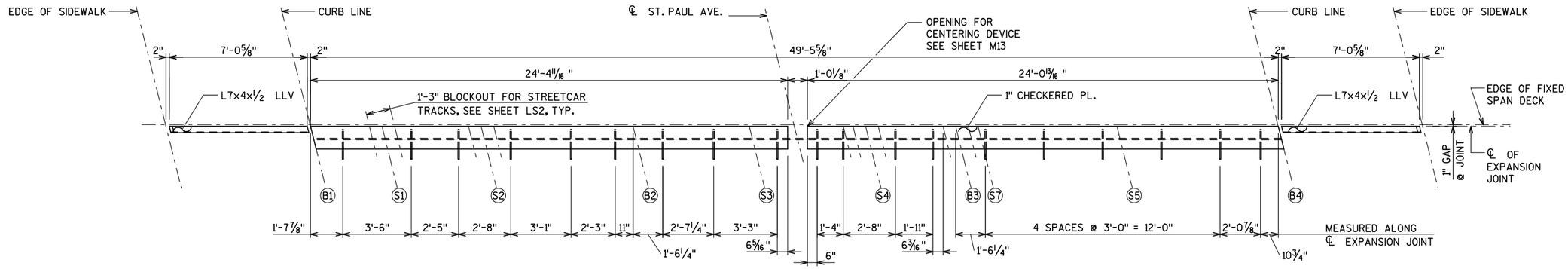

PLATE JOINT - TOP PLATE

EAST JOINT SHOWN
WEST JOINT OPP. HAND

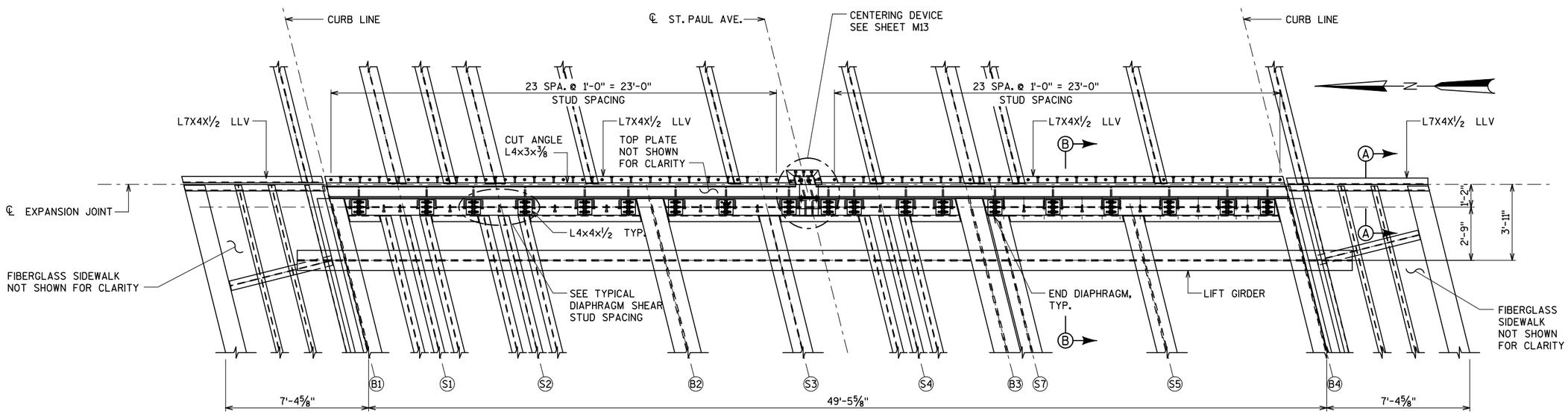

PLATE JOINT - PLAN

EAST JOINT SHOWN
WEST JOINT OPP. HAND

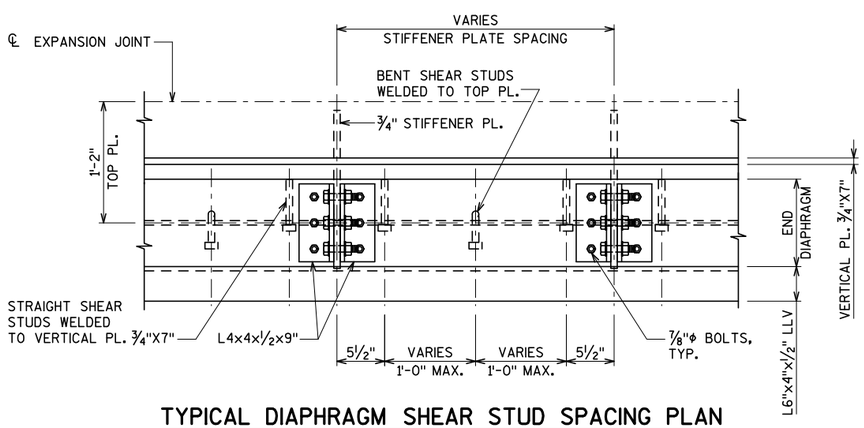

TYPICAL DIAPHRAGM SHEAR STUD SPACING PLAN

NOTES

SEE SHEET LS23 FOR JOINT SECTION A-A AND B-B.

SEE SHEET M9 FOR CENTERING DEVICE DETAILS.

THE LIFT SPAN ROADWAY JOINT MAY HAVE TO BE FABRICATED IN MULTIPLE SEGMENTS DEPENDING UPON THE STATUS OF CONSTRUCTION OF THE STREETCAR PROJECT. BEFORE FABRICATION, VERIFY WITH THE ENGINEER IF THE JOINT HAS TO BE CONTINUOUS ACROSS THE RAIL BLCOK OUT FOR RAIL EXPANSION JOINT. BID PRICE SHALL INCLUDE THE COST OF FABRICATION OF ROADWAY JOINT IN MULTIPLE SEGMENTS BETWEEN THE STREETCAR RAILS.

ALL ITEMS SHOWN IN THE PLATE JOINT DETAILS ARE INCLUDED IN BID ITEMS "LIFT SPAN ROADWAY JOINTS" AND "LIFT SPAN SIDEWALK JOINTS".

City of Milwaukee

Department of Public Works

Infrastructure Services Division

BLOOM COMPANIES, LLC
Infrastructure Innovation and Ingenuity
10501 W. Research Drive • Milwaukee, WI 53226
Phone: (414) 771-3380 Fax: (414) 771-4490

ST PAUL AVE. LIFT BRIDGE
OVER THE MILWAUKEE RIVER
LIFT SPAN JOINT DETAILS
(1 OF 2)

REVISIONS

DESIGNED BY

DRAWN BY TAL

CHECKED BY

DATE FEB 2013 | SCALE NTS

JOB NUMBER BR100-10-0106

SHEET NUMBER LS22 OF LS33

OF 198

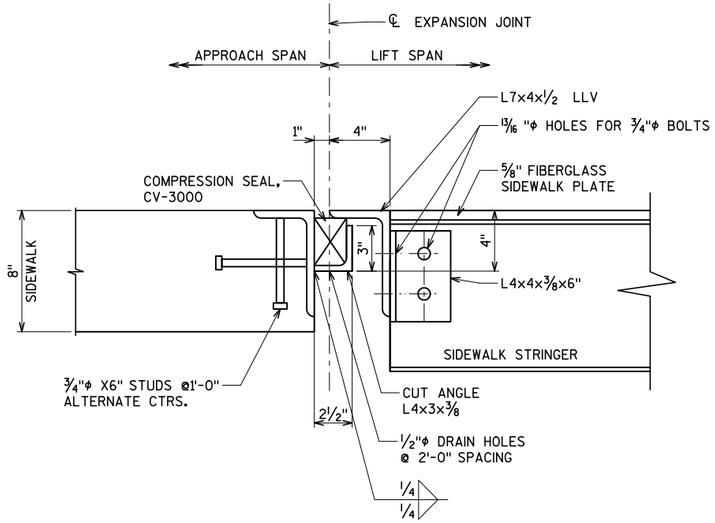

JOINT SECTION B-B

AT SIDEWALK

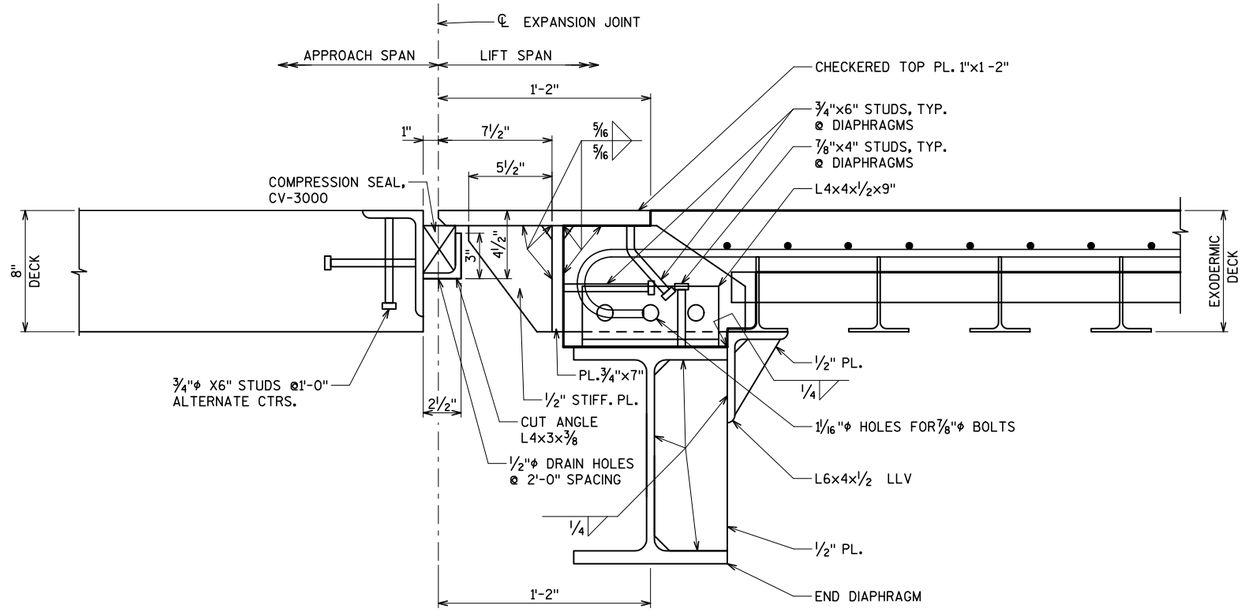

JOINT SECTION A-A

AT DECK

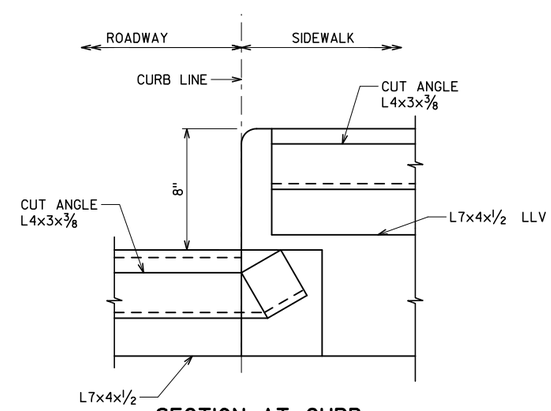

SECTION AT CURB

NOTE

BID ITEMS ARE "LIFT SPAN ROADWAY JOINTS" AND "LIFT SPAN SIDEWALK JOINTS" AND SHALL INCLUDE ALL ITEMS SHOWN, INCLUDING THE ANGLES, STUDS, AND COMPRESSION SEAL ON THE FIXED SPAN SIDE.

City of Milwaukee

Department of Public Works

Infrastructure Services Division

BLOOM COMPANIES, LLC
Infrastructure Innovation and Ingenuity
10501 W. Research Drive • Milwaukee, WI 53226
Phone: (414) 771-3380 Fax: (414) 771-4490

ST PAUL AVE. LIFT BRIDGE
OVER THE MILWAUKEE RIVER
LIFT SPAN JOINT DETAILS
(2 OF 2)

REVISIONS

DESIGNED BY JRS	
DRAWN BY TAL	
CHECKED BY BDT	
DATE FEB 2013	SCALE NTS
JOB NUMBER BR100-10-0106	
SHEET NUMBER LS23 OF LS33	
OF 198	

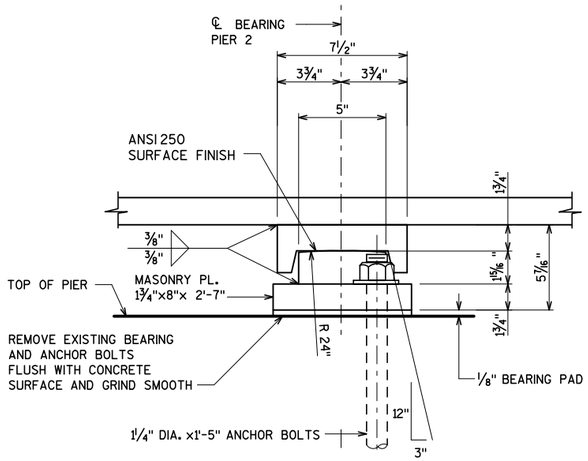

FIXED BEARING-LIFT SPAN

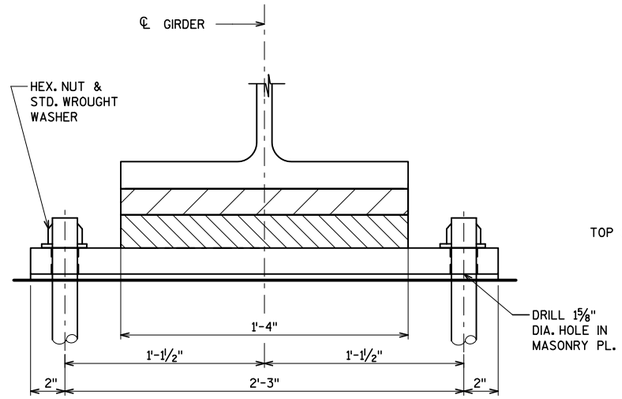

SECTION THRU FIXED BEARING
EXPANSION BEARING SIMILAR

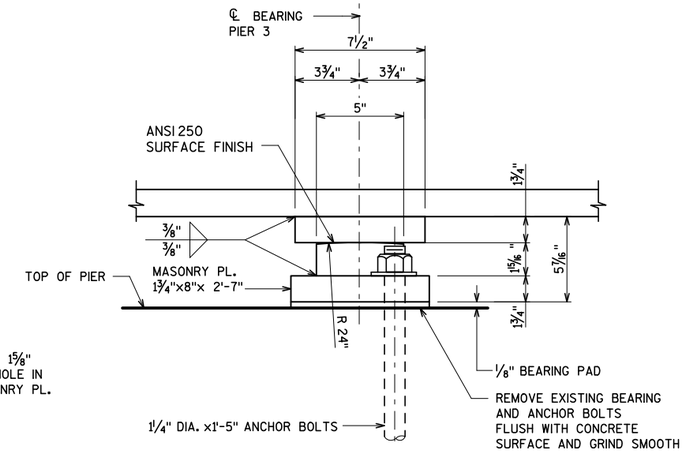

EXPANSION BEARING-LIFT SPAN

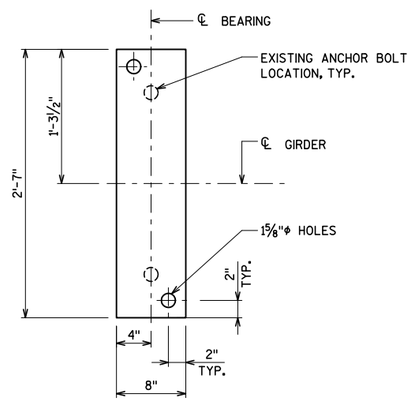

MASONRY PLATE PLAN

BEARING NOTES

ALL BEARINGS ARE SYMMETRICAL ABOUT ℄ OF GIRDER AND ℄ OF BEARING.

ANCHOR BOLTS, NUTS AND WASHERS SHALL BE GALVANIZED IN ACCORDANCE WITH ASTM A153, CLASS C.

ALL MATERIAL IN BEARINGS INCLUDING SHIM PLATES BUT EXCLUDING ANCHOR BOLTS, NUTS, AND WASHERS SHALL CONFORM TO ASTM A709 GRADE 50W, UNLESS NOTED OTHERWISE.

IN LIEU OF USING SHIM PLATES, FABRICATOR MAY INCREASE THICKNESS OF MASONRY PLATE BY THE SHIM PLATE THICKNESS.

CHAMFER ANCHOR BOLTS PRIOR TO THREADING.

ALL FINISHED SURFACES SHALL BE MACHINE FINISHED BY AN AUTOMATIC PROCESS.

ALL PLATE CUTS SHALL BE MACHINE OR MACHINE FLAME CUT.

ALL STRUCTURAL STEEL BEARING PLATES SHALL BE FLAT ROLLED STEEL PLATES WITH ALL SURFACES SMOOTH AND FREE FROM WARP AND ALL EDGES SMOOTH, STRAIGHT AND VERTICAL.

PROVIDE ⅛" THICK PLATE PAD THE SAME SIZE AS MASONRY PLATE FOR EACH BEARING.

ANCHOR BOLTS SHALL BE THREADED 3", PROVIDE ONE STANDARD WROUGHT WASHER AND ONE HEX NUT PER BOLT. PROJECT ANCHOR BOLTS, MASONRY PLATE THICKNESS +4" ABOVE TOP OF CONCRETE.

ANCHOR BOLTS, NUTS AND WASHERS SHALL CONFORM TO ASTM A709 GRADE 36, OR MATERIAL OF EQUIVALENT YIELD STRENGTH AND ELONGATION.

PLACE SHIM PLATE BETWEEN BEARING PAD AND MASONRY PLATE, PLATES SHALL HAVE LENGTH AND WIDTH DIMENSIONS THAT MATCH MASONRY PLATE.

MASONRY PLATE SHALL BE GALVANIZED. ROCKER PLATE SHALL BE SHOP PAINTED WITH A WELDABLE PRIMER.

FIXED BEARINGS ARE PAID FOR UNDER THE BID ITEM "BEARING ASSEMBLIES FIXED P-40-523" WHICH INCLUDES ALL ITEMS SHOWN.

EXPANSION BEARINGS ARE PAID FOR UNDER THE BID ITEM "BEARING ASSEMBLIES EXPANSION P-40-523" WHICH INCLUDES ALL ITEMS SHOWN.

REMOVAL OF EXISTING BEARINGS IS INCLUDED WITH THE BID ITEM "REMOVONG OLD STRUCTURE OVER WATERWAY WITH MINIMAL DEBRIS".

City of Milwaukee
Department of Public Works
Infrastructure Services Division

BLOOM COMPANIES, LLC
Infrastructure Innovation and Ingenuity
10501 W. Research Drive • Milwaukee, WI 53226
Phone: (414) 771-3380 Fax: (414) 771-4490

ST PAUL AVE. LIFT BRIDGE
OVER THE MILWAUKEE RIVER
LIFT SPAN BEARINGS

REVISIONS

DESIGNED BY JRS	
DRAWN BY TAL	
CHECKED BY BDT	
DATE FEB 2013	SCALE NTS
JOB NUMBER BR100-10-0106	
SHEET NUMBER LS24 OF LS33	
OF 198	

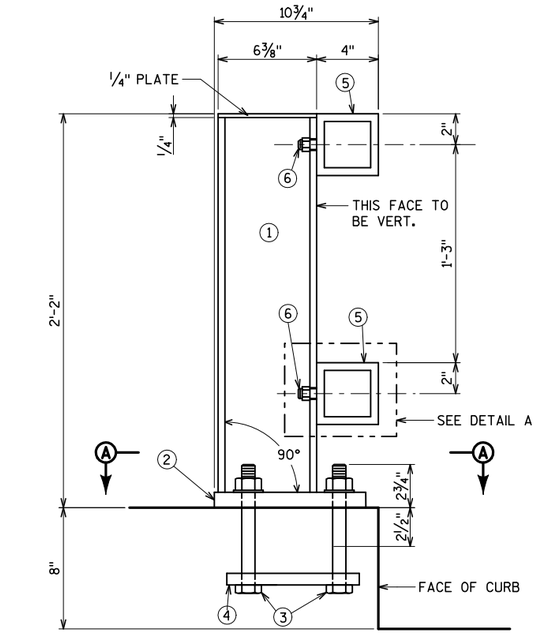

SECTION THRU RAILING AT SIDEWALK

FIXED SPAN SHOWN. SEE SHEET LS19 FOR SECTION THRU LIFT SPAN

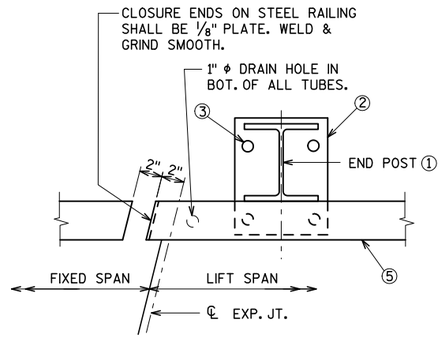

DETAIL FOR END POSTS AT LIFT SPAN JOINTS

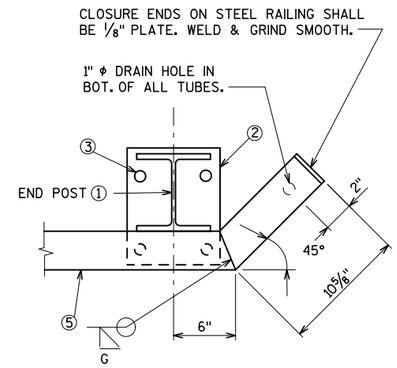

DETAIL FOR END POSTS NEAR ABUTMENTS

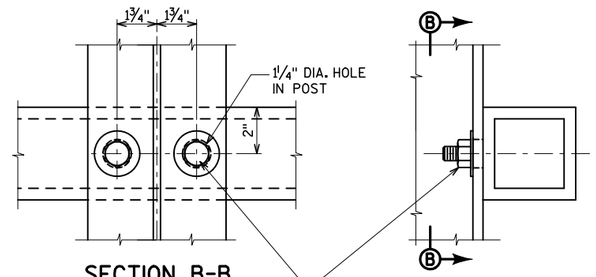

SECTION B-B

DETAIL A

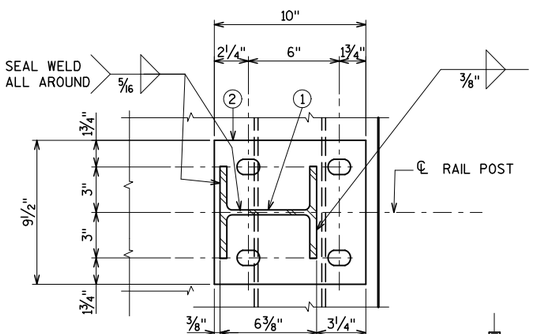

SECTION A-A

AT FIXED SPANS

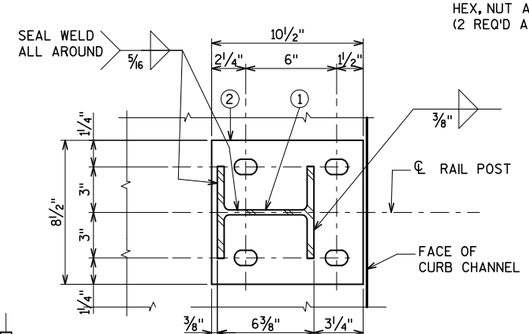

SECTION A-A

AT LIFT SPAN

SEE SHEET LS19 FOR ADDITIONAL DETAILS

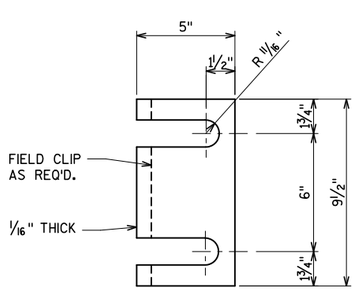

POST SHIM DETAIL

(4 PER POST)
FOR FIXED SPANS AND LIFT SPAN

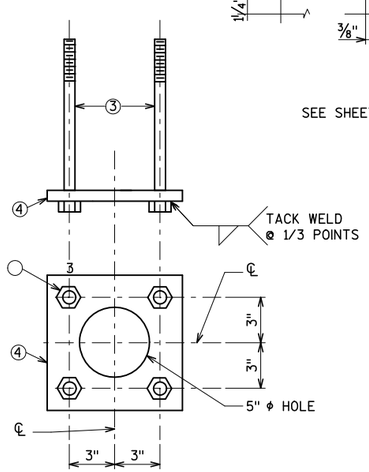

ANCHORAGE DETAIL

REQ'D FOR FIXED SPANS

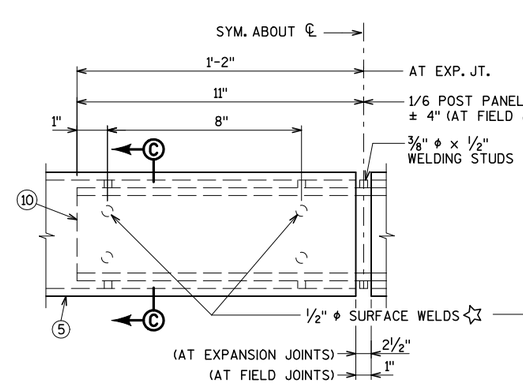

FIELD ERECTION JOINT DETAIL

☆ MIN. ⅝" FLAT SURFACE DIA. PUNCHINGS OR STUDS MAY BE USED AS AN ALTERNATE.

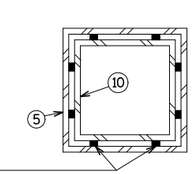

SECTION C-C

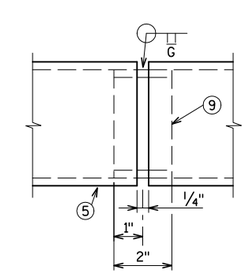

SHOP RAIL SPLICE DETAIL

(LOCATION MUST BE SHOWN ON SHOP DRAWINGS)

LEGEND

① W6 x 25 WITH 1¼" DIA. HOLES ON EACH SIDE OF POST FOR STUD NO. 6. CUT BOTTOM OF POST TO MATCH CROSS SLOPE OF ROADWAY (OR SIDEWALK, AS APPLICABLE). PLACE POST VERTICAL. PLACE POSTS NORMAL TO GRADE LINE.

② PLATE 1" x 9½" x 10" WITH 1 1/16" x 1½" SLOTTED HOLES FOR ANCHOR BOLTS NO. 3. WELD TO NO. 1 AS SHOWN.

③ A325 - ⅞" DIA. HEX BOLTS (GALVANIZED) WITH A325 NUT & WASHER. 14" LONG AT END POSTS AND AT POSTS ON CONCRETE SLAB SUPERSTRUCTURES WHERE THE SLAB THICKNESS IS > 15". USE 8" LONG AT ALL OTHER LOCATIONS. 4 REQ'D. PER POST. THREAD 3" AND PLACE NORMAL TO PLATE NO. 2. CHAMFER TOP OF BOLTS BEFORE THREADING.

④ ¼" x 8" x 8" FLAT BAR WITH 15/16 " DIA. HOLES FOR ANCHOR BOLTS NO. 3.

⑤ TS 4 x 4 x 0.25 STRUCTURAL TUBING, CONFORMING TO A.S.T.M. DESIGNATION A501 OR A500 GRADE B. ATTACH TO NO. 1 WITH STUDS NO. 6.

⑥ ⅝" DIA. x 1½" LONG SHOP WELDED STUDS WITH HEX NUT AND 2" WASHERS (2 REQ'D. AT EACH RAIL TO POST LOCATION).

⑦ NOT USED

⑧ NOT USED

⑨ SQUARE SLEEVE FABRICATED FROM ¼" PLATE. PROVIDE "SLIDING FIT" WITH A MINIMUM OUT TO OUT DIMENSION OF 3 13/32 ".

⑩ TS 3 x 3 x 0.25 x (2'-4" AT EXPANSION JOINTS) & (1'-10" AT FIELD JOINTS) LONG. PROVIDE ½" DIA. SURFACE WELDS ON ALL SIDES AS SHOWN. GRIND WELDS TO FIT FREE INTO I.D. OF NO. 5. PROVIDE ⅜" DIA. x ½" WELDING STUDS ON TOP AND BOTTOM SURFACES AT CENTERLINE.

GENERAL NOTES

BID ITEM SHALL BE TUBULAR RAILING TYPE F MODIFIED, WHICH INCLUDES ALL ITEMS SHOWN.

RAILING SHALL BE FABRICATED IN LENGTHS THAT INCLUDE 3 OR 4 POSTS.

POST BASE PLATES SHALL BE FLAT WITH ALL SURFACES SMOOTH AND FREE FROM WARP AND ALL EDGES SMOOTH, STRAIGHT AND VERTICAL. ALL PLATE CUTS SHALL BE MACHINE OR MACHINE FLAME CUT.

ALL MATERIAL SHALL BE GALVANIZED AFTER FABRICATION. PRIOR TO GALVANIZING, ALL STEEL RAILING POSTS & STEEL TUBING SHALL BE GIVEN A NO. 6 BLAST CLEANING BY S.S.P.C. SPECIFICATIONS. RAILINGS TO BE PAINTED AFTER GALVANIZING. SEE SPECIAL PROVISIONS FOR DETAILS.

ALL MATERIALS USED IN FABRICATION SHALL BE MADE FROM MATERIALS CONFORMING TO ASTM A709 GRADE 36 UNLESS NOTED OTHERWISE.

FILL BOLT SLOT OPENINGS IN POST SHIMS AND PLATE NO. 2 WITH NON-STAINING GRAY NON-BITUMINOUS JOINT SEALER.

GALVANIZED OR STAINLESS STEEL POST SHIMS MAY BE USED UNDER POSTS WHERE REQ'D FOR ALIGNMENT.

ALL MATERIAL, EXCEPT ANCHORAGE, SHALL BE PAINTED OVER GALVANIZING COAT. SEE SPECIAL PROVISION.

City of Milwaukee
Department of Public Works
Infrastructure Services Division

BLOOM COMPANIES, LLC
Infrastructure Innovation and Ingenuity
10501 W. Research Drive • Milwaukee, WI 53226
Phone: (414) 771-3380 • Fax: (414) 771-4490

ST PAUL AVE. LIFT BRIDGE
OVER THE MILWAUKEE RIVER
TRAFFIC RAILING

REVISIONS

DESIGNED BY BDT	
DRAWN BY TAL	
CHECKED BY JRS	
DATE FEB 2013	SCALE NTS
JOB NUMBER BR100-10-0106	
SHEET NUMBER LS25 OF LS33	
OF 198	

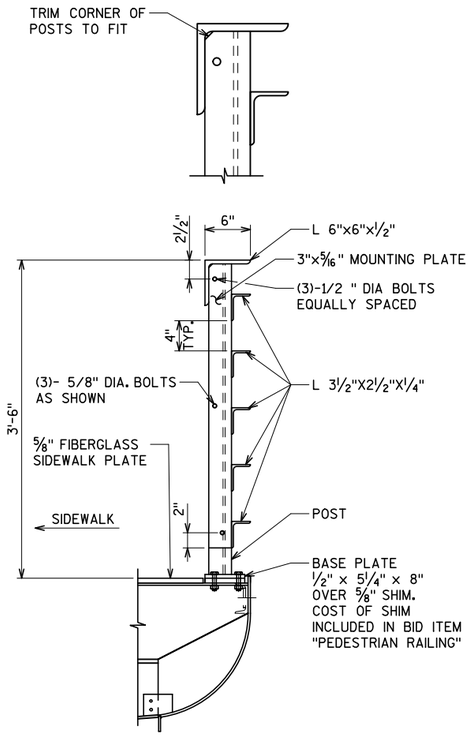

SECTION A-A

SEE SHEETS LS20 AND LS21 FOR RAILING CONNECTION DETAILS

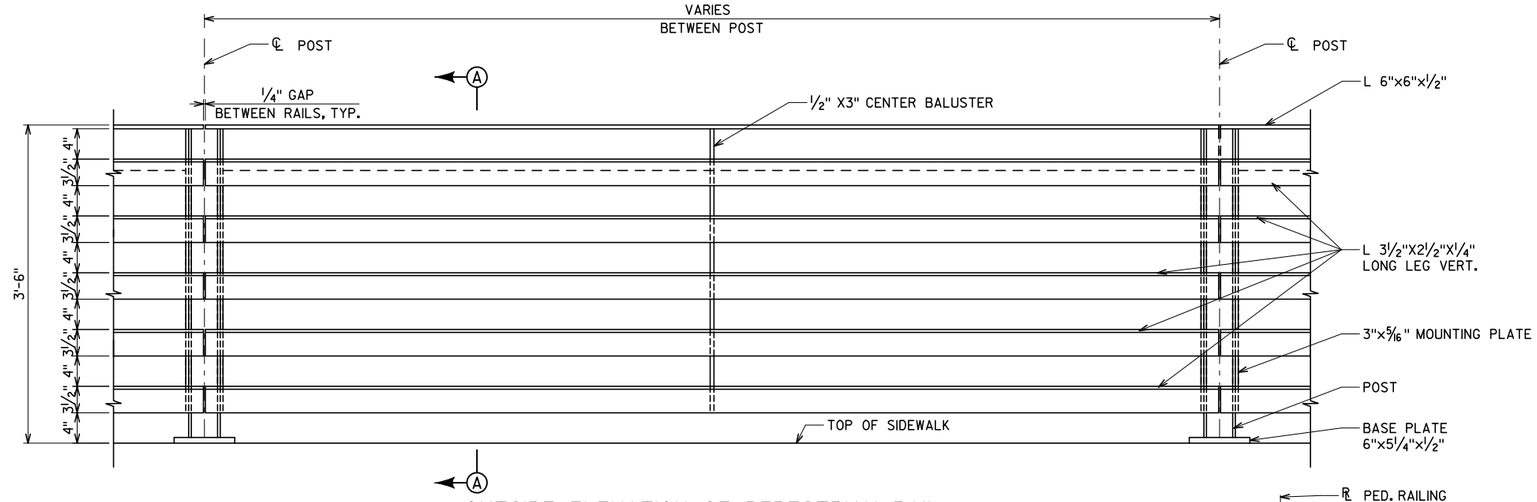

OUTSIDE ELEVATION OF PEDESTRIAN RAIL

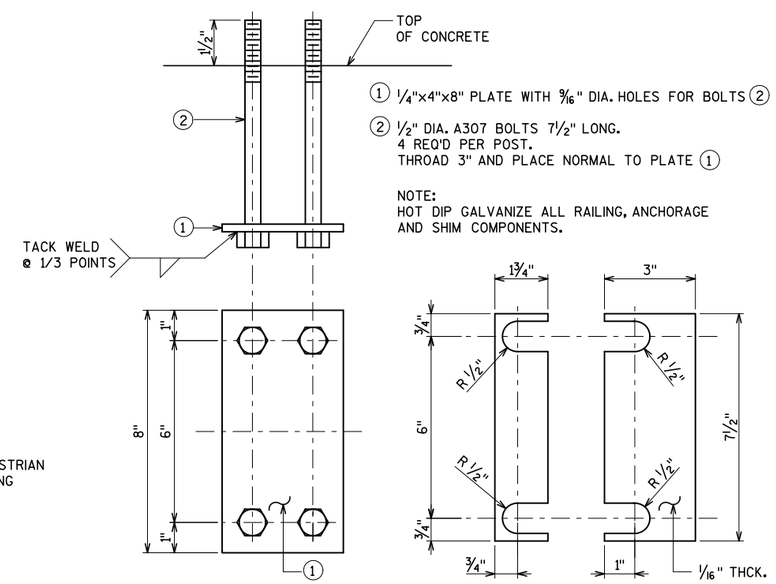

ANCHORAGE DETAIL

(ON FIXED SPAN SLABS AND WINGWALLS)

POST SHIM DETAIL

(2 SETS PER POST AT ALL LOCATIONS)

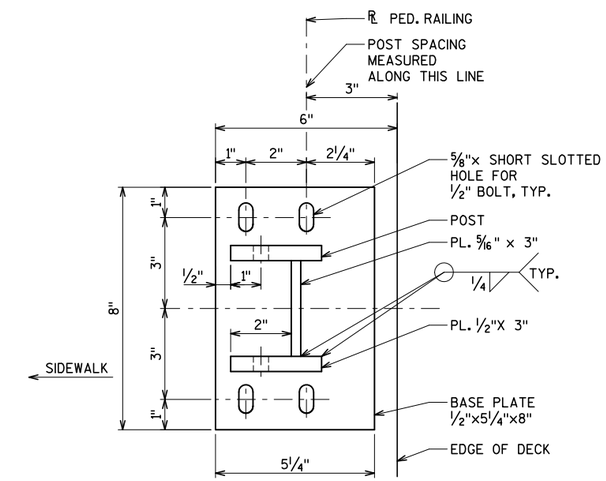

BASE PLATE

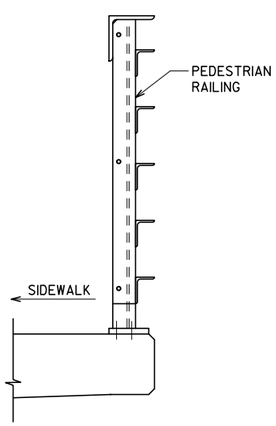

SECTION AT FIXED SPAN

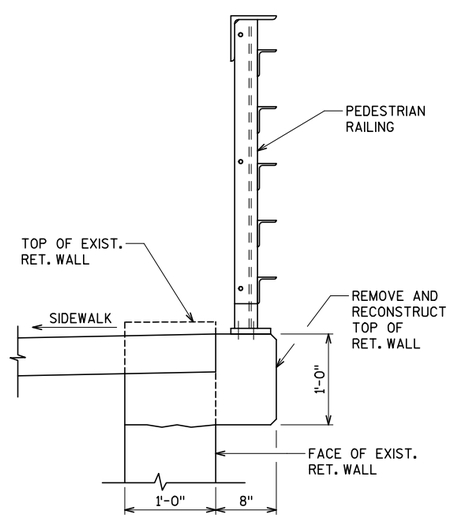

SECTION AT RETAINING WALL

NOTES

1. BID ITEM SHALL BE "PEDESTRIAN RAILING" WHICH INCLUDES ALL ITEMS SHOWN.
2. POST BASE PLATES SHALL BE FLAT WITH ALL SURFACES SMOOTH AND FREE FROM WARP AND ALL EDGES SMOOTH, STRAIGHT AND VERTICAL. ALL PLATE CUTS SHALL BE MACHINE OR MACHINE FLAME CUT.
3. ALL MATERIAL SHALL BE GALVANIZED AFTER FABRICATION. PRIOR TO GALVANIZING, ALL STEEL RAILING POSTS & STEEL ANGLES SHALL BE GIVEN A NO. 6 BLAST CLEANING BY S.S.P.C. SPECIFICATIONS. SEE SPECIAL PROVISIONS FOR DETAILS.
4. ALL MATERIALS USED IN FABRICATION SHALL BE MADE FROM MATERIALS CONFORMING TO ASTM A709 GRADE 50 UNLESS NOTED OTHERWISE.
5. SEAL THE GAP BETWEEN FIBERGLASS SIDEWALK PLATE AND POST BASE PLATE WITH NON-STAINING GRAY NON-BITUMINOUS JOINT SEALER.
6. FILL BOLT SLOT OPENINGS IN POST SHIMS AND BASE PLATE WITH NON-STAINING GRAY NON-BITUMINOUS JOINT SEALER.
7. GALVANIZED OR STAINLESS STEEL POST SHIMS MAY BE USED UNDER POSTS WHERE REQ'D FOR ALIGNMENT.
8. ALL MATERIAL, EXCEPT ANCHORAGE, SHALL BE PAINTED OVER GALVANIZING COAT. SEE SPECIAL PROVISION.
9. SEE SHEET LS27 FOR RALING POST LAYOUT.

City of Milwaukee
Department of Public Works
Infrastructure Services Division

BLOOM COMPANIES, LLC
Infrastructure Innovation and Ingenuity
10501 W. Research Drive • Milwaukee, WI 53226
Phone: (414) 771-3380 Fax: (414) 771-4490

ST PAUL AVE. LIFT BRIDGE
OVER THE MILWAUKEE RIVER
PEDESTRIAN RAILING

REVISIONS

DESIGNED BY BDT	
DRAWN BY TAL	
CHECKED BY JRS	
DATE FEB 2013	SCALE NTS
JOB NUMBER BR100-10-0106	
SHEET NUMBER LS26 OF LS33	

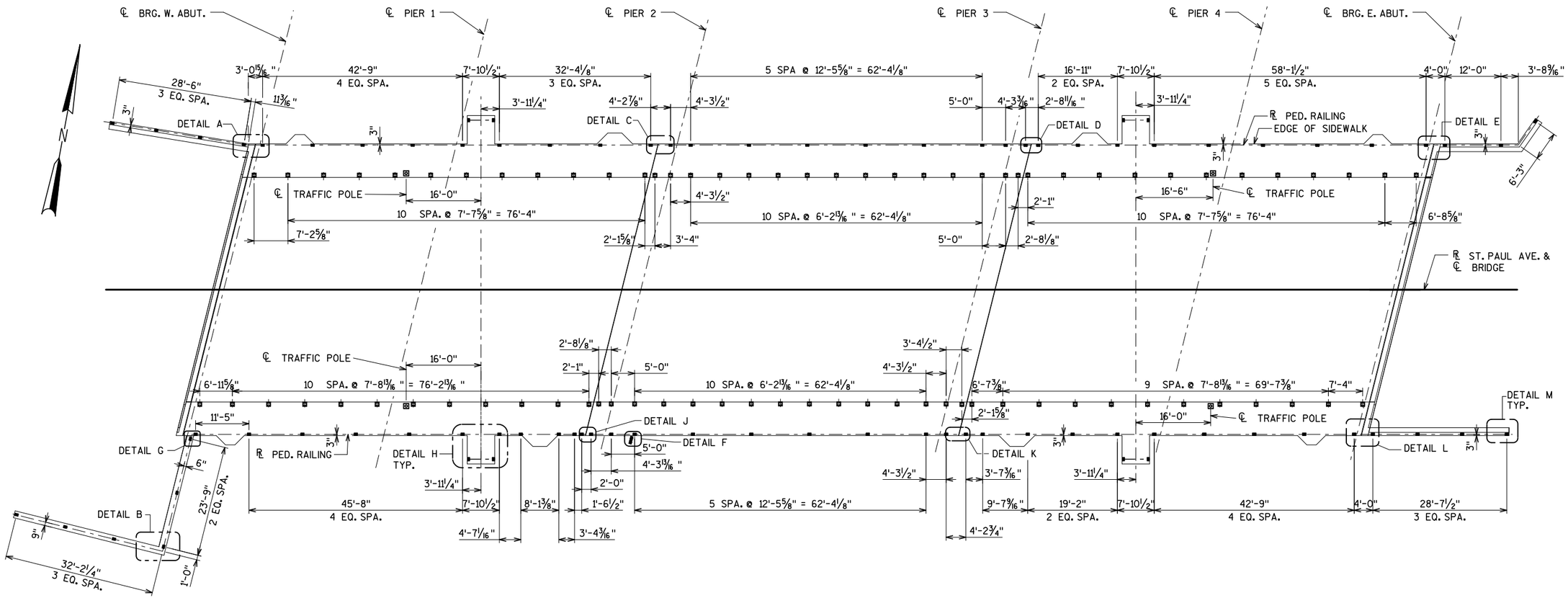

POST SPACING PLAN

TRAFFIC RAIL POST SPA. MEASURED ALONG FACE OF CURB.
PEDESTRIAN RAIL POST SPA. MEASURED ALONG ℞ OF RAIL. SEE SHEET LS26 FOR DETAILS.

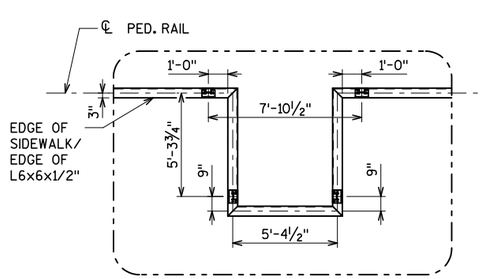

DETAIL H

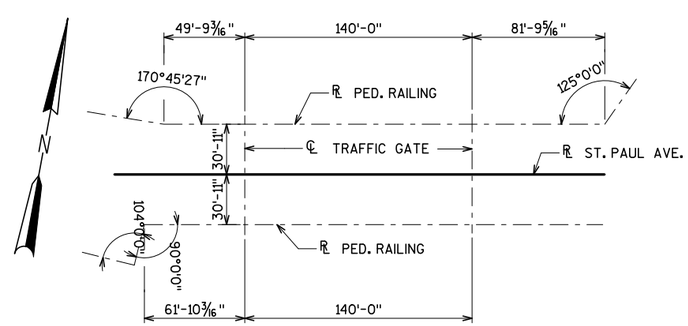

PEDESTRIAN RAIL LAYOUT

NOTES

POST SPACING IS MEASURED ALONG ℞ PEDESTRIAN RAILING.

SEE SHEET LS25 FOR TRAFFIC RAILING DETAILS.

SEE SHEET LS26 FOR PEDESTRIAN RAILING DETAILS.

SEE SHEET LS33 FOR DETAILS A,B,C,D,E,FG,J,K,L, AND M.

City of Milwaukee

Department of Public Works

Infrastructure Services Division

BLOOM COMPANIES, LLC
Infrastructure Innovation and Ingenuity
10501 W. Research Drive • Milwaukee, WI 53226
Phone: (414) 771-3380 Fax: (414) 771-4490

ST PAUL AVE. LIFT BRIDGE
OVER THE MILWAUKEE RIVER
RAILING POST LAYOUT

REVISIONS

DESIGNED BY BDT	
DRAWN BY TAL	
CHECKED BY JRS	
DATE FEB 2013	SCALE NTS
JOB NUMBER BR100-10-0106	
SHEET NUMBER LS27 OF LS33	
OF 198	

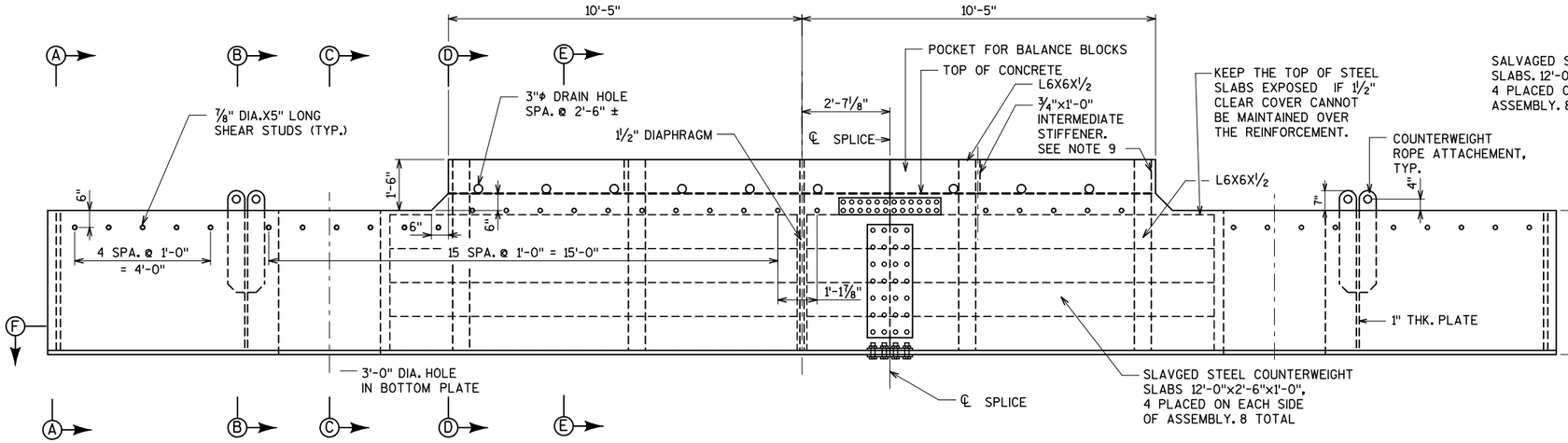

COUNTERWEIGHT ELEVATION

(LOOKING WEST)

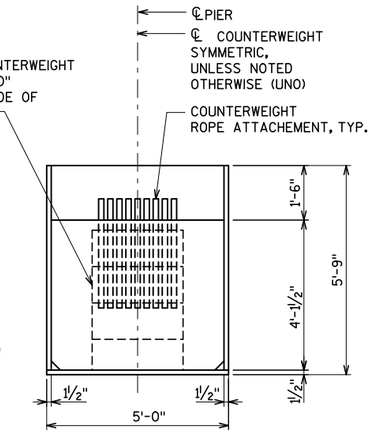

VIEW F-F

(COUNTERWEIGHT END VIEW)

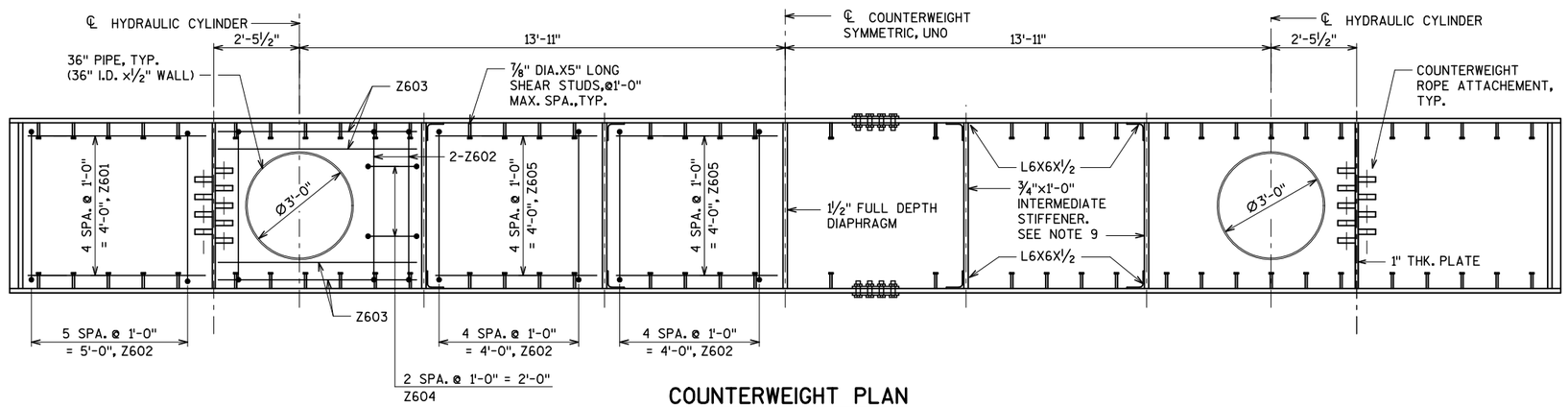

COUNTERWEIGHT PLAN

(STEEL SLABS NOT SHOWN FOR CLARITY)

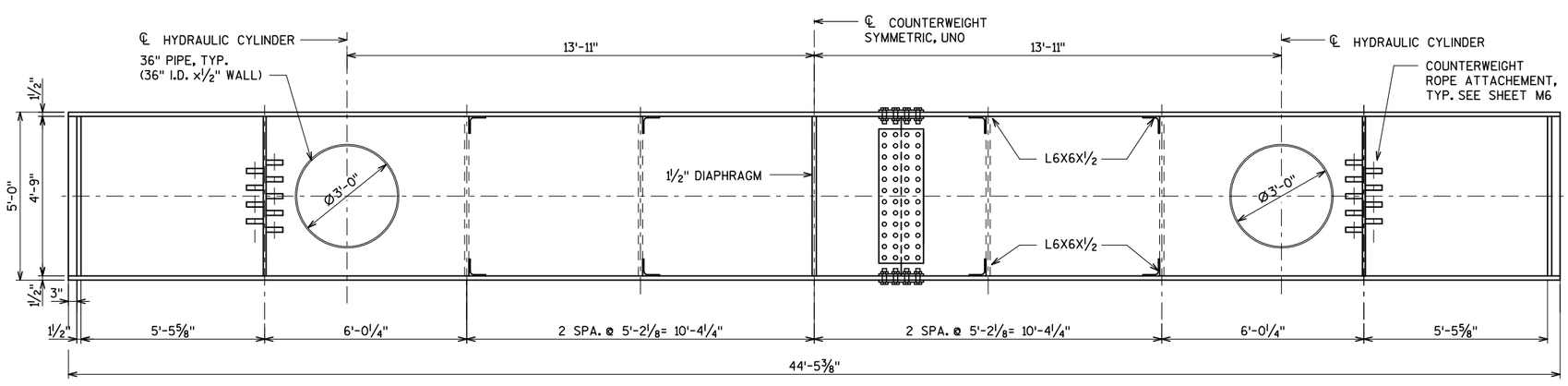

SECTION F-F

(STEEL SLABS NOT SHOWN FOR CLARITY)

NOTES

1. ALL STEEL OF THE COUNTERWEIGHT(CWT) ASSEMBLY SHALL BE AASHTO M270 GRADE 50, EXCEPT THE PIPES, WHICH SHALL BE ASTM A139 GRADE B.
2. CONCRETE UNIT WEIGHT SHALL BE 150 PCF. A LOW SLUMP CONCRETE SHALL BE USED WITH ANY EXCESS WATER DRAWN OFF AS THE CONCRETE IS PLACED.
3. BOLTS IN SPLICE SHALL BE ORIENTED SUCH THAT BOLT HEAD IS OUTSIDE BOX AND NUT IS EMBEDDED IN CONCRETE.
4. ALL STEEL, INCLUDING STUDS, BOLTS, NUTS, WASHERS, AND COUNTERWEIGHT ROPE ATTACHMENTS SHALL BE HOT-DIP GALVANIZED.
5. THE COUNTERWEIGHT STEEL BOX ASSEMBLY SHALL BE SHOP PAINTED AFTER GALVANIZING WITH THE APPROVED TWO COAT PAINT SYSTEM. ALL EXPOSED SURFACES SHALL BE PAINTED, AND PAINT SHALL EXTEND 9" INTO CONCRETE.
6. COORDINATE ANY DRAIN HOLES REQUIRED FOR GALVANIZING WITH THE ENGINEER.
7. COORDINATE ANY STIFFENERS OR TEMPORARY BRACING REQUIRED FOR GALVANIZING WITH THE ENGINEER.
8. INSTALL 8 SALVAGED STEEL SLABS IN COUNTERWEIGHT ASSEMBLY PRIOR TO PLACEMENT OF CONCRETE. SLAVAGED STEEL SLABS AHALL BE SANDBLASTED AND PAINTED WITH THE APPROVED THREE COAT PAINT SYSTEM BEFORE PLACING IN THE COUNTERWEIGHT BOX.
9. INTERMEDEDIATE STIFFENERS SHALL BE INSTALLED AFTER PLACEMENT OF THE STEEL BILLETS AND PRIOR TO PLACEMENT OF CONCRETE.
10. ITEMS SHOWN ON SHEETS LS28 AND LS29 ARE FOR ONE COUNTERWEIGHT UNIT ONLY.
11. SEE SHEET LS29 FOR SECTIONS.

City of Milwaukee
Department of Public Works
Infrastructure Services Division

BLOOM COMPANIES, LLC
Infrastructure Innovation and Ingenuity
10501 W. Research Drive • Milwaukee, WI 53226
Phone: (414) 771-3380 Fax: (414) 771-4490

ST PAUL AVE. LIFT BRIDGE
OVER THE MILWAUKEE RIVER
COUNTERWEIGHT

REVISIONS

DESIGNED BY MD	
DRAWN BY TAL	
CHECKED BY BDT	
DATE FEB 2013	SCALE NTS
JOB NUMBER BR100-10-0106	
SHEET NUMBER LS28 OF LS33	
OF 198	

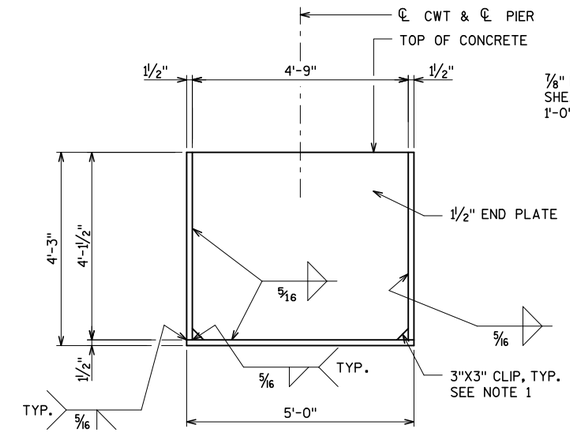

SECTION A-A

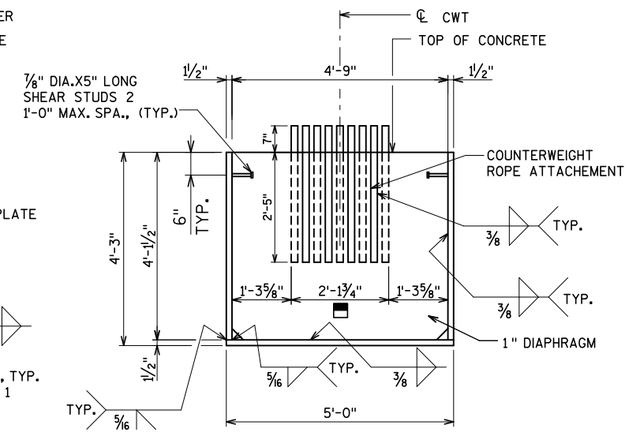

SECTION B-B

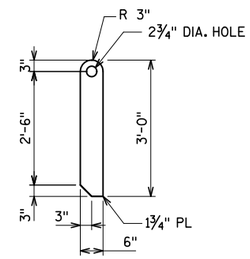

COUNTERWEIGHT ROPE
ATTACHEMENT PLATE

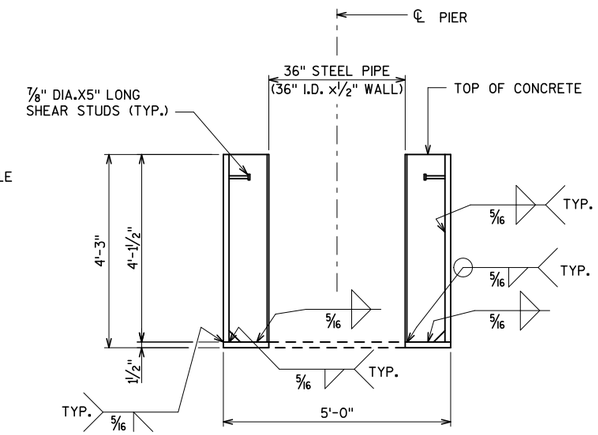

SECTION C-C

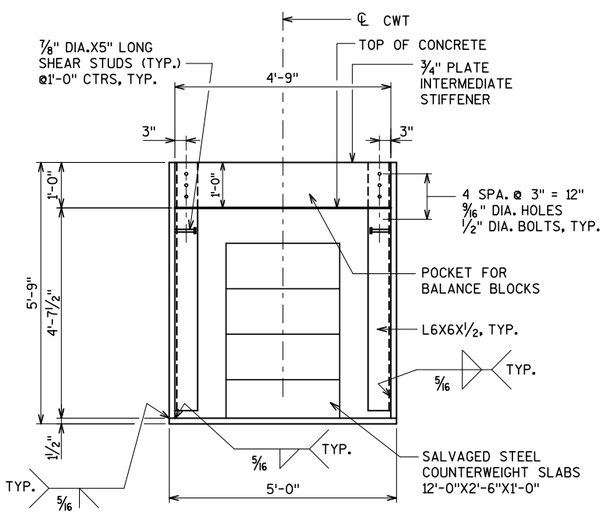

SECTION D-D

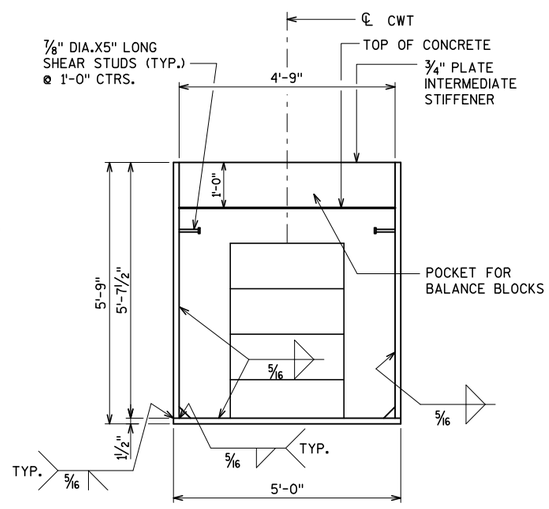

SECTION E-E

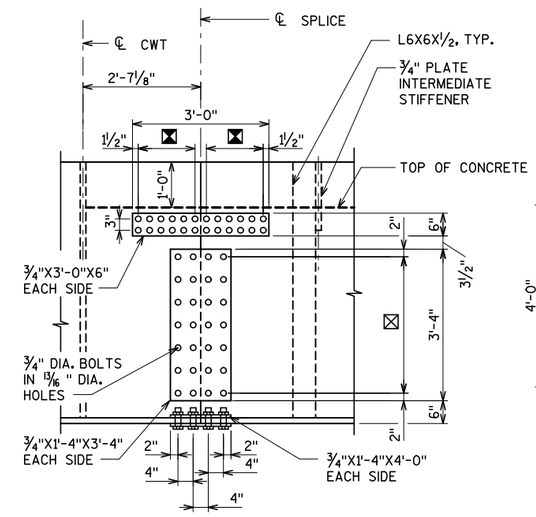

SPLICE ELEVATION

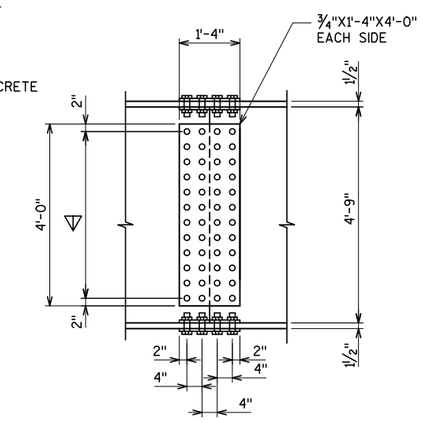

SPLICE PLAN

BILL OF BARS *

BAR MARK	COAT	NO.	LENGTH	BENT	BAR SERIES	LOCATION
Z601	X	10	5'-1"			COUNTERWEIGHT TOP
Z602	X	38	6'-2"	X		COUNTERWEIGHT TOP
Z603	X	8	5'-8"			COUNTERWEIGHT TOP
Z604	X	6	3'-3"	X		COUNTERWEIGHT TOP
Z605	X	20	4'-8"			COUNTERWEIGHT TOP

* COST OF REINFORCEMENT INCLIDED IN BID ITEM" COUNTERWEIGHT BALLAST".

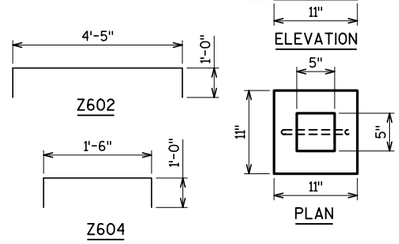

BENDING DIAGRAMS

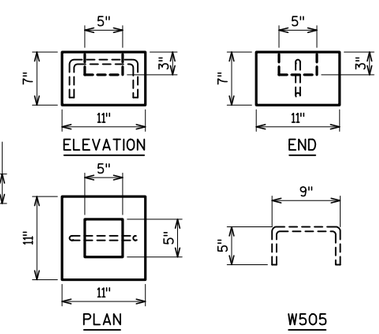

COUNTERWEIGHT *
BALANCE BLOCKS

LEGEND

- COUNTERWEIGHT ROPE ATTACHEMENTS STAGGERED AT 3" ON ALTERNATING SIDES OF PLATE
- ▽ 11 SPA. @ 4" = 3'-8"
- ⊠ 5 SPA. @ 3" = 1'-3"
- ⊠ 6 SPA. @ 6" = 3'-0"

NOTE

1. SEAL CLIPPED CORNERS OF END PLATES AND STIFFENERS AFTER GALVANIZING, PRIOR TO POURING CONCRETE.
2. FURNISH BALANCE BLOCKS FOR 24,000 LBS PER COUNTERWEIGHT. (APPROXIMATELY 370 BLOCKS, EACH WEIGHING 65 LBS).
3. THE EXISTING COUNTERWEIGHT STEEL SLABS ARE WARPED. SET THE BOTTOM SLAB ON A LAYER OF BEDDING MORTAR TO DISTRIBUTE THE LOAD EVENLY TO THE BOTTOM PLATE OF THE GALVANIZED STEEL BOX AND TO COVER THE BOLT HEADS AT THE SPLICE. SET THE REMAINING BLOCKS AFTER THE MORTAR HAS SET. USE PLASTIC OR STAINLESS STEEL SHIMS AS REQUIRED.

* COST OF CONCRETE AND REINFORCEMENT FOR COUNTERWEIGHT AND BALANCE BLOCKS IS INCLUDED IN BID ITEM "COUNTERWEIGHT BALLAST".

City of Milwaukee
Department of Public Works
Infrastructure Services Division

BLOOM COMPANIES, LLC
Infrastructure Innovation and Ingenuity
10501 W. Research Drive • Milwaukee, WI 53226
Phone: (414) 771-3380 Fax: (414) 771-4490

ST PAUL AVE. LIFT BRIDGE OVER THE MILWAUKEE RIVER COUNTERWEIGHT DETAILS

REVISIONS

DESIGNED BY MD	
DRAWN BY TAL	
CHECKED BY BDT	
DATE FEB 2013	SCALE NTS
JOB NUMBER BR100-10-0106	
SHEET NUMBER LS29 OF LS33	
OF 198	

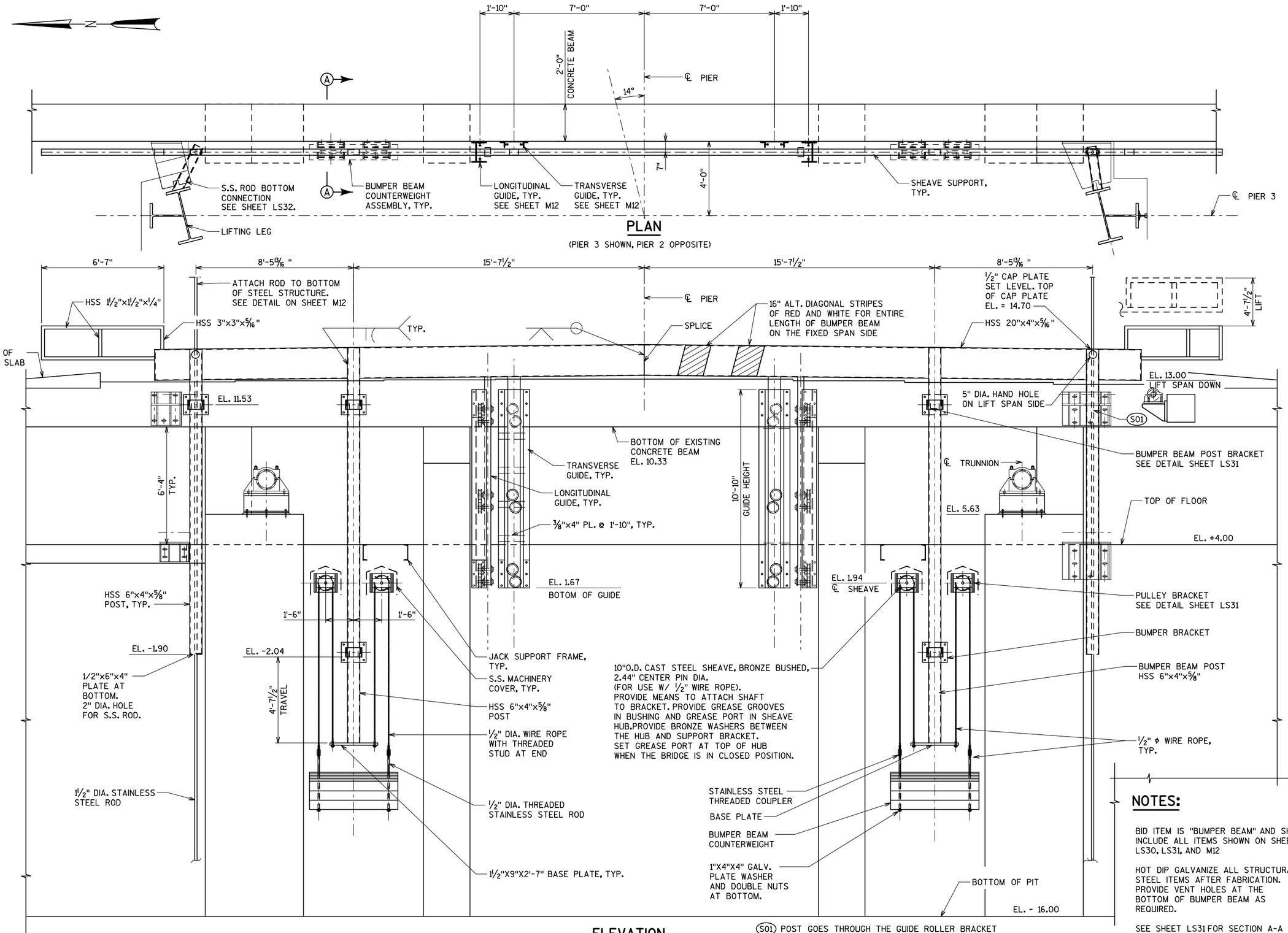

S01 POST GOES THROUGH THE GUIDE ROLLER BRACKET ON PIER 3. PROVIDE BUMPER BEAM POST BRACKET AT THIS LOCATION ON PIER 2. SEE SHEETS M7-M11 FOR GUIDE ROLLER BRACKET DETAILS.

NOTES:

BID ITEM IS "BUMPER BEAM" AND SHALL INCLUDE ALL ITEMS SHOWN ON SHEETS LS30, LS31, AND M12

HOT DIP GALVANIZE ALL STRUCTURAL STEEL ITEMS AFTER FABRICATION. PROVIDE VENT HOLES AT THE BOTTOM OF BUMPER BEAM AS REQUIRED.

SEE SHEET LS31 FOR SECTION A-A AND ADDITIONAL DETAILS.

City of Milwaukee

Department of Public Works

Infrastructure Services Division

BLOOM COMPANIES, LLC
Infrastructure Innovation and Ingenuity
10501 W. Research Drive • Milwaukee, WI 53226
Phone: (414) 771-3380 • Fax: (414) 771-4490

ST PAUL AVE. LIFT BRIDGE OVER THE MILWAUKEE RIVER BUMPER BEAM

REVISIONS

DESIGNED BY BDT	
DRAWN BY TAL	
CHECKED BY JRS	
DATE FEB 2013	SCALE NTS
JOB NUMBER BR100-10-0106	
SHEET NUMBER LS30 OF LS33	
OF 198	

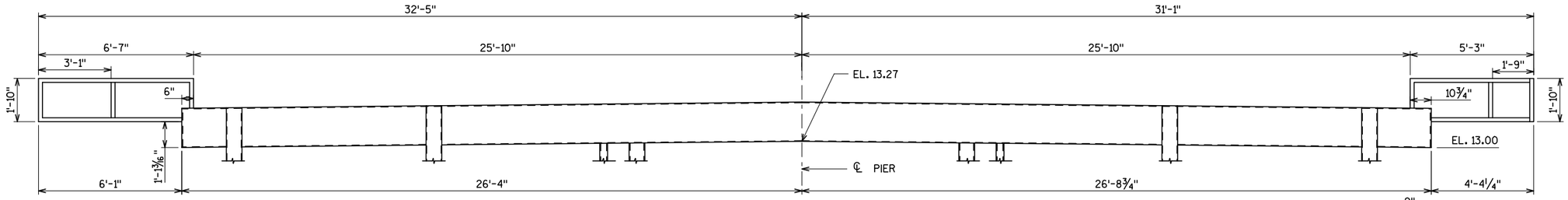

BUMPER BEAM ELEVATION

(LOOKING WEST, PIER 2
LOOKING EAST, PIER 3)

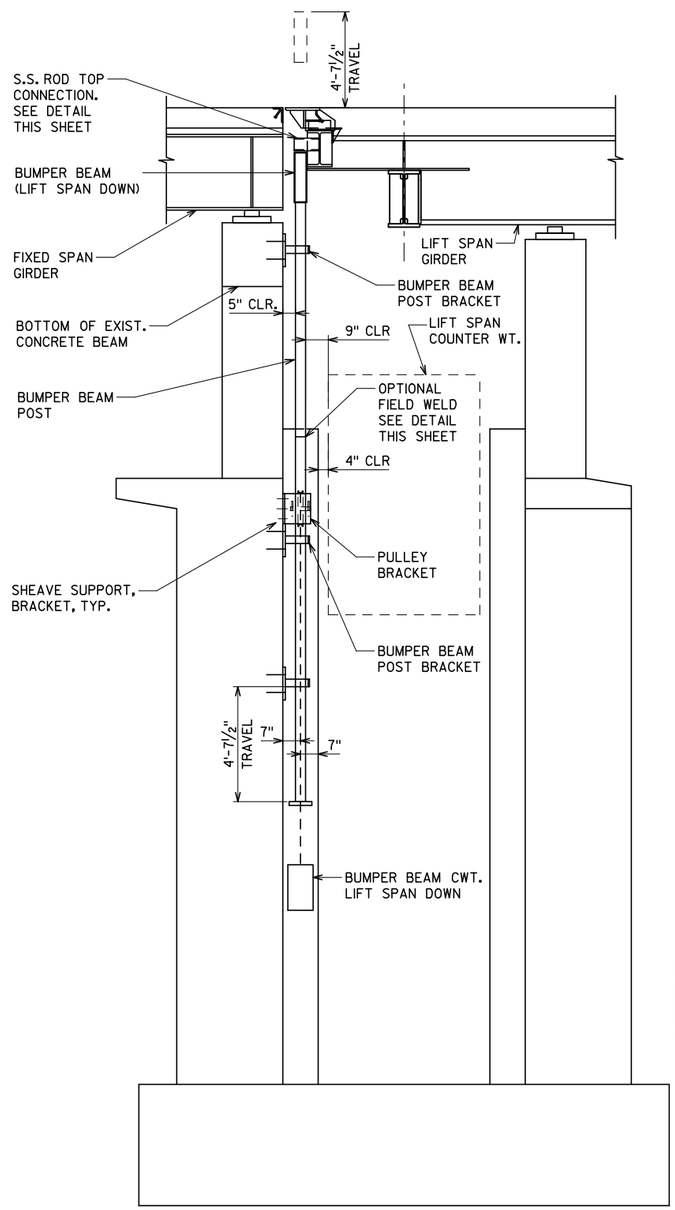

SECTION A-A

(REF. SHEET LS30)

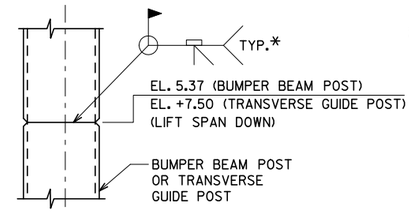

OPTIONAL FIELD JOINT FOR BUMPER BEAM POSTS

* APPLY GALVANIZING REPAIR PAINT TO FIELD WELDED AREAS AND FINISH PAINT

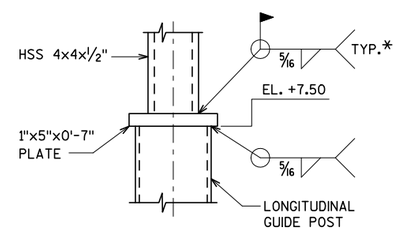

OPTIONAL FIELD JOINT FOR LONGITUDINAL GUIDE POST

* APPLY GALVANIZING REPAIR PAINT TO FIELD WELDED AREAS AND FINISH PAINT

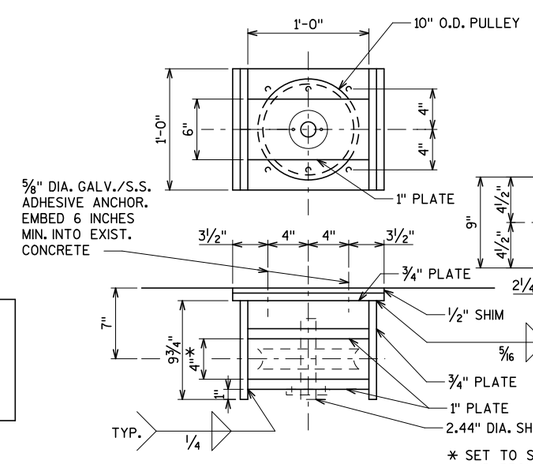

PULLEY BRACKET

* SET TO SUIT HUB LENGTH AND BRONZE WASHER THICKNESS

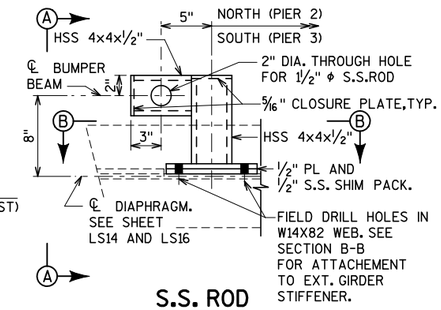

S.S. ROD TOP CONNECTION

(PLAN)
(SW CNNECTION SHOWN. OTHER CONNECTIONS SIMILAR OR OPPOSITE)

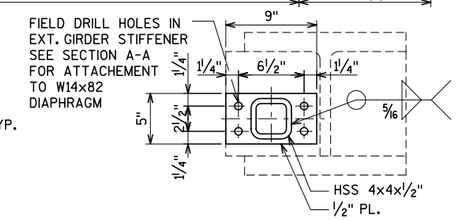

SECTION B-B

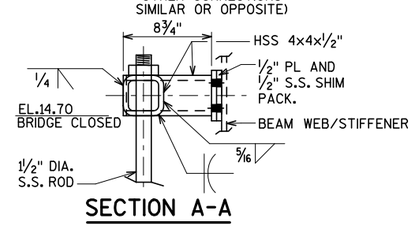

SECTION A-A

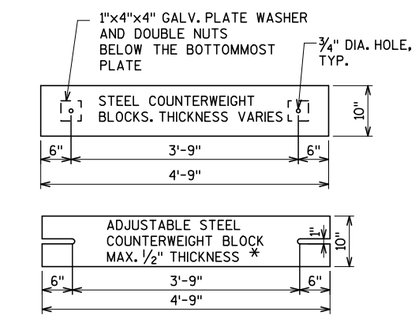

BUMPER BEAM COUNTERWEIGHT

* PROVIDE ADJUSTABLE COUNTERWEIGHT BLOCKS FOR A MINIMUM OF 10 PERCENT OF THE WEIGHT OF BUMPER BEAM ASSEMBLY

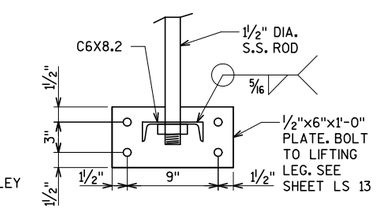

S.S. ROD BOTTOM CONNECTION

(REF. SHEET LS30)

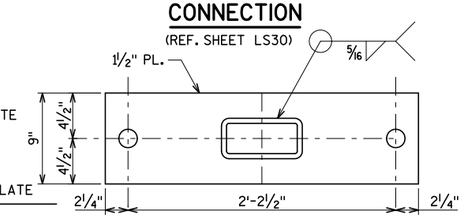

BUMPER BEAM POST BASE PLATE

(REF. SHEET LS30)

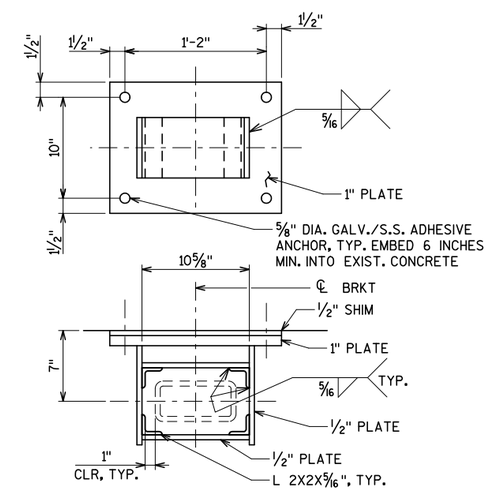

BUMPER BEAM POST BRACKET

City of Milwaukee

Department of Public Works

Infrastructure Services Division

BLOOM COMPANIES, LLC
Infrastructure Innovation and Ingenuity
10501 W. Research Drive • Milwaukee, WI 53226
Phone: (414) 771-3380 Fax: (414) 771-4490

ST PAUL AVE. LIFT BRIDGE OVER THE MILWAUKEE RIVER BUMPER BEAM DETAILS

REVISIONS

DESIGNED BY

DRAWN BY TAL

CHECKED BY

DATE FEB 2013 | SCALE NTS

JOB NUMBER BR100-10-0106

SHEET NUMBER LS31 OF LS33

OF 198

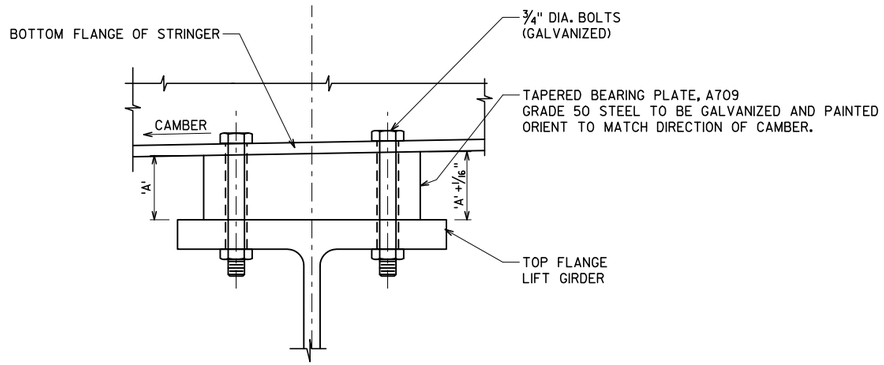

STRINGER BEARING PLATE ELEVATION

(NORMAL TO BEARING)

BEARING PLATE HEIGHT

STRINGER LINE	'A' DIMENSION	
	PIER 2 LIFT GIRDER	PIER 3 LIFT GIRDER
S1/S6	15/16"	N/A
S2/S6	1 7/16"	9/16"
S3	4 1/16"	3 15/16"
S4/S6	2 7/16"	2 5/8"
S7	2 1/4"	2 3/4"
S5	1 13/16"	2 11/16"

'N/A' INDICATES NO BEARING PLATE REQ'D

NOTES

ALL PLATE CUTS SHALL BE MACHINE OR MACHINE FLAME CUT.

ALL STRUCTURAL STEEL BEARING PLATES SHALL BE FLAT ROLLED STEEL PLATES WITH ALL SURFACES SMOOTH AND FREE FROM WARP AND ALL EDGES SMOOTH, STRAIGHT AND VERTICAL.

BEARING PLATES AT LIFT GIRDER, BELOW STRINGERS, ARE PAID FOR UNDER BID ITEM "BRIDGE STRUCTURAL STEEL".

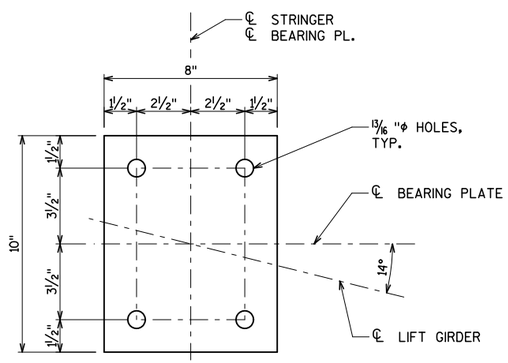

STRINGER S3, S5 & S7

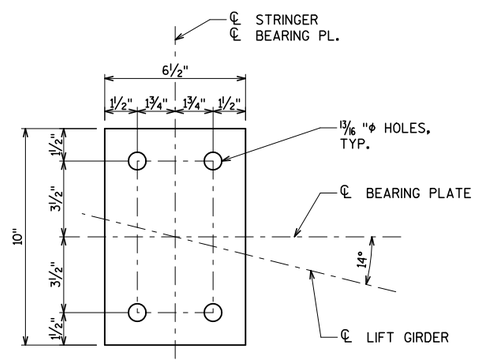

STRINGERS S1, S2, & S4

STRINGER BEARING PLATE PLAN

City of Milwaukee

Department of Public Works

Infrastructure Services Division

BLOOM COMPANIES, LLC
Infrastructure Innovation and Ingenuity
10501 W. Research Drive • Milwaukee, WI 53226
Phone: (414) 771-3380 Fax: (414) 771-4490

ST PAUL AVE. LIFT BRIDGE
OVER THE MILWAUKEE RIVER
STRINGER BEARING PLATES

REVISIONS

DESIGNED BY JRS
DRAWN BY TAL
CHECKED BY BDT
DATE FEB 2013 | SCALE NTS
JOB NUMBER BR100-10-0106
SHEET NUMBER LS32 OF LS33
OF 198

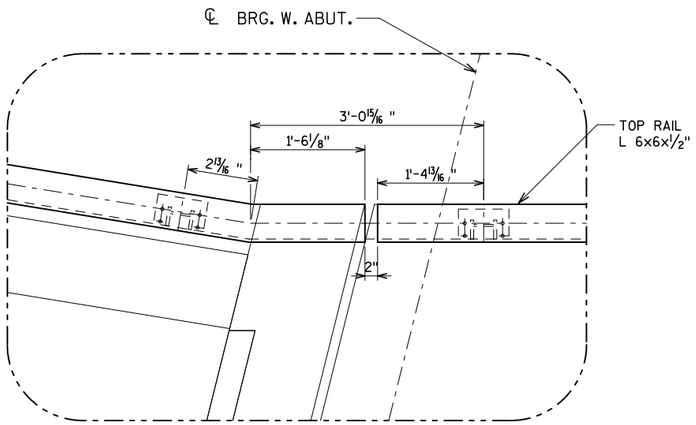

DETAIL A

(REF. SHEET LS27)

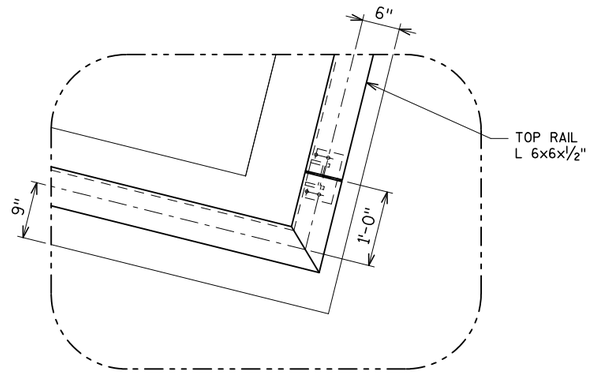

DETAIL B

(REF. SHEET LS27)

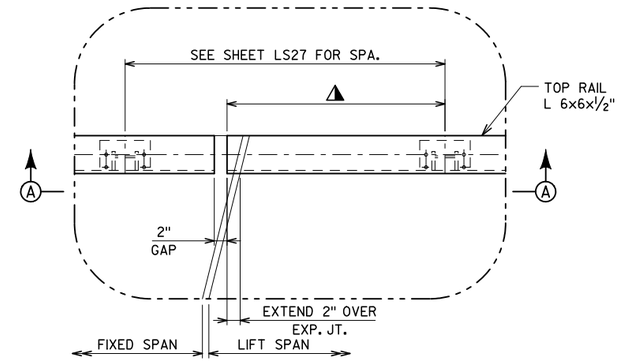

DETAILS C,D,J & K

(REF. SHEET LS27)

(DETAIL C SHOWN, DETAILS D,J,&K SIMILAR OR OPPOSITE)

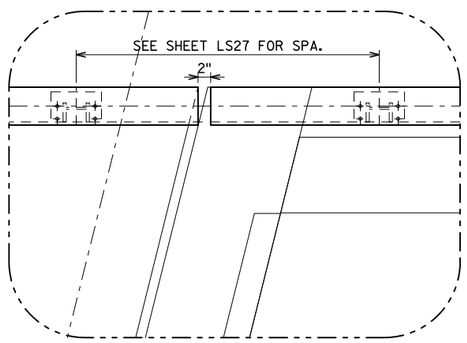

DETAILS E AND L

(REF. SHEET LS27)

DETAIL E SHOWN. DETAIL L SIMILAR

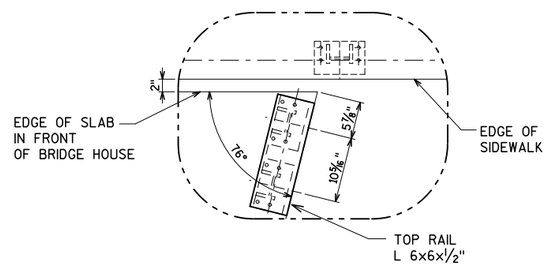

DETAIL F

(REF. SHEET LS27)

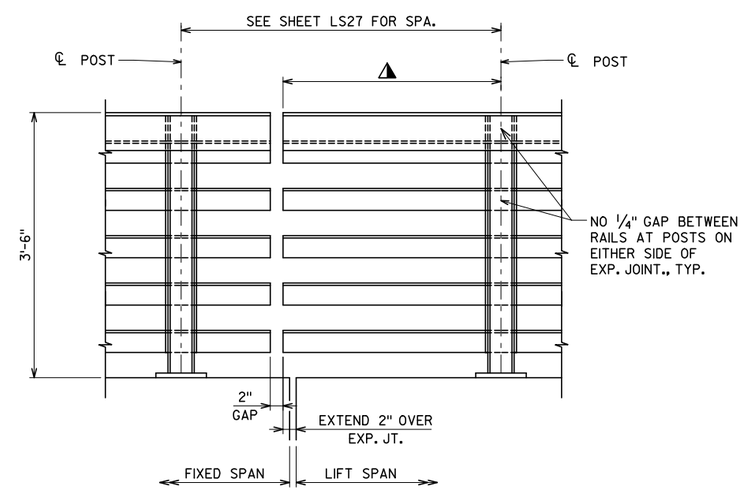

VIEW A-A

DETAIL C - 2'-10 3/4"
DETAIL D - 1'-4 1/4"
DETAIL J - 1'-3 3/4"
DETAIL K - 2'-11"

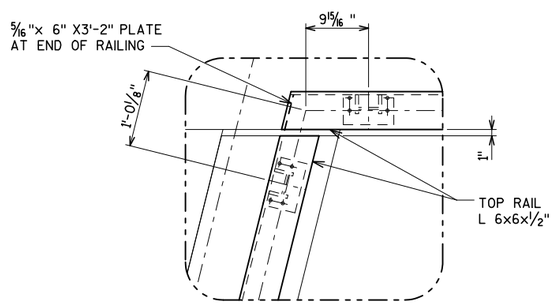

DETAIL G

(REF. SHEET LS27)

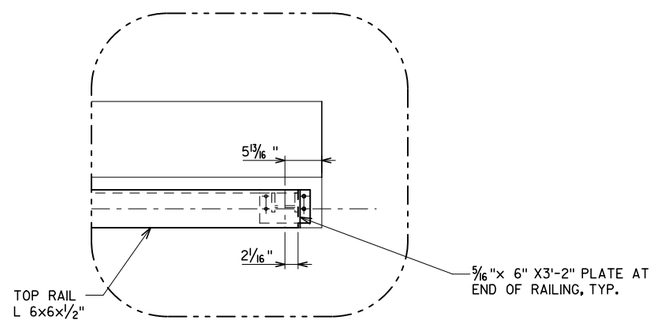

DETAIL M

(REF. SHEET LS27)

NOTES

SEE SHEET LS27 FOR RAIL POST LAYOUT

City of Milwaukee

Department of Public Works

Infrastructure Services Division

BLOOM COMPANIES, LLC
Infrastructure Innovation and Ingenuity
10501 W. Research Drive • Milwaukee, WI 53226
Phone: (414) 771-3380 Fax: (414) 771-4490

ST PAUL AVE. LIFT BRIDGE
OVER THE MILWAUKEE RIVER
RAILING DETAILS

REVISIONS

DESIGNED BY

DRAWN BY
TAL

CHECKED BY

DATE	SCALE
FEB 2013	NTS

JOB NUMBER
BR100-10-0106

SHEET NUMBER
LS33 OF LS33

OF
198

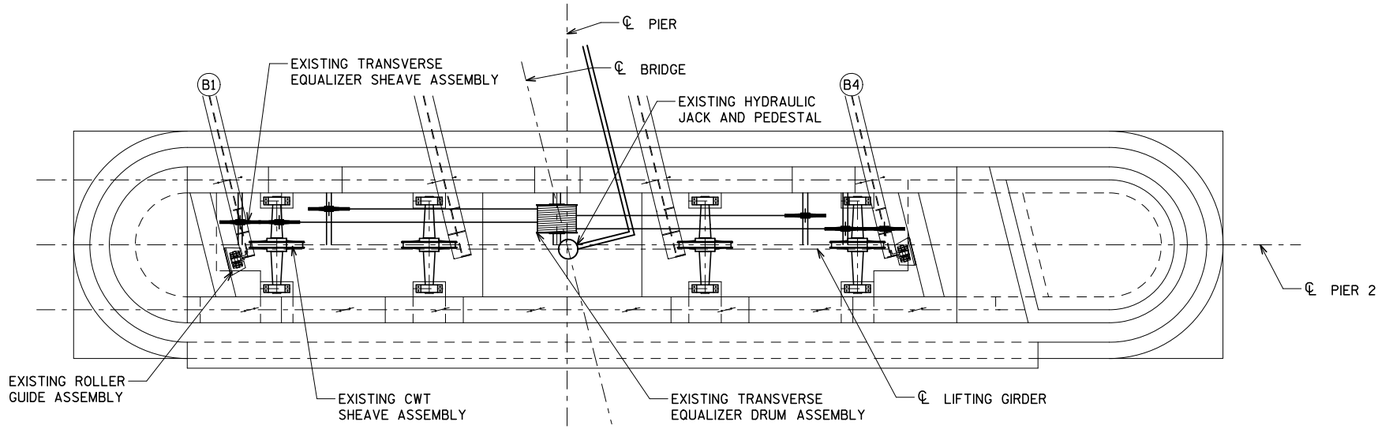

PLAN-MECHANICAL DEMOLITION

PIER 2 SHOWN, PIER 3 SIMILAR

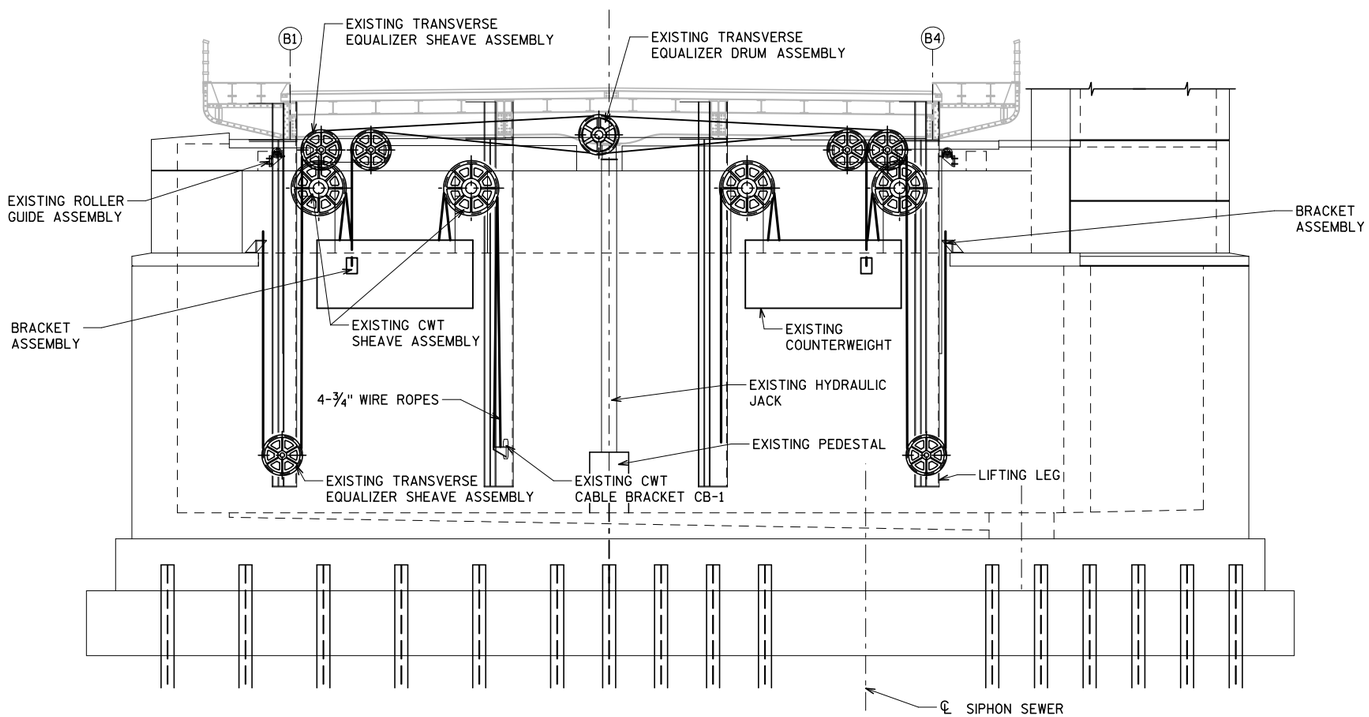

ELEVATION-MECHANICAL DEMOLITION

(LOOKING EAST)

NOTES

1. EXISTING TRANSVERSE EQUALIZER SYSTEM TO BE REMOVED AND DISPOSED OF INCLUDING, BUT NOT LIMITED TO:

   - DRUM ASSEMBLIES (2)
   - SHEAVE ASSEMBLIES (8)
   - EQUALIZER WIRE ROPES
   - END CONNECTION AND BRACKETS (8)

2. EXISTING ROLLER GUIDE ASSEMBLIES TO BE REMOVED AND DISPOSED OF INCLUDING, BUT NOT LIMITED TO:

   - ROLLER GUIDE ASSEMBLIES (4)
   - RAILS SUPPORT ASSEMBLIES (4)

3. EXISTING COUNTERWEIGHT SHEAVE ASSEMBLIES TO BE REMOVED AND DISPOSED OF INCLUDING, BUT NOT BE LIMITED TO:

   - EXISTING COUNTERWEIGHT SHEAVES (8)
   - COUNTERWEIGHT SHEAVE SHAFTS (8)
   - COUNTERWEIGHT SHEAVE BEARINGS (16)

4. EXISTING COUNTERWEIGHT ROPES AND CONNECTIONS TO BE REMOVED (32) AND DISPOSED OF.

5. EXISTING LIFTING LEGS (8) AND RAILS ATTACHED TO THE LIFTING LEGS (4) ARE TO BE REMOVED AND DISPOSED OF.

6. EXISTING LIFT SPAN BRAKES(4) TO BE REMOVED AND DISPOSED OF.

7. EXISTING BUMPER BEAM (2), BUMPER BEAM POSTS, AND COUNTERWEIGHT TO BE REMOVED AND DISPOSED OF.

8. UNLESS OTHERWISE REQUESTED BY THE CITY, ALL REMOVED MATERIAL SHALL BECOME PROPERTY OF THE CONTRACTOR, AND DISPOSED OF IN ACCORDANCE WITH ALL LOCAL, STATE, AND FEDERAL REGULATIONS. ANY SALVAGED COMPONENTS REQUESTED BY THE CITY SHALL BE TRANSPORTED BY THE CONTRACTOR TO A LOCAL CITY FACILITY DESIGNATED AT THE TIME OF REMOVAL.

9. ANY OPEN HOLES RESULTING FROM REMOVAL OF EXISTING MACHINERY SHALL BE FILLED WITH NEW GALVANIZED ASTM A325 FASTENERS.

10. SEE SHEET M2 FOR ADDITIONAL MECHANICAL DEMO INFORMATION.

11. COST OF ALL REMOVALS SHOWN ON SHEET M1 AND M2 IS TO BE INCLUDED IN BID ITEM "REMOVING OLD STRUCTURE OVER WATERWAY WITH MINIMAL DEBRIS".

City of Milwaukee

Department of Public Works

Infrastructure Services Division

BLOOM COMPANIES, LLC
Infrastructure Innovation and Ingenuity
10501 W. Research Drive • Milwaukee, WI 53226
Phone: (414) 771-3380 Fax: (414) 771-4490

ST PAUL AVE. LIFT BRIDGE OVER THE MILWAUKEE RIVER MECHANICAL DEMOLITION (1 OF 2)

REVISIONS

DESIGNED BY BDT	
DRAWN BY TAL	
CHECKED BY MPT	
DATE FEB 2013	SCALE NTS
JOB NUMBER BR100-10-0106	
SHEET NUMBER M1 OF M13	
OF 198	

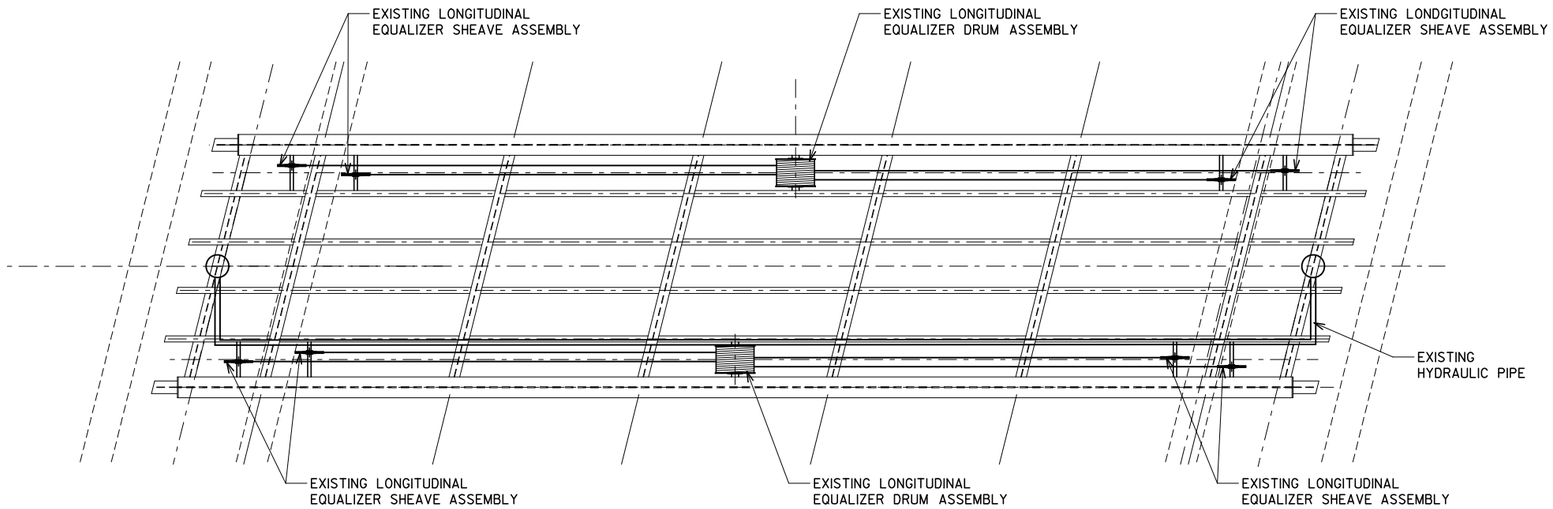

PLAN-MECHANICAL DEMOLITION

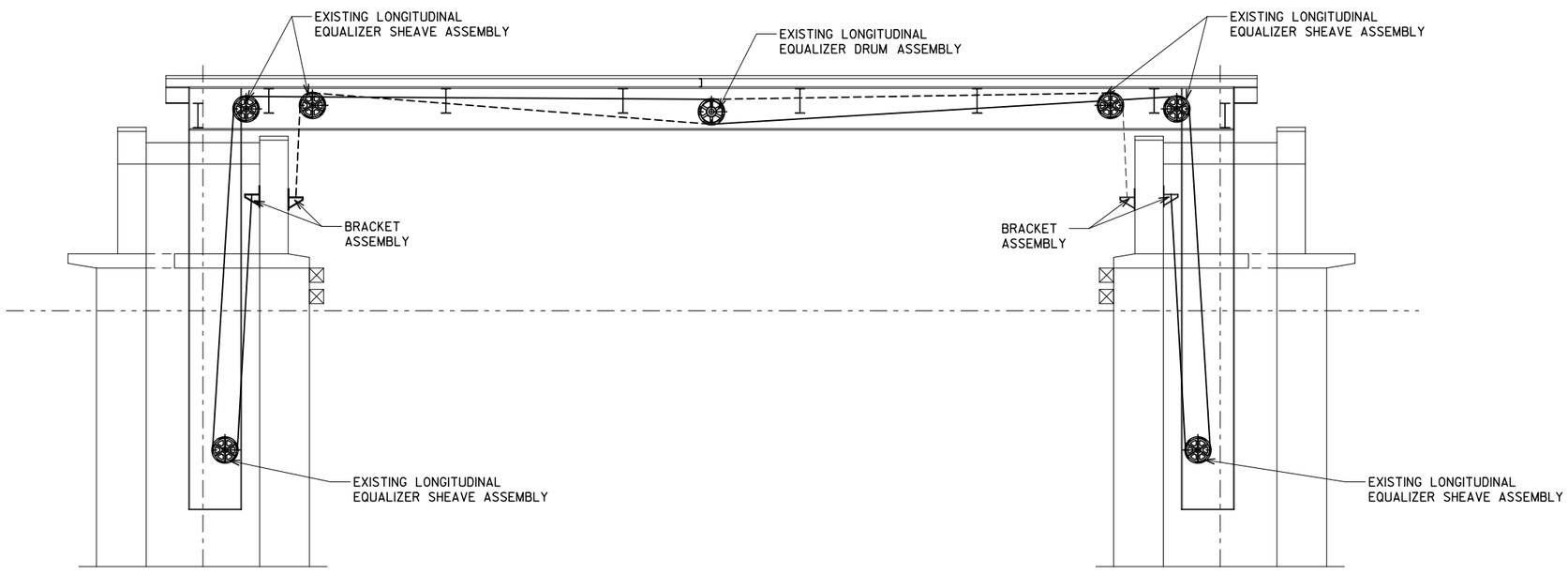

ELEVATION-MECHANICAL DEMOLITION

(LOOKING NORTH)

NOTES

1. EXISTING LONGITUDINAL EQUALIZER SYSTEM TO BE REMOVED AND DISPOSED OF INCLUDING, BUT NOT LIMITED TO:

- DRUM ASSEMBLIES (2)
- SHEAVE ASSEMBLIES (8)
- EQUALIZER WIRE ROPES
- END CONNECTION AND BRACKETS (8)

SEE SHEET M1 FOR ADDITIONAL MECHANICAL DEMOLITION INFORMATION.

City of Milwaukee

Department of Public Works

Infrastructure Services Division

BLOOM COMPANIES, LLC
Infrastructure Innovation and Ingenuity
10501 W. Research Drive • Milwaukee, WI 53226
Phone: (414) 771-3380 Fax: (414) 771-4490

ST PAUL AVE. LIFT BRIDGE
OVER THE MILWAUKEE RIVER
MECHANICAL DEMOLITION
(2 OF 2)

REVISIONS

DESIGNED BY BDT	
DRAWN BY TAL	
CHECKED BY MPT	
DATE FEB 2013	SCALE NTS
JOB NUMBER BR100-10-0106	
SHEET NUMBER M2 OF M13	
OF 198	

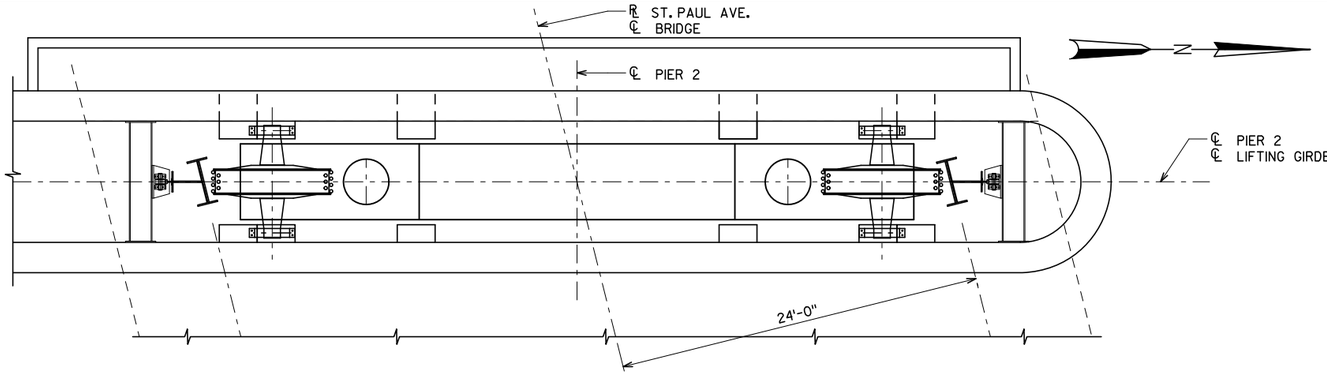

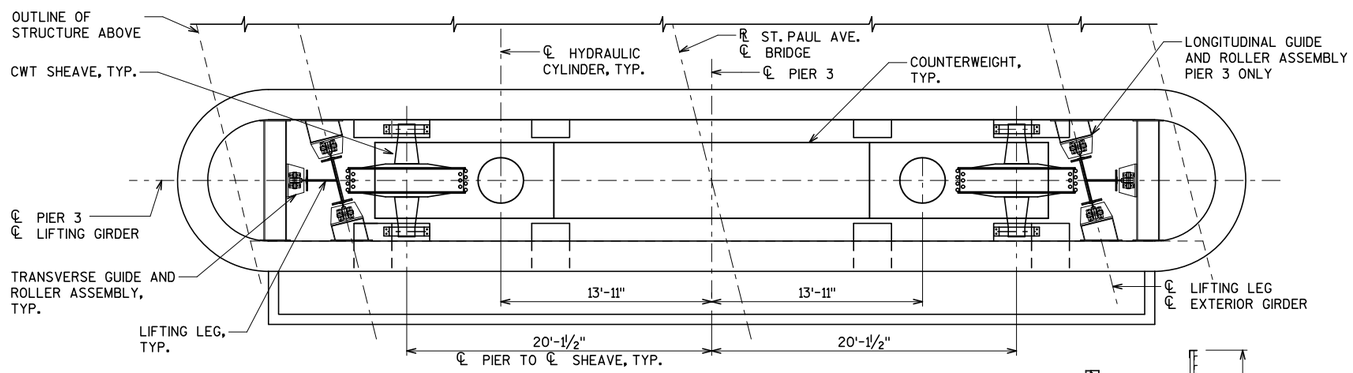

PLAN

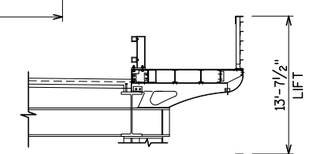

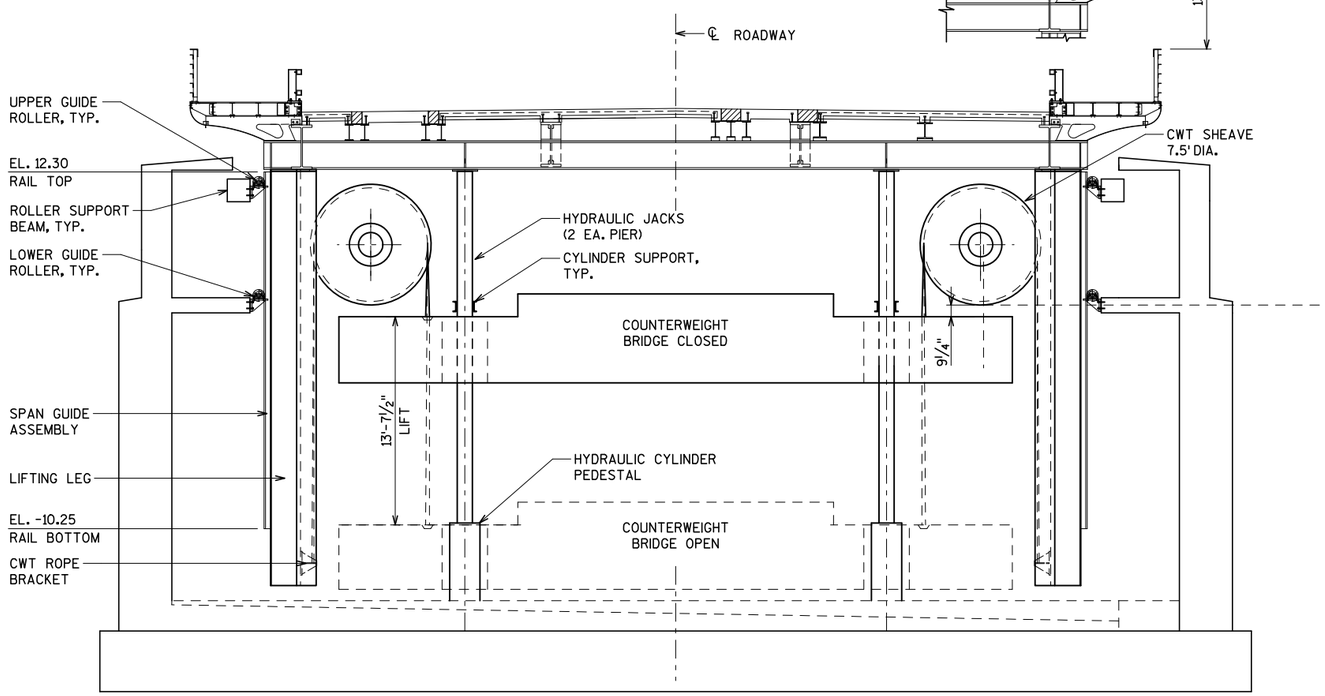

TYPICAL SECTION THROUGH PIER

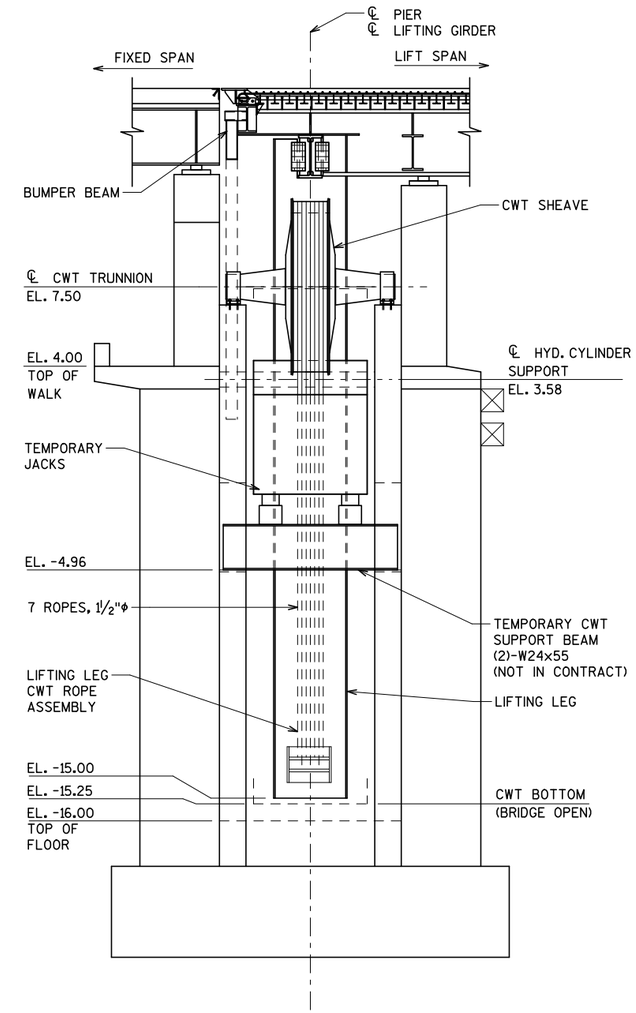

SECTION THROUGH PIER 2

(LOOKING NORTH)
(PIER 3 SIMILAR)

DESIGN LOADS

1. SPAN IMBALANCE = APPROX. 60 KIPS (SPAN HEAVY)
2. COUNTERWEIGHT = APPROX. 240 KIPS EACH (254 KIPS MAX.)
3. LATERAL LOADS = APPROX. 13.4 KIPS (PER GUIDE ROLLER)

GENERAL NOTES

1. MACHINERY SUPPORTS, INCLUDING BUT NOT LIMITED TO, COUNTERWEIGHT BEARING SUPPORTS; WIRE ROPE BRACKETS, SOCKETS, STUDS, PINS, AND NUTS; GUIDE RAIL SUPPORTS; LIMIT SWITCH/RESOLVER SUPPORTS; ROLLER GUIDE ASSEMBLY SUPPORTS; BUMPER BEAM, POSTS, GUIDES, BRACKETS; CENTERING DEVICE WITH THE EXCEPTION OF WEAR PLATES; JACK SUPPORT FRAME; AND HPU SUPPORTS SHALL BE GALVANIZED AND PAINTED IN ACCORDANCE WITH APPLICABLE SECTIONS OF "BRIDGE STRUCTURAL STEEL".
2. ANCHOR BOLTS USED TO SECURE MACHINERY SUPPORTS SHALL CONFORM TO ASTM F1554 AND SHALL BE GALVANIZED AND PAINTED.

City of Milwaukee
Department of Public Works
Infrastructure Services Division

BLOOM COMPANIES, LLC
Infrastructure Innovation and Ingenuity
10501 W. Research Drive • Milwaukee, WI 53228
Phone: (414) 771-3380 • Fax: (414) 771-4490

ST PAUL AVE. LIFT BRIDGE OVER THE MILWAUKEE RIVER
LIFT SPAN - GENERAL MECHANICAL PLAN

REVISIONS

DESIGNED BY BDT	
DRAWN BY TAL	
CHECKED BY MPT	
DATE FEB 2013	SCALE NTS
JOB NUMBER BR100-10-0106	
SHEET NUMBER M3 OF M13	
OF 198	

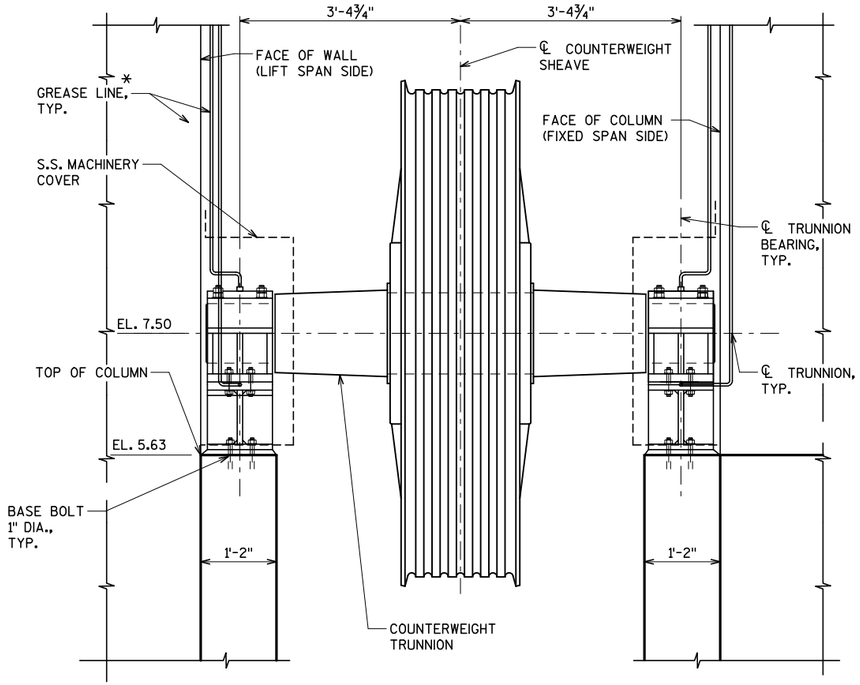

COUNTERWEIGHT SHEAVE ASSEMBLY

* PROVIDE MANIFOLD BLOCK FOR GREASE LINES AND MOUNT IN AN ACCESSIBLE LOCATION

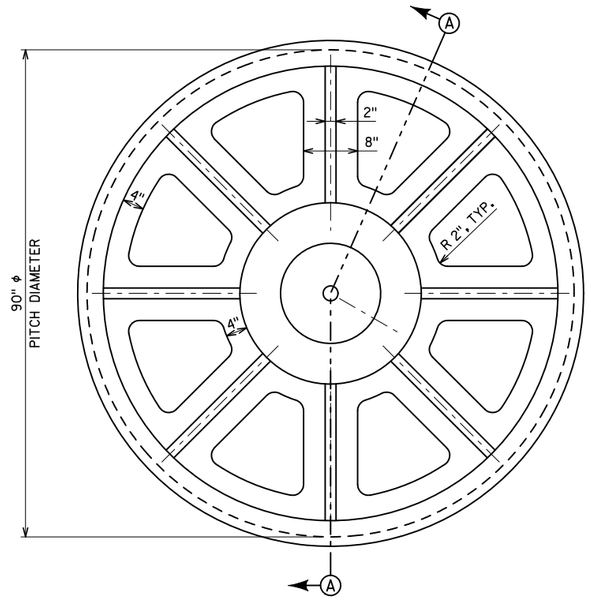

COUNTERWEIGHT SHEAVE

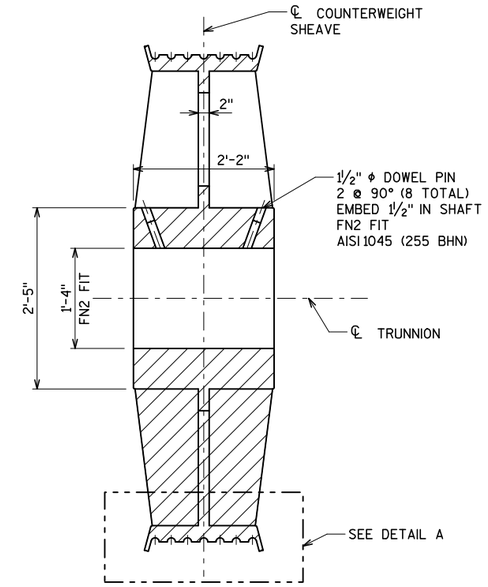

SECTION A-A

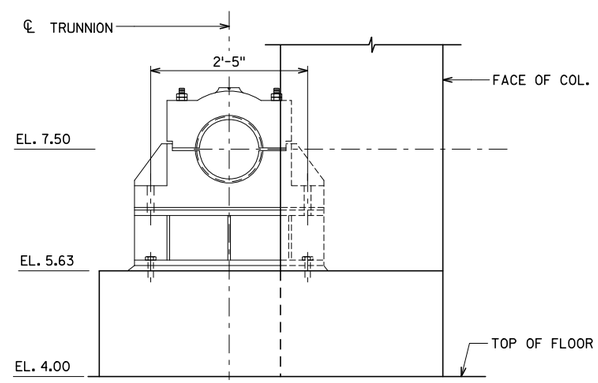

TRUNNION BEARING

(VIEW FROM FIXED SPAN SIDE)

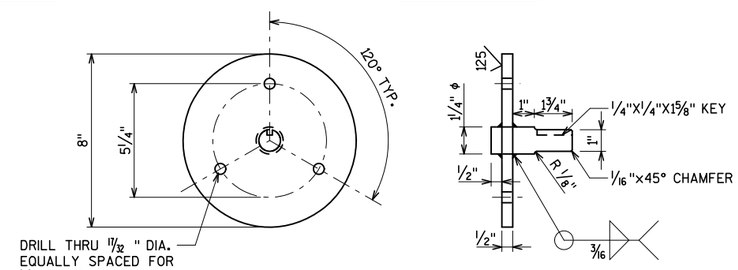

TRUNNION ADAPTER

(4) REQUIRED

ASTM A709 GRADE 50

NOTES:

1. CONTRACTOR TO COORDINATE TRUNNION REQUIREMENTS WITH BEARING MANUFACTURER.
2. COUNTERWEIGHT SHEAVES SHALL BE STEEL CASTINGS MEETING THE REQUIREMENTS OF ASTM A148 CLASS 90-60 OR SHALL BE STEEL WELDMENTS OF ASTM A36 STRUCTURAL STEEL WITH ASTM A668 CLASS D FORGED HUBS.
3. GREASE LINES SHOWN SHALL CONTINUE TO ACCESSIBLE LOCATION AS DIRECTED BY THE ENGINEER . GREASE FITTING AT THESE LOCATIONS SHALL BE INSTALLED IN GROUPS OF 2, 3, 4 OR MORE, AS PRACTICAL.
4. BASE BOLTS, ANCHOR BOLTS, NUTS AND WASHERS, SHALL BE HOT DIPPED GALVANIZED.
5. CONTRACTOR TO USE JACKING BOLTS TO LEVEL SUPPORT.
6. TRUNNION BEARING SUPPORT SHALL BE FABRICATED USING 5/16" FILLET WELDS. COST OF BEARING SUPPORT IS INCLUDED IN BID ITEM "COUNTERWEIGHT MACHINERY".
7. CONTRACTOR SHALL UTILIZE BEARING AS TEMPLATE TO FILED DRILL AND REAM BASE BOLT (H.S. TURNED BOLTS) HOLES IN SUPPORT.
8. MOUNT TRUNNION ADAPTER ON WEST SIDE OF PIER 2 COUNTERWEIGHT SHAFTS AND ON EAST SIDE OF PIER 3 COUNTERWEIGHT SHAFTS. COST INCLUDED IN BID ITEM "COUNTERWEIGHT MACHINERY".
9. BEARRING SHALL BE OF TWO PIECE SPLIT CONSTRUCTION AND SHALL HAVE OVAL LUBRICATION GROOVES IN THE BRONZE BUSHING.
10. ANCHOR BOLTS WILL BE PAID UNDER BID ITEM" BRIDGE STRUCTURAL STEEL".
11. SEE SHEET M5 FOR TRUNNION BEARING DETAILS

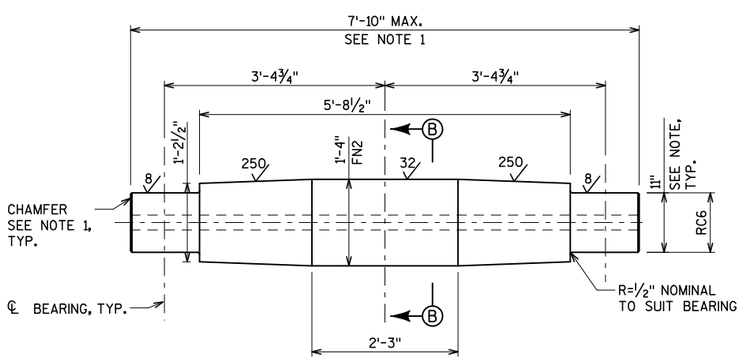

TRUNNION SHAFT

ASTM A 668 CLASS D

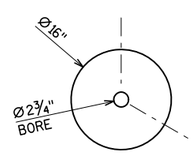

SECTION B-B

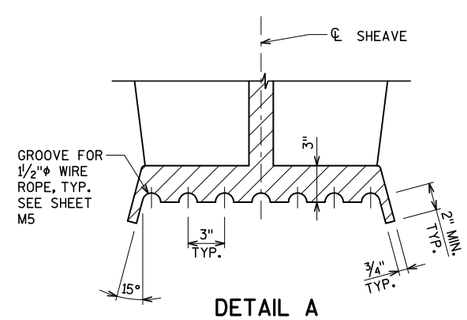

DETAIL A

City of Milwaukee

Department of Public Works

Infrastructure Services Division

BLOOM COMPANIES, LLC
Infrastructure Innovation and Ingenuity
10501 W. Research Drive • Milwaukee, WI 53226
Phone: (414) 771-3380 Fax: (414) 771-4490

ST PAUL AVE. LIFT BRIDGE
OVER THE MILWAUKEE RIVER
COUNTERWEIGHT SHEAVE
AND TRUNNION

REVISIONS

DESIGNED BY BDT	
DRAWN BY TAL	
CHECKED BY MPT	
DATE FEB 2013	SCALE NTS
JOB NUMBER BR100-10-0106	
SHEET NUMBER M4 OF M13	
OF 198	

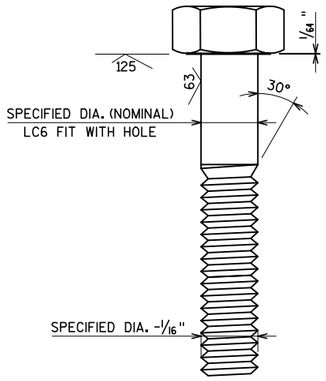

TYPICAL TURNED BOLT DETAIL

MATERIAL - ASTM A449
HEAVY HEX HEAD TURNED
FROM (SPECIFIED DIA. +1/16") BOLT BLANK

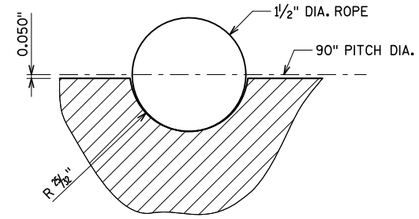

ROPE GROOVE DETAIL

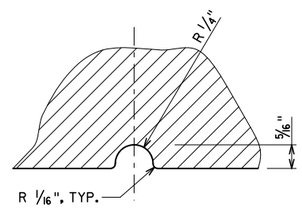

GREASE GROOVE DETAIL A

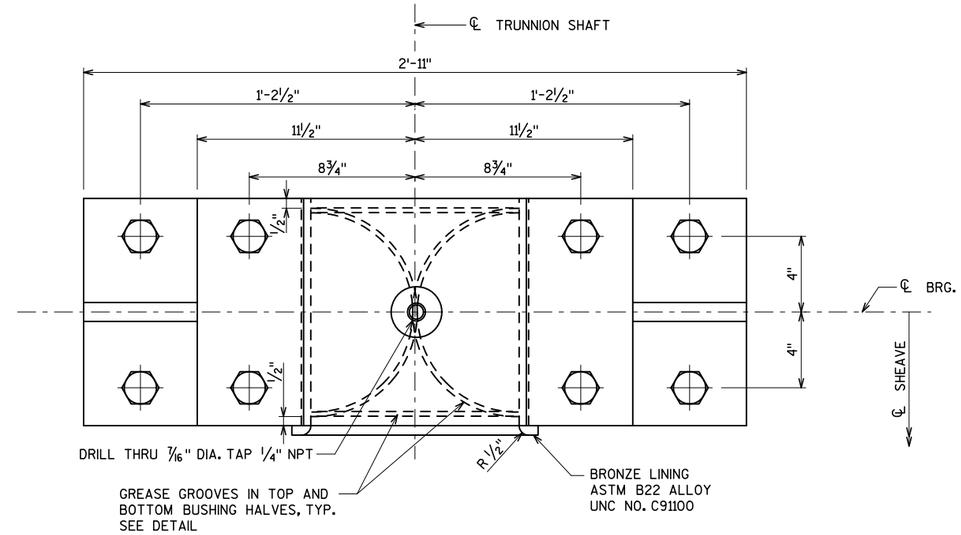

TRUNNION BEARING PLAN

(TOP VIEW)

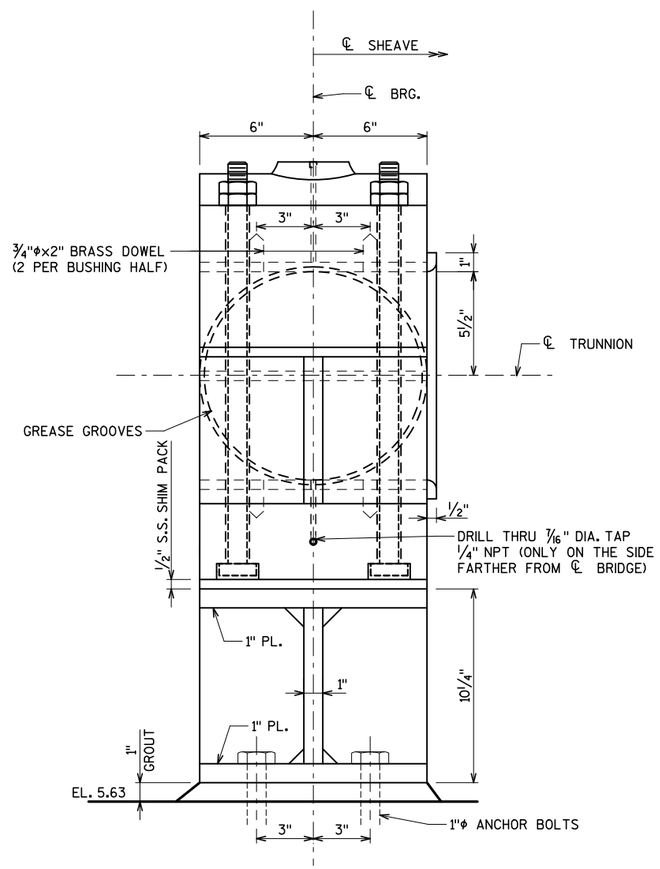

ELEVATION

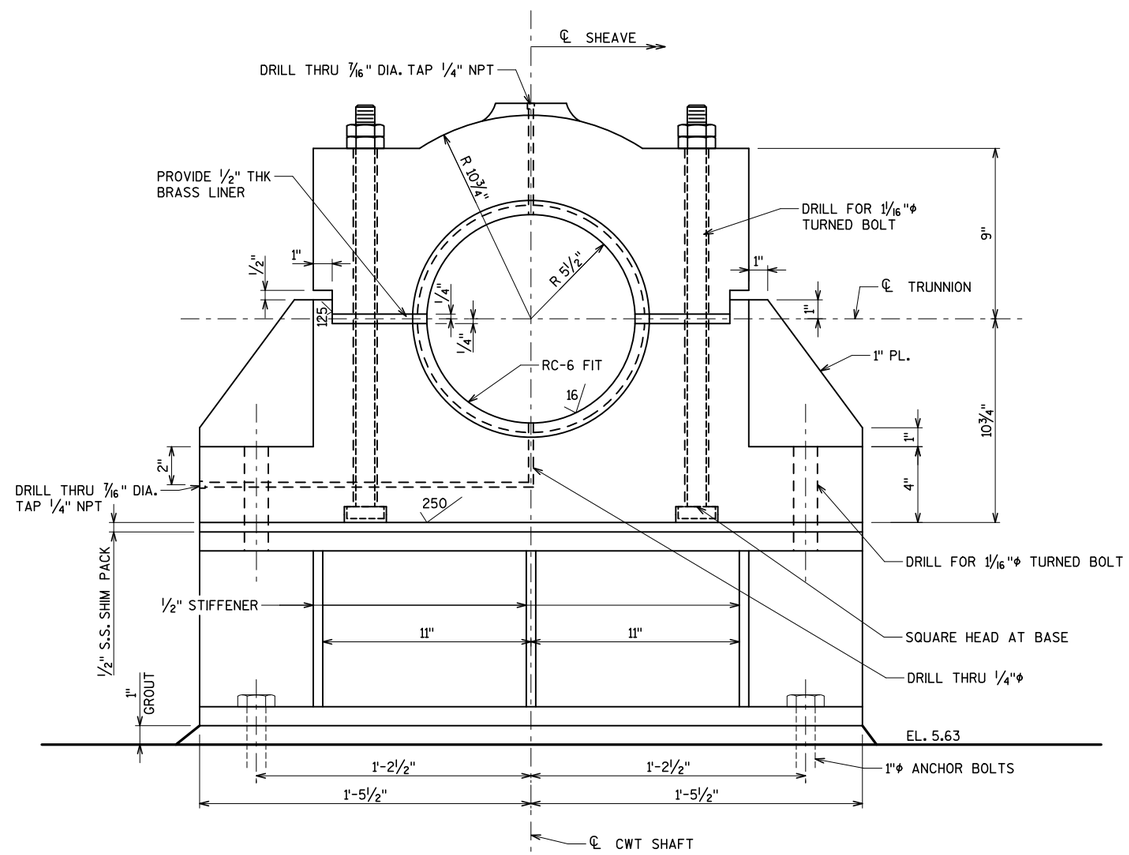

ELEVATION

City of Milwaukee

Department of Public Works

Infrastructure Services Division

BLOOM COMPANIES, LLC
Infrastructure Innovation and Ingenuity
10501 W. Research Drive • Milwaukee, WI 53226
Phone: (414) 771-3380 • Fax: (414) 771-4490

ST PAUL AVE. LIFT BRIDGE OVER THE MILWAUKEE RIVER TRUNNION BEARING

REVISIONS

DESIGNED BY BDT	
DRAWN BY TAL	
CHECKED BY MPT	
DATE FEB 2013	SCALE NTS
JOB NUMBER BR100-10-0106	
SHEET NUMBER M5 OF M13	
OF 198	

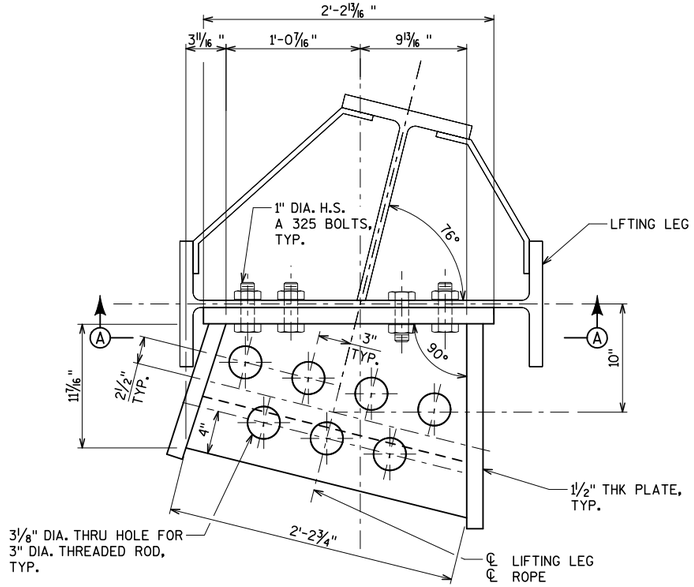

PLAN - COUNTERWEIGHT - ROPE CONNECTION - LIFT LEG

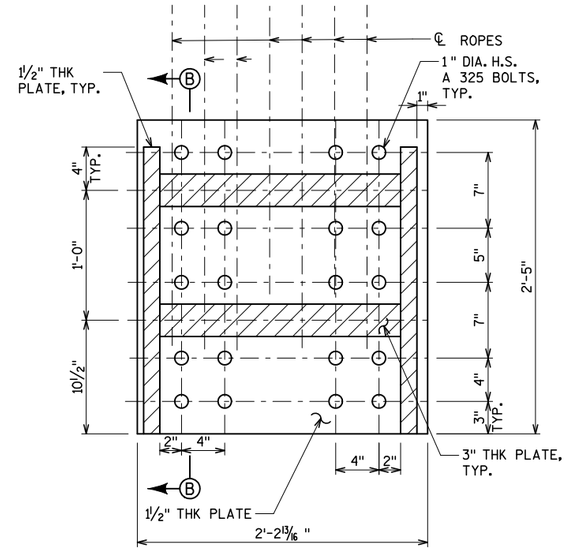

SECTION A-A

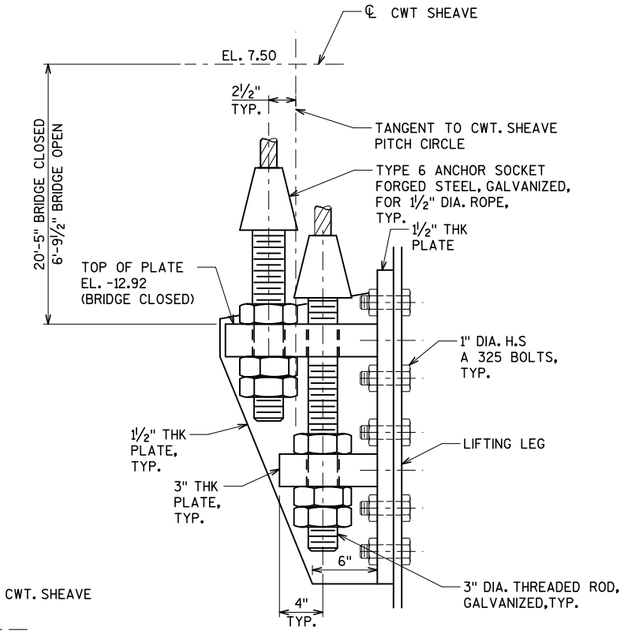

SECTION B-B

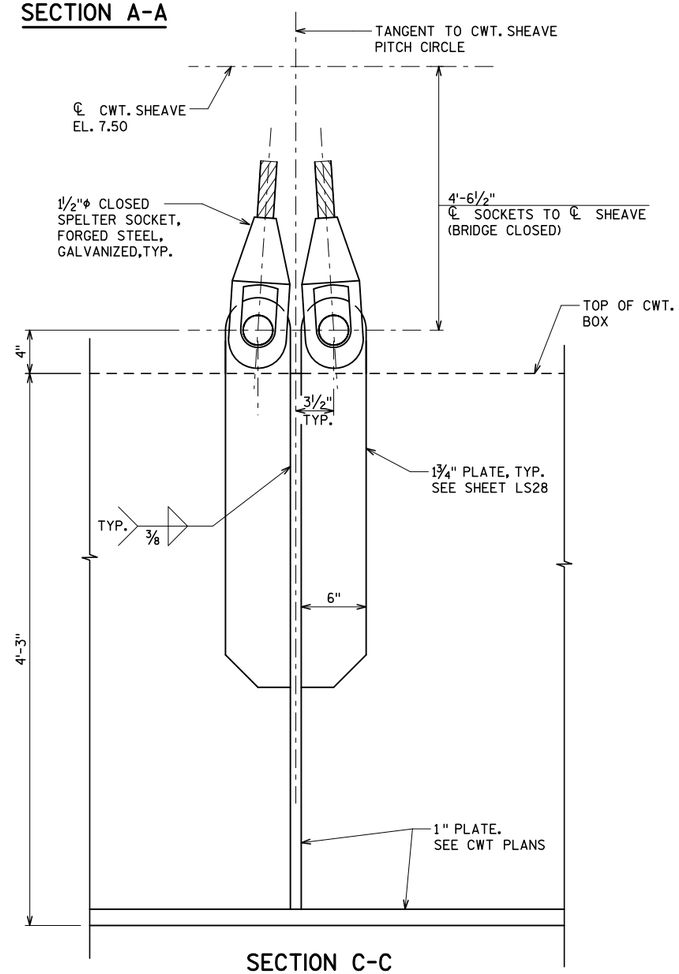

SECTION C-C

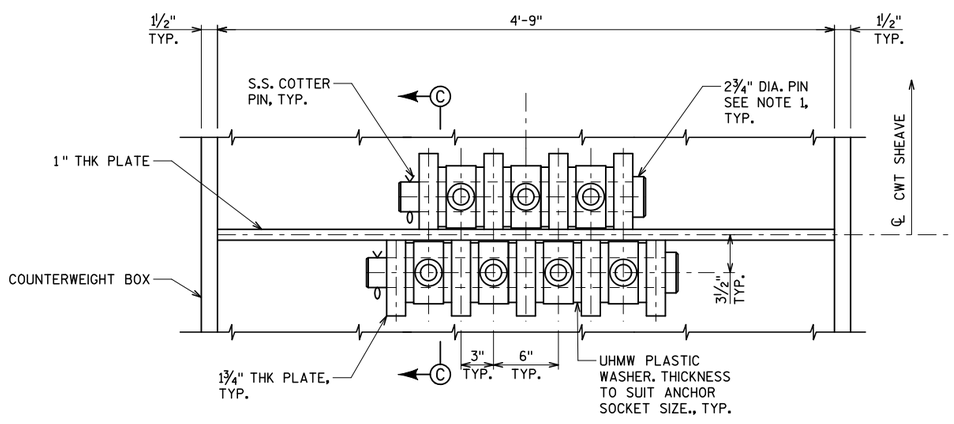

COUNTERWEIGHT ROPE CONNECTION

NOTES:

1. COUNTERWEIGHT PIN SHALL BE FABRICATED FROM ASTM A668 CLASS D.
2. COUNTERWEIGHT ROPE CONNECTION - LIFTING LEG WELDMENT SHALL BE FABRICATED FROM 7/16" FILLET WELDS.
3. WIRE ROPE SHALL BE GALVANIZED 6X19 FIBER CORE IMPROVED PLOW STEEL
4. ALL STRUCTURAL STEEL WELDMENTS AND BOLTS SHALL BE HOT DIP GALVANIZED AND PAINTED.
5. SEE SHEETS LS28 AND LS29 FOR COUNTERWEIGHT DETAILS.
6. WIRE ROPE ASSEMBLIES (ROPE, CLOSED SPELTER SOCKETS, ANCHOR SOCKETS, THREADED RODS, NUTS, AND PINS) SHALL HAVE A MINIMUM BREAKING STRENGTH OF 83 TONS.

City of Milwaukee

Department of Public Works

Infrastructure Services Division

BLOOM COMPANIES, LLC
Infrastructure Innovation and Ingenuity
10501 W. Research Drive • Milwaukee, WI 53226
Phone: (414) 771-3380 Fax: (414) 771-4490

ST PAUL AVE. LIFT BRIDGE OVER THE MILWAUKEE RIVER COUNTERWEIGHT ROPE AND CONNECTIONS

REVISIONS

DESIGNED BY BDT	
DRAWN BY TAL	
CHECKED BY MPT	
DATE FEB 2013	SCALE NTS
JOB NUMBER BR100-10-0106	
SHEET NUMBER M6 OF M13	
OF 198	

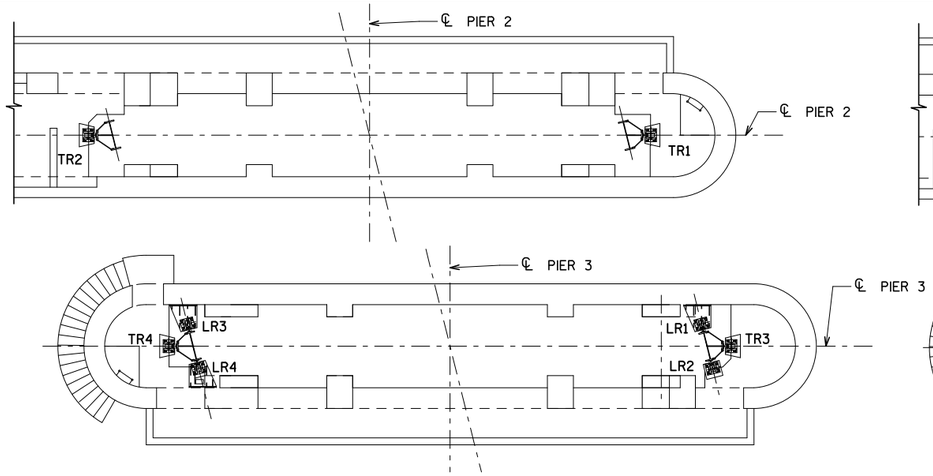

LOWER GUIDE ROLLER ASSEMBLY- KEY PLAN

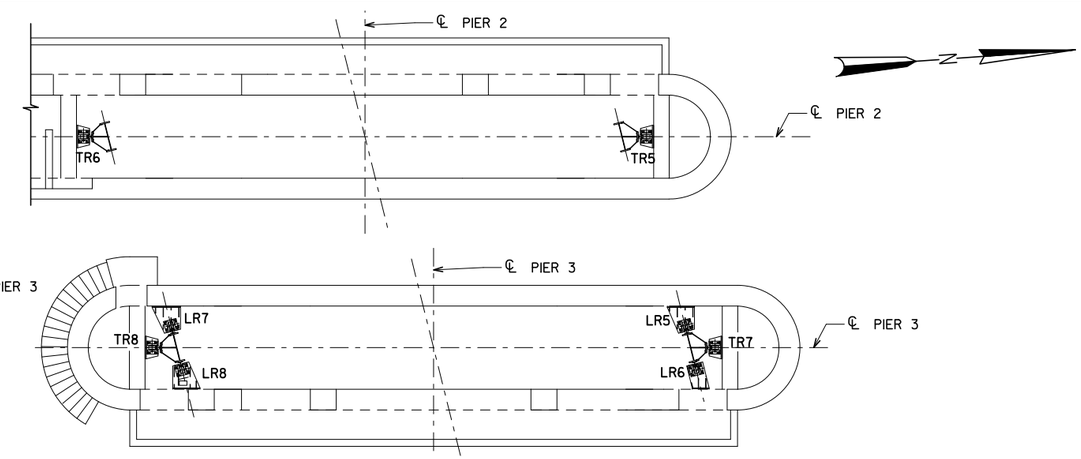

UPPER GUIDE ROLLER ASSEMBLY- KEY PLAN

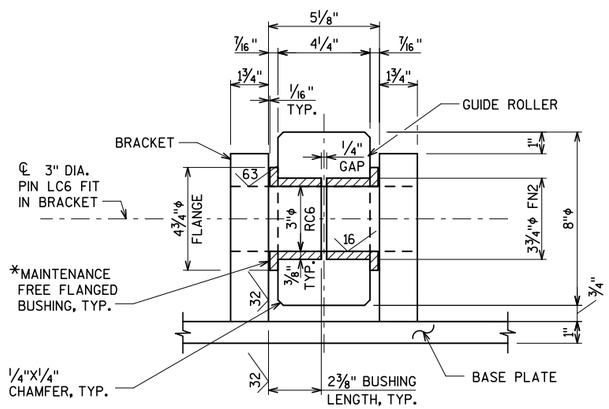

✳ LUBRON AQ30, ALLOY 954 WITH LUBRICATED FLANGE OR EQUALS BY GARPHALLOY OR DEVAGLIDE (2 REQUIRED PER ROLLER)

GUIDE ROLLER BUSHINGS DETAILS

NOTE: SECURE PIN AGAINST ROTATION IN BRACKET AND PROVIDE MEANS TO LOCK PIN IN PLACE LATERLALLY.

8 MICROINCH FINISH-PIN AT BUSHING
63 MICROINCH FINISH- PIN AT BRACKET.

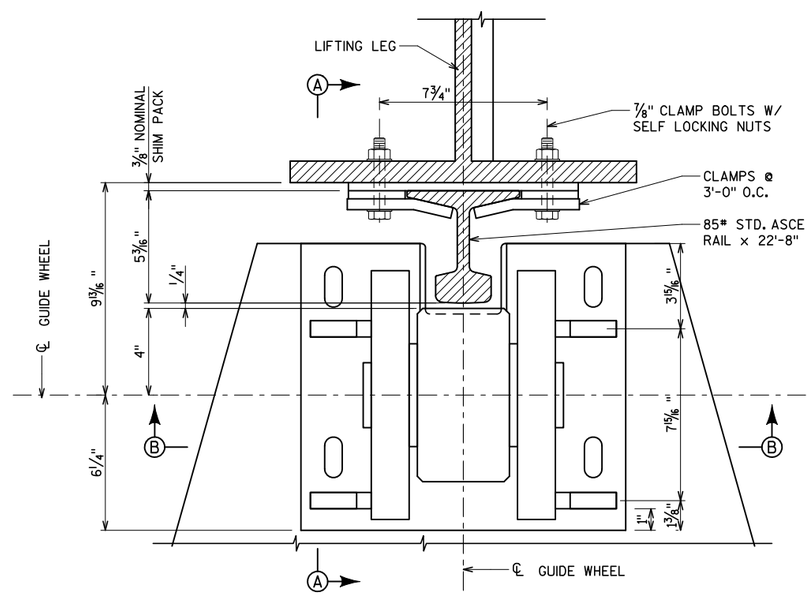

GUIDE ROLLER ASSEMBLY PLAN

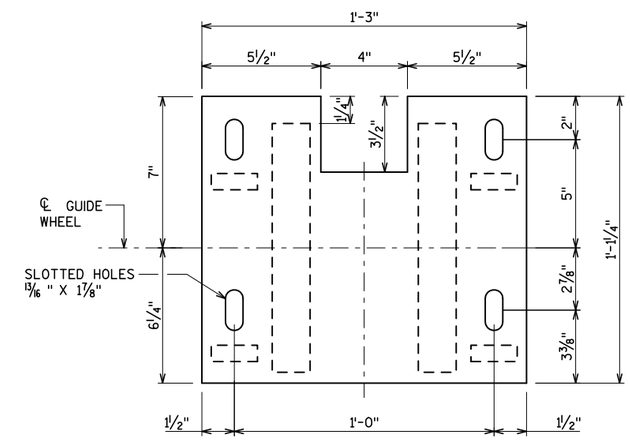

ROLLER GUIDE ASSEMBLY BASE PLATE

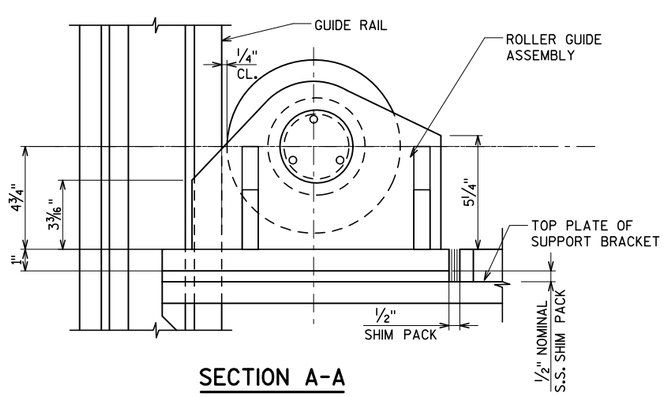

SECTION A-A

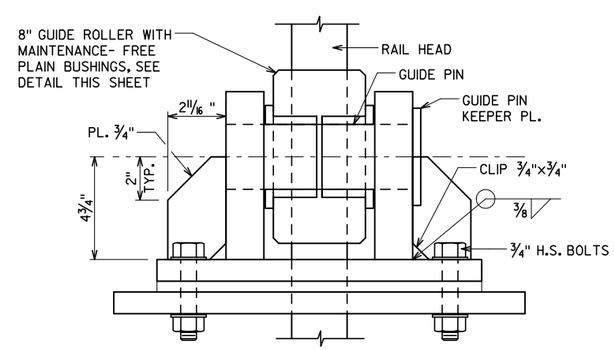

SECTION B-B

NOTES

1. DESIGN AND SIZING OF COMPONENTS ARE BASED ON A MAXIMUM LOAD OF 13.4 KIPS PER GUIDE ROLLER.
2. THE NEW ROLLER GUIDE SUPPORT WELDMENT SHALL BE SECURED TO THE CONCRETE SUPPORTS WITH STAINLESS STEEL ANCHOR RODS.
3. ALL SHIMS SAHLL BE STAINLESS STEEL
4. GUIDE PIN SHALL BE ASTM A668 CLASS D
5. ROLLER GUIDE ASSEMBLY AND SUPPORT PLATES SHALL BE ASTM A709, GRADE 36.
6. HS BOLTS SHALL BE GALVANIZED ASTM A325.
7. FABRICATE ROLLER GUIDE STRUCTURAL SUPPORT WELDMENTS WITH 5/16" FILLET WELDS.
8. SEE SHEETS M8-M11 FOR GUIDE ROLLER ASSEMBLY SUPPORT BRACKET DETAILS.

City of Milwaukee
Department of Public Works
Infrastructure Services Division

BLOOM COMPANIES, LLC
Infrastructure Innovation and Ingenuity
10501 W. Research Drive • Milwaukee, WI 53226
Phone: (414) 771-3380 Fax: (414) 771-4490

ST PAUL AVE. LIFT BRIDGE OVER THE MILWAUKEE RIVER GUIDE ROLLER ASSEMBLY

REVISIONS

DESIGNED BY BDT	
DRAWN BY TAL	
CHECKED BY MPT	
DATE FEB 2013	SCALE NTS
JOB NUMBER BR100-10-0106	
SHEET NUMBER M7 OF M13	
OF 198	

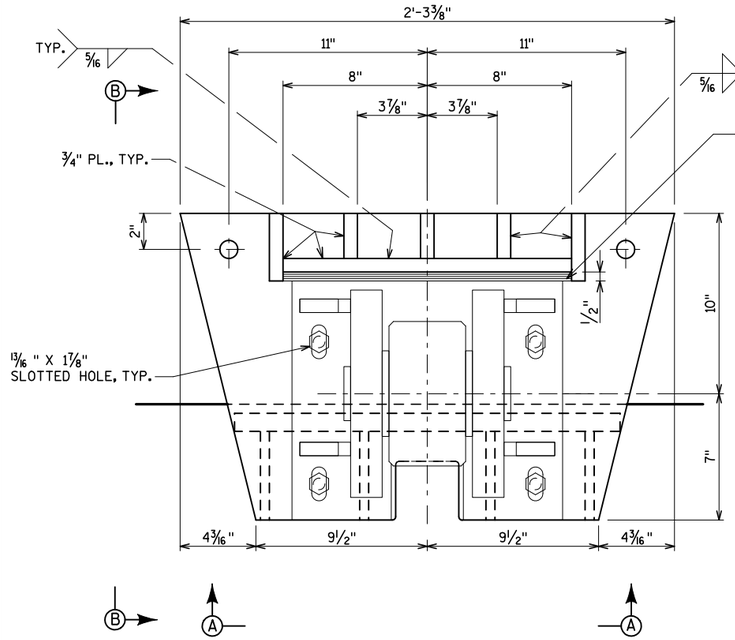

PLAN

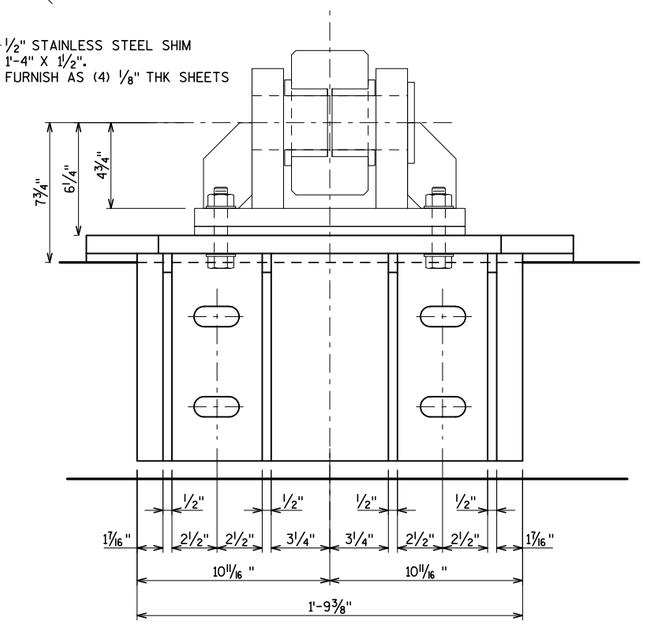

VIEW A-A

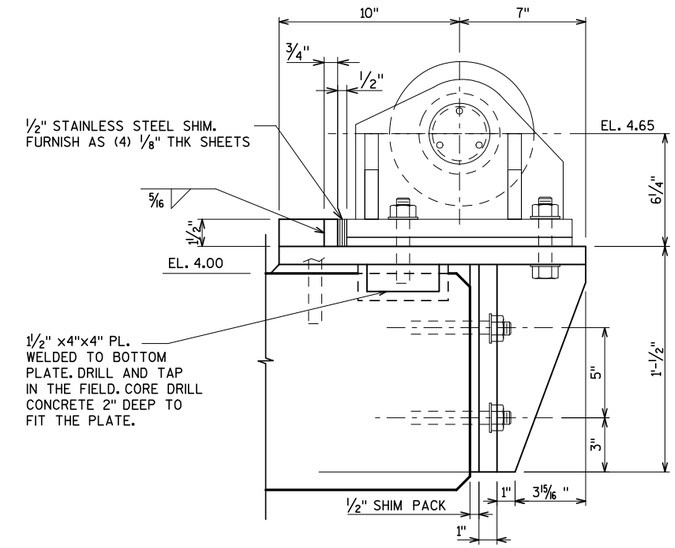

VIEW B-B

LOWER TRANSVERSE GUIDE ROLLER ASSEMBLIES TR1, TR2, TR3, & TR4

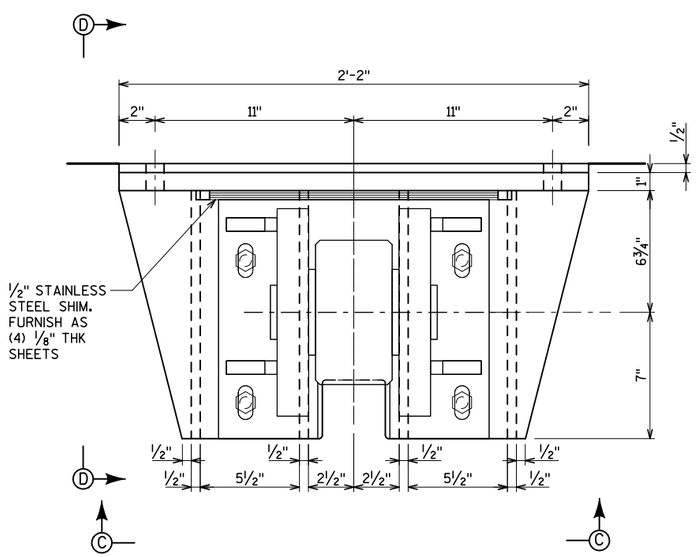

PLAN

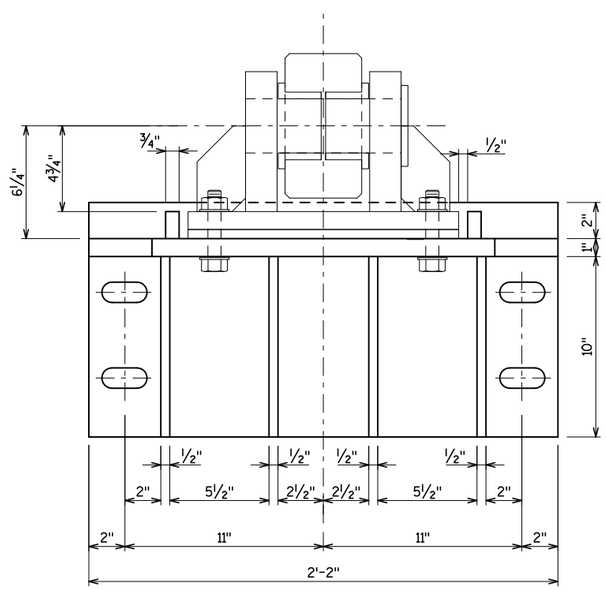

VIEW C-C

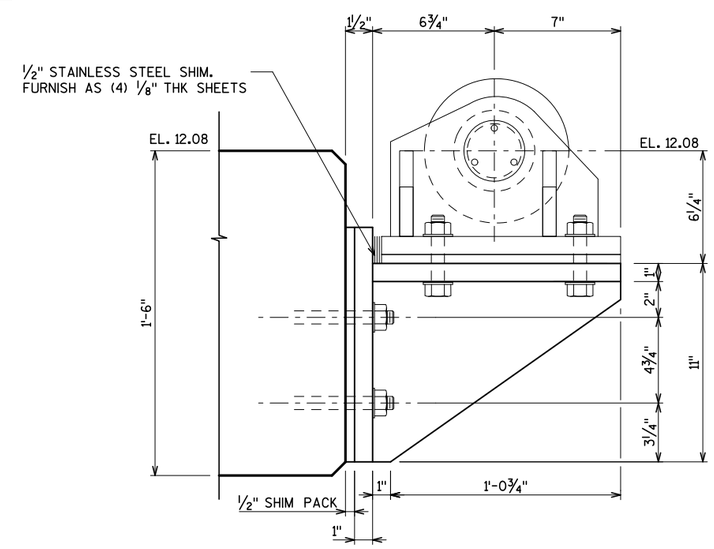

VIEW D-D

UPPER TRANSVERSE GUIDE ROLLER ASSEMBLIES TR5, TR6, TR7, & TR8

NOTES

SEE SHEET M7 FOR GUIDE ROLLER ASSEMBLY DETAILS

City of Milwaukee

Department of Public Works

Infrastructure Services Division

BLOOM COMPANIES, LLC
Infrastructure Innovation and Ingenuity
10501 W. Research Drive • Milwaukee, WI 53226
Phone: (414) 771-3380 Fax: (414) 771-4490

ST PAUL AVE. LIFT BRIDGE
OVER THE MILWAUKEE RIVER
GUIDE ROLLER SUPPORT
(1 OF 4)

REVISIONS

DESIGNED BY BDT	
DRAWN BY TAL	
CHECKED BY MPT	
DATE FEB 2013	SCALE NTS
JOB NUMBER BR100-10-0106	
SHEET NUMBER M8 OF M13	
OF 198	

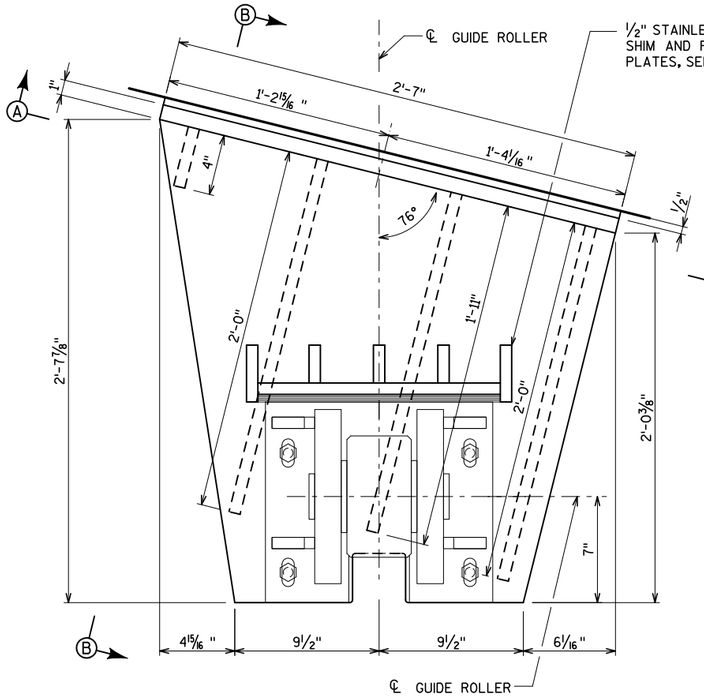

PLAN

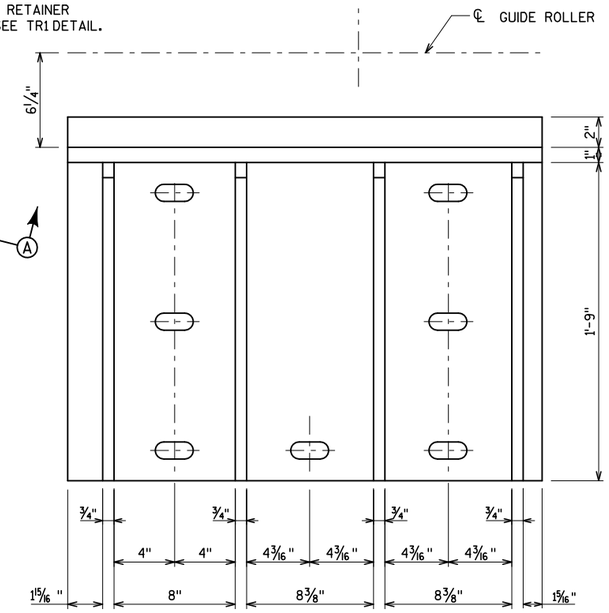

SECTION A-A

GUIDE ROLLER NOT SHOWN FOR CLARITY

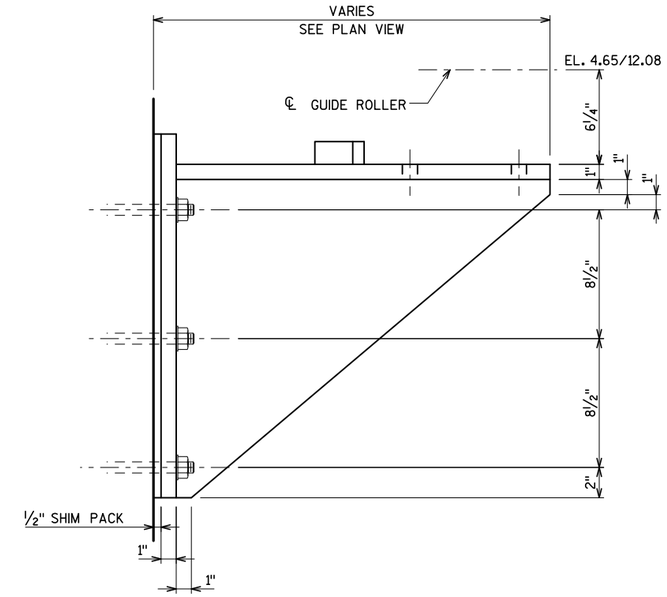

SECTION B-B

GUIDE ROLLER NOT SHOWN FOR CLARITY

LONGITUDINAL GUIDE ROLLER ASSEMBLIES LR1, LR3, LR5 & LR7

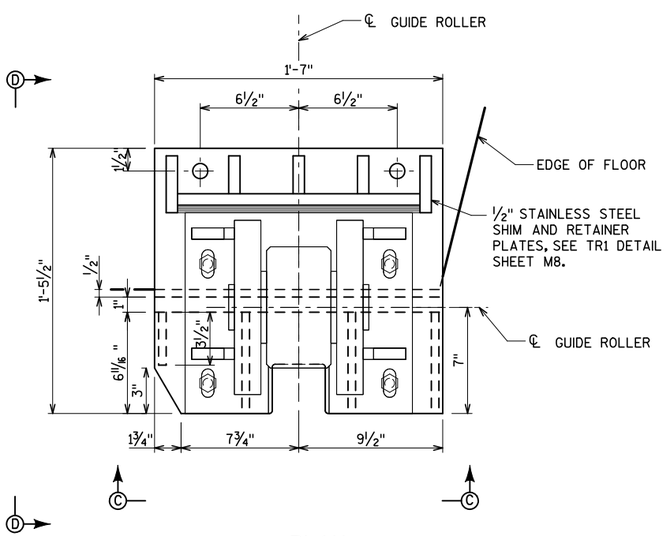

PLAN

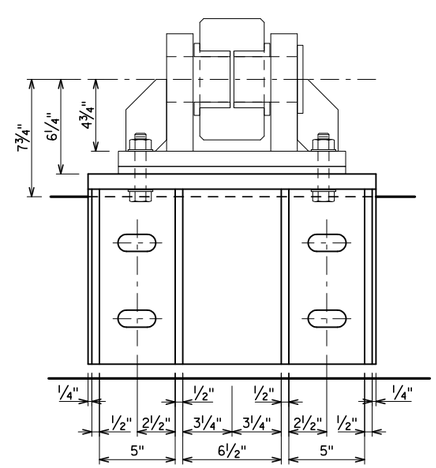

VIEW C-C

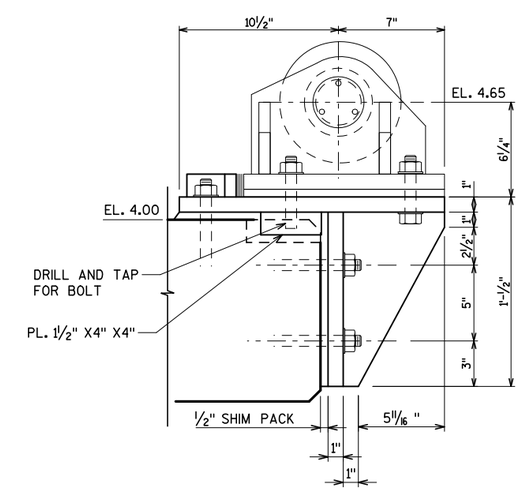

VIEW D-D

LOWER LONGITUDINAL GUIDE ROLLER ASSEMBLY LR2

NOTES

SEE SHEET M7 FOR GUIDE ROLLER ASSEMBLY DETAILS

City of Milwaukee

Department of Public Works

Infrastructure Services Division

BLOOM COMPANIES, LLC
Infrastructure Innovation and Ingenuity
10501 W. Research Drive • Milwaukee, WI 53226
Phone: (414) 771-3380 Fax: (414) 771-4490

ST PAUL AVE. LIFT BRIDGE
OVER THE MILWAUKEE RIVER
GUIDE ROLLER SUPPORT
(2 OF 4)

REVISIONS

DESIGNED BY BDT	
DRAWN BY TAL	
CHECKED BY MPT	
DATE FEB 2013	SCALE NTS
JOB NUMBER BR100-10-0106	
SHEET NUMBER M9 OF M13	
OF 198	

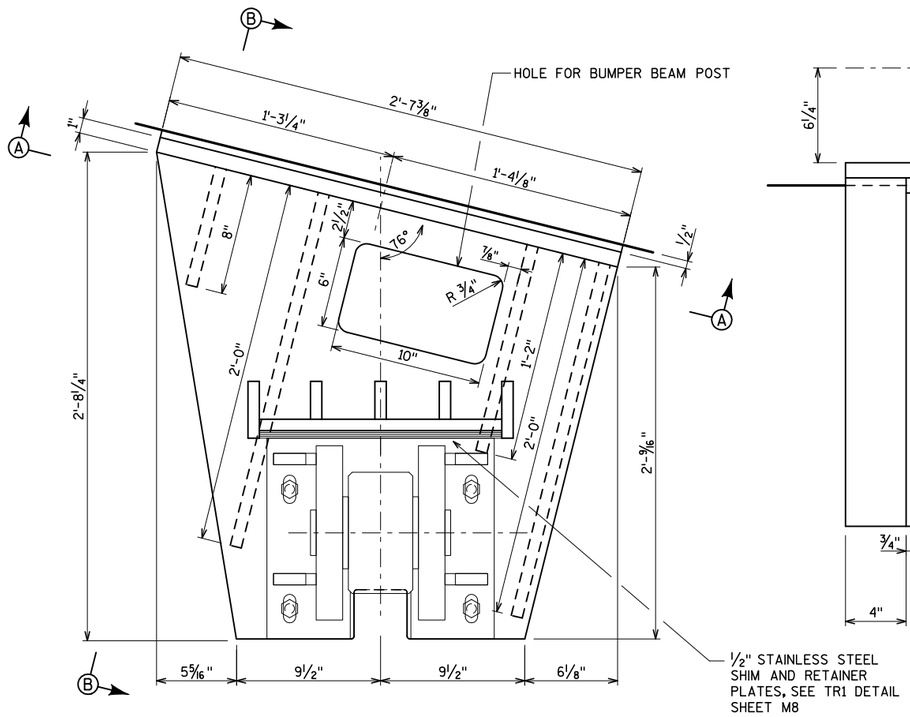

PLAN

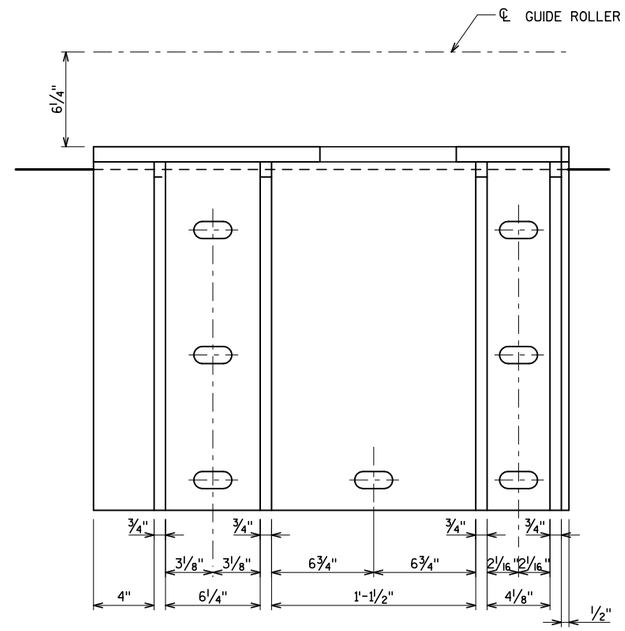

SECTION A-A

GUIDE ROLLER NOT SHOWN FOR CLARITY

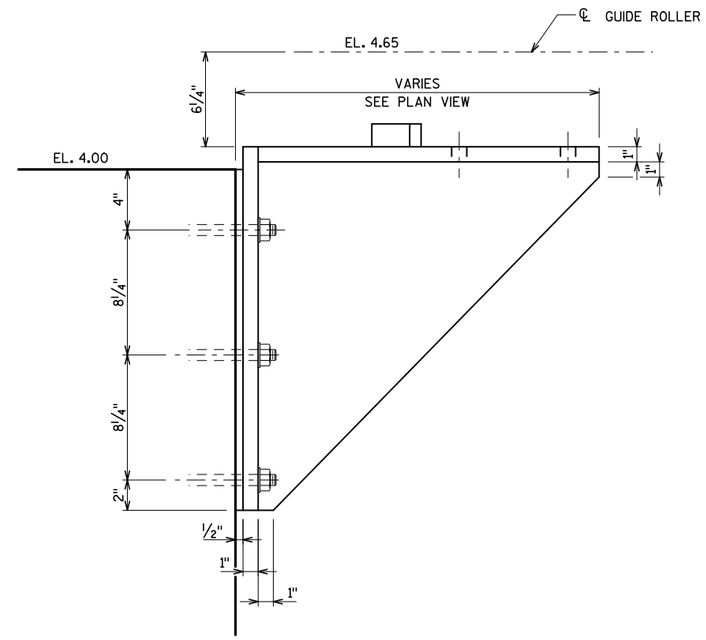

SECTION B-B

GUIDE ROLLER NOT SHOWN FOR CLARITY

LOWER LONGITUDINAL GUIDE ROLLER ASSEMBLY LR4

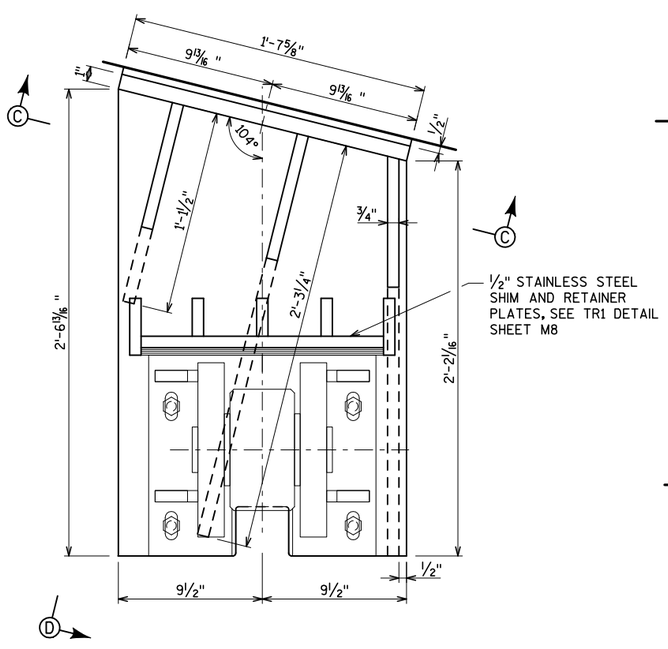

PLAN

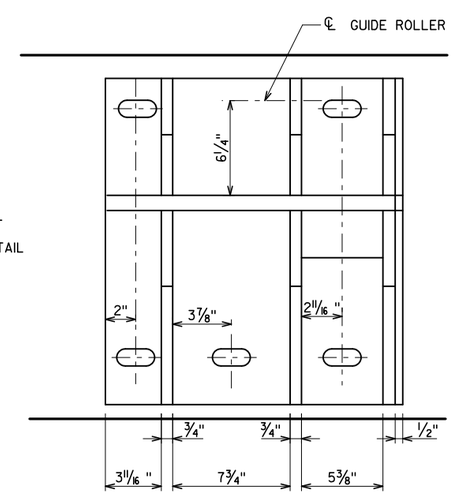

SECTION C-C

GUIDE ROLLER NOT SHOWN FOR CLARITY

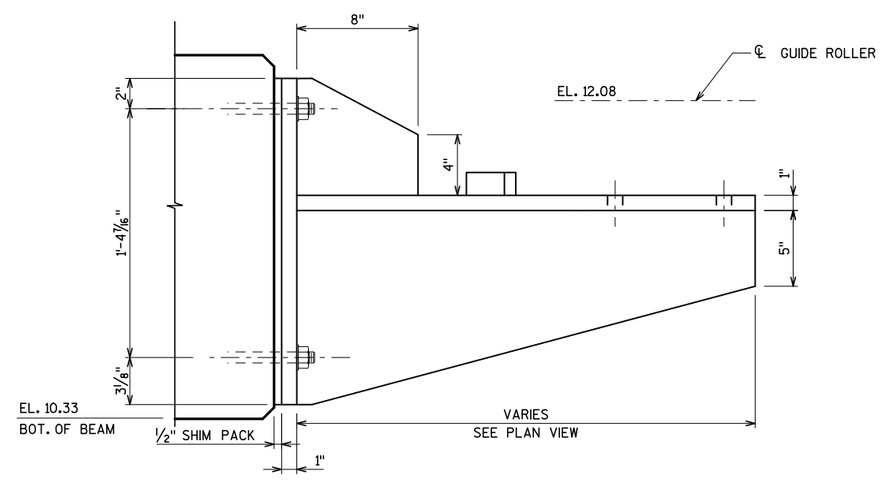

VIEW D-D

GUIDE ROLLER NOT SHOWN FOR CLARITY

UPPER LONGITUDINAL GUIDE ROLLER ASSEMBLY LR6

NOTES

SEE SHEET M7 FOR GUIDE ROLLER ASSEMBLY DETAILS

City of Milwaukee

Department of Public Works

Infrastructure Services Division

BLOOM COMPANIES, LLC
Infrastructure Innovation and Ingenuity
10501 W. Research Drive • Milwaukee, WI 53226
Phone: (414) 771-3380 Fax: (414) 771-4490

ST PAUL AVE. LIFT BRIDGE OVER THE MILWAUKEE RIVER GUIDE ROLLER SUPPORT (3 OF 4)

REVISIONS

DESIGNED BY BDT	
DRAWN BY TAL	
CHECKED BY MPT	
DATE FEB 2013	SCALE NTS
JOB NUMBER BR100-10-0106	
SHEET NUMBER M10 OF M13	
OF 198	

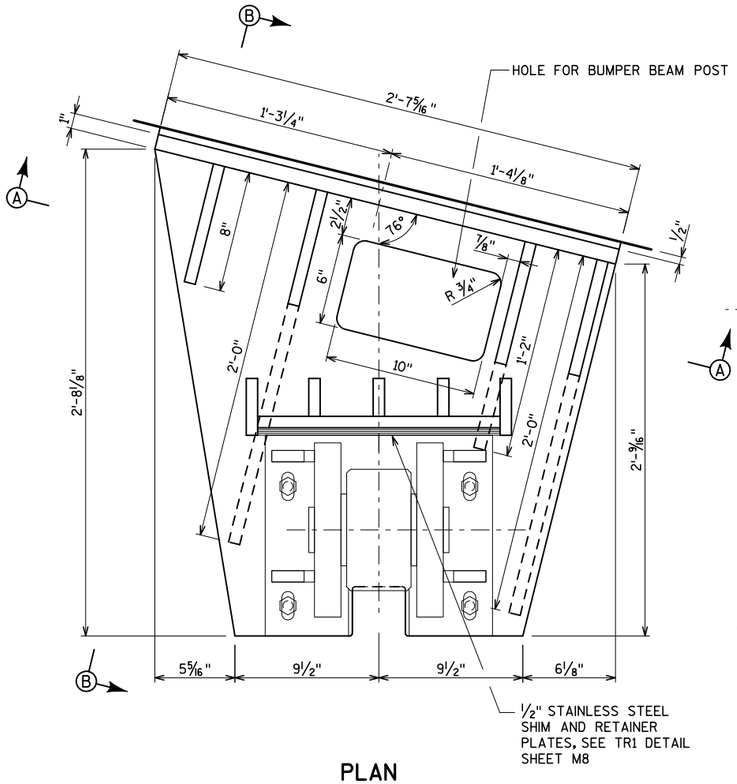

PLAN

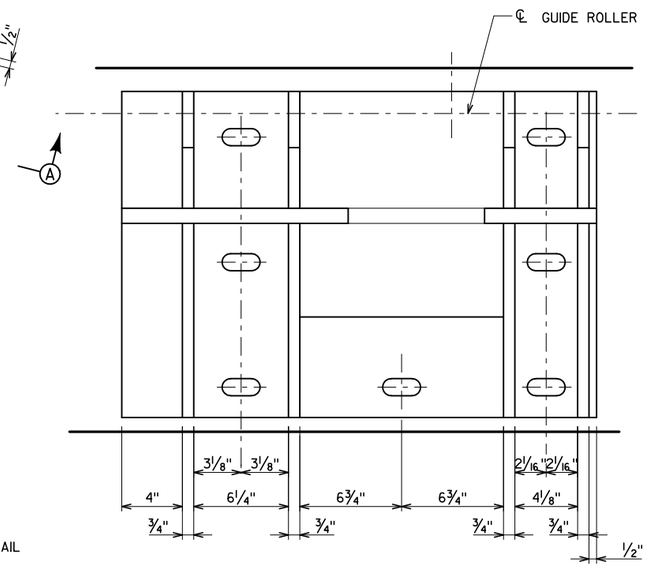

SECTION A-A

GUIDE ROLLER NOT SHOWN FOR CLARITY

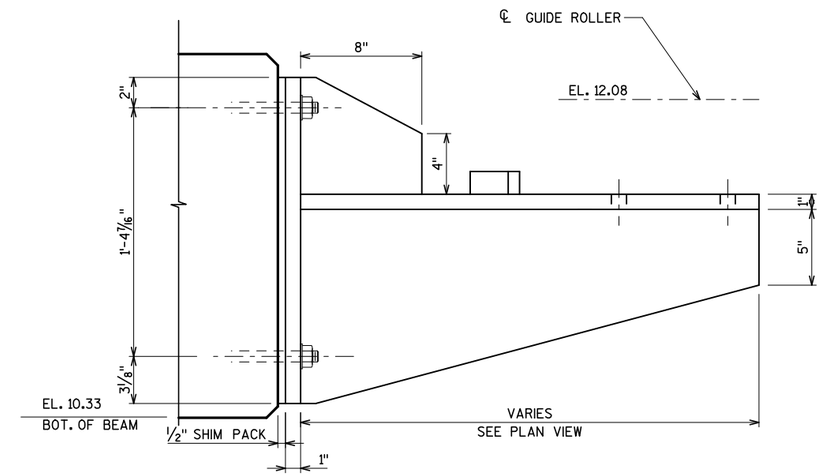

VIEW B-B

GUIDE ROLLER NOT SHOWN FOR CLARITY

UPPER LONGITUDINA; GUIDE ROLLER ASSEMBLY LR8

NOTES

SEE SHEET M7 FOR GUIDE ROLLER ASSEMBLY DETAILS

City of Milwaukee

Department of Public Works

Infrastructure Services Division

BLOOM COMPANIES, LLC
Infrastructure Innovation and Ingenuity
10501 W. Research Drive • Milwaukee, WI 53226
Phone: (414) 771-3380 Fax: (414) 771-4490

ST PAUL AVE. LIFT BRIDGE
OVER THE MILWAUKEE RIVER
GUIDE ROLLER SUPPORT
(4 OF 4)

REVISIONS

DESIGNED BY BDT	
DRAWN BY TAL	
CHECKED BY MPT	
DATE FEB 2013	SCALE NTS
JOB NUMBER BR100-10-0106	
SHEET NUMBER M11 OF M13	
OF 198	

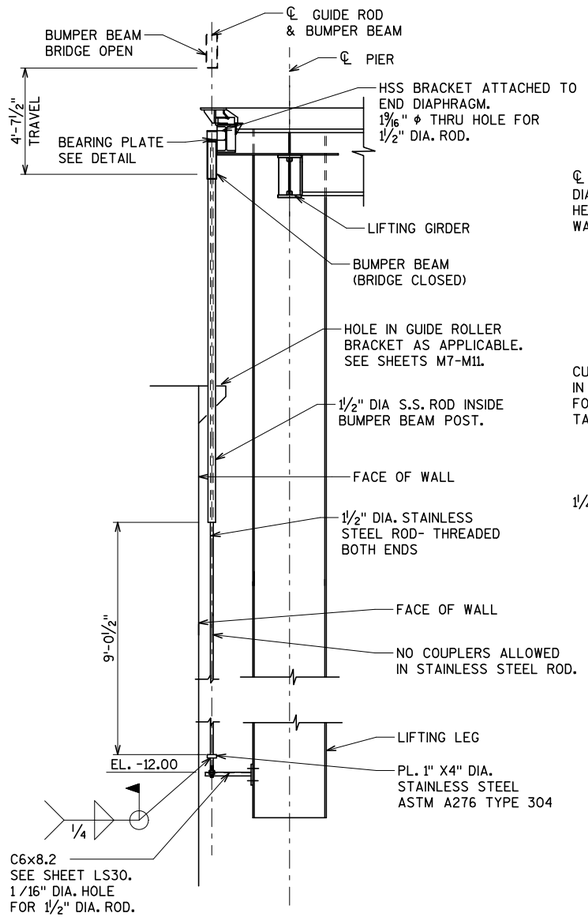

LIFTING LEG - ELEVATION

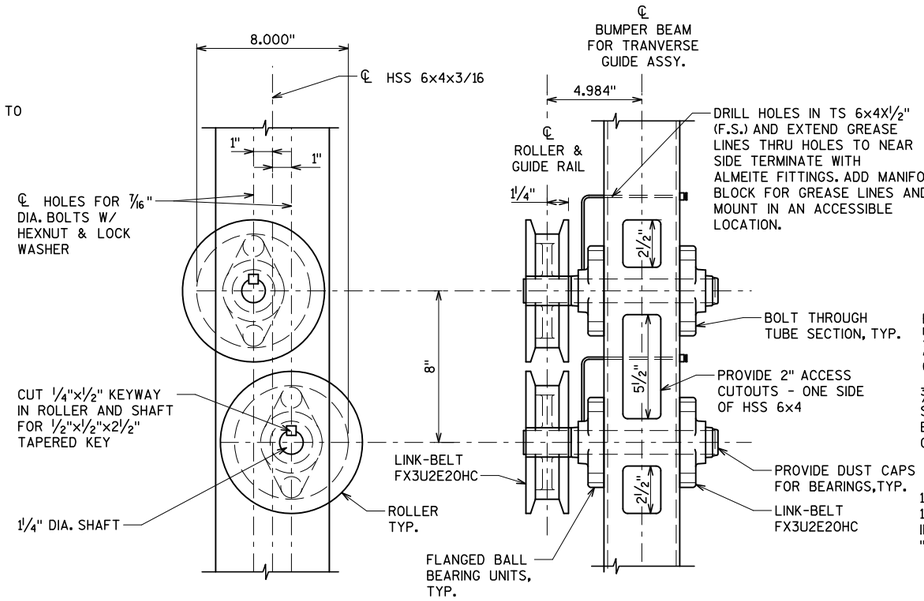

TWIN ROLLER GUIDE ASSEMBLY - DETAIL

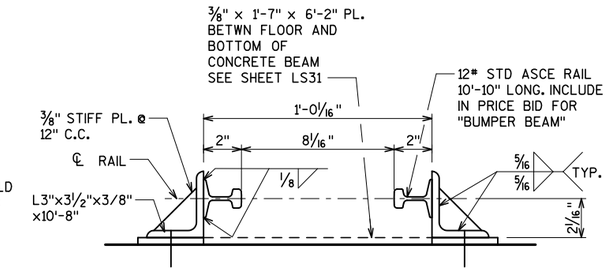

TRANSVERSE GUDE - PLAN

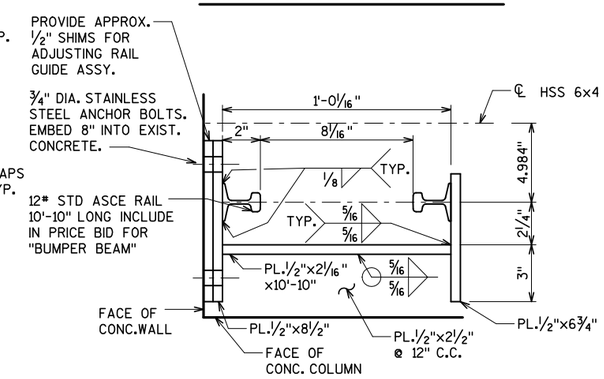

LONGITUDINAL GUIDE - PLAN

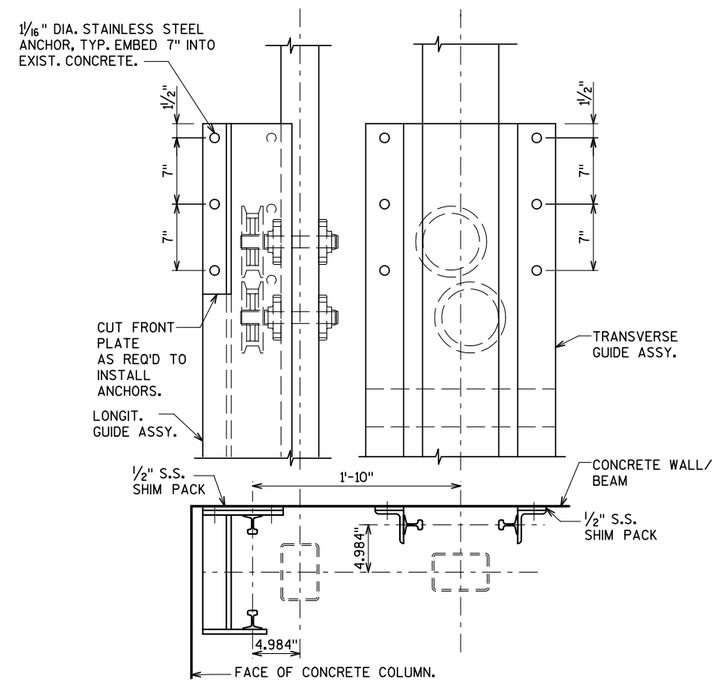

GUIDE ANCHOR DETAIL

NE AND SW GUIDES SHOWN.
NW AND SE GUIDES OPPOSITE.

GUIDE TOP CONECTION TO CONCRETE BEAM SHOWN.
BOTTOM CONNECTION TO CONCRETE WALL SIMILAR.

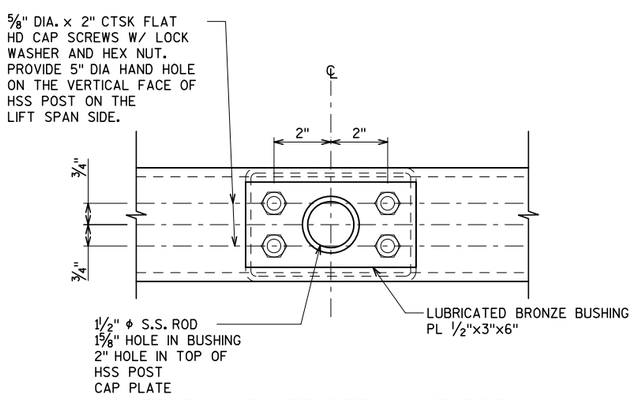

BEARING PLATE DETAIL AT ROD

NOTES

BEARING PLATE TO BE MOUNTED ON THE TOP OF BUMPER BEAM. ROUND CORNERS OF PLATE AS REQUIRED TO FIT.

SEE SHEET LS30 FOR BUMPER BEAM PULLEY DETAILS.

BUMPER BEAM PULLEY SHAFT AND ROLLER SHAFTS SHALL BE FABRICATED FROM ASTM A668 CLASS D.

BUMPER BEAM CONNECTIONS SHALL UTILIZE STUD SWAGE SOCKETS.

GALVANIZE AND PAINT ALL STEEL COMPONENTS EXCEPT BEARINGS AND SHAFTS. ASCE 12# RAIL NEED NOT BE GALVANIZED.

WHERE A MANUFACTURER'S NAME IS INDICATED ON THE PLAN AN EQUIVALENT PRODUCT MAY BE SUBSTITUTED WITH THE APPROVAL OF THE ENGINEER. PLAN DIMENSIONS ARE BASED ON THE PRODUCT BY THE MANUFACTURER SHOWN ON THE PLANS AND SHALL BE ADJUSTED FOR THE SELECTED PRODUCT.

BID ITEM IS "BUMPER BEAM" AND SHALL INCLUDE ALL ITEMS SHOWN ON THIS SHEET AND SHEET LS30.

City of Milwaukee
Department of Public Works
Infrastructure Services Division

BLOOM COMPANIES, LLC
Infrastructure Innovation and Ingenuity
10501 W. Research Drive • Milwaukee, WI 53226
Phone: (414) 771-3380 Fax: (414) 771-4490

ST PAUL AVE. LIFT BRIDGE
OVER THE MILWAUKEE RIVER
BUMPER BEAM GUIDES

REVISIONS

DESIGNED BY BDT	
DRAWN BY TAL	
CHECKED BY MPT	
DATE FEB 2013	SCALE NTS
JOB NUMBER BR100-10-0106	
SHEET NUMBER M12 OF M13	
OF 198	

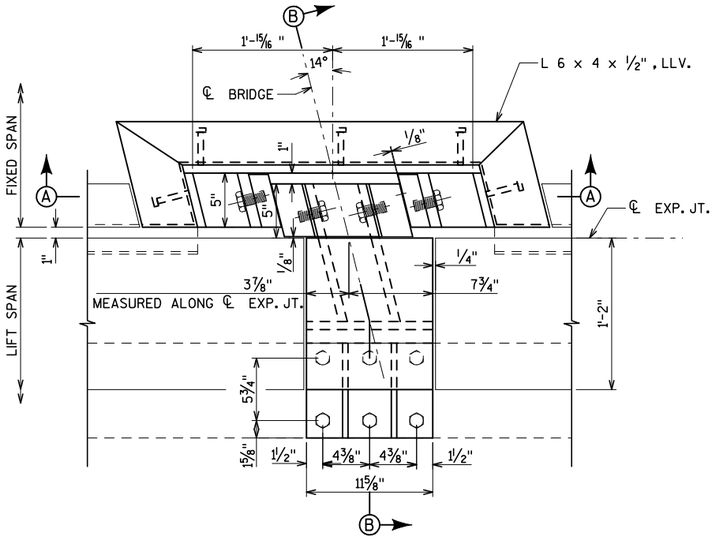

PLAN AT CENTERING DEVICE

PIER 3 SHOWN. PIER 2 OPPOSITE, EXCEPT FOR SKEW.

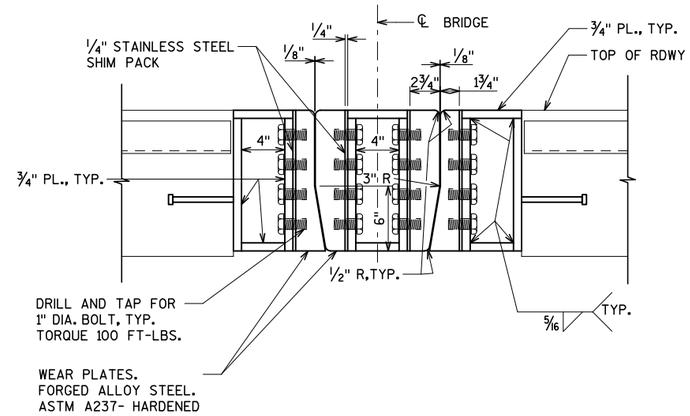

SECTION A-A

NOTE: ALL HORIZONTAL DIMENSIONS MEASURED NORMAL TO ℄ BRIDGE

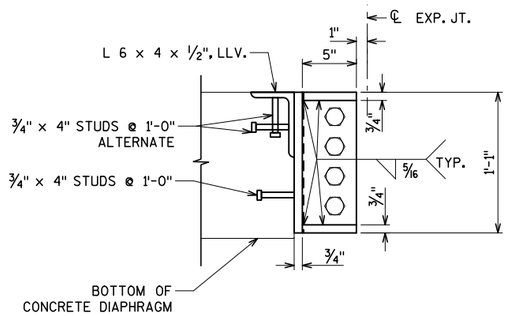

FIXED SPAN

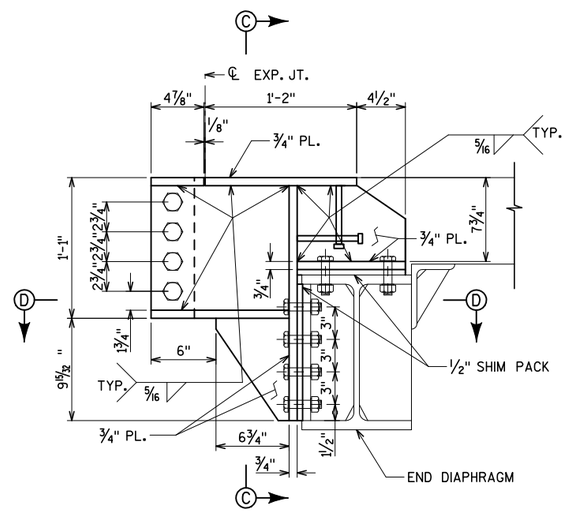

LIFT SPAN

SECTION B-B

NOTE: ALL HORIZONTAL DIMENSIONS MEASURED NORMAL TO ℄ EXP. JT.

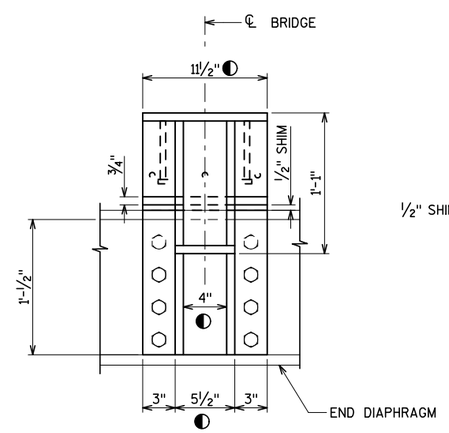

SECTION C-C

◐ DIMENSION MEASURED NORMAL TO ℄ BRIDGE

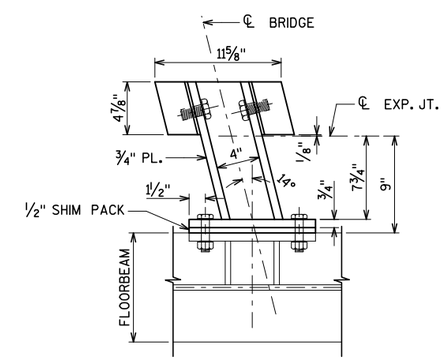

SECTION D-D

NOTES

CENTERING DEVICE WELDMENT SHALL BE FABRICATED FROM 5/16" FILLET WELDS.

HOT DIP GALVANIZE AND PAINT ALL STEEL, EXCEPT WEAR PLATES, AFTER FABRICATION.

ATTACH CENTERING DEVICE TO THE STRUCTURE USING 1" DIA x 2 5/8" LONG FULLY THREADED TURNED BOLTS.

BID ITEM IS "CENTERING DEVICE" AND SHALL INCLUDE ALL ITEMS SHOWN EXCEPT THE END DIAPHRAGMS.

City of Milwaukee
Department of Public Works
Infrastructure Services Division

BLOOM COMPANIES, LLC
Infrastructure Innovation and Ingenuity
10501 W. Research Drive • Milwaukee, WI 53226
Phone: (414) 771-3380 Fax: (414) 771-4490

ST PAUL AVE. LIFT BRIDGE OVER THE MILWAUKEE RIVER CENTERING DEVICE

REVISIONS

DESIGNED BY BDT	
DRAWN BY TAL	
CHECKED BY MPT	
DATE FEB 2013	SCALE NTS
JOB NUMBER BR100-10-0106	
SHEET NUMBER M13 OF M13	
OF 198	

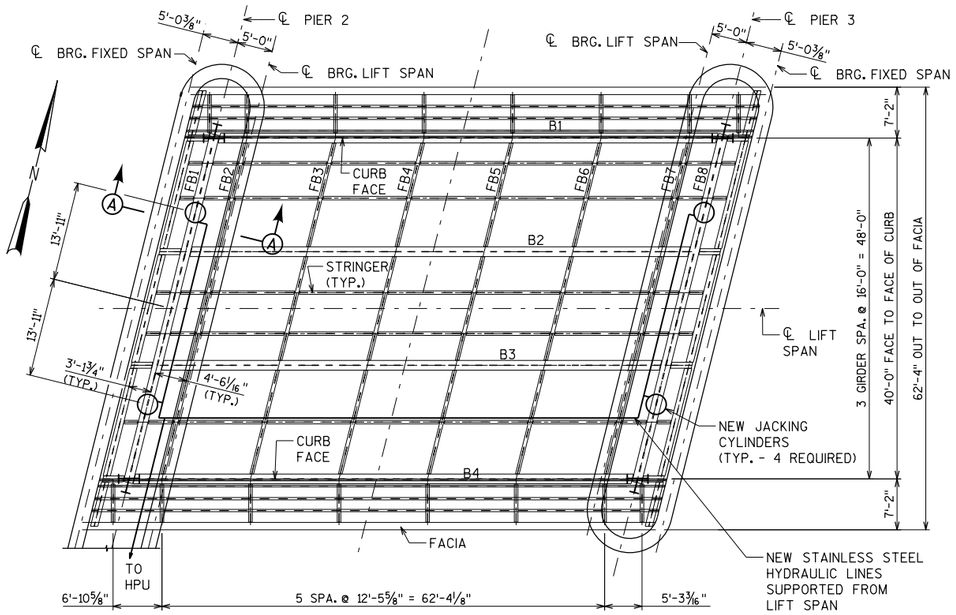

PLAN

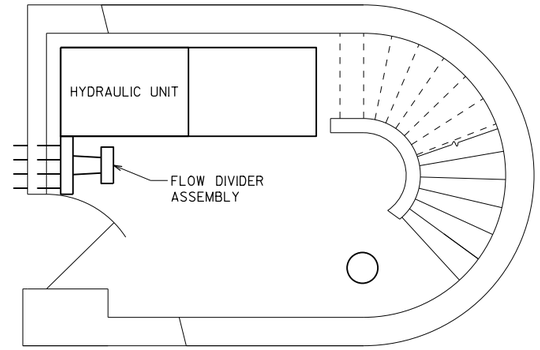

PLAN OF HYDRAULIC EQUIPMENT ROOM

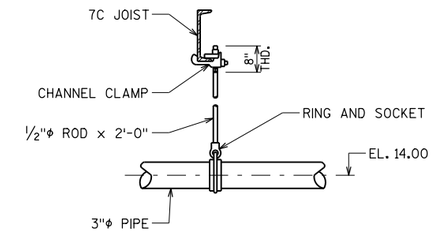

TYPICAL HANGER

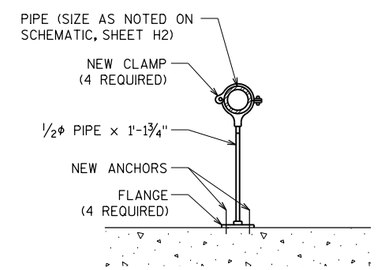

TYPICAL FLOOR SUPPORT

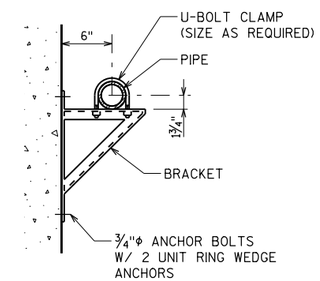

TYPICAL SUPPORT

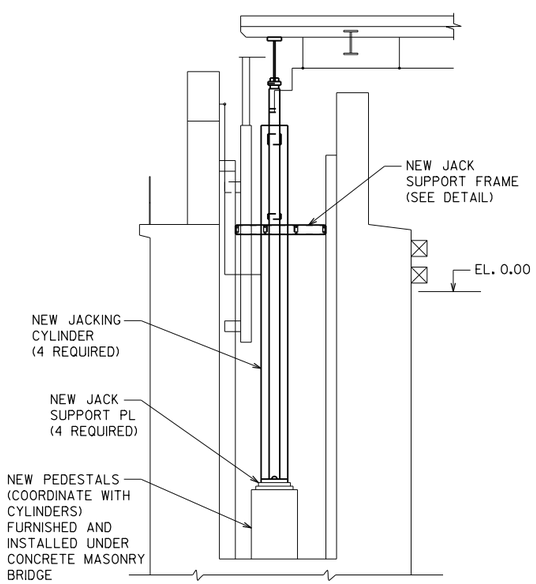

SECTION A-A

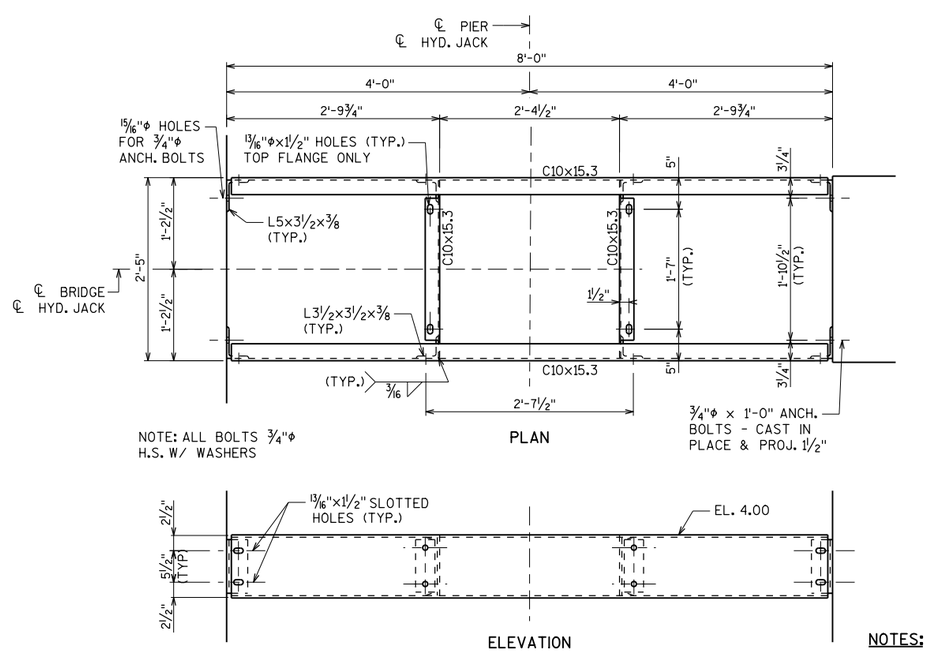

NEW JACK SUPPORT FRAME

(4 REQUIRED)
(FURNISHED UNDER STRUCTURAL CARBON STEEL)

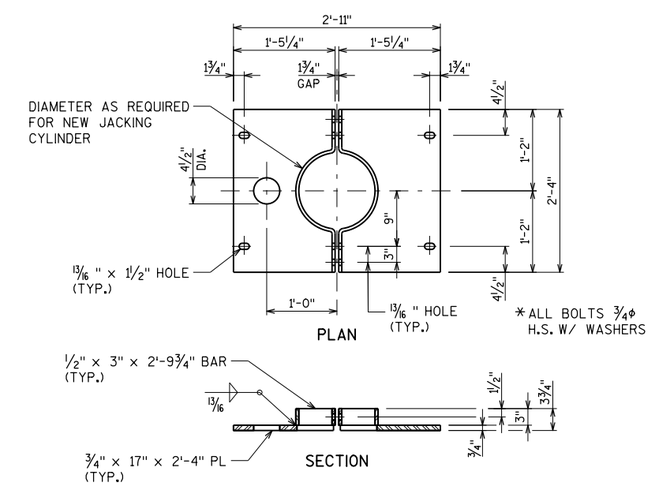

NEW JACK SUPPORT PLATE

(4 REQUIRED)
(FURNISHED UNDER HYDRAULIC WORK)

NOTES:

1. NEW PIPE SUPPORTS AND HANGERS FURNISHED AND INSTALLED UNDER BRIDGE HYDRAULIC SYSTEM.
2. NEW SUPPORT FRAMES, PLATES, AND BRACKETS FURNISHED UNDER STRUCTURAL CARBON STEEL AND INSTALLED UNDER BRIDGE HYDRAULIC SYSTEM.
3. ALL STEEL SHALL BE HOT DIPPED GALVANIZED (HDG) AND PAINTED.

City of Milwaukee
Department of Public Works
Infrastructure Services Division

HNTB
11414 West Park Place, Suite 300
Milwaukee, WI 53224
414-359-2300

ST. PAUL AVE LIFT BRIDGE OVER THE MILWAUKEE RIVER NEW HYDRAULIC SYSTEM

REVISIONS

DESIGNED BY WEN	
DRAWN BY ELT	
CHECKED BY WEN	
DATE FEB 2013	SCALE N.T.S.
JOB NUMBER BR100-10-0106	
SHEET NUMBER H1 OF H6	
OF 198	

etobias
01-FEB-2013
\\nyw00\dept\cadd\58635 St. Paul Avenue\St. Paul\H1.dgn

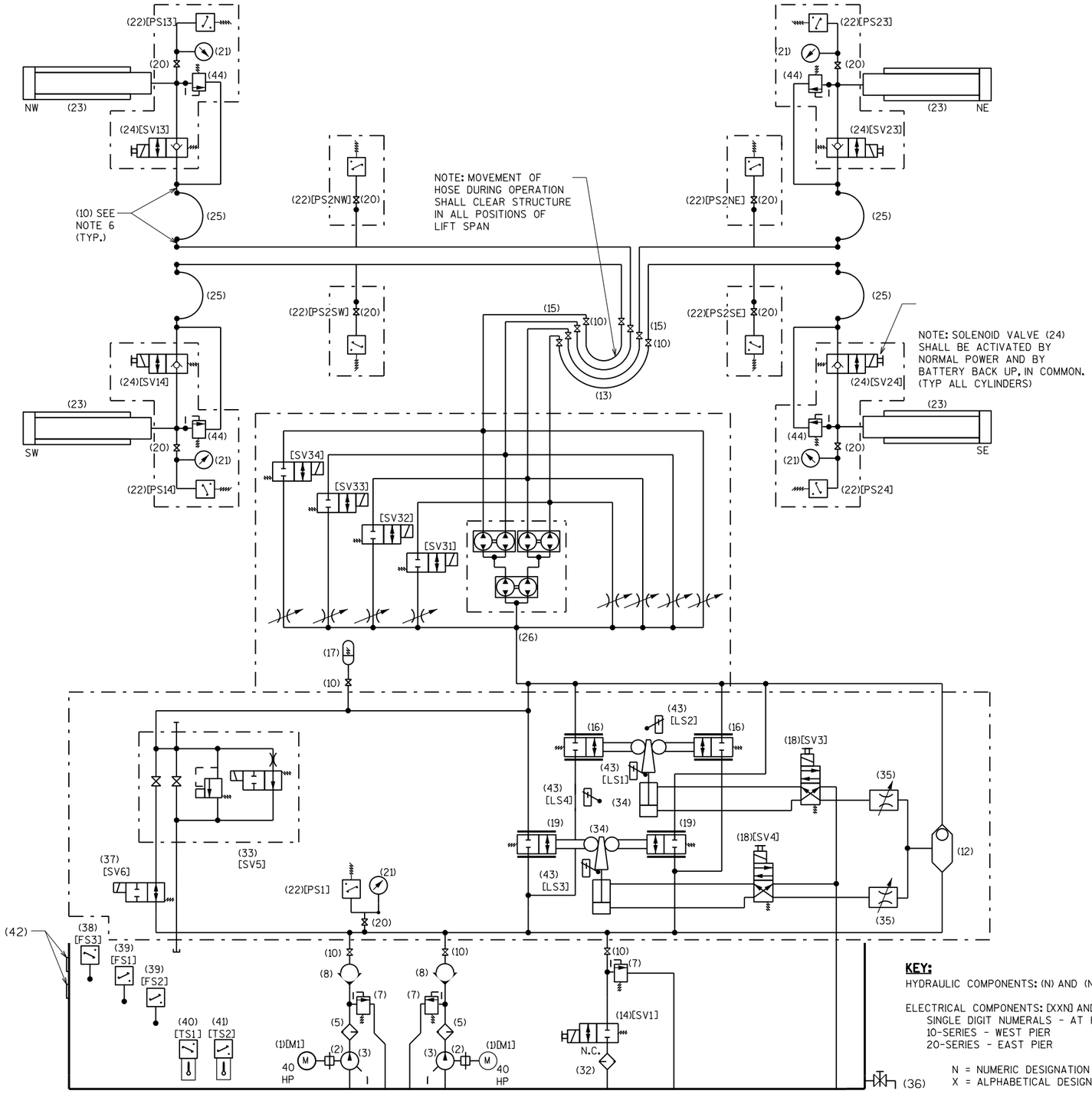

HYDRAULIC SYSTEM-FLOW DIAGRAM

HYDRAULIC BILL OF MATERIALS

ITEM	QTY.	DESCRIPTION
1	2	MAIN MOTOR
2	2	COUPLING
3	2	MAIN PUMP
4		
5	2	MAIN PUMP PRESSURE FILTER
6		
7	3	PRESSURE RELIEF VALVE (ADJUSTABLE)
8	2	CHECK VALVE
9		
10	20	SHUTOFF VALVE
11		
12	1	SHUTTLE VALVE
13	4	2" I.D. HOSE ASSEMBLY WITH CONNECTION
14	1	SOLENOID VALVE-TWO POSITION
15	8	HOSE CONNECTION MANIFOLD
16	2	ACCEL/DECEL VALVE - UP-START/LEVELING*
17	1	ACCUMULATOR
18	2	SOLENOID VALVE - TWO POSITION
19	2	ACCEL/DECEL VALVE- FULL SPEED*
20	9	SHUTOFF VALVE
21	5	PRESSURE GAUGE
22	9	PRESSURE SWITCH (1-N.O, 1-NC)
23	4	JACKING CYLINDER
24	4	SOLENOID VALVE - TWO POSITION
25	4	HOSE ASSEMBLY WITH CONNECTION FITTINGS
26	1	FLOW DIVIDER ASSEMBLY
27		
28		
29		
30		
31		
32	1	RETURN LINE FILTER
33	1	ACCUMULATOR SAFETY BLOCK
34	4	ACCEL/DECEL ACTUATOR
35	2	FLOW CONTROL (ADJUSTABLE)
36	1	DRAIN VALVE
37	1	SOLENOID VALVE - TWO POSITION
38	1	FLOAT SWITCH (1 N.O. & 1 N.C. CONTACT)
		NC CONTACT OPENS AT HIGH FLUID LEVEL
39	2	FLOAT SWITCH (1 N.O. & 1 N.C. CONTACT)
		NC CONTACT OPENS AT LOW FLUID LEVEL
40	1	HIGH TEMP SWITCH (1 N.O. & 1 N.C.
		CONTACT) NC CONTACT OPENS AT HIGH TEMP
41	1	LOW TEMP SWITCH (1 N.O. & 1 N.C.
		CONTACT) NC CONTACT OPENS AT LOW TEMP
42	2	PORTS IN RESERVOIR FOR FUTURE HEAT
		EXCHANGER INSTALLATION
43	4	LIMIT SWITCH - 1 N.O. AND 1 N.C. CONTACT
44	4	PRESSURE RELIEF VALVE (ADJUSTABLE)

* SEE NOTE 2 REGARDING QUANTITY AND SIZES OF VALVES (16) AND (19)

NOT USED

KEY:

HYDRAULIC COMPONENTS: (N) AND (NN)

ELECTRICAL COMPONENTS: [XXN] AND [XXNN]
SINGLE DIGIT NUMERALS - AT HPU
10-SERIES - WEST PIER
20-SERIES - EAST PIER

N = NUMERIC DESIGNATION
X = ALPHABETICAL DESIGNATION

NOTES:

1. SEE SPECIAL PROVISIONS FOR REQUIREMENTS OF HYDRAULIC POWER UNIT AND HYDRAULIC SYSTEM, AND FOR REQUIRED CAPACITIES AND FEATURES OF ALL COMPONENTS LISTED.
2. TOTAL FLOW CAPACITY THROUGH VALVES (16) AND (19) SHALL BE AS STATED IN THE SPECIAL PROVISIONS FOR JACK CYLINDER DETAILED ON SHEET H6, OR SHALL BE ADJUSTED IN PROPORTION TO THE BORE AREA OF CYLINDERS PROVIDED.
3. SEE SHEET H3 FOR HPU ARRANGEMENT AND DETAILS.
4. RESERVOIR AND ALL HYDRAULIC LINES AND VALVES SHALL BE STAINLESS STEEL. HPU SKID AND FRAMING SHALL BE HDG AND PAINTED STEEL.
5. HYDRAULIC CYLINDER VALVES (24) SHALL STOP SPAN AND HOLD IN POSITION IN CASE OF PIPE FAILURE AUTOMATICALLY, AND UPON DEMAND.
6. PROVIDE SHUTOFF VALVES (10) AT ALL HOSE CONNECTIONS, (NOT ALL SHOWN FOR CLARITY).

City of Milwaukee
Department of Public Works
Infrastructure Services Division

HNTB
11414 West Park Place, Suite 300
Milwaukee, WI 53224
414-359-2300

ST PAUL AVE. LIFT BRIDGE
OVER THE MILWAUKEE RIVER
HYDRAULIC SCHEMATIC

REVISIONS

DESIGNED BY WEN
DRAWN BY KAS
CHECKED BY WEN
DATE FEB 2013
SCALE N.T.S.
JOB NUMBER BR100-10-0106
SHEET NUMBER H2 OF H6
OF 198

etobias
01-FEB-2013
\\nyw00\dept\cadd\58635 St. Paul Avenue\St. Paul\H2.dgn

SOLENOID VALVE LIMIT SWITCH CONTACT DEVELOPMENT

SOLENOID VALVE	CONTACT	FULLY RETRACTED	OPERATOR POSITION	FULLY EXTENDED	FUNCTION
SV3	LS-3E	- - - - - -	- - - - - -	———	SHT E3, LINE 65
SV3	LS-3E	———	———	- - - - - -	NOT USED
SV3	LS-3R	———	- - - - - -	- - - - - -	SHT E3, LINE 90
SV3	LS-3R	- - - - - -	———	———	NOT USED
SV4	LS-4E	- - - - - -	- - - - - -	———	SHT E3, LINE 91
SV4	LS-4E	———	———	- - - - - -	NOT USED
SV4	LS-4R1	———	- - - - - -	- - - - - -	SHT E3, LINE 55
SV4	LS-4R1	- - - - - -	———	———	NOT USED
SV4	LS-4R2	———	- - - - - -	- - - - - -	SHT E3, LINE 92
SV4	LS-4R2	- - - - - -	———	———	NOT USED

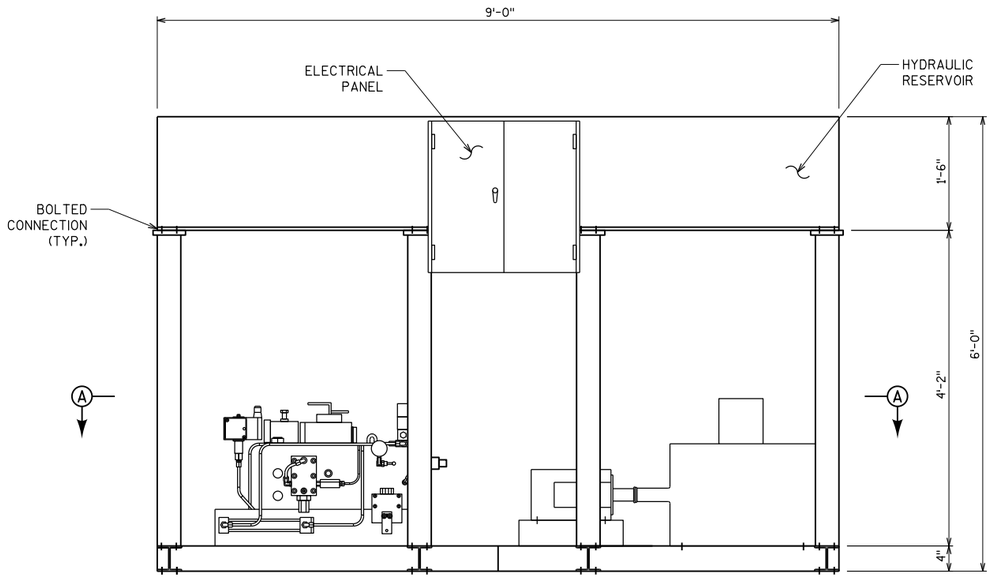

NEW HPU ELEVATION (FRONT)

(FLOW DIVIDER ASSEMBLY, FILTERS, AND ACCUMULATOR NOT SHOWN)
(SEE NOTE 4)

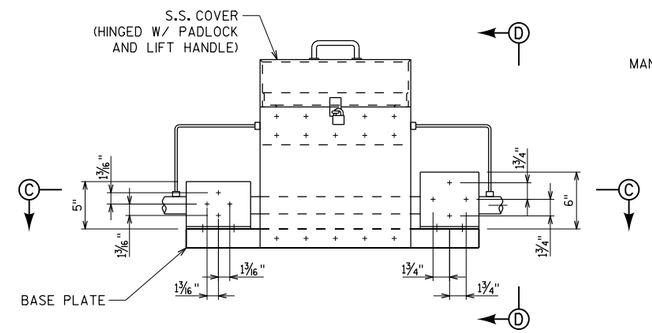

SECTION B-B - FLOW DIVIDER ASSEMBLY

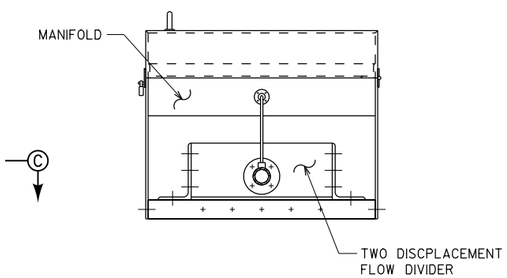

SECTION D-D

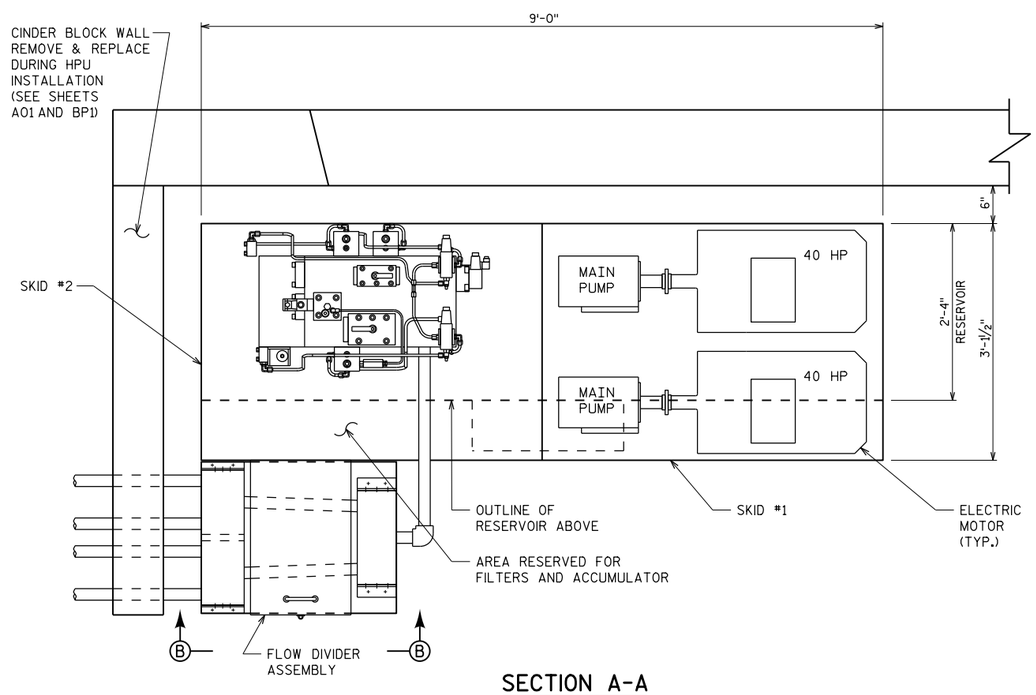

SECTION A-A

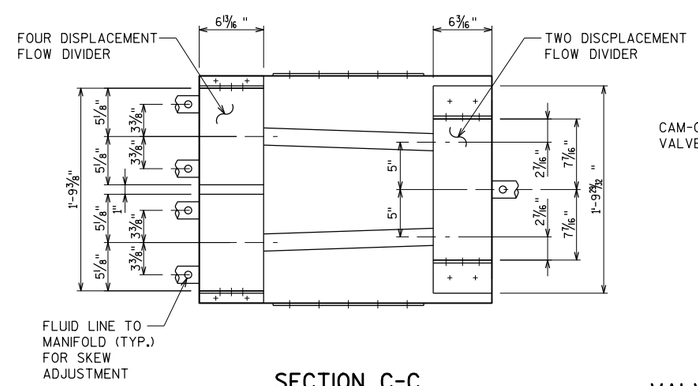

SECTION C-C

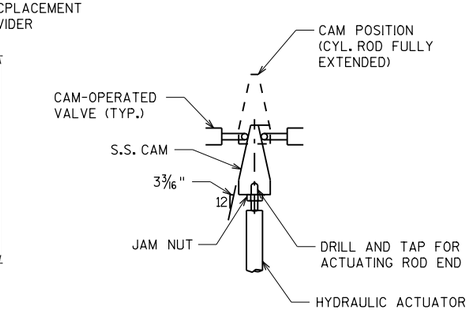

VALVE ACTUATOR ASSEMBLY ON HPU

LIMIT SWITCHES NOT SHOWN FOR CLARITY. SEE NOTES 1-3

NOTES:

1. EACH VALVE ACTUATOR ASSEMBLY, ONE FOR FAST AND ONE FOR SLOW SPEEDS, SHALL CONSIST OF A HYDRAULIC ACTUATOR WITH WEDGE CAM ATTACHMENT, PLUS TWO ADJUSTABLE LIMIT SWITCHES (ONE AT EACH END OF STROKE), AND TWO CAM-OPERATED VALVES MOUNTED ON STAINLESS STEEL MOUNTING PLATE. WEDGE CAM SHALL NOT BE ALLOWED TO ROTATE. ALL FABRICATED COMPONENTS SHALL BE STAINLESS STEEL.
2. ACTUATOR CAMS, VALVE PLUNGERS, AND LIMIT SWITCHES SHALL BE EFFECTIVELY GUARDED BY A BOLTED STEEL GUARD.
3. CAM POSITION AND LIMIT SWITCHES SHALL BOTH BE ADJUSTED FOR SMOOTH OPERATION, ACCELERATION, AND DECELERATION OF SPAN.
4. HPU RESERVOIR, REMOVABLE DOORS, ENCLOSURE, AND DRIP PAN SHALL BE STAINLESS STEEL. ENCLOSURE DOORS SHALL BE 10 GAUGE MINIMUM THICKNESS, SUITABLY REINFORCED FOR RIGIDITY, AND PROVIDED WITH STAINLESS STEEL HARDWARE. HPU SKID FRAMING SHALL BE HDG AND PAINTED STEEL (NOT SHOWN FOR CLARITY).
5. SUGGESTED ARRANGEMENT IS SHOWN FOR RESERVOIR AND MOUNTED COMPONENTS ON HPU SKID. LOCATE MOTORS, PUMPS, MANIFOLD AND ALL SERVICEABLE COMPONENTS IN ACCESSIBLE LOCATIONS ON SKID WITH RESPECT TO INSTALLED POSITION WITHIN EQUIPMENT ROOM.

City of Milwaukee
Department of Public Works
Infrastructure Services Division

HNTB
1414 West Park Place, Suite 300
Milwaukee, WI 53224
414-359-2300

ST PAUL AVE. LIFT BRIDGE
OVER THE MILWAUKEE RIVER
HPU AND FLEX ENCLOSURE

REVISIONS

DESIGNED BY WEN	
DRAWN BY ELT	
CHECKED BY WEN	
DATE FEB 2013	SCALE N.T.S.
JOB NUMBER BR100-10-0106	
SHEET NUMBER H3 OF H6	
OF 198	

etobias
04-FEB-2013
\\nyw00\dept1\cadd\58635 St. Paul Avenue\St. Paul\H3.dgn

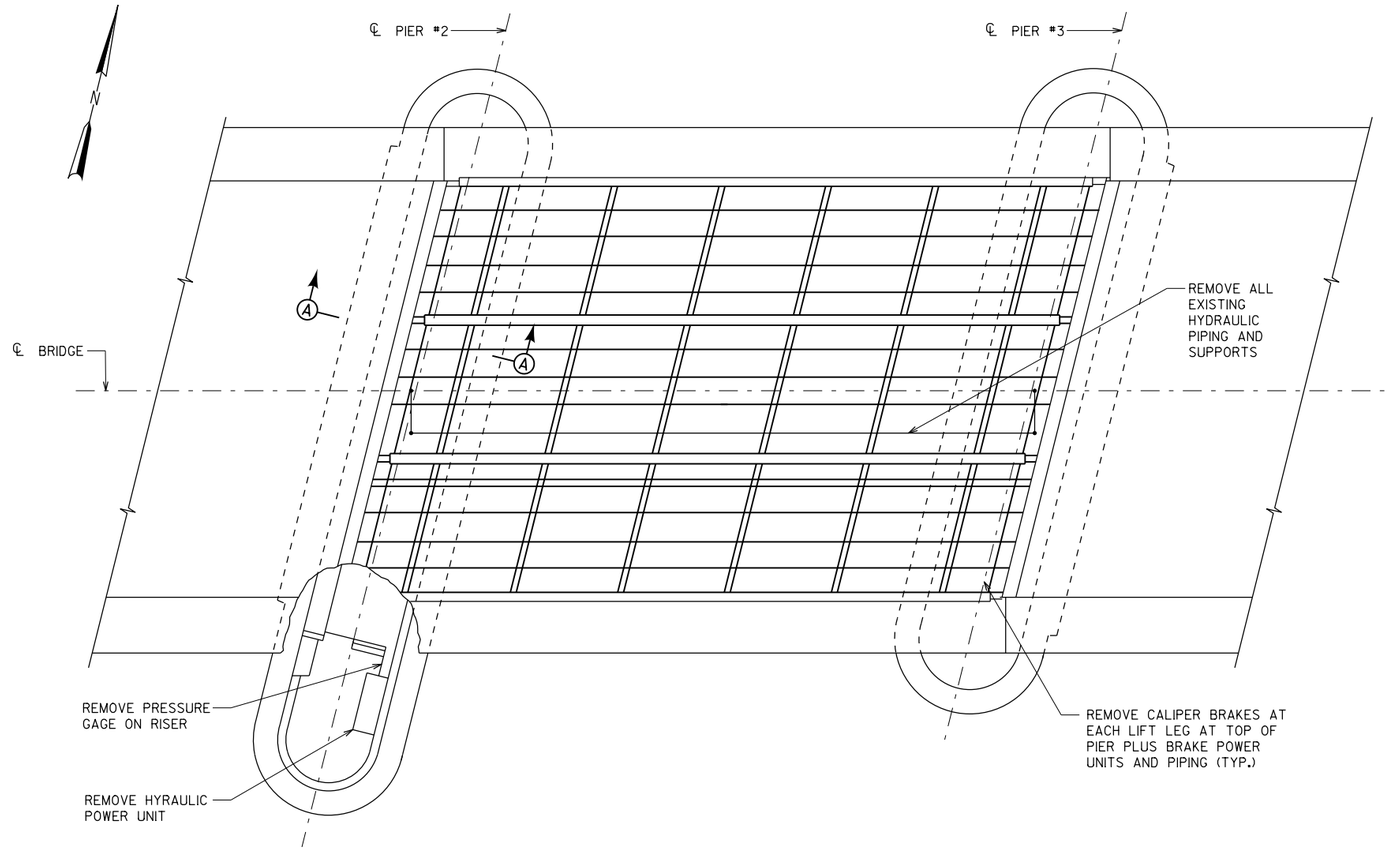

PLAN OF HYDRAULIC EQUIPMENT TO BE REMOVED

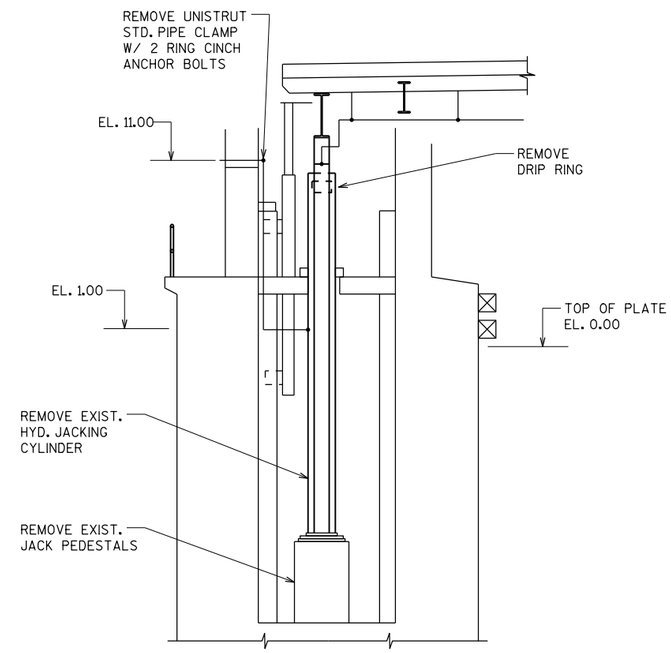

SECTION A-A

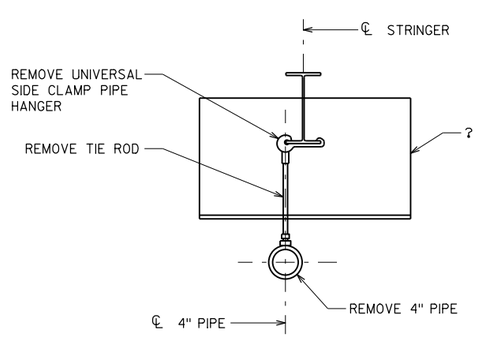

PIER HANGER DETAIL

NOTE:
REMOVE ALL EXISTING HYDRAULIC PIPING AND SUPPORTS.

City of Milwaukee
Department of Public Works
Infrastructure Services Division

HNTB
11414 West Park Place, Suite 300
Milwaukee, WI 53224
414-359-2300

ST. PAUL AVE LIFT BRIDGE
OVER THE MILWAUKEE RIVER
HYDRAULIC DEMOLITION I

REVISIONS

DESIGNED BY WEN
DRAWN BY ELT
CHECKED BY WEN
DATE FEB 2013 | SCALE N.T.S.
JOB NUMBER BR100-10-0106
SHEET NUMBER H4 OF H6
OF 198

etobias
01-FEB-2013
\\nyw00\dept\cadd\58635 St.Paul Avenue\St.Paul\H4.dgn

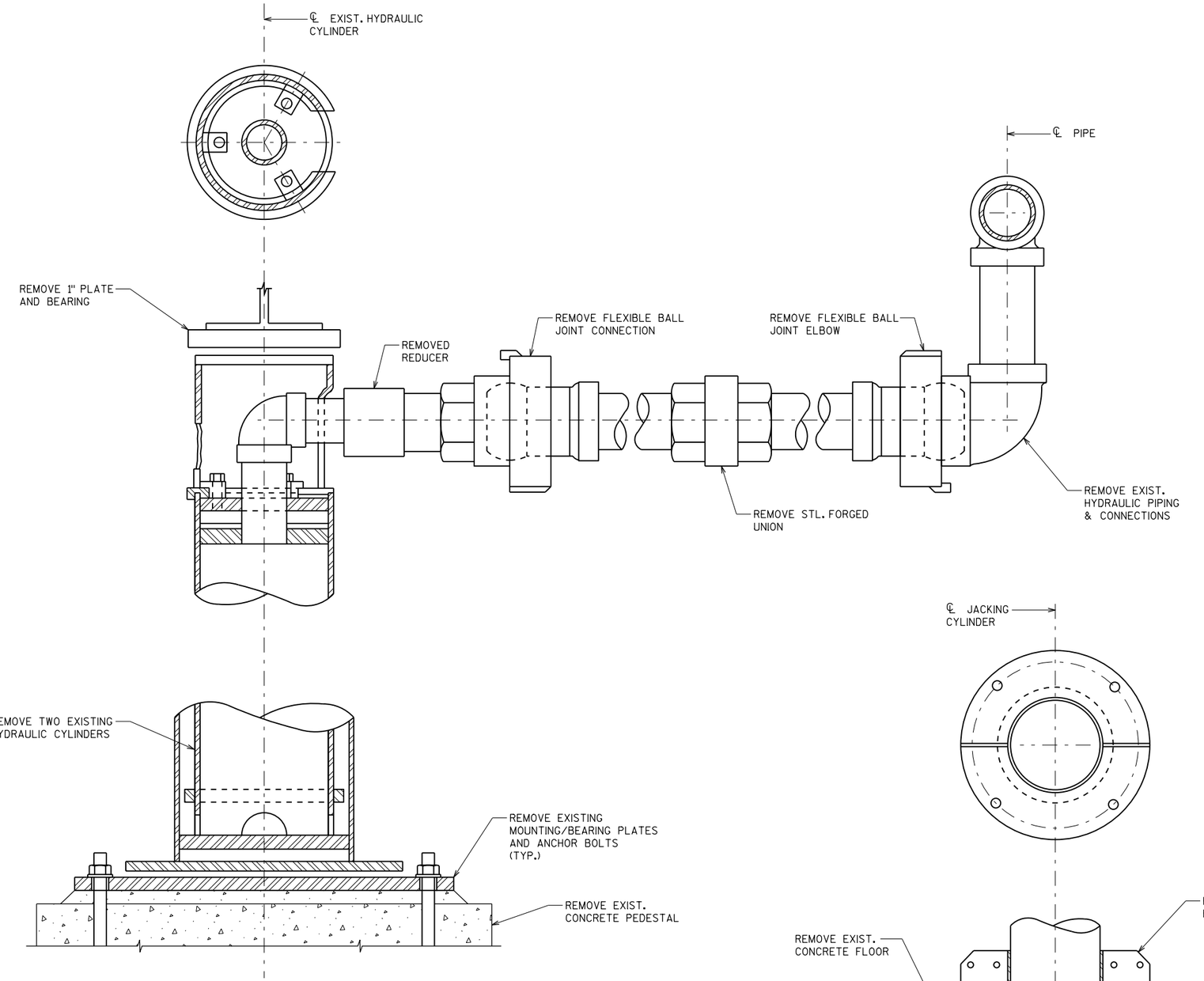

HYDRAULIC CYLINDER ASSEMBLY REMOVAL

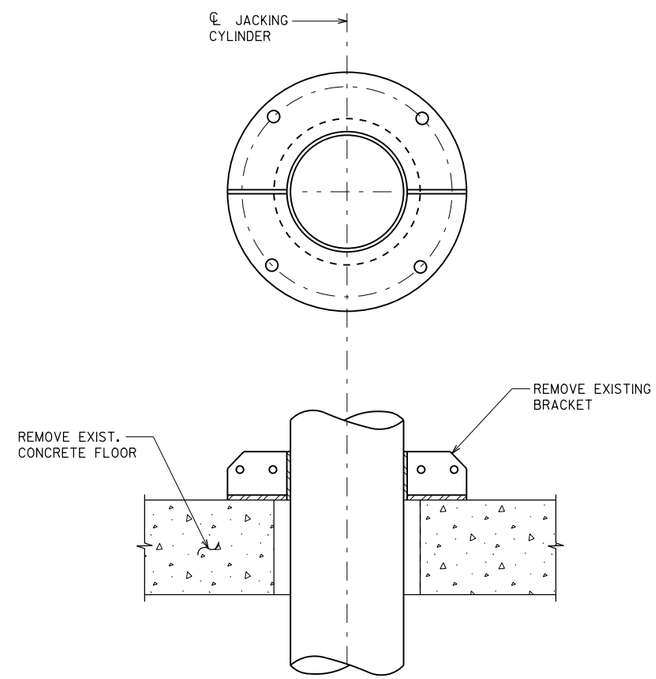

CYLINDER SUPPORT REMOVAL DETAIL

City of Milwaukee

Department of Public Works

Infrastructure Services Division

HNTB
11414 West Park Place, Suite 300
Milwaukee, WI 53224
414-359-2300

ST. PAUL AVE LIFT BRIDGE
OVER THE MILWAUKEE RIVER
HYDRAULIC DEMOLITION II

REVISIONS

DESIGNED BY WEN	
DRAWN BY ELT	
CHECKED BY WEN	
DATE FEB 2013	SCALE N.T.S.
JOB NUMBER BR100-10-0106	
SHEET NUMBER H5 OF H6	
OF 198	

etobias
01-FEB-2013
\\nyw00\dept\cadd\58635 St. Paul Avenue\St. Paul\H5.dgn

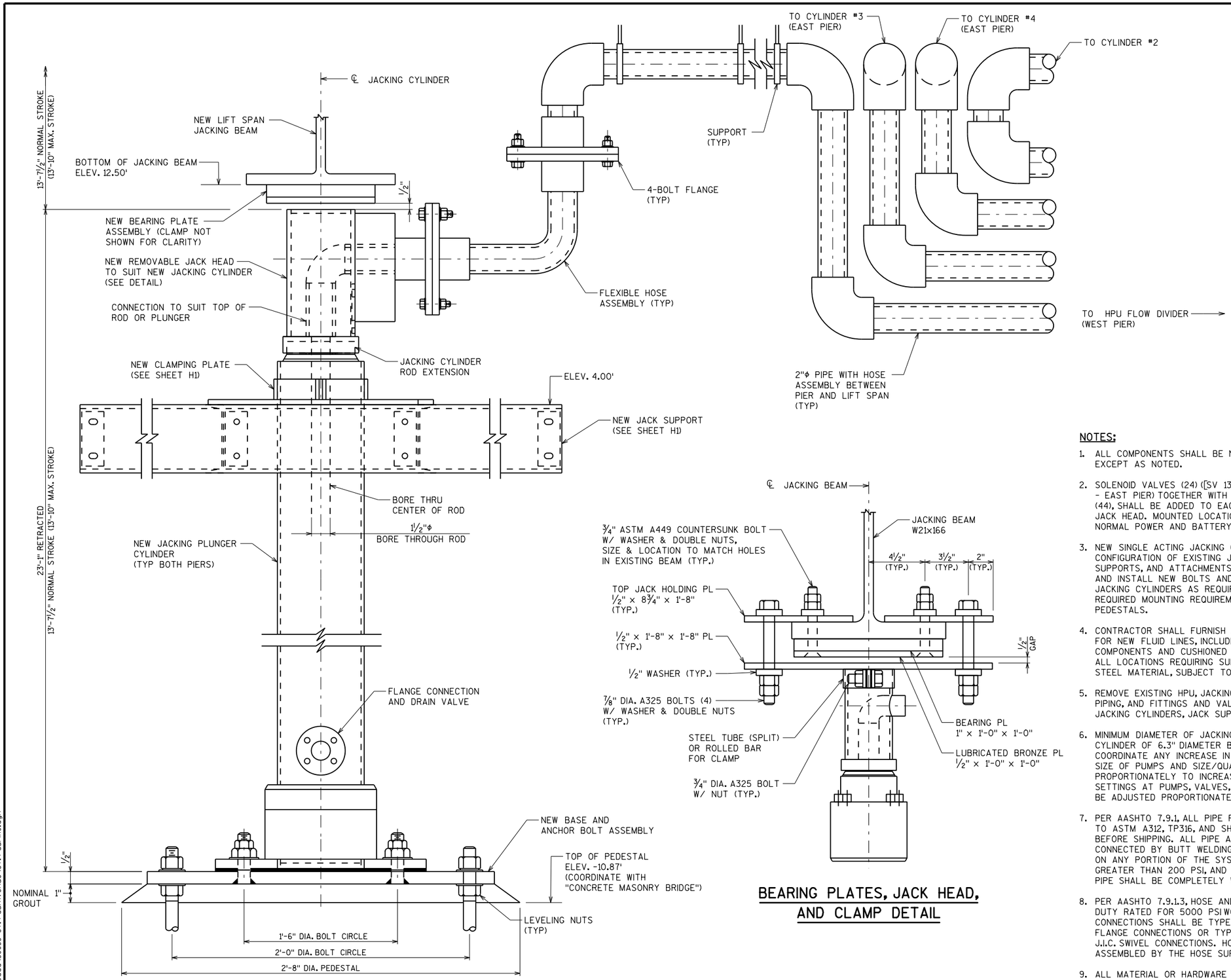

NEW JACKING CYLINDER MECHANISM ASSEMBLY (4 REQUIRED)

BEARING PLATES, JACK HEAD, AND CLAMP DETAIL

NOTES:

1. ALL COMPONENTS SHALL BE NEW, AND SHALL BE STAINLESS STEEL, EXCEPT AS NOTED.
2. SOLENOID VALVES (24) ([SV 13] & [SV 14] - WEST PIER; [SV 23] & [SV 24] - EAST PIER) TOGETHER WITH GAUGE (21) AND PRESSURE RELIEF VALVE (44), SHALL BE ADDED TO EACH CONNECTION ABOVE OR NEAR THE JACK HEAD. MOUNTED LOCATION SHALL BE OPERATED BY BOTH NORMAL POWER AND BATTERY BACK UP SYSTEM.
3. NEW SINGLE ACTING JACKING CYLINDERS SHALL ESSENTIALLY MATCH CONFIGURATION OF EXISTING JACKING CYLINDERS, EXISTING BASES, SUPPORTS, AND ATTACHMENTS EXCEPT AS SHOWN AND NOTED. FURNISH AND INSTALL NEW BOLTS AND OTHER HARDWARE ASSOCIATED WITH JACKING CYLINDERS AS REQUIRED FOR NEW CYLINDER. COORDINATE ANY REQUIRED MOUNTING REQUIREMENTS WITH NEW CONCRETE MOUNTING PEDESTALS.
4. CONTRACTOR SHALL FURNISH AND INSTALL ALL SUPPORTS NECESSARY FOR NEW FLUID LINES, INCLUDING SUPPORTS FOR ADDITIONAL COMPONENTS AND CUSHIONED FLUID LINE SUPPORTS AS REQUIRED IN ALL LOCATIONS REQUIRING SUPPORT. ALL SHALL BE OF STAINLESS STEEL MATERIAL, SUBJECT TO THE APPROVAL OF ENGINEER.
5. REMOVE EXISTING HPU, JACKING CYLINDERS, JACK SUPPORT, HYDRAULIC PIPING, AND FITTINGS AND VALVES. FURNISH AND INSTALL NEW HPU, JACKING CYLINDERS, JACK SUPPORT, AND HYDRAULIC PIPING.
6. MINIMUM DIAMETER OF JACKING CYLINDER ROD IS 6.3". PLUNGER CYLINDER OF 6.3" DIAMETER BORE IS SHOWN AND PREFERRED. COORDINATE ANY INCREASE IN DIAMETER REQUIRED BY INCREASING THE SIZE OF PUMPS AND SIZE/QUANTITY OF VALVES, AND PIPING PROPORTIONATELY TO INCREASE IN AREA OF BORE. PRESSURE SETTINGS AT PUMPS, VALVES, AND PRESSURE SWITCHES SHALL ALSO BE ADJUSTED PROPORTIONATELY.
7. PER AASHTO 7.9.1, ALL PIPE FOR HYDRAULIC SYSTEM SHALL CONFORM TO ASTM A312, TP316, AND SHALL BE PICKELED, CLEANED AND CAPPED BEFORE SHIPPING. ALL PIPE AND BUTT PIPE FITTINGS SHALL BE CONNECTED BY BUTT WELDING. NO PIPE THREAD SHALL BE ALLOWED ON ANY PORTION OF THE SYSTEM THAT WILL EXPERIENCE PRESSURES GREATER THAN 200 PSI, AND NO PIPE SEALANT SHALL BE PERMITTED. PIPE SHALL BE COMPLETELY WELDED IN LOCATIONS ABOVE THE RIVER.
8. PER AASHTO 7.9.1.3, HOSE AND HOSE FITTINGS SHALL BE HYDRAULIC DUTY RATED FOR 5000 PSI WORKING PRESSURE. HOSE END CONNECTIONS SHALL BE TYPE 316 STAINLESS STEEL 4-BOLT, O-RING FLANGE CONNECTIONS OR TYPE 304 STAINLESS STEEL 37° FEMALE J.I.C. SWIVEL CONNECTIONS. HOSE ASSEMBLIES SHALL BE SHOP ASSEMBLED BY THE HOSE SUPPLIER.
9. ALL MATERIAL OR HARDWARE REQUIRED FOR FITTINGS SHALL BE SIMILAR TO THE FITTING MATERIAL. FLANGE BOLTS SHALL BE PROVIDED WITH LOCKING WASHERS.

City of Milwaukee
Department of Public Works
Infrastructure Services Division

HNTB
11414 West Park Place, Suite 300
Milwaukee, WI 53224
414-359-2300

ST PAUL AVE. LIFT BRIDGE OVER THE MILWAUKEE RIVER HYDRAULIC NOTES

REVISIONS

DESIGNED BY WEN	
DRAWN BY ELT	
CHECKED BY WEN	
DATE FEB 2013	SCALE N.T.S.
JOB NUMBER BR100-10-0106	
SHEET NUMBER H6 OF H6	
OF 198	

etobias
01-FEB-2013
\\nyw00\dept\cadd\58635 St. Paul Avenue\St. Paul\H6.dgn

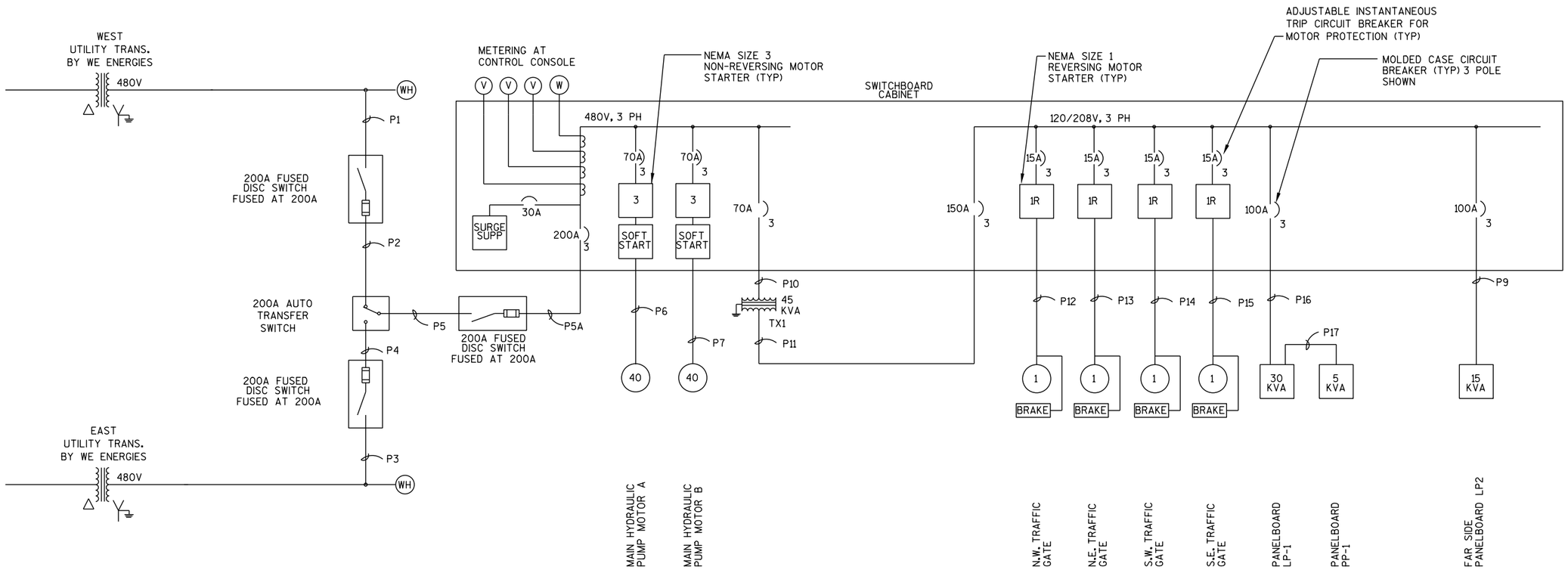

NOTES:

1. PROVIDE INSIGHT DISCONNECT SWITCHES SIZED IN ACCORDANCE WITH THE NEC AND LOCAL CODES. MOUNT SWITCHES NEAR MOTORS AS REQUIRED.

2. SEE SHEET E16 FOR LEGEND.

City of Milwaukee

Department of Public Works

Infrastructure Services Division

HNTB
11414 West Park Place, Suite 300
Milwaukee, WI 53224
414-359-2300

ST PAUL AVE. LIFT BRIDGE OVER THE MILWAUKEE RIVER ONE LINE DIAGRAM

REVISIONS

DESIGNED BY GLP	
DRAWN BY SMS	
CHECKED BY JGS	
DATE FEB 2013	SCALE NONE
JOB NUMBER BR100-10-0106	
SHEET NUMBER E1 OF E33	
OF 198	

FILE NAME: E1.dgn
DATE: 1/29/2013 09:14
Plotted by: SSympson
PEN TABLE: hpscrnthpen

A AUTO TRANSFER SWITCH
B DISCONNECT SWITCH
C TRANSFORMER TX1
D PANELBOARD LP-1
E CONTROL DESK
F FIBER OPTICS SPLICE PANEL (EXISTING)
G HYDRAULIC SKID (BY OTHERS)
H MICHIGAN STREET REMOTE CONTROL PANEL

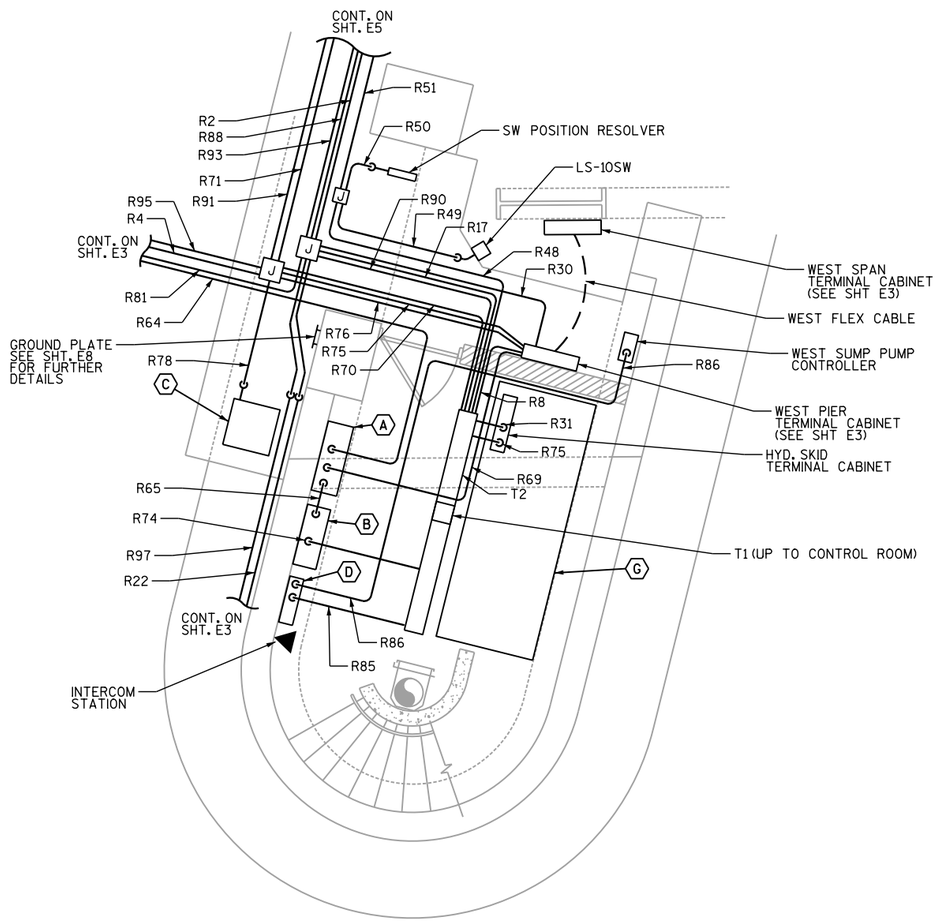

EQUIPMENT ROOM 1ST LEVEL POWER WIRING

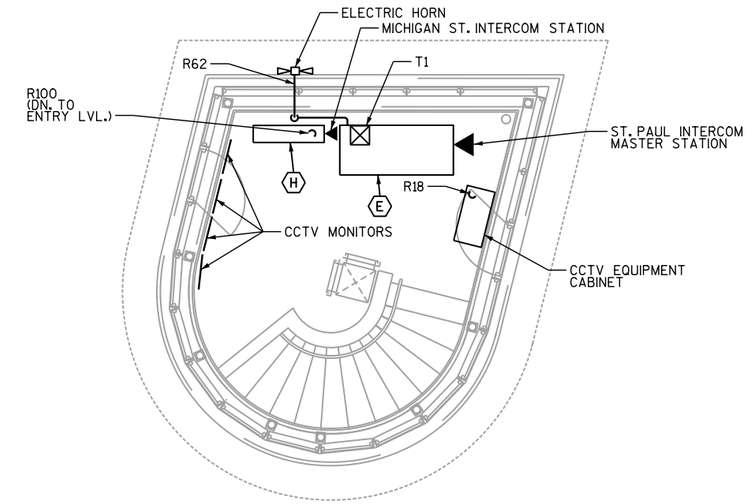

CONTROL ROOM 3RD LEVEL POWER WIRING

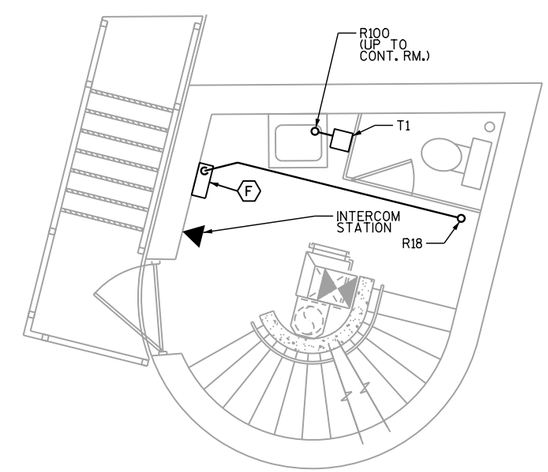

ENTRY/STREET LEVEL 2ND LEVEL POWER WIRING

NOTES:

1. EQUIPMENT LOCATIONS SHALL BE CONSIDERED AS ILLUSTRATIVE AND SUBJECT TO ADJUSTMENTS AS NECESSARY TO MEET FIELD CONDITIONS. THE LOCATIONS OF CONDUITS, BOXES AND EQUIPMENT IS DIAGRAMMATIC ONLY AND MAY BE SUBJECT TO SHIFTING AS REQUIRED IN ORDER TO CONFORM TO LOCAL CONDITIONS.

City of Milwaukee
Department of Public Works
Infrastructure Services Division

HNTB
11414 West Park Place, Suite 300
Milwaukee, WI 53224
414-359-2300

ST PAUL AVE. LIFT BRIDGE
OVER THE MILWAUKEE RIVER
CONTROL HOUSE
POWER WIRING

REVISIONS

DESIGNED BY GLP	
DRAWN BY SMS	
CHECKED BY JGS	
DATE FEB 2013	SCALE 3/16"=1'-0"
JOB NUMBER BR100-10-0106	
SHEET NUMBER E2 OF E33	
OF 198	

FILE NAME: E2.dgn
DATE: 1/29/2013 09:14
Plotted by: SSympson
PEN TABLE: Hbscmthupen

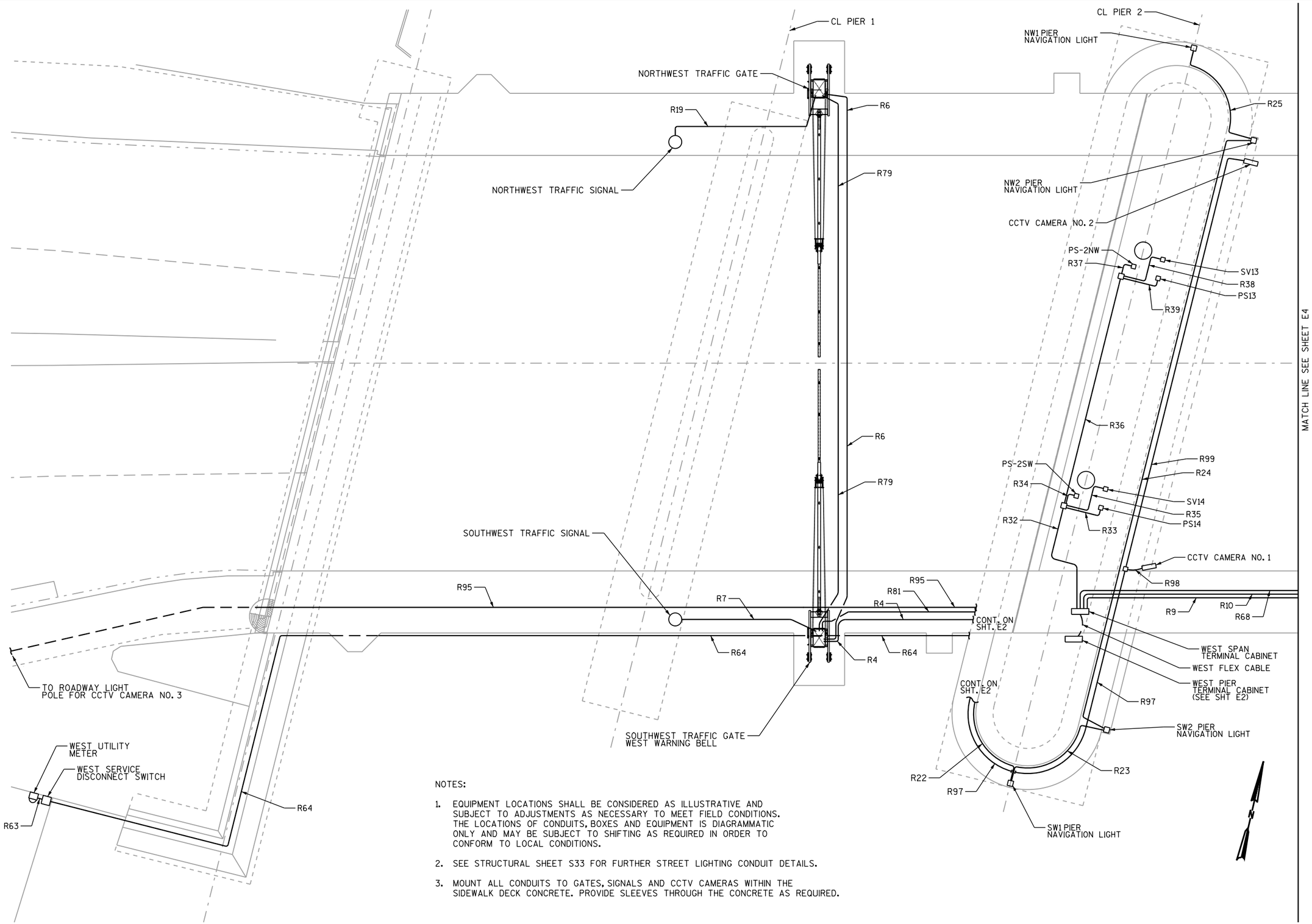

NOTES:

1. EQUIPMENT LOCATIONS SHALL BE CONSIDERED AS ILLUSTRATIVE AND SUBJECT TO ADJUSTMENTS AS NECESSARY TO MEET FIELD CONDITIONS. THE LOCATIONS OF CONDUITS, BOXES AND EQUIPMENT IS DIAGRAMMATIC ONLY AND MAY BE SUBJECT TO SHIFTING AS REQUIRED IN ORDER TO CONFORM TO LOCAL CONDITIONS.
2. SEE STRUCTURAL SHEET S33 FOR FURTHER STREET LIGHTING CONDUIT DETAILS.
3. MOUNT ALL CONDUITS TO GATES, SIGNALS AND CCTV CAMERAS WITHIN THE SIDEWALK DECK CONCRETE. PROVIDE SLEEVES THROUGH THE CONCRETE AS REQUIRED.

WEST SIDE APPROACH SPAN

City of Milwaukee
Department of Public Works
Infrastructure Services Division

HNTB
11414 West Park Place, Suite 300
Milwaukee, WI 53224
414-359-2300

ST PAUL AVE. LIFT BRIDGE
OVER THE MILWAUKEE RIVER
WEST APPROACH SPAN AND
LIFT SPAN POWER WIRING

REVISIONS

DESIGNED BY GLP	
DRAWN BY SMS	
CHECKED BY JGS	
DATE FEB 2013	SCALE 3/32"= 1'-0"
JOB NUMBER BR100-10-0106	
SHEET NUMBER E3 OF E33	
OF 198	

FILE NAME: E3.dgn
DATE: 1/31/2013 08:33 Plotted by: SSimpson PEN TABLE: Hpacmth.pen

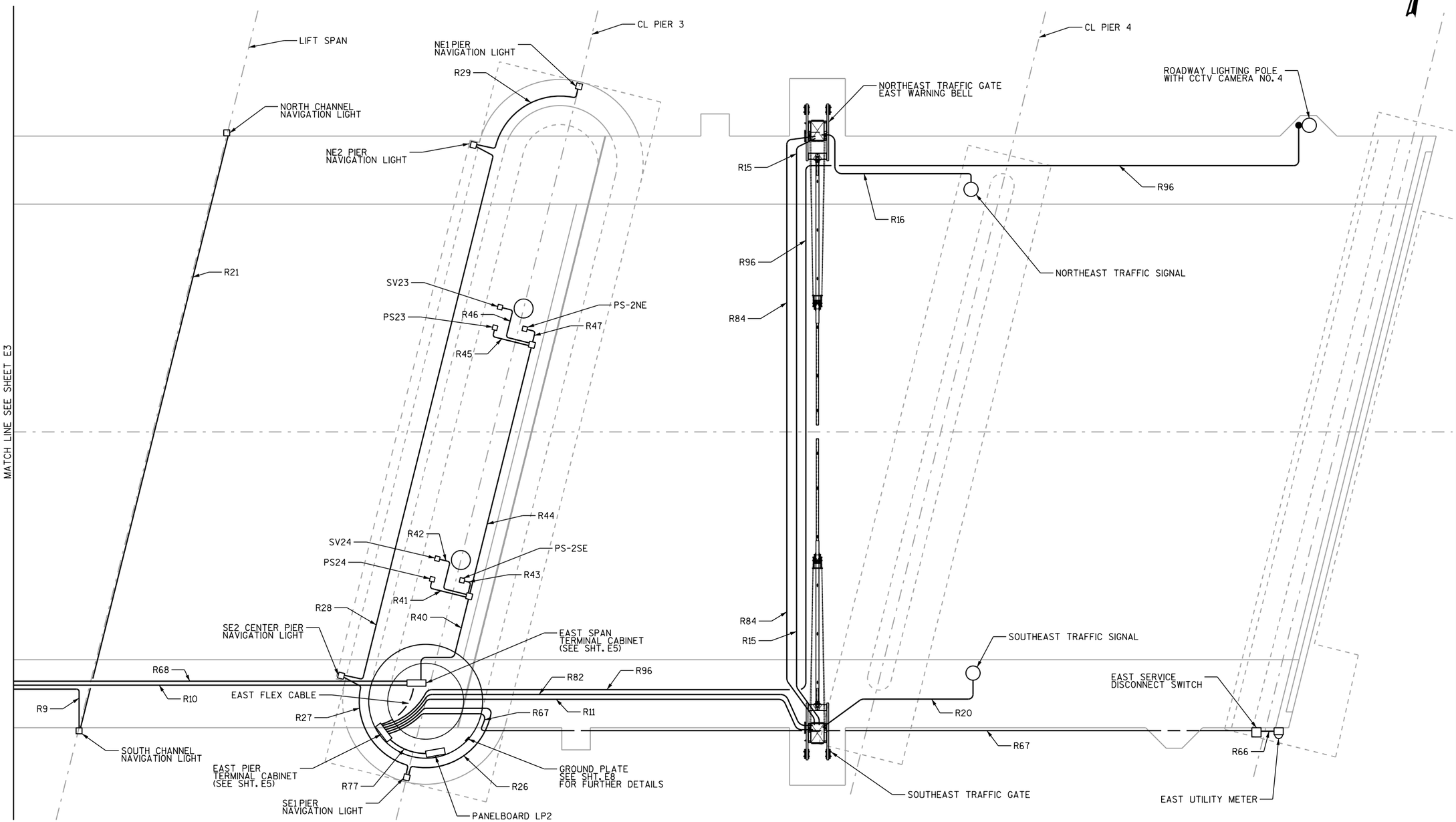

EAST SIDE APPROACH SPAN

NOTES:

1. EQUIPMENT LOCATIONS SHALL BE CONSIDERED AS ILLUSTRATIVE AND SUBJECT TO ADJUSTMENTS AS NECESSARY TO MEET FIELD CONDITIONS. THE LOCATIONS OF CONDUITS, BOXES AND EQUIPMENT IS DIAGRAMMATIC ONLY AND MAY BE SUBJECT TO SHIFTING AS REQUIRED IN ORDER TO CONFORM TO LOCAL CONDITIONS.
2. SEE STRUCTURAL SHEET S35 FOR FURTHER STREET LIGHTING CONDUIT DETAILS.
3. MOUNT ALL CONDUITS TO GATES, SIGNALS AND CCTV CAMERAS WITHIN THE SIDEWALK DECK CONCRETE. PROVIDE SLEEVES THROUGH THE CONCRETE AS REQUIRED.

City of Milwaukee
Department of Public Works
Infrastructure Services Division

HNTB
11414 West Park Place, Suite 300
Milwaukee, WI 53224
414-359-2300

ST PAUL AVE. LIFT BRIDGE OVER THE MILWAUKEE RIVER EAST APPROACH SPAN AND LIFT SPAN POWER WIRING

REVISIONS

DESIGNED BY GLP	
DRAWN BY SMS	
CHECKED BY JGS	
DATE FEB 2013	SCALE 3/32"= 1'-0"
JOB NUMBER BR100-10-0106	
SHEET NUMBER E4 OF E33	
OF 198	

FILE NAME: E4.dgn
DATE: 1/31/2013 08:33 Plotted by: SSympson PEN TABLE: Hpacmtb.pen

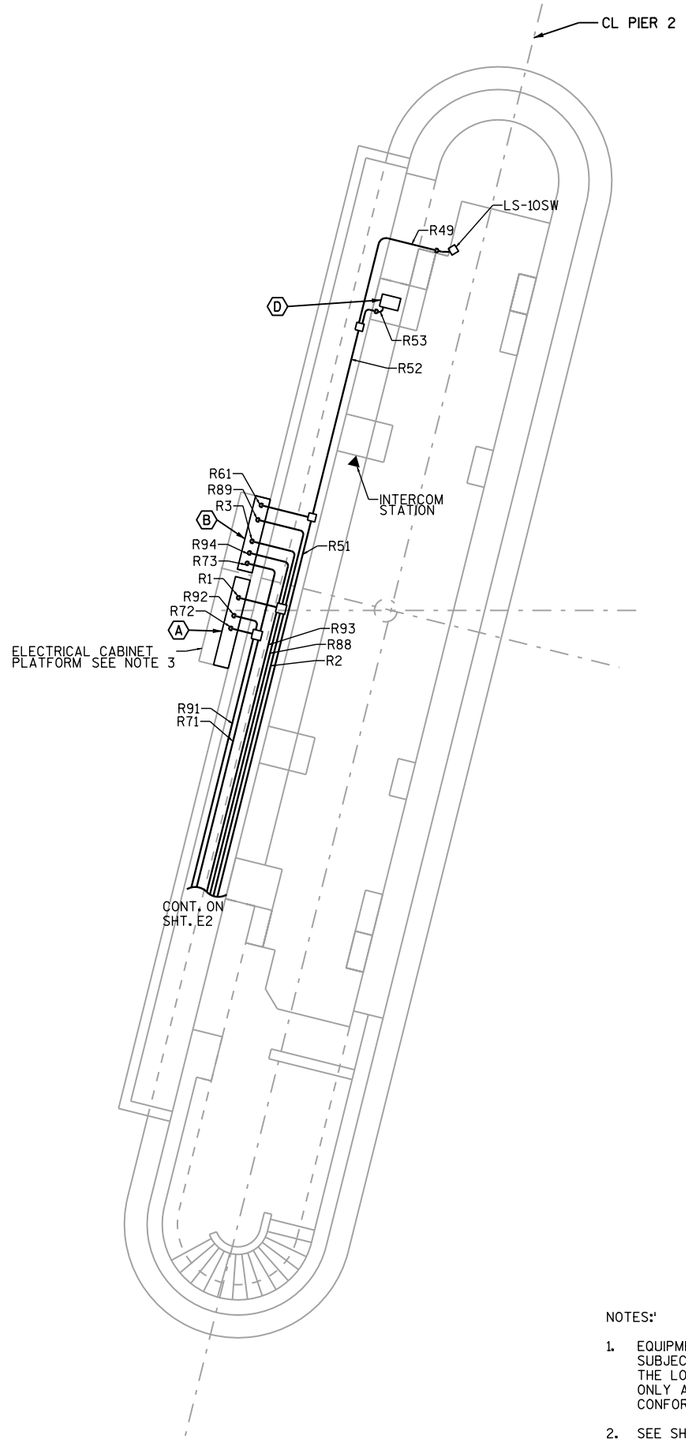

WEST PIER 2 POWER WIRING

EQUIPMENT LEGEND

- (A) SWITCHBOARD CABINET
- (B) RELAY CABINET
- (C) PANELBOARD LP-2
- (D) ROTARY LIMIT SWITCH W/NW POS. RESOLVER
- (E) SW POSITION RESOLVER
- (F) SE POSITION RESOLVER
- (G) NE POSITION RESOLVER

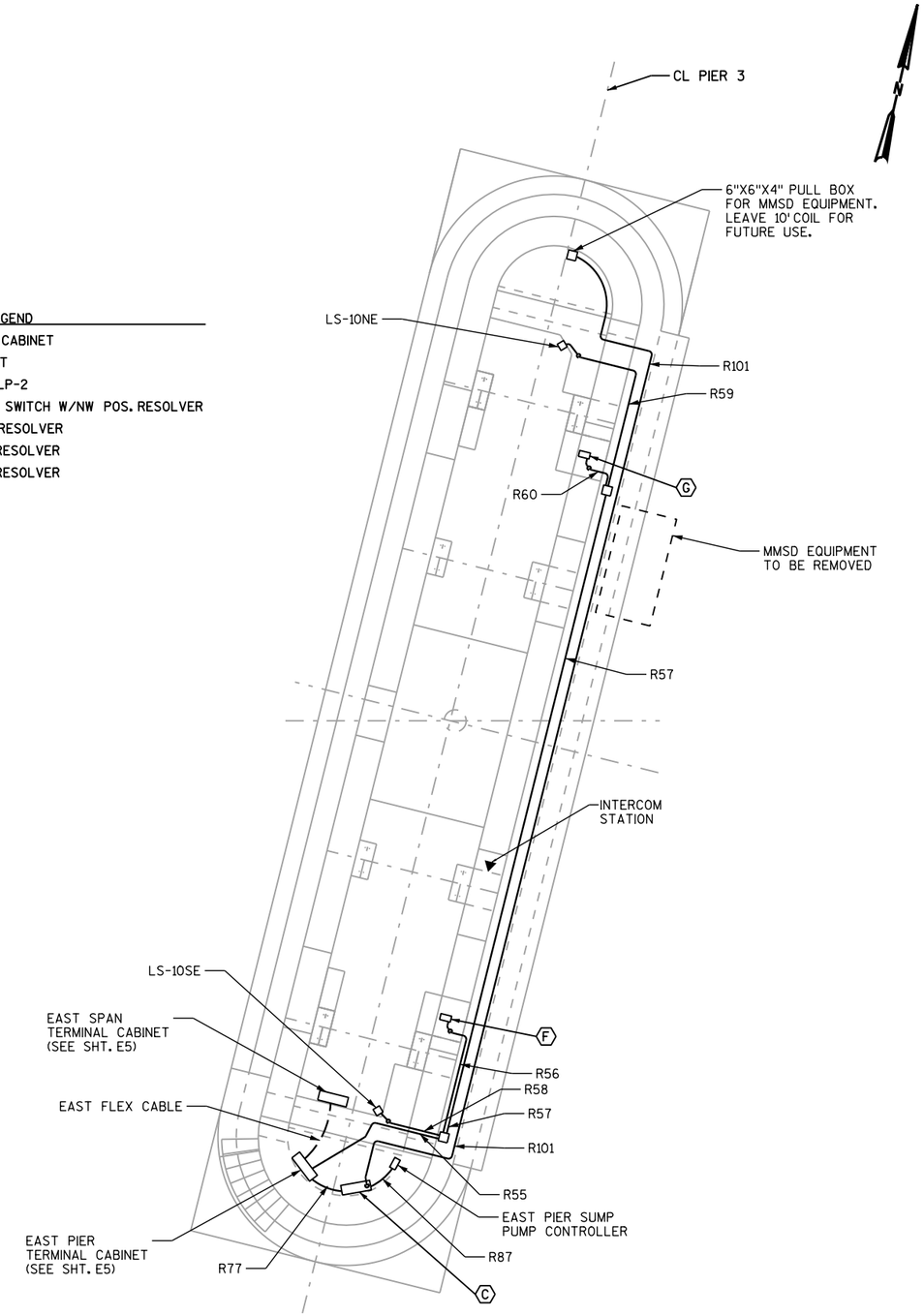

EAST PIER 3 POWER WIRING

NOTES:

1. EQUIPMENT LOCATIONS SHALL BE CONSIDERED AS ILLUSTRATIVE AND SUBJECT TO ADJUSTMENTS AS NECESSARY TO MEET FIELD CONDITIONS. THE LOCATIONS OF CONDUITS, BOXES AND EQUIPMENT IS DIAGRAMMATIC ONLY AND MAY BE SUBJECT TO SHIFTING AS REQUIRED IN ORDER TO CONFORM TO LOCAL CONDITIONS.
2. SEE SHEETS S16 & S20 FOR FURTHER PIER RECONSTRUCTION DETAILS.
3. SEE SHEET S51 FOR DETAILS OF ELECTRICAL CABINET PLATFORM. COORDINATE WITH STRUCTURAL CONTRACTOR DURING CONSTRUCTION OF THE PLATFORM TO ENSURE THAT THE CABINETS CAN BE PROPERLY MOUNTED TO THE PLATFORM. SECURE CABINETS TO THE PLATFORM WITH 1/2"X13X1 1/2" STN. STEEL BOLTS AND HARDWARE.

City of Milwaukee
Department of Public Works
Infrastructure Services Division

HNTB
11414 West Park Place, Suite 300
Milwaukee, WI 53224
414-359-2300

ST PAUL AVE. LIFT BRIDGE
OVER THE MILWAUKEE RIVER
WEST & EAST PIER
POWER WIRING

REVISIONS

DESIGNED BY GLP	
DRAWN BY SMS	
CHECKED BY JGS	
DATE FEB 2013	SCALE 1"= 10'-0"
JOB NUMBER BR100-10-0106	
SHEET NUMBER E5 OF E33	
OF 198	

FILE NAME: E5.dgn
DATE: 1/31/2013 08:33 Plotted by: SSympson PEN TABLE: Hpscrnlh.pen

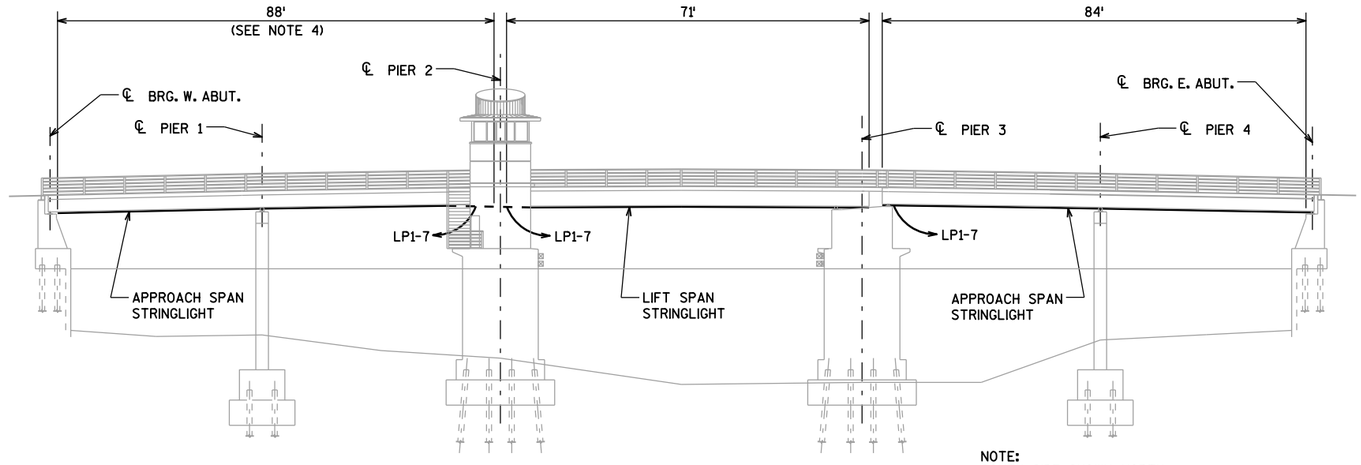

NOTE:
SOUTH SIDE SHOWN, NORTH SIDE SIMILAR.

ELEVATION

LOOKING NORTH

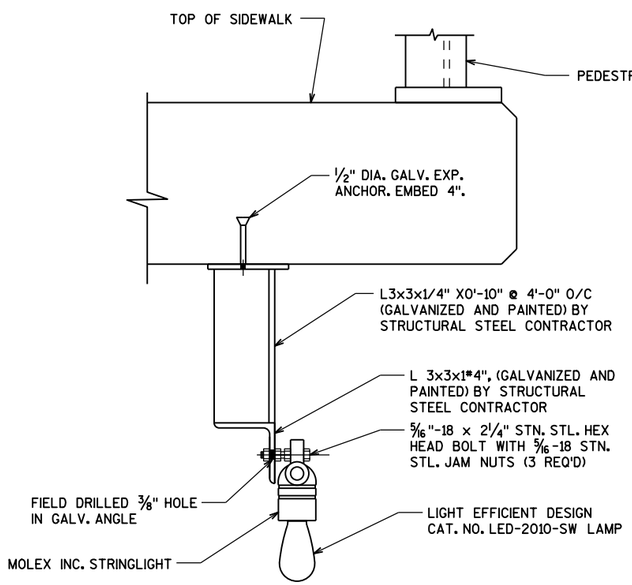

STRIP LIGHT ATTACHMENT- FIXED SPAN

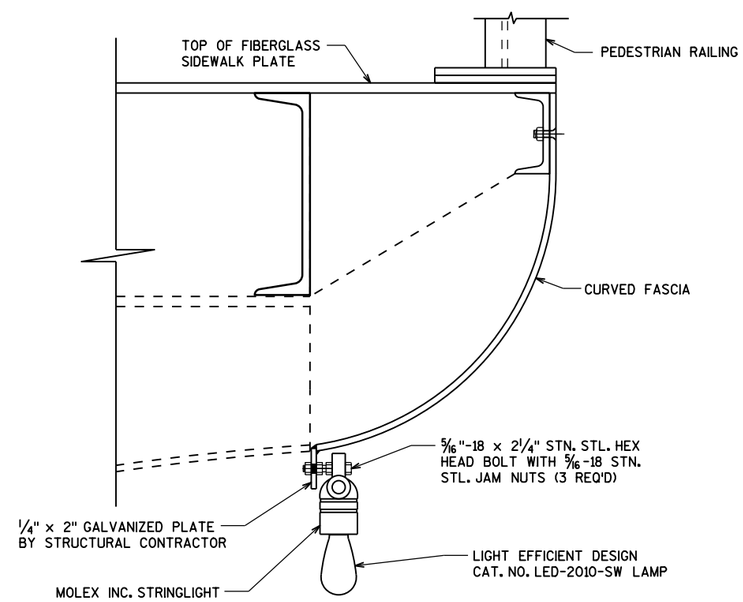

STRIP LIGHT ATTACHMENT- LIFT SPAN

NOTES:

1. SEE STRUCTURAL DRAWINGS FOR FURTHER DETAILS.
2. APPLY GALVANIZING PAINT TO ALL FIELD DRILLED HOLES.
3. STRINGLIGHT LAMP SOCKETS TO BE ON 1 FOOT INTERVALS. EACH STRINGLIGHT SECTION TO BE CONTINUOUS WITH 15 FOOT LEAD AND 6" TAIL. NO SPLICING PERMITTED.
4. CONTRACTOR SHALL FIELD VERIFY ALL STRINGLIGHT LENGTHS. LENGTHS SHOWN ARE FOR ESTIMATING PURPOSES.
5. ALL MOUNTING HARDWARE SHALL BE STAINLESS STEEL.

City of Milwaukee
Department of Public Works
Infrastructure Services Division

HNTB
11414 West Park Place, Suite 300
Milwaukee, WI 53224
414-359-2300

ST PAUL AVE. LIFT BRIDGE OVER THE MILWAUKEE RIVER DECORATIVE LIGHTING PLAN

REVISIONS

DESIGNED BY GLP	
DRAWN BY SMS	
CHECKED BY JGS	
DATE FEB 2013	SCALE NONE
JOB NUMBER BR100-10-0106	
SHEET NUMBER E6 OF E33	
OF 198	

FILE NAME: E6.dgn
DATE: 2/18/2013 13:40
Plotted by: SSympson
PEN TABLE: ftpscrnlh.pen

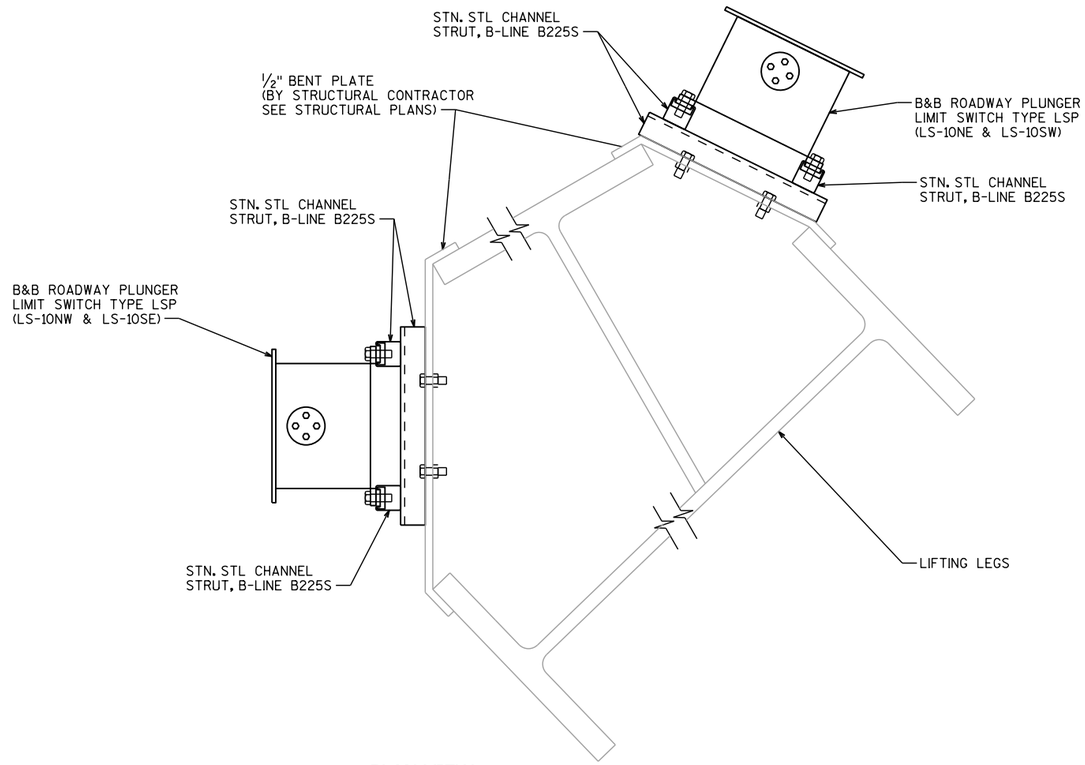

PLAN VIEW

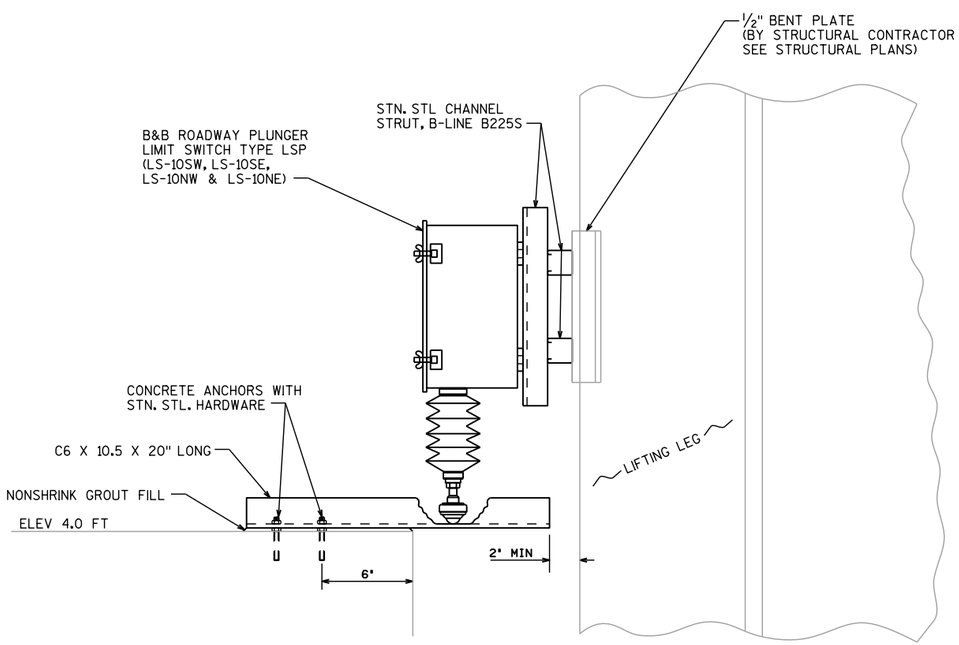

ELEVATION VIEW

City of Milwaukee

Department of Public Works

Infrastructure Services Division

HNTB
11414 West Park Place, Suite 300
Milwaukee, WI 53224
414-359-2300

ST PAUL AVE. LIFT BRIDGE
OVER THE MILWAUKEE RIVER
LIMIT SWITCH DETAILS

REVISIONS

DESIGNED BY GLP	
DRAWN BY SMS	
CHECKED BY JGS	
DATE FEB 2013	SCALE NONE
JOB NUMBER BR100-10-0106	
SHEET NUMBER E7 OF E33	
OF 198	

FILE NAME: E7.dgn
DATE: 1/29/2013 09:14
Plotted by: SSympson
PEN TABLE: Hpscrnlh.pen

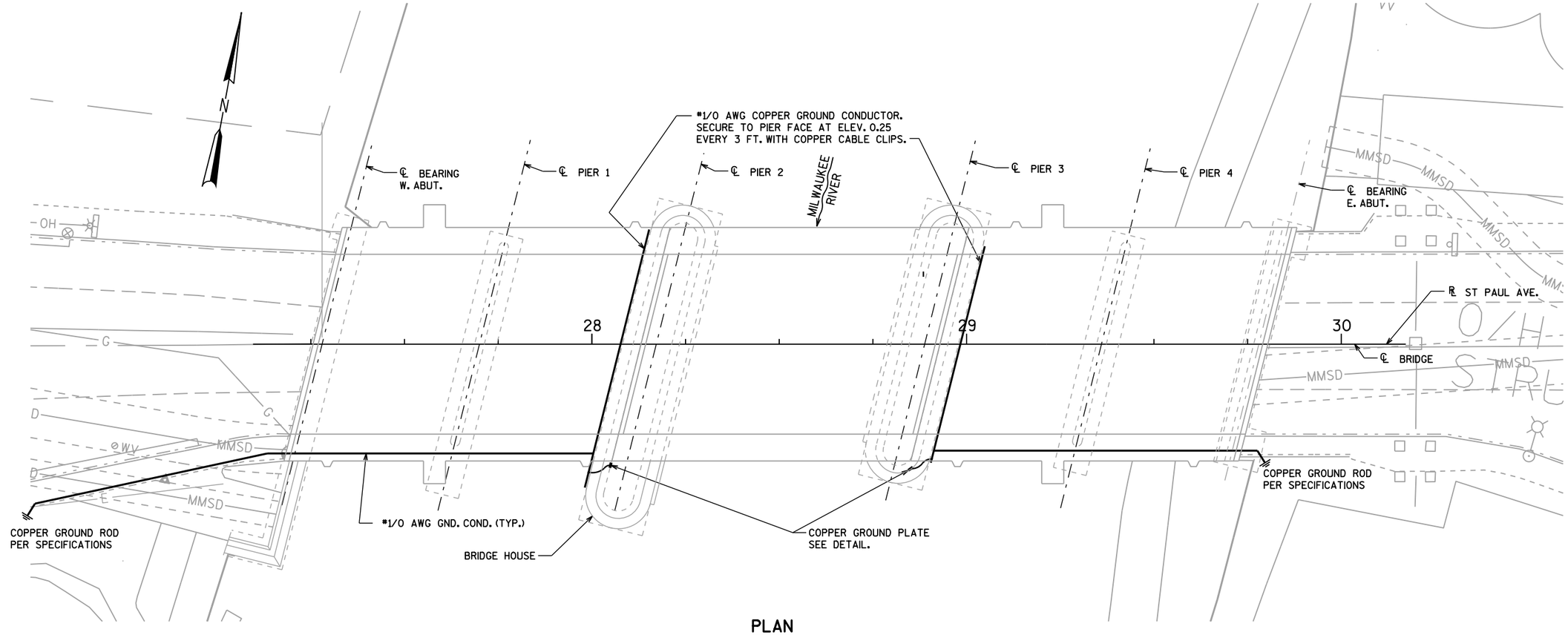

PLAN

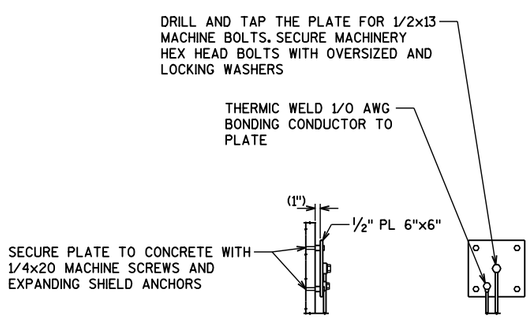

GROUNDING PLATE AT BRIDGE PIERS

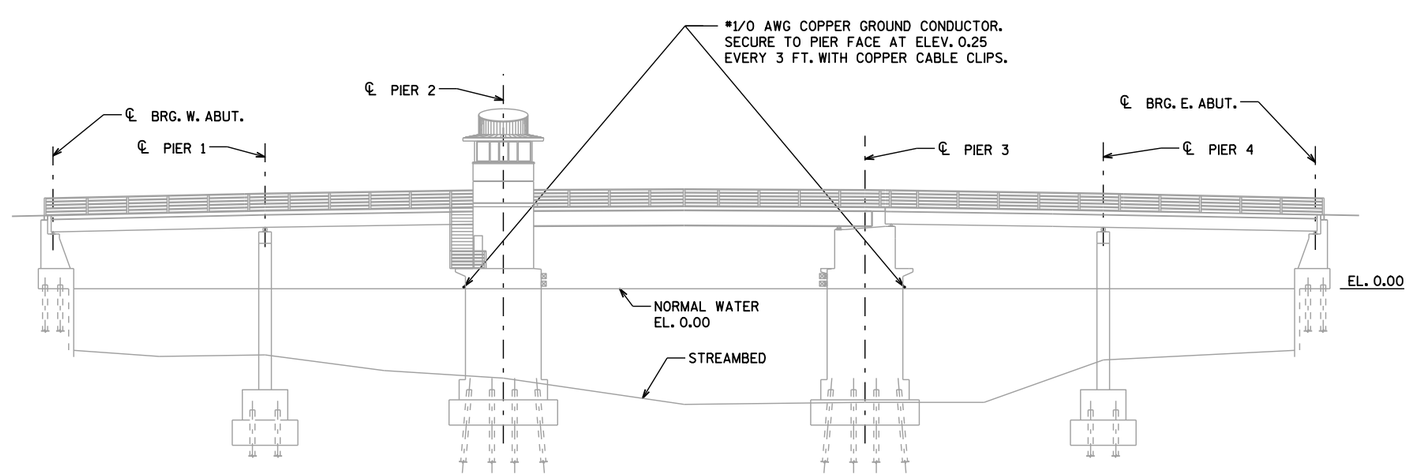

ELEVATION

LOOKING NORTH

City of Milwaukee

Department of Public Works

Infrastructure Services Division

HNTB
11414 West Park Place, Suite 300
Milwaukee, WI 53224
414-359-2300

ST PAUL AVE. LIFT BRIDGE OVER THE MILWAUKEE RIVER GROUNDING SYSTEM DETAILS

REVISIONS

DESIGNED BY GLP	
DRAWN BY SMS	
CHECKED BY JGS	
DATE FEB 2013	SCALE NONE
JOB NUMBER BR100-10-0106	
SHEET NUMBER E8 OF E33	
OF 198	

FILE NAME: E8.dgn
DATE: 1/29/2013 09:14
Plotted by: SSympson
PEN TABLE: Hpacmth.pen

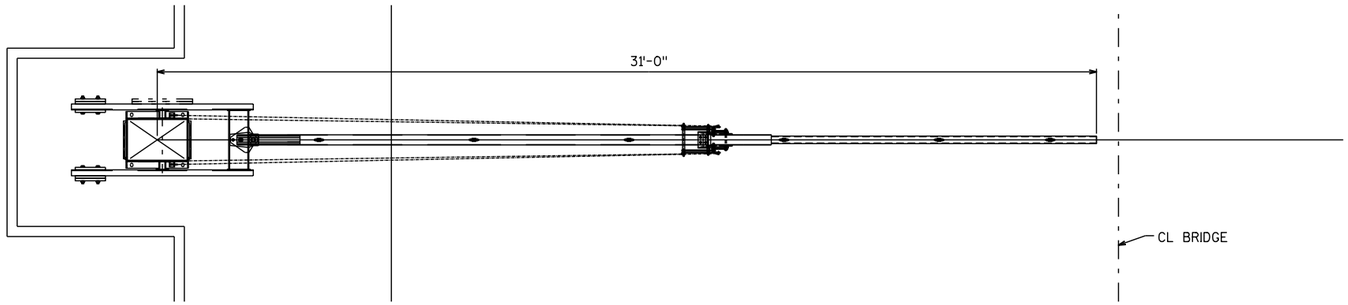

PLAN

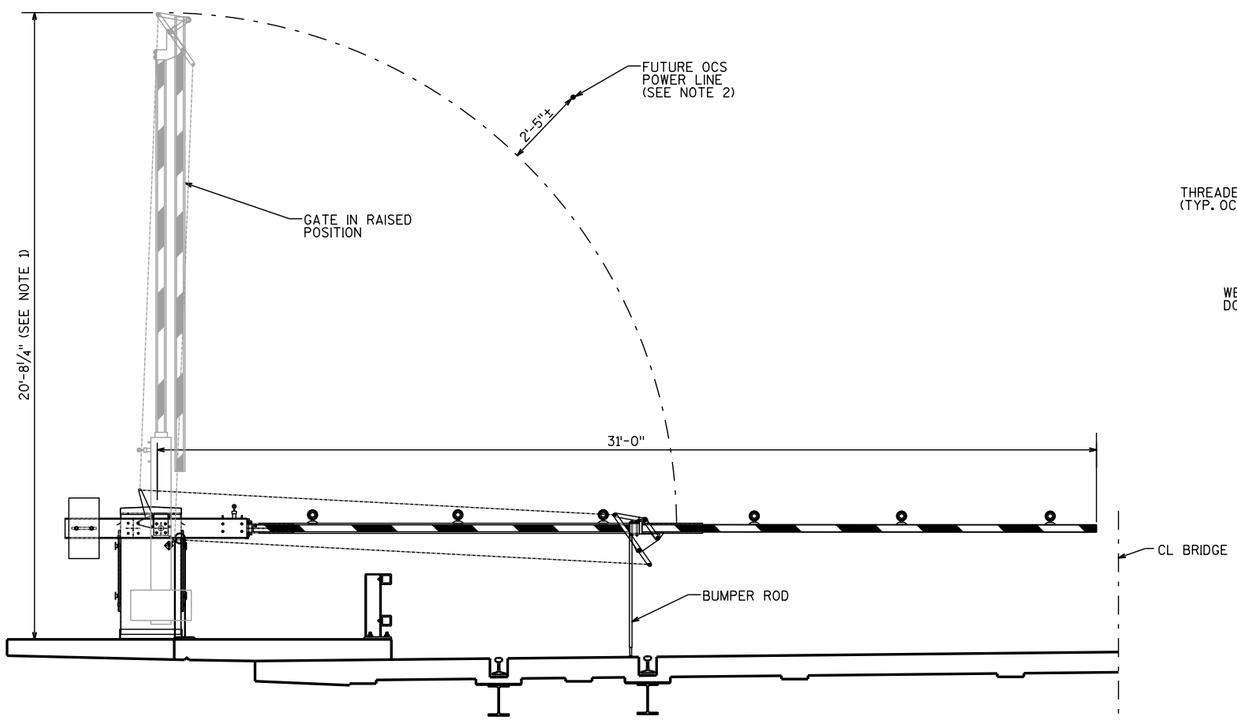

ELEVATION

TRAFFIC GATE DETAILS

NOTES:

1. FINAL DIMENSION SHALL NOT BE EXCEEDED AND SHALL BE VERIFIED BY MANUFACTURER. ANY ADJUSTMENTS SHALL BE REFLECTED IN GATE ARM TIP SECTION ACCORDINGLY TO ACHIEVE OVERALL GATE LENGTH SHOWN.
2. OCS POWER LINE POSITION BASED ON A MOUNTING HEIGHT OF 20' WITH AN ASSUMED MAXIMUM SAG OF 1.5 FEET.

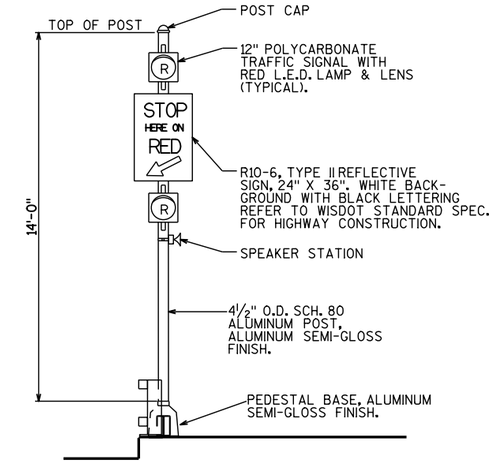

BRIDGE TRAFFIC SIGNAL POLE ASSEMBLY

(TYPICAL 4 INSTALLATIONS)

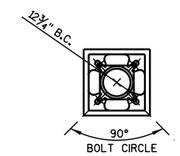

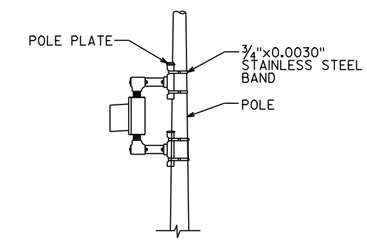

VERTICAL POLE BRACKET MOUNT

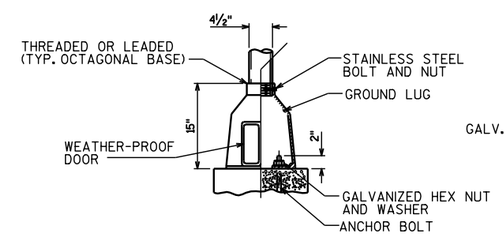

TRAFFIC SIGNAL PEDESTAL BASE

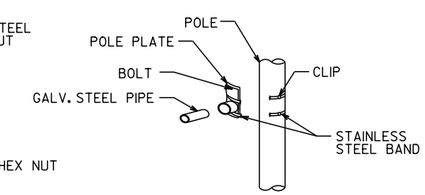

POLE PLATE MOUNTING DETAIL

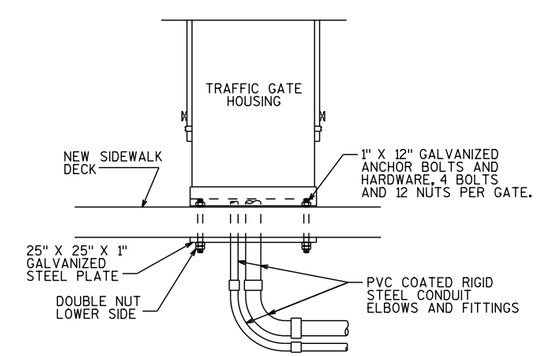

GATE MOUNTING DETAIL

City of Milwaukee

Department of Public Works

Infrastructure Services Division

HNTB
11414 West Park Place, Suite 300
Milwaukee, WI 53224
414-359-2300

ST PAUL AVE. LIFT BRIDGE
OVER THE MILWAUKEE RIVER
TRAFFIC GATE AND
TRAFFIC SIGNAL DETAILS

REVISIONS

DESIGNED BY GLP	
DRAWN BY SMS	
CHECKED BY JGS	
DATE FEB 2013	SCALE NONE
JOB NUMBER BR100-10-0106	
SHEET NUMBER E9 OF E33	
OF 198	

FILE NAME: E9.dgn
DATE: 1/29/2013 09:14
Plotted by: SSympson
PEN TABLE: hpscrnthpen

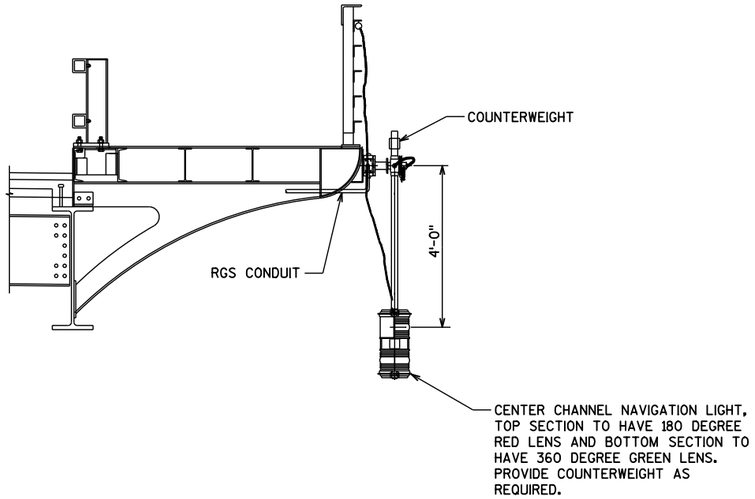

CENTER CHANNEL NAVIGATION LIGHT DETAIL

NOT TO SCALE

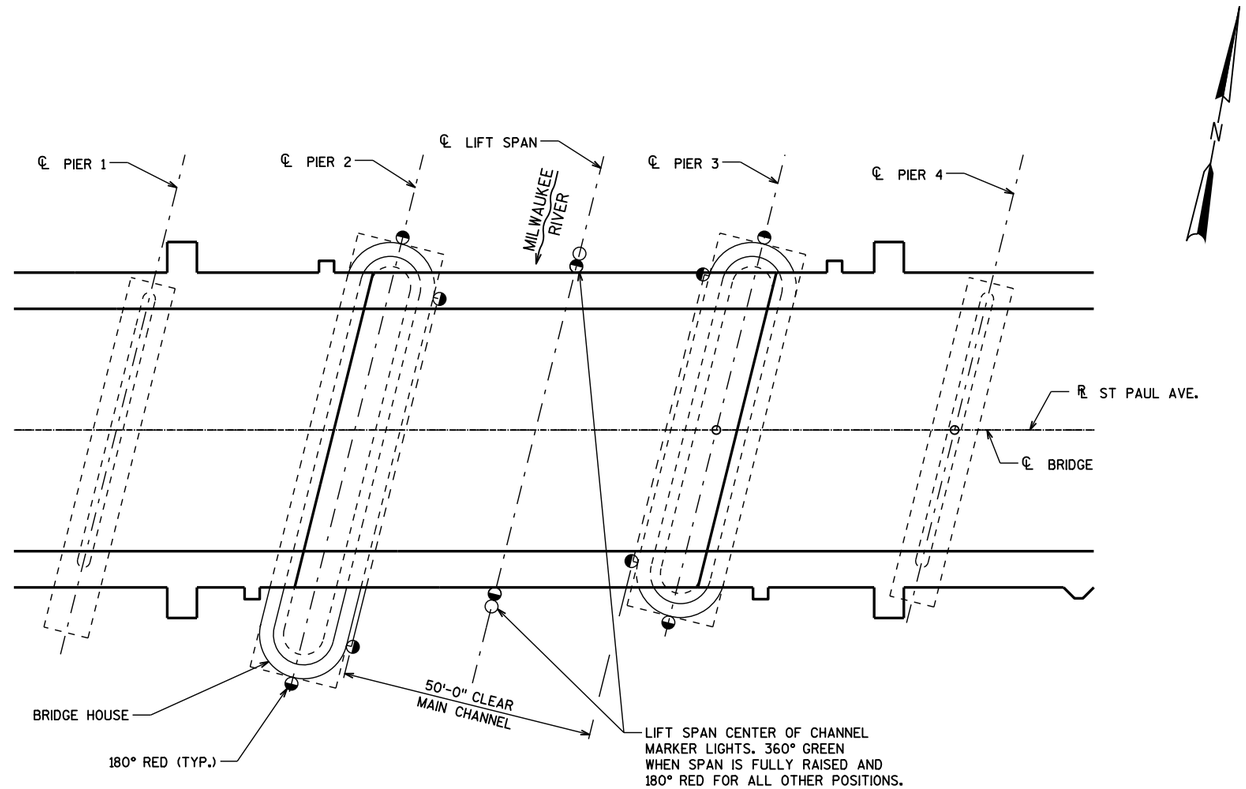

PLAN

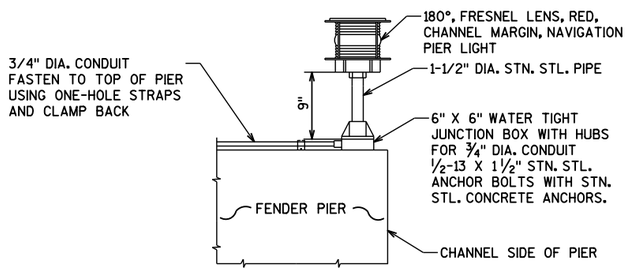

FENDER TOP NAVIGATION LIGHT DETAIL

NOT TO SCALE

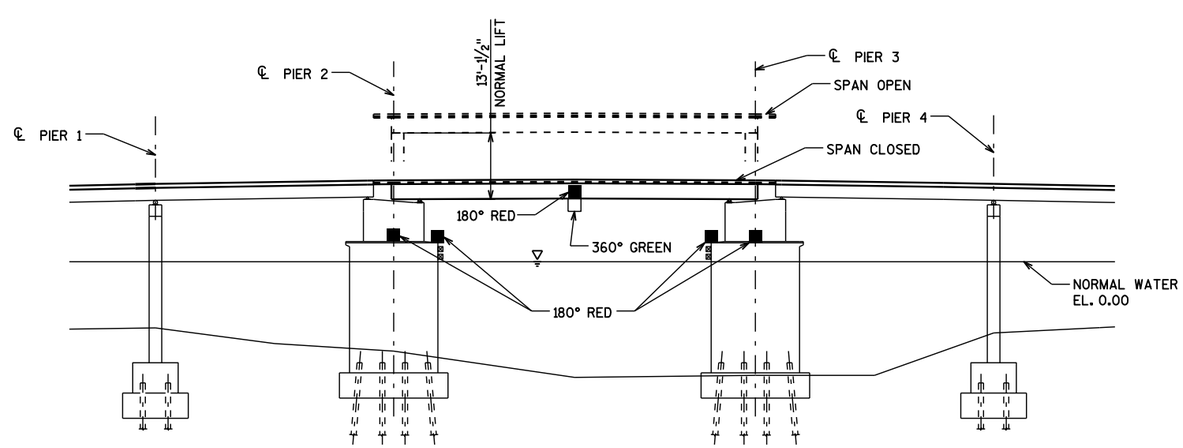

ELEVATION

LOOKING NORTH

City of Milwaukee

Department of Public Works

Infrastructure Services Division

HNTB
11414 West Park Place, Suite 300
Milwaukee, WI 53224
414-359-2300

ST PAUL AVE. LIFT BRIDGE OVER THE MILWAUKEE RIVER NAVIGATION LIGHTING

REVISIONS

DESIGNED BY GLP	
DRAWN BY SMS	
CHECKED BY JGS	
DATE FEB 2013	SCALE 1"=20'-0"
JOB NUMBER BR100-10-0106	
SHEET NUMBER E10 OF E33	
OF 198	

FILE NAME: E10.dgn
DATE: 1/29/2013 09:14
Plotted by: SSympson
PEN TABLE: Hescrnth.pen

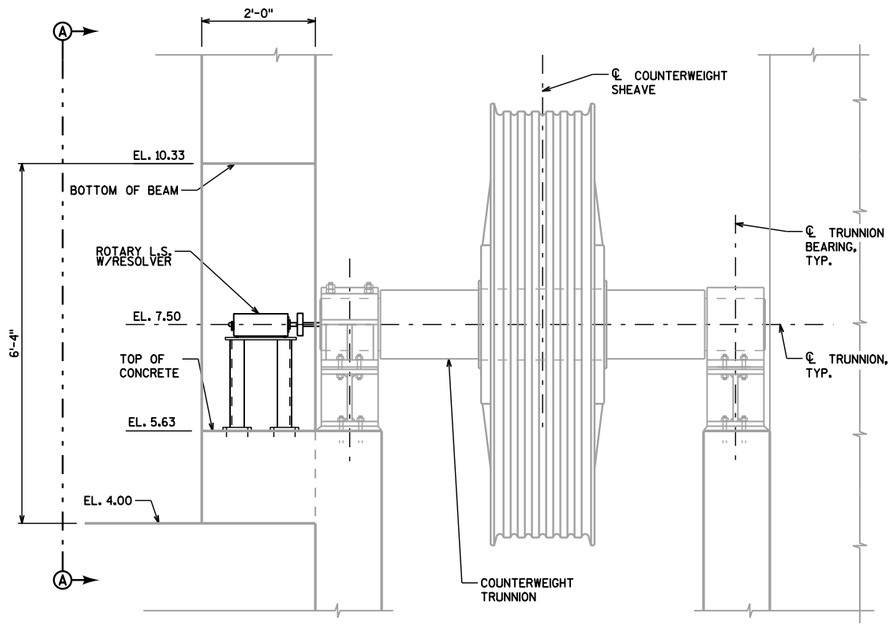

ELEVATION VIEW

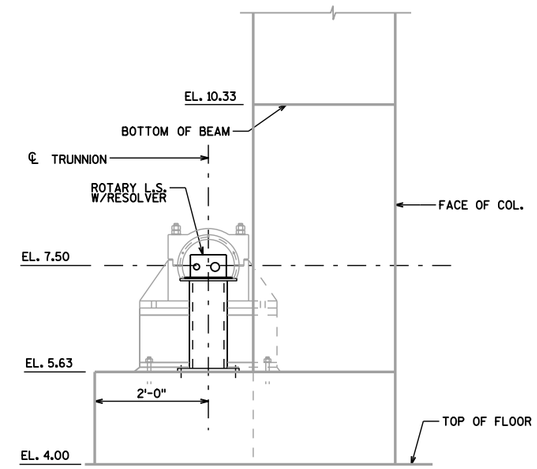

SECTION A-A

ROTARY LIMIT SWITCH/RESOLVER MOUNTING DETAIL

NOTE:
ROTARY LIMIT SWITCH MOUNTING SHOWN, POSITION RESOLVER MOUNTING SIMILAR.

SCALE, FEET 0 1 2

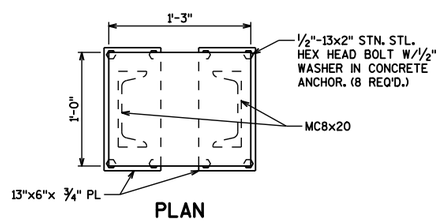

PLAN

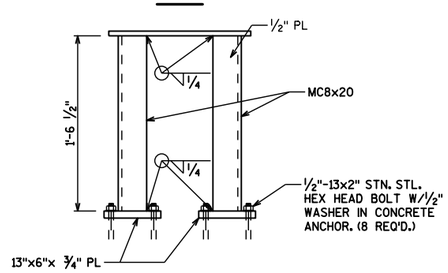

SIDE VIEW

LIMIT SWITCH & RESOLVER SUPPORT DETAIL

SCALE, FEET 0 1 2

NOTES:
1) SUPPORT TO BE HOT DIP GALVANIZED AND PAINTED AFTER FABRICATION.

City of Milwaukee

Department of Public Works

Infrastructure Services Division

HNTB
11414 West Park Place, Suite 300
Milwaukee, WI 53224
414-359-2300

ST PAUL AVE. LIFT BRIDGE
OVER THE MILWAUKEE RIVER
LIMIT SW/RESOLVER DETAILS

REVISIONS

DESIGNED BY GLP
DRAWN BY SMS
CHECKED BY JGS
DATE FEB 2013 | SCALE NONE
JOB NUMBER BR100-10-0106
SHEET NUMBER E11 OF E33
OF 198

FILE NAME: E11.dgn
DATE: 1/29/2013 09:14
Plotted by: SSympson
PEN TABLE: ftpscrmb.pen

DESIGNATION: PANELBOARD LP-1
VOLTAGE: 120/208, THREE PHASE — MAIN BREAKER: 100 AMPS
MOUNTING: SURFACE, NEMA 12 — PANEL BUS: 100 AMPS

CIRCUIT ID	CONN. WATTS	BKR AMP	BKR POLE	CKT NO.		BKR AMP	BKR POLE	CONN. WATTS	CIRCUIT ID
OPERATOR'S LEVEL LIGHTING	244	15	1	1	2	15	1	233	ENTRANCE LEVER LIGHTING
OPER RECEPT - N & E WALL	720	20	1	3	4	15	1	540	ENTRANCE LEVEL RECEPT
OPER RECEPT - W & S WALL	540	15	1	5	6	15	1	1200	FURNACE
DECORATIVE LIGHTING	488	15	1	7	8	20	1	540	EQUIPMENT ROOM RECEPT
SEWER PUMP	864	20	1	9	10	15	1	143	EQUIPMENT ROOM LIGHTING
PIER 2 LIGHTING	707	15	1	11	12	15	1	400	CCTV SYSTEM
PIER 2 RECEPTACLES	1260	20	1	13	14		2	1250	WATER HEATER
FIBER OPTICS PANEL	500	15	1	15	16	20		1250	
SMOKE DETECTORS	30	15	1	17	18		2	1903	A/C CONDENSOR
	1050			19	20	45		1903	
WEST PIER SUMP PUMP	1050	20	3	21	22		2	1175	PANELBOARD PP-1
	1050			23	24	60		1590	
WATER/SEWER HEAT TRACE	450	15	2	25	26	15	1	600	INTERCOM SYSTEMS
	450			27	28	20	1		SPARE
MICROWAVE	1200	20	1	29	30	20	1		SPARE
SPARE		15	1	31	32	20	1	1400	REFRIGERATOR/COFFEE POT
WEST & NORTH WINDOW SHADES	1440	15	1	33	34	15	1	1080	EAST & NORTH WINDOW SHADES
SPARE				35	36				SPARE
SPACE				38	40				SPACE
SPACE				41	42				SPACE
SPACE				29	30				SPACE

TOTAL PHASE A LOAD = 9418 VA = 78.5 AMPS
TOTAL PHASE B LOAD = 9212 VA = 76.8 AMPS
TOTAL PHASE C LOAD = 8620 VA = 71.8 AMPS

DESIGNATION: PANELBOARD LP-2
VOLTAGE: 120/208, THREE PHASE — MAIN BREAKER: 100 AMPS
MOUNTING: SURFACE, NEMA 4X — PANEL BUS: 100 AMPS

CIRCUIT ID	CONN. WATTS	BKR AMP	BKR POLE	CKT NO.		BKR AMP	BKR POLE	CONN. WATTS	CIRCUIT ID
PIER 3 LIGHTING	720	15	1	1	2			1050	
PIER 3 RECEPTACLES	1260	20	1	3	4	20	3	1050	WEST PIER SUMP PUMP
PIER 3 INTERCOM STATIONS	225	15	1	5	6			1050	
SPARE		15	1	7	8	15	1	150	EAST SIDE CCTV CAMERA
SPARE		15	1	9	10	20	1		SPARE
SPARE		15	1	11	12	20	1	750	MMSD EQUIPMENT
SPACE				13	14				SPACE
SPACE				15	16				SPACE
SPACE				17	18				SPACE
SPACE				19	20				SPACE

TOTAL PHASE A LOAD = 1920 VA = 16 AMPS
TOTAL PHASE B LOAD = 2310 VA = 19.3 AMPS
TOTAL PHASE C LOAD = 2025 VA = 16.9 AMPS

PANELBOARD SCHEDULE

MARK	VOLTAGE & PHASE	MOUNTING	MAINS	LOCATION
LP-1	120/208 V, 3 PHASE	SURFACE	100 AMPS	CONTROL TOWER
LP-2	120/208 V, 3 PHASE	SURFACE	100 AMPS	EAST PIER
PP-1	120/208 V, SINGLE PH	SURFACE	60 AMPS	RELAY CABINET

TRANSFORMER SCHEDULE

MARK	PRIMARY	SECONDARY	KVA	MOUNTING	LOCATION
TX-1	480 V, 3 PH	120/208 V, 3 PH	45	FLOOR	CONTROL TOWER

DESIGNATION: PANELBOARD PP-1
VOLTAGE: 120/208, SINGLE PHASE — MAIN BREAKER: 60 AMP
MOUNTING: SURFACE, NEMA 12 — PANEL BUS: 100 AMP

CIRCUIT ID	CONN. WATTS	BKR AMP	BKR POLE	CKT NO.		BKR AMP	BKR POLE	CONN. WATTS	CIRCUIT ID
TRAFFIC SIGNALS	115	15	1	1	2	20	1	65	WARNING BELLS/REMOTE CONT
NAVIGATION LIGHTS	140	15	1	3	4	20	1	200	NE & SE TRAFFIC GATES
SW & NW TRAFFIC GATES	320	15	1	5	6	20	1	200	TRAFFIC GATE WARNING LTS
PUMP CONTROL/SPAN CONTROL	200	15	1	7	8	15	1	450	LIFT CYLINDERS
ELECTRIC HORN	225	15	1	9	10	15	1	250	NW & SW LIFT CYLINDER POSITION
PLC	350	15	1	11	12	20	1	250	NE & SE LIFT CYLINDER POSITION
SPARE		20	1	13	14	15	1		SPARE
SPARE		15	1	15	16	15	1		SPARE

TOTAL PHASE A LOAD = 1175 VA = 9.79 AMPS
TOTAL PHASE B LOAD = 1590 VA = 13.3 AMPS

City of Milwaukee
Department of Public Works
Infrastructure Services Division

HNTB
11414 West Park Place, Suite 300
Milwaukee, WI 53224
414-359-2300

ST PAUL AVE. LIFT BRIDGE
OVER THE MILWAUKEE RIVER
PANELBOARD SCHEDULES

REVISIONS

DESIGNED BY GLP
DRAWN BY SMS
CHECKED BY JGS
DATE FEB 2013 | SCALE NONE
JOB NUMBER BR100-10-0106
SHEET NUMBER E12 OF E33
OF 198

FILE NAME: E12.dgn
DATE: 1/31/2013 08:33 Plotted by: SSympson PEN TABLE: Hpscrnbl.pen

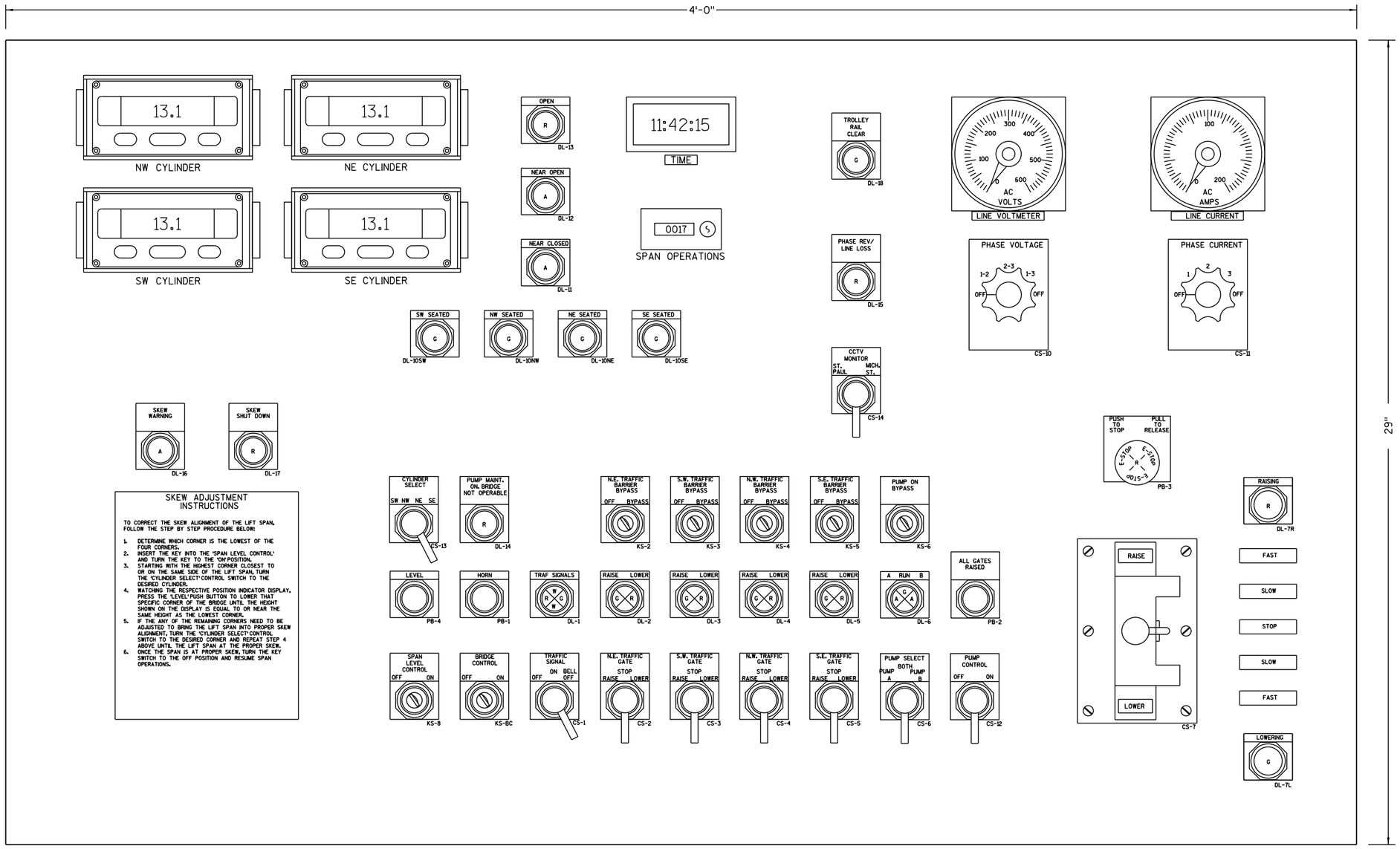

CONTROL CONSOLE LAYOUT

NOTES:

1. BYPASS KS-2 THRU KS-5 SHALL BE MOMENTARY SPRING RETURN TO "OFF". KS-6 AND KS-8 SHALL BE MAINTAINED IN BOTH POSITIONS. UNITS SHALL BE CUTLER HAMMER TYPE 10250T AND SHALL BE KEYED TO TYPE "MD2" KEY.
2. ALL KEY SWITCHES SHALL HAVE THE KEYS CAPTIVE WHEN TURNED TO THE RIGHT.
3. KEY SWITCH KS-BC SHALL BE CUTLER-HAMMER TYPE 10250T AND SHALL BE KEYED TO TYPE "MD1" KEY.
4. CCTV MONITOR SWITCH, CS-14 FOR USE WITH CCTV SYSTEM. SEE SHEET E32 FOR FURTHER DETAILS.

City of Milwaukee
Department of Public Works
Infrastructure Services Division

HNTB
11414 West Park Place, Suite 300
Milwaukee, WI 53224
414-359-2300

ST PAUL AVE. LIFT BRIDGE
OVER THE MILWAUKEE RIVER
CONTROL CONSOLE LAYOUT

REVISIONS

DESIGNED BY GLP
DRAWN BY SMS
CHECKED BY JGS
DATE FEB 2013
SCALE NONE
JOB NUMBER BR100-10-0106
SHEET NUMBER E13 OF E33
OF 198

FILE NAME: E13.dgn
DATE: 1/29/2013 09:15
Plotted by: SSympson
PEN TABLE: Hpscrnth.pen

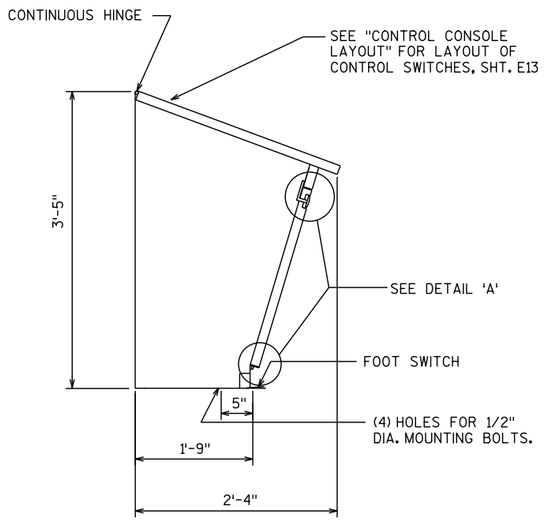

SIDE VIEW

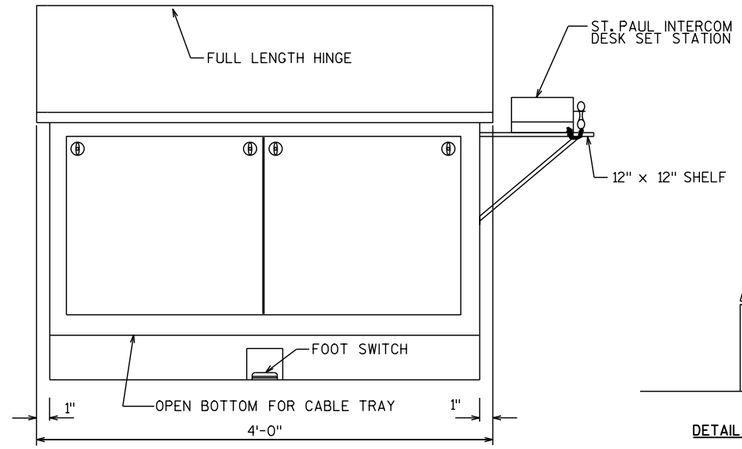

FRONT VIEW

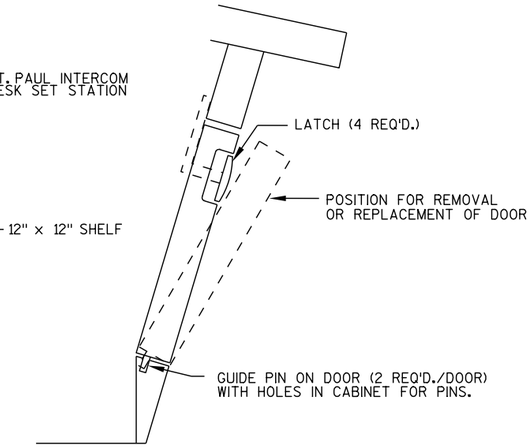

DETAIL 'A'

CONTROL CONSOLE DETAILS

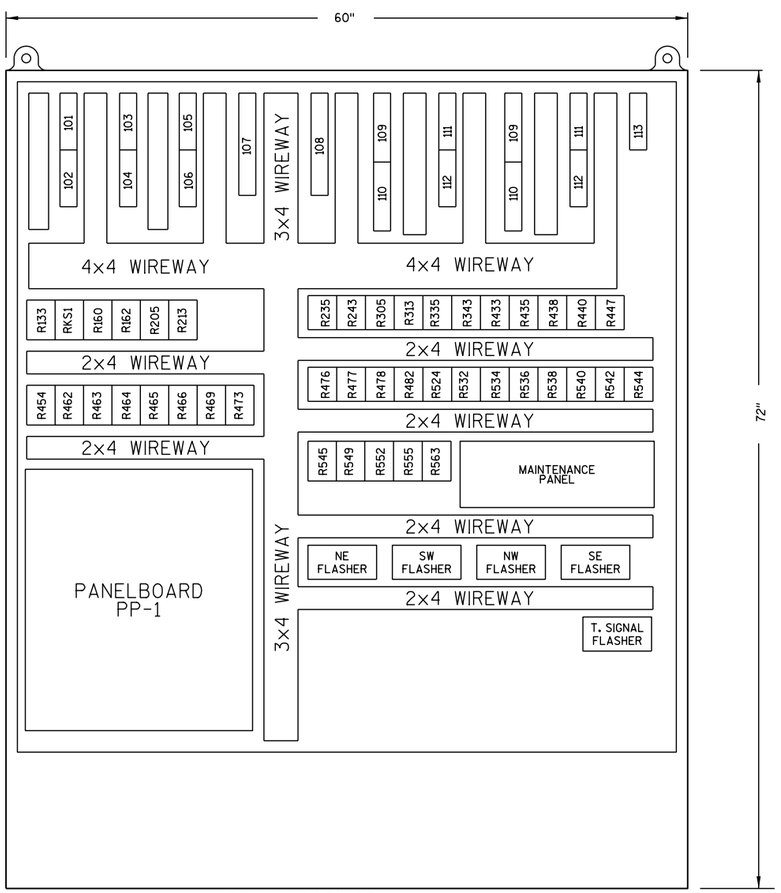

RELAY CABINET

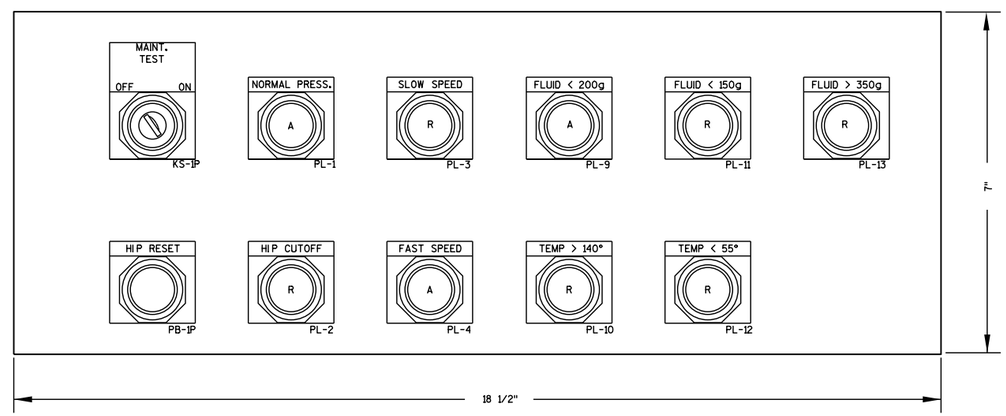

MAINTENANCE PANEL
(MOUNT ON RELAY CABINET BACK PANEL)

CABINET SHALL BE HOFFMAN ENGINEERING CATALOG NUMBER A726018SSFSDN4 WITH BACK PANEL A72P60F1 OR APPROVED EQUAL.

City of Milwaukee

Department of Public Works

Infrastructure Services Division

HNTB
11414 West Park Place, Suite 300
Milwaukee, WI 53224
414-359-2300

ST PAUL AVE. LIFT BRIDGE
OVER THE MILWAUKEE RIVER
CONTROL CONSOLE
RELAY CABINET DETAILS

REVISIONS

DESIGNED BY GLP
DRAWN BY SMS
CHECKED BY JGS
DATE FEB 2013
SCALE NONE
JOB NUMBER BR100-10-0106
SHEET NUMBER E14 OF E33
OF 198

FILE NAME: E14.dgn
DATE: 1/29/2013 09:15
Plotted by: SSympson
PEN TABLE: Hpscrnbwpen

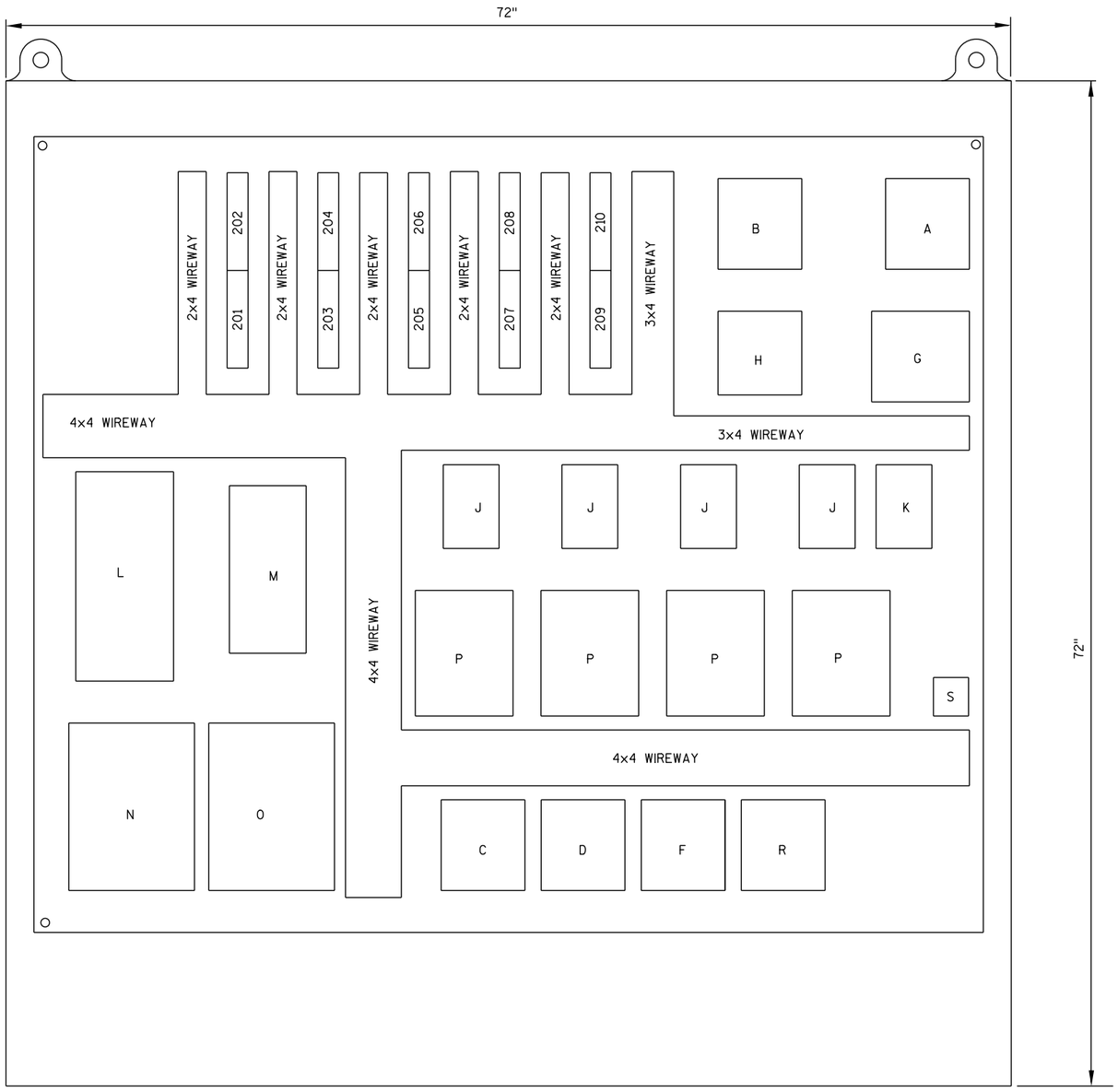

SWITCHBOARD CABINET

A MAIN CB - 200A - CUTLER HAMMER KS360200D
B TVSS CB - 30A - CUTLER HAMMER FS340030A
C PUMP 'A' CB - CUTLER HAMMER GMCP063M2C
D PUMP 'B' CB - CUTLER HAMMER GMCP063M2C
F TRANSFORMER TX1 CB - 70A - CUTLER HAMMER FS340070A
G CT/PT EQUIPMENT
H TVSS MODULE NLP MODEL NLPXA-04-20-E1-X
J TRAFFIC GATE CB - CUTLER HAMMER GMCP007C0C
K PANELBOARD LP1 CB - 225A - CUTLER HAMMER JS360225A
L PUMP 'A' MOTOR STARTER - NEMA 3NR-CUTLER HAMMER AN16GN0_C
M PUMP 'B' MOTOR STARTER - NEMA 3NR-CUTLER HAMMER AN16GN0_C
N PUMP 'A' SOFT START MODULE - AB150-B135NBDB-8M
O PUMP 'B' SOFT START MODULE - AB150-B97NBDB-8M
P TRAFFIC GATE MOTOR STARTER - NEMA 0 REV - CUTLER HAMMER AN16BN0_C
R 120/208V BUS CB - CUTLER HAMMER JH360225A
S PHASE REVERSE/LINE LOSS RELAY - TIME MARK MODEL 269

NOTE:
CABINET SHALL BE HOFFMAN ENGR. CAT. NO. A72X7318SSLPN4 WITH PANEL A72P72F1 OR EQUAL.

City of Milwaukee

Department of Public Works

Infrastructure Services Division

HNTB
11414 West Park Place, Suite 300
Milwaukee, WI 53224
414-359-2300

ST PAUL AVE. LIFT BRIDGE
OVER THE MILWAUKEE RIVER
SWITCHBOARD
CABINET DETAILS

REVISIONS

DESIGNED BY GLP
DRAWN BY SMS
CHECKED BY JGS
DATE FEB 2013
SCALE NONE
JOB NUMBER BR100-10-0106
SHEET NUMBER E15 OF E33
OF 198

FILE NAME: E15.dgn
DATE: 1/29/2013 09:15
Plotted by: SSympson
PEN TABLE: Hpacmth.pen

SWITCHES

PUSHBUTTON (MOMENTARY)

"PUSH TO STOP" CS-3
OPEN CLOSE

COMBINATION SELECTOR SWITCH WITH PUSHBUTTON
ARROWS INDICATE SPRING RETURN TO POSITION SHOWN
X INDICATES SWITCH CLOSURE IN EACH POSITION
CS-3 INDICATES SWITCH NUMBER-SEE CONTROL PANEL
VIEWS FOR SWITCH LOCATIONS.

LIMIT SWITCH, (LS-) NORMALLY CLOSED

LIMIT SWITCH, NORMALLY OPEN

BYPASS SWITCH (KS-) MAINTAINED CONTACT

BYPASS SWITCH (KS-) MOMENTARY CONTACT

PRESSURE SWITCH (PS-) NORMALLY OPEN

PRESSURE SWITCH (PS-) NORMALLY CLOSED

TEMPERATURE SWITCH (TS-) NORMALLY OPEN

RELAYS

2 R 302 7,34, 725 — RELAY COIL, ON SCHEMATIC 3, LINE 2. REFERENCE NUMBERS:
7 INDICATES A NORMALLY OPEN CONTACT OF R2 ON LINE 7.
UNDERLINED 34 INDICATES A NORMALLY CLOSED CONTACT ON
ON LINE 34. EACH SCHEMATIC SHEET HAS 99 OR FEWER LINES.
THE 725 INDICATES A CONTACT ON LINE 25 OF SCHEMATIC SHEET 7.

R302 — NORMALLY OPEN INSTANTANEOUS CONTACT OF RELAY R2. COIL IS ON SAME SHEET AS CONTACT.

R702 — NORMALLY CLOSED INSTANTANEOUS CONTACT OF RELAY WHOSE COIL IS ON SCHEMATIC SHEET 7, LINE 2.

R63 — MACHINE TOOL RELAY

ABBREVIATIONS

KS KEY SWITCH
CB CIRCUIT BREAKER

MISC. DEVICES

TRANSFORMER SECONDARY

FUSE

GROUND CONNECTION

LAMP

CS-3 R "PUSH TO START" — LAMP ON PANEL. R INDICATES RED LENSE. CS-3 INDICATES DEVICE NUMBER. SEE CONTROL PANEL VIEWS FOR SWITCH LOCATIONS. WORDS IN MARGIN INDICATE LENSE ENGRAVING.

WARNING HORN

STEP DOWN TRANSFORMER
WITH ELECTROSTATIC SHIELDS

SOLENOID VALVE (SV-)

WIRING

LINE CONNECTIONS

LINES CROSSING WITHOUT BEING CONNECTED

WIRING TERMINAL--SEE TERMINAL LOCATION LEGEND

4 4 — HEAVY LINE INDICATES FIELD WIRING BETWEEN
TERMINAL POINTS

TIMING RELAYS

NORMALLY OPEN, TIME DELAY CLOSING

NORMALLY CLOSED, TIME DELAY OPENING

30 SEC. T24 — TIME RELAY-30 SEC. DENOTES
TIMING INTERVAL

TERMINAL LOCATION LEGEND

- TERMINAL IN MAIN CONTROL CONSOLE
- TERMINAL IN RELAY CABINET
- TERMINAL IN SWITCHBOARD CABINET
- TERMINAL IN MICHIGAN ST. CONTROL PANEL

SWITCHES, RECEPTACLES AND CIRCUITRY

$ — SINGLE POLE SWITCH

$D — DIMMER SWITCH, 600V

$3 — THREE WAY SWITCH

$WP — SWITCH IN WEATHERPROOF HOUSING

20A, 125V, DUPLES CONVIENCE OUTLET

GFCI — 20A, 125V, GROUNDFAULT INTERRUPTER OUTLET

WP — 20A, 120V, WEATHERPROOF OUTLET

INTERCOM STATION

TELEPHONE STATION

COMBINATION FAX & INTERNET OUTLET

S — SMOKE DETECTOR

JB — JUNCTION/PULL BOX

HOME RUN TO PANELBOARD CIRCUIT BREAKER INDICATED WITH 1 CIRCUIT CONDUCTOR, 1 CIRCUIT NEUTRAL AND 1 CIRCUIT GROUND CONDUCTOR IN CIRCUIT CONDUIT

CIRCUIT RUN WITH 3 CIRCUIT CONDUCTORS, 1 NEUTRAL AND 1 CIRCUIT GROUND. EACH SMALL MARK TYPICAL FOR A SINGLE CIRCUIT CONDUCTOR

SWITCH CIRCUIT WITH TWO (2) CIRCUIT CONDUCTORS

A — FLUORESCENT LIGHT FIXTURE, RECESSED, SUSPENDED OR SURFACE MOUNTED, LETTER DESIGNATES TYPE AS SHOWN ON LIGHTING FIXTURE SHEET

A — SURFACE MOUNTED LIGHT FIXTURE, LETTER DESIGNATES TYPE AS SHOWN ON LIGHTING FIXTURE SHEET

A — TRACK LIGHT WITH TRACK AND FIXTURES, NUMBER OF TRIANGLES INDICATES NUMBER OF LAMPS AND GENERAL AREA OF AIMING. LETTER DESIGNATES TYPE

A — CEILING MOUNTED LIGHT FIXTURE, LETTER INDICATES TYPE

A — EMERGENCY EGRESS LIGHT, BATTERY POWERED, LETTER DESIGNATES TYPE

CONDUIT - TURN DOWN

CONDUIT - TURN UP

CABLE TRAY

CABLE TRAY - TURN UP

CABLE TRAY - TURN DOWN

3 — CIRCUIT BREAKER, # OF PHASES SHOWN

City of Milwaukee
Department of Public Works
Infrastructure Services Division

HNTB
11414 West Park Place, Suite 300
Milwaukee, WI 53224
414-359-2300

ST PAUL AVE. LIFT BRIDGE OVER THE MILWAUKEE RIVER SCHEMATIC LEGEND AND SYMBOL LIST

REVISIONS

DESIGNED BY GLP	
DRAWN BY SMS	
CHECKED BY JGS	
DATE FEB 2013	SCALE NONE
JOB NUMBER BR100-10-0106	
SHEET NUMBER E16 OF E33	
OF 198	

FILE NAME: E16.dgn
DATE: 1/29/2013 09:15
Plotted by: SSympson
PEN TABLE: Hpscrmth.pen

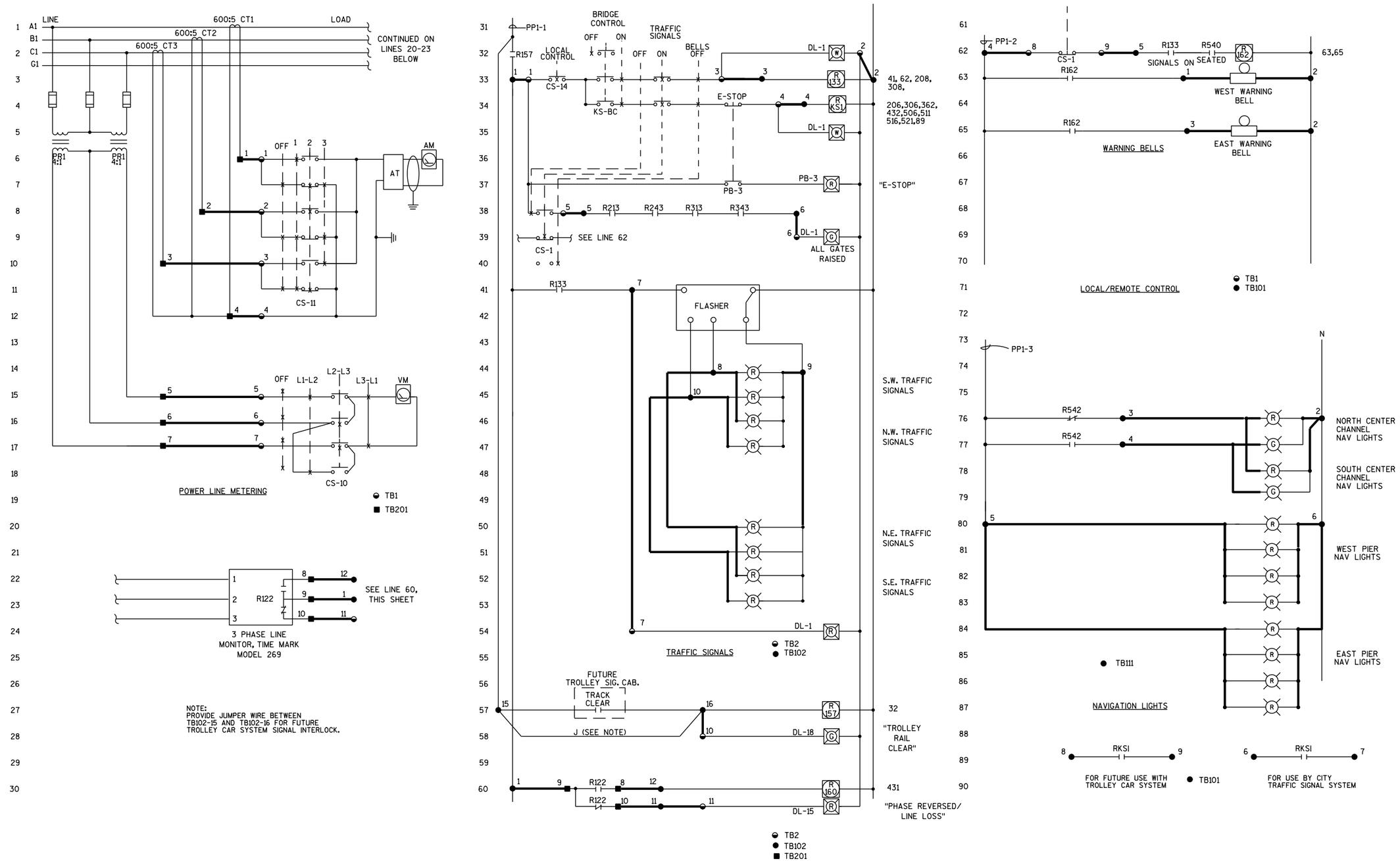

City of Milwaukee

Department of Public Works

Infrastructure Services Division

HNTB
11414 West Park Place, Suite 300
Milwaukee, WI 53224
414-359-2300

ST PAUL AVE. LIFT BRIDGE OVER THE MILWAUKEE RIVER SCHEMATIC 1

REVISIONS

DESIGNED BY GLP	
DRAWN BY SMS	
CHECKED BY JGS	
DATE FEB 2013	SCALE NONE
JOB NUMBER BR100-10-0106	
SHEET NUMBER E17 OF E33	
OF 198	

FILE NAME: E17.dgn
DATE: 1/29/2013 09:15
Plotted by: SSympson
PEN TABLE: hpscmhkpen

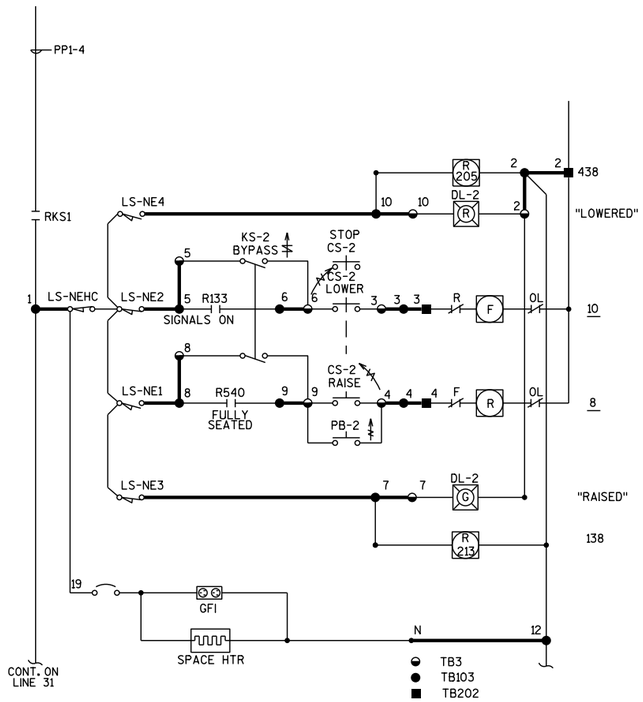

LIMIT SWITCH CONTACT DEVELOPMENT

CONTACT	LOWERED	OPERATOR POSITION	RAISED	FUNCTION THIS DWG OR DWG WHERE CONTACT IS SHOWN
LS-NE1	———	———	– – –	RAISE LIMIT
LS-NE2	– – –	———	———	LOWER LIMIT
LS-NE3	– – –	– – – – – – –	———	IND LIGHT
LS-NE4	———	– – – – – – – –	– – –	IND LIGHT
LS-NE5	———	– – – – – – – –	– – –	LINE 38, THIS SHEET
LS-NE6	– – –	———	———	SPARE
LS-NE7	———	———	– – –	SPARE

0° 90°

LS-NEHC IS HAND CRANK LIMIT SWITCH

NORTHEAST TRAFFIC GATE

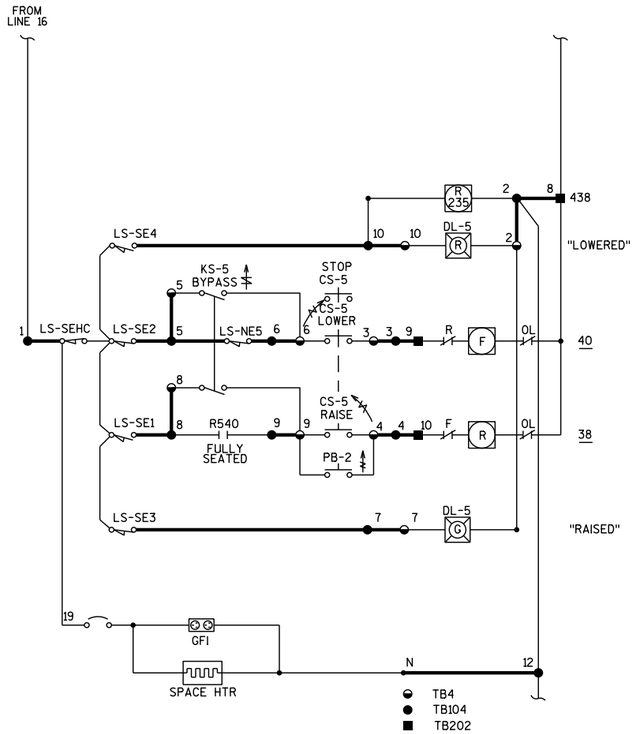

LIMIT SWITCH CONTACT DEVELOPMENT

CONTACT	LOWERED	OPERATOR POSITION	RAISED	FUNCTION THIS DWG OR DWG WHERE CONTACT IS SHOWN
LS-SE1	———	———	– – –	RAISE LIMIT
LS-SE2	– – –	———	———	LOWER LIMIT
LS-SE3	– – –	– – – – – – –	———	IND LIGHT
LS-SE4	———	– – – – – – – –	– – –	SPARE
LS-SE5	———	– – – – – – – –	– – –	SPARE
LS-SE6	– – –	———	———	SPARE
LS-SE7	———	———	– – –	SPARE

0° 90°

LS-SEHC IS HAND CRANK LIMIT SWITCH

SOUTHEAST TRAFFIC GATE

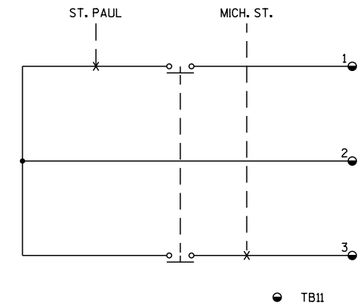

CCTV MONITOR SELECT

City of Milwaukee

Department of Public Works

Infrastructure Services Division

HNTB
11414 West Park Place, Suite 300
Milwaukee, WI 53224
414-359-2300

ST PAUL AVE. LIFT BRIDGE
OVER THE MILWAUKEE RIVER
SCHEMATIC 2

REVISIONS

DESIGNED BY GLP
DRAWN BY SMS
CHECKED BY JGS
DATE FEB 2013
SCALE NONE
JOB NUMBER BR100-10-0106
SHEET NUMBER E18 OF E33
OF 198

FILE NAME: E18.dgn
DATE: 1/29/2013 09:15
Plotted by: SSympson
PEN TABLE: Hpscrnth.pen

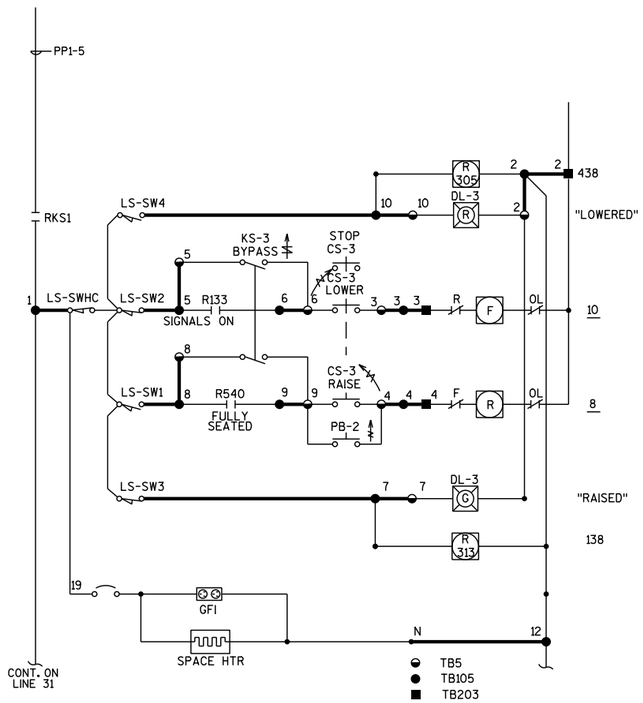

LIMIT SWITCH CONTACT DEVELOPMENT

CONTACT	LOWERED	OPERATOR POSITION	RAISED	FUNCTION THIS DWG OR DWG WHERE CONTACT IS SHOWN
LS-SW1	———	———	– – –	RAISE LIMIT
LS-SW2	– – –	———	———	LOWER LIMIT
LS-SW3	– – –	– – – – – – – –	———	IND LIGHT
LS-SW4	———	– – – – – – – –	– – –	IND LIGHT
LS-SW5	———	– – – – – – – –	– – –	LINE 38, THIS SHEET
LS-SW6	– – –	———	———	SPARE
LS-SW7	———	———	– – –	LINE 15

0° 90°

LS-SWHC IS HAND CRANK LIMIT SWITCH

SOUTHWEST TRAFFIC GATE

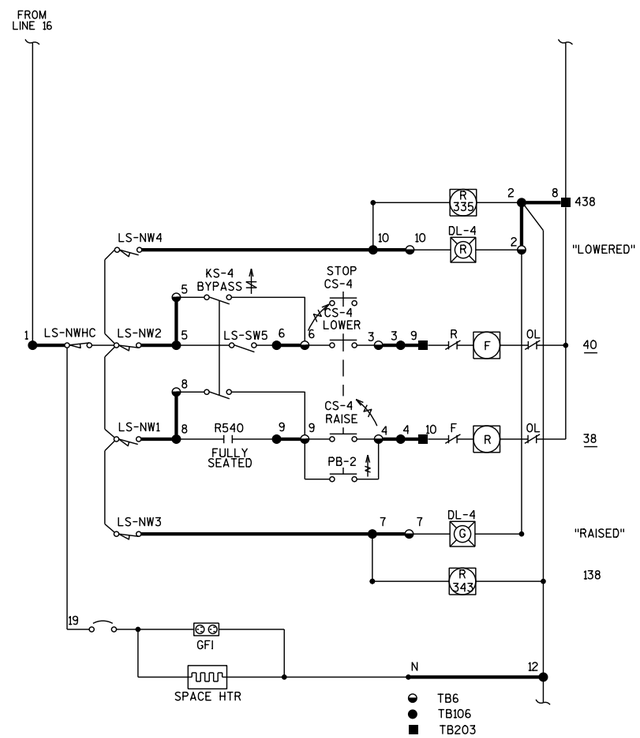

LIMIT SWITCH CONTACT DEVELOPMENT

CONTACT	LOWERED	OPERATOR POSITION	RAISED	FUNCTION THIS DWG OR DWG WHERE CONTACT IS SHOWN
LS-NW1	———	———	– – –	RAISE LIMIT
LS-NW2	– – –	———	———	LOWER LIMIT
LS-NW3	– – –	– – – – – – – –	———	IND LIGHT
LS-NW4	———	– – – – – – – –	– – –	IND LIGHT
LS-NW5	———	– – – – – – – –	– – –	SPARE
LS-NW6	– – –	———	———	SPARE
LS-NW7	———	———	– – –	SPARE

0° 90°

LS-NWHC IS HAND CRANK LIMIT SWITCH

NORTHWEST TRAFFIC GATE

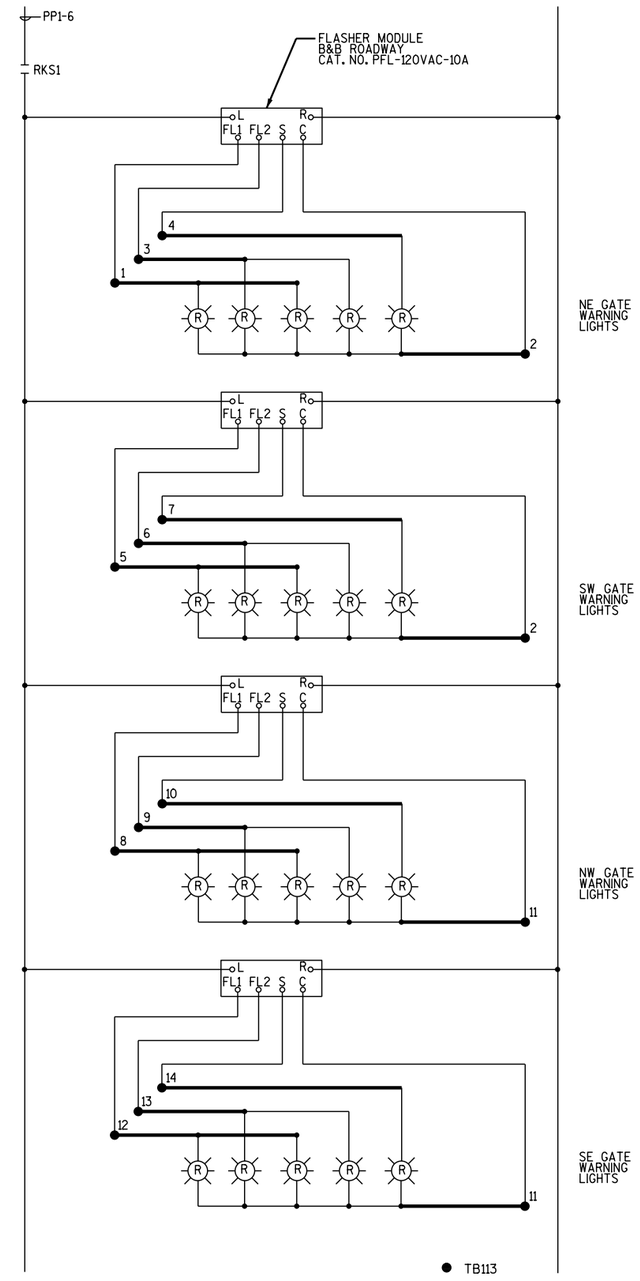

TRAFFIC GATES WARNING LIGHTS

City of Milwaukee

Department of Public Works

Infrastructure Services Division

HNTB
11414 West Park Place, Suite 300
Milwaukee, WI 53224
414-359-2300

ST PAUL AVE. LIFT BRIDGE OVER THE MILWAUKEE RIVER SCHEMATIC 3

REVISIONS

DESIGNED BY GLP

DRAWN BY SMS

CHECKED BY JGS

DATE FEB 2013 | SCALE NONE

JOB NUMBER BR100-10-0106

SHEET NUMBER E19 OF E33

OF 198

FILE NAME: E19.dgn
DATE: 1/29/2015 09:15
Plotted by: SSympson
PEN TABLE: hpscrnthpen

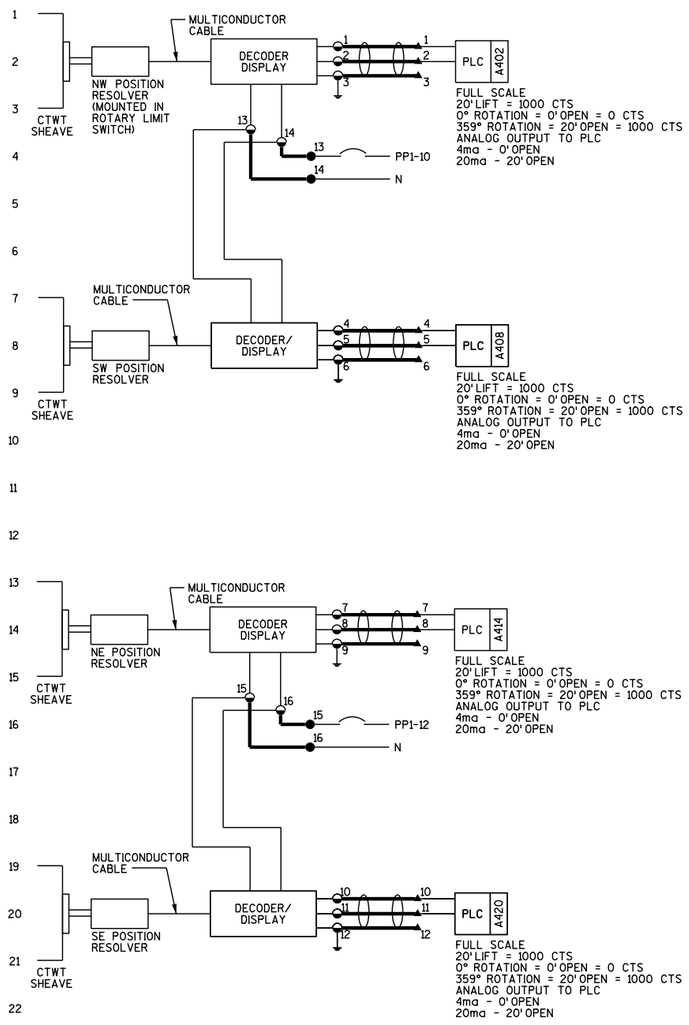

TB9
TB301

LIFT CYLINDER POSITION

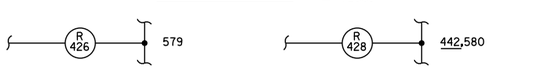

NOTE:
UTILIZE THE FOUR CYLINDER POSITION INPUT REGISTERS ABOVE (A402, A408, A414 AND A420) TO DEVELOP A PID COMPARATOR THAT WILL EVALUATE EACH REGISTER TO ESTABLISH A LOW POSITION AND COMPARE THE OTHER THREE TO DETERMINE OVERALL SKEW OF THE LIFT SPAN DURING OPERATION. SET TOLERANCE SO THAT WHEN SKEW EXCEEDS A 3 INCH DIFFERENCE BETWEEN THE HIGH AND LOW CYLINDER POSITIONS, AN OUTPUT (R426) SHALL GO HIGH THAT WILL CLOSE A NORMALLY OPEN CONTACT THAT WILL ILLUMINATE A WARNING LIGHT (DL-16) TO THE OPERATOR. A SECOND OUTPUT (R428) SHALL BE SET SUCH THAT WHEN THE SKEW EXCEEDS A 4 INCH DIFFERENCE BETWEEN THE HIGH AND LOW CYLINDER POSITIONS, AN OUTPUT SHALL GO HIGH THAT WILL OPEN A NORMALLY CLOSED CONTACT TO SHUT DOWN THE BRIDGE OPERATION AND CLOSE A NORMALLY OPEN CONTACT TO ILLUMINATE A WARNING LIGHT (DL-17) TO THE OPERATOR.

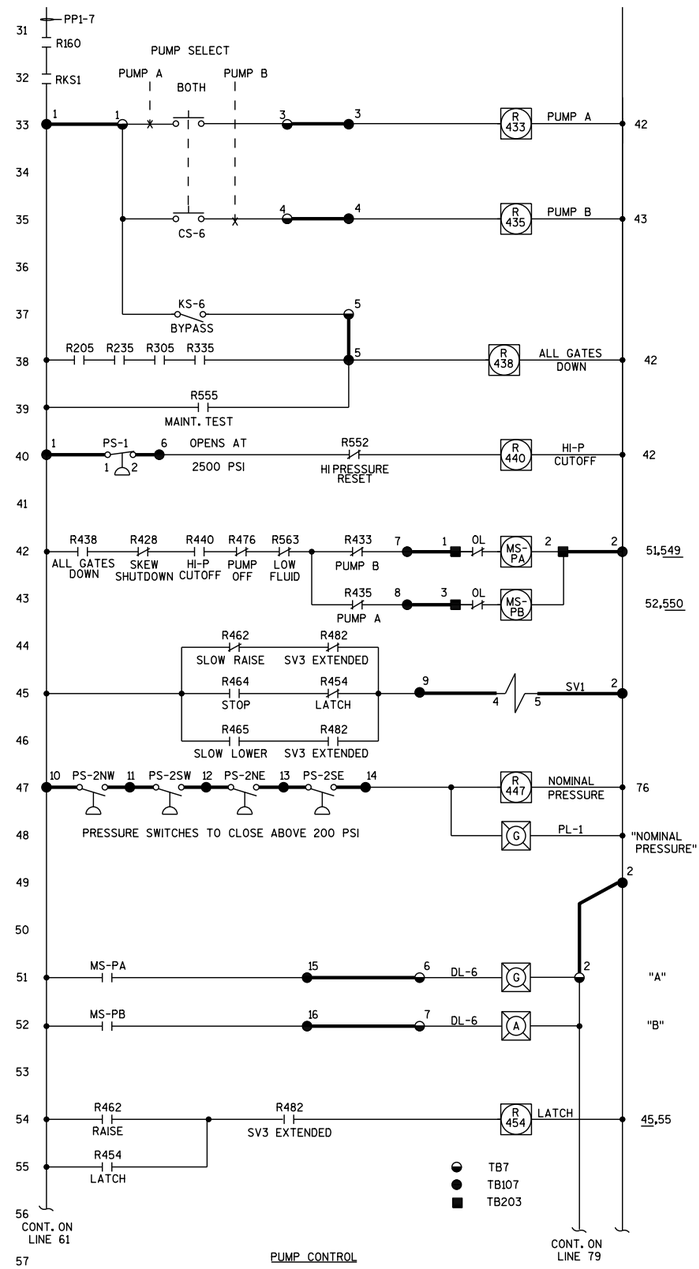

TB7
TB107
TB203

PUMP CONTROL

SOLENOID VALVE SV3

CONTACT	FULLY EXTENDED	OPERATOR POSITION	FULLY RETRACTED	FUNCTION THIS DWG OR DWG WHERE CONTACT IS SHOWN
LS-SV3E1	———	— — — — — —	— — — —	LINE 74 THIS SHEET
LS-SV3E2	— — — —	———	———	NOT USED
LS-SV3R1	— — — —	— — — — — —	———	NOT USED
LS-SV3R2	———	———	— — — —	LINE 82 THIS SHEET

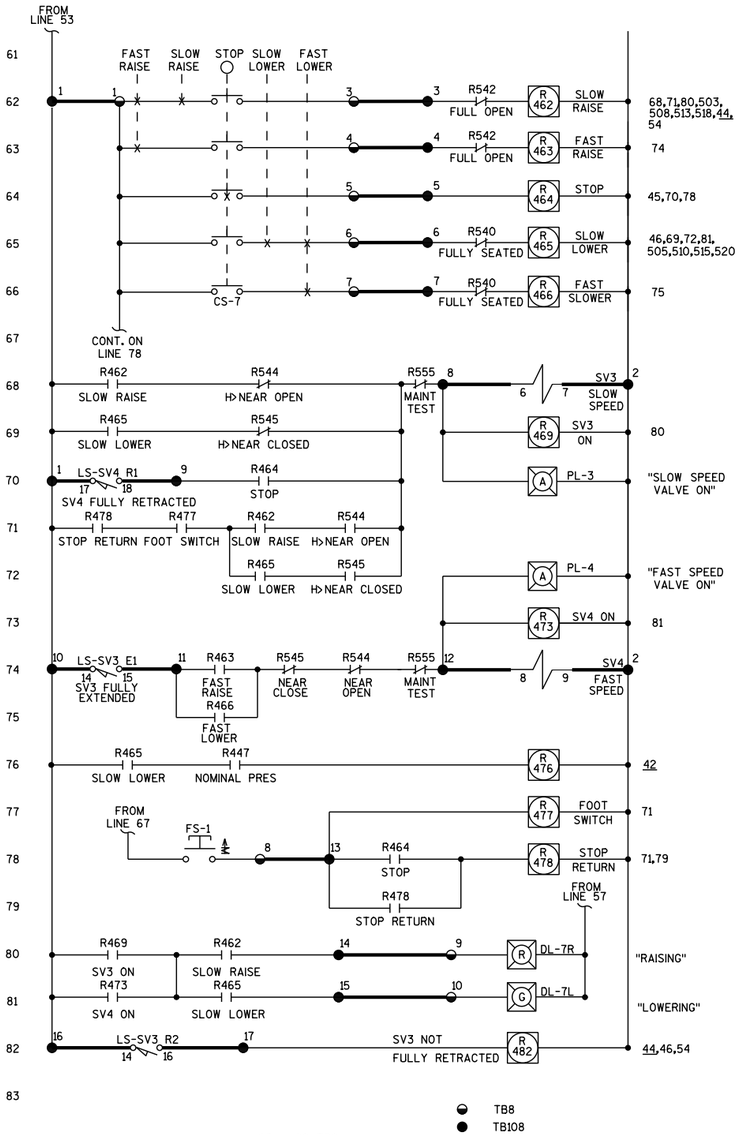

TB8
TB108

SPAN CONTROL

SOLENOID VALVE SV4

CONTACT	FULLY EXTENDED	OPERATOR POSITION	FULLY RETRACTED	FUNCTION THIS DWG OR DWG WHERE CONTACT IS SHOWN
LS-SV4E1	— — — —	— — — — — —	— — — —	NOT USED
LS-SV4E2	— — — —	———	———	NOT USED
LS-SV4R1	— — — —	— — — — — —	———	LINE 70 THIS SHEET
LS-SV4R2	———	———	— — — —	NOT USED

City of Milwaukee
Department of Public Works
Infrastructure Services Division

HNTB
11414 West Park Place, Suite 300
Milwaukee, WI 53224
414-359-2300

ST PAUL AVE. LIFT BRIDGE OVER THE MILWAUKEE RIVER SCHEMATIC 4

REVISIONS

DESIGNED BY GLP
DRAWN BY SMS
CHECKED BY JGS
DATE FEB 2013
SCALE NONE
JOB NUMBER BR100-10-0106
SHEET NUMBER E20 OF E33
OF 198

FILE NAME: E20.dgn
DATE: 1/29/2013 09:15
Plotted by: SSympson
PEN TABLE: Hpscmth.pen

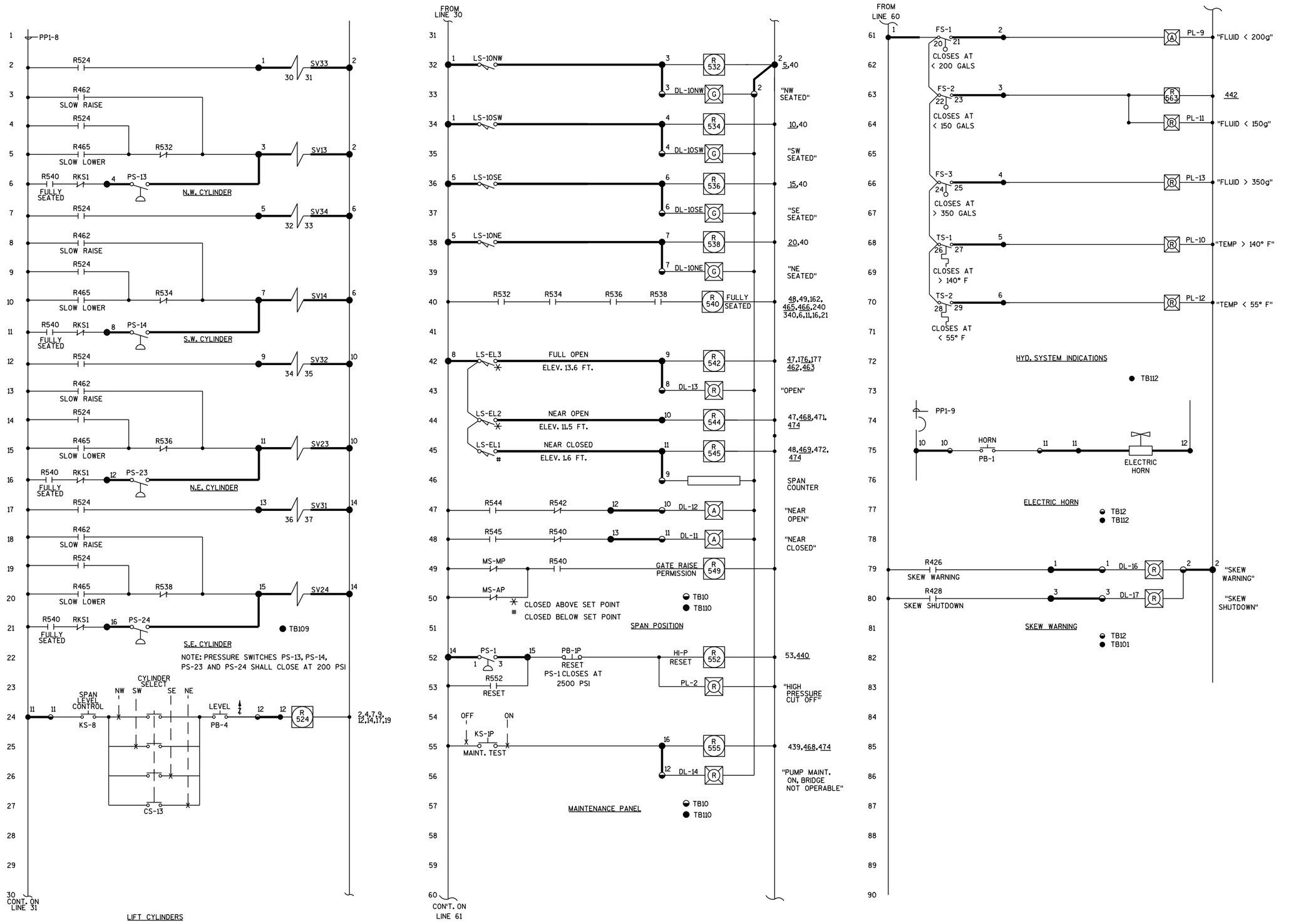

City of Milwaukee

Department of Public Works

Infrastructure Services Division

HNTB
11414 West Park Place, Suite 300
Milwaukee, WI 53224
414-359-2300

ST PAUL AVE. LIFT BRIDGE OVER THE MILWAUKEE RIVER SCHEMATIC 5

REVISIONS

DESIGNED BY GLP	
DRAWN BY SMS	
CHECKED BY JGS	
DATE FEB 2013	SCALE NONE
JOB NUMBER BR100-10-0106	
SHEET NUMBER E21 OF E33	
OF 198	

FILE NAME: E21.dgn
DATE: 1/29/2013 09:15
Plotted by: SSympson
PEN TABLE: Hpscrnb.pen

CIRCUIT NUMBER	COND COLOR	FROM	TO
POWER LINE METERING			
C1		SWBD CAB	CONTROL DESK
	B	TB201-1	TB1-1
	R	TB201-2	TB1-2
	BL	TB201-3	TB1-3
	O	TB201-4	TB1-4
C2		SWBD CAB	CONTROL DESK
	B	TB201-5	TB1-5
	R	TB201-6	TB1-6
	BL	TB201-7	TB1-7
	O	SPARE	SPARE
TRAFFIC SIGNALS			
C3		RELAY CABINET	CONTROL DESK
	B	TB102-1	TB2-1
	R	TB102-2	TB2-2
	BL	TB102-3	TB2-3
	O	TB102-4	TB2-4
	Y	TB102-5	TB2-5
	BN	TB102-6	TB2-6
	RB	TB102-7	TB2-7
	BLB	TB102-11	TB2-11
	OB	SPARE	SPARE
C4		SW TRAFFIC SIG	RELAY CABINET
	B	UPPER RED	TB102-8
	R	LOWER RED	TB102-9
	BL	COMMON	TB102-10
	O	SPARE	SPARE
C5		NW TRAFFIC SIG	SW TRAFFIC SIG
	B	UPPER RED	UPPER RED
	R	LOWER RED	LOWER RED
	BL	COMMON	COMMON
	O	SPARE	SPARE
C6		SE TRAFFIC SIG	RELAY CABINET
	B	UPPER RED	TB102-8
	R	LOWER RED	TB102-9
	BL	COMMON	TB102-10
	O	SPARE	SPARE
C7		SE TRAFFIC SIG	NE TRAFFIC SIG
	B	UPPER RED	UPPER RED
	R	LOWER RED	LOWER RED
	BL	COMMON	COMMON
	O	SPARE	SPARE
C8		480 V SWBD CAB	RELAY CAB
	B	TB201-9	TB102-1
	R	TB201-10	TB102-11
	BL	TB201-8	TB102-12
	O	SPARE	SPARE
WARNING BELLS			
C9		W WARNING BELL	RELAY CABINET
	B	LINE	TB101-1
	R	COMMON	TB101-2
C10		E WARNING BELL	RELAY CABINET
	B	LINE	TB101-3
	R	COMMON	TB101-2
C11		RELAY CAB	CONTROL DESK
	B	TB101-4	TB1-8
	R	TB101-5	TB1-9
NAVIGATION LIGHTS			
C13		S CHANNEL LT	RELAY CABINET
	B	RED	TB111-3
	R	GREEN	TB111-4
	BL	COMMON	TB111-2
	O	SPARE	SPARE
C14		N CHANNEL LT	S CHANNEL LT
	B	RED	RED
	R	GREEN	GREEN
	BL	COMMEN	COMMON
	O	SPARE	SPARE
C15		SW1 PIER NAV LT	RELAY CAB
	B	LINE	TB111-5
	R	COMMON	TB111-6

CIRCUIT NUMBER	COND COLOR	FROM	TO
C16		SW1 PIER NAV LT	SW2 PIER NAV LT
	B	LINE	LINE
	R	COMMON	COMMON
C17		SW2 PIER NAV LT	NW2 PIER NAV LT
	B	LINE	TB111-5
	R	COMMON	TB111-6
C18		NW2 PIER NAV LT	NW1 PIER NAV LT
	B	LINE	TB111-5
	R	COMMON	TB111-6
C19		SE1 PIER NAV LT	RELAY CAB
	B	LINE	TB111-5
	R	COMMON	TB111-6
C20		SE1 PIER NAV LT	SE2 PIER NAV LT
	B	LINE	LINE
	R	COMMON	COMMON
C21		SE2 PIER NAV LT	NE2 PIER NAV LT
	B	LINE	LINE
	R	COMMON	COMMON
C22		NE2 PIER NAV LT	NE1 PIER NAV LT
	B	LINE	LINE
	R	COMMON	COMMON
NE TRAFFIC GATE			
C23		SWBD CAB	RELAY CABINET
	B	SPARE	SPARE
	R	TB202-2	TB103-2
	BL	TB202-3	TB103-3
	O	TB202-4	TB103-4
C24		RELAY CABINET	CONTROL DESK
	B	SPARE	SPARE
	R	TB103-2	TB3-2
	BL	TB103-3	TB3-3
	O	TB103-4	TB3-4
	Y	TB103-5	TB3-5
	BN	TB103-6	TB3-6
	RB	TB103-7	TB3-7
	BLB	TB103-8	TB3-8
	OB	TB103-9	TB3-9
	YB	TB103-10	TB3-10
	BNB	SPARE	SPARE
	BR	SPARE	SPARE
C25		NE TRAF GATE	RELAY CAB
	B	LS-NEHC COM	TB103-1
	R	LS-NE2 NC	TB103-5
	BL	LS-NE4 NO	TB103-10
	O	LS-NE3 NC	TB103-7
	Y	LS-NE1 NO	TB103-8
	BN	N2	TB103-12
	RB	SPARE	SPARE
P13		NE TRAF GATE	SWBD CAB
	B1	T1	TB204-1
	B2	T2	TB204-2
	B3	T3	TB204-3
	B4	GRD	TB204-4
SE TRAFFIC GATE			
C26		SWBD CAB	RELAY CABINET
	B	SPARE	SPARE
	R	TB202-8	TB104-2
	BL	TB202-9	TB104-3
	O	TB202-10	TB104-4
C27		RELAY CABINET	CONTROL DESK
	B	SPARE	SPARE
	R	TB104-2	TB4-2
	BL	TB104-3	TB4-3
	O	TB104-4	TB4-4
	Y	TB104-5	TB4-5
	BN	TB104-6	TB4-6
	RB	TB104-7	TB4-7
	BLB	TB104-8	TB4-8
	OB	TB104-9	TB4-9
	YB	TB104-10	TB4-10
	BNB	SPARE	SPARE
	BR	SPARE	SPARE

CIRCUIT NUMBER	COND COLOR	FROM	TO
C36		SW TRAFFIC GATE	RELAY CAB
	B	LS-SW5 NO	TB105-6
	R	LS-SW5 COM	TB106-5
P12		NW TRAFFIC GATE	MCC-1
	B1	T1	TB205-9
	B2	T2	TB205-10
	B3	T3	TB205-11
	B4	GRD	TB205-12
GATE WARNING LIGHTS			
C37		NE GATE LTS	RELAY CAB
	B	FL1	TB113-1
	R	COMMON	TB113-2
	BL	FL2	TB113-3
	O	STEADY	TB113-4
C38		SE GATE LTS	RELAY CAB
	B	FL1	TB113-5
	R	COMMON	TB113-2
	BL	FL2	TB113-6
	O	STEADY	TB113-7
C39		SW GATE LTS	RELAY CAB
	B	FL1	TB113-8
	R	COMMON	TB113-11
	BL	FL2	TB113-9
	O	STEADY	TB113-10
C40		NW GATE LTS	RELAY CAB
	B	FL1	TB113-12
	R	COMMON	TB113-11
	BL	FL2	TB113-13
	O	STEADY	TB113-14
PUMP CONTROL			
C41		RELAY CAB	CONTROL DESK
	B	TB107-1	TB7-1
	R	TB107-2	TB7-2
	BL	TB107-3	TB7-3
	O	TB107-4	TB7-4
	Y	TB107-5	TB7-5
	BN	TB107-15	TB7-6
	RB	TB107-16	TB7-7
	BLB	SPARE	SPARE
	OB	SPARE	SPARE
C42		SWBD CAB	RELAY CAB
	B	TB203-1	TB107-7
	R	TB203-2	TB107-2
	BL	TB203-3	TB107-8
	O	SPARE	SPARE
C43		HYD SKID	RELAY CAB
	B	PS-1 COM (1)	TB107-1
	R	PS-1 NC (2)	TB107-6
	BL	SV-1 LINE (4)	TB107-9
	O	SV-1 COMMON (5)	TB107-2
	Y	SPARE	SPARE
	BN	SPARE	SPARE
	RB	SPARE	SPARE
C44		PS-2NW	RELAY CAB
	B	PS-2NW COM	TB107-10
	R	PS-2NW NO	1B107-11
C45		PS-2SW	RELAY CAB
	B	PS-2SW COM	TB107-12
	R	PS-2SW NO	1B107-11
C46		PS-2NE	RELAY CAB
	B	PS-2NE COM	TB107-12
	R	PS-2NE NO	1B107-13
C47		PS-2SE	RELAY CAB
	B	PS-2SE COM	TB107-14
	R	PS-2SE NO	1B107-13
P6		PUMP MTR A	SWBD CAB
	B1	T1	TB206-1
	B2	T2	TB206-2
	B3	T3	TB206-3
	B4	GND	TB206-4

CIRCUIT NUMBER	COND COLOR	FROM	TO
P7		PUMP MTR B	SWBD CAB
	B1	T1	TB206-9
	B2	T2	TB206-10
	B3	T3	TB206-11
	B4	GND	TB206-12
SPAN CONTROL			
C48		RELAY CAB	CONTROL DESK
	B	TB108-1	TB8-1
	R	SPARE	SPARE
	BL	TB108-3	TB8-3
	O	TB108-4	TB8-4
	Y	TB108-5	TB8-5
	BN	TB108-6	TB8-6
	RB	TB108-7	TB8-7
	BLB	TB108-13	TB8-8
	OB	TB108-14	TB8-9
	YB	TB108-15	TB8-10
	BNB	SPARE	SPARE
	BR	SPARE	SPARE
C49		HYD SKID	RELAY CAB
	B	LS-SV4 R1 C (17)	TB108-1
	R	LS-SV4 R1 NO (18)	TB108-9
	BL	LS-SV3 E1 C (14)	TB108-10
	O	LS-SV3 E1 NO (15)	TB108-11
	Y	SV3 LINE (6)	TB108-8
	BN	SV3 COM (7)	TB108-2
	RB	SV4 LINE (8)	TB108-12
	BLB	SV4 COM (9)	TB108-2
	OB	LS-SV3 R2 C (14)	TB108-16
	YB	LS-SV3 R2 NO (16)	TB108-17
	BNB	SPARE	SPARE
	BR	SPARE	SPARE
LIFT CYLINDERS			
C50		HYD SKID	RELAY CAB
	B	SV33 LINE (30)	TB109-1
	R	SV33 COM (31)	TB109-2
C51		NW CYLINDER	RELAY CAB
	B	SV13 LINE	TB109-3
	R	SV13 COM	TB109-2
C52		NW CYLINDER	RELAY CAB
	B	PS-13 LINE	TB109-3
	R	PS-13 COM	TB109-4
C53		HYD SKID	RELAY CAB
	B	SV34 LINE (32)	TB109-5
	R	SV34 COM (33)	TB109-6
C54		SW CYLINDER	RELAY CAB
	B	SV14 LINE	TB109-7
	R	SV14 COM	TB109-6
C55		SW CYLINDER	RELAY CAB
	B	PS-14 LINE	TB109-7
	R	PS-14 COM	TB109-8
C56		HYD SKID	RELAY CAB
	B	SV32 LINE (34)	TB109-9
	R	SV32 COM (35)	TB109-10
C57		NE CYLINDER	RELAY CAB
	B	SV23 LINE	TB109-11
	R	SV23 COM	TB109-10
C58		NE CYLINDER	RELAY CAB
	B	PS-23 LINE	TB109-11
	R	PS-23 COM	TB109-12
C59		HYD SKID	RELAY CAB
	B	SV31 LINE (36)	TB109-13
	R	SV31 COM (37)	TB109-14
C60		SE CYLINDER	RELAY CAB
	B	SV24 LINE	TB109-15
	R	SV24 COM	TB109-14
C61		SE CYLINDER	RELAY CAB
	B	PS-24 LINE	TB109-15
	R	PS-24 COM	TB109-16

1. PROVIDE INTERNAL JUMPER WIRES IN ACCORDANCE WITH SCHEMATIC DRAWINGS.
2. CONDUCTOR COLOR CODE:
   - B BLACK
   - R RED
   - BL BLUE
   - O ORANGE
   - Y YELLOW
   - BN BROWN
   - RB RED/BLACK
   - BLB BLUE/BLACK
   - OB ORANGE/BLACK
   - YB YELLOW/BLACK
   - BNB BROWN/BLACK
   - BR BLACK/RED
3. PROVIDE BELDEN #9330 BETWEEN THE POSITION RESOLVER AND DECODER MODULE OR AS RECOMMENDED BY THE POSITION MONITOR EQUIPMENT MANUFACTURER.

City of Milwaukee
Department of Public Works
Infrastructure Services Division

HNTB
11414 West Park Place, Suite 300
Milwaukee, WI 53224
414-359-2300

ST PAUL AVE. LIFT BRIDGE
OVER THE MILWAUKEE RIVER
WIRING SCHEDULE

REVISIONS

DESIGNED BY GLP
DRAWN BY SMS
CHECKED BY JGS
DATE FEB 2013
SCALE NONE
JOB NUMBER BR100-10-0106
SHEET NUMBER E22 OF E33
OF 198

FILE NAME: E22.dgn
DATE: 1/29/2013 09:15
Plotted by: SSympson
PEN TABLE: Hpscmth.pen

CIRCUIT NUMBER	COND COLOR	FROM	TO
C62		RELAY CAB	CONTROL DESK
	B	TB111-11	TB11-11
	R	TB111-12	TB11-12
SPAN POSITION			
C63		RELAY CAB	CONTROL DESK
	B	TB110-2	TB10-2
	R	TB110-3	TB10-3
	BL	TB110-6	TB10-6
	O	TB110-7	TB10-7
	Y	TB110-9	TB10-8
	BN	TB110-11	TB10-9
	RB	TB110-12	TB10-10
	BLB	TB110-13	TB10-11
	OB	TB110-16	TB10-12
	YB	SPARE	SPARE
	BNB	SPARE	SPARE
	BR	SPARE	SPARE
C64		LS-10NW	RELAY CAB
	B	NO	TB110-1
	R	COM	TB110-3
C65		LS-10SW	RELAY CAB
	B	NO	TB110-1
	R	COM	TB110-4
C66		LS-10SE	RELAY CAB
	B	NO	TB110-5
	R	COM	TB110-6
C67		LS-10NE	RELAY CAB
	B	NO	TB110-5
	R	COM	TB110-7
C68		ROTARY SW LS-EL	RELAY CAB
	B	LS-EL3 COM	TB110-8
	R	LS-EL3 NO	TB110-9
	BL	LS-EL2 NO	TB110-10
	O	LS-EL1 NO	TB110-11
	Y	SPARE	SPARE
	BN	SPARE	SPARE
	RB	SPARE	SPARE
C69		HYD SKID	RELAY CAB
	B	PS-1 NO (1)	TB110-14
	R	PS-1 COM (3)	TB110-15
HYD. SYSTEMS INDICATIONS			
C70		HYD SKID	RELAY CAB
	B	FS-1 COM (20)	TB112-1
	R	FS-1 NO (21)	TB112-2
	BL	FS-2 NO (23)	TB112-3
	O	FS-3 NO (25)	TB112-4
	Y	TS-1 NO (27)	TB112-5
	BN	TS-2 NO (29)	TB112-6
	RB	SPARE	SPARE
ELECTRIC HORN			
C71		RELAY CAB	CONTROL DESK
	B	TB112-10	TB12-10
	R	TB112-11	TB12-11
C72		ELECT HORN	RELAY CAB
	B	LINE	TB112-12
	R	NEUTRAL	TB113-11
SKEW WARNING			
C73		RELAY CAB	CONTROL DESK
	B	TB101-1	TB12-1
	R	TB101-2	TB12-2
	BL	TB101-3	TB12-3
	O	SPARE	SPARE

LIFT CYLINDER POSITION			
C74		NW POS RESLVR	CONTROL DESK
	SEE	S1	S1
	NOTE	S2	S2
	3	S3	S3
		S4	S4
		RH	RH
		RL	RL
		SPARE	SPARE
C75		REM CONT PNL	CONTROL DESK
	B	TB301-1	TB9-1
	W	TB301-2	TB9-2
	SHLD	TB301-3 (GND)	TB9-3
C76		RELAY CAB	CONTROL DESK
	B	TB114-13 (PP1-10)	TB9-13
	R	TB114-14 (NEUT)	TB9-14
C77		SW POS RESLVR	CONTROL DESK
	SEE	S1	S1
	NOTE	S2	S2
	3	S3	S3
		S4	S4
		RH	RH
		RL	RL
		SPARE	SPARE
		SPARE	SPARE
C78		REM CONT PNL	CONTROL DESK
	B	TB301-4	TB9-4
	W	TB301-5	TB9-5
	SHLD	TB301-6 (GND)	TB9-6
C79		NE POS RESLVR	CONTROL DESK
	SEE	S1	S1
	NOTE	S2	S2
	3	S3	S3
		S4	S4
		RH	RH
		RL	RL
		SPARE	SPARE
		SPARE	SPARE
C80		REM CONT PNL	CONTROL DESK
	B	TB301-7	TB9-7
	W	TB301-8	TB9-8
	SHLD	TB301-9 (GND)	TB9-9
C81		RELAY CAB	CONTROL DESK
	B	TB114-15 (PP1-12)	TB9-15
	R	TB114-16 (NEUT)	TB9-16
C82		SE POS RESLVR	CONTROL DESK
	SEE	S1	S1
	NOTE	S2	S2
	3	S3	S3
		S4	S4
		RH	RH
		RL	RL
		SPARE	SPARE
		SPARE	SPARE
C83		REM CONT PNL	CONTROL DESK
	B	TB301-10	TB9-10
	W	TB301-11	TB9-11
	SHLD	TB301-12 (GND)	TB9-12

1. PROVIDE INTERNAL JUMPER WIRES IN ACCORDANCE WITH SCHEMATIC DRAWINGS.

2. CONDUCTOR COLOR CODE:
   - B BLACK
   - R RED
   - BL BLUE
   - O ORANGE
   - Y YELLOW
   - BN BROWN
   - RB RED/BLACK
   - BLB BLUE/BLACK
   - OB ORANGE/BLACK
   - YB YELLOW/BLACK
   - BNB BROWN/BLACK
   - BR BLACK/RED

3. PROVIDE BELDEN #9330 BETWEEN THE POSITION RESOLVER AND DECODER MODULE OR AS RECOMMENDED BY THE POSITION MONITOR EQUIPMENT MANUFACTURER.

City of Milwaukee

Department of Public Works

Infrastructure Services Division

HNTB
11414 West Park Place, Suite 300
Milwaukee, WI 53224
414-359-2300

ST PAUL AVE. LIFT BRIDGE
OVER THE MILWAUKEE RIVER
WIRING SCHEDULE

REVISIONS

DESIGNED BY GLP

DRAWN BY SMS

CHECKED BY JGS

DATE FEB 2013 | SCALE NONE

JOB NUMBER BR100-10-0106

SHEET NUMBER E23 OF E33

OF 198

FILE NAME: E23.dgn
DATE: 1/29/2013 09:15
Plotted by: SSympson
PEN TABLE: Hpscrnlh.pen

CKT NUMBER	FROM	TO	CABLE NO.	CABLE SIZE/ TYPE	AREA (SQ. IN.)	ROUTING 1	2	3	4	5	6	7	8	9	10
C1	SWBD CABINET	CONTROL DESK	1	12D4	0.193	R1	R2	R17	T2	T1					
C2	SWBD CABINET	CONTROL DESK	1	12D4	0.193	R1	R2	R17	T2	T1					
C3	RELAY CABINET	CONTROL DESK	1	12D9	0.391	R3	R2	R17	T2	T1					
C4	SW TRAFFIC SIGNAL	RELAY CABINET	1	12D4	0.193	R7	R4	R2	R3						
C5	NW TRAFFIC SIGNAL	SW TRAFFIC SIGNAL	1	12D4	0.193	R19	R6	R7							
C6	SE TRAFFIC SIGNAL	RELAY CABINET	1	12D4	0.193	R20	R11	EFLX	R10	WFLX	R8	R17	R2	R3	
C7	SE TRAFFIC SIGNAL	NE TRAFFIC SIGNAL	1	12D4	0.193	R20	R13	R16							
C8	SWBD CABINET	RELAY CABINET	1	12D4	0.193	R1	R3								
C9	WEST WARNING BELL	RELAY CABINET	1	12D2	0.142	R4	R2	R3							
C10	EAST WARNING BELL	RELAY CABINET	1	12D2	0.142	R15	R13	R11	EFLX	R10	WFLX	R30	R2	R3	
C11	RELAY CABINET	CONTROL DESK	1	12D2	0.142	R3	R2	R17	T2	T1					
C12	NOT USED														
C13	SOUTH CHANNEL NAV LT	RELAY CABINET	1	12D4	0.193	R14	R9	WFLX	R30	R2	R3				
C14	NORTH CHANNEL NAV LT	SOUTH CHANNEL NAV LT	1	12D4	0.193	R21									
C15	SW1 PIER NAV LIGHT	RELAY CABINET	1	12D2	0.142	R22	R2	R3							
C16	SW1 PIER NAV LIGHT	SW2 PIER NAV LIGHT	1	12D2	0.142	R23									
C17	SW2 PIER NAV LIGHT	NW2 PIER NAV LIGHT	1	12D2	0.142	R24									
C18	NW2 PIER NAV LIGHT	NW1 PIER NAV LIGHT	1	12D2	0.142	R25									
C19	SE1 PIER NAV LIGHT	RELAY CABINET	1	12D2	0.142	R26	EFLX	R10	R9	WFLX	R30	R2	R3		
C20	SE1 PIER NAV LIGHT	SE2 PIER NAV LIGHT	1	12D2	0.142	R27									
C21	SE2 PIER NAV LIGHT	NE2 PIER NAV LIGHT	1	12D2	0.142	R28									
C22	NE2 PIER NAV LIGHT	NE1 PIER NAV LIGHT	1	12D2	0.142	R29									
C23	SWBD CABINET	RELAY CABINET	1	12D4	0.193	R1	R3								
C24	RELAY CABINET	CONTROL DESK	1	12D12	0.497	R3	R2	R17	T2	T1					
C25	NE TRAFFIC GATE	RELAY CABINET	1	12D7	0.294	R13	R11	EFLX	R10	WFLX	R30	R2	R3		
C26	SWBD CABINET	RELAY CABINET	1	12D4	0.193	R1	R3								
C27	RELAY CABINET	CONTROL DESK	1	12D12	0.497	R3	R2	R17	T2	T1					
C28	SE TRAFFIC GATE	RELAY CABINET	1	12D7	0.294	R11	EFLX	R10	WFLX	R30	R2	R3			
C29	NE TRAFFIC GATE	RELAY CABINET	1	12D2	0.142	R15	R11	EFLX	R10	WFLX	R30	R2	R3		
C30	SWBD CABINET	RELAY CABINET	1	12D4	0.193	R1	R3								
C31	RELAY CABINET	CONTROL DESK	1	12D12	0.497	R3	R2	R17	T2	T1					
C32	SW TRAFFIC GATE	RELAY CABINET	1	12D7	0.294	R4	R93	R94							
C33	SWBD CABINET	RELAY CABINET	1	12D4	0.193	R1	R94								
C34	RELAY CABINET	CONTROL DESK	1	12D12	0.497	R94	R93	R17	T2	T1					
C35	NW TRAFFIC GATE	RELAY CABINET	1	12D7	0.294	R6	R4	R93	R94						
C36	SW TRAFFIC GATE	RELAY CABINET	1	12D2	0.142	R4	R93	R94	R94						
C37	NE TRAFFIC GATE LTS	RELAY CABINET	1	12D4	0.193	R15	R11	EFLX	R10	WFLX	R30	R93	R94		
C38	SE TRAFFIC GATE LTS	RELAY CABINET	1	12D4	0.193	R11	EFLX	R10	WFLX	R30	R93	R94			
C39	SW TRAFFIC GATE LTS	RELAY CABINET	1	12D4	0.193	R4	R93	R94							
C40	NW TRAFFIC GATE LTS	RELAY CABINET	1	12D4	0.193	R6	R4	R93	R94						
C41	RELAY CABINET	CONTROL DESK	1	12D9	0.391	R94	R93	R17	T2	T1					
C42	SWBD CABINET	RELAY CABINET	1	12D4	0.193	R1	R94								
C43	HYDRAULIC SKID	RELAY CABINET	1	12D7	0.294	R31	T2	R17	R93	R94					
C44	PS-2NW	RELAY CABINET	1	12D2	0.142	R37	R36	R32	WFLX	R30	R88	R89			
C45	PS-2SW	RELAY CABINET	1	12D2	0.142	R34	R32	WFLX	R30	R88	R89				
C46	PS-2NE	RELAY CABINET	1	12D2	0.142	R47	R44	R40	R10	R9	WFLX	R30	R88	R89	
C46	PS-2SE	RELAY CABINET	1	12D2	0.142	R43	R40	R10	R9	WFLX	R30	R88	R89		
C48	RELAY CABINET	CONTROL DESK	1	12D12	0.497	R89	R88	R17	T2	T1					
C49	HYDRAULIC SKID	RELAY CABINET	1	12D12	0.497	R31	T2	R90	R88	R89					
C50	HYDRAULIC SKID	RELAY CABINET	1	12D2	0.142	R31	T2	R90	R88	R89					
C51	NW HYD CYL (SV-13)	RELAY CABINET	1	12D2	0.142	R38	R36	R32	WFLX	R30	R88	R89			
C52	NW HYD CYL (PS-13)	RELAY CABINET	1	12D2	0.142	R39	R36	R32	WFLX	R30	R88	R89			
C53	HYDRAULIC SKID	RELAY CABINET	1	12D2	0.142	R31	T2	R90	R88	R89					
C54	SW HYD CYL (SV-14)	RELAY CABINET	1	12D2	0.142	R35	R32	WFLX	R30	R88	R89				
C55	SW HYD CYL (PS-14)	RELAY CABINET	1	12D2	0.142	R33	R32	WFLX	R30	R88	R89				
C56	HYDRAULIC SKID	RELAY CABINET	1	12D2	0.142	R31	T2	R90	R88	R89					
C57	NE HYD CYL (SV-23)	RELAY CABINET	1	12D2	0.142	R46	R44	R40	R10	R9	WFLX	R30	R88	R89	
C58	NE HYD CYL (PS-23)	RELAY CABINET	1	12D2	0.142	R45	R44	R40	R10	R9	WFLX	R30	R88	R89	
C59	HYDRAULIC SKID	RELAY CABINET	1	12D2	0.142	R31	T2	R90	R88	R89					
C60	SE HYD CYL (SV-24)	RELAY CABINET	1	12D2	0.142	R42	R40	R10	R9	WFLX	R30	R88	R89		
C61	SE HYD CYL (PS-24)	RELAY CABINET	1	12D2	0.142	R41	R40	R10	R9	WFLX	R30	R88	R89		
C62	RELAY CABINET	CONTROL DESK	1	12D2	0.142	R89	R88	R90	T2	T1					
C63	RELAY CABINET	CONTROL DESK	1	12D12	0.497	R89	R88	R90	T2	T1					
C64	LS-10NW	RELAY CABINET	1	12D2	0.142	R54	R52	R61							
C65	LS-10SW	RELAY CABINET	1	12D2	0.142	R49	R51	R61							
C66	LS-10SE	RELAY CABINET	1	12D2	0.142	R58	R55	EFLX	R10	R9	WFLX	R30	R88	R89	
C67	LS-10NE	RELAY CABINET	1	12D2	0.142	R59	R57	R55	EFLX	R10	R9	WFLX	R30	R88	R89
C68	ROTARY SW LS-EL	RELAY CABINET	1	12D7	0.294	R53	R52	R61							
C69	HYDRAULIC SKID	RELAY CABINET	1	12D2	0.142	R31	T2	R90	R88	R89					
C70	HYDRAULIC SKID	RELAY CABINET	1	12D7	0.294	R31	T2	R90	R88	R89					

NUMBER OF CABLES
CONDUCTOR AWG
NUMBER OF CONDUCTORS
CABLE TYPE
(SEE CABLE DESCRIPTIONS)

CABLE DESCRIPTIONS

TYPE B - 600 VOLT SINGLE CONDUCTOR FLAME RESISTANT POWER CABLE, CLASS B STRANDING, 90 DEG C STANDARD ROUND UNCOATED COPPER, UL LISTING TWHN.

DETAILS:

SIZE (AWG)	INSULATION THICKNESS - INCHES	OUTSIDE DIAMETER - INCHES	AREA SQ. INCHES
12	0.03	0.16	0.038
8	0.045	0.24	0.045
4	0.045	0.35	0.084
2	0.045	0.04	0.118
1	0.055	0.46	0.159
4/0	0.055	0.57	0.226
2/0	0.055	0.66	0.327

TYPE D - 600 VOLT MULTI-CONDUCTOR NO. 12 AWG FLAME RESISTANT CONTROL CABLE, CLASS B STRANDING, 90 DEG C, STANDARD ROUND UNCOATED CPPER UL LISTING XHHW, TYPE TC TRAY CABLE.

DETAILS:

NUMBER OF CONDUCTORS	JACKET THICKNESS - INCHES	OUTSIDE DIAMETER - INCHES	AREA SQ. INCHES
2	0.045	0.365	0.142
4	0.045	0.422	0.193
7	0.061	0.501	0.197
9	0.061	0.614	0.296
12	0.061	0.689	0.383

TYPE H - 600 VOLT THREE CONDUCTOR WITH GROUND POWER CABLE, CLASS B STRANDING, 90 DEG C FLAME RESISTANT, UNCOATED COPPER, UL LISTING XHHW.

DETAILS:

PHASE CONDUCTOR SIZE (AWG)	GROUND CONDUCTOR SIZE (AWG)	OUTSIDE DIAMETER - INCHES	AREA SQ. INCHES
12	12	0.045	0.212
10	10	0.045	0.268
6	8	0.075	0.349
4	3X10	0.075	0.621
2	6	0.075	0.819

City of Milwaukee

Department of Public Works

Infrastructure Services Division

HNTB
11414 West Park Place, Suite 300
Milwaukee, WI 53224
414-359-2300

ST PAUL AVE. LIFT BRIDGE
OVER THE MILWAUKEE RIVER
CIRCUIT SCHEDULE

REVISIONS

DESIGNED BY GLP
DRAWN BY SMS
CHECKED BY JGS
DATE FEB 2013 | SCALE NONE
JOB NUMBER BR100-10-0106
SHEET NUMBER E24 OF E33
OF 198

FILE NAME: E24.dgn
DATE: 1/29/2013 09:15
Plotted by: SSympson
PEN TABLE: hpscrnthpen

CKT NUMBER	FROM	TO	CABLE NO.	CABLE SIZE/ TYPE	AREA (SQ. IN.)	ROUTING 1	2	3	4	5	6	7	8	9	10
C71	RELAY CABINET	CONTROL DESK	1	12D2	0.142	R94	R88	R90	T2	T1					
C72	ELECTRIC HORN	RELAY CABINET	1	12D2	0.142	R62	T1	T2	R90	R93	R89				
C73	RELAY CABINET	CONTROL DESK	1	12D4	0.193	R89	R88	R90	T2	T1					
C74	NW POS RESOLVER (ROT LS)	RELAY CABINET	1	24S6	0.097	R53	R52	R61							
C75	REMOTE CONTROL PANEL	CONTROL DESK	1	16E2	0.08	R100									
C76	RELAY CABINET	CONTROL DESK	1	12D2	0.142	R61	R51	R48	T2	T1					
C77	SW POS RESOLVER	CONTROL DESK	1	24S6	0.097	R50	R48	T2	T1						
C78	REMOTE CONTROL PANEL	CONTROL DESK	1	16E2	0.08	R100									
C79	NE POS RESOLVER	CONTROL DESK	1	24S6	0.097	R60	R57	R55	EFLX	R10	R9	WFLX	R8	T2	T1
C80	REMOTE CONTROL PANEL	CONTROL DESK	1	16E2	0.08	R100									
C81	RELAY CABINET	CONTROL DESK	1	12D2	0.142	R61	R51	R48	T2	T1					
C82	SE POS RESOLVER	CONTROL DESK	1	24S6	0.097	R56	R55	EFLX	R10	R9	WFLX	R8	T2	T1	
C83	REMOTE CONTROL PANEL	CONTROL DESK	1	16E2	0.08	R100									
P1	WEST UTILITY METER	WEST SERVICE DISC SW	5	250B1	2.01	R63									
P2	WEST SERVICE DISC SW	AUTO TRANSFER SW	5	250B1	2.01	R64									
P3	EAST UTILITY METER	EAST SERVICE DISC SW	5	250B1	2.01	R66									
P4	EAST SERVICE DISC SW	AUTO TRANSFER SW	5	250B1	2.01	R67	EFLX	R68	WFLX	R69					
P5	AUTO TRANSFER SW	CONTROL HOUSE DISC SW	5	250B1	2.01	R65									
P5A	CONTROL HOUSE DISC SW	SWBD CABINET	5	250B1	2.01	R74	T2	R70	R71	R72					
P6	PUMP MOTOR A	SWBD CABINET	1	4H3	0.62	R75	T2	R70	R71	R72					
P7	PUMP MOTOR B	SWBD CABINET	1	4H3	0.62	R75	T2	R70	R71	R72					
P8	W. SUMP PUMP CONTROLLER	PANELBOARD LP1	1	10H3	0.268	R86									
P9	SWBD CABINET	PANELBOARD LP2	5	2B1	0.59	R72	R71	R75	WFLX	R68	EFLX	R77			
P10	SWBD CABINET	TRANSFORMER TX-1	4	4B1	0.336	R72	R71	R78							
P11	SWBD CABINET	TRANSFORMER TX-1	4	1/0B1	0.756	R72	R71	R78							
P12	NW TRAFFIC GATE	SWBD CABINET	1	12H3	0.212	R79	R81	R91	R92						
P13	NE TRAFFIC GATE	SWBD CABINET	1	12H3	0.212	R84	R82	EFLX	R68	WFLX	R76	R91	R92		
P14	SW TRAFFIC GATE	SWBD CABINET	1	12H3	0.212	R81	R91	R92							
P15	SE TRAFFIC GATE	SWBD CABINET	1	12H3	0.212	R82	EFLX	R68	WFLX	R76	R91	R92			
P16	PANELBOARD LP1	SWBD CABINET	5	1B1	0.795	R85	T2	R70	R91	R92					
P17	PANELBOARD LP1	PANELBOARD PP1	1	6H3	0.529	R85	T2	R70	R91	R73					
P18	E.SUMP PUMP CONTROLLER	PANELBOARD LP2	1	10H3	0.268	R87									
P19	MMSD PULL BOX	PANELBOARD LP2	1	12H3	0.212	R101									

NUMBER OF CABLES
CONDUCTOR AWG
NUMBER OF CONDUCTORS
CABLE TYPE
(SEE CABLE DESCRIPTIONS)

City of Milwaukee

Department of Public Works

Infrastructure Services Division

HNTB
11414 West Park Place, Suite 300
Milwaukee, WI 53224
414-359-2300

ST PAUL AVE. LIFT BRIDGE
OVER THE MILWAUKEE RIVER
CIRCUIT SCHEDULE

REVISIONS

DESIGNED BY GLP
DRAWN BY SMS
CHECKED BY JGS
DATE FEB 2013 | SCALE NONE
JOB NUMBER BR100-10-0106
SHEET NUMBER E25 OF E33
OF 198

FILE NAME: E25.dgn
DATE: 1/29/2013 09:15
Plotted by: SSympson
PEN TABLE: Hbscrnth.pen

RCWY NUMBER	TYPE	SIZE	AREA (SQ. IN.)	CIRCUIT ASSIGNMENTS																												
				1	2	3	4	5	6	7	8	9	10	11	12	13	14	15	16	17	18	19	20	21	22	23	24	25	26	27	28	29
R1	PVGR	2.5	1.544	C1	C2	C8	C23	C26	C30	C33	C42																					
R2	PVGR	4	4.480	C1	C2	C3	C4	C6	C9	C10	C11	C13	C15	C19	C24	C25	C27	C28	C29	C31												
R3	PVGR	4	4.866	C3	C4	C6	C8	C9	C10	C11	C13	C15	C19	C23	C24	C25	C26	C27	C28	C29	C30	C31										
R4	PVGR	2.5	1.451	C4	C9	C32	C35	C36	C39	C40																						
R5	PVGR			NOT	USED																											
R6	PVGR	1.5	0.680	C5	C35	C40																										
R7	PVGR	1.25	0.386	C4	C5																											
R8	PVGR	1.25	0.387	C6	C79	C82																										
R9	PVGR	2.5	3.116	C13	C19	C46	C46	C57	C58	C60	C61	C66	C67	C79	C82																	
R10	PVGR	3	2.923	C6	C10	C19	C25	C28	C29	C37	C38	C46	C46	C57	C58	C60	C61	C66	C67	C79	C82											
R11	PVGR	2.5	1.451	C6	C10	C25	C28	C29	C37	C38																						
R12	PVGR			NOT	USED																											
R13	PVGR	1.5	0.964	C7	C10	C25																										
R14	PVGR	0.75	0.386	C13																												
R15	PVGR	1.5	0.771	C10	C29	C37																										
R16	PVGR	0.75	0.193	C7																												
R17	PVGR	4	4.475	C1	C2	C3	C6	C11	C24	C27	C31	C34	C41	C43	C48																	
R18	PVGR	1.5		FOR	CCTV	USE																										
R19	PVGR	0.75	0.193	C5																												
R20	PVGR	1.25	0.386	C6	C7																											
R21	PVGR	0.75	0.193	C14																												
R22	PVGR	0.75	0.142	C15																												
R23	PVGR	0.75	0.142	C16																												
R24	PVGR	0.75	0.142	C17																												
R25	PVGR	0.75	0.142	C18																												
R26	PVGR	0.75	0.142	C19																												
R27	PVGR	0.75	0.142	C20																												
R28	PVGR	0.75	0.142	C21																												
R29	PVGR	0.75	0.142	C22																												
R30	PVGR	4	3.581	C10	C13	C19	C25	C28	C29	C37	C38	C44	C45	C46	C46	C51	C52	C54	C55	C57	C58	C60	C61	C66	C67							
R31	GRS	2.5	1.795	C43	C49	C50	C53	C56	C59	C69	C70																					
R32	PVGR	2	0.852	C44	C45	C51	C52	C54	C55																							
R33	PVGR	0.75	0.142	C55																												
R34	PVGR	0.75	0.142	C45																												
R35	PVGR	0.75	0.142	C54																												
R36	PVGR	1.25	0.426	C44	C51	C52																										
R37	PVGR	0.75	0.142	C44																												
R38	PVGR	0.75	0.142	C51																												
R39	PVGR	0.75	0.142	C52																												
R40	PVGR	2	0.852	C46	C46	C57	C58	C60	C61																							
R41	PVGR	0.75	0.142	C61																												
R42	PVGR	0.75	0.142	C60																												
R43	PVGR	0.75	0.142	C46																												
R44	PVGR	1.25	0.426	C46	C57	C58																										
R45	PVGR	0.75	0.142	C58																												
R46	PVGR	0.75	0.142	C57																												
R47	PVGR	0.75	0.142	C46																												
R48	PVGR	1.5	0.381	C76	C77	C81																										
R49	PVGR	0.75	0.142	C65																												
R50	PVGR	0.75	0.097	C77																												
R51	PVGR	1.5	0.426	C65	C76	C81																										
R52	PVGR	1.25	0.533	C64	C68	C74																										
R53	PVGR	1.25	0.391	C68	C74																											
R54	PVGR	0.75	0.142	C64																												
R55	PVGR	1.25	0.478	C66	C67	C79	C82																									
R56	PVGR	0.75	0.097	C82																												
R57	PVGR	1	0.239	C67	C79																											
R58	PVGR	0.75	0.142	C66																												
R59	PVGR	0.75	0.142	C67																												
R60	PVGR	0.75	0.097	C79																												
R61	PVGR	2	0.959	C64	C65	C68	C74	C76	C81																							
R62	GRS	0.75	0.142	C72																												
R63	PVGR	2.5	2.010	P1																												
R64	PVGR	2.5	2.010	P2																												
R65	GRS	2.5	2.010	P5																												
R66	PVGR	2.5	2.010	P3																												
R67	PVGR	2.5	2.010	P4																												
R68	PVGR	3	3.024	P4	P9	P13	P15																									
R69	PVGR	2.5	2.010	P4																												
R70	PVGR	4	4.574	P5A	P6	P7	P16	P17																								
R71	PVGR	4	4.932	P5A	P6	P7	P9	P10	P11																							
R72	PVGR	4	4.932	P5A	P6	P7	P9	P10	P11																							
R73	PVGR	1.25	0.529	P17																												

City of Milwaukee

Department of Public Works

Infrastructure Services Division

HNTB
11414 West Park Place, Suite 300
Milwaukee, WI 53224
414-359-2300

ST PAUL AVE. LIFT BRIDGE
OVER THE MILWAUKEE RIVER
RACEWAY SCHEDULE

REVISIONS

DESIGNED BY GLP
DRAWN BY SMS
CHECKED BY JGS
DATE FEB 2013
SCALE NONE
JOB NUMBER BR100-10-0106
SHEET NUMBER E26 OF E33
OF 198

FILE NAME: E26.dgn
DATE: 1/29/2013 09:15
Plotted by: SSympson
PEN TABLE: hpscmhi.pen

RCWY NUMBER	TYPE	SIZE	AREA (SQ. IN.)	CIRCUIT ASSIGNMENTS																												
				1	2	3	4	5	6	7	8	9	10	11	12	13	14	15	16	17	18	19	20	21	22	23	24	25	26	27	28	29
R74	PVGR	2.5	2.010	P5A																												
R75	PVGR	2.5	1.830	P6	P7	P9																										
R76	PVGR	1.25	0.424	P13	P15																											
R77	PVGR	1.25	0.590	P9																												
R78	PVGR	2	1.092	P10	P11																											
R79	PVGR	0.75	0.212	P12																												
R80	PVGR	0.75	0.212	P14																												
R81	PVGR	1.25	0.424	P12	P14																											
R82	PVGR	1.25	0.424	P13	P15																											
R83	PVGR	0.75	0.212	P15																												
R84	PVGR	0.75	0.212	P13																												
R85	GRS	2	1.324	P16	P17																											
R86	PVGR	0.75	0.268	P8																												
R87	PVGR	0.75	0.268	P18																												
R88	PVGR	4	4.960	C44	C45	C46	C46	C48	C49	C50	C51	C52	C53	C54	C55	C56	C57	C58	C59	C60	C61	C62	C63	C66	C67	C69	C70	C71	C73			
R89	PVGR	4	4.960	C44	C45	C46	C46	C48	C49	C50	C51	C52	C53	C54	C55	C56	C57	C58	C59	C60	C61	C62	C63	C66	C67	C69	C70	C72	C73			
R90	PVGR	3	2.617	C49	C50	C53	C56	C59	C62	C63	C69	C70	C71	C72	C73																	
R91	PVGR	3	2.172	P12	P13	P14	P15	P16	P17																							
R92	PVGR	2.5	1.643	P12	P13	P14	P15	P16																								
R93	PVGR	3	2.826	C32	C34	C35	C36	C37	C38	C39	C40	C41	C43	C72																		
R94	PVGR	4	3.212	C32	C33	C34	C35	C36	C37	C38	C39	C40	C41	C42	C43	C71																
R95	PVGR	1.5		FOR	CCTV	USE																										
R96	PVGR	1.5		FOR	CCTV	USE																										
R97	PVGR	1.5		FOR	CCTV	USE																										
R98	PVGR	1.5		FOR	CCTV	USE																										
R99	PVGR	1.5		FOR	CCTV	USE																										
R100	GRS	1	0.320	R75	R78	R80	R83																									
R101	PVGR	0.75	0.212	P19																												
WFLX	CBL		6.617	C6	C10	C13	C19	C25	C28	C29	C37	C38	C44	C45	C46	C46	C51	C52	C54	C55	C57	C58	C60	C61	C66	C67	C79	C82	P4	P9	P13	P15
EFLX	CBL		4.720	C10	C19	C25	C28	C29	C37	C38	C66	C67	C79	C82	P4	P9	P13	P15														
T1	T1	6x6	5.806	C2	C3	C11	C24	C27	C31	C34	C41	C48	C62	C63	C71	C72	C73	C76	C77	C79	C81	C82										
T2	T2	6x6	11.800	C1	C2	C3	C11	C24	C27	C31	C34	C41	C43	C48	C49	C50	C53	C56	C59	C62	C63	C69	C70	C71	C72	C73	C76	C77	C79	C81	C82	P5A
				P6	P7	P16	P17																									

City of Milwaukee

Department of Public Works

Infrastructure Services Division

HNTB
11414 West Park Place, Suite 300
Milwaukee, WI 53224
414-359-2300

ST PAUL AVE. LIFT BRIDGE
OVER THE MILWAUKEE RIVER
RACEWAY SCHEDULE

REVISIONS

DESIGNED BY GLP
DRAWN BY SMS
CHECKED BY JGS
DATE FEB 2013 | SCALE NONE
JOB NUMBER BR100-10-0106
SHEET NUMBER E27 OF E33
OF 198

FILE NAME: E27.dgn
DATE: 1/29/2013 09:15 Plotted by: SSympson PEN TABLE: Hpsbrnthpen

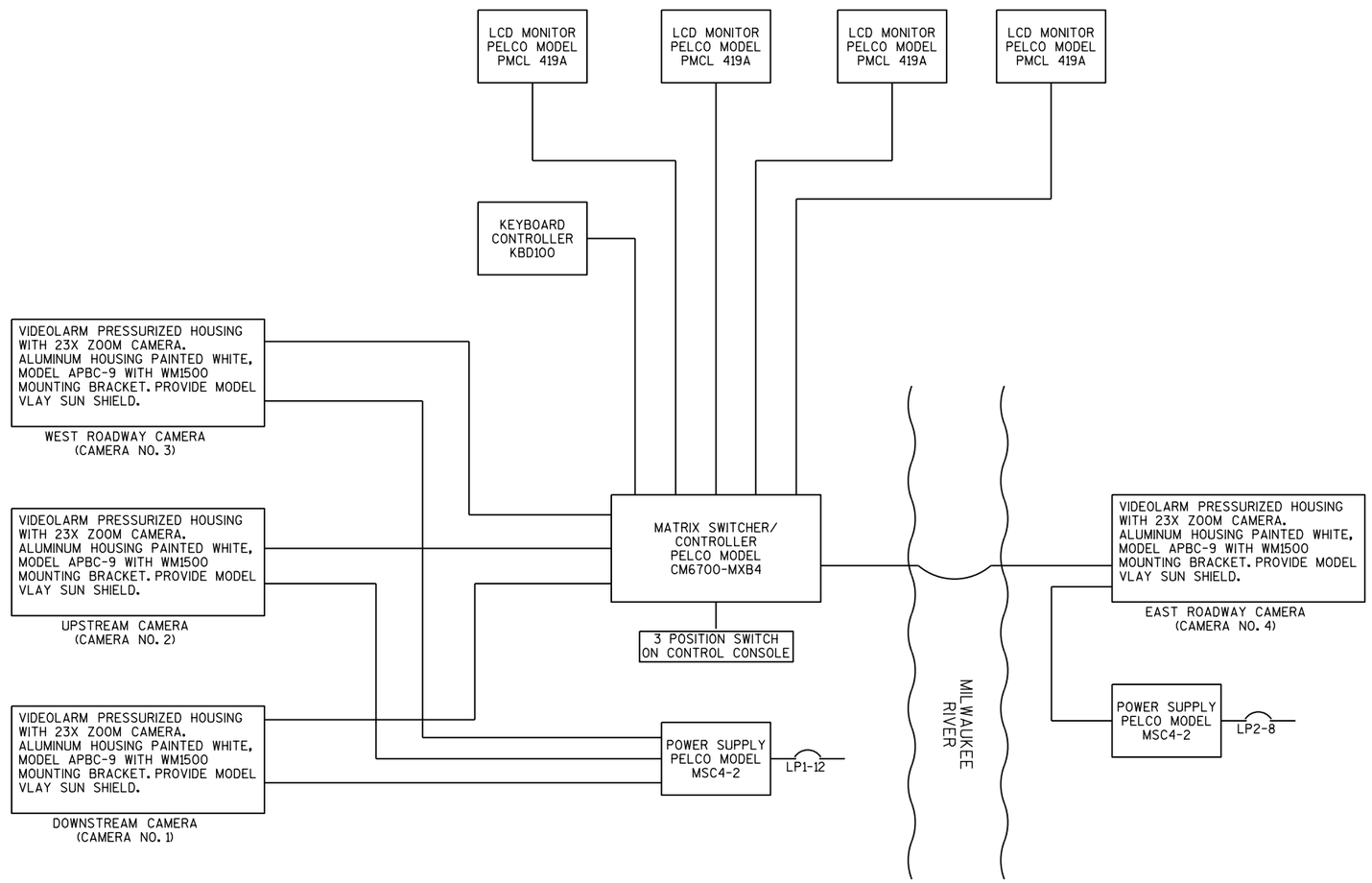

ST. PAUL CCTV BLOCK DIAGRAM

NOTES:

1. PROVIDE APM16 POLE MOUNT ADAPTER FOR ROADWAY CAMERAS NO. 3 AND NO. 4.
2. SEE SHEET E29 FOR CAMERA LOCATIONS AND DETAILS.
3. PROVIDED SPECIAL DIGITAL VIDEO CABLES IN ACCORDANCE WITH MANUFACTURER'S REQUIREMENTS.
4. ROUTE CONDUCTORS AND CABLES IN DEDICATED CONDUITS PER SPECIFICATIONS OR AS INDICATED ON RACEWAY SCHEDULES.

City of Milwaukee
Department of Public Works
Infrastructure Services Division

HNTB
11414 West Park Place, Suite 300
Milwaukee, WI 53224
414-359-2300

ST PAUL AVE. LIFT BRIDGE
OVER THE MILWAUKEE RIVER
ST. PAUL
CCTV SYSTEM

REVISIONS

DESIGNED BY GLP
DRAWN BY SMS
CHECKED BY JGS
DATE FEB 2013 | SCALE NONE
JOB NUMBER BR100-10-0106
SHEET NUMBER E28 OF E33
OF 198

FILE NAME: E28.dgn
DATE: 1/29/2013 09:15
Plotted by: SSympson
PEN TABLE: Hpscrnth.pen

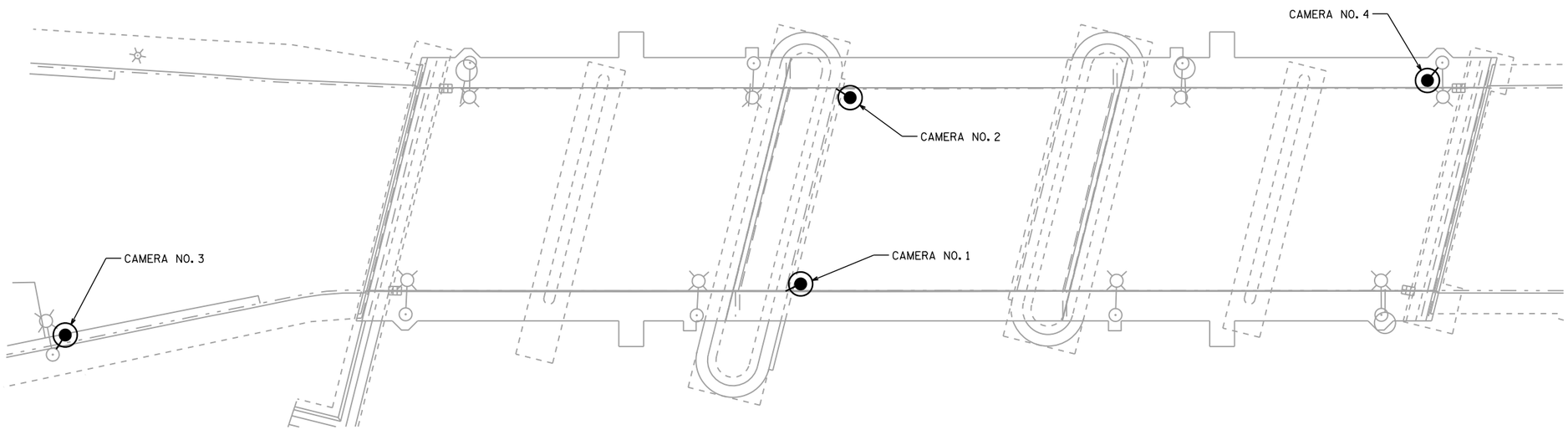

CAMERA LOCATION PLAN

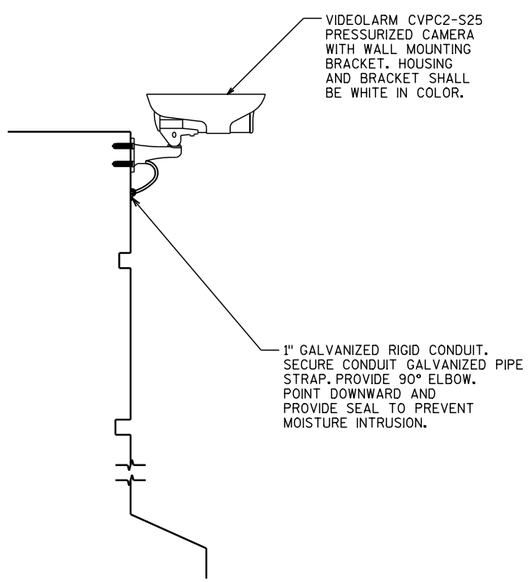

PIER MOUNTED CAMERA DETAIL

(CAMERA'S 1 AND 2)

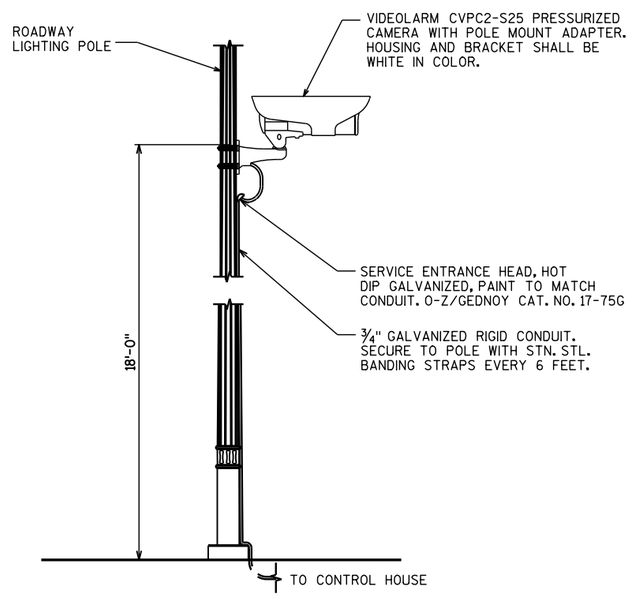

POLE MOUNTED CAMERA DETAIL

(CAMERA'S 3 AND 4)

NOTES:

1. FIELD ROUTE PVC COATED RIGID CONDUIT FROM CONTROL HOUSETO LIGHTING POLE BASE. CONTINUE CONDUIT UP POLE TO WEATHERHEAD AS SHOWN.
2. UTILIZE FLEXIBLE CABLE LOOPS BETWEEN PIER AND LIFT SPAN FOR CAMERA 4 CONDUCTORS.
3. FIELD ROUTE RIGID CONDUIT FROM CONTROL HOUSE TO PIER CAMERAS 1 & 2.

City of Milwaukee
Department of Public Works
Infrastructure Services Division

HNTB
11414 West Park Place, Suite 300
Milwaukee, WI 53224
414-359-2300

ST PAUL AVE. LIFT BRIDGE
OVER THE MILWAUKEE RIVER
CCTV SYSTEM DETAILS

REVISIONS

DESIGNED BY GLP	
DRAWN BY SMS	
CHECKED BY JGS	
DATE FEB 2013	SCALE NONE
JOB NUMBER BR100-10-0106	
SHEET NUMBER E29 OF E33	
OF 198	

FILE NAME: E29.dgn
DATE: 1/29/2013 09:15
Plotted by: SSympson
PEN TABLE: Hpscrnthi.pen

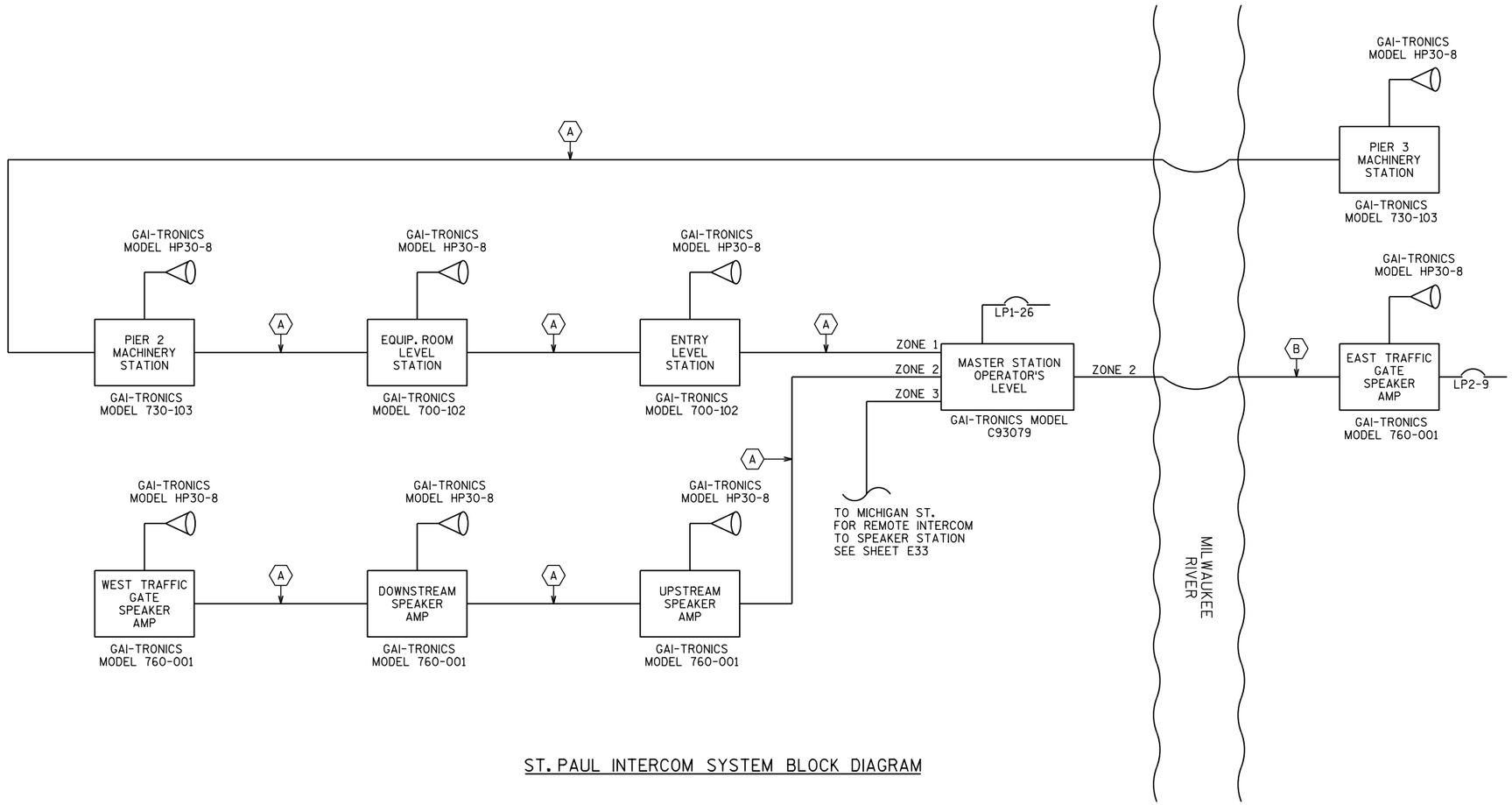

ST. PAUL INTERCOM SYSTEM BLOCK DIAGRAM

A SPECIAL 8 CONDUCTOR CABLE BY INTERCOM SYSTEM MANUFACTURER

B #16 AWG TWISTED SHIELDED PAIR CABLE

City of Milwaukee

Department of Public Works

Infrastructure Services Division

HNTB
11414 West Park Place, Suite 300
Milwaukee, WI 53224
414-359-2300

ST PAUL AVE. LIFT BRIDGE
OVER THE MILWAUKEE RIVER
ST. PAUL
INTERCOM SYSTEM

REVISIONS

DESIGNED BY GLP
DRAWN BY SMS
CHECKED BY JGS
DATE FEB 2013
SCALE NONE
JOB NUMBER BR100-10-0106
SHEET NUMBER E30 OF E33
OF 198

FILE NAME: E30.dgn
DATE: 1/29/2013 09:16
Plotted by: SSympson
PEN TABLE: Hpsornthpen

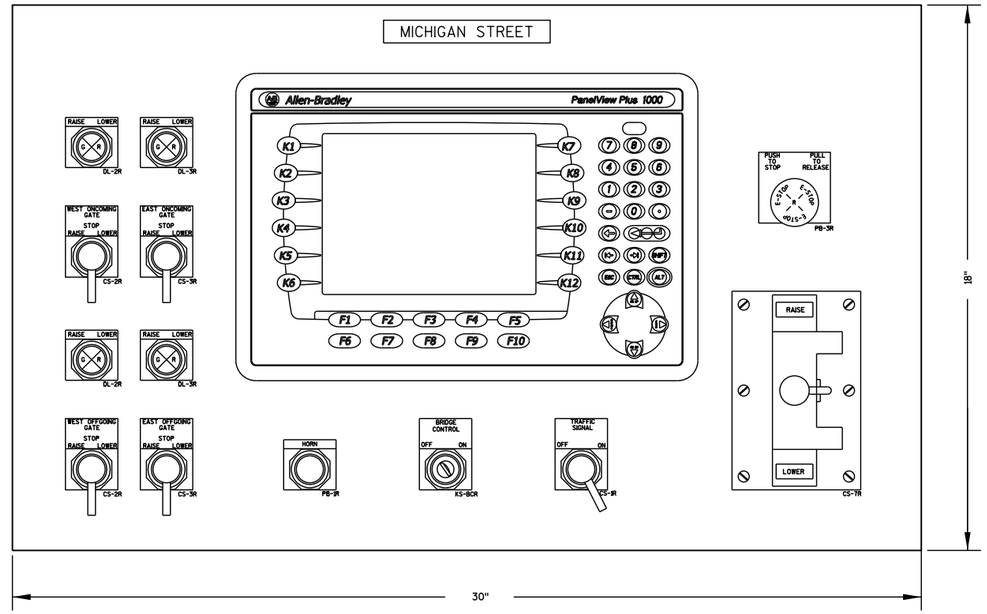

REMOTE CONTROL PANEL

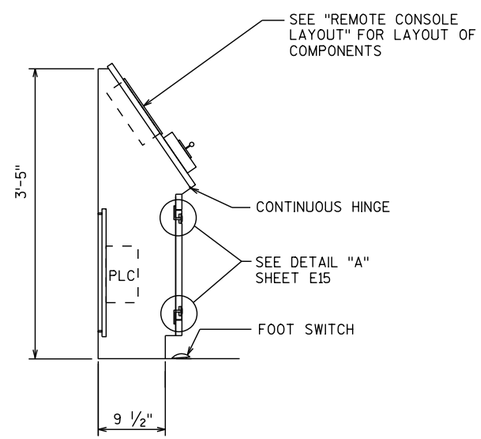

SIDE VIEW

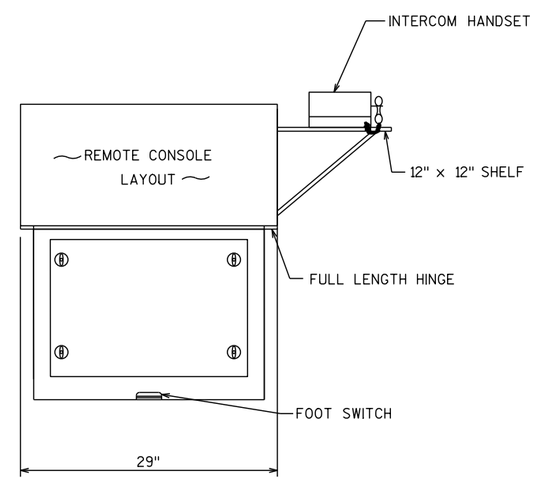

FRONT VIEW

CONTROL PANEL DETAILS

City of Milwaukee

Department of Public Works

Infrastructure Services Division

HNTB

11414 West Park Place, Suite 300
Milwaukee, WI 53224
414-359-2300

ST PAUL AVE. LIFT BRIDGE
OVER THE MILWAUKEE RIVER
MICHIGAN ST. REMOTE CONTROL
PANEL LAYOUT & DETAILS

REVISIONS

DESIGNED BY GLP	
DRAWN BY SMS	
CHECKED BY JGS	
DATE FEB 2013	SCALE NONE
JOB NUMBER BR100-10-0106	
SHEET NUMBER E31 OF E33	
OF 198	

FILE NAME: E31.dgn
DATE: 1/29/2013 09:16
Plotted by: SSympson
PEN TABLE: Hpscrnlh.pen

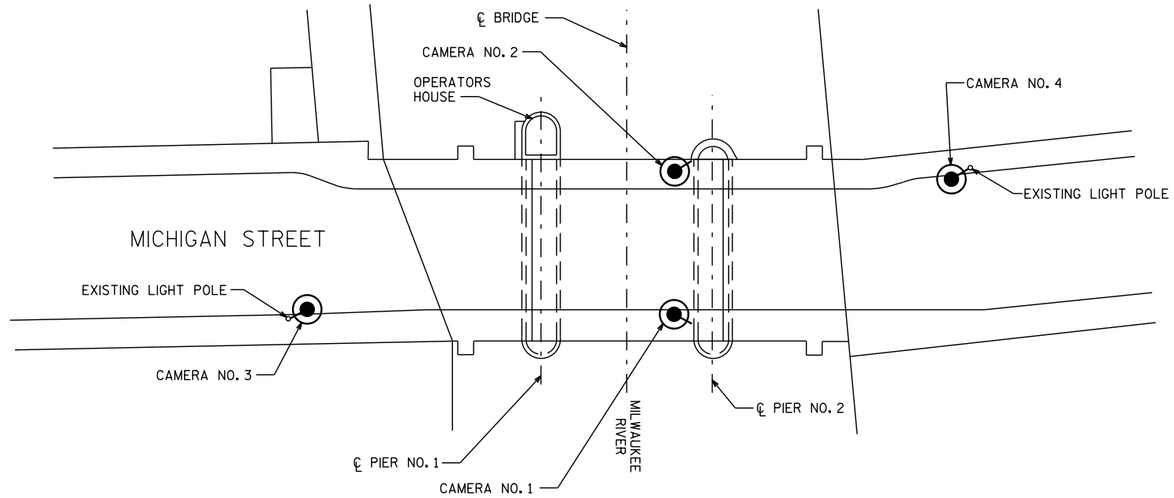

SITE PLAN

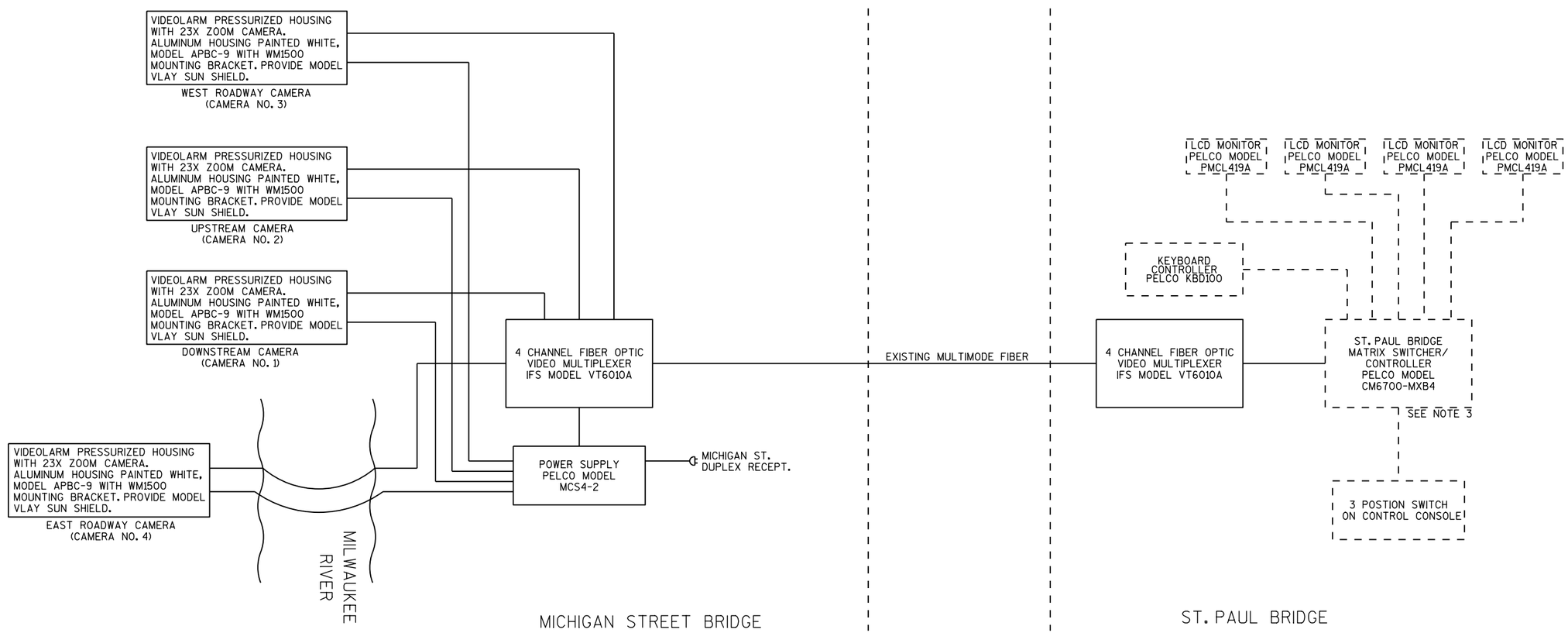

NOTES:

1. PROVIDE APM16 POLE MOUNT ADAPTER FOR ROADWAY CAMERAS NO. 3 & NO. 4.
2. UTILIZE ROADWAY LIGHTING SYSTEM CONDUITS FOR CAMERA CABLES WHERE POSSIBLE OR CUT AND CORE AS REQUIRED.
3. REFER TO SHEET E28 FOR FURTHER DETAILS OF THE ST. PAUL CCTV SYSTEM.
4. SEE SHEET E29 FOR TYPICAL MOUNTING DETAILS.

City of Milwaukee
Department of Public Works
Infrastructure Services Division

HNTB
11414 West Park Place, Suite 300
Milwaukee, WI 53224
414-359-2300

ST PAUL AVE. LIFT BRIDGE
OVER THE MILWAUKEE RIVER
CCTV SYSTEM DETAILS

REVISIONS

DESIGNED BY GLP
DRAWN BY SMS
CHECKED BY JGS
DATE FEB 2013 | SCALE NONE
JOB NUMBER BR100-10-0106
SHEET NUMBER E32 OF E33
OF 198

FILE NAME: E32.dgn
DATE: 1/29/2013 09:16
Plotted by: SSympson
PEN TABLE: Hpscrnth.pen

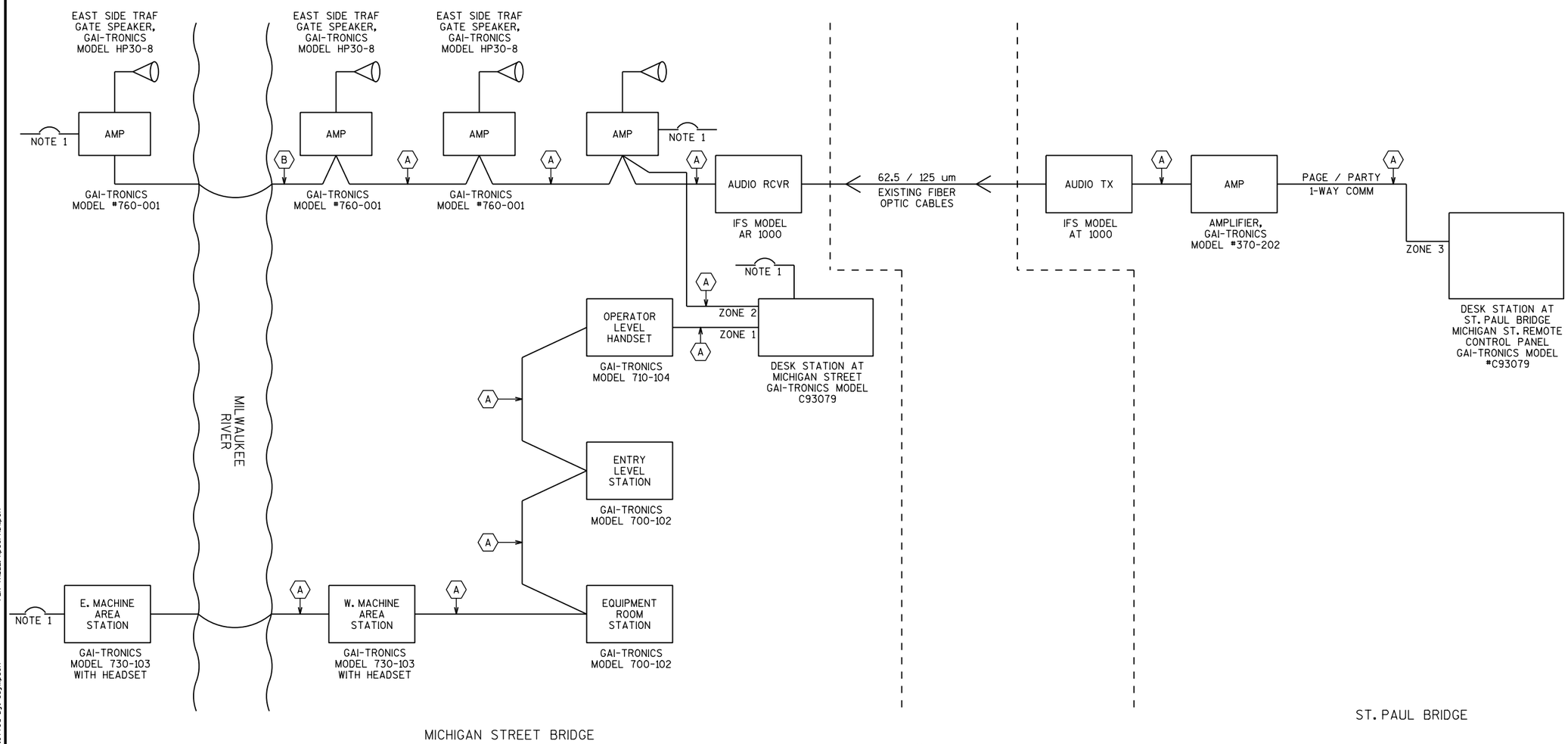

NOTES:
1. UTILIZE SPARE CIRCUIT BREAKERS AT MICHIGAN ST. PANELBOARDS ON NEAR SIDE AND FAR SIDE PIERS AS APPLICABLE.

(A) SPECIAL 8 CONDUCTOR CABLE BY INTERCOM SYSTEM MANUFACTURER

(B) #16 AWG TWISTED SHIELDED PAIR CABLE

City of Milwaukee

Department of Public Works

Infrastructure Services Division

HNTB
11414 West Park Place, Suite 300
Milwaukee, WI 53224
414-359-2300

ST PAUL AVE. LIFT BRIDGE OVER THE MILWAUKEE RIVER MICHIGAN ST. TO ST. PAUL INTERCOM SYSTEM

REVISIONS

DESIGNED BY GLP	
DRAWN BY SMS	
CHECKED BY JGS	
DATE FEB 2013	SCALE NONE
JOB NUMBER BR100-10-0106	
SHEET NUMBER E33 OF E33	
OF 198	

PEN TABLE: Hpscrnlh.pen
Plotted by: SSympson
FILE NAME: E33.dgn
DATE: 1/29/2013 09:16

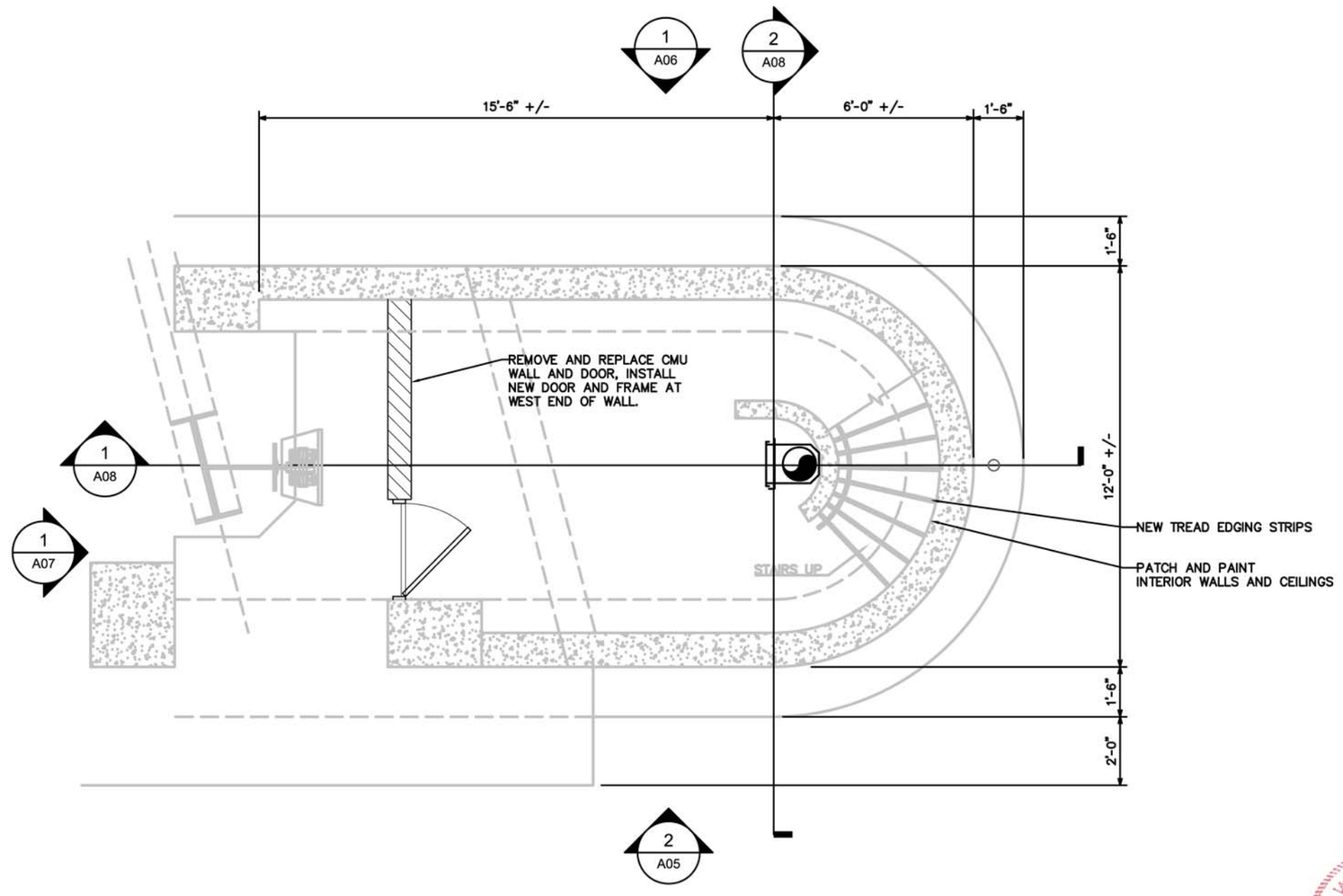

1 A01 EQUIPMENT ROOM (1ST) LEVEL PLAN

WISCONSIN JAMES L. PIWONI A-5765 MILWAUKEE, WI ARCHITECT

2/11/2013

PAGES A01-A10

City of Milwaukee

Department of Public Works

Infrastructure Services Division

ST PAUL AVE. LIFT BRIDGE OVER THE MILWAUKEE RIVER
EQUIPMENT ROOM (1ST) LEVEL PLAN

REVISIONS

DESIGNED BY JIM PIWONI	
DRAWN BY ZACH RASMUSSEN	
CHECKED BY JIM PIWONI	
DATE FEB 2013	SCALE 1/4" = 1'-0"
JOB NUMBER BR100-10-0106	
SHEET NUMBER A01 OF A10	

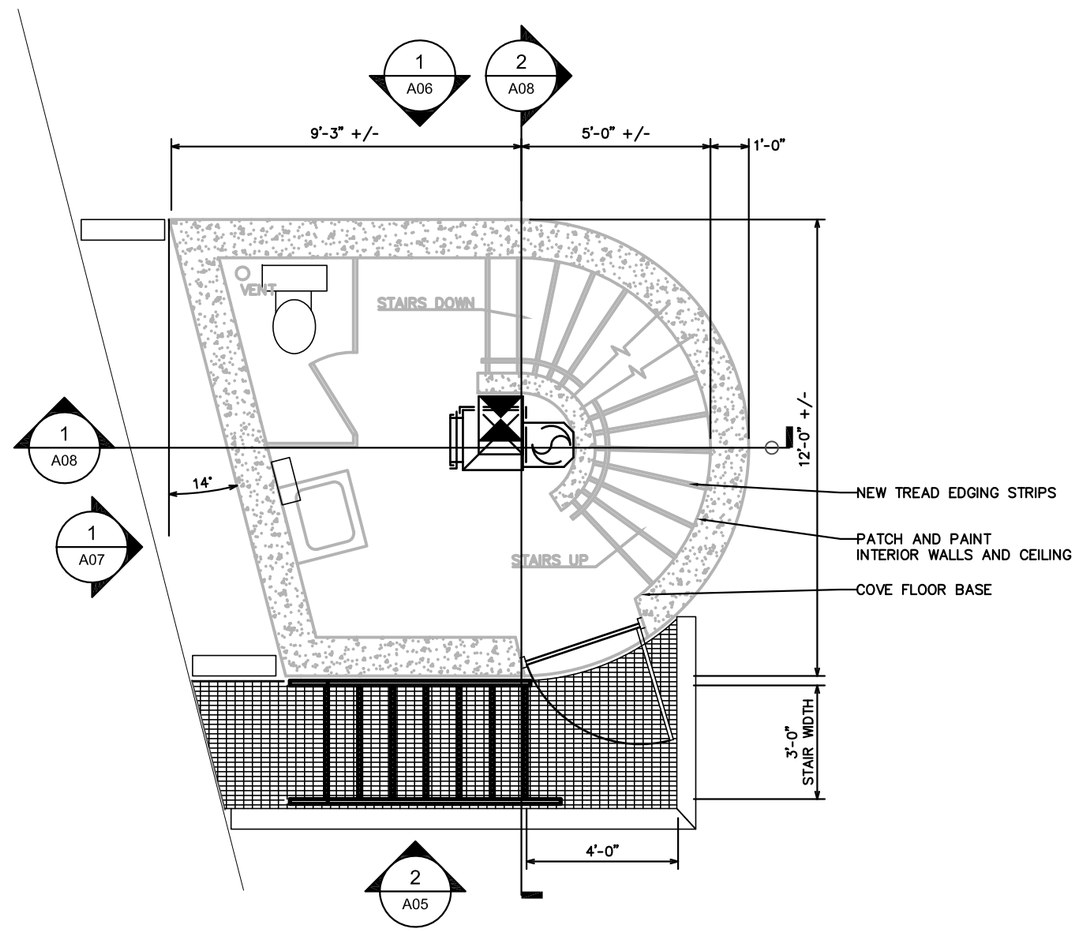

2/A02 ENTRY/STREET (2ND) LEVEL PLAN

City of Milwaukee

Department of Public Works

Infrastructure Services Division

ST PAUL AVE. LIFT BRIDGE
OVER THE MILWAUKEE RIVER
ENTRY / STREET
(2ND) LEVEL PLAN

REVISIONS

DESIGNED BY JIM PIWONI	
DRAWN BY ZACH RASMUSSEN	
CHECKED BY JIM PIWONI	
DATE FEB 2013	SCALE 1/4" = 1'-0"
JOB NUMBER BR100-10-0106	
SHEET NUMBER A02 OF A10	

OF 198

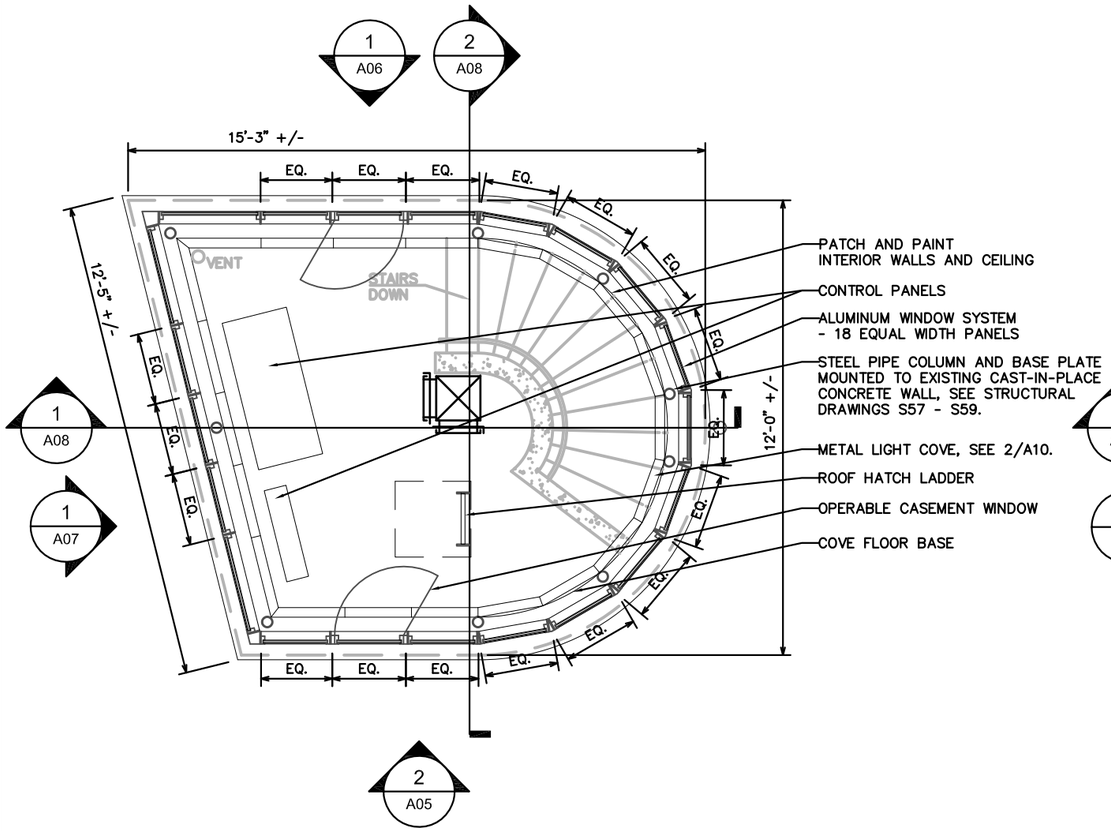

1 A03 CONTROL ROOM (3RD) LEVEL PLAN

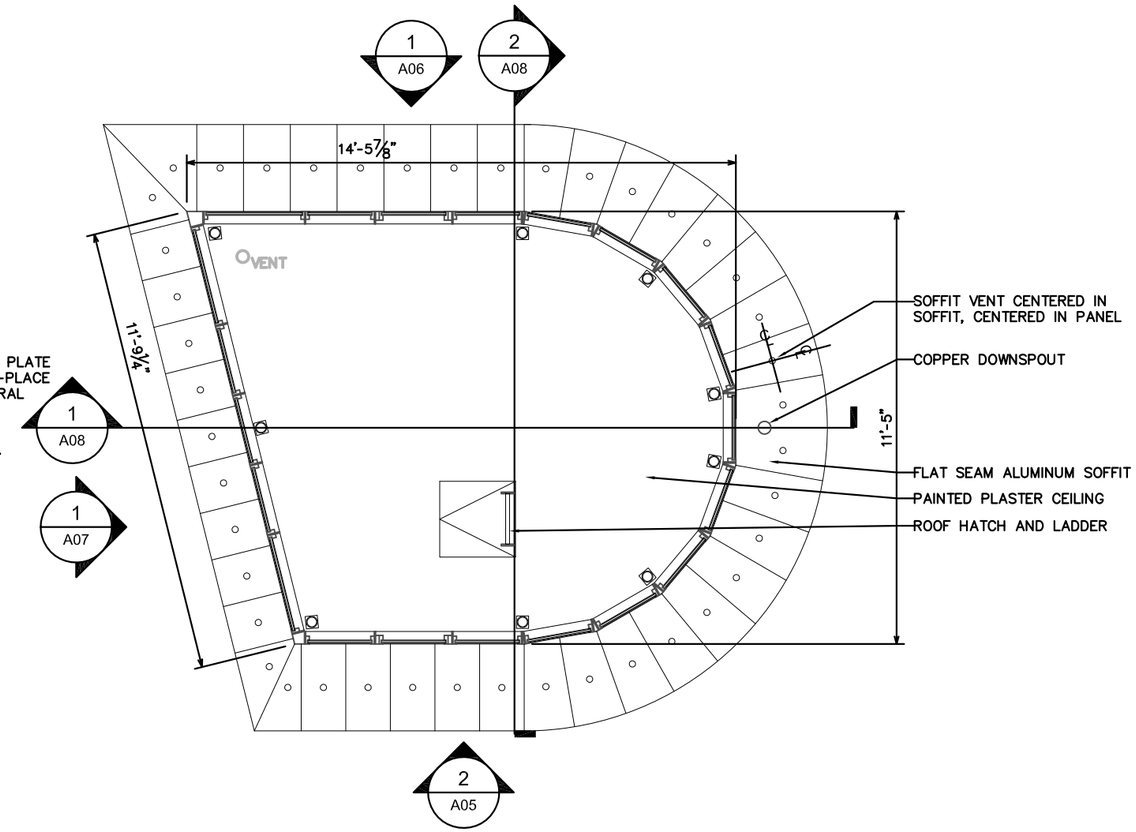

2 A03 REFLECTED CEILING PLAN (3RD)

City of Milwaukee

Department of Public Works

Infrastructure Services Division

ST PAUL AVE. LIFT BRIDGE
OVER THE MILWAUKEE RIVER
CONTROL ROOM
(3RD) LEVEL PLAN

REVISIONS

DESIGNED BY
JIM PIWONI

DRAWN BY
ZACH RASMUSSEN

CHECKED BY
JIM PIWONI

DATE FEB 2013 | SCALE 1/4" = 1'-0"

JOB NUMBER
BR100-10-0106

SHEET NUMBER
A03 OF A10

OF
198

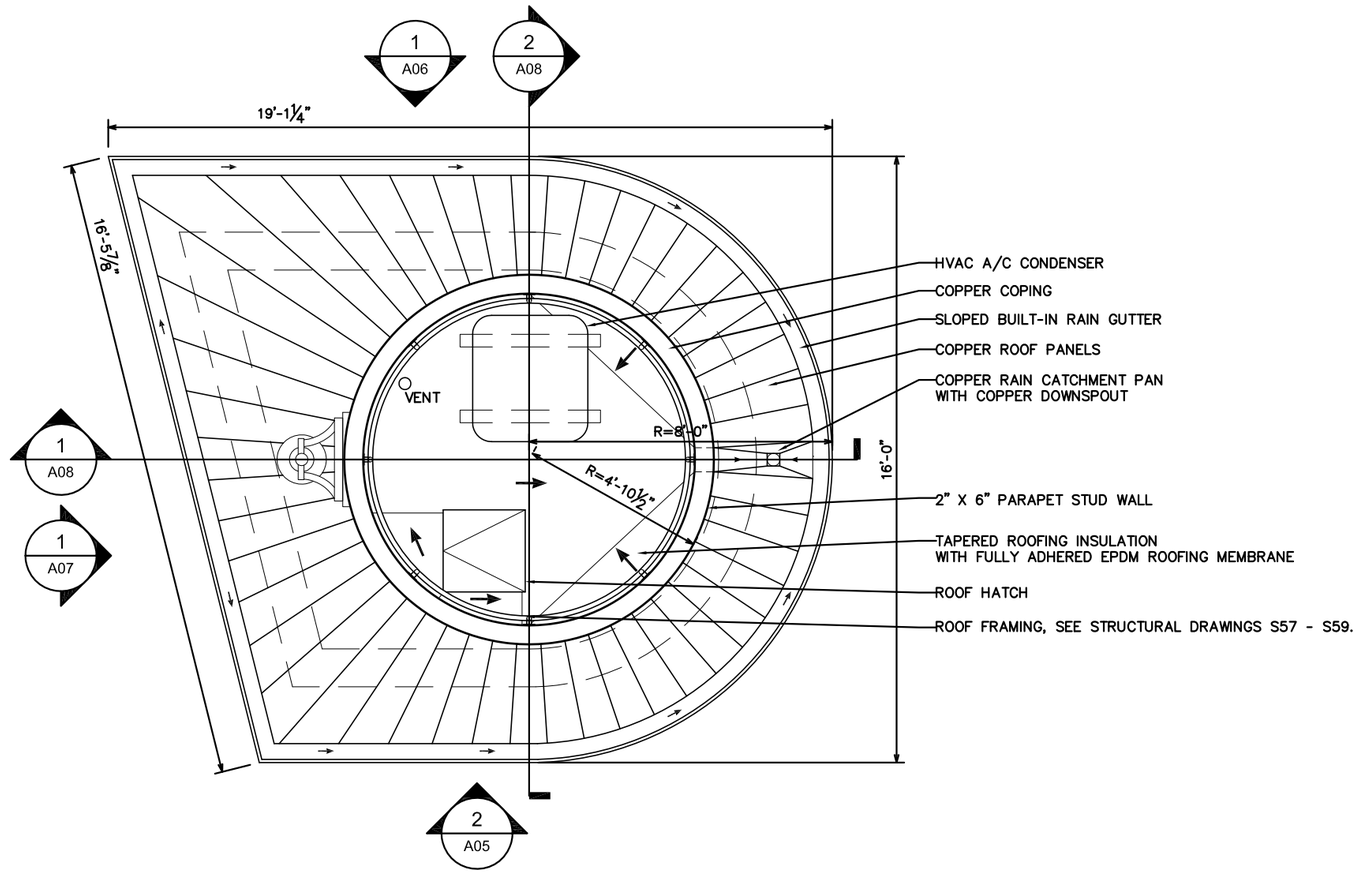

2 A04 ROOF PLAN

City of Milwaukee

Department of Public Works

Infrastructure Services Division

ST PAUL AVE. LIFT BRIDGE
OVER THE MILWAUKEE RIVER
ROOF PLAN

REVISIONS

DESIGNED BY
JIM PIWONI

DRAWN BY
ZACH RASMUSSEN

CHECKED BY
JIM PIWONI

DATE	SCALE
FEB 2013	1/4" = 1'-0"

JOB NUMBER
BR100-10-0106

SHEET NUMBER
A04 OF A10

OF
198

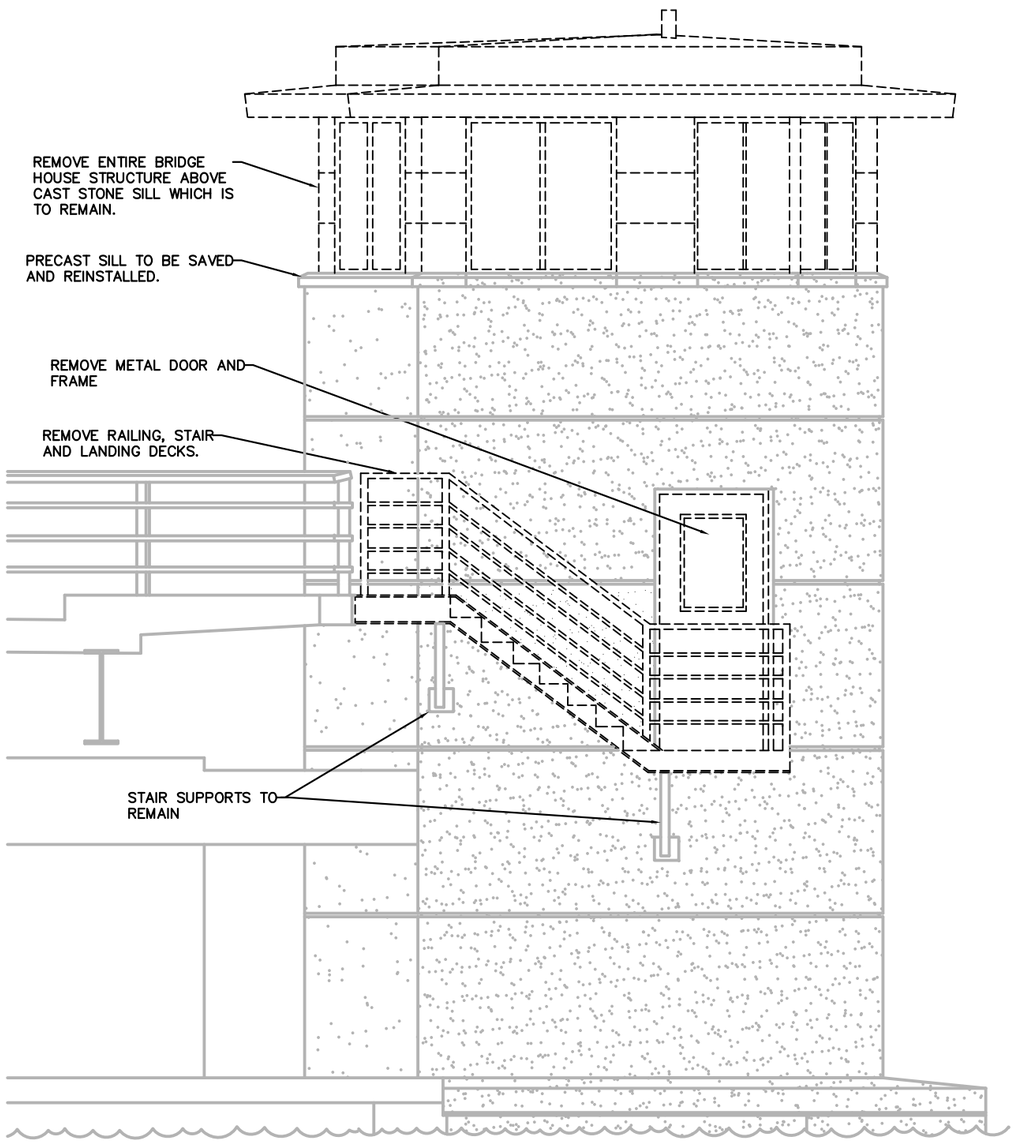

1 A05 EXISTING WEST ELEVATION

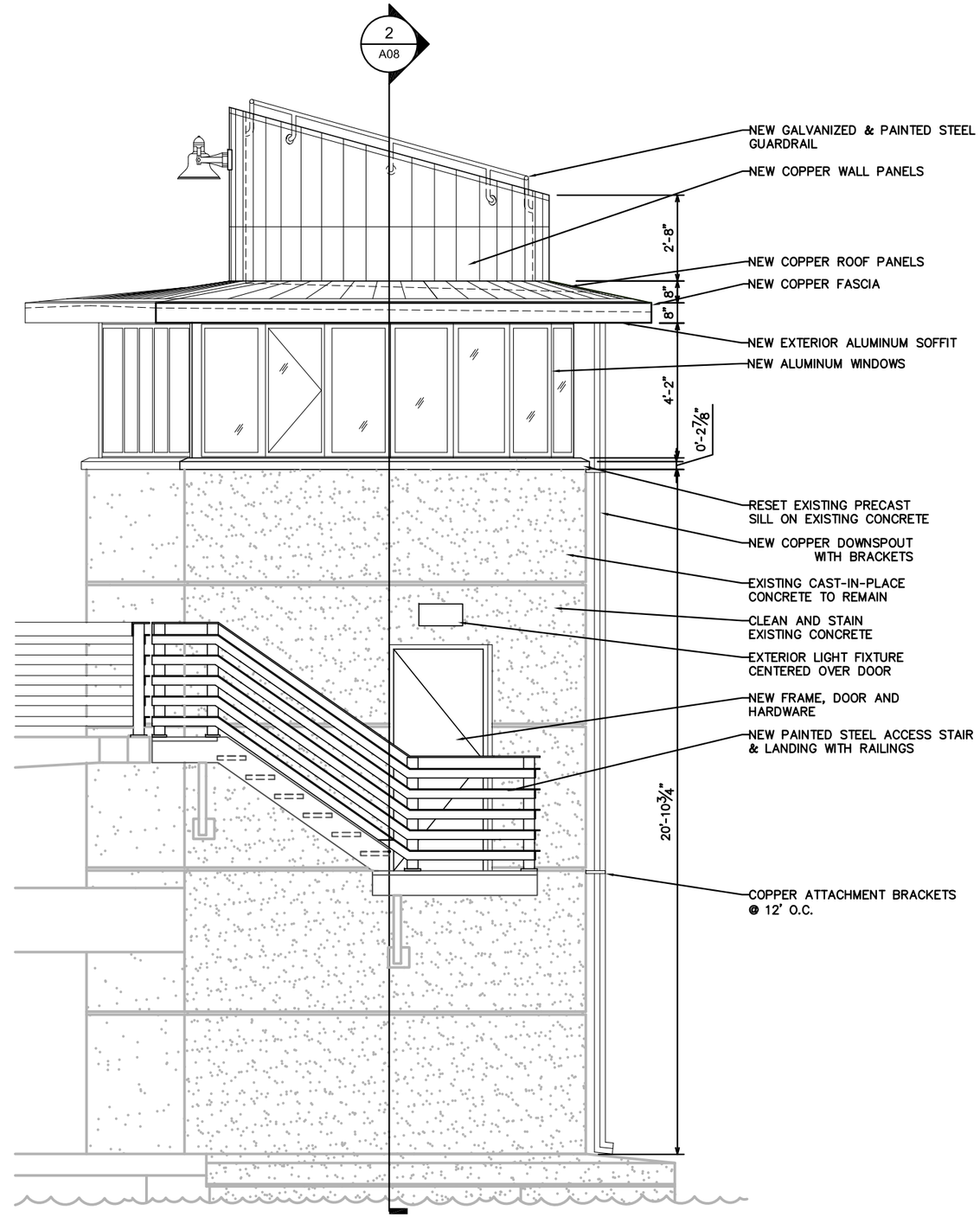

2 A05 WEST ELEVATION

City of Milwaukee

Department of Public Works

Infrastructure Services Division

ST PAUL AVE. LIFT BRIDGE OVER THE MILWAUKEE RIVER WEST ELEVATION

REVISIONS

DESIGNED BY JIM PIWONI	
DRAWN BY ZACH RASMUSSEN	
CHECKED BY JIM PIWONI	
DATE FEB 2013	SCALE 1/4" = 1'-0"
JOB NUMBER BR100-10-0106	
SHEET NUMBER **A05 OF A10**	

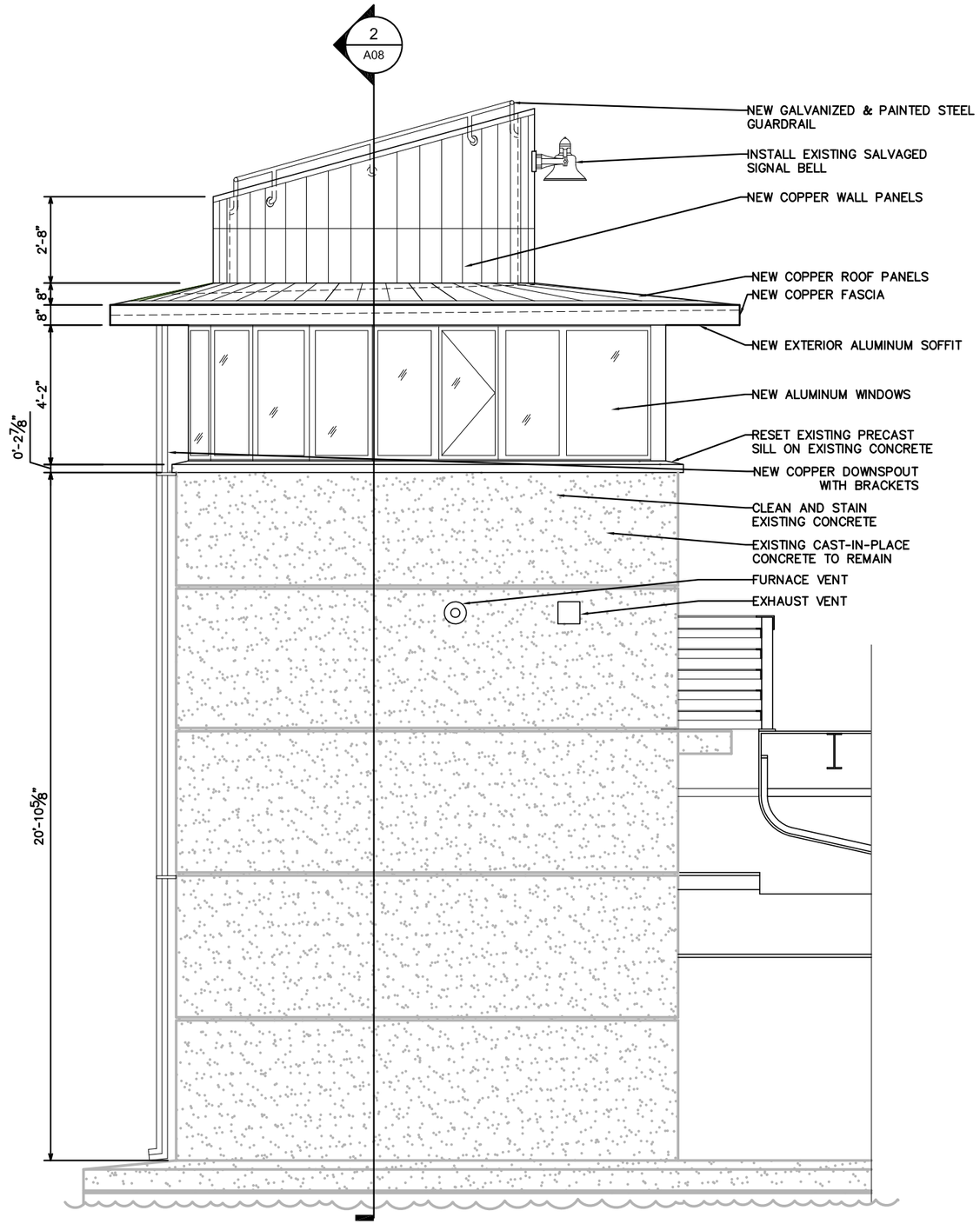

1 A06 EAST ELEVATION

City of Milwaukee

Department of Public Works

Infrastructure Services Division

ST PAUL AVE. LIFT BRIDGE
OVER THE MILWAUKEE RIVER
EAST ELEVATION

REVISIONS

DESIGNED BY
JIM PIWONI

DRAWN BY
ZACH RASMUSSEN

CHECKED BY
JIM PIWONI

DATE	SCALE
FEB 2013	1/4" = 1'-0"

JOB NUMBER
BR100-10-0106

SHEET NUMBER
A06 OF A10

OF
198

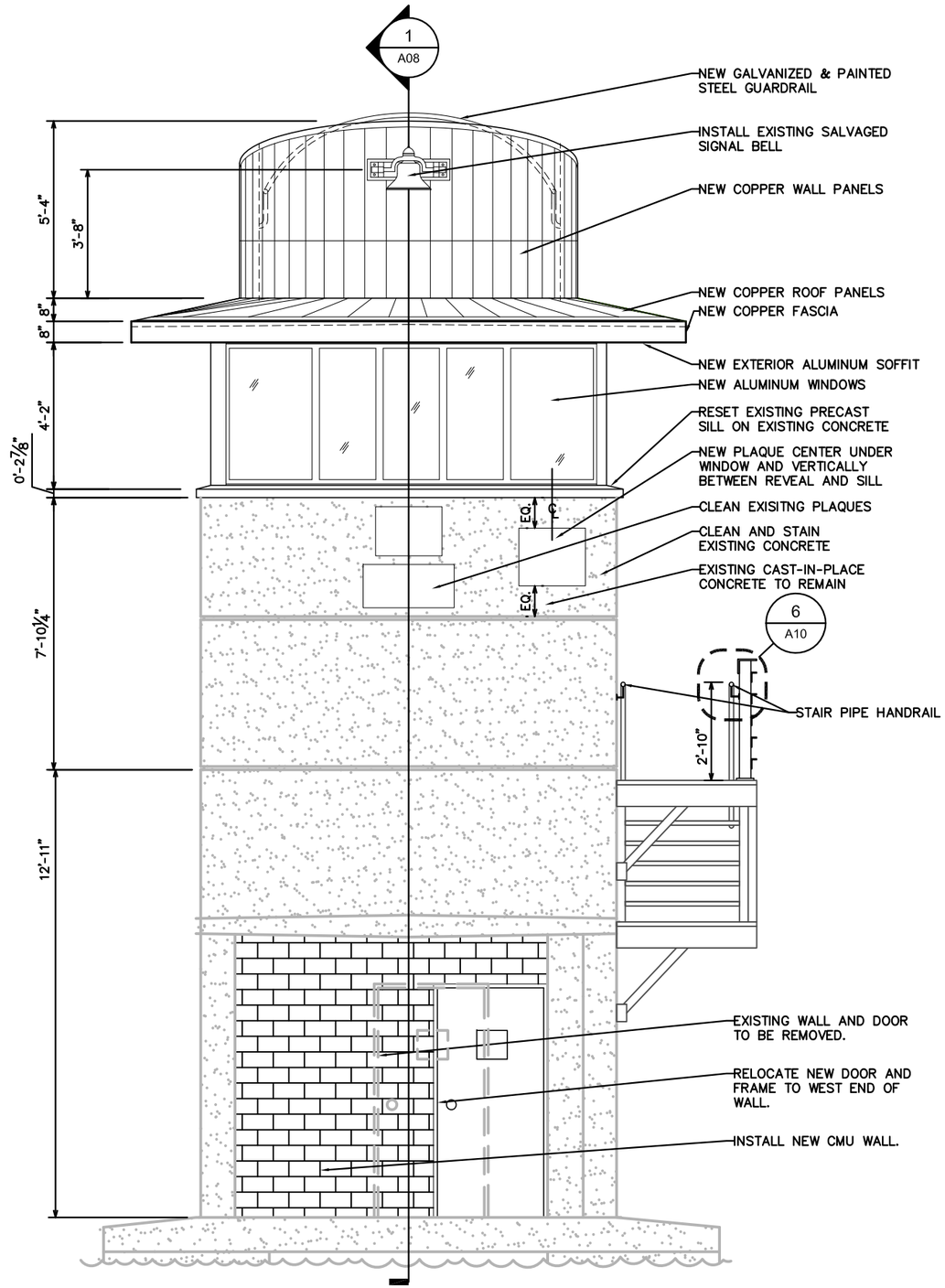

1 / A07 NORTH ELEVATION

City of Milwaukee

Department of Public Works

Infrastructure Services Division

ST PAUL AVE. LIFT BRIDGE OVER THE MILWAUKEE RIVER NORTH ELEVATION

REVISIONS

DESIGNED BY
JIM PIWONI

DRAWN BY
ZACH RASMUSSEN

CHECKED BY
JIM PIWONI

DATE	SCALE
FEB 2013	1/4" = 1'-0"

JOB NUMBER
BR100-10-0106

SHEET NUMBER
A07 OF A10

OF
198

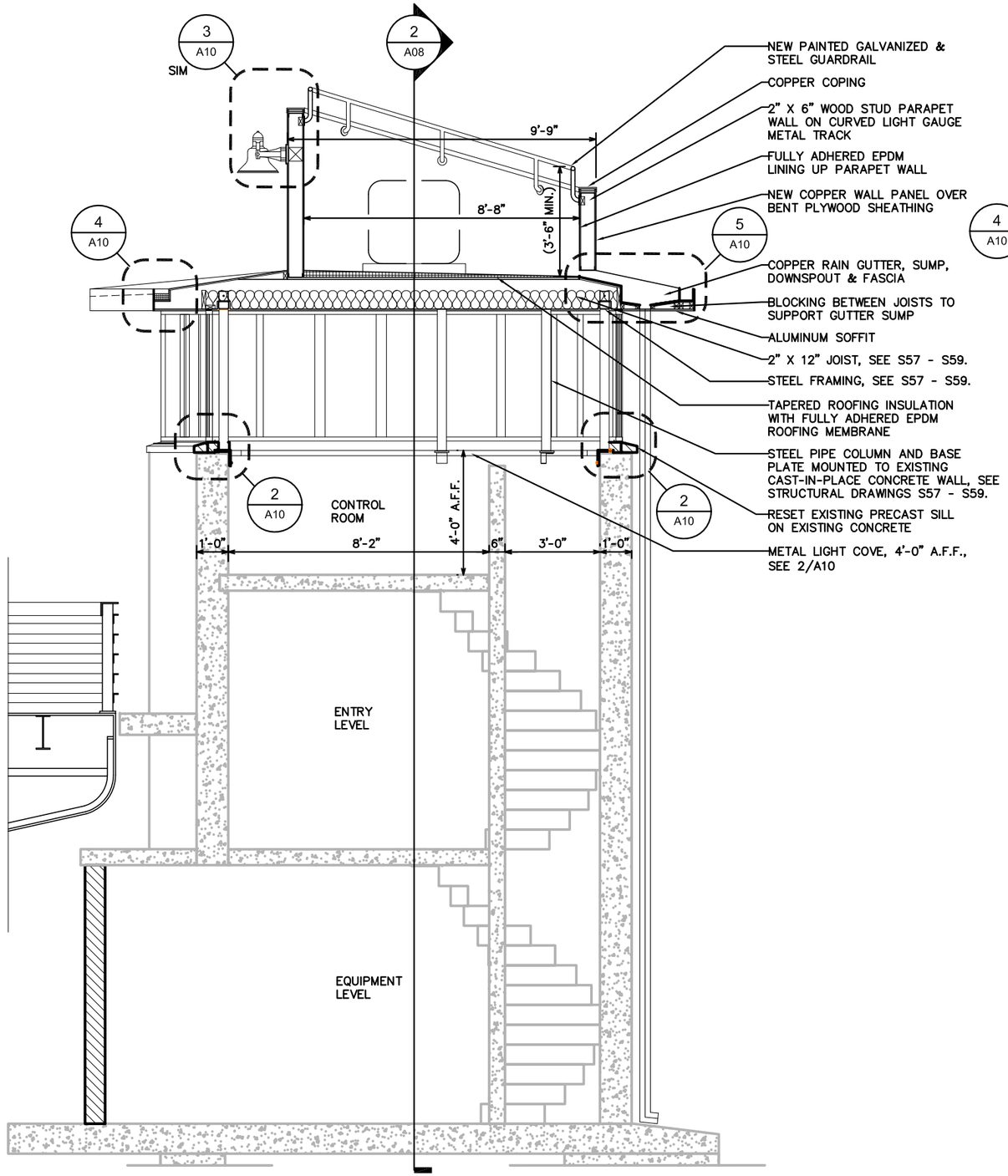

1 A08 BUILDING SECTION

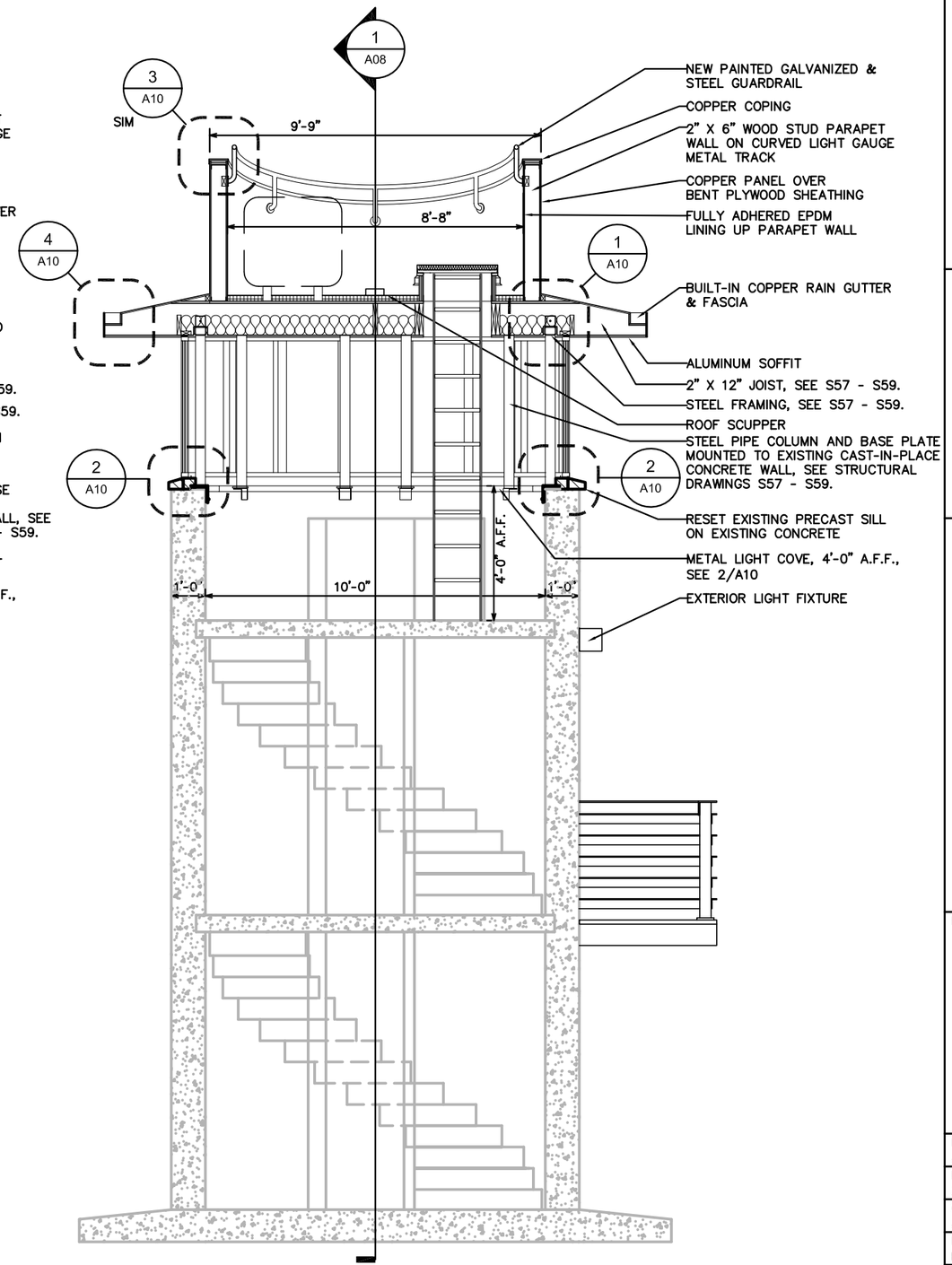

2 A08 BUILDING SECTION

City of Milwaukee

Department of Public Works

Infrastructure Services Division

ST PAUL AVE. LIFT BRIDGE OVER THE MILWAUKEE RIVER BUILDING SECTION

REVISIONS

DESIGNED BY JIM PIWONI	
DRAWN BY ZACH RASMUSSEN	
CHECKED BY JIM PIWONI	
DATE FEB 2013	SCALE 1/4" = 1'-0"
JOB NUMBER BR100-10-0106	
SHEET NUMBER **A08 OF A10**	
OF 198	

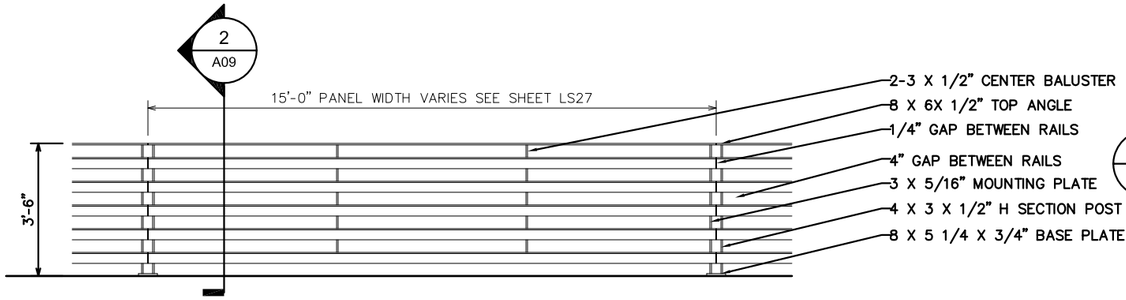

1 A09 TYPICAL RIVER RAILING ELEVATION

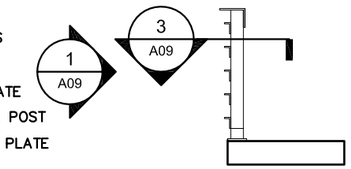

2 A09 RAILING SECTION

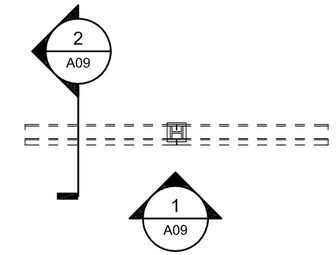

3 A09 RAILING SECTION

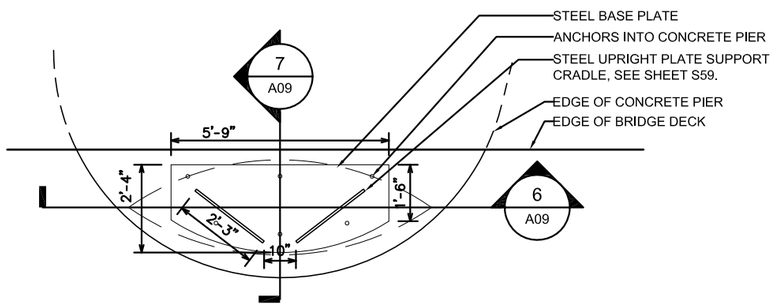

4 A09 PLANTER BASE PLAN

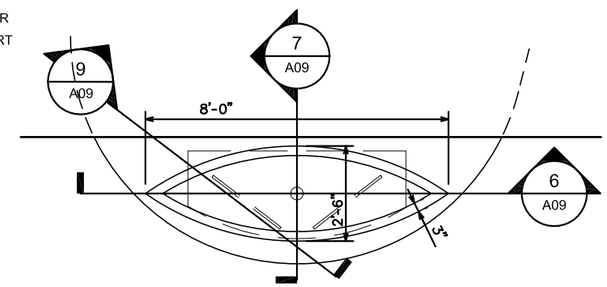

5 A09 PLANTER PLAN

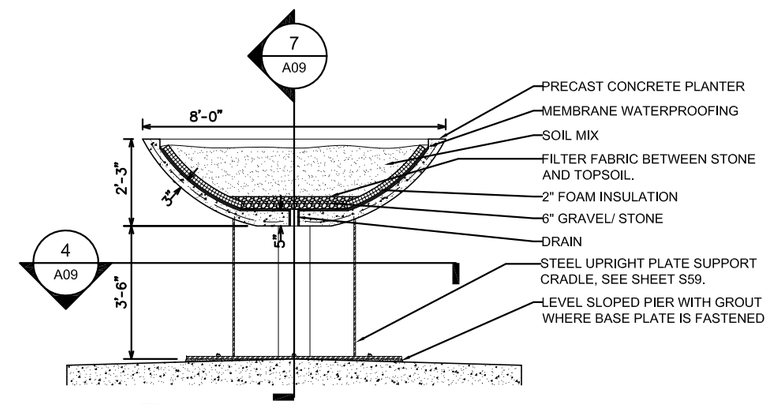

6 A09 PLANTER SECTION

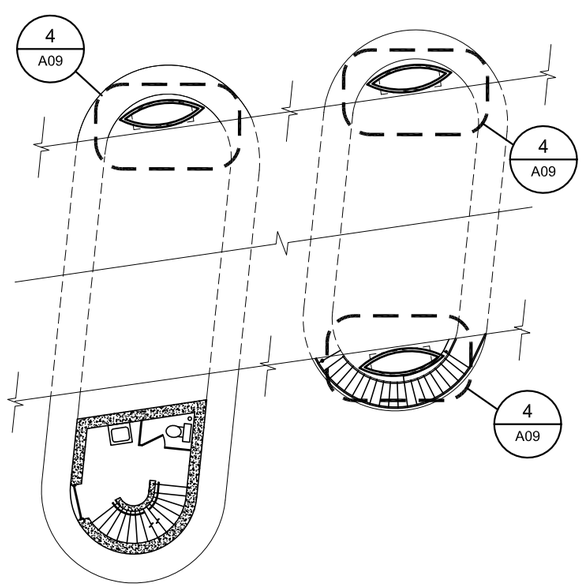

8 A09 PLANTER LOCATIONS ON PIERS

N

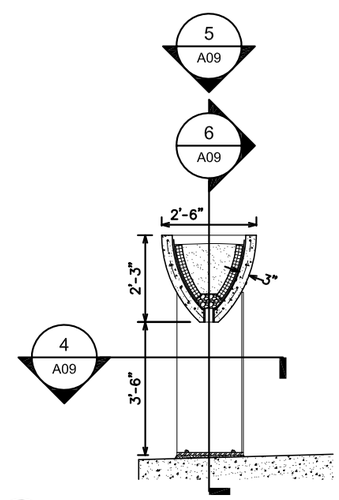

7 A09 PLANTER SECTION

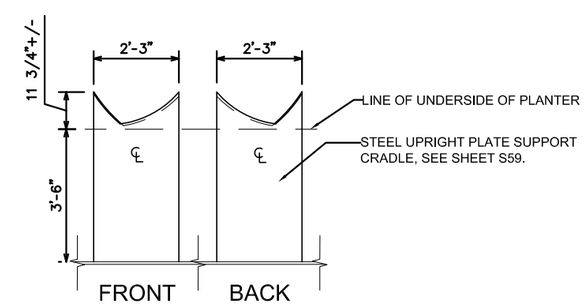

9 A09 STEEL PLATE SUPPORT CRADLE ELEV.

City of Milwaukee

Department of Public Works

Infrastructure Services Division

ST PAUL AVE. LIFT BRIDGE
OVER THE MILWAUKEE RIVER
RAILING & PLANTER DETAILS

REVISIONS

DESIGNED BY JIM PIWONI	
DRAWN BY ZACH RASMUSSEN	
CHECKED BY JIM PIWONI	
DATE FEB 2013	SCALE VARIES
JOB NUMBER BR100-10-0106	
SHEET NUMBER A09 OF A10	
OF 198	

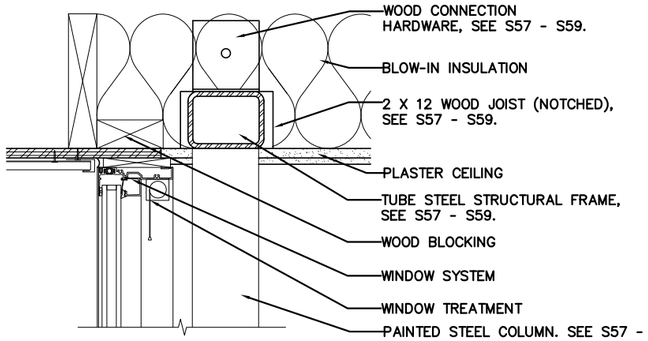

1 A10 WINDOW HEAD DETAIL

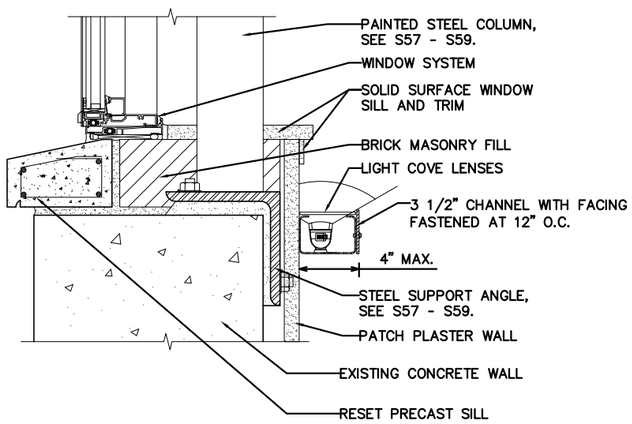

2 A10 SILL SECTION DETAIL

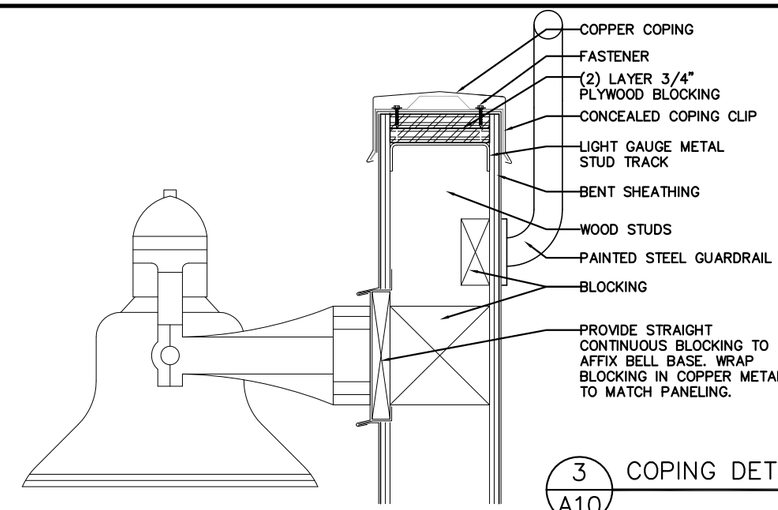

3 A10 COPING DETAIL

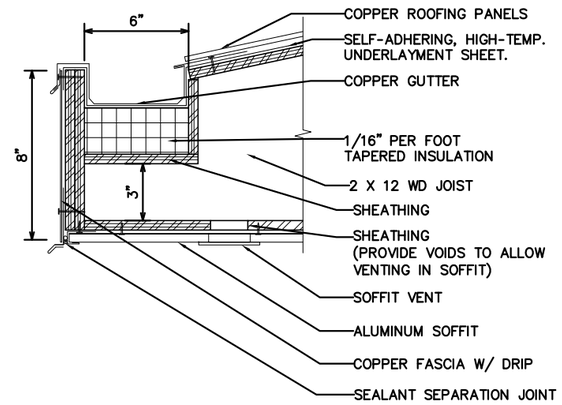

4 A10 ROOF DETAIL AT GUTTER

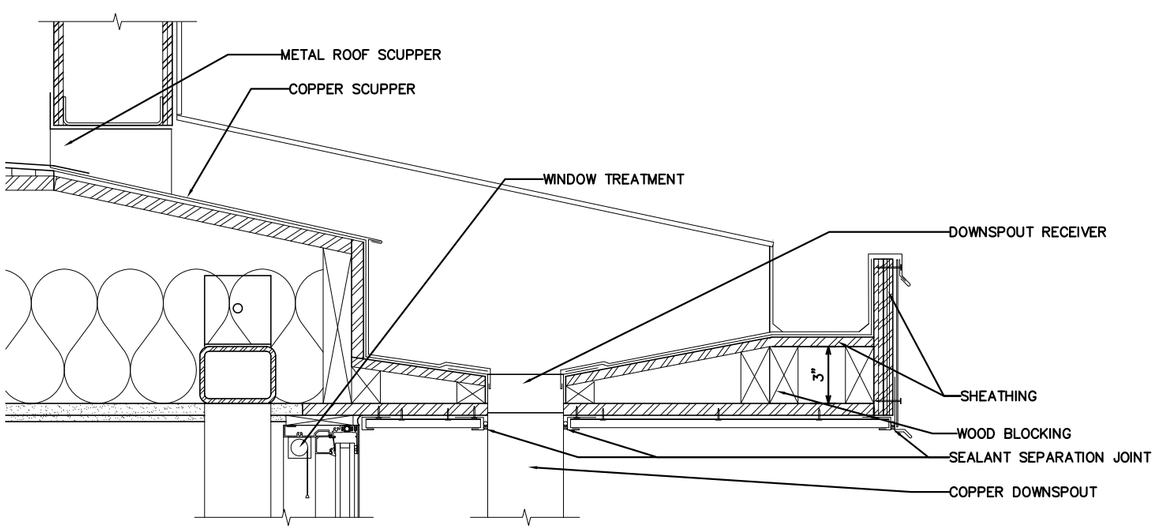

5 A10 ROOF DETAIL AT SUMP

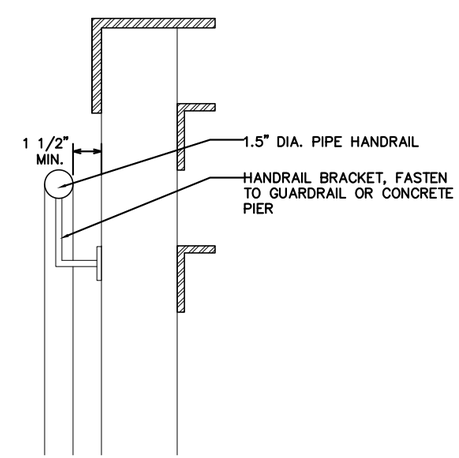

6 A10 HANDRAIL DETAIL

City of Milwaukee

Department of Public Works

Infrastructure Services Division

ST PAUL AVE. LIFT BRIDGE
OVER THE MILWAUKEE RIVER
DETAILS

REVISIONS

DESIGNED BY JIM PIWONI	
DRAWN BY ZACH RASMUSSEN	
CHECKED BY JIM PIWONI	
DATE FEB 2013	SCALE 1 1/2" = 1'-0"
JOB NUMBER BR100-10-0106	
SHEET NUMBER A10 OF A10	
OF 198	

DEMOLITION NOTES

1. REMOVE EXISTING ELECTRIC UNIT HEATER ALONG WITH ALL ASSOCIATED WIRING AND CONTROL.
2. REMOVE EXISTING NATURAL GAS PIPING SERVING EXISTING EMERGENCY GENERATOR BACK TO EXISTING METER.
3. EXISTING NATURAL GAS SERVICE AND METER IS TO BE REMOVED BY LOCAL UTILITY COMPANY AND SAVED FOR REINSTALLATION WHEN BRIDGE WORK IS COMPLETED. GENERAL CONTRACTOR SHALL COORDINATE WORK WITH LOCAL UTILITY COMPANY.

KEY NOTES

1. LOCAL UTILITY COMPANY TO REINSTALL NATURAL GAS SERVICE AND METER UPON COMPLETION OF BRIDGE WORK. GENERAL CONTRACTOR SHALL COORDINATE WORK WITH LOCAL UTILITY COMPANY.

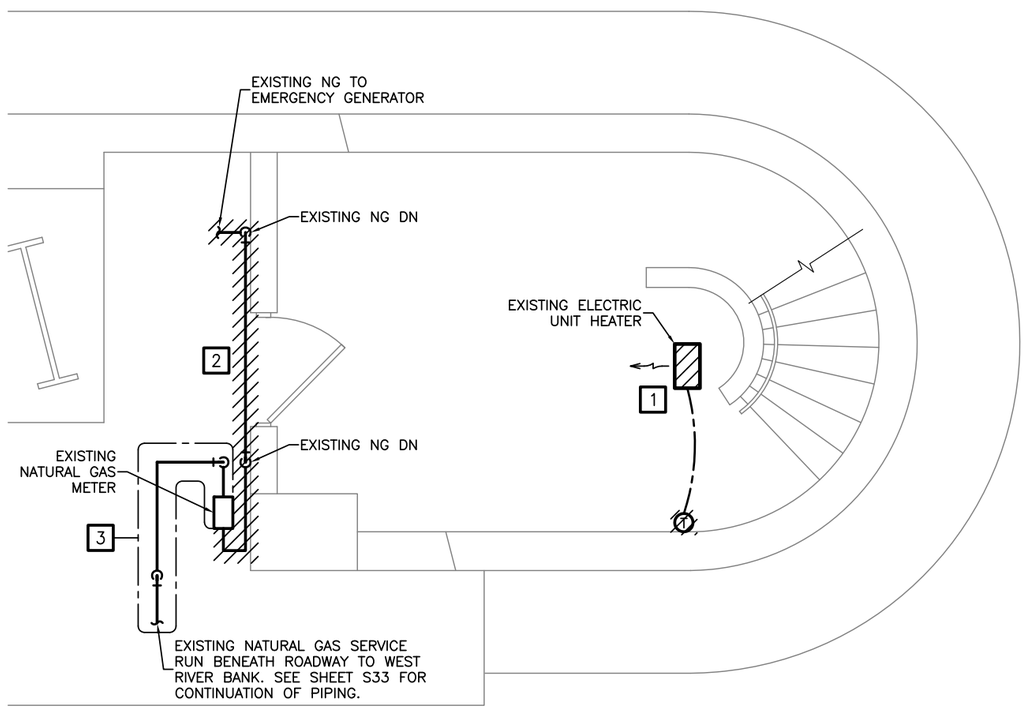

1 / BH1 EQUIPMENT ROOM (1ST) LEVEL HVAC DEMOLITION PLAN ¼"=1'-0"

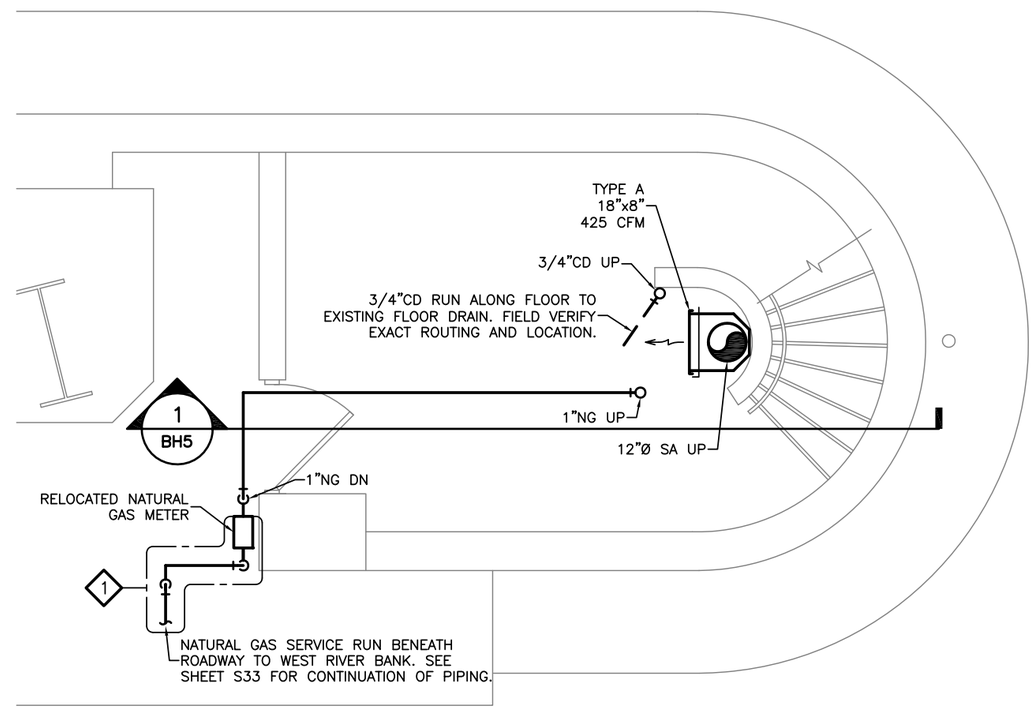

2 / BH1 EQUIPMENT ROOM (1ST) LEVEL HVAC PLAN ¼"=1'-0"

WISCONSIN
MIKE R. ROLLER
E-24969
HARTLAND, WI
PROFESSIONAL ENGINEER
12/11/2013

BH1 THRU BH6

City of Milwaukee

Department of Public Works

Infrastructure Services Division

IBC ENGINEERING SERVICES, INC.
N8 W22195 JOHNSON DR. SUITE 180
WAUKESHA, WISCONSIN 53186
262.549.1190 fx 262.549.1620

ST PAUL AVE. LIFT BRIDGE
OVER THE MILWAUKEE RIVER
EQUIPMENT ROOM (1ST)
LEVEL HVAC PLANS

REVISIONS

DESIGNED BY MRB	
DRAWN BY MRB	
CHECKED BY MRR	
DATE FEB 2013	SCALE 1/4" = 1'-0"
JOB NUMBER BR100-10-0106	
SHEET NUMBER BH1 OF BH6	
OF 198	

DEMOLITION NOTES

1. REMOVE EXISTING ELECTRIC WALL HEATER ALONG WITH ALL ASSOCIATED WIRING AND CONTROL.

KEY NOTES

1. MOUNT NEW NATURAL GAS FIRED FURNACE (GFF–01) ON NEW 4"CONCRETE HOUSEKEEPING PAD. CORE DRILL NEW FLOOR OPENINGS IN EXISTING CONCRETE FLOOR FOR THE INSTALLATION OF THE NEW 12"Ø SA DUCT, THE NEW 1"NG PIPING AND THE NEW 3/4"CD PIPING. FIELD VERIFY EXACT LOCATIONS.
2. CORE DRILL NEW OPENING IN EXISTING CONCRETE WALL FOR THE INSTALLATION OF NEW 6"Ø EA DUCTWORK AND ASSOCIATED WALL CAP. FIELD VERIFY EXACT LOCATION. SEAL WATERTIGHT.
3. CORE DRILL NEW OPENING IN EXISTING CONCRETE WALL FOR THE INSTALLATION OF NEW CONCENTRIC CAI/VENT. SIZE AND INSTALL PER MANUFACTURERS RECOMMENDATIONS. FIELD VERIFY EXACT LOCATION. SEAL WATERTIGHT.
4. INTERLOCK OPERATION OF EXHAUST FAN WITH ROOM LIGHT SWITCH.

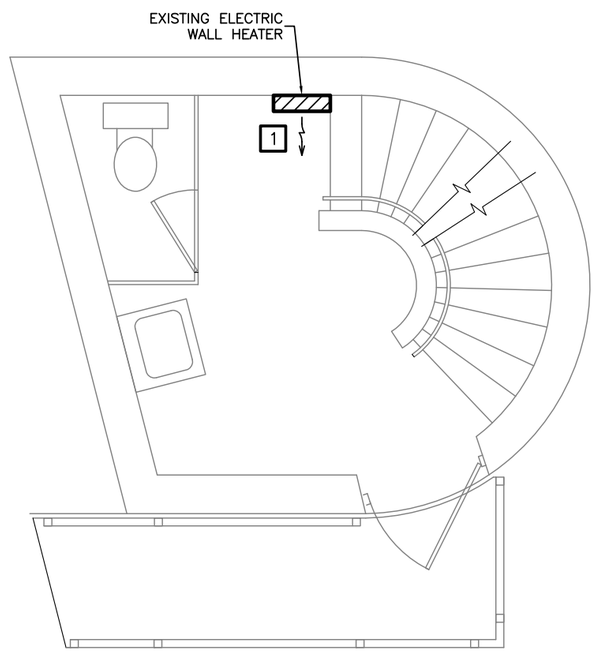

1 / BH2 ENTRY/STREET (2ND) LEVEL HVAC DEMOLITION PLAN ¼"=1'-0"

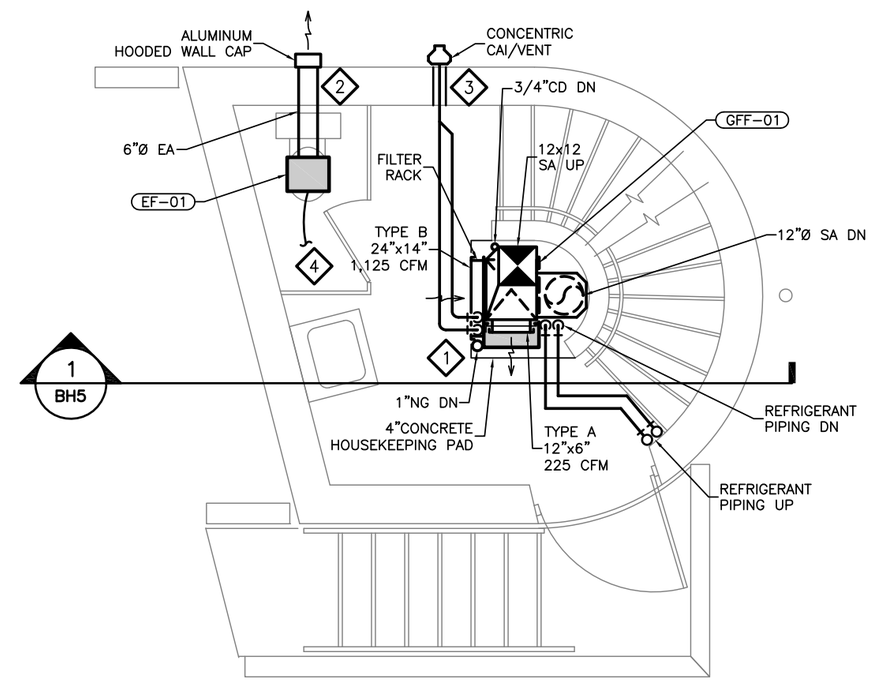

2 / BH2 ENTRY/STREET (2ND) LEVEL HVAC PLAN ¼"=1'-0"

City of Milwaukee

Department of Public Works

Infrastructure Services Division

IBC ENGINEERING SERVICES, INC.

N8 W22195 JOHNSON DR. SUITE 180
WAUKESHA, WISCONSIN 53186
262.549.1190 fx 262.549.1620

ST PAUL AVE. LIFT BRIDGE OVER THE MILWAUKEE RIVER
ENTRY / STREET (2ND) LEVEL HVAC PLANS

REVISIONS

DESIGNED BY MRB	
DRAWN BY MRB	
CHECKED BY MRR	
DATE FEB 2013	SCALE 1/4" = 1'-0"
JOB NUMBER BR100-10-0106	
SHEET NUMBER BH2 OF BH6	

DEMOLITION NOTES

1. REMOVE EXISTING ELECTRIC WALL HEATER ALONG WITH ALL ASSOCIATED WIRING AND CONTROL.
2. REMOVE EXISTING ABANDONED FLUE PIPE.

KEY NOTES

1. SAW CUT NEW OPENING IN EXISTING CONCRETE FLOOR FOR THE INSTALLATION OF THE NEW 12x12 SA DUCTWORK. FIELD VERIFY EXACT LOCATION.
2. CORE DRILL NEW OPENING IN EXISTING CONCRETE FLOOR FOR THE INSTALLATION OF THE NEW REFRIGERANT PIPING. FIELD VERIFY EXACT SIZE AND LOCATION. RUN REFRIGERANT PIPING UP ALONG STEEL COLUMN TO ABOVE CEILING INTO JOIST SPACE. SIZE AND INSTALL PER MANUFACTURERS RECOMMENDATIONS.

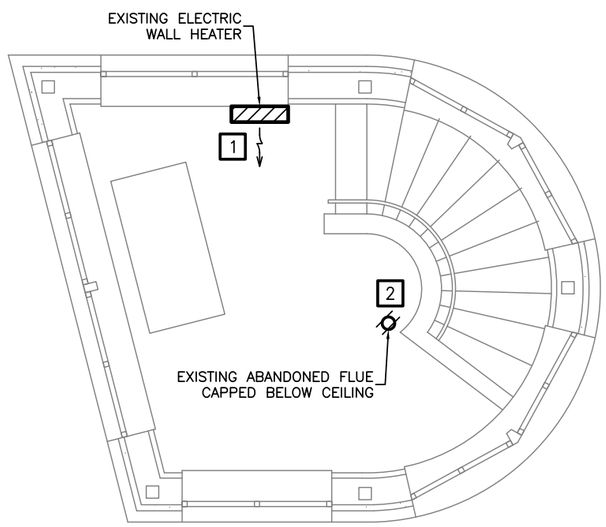

1 / BH3 CONTROL ROOM (3RD) LEVEL HVAC DEMOLITION PLAN ¼"=1'-0"

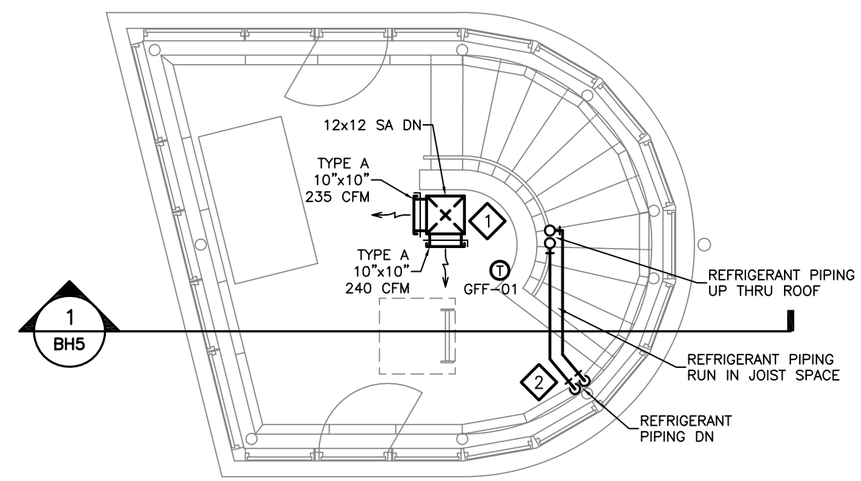

2 / BH3 CONTROL ROOM (3RD) LEVEL HVAC PLAN ¼"=1'-0"

City of Milwaukee
Department of Public Works
Infrastructure Services Division

IBC ENGINEERING SERVICES, INC.
N8 W22195 JOHNSON DR. SUITE 180
WAUKESHA, WISCONSIN 53186
262.549.1190 fx 262.549.1620

ST PAUL AVE. LIFT BRIDGE OVER THE MILWAUKEE RIVER CONTROL ROOM (3RD) LEVEL HVAC PLANS

REVISIONS

DESIGNED BY MRB	
DRAWN BY MRB	
CHECKED BY MRR	
DATE FEB 2013	SCALE 1/4" = 1'-0"
JOB NUMBER BR100-10-0106	
SHEET NUMBER BH3 OF BH6	

DEMOLITION NOTES

1 REMOVE EXISTING ABANDONED FLUE PIPE.

KEY NOTES

1 MOUNT NEW AIR COOLED CONDENSING UNIT (ACCU–01) ON NEW ROOF RAILS. POSITION UNIT AS REQUIRED TO ALLOW FOR ALL MANUFACTURERS RECOMMENDED SERVICE CLEARANCES. SIZE AND INSTALL REFRIGERANT PIPING PER MANUFACTURERS RECOMMENDATIONS.

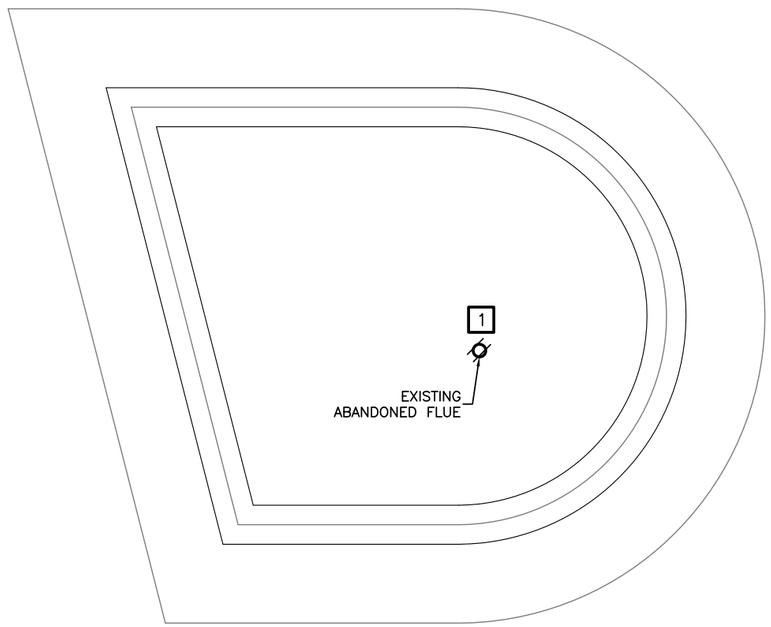

1/BH4 ROOF HVAC DEMOLITION PLAN ¼"=1'-0"

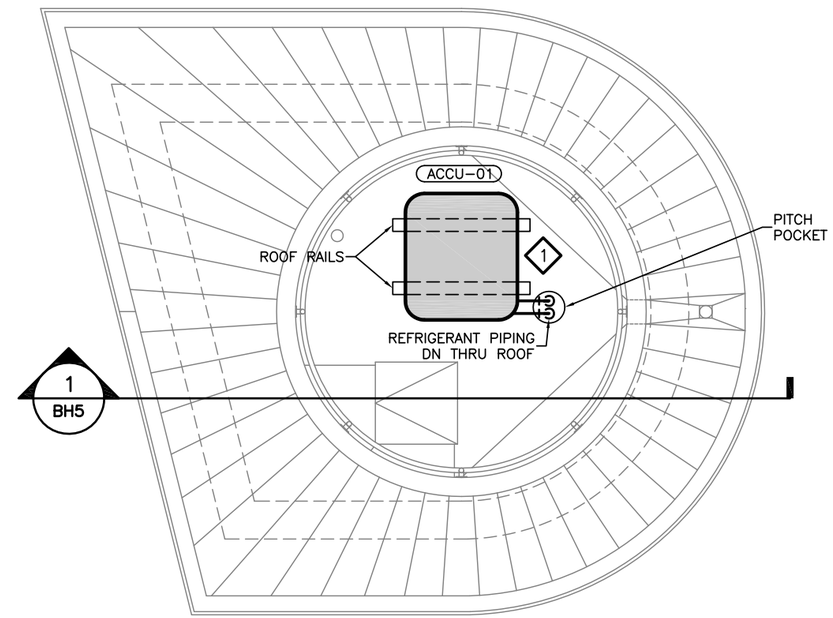

2/BH4 ROOF HVAC PLAN ¼"=1'-0"

City of Milwaukee

Department of Public Works

Infrastructure Services Division

IBC ENGINEERING SERVICES, LTD.

N8 W22195 JOHNSON DR. SUITE 180
WAUKESHA, WISCONSIN 53186
262.549.1190 fx 262.549.1620

ST PAUL AVE. LIFT BRIDGE
OVER THE MILWAUKEE RIVER
ROOF HVAC PLANS

REVISIONS

DESIGNED BY MRB	
DRAWN BY MRB	
CHECKED BY MRR	
DATE FEB 2013	SCALE 1/4" = 1'-0"
JOB NUMBER BR100-10-0106	
SHEET NUMBER BH4 OF BH6	

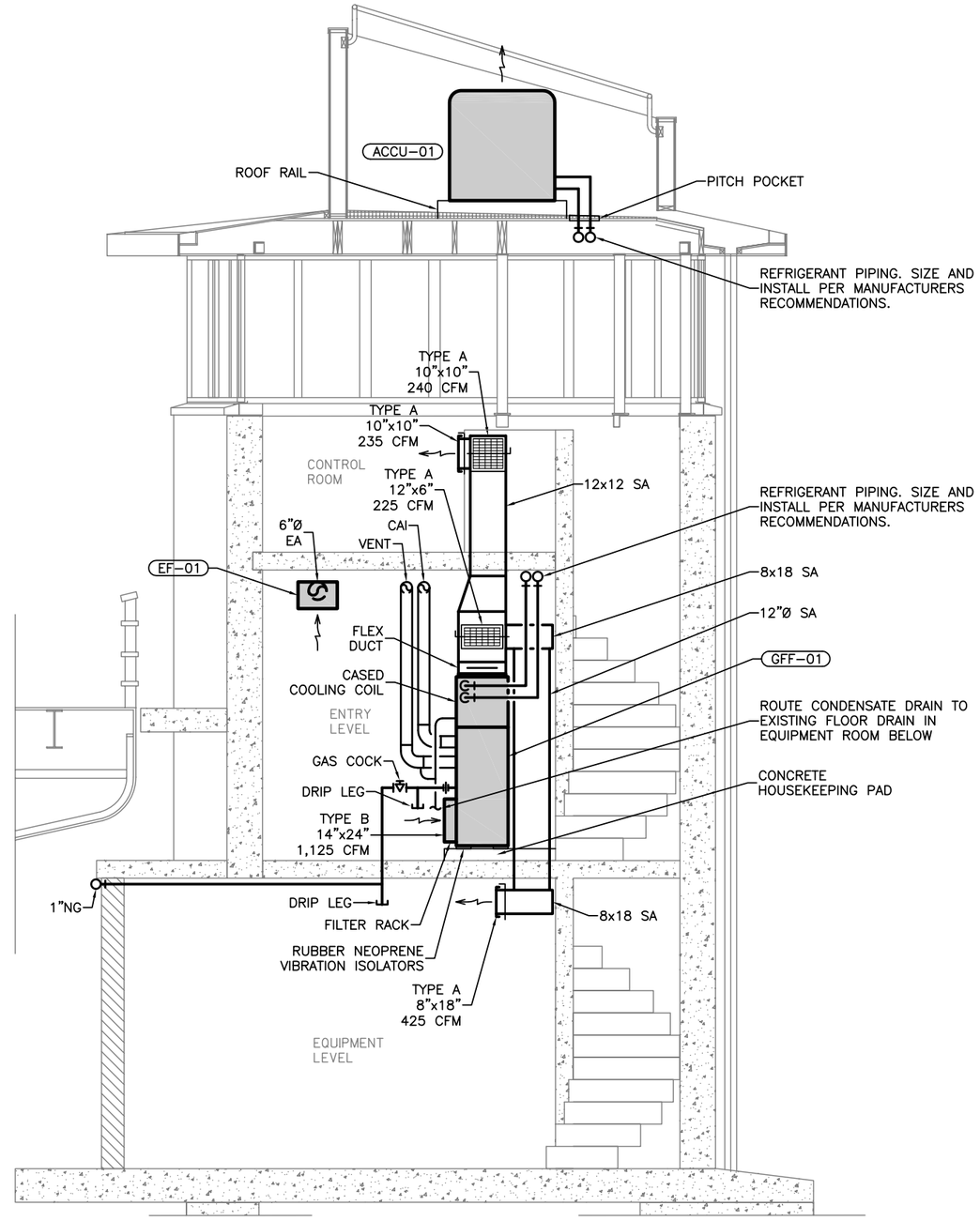

1 / BH5 HVAC SECTION ¼"=1'-0"

City of Milwaukee

Department of Public Works

Infrastructure Services Division

IBC ENGINEERING SERVICES, LTD.

N8 W22195 JOHNSON DR. SUITE 180
WAUKESHA, WISCONSIN 53186
262.549.1190 fx 262.549.1620

ST PAUL AVE. LIFT BRIDGE
OVER THE MILWAUKEE RIVER
HVAC SECTION

REVISIONS

DESIGNED BY MRB	
DRAWN BY MRB	
CHECKED BY MRR	
DATE FEB 2013	SCALE NTS
JOB NUMBER BR100-10-0106	
SHEET NUMBER BH5 OF BH6	
OF 198	

EXHAUST FANS

PLAN DESIGNATION		EF–01	
MANUFACTURER		GREENHECK	
MODEL		SP–A190	
SERVICE		UTILITY ROOM	
LOCATION		UTILITY ROOM	
CONSTRUCTION	TYPE	CEILING	
	CASING MATERIAL	GALV. STEEL	
	FAN MATERIAL	ALUMINUM	
	DRIVE	DIRECT	
AIR	CFM	150	
	ESP – IN WC	0.25	
	FAN RPM	1,311	
ELECTRICAL	FAN MOTOR WATTS	113	
	VOLTS/PHASE	115V / 1Ø	
	THER OVERLOAD PROTECTION	INTEGRAL	
INLET dBA		37	
INLET SONES		2.0	
REMARKS		1,2,3,4,5,6	

NOTE: THE MANUFACTURERS LISTED ABOVE ARE SELECTED AS THE "BASIS OF DESIGN". OTHER ACCEPTABLE MANUFACTURERS ARE LISTED IN THE SPECIFICATIONS.

1. PROVIDE DISCONNECT SWITCH.
2. PROVIDE NEOPRENE VIBRATION ISOLATION HANGERS.
3. PROVIDE BACKDRAFT DAMPER.
4. PROVIDE SPEED CONTROL MOUNTED ON FAN FOR BALANCING PURPOSES.
5. PROVIDE WITH GREENHECK MODEL RDC–6 ROUND DUCT CONNECTOR.
6. PROVIDE WHITE ALUMINUM GRILLE AND HOODED WALL CAP EQUAL TO GREENHECK MODEL WC–6.

GAS FIRED FURNACE

PLAN DESIGNATION		GFF–01	
MANUFACTURER		CARRIER	
MODEL		59SC2A080–16	
SERVICE		BRIDGEHOUSE	
LOCATION		UTILITY ROOM	
TYPE VENTING		SEALED COMB.	
CONFIGURATION		UPFLOW	
SUPPLY AIR – CFM		1,125	
OUTSIDE AIR – CFM		0	
EXTERNAL STATIC PRESSURE – IN WC		0.5	
INPUT MBH		80	
OUTPUT MBH		74	
EFFICIENCY		92%	
SUPPLY FAN	HP	3/4	
	RPM	1,075	
	VOLTS/PHASE	115V / 1Ø	
ELECTRICAL	MAXIMUM UNIT AMPS	9.6	
	VOLTS/PHASE	115V / 1Ø	
REMARKS		1,2,3,4,5	

NOTE: THE MANUFACTURERS LISTED ABOVE ARE SELECTED AS THE "BASIS OF DESIGN". OTHER ACCEPTABLE MANUFACTURERS ARE LISTED IN THE SPECIFICATIONS.

1. PROVIDE STARTER & DISCONNECT SWITCH.
2. PROVIDE CONCENTRIC COMBUSTION AIR INTAKE/VENT KIT.
3. PROVIDE FILTER RACK WITH 1"PLEATED FILTERS.
4. DRAIN CONDENSATE TO EXISTING FLOOR DRAIN.
5. PROVIDE 2.5 TON CASED DX COOLING COIL EQUAL TO CARRIER MODEL CNPVP30.

AIR COOLED CONDENSING UNIT

PLAN DESIGNATION		ACCU–01	
MANUFACTURER		CARRIER	
MODEL		24ANB630	
SERVICE		GFF–01	
CAPACITY	TONS OF REFRIGERATION	2.5	
	SEER	15	
CONDENSER FANS	QUANTITY	1	
	HORSEPOWER EACH	1/10	
	AIRFLOW – CFM	2,614	
REFRIGERANT		R–410A	
ELECTRICAL	MCA	16.6	
	MOCP	25	
	LOCKED ROTOR AMPS	64	
	VOLTS/PHASE	208–230V/1Ø	
DIMENSIONS	LENGTH	32"	
	WIDTH	32"	
	HEIGHT	33"	
REMARKS		1,2,3,4	

NOTE: THE MANUFACTURERS LISTED ABOVE ARE SELECTED AS THE "BASIS OF DESIGN". OTHER ACCEPTABLE MANUFACTURERS ARE LISTED IN THE SPECIFICATIONS.

1. SEER ARE SPECIFIED AT ARI CONDITIONS.
2. PROVIDE STARTER & DISCONNECT SWITCH.
3. PROVIDE FACTORY CHARGED REFRIGERANT LINE KIT.
4. PROVIDE CRANKCASE HEATER & LOW–AMBIENT CONTROLLER DOWN TO 0 DEGREES F.

DIFFUSERS & GRILLES

PLAN DESIGNATION	MANUFACTURER	MODEL	DESCRIPTION
A	TITUS	300FS	DOUBLE DEFLECTION, 3/4"BLADE SPACING, ADJUSTABLE BLADES, ALUMINUM CONSTRUCTION
B	TITUS	350FS	3/4"BLADE SPACING, 45 DEGREE DEFLECTION, ALUMINUM CONSTRUCTION

NOTE: THE MANUFACTURERS LISTED ABOVE ARE SELECTED AS THE "BASIS OF DESIGN". OTHER ACCEPTABLE MANUFACTURERS ARE LISTED IN THE SPECIFICATIONS.

GENERAL NOTES

1. THESE DRAWINGS DO NOT ATTEMPT TO SHOW THE COMPLETE DETAILS OF BUILDING CONSTRUCTION, WHICH AFFECT THE MECHANICAL INSTALLATION. THE CONTRACTOR SHALL FIELD VERIFY EXISTING CONDITIONS AND REFER TO THE ARCHITECTURAL, CIVIL, STRUCTURAL, PLUMBING & ELECTRICAL DRAWINGS FOR ADDITIONAL DETAILS WHICH AFFECT THE PROPER INSTALLATION OF THIS WORK. NO EXTRA PAYMENT WILL BE ALLOWED FOR THE FAILURE TO OBTAIN THIS INFORMATION.
2. THE CONTRACTOR SHALL BE RESPONSIBLE FOR ALL EXISTING FIELD CONDITIONS. THE CONTRACTOR SHALL REVIEW EXISTING FIELD CONDITIONS PRIOR TO BID AND SHALL TAKE INTO ACCOUNT IN BID PROPOSAL. NO ADDITIONAL COMPENSATION WILL BE ALLOWED DUE TO CONTRACTORS FAILURE TO INCLUDE ALL NECESSARY WORK IN THE BID PROPOSAL.
3. MECHANICAL CONTRACTOR SHALL COORDINATE HIS WORK WITH THE WORK OF OTHER TRADES. RESOLVE ALL CONFLICTS AT NO ADDITIONAL COST TO THE OWNER OR ARCHITECT.
4. THESE DRAWINGS ARE A DIAGRAMMATIC REPRESENTATION OF WORK TO BE ACCOMPLISHED AND AS SUCH DO NOT SHOW ALL REQUIRED OFFSETS OF DUCTWORK AND PIPING. MECHANICAL CONTRACTOR SHALL INSTALL MATERIAL AND EQUIPMENT AS TO CONFORM TO THE STRUCTURE, EQUIPMENT CONNECTIONS AND MAINTAIN HEADROOM AND PASSAGEWAY.
5. ALL CUTTING AND PATCHING OF EXISTING STRUCTURE TO ACCOMMODATE NEW HVAC IS BY MECHANICAL CONTRACTOR.
6. ALL CONTROL WIRING SHALL BE RUN IN CONDUIT.
7. KEY NOTES PERTAIN ONLY TO THE DRAWING THE ARE LOCATED ON.
8. DUCT SIZES ARE CLEAR INSIDE DIMENSIONS.

LEGEND

	NEW HVAC EQUIPMENT
	EXISTING HVAC EQUIPMENT
	NEW DUCTWORK
	EXISTING DUCTWORK
T	THERMOSTAT
	DUCT UP
	DUCT DOWN
	FLEX DUCT
	BALANCING DAMPER
	AIR FLOW INDICATOR
	EQUIPMENT TO BE REMOVED
	KEY NOTE
	BALL VALVE
	PIPE ELBOW/TEE DOWN
	PIPE ELBOW/TEE UP
	CAPPED PIPE END
M	MOTORIZED CONTROL DAMPER
$	WALL SWITCH
AFF	ABOVE FINISHED FLOOR
BD	BALANCING DAMPER
CAI	COMBUSTION AIR INTAKE
CD	CONDENSATE DRAIN
CFM	CUBIC FEET PER MINUTE
DN	DOWN
EA	EXHAUST AIR
MAX	MAXIMUM
MIN	MINIMUM
NG	NATURAL GAS
SA	SUPPLY AIR
X–...	EXISTING ...

City of Milwaukee

Department of Public Works

Infrastructure Services Division

IBC ENGINEERING SERVICES, INC.
N8 W22195 JOHNSON DR. SUITE 180
WAUKESHA, WISCONSIN 53186
262.549.1190 fx 262.549.1620

ST PAUL AVE. LIFT BRIDGE
OVER THE MILWAUKEE RIVER
HVAC GENERAL NOTES,
LEGEND AND SCHEDULES

REVISIONS

DESIGNED BY MRB	
DRAWN BY MRB	
CHECKED BY MRR	
DATE FEB 2013	SCALE NTS
JOB NUMBER BR100-10-0106	
SHEET NUMBER BH6 OF BH6	
OF 198	

SHEET NOTES

1. PATCH AND PAINT ALL HOLES IN WALLS AND CEILINGS RESULTING FROM THE REMOVAL OF EXISTING ELECTRICAL EQUIPMENT AND SURFACE CONDUIT.
2. PROVIDE CODE REQUIRED WORKING SPACE IN FRONT OF ALL ELECTRICAL EQUIPMENT.
3. REMOVE AND REPLACE ALL BRANCH CIRCUIT WIRING, INCLUDING ALL SWITCHES AND RECEPTACLES. EXISTING CONDUIT CONCEALED IN WALLS AND CEILINGS THAT IS NOT REUSED SHALL BE CUT OFF FLUSH WITH SURFACE AND PATCHED.
4. ALL EXPOSED CONDUIT INSTALLED ON THE BRIDGE PIERS SHALL BE PVC COATED GALVANIZED RIGID STEEL. ALL JUNCTION BOXES SHALL BE NEMA 4X STAINLESS STEEL.
5. ALL EXTERIOR WEATHERPROOF RECEPTACLES SHALL HAVE COVERS THAT ARE LISTED FOR WET LOCATION WHILE IN–USE.
6. CONDUIT AND OUTLET BOXES INSTALLED IN THE NEW NORTH WALL OF THE EQUIPMENT ROOM TO BE CONCEALED IN THE CONCRETE BLOCK WALL.

KEY NOTES

1. REMOVE AND REPLACE EXISTING LIGHTS IN EQUIPMENT ROOM WITH TWO NEW 4' 2–LAMP INDUSTRIAL TYPE ENCLOSED AND GASKETED FLUORESCENT FIXTURES WITH FIBERGLASS HOUSING. FIXTURES TO BE SURFACE MOUNTED.
2. EXISTING ELECTRICAL SERVICE AND UTILITY METER TO BE REMOVED. REFER TO BRIDGE ELECTRICAL SHEETS FOR NEW ELECTRICAL SERVICE REQUIREMENTS.
3. PROVIDE APPROPRIATELY SIZED BRANCH CIRCUIT FROM NEW PANEL TO ALL HVAC AND PLUMBING EQUIPMENT. REFER TO SHEETS BH1/BP1 AND HVAC/PLUMPING SPECIFICATIONS FOR ADDITIONAL INFORMATION.
4. REFER TO BRIDGE ELECTRICAL SHEETS FOR ELECTRICAL EQUIPMENT ASSOCIATED WITH MAIN ELECTRICAL SERVICE, BRIDGE POWER, REMOTE CONTROL, MONITORING, CCTV, INTERCOM, PA SYSTEM, RADIO COMMUNICATIONS, TELEPHONE, SECURITY, TRAFFIC CONTROL, BRIDGE LIGHTING, NAVIGATION LIGHTING, OPERATOR'S CONTROL CONSOLE, WIREWAY BETWEEN CONTROL PANEL AND OPERATOR'S CONSOLE AND FROM CONTROL PANEL OUT TO BRIDGE STRUCTURE, ETC.
5. PROVIDE 120V PHOTOELECTRIC SMOKE DETECTOR WITH INTEGRAL ALARM SOUNDER, FLASHING STROBE LIGHT, AND 9VDC BATTERY BACK–UP. INTERCONNECT ALL SMOKE DETECTORS SO THAT WHEN ONE DETECTOR GOES INTO ALARM MODE, THE SOUNDERS AND STROBE LIGHTS IN ALL SMOKE DETECTORS SHALL BE ACTIVATED. DETECTORS SHALL BE PROVIDED WITH FORM C CONTACT FOR (FUTURE) REMOTE ANNUNCIATION PURPOSES. CIRCUIT LP1–17.
6. EXISTING SANITARY SEWER PUMP TO BE REPLACED BY OWNER (CITY OF MILWAUKEE). PROVIDE NEW BRANCH CIRCUIT FROM NEW PANEL LP–1.
7. EXISTING EMERGENCY GENERATOR AND RELATED ACCESSORIES, EXHAUST PIPING, AND GAS PIPING TO BE REMOVED.
8. REMOVE AND REPLACE ALL EXISTING SERVICE LIGHTS LOCATED UNDER THE BRIDGE ALONG THE WEST AND EAST BRIDGE PIERS. NEW FIXTURES TO BE 4' 2–LAMP ENCLOSED AND GASKET FLUORESCENT FIXTURES, INDUSTRIAL TYPE WITH REINFORCED POLYESTER FIBERGLASS HOUSING. FIXTURES TO HAVE LOW TEMPERATURE ELECTRONIC BALLASTS (–20°F STARTING). FIXTURES TO BE CHAIN HUNG WITH BOTTOM OF FIXTURES EVEN WITH BOTTOM OF STRUCTURAL BEAMS. REFER TO SHEET BE5.
9. REMOVE AND REPLACE ALL EXISTING 120V SERVICE RECEPTACLES LOCATED ON THE PIERS. ALL NEW RECEPTACLES TO BE GFCI TYPE WITH WEATHER PROOF COVERS THAT ARE LISTED FOR WET LOCATIONS WHILE IN–USE. REFER TO SHEET BE5.
10. LIGHT SWITCH FOR PIER LIGHTS TO BE PILOT LIGHT TYPE (LIGHT ON WITH LOAD ON). LABEL SWITCH. "PIER LIGHTS"
11. CONNECT EBU TO ROOM LIGHT CIRCUIT, AHEAD OF ANY LOCAL SWITCHES.
12. POWER CONNECTION FOR HEAT TRACE CABLE ON SANITARY SEWER PIPE LOCATED ON BRIDGE. REFER TO SHEET BE7.

LEGEND

$	SWITCH
$3	THREE WAY WALL SWITCH
$D	DIMMER SWITCH
$P	SWITCH WITH PILOT LIGHT
	1X4 LIGHT FIXTURE
	WALL MOUNTED FIXTURE
	EMERGENCY BATTERY UNIT (EBU)
OS	CEILING MOUNT OCCUPANCY SENSOR
DS	CEILING MOUNT DAYLIGHT SENSOR
	DUPLEX RECEPTACLE
	DUPLEX RECEPTACLE MOUNTED AT 48" AFF
	DOUBLE DUPLEX RECEPTACLE
	SPECIAL PURPOSE OUTLET
	MOTOR
S	WINDOW SHADE MOTOR
J	JUNCTION BOX
S	FIRE ALARM SMOKE DETECTOR

ABBREVIATIONS

A	AMPERE
AC	ALTERNATING CURRENT
AFF	ABOVE FINISHED FLOOR
AMP	AMPERE
BKR	BREAKER
CB	CIRCUIT BREAKER
CFL	COMPACT FLUORESCENT LAMP
CKT	CIRCUIT
EBU	EMERGENCY BATTERY UNIT
EF	EXHAUST FAN
EMER	EMERGENCY
ENCL	ENCLOSURE OR ENCLOSED
EWH	ELECTRIC WATER HEATER
EXTR	EXTERIOR
FA	FIRE ALARM
FLA	FULL LOAD AMPERE
FURN	FURNACE
GC	GENERAL CONTRACTOR
GEN	GENERATOR
GFI/GFCI	GROUND FAULT CIRCUIT INTERRUPTER
HVAC	HEATING, VENTILATING & AIR CONDITIONING
IC	INSULATION CONTACT
KW	KILOWATT
LED	LIGHT EMITTING DIODE
LTG	LIGHTING
MCA	MINIMUM CIRCUIT AMPACITY
P	POLE OR PILOT LIGHT
PH	PHASE
PVC	POLYVINYL CHLORIDE (PLASTIC)
V	VOLT
W	WATT OR WIRE
WP	WEATHERPROOF

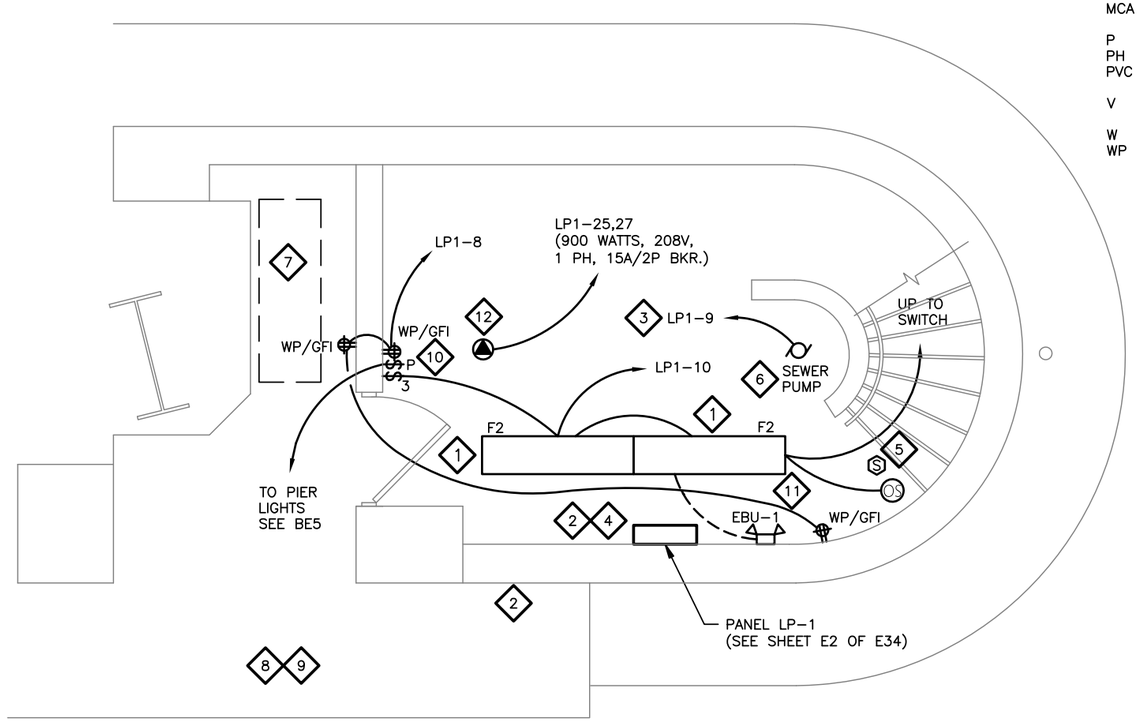

1 / BE1 EQUIPMENT ROOM (1ST) LEVEL ELECTRICAL PLAN ¼"=1'-0"

WISCONSIN
JOHN S. FRY
D-1013E
Menomonee Falls, WI
DESIGNER
2/11/2013

BE1 THRU BE7

City of Milwaukee

Department of Public Works

Infrastructure Services Division

IBC ENGINEERING SERVICES, INC.
N8 W22195 JOHNSON DR. SUITE 180
WAUKESHA, WISCONSIN 53186
262.549.1190 fx 262.549.1620

ST PAUL AVE. LIFT BRIDGE
OVER THE MILWAUKEE RIVER
EQUIPMENT ROOM (1ST)
LEVEL ELECTRICAL PLAN

REVISIONS

DESIGNED BY JSF	
DRAWN BY KEB	
CHECKED BY JSF	
DATE FEB 2013	SCALE 1/4" = 1'-0"
JOB NUMBER BR100-10-0106	
SHEET NUMBER BE1 OF BE7	
OF 198	

SHEET NOTES

1. PATCH AND PAINT ALL HOLES IN WALLS AND CEILINGS RESULTING FROM THE REMOVAL OF EXISTING ELECTRICAL EQUIPMENT AND SURFACE CONDUIT.
2. PROVIDE CODE REQUIRED WORKING SPACE IN FRONT OF ALL ELECTRICAL EQUIPMENT.
3. REMOVE AND REPLACE ALL BRANCH CIRCUIT WIRING, INCLUDING ALL SWITCHES AND RECEPTACLES. EXISTING CONDUIT CONCEALED IN WALLS AND CEILINGS THAT IS NOT REUSED SHALL BE CUT OFF FLUSH WITH SURFACE AND PATCHED.
4. ALL EXPOSED CONDUIT INSTALLED ON THE BRIDGE PIERS SHALL BE PVC COATED GALVANIZED RIGID STEEL. ALL JUNCTION BOXES SHALL BE NEMA 4X STAINLESS STEEL.
5. ALL EXTERIOR WEATHERPROOF RECEPTACLES SHALL HAVE COVERS THAT ARE LISTED FOR WET LOCATIONS WHILE IN-USE.

KEY NOTES

1. REMOVE AND REPLACE EXISTING LIGHTS WITH NEW 4' 2-LAMP ENCLOSED AND GASKETED FLUORESCENT FIXTURE. FIXTURE TO BE SURFACE MOUNTED. FIXTURES IN UTILITY ROOM TO BE INDUSTRIAL TYPE WITH FIBERGLASS HOUSING.
2. PROVIDE EXTERIOR LED WALL BRACKET FIXTURE. LOCATE FIXTURE ABOVE DOOR - CENTERED BETWEEN THE HORIZONTAL WALL REVEAL LINE AND THE DOOR OPENING.
3. PROVIDE APPROPRIATELY SIZED BRANCH CIRCUIT FROM NEW PANEL LP-1 TO ALL HVAC AND PLUMBING EQUIPMENT. REFER TO SHEETS BH2/BP2 AND HVAC/PLUMBING SPECIFICATIONS FOR ADDITIONAL INFORMATION.
4. PROVIDE 120V PHOTOELECTRIC SMOKE DETECTOR WITH INTEGRAL ALARM SOUNDER, FLASHING STROBE LIGHT, AND 9VDC BATTERY BACK-UP. INTERCONNECT ALL SMOKE DETECTORS SO THAT WHEN ONE DETECTOR GOES INTO ALARM MODE, THE SOUNDERS AND STROBE LIGHTS IN ALL SMOKE DETECTORS SHALL BE ACTIVATED. DETECTORS SHALL BE PROVIDED WITH FORM C CONTACT FOR (FUTURE) REMOTE ANNUNCIATION PURPOSES. CIRCUIT LPI-17.
5. CONNECT EBU TO ROOM LIGHT CIRCUIT, AHEAD OF ANY LOCAL SWITCHES.
6. CONNECT EXHAUST FAN TO LIGHT CIRCUIT SO THAT FAN IS ON WHEN BUILDING IS OCCUPIED AND ROOM LIGHT IS TURNED ON.
7. POWER CONNECTION FOR HEAT TRACE CABLE ON WATER SUPPLY PIPE LOCATED ON BRIDGE. REFER TO SHEET BE7.

LIGHTING SCHEDULE

FIXT.	DESCRIPTION	LAMPING			VOLT	MANUFACTURER	CATALOG NUMBER	MOUNTING	SEE NOTE
		NO.	TYPE	INPUT					
F2	4' ENCL. & GASKETED INDUSTRIAL	2	32W T8	64W	120V	METALUX	VT2 232 DR 120V EB81 WL SSL	SURFACE (BLDG.) / CHAIN (PIER)	1
F3	1X4 RECESSED IC RATED TROFFER	2	32W T8	64W	120V	METALUX	FC81C-232-A19/125-PAF	RECESSED / FLANGED	2
F4	EXTERIOR LED WALL MOUNT W/BATTERY	-	LED	26W	120V	COOPER LIGHTING - INVUE	ENC-B01-LED-E1-BL2-BZ-PC-CWB	WALL MOUNT ABOVE DOOR	3
F5	ENCL & GASKETED CFL WALL MOUNT	1	18W QUAD	18W	120V	FAIL-SAFE	QDDC-VE-18A-120V-LL-AP-SCD	WALL MOUNT ABOVE STAIRS	4
F6	ENCL & GASKETED LED WALL MOUNT	-	LED	13W	120V	HUBBELL / KILLARK	VSL1330W2SG	SURFACE WALL ABOVE STAIRS	5
F7	LED UPLIGHT (DIMMABLE)	-	LED	7W	120V	TRAXON	MB.CA.1127001	WINDOW SILL / LIGHT COVE	6
F8	CLASS I, DIV. 2 NEMA 4X CFL WALL MOUNT	3	13W PL	39W	120V	HUBBELL INDUSTRIAL	HLMB-F-39-1-GG-B2-HLMBAG	SURFACE WALL 8'-0" ABOVE PIT FLOOR	
EBU-1	6V, 12W EMERGENCY BATERY UNIT	2	6V, 9W MRI6	15W	120V	SURE-LITES	CC4-WH-MRT-SD	WALL 7'-6" AFF	

LIGHTING FIXTURE SCHEDULE GENERAL NOTES:

NOTE A. CONTRACTOR SHALL CONFIRM CEILING TYPE REQUIREMENTS PRIOR TO THE RELEASE OF THE ORDER.
NOTE B. CATALOG NUMBERS ARE TO PROVIDE GUIDANCE ONLY AND MAY NOT BE COMPLETE.
NOTE C. FIXTURES SPECIFIED TO MEET DESIGN INTENT. APPROVED EQUALS MAY BE SUBSTITUTED SUBJECT TO DESIGN TEAM'S ACCEPTANCE. REFER TO SPECIAL PROVISIONS ARTICLE 60, ITEM B.1.2 FOR LIST OF ADDITIONAL MANUFACTURERS DETERMINED TO BE EQUAL.
NOTE D. PROVIDE ALL PARTS AND PIECES NECESSARY FOR A COMPLETE AND FUNCTIONAL INSTALLATION.
NOTE E. ARCHITECT TO DETERMINE ALL FINISHES.

LIGHTING FIXTURE SCHEDULE KEY NOTES:

NOTE 1. FIXTURES LOCATED ON PIERS TO BE CHAIN HUNG. ALL MOUNTING HARDWARE, INCLUDING CHAINS, TO BE STAINLESS STEEL. ALL CHAIN HUNG FIXTURES TO BE CORD AND PLUG FEED.
NOTE 2. FIXTURES SHALL HAVE A GASKET IN-BETWEEN LENS AND DOOR TRIM, AND BETWEEN FLANGE TRIM AND CEILING. FIXTURE SHALL BE FURNISHED WITH DIMMING BALLAST.
NOTE 3. PROVIDE FIXTURE WITH INTEGRAL PHOTOCELL AND COLD WEATHER BATTERY PACK. ARCHITECT TO VERIFY FINISH.
NOTE 4. MOUNT FIXTURE VERTICALLY, CENTERED ON HALF-WALL ABOVE STAIRS TO CONTROL ROOM.
NOTE 5. REINSTALL NEW FIXTURE AT EXISTING FIXTURE LOCATION.
NOTE 6. INSTALL FIXTURE IN LIGHT COVE AT WINDOW SILL. SEE ARCHITECTURAL SILL SECTION DETAIL 2/A10.

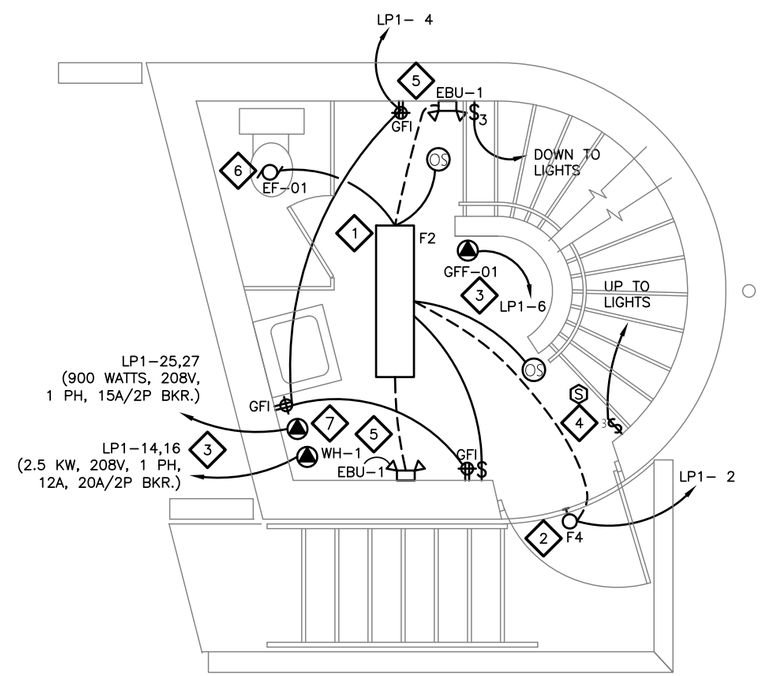

1 / BE2 ENTRY/STREET (2ND) LEVEL ELECTRICAL PLAN 1/4"=1'-0"

City of Milwaukee

Department of Public Works

Infrastructure Services Division

IBC ENGINEERING SERVICES, INC.
N8 W22195 JOHNSON DR. SUITE 180
WAUKESHA, WISCONSIN 53186
262.549.1190 fx 262.549.1620

ST PAUL AVE. LIFT BRIDGE OVER THE MILWAUKEE RIVER
ENTRY / STREET (2ND) LEVEL ELECTRICAL PLAN

REVISIONS

DESIGNED BY JSF	
DRAWN BY KEB	
CHECKED BY JSF	
DATE FEB 2013	SCALE 1/4" = 1'-0"
JOB NUMBER BR100-10-0106	
SHEET NUMBER BE2 OF BE7	

SHEET NOTES

1. PATCH AND PAINT ALL HOLES IN WALLS AND CEILINGS RESULTING FROM THE REMOVAL OF EXISTING ELECTRICAL EQUIPMENT AND SURFACE CONDUIT.
2. PROVIDE CODE REQUIRED WORKING SPACE IN FRONT OF ALL ELECTRICAL EQUIPMENT.
3. REMOVE AND REPLACE ALL BRANCH CIRCUIT WIRING, INCLUDING ALL SWITCHES AND RECEPTACLES. EXISTING CONDUIT CONCEALED IN WALLS AND CEILINGS THAT IS NOT REUSED SHALL BE CUT OFF FLUSH WITH SURFACE AND PATCHED.
4. ALL CONDUIT INSTALLED IN THE CONTROL ROOM SHALL BE CONCEALED IN THE GYP BOARD WALLS AND CEILING. PATCH AND REPAINT GYP BOARD AS REQUIRED.

KEY NOTES

1. FIXTURE SHALL BE GASKETTED BETWEEN TRIM AND CEILING.
2. ENCLOSED AND GASKETED WALL MOUNTED FIXTURE WITH CFL LAMP. MOUNT TO HALF–WALL ABOVE STAIRS.
3. PROVIDE 120V PHOTOELECTRIC SMOKE DETECTOR WITH INTEGRAL ALARM SOUNDER, FLASHING STROBE LIGHT, AND 9VDC BATTERY BACK–UP. INTERCONNECT ALL SMOKE DETECTORS SO THAT WHEN ONE DETECTOR GOES INTO ALARM MODE, THE SOUNDERS AND STROBE LIGHTS IN ALL SMOKE DETECTORS SHALL BE ACTIVATED. DETECTORS SHALL BE PROVIDED WITH FORM C CONTACT FOR (FUTURE) REMOTE ANNUNCIATION PURPOSES. CIRCUIT LPI–17.
4. REFER TO BRIDGE ELECTRICAL SHEETS FOR ELECTRICAL EQUIPMENT ASSOCIATED WITH MAIN ELECTRICAL SERVICE, BRIDGE POWER, REMOTE CONTROL, MONITORING, CCTV, INTERCOM, PA SYSTEM, RADIO COMMUNICATIONS, TELEPHONE, SECURITY, TRAFFIC CONTROL, BRIDGE LIGHTING, NAVIGATION LIGHTING, OPERATOR'S CONTROL CONSOLE, WIREWAY BETWEEN CONTROL PANEL AND OPERATOR'S CONSOLE AND FROM CONTROL PANEL OUT TO BRIDGE STRUCTURE, ETC.
5. CONNECT EBU TO ROOM LIGHT CIRCUIT, AHEAD OF ANY LOCAL SWITCHES.
6. TYPE F7 LED UPLIGHTS TO BE AIMED TOWARD CENTER OF CEILING.
7. CONNECT WINDOW SHADE MOTORS TO MOTOR CONTROLLERS IN GROUPS:
   - EAST–SOUTH–WEST CURVED SEGMENT (HALF CIRCLE).
   - EAST SEGMENT.
   - WEST SEGMENT.
   - NORTH SEGMENT.

   PROVIDE (4) WALL–MOUNTED CONTROL SWITCHES, ONE FOR FOR EACH GROUP OF SHADE MOTOR CONTROLLERS. LABEL SWITCHES "SOUTH SHADES", "EAST SHADES", "WEST SHADES" AND "NORTH SHADES".

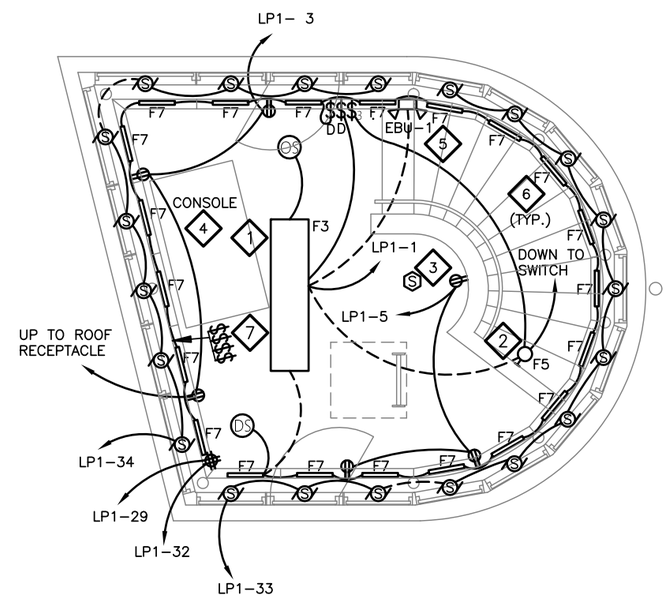

1 / BE3 CONTROL ROOM (3RD) LEVEL ELECTRICAL PLAN ¼"=1'-0"

City of Milwaukee

Department of Public Works

Infrastructure Services Division

IBC ENGINEERING SERVICES, INC.

N8 W22195 JOHNSON DR. SUITE 180
WAUKESHA, WISCONSIN 53186
262.549.1190 fx 262.549.1620

ST PAUL AVE. LIFT BRIDGE
OVER THE MILWAUKEE RIVER
CONTROL ROOM (3RD)
LEVEL ELECTRICAL PLAN

REVISIONS

DESIGNED BY JSF	
DRAWN BY KEB	
CHECKED BY JSF	
DATE FEB 2013	SCALE 1/4" = 1'-0"
JOB NUMBER BR100-10-0106	
SHEET NUMBER BE3 OF BE7	

OF 198

SHEET NOTES

1. PATCH AND PAINT ALL HOLES IN WALLS AND CEILINGS RESULTING FROM THE REMOVAL OF EXISTING ELECTRICAL EQUIPMENT AND SURFACE CONDUIT.
2. PROVIDE CODE REQUIRED WORKING SPACE IN FRONT OF ALL ELECTRICAL EQUIPMENT.
3. ALL EXPOSED CONDUIT INSTALLED ON THE ROOF SHALL BE PVC COATED GALVANIZED RIGID STEEL. ALL JUNCTION BOXES SHALL BE NEMA 4X STAINLESS STEEL.
4. ALL EXTERIOR WEATHERPROOF RECEPTACLES SHALL HAVE COVERS THAT ARE LISTED FOR WET LOCATIONS WHILE IN-USE.

KEY NOTES

1 PROVIDE APPROPRIATELY SIZED BRANCH CIRCUIT FROM NEW PANEL TO ALL HVAC AND PLUMBING EQUIPMENT. REFER TO SHEET BH4/BP4 AND HVAC/PLUMBING SPECIFICATIONS FOR ADDITIONAL INFORMATION.

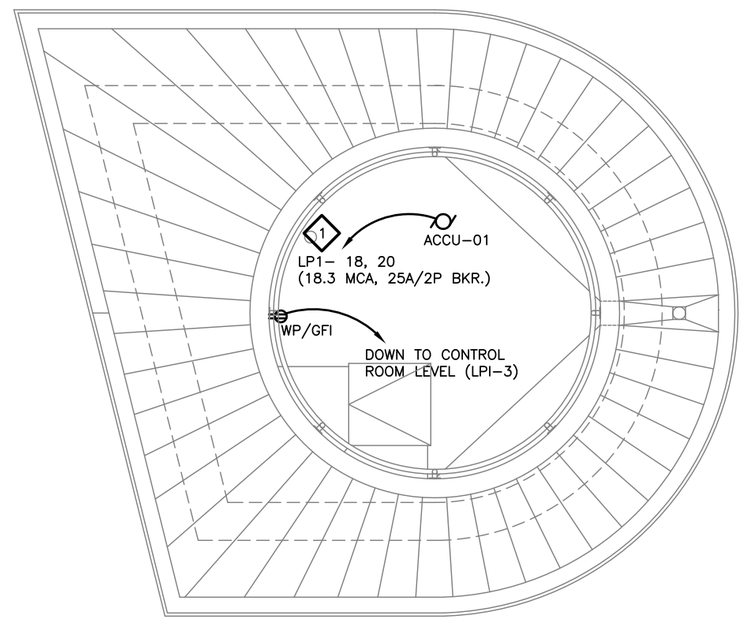

1 / BE4 ROOF ELECTRICAL PLAN ¼"=1'-0"

City of Milwaukee

Department of Public Works

Infrastructure Services Division

IBC ENGINEERING SERVICES, INC.

N8 W22195 JOHNSON DR. SUITE 180
WAUKESHA, WISCONSIN 53186
262.549.1190 fx 262.549.1620

ST PAUL AVE. LIFT BRIDGE
OVER THE MILWAUKEE RIVER
ROOF ELECTRICAL PLAN

REVISIONS

DESIGNED BY JSF	
DRAWN BY KEB	
CHECKED BY JSF	
DATE FEB 2013	SCALE 1/4" = 1'-0"
JOB NUMBER BR100-10-0106	
SHEET NUMBER BE4 OF BE7	
OF 198	

SHEET NOTES

1. PROVIDE CODE REQUIRED WORKING SPACE IN FRONT OF ALL ELECTRICAL EQUIPMENT.
2. ALL EXPOSED CONDUIT INSTALLED ON THE BRIDGE PIERS SHALL BE PVC COATED GALVANIZED RIGID STEEL. ALL JUNCTION BOXES SHALL BE NEMA 4X STAINLESS STEEL.
3. ALL EXTERIOR WEATHERPROOF RECEPTACLES SHALL HAVE COVERS THAT ARE LISTED FOR WET LOCATIONS WHILE IN–USE.

KEY NOTES

1. PROVIDE EXTERIOR WALL BRACKET FIXTURE. LOCATE FIXTURE 5'–6" ABOVE STAIR TREAD. PROVIDE WEATHERPROOF LIGHT SWITCH NEAR THE GATE IN RAILING AT SIDEWALK ABOVE.
2. REMOVE AND REPLACE ALL BRANCH CIRCUIT WIRING, INCLUDING ALL SWITCHES AND RECEPTACLES. EXISTING CONDUIT CONCEALED IN WALLS AND CEILINGS THAT IS NOT REUSED SHALL BE CUT OFF FLUSH WITH SURFACE AND PATCHED.
3. EXISTING EMERGENCY GENERATOR AND RELATED ACCESSORIES, EXHAUST PIPING, AND GAS PIPING TO BE REMOVED.
4. REFER TO BRIDGE ELECTRICAL SHEETS FOR ELECTRICAL EQUIPMENT ASSOCIATED WITH MAIN ELECTRICAL SERVICE, BRIDGE POWER, REMOTE CONTROL, MONITORING CCTV, INTERCOM, PA SYSTEM, RADIO COMMUNICATION, TELEPHONE, SECURITY, TRAFFIC CONTROL, BRIDGE LIGHTING, NAVIGATION LIGHTING, OPERATOR'S CONTROL CONSOLE, WIREWAY BETWEEN CONTROL PANEL AND OPERATOR'S CONSOLE AND FROM CONTROL PANEL OUT TO BRIDGE STRUCTURE, ETC.
5. REMOVE AND REPLACE ALL EXISTING SERVICE LIGHTS LOCATED UNDER THE BRIDGE DECK ALONG THE WEST AND EAST BRIDGE PIERS. NEW FIXTURES TO BE 4' 2–LAMP ENCLOSED AND GASKETED FLUORESCENT FIXTURES, INDUSTRIAL TYPE WITH REINFORCED POLYESTER FIBERGLASS HOUSING. FIXTURES TO HAVE LOW TEMPERATURE ELECTRONIC BALLASTS (–20 °F STARTING). FIXTURES TO BE CHAIN HUNG WITH BOTTOM OF FIXTURE EVEN WITH BOTTOM OF STRUCTURAL BEAMS. ALL CHAIN HUNG FIXTURES TO BE CORD AND PLUG FEED.
6. REMOVE AND REPLACE ALL EXISTING 120V SERVICE RECEPTACLES LOCATED ON THE PIERS. ALL NEW RECEPTACLES TO BE GFCI TYPE WITH WEATHER PROOF COVERS THAT ARE LISTED FOR WET LOCATIONS WHILE IN–USE.
7. PANEL LP–2 (SEE SHEET E5 OF E34).
8. EXISTING CONTROL CABINET FOR MMSD'S WQ/RL SENSING EQUIPMENT TO BE REMOVED. DISCONNECT AND REMOVE ALL EXISTING BRANCH CIRCUIT CONDUIT AND WIRING. PROVIDE NEW CIRCUIT FROM PANEL LP–2 (CIRCUIT LP2–12) TO NEW MMSD PANEL LOCATION AT NORTH SIDE OF BRIDGE PIER.
9. EXISTING FLOODLIGHTS MOUNTED TO LOWER FLANGE OF BRIDGE DECK SUPPORT BEAM. REMOVE FIXTURES AND EXISTING CONDUIT AND WIRING FROM MMSD'S CONTROL CABINET. REINSTALL FIXTURES AFTER REPAIRS AND PAINTING OF BRIDGE IS COMPLETED, AND PROVIDE NEW CONDUIT AND WIRING AND RECONNECT TO NEW MMSD CONTROL CABINET RELOCATED TO NORTH END OF EAST PIER.

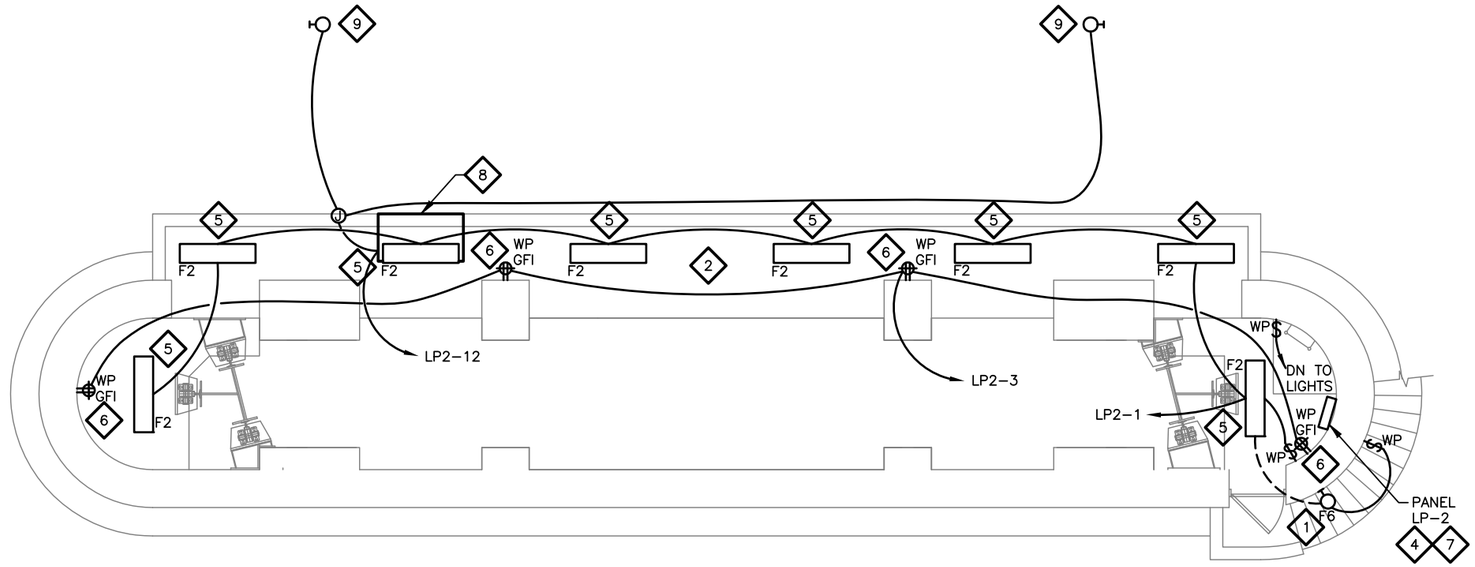

1 / BE5 EAST PIER ELECTRICAL PLAN 1/8"=1'-0"

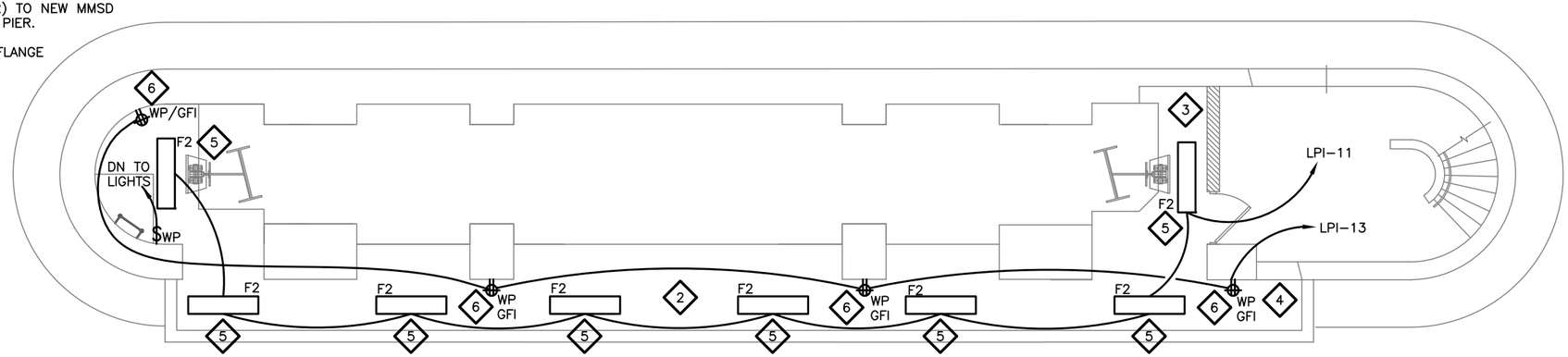

2 / BE5 WEST PIER ELECTRICAL PLAN 1/8"=1'-0"

City of Milwaukee

Department of Public Works

Infrastructure Services Division

IBC ENGINEERING SERVICES, INC.

N8 W22195 JOHNSON DR. SUITE 180
WAUKESHA, WISCONSIN 53186
262.549.1190 fx 262.549.1620

ST PAUL AVE. LIFT BRIDGE
OVER THE MILWAUKEE RIVER
PIER ELECTRICAL PLANS

REVISIONS

DESIGNED BY JSF	
DRAWN BY KEB	
CHECKED BY JSF	
DATE FEB 2013	SCALE 1/8" = 1'-0"
JOB NUMBER BR100-10-0106	
SHEET NUMBER BE5 OF BE7	

OF 198

SHEET NOTES

1. PROVIDE CODE REQUIRED WORKING SPACE IN FRONT OF ALL ELECTRICAL EQUIPMENT.
2. ALL EXPOSED CONDUIT INSTALLED ON THE PIERS SHALL BE PVC COATED GALVANIZED RIGID STEEL. ALL JUNCTION BOXES SHALL BE NEMA 4X STAINLESS STEEL.
3. ALL EXTERIOR WEATHERPROOF RECEPTACLES SHALL HAVE COVERS THAT ARE LISTED FOR WET LOCATIONS WHILE IN–USE.

KEY NOTES

1. REMOVE AND REPLACE ALL EXISTING SERVICE LIGHTS LOCATED IN THE WEST AND EAST BRIDGE PIER PITS. PROVIDE NEW TYPE F8 EXTERIOR WALL BRACKET FIXTURES. LOCATE FIXTURES 8'–0" ABOVE PIT FLOOR. PROVIDE LIGHT SWITCH ABOVE AT FLOOR OPENING TO PIT.
2. REMOVE AND REPLACE ALL BRANCH CIRCUIT WIRING, INCLUDING ALL SWITCHES AND RECEPTACLES. EXISTING CONDUIT CONCEALED IN WALLS AND CEILINGS THAT IS NOT REUSED SHALL BE CUT OFF FLUSH WITH SURFACE AND PATCHED.
3. REMOVE AND REPLACE ALL EXISTING 120V SERVICE RECEPTACLES LOCATED IN THE PIER PITS. ALL NEW RECEPTACLES TO BE GFCI TYPE WITH WEATHER PROOF COVERS THAT ARE LISTED FOR WET LOCATIONS WHILE IN–USE. LOCATE RECEPTACLES 48" ABOVE PIT FLOOR.

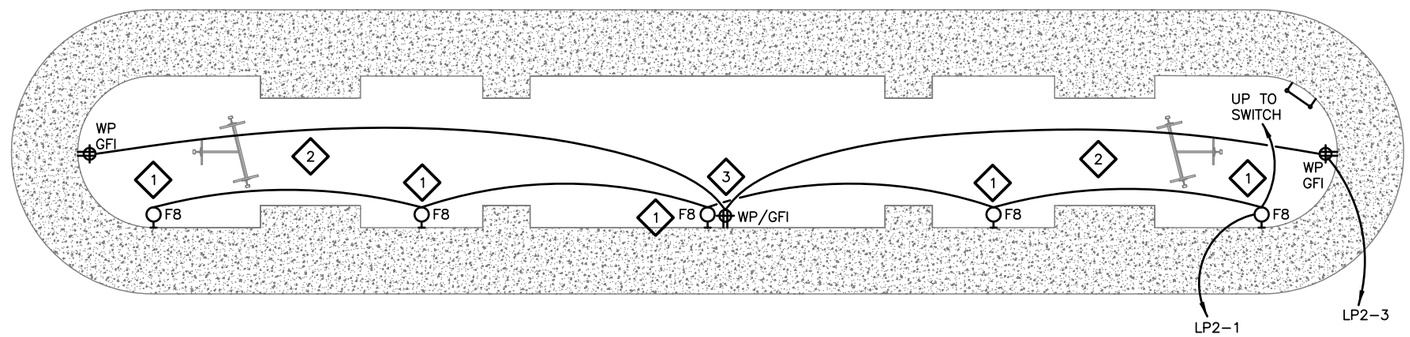

1 / BE6 EAST PIER PIT ELECTRICAL PLAN 1/8"=1'-0"

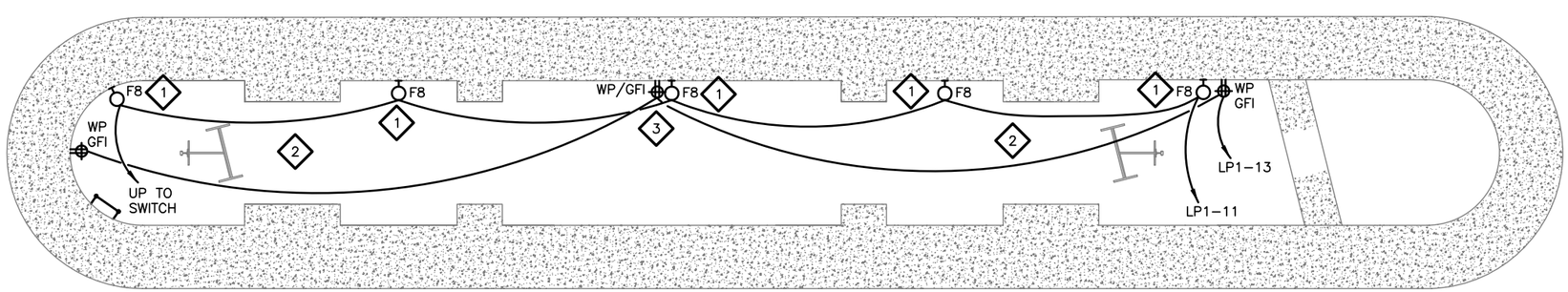

2 / BE6 WEST PIER PIT ELECTRICAL PLAN 1/8"=1'-0"

City of Milwaukee

Department of Public Works

Infrastructure Services Division

IBC ENGINEERING SERVICES, INC.

N8 W22195 JOHNSON DR. SUITE 180
WAUKESHA, WISCONSIN 53186
262.549.1190 fx 262.549.1620

ST PAUL AVE. LIFT BRIDGE
OVER THE MILWAUKEE RIVER
PIER PIT ELECTRICAL PLANS

REVISIONS

DESIGNED BY JSF	
DRAWN BY KEB	
CHECKED BY JSF	
DATE FEB 2013	SCALE 1/8" = 1'-0"
JOB NUMBER BR100-10-0106	
SHEET NUMBER BE6 OF BE7	

SHEET NOTES

1. ALL EXPOSED CONDUIT INSTALLED ON THE BRIDGE SHALL BE PVC COATED GALVANIZED RIGID STEEL. ALL JUNCTION BOXES SHALL BE NEMA 4X STAINLESS STEEL.

KEY NOTES

1. EXISTING TELEPHONE TERMINAL PEDESTAL.
2. EXISTING TELEPHONE SERVICE CONDUIT TO BRIDGE HOUSE TO BE REMOVED TO FACILITATE BRIDGE REPAIRS AND PAINTING. REPLACE WITH NEW 2" PVC COATED GALVANIZED RIGID STEEL CONDUIT. CLAMP CONDUIT TO STEEL SUPPORT GIRDERS. TELEPHONE SERVICE CABLE TO BE REPLACED BY AT&T.
3. EXISTING HEAT TRACE CABLE ON WATER SUPPLY AND SANITARY SEWER PIPES TO BRIDGE HOUSE TO BE REMOVED AND REPLACED WITH NEW. PROVIDE PARALLEL HEAT TRACE CABLES ON EACH PIPE – ONE ACTIVE AND ONE SPARE. CONNECT ACTIVE CABLE TO THERMOSTAT AND POWER CONNECTION JUNCTION BOX LOCATED IN BRIDGE HOUSE EQUIPMENT ROOM. COIL THE ENDS OF THE SPARE CABLES ADJACENT TO THE RESPECTIVE POWER CONNECTIONS. REINSULATION OF PIPES TO BE PROVIDED BY OTHERS.
4. EXISTING RIVERWALK LIGHT FIXTURE MOUNTED TO UNDERSIDE OF BRIDGE DECK TO BE REMOVED AND TEMPORARILY STORED DURING BRIDGE REPAIRS. REINSTALL FIXTURE AND RECONNECT TO RIVERWALK LIGHT CIRCUIT.
5. EXISTING CONDUIT AND BRANCH CIRCUIT WIRING FOR RIVERWALK LIGHTS TO BE REMOVED TO FACILITATE BRIDGE REPAIRS. REMOVE CONDUIT AND WIRING BACK TO NORTH SIDE OF CONCRETE BASE SUPPORT FOR BRIDGE STRUCTURE. PROVIDE A NEMA 4X STAINLESS STEEL JUNCTION BOX TO INTERCEPT THE EXISTING RIVERWALK LIGHT CIRCUIT, AND EXTEND CIRCUIT TO REINSTALLED LIGHT FIXTURES WITH PVC COATED GALVANIZED RIGID STEEL CONDUIT. PAINT CONDUIT THE SAME COLOR AS THE CONCRETE STAIN.

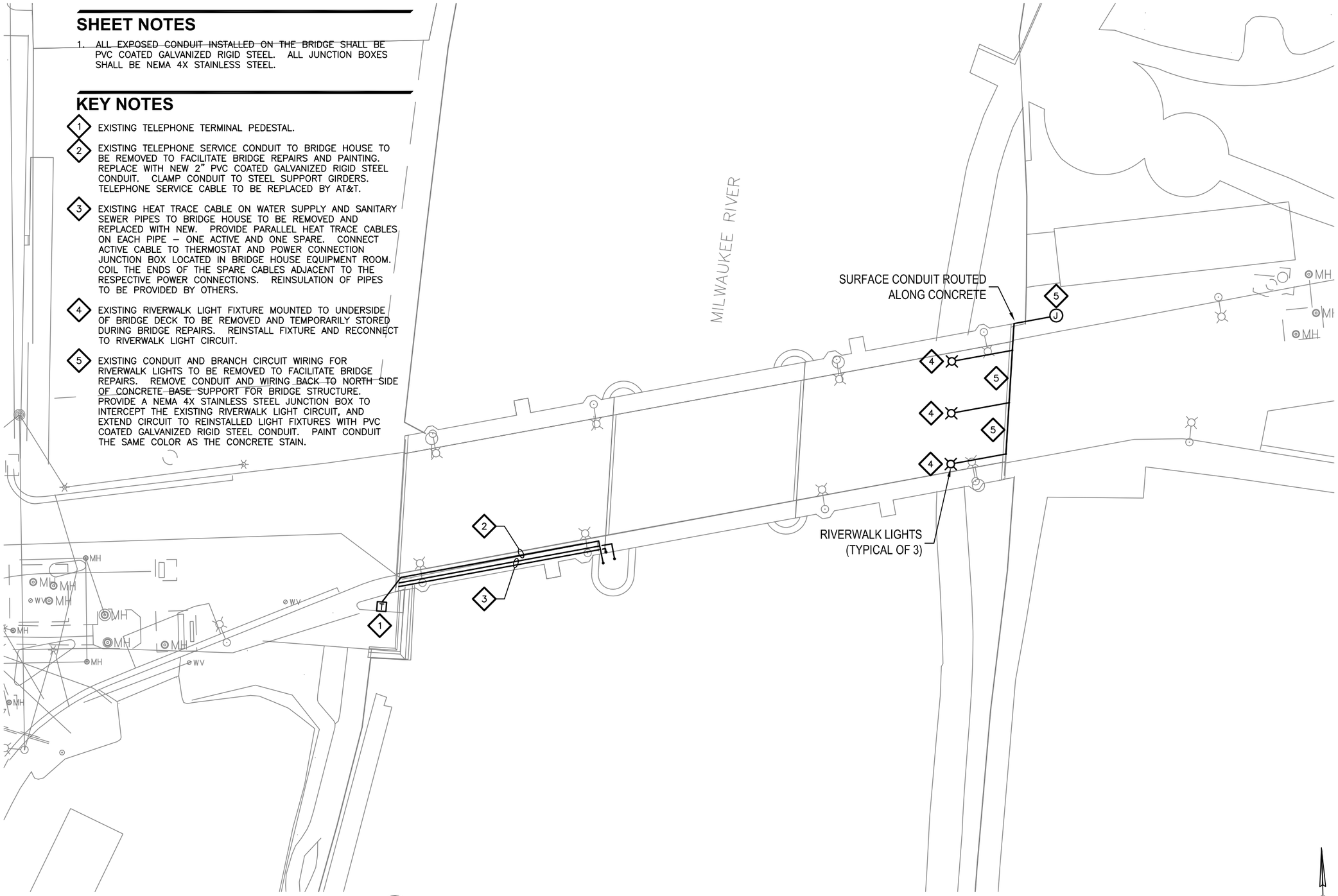

1 / BE7 BRIDGE ELECTRICAL PLAN 1"=40'-0"

City of Milwaukee

Department of Public Works

Infrastructure Services Division

IBC ENGINEERING SERVICES, INC.

N8 W22195 JOHNSON DR. SUITE 180
WAUKESHA, WISCONSIN 53186
262.549.1190 fx 262.549.1620

ST PAUL AVE. LIFT BRIDGE OVER THE MILWAUKEE RIVER BRIDGE ELECTRICAL PLAN

REVISIONS

DESIGNED BY JSF	
DRAWN BY KEB	
CHECKED BY JSF	
DATE FEB 2013	SCALE 1" = 40'-0"
JOB NUMBER BR100-10-0106	
SHEET NUMBER BE7 OF BE7	
OF 198	

DEMOLITION NOTES

1. REMOVE THE EXISTING 3/4"CW PIPING ALONG WITH THE EXISTING WATER METER AS SHOWN. SAVE WATER METER FOR REINSTALLATION.
2. ALL EXISTING EXTERIOR WATER SERVICE PIPING TO BE REMOVED AND SAVED FOR REINSTALLATION WHEN BRIDGE WORK IS COMPLETED. ALL EXISTING PIPING INSULATION AND ELECTRIC HEAT TRACING TO BE REPLACED WITH NEW. SEE SHEET S33. COORDINATE ALL WORK WITH GENERAL CONTRACTOR.

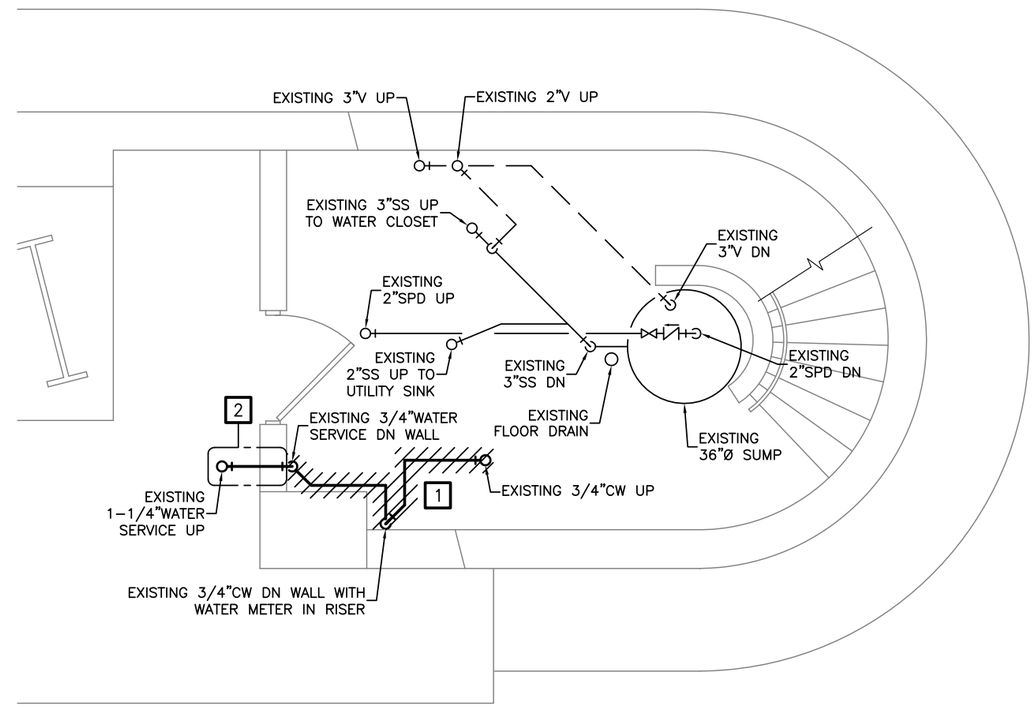

1 / BP1 EQUIPMENT ROOM (1ST) LEVEL PLUMBING DEMOLITION PLAN ¼"=1'-0"

WISCONSIN
MIKE R. ROLLER
E-24969
HARTLAND, WI
PROFESSIONAL ENGINEER
12/11/2013

BP1 THRU BP5

City of Milwaukee

Department of Public Works

Infrastructure Services Division

IBC ENGINEERING SERVICES, INC.
N8 W22195 JOHNSON DR. SUITE 180
WAUKESHA, WISCONSIN 53186
262.549.1190 fx 262.549.1620

ST PAUL AVE. LIFT BRIDGE
OVER THE MILWAUKEE RIVER
EQUIPMENT ROOM (1ST)
LEVEL PLUMBING PLAN

REVISIONS

DESIGNED BY MRB	
DRAWN BY MRB	
CHECKED BY MRR	
DATE FEB 2013	SCALE 1/4" = 1'-0"
JOB NUMBER BR100-10-0106	
SHEET NUMBER BP1 OF BP5	

DEMOLITION NOTES

1. REMOVE THE EXISTING 2.5 GALLON ELECTRIC WATER HEATER ALONG WITH ALL ASSOCIATED WIRING. REMOVE ALL ASSOCIATED HOT WATER AND COLD WATER PIPING AS SHOWN.
2. REMOVE EXISTING UTILITY SINK FAUCET ALONG WITH ALL ASSOCIATED PIPING. FAUCET TO BE REPLACED WITH NEW.
3. EXISTING 2"SPD, EXISTING 4"SS & EXISTING 1–1/4"WATER SERVICE PIPING TO BE REMOVED AND SAVED FOR REINSTALLATION WHEN BRIDGE WORK IS COMPLETED. ALL EXISTING PIPING INSULATION AND ELECTRIC HEAT TRACING TO BE REPLACED WITH NEW. COORDINATE ALL WORK WITH GENERAL CONTRACTOR.

KEY NOTES

1. MOUNT NEW WATER HEATER (WH–1) ON WALL. SEE ELECTRIC WATER HEATER DETAIL ON SHEET BP5. FIELD VERIFY EXACT LOCATION.
2. INSTALL NEW UTILITY SINK FAUCET ON EXISTING UTILITY SINK. CONNECT PIPING FROM BELOW AS REQUIRED.
3. EXISTING 2"SPD, EXISTING 4"SS & EXISTING 1–1/4" WATER SERVICE PIPING TO BE REINSTALLED UPON COMPLETION OF BRIDGE WORK. MAINTAIN ALL CLEANOUTS AND PROPER PITCH OF 4"SS PIPING AS REQUIRED. ALL EXTERIOR PIPING TO BE PROVIDED WITH NEW ELECTRIC HEAT TRACING AND NEW INSULATION WITH PROTECTIVE JACKET. COORDINATE ALL WORK WITH GENERAL CONTRACTOR.
4. RECONNECT 2"SPD TO EXISTING 2"SPD. FIELD VERIFY EXACT SIZE AND LOCATION. FLASH AND SEAL ROOF PENETRATION WATER TIGHT.
5. CONNECT EXISTING 3/4"CW LINE THAT SERVES THE EXISTING WATER CLOSET TO THE NEW 3/4"CW LINE UNDER THE EXISTING UTILITY SINK. FIELD VERIFY EXACT SIZE AND LOCATION.
6. PROVIDE AND INSTALL NEW HUB DRAIN FOR WATER HEATER P/T RELIEF VALVE DISCHARGE. CONNECT NEW HUB DRAIN TO EXISTING 2"SS. FIELD VERIFY EXACT SIZE AND LOCATION. FILL HUB DRAIN P–TRAP WITH MINERAL OIL. SEE PARTIAL SANITARY & VENT ISOMETRIC ON SHEET BP5 FOR MORE DETAIL.
7. CORE DRILL NEW WALL OPENING IN EXISTING CONCRETE WALL FOR THE INSTALLATION OF THE NEW 1–1/4" WATER SERVICE PIPING AS REQUIRED. SEAL WATER TIGHT. REINSTALL EXISTING WATER METER BELOW WATER HEATER PER THE CITY OF MILWAUKEE REQUIREMENTS. FIELD VERIFY EXACT LOCATION. SEE DOMESTIC WATER ISOMETRIC ON SHEET BP5.

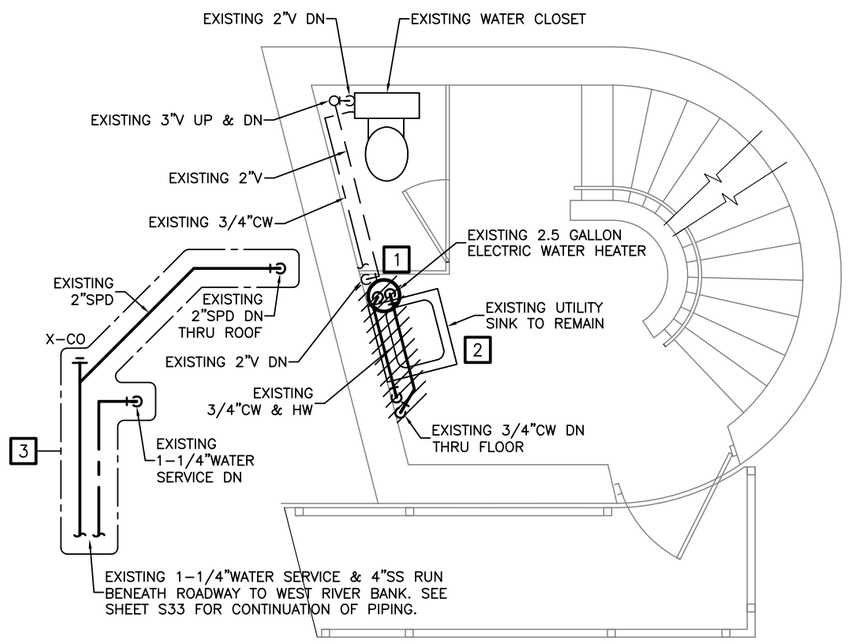

1 / BP2 ENTRY/STREET (2ND) LEVEL PLUMBING DEMOLITION PLAN ¼"=1'-0"

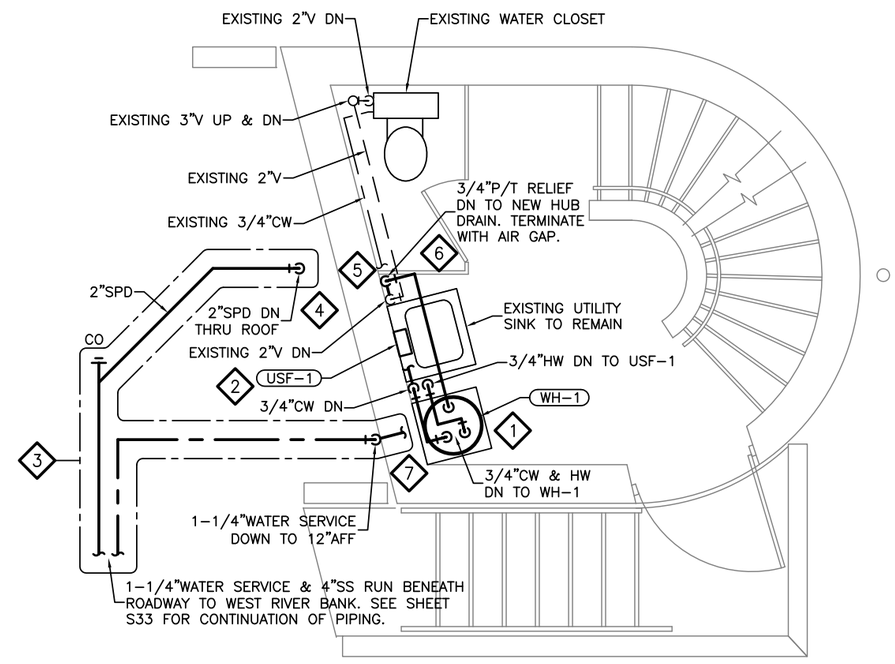

2 / BP2 ENTRY/STREET (2ND) LEVEL PLUMBING PLAN ¼"=1'-0"

City of Milwaukee

Department of Public Works

Infrastructure Services Division

IBC ENGINEERING SERVICES, INC.

N8 W22195 JOHNSON DR. SUITE 180
WAUKESHA, WISCONSIN 53186
262.549.1190 fx 262.549.1620

ST PAUL AVE. LIFT BRIDGE
OVER THE MILWAUKEE RIVER
ENTRY / STREET (2ND)
LEVEL PLUMBING PLANS

REVISIONS

DESIGNED BY MRB	
DRAWN BY MRB	
CHECKED BY MRR	
DATE FEB 2013	SCALE 1/4" = 1'-0"
JOB NUMBER BR100-10-0106	
SHEET NUMBER BP2 OF BP5	

DEMOLITION NOTES

1 REMOVE THE EXISTING 3"V PIPING DOWN TO THE CONTROL ROOM FLOOR LEVEL.

KEY NOTES

1 CONNECT NEW 3"V PIPING TO EXISTING AT CONTROL ROOM FLOOR LEVEL. EXTEND NEW 3"V PIPING UP ALONG STEEL COLUMN TO ABOVE CEILING INTO JOIST SPACE.

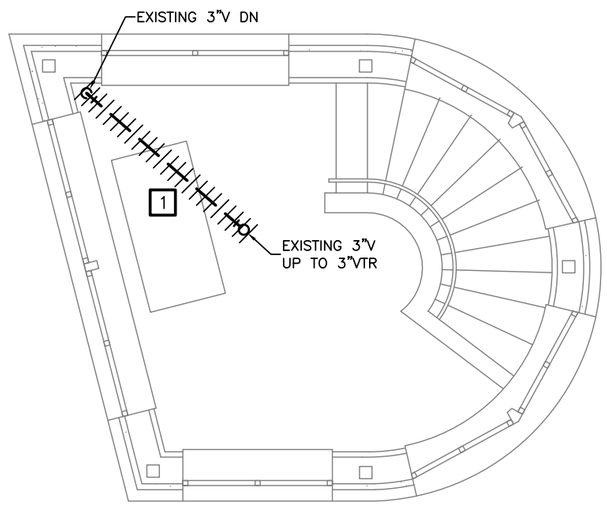

1 / BP3 CONTROL ROOM (3RD) LEVEL PLUMBING DEMOLITION PLAN ¼"=1'-0"

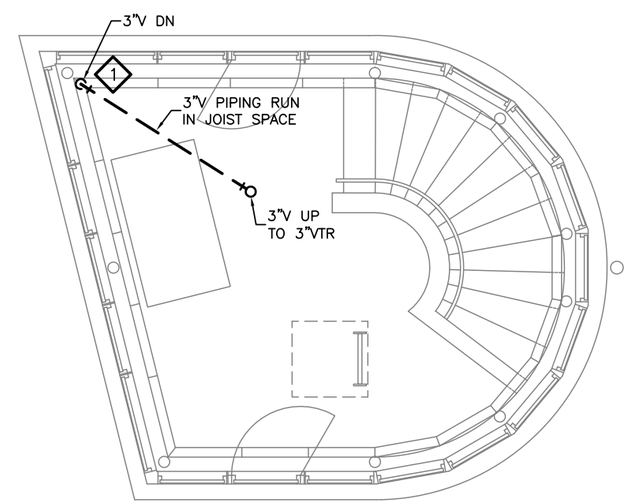

2 / BP3 CONTROL ROOM (3RD) LEVEL PLUMBING PLAN ¼"=1'-0"

City of Milwaukee

Department of Public Works

Infrastructure Services Division

IBC ENGINEERING SERVICES, INC.

N8 W22195 JOHNSON DR. SUITE 180
WAUKESHA, WISCONSIN 53186
262.549.1190 fx 262.549.1620

ST PAUL AVE. LIFT BRIDGE
OVER THE MILWAUKEE RIVER
CONTROL ROOM (3RD)
LEVEL PLUMBING PLANS

REVISIONS

DESIGNED BY MRB	
DRAWN BY MRB	
CHECKED BY MRR	
DATE FEB 2013	SCALE 1/4" = 1'-0"
JOB NUMBER BR100-10-0106	
SHEET NUMBER BP3 OF BP5	
OF 198	

DEMOLITION NOTES

1 REMOVE THE EXISTING 3"VTR.

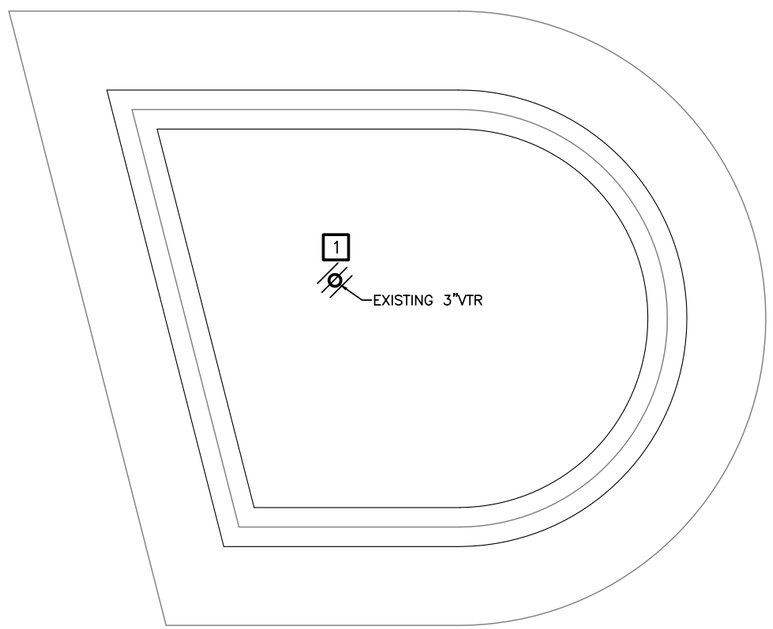

1 / BP4 ROOF PLUMBING DEMOLITION PLAN ¼"=1'-0"

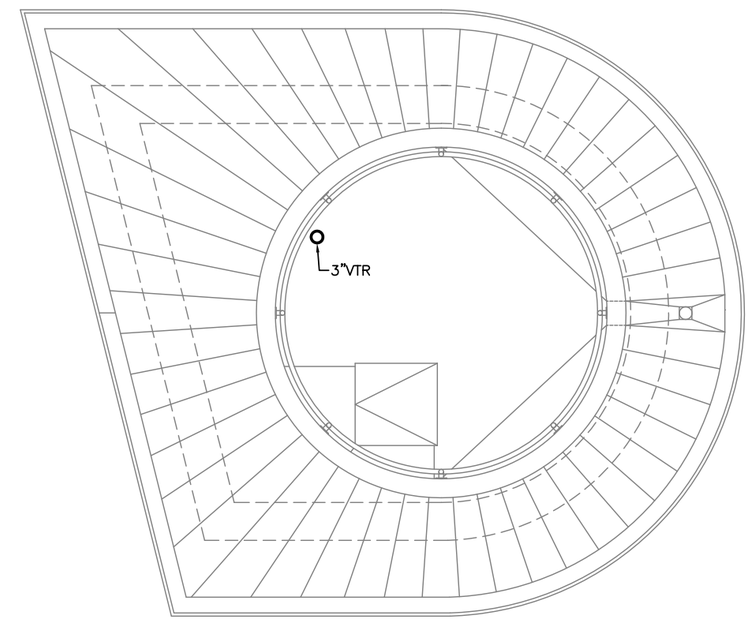

2 / BP4 ROOF PLUMBING PLAN ¼"=1'-0"

City of Milwaukee

Department of Public Works

Infrastructure Services Division

IBC ENGINEERING SERVICES, INC.
N8 W22195 JOHNSON DR. SUITE 180
WAUKESHA, WISCONSIN 53186
262.549.1190 fx 262.549.1620

ST PAUL AVE. LIFT BRIDGE
OVER THE MILWAUKEE RIVER
ROOF PLUMBING PLANS

REVISIONS

DESIGNED BY MRB	
DRAWN BY MRB	
CHECKED BY MRR	
DATE FEB 2013	SCALE 1/4" = 1'-0"
JOB NUMBER BR100-10-0106	
SHEET NUMBER BP4 OF BP5	

PLUMBING FIXTURES

MARK	MANUFACTURER	MODEL	DESCRIPTION
USF–1	CHICAGO FAUCETS	305–VBCP	UTILITY SINK FAUCET, SOLID BRASS CONSTRUCTION, WALL MOUNTED 3–3/8" BODY, ADJUSTABLE ARMS 3"–8–3/8", RIGID ATMOSPHERIC VACUUM BREAKER SPOUT WITH PAIL HOOK AND 3/4" MALE HOSE THREAD OUTLET, METAL LEVER HANDLES AND POLISHED CHROME PLATED FINISH. PROVIDE WATTS 8B VACUUM BREAKER ON FAUCET.
WH–1	A.O. SMITH	DEL–10	ELECTRIC WATER HEATER WITH 10 GALLON GLASS–LINED STORAGE TANK, A SINGLE 2500 WATT, 208V, SINGLE PHASE HEATING ELEMENT CONTROLLED BY AN INTEGRALLY MOUNTED THERMOSTAT WITH HIGH TEMPERATURE CUTOFF SWITCH, TEMPERATURE/PRESSURE RELIEF VALVE AND DRAIN VALVE.

NOTE: THE MANUFACTURERS LISTED ABOVE ARE SELECTED AS THE "BASIS OF DESIGN". OTHER ACCEPTABLE MANUFACTURERS ARE LISTED IN THE SPECIFICATIONS.

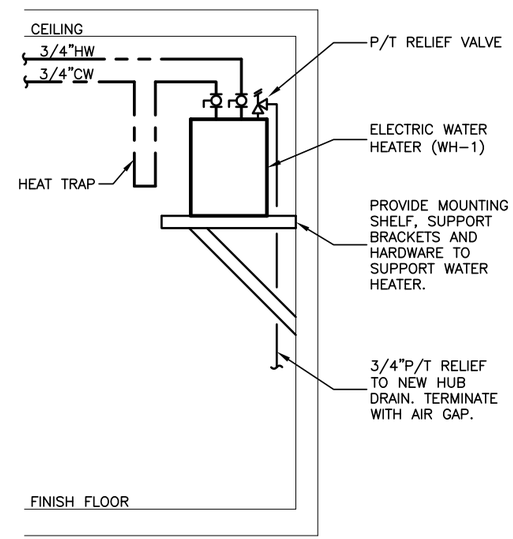

1 BP5 ELECTRIC WATER HEATER DETAIL

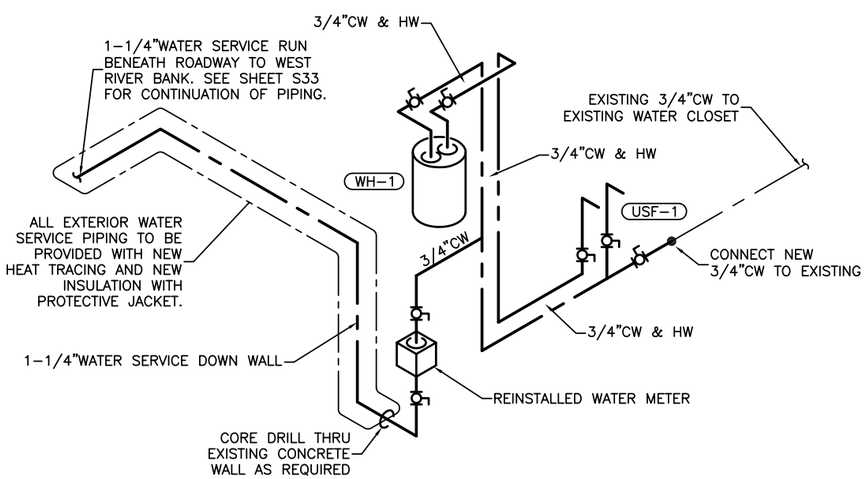

2 BP5 DOMESTIC WATER ISOMETRIC

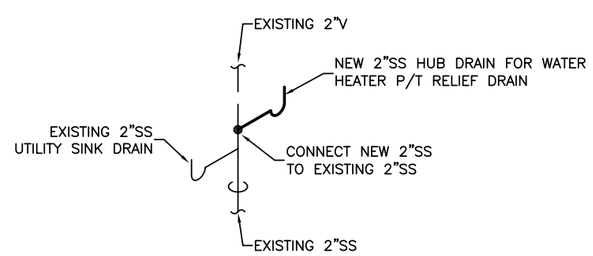

3 BP5 PARTIAL SANITARY & VENT ISOMETRIC

GENERAL NOTES

1. THESE DRAWINGS DO NOT ATTEMPT TO SHOW THE COMPLETE DETAILS OF BUILDING CONSTRUCTION, WHICH AFFECT THE PLUMBING INSTALLATION. THE CONTRACTOR SHALL FIELD VERIFY EXISTING CONDITIONS AND REFER TO THE ARCHITECTURAL, CIVIL, STRUCTURAL, HVAC & ELECTRICAL DRAWINGS FOR ADDITIONAL DETAILS WHICH AFFECT THE PROPER INSTALLATION OF THIS WORK. NO EXTRA PAYMENT WILL BE ALLOWED FOR THE FAILURE TO OBTAIN THIS INFORMATION.
2. THE CONTRACTOR SHALL BE RESPONSIBLE FOR ALL EXISTING FIELD CONDITIONS. THE CONTRACTOR SHALL REVIEW EXISTING FIELD CONDITIONS PRIOR TO BID AND SHALL TAKE INTO ACCOUNT IN BID PROPOSAL. NO ADDITIONAL COMPENSATION WILL BE ALLOWED DUE TO CONTRACTORS FAILURE TO INCLUDE ALL NECESSARY WORK IN THE BID PROPOSAL.
3. CONTRACTOR SHALL COORDINATE HIS WORK WITH THE WORK OF OTHER TRADES. RESOLVE ALL CONFLICTS AT NO ADDITIONAL COST TO THE OWNER OR ARCHITECT.
4. THESE DRAWINGS ARE A DIAGRAMMATIC REPRESENTATION OF WORK TO BE ACCOMPLISHED AND AS SUCH DO NOT SHOW ALL REQUIRED OFFSETS OF PIPING. PLUMBING CONTRACTOR SHALL INSTALL MATERIAL AND EQUIPMENT AS TO CONFORM TO THE STRUCTURE, EQUIPMENT CONNECTIONS AND MAINTAIN HEADROOM AND PASSAGEWAY.
5. ALL CUTTING AND PATCHING OF EXISTING STRUCTURE TO ACCOMMODATE NEW PLUMBING IS BY PLUMBING CONTRACTOR.
6. KEY NOTES PERTAIN ONLY TO THE DRAWING THE ARE LOCATED ON.

LEGEND

—— CW ——	NEW DOMESTIC COLD WATER
—— CW ——	EXISTING DOMESTIC COLD WATER
—— HW ——	NEW DOMESTIC HOT WATER
—— HW ——	EXISTING DOMESTIC HOT WATER
—— SS ——	NEW SANITARY SEWER
—— SS ——	EXISTING SANITARY SEWER
—— V ——	NEW VENT
—— V ——	EXISTING VENT
	PIPING/EQUIPMENT TO BE REMOVED
	PIPE ELBOW/TEE DOWN
	PIPE ELBOW/TEE UP
	CAPPED PIPE END
	BALL VALVE
	GATE VALVE
	CHECK VALVE
	KEY NOTE
CO	CLEAN OUT
DN	DOWN
FD	FLOOR DRAIN
P/T	PRESSURE/TEMPERATURE
SPD	SUMP PUMP DISCHARGE
VTR	VENT THRU ROOF
X–...	EXISTING ...

City of Milwaukee

Department of Public Works

Infrastructure Services Division

IBC ENGINEERING SERVICES, INC.
N8 W22195 JOHNSON DR. SUITE 180
WAUKESHA, WISCONSIN 53186
262.549.1190 fx 262.549.1620

ST PAUL AVE. LIFT BRIDGE OVER THE MILWAUKEE RIVER
PLUMBING GENERAL NOTES, LEGEND, SCHEDULES & DETAILS

REVISIONS

DESIGNED BY MRB	
DRAWN BY MRB	
CHECKED BY MRR	
DATE FEB 2013	SCALE NTS
JOB NUMBER BR100-10-0106	
SHEET NUMBER BP5 OF BP5	