REMOTE CONTROL OF ST. PAUL AVE. BRIDGE FROM MICHIGAN ST. BRIDGE

City of Milwaukee
Department of Public Works
Infrastructure Services Division

ELECTRICAL DRAWING MASTER INDEX

MICHIGAN ST. BRIDGE DRAWINGS

PROJ. SHT.	BRIDGE SHEET	DRAWING CONTENTS
2	M0	ELECTRICAL DRAWING INDEX
3	M1	MAIN INCOMING POWER WIRING
4	M1A	EMERG. HYD. MOTOR & SUMP PUMP WIRING
5	M2	GATE WIRING
6	M3	SPAN WIRING
7	M3A	TRAFFIC CONTROL WIRING
8	M4	SPAN CONTROL WIRING
9	M4A	MAIN & EMERG. MOTOR CONTROL WIRING
10	M4B	BRIDGEHOUSE & PIER LIGHT WIRING
11	M5	PLC, PANELVIEW CABLE CONNECTIONS
12	M6	I/O RACK 0 MODULE GROUPS 0 THRU 3
13	M7	PLC 5/30 I/O RACK ENCLOSURE DETAIL
14	M8	REMOTE CONSOLE FLEX I/O RACK 2 GROUPS 0 THRU 2
15	M9	REMOTE OPERATION CONSOLE
16	M10	VIDEO EQUIPMENT WIRING DETAILS
17	M11	SPARE SHEET
18	M12	AUDIO EQUIPMENT WIRING DETAILS
19	M13	AUDIO/VIDEO EQUIPMENT ENCLOSURE DETAIL
20	M14	SWIVEL PEDESTAL ASSEMBLY DRAWING
21	M15	SWIVEL PEDESTAL DETAILS DRAWING
22	M16	SWIVEL PEDESTAL DETAILS DRAWING
23	M17	ELECTRICAL PLAN – BRIDGE HOUSE

ST. PAUL AVE. BRIDGE DRAWINGS

PROJ. SHT.	BRIDGE SHEET	DRAWING CONTENTS
24	SP0	ELECTRICAL DRAWING INDEX
25	SP1	MAIN INCOMING & GENERATOR POWER WIRING
26	SP1A	MAIN POWER DISTRIBUTION WIRING
27	SP2	SEWAGE PUMP & GATE POWER WIRING
28	SP3	GATE & SPAN CONTROL WIRING
29	SP3A	SPAN HYDRAULIC PUMP CONTROL WIRING
30	SP3B	GATE SWITCH & LIGHT CONTROL WIRING
31	SP4	GATE, NAVIGATION & PIER LIGHT CONTROL WIRING
32	SP4A	WARNING BELL & TRAFFIC LIGHT CONTROL WIRING
33	SP5	PIER WALK & CONTROL ROOM LIGHTING & SPAN LIFT CONTROL WIRING
34	SP6	SLAVE RELAY, HORN, PLC & CAMERA CONTROL POWER WIRING
35	SP7	PLC PROCESSOR CABLE CONNECTIONS
36	SP8	I/O RACK 0 MODULE GROUPS 0 THRU 3
37	SP9	I/O RACK 0 MODULE GROUPS 4 THRU 7
38	SP10	I/O RACK 1 MODULE GROUPS 0 THRU 3
39	SP11	REMOTE CONTROLLER ENCLOSURE
40	SP12	BLANK SHEET RESERVED FOR FUTURE
41	SP13	VIDEO EQUIPMENT WIRING DETAILS
42	SP14	AUDIO EQUIPMENT WIRING DETAILS
43	SP15	AUDIO/VIDEO EQUIPMENT ENCLOSURE DETAIL
44	SP16	ELECTRICAL SITE PLAN – BRIDGE
45	SP17	ELECTRICAL PLAN – PIERS
46	SP18	ELECTRICAL PLAN – BRIDGE HOUSE

WISCONSIN
ROBERT R. MILLER
E-14028
WAUKESHA, WIS.
PROFESSIONAL ENGINEER

"AS BUILT"

REV.	DESC. OF CHANGE	DATE	PROJ. #
1	NO CHANGE	5-19-06	349-051
2	NO CHANGE	5-19-06	349-051
3	AS INSTALLED	5-19-06	349-051

ENGINEERING SPECIALISTS, INC.
BROOKFIELD, WI. 53005-5118
NEENAH, WI. 54956

DR. BY ES
DATE 10-21-02
REV. 3
SCALE NTS
SHT. 1 OF 46

CITY OF MILWAUKEE, WI.
MICHIGAN ST. BRIDGE
REMOTE CONTROL
349-051

ELECTRICAL DRAWING MASTER INDEX

SHEET 1 OF 1
349-051

VERTICAL LIFT BRIDGE REMOTE CONTROL
ELECTRICAL DRAWING MASTER INDEX

REVISIONS

DESIGNED BY T.G.
DRAWN BY D.K.
CHECKED BY T.G.
DATE 10/21/02
SCALE NONE
JOB NUMBER BR10090124
SHEET NUMBER 1
OF 46

MICHIGAN ST. BRIDGE
ELECTRICAL DRAWING INDEX

REVISION	PROJ. SHT.	BRIDGE SHEET	DRAWING CONTENTS
3	2	M0	ELECTRICAL DRAWING INDEX
3	3	M1	MAIN INCOMING POWER WIRING
3	4	M1A	EMERG. HYD. MOTOR & SUMP PUMP WIRING
3	5	M2	GATE WIRING
3	6	M3	SPAN WIRING
3	7	M3A	TRAFFIC CONTROL WIRING
3	8	M4	SPAN CONTROL WIRING
3	9	M4A	MAIN & EMERG. MOTOR CONTROL WIRING
3	10	M4B	BRIDGE HOUSE & PIER LIGHT WIRING
3	11	M5	PLC, PANELVIEW CABLE CONNECTIONS
3	12	M6	I/O RACK 0 MODULE GROUPS 0 THRU 3
3	13	M7	PLC 5/30 I/O RACK ENCLOSURE DETAIL
3	14	M8	REMOTE CONSOLE FLEX I/O RACK 2 GROUPS 0 THRU 2
3	15	M9	REMOTE OPERATION CONSOLE
3	16	M10	VIDEO EQUIPMENT WIRING DETAILS
3	17	M11	SPARE SHEET
3	18	M12	AUDIO EQUIPMENT WIRING DETAILS
3	19	M13	AUDIO/VIDEO EQUIPMENT ENCLOSURE DETAIL
3	20	M14	SWIVEL PEDESTAL ASSEMBLY
3	21	M15	SWIVEL PEDESTAL DETAILS
3	22	M16	SWIVEL PEDESTAL DETAILS
3	23	M17	ELECTRICAL PLAN – BRIDGE HOUSE

"AS BUILT"

REV.	DESC. OF CHANGE	DATE	PROJ. #
1	NO CHANGE	5-19-06	349-051
2	NO CHANGE	5-19-06	349-051
3	AS INSTALLED	5-19-06	349-051

ENGINEERING SPECIALISTS, INC.
BROOKFIELD, WI. 53045-3119
NEENAH, WI. 54956

DR. BY ES	CITY OF MILWAUKEE, WI.
DATE 10/21/02	MICHIGAN ST. BRIDGE
REV. 3	REMOTE CONTROL
SCALE NTS	349-051
SHT. 2 OF 46	

MICHIGAN ST. BRIDGE ELECTRICAL DRAWING INDEX

SHEET M0 OF 17

ES 349-051

City of Milwaukee
Department of Public Works
Infrastructure Services Division

WISCONSIN
ROBERT R. MILLER
E-14028
WAUWATOSA, WIS.
PROFESSIONAL ENGINEER

VERTICAL LIFT BRIDGE REMOTE CONTROL

MICHIGAN ST. BRIDGE ELECTRICAL DRAWING INDEX

REVISIONS

DESIGNED BY T.G.
DRAWN BY D.K.
CHECKED BY T.G.
DATE 10/21/02
SCALE NONE
JOB NUMBER BR10090124
SHEET NUMBER 2
OF 46

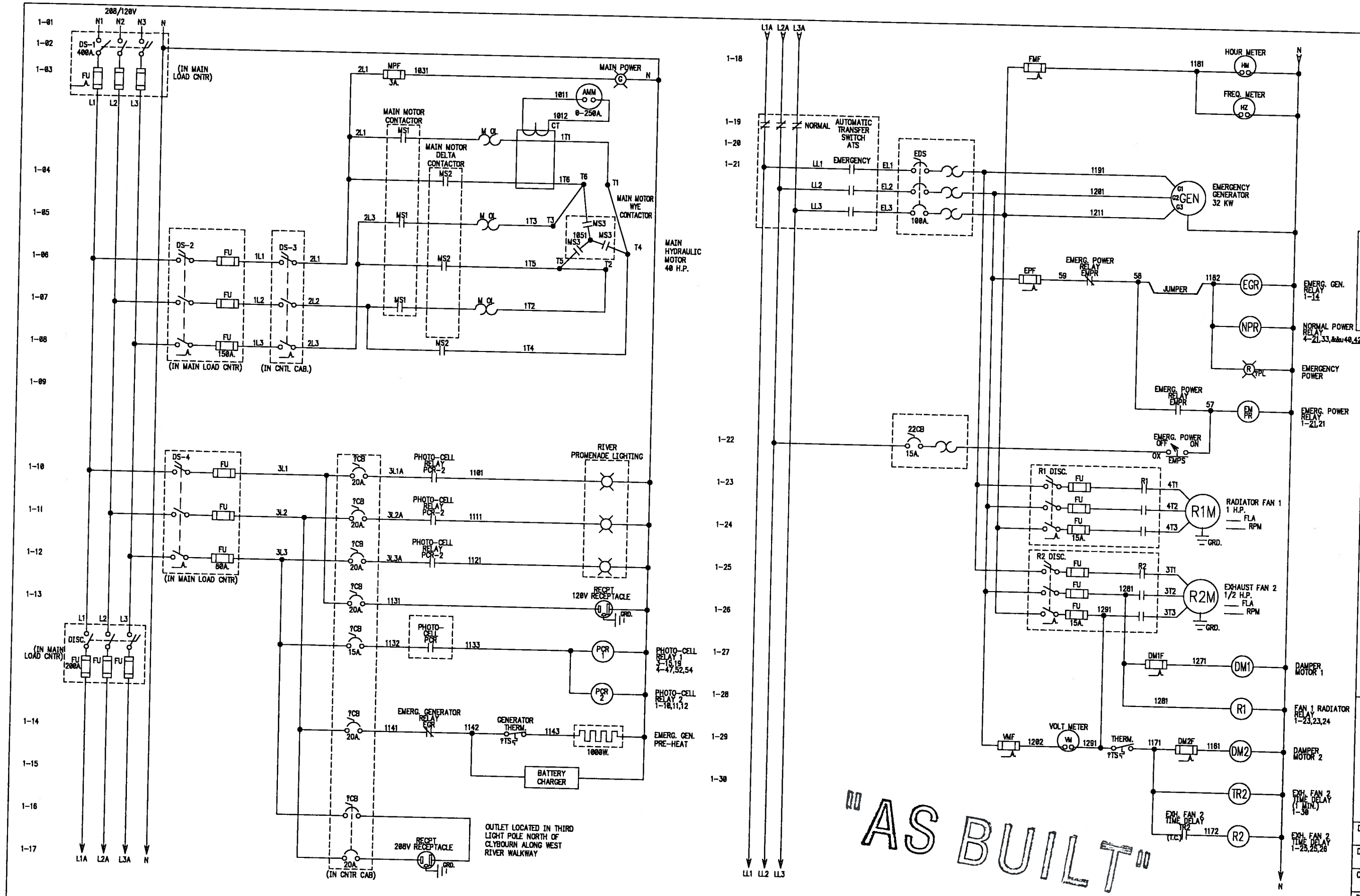

City of Milwaukee

Department of Public Works

Infrastructure Services Division

WISCONSIN ROBERT R. MILLER PROFESSIONAL ENGINEER

VERTICAL LIFT BRIDGE REMOTE CONTROL

MICHIGAN ST. BRIDGE MAIN INCOMING POWER WIRING

REVISIONS

REV.	DESC. OF CHANGE	DATE	PROJ. #
1	NO CHANGE	5-19-06	349-051
2	NO CHANGE	5-19-06	349-051
3	AS INSTALLED	5-19-06	349-051

ENGINEERING SPECIALISTS, INC.
BROOKFIELD, WI. 53045-5118
NEENAH, WI. 54956

DR. BY ES	CITY OF MILWAUKEE, WI.
DATE 10/21/02	MICHIGAN BRIDGE
REV. 3	REMOTE CONTROL
SCALE NTS	349-051
SHT. 3 OF 46	

MICHIGAN ST. BRIDGE MAIN INCOMING POWER WIRING

SHEET M1 OF 17

ES 349-051

DESIGNED BY T.G.

DRAWN BY D.K.

CHECKED BY T.G.

DATE 10/21/02

SCALE NONE

JOB NUMBER BR10090124

SHEET NUMBER 3

OF 46

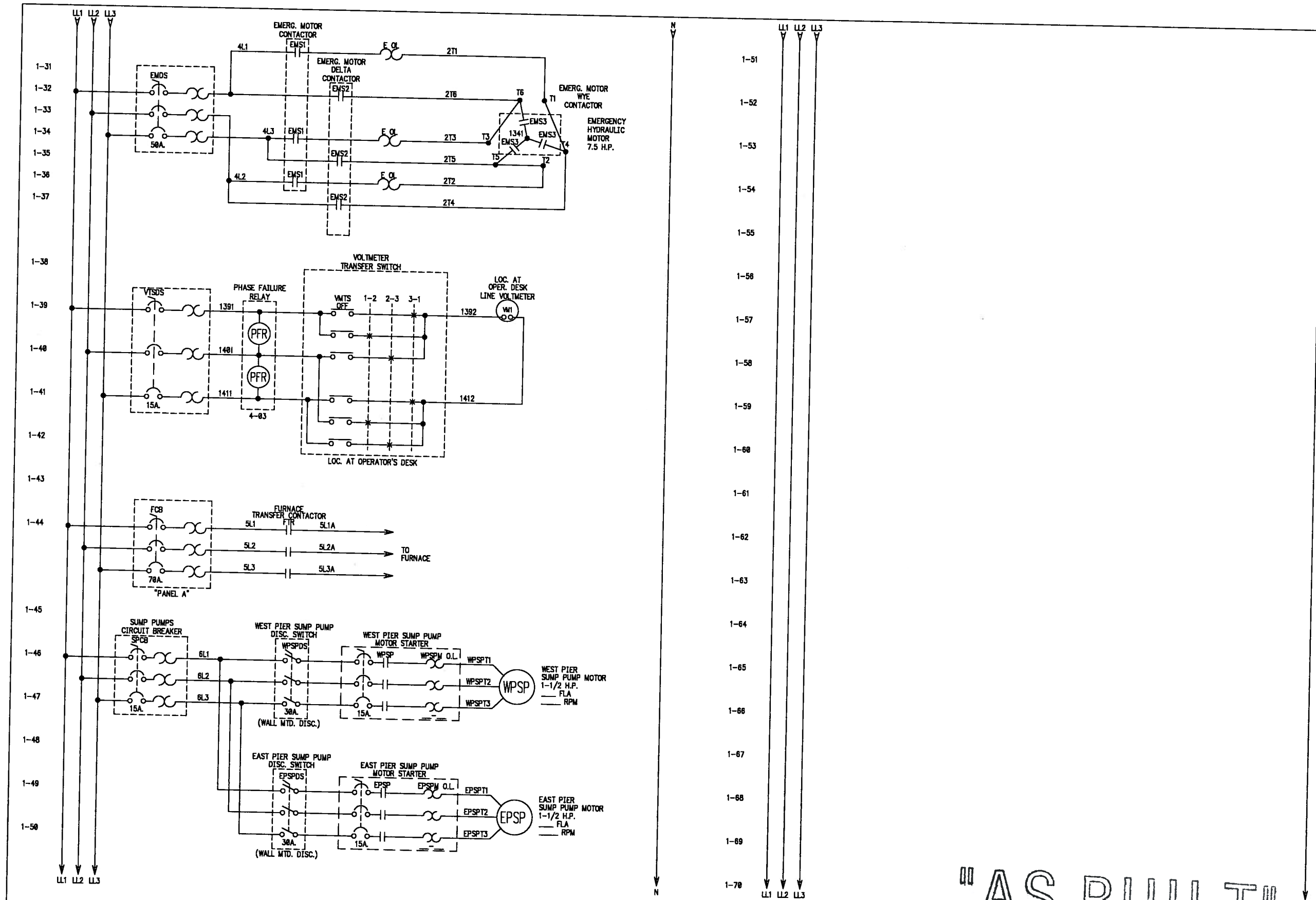

"AS BUILT"

REV.	DESC. OF CHANGE	DATE	PROJ #
1	NO CHANGE	5-19-06	349-051
2	NO CHANGE	5-19-06	349-051
3	AS INSTALLED	5-19-06	349-051

ENGINEERING SPECIALISTS, INC.
BROOKFIELD, WI. 53045-3119
NEENAH, WI. 54956

DR. BY ES	CITY OF MILWAUKEE, WI.
DATE 10/21/02	MICHIGAN BRIDGE
REV. 3	REMOTE CONTROL
SCALE NTS	349-051
SHT. 4 OF 46	

MICHIGAN ST. BRIDGE
EMERG. HYD. MOTOR
& SUMP PUMP WIRING

SHEET M1A OF 17

ES 349-051

City of Milwaukee

Department of Public Works

Infrastructure Services Division

WISCONSIN
ROBERT R. MILLER
E-14028
WAUWATOSA, WIS
PROFESSIONAL ENGINEER

VERTICAL LIFT BRIDGE
REMOTE CONTROL

MICHIGAN ST. BRIDGE
EMERG. HYD. MOTOR
& SUMP PUMP WIRING

REVISIONS

DESIGNED BY T.G.

DRAWN BY D.K.

CHECKED BY T.G.

DATE 10/21/02

SCALE NONE

JOB NUMBER BR10090124

SHEET NUMBER 4

OF 46

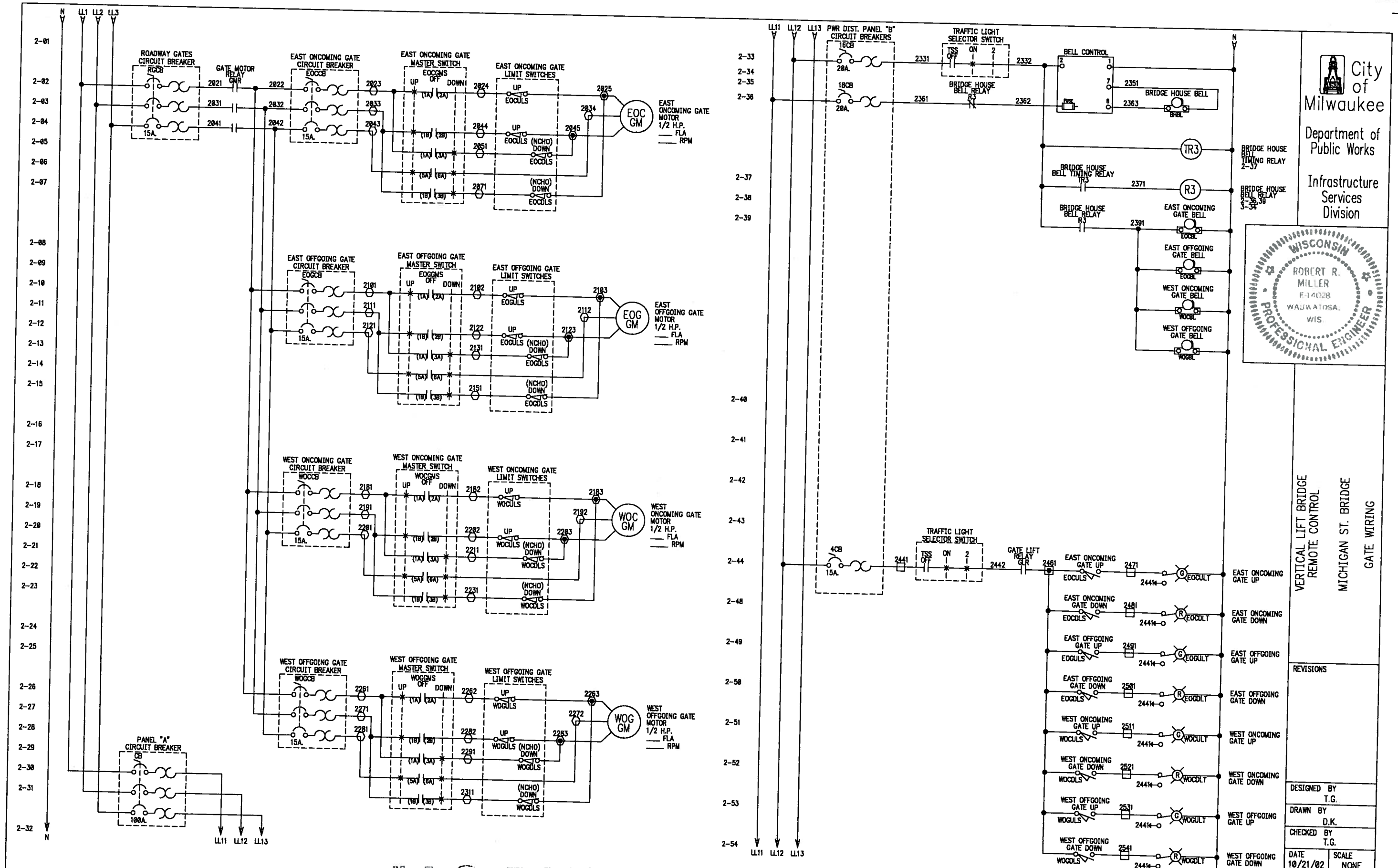

"AS BUILT"

City of Milwaukee
Department of Public Works
Infrastructure Services Division

WISCONSIN ROBERT R. MILLER E-14028 WAUWATOSA, WIS. PROFESSIONAL ENGINEER

VERTICAL LIFT BRIDGE REMOTE CONTROL
MICHIGAN ST. BRIDGE
GATE WIRING

REVISIONS

REV.	DESC. OF CHANGE	DATE	PROJ #
1	NO CHANGE	5-19-06	349-051
2	NO CHANGE	5-19-06	349-051
3	AS INSTALLED	5-19-06	349-051

ENGINEERING SPECIALISTS, INC.
BROOKFIELD, WI. 53045-5118
NEENAH, WI. 54956

DR. BY ES	CITY OF MILWAUKEE, WI.
DATE 10/21/02	MICHIGAN BRIDGE
REV. 3	REMOTE CONTROL
SCALE NTS	349-051
SHT. 5 OF 46	

MICHIGAN ST. BRIDGE GATE WIRING

SHEET M2 OF 17

349-051

DESIGNED BY T.G.
DRAWN BY D.K.
CHECKED BY T.G.
DATE 10/21/02
SCALE NONE
JOB NUMBER BR10090124
SHEET NUMBER 5
OF 46

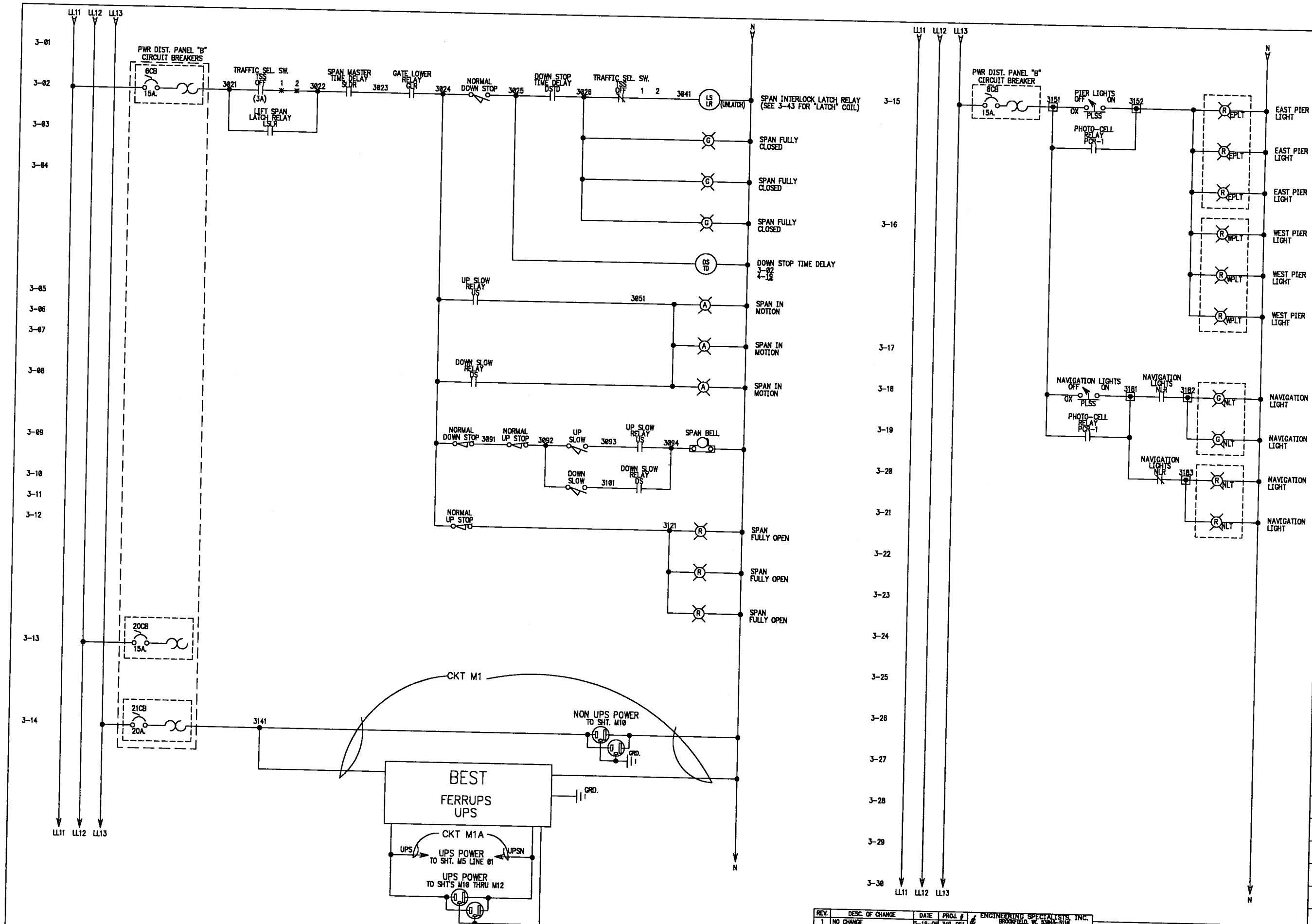

City of Milwaukee

Department of Public Works

Infrastructure Services Division

WISCONSIN ROBERT R. MILLER E-36018 WAUKESHA, WIS. PROFESSIONAL ENGINEER

VERTICAL LIFT BRIDGE REMOTE CONTROL

MICHIGAN ST. BRIDGE

SPAN WIRING

REVISIONS

REV.	DESC. OF CHANGE	DATE	PROJ. #
1	NO CHANGE	5-19-06	349-051
2	NO CHANGE	5-19-06	349-051
3	AS INSTALLED	5-19-06	349-051

ENGINEERING SPECIALISTS, INC.
BROOKFIELD, WI. 53045-5110
NEENAH, WI. 54956

DR. BY ES	CITY OF MILWAUKEE, WI.
DATE 10/21/02	MICHIGAN BRIDGE
REV. 3	REMOTE CONTROL
SCALE NTS	349-051
SHT. 6 OF 46	

MICHIGAN ST. BRIDGE SPAN WIRING

SHEET M3 OF 17

349-051

DESIGNED BY	T.G.
DRAWN BY	D.K.
CHECKED BY	T.G.
DATE 10/21/02	SCALE NONE
JOB NUMBER	BR10090124
SHEET NUMBER	6
OF	46

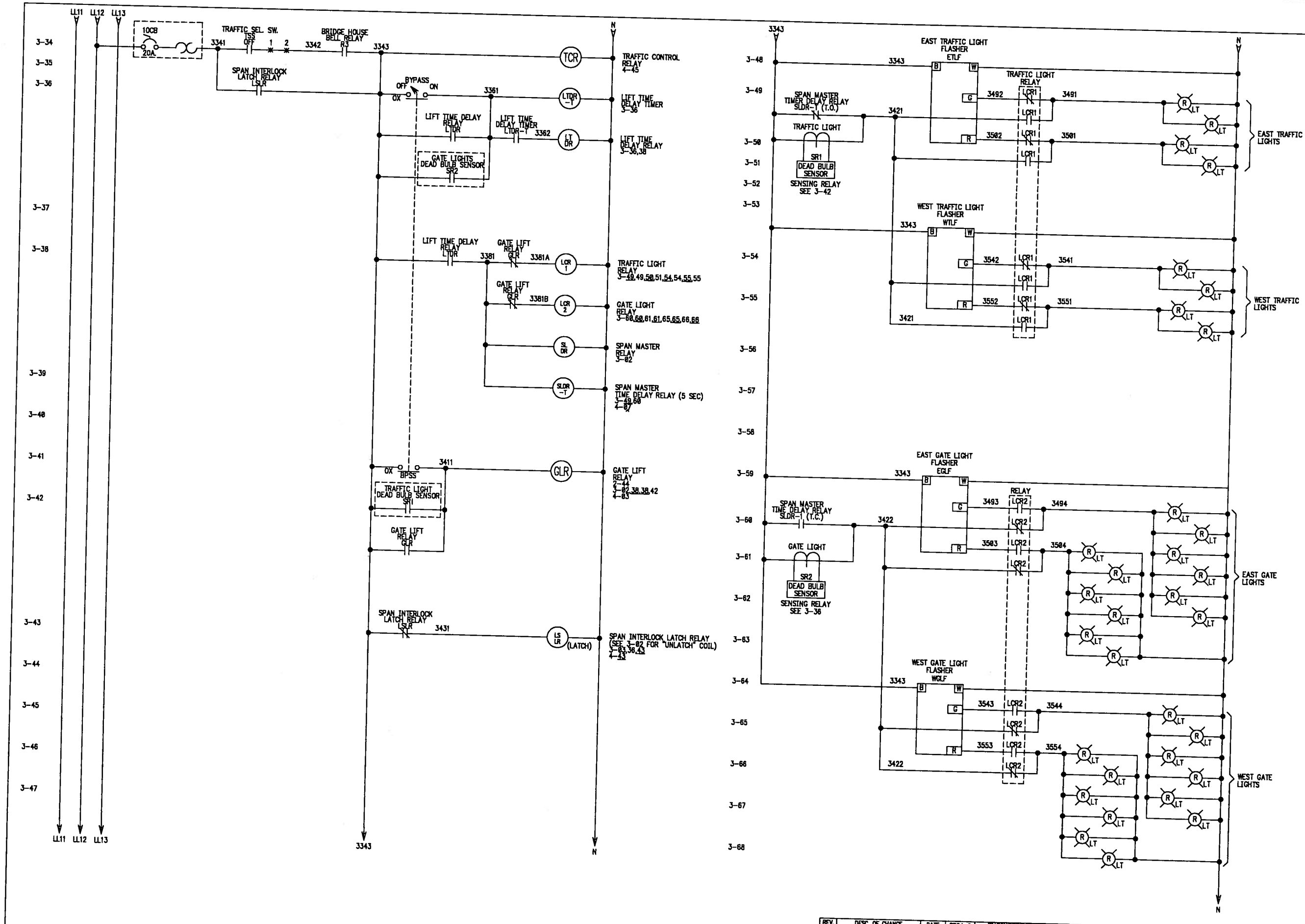

REV.	DESC. OF CHANGE	DATE	PROJ. #
1	NO CHANGE	5-19-06	349-051
2	NO CHANGE	5-19-06	349-051
3	AS INSTALLED	5-19-06	349-051

ENGINEERING SPECIALISTS, INC.
BROOKFIELD, WI. 53045-5118
NESHKORO, WI. 54960

DR. BY ES	CITY OF MILWAUKEE, WI.
DATE 10/21/02	MICHIGAN BRIDGE
REV. 3	REMOTE CONTROL
SCALE NTS	349-051
SHT. 7 OF 46	

MICHIGAN ST. BRIDGE TRAFFIC CONTROL WIRING

SHEET M3A OF 17

349-051

City of Milwaukee

Department of Public Works

Infrastructure Services Division

WISCONSIN ROBERT R. MILLER E-14058 WAUWATOSA, WIS PROFESSIONAL ENGINEER

VERTICAL LIFT BRIDGE REMOTE CONTROL

MICHIGAN ST. BRIDGE TRAFFIC CONTROL WIRING

REVISIONS

DESIGNED BY T.G.

DRAWN BY D.K.

CHECKED BY T.G.

DATE 10/21/02

SCALE NONE

JOB NUMBER BR10090124

SHEET NUMBER 7

OF 46

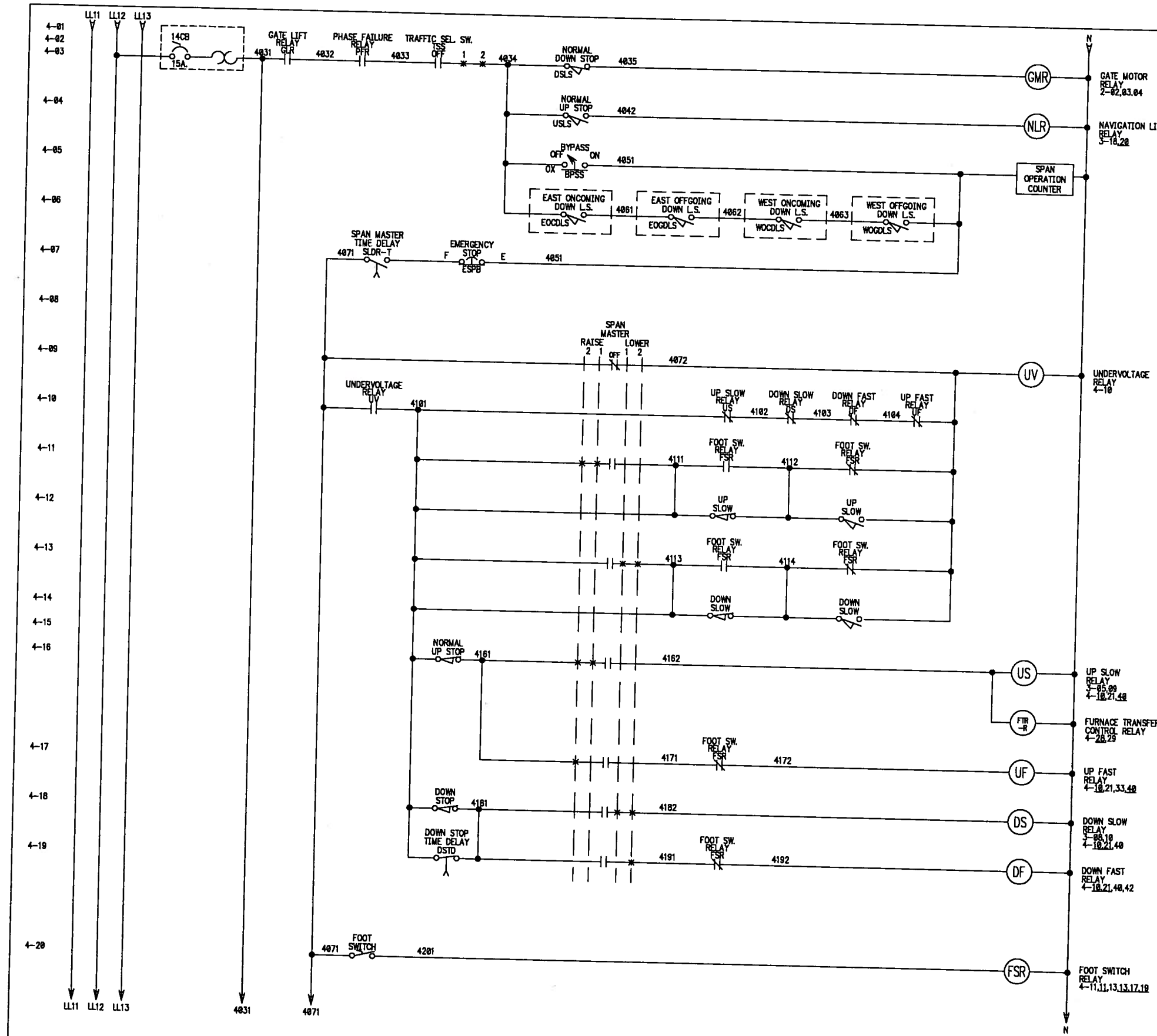

City of Milwaukee

Department of Public Works

Infrastructure Services Division

WISCONSIN ROBERT R. MILLER E-14028 WAUWATOSA, WIS. PROFESSIONAL ENGINEER

VERTICAL LIFT BRIDGE REMOTE CONTROL

MICHIGAN ST. BRIDGE SPAN CONTROL WIRING

REVISIONS

REV.	DESC. OF CHANGE	DATE	PROJ. #
1	NO CHANGE	5-19-06	349-051
2	NO CHANGE	5-19-06	349-051
3	AS INSTALLED	5-19-06	349-051

ENGINEERING SPECIALISTS, INC. BROOKFIELD, WI. 53045-5118 NEEKAH, WI. 54956

DR. BY ES | CITY OF MILWAUKEE, WI.
DATE 10/21/02 | MICHIGAN BRIDGE
REV. 3 | REMOTE CONTROL
SCALE NTS | 349-051
SHT. 8 OF 46

MICHIGAN ST. BRIDGE SPAN CONTROL WIRING

SHEET M4 OF 17

349-051

DESIGNED BY T.G.
DRAWN BY D.K.
CHECKED BY T.G.
DATE 10/21/02
SCALE NONE
JOB NUMBER BR10090124
SHEET NUMBER 8
OF 46

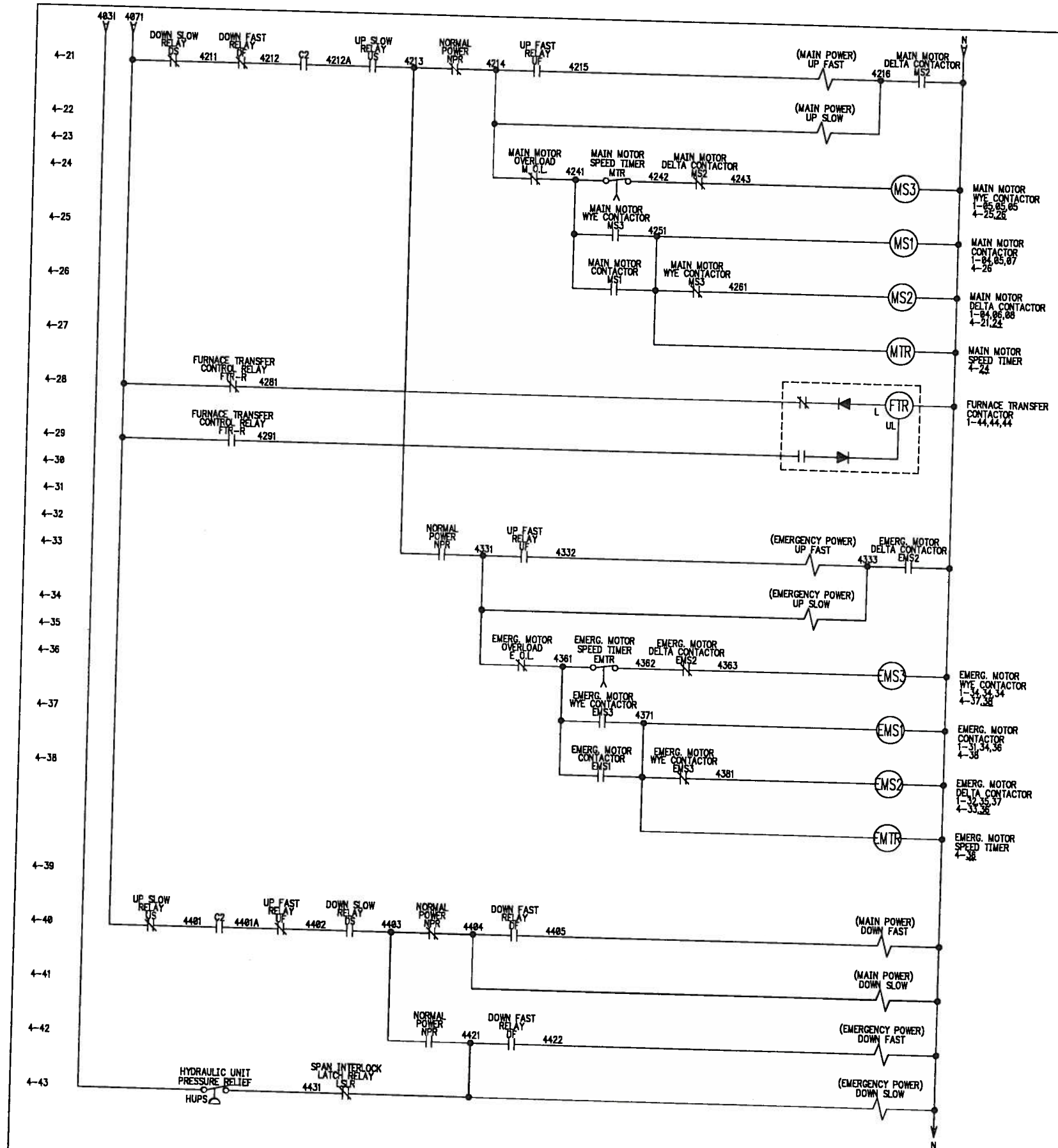

City of Milwaukee

Department of Public Works

Infrastructure Services Division

WISCONSIN
ROBERT R. MILLER
E-14028
WAUWATOSA
WIS
PROFESSIONAL ENGINEER

VERTICAL LIFT BRIDGE
REMOTE CONTROL

MICHIGAN ST. BRIDGE
MAIN & EMERG. MOTOR
CONTROL WIRING

REVISIONS

REV.	DESC. OF CHANGE	DATE	PROJ. #
1	NO CHANGE	5-19-06	349-051
2	NO CHANGE	5-19-06	349-051
3	AS INSTALLED	5-19-06	349-051

ENGINEERING SPECIALISTS, INC.
BROOKFIELD, WI 53005-5118
NEENAH, WI. 54956

DR. BY ES	CITY OF MILWAUKEE, WI.
DATE 10/21/02	MICHIGAN BRIDGE
REV. 3	REMOTE CONTROL
SCALE NTS	349-051
SHT. 9 OF 46	

MICHIGAN ST. BRIDGE
MAIN & EMERG. MOTOR
CONTROL WIRING

SHEET M4A OF 17

349-051

DESIGNED BY	T.G.
DRAWN BY	D.K.
CHECKED BY	T.G.
DATE 10/21/02	SCALE NONE
JOB NUMBER	BR10090124
SHEET NUMBER	9
OF	46

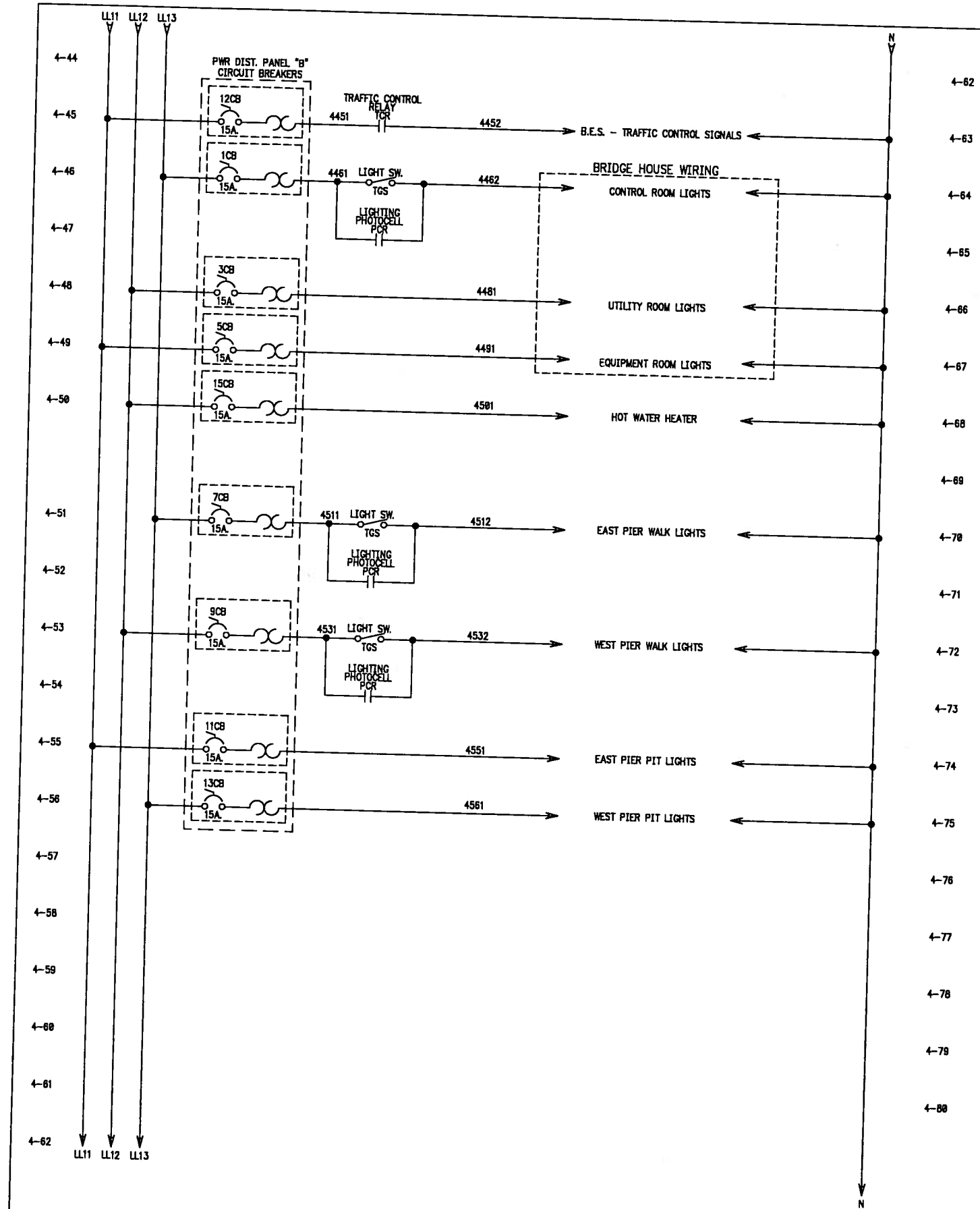

City of Milwaukee

Department of Public Works

Infrastructure Services Division

WISCONSIN
ROBERT R. MILLER
E-14028
WAUWATOSA, WIS.
PROFESSIONAL ENGINEER

VERTICAL LIFT BRIDGE
REMOTE CONTROL

MICHIGAN ST. BRIDGE
BRIDGE HOUSE &
PIER LIGHT WIRING

REVISIONS

REV.	DESC. OF CHANGE	DATE	PROJ #
1	NO CHANGE	5-19-06	349-051
2	NO CHANGE	5-19-06	349-051
3	AS INSTALLED	5-19-06	349-051

ENGINEERING SPECIALISTS, INC.
BROOKFIELD, WI. 53045-5118
NEENAH, WI. 54956

DR. BY ES	CITY OF MILWAUKEE, WI.
DATE 10/21/02	MICHIGAN BRIDGE
REV. 3	REMOTE CONTROL
SCALE NTS	349-051
SHT. 10 OF 48	

MICHIGAN ST. BRIDGE
BRIDGE HOUSE &
PIER LIGHT WIRING

SHEET M4B OF 17

349-051

DESIGNED BY	T.G.
DRAWN BY	D.K.
CHECKED BY	T.G.
DATE 10/21/02	SCALE NONE
JOB NUMBER	BR10090124
SHEET NUMBER	10
OF	46

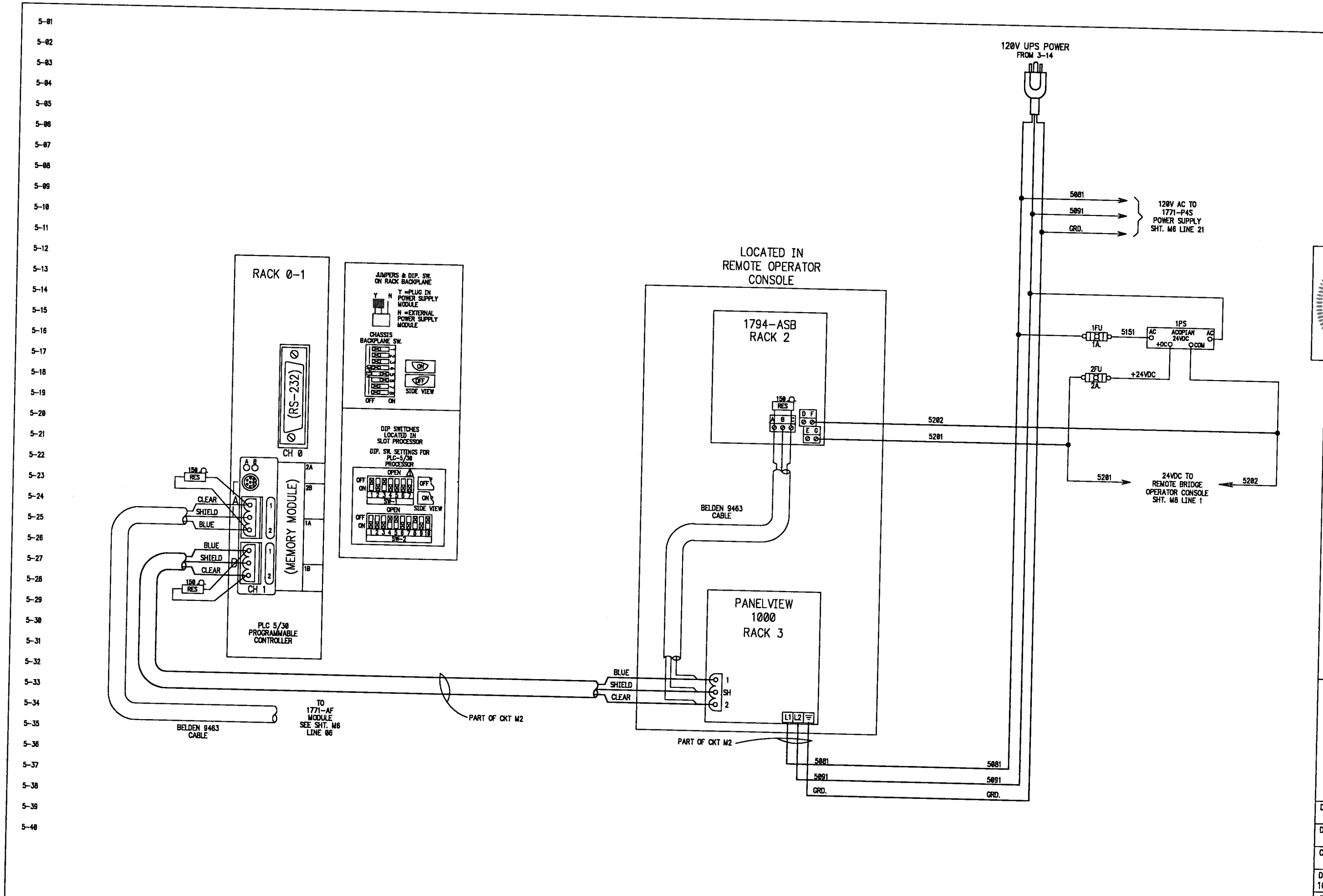

City of Milwaukee

Department of Public Works

Infrastructure Services Division

WISCONSIN
ROBERT R MILLER
E-14028
WAUWATOSA
WIS
PROFESSIONAL ENGINEER

VERTICAL LIFT BRIDGE
REMOTE CONTROL

MICHIGAN BRIDGE
PLC, PANELVIEW
CABLE CONNECTIONS

REVISIONS

1 ES CHG. SETTING ON SW-1 SWITCH 7

DESIGNED BY T.G.

DRAWN BY D.K.

CHECKED BY T.G.

DATE 10/21/02

SCALE NONE

JOB NUMBER BR10090124

SHEET NUMBER 11

OF 46

GENERAL NOTE:
M# = CIRCUIT NUMBER FOR MICHIGAN BRIDGE
WHERE # = ID NUMBER OF CIRCUIT.

REV.	DESC. OF CHANGE	DATE	PROJ. #
1	CHG. SWITCH SETTING	2-28-03	349-051
2	NO CHANGE	5-19-06	349-051
3	AS INSTALLED	5-19-06	349-051

ENGINEERING SPECIALISTS, INC.
BROOKFIELD, WI. 53045-5110
NEENAH, WI. 54956

DR. BY ES
DATE 10/21/02
REV. 3
SCALE NTS
SHT. 11 OF 46

CITY OF MILWAUKEE, WI.
MICHIGAN BRIDGE
REMOTE CONTROL
349-051

MICHIGAN BRIDGE
PLC, PANELVIEW
CABLE CONNECTIONS

SHEET M5 OF 17

E-S 349-051

6-01 RACK 0 MODULE 0

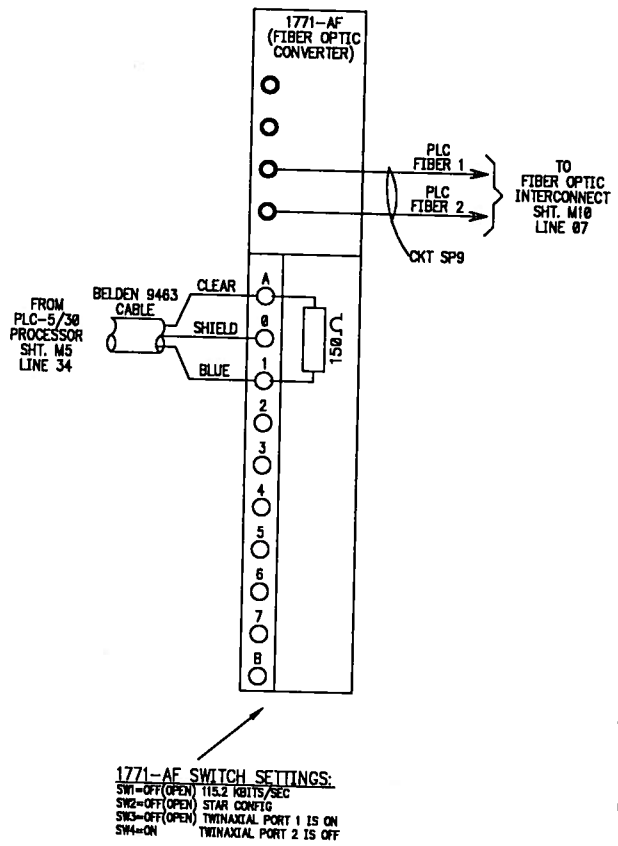

6-21 120V AC FROM SHT. M5 LINE 09

RACK 0 MODULE 1

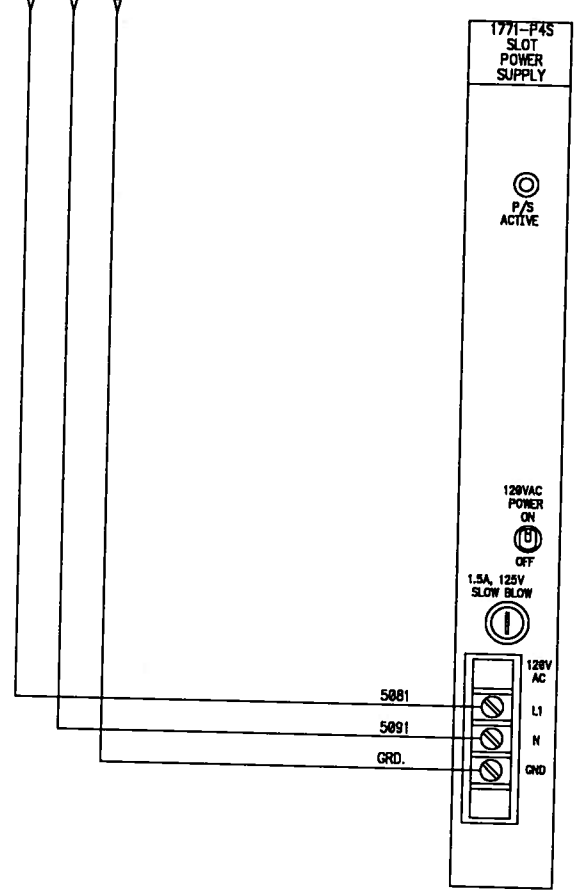

6-41 RACK 0 MODULE 2 WORD ADDRESS _:02

6-61 RACK 0 MODULE 3 WORD ADDRESS _:03

6-01 6-02 6-03 6-04 6-05 6-06 6-07 6-08 6-09 6-10 6-11 6-12 6-13 6-14 6-15 6-16 6-17 6-18 6-19 6-20

6-21 6-22 6-23 6-24 6-25 6-26 6-27 6-28 6-29 6-30 6-31 6-32 6-33 6-34 6-35 6-36 6-37 6-38 6-39 6-40

6-41 6-42 6-43 6-44 6-45 6-46 6-47 6-48 6-49 6-50 6-51 6-52 6-53 6-54 6-55 6-56 6-57 6-58 6-59 6-60

6-61 6-62 6-63 6-64 6-65 6-66 6-67 6-68 6-69 6-70 6-71 6-72 6-73 6-74 6-75 6-76 6-77 6-78 6-79 6-80

City of Milwaukee

Department of Public Works

Infrastructure Services Division

WISCONSIN
ROBERT R. MILLER
E-14028
WAUWATOSA, WIS.
PROFESSIONAL ENGINEER

VERTICAL LIFT BRIDGE
REMOTE CONTROL

MICHIGAN BRIDGE
I/O RACK 0
MODULE GROUPS 0 THRU 3

REVISIONS

GENERAL NOTE:
W# = CIRCUIT NUMBER FOR MICHIGAN BRIDGE
WHERE # = ID NUMBER OF CIRCUIT.
C# = CIRCUIT NUMBER FOR ST. PAUL AVE. BRIDGE
WHERE # = ID NUMBER OF CIRCUIT.

REV.	DESC. OF CHANGE	DATE	PROJ #
1	NO CHANGE	5-19-06	349-051
2	NO CHANGE	5-19-06	349-051
3	AS INSTALLED	5-19-06	349-051

ENGINEERING SPECIALISTS, INC.
BROOKFIELD, WI 53045-5118
NEENAH, WI 54956

DR. BY ES	CITY OF MILWAUKEE, WI.
DATE 10/21/02	MICHIGAN BRIDGE
REV. 3	REMOTE CONTROL
SCALE NTS	349-051
SHT. 12 OF 46	

MICHIGAN BRIDGE
I/O RACK 0
MODULE GROUPS
0 THRU 3

SHEET M6 OF 17

E-S 349-051

DESIGNED BY T.G.	
DRAWN BY D.K.	
CHECKED BY T.G.	
DATE 10/21/02	SCALE NONE
JOB NUMBER BR10090124	
SHEET NUMBER 12	
OF 46	

HOFFMAN ENGINEERING
A-242012LP

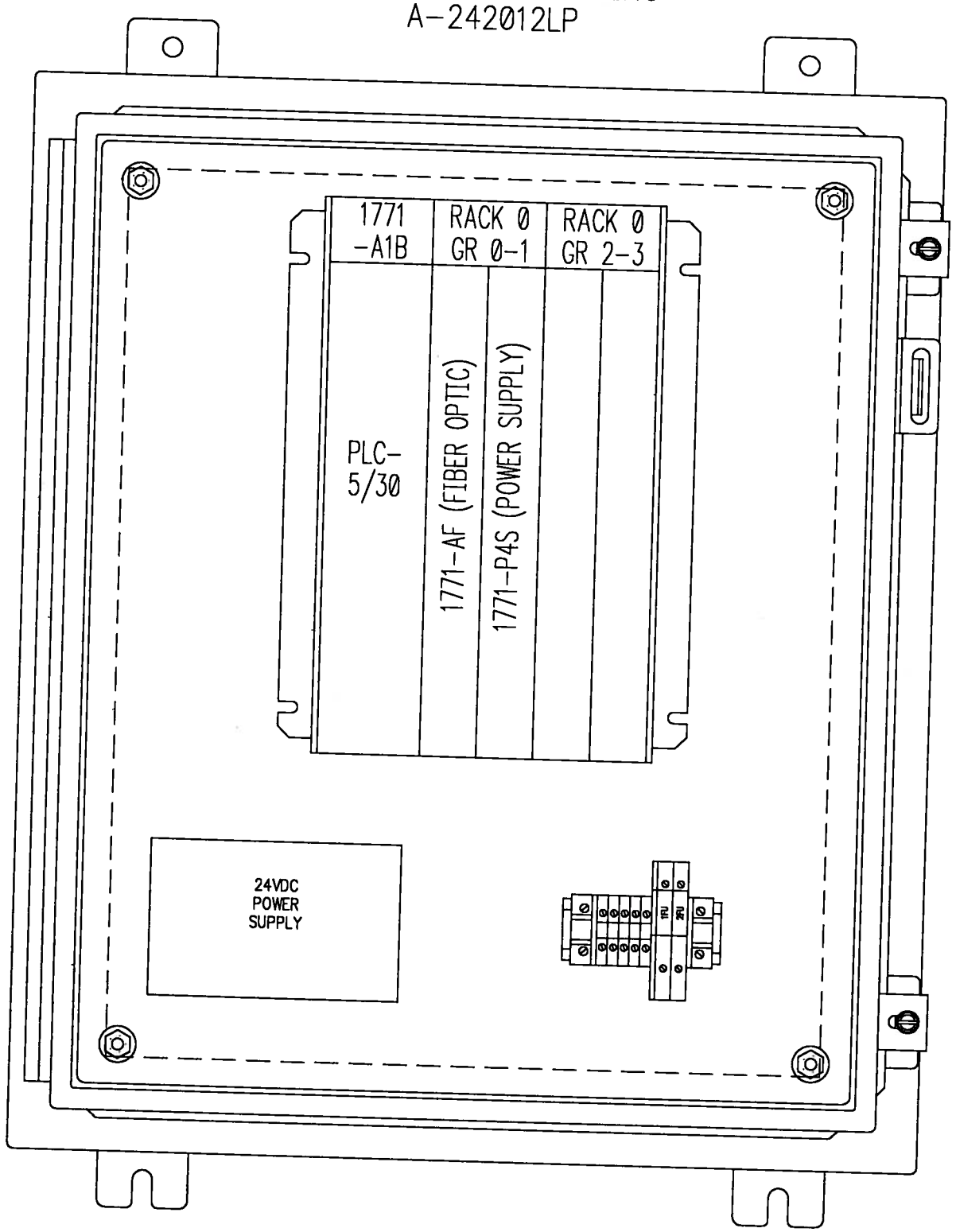

LOCATED @ BRIDGEHOUSE
OPERATOR LEVEL

City of Milwaukee
Department of Public Works
Infrastructure Services Division

WISCONSIN
ROBERT R. MILLER
E-14028
WAUWATOSA, WIS.
PROFESSIONAL ENGINEER

VERTICAL LIFT BRIDGE
REMOTE CONTROL

MICHIGAN BRIDGE
PLC 5/30 I/O RACK
ENCLOSURE DETAIL

REVISIONS

REV.	DESC. OF CHANGE	DATE	PROJ. #
1	NO CHANGE	5-19-08	349-051
2	NO CHANGE	5-19-08	349-051
3	AS INSTALLED	5-19-08	349-051

ENGINEERING SPECIALISTS, INC.
BROOKFIELD, WI. 53045-5118
NEEKAH, WI. 54956

DR. BY ES	CITY OF MILWAUKEE, WI.
DATE 10/21/02	MICHIGAN BRIDGE
REV. 3	REMOTE CONTROL
SCALE NTS	349-051
SHT. 13 OF 46	

MICHIGAN BRIDGE
PLC 5/30 I/O RACK
ENCLOSURE DETAIL

SHEET M7 OF 17

E-S 349-051

DESIGNED BY T.G.
DRAWN BY D.K.
CHECKED BY T.G.
DATE 10/21/02
SCALE NONE
JOB NUMBER BR10090124
SHEET NUMBER 13
OF 46

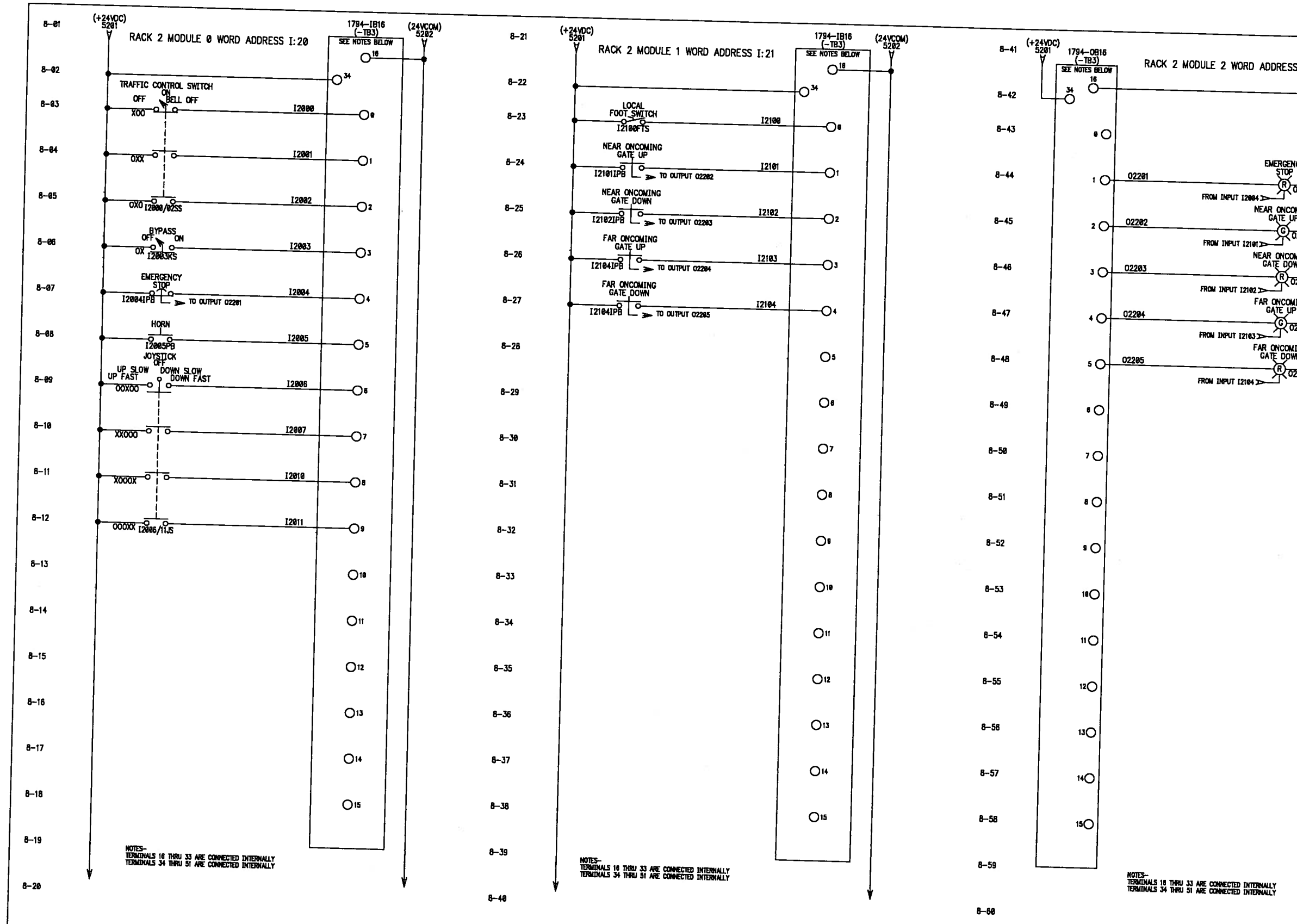

City of Milwaukee

Department of Public Works

Infrastructure Services Division

WISCONSIN ROBERT R. MILLER E-14028 WAUWATOSA, WIS. PROFESSIONAL ENGINEER

VERTICAL LIFT BRIDGE REMOTE CONTROL

MICHIGAN BRIDGE REMOTE CONSOLE FLEX I/O RACK 2 GROUPS 0 THRU 2

REVISIONS

REV.	DESC. OF CHANGE	DATE	PROJ #
1	NO CHANGE	5-19-06	349-051
2	NO CHANGE	5-19-06	349-051
3	AS INSTALLED	5-19-06	349-051

ENGINEERING SPECIALISTS, INC. BROOKFIELD, WI. 53045-5118 NEENAH, WI. 54956

DR. BY ES | CITY OF MILWAUKEE, WI.
DATE 10/21/02 | MICHIGAN BRIDGE
REV. 3 | REMOTE CONTROL
SCALE NTS | 349-051
SHT. 14 OF 46

MICHIGAN BRIDGE REMOTE CONSOLE FLEX I/O RACK 2 GROUPS 0 THRU 2

SHEET M8 OF 17

E-S 349-051

DESIGNED BY T.G.
DRAWN BY D.K.
CHECKED BY T.G.
DATE 10/21/02
SCALE NONE
JOB NUMBER BR10090124
SHEET NUMBER 14
OF 46

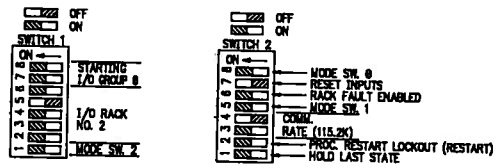

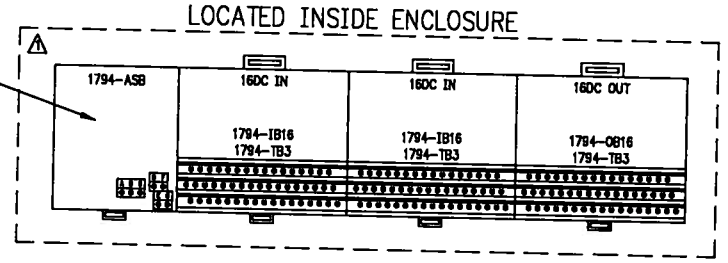

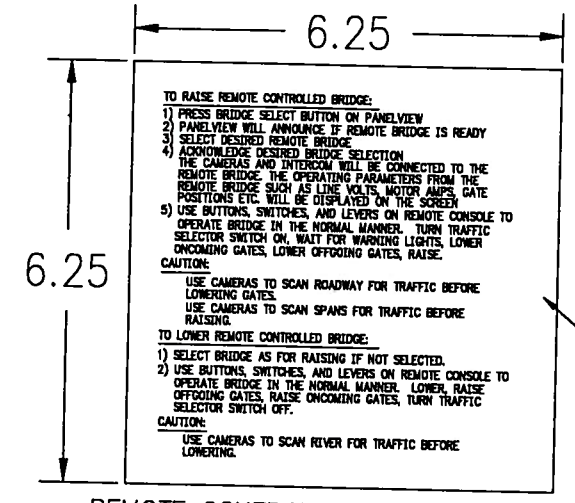

NOTE:
TEXT HGT TO BE .12"

REMOTE CONTROL INSTRUCTON PLATE

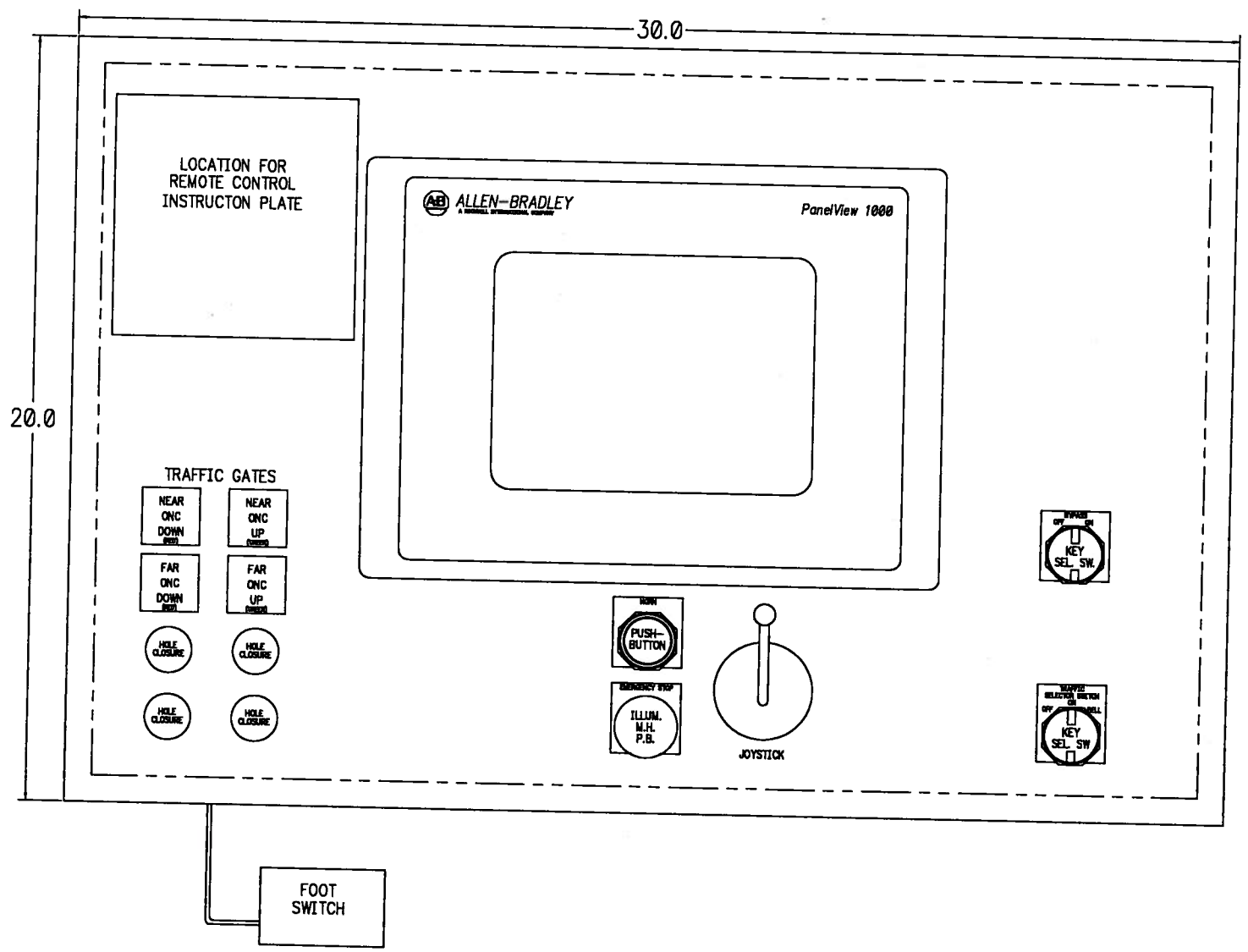

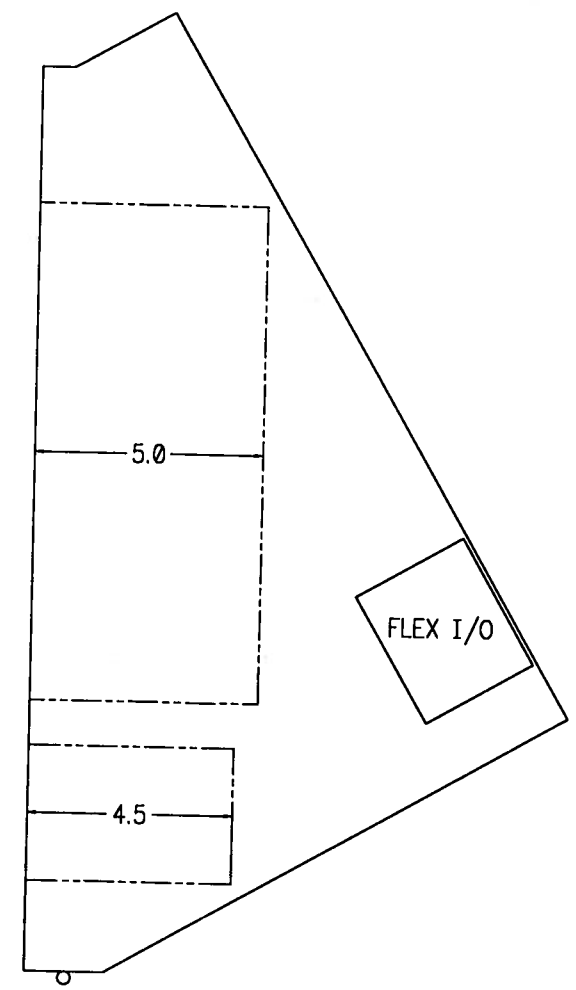

REV.	DESC. OF CHANGE	DATE	PROJ. #
1	ADD SWITCH SETTINGS	2-28-03	349-051
2	NO CHANGE	5-19-08	349-051
3	AS INSTALLED	5-19-08	349-051

ENGINEERING SPECIALISTS, INC.
BROOKFIELD, WI. 53045-5116
NEENAH, WI. 54956

DR. BY ES	CITY OF MILWAUKEE, WI.
DATE 10/21/02	MICHIGAN BRIDGE
REV. 3	REMOTE CONTROL
SCALE NTS	349-051
SHT. 15 OF 46	

MICHIGAN BRIDGE
REMOTE
OPERATION
CONSOLE

SHEET M9 OF 17

E-S 349-051

City of Milwaukee

Department of Public Works

Infrastructure Services Division

WISCONSIN
ROBERT R. MILLER
E-16028
WAUWATOSA, WIS.
PROFESSIONAL ENGINEER

VERTICAL LIFT BRIDGE
REMOTE CONTROL

MICHIGAN BRIDGE
REMOTE OPERATION
CONSOLE

REVISIONS

1 ES ADD REM I/O SWITCH SETTINGS

DESIGNED BY T.G.

DRAWN BY D.K.

CHECKED BY T.G.

DATE 10/21/02

SCALE NONE

JOB NUMBER BR10090124

SHEET NUMBER 15

OF 46

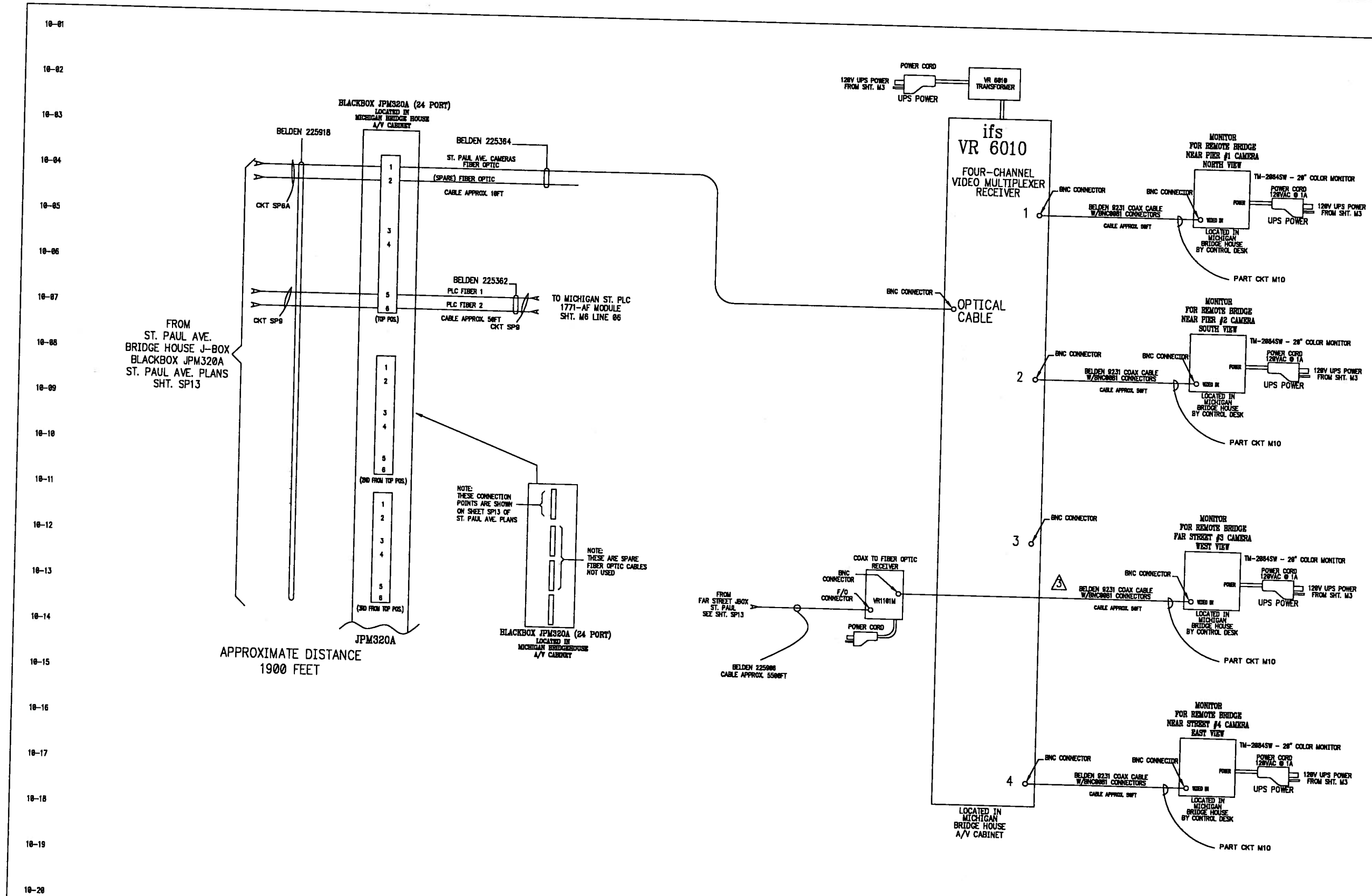

GENERAL NOTE:
M# = CIRCUIT NUMBER FOR MICHIGAN BRIDGE
WHERE # = ID NUMBER OF CIRCUIT.
SP# = CIRCUIT NUMBER FOR ST. PAUL BRIDGE
WHERE # = ID NUMBER OF CIRCUIT.

REV.	DESC. OF CHANGE	DATE	PROJ. #
1	REVISED CAMERA CONNECTIONS	1-30-03	349-051
2	NO CHANGE	5-19-08	349-051
3	AS INSTALLED	5-19-08	349-051

ENGINEERING SPECIALISTS, INC.
BROOKFIELD, WI. 53045-3118
NEENAH, WI. 54956

DR. BY ES
DATE 10/21/02
REV. 3
SCALE NTS
SHT. 16 OF 46

CITY OF MILWAUKEE
MICHIGAN BRIDGE
REMOTE CONTROL
349-051

MICHIGAN BRIDGE VIDEO EQUIPMENT WIRING DETAILS

SHEET M10 OF 17

E-S 349-051

City of Milwaukee
Department of Public Works
Infrastructure Services Division

WISCONSIN ROBERT R. MILLER E-14028 WAUWATOSA, WIS PROFESSIONAL ENGINEER

VERTICAL LIFT BRIDGE REMOTE CONTROL

MICHIGAN BRIDGE VIDEO EQUIPMENT WIRING DETAILS

REVISIONS

DESIGNED BY T.G.
DRAWN BY D.K.
CHECKED BY T.G.
DATE 10/21/02
SCALE NONE
JOB NUMBER BR10090124
SHEET NUMBER 16
OF 46

11-01

11-02

11-03

11-04

11-05

11-06

11-07

11-08

11-09

11-10

11-11

11-12

11-13

11-14

11-15

11-16

11-17

11-18

11-19

11-20

City of Milwaukee

Department of Public Works

Infrastructure Services Division

WISCONSIN
ROBERT R. MILLER
E-14028
WAUWATOSA, WIS.
PROFESSIONAL ENGINEER

VERTICAL LIFT BRIDGE
REMOTE CONTROL

MICHIGAN BRIDGE

SPARE SHEET

REVISIONS

REV.	DESC. OF CHANGE	DATE	PROJ. #
1	NO CHANGE	5-19-06	349-051
2	NO CHANGE	5-19-06	349-051
3	AS INSTALLED	5-19-06	349-051

ENGINEERING SPECIALISTS, INC.
BROOKFIELD, WI. 53045-5110
NEENAH, WI. 54956

DR. BY ES
DATE 10/21/02
REV. 3
SCALE NTS
SHT. 17 OF 46

CITY OF MILWAUKEE, WI.
MICHIGAN BRIDGE
REMOTE CONTROL
349-051

MICHIGAN BRIDGE

SPARE SHEET

SHEET M11 OF 17

E-S 349-051

DESIGNED BY T.G.
DRAWN BY D.K.
CHECKED BY T.G.
DATE 10/21/02
SCALE NONE
JOB NUMBER BR10090124
SHEET NUMBER 17
OF 46

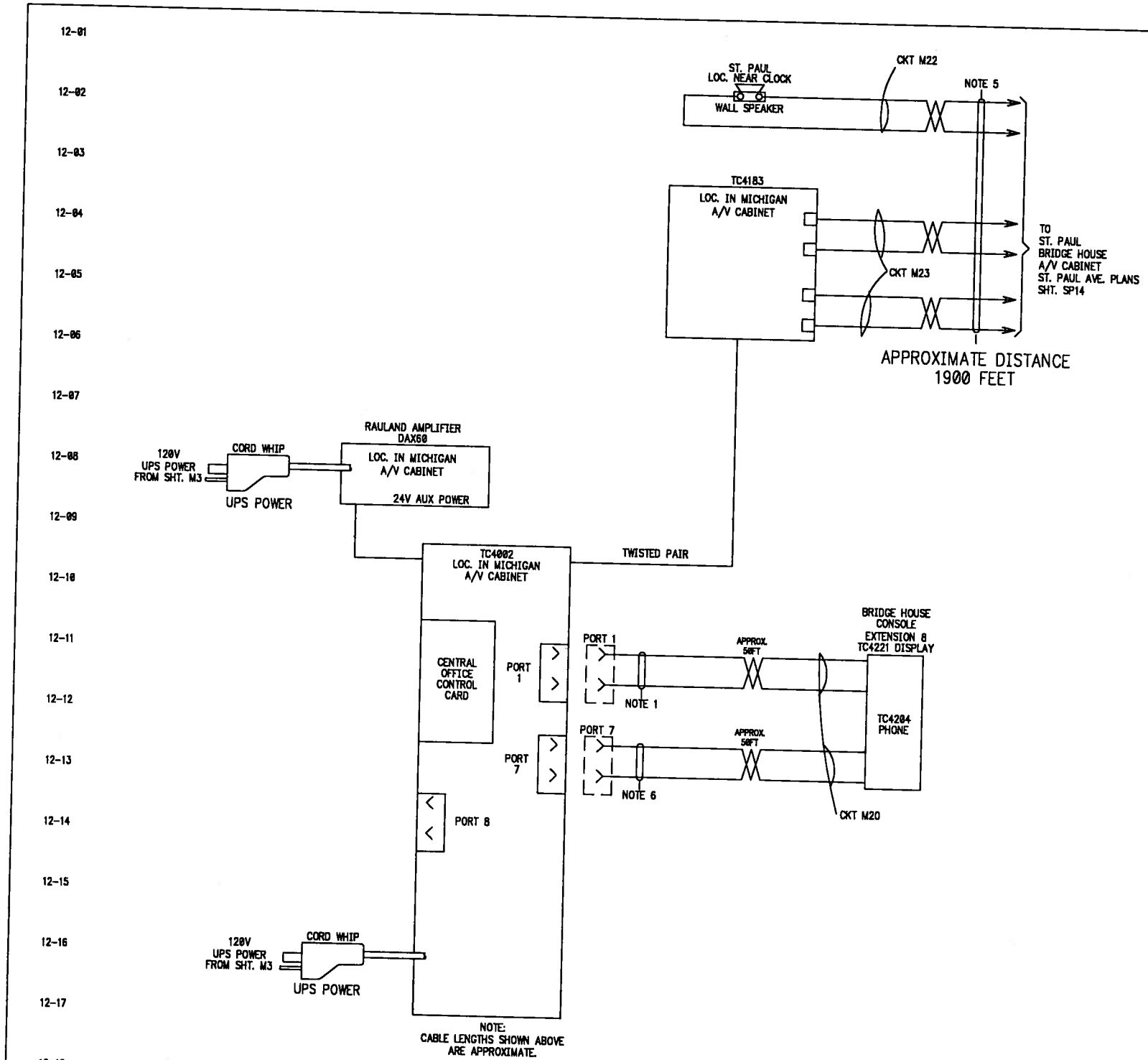

NOTE 1 : 4-PAIR CABLE LUCENT CM-00424BAB-3 OR EQUIV. (3000 FT. MAXIMUM DISTANCE)

NOTE 2 : 12-PAIR CABLE LUCENT CM-01224BAB-2 OR EQUIV. (3000 FT. MAXIMUM DISTANCE)

NOTE 3 : BELDEN #8760 CABLE OR EQUIV. (3000 FT. MAXIMUM DISTANCE)

NOTE 4 : SIEMENS 50H3-607 (9-PAIR 16 GA.)

NOTE 5 : ANIXTER 323-231-1603 (3-PR 16 GA.)

NOTE 6 : 20 GA. TWISTED PAIR UNSHIELDED CABLE (3000 FT. MAXIMUM DISTANCE)

GENERAL NOTE:
M# = CIRCUIT NUMBER FOR MICHIGAN BRIDGE
WHERE # = ID NUMBER OF CIRCUIT.
SP# = CIRCUIT NUMBER FOR ST. PAUL BRIDGE
WHERE # = ID NUMBER OF CIRCUIT.

REV.	DESC. OF CHANGE	DATE	PROJ. #
1	NO CHANGE	5-19-06	349-051
2	NO CHANGE	5-19-06	349-051
3	AS INSTALLED	5-19-06	349-051

ENGINEERING SPECIALISTS, INC.
BROOKFIELD, WI. 53045-5119
NEENAH, WI. 54956

DR. BY ES	CITY OF MILWAUKEE, WI.
DATE 10/21/02	MICHIGAN BRIDGE
REV. 3	REMOTE CONTROL
SCALE NTS	349-051
SHT. 18 OF 46	

MICHIGAN BRIDGE
AUDIO EQUIPMENT
WIRING DETAILS

SHEET M12 OF 17

E-S 349-051

City of Milwaukee

Department of Public Works

Infrastructure Services Division

WISCONSIN
ROBERT R. MILLER
E-14028
WAUWATOSA, WIS.
PROFESSIONAL ENGINEER

VERTICAL LIFT BRIDGE
REMOTE CONTROL

MICHIGAN BRIDGE
AUDIO EQUIPMENT
WIRING DETAILS

REVISIONS

DESIGNED BY T.G.

DRAWN BY D.K.

CHECKED BY T.G.

DATE 10/21/02

SCALE NONE

JOB NUMBER BR10090124

SHEET NUMBER 18

OF 46

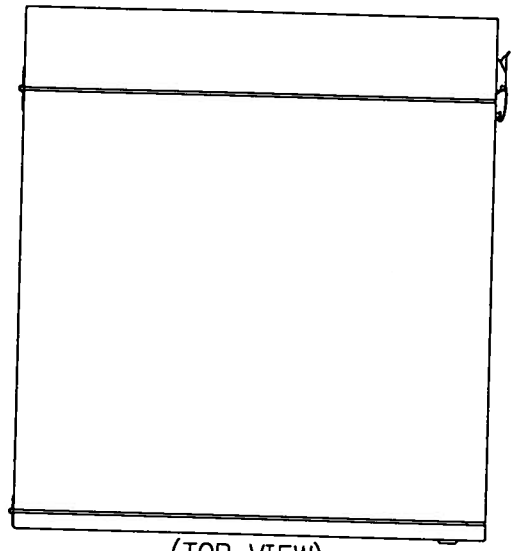

(TOP VIEW)

MICHIGAN ST. – NEAR SIDE
AUDIO/VIDEO
EQUIPMENT
ENCLOSURE

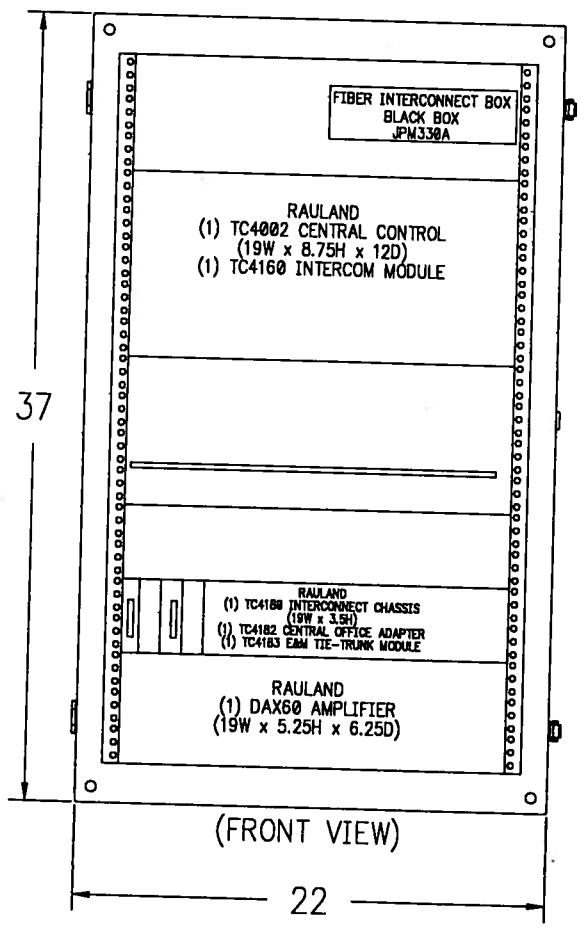

(FRONT VIEW)

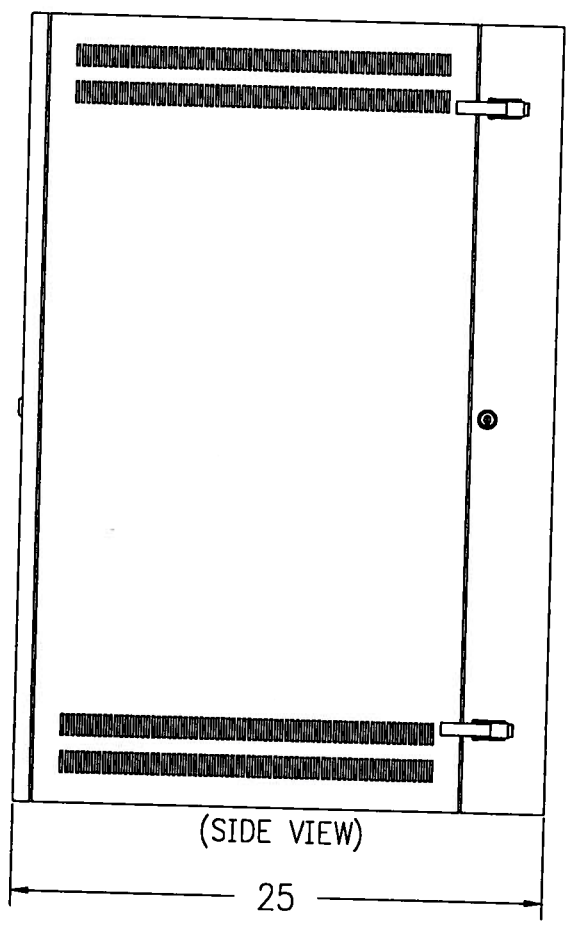

(SIDE VIEW)

BEST FERRUPS UPS
FER1.8KVA
(19W x 10.5H x 26.25D)

AUDIO/VIDEO
EQUIPMENT
LOC. OUTSIDE OF ENCL.

City of Milwaukee

Department of Public Works

Infrastructure Services Division

WISCONSIN
ROBERT R. MILLER
E-14028
WAUWATOSA, WIS
PROFESSIONAL ENGINEER

VERTICAL LIFT BRIDGE
REMOTE CONTROL

MICHIGAN ST. BRIDGE
AUDIO/VIDEO EQUIPMENT
ENCLOSURE DETAIL

REVISIONS

REV.	DESC. OF CHANGE	DATE	PROJ. #
1	NO CHANGE	5-19-08	349-051
2	NO CHANGE	5-19-08	349-051
3	AS INSTALLED	5-19-08	349-051

ENGINEERING SPECIALISTS, INC.
BROOKFIELD, WI 53005-5119
NEENAH, WI. 54956

DR. BY ES	CITY OF MILWAUKEE, WI.
DATE 10/21/02	MICHIGAN BRIDGE
REV. 3	REMOTE CONTROL
SCALE NTS	349-051
SHT. 19 OF 46	

MICHIGAN ST. BRIDGE
AUDIO/VIDEO EQUIPMENT
ENCLOSURE DETAIL

SHEET M13 OF 17

E-S 349-051

DESIGNED BY	T.G.
DRAWN BY	D.K.
CHECKED BY	T.G.
DATE 10/21/02	SCALE NONE
JOB NUMBER	BR10090124
SHEET NUMBER	19
OF	46

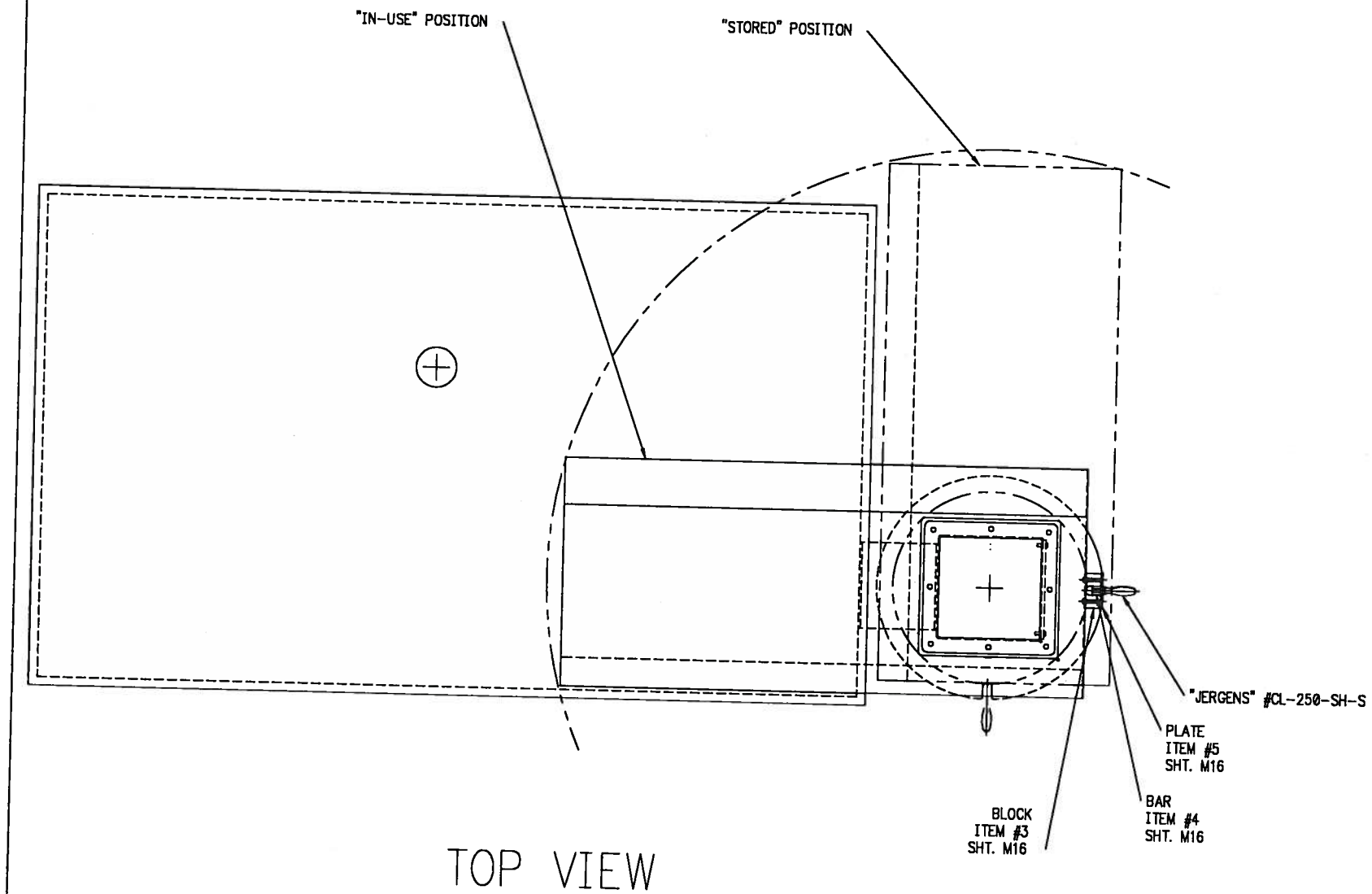

TOP VIEW

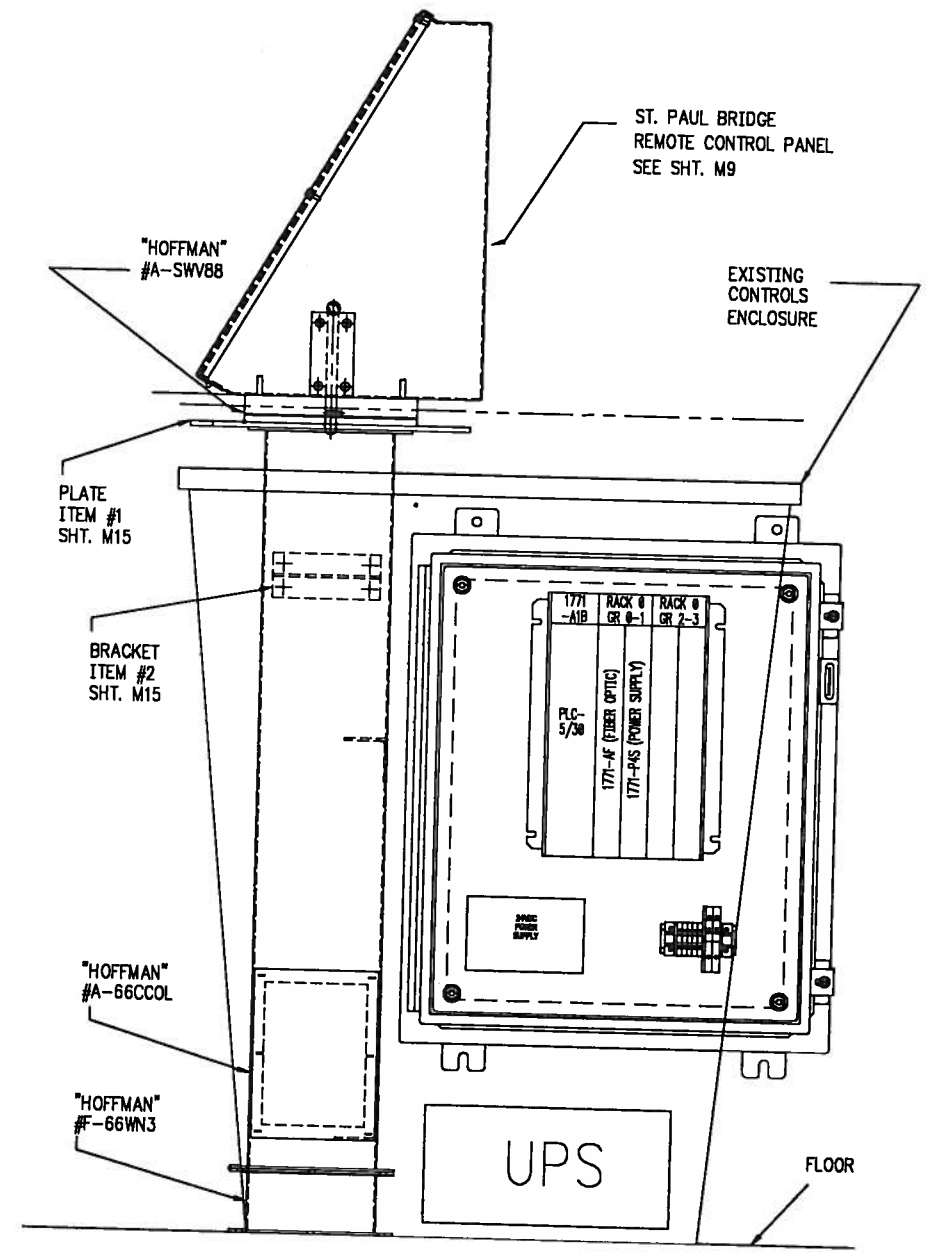

SIDE VIEW

City of Milwaukee

Department of Public Works

Infrastructure Services Division

WISCONSIN
ROBERT R. MILLER
E-14078
WAUWATOSA, WIS
PROFESSIONAL ENGINEER

VERTICAL LIFT BRIDGE
REMOTE CONTROL

MICHIGAN ST.
BRIDGE HOUSE
SWIVEL PEDESTAL ASSEMBLY

REVISIONS

REV.	DESC. OF CHANGE	DATE	PROJ. #
1	NO CHANGE	5-19-08	349-051
2	NO CHANGE	5-19-08	349-051
3	AS INSTALLED	5-19-08	349-051

ENGINEERING SPECIALISTS, INC.
BROOKFIELD, WI. 53045-3119
NEENAH, WI. 54956

DR. BY ES
DATE 10/21/02
REV. 3
SCALE NTS
SHT. 20 OF 46

CITY OF MILWAUKEE, WI.
MICHIGAN ST. BRIDGE
REMOTE CONTROL

349-051

MICHIGAN ST.
BRIDGE HOUSE
SWIVEL PEDESTAL
ASSEMBLY

SHEET M14 OF 17

ES 349-051

DESIGNED BY T.G./E.N.
DRAWN BY E.N.
CHECKED BY T.G.
DATE 10/21/02
SCALE 1:4
JOB NUMBER BR10090124
SHEET NUMBER 20
OF 46

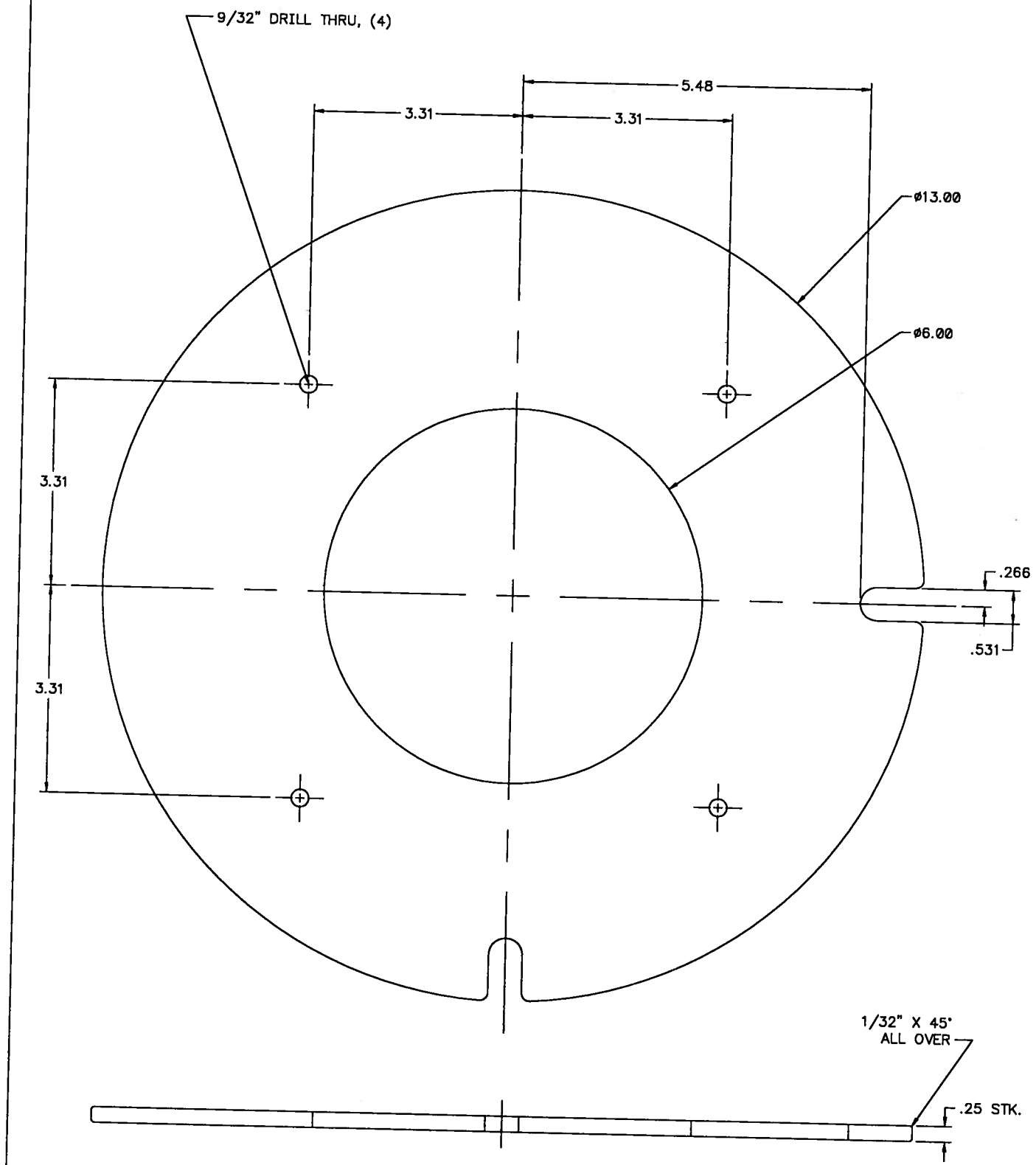

1 (1)REQ'D, MAT'L– #304 STAINLESS, #3 FINISH

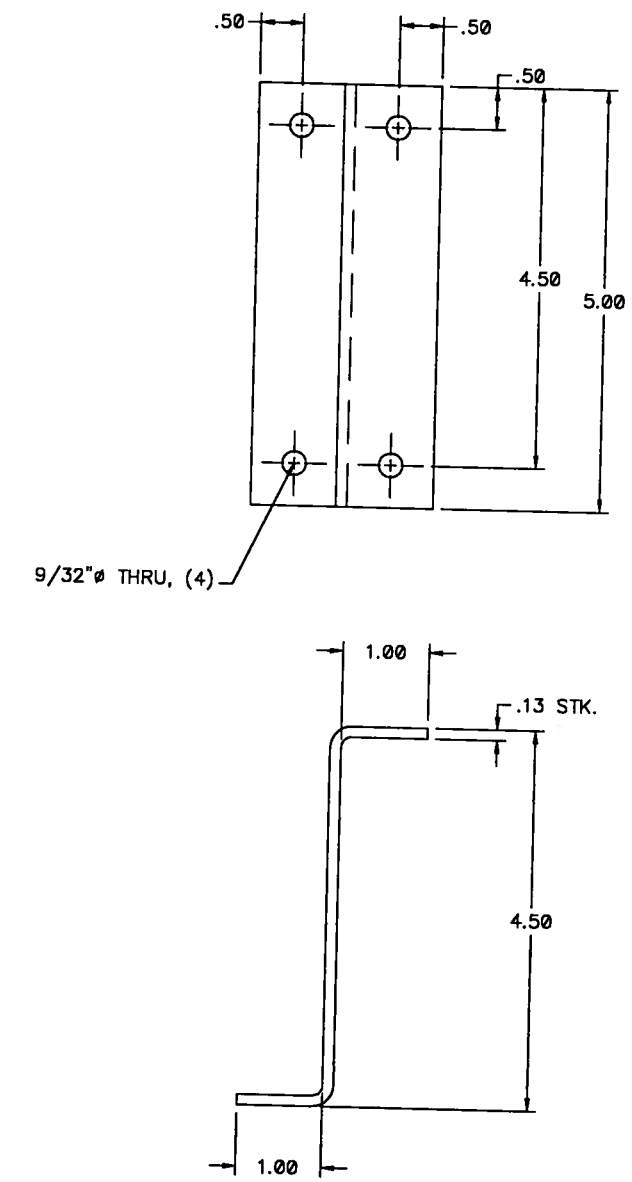

2 (1)REQ'D, MAT'L– SHEET STEEL, PAINT RAL 7008 INDUSTRIAL ENAMEL

City of Milwaukee

Department of Public Works

Infrastructure Services Division

WISCONSIN ROBERT R. MILLER E-14028 WAUWATOSA, WIS. PROFESSIONAL ENGINEER

VERTICAL LIFT BRIDGE REMOTE CONTROL

MICHIGAN ST. BRIDGE HOUSE SWIVEL PEDESTAL DETAILS

REVISIONS

REV.	DESC. OF CHANGE	DATE	PROJ. #
1	NO CHANGE	5-19-08	349-051
2	NO CHANGE	5-19-08	349-051
3	AS INSTALLED	5-19-08	349-051

ENGINEERING SPECIALISTS, INC. BROOKFIELD, WI. 53045-5110 NEENAH, WI. 54956

DR. BY ES | CITY OF MILWAUKEE, WI.
DATE 10/21/02 | MICHIGAN ST. BRIDGE
REV. 3 | REMOTE CONTROL
SCALE NTS | 349-051
SHT. 21 OF 46

MICHIGAN ST. BRIDGE HOUSE SWIVEL PEDESTAL DETAILS

SHEET M15 OF 17

ES 349-051

DESIGNED BY T.G./E.N.
DRAWN BY E.N.
CHECKED BY T.G.
DATE 10/21/02
SCALE 1:4
JOB NUMBER BR10090124
SHEET NUMBER 21
OF 46

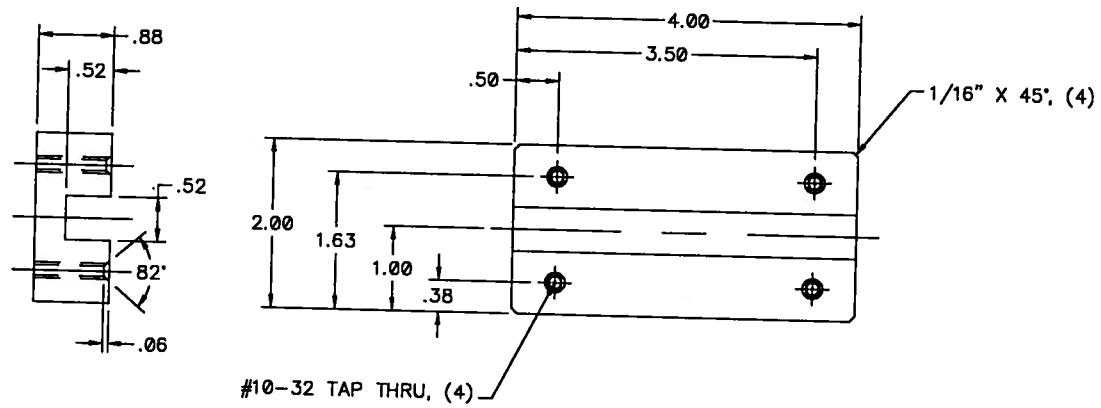

3 (1)REQ'D, MAT'L- #304 STAINLESS, #3 FINISH

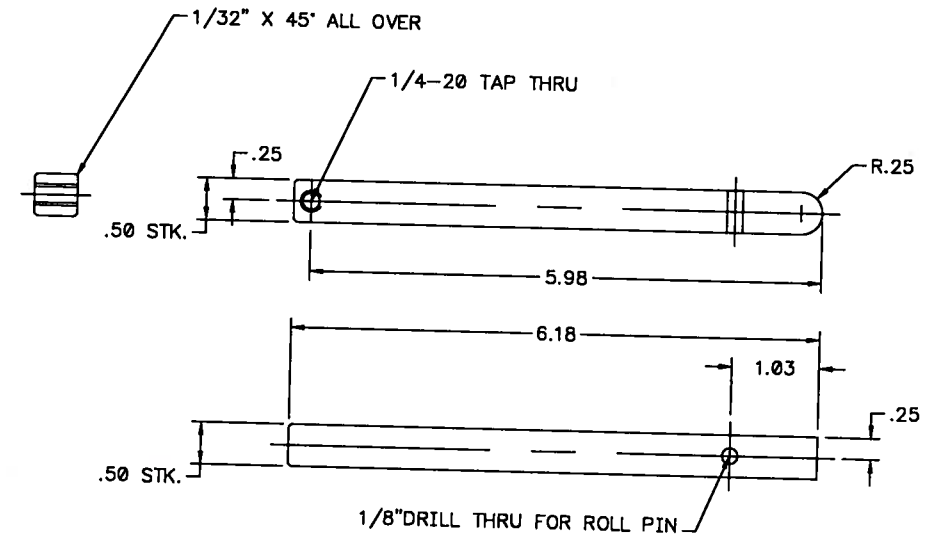

4 (1)REQ'D, MAT'L- #304 STAINLESS, #3 FINISH

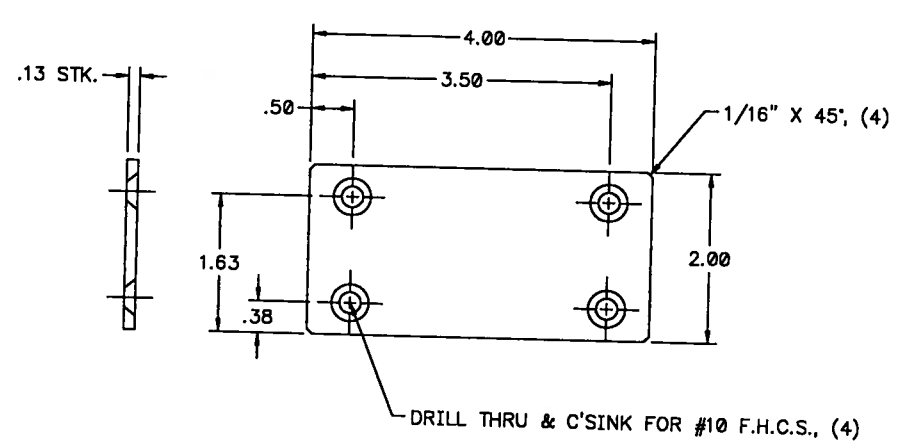

5 (1)REQ'D, MAT'L- #304 STAINLESS, #3 FINISH

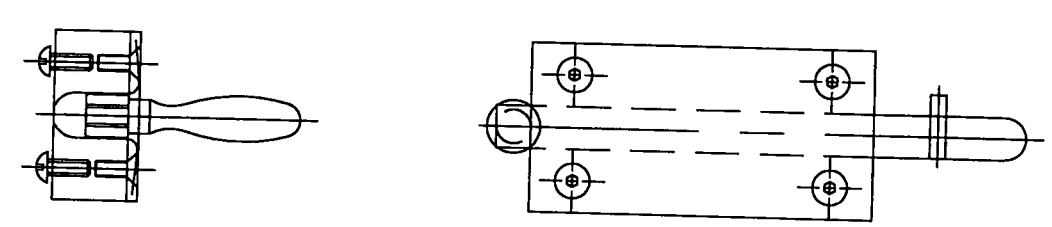

City of Milwaukee

Department of Public Works

Infrastructure Services Division

WISCONSIN ROBERT R MILLER E-14028 WAUWATOSA, WIS PROFESSIONAL ENGINEER

VERTICAL LIFT BRIDGE REMOTE CONTROL

MICHIGAN ST. BRIDGE HOUSE SWIVEL PEDESTAL DETAILS

REVISIONS

REV.	DESC. OF CHANGE	DATE	PROJ. #
1	NO CHANGE	5-19-08	349-051
2	NO CHANGE	5-19-08	349-051
3	AS INSTALLED	5-19-08	349-051

ENGINEERING SPECIALISTS, INC. BROOKFIELD, WI. 53045-5110 NEKOOSA, WI. 54457

DR. BY ES
DATE 10/21/02
REV. 3
SCALE NTS
SHT. 22 OF 46

CITY OF MILWAUKEE, WI.
MICHIGAN ST. BRIDGE
REMOTE CONTROL
349-051

MICHIGAN ST. BRIDGE HOUSE SWIVEL PEDESTAL DETAILS

SHEET M16 OF 17

ES 349-051

DESIGNED BY T.G./E.N.
DRAWN BY E.N.
CHECKED BY T.G.
DATE 10/21/02
SCALE 1:4
JOB NUMBER BR10090124
SHEET NUMBER 22
OF 46

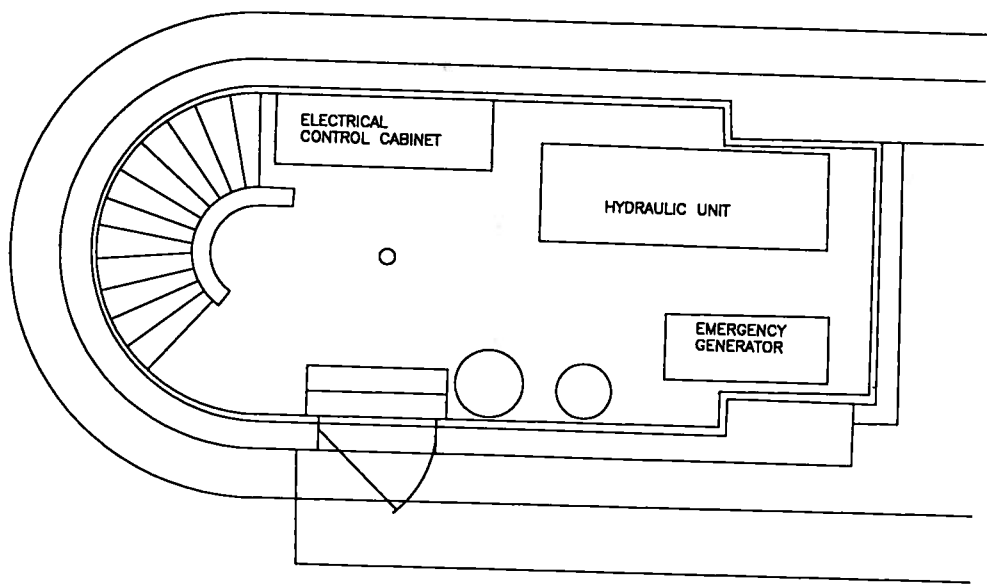

SCALE 3/8"=1'-0"

UTILITY ROOM PLAN EL. +2.67

SCALE 3/8"=1'-0"

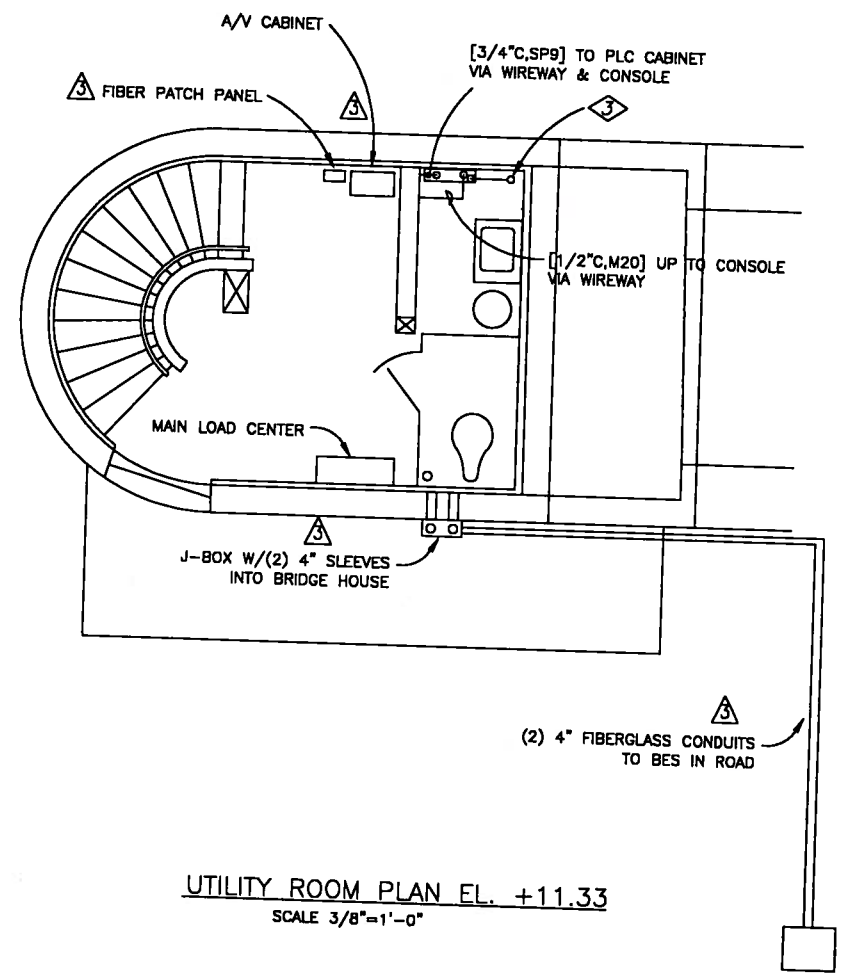

UTILITY ROOM PLAN EL. +11.33

SCALE 3/8"=1'-0"

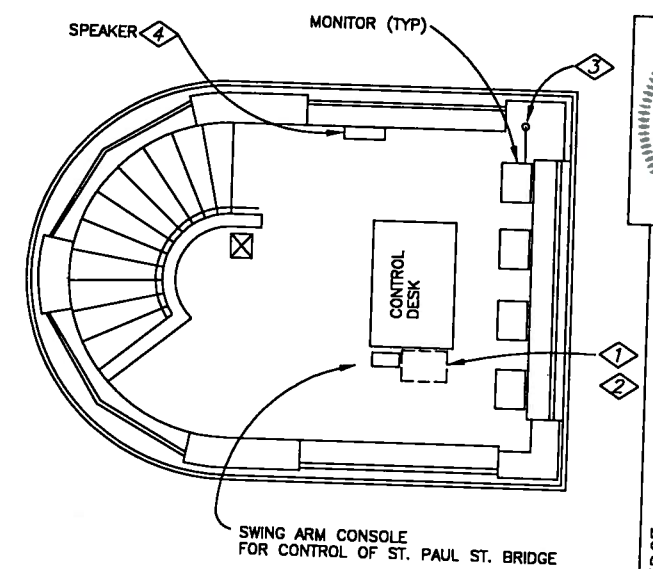

CONTROL ROOM PLAN EL. +20.00

SCALE 3/8"=1'-0"

PLAN NOTES ◇

1. UPS UNDER PLC CABINET & CONSOLE SWING ARM. PROVIDE [3/4"C,2#12,1#12 GND] IN FLEXIBLE METALIC CONDUIT TO PANEL B IN CONSOLE.
2. [3/4"C,2#12,1#12 GND] FROM UPS TO QUAD RECEPT IN PLC CABINET, LOCATED ON TOP OF UPS.
3. [3/4"C,M10] UP THRU FLOOR AT CORNER TO CEILING OF CONTROL ROOM AND TO EACH MONITOR
4. SPEAKER FOR ST PAUL, ROUTE [1/2"C,M22] DOWN TO THE LOWER LEVEL VIA A/V CABINET FOR EXTENSION TO ST. PAUL BRIDGE. USE SURFACE MOUNTED RACEWAY IN CONTROL ROOM & UTILITY ROOM.

REV.	DESC. OF CHANGE	DATE	PROJ #
1	NO CHANGE	5-19-06	349-051
2	NO CHANGE	5-19-06	349-051
3	AS INSTALLED	5-19-06	349-051

ENGINEERING SPECIALISTS, INC.
BROOKFIELD, WI. 53045-5108
NEENAH, WI. 54956

DR. BY ES
DATE 10/21/02
REV. 3
SCALE NTS
SHT. 23 OF 46

CITY OF MILWAUKEE
MICHIGAN ST. BRIDGE
REMOTE CONTROL

349-051

MICHIGAN ST. BRIDGE ELECTRICAL PLAN BRIDGE HOUSE

SHEET M17 OF 17

ES 349-051

City of Milwaukee

Department of Public Works

Infrastructure Services Division

WISCONSIN ROBERT R. MILLER E-11428 WAUWATOSA, WIS PROFESSIONAL ENGINEER

VERTICAL LIFT BRIDGE REMOTE CONTROL

MICHIGAN ST. BRIDGE ELECTRICAL PLAN BRIDGE HOUSE

REVISIONS

DESIGNED BY DAF

DRAWN BY DAF

CHECKED BY T.G.

DATE 10/21/02 | SCALE 3/8"=1'-0"

JOB NUMBER BR10090124

SHEET NUMBER 23

OF 46

ST. PAUL AVE. BRIDGE
ELECTRICAL DRAWING INDEX

ST. PAUL AVE. BRIDGE DRAWINGS

REVISION	PROJ. SHT.	SHEET	DRAWING CONTENTS
3	24	SP0	ELECTRICAL DRAWING INDEX
3	25	SP1	MAIN INCOMING & GENERATOR POWER WIRING
3	26	SP1A	MAIN POWER DISTRIBUTION WIRING
3	27	SP2	SEWAGE PUMP & GATE POWER WIRING
3	28	SP3	GATE & SPAN CONTROL WIRING
3	29	SP3A	SPAN HYDRAULIC PUMP CONTROL WIRING
3	30	SP3B	GATE SWITCH & LIGHT CONTROL WIRING
3	31	SP4	GATE, NAVIGATION & PIER LIGHT CONTROL WIRING
3	32	SP4A	WARNING BELL & TRAFFIC LIGHT CONTROL WIRING
3	33	SP5	PIER WALK & HOUSE LIGHTING & SPAN LIFT CONTROL WIRING
3	34	SP6	SLAVE RELAY, HORN, PLC & CAMERA CONTROL POWER WIRING
3	35	SP7	PLC 5/30 PROCESSOR CABLE CONNECTIONS
3	36	SP8	I/O RACK 0 MODULE GROUPS 0 THRU 3
3	37	SP9	I/O RACK 0 MODULE GROUPS 4 THRU 7
3	38	SP10	I/O RACK 1 MODULE GROUPS 0 THRU 3
3	39	SP11	REMOTE CONTROLLER ENCLOSURE
3	40	SP12	BLANK SHEET RESERVED FOR FUTURE
3	41	SP13	VIDEO EQUIPMENT WIRING DETAILS
3	42	SP14	AUDIO EQUIPMENT WIRING DETAILS
3	43	SP15	AUDIO/VIDEO EQUIPMENT ENCLOSURE DETAIL
3	44	SP16	ELECTRICAL SITE PLAN – BRIDGE
3	45	SP17	ELECTRICAL PLAN – PIERS
3	46	SP18	ELECTRICAL PLAN – BRIDGE HOUSE

"AS BUILT"

City of Milwaukee
Department of Public Works
Infrastructure Services Division

WISCONSIN
ROBERT R. MILLER
E-14028
WAUWATOSA, WIS.
PROFESSIONAL ENGINEER

VERTICAL LIFT BRIDGE REMOTE CONTROL

ST. PAUL AVE. BRIDGE ELECTRICAL DRAWING INDEX

REVISIONS

REV.	DESC. OF CHANGE	DATE	PROJ. #
1	NO CHANGE	5-19-06	349-051
2	NO CHANGE	5-19-06	349-051
3	AS INSTALLED	5-19-06	349-051

ENGINEERING SPECIALISTS, INC.
BROOKFIELD, WI. 53045-5119
NEENAH, WI. 54956

DR. BY ES
DATE 10/21/02
REV. 3
SCALE NTS
SHT. 24 OF 46

CITY OF MILWAUKEE, WI.
ST. PAUL AVE. BRIDGE
REMOTE CONTROL
349-051

ST. PAUL AVE. BRIDGE ELECTRICAL DRAWING INDEX

SHEET SP0 OF 18

349-051

DESIGNED BY T.G.
DRAWN BY D.K.
CHECKED BY T.G.
DATE 10/21/02
SCALE NONE
JOB NUMBER BR10090124
SHEET NUMBER 24
OF 46

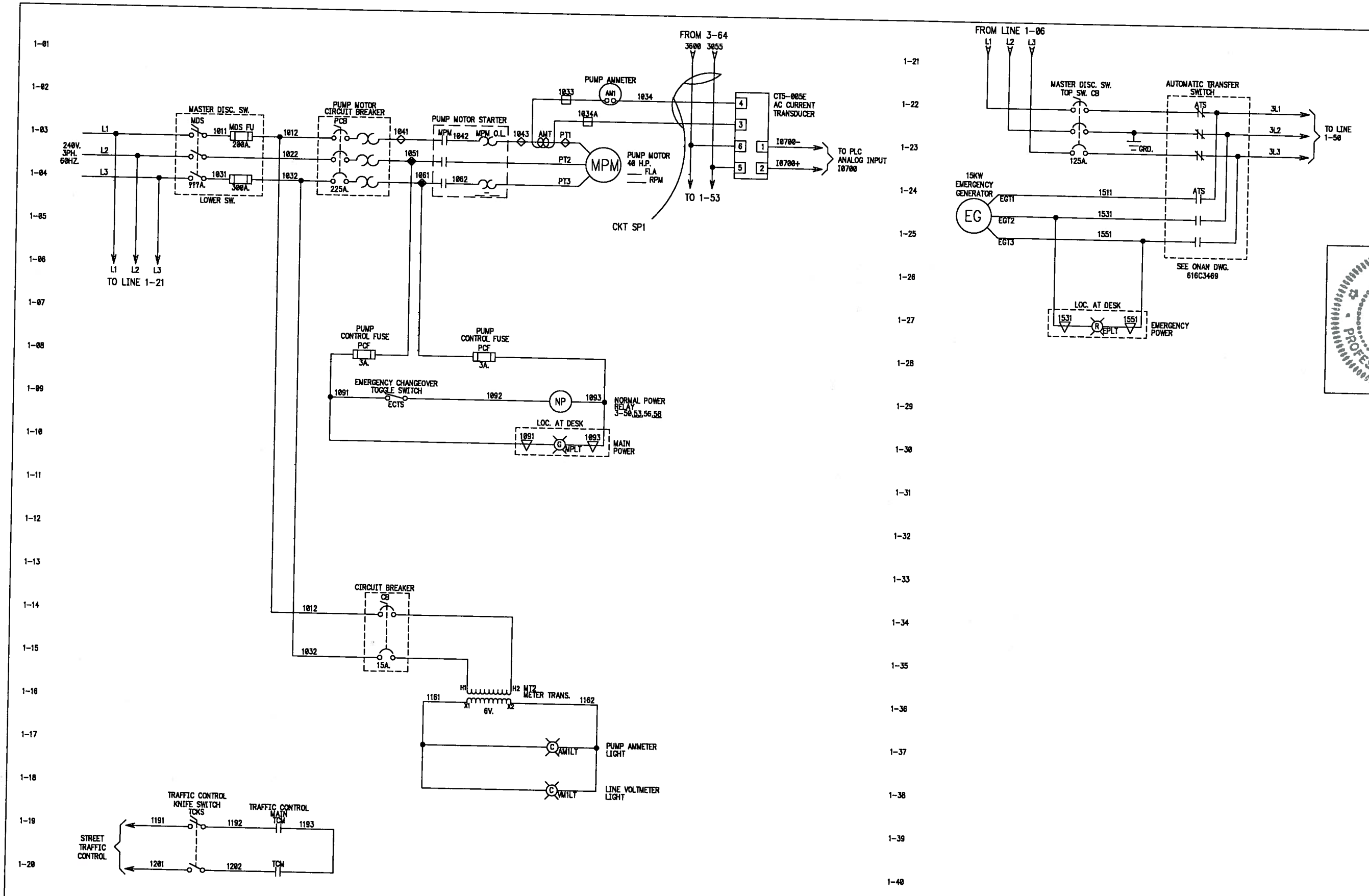

City of Milwaukee

Department of Public Works

Infrastructure Services Division

WISCONSIN
ROBERT R. MILLER
E-14028
WAUWATOSA, WIS.
PROFESSIONAL ENGINEER

VERTICAL LIFT BRIDGE REMOTE CONTROL

ST. PAUL AVE. BRIDGE MAIN INCOMING & GENERATOR POWER WIRING

REVISIONS

REV.	DESC. OF CHANGE	DATE	PROJ. #
1	NO CHANGE	5-19-06	349-051
2	NO CHANGE	5-19-06	349-051
3	AS INSTALLED	5-19-06	349-051

ENGINEERING SPECIALISTS, INC.
BROOKFIELD, WI. 53045-5118
NEENAH, WI. 54956

DR. BY ES	CITY OF MILWAUKEE, WI.
DATE 10/21/02	ST. PAUL AVE. BRIDGE
REV. 3	REMOTE CONTROL
SCALE NTS	349-051
SHT. 25 OF 46	

ST. PAUL AVE. BRIDGE MAIN INCOMING & GENERATOR POWER WIRING

SHEET SP1 OF 18

349-051

DESIGNED BY T.G.

DRAWN BY D.K.

CHECKED BY T.G.

DATE 10/21/02

SCALE NONE

JOB NUMBER BR10090124

SHEET NUMBER 25

OF 46

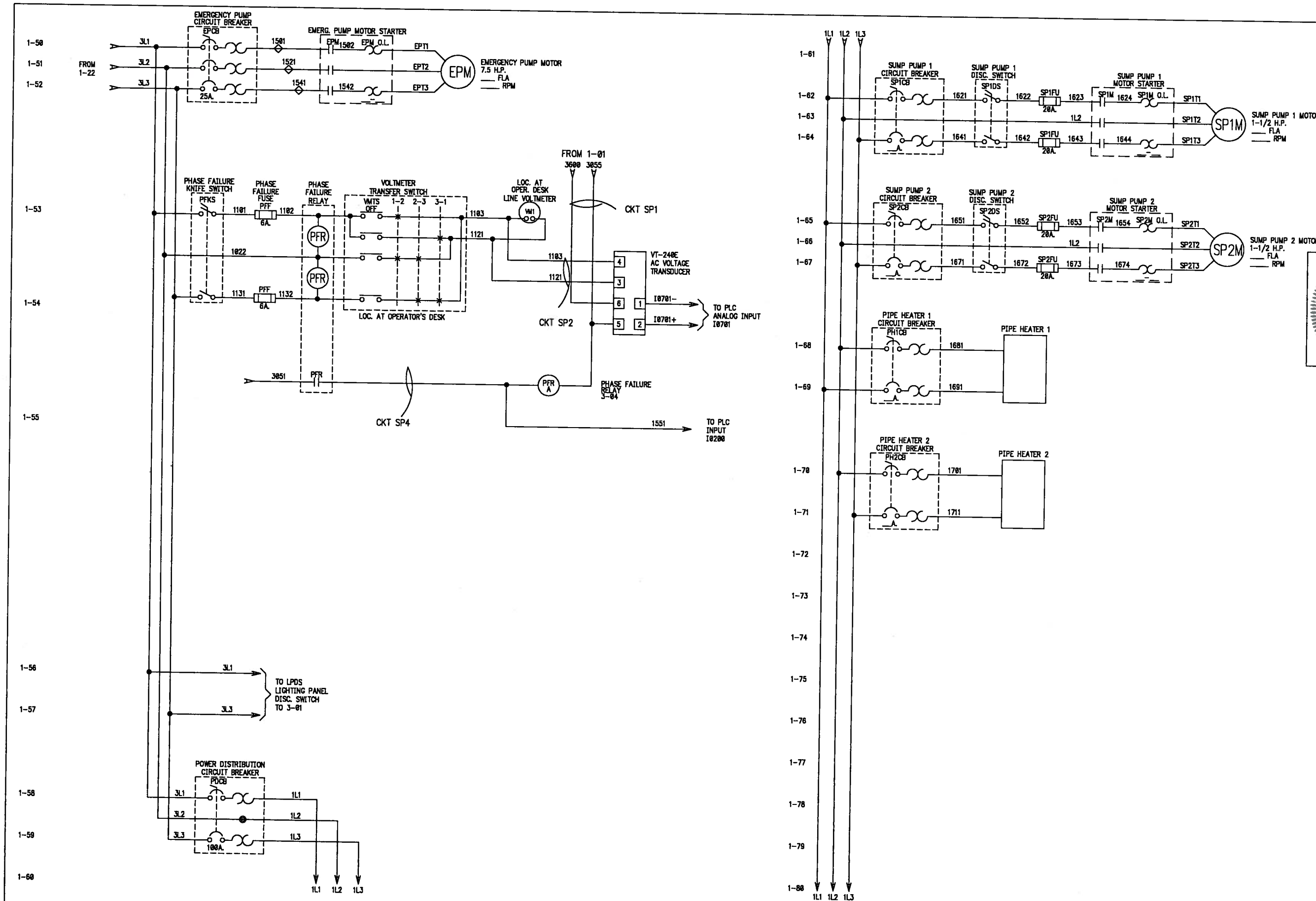

City of Milwaukee

Department of Public Works

Infrastructure Services Division

WISCONSIN ROBERT R. MILLER E-14028 WAUWATOSA, WIS. PROFESSIONAL ENGINEER

VERTICAL LIFT BRIDGE REMOTE CONTROL

ST. PAUL AVE. BRIDGE MAIN POWER DISTRIBUTION WIRING

REVISIONS

REV.	DESC. OF CHANGE	DATE	PROJ. #
1	NO CHANGE	5-19-06	349-051
2	NO CHANGE	5-19-06	349-051
3	AS INSTALLED	5-19-06	349-051

ENGINEERING SPECIALISTS, INC. BROOKFIELD, WI. 53045-5118 NEENAH, WI. 54956

DR. BY ES — CITY OF MILWAUKEE, WI.
DATE 10/21/02 — ST. PAUL AVE. BRIDGE
REV. 3 — REMOTE CONTROL
SCALE NTS — 349-051
SHT. 26 OF 46

ST. PAUL AVE. BRIDGE MAIN POWER DISTRIBUTION WIRING

SHEET SP1A OF 18

349-051

DESIGNED BY T.G.
DRAWN BY D.K.
CHECKED BY T.G.
DATE 10/21/02
SCALE NONE
JOB NUMBER BR10090124
SHEET NUMBER 26
OF 46

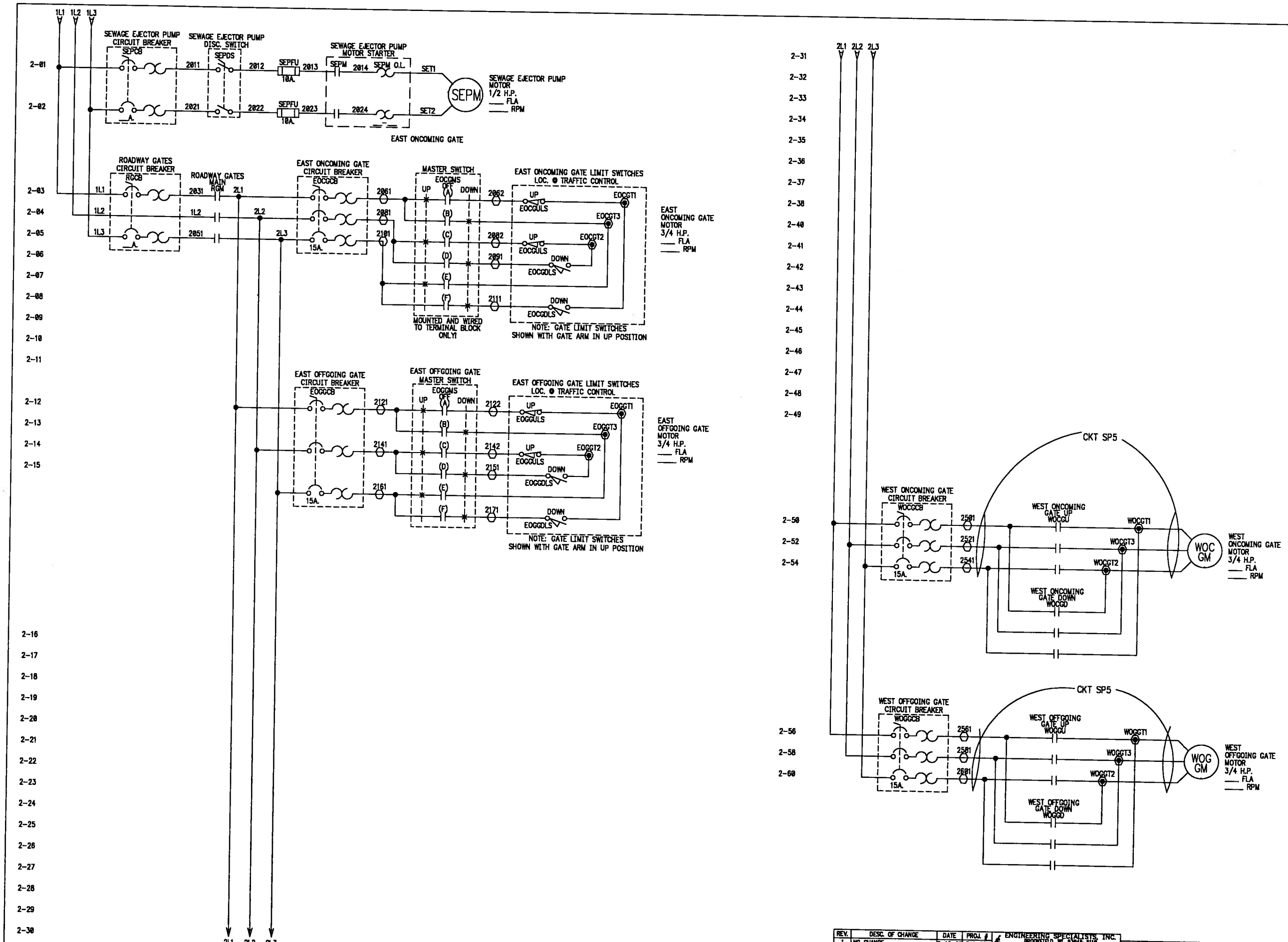

City of Milwaukee

Department of Public Works

Infrastructure Services Division

WISCONSIN ROBERT R MILLER E-14028 WAUWATOSA WIS. PROFESSIONAL ENGINEER

VERTICAL LIFT BRIDGE REMOTE CONTROL

ST. PAUL AVE. BRIDGE SEWAGE PUMP & GATE POWER WIRING

REVISIONS

REV.	DESC. OF CHANGE	DATE	PROJ. #
1	NO CHANGE	5-19-06	349-051
2	NO CHANGE	5-19-06	349-051
3	AS INSTALLED	5-19-06	349-051

ENGINEERING SPECIALISTS, INC. BROOKFIELD, WI. 53045-3118 NEENAH, WI. 54956

DR. BY ES | CITY OF MILWAUKEE, WI.
DATE 10/21/02 | ST. PAUL AVE. BRIDGE
REV. 3 | REMOTE CONTROL
SCALE NTS | 349-051
SHT. 27 OF 46

ST. PAUL AVE. BRIDGE SEWAGE PUMP & GATE POWER WIRING

SHEET SP2 OF 18

349-051

DESIGNED BY T.G.
DRAWN BY D.K.
CHECKED BY T.G.
DATE 10/21/02
SCALE NONE
JOB NUMBER BR10090124
SHEET NUMBER 27
OF 46

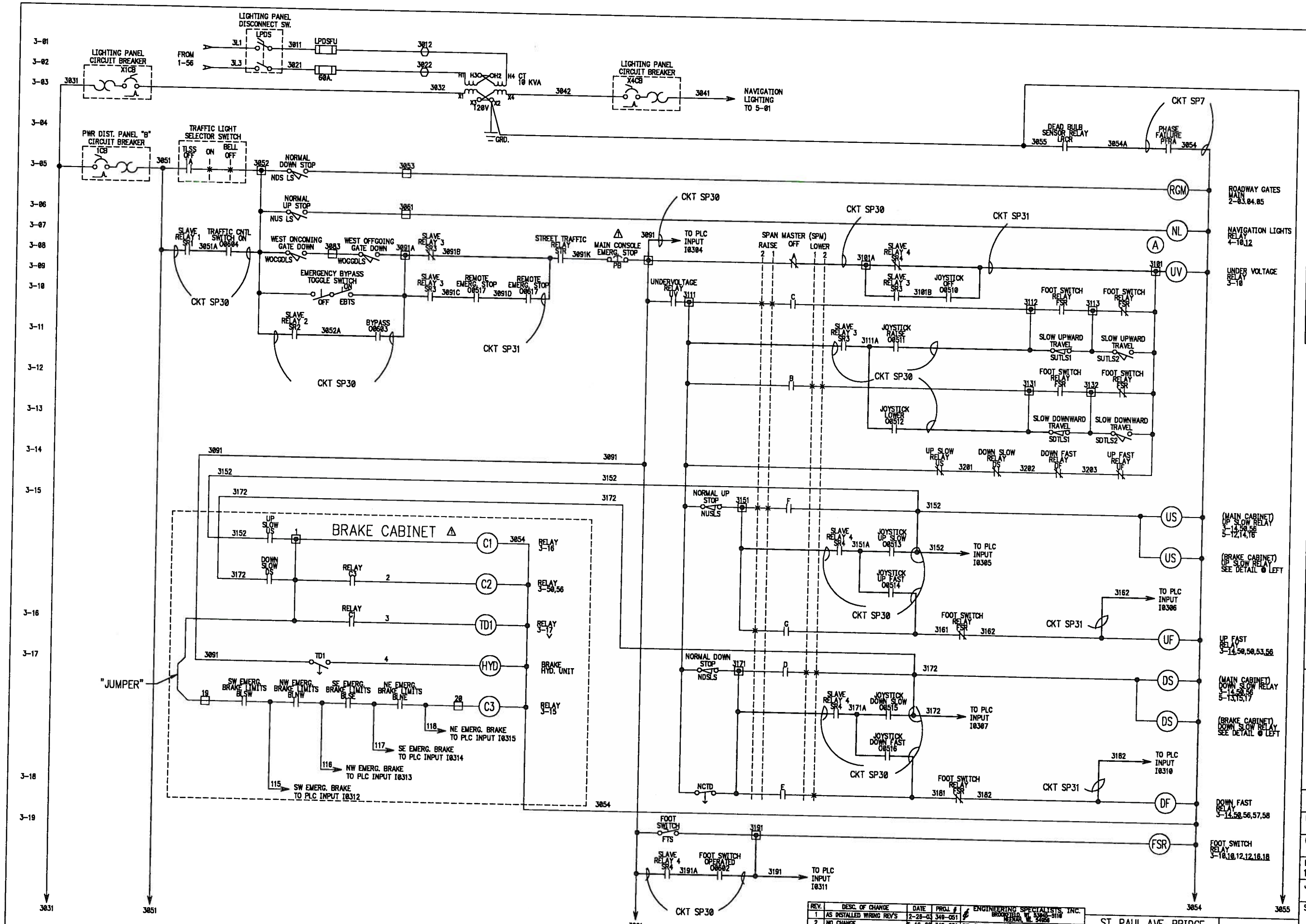

REV.	DESC. OF CHANGE	DATE	PROJ. #
1	AS INSTALLED WIRING REV'S	2-28-03	349-051
2	NO CHANGE	5-19-06	349-051
3	AS INSTALLED	5-19-06	349-051

ENGINEERING SPECIALISTS, INC.
BROOKFIELD, WI 53045-5110
NEEDAH, WI 54956

DR. BY ES	CITY OF MILWAUKEE, WI.
DATE 10/21/02	ST. PAUL AVE. BRIDGE
REV. 3	REMOTE CONTROL
SCALE NTS	349-051
SHT. 28 OF 46	

ST. PAUL AVE. BRIDGE

GATE & SPAN CONTROL WIRING

SHEET SP3 OF 18

349-051

City of Milwaukee

Department of Public Works

Infrastructure Services Division

WISCONSIN ROBERT R MILLER E-14128 WAUWATOSA WIS PROFESSIONAL ENGINEER

VERTICAL LIFT BRIDGE REMOTE CONTROL

ST. PAUL AVE. BRIDGE GATE & SPAN CONTROL WIRING

REVISIONS

1 ES AS INSTALLED WIRING REV'S

DESIGNED BY T.G.

DRAWN BY D.K.

CHECKED BY T.G.

DATE 10/21/02 SCALE NONE

JOB NUMBER BR10090124

SHEET NUMBER 28

OF 46

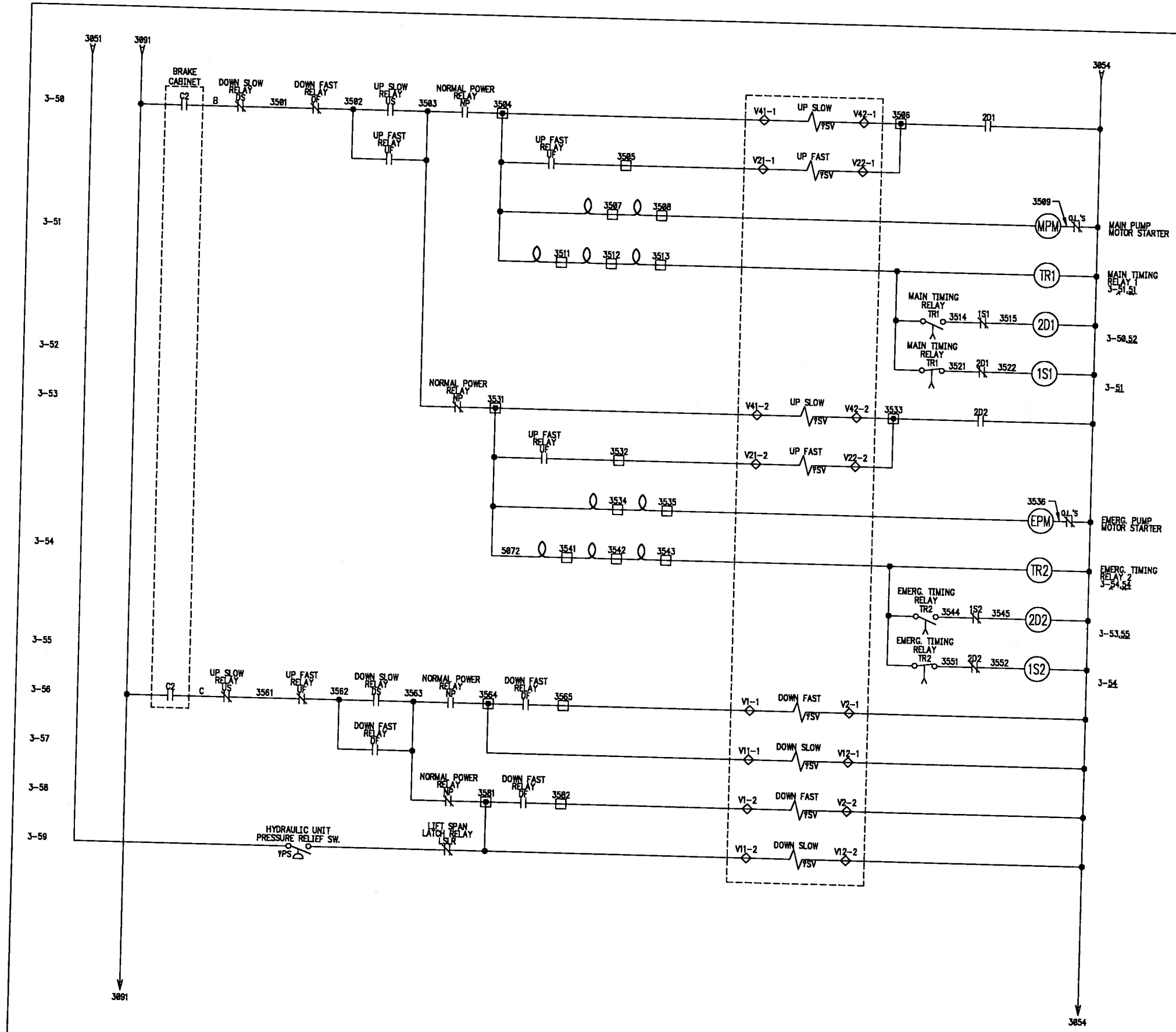

City of Milwaukee

Department of Public Works

Infrastructure Services Division

WISCONSIN ROBERT R. MILLER E-14028 WAUWATOSA, WIS. PROFESSIONAL ENGINEER

VERTICAL LIFT BRIDGE REMOTE CONTROL

ST. PAUL AVE. BRIDGE SPAN HYDRAULIC PUMP CONTROL WIRING

REVISIONS

1 ES AS INSTALLED WIRING REV.

DESIGNED BY T.G.

DRAWN BY D.K.

CHECKED BY T.G.

DATE 10/21/02 | SCALE NONE

JOB NUMBER BR10090124

SHEET NUMBER 29 OF 46

REV.	DESC. OF CHANGE	DATE	PROJ. #
1	AS INSTALLED WIRING REV.	2-26-03	349-051
2	NO CHANGE	5-19-06	349-051
3	AS INSTALLED	5-19-06	349-051

ENGINEERING SPECIALISTS, INC. BROOKFIELD, WI. 53045-3118 NEENAH, WI. 54956

DR. BY ES | DATE 10/21/02 | REV. 3 | SCALE NTS | SHT. 29 OF 48

CITY OF MILWAUKEE, WI. ST. PAUL AVE. BRIDGE REMOTE CONTROL 349-051

ST. PAUL AVE. BRIDGE SPAN HYDRAULIC PUMP CONTROL WIRING

SHEET SP3A OF 18

349-051

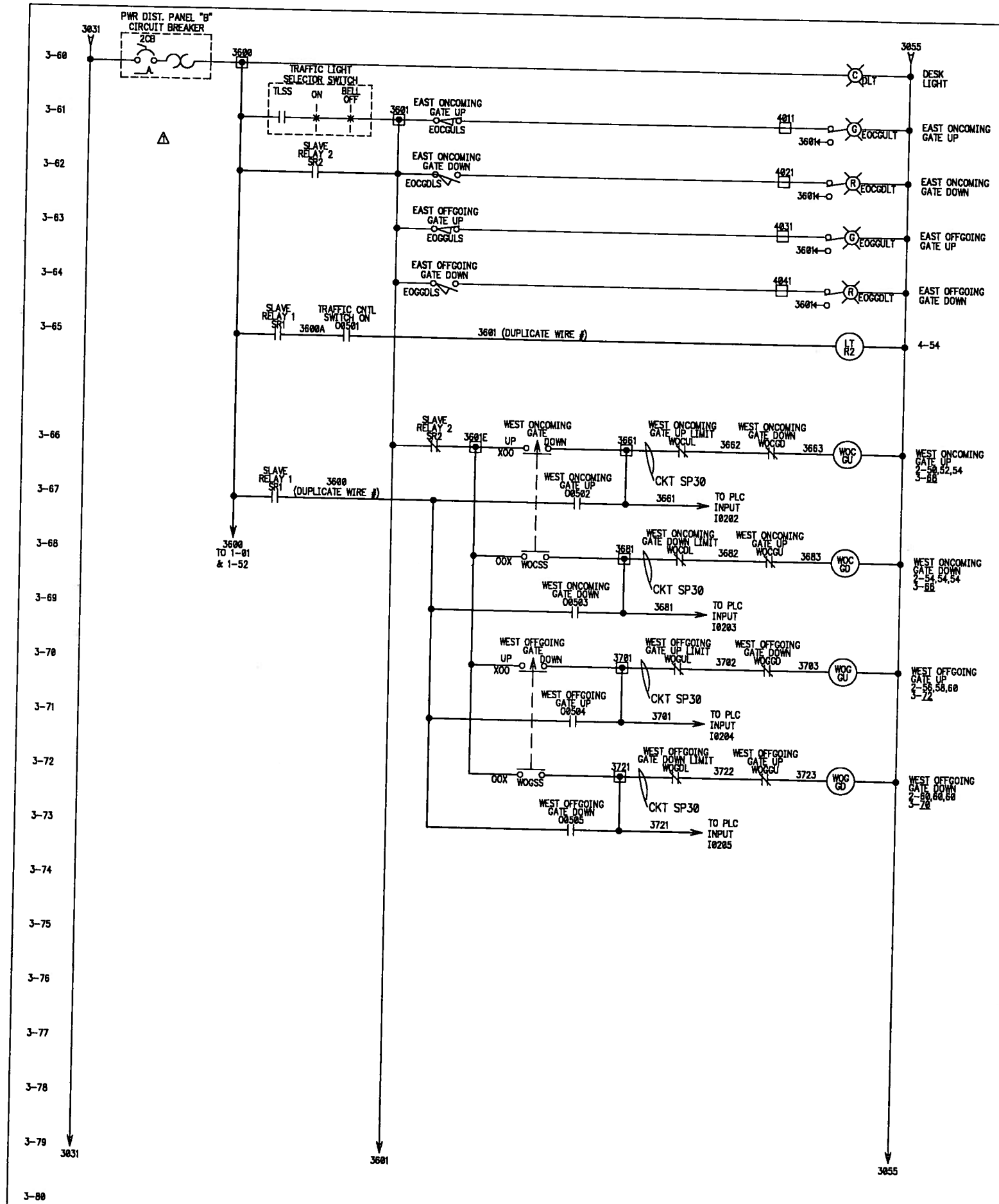

City of Milwaukee

Department of Public Works

Infrastructure Services Division

WISCONSIN ROBERT R. MILLER E-14028 WAUKESHA, WIS PROFESSIONAL ENGINEER

VERTICAL LIFT BRIDGE REMOTE CONTROL

ST. PAUL AVE. BRIDGE GATE SWITCH & LIGHT CONTROL WIRING

REVISIONS

1 ES AS INSTALLED WIRING REV'S

DESIGNED BY T.G.

DRAWN BY D.K.

CHECKED BY T.G.

DATE 10/21/02 | SCALE NONE

JOB NUMBER BR10090124

SHEET NUMBER 30 OF 46

REV.	DESC. OF CHANGE	DATE	PROJ. #
1	AS INSTALLED WIRING REV'S	2-23-03	349-051
2	NO CHANGE	5-19-06	349-051
3	AS INSTALLED	5-19-06	349-051

ENGINEERING SPECIALISTS, INC. BROOKFIELD, WI. 53045-5110 NEENAH, WI. 54956

DR. BY ES	CITY OF MILWAUKEE, WI.
DATE 10/21/02	ST. PAUL AVE. BRIDGE
REV. 3	REMOTE CONTROL
SCALE NTS	349-051
SHT. 30 OF 46	

ST. PAUL AVE. BRIDGE GATE SWITCH & LIGHT CONTROL WIRING

SHEET SP3B OF 18

349-051

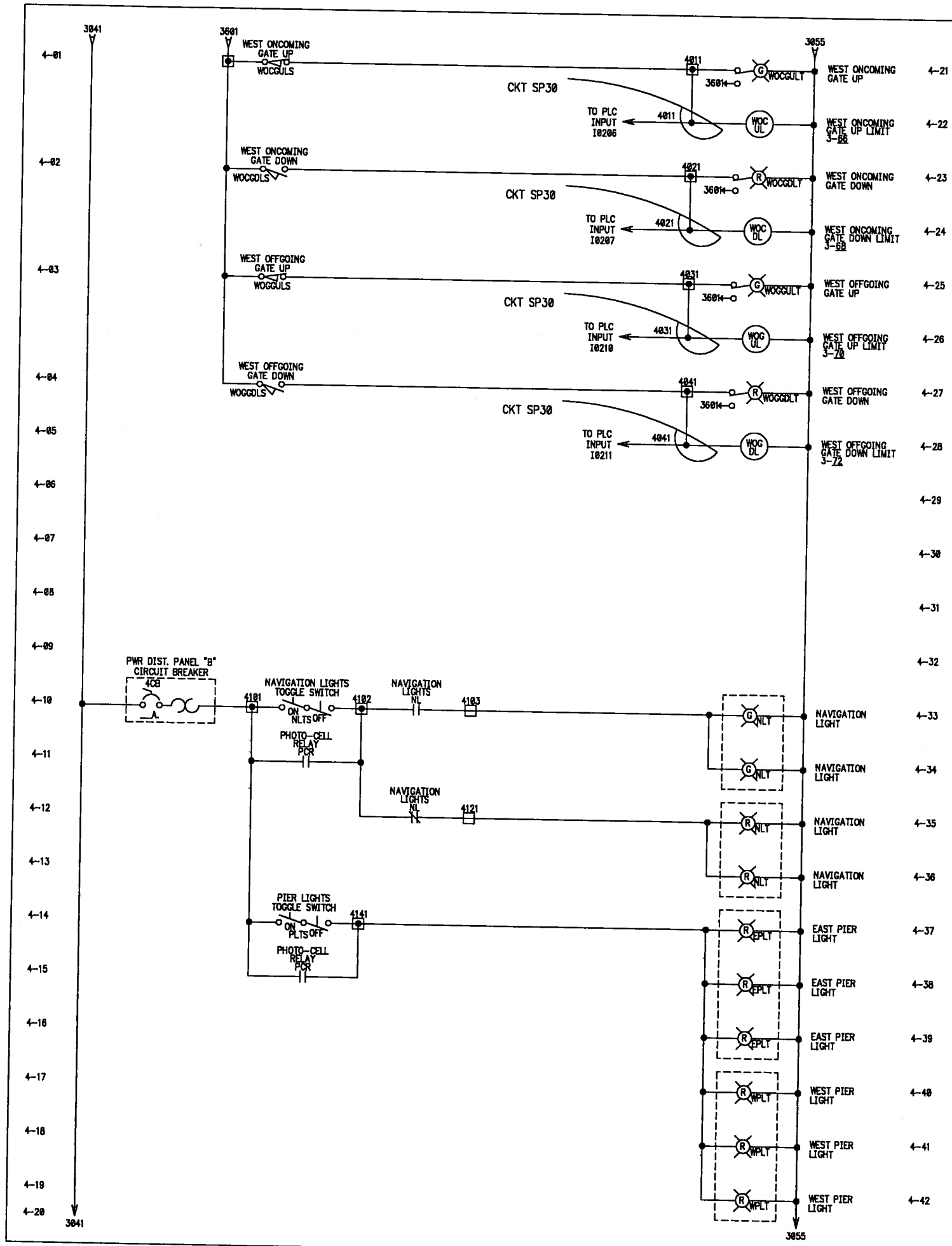

REV.	DESC. OF CHANGE	DATE	PROJ. #
1	NO CHANGE	5-19-06	349-051
2	NO CHANGE	5-19-06	349-051
3	AS INSTALLED	5-19-06	349-051

ENGINEERING SPECIALISTS, INC.
BROOKFIELD, WI. 53045-5119
NEENAH, WI. 54956

DR. BY ES	CITY OF MILWAUKEE, WI.
DATE 10/21/02	ST. PAUL AVE. BRIDGE
REV. 3	REMOTE CONTROL
SCALE NTS	349-051
SHT. 31 OF 46	

ST. PAUL AVE. BRIDGE
GATE, NAVIGATION
& PIER LIGHTS
CONTROL WIRING

SHEET SP4 OF 18

349-051

City of Milwaukee

Department of Public Works

Infrastructure Services Division

WISCONSIN
ROBERT R. MILLER
E-14028
WAUWATOSA, WIS.
PROFESSIONAL ENGINEER

VERTICAL LIFT BRIDGE
REMOTE CONTROL

ST. PAUL AVE. BRIDGE
GATE, NAVIGATION & PIER LIGHTS
CONTROL WIRING

REVISIONS

DESIGNED BY T.G.

DRAWN BY D.K.

CHECKED BY T.G.

DATE 10/21/02

SCALE NONE

JOB NUMBER BR10090124

SHEET NUMBER 31

OF 46

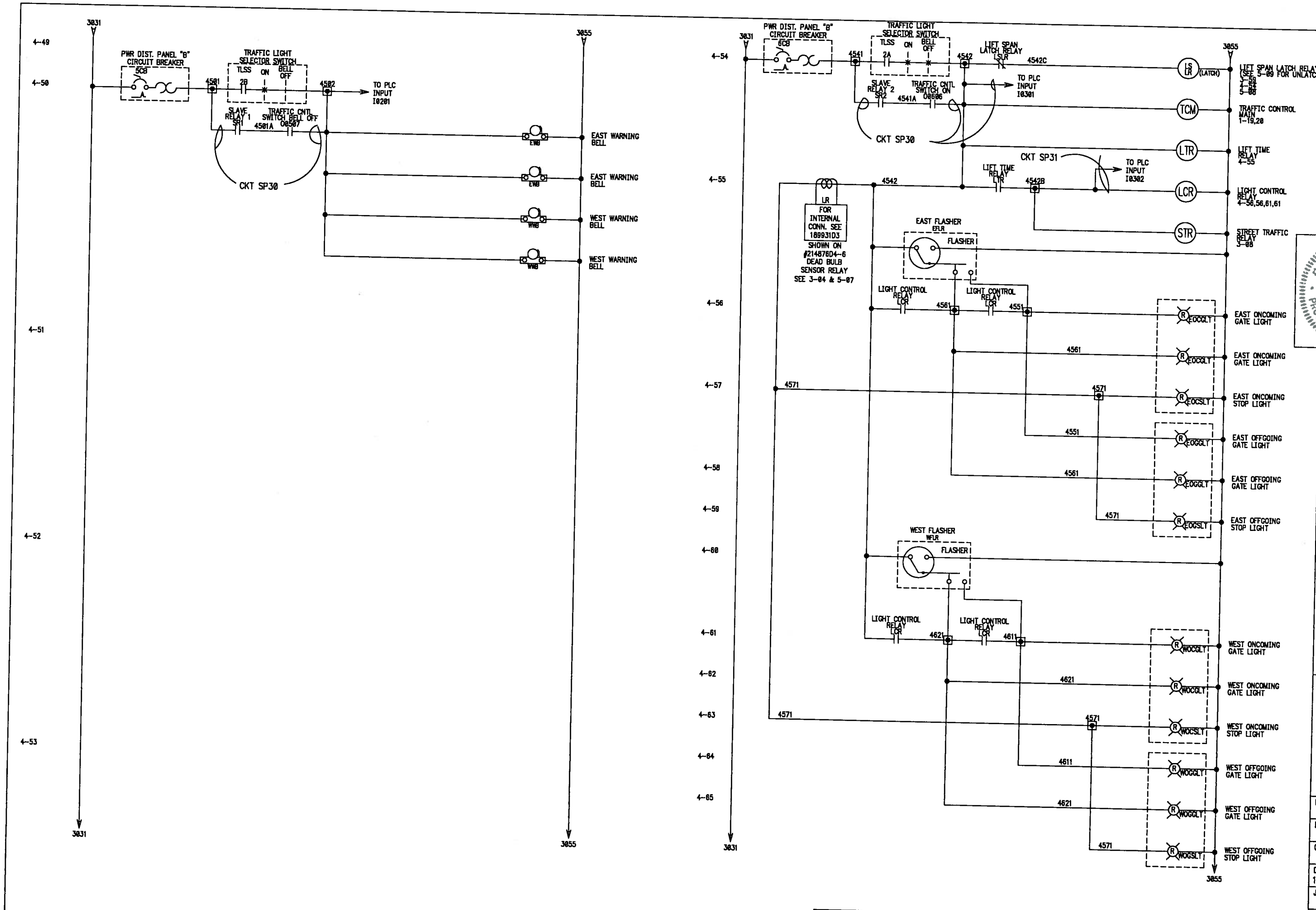

REV.	DESC. OF CHANGE	DATE	PROJ. #
1	NO CHANGE	5-19-06	349-051
2	NO CHANGE	5-19-06	349-051
3	AS INSTALLED	5-19-06	349-051

ENGINEERING SPECIALTISTS, INC.
BROOKFIELD, WI. 53045-5118
NEENAH, WI. 54956

DR. BY ES	CITY OF MILWAUKEE, WI.
DATE 10/21/02	ST. PAUL AVE. BRIDGE
REV. 3	REMOTE CONTROL
SCALE NTS	349-051
SHT. 32 OF 46	

ST. PAUL AVE. BRIDGE WARNING BELLS, STOP & GATE LIGHTS

SHEET SP4A OF 18

349-051

City of Milwaukee

Department of Public Works

Infrastructure Services Division

WISCONSIN ROBERT R. MILLER E-14028 WAUWATOSA, WIS PROFESSIONAL ENGINEER

VERTICAL LIFT BRIDGE REMOTE CONTROL

ST. PAUL AVE. BRIDGE WARNING BELLS, STOP & GATE LIGHTS

REVISIONS

DESIGNED BY	T.G.
DRAWN BY	D.K.
CHECKED BY	T.G.
DATE 10/21/02	SCALE NONE
JOB NUMBER	BR10090124
SHEET NUMBER	32
OF	46

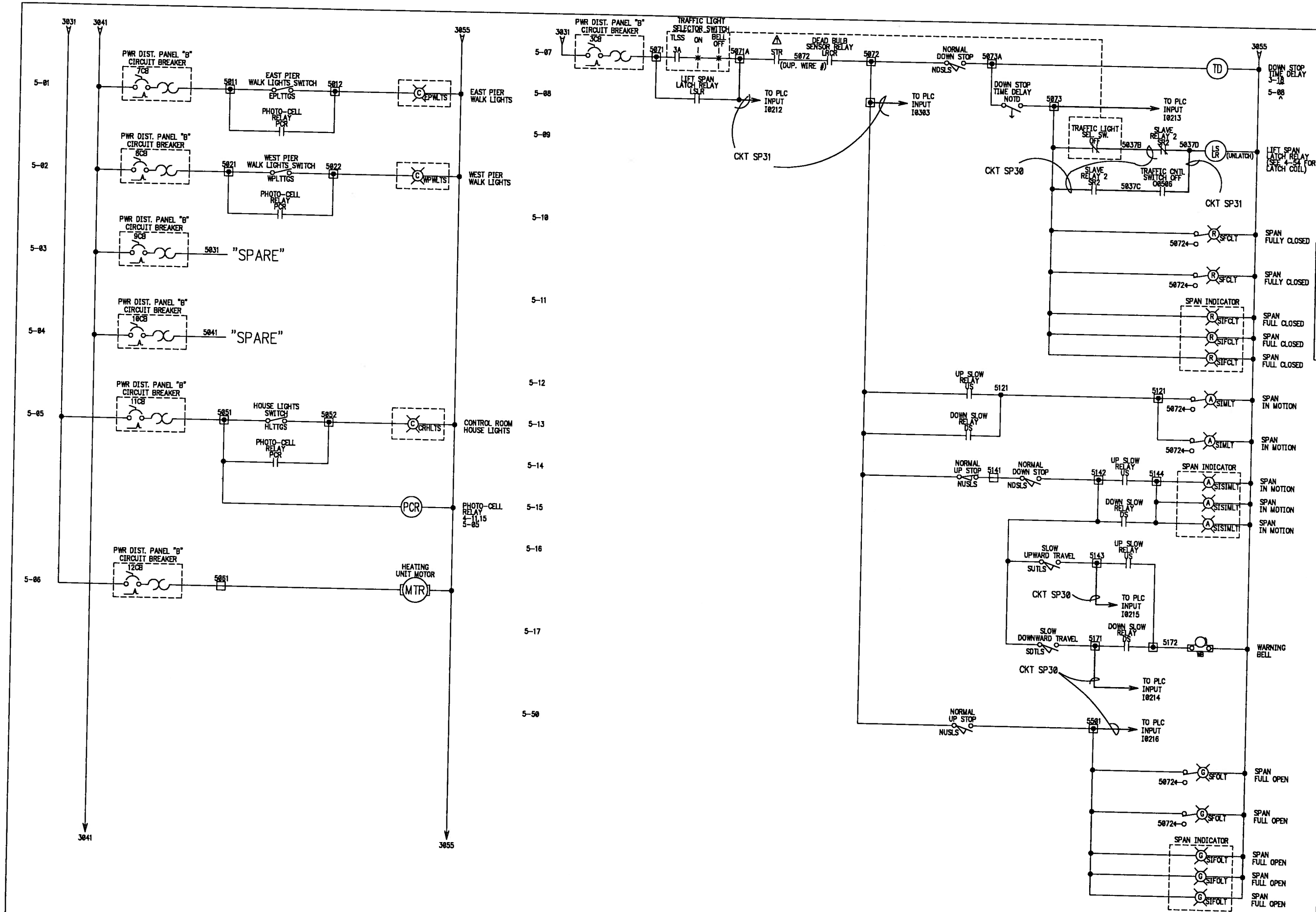

City of Milwaukee

Department of Public Works

Infrastructure Services Division

WISCONSIN ROBERT R MILLER E-30028 WAUWATOSA WIS PROFESSIONAL ENGINEER

VERTICAL LIFT BRIDGE REMOTE CONTROL

ST. PAUL AVE. BRIDGE PIER WALK & HOUSE LIGHTING & SPAN LIFT CONTROL WIRING

REVISIONS

1 ES AS INSTALLED WIRING REV

DESIGNED BY	T.G.
DRAWN BY	D.K.
CHECKED BY	T.G.
DATE 10/21/02	SCALE NONE
JOB NUMBER	BR10090124
SHEET NUMBER	33
OF	46

REV.	DESC. OF CHANGE	DATE	PROJ. #
1	AS INSTALLED WIRING REV	2-28-03	349-051
2	NO CHANGE	5-19-06	349-051
3	AS INSTALLED	5-19-06	349-051

ENGINEERING SPECIALISTS, INC. BROOKFIELD, WI. 53045-5110 NEENAH, WI. 54956

DR. BY ES — CITY OF MILWAUKEE, WI.
DATE 10/21/02 — ST. PAUL AVE. BRIDGE
REV. 3 — REMOTE CONTROL
SCALE NTS
SHT. 33 OF 46 — 349-051

ST. PAUL AVE. BRIDGE PIER WALK & HOUSE LIGHTING & SPAN LIFT CONTROL WIRING

SHEET SP5 OF 18

349-051

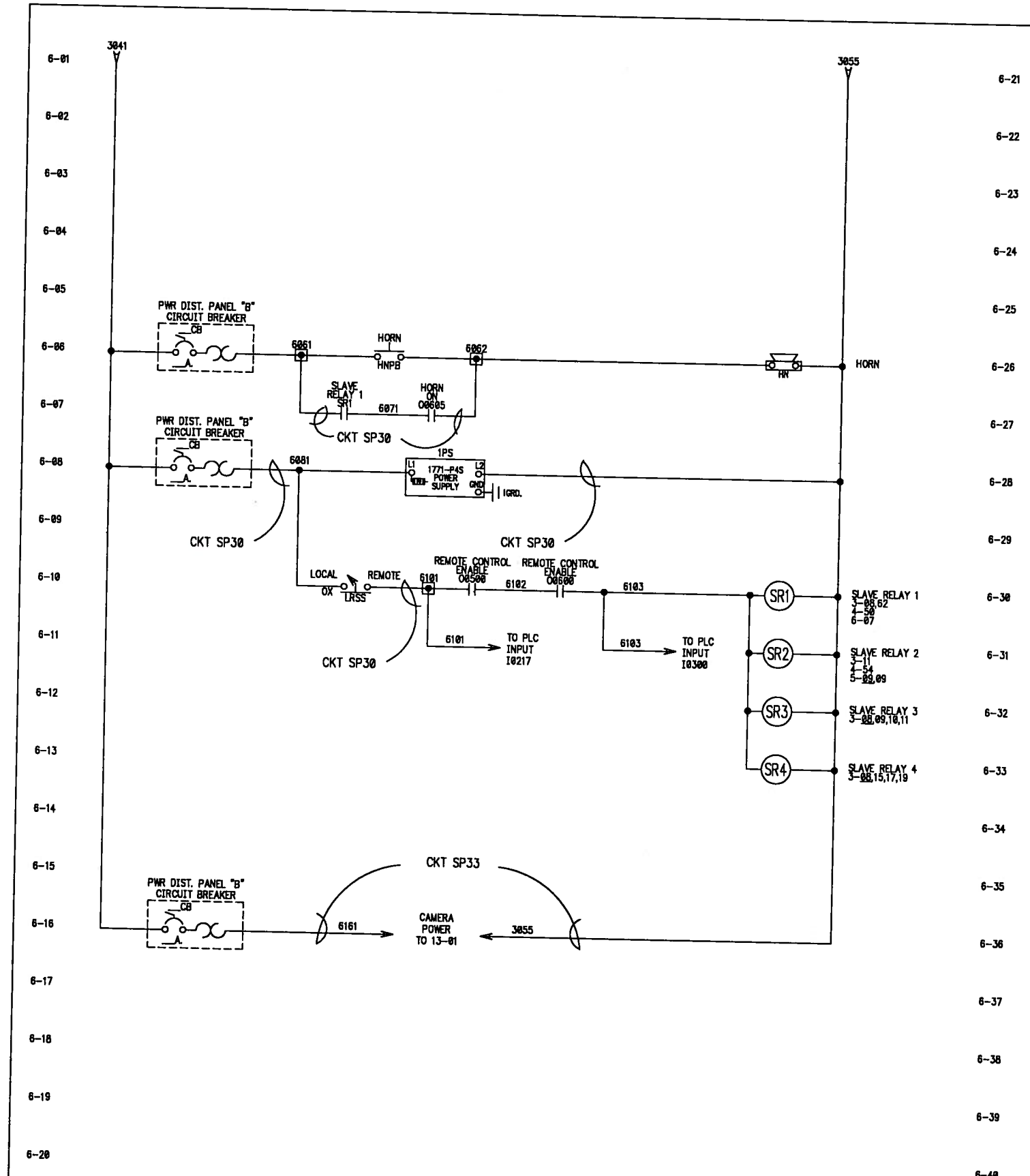

City of Milwaukee

Department of Public Works

Infrastructure Services Division

WISCONSIN
ROBERT R. MILLER
E-14028
WAUWATOSA, WIS.
PROFESSIONAL ENGINEER

VERTICAL LIFT BRIDGE
REMOTE CONTROL

ST. PAUL AVE. BRIDGE
SLAVE RELAY, HORN, PLC &
CAMERA CONTROL POWER WIRING

REVISIONS

REV.	DESC. OF CHANGE	DATE	PROJ #
1	NO CHANGE	5-19-06	349-051
2	NO CHANGE	5-19-06	349-051
3	AS INSTALLED	5-19-06	349-051

ENGINEERING SPECIALISTS, INC.
BROOKFIELD, WI. 53005-3118
NEENAH, WI. 54956

DR. BY ES	CITY OF MILWAUKEE, WI.
DATE 10/21/02	ST. PAUL AVE. BRIDGE
REV. 3	REMOTE CONTROL
SCALE NTS	349-051
SHT. 34 OF 46	

ST. PAUL AVE. BRIDGE
SLAVE RELAY, HORN, PLC
& CAMERA CONTROL
POWER WIRING

SHEET SP6 OF 18

349-051

DESIGNED BY	T.G.
DRAWN BY	D.K.
CHECKED BY	T.G.
DATE 10/21/02	SCALE NONE
JOB NUMBER	BR10090124
SHEET NUMBER	34
OF	46

7-01
7-02
7-03
7-04
7-05
7-06
7-07
7-08
7-09
7-10
7-11
7-12
7-13
7-14
7-15
7-16
7-17
7-18
7-19
7-20

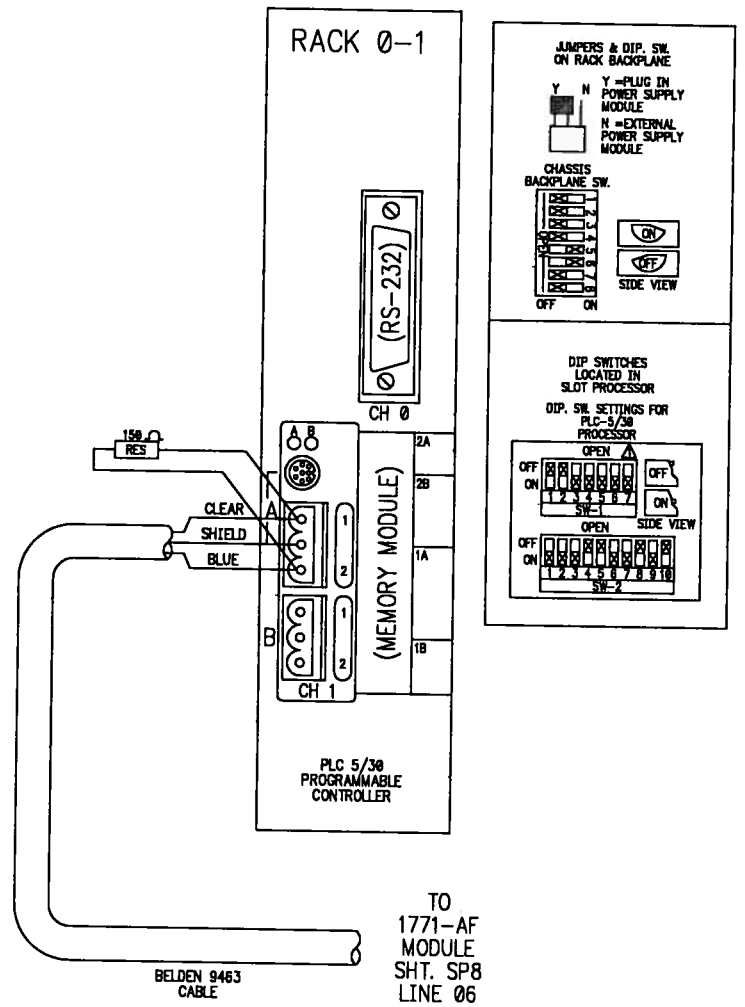

City of Milwaukee

Department of Public Works

Infrastructure Services Division

WISCONSIN
ROBERT R MILLER
E-14028
WAUWATOSA, WIS
PROFESSIONAL ENGINEER

VERTICAL LIFT BRIDGE REMOTE CONTROL

ST. PAUL AVE. BRIDGE PLC 5/30 PROCESSOR CABLE CONNECTIONS

REVISIONS

1 ES CHG. SETTING ON SW-1 SWITCH 7

DESIGNED BY T.G.

DRAWN BY D.K.

CHECKED BY T.G.

DATE 10/21/02 | SCALE NONE

JOB NUMBER BR10090124

SHEET NUMBER 35 OF 46

REV.	DESC. OF CHANGE	DATE	PROJ. #
1	CHG. SWITCH SETTING	2-26-03	349-051
2	NO CHANGE	5-19-06	349-051
3	AS INSTALLED	5-19-06	349-051

ENGINEERING SPECIALISTS, INC.
BROOKFIELD, WI 53005-5110
NEENAH, WI. 54956

DR. BY ES	CITY OF MILWAUKEE, WI.
DATE 10/21/02	ST. PAUL AVE. BRIDGE
REV. 3	REMOTE CONTROL
SCALE NTS	349-051
SHT. 35 OF 46	

ST. PAUL BRIDGE PLC 5/30 PROCESSOR CABLE CONNECTIONS

SHEET SP7 OF 18

349-051

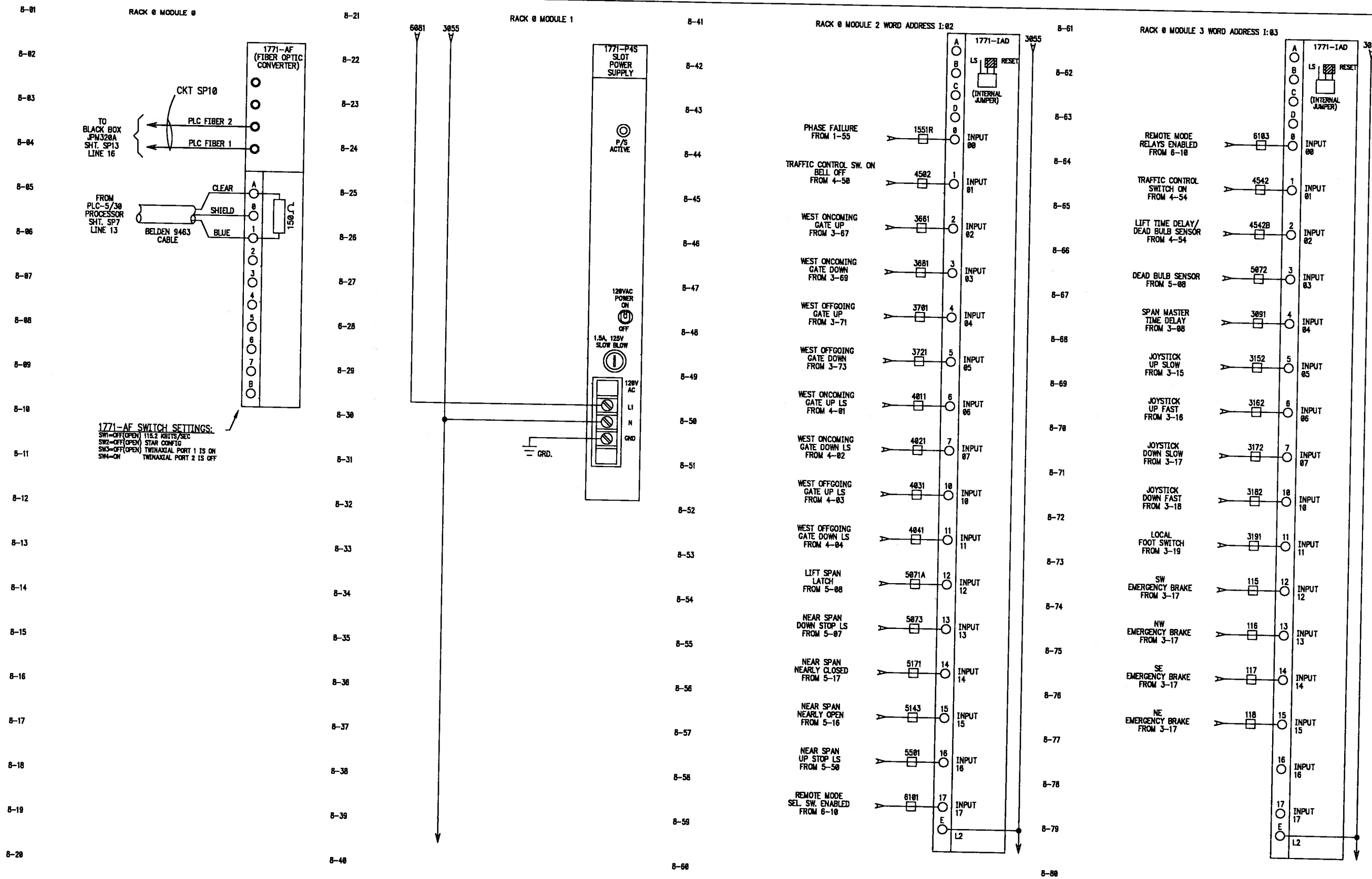

GENERAL NOTE:
SP# = CIRCUIT NUMBER FOR ST. PAUL AVE. BRIDGE
WHERE # = ID NUMBER OF CIRCUIT.

REV.	DESC. OF CHANGE	DATE	PROJ #
1	AS INSTALLED WIRING REV	12-26-03	349-051
2	NO CHANGE	5-19-06	349-051
3	AS INSTALLED	5-19-06	349-051

ENGINEERING SPECIALISTS, INC.
BROOKFIELD, WI. 53045-5110
NEENAH, WI. 54956

DR. BY ES	CITY OF MILWAUKEE, WI.
DATE 10/21/02	ST. PAUL AVE. BRIDGE
REV. 3	REMOTE CONTROL
SCALE NTS	349-051
SHT. 36 OF 46	

ST. PAUL AVENUE BRIDGE
I/O RACK 0
MODULE GROUPS
0 THRU 3

SHEET SP8 OF 18

E-S 349-051

City of Milwaukee
Department of Public Works
Infrastructure Services Division

WISCONSIN ROBERT R. MILLER E-14028 WAUWATOSA, WIS PROFESSIONAL ENGINEER

VERTICAL LIFT BRIDGE
REMOTE CONTROL

ST. PAUL AVENUE BRIDGE
I/O RACK 0
MODULE GROUPS 0 THRU 3

REVISIONS

1 ES AS INSTALLED WIRING REV.

DESIGNED BY T.G.
DRAWN BY D.K.
CHECKED BY T.G.
DATE 10/21/02
SCALE NONE
JOB NUMBER BR10090124
SHEET NUMBER 36
OF 46

RACK 0 MODULE 4 WORD ADDRESS _:04

RACK 0 MODULE 5 WORD ADDRESS O:05

1771-OW16

Slot	Terminal	Tag	Field device
COMMON 00	1	6101	REMOTE CONTROL ENABLE TO 6-10
	2	6102	
COMMON 01	3	3600A	TRAFFIC CONTROL SWITCH ON TO 3-62
	4	3601	
COMMON 02	5	3601	WEST ONCOMING GATE UP TO 3-67
	6	3661	
COMMON 03	7	3601	WEST ONCOMING GATE DOWN TO 3-69
	8	3681	
COMMON 04	9	3601	WEST OFFGOING GATE UP TO 3-71
	10	3701	
COMMON 05	11	3601	WEST OFFGOING GATE DOWN TO 3-73
	12	3721	
COMMON 06	13	5037C	TRAFFIC CONTROL SWITCH OFF TO 5-09
	14	5037D	
COMMON 07	15	4501A	TRAFFIC CONTROL SW. BELL OFF TO 4-50
	16	4502	
COMMON 10	17		
	18	3101	JOYSTICK OFF TO 3-09
	19	3101B	
COMMON 11	20		
	21	3111A	JOYSTICK RAISE TO 3-11
	22	3112	
COMMON 12	23		
	24		JOYSTICK LOWER TO 3-13
	25	3131	
COMMON 13	26		
	27	3151A	JOYSTICK UP SLOW TO 3-15
	28	3152	
COMMON 14	29		
	30		JOYSTICK UP FAST TO 3-15
	31	3161	
COMMON 15	32		
	33	3171A	JOYSTICK DOWN SLOW TO 3-17
	34	3172	
COMMON 16	35		
	36		JOYSTICK DOWN FAST TO 3-17
	37	3181	
COMMON 17	38		
	39	3091C	REMOTE EMERGENCY STOP TO 3-10
	40	3091D	

RACK 0 MODULE 6 WORD ADDRESS O:06

1771-OW16

Slot	Terminal	Tag	Field device
COMMON 00	1	6102	REMOTE CONTROL ENABLE TO 6-10
	2	6103	
COMMON 01	3		
	4		
COMMON 02	5	3191A	FOOT SWITCH OPERATED TO 3-19
	6	3191	
COMMON 03	7	3052A	BYPASS TO 3-11
	8	3091A	
COMMON 04	9	3051A	TRAFFIC CONTROL SWITCH ON TO 3-08
	10	3052	
COMMON 05	11	6071	HORN ON TO 6-07
	12	6062	
COMMON 06	13	4541A	TRAFFIC CONTROL SWITCH ON TO 4-54
	14	4542	
COMMON 07	15		
	16		
COMMON 10	17	00610A	
	18	00610	BRIDGE INITIATED TO AUDIO SYSTEM TO 14-01
	19	COM	
COMMON 11	20		GRD.
	21		CKT SP3
	22		
COMMON 12	23		
	24		
	25		
COMMON 13	26		
	27		
	28		
COMMON 14	29		
	30		
	31		
COMMON 15	32		
	33		
	34		
COMMON 16	35		
	36		
	37		
COMMON 17	38		
	39	3091D	REMOTE EMERGENCY STOP TO 3-10
	40	3091B	

RACK 0 MODULE 7

1771-IFE

Terminal	Tag	Field device
1	I0700+	AC CURRENT FROM SHT. SP1 LINE 03
2	I0700-	
3	I0701+	AC VOLTAGE FROM SHT. SP1 LINE 54
4	I0701-	
5	NOT USED	
6	CHAN. 3+	
7	CHAN. 3-	
8	CHAN. 4+	
9	CHAN. 4-	
10	NOT USED	
11	CHAN. 5+	
12	CHAN. 5-	
13	CHAN. 6+	
14	CHAN. 6-	
15	NOT USED	
16	CHAN. 7+	
17	CHAN. 7-	
18	CHAN. 8+	
19	CHAN. 8-	
20	MODULE COMMON	
21	MODULE COMMON	

NOTE- JUMPER ALL UNUSED CHANNELS TO MODULE COMMON TO REDUCE NOISE

PLUG FARM LOCATED INSIDE OF 1771-IFE MODULE

GENERAL NOTE:
SP# = CIRCUIT NUMBER FOR ST. PAUL AVE. BRIDGE
WHERE # = ID NUMBER OF CIRCUIT.

REV.	DESC. OF CHANGE	DATE	PROJ #
1	NO CHANGE	5-19-08	349-051
2	NO CHANGE	5-19-08	349-051
3	AS INSTALLED	5-19-08	349-051

ENGINEERING SPECIALISTS, INC.
BROOKFIELD, WI. 53045-5119
NEENAH, WI. 54956

DR. BY ES	CITY OF MILWAUKEE, WI.
DATE 10/21/02	ST. PAUL AVE. BRIDGE
REV. 3	REMOTE CONTROL
SCALE NTS	349-051
SHT. 37 OF 46	

ST. PAUL AVE. BRIDGE
I/O RACK 0
MODULE GROUPS
4 THRU 7

SHEET SP9 OF 18

ES 349-051

City of Milwaukee
Department of Public Works
Infrastructure Services Division

WISCONSIN ROBERT R. MILLER E-16028 WAUWATOSA, WIS PROFESSIONAL ENGINEER

VERTICAL LIFT BRIDGE
REMOTE CONTROL
ST. PAUL AVE. BRIDGE
I/O RACK 0
MODULE GROUPS 4 THRU 7

REVISIONS

DESIGNED BY T.G.
DRAWN BY D.K.
CHECKED BY T.G.
DATE 10/21/02
SCALE NONE
JOB NUMBER BR10090124
SHEET NUMBER 37
OF 46

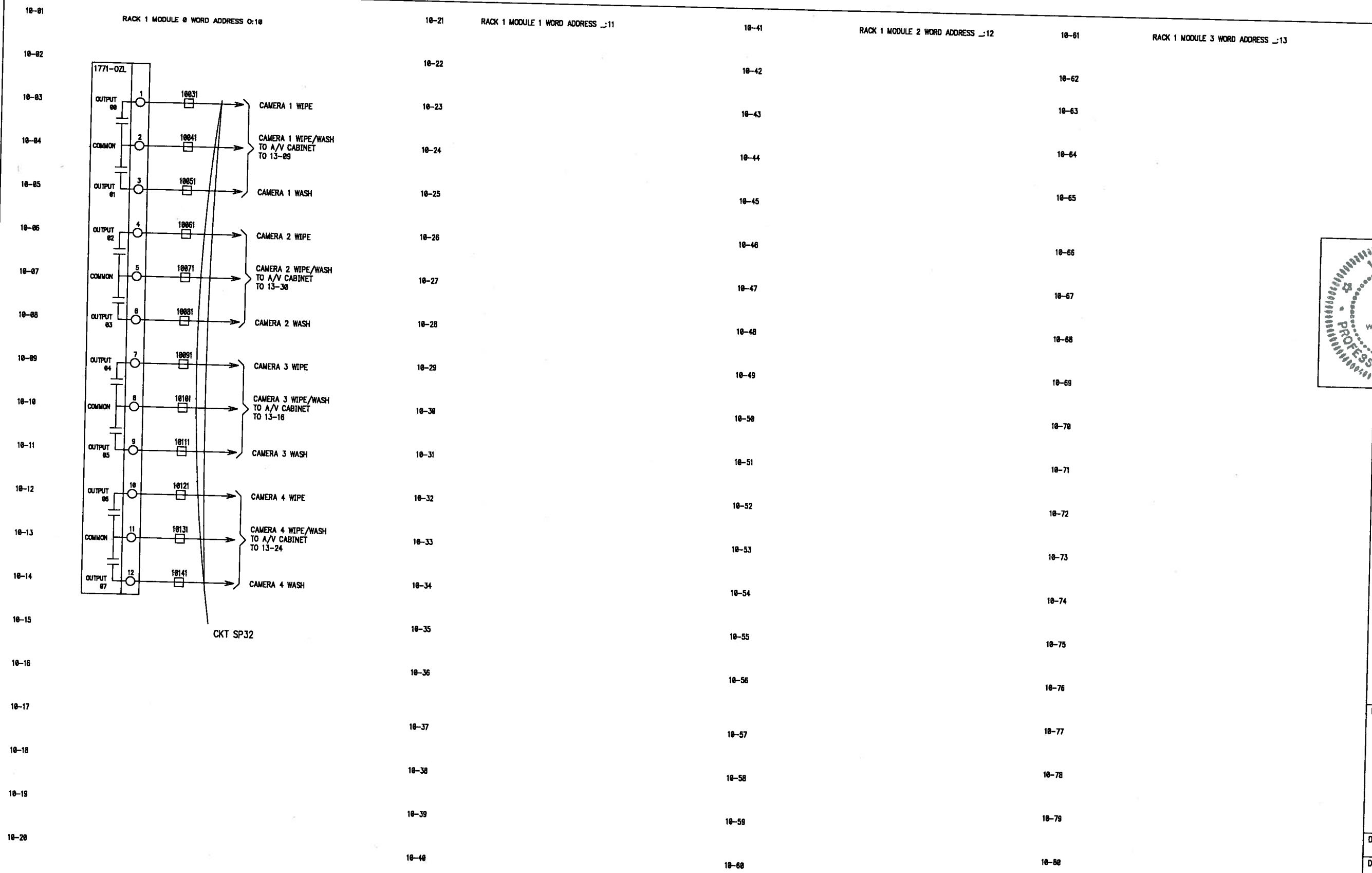

City of Milwaukee

Department of Public Works

Infrastructure Services Division

WISCONSIN ROBERT R. MILLER E-14028 WAUWATOSA, WIS. PROFESSIONAL ENGINEER

VERTICAL LIFT BRIDGE REMOTE CONTROL

ST. PAUL AVE. BRIDGE I/O RACK 1 MODULE GROUPS 0 THRU 3

REVISIONS

REV.	DESC. OF CHANGE	DATE	PROJ. #
1	NO CHANGE	5-19-06	349-051
2	NO CHANGE	5-19-06	349-051
3	AS INSTALLED	5-19-06	349-051

ENGINEERING SPECIALISTS, INC. BROOKFIELD, WI. 53045-5110 NEEKAH, WI. 54956

DR. BY ES | CITY OF MILWAUKEE, WI.
DATE 10/21/02 | ST. PAUL AVE. BRIDGE
REV. 3 | REMOTE CONTROL
SCALE NTS | 349-051
SHT. 38 OF 46

ST. PAUL AVE. BRIDGE I/O RACK 1 MODULE GROUPS 0 THRU 3

SHEET SP10 OF 18

ES 349-051

DESIGNED BY T.G.
DRAWN BY D.K.
CHECKED BY T.G.
DATE 10/21/02
SCALE NONE
JOB NUMBER BR10090124
SHEET NUMBER 38
OF 46

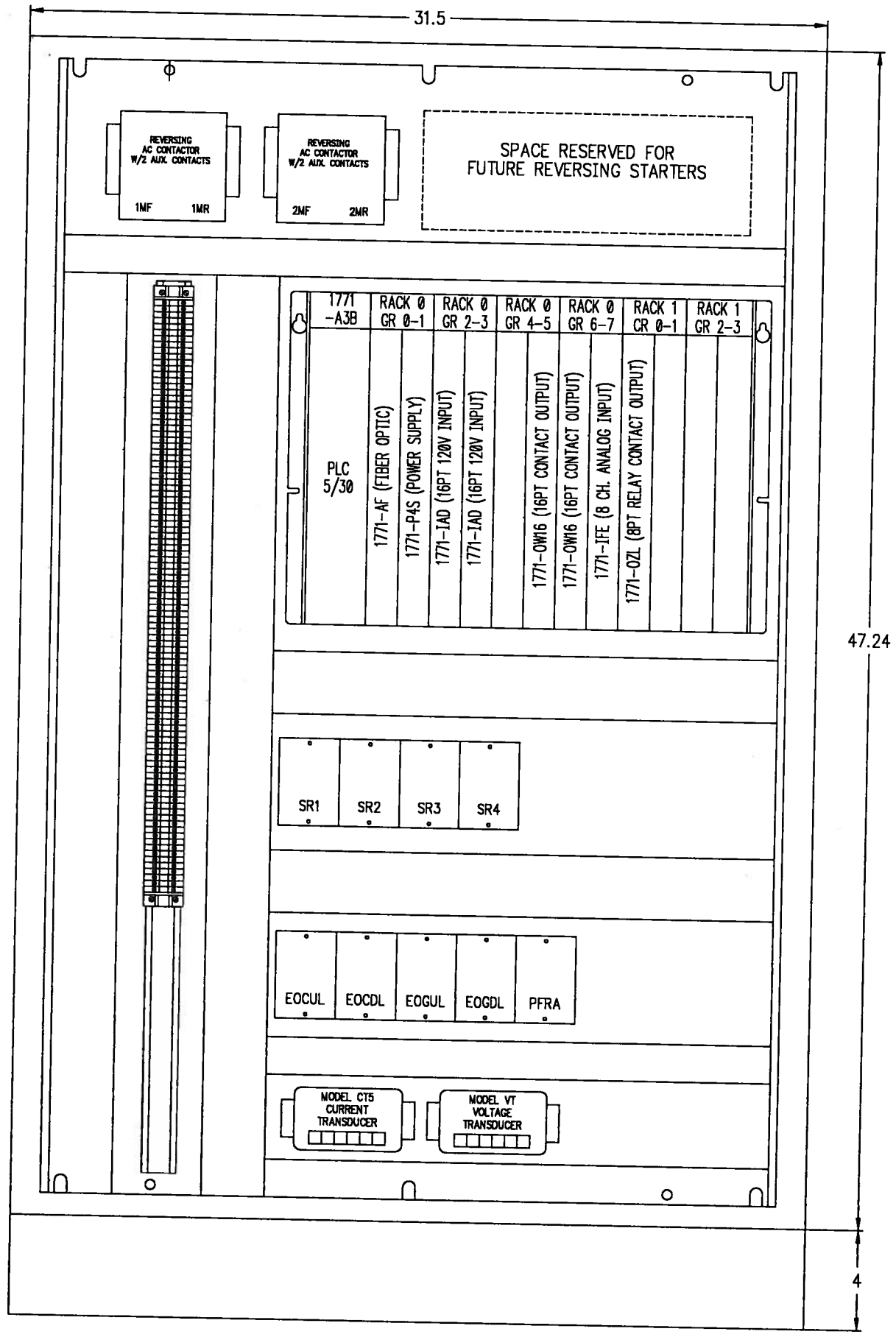

RITTAL AE 1280

RITTAL SO 2818

REV.	DESC. OF CHANGE	DATE	PROJ. #
1	NO CHANGE	5-19-08	349-051
2	NO CHANGE	5-19-08	349-051
3	AS INSTALLED	5-19-08	349-051

ENGINEERING SPECIALISTS, INC.
BROOKFIELD, WI. 53045-3119
NEENAH, WI. 54956

DR. BY ES
DATE 10/21/02
REV. 3
SCALE NTS
SHT. 39 OF 46

CITY OF MILWAUKEE, WI.
ST. PAUL AVE. BRIDGE
REMOTE CONTROL
349-051

ST. PAUL AVE. BRIDGE REMOTE CONTROLLER ENCLOSURE

SHEET SP11 OF 18

ES 349-051

City of Milwaukee

Department of Public Works

Infrastructure Services Division

WISCONSIN ROBERT R. MILLER E-14628 WAUKESHA, WIS PROFESSIONAL ENGINEER

VERTICAL LIFT BRIDGE REMOTE CONTROL

ST. PAUL AVE. BRIDGE REMOTE CONTROLLER ENCLOSURE

REVISIONS

DESIGNED BY T.G.

DRAWN BY D.K.

CHECKED BY T.G.

DATE 10/21/02

SCALE NONE

JOB NUMBER BR10090124

SHEET NUMBER 39

OF 46

City of Milwaukee

Department of Public Works

Infrastructure Services Division

WISCONSIN
ROBERT R. MILLER
E-14028
WAUWATOSA, WIS.
PROFESSIONAL ENGINEER

VERTICAL LIFT BRIDGE
REMOTE CONTROL

ST. PAUL AVE. BRIDGE
RESERVED
FOR FUTURE

REVISIONS

REV.	DESC. OF CHANGE	DATE	PROJ. #
1	NO CHANGE	5-19-06	349-051
2	NO CHANGE	5-19-06	349-051
3	AS INSTALLED	5-19-06	349-051

ENGINEERING SPECIALISTS, INC.
BROOKFIELD, WI. 53045-5110
NEENAH, WI. 54956

DR. BY ES	CITY OF MILWAUKEE, WI.
DATE 10/21/02	ST. PAUL AVE. BRIDGE
REV. 3	REMOTE CONTROL
SCALE NTS	349-051
SHT. 40 OF 46	

ST. PAUL AVE. BRIDGE
RESERVED
FOR
FUTURE

SHEET SP12 OF 18

ES 349-051

DESIGNED BY T.G.

DRAWN BY D.K.

CHECKED BY T.G.

DATE 10/21/02

SCALE NONE

JOB NUMBER BR10090124

SHEET NUMBER 40

OF 46

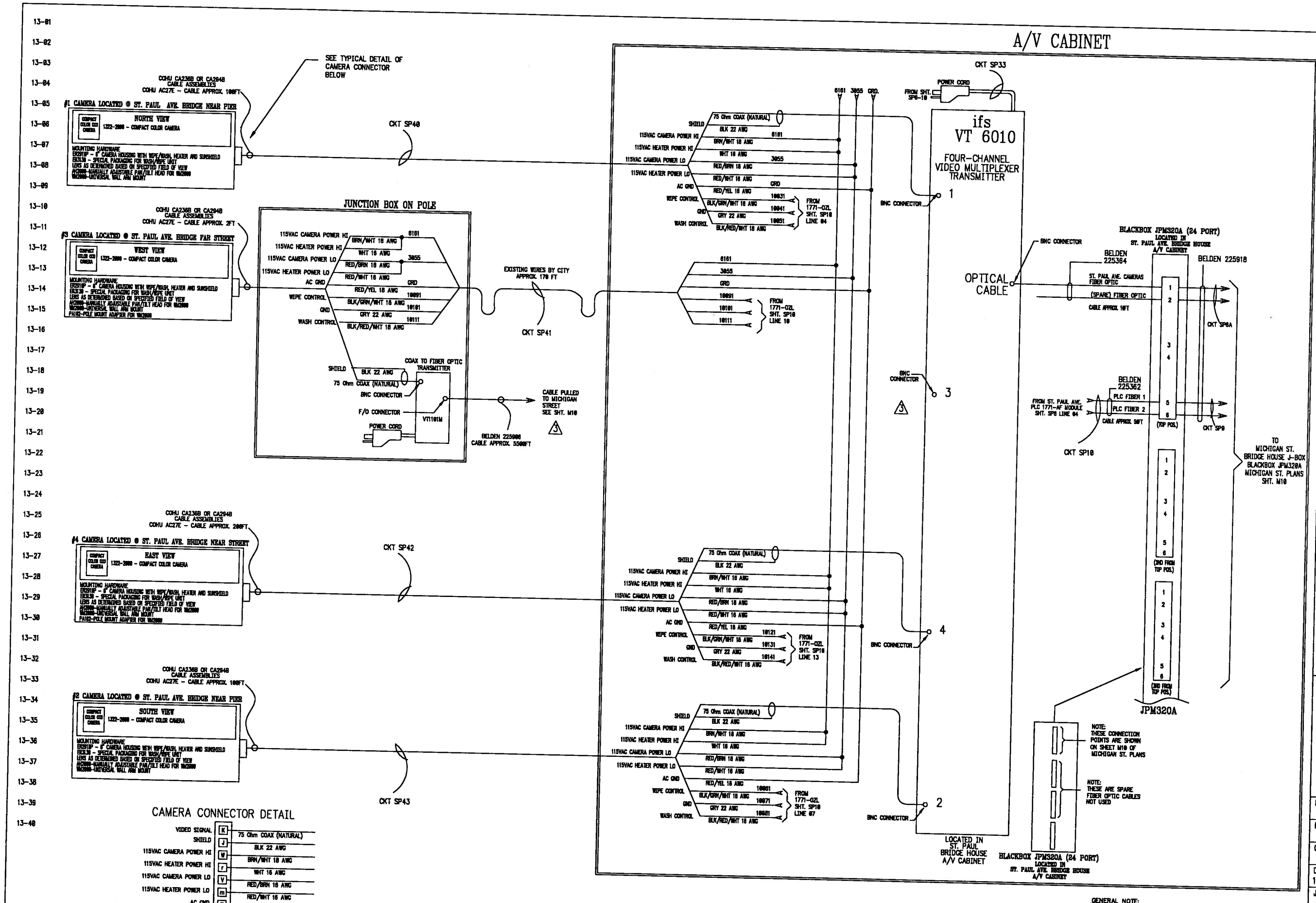

GENERAL NOTE:
SP# = CIRCUIT NUMBER FOR ST. PAUL ST. BRIDGE
WHERE # = ID NUMBER OF CIRCUIT.

REV.	DESC. OF CHANGE	DATE	PROJ #
1	REVISED CAMERA 1&2 CABLING	1-30-03	349-051
2	NO CHANGE	5-19-06	349-051
3	AS INSTALLED	5-19-06	349-051

ENGINEERING SPECIALISTS, INC.
BROOKFIELD, WI. 53045-5119
NEENAH, WI. 54956

DR. BY ES	CITY OF MILWAUKEE, WI.
DATE 10/21/02	ST. PAUL AVE. BRIDGE
REV. 3	REMOTE CONTROL
SCALE NTS	349-051
SHT. 41 OF 46	

ST. PAUL AVE. BRIDGE VIDEO EQUIPMENT WIRING DETAILS

SHEET SP13 OF 18

E-S 349-051

City of Milwaukee

Department of Public Works

Infrastructure Services Division

WISCONSIN PROFESSIONAL ENGINEER

VERTICAL LIFT BRIDGE REMOTE CONTROL

ST. PAUL BRIDGE VIDEO EQUIPMENT WIRING DETAILS

REVISIONS

DESIGNED BY T.G.	
DRAWN BY D.K.	
CHECKED BY T.G.	
DATE 10/21/02	SCALE NONE
JOB NUMBER BR10090124	
SHEET NUMBER 41	
OF 46	

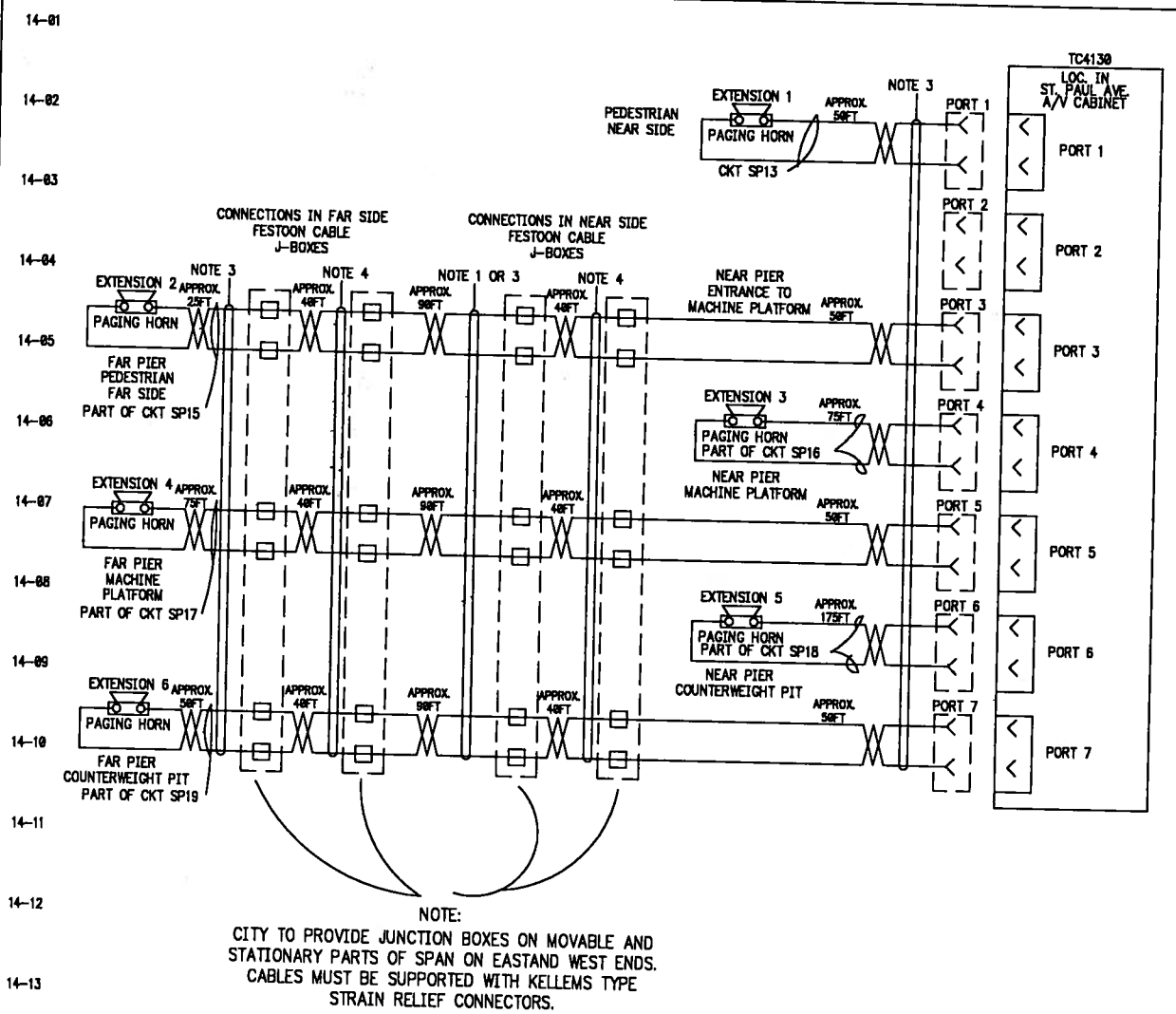

NOTE:
CITY TO PROVIDE JUNCTION BOXES ON MOVABLE AND STATIONARY PARTS OF SPAN ON EASTAND WEST ENDS. CABLES MUST BE SUPPORTED WITH KELLEMS TYPE STRAIN RELIEF CONNECTORS.

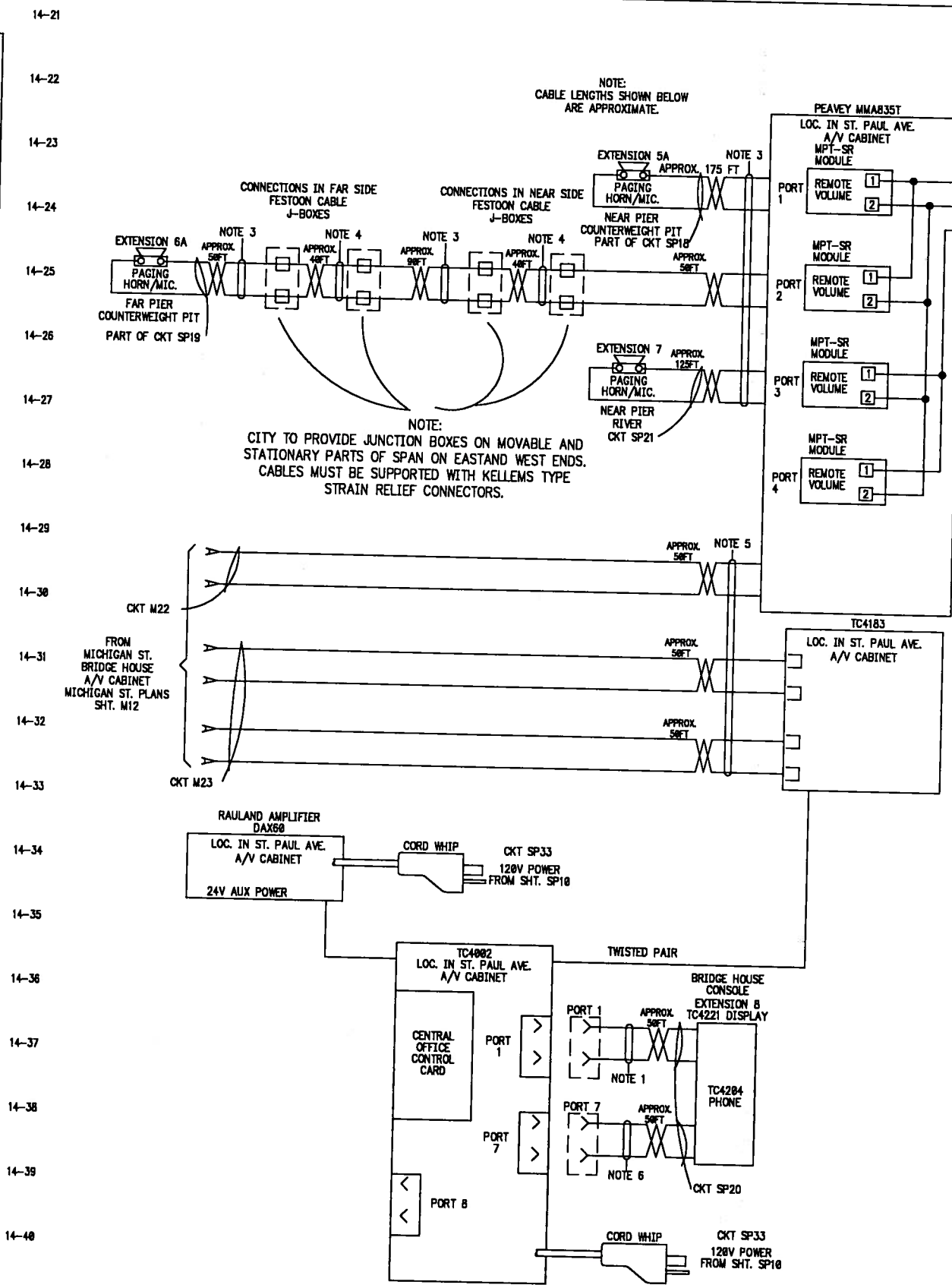

NOTE 1 : 4-PAIR CABLE LUCENT CM-00424BAB-3 OR EQUIV. (3000 FT. MAXIMUM DISTANCE)

NOTE 2 : 12-PAIR CABLE LUCENT CM-01224BAB-2 OR EQUIV. (3000 FT. MAXIMUM DISTANCE)

NOTE 3 : BELDEN #8760 CABLE OR EQUIV. (3000 FT. MAXIMUM DISTANCE)

NOTE 4 : SIEMENS 50H3-607 (9-PAIR 16 GA.)

NOTE 5 : ANIXTER 323-231-1603 (3-PR 16 GA.)

NOTE 6 : 20 GA. TWISTED PAIR UNSHIELDED CABLE (3000 FT. MAXIMUM DISTANCE)

GENERAL NOTE:
SP# = CIRCUIT NUMBER FOR ST. PAUL AVE. BRIDGE
WHERE # = ID NUMBER OF CIRCUIT.

REV.	DESC. OF CHANGE	DATE	PROJ. #
1	NO CHANGE	5-19-06	349-051
2	NO CHANGE	5-19-06	349-051
3	AS INSTALLED	5-19-06	349-051

ENGINEERING SPECIALISTS, INC.
BROOKFIELD, WI. 53045-5110
NEENAH, WI. 54956

DR. BY ES	CITY OF MILWAUKEE, WI.
DATE 10/21/02	ST. PAUL AVE. BRIDGE
REV. 3	REMOTE CONTROL
SCALE NTS	349-051
SHT. 42 OF 46	

ST. PAUL BRIDGE AUDIO EQUIPMENT WIRING DETAILS

SHEET SP14 OF 18

E-S 349-051

City of Milwaukee
Department of Public Works
Infrastructure Services Division

WISCONSIN ROBERT R. MILLER E-14028 WAUWATOSA, WIS. PROFESSIONAL ENGINEER

VERTICAL LIFT BRIDGE REMOTE CONTROL

ST. PAUL BRIDGE AUDIO EQUIPMENT WIRING DETAILS

REVISIONS

DESIGNED BY T.G.
DRAWN BY D.K.
CHECKED BY T.G.
DATE 10/21/02
SCALE NONE
JOB NUMBER BR10090124
SHEET NUMBER 42
OF 46

ST. PAUL – NEAR SIDE
AUDIO/VIDEO
EQUIPMENT
ENCLOSURE

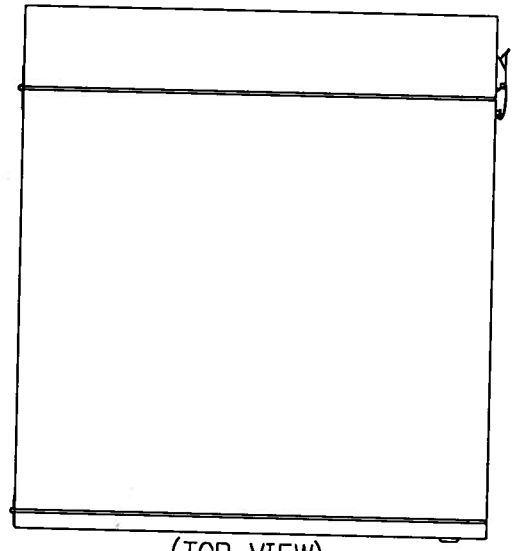

(TOP VIEW)

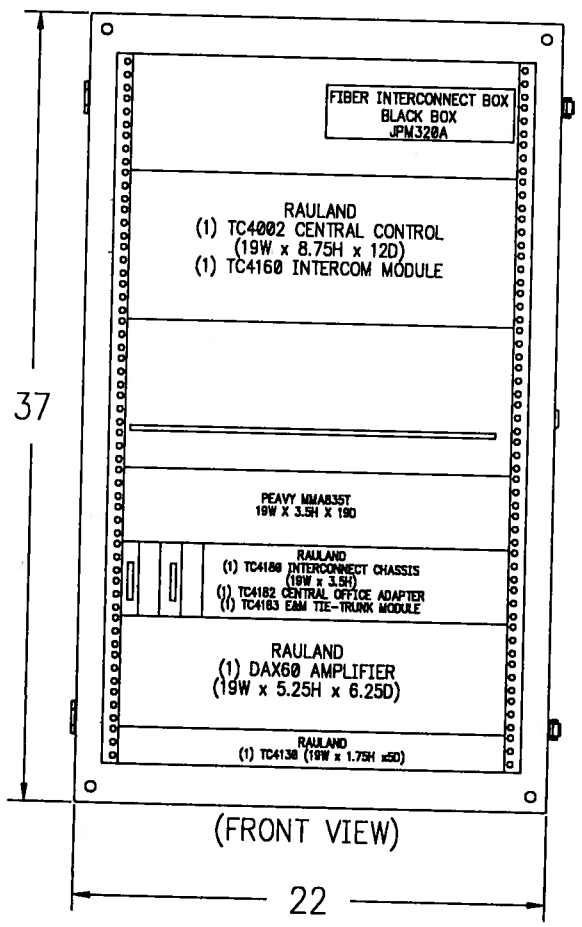

(FRONT VIEW)

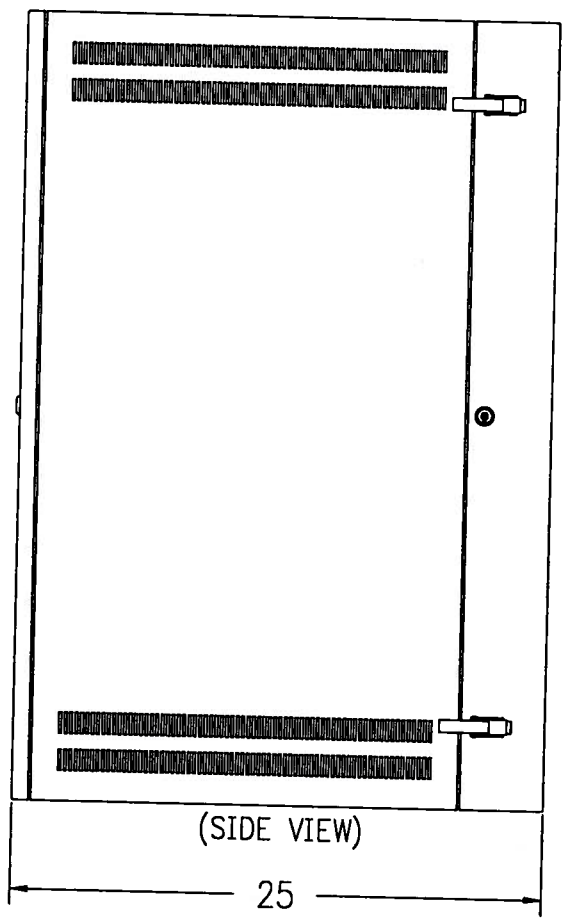

(SIDE VIEW)

City of Milwaukee

Department of Public Works

Infrastructure Services Division

WISCONSIN
ROBERT R. MILLER
E-14028
WAUWATOSA, WIS.
PROFESSIONAL ENGINEER

VERTICAL LIFT BRIDGE
REMOTE CONTROL

ST. PAUL BRIDGE
AUDIO/VIDEO
EQUIPMENT ENCLOSURE

REVISIONS

REV.	DESC. OF CHANGE	DATE	PROJ. #
1	NO CHANGE	5-19-08	349-051
2	NO CHANGE	5-19-08	349-051
3	AS INSTALLED	5-19-08	349-051

ENGINEERING SPECIALISTS, INC.
BROOKFIELD, WI. 53045-5110
NEENAH, WI. 54956

DR. BY ES	CITY OF MILWAUKEE, WI.
DATE 10/21/02	ST. PAUL AVE. BRIDGE
REV. 3	REMOTE CONTROL
SCALE NTS	349-051
SHT. 43 OF 48	

ST. PAUL BRIDGE
AUDIO/VIDEO
EQUIPMENT
ENCLOSURE

SHEET SP15 OF 18

E-S 349-051

DESIGNED BY T.G.

DRAWN BY D.K.

CHECKED BY T.G.

DATE 10/21/02 | SCALE NONE

JOB NUMBER BR10090124

SHEET NUMBER 43

OF 46

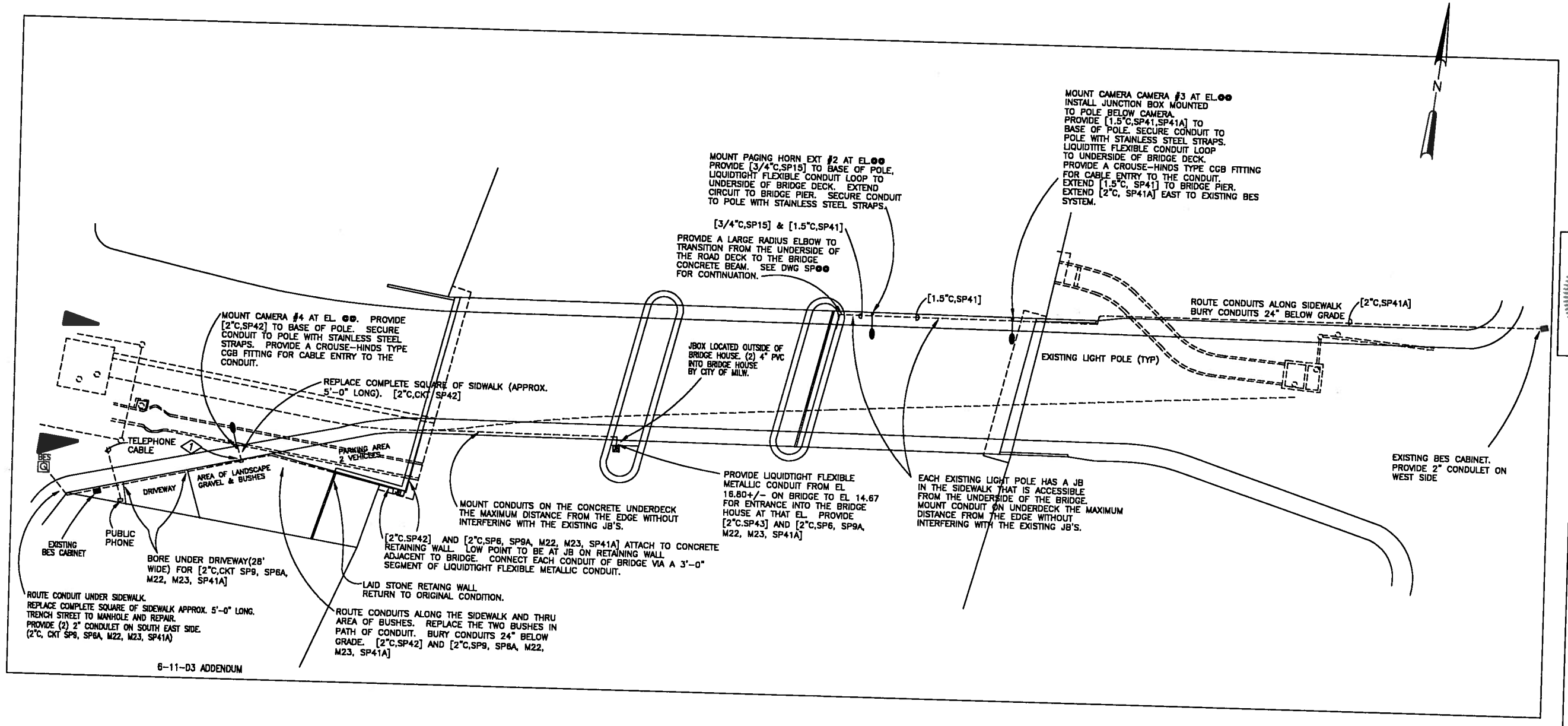

6-11-03 ADDENDUM

REV.	DESC. OF CHANGE	DATE	PROJ #
1	REVISE CONDUITS/CIRCUITS	11-30-03	349-051
2	ADD MANHOLE & CONDUIT	6-11-03	349-051
3	AS INSTALLED	5-29-08	349-051

ENGINEERING SPECIALTISTS, INC.
BROOKFIELD, WI. 53045-5118
NEENAH, WI. 54956

DR. BY ES	CITY OF MILWAUKEE, WI.
DATE 10/21/02	ST. PAUL AVE. BRIDGE
REV. 3	REMOTE CONTROL
SCALE NTS	349-051
SHT. 44 OF 48	

ST. PAUL AVE. BRIDGE
ELECTRICAL
SITE
PLAN

SHEET SP16 OF 18

ES 349-051

City of Milwaukee

Department of Public Works

Infrastructure Services Division

WISCONSIN
ROBERT R. MILLER
E-14028
WAUWATOSA, WIS
PROFESSIONAL ENGINEER

VERTICAL LIFT BRIDGE
REMOTE CONTROL

ST. PAUL AVE. BRIDGE
ELECTRICAL
SITE PLAN

REVISIONS

6-11-03 ADDENDUM

DESIGNED BY DAF

DRAWN BY DAF

CHECKED BY T.G.

DATE 10/21/02

SCALE 1"=20'-0"

JOB NUMBER BR10090124

SHEET NUMBER 44

OF 46

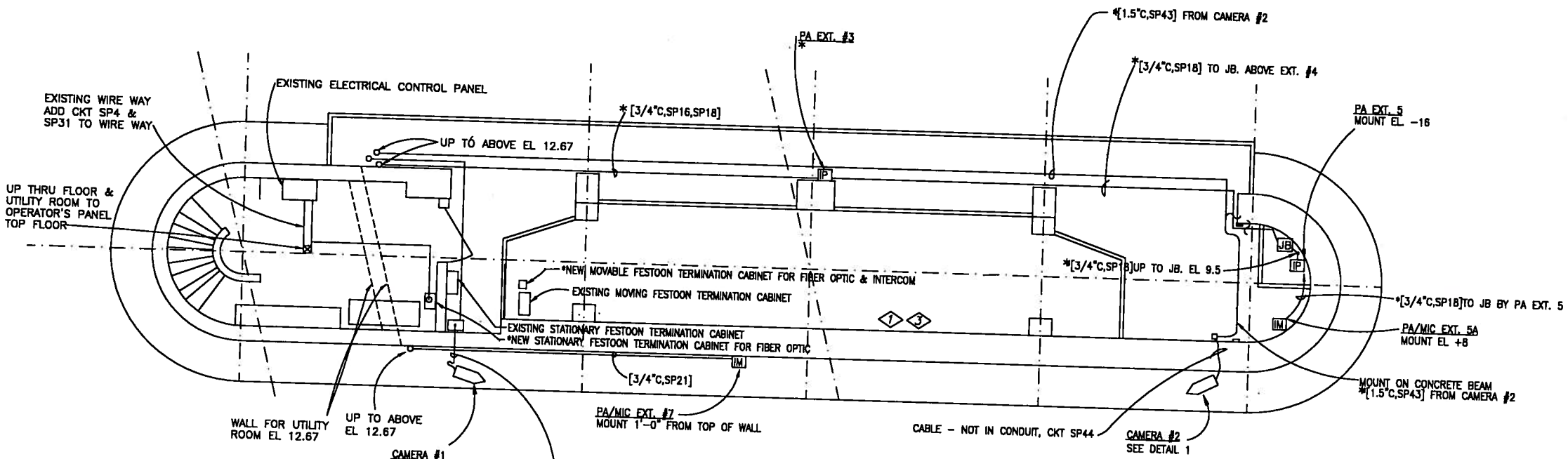

NEAR PIER ELECTRICAL SITE PLAN FL. EL. +4.0

SCALE 1/4" = 1-0'

CONDUIT & WIRING ON BRIDGE SPAN

[1.5"C, SP44]

[1"C,SP15,SP17,SP19]

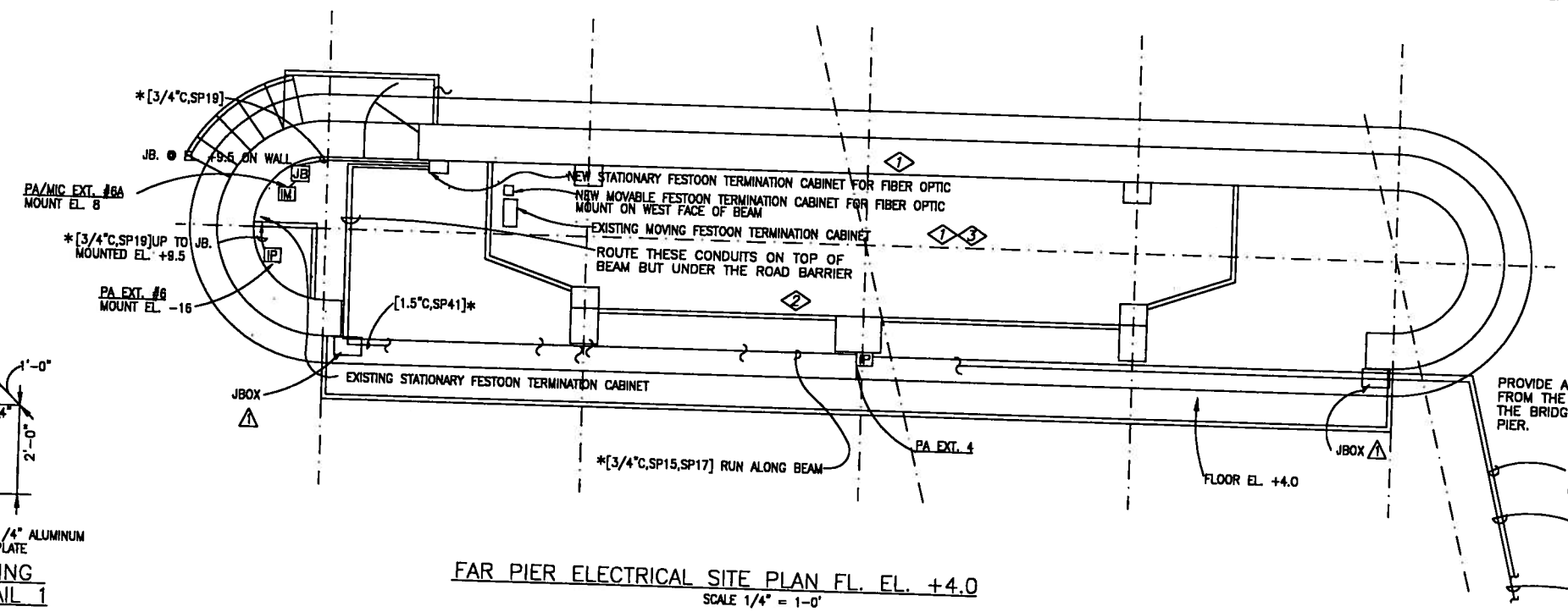

FAR PIER ELECTRICAL SITE PLAN FL. EL. +4.0

SCALE 1/4" = 1-0'

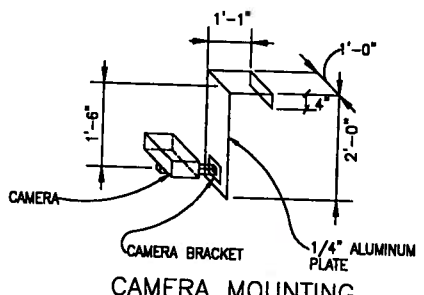

CAMERA MOUNTING BRACKET -DETAIL 1

NTS

GENERAL NOTES

1. P# = CIRCUIT NUMBER FOR ST. PAUL AVE. BRIDGE WHERE # = ID NUMBER OF CIRCUIT
2. SEE SHEETS SP1, SP1A, SP2, SP3, SP3B, SP4, SP4A, SP5, SP6, SP8, SP9, SP13, SP14 FOR CIRCUIT CALLOUTS.

PLAN NOTES ◇

1. PROVIDE NEW ADDITIONAL FESTOON CABLES BETWEEN THE STATIONARY & MOBILE FESTOON TERMINATION CABINETS ON BOTH NEAR AND FAR PIERS. EACH FESTOON LOOP SHALL CONSIST OF 40 FEET OF FREE CABLES WITH KELLEMS CABLE RESTRAINTS. BOTH FESTOONS SHALL CONSIST OF CIRCUITS SP15, SP17 AND SP19.
2. PROVIDE NEMA 4X SPLICE BOX ADJACENT TO THE STATIONARY FESTOON TERMINATION CABINET ON FAR PIER FOR FIBER OPTIC SPLICING.
3. EXISTING ONE OF 1-1/2"C AND ONE OF 1"C BETWEEN THE TWO MOBILE FESTOON TERMINATORS CABINETS ON THE MOVABLE PORTION OF THE BRIDGE. CIRCUITS SP15, SP17 AND SP19.

LEGEND

- IM PAGING HORN/MICROPHONE
- IP PAGING HORN

KAPUR & ASSOCIATES, INC.
CONSULTING ENGINEERS
MILWAUKEE, WISCONSIN
414.351.6668

0 4 8 12 16
SCALE: 1/4"=1'-0"

REV.	DESC. OF CHANGE	DATE	PROJ #
1	REVISED CONDUITS/CIRCUITS	1-30-03	349-051
2	NO CHANGE	5-19-08	349-051
3	AS INSTALLED	5-19-08	349-051

ENGINEERING SPECIALISTS, INC.
BROOKFIELD, WI. 53045-5119
NEENAH, WI. 54956

DR. BY ES	CITY OF MILWAUKEE, WI.
DATE 10/21/02	ST. PAUL AVE. BRIDGE
REV. 3	REMOTE CONTROL
SCALE NTS	349-051
SHT. 45 OF 46	

ST. PAUL AVE. BRIDGE ELECTRICAL PLAN PIERS

SHEET SP17 OF 18

ES 349-051

City of Milwaukee
Department of Public Works
Infrastructure Services Division

WISCONSIN ROBERT R. MIL FR E-14028 WAUWATOSA, WIS. PROFESSIONAL ENGINEER

VERTICAL LIFT BRIDGE REMOTE CONTROL

ST. PAUL AVE. BRIDGE ELECTRICAL PLAN PIERS

REVISIONS

DESIGNED BY DAF

DRAWN BY DAF

CHECKED BY T.G.

DATE 10/21/02 SCALE 1/4"=1'-0"

JOB NUMBER BR10090124

SHEET NUMBER 45 OF 46

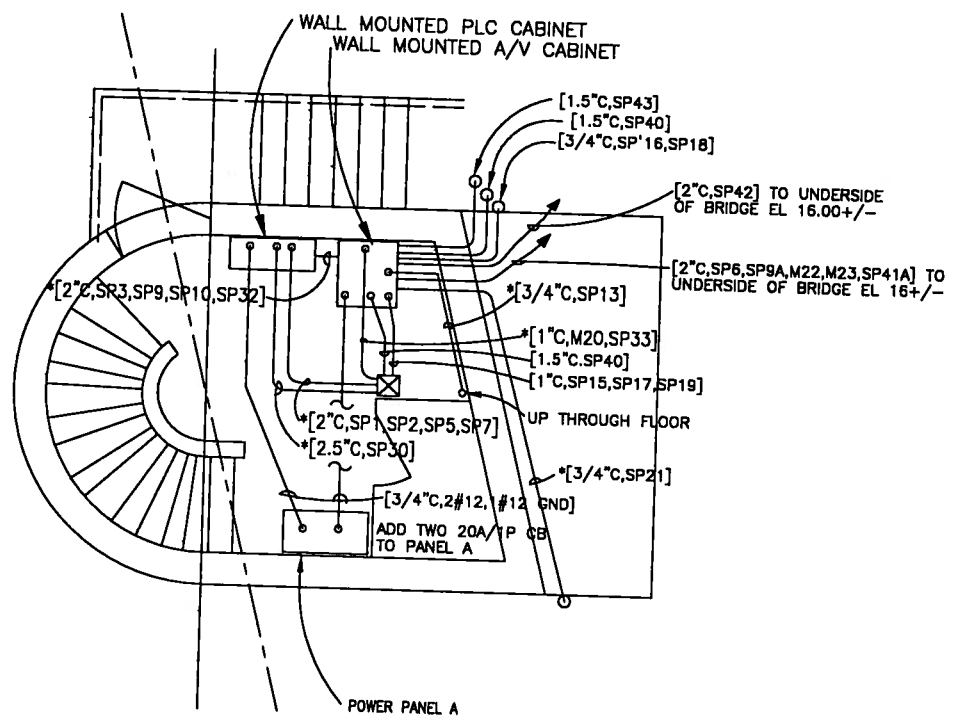

UTILITY ROOM PLAN EL. +12.67

SCALE 3/8"=1'-0"

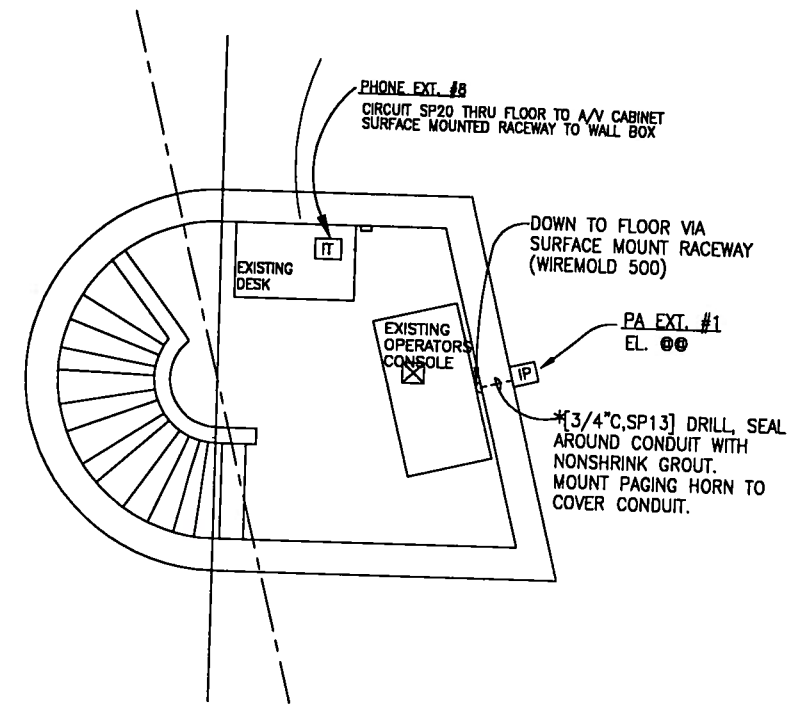

CONTROL ROOM PLAN EL. +26.88

SCALE 3/8"=1'-0"

GENERAL NOTES

1. SP# = CIRCUIT NUMBER FOR THE ST. PAUL AVE. BRIDGE WHERE # = ID NUMBER OF CIRCUIT
2. SEE SHEET SP1, SP1A, SP2, SP3, SP3B, SP4, SP4A, SP5, SP6, SP8, SP9, SP13, SP14 FOR CIRCUIT CALLOUTS

REV.	DESC. OF CHANGE	DATE	PROJ. #
1	REVISED CONDUITS/CIRCUITS	1-30-03	349-051
2	NO CHANGE	5-19-06	349-051
3	AS INSTALLED	5-19-06	349-051

ENGINEERING SPECIALISTS, INC.
BROOKFIELD, WI 53045-5119
NEENAH, WI 54956

DR. BY ES	CITY OF MILWAUKEE, WI.
DATE 10/21/02	ST. PAUL AVE. BRIDGE
REV. 3	REMOTE CONTROL
SCALE NTS	349-051
SHT. 46 OF 46	

ST. PAUL AVE. BRIDGE ELECTRICAL PLAN BRIDGE HOUSE

SHEET SP18 OF 18

ES 349-051

City of Milwaukee

Department of Public Works

Infrastructure Services Division

WISCONSIN ROBERT R. MILLER E-14028 WAUWATOSA, WIS. PROFESSIONAL ENGINEER

VERTICAL LIFT BRIDGE REMOTE CONTROL

ST. PAUL AVE. BRIDGE ELECTRICAL PLAN BRIDGE HOUSE

REVISIONS

DESIGNED BY DAF

DRAWN BY DAF

CHECKED BY T.G.

DATE 10/21/02 | SCALE 3/8"=1'-0"

JOB NUMBER BR10090124

SHEET NUMBER 46

OF 46