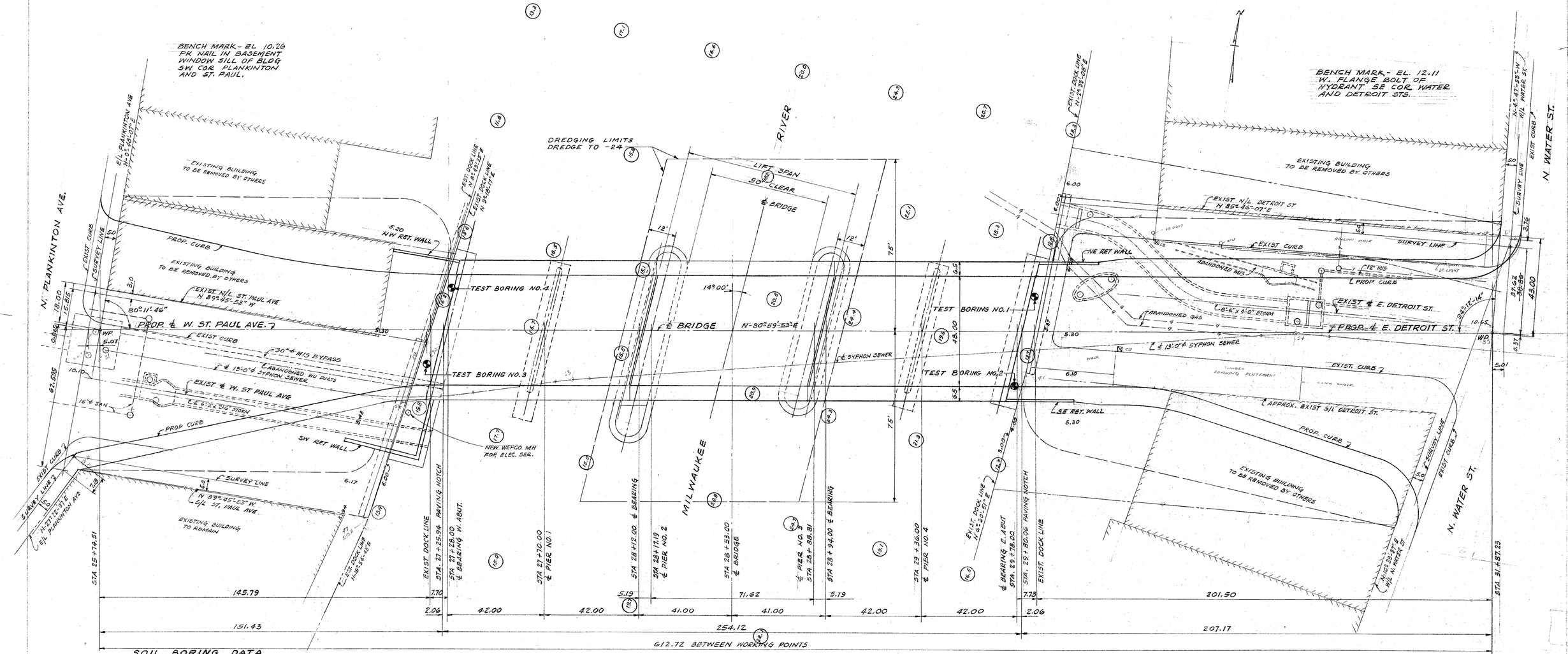

PLAN
SCALE 1" = 20'

SOIL BORING DATA

0	Blows / Ft.	Material	Blows / Ft.	Material	Blows / Ft.	Material	Blows / Ft.	Material
	BORING NO. 1		BORING NO. 2		BORING NO. 3		BORING NO. 4	
			℄ Water		Surface			
		River Water -13.4		River Water -14.5		River Water -14.2		River Water -13
-10	1	Soft dark muck -18.4	1	Soft dark muck -24.7	1	Very soft dark silt -24	1	Very soft dark silt -25
-20	1	Very soft silty clay -21.4	1		1		1	
	6		1		2		2	Soft grey-brown silty clay
	5	Soft grey clay, silty thin seams of sand -33.6	3	Soft grey clay, fine sandy silt -36	3	Soft grey-brown clay, silt -35	3	-35
-30	3		4		4		3	
	4		5		4		3	Loose grey fine sand -42
	4		2		4		8	
	9	Loose grey fine sand, silty clay -36.3	3		17	Medium firm grey fine sand -43	27	Firm brown coarse sand -51
	18	Medium firm sand -38.2	10	Loose fine sand -38	12		17	
-40	18	Medium firm grey-brown sand -43	16	Medium firm fine sand -42	18	Medium firm grey-brown sand & gravel -52	57	Very dense brown coarse sand -56
	18	Fine to coarse sand -46	19	Medium firm fine to coarse sand & gravel -48	21		25	Firm grey fine sand -60
	21	Dense grey-brown fine to coarse sand & gravel -53	60	Very dense fine to coarse sand -52	76	Very dense sand -55	18	Firm grey fine sand & gravel -68
-50	37		31	Dense brown sand -58	28	Firm grey fine sand -62	40	Dense grey sand -71
	28	Very stiff grey clay, some sand -58	34	Hard grey clay -62	19	Firm grey fine to coarse sand	90	Very dense grey sand & small gravel
-60	40	Dense grey sand & gravel -61	19	Firm grey fine to coarse sand	24			
	34	Dense grey sand, some silt -66	24	Firm grey sand -72	16			
-70	18	Firm grey sand -72	29	Firm grey sand -77	27			
	29	Very firm sand -77		Firm grey sand				
		Very firm coarse						

DRAWING INDEX

SHEET NO.	TITLE	SHEET NO.	TITLE
1	SITE PLAN	33	MACHINERY - BEARINGS, COUPLINGS, ANCHOR BOLTS
2	FRAMING PLAN & GRADE PROFILE	34	MACHINERY - EQUALIZER SHEAVES
3	WEST ABUTMENT	35	MACHINERY - BEARINGS
4	WEST ABUTMENT & RETAINING WALLS	36	MACHINERY - SHAFTS
5	CROSS SECTION AT CENTER LINE ROADWAY AT ABUTMENTS	37	MACHINERY - EQUALIZER DRUM, INTERNAL GEAR, SHEAVES
6	NORTHWEST & SOUTHWEST RETAINING WALLS	38	MACHINERY - CABLE BRACKETS
7	SEWER EXTENSIONS	39	MACHINERY - ROLLER GUIDE & SHAFTS
8	EAST ABUTMENT	40	DECK PLAN & CROSS SECTION THRU ROADWAY
9	EAST ABUTMENT & RETAINING WALLS	41	DRAINAGE TROUGH, SCUPPER & BEARINGS
10	NORTHEAST & SOUTHEAST RETAINING WALLS	42	RAILING PLAN
11	FOUNDATION & PILING PLAN - PIERS 1, 2, 3 & 4	43	LIGHT POLES & RAILING DETAILS
12	PIERS 1 & 4	44	EXPANSION JOINTS AT ABUTMENTS
13	PIER 2	45	CIRCULAR STAIR
14	PIER 3	46	ELECTRICAL - WIRING PLAN - LIGHTS
15	APPROACH SPAN BEAM - PIERS 2 & 3	47	ELECTRICAL - SECTIONS & DETAILS
16	PLAN PIERS 2 & 3 AT ELEV. +4.00	48	ELECTRICAL - SCHEMATIC DIAGRAM
17	BRIDGE OPERATOR'S HOUSE	49	ELECTRICAL - LIMIT SWITCH MOUNTING DETAILS
18	BRIDGE OPERATOR'S HOUSE - CONCRETE DETAILS	50	HYDRAULIC EQUIPMENT - PLAN
19	BRIDGE OPERATOR'S HOUSE - WINDOW & DOOR DETAILS	51	HYDRAULIC EQUIPMENT - DETAILS
20	BRIDGE OPERATOR'S HOUSE - STEEL & ROOF DETAILS	52	PLUMBING - PLOT PLAN
21	BRIDGE OPERATOR'S HOUSE - SIGNAL BALL	53	PLUMBING & HEATING - OPERATOR'S HOUSE
22	LIFT SPAN		PAVEMENT - W. ST. PAUL AVE. FROM N. PLANKINTON AVE. TO MILWAUKEE RIVER
23	CROSS SECTION THRU LIFT SPAN - INTERIOR FLOORBEAM		PAVEMENT - E. DETROIT ST. FROM N. WATER ST. TO MILWAUKEE RIVER
24	LONGITUDINAL SECTION THRU LIFT SPAN	54	NAME PLATE
25	LIFTING LEG DETAIL - EXPANSION JOINT		
26	LIFT SPAN - JACKING BEAM	55	PLAN OF MACHINERY - REVISED
27	CROSS SECTION THRU LIFT SPAN - GRATING DETAILS	56	MACHINERY - ASSEMBLIES - ADDITIONAL
28	BUMPER BEAM - LIFT SPAN	57	MACHINERY - PARTS - ADDITIONAL
29	EXPANSION JOINTS AT LIFT SPAN		
30	PLAN OF MACHINERY		
31	MACHINERY - CROSS SECTION THRU EQUALIZER		
32	MACHINERY - LONGITUDINAL SHAFT - CWT SHEAVE		

WISCONSIN
GEORGE C. ASHTON
MILWAUKEE, WISCONSIN
PROFESSIONAL ENGINEER

NOTE:
SOUNDINGS ARE ACTUAL ELEVATIONS OF BOTTOM OF RIVER, REFERRED TO CITY DATUM ELEV. 0.0
SOUNDINGS WERE TAKEN MAY 5, 1954
SOUNDINGS IN RIVER BELOW CITY DATUM SHOWN THUS —(24)
EXISTING GROUND ELEVATIONS SHOWN THUS — 5.30

COMPLETED NOV. 1, 1966

DEPARTMENT OF PUBLIC WORKS
BUREAU OF BRIDGES AND PUBLIC BUILDINGS
CITY OF MILWAUKEE

REVISIONS		
NO.	DATE	BY
1	9/19/65	LFR

W. ST. PAUL AVE.-E. DETROIT ST. VERTICAL LIFT BRIDGE
OVER MILWAUKEE RIVER
SITE PLAN

DESIGNED BY: TRACED BY: DATE:
DRAWN BY: T.E.S. CHECKED BY: DATE:
APPROVED: SCALE:
Norin G. Batalden DESIGNER IN CHARGE DATE: 6-28-65 SHEET NUMBER: 1
George C. Ashton COMMISSIONER OF PUBLIC WORKS AND BUILDINGS DATE: 7-3-65 SHEET OF SHEETS
Donald L. Lively COMMISSIONER OF PUBLIC WORKS AND BUILDINGS DATE: 7-6-65 JOB NO. 522-001
Special Deputy

103

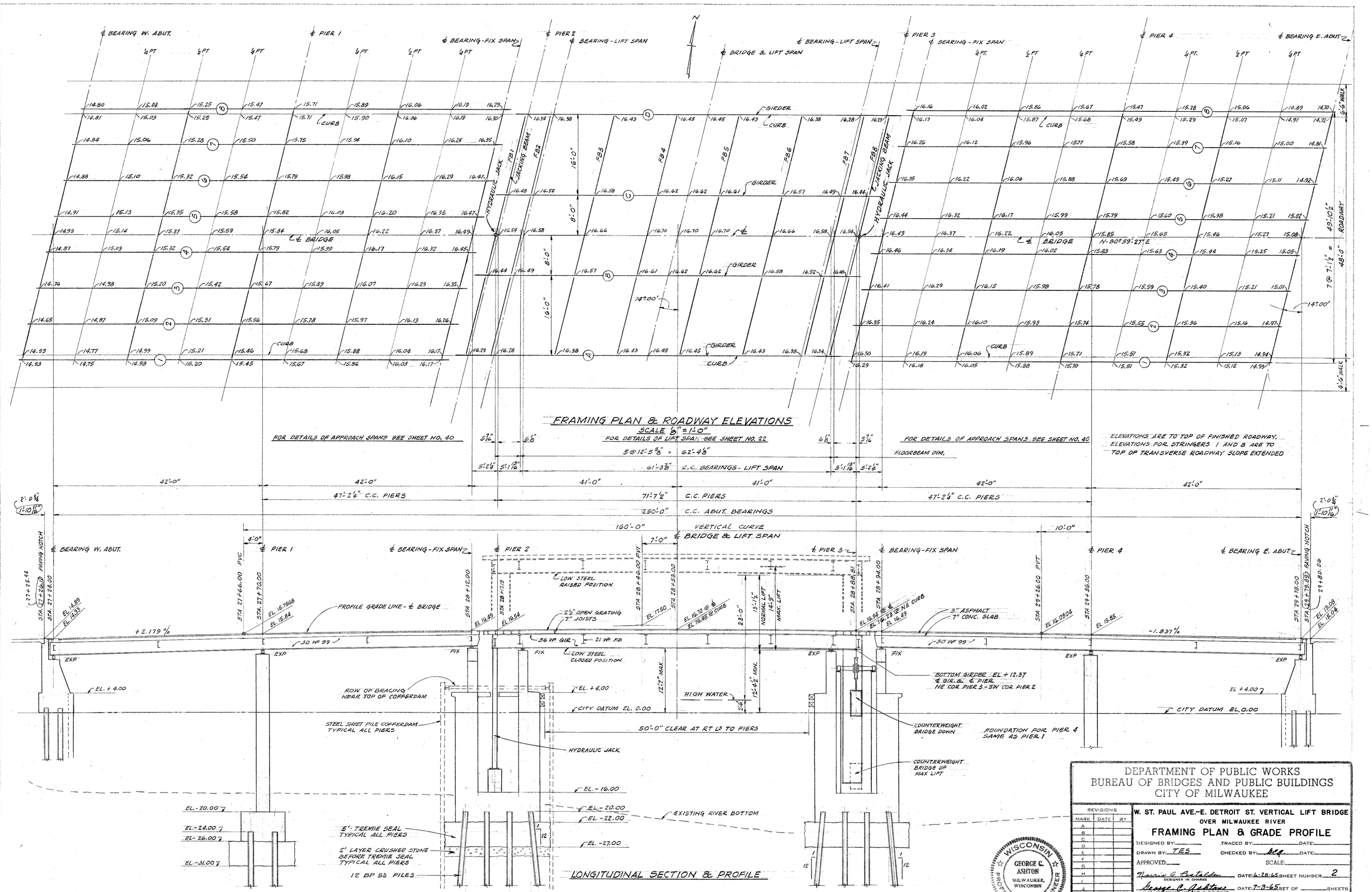

DEPARTMENT OF PUBLIC WORKS
BUREAU OF BRIDGES AND PUBLIC BUILDINGS
CITY OF MILWAUKEE

W. ST. PAUL AVE.-E. DETROIT ST. VERTICAL LIFT BRIDGE
OVER MILWAUKEE RIVER

FRAMING PLAN & GRADE PROFILE

DESIGNED BY: TRACED BY: DATE:
DRAWN BY: TES CHECKED BY: GCA DATE:
APPROVED: SCALE:
Norris A. Batelden DATE: 6-28-65 SHEET NUMBER 2
DESIGNER IN CHARGE
George C. Ashton DATE: 7-3-65 SET OF SHEETS
BUREAU OF BRIDGES AND PUBLIC BUILDINGS
Donald D. Loetling DATE: 7-6-65 JOB NO. 522-001
COMMISSIONER OF PUBLIC WORKS
Special Deputy

WISCONSIN GEORGE C. ASHTON MILWAUKEE, WISCONSIN PROFESSIONAL ENGINEER

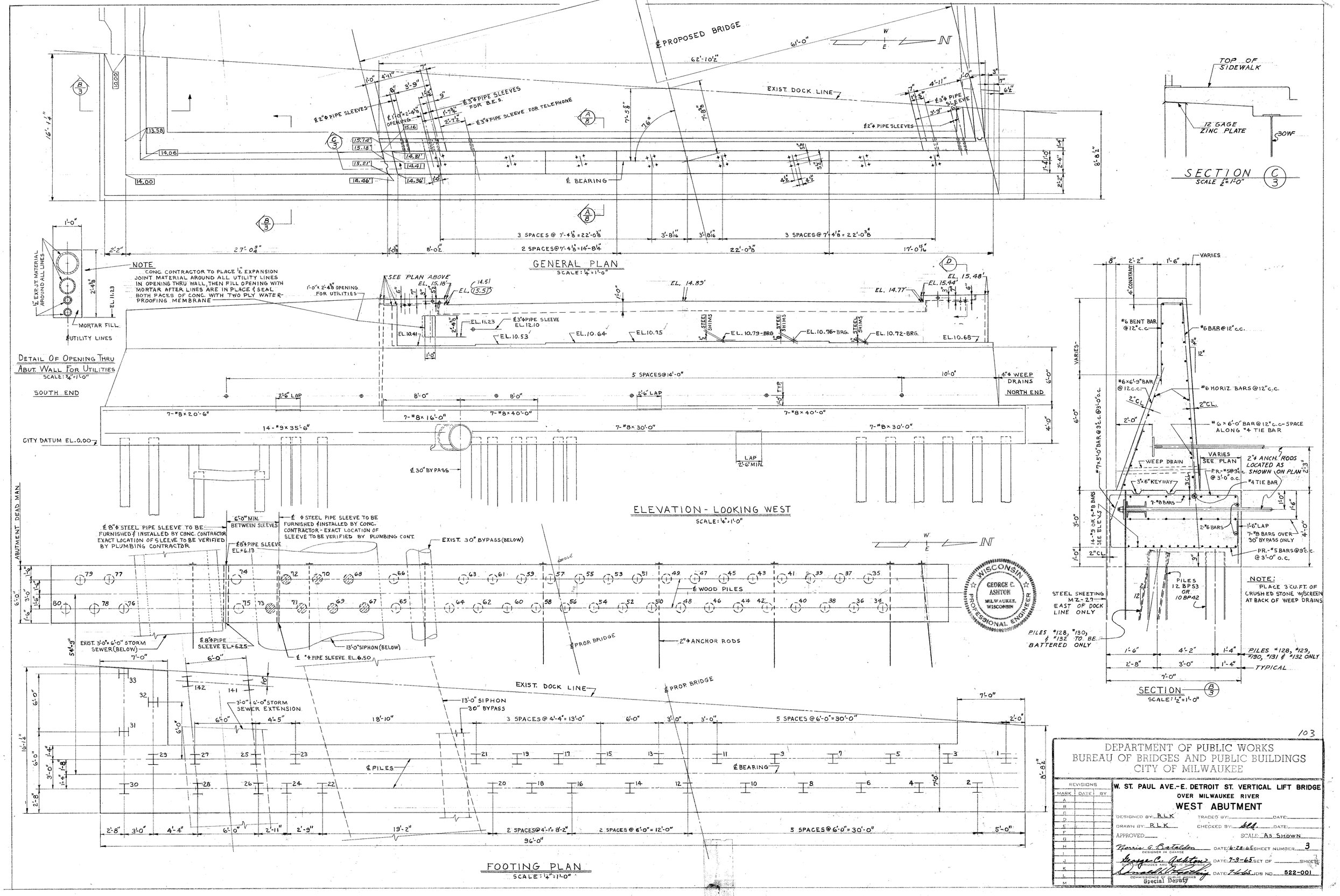

103

DEPARTMENT OF PUBLIC WORKS
BUREAU OF BRIDGES AND PUBLIC BUILDINGS
CITY OF MILWAUKEE

REVISIONS		
MARK	DATE	BY
A		
B		
C		
D		
E		
F		
G		
H		
I		
J		
K		
L		
M		

W. ST. PAUL AVE.-E. DETROIT ST. VERTICAL LIFT BRIDGE
OVER MILWAUKEE RIVER
WEST ABUTMENT

DESIGNED BY: R.L.K. TRACED BY: DATE:
DRAWN BY: R.L.K. CHECKED BY: DATE:
APPROVED: SCALE: As Shown

Morris C. Batalden — DESIGNER IN CHARGE — DATE: 6-28-65 SHEET NUMBER: 3
George C. Ashton — CHIEF, BUREAU OF BRIDGES AND PUBLIC BUILDINGS — DATE: 7-3-65 SET OF: SHEETS
Donald W. Reichly — COMMISSIONER OF PUBLIC WORKS, Special Deputy — DATE: 7-6-65 JOB NO. 522-001

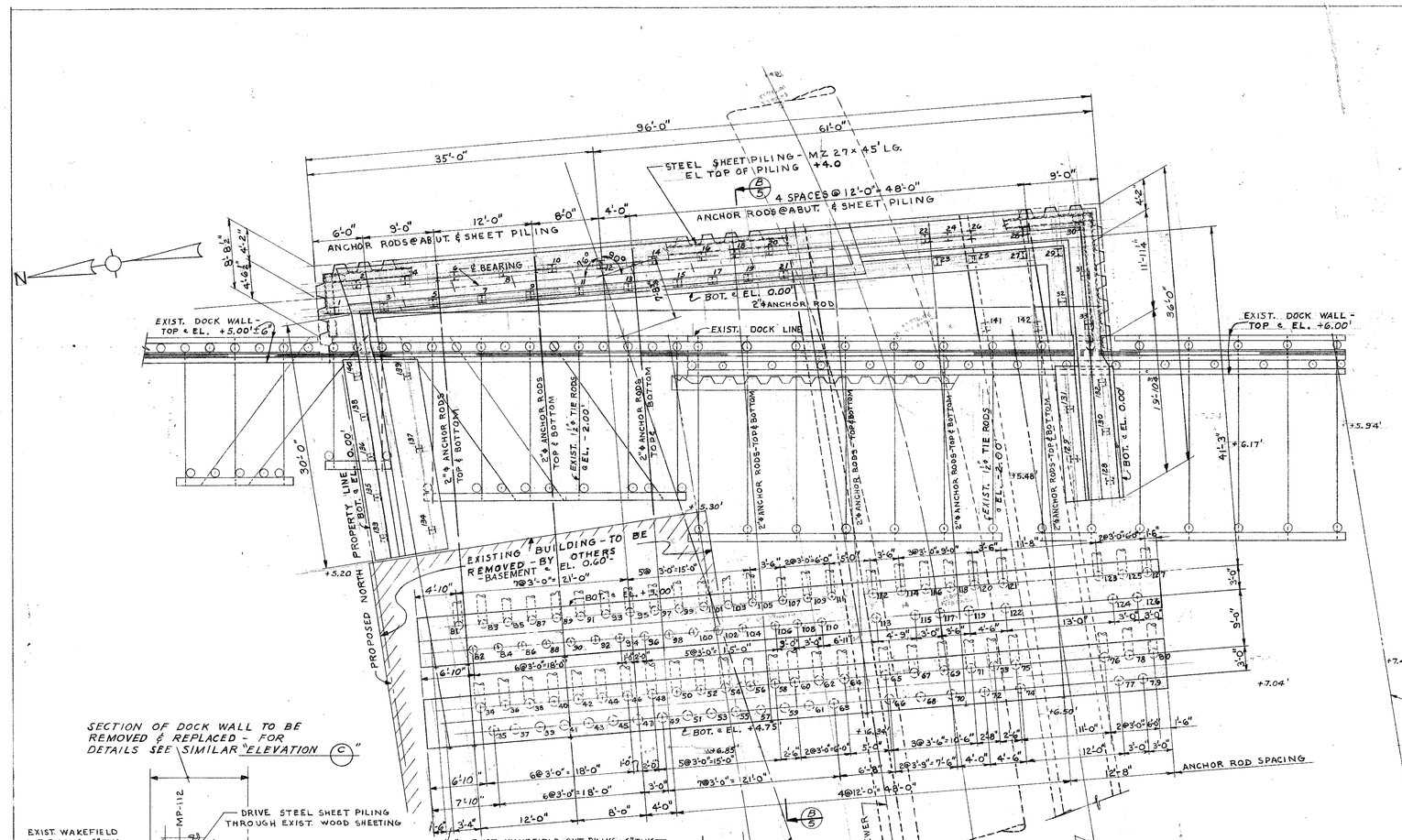

PLAN OF ABUTMENT AND RETAINING WALLS AT WEST DOCK LINE

SCALE 1/8" = 1'-0"

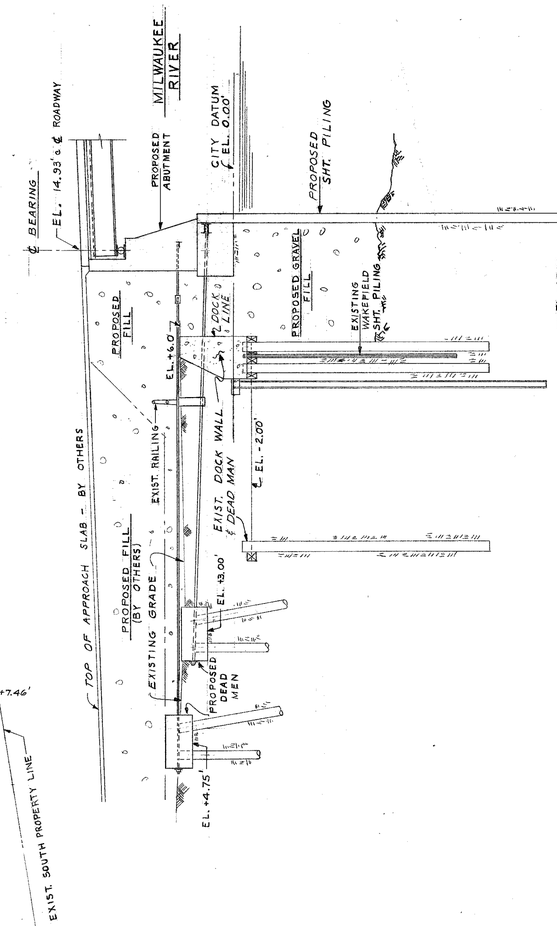

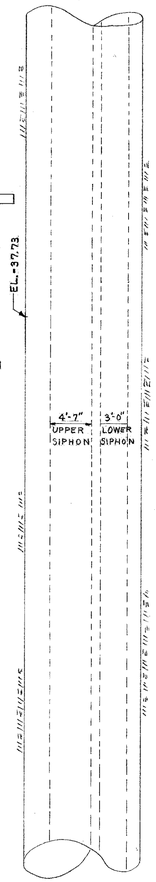

CROSS - SECTION

SCALE 1/8" = 1'-0"

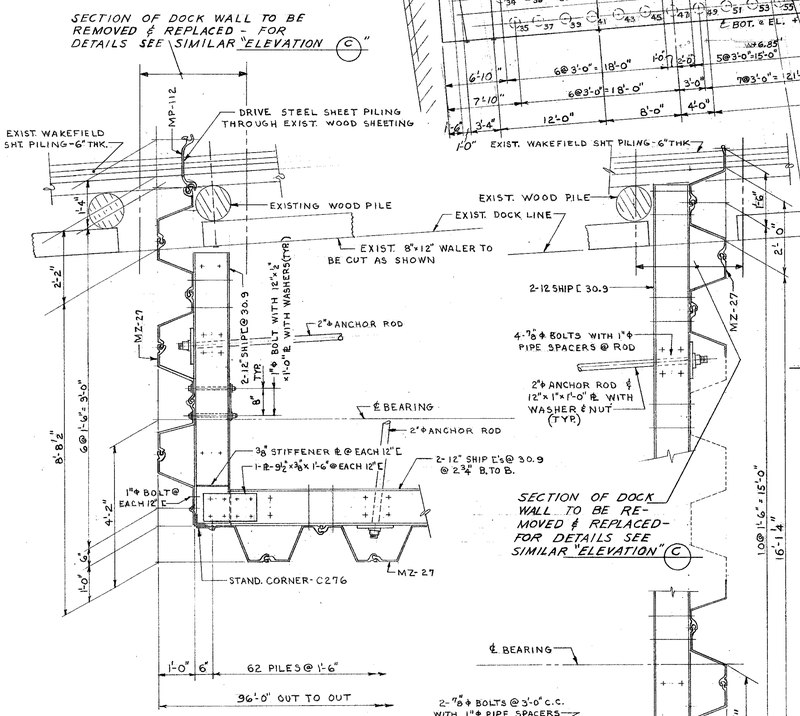

SHEET PILING AT NORTH END OF WEST ABUTMENT

SCALE: 1/2" = 1'-0"

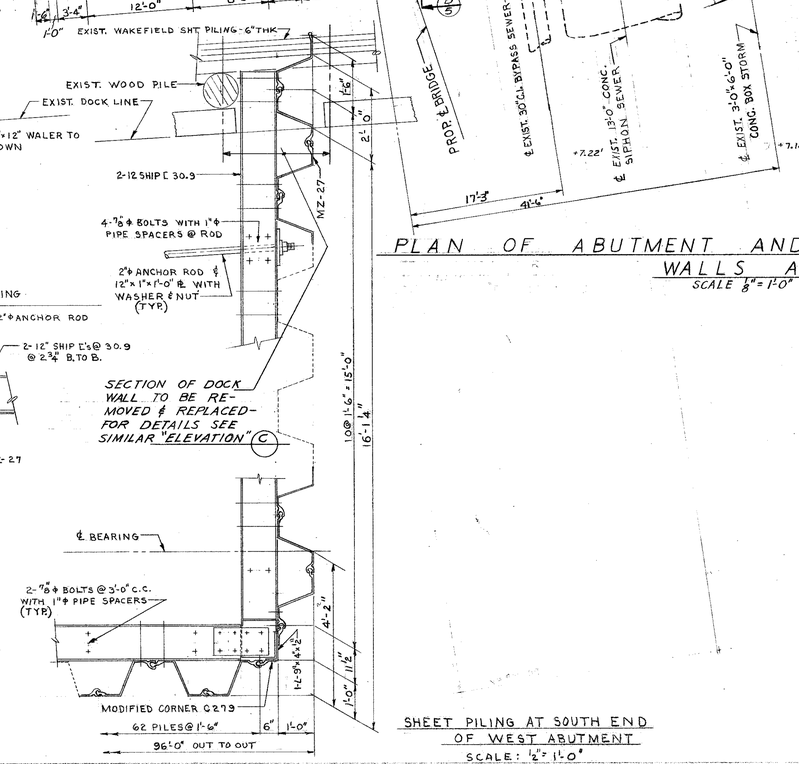

SHEET PILING AT SOUTH END OF WEST ABUTMENT

SCALE: 1/2" = 1'-0"

NOTE:

FOR TYPICAL STEEL SHEET PILING DETAILS SEE SHT. NO. 8 - EAST ABUTMENT DETAILS

PILING SCHEDULE

PILE NUMBER	NUMBER	TYPE	SECTION	LENGTH	
1 THROUGH 33	33	STEEL-H	12BP53	80'-0"	
34 THROUGH 64	31	TIMBER	DOUGLAS FIR	50'-0"	
65 & 66	2			45'-0"	
67 THROUGH 72	6			40'-0"	
73, 74 & 75	3			45'-0"	
76 THROUGH 80	5			50'-0"	
81 THROUGH 111	31			50'-0"	
112 & 113	2			45'-0"	
114 THROUGH 119	6			40'-0"	
120, 121 & 122	3			45'-0"	
123 THROUGH 127	5			50'-0"	
128 THROUGH 132	5	STEEL-H	10BP42	75'-0"	
133 THROUGH 140	8			75'-0"	
141 & 142	2		12BP53	80'-0"	

PILES #64, #65, #66, #74, #75, #76, #112, #113, #121, #122 & #123 TO BE DRILLED 1ST TEN FOOT OF DEPTH BEFORE DRIVING PILE

WISCONSIN GEORGE C. ASHTON MILWAUKEE, WISCONSIN PROFESSIONAL ENGINEER

DEPARTMENT OF PUBLIC WORKS
BUREAU OF BRIDGES AND PUBLIC BUILDINGS
CITY OF MILWAUKEE

W. ST. PAUL AVE.-E. DETROIT ST. VERTICAL LIFT BRIDGE
OVER MILWAUKEE RIVER

WEST ABUTMENT & RETAINING WALLS

REVISIONS		
MARK	DATE	BY
A		
B		
C		
D		
E		
F		
G		
H		
I		
J		
K		
L		
M		

DESIGNED BY: R.L.K. TRACED BY: DATE:
DRAWN BY: R.L.K. CHECKED BY: DATE:
APPROVED: SCALE: AS SHOWN
Norris C. Batselier DESIGNED IN CHARGE DATE: 6-28-65 SHEET NUMBER: 4
George C. Ashton DIVISION HEAD BUREAU OF BRIDGES DATE: 7-3-65 TOTAL SHEETS:
Donald R. Spethy Special Deputy DATE: 7-6-65 JOB NO. 522-001

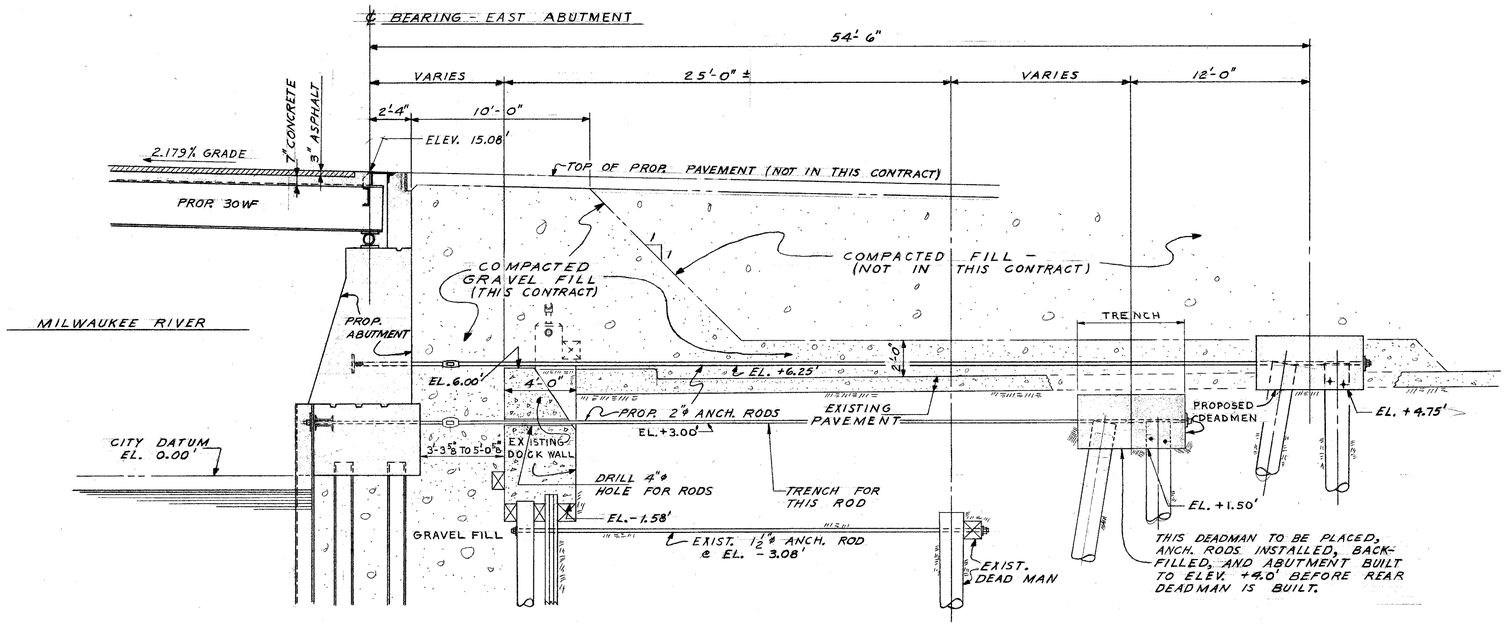

CROSS - SECTION @ ℄ OF ROADWAY
OF EAST ABUTMENT (A/9)
SCALE ¼" = 1'-0"

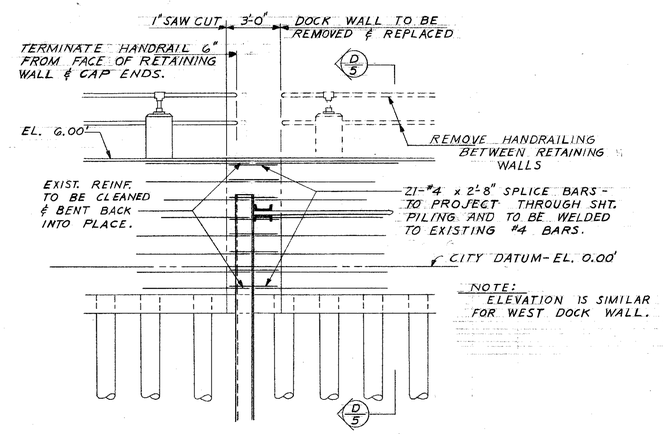

EAST DOCK WALL
PARTIAL ELEVATION (C/9)
SCALE ¼" = 1'-0"

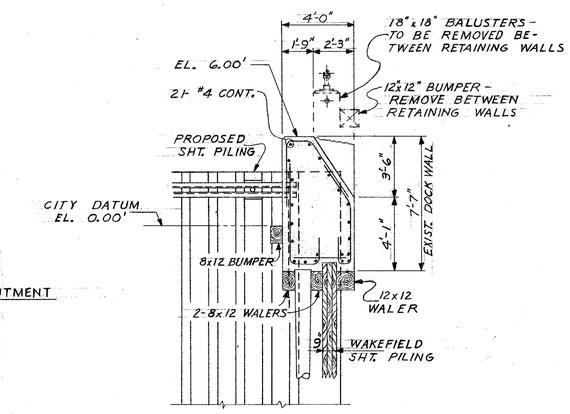

SECTION (D/5)
SCALE ¼" = 1'-0"

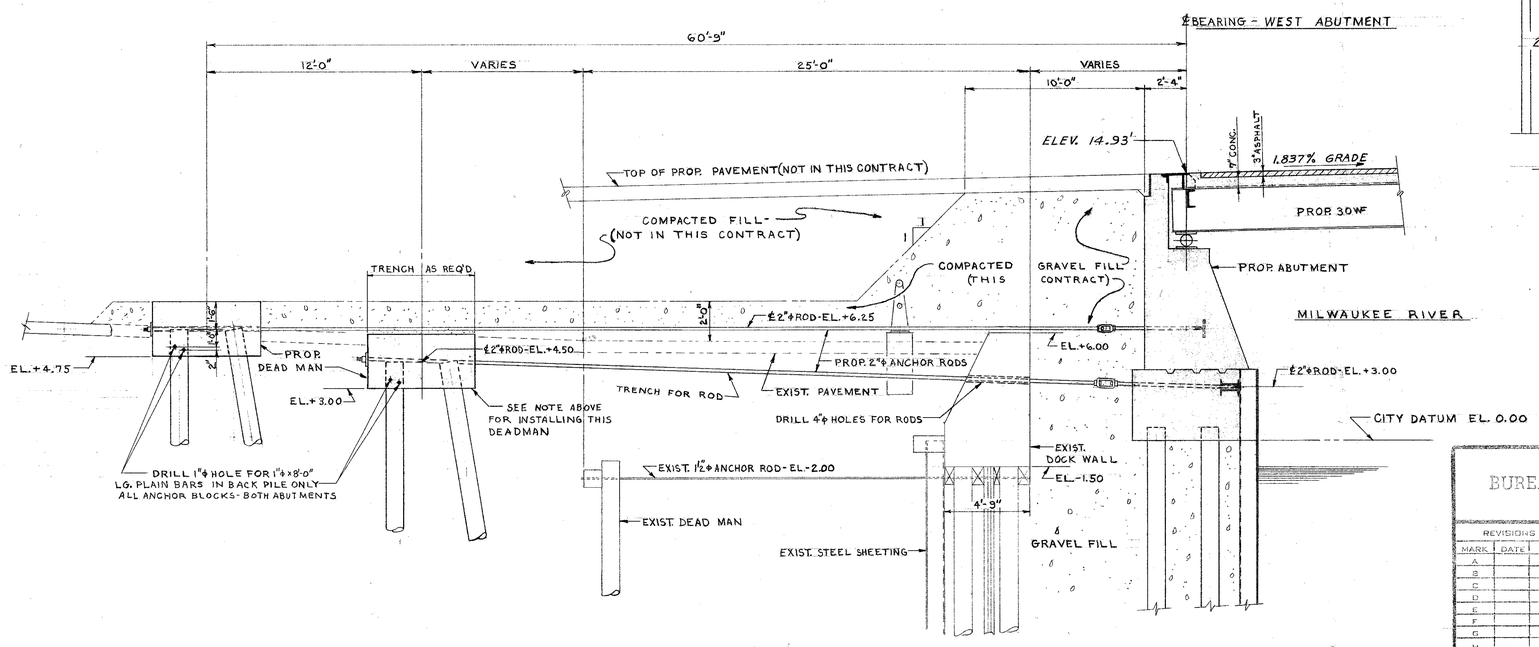

CROSS - SECTION @ ℄ OF ROADWAY
OF WEST ABUTMENT (B/4)
SCALE ¼" = 1'-0"

WISCONSIN
GEORGE C. ASHTON
MILWAUKEE, WISCONSIN
PROFESSIONAL ENGINEER

DEPARTMENT OF PUBLIC WORKS
BUREAU OF BRIDGES AND PUBLIC BUILDINGS
CITY OF MILWAUKEE

REVISIONS		
MARK	DATE	BY
A		
B		
C		
D		
E		
F		
G		
H		
I		
J		
K		
L		
M		

W. ST. PAUL AVE.-E. DETROIT ST. VERTICAL LIFT BRIDGE
OVER MILWAUKEE RIVER
CROSS SECTION AT ℄ ROADWAY AT ABUTMENTS

DESIGNED BY: RLK — TRACED BY: — DATE:
DRAWN BY: RLK — CHECKED BY: — DATE:
APPROVED: — SCALE: AS SHOWN
Norris A. Bakalen, DESIGNER IN CHARGE — DATE: 6-28-65 — SHEET NUMBER: 5
George C. Ashton, CHIEF OF BRIDGES AND PUBLIC BUILDINGS — DATE: 7-3-65 — SET OF: — SHEETS
Donald L. Spaeding, COMMISSIONER OF PUBLIC WORKS, Special Deputy — DATE: 7-6-65 — JOB NO. 522-001

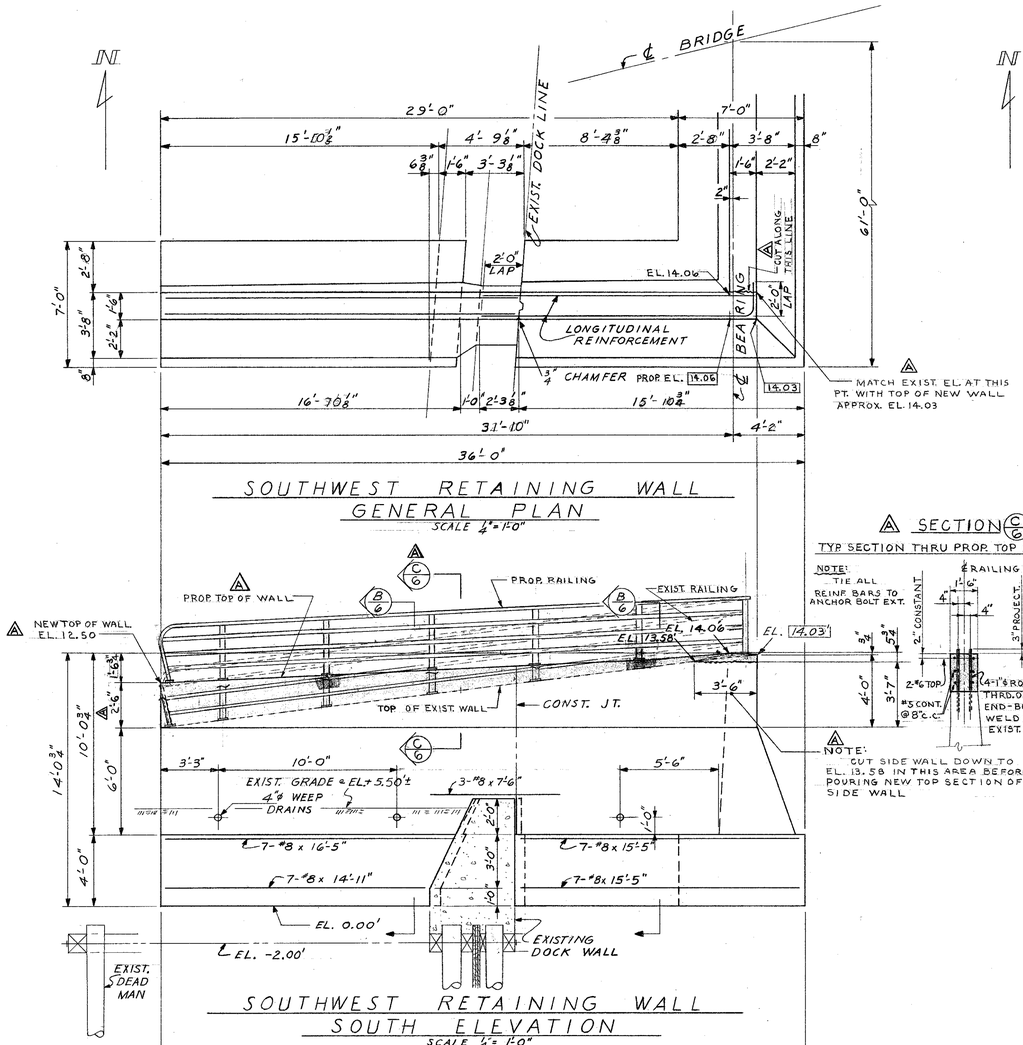

SOUTHWEST RETAINING WALL
GENERAL PLAN
SCALE ¼"=1'-0"

SOUTHWEST RETAINING WALL
SOUTH ELEVATION
SCALE ¼"=1'-0"

SECTION C/6
TYP. SECTION THRU PROP. TOP FOR RET. WALL

NOTE:
TIE ALL REINF. BARS TO ANCHOR BOLT EXT.

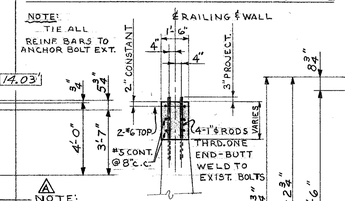

NOTE:
CUT SIDE WALL DOWN TO EL. 13.58 IN THIS AREA BEFORE POURING NEW TOP SECTION OF SIDE WALL

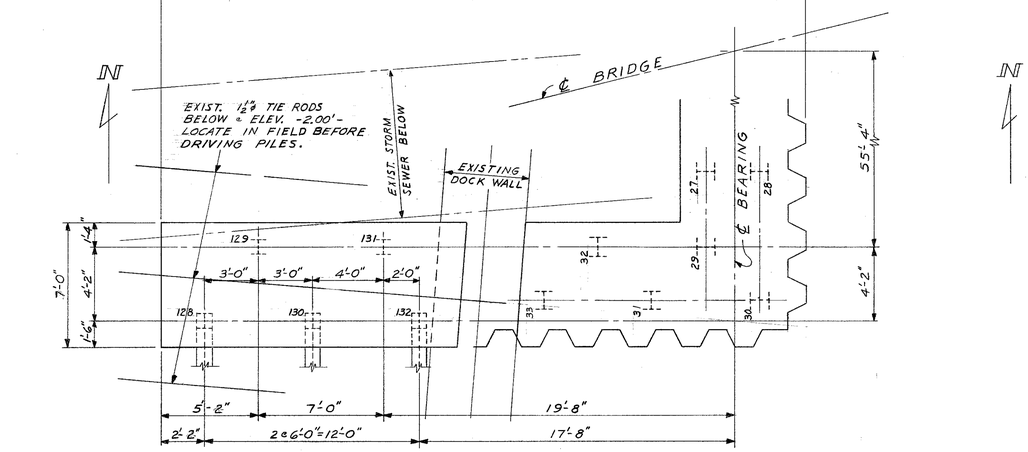

SOUTHWEST RETAINING WALL
FOOTING PLAN
SCALE ¼"=1'-0"

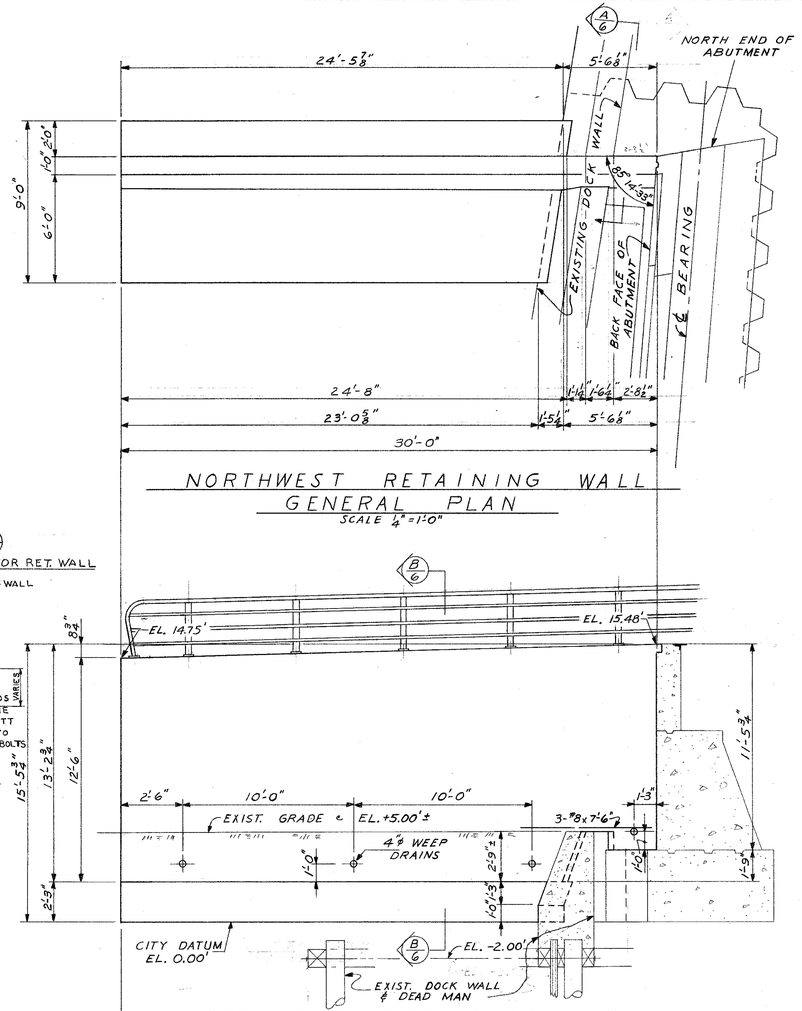

NORTHWEST RETAINING WALL
SOUTH ELEVATION
SCALE ¼"=1'-0"

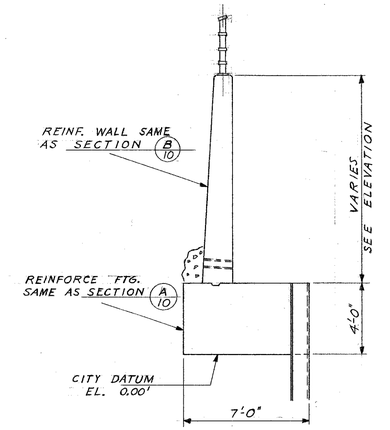

SECTION A/6
SCALE ¼"=1'-0"

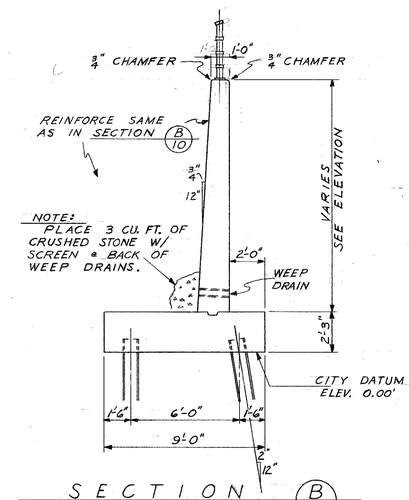

NOTE:
PLACE 3 CU. FT. OF CRUSHED STONE W/ SCREEN @ BACK OF WEEP DRAINS.

SECTION B/6
SCALE ¼"=1'-0"

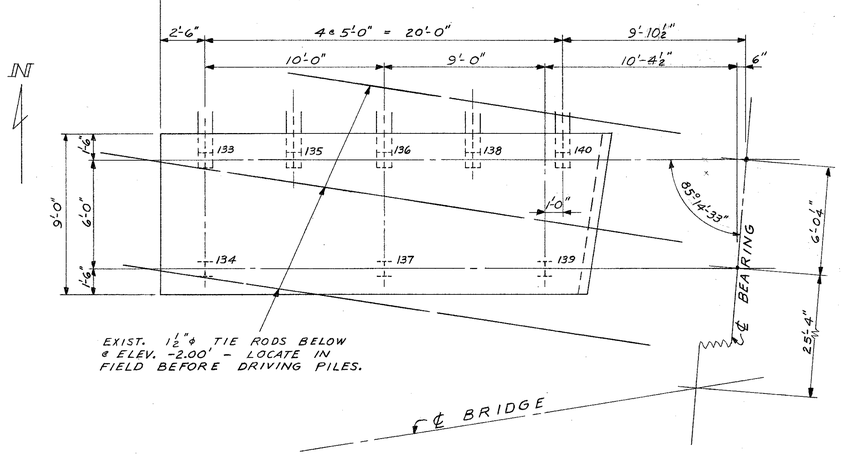

NORTHWEST RETAINING WALL
FOOTING PLAN
SCALE ¼"=1'-0"

WISCONSIN
GEORGE C. ASHTON
MILWAUKEE, WISCONSIN
PROFESSIONAL ENGINEER

DEPARTMENT OF PUBLIC WORKS
BUREAU OF BRIDGES AND PUBLIC BUILDINGS
CITY OF MILWAUKEE

REVISIONS		
MARK	DATE	BY
A	10-26-66	RLK
B		
C		
D		
E		
F		
G		
H		
I		
J		
K		
L		
M		

W. ST. PAUL AVE.-E. DETROIT ST. VERTICAL LIFT BRIDGE
OVER MILWAUKEE RIVER
NORTHWEST & SOUTHWEST RETAINING WALLS

DESIGNED BY: L.F.R. TRACED BY: DATE:
DRAWN BY: L.F.R. CHECKED BY: GCA DATE:
APPROVED: SCALE: ¼" = 1'-0"
Norris C. Batelder — DESIGNER IN CHARGE — DATE: 6-28-65 SHEET NUMBER 6
George C. Ashton — BUREAU OF BRIDGES AND PUBLIC BUILDINGS — DATE: 7-3-65 SET OF SHEETS
Thomas M. Feeney — COMMISSIONER OF PUBLIC WORKS — Special Deputy — DATE: 7-6-65 JOB NO. 522-001

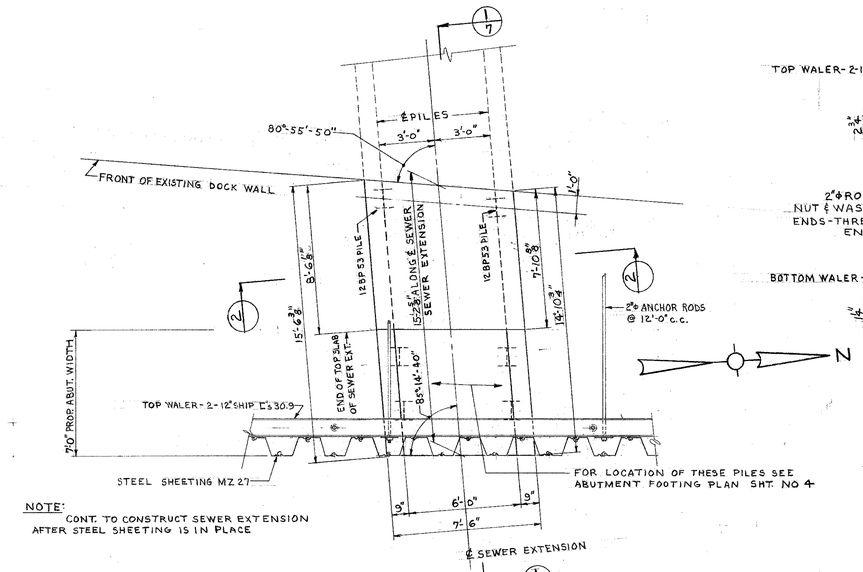

NOTE:
CONT. TO CONSTRUCT SEWER EXTENSION AFTER STEEL SHEETING IS IN PLACE

PLAN-STORM SEWER EXTENSION
(PROP. ABUTMENT NOT SHOWN)
SCALE: ¼"=1'-0"

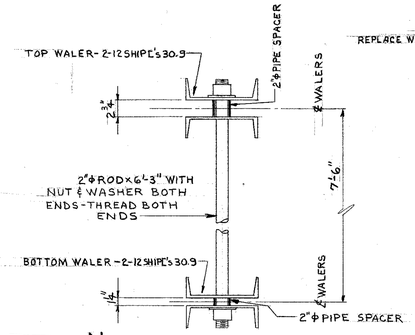

2"ϕ VERTICAL ROD DETAIL
SCALE: 1"=1'-0"

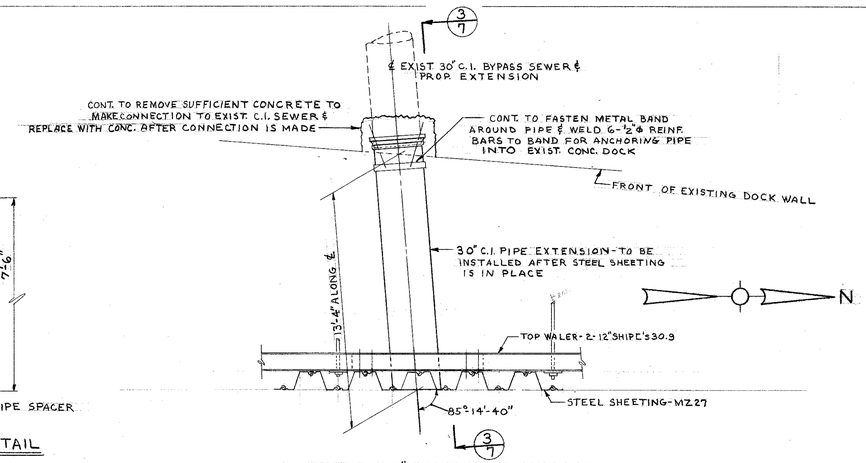

NOTE:
BYPASS SEWER IS A FACILITY OF THE SEWERAGE COMM. OF THE CITY OF MILWAUKEE. CONTRACTOR SHALL NOTIFY SEWERAGE COMM. AT LEAST THREE (3) DAYS BEFORE STARTING WORK ON THE SEWER.

PLAN - 30" C.I. BYPASS EXTENSION
(PROP. ABUTMENT NOT SHOWN)
SCALE: ¼"=1'-0"

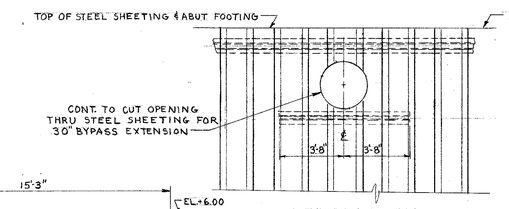

ELEVATION
SCALE: ¼"=1'-0"

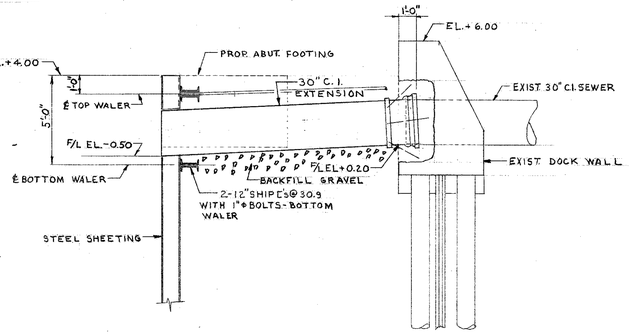

SECTION 3/7
SCALE: ¼"=1'-0"

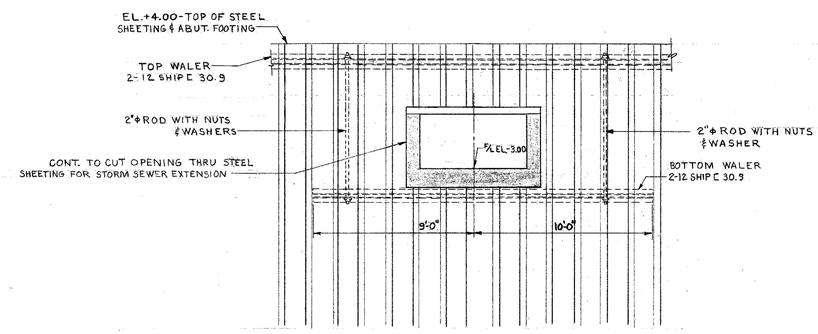

ELEVATION
SCALE: ¼"=1'-0"

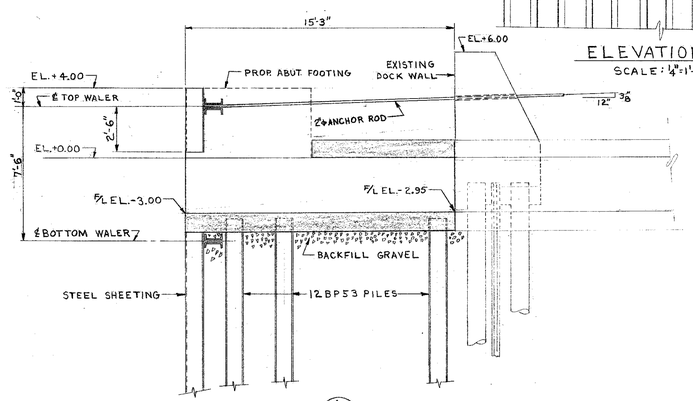

SECTION 1/7
SCALE: ¼"=1'-0"

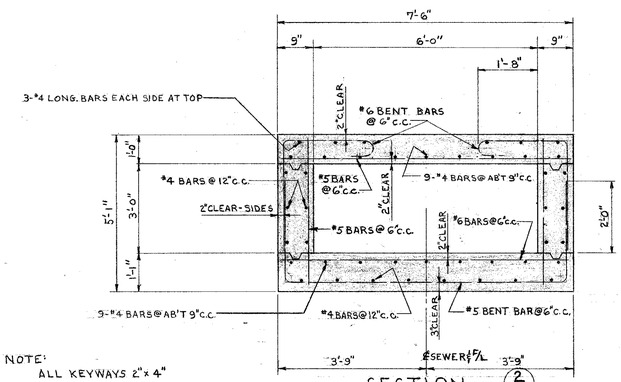

NOTE:
ALL KEYWAYS 2" x 4"

SECTION 2/7
TYPICAL SECTION THRU SEWER EXTENSION
SCALE: ½"=1'-0"

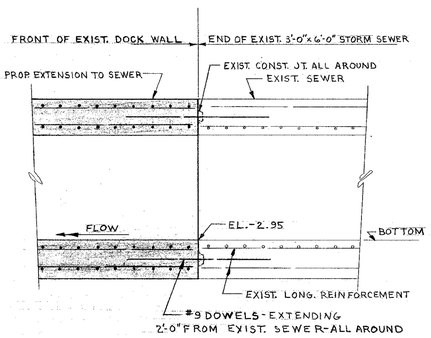

DETAIL THRU CONNECTION AT EXTENSION OF STORM SEWER
SCALE: ½"=1'-0"

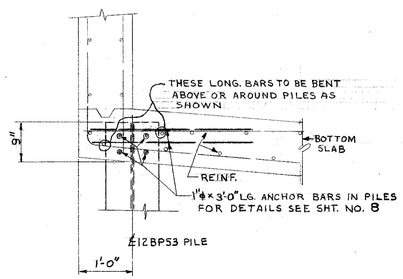

DETAIL FOR PLACING OF REINFORCEMENT & PILES IN BOTTOM SLAB OF SEWER EXTENSION
SCALE: ¾"=1'-0"

WISCONSIN
GEORGE C. ASHTON
MILWAUKEE, WISCONSIN
PROFESSIONAL ENGINEER

DEPARTMENT OF PUBLIC WORKS
BUREAU OF BRIDGES AND PUBLIC BUILDINGS
CITY OF MILWAUKEE

REVISIONS		
MARK	DATE	BY
A		
B		
C		
D		
E		
F		
G		
H		
I		
J		
K		
L		
M		

W. ST. PAUL AVE.-E. DETROIT ST. VERTICAL LIFT BRIDGE
OVER MILWAUKEE RIVER
SEWER EXTENSIONS

DESIGNED BY: R.L.K. TRACED BY: DATE:
CHECKED BY: R.L.K. CHECKED BY: J.C.A. DATE:
APPROVED: SCALE: AS SHOWN
Norris A. Batalden, DESIGNER IN CHARGE — DATE: 6-28-65 — SHEET NUMBER 7
George C. Ashton, BRIDGES AND PUBLIC BUILDINGS — DATE: 7-3-65 — SET OF SHEETS
Donald Bradley, COMMISSIONER — DATE: 7-6-65 — JOB NO. 522-001
Special Deputy

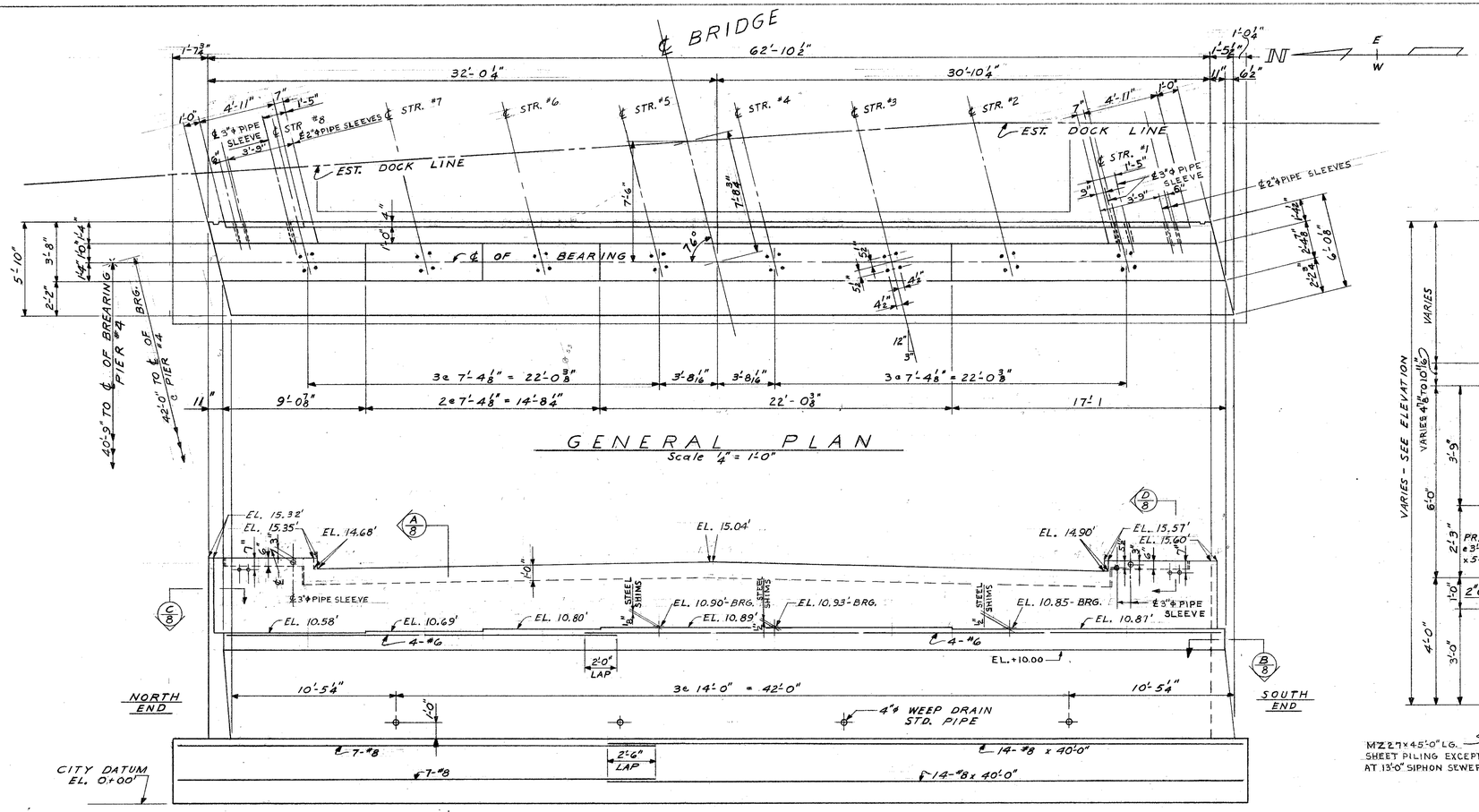

GENERAL PLAN
Scale 1/4" = 1'-0"

ELEVATION
LOOKING EAST
Scale 1/4" = 1'-0"

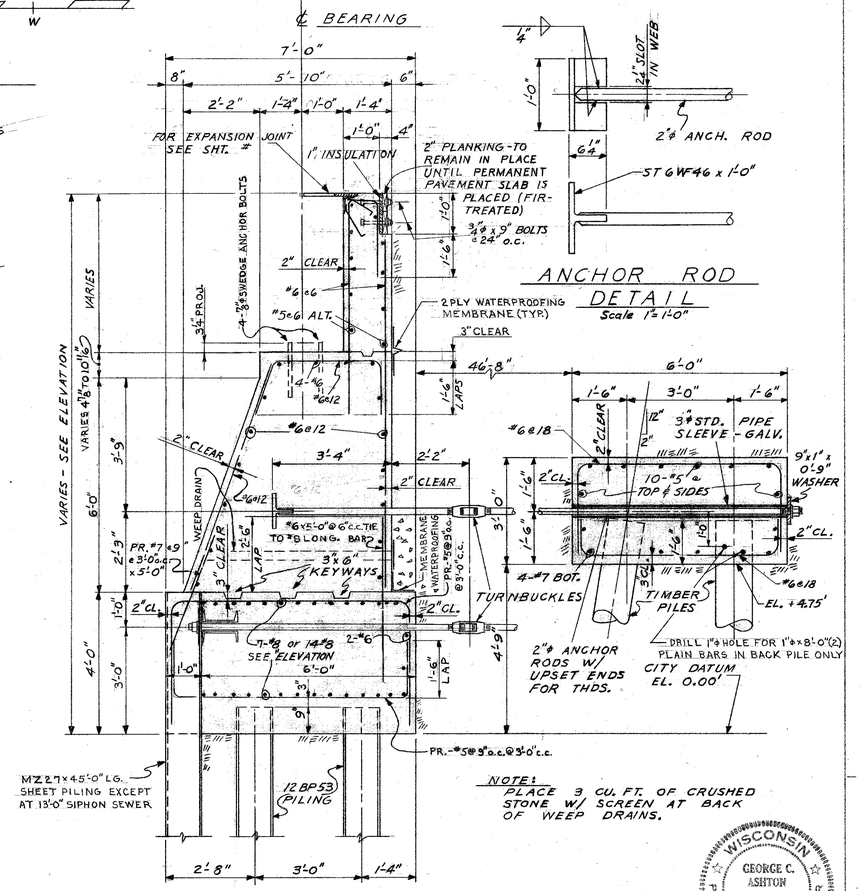

NOTE:
PLACE 3 CU. FT. OF CRUSHED STONE W/ SCREEN AT BACK OF WEEP DRAINS.

SECTION (A/8)
Scale 1/2" = 1'-0"

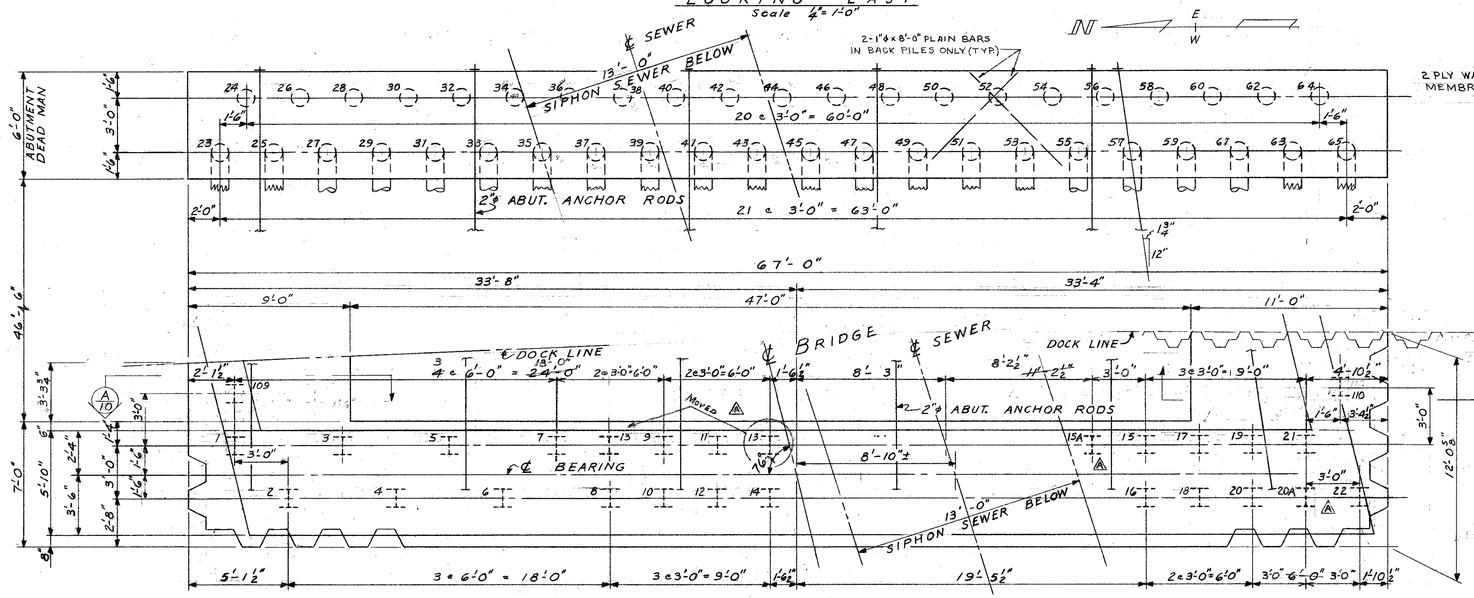

FOOTING PLAN
Scale 1/4" = 1'-0"

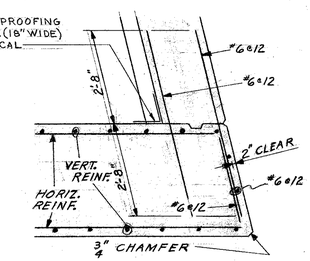

SECTION (B/8)
Scale 1/2" = 1'-0"

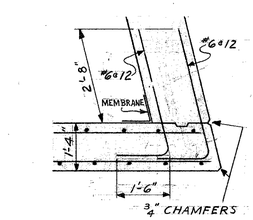

SECTION (C/8)
Scale 1/2" = 1'-0"

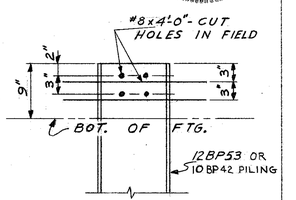

TOP OF PILE DETAIL
Scale 1" = 1'-0"

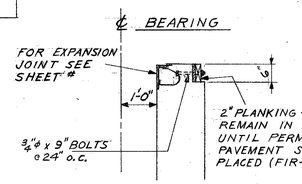

SECTION (D/8)
SCALE 1/2" = 1'-0"

△ AS BUILT

103

DEPARTMENT OF PUBLIC WORKS
BUREAU OF BRIDGES AND PUBLIC BUILDINGS
CITY OF MILWAUKEE

REVISIONS		
MARK	DATE	BY
△	12/16/65	LFR
B		
C		
D		
E		
F		
G		
H		
I		
J		
K		
L		
M		

W. ST. PAUL AVE.-E. DETROIT ST. VERTICAL LIFT BRIDGE
OVER MILWAUKEE RIVER
EAST ABUTMENT

DESIGNED BY: L. F. R. TRACED BY: DATE:
DRAWN BY: L. F. R. CHECKED BY: DATE:
APPROVED: SCALE: As Shown
Norris A. Batalden, DESIGNER IN CHARGE — DATE: 6-28-65 SHEET NUMBER: 8
George C. Ashton, BUREAU OF BRIDGES AND PUBLIC BUILDINGS — DATE: 9-3-65 SET OF: SHEETS
Samuel N. Kasling, COMMISSIONER OF PUBLIC WORKS, Special Deputy — DATE: 7-6-65 JOB NO. 522-001

WISCONSIN
GEORGE C. ASHTON
MILWAUKEE, WISCONSIN
PROFESSIONAL ENGINEER

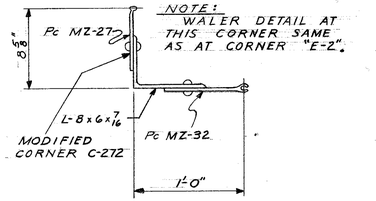

SPECIAL CORNER "C-1"
Scale 1½" = 1'-0"

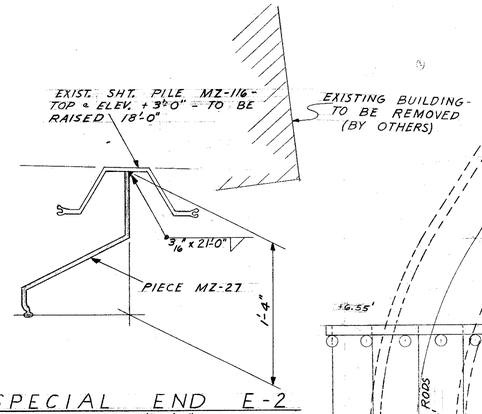

SPECIAL END E-2
Scale 1½" = 1'-0"

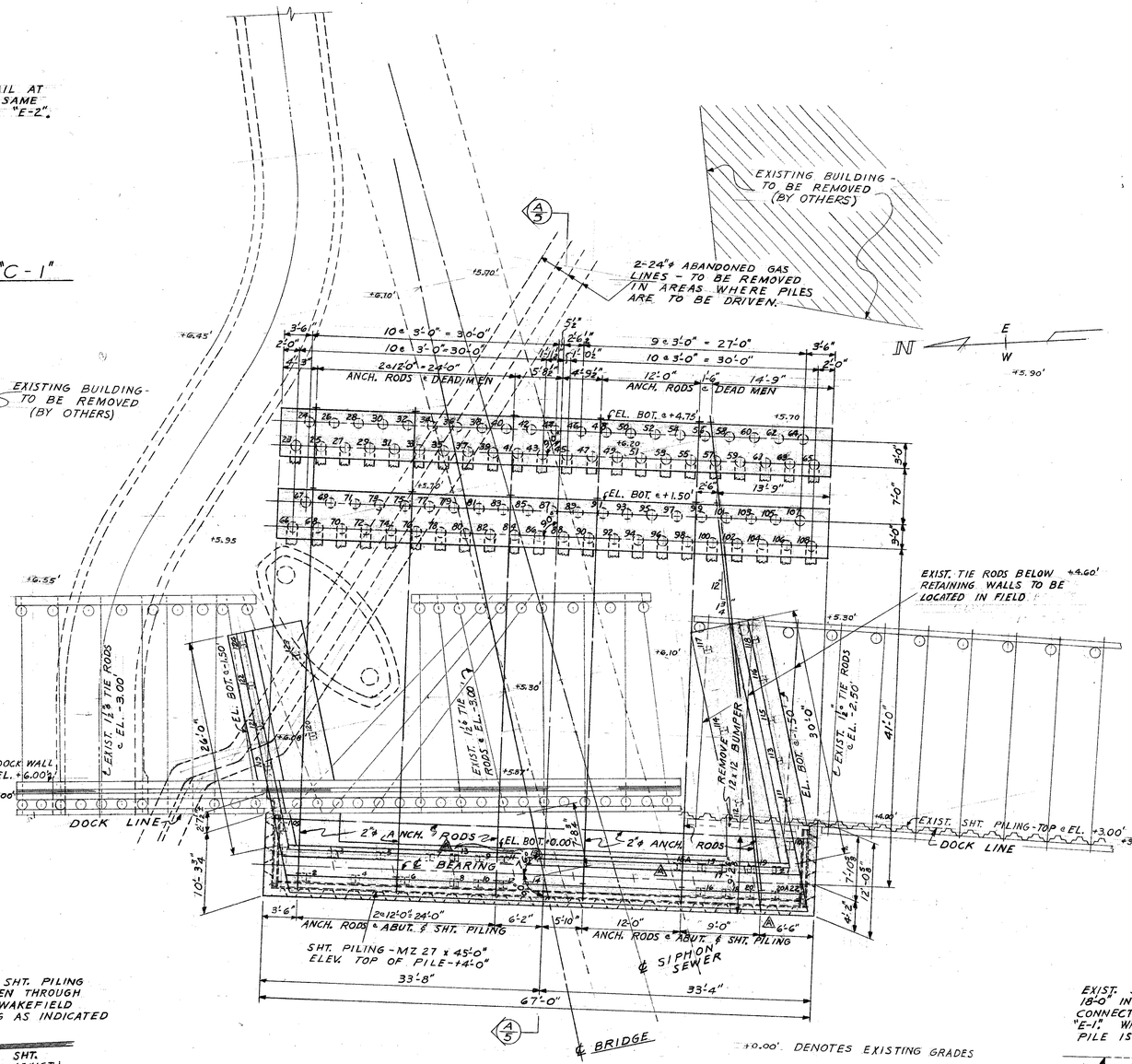

PLAN OF ABUTMENT AND RETAINING WALLS AT EAST DOCK LINE
Scale 1/8" = 1'-0"

PILING SCHEDULE

PILE NUMBER	NUMBER	TYPE	SECTION	LENGTH	
1 THROUGH 22	22	STEEL - H	12 BP 53	80'-0"	
23 THROUGH 33	11	TIMBER	DOUGLAS FIR	50'-0"	
34 & 35	2			45'-0"	
36 THROUGH 41	6			40'-0"	
42 & 43	2			45'-0"	
44 & 45	2			50'-0"	
46 THROUGH 65	20			50'-0"	
66 THROUGH 78	13			50'-0"	
79 & 80	2			45'-0"	
81 & 82	2			40'-0"	
83 THROUGH 86	4			35'-0"	
87 & 88	2			40'-0"	
89 & 90	2			45'-0"	
91 THROUGH 108	18			50'-0"	
109 & 110	2	STEEL - H	12 BP53	80'-0"	
111 THROUGH 118	8		10 BP42	75'-0"	
119 THROUGH 124	6			75'-0"	

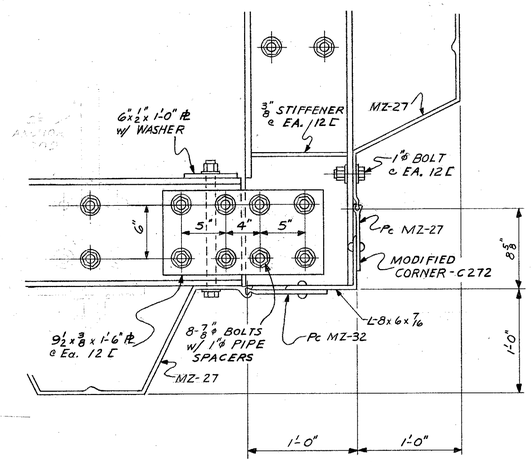

SPECIAL CORNER "C-2"
Scale 1½" = 1'-0"

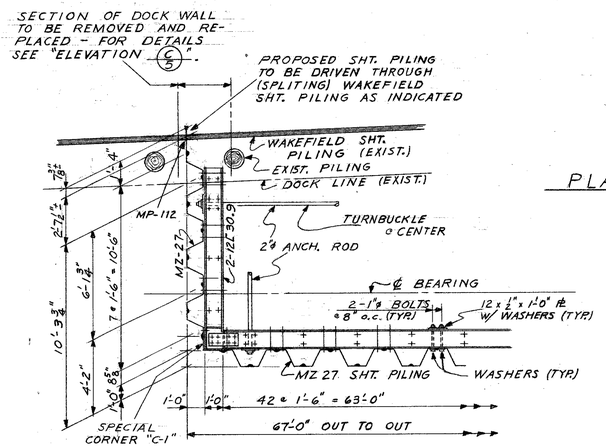

SHEET PILING @ NORTH END OF EAST ABUTMENT
Scale ¼" = 1'-0"

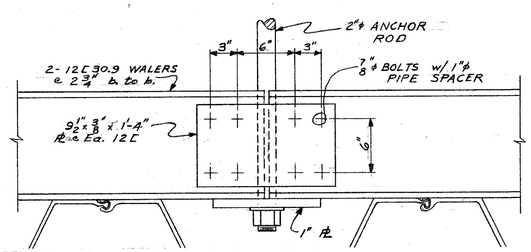

TYPICAL WALER SPLICE
Scale 1½" = 1'-0"

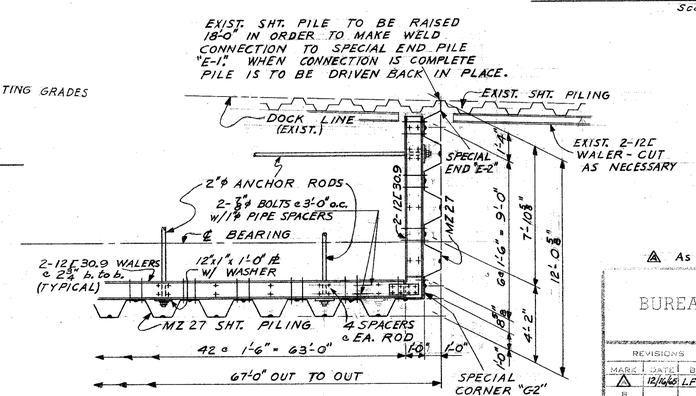

SHEET PILING @ SOUTH END OF EAST ABUTMENT
Scale ¼" = 1'-0"

WISCONSIN GEORGE C. ASHTON MILWAUKEE, WISCONSIN PROFESSIONAL ENGINEER

△ As Built

DEPARTMENT OF PUBLIC WORKS
BUREAU OF BRIDGES AND PUBLIC BUILDINGS
CITY OF MILWAUKEE

REVISIONS

MARK	DATE	BY
△	12/1/66	LFR
B		
C		
D		
E		
F		
G		
H		
J		
K		
L		
M		

W. ST. PAUL AVE.-E. DETROIT ST. VERTICAL LIFT BRIDGE
OVER MILWAUKEE RIVER

EAST ABUTMENT & RETAINING WALLS

DESIGNED BY: L.F.R. TRACED BY: DATE:
DRAWN BY: L.F.R. CHECKED BY: DATE:
APPROVED: SCALE:
Norris A. Batalden DATE: 6-28-65 SHEET NUMBER 9
DESIGNER IN CHARGE
George C. Ashton DATE: 7-3-65 SHEET OF SHEETS
BRIDGE AND BUILDING ENGINEER
Donald R. Lasecky DATE: 2-6-68 JOB NO. 522-001
COMMISSIONER OF PUBLIC WORKS
Special Deputy

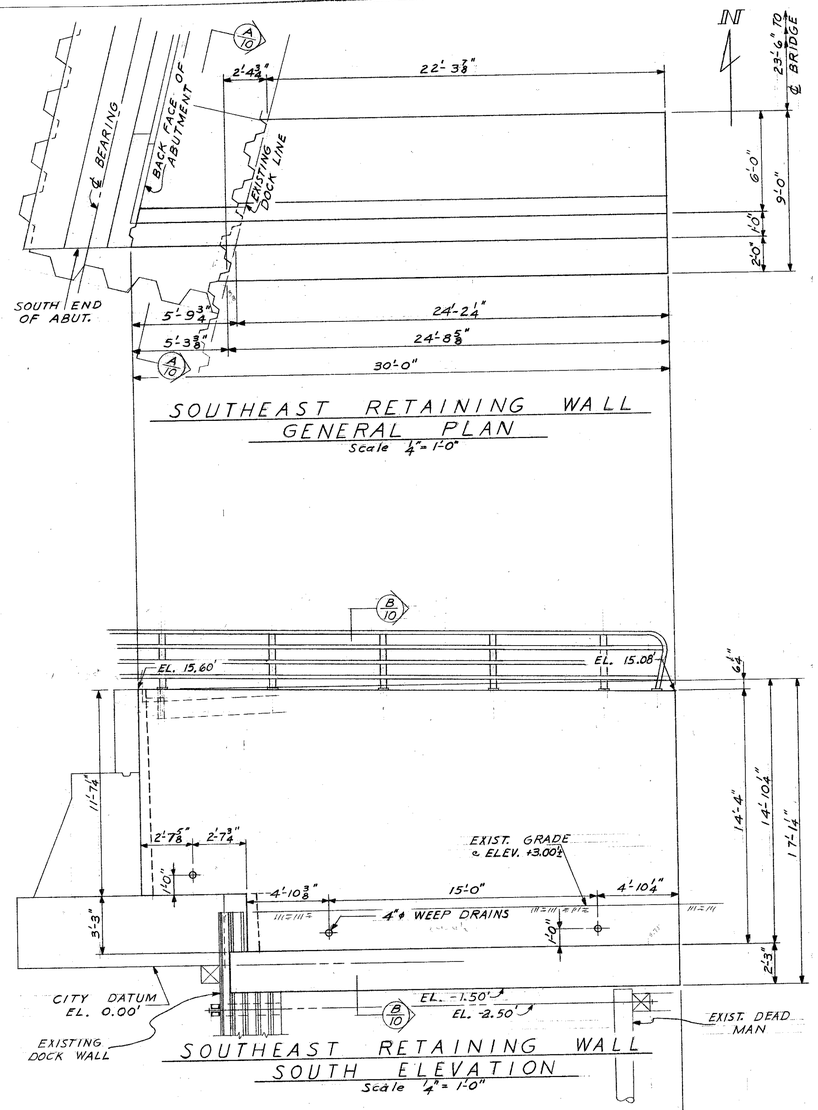

SOUTHEAST RETAINING WALL
GENERAL PLAN
Scale ¼" = 1'-0"

SOUTHEAST RETAINING WALL
SOUTH ELEVATION
Scale ¼" = 1'-0"

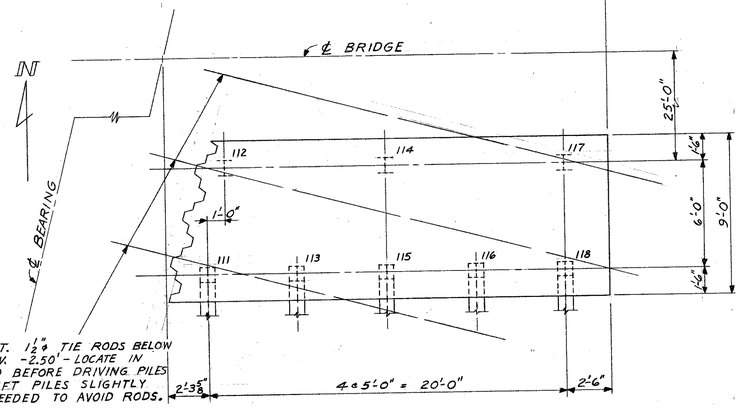

SOUTHEAST RETAINING WALL
FOOTING PLAN
Scale ¼" = 1'-0"

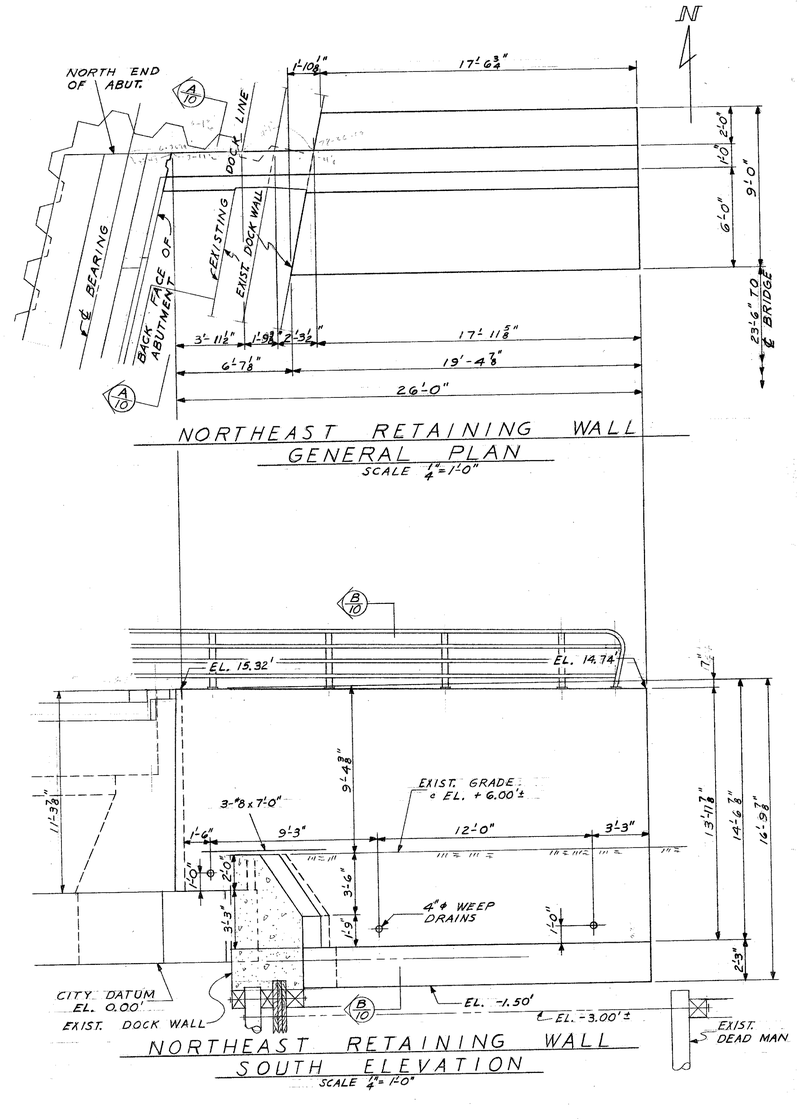

NORTHEAST RETAINING WALL
GENERAL PLAN
SCALE ¼" = 1'-0"

NORTHEAST RETAINING WALL
SOUTH ELEVATION
SCALE ¼" = 1'-0"

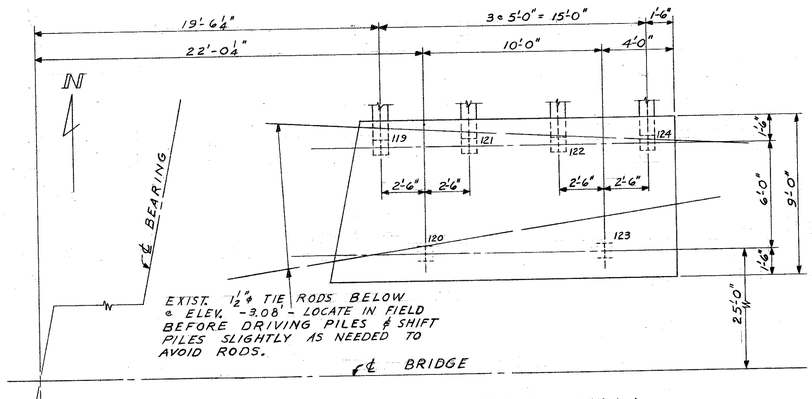

NORTHEAST RETAINING WALL
FOOTING PLAN
SCALE ¼" = 1'-0"

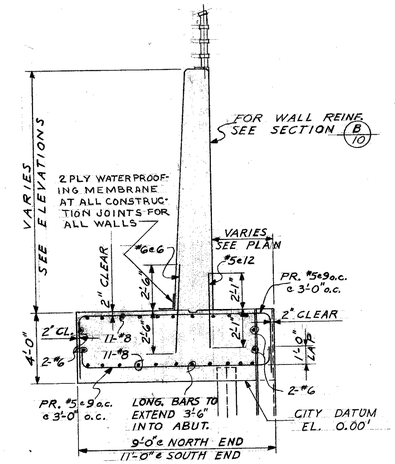

SECTION A/10
SCALE ¼" = 1'-0"

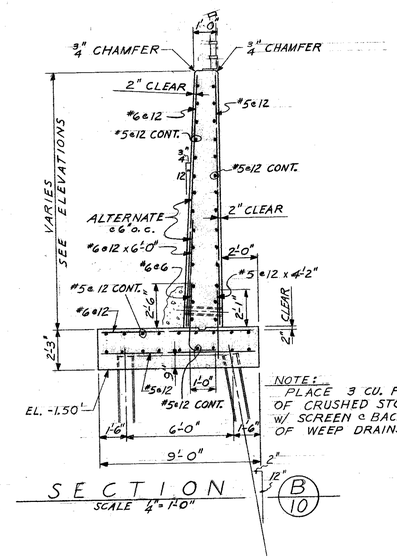

NOTE: PLACE 3 CU. FT. OF CRUSHED STONE W/ SCREEN @ BACK OF WEEP DRAINS

SECTION B/10
SCALE ¼" = 1'-0"

WISCONSIN GEORGE C. ASHTON MILWAUKEE, WISCONSIN PROFESSIONAL ENGINEER

DEPARTMENT OF PUBLIC WORKS
BUREAU OF BRIDGES AND PUBLIC BUILDINGS
CITY OF MILWAUKEE

REVISIONS		
MARK	DATE	BY
A		
B		
C		
D		
E		
F		
G		
H		
I		
J		
K		
L		
M		

W. ST. PAUL AVE.-E. DETROIT ST. VERTICAL LIFT BRIDGE
OVER MILWAUKEE RIVER
NORTHEAST & SOUTHEAST RETAINING WALLS

DESIGNED BY: L. F. R. TRACED BY: DATE:
DRAWN BY: L. F. R. CHECKED BY: DATE:
APPROVED: SCALE: ¼" = 1'-0"
Norris A. Batalden DESIGNER IN CHARGE DATE: 6-28-65 SHEET NUMBER 10
George C. Ashton BUREAU OF BRIDGES AND PUBLIC BUILDINGS DATE: 7-3-65 SHEET OF SHEETS
Donald W. Seeley COMMISSIONER OF PUBLIC WORKS Special Deputy DATE: 7-6-65 JOB NO. 522-001

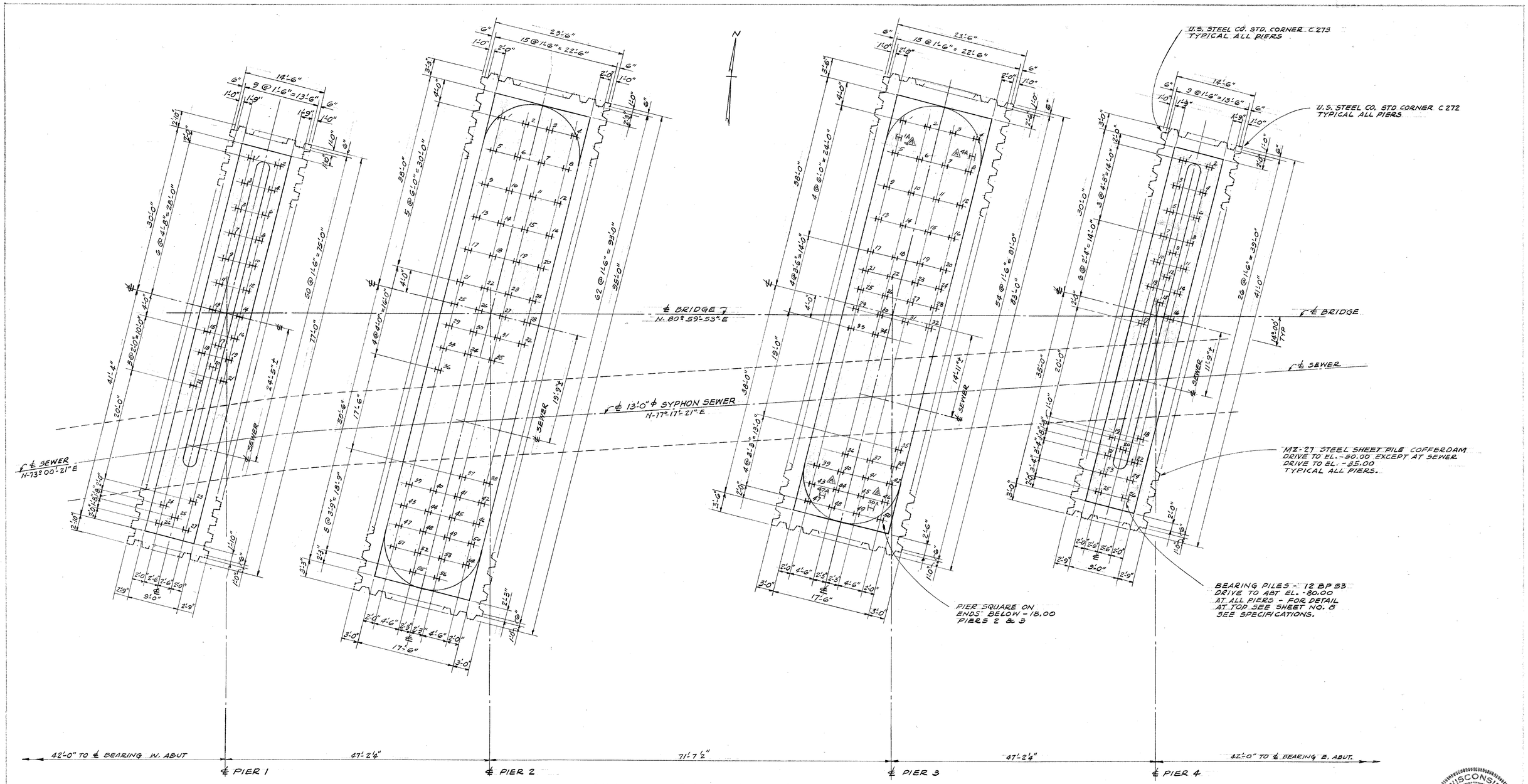

FOUNDATION AND PILING PLAN
PIERS 1, 2, 3, AND 4
SCALE 1/8" = 1'-0"

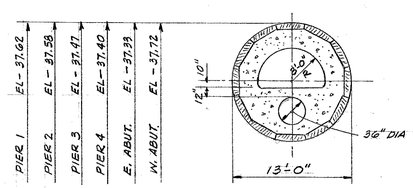

SECTION THRU SYPHON SEWER

WISCONSIN
GEORGE C. ASHTON
MILWAUKEE, WISCONSIN
PROFESSIONAL ENGINEER

DEPARTMENT OF PUBLIC WORKS
BUREAU OF BRIDGES AND PUBLIC BUILDINGS
CITY OF MILWAUKEE

REVISIONS		
MARK	DATE	BY
A	12/16/68	LFR
B		
C		
D		
E		
F		
G		
H		
I		
J		
K		
L		
M		

As Built

W. ST. PAUL AVE.-E. DETROIT ST. VERTICAL LIFT BRIDGE
OVER MILWAUKEE RIVER
FOUNDATION & PILING PLAN-PIERS 1,2,3 & 4

DESIGNED BY: TES — TRACED BY: — DATE:
DRAWN BY: TES — CHECKED BY: — DATE:
APPROVED: — SCALE:
Norris C. Batchelor, DESIGNER IN CHARGE — DATE: 6-28-65 — SHEET NUMBER 11
George C. Ashton, BUR. OF BRIDGES AND PUBLIC BUILDINGS — DATE: 7-3-65 — SET OF — SHEETS
COMMISSIONER OF PUBLIC WORKS, Special Deputy — DATE: 7-6-65 — JOB NO. 522-001

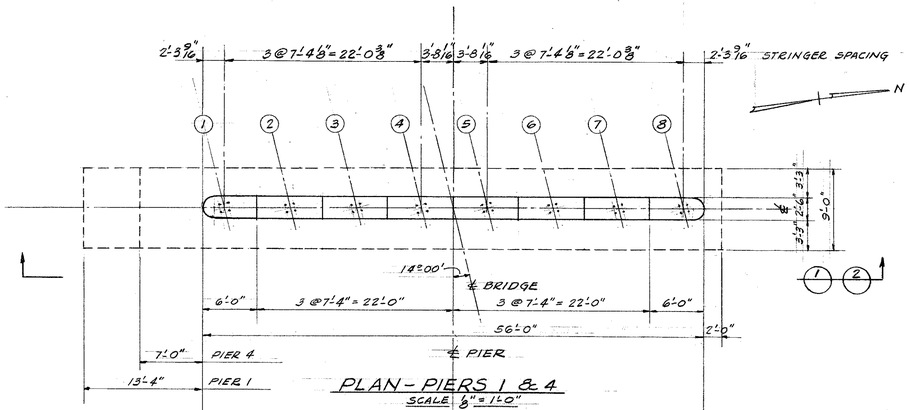

PLAN - PIERS 1 & 4
SCALE 3/8" = 1'-0"

TOP OF PIER ELEVATIONS

STRINGER	1	2	3	4	5	6	7	8
PIER 1	11.27	11.41	11.52	11.64	11.67	11.63	11.60	11.52
PIER 4	11.52	11.59	11.63	11.67	11.64	11.54	11.43	11.29

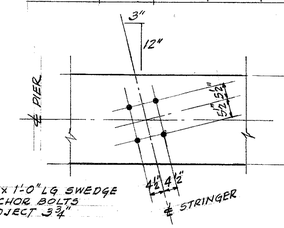

ANCHOR BOLT SETTING DETAIL

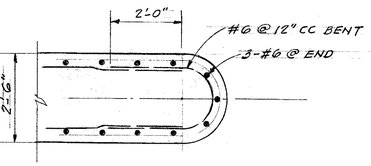

PIER END DETAIL 4

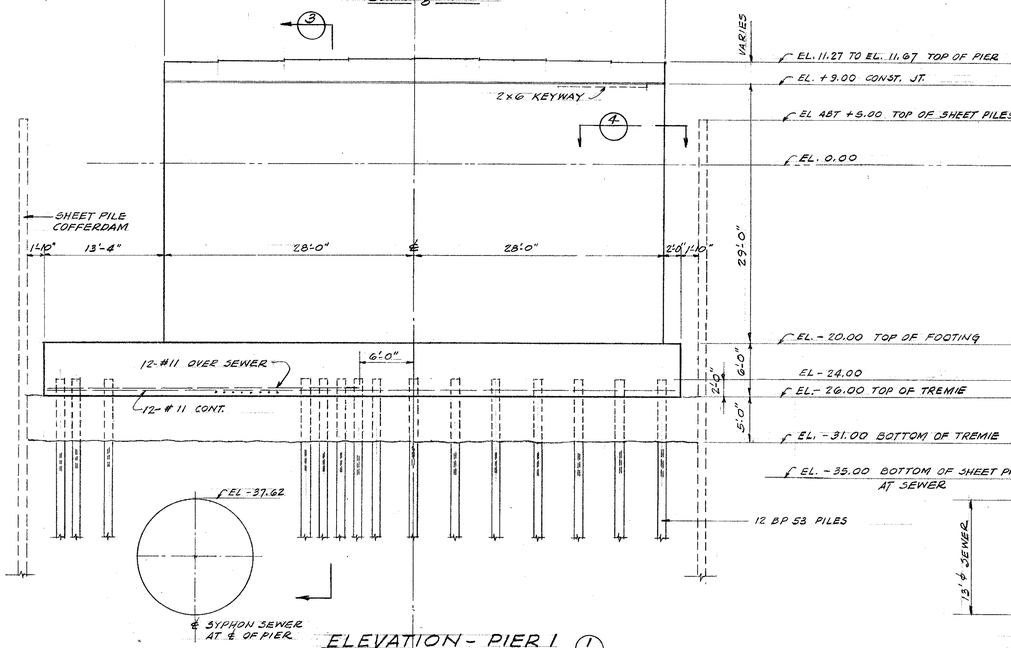

ELEVATION - PIER 1 1
LOOKING WEST

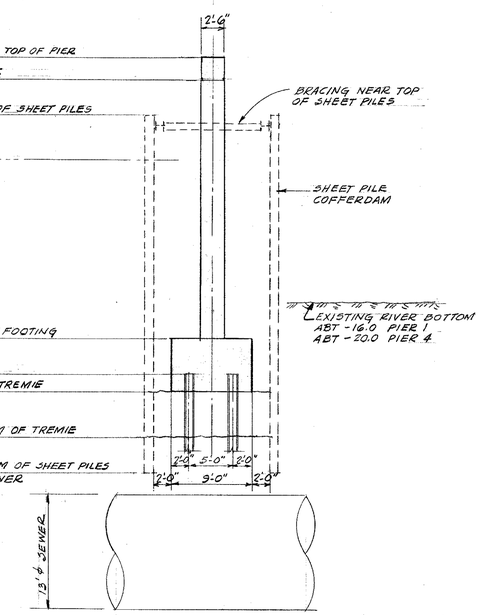

SECTION 3

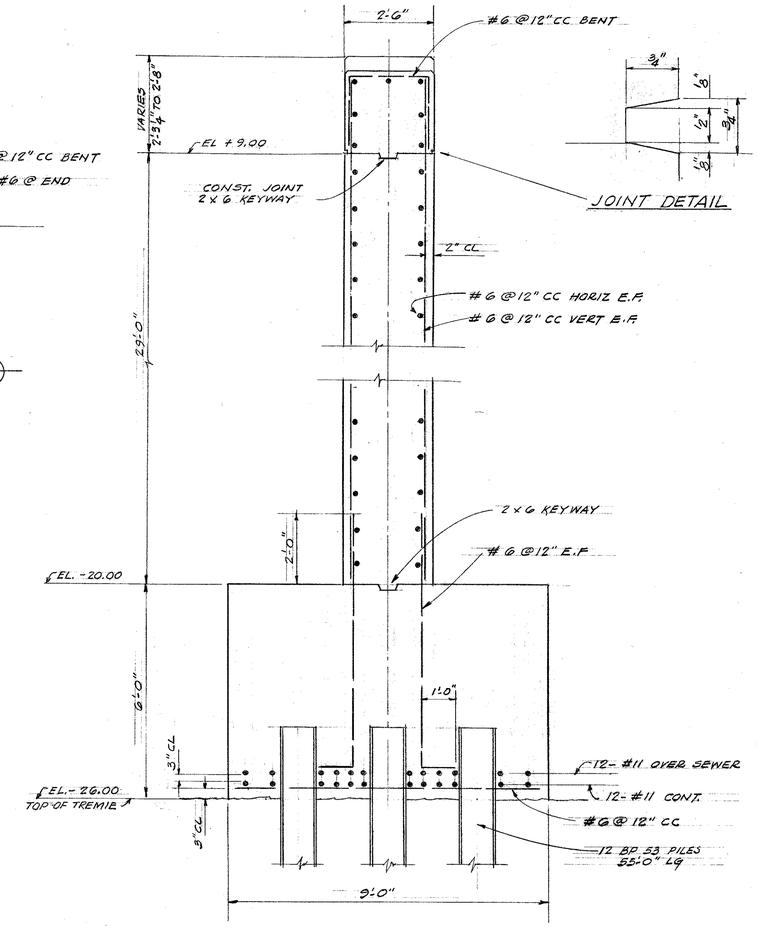

ENLARGED SECTION 3

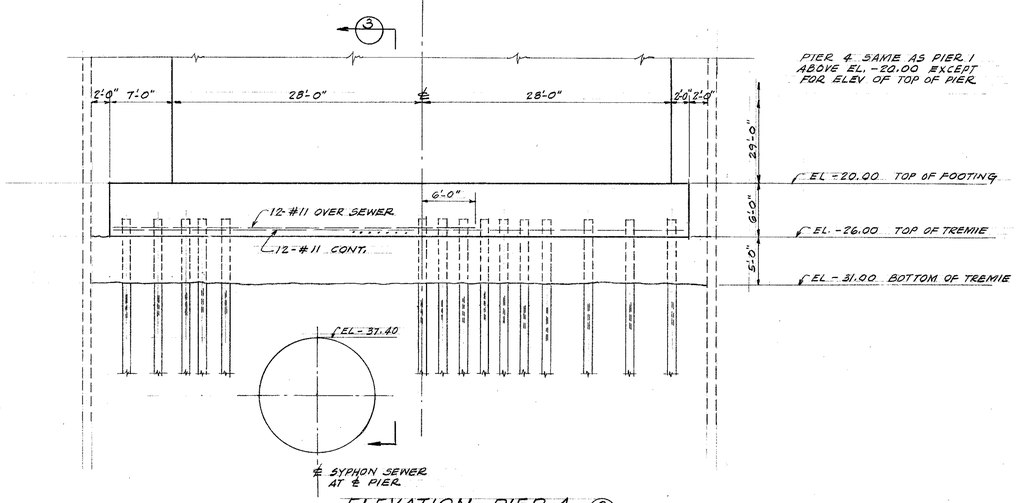

ELEVATION - PIER 4 2
LOOKING WEST

WISCONSIN
GEORGE C. ASHTON
MILWAUKEE, WISCONSIN
PROFESSIONAL ENGINEER

103

DEPARTMENT OF PUBLIC WORKS
BUREAU OF BRIDGES AND PUBLIC BUILDINGS
CITY OF MILWAUKEE

REVISIONS		
MARK	DATE	BY
A		
B		
C		
D		
E		
F		
G		
H		
I		
J		
K		
L		
M		

W. ST. PAUL AVE.-E. DETROIT ST. VERTICAL LIFT BRIDGE
OVER MILWAUKEE RIVER
PIERS 1 & 4

DESIGNED BY: TES TRACED BY: DATE:
DRAWN BY: TES CHECKED BY: DATE:
APPROVED: SCALE:
Morris A. Batalden DESIGNER IN CHARGE DATE: 6-28-65 SHEET NUMBER: 12
CITY BRIDGES AND PUBLIC BUILDINGS DATE: 7-3-65 SET OF SHEETS
COMMISSIONER OF PUBLIC WORKS Special Deputy DATE: 7-6-65 JOB NO. 522-001

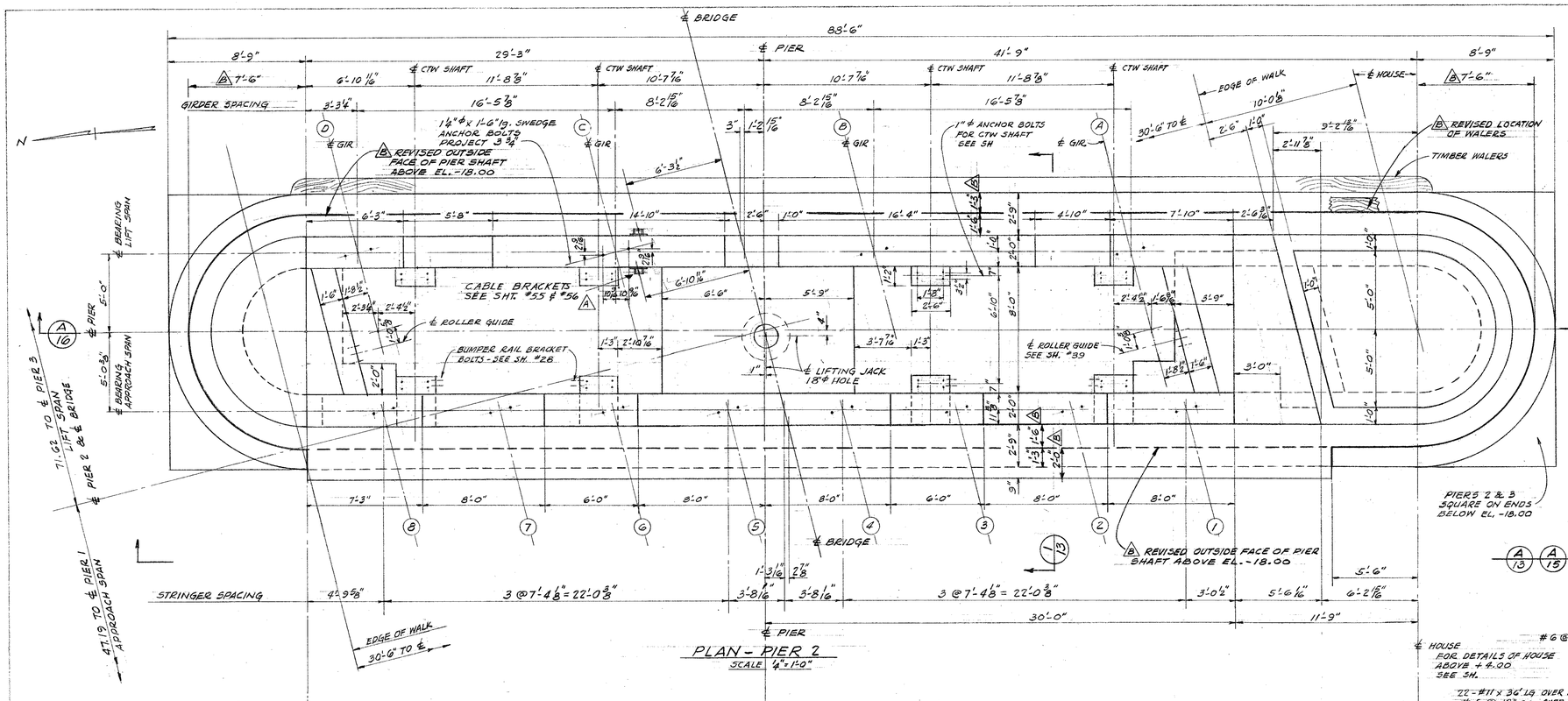

PLAN - PIER 2
SCALE 1/4" = 1'-0"

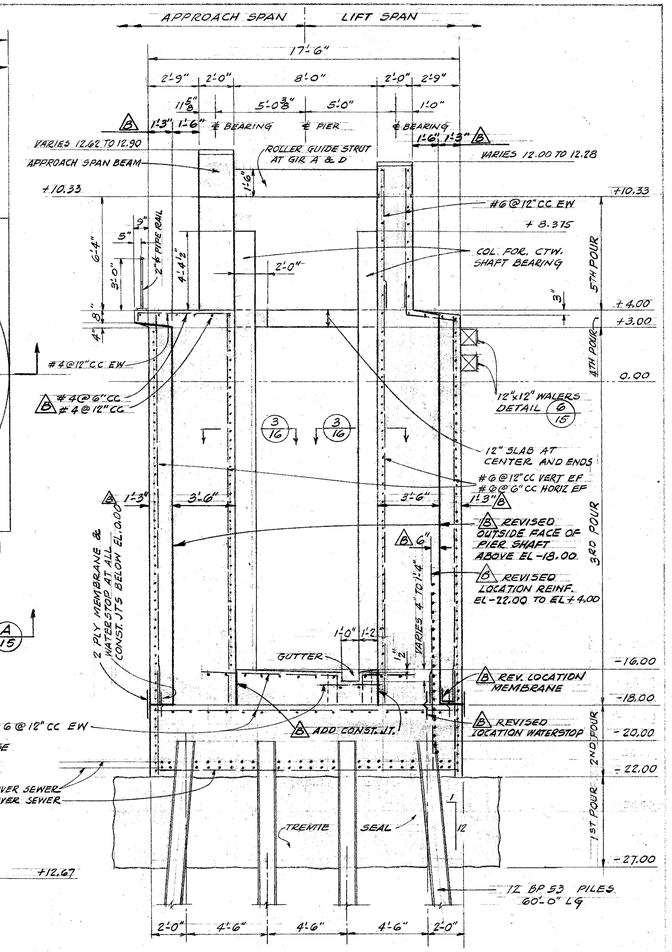

PIERS 2 & 3 - TYPICAL SECTION
SCALE 1/4" = 1'-0"

ELEVATION - PIER 2
LOOKING EAST

BEVEL ALL EXPOSED EDGES OF CONCRETE ¾"

WISCONSIN GEORGE C. ASHTON MILWAUKEE, WISCONSIN PROFESSIONAL ENGINEER

103

DEPARTMENT OF PUBLIC WORKS
BUREAU OF BRIDGES AND PUBLIC BUILDINGS
CITY OF MILWAUKEE

REVISIONS		
MARK	DATE	BY
A	9/15/65	LFR
B	1-6-66	TES
C		
D		
E		
F		
G		
H		
I		
J		
K		
L		
M		

W. ST. PAUL AVE.-E. DETROIT ST. VERTICAL LIFT BRIDGE
OVER MILWAUKEE RIVER
PIER 2

DESIGNED BY: TES TRACED BY: DATE:
DRAWN BY: TES CHECKED: DATE:
APPROVED: SCALE:
DESIGNER IN CHARGE — DATE: 6-28-65 SHEET NUMBER 13
CHIEF OF BRIDGES AND PUBLIC BUILDINGS — DATE: 7-3-65 SET OF SHEETS
COMMISSIONER OF PUBLIC WORKS Special Deputy — DATE: 7-6-65 JOB NO. 522-001

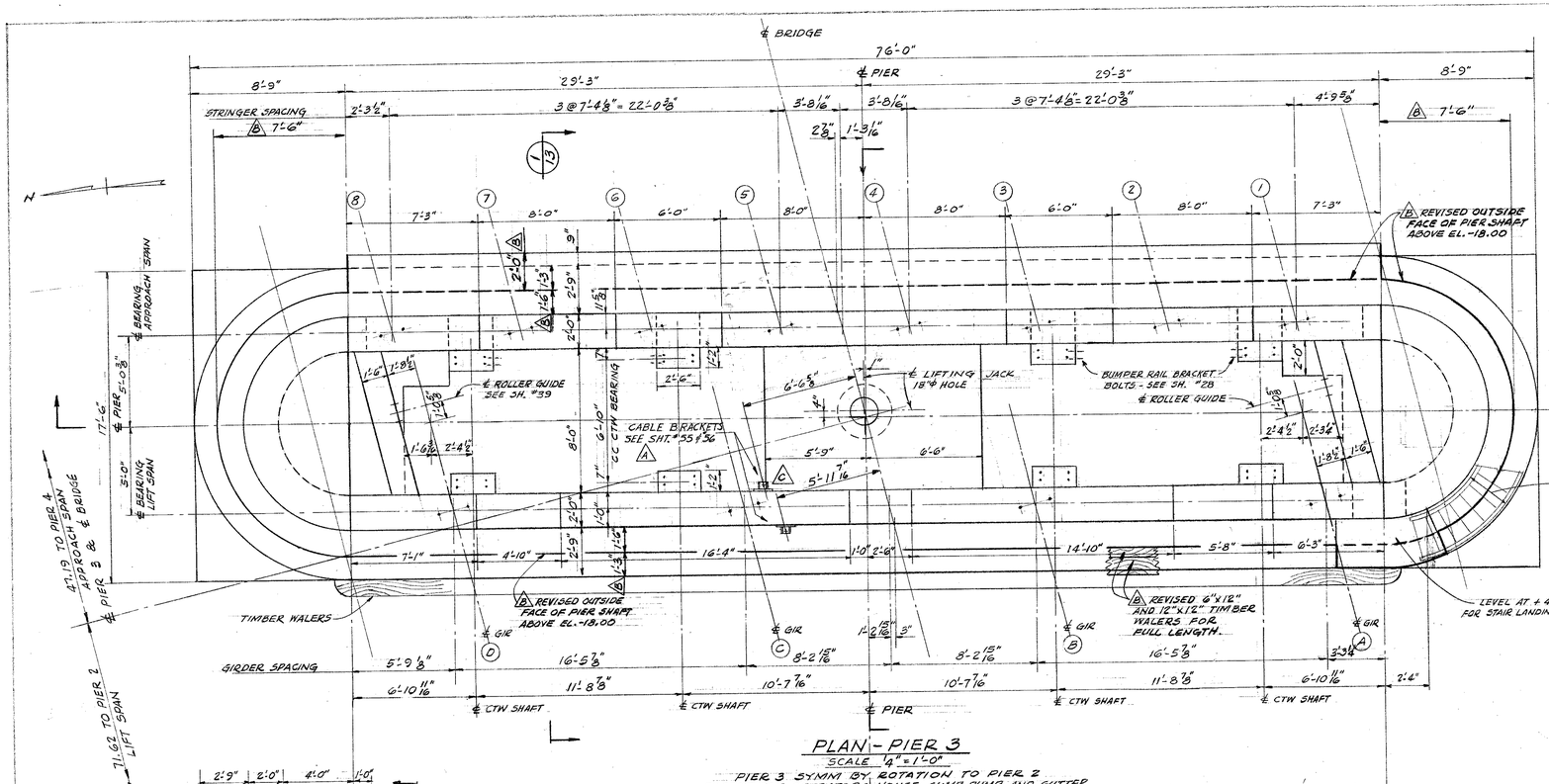

PLAN - PIER 3

SCALE 1/4" = 1'-0"

PIER 3 SYMM BY ROTATION TO PIER 2 EXCEPT FOR OPERATORS HOUSE, SUMP PUMP, AND GUTTER

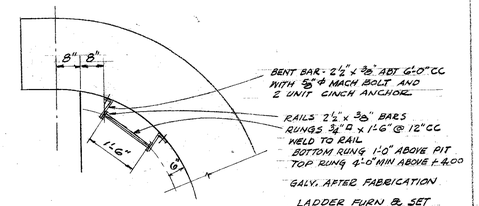

LADDER DETAIL

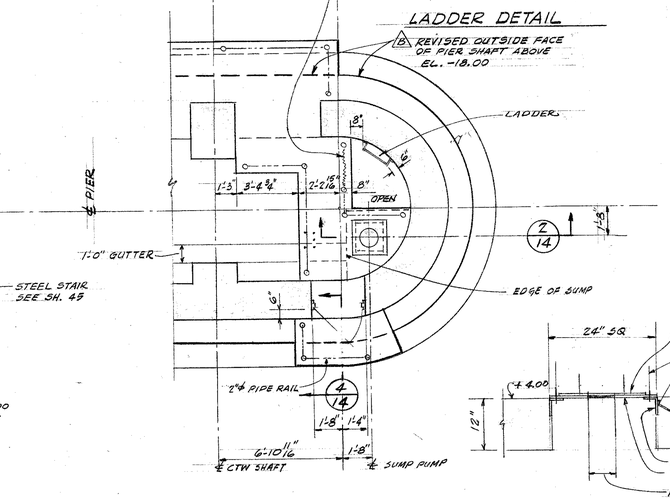

SECTION AT EL. +4.00

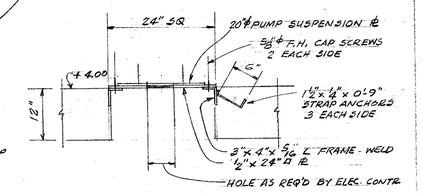

SUMP PUMP FRAME-SEC

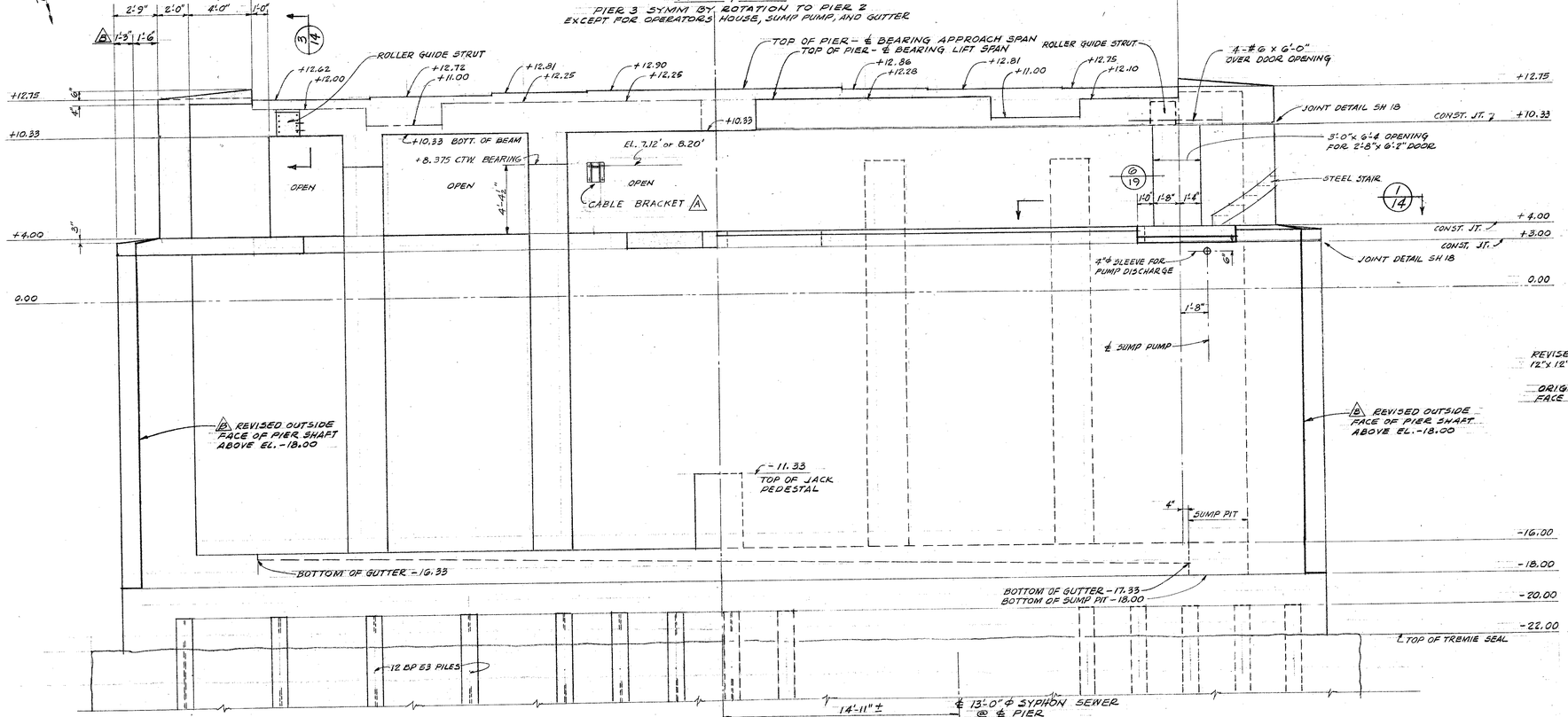

HALF SECTION AND ELEVATION - PIER 3

LOOKING EAST

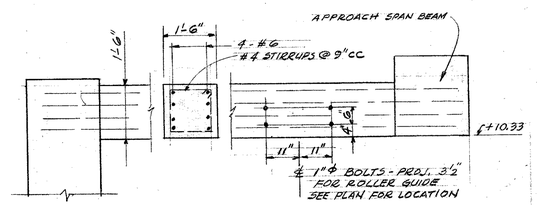

ROLLER GUIDE STRUT

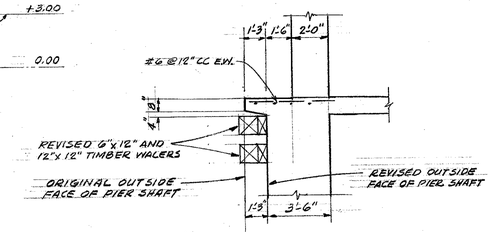

REVISED SECTION FOR STAIR LANDING

WISCONSIN GEORGE C. ASHTON MILWAUKEE, WISCONSIN PROFESSIONAL ENGINEER

103

DEPARTMENT OF PUBLIC WORKS
BUREAU OF BRIDGES AND PUBLIC BUILDINGS
CITY OF MILWAUKEE

REVISIONS		
MARK	DATE	BY
A	9/15/65	LFR
B	1-6-66	TES
C	1/6/66	LFR
D		
E		
F		
G		
H		
I		
J		
K		
L		
M		

W. ST. PAUL AVE.-E. DETROIT ST. VERTICAL LIFT BRIDGE
OVER MILWAUKEE RIVER
PIER 3

DESIGNED BY: TES
DRAWN BY: TES
APPROVED:
TRACED BY: DATE:
CHECKED BY: DATE:
SCALE:
Norris D. Batalden, DESIGNER IN CHARGE — DATE: 6-28-65 SHEET NUMBER 14
George C. Ashton, COMM. BRIDGES AND PUBLIC BUILDINGS — DATE: 7-3-65 SHEET OF SHEETS
Lloyd F. Gladding, COMMISSIONER OF PUBLIC WORKS, Special Deputy — DATE: 7-6-65 JOB NO. 522-001

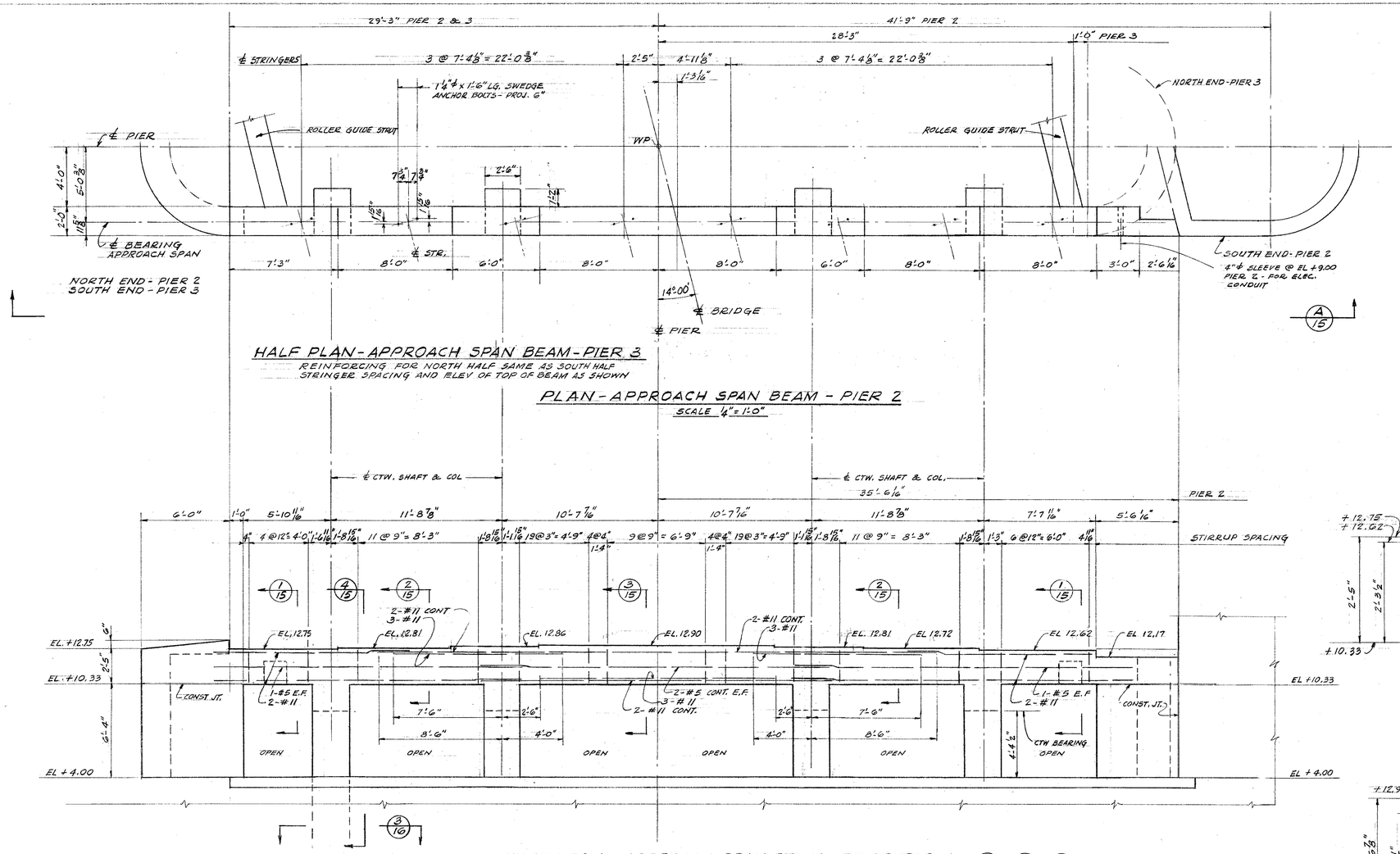

HALF PLAN-APPROACH SPAN BEAM-PIER 3

REINFORCING FOR NORTH HALF SAME AS SOUTH HALF
STRINGER SPACING AND ELEV OF TOP OF BEAM AS SHOWN

PLAN-APPROACH SPAN BEAM - PIER 2

SCALE 1/4" = 1'-0"

ELEVATION - APPROACH SPAN BEAM - PIERS 2 & 3

A 15 A 13 A 14

LOOKING EAST - PIER 2
LOOKING WEST - PIER 3
SCALE 1/4" = 1'-0"

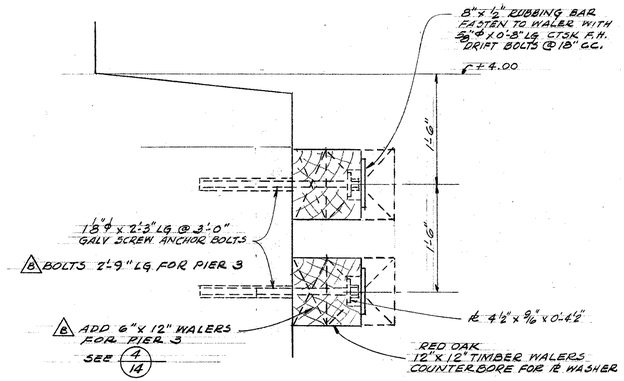

WALER DETAIL 6 13

SCALE 1" = 1'-0"

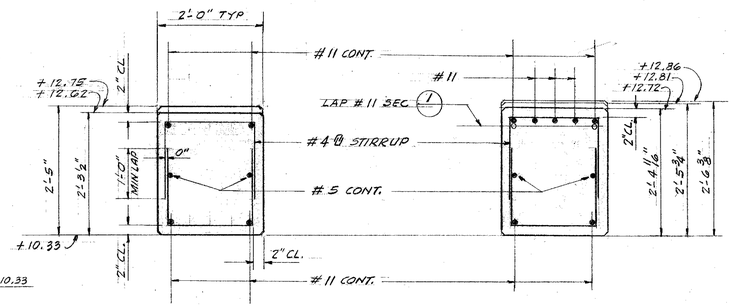

SECTION 1 15

SCALE 3/4" = 1'-0"

SECTION 2 15

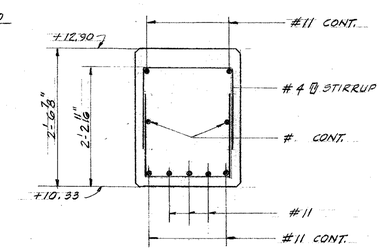

SECTION 3 15

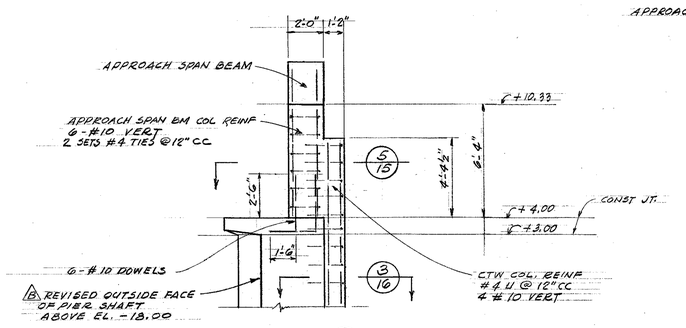

SECTION 4 15

TYPICAL APPROACH SPAN COL
AND CTW COL REINF ABOVE +4.00

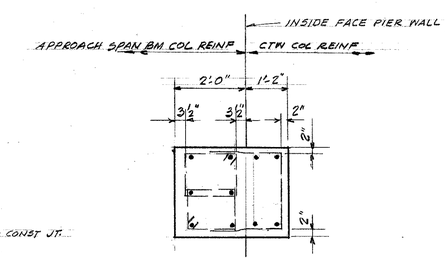

SECTION 5 15

DEPARTMENT OF PUBLIC WORKS
BUREAU OF BRIDGES AND PUBLIC BUILDINGS
CITY OF MILWAUKEE

REVISIONS			
MARK	DATE	BY	
A	1-6-66	TES	
C			
D			
E			
F			
G			
H			
I			
J			
K			
L			
M			

W. ST. PAUL AVE.-E. DETROIT ST. VERTICAL LIFT BRIDGE
OVER MILWAUKEE RIVER

APPROACH SPAN BEAM-PIERS 2 & 3

DESIGNED BY: TES TRACED BY: DATE:
DRAWN BY: TES CHECKED BY: DATE:
APPROVED: SCALE:
Norris O. Bostrom DESIGNER IN CHARGE DATE: 6-28-65 SHEET NUMBER 15
George C. Ashton SUPT. OF BRIDGES AND PUBLIC BUILDINGS DATE: 7-3-65 SET OF SHEETS
Donald Nowicki COMMISSIONER OF PUBLIC WORKS Special Deputy DATE: 7-6-65 JOB NO. 522-001

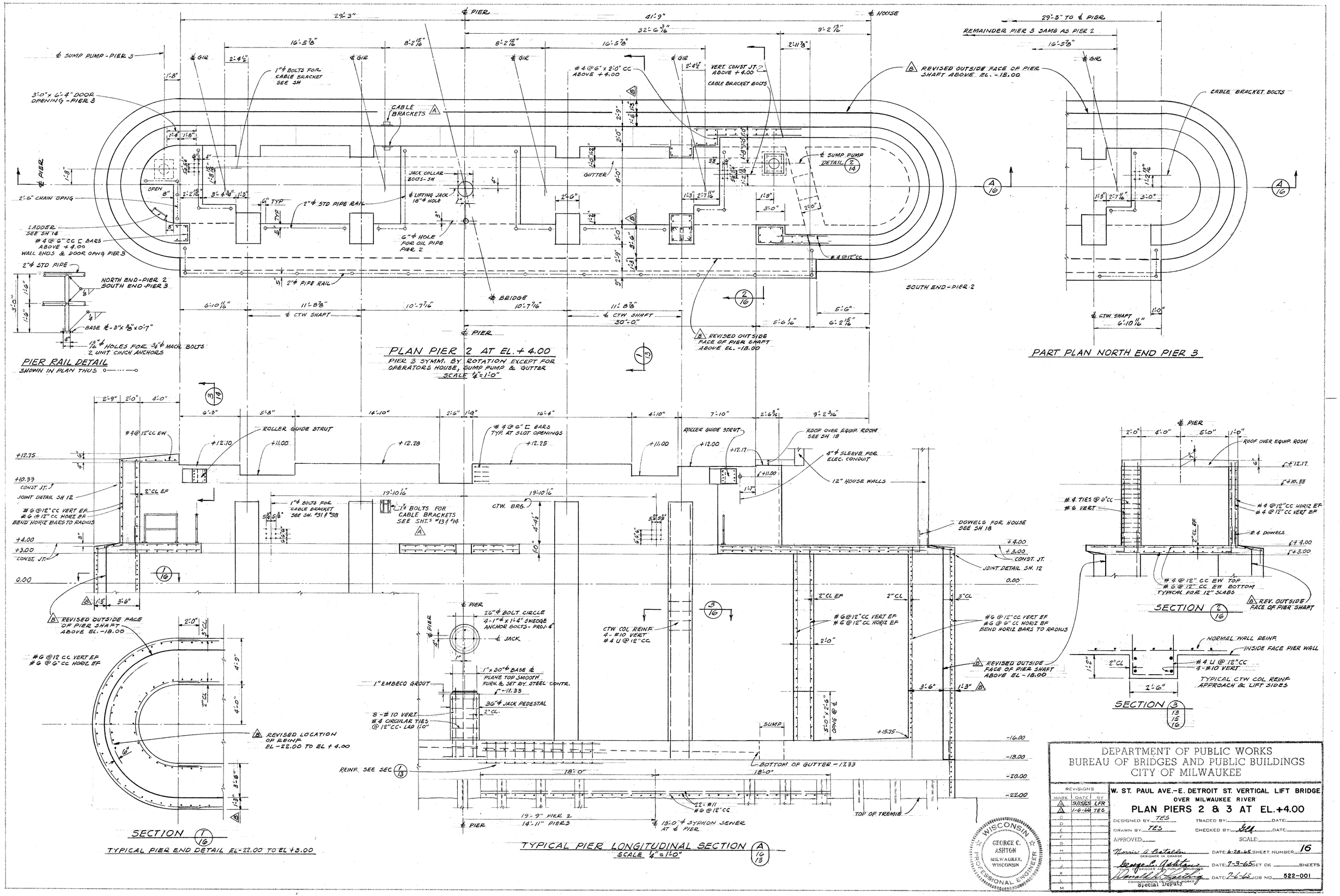
PLAN PIER 2 AT EL. + 4.00
PIER 3 SYMM. BY ROTATION EXCEPT FOR OPERATORS HOUSE, SUMP PUMP & GUTTER
SCALE 1/4" = 1'-0"
PIER RAIL DETAIL
SHOWN IN PLAN THUS
PART PLAN NORTH END PIER 3
REMAINDER PIER 3 SAME AS PIER 2
SECTION 2/16
SECTION 3/13 15 16
SECTION 1/16
TYPICAL PIER END DETAIL EL-22.00 TO EL +3.00
TYPICAL PIER LONGITUDINAL SECTION A 16 13
SCALE 1/4" = 1'-0"
DEPARTMENT OF PUBLIC WORKS
BUREAU OF BRIDGES AND PUBLIC BUILDINGS
CITY OF MILWAUKEE
W. ST. PAUL AVE.-E. DETROIT ST. VERTICAL LIFT BRIDGE
OVER MILWAUKEE RIVER
PLAN PIERS 2 & 3 AT EL.+4.00
DESIGNED BY TES
DRAWN BY TES
APPROVED
SHEET NUMBER 16
JOB NO. 522-001
GEORGE C. ASHTON
MILWAUKEE, WISCONSIN
PROFESSIONAL ENGINEER

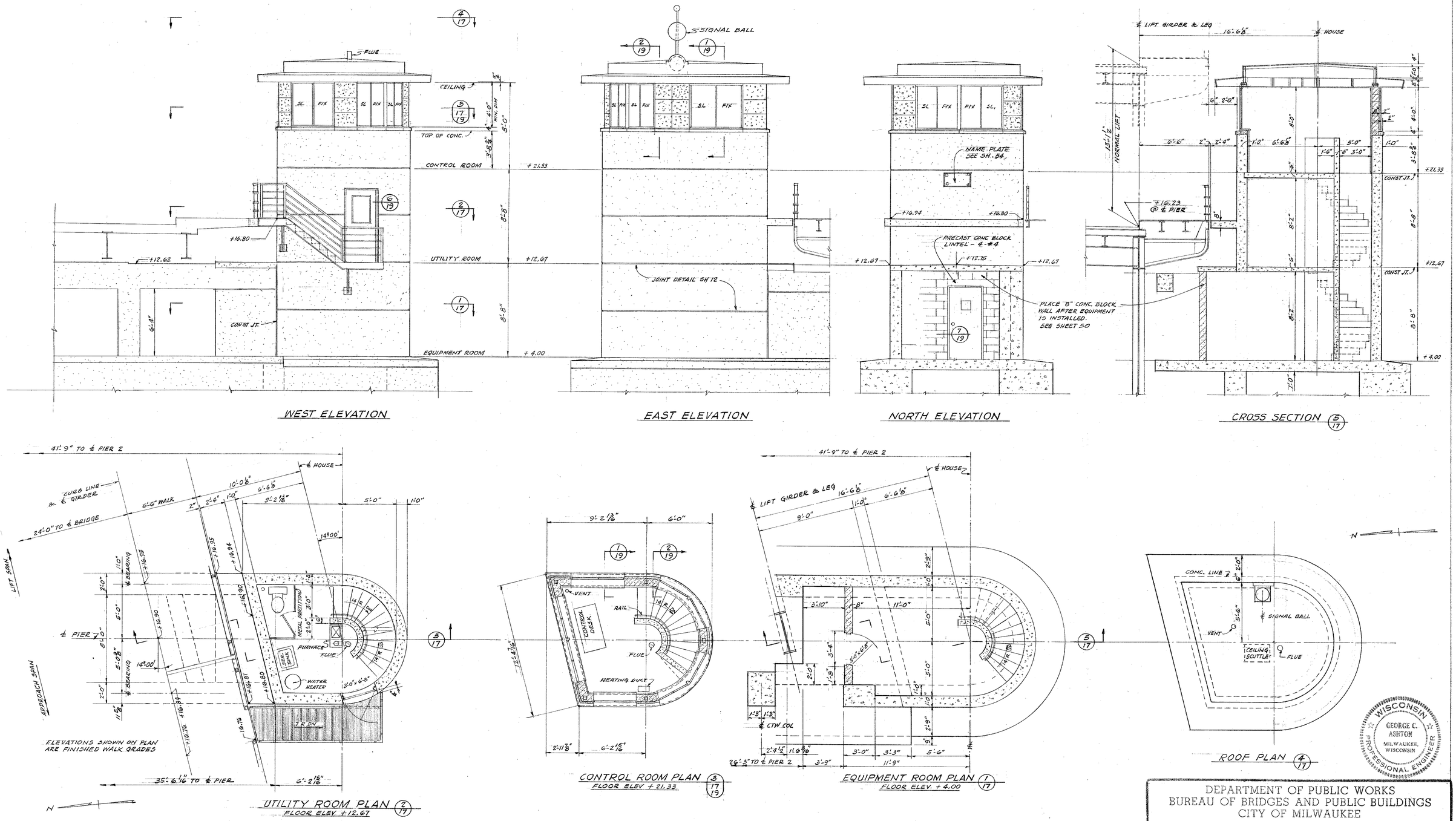

WISCONSIN GEORGE C. ASHTON MILWAUKEE, WISCONSIN PROFESSIONAL ENGINEER

DEPARTMENT OF PUBLIC WORKS
BUREAU OF BRIDGES AND PUBLIC BUILDINGS
CITY OF MILWAUKEE

REVISIONS		
MARK	DATE	BY
A		
B		
C		
D		
E		
F		
G		
H		
I		
J		
K		
L		
M		

W. ST. PAUL AVE.-E. DETROIT ST. VERTICAL LIFT BRIDGE
OVER MILWAUKEE RIVER
BRIDGE OPERATOR'S HOUSE

DESIGNED BY: _____ TRACED BY: _____ DATE: _____
DRAWN BY: TES CHECKED BY: [illegible] DATE: _____
APPROVED: _____ SCALE: 1/4" = 1'-0"
Norris A. Batalden DESIGNER IN CHARGE DATE: 6-28-65 SHEET NUMBER 17
George C. Ashton SUPT. OF BRIDGES AND PUBLIC BUILDINGS DATE: 7-3-65 SET OF _____ SHEETS
[illegible] COMMISSIONER OF PUBLIC WORKS Special Deputy DATE: 7-6-65 JOB NO. 522-001

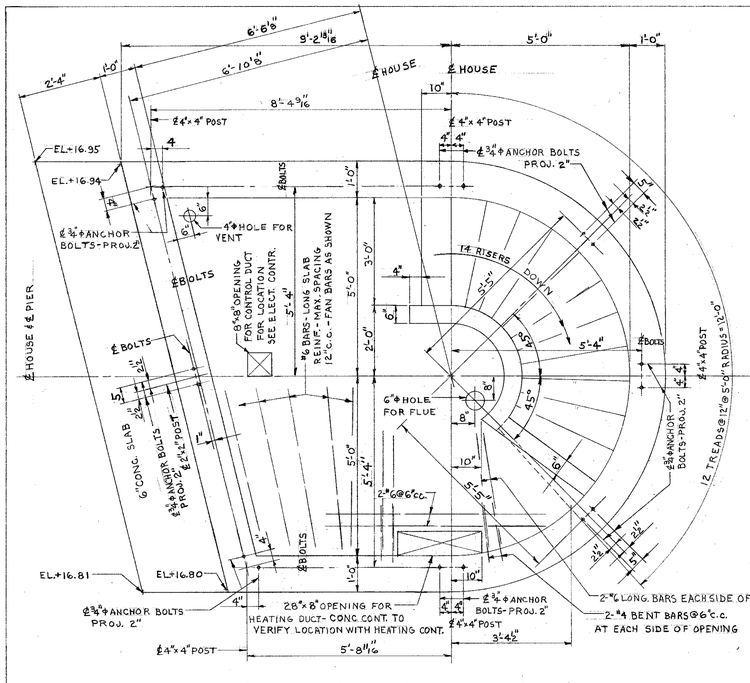

CONTROL ROOM PLAN
EL. +21.33
SCALE: 1/2"=1'-0"

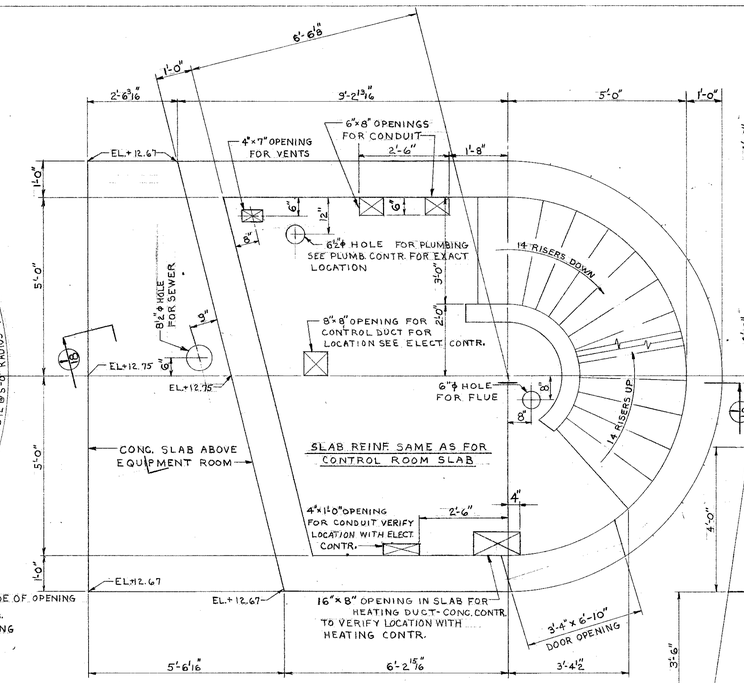

UTILITY ROOM PLAN
EL. +12.67
SCALE: 1/2"=1'-0"

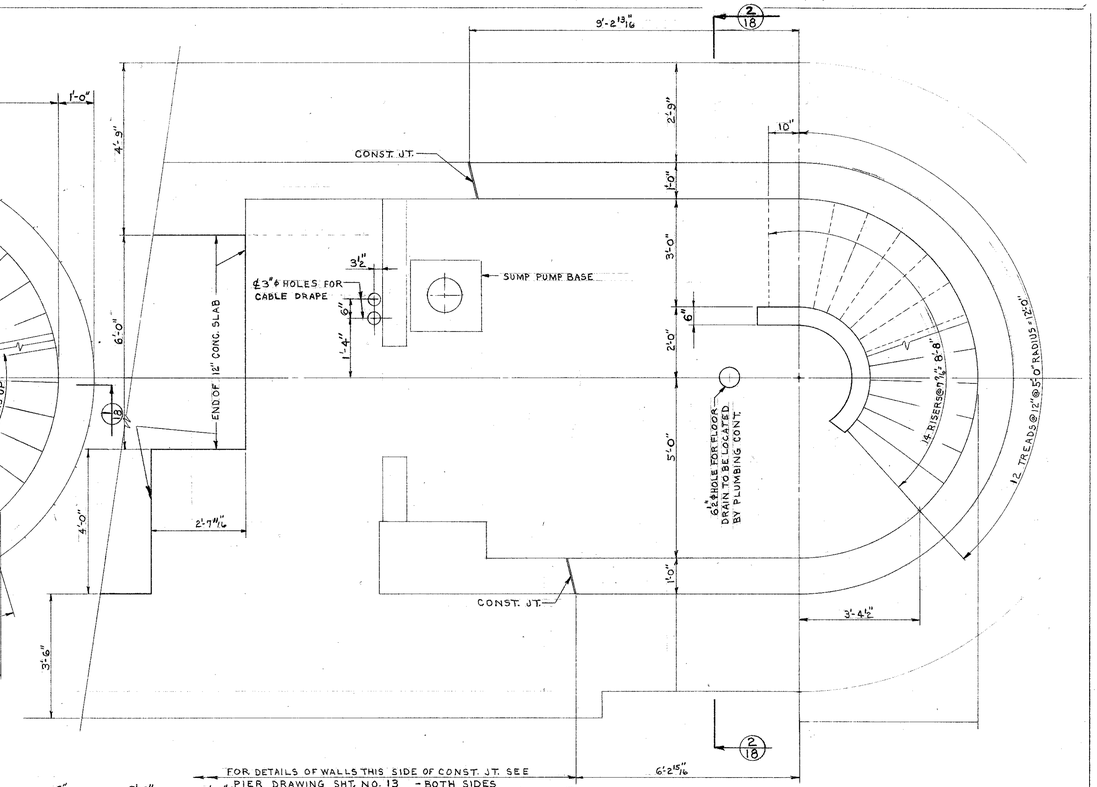

FOR DETAILS OF WALLS THIS SIDE OF CONST. J.T. SEE PIER DRAWING SHT. NO. 13 - BOTH SIDES

EQUIPMENT ROOM PLAN
EL. +4.00
SCALE: 1/2"=1'-0"

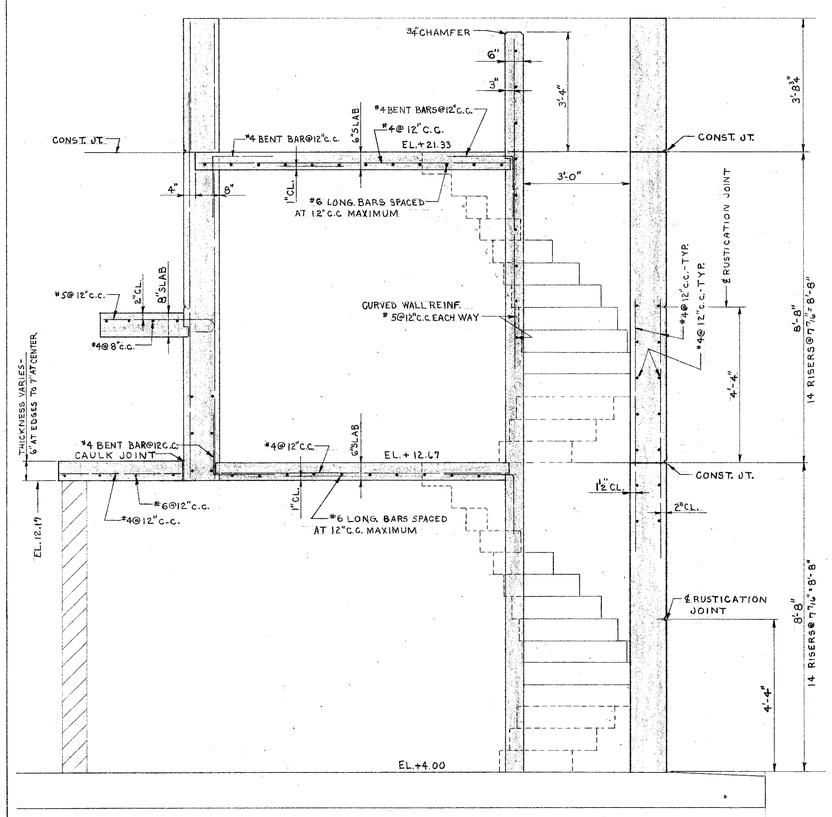

SECTION 1/18
SCALE: 1/2"=1'-0"

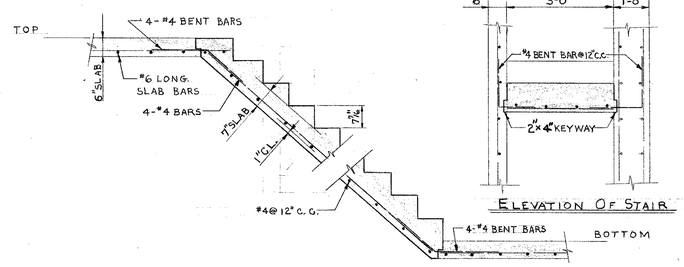

SECTION THRU STAIRS
SCALE: 1/2"=1'-0"

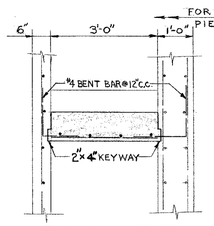

ELEVATION OF STAIR

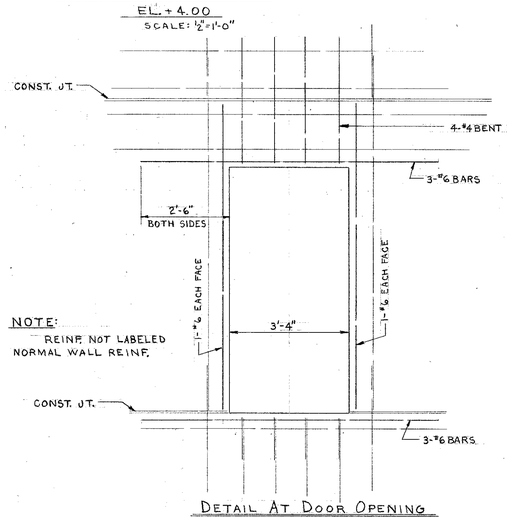

NOTE:
REINF. NOT LABELED NORMAL WALL REINF.

DETAIL AT DOOR OPENING
SCALE: 1/2"=1'-0"

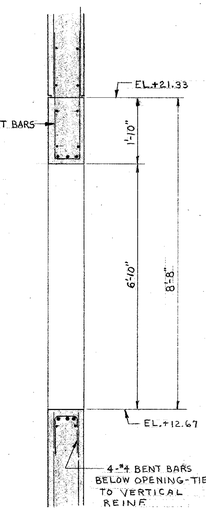

SECTION THRU OPENING

NOTE:
FOR DETAILS OF CONST. & RUSTICATION JOINTS SEE JOINT DETAILS SHEET NO. 12

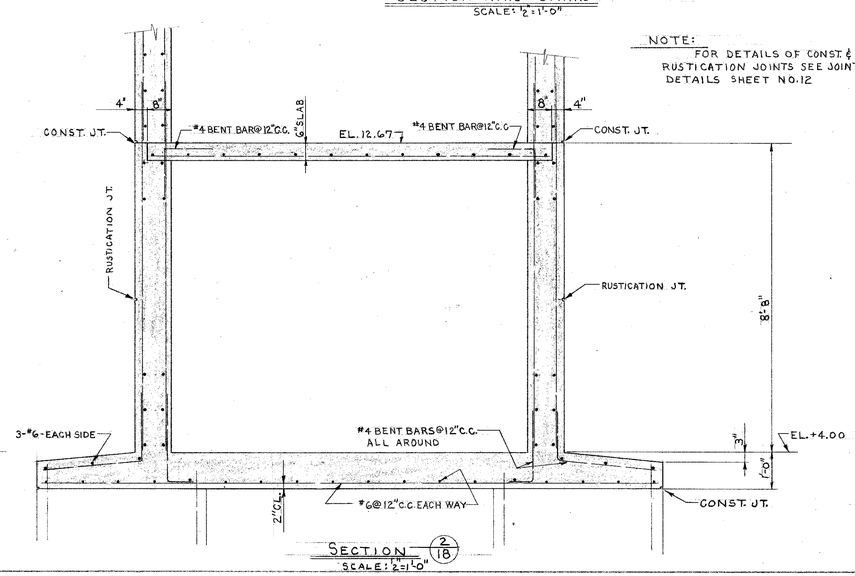

SECTION 2/18
SCALE: 1/2"=1'-0"

WISCONSIN
GEORGE C. ASHTON
MILWAUKEE, WISCONSIN
PROFESSIONAL ENGINEER

DEPARTMENT OF PUBLIC WORKS
BUREAU OF BRIDGES AND PUBLIC BUILDINGS
CITY OF MILWAUKEE

REVISIONS		
MARK	DATE	BY
A		
B		
C		
D		
E		
F		
G		
H		
J		
K		
L		

W. ST. PAUL AVE.-E. DETROIT ST. VERTICAL LIFT BRIDGE
OVER MILWAUKEE RIVER
BRIDGE OPERATOR'S HOUSE-CONCRETE DETAILS

DESIGNED BY: R.L.K. TRACED BY: DATE:
DRAWN BY: R.L.K. CHECKED BY: DATE:
APPROVED: SCALE: As Shown
Morris A. Bataldon DESIGNER IN CHARGE DATE 6-28-65 SHEET NUMBER 18
George C. Ashton BUREAU OF BRIDGES AND PUBLIC BUILDINGS DATE 7-3-65 SET OF SHEETS
Donald C. Kelly COMMISSIONER Special Deputy DATE 7-6-65 JOB NO. 522-001

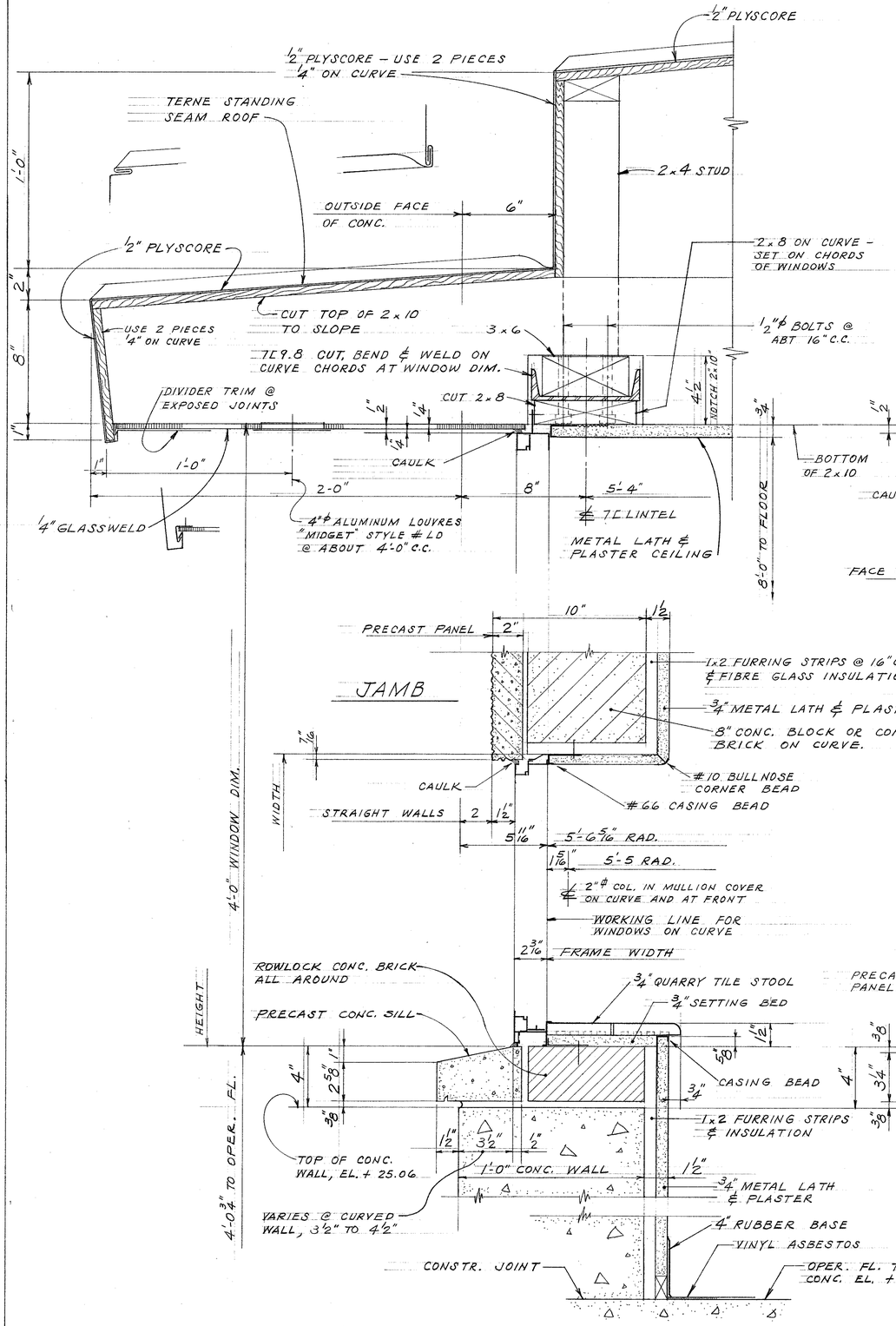

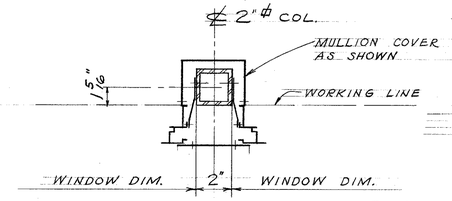

MULLION DETAIL — 4/19

SCALE: 3" = 1'-0"

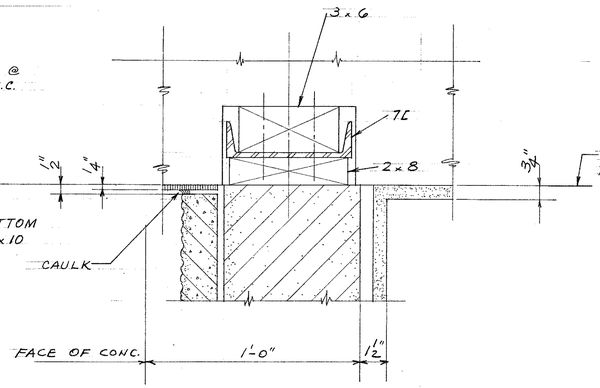

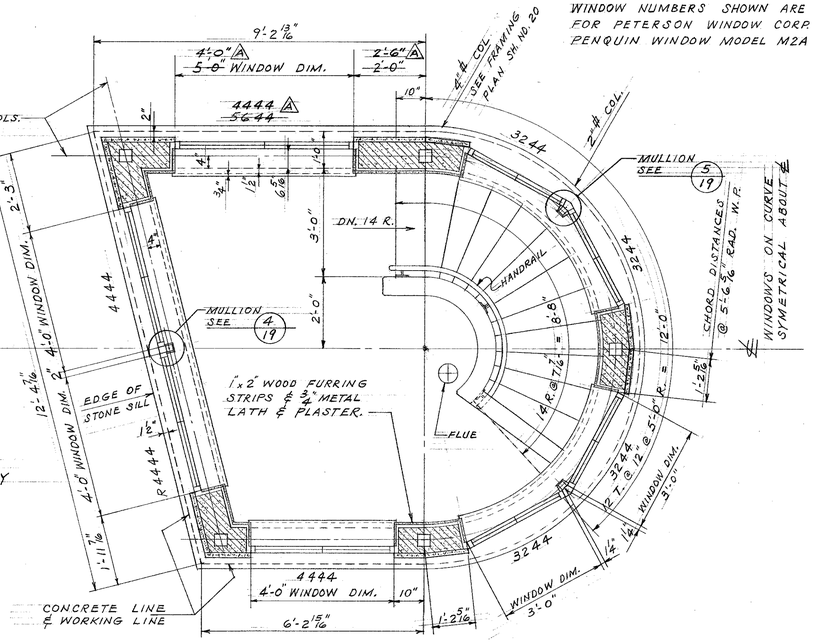

OPERATOR'S HOUSE HANDRAIL

RAILS – 1 1/2" NOMINAL DIA. ALCOA ALLOY 6063-T832, SATIN FINISH. RAIL 2'-9" ABOVE NOSE OF RISER

WALL BRACKETS – J. G. BRAUN CO. # 4401 ALUM. HEAVY DUTY BRACKETS. FASTEN TO WALL WITH 3/8"ϕ x 4" LG. ALUM. LAG BOLT WITH LEAD EXPANSION SHIELD. BRACKETS @ ABOUT 3'-0" C.C.

CONTROL ROOM PLAN — 3/17 FLOOR EL. + 21.33

SCALE: 1/2" = 1'-0"

SECTION — 1/17

SCALE: 3" = 1'-0"

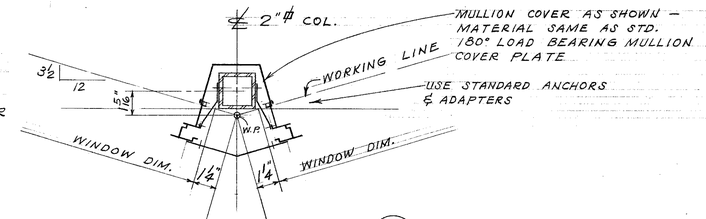

MULLION DETAIL — 5/19

SCALE: 3" = 1'-0"

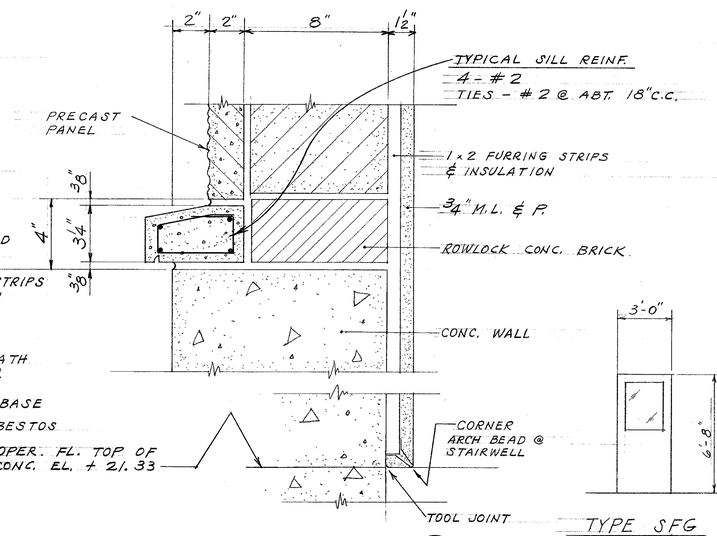

SECTION — 2/17

SCALE: 3" = 1'-0"

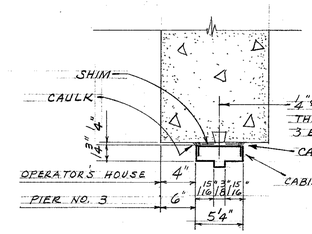

JAMB TYPE RA — 6/14-17

FOR OPERATOR'S HOUSE @ EL. + 12.67 & AT PIER NO. 3 @ EL. + 4.00

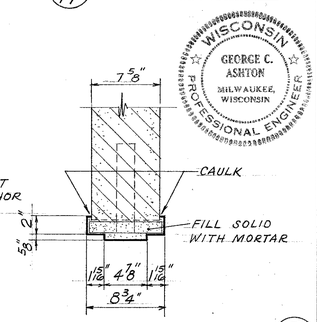

JAMB TYPE WB-1 — 7/17

FOR EQUIPMENT ROOM IN OPERATOR'S HOUSE @ EL. + 4.00

PROVIDE DOOR CLOSERS AND THRESHOLDS ALL DOORS. WEATHERPROOF DOORS ON OPERATORS HOUSE.

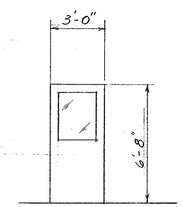

TYPE SFG

FOR OPERATOR'S HOUSE @ EL. + 12.67

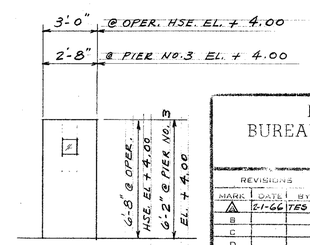

TYPE SFV

FOR OPER. HSE @ EL + 4.00 & PIER NO. 3 @ EL. + 4.00

NOTE:

ALL GLASS IN DOORS TO BE 1/4" P.C.W. BY FIRST BRANCH CONTRACTOR

GEORGE C. ASHTON — WISCONSIN — MILWAUKEE, WISCONSIN — PROFESSIONAL ENGINEER

DEPARTMENT OF PUBLIC WORKS
BUREAU OF BRIDGES AND PUBLIC BUILDINGS
CITY OF MILWAUKEE

REVISIONS			
MARK	DATE	BY	
A	2-1-66	TES	
B			
C			
D			
E			
F			
G			
H			
I			
J			
K			
L			
M			

W. ST. PAUL AVE.–E. DETROIT ST. VERTICAL LIFT BRIDGE OVER MILWAUKEE RIVER

BRIDGE OPERATOR'S HOUSE–WINDOW & DOOR DETAILS

DESIGNED BY: T.E.S. TRACED BY: DATE:
DRAWN BY: P.C.B. CHECKED BY: DATE:
APPROVED: SCALE:
Norris C. Batelle DESIGNER IN CHARGE DATE: 6-20-65 SHEET NUMBER 19
George C. Ashton CITY ENGINEER BRIDGES AND PUBLIC BUILDINGS DATE: 7-3-65 SET OF SHEETS
Donald W. Lucky COMMISSIONER PUBLIC WORKS Special Deputy DATE: 7-6-65 JOB NO. 522-001

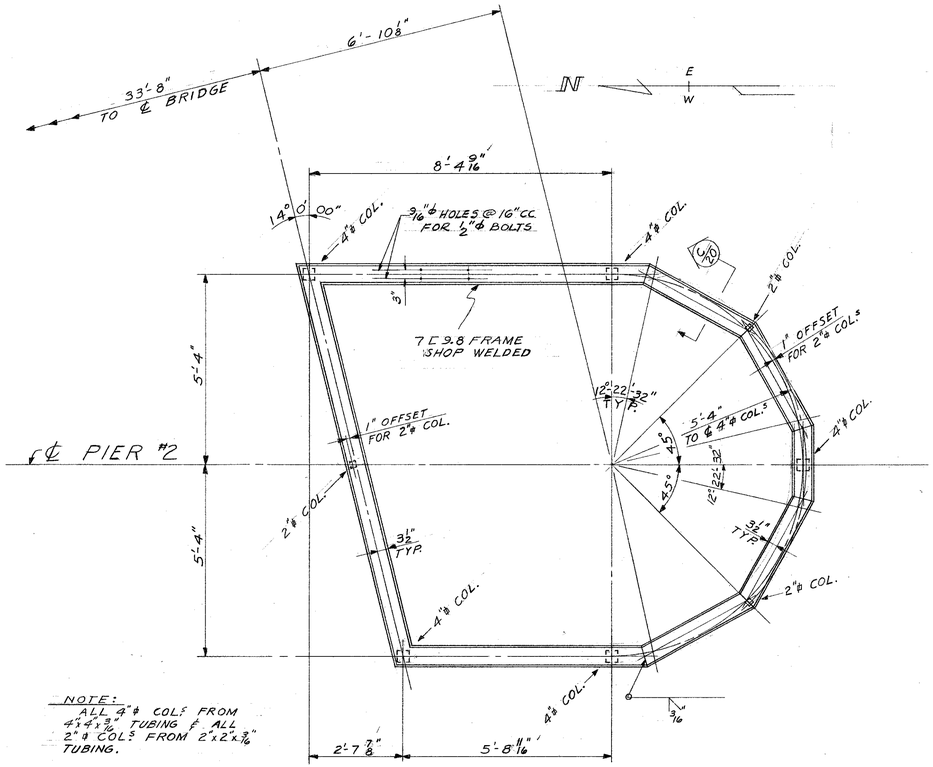

NOTE:
ALL 4"ϕ COLS FROM 4"x4"x3/8" TUBING & ALL 2"ϕ COLS FROM 2"x2"x3/16" TUBING.

STRUCTURAL STEEL ROOF FRAMING PLAN
SCALE 1/2" = 1'-0"

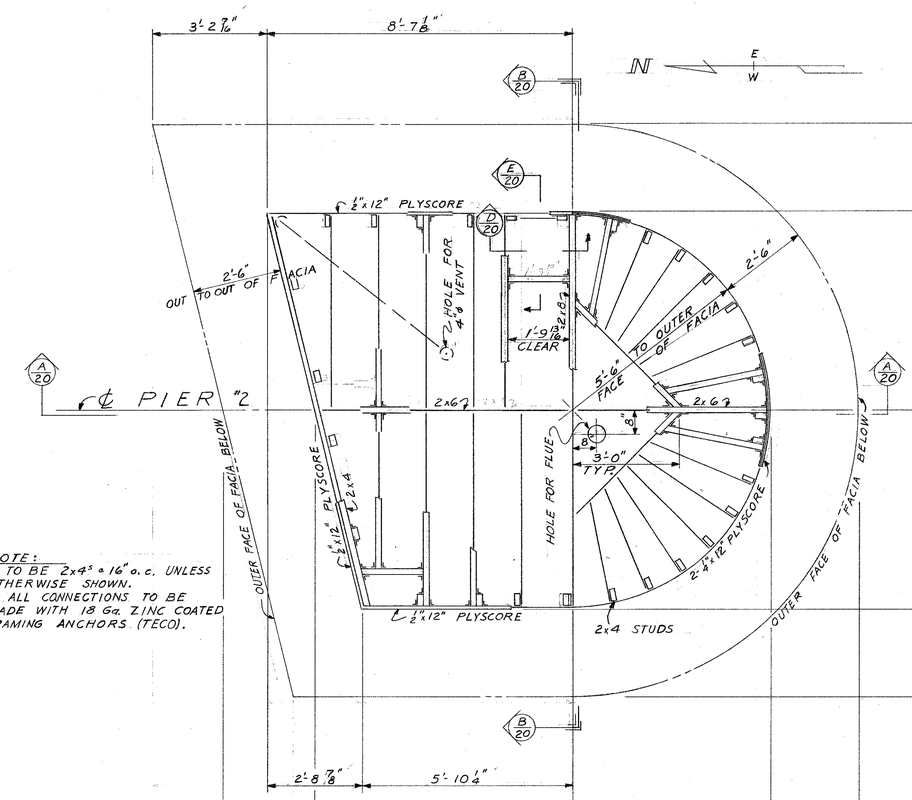

NOTE:
1. TO BE 2x4s @ 16" o.c. UNLESS OTHERWISE SHOWN.
2. ALL CONNECTIONS TO BE MADE WITH 18 Ga. ZINC COATED FRAMING ANCHORS (TECO).

UPPER ROOF FRAMING PLAN
SCALE 1/2" = 1'-0"

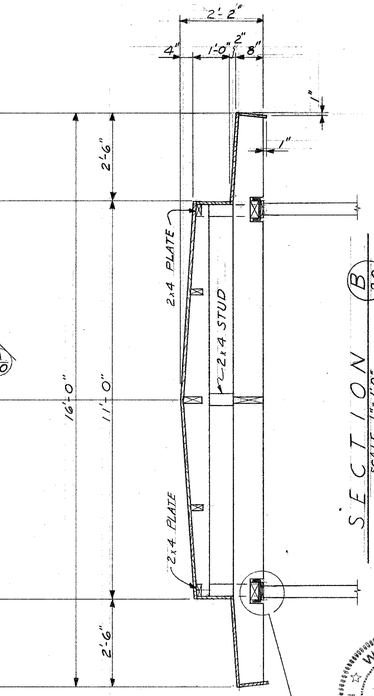

SECTION B/20
SCALE 1/2" = 1'-0"

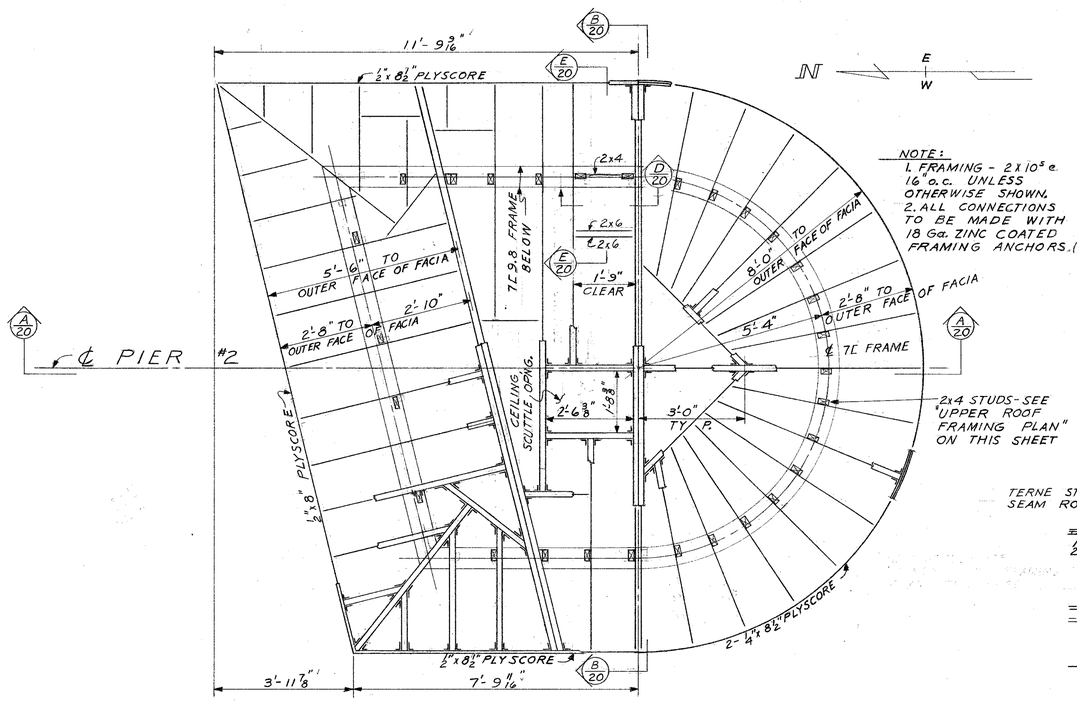

NOTE:
1. FRAMING - 2x10s @ 16" o.c. UNLESS OTHERWISE SHOWN.
2. ALL CONNECTIONS TO BE MADE WITH 18 Ga. ZINC COATED FRAMING ANCHORS. (TECO)

LOWER ROOF & CEILING FRAMING PLAN
SCALE 1/2" = 1'-0"

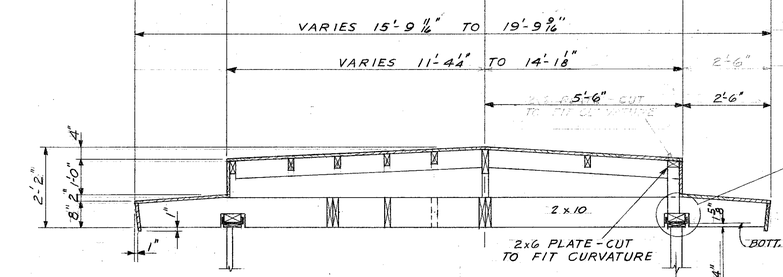

SECTION A/20
SCALE 1/2" = 1'-0"

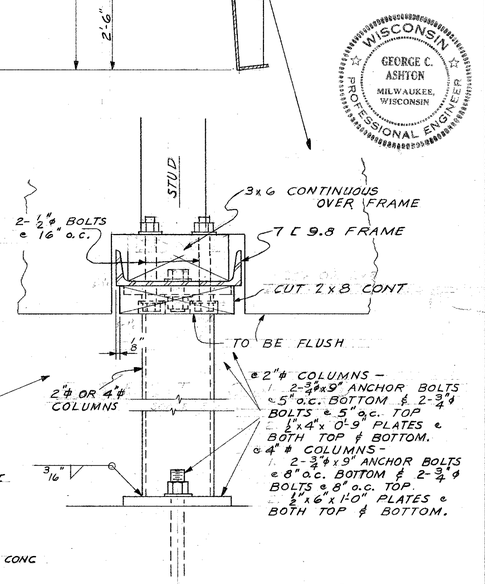

SECTION C/20
SCALE 3" = 1'-0"

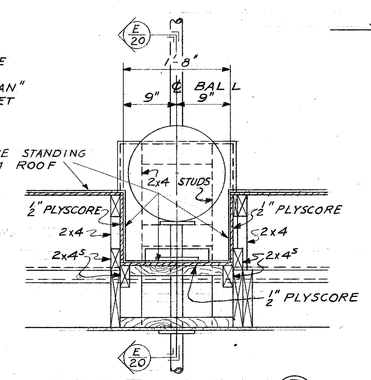

SECTION D/20
SCALE 1" = 1'-0"

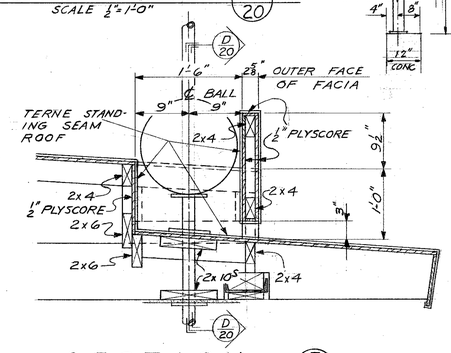

SECTION E/20
SCALE 1" = 1'-0"

DEPARTMENT OF PUBLIC WORKS
BUREAU OF BRIDGES AND PUBLIC BUILDINGS
CITY OF MILWAUKEE

REVISIONS		
MARK	DATE	BY
A		
B		
C		
D		
E		
F		
G		
H		
I		
J		
K		
L		
M		

W. ST. PAUL AVE.-E. DETROIT ST. VERTICAL LIFT BRIDGE
OVER MILWAUKEE RIVER
BRIDGE OPERATOR'S HOUSE-STEEL & ROOF DETAILS

DESIGNED BY: T.E.S. TRACED BY: DATE:
DRAWN BY: L.F.R. CHECKED BY: DATE:
APPROVED: SCALE:
Norris C. Bestelen — DESIGNER IN CHARGE — DATE: 6-28-65 — SHEET NUMBER 20
George C. Ashton — CITY ENGINEER BRIDGES AND PUBLIC BUILDINGS — DATE: 7-3-65 — SHEET OF SHEETS
Donald W. Lindley — COMMISSIONER OF PUBLIC WORKS Special Deputy — DATE: 7-6-65 — JOB NO. 522-001

WISCONSIN GEORGE C. ASHTON MILWAUKEE, WISCONSIN PROFESSIONAL ENGINEER

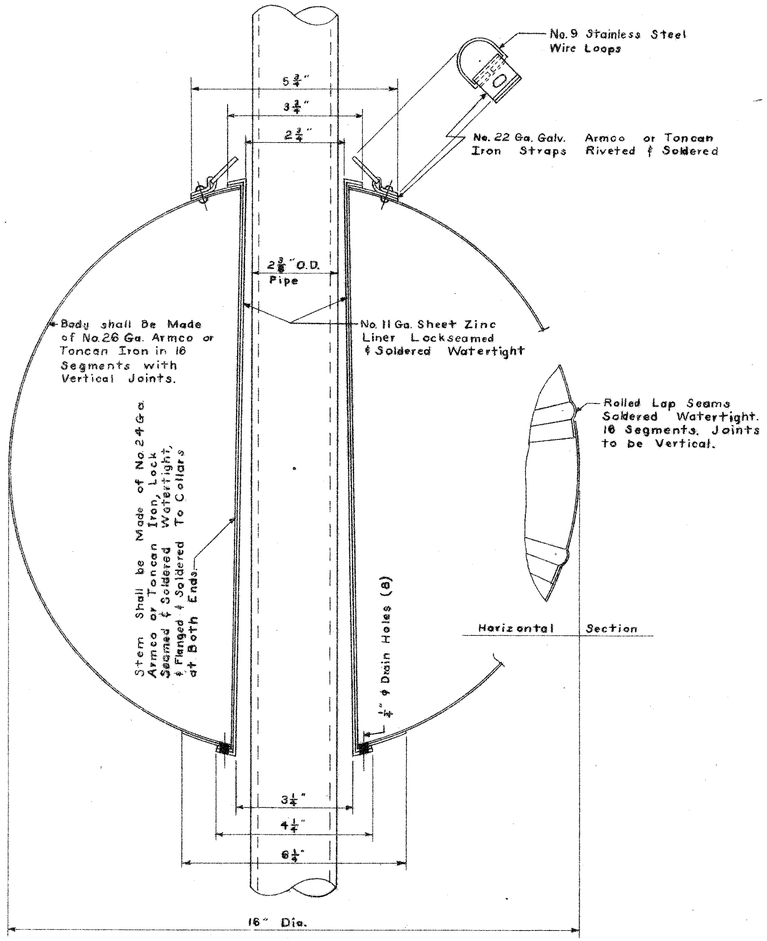

CROSS SECTION OF SIGNAL BALL

Half Size

Horizontal Section

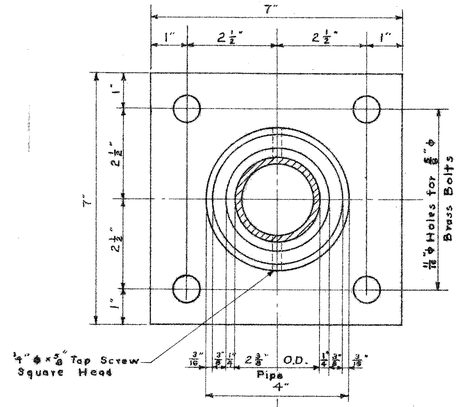

℄ of Signal Ball

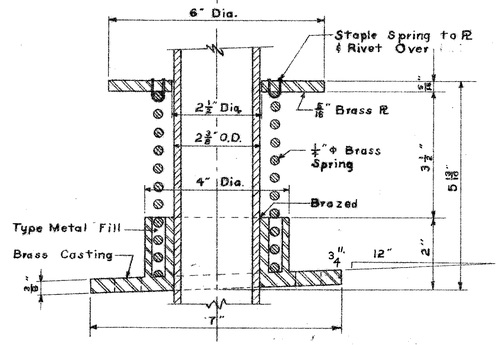

DETAIL OF BASE FLANGE FOR SIGNAL BALL

Half Size

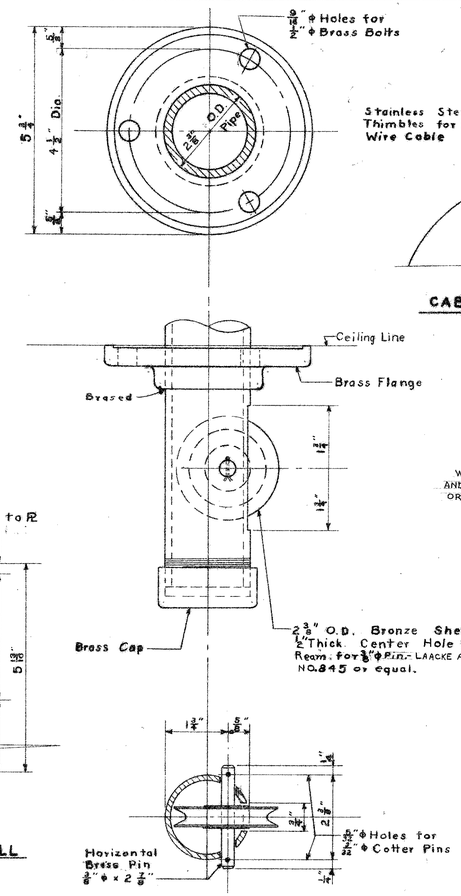

DETAIL OF CEILING SHEAVE BLOCK FOR SIGNAL BALL

Half Size

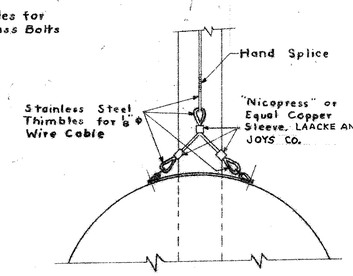

CABLE FASTENER DETAIL

Scale: 3" = 1'-0"

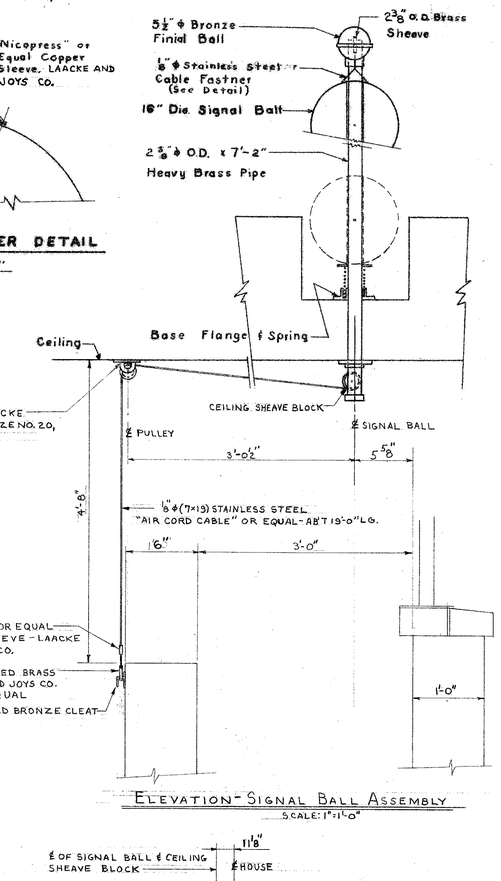

ELEVATION - SIGNAL BALL ASSEMBLY

SCALE: 1" = 1'-0"

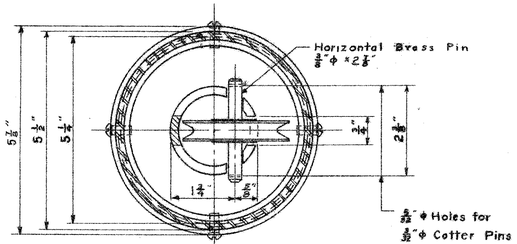

SECTION A-A

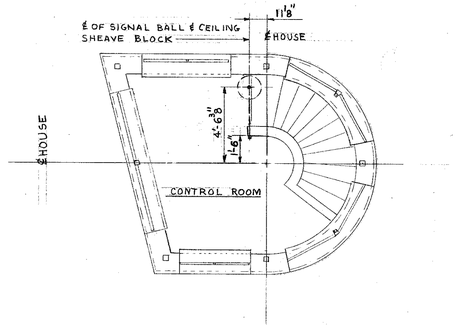

PLAN - SIGNAL BALL ASSEMBLY

SCALE: ½" = 1'-0"

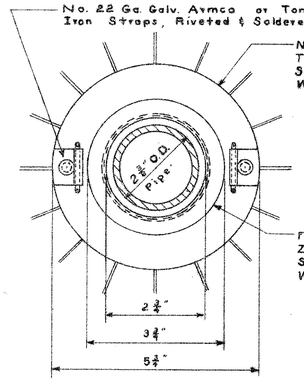

PLAN OF TOP COLLAR

Half Size

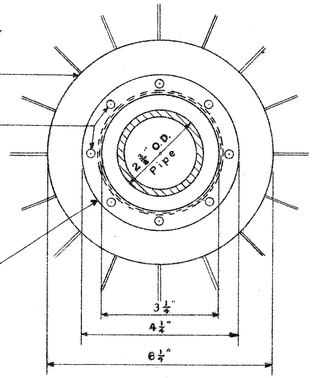

PLAN OF BOTTOM COLLAR

Half Size

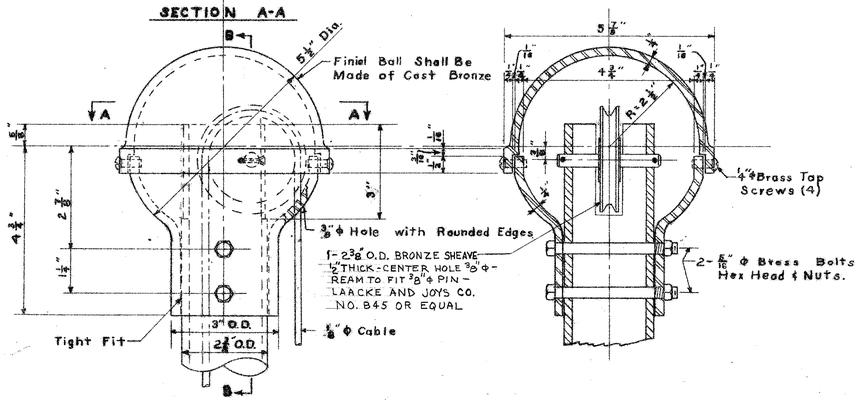

FINIAL BALL FOR SIGNAL BALL STAFF

Half Size

SECTION B-B

(JUNEAU AVE. BRIDGE PATTERN)

GEORGE C. ASHTON
MILWAUKEE, WISCONSIN
WISCONSIN PROFESSIONAL ENGINEER

DEPARTMENT OF PUBLIC WORKS
BUREAU OF BRIDGES AND PUBLIC BUILDINGS
CITY OF MILWAUKEE

REVISIONS		
MARK	DATE	BY
A		
B		
C		
D		
E		
F		
G		
H		
I		
J		
K		
L		
M		

W. ST. PAUL AVE. - E. DETROIT ST. VERTICAL LIFT BRIDGE
OVER MILWAUKEE RIVER

BRIDGE OPERATOR'S HOUSE - SIGNAL BALL

DESIGNED BY: R.L.K. TRACED BY: _____ DATE: _____
DRAWN BY: R.L.K. CHECKED BY: G.C.A. DATE: _____
APPROVED: _____ SCALE: As Shown
Norris C. Batalden — DESIGNER IN CHARGE — DATE: 6-28-65 SHEET NUMBER: 21
George C. Ashton — CHIEF OF BRIDGES AND PUBLIC BUILDINGS — DATE: 7-3-65 SET OF _____ SHEETS
Donald W. Lasky — COMMISSIONER OF PUBLIC WORKS, Special Deputy — DATE: 7-6-65 JOB NO. 522-001

NO. 125-200-4-27-53

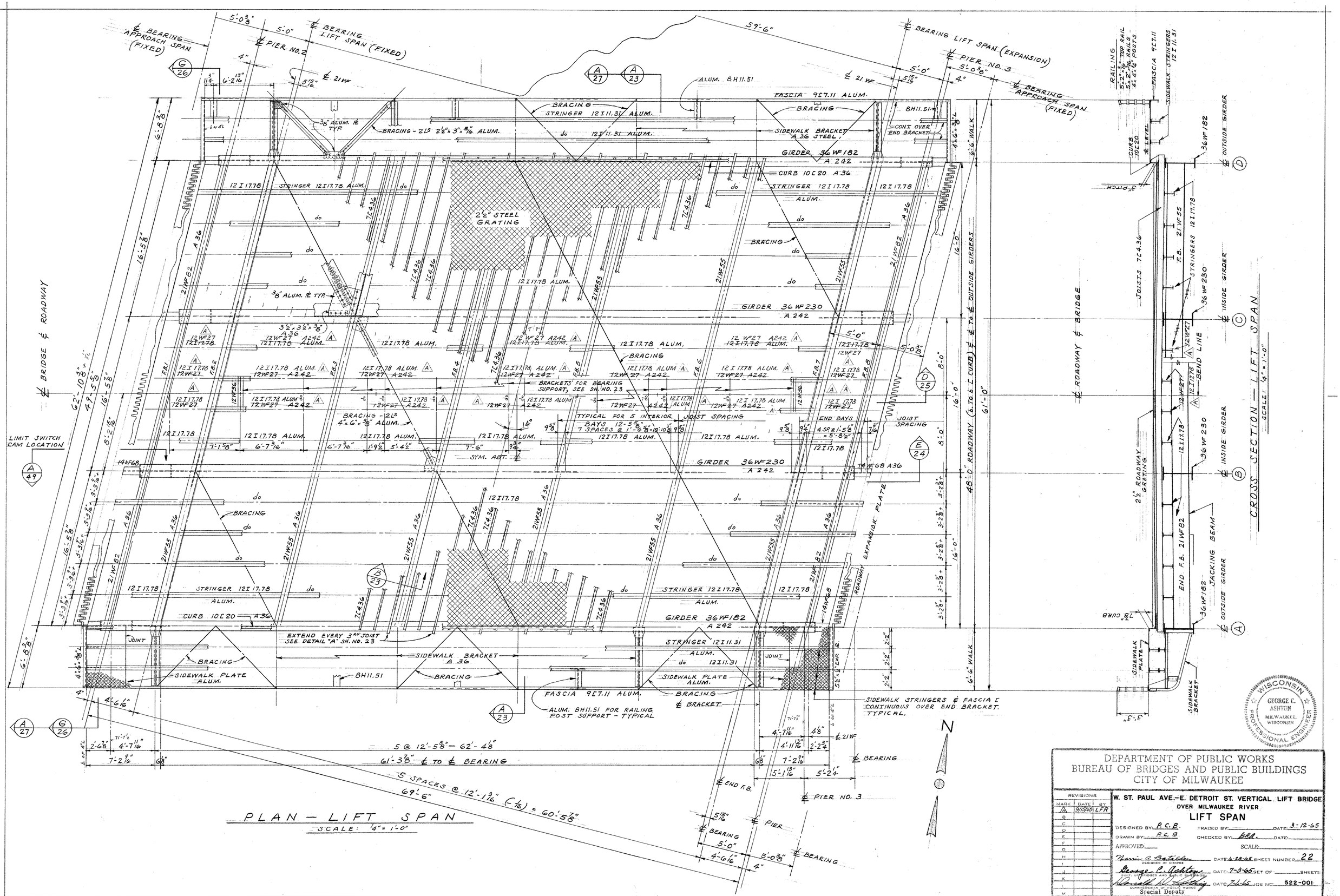

PLAN — LIFT SPAN

SCALE: 1/4" = 1'-0"

GEORGE C. ASHTON
MILWAUKEE, WISCONSIN
WISCONSIN
PROFESSIONAL ENGINEER

DEPARTMENT OF PUBLIC WORKS
BUREAU OF BRIDGES AND PUBLIC BUILDINGS
CITY OF MILWAUKEE

REVISIONS		
MARK	DATE	BY
A	9/15/65	LFR
B		
C		
D		
E		
F		
G		
H		
I		
J		
K		
L		
M		

W. ST. PAUL AVE.–E. DETROIT ST. VERTICAL LIFT BRIDGE
OVER MILWAUKEE RIVER

LIFT SPAN

DESIGNED BY: P.C.B. TRACED BY: DATE: 3-12-65
DRAWN BY: P.C.B. CHECKED BY: DATE:
APPROVED: SCALE:
DESIGNER IN CHARGE — DATE: 6-28-65 SHEET NUMBER: 22
ASST. CH. BRIDGES AND PUBLIC BUILDINGS — DATE: 7-3-65 SET OF: SHEETS
COMMISSIONER OF PUBLIC WORKS — DATE: 7-6-65 JOB NO: 522-001
Special Deputy

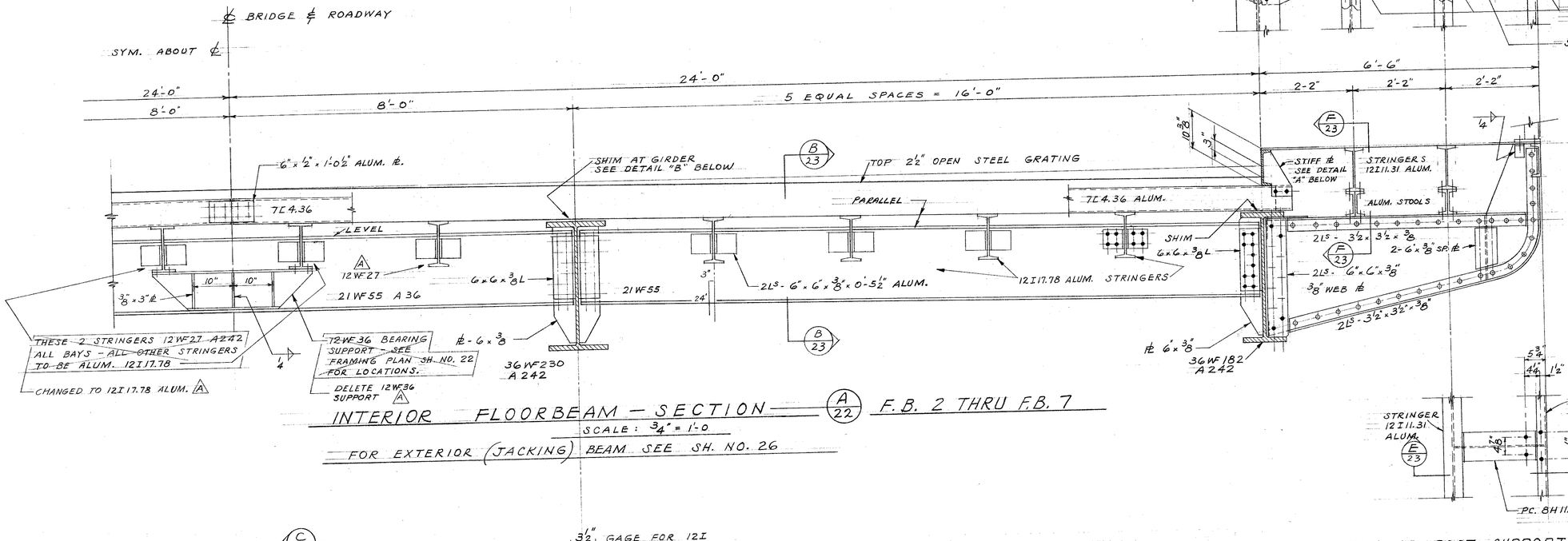

INTERIOR FLOORBEAM - SECTION (A/22) F.B. 2 THRU F.B. 7

SCALE: 3/4" = 1'-0

FOR EXTERIOR (JACKING) BEAM SEE SH. NO. 26

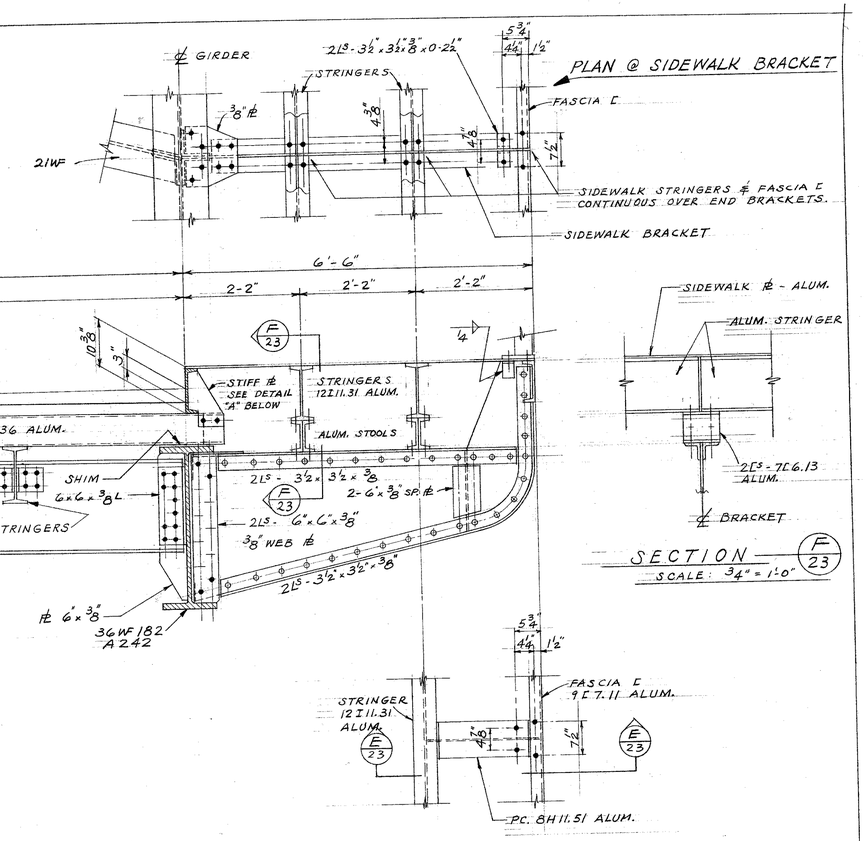

PLAN @ SIDEWALK BRACKET

SECTION (F/23)

SCALE: 3/4" = 1'-0

RAILING POST SUPPORT BETWEEN BRACKETS

SCALE: 3/4" = 1'-0

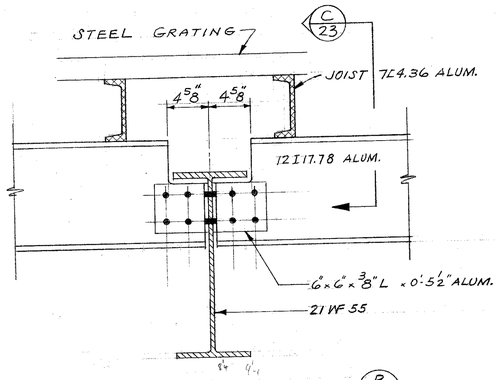

SECTION (B/23)

SCALE: 1 1/2" = 1'-0

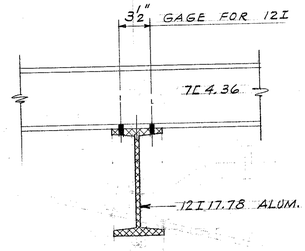

SECTION (C/23)

SCALE: 1 1/2" = 1'-0

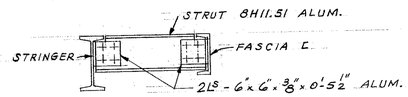

SECTION (E/23)

SCALE: 3/4" = 1'-0

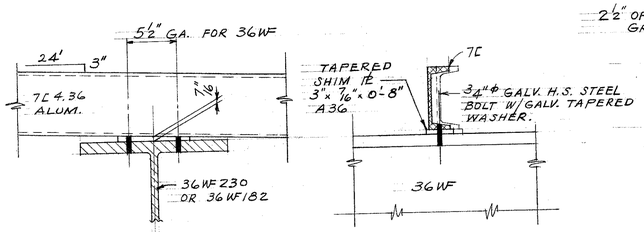

SHIM PL @ GIRDERS - DETAIL "B"

SCALE: 1 1/2" = 1'-0

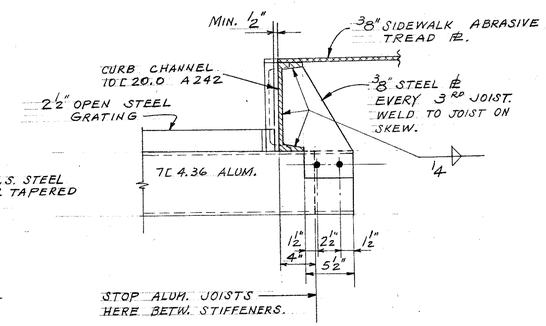

ROADWAY CURB DETAIL "A"

SCALE: 1 1/2" = 1'-0

NOTES:

1. ALL SHOP CONNECTIONS BETWEEN STEEL MEMBERS TO BE WELDED OR RIVETED.
2. ALL FIELD CONNECTIONS BETWEEN STEEL MEMBERS TO BE 3/4"φ HIGH STRENGTH BOLTS.
3. ALL SHOP OR FIELD CONNECTIONS BETWEEN ALUMINUM AND STEEL MEMBERS TO BE 3/4"φ HIGH STRENGTH GALVANIZED STEEL BOLTS.
4. ALL SHOP CONNECTIONS BETWEEN ALUMINUM MEMBERS TO BE 3/4"φ ALUMINUM RIVETS, COLD DRIVEN - GRADE 6061-T6
5. ALL ALUMINUM MEMBERS TO BE ALUMINUM ALLOY - GRADE 6061-T6 UNLESS NOTED.
6. EDGE DISTANCE 1 1/2" - UNLESS NOTED.
7. 13/16"φ HOLES UNLESS NOTED - 3/4"φ BOLTS OR RIVETS.

6011-T1 FOR RIVETS 615-T6

WISCONSIN GEORGE C. ASHTON MILWAUKEE, WISCONSIN PROFESSIONAL ENGINEER

DEPARTMENT OF PUBLIC WORKS
BUREAU OF BRIDGES AND PUBLIC BUILDINGS
CITY OF MILWAUKEE

REVISIONS		
MARK	DATE	BY
A	9/15/65	LFR
B		
C		
D		
E		
F		
G		
H		
I		
J		
K		
L		
M		

W. ST. PAUL AVE.-E. DETROIT ST. VERTICAL LIFT BRIDGE OVER MILWAUKEE RIVER

CROSS SECTION THRU LIFT SPAN-INTERIOR FLOORBEAM

DESIGNED BY: P.C.B. TRACED BY: DATE:
DRAWN BY: P.C.B. CHECKED BY: DATE: 3-30-66
APPROVED: SCALE:
DESIGNER IN CHARGE DATE: 6-28-66 SHEET NUMBER: 23
GEORGE C. ASHTON, CHIEF, BUREAU OF BRIDGES AND PUBLIC BUILDINGS DATE: 7-3-65 SET OF SHEETS
COMMISSIONER OF PUBLIC WORKS Special Deputy DATE: 7-6-65 JOB NO. 522-001

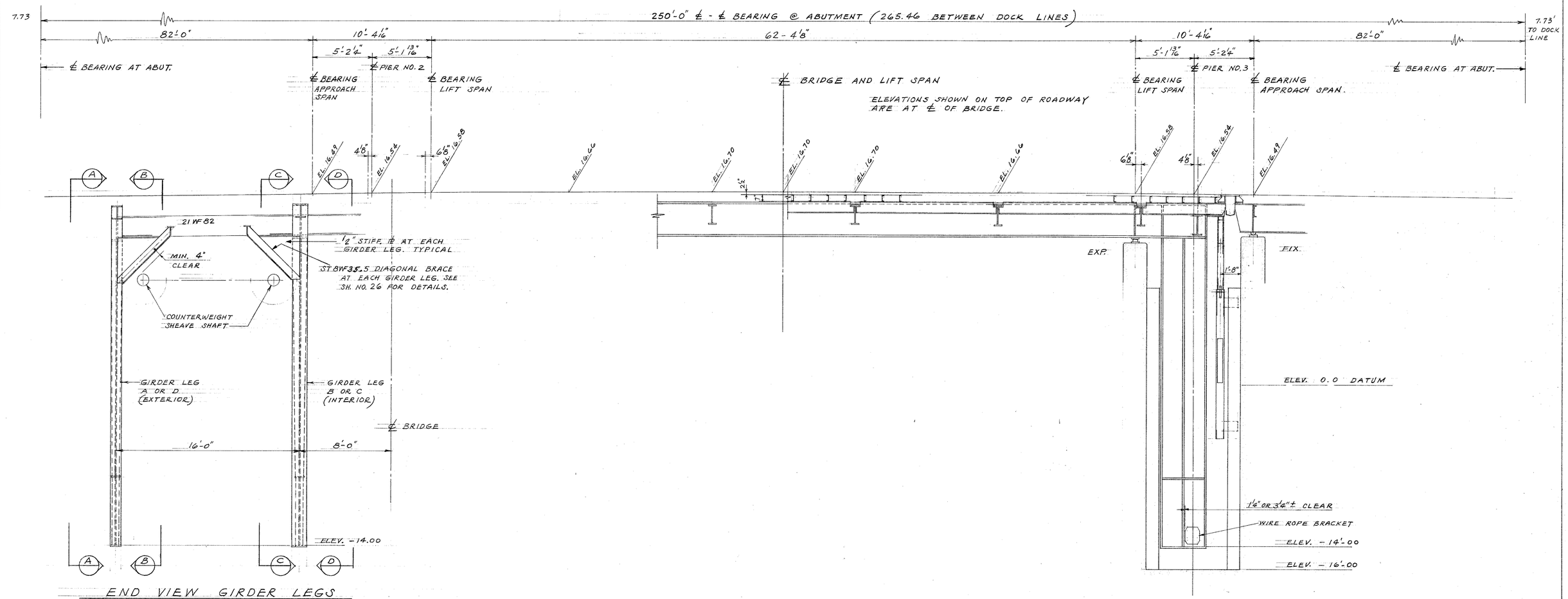

END VIEW GIRDER LEGS

SCALE: 1/4" = 1'-0"

TYPICAL SECTION - INTERIOR GIRDER — E/22

SCALE: 1/4" = 1'-0"

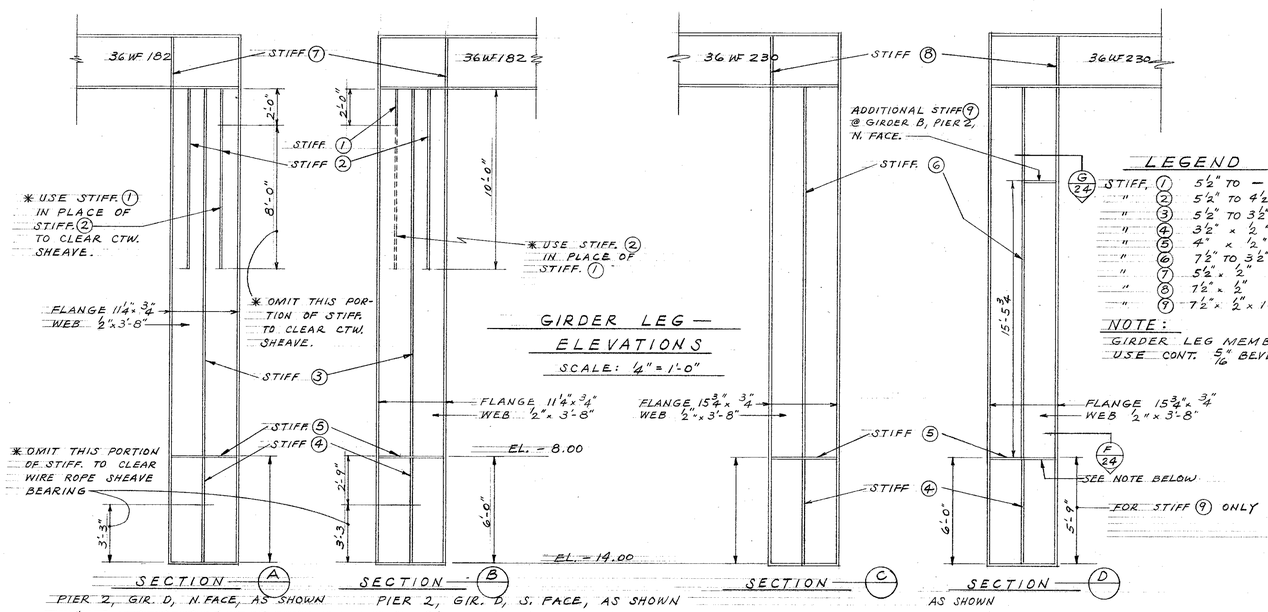

GIRDER LEG — ELEVATIONS

SCALE: 1/4" = 1'-0"

SECTION — A

PIER 2, GIR. D, N. FACE, AS SHOWN
" 3, " A, S. " , " "
" 2, " A, N " AS INDICATED
" 3 " D, S " " "

SECTION — B

PIER 2, GIR. D, S. FACE, AS SHOWN
" 3, " A, N. " , " "
" 2, " A, S. " , AS INDICATED *
" 3, " D, N. " , " " *

SECTION — C

SECTION — D

AS SHOWN
EXCEPT @ GIRDER B, PIER 2, N. FACE
USE STIFF 9 INSTEAD OF STIFF. 5

LEGEND

STIFF. 1	5 1/2" TO —	(TAPERS 1 IN 10) x 1/2" x 2'-0"
" 2	5 1/2" TO 4 1/2" ("	") x 1/2" x 10'-0"
" 3	5 1/2" TO 3 1/2" ± ("	") x 1/2" x 20'-6" ±
" 4	3 1/2" x 1/2" x 6'-0" (EA)	2'-9" SEE ELEVATIONS.
" 5	4" x 1/2" x 3'-8"	
" 6	7 1/2" TO 3 1/2" ±	(TAPERS 1 IN 10) x 1/2" x 20'-6" ±
" 7	5 1/2" x 1/2"	
" 8	7 1/2" x 1/2"	
" 9	7 1/2" x 1/2" x 1'-10" LG. OR 3'-8" LG.	SEE SEC F/24 & G/24

NOTE:
GIRDER LEG MEMBERS TO BE WELDED
USE CONT. 5/16" BEVEL WELD THROUGH-OUT.

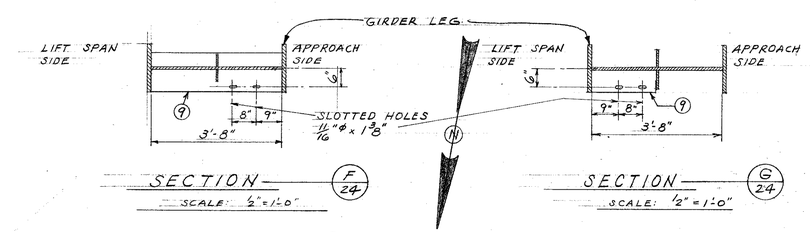

SECTION — F/24

SCALE: 1/2" = 1'-0"

SECTION — G/24

SCALE: 1/2" = 1'-0"

NOTE: STIFF. 9 SHOWN IN CORRECT RELATIVE POSITION FOR GIRDER B, PIER 2, NORTH FACE — ALSO SEE SH. NO. 49 — LIMIT SWITCH MOUNTING DETAILS.

DEPARTMENT OF PUBLIC WORKS
BUREAU OF BRIDGES AND PUBLIC BUILDINGS
CITY OF MILWAUKEE

REVISIONS		
MARK	DATE	BY
A		
B		
C		
D		
E		
F		
G		
H		
I		
J		
K		
L		
M		

W. ST. PAUL AVE.-E. DETROIT ST. VERTICAL LIFT BRIDGE
OVER MILWAUKEE RIVER

LONGITUDINAL SECTION THRU LIFT SPAN

DESIGNED BY: P.C.B. TRACED BY: DATE:
DRAWN BY: P.C.B. CHECKED BY: DATE:
APPROVED: SCALE:
DATE: 6-28-65 SHEET NUMBER 24
DESIGNER IN CHARGE
DATE: 7-3-65 SET OF SHEETS
CHIEF, BRIDGES AND PUBLIC BUILDINGS
DATE: 7-6-65 JOB NO. 522-001
COMMISSIONER OF PUBLIC WORKS
Special Deputy

WISCONSIN PROFESSIONAL ENGINEER GEORGE C. ASHTON MILWAUKEE, WISCONSIN

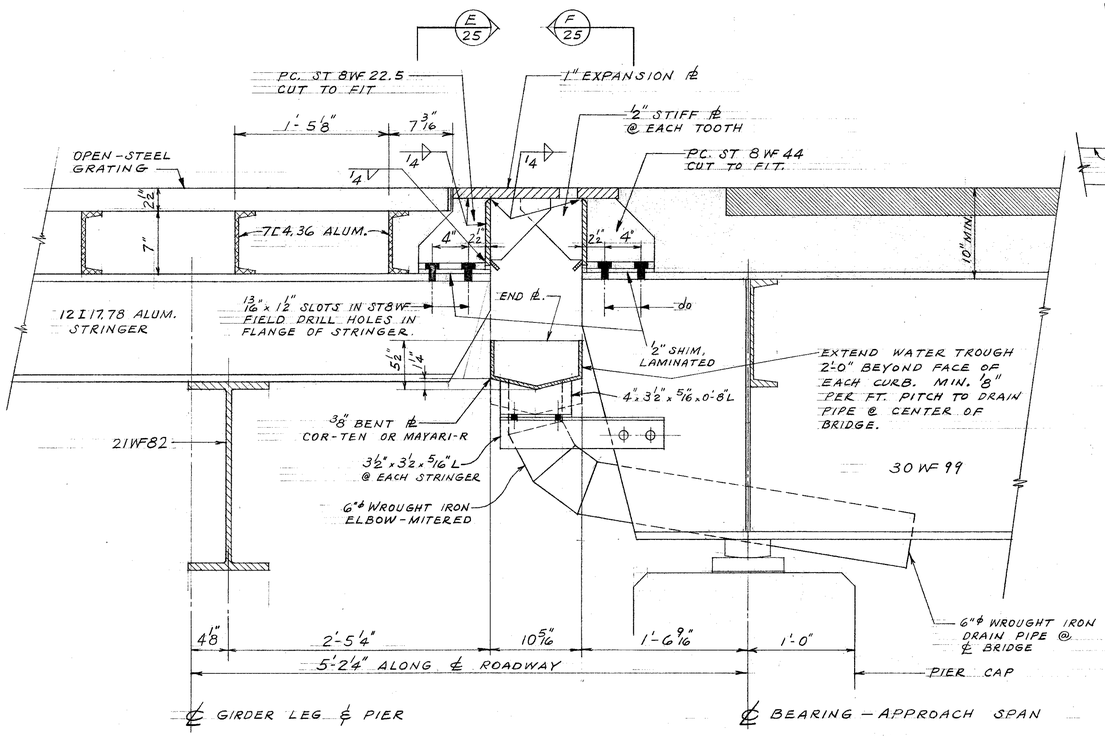

TYPICAL SECTION THRU ROADWAY EXPANSION JOINT @ MOVABLE SPAN — D/22

SCALE: 1/2" = 1'-0"

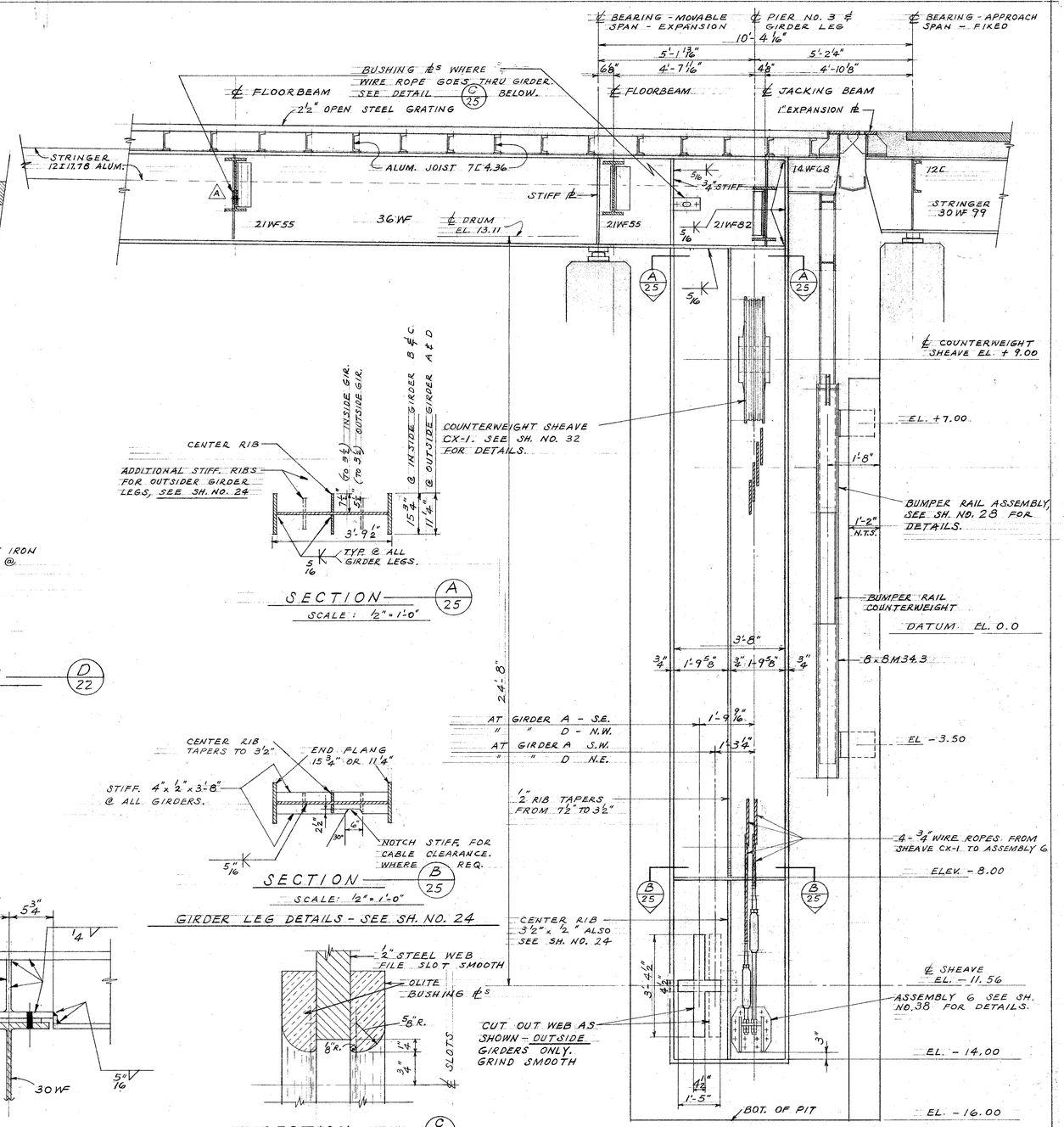

SECTION — A/25

SCALE: 1/2" = 1'-0"

SECTION — B/25

SCALE: 1/2" = 1'-0"

GIRDER LEG DETAILS - SEE SH. NO. 24

SECTION — C/25

TYPICAL END SECTION

SCALE: 1/2" = 1'-0"

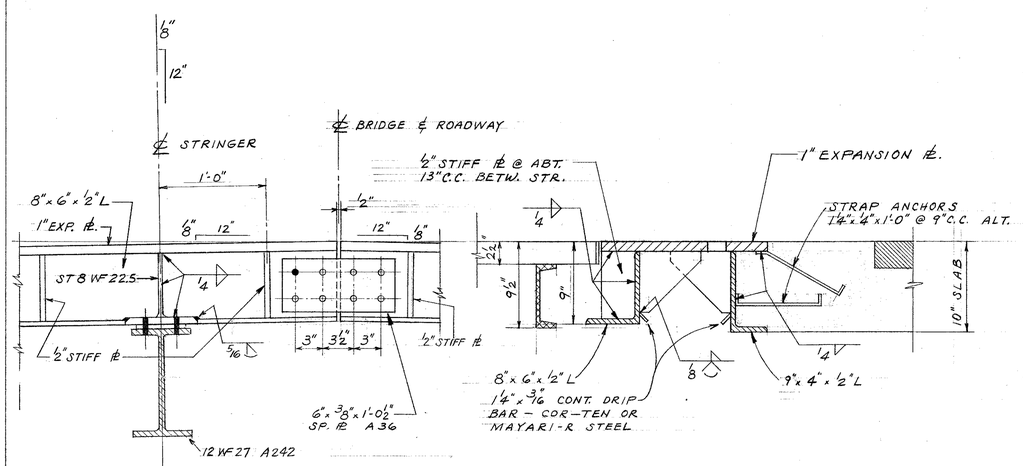

SECTION — E/25

SCALE: 1/2" = 1'-0"

EXPANSION JOINT DETAIL BETW. STRINGERS

SCALE: 1/2" = 1'-0"

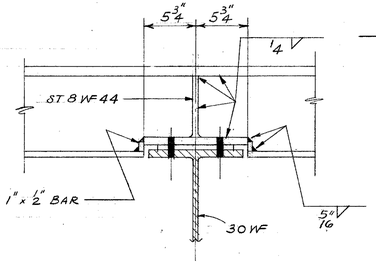

SECTION — F/25

SCALE: 1/2" = 1'-0"

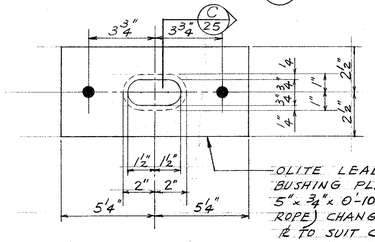

CABLE GUIDE BUSHING ℄S

SCALE: 3" = 1'-0"

WISCONSIN GEORGE C. ASHTON MILWAUKEE, WISCONSIN PROFESSIONAL ENGINEER

DEPARTMENT OF PUBLIC WORKS
BUREAU OF BRIDGES AND PUBLIC BUILDINGS
CITY OF MILWAUKEE

REVISIONS		
MARK	DATE	BY
A	9/15/65	LFR
B		
C		
D		
E		
F		
G		
H		
I		
J		
K		
L		
M		

W. ST. PAUL AVE.- E. DETROIT ST. VERTICAL LIFT BRIDGE
OVER MILWAUKEE RIVER

LIFTING LEG DETAIL-EXPANSION JOINT

DESIGNED BY: P.C.B. TRACED BY: DATE:
DRAWN BY: P.C.B. CHECKED BY: DATE: 3-24-65
APPROVED: SCALE:
Harris O. Batchelor — DESIGNER IN CHARGE — DATE: 6-28-65 SHEET NUMBER 25
George C. Ashton — SUPV. BRIDGES AND PUBLIC BUILDINGS — DATE: 7-3-65 SHEET OF SHEETS
Donald R. Lindsay — COMMISSIONER OF PUBLIC WORKS — DATE: 7-6-65 JOB NO. 522-001
Special Deputy

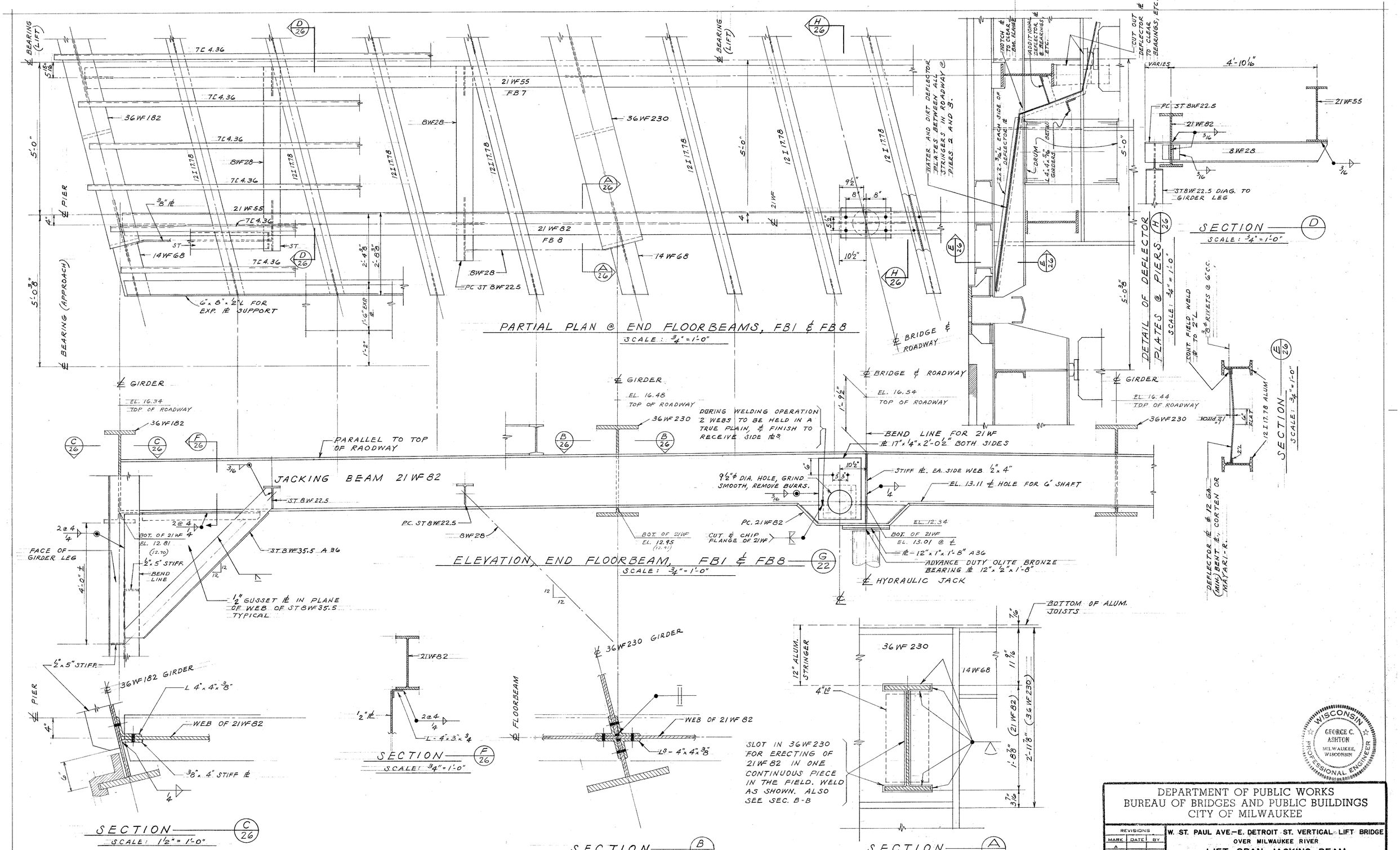

DEPARTMENT OF PUBLIC WORKS
BUREAU OF BRIDGES AND PUBLIC BUILDINGS
CITY OF MILWAUKEE

REVISIONS		
MARK	DATE	BY
A		
B		
C		
D		
E		
F		
G		
H		
I		
J		
K		
L		
M		

W. ST. PAUL AVE.–E. DETROIT ST. VERTICAL LIFT BRIDGE
OVER MILWAUKEE RIVER

LIFT SPAN-JACKING BEAM

DESIGNED BY: P.C.B. TRACED BY: DATE:
DRAWN BY: P.C.B. CHECKED BY: DATE: 5-6-65
APPROVED: SCALE:
Norris C. Batchelor DESIGNER IN CHARGE DATE: 6-28-65 SHEET NUMBER 26
George C. Ashton CHIEF, BUREAU OF BRIDGES AND PUBLIC BUILDINGS DATE: 7-3-65 SET OF SHEETS
Donald O. Collins COMMISSIONER OF PUBLIC WORKS Special Deputy DATE: 7-6-65 JOB NO. 522-001

WISCONSIN GEORGE C. ASHTON MILWAUKEE, WISCONSIN PROFESSIONAL ENGINEER

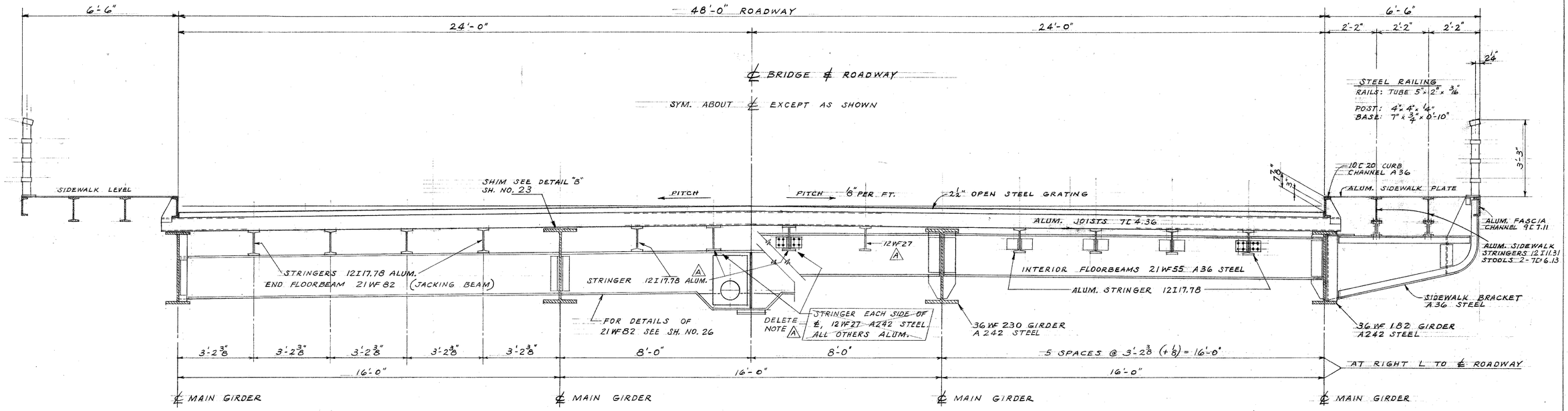

CROSS SECTION (A/22)
SCALE: ½" = 1'-0"

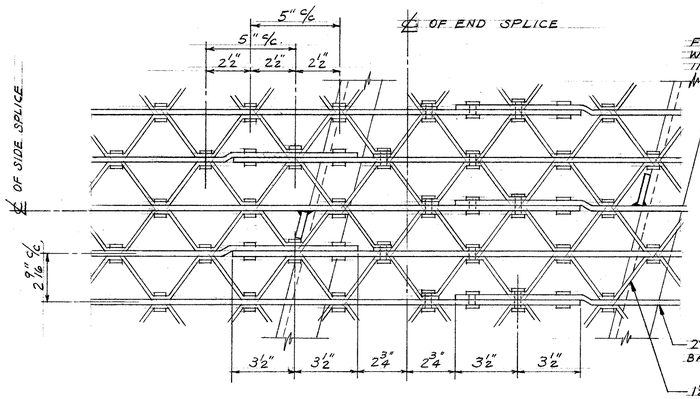

DETAIL OF SIDE AND END SPLICE
SCALE: 3" = 1'-0"

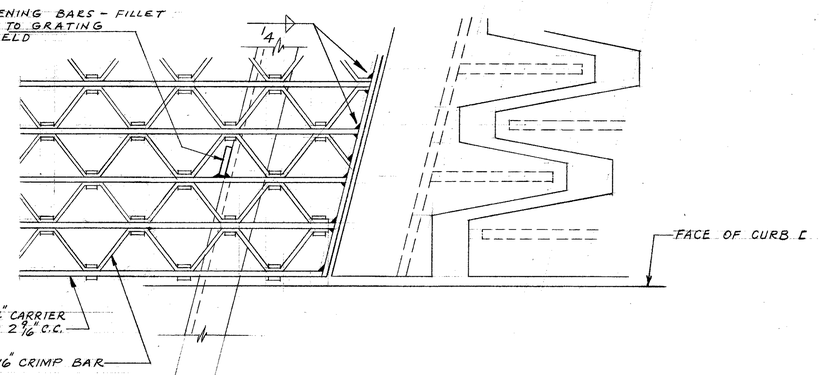

END DETAIL
SCALE: 3" = 1'-0"

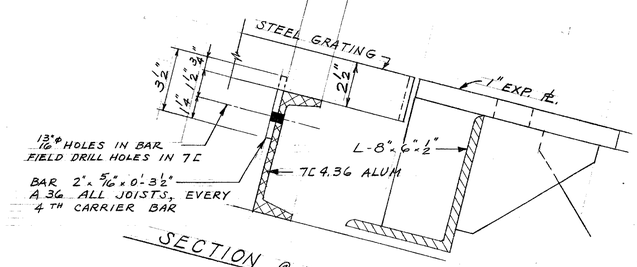

SECTION @ GRATING FASTENERS
SCALE: 3" = 1'-0"

WISCONSIN
GEORGE C. ASHTON
MILWAUKEE, WISCONSIN
PROFESSIONAL ENGINEER

DEPARTMENT OF PUBLIC WORKS
BUREAU OF BRIDGES AND PUBLIC BUILDINGS
CITY OF MILWAUKEE

REVISIONS		
MARK	DATE	BY
A	9/15/65	LFR
B		
C		
D		
E		
F		
G		
H		
I		
J		
K		
L		
M		

W. ST. PAUL AVE.-E. DETROIT ST. VERTICAL LIFT BRIDGE
OVER MILWAUKEE RIVER
CROSS SECTION THRU LIFT SPAN-GRATING DETAILS

DESIGNED BY: P.C.B. TRACED BY: DATE:
DRAWN BY: P.C.B. CHECKED BY: GCA DATE: 3-17-65
APPROVED: SCALE:
Morris A. Batalden DESIGNER IN CHARGE DATE: 6-28-65 SHEET NUMBER 27
George C. Ashton SUPERVISOR BRIDGES AND PUBLIC BUILDINGS DATE: 7-3-65 SET OF SHEETS
Donald D. Lasting COMMISSIONER OF PUBLIC WORKS DATE: 7-6-65 JOB NO. 522-001
Special Deputy

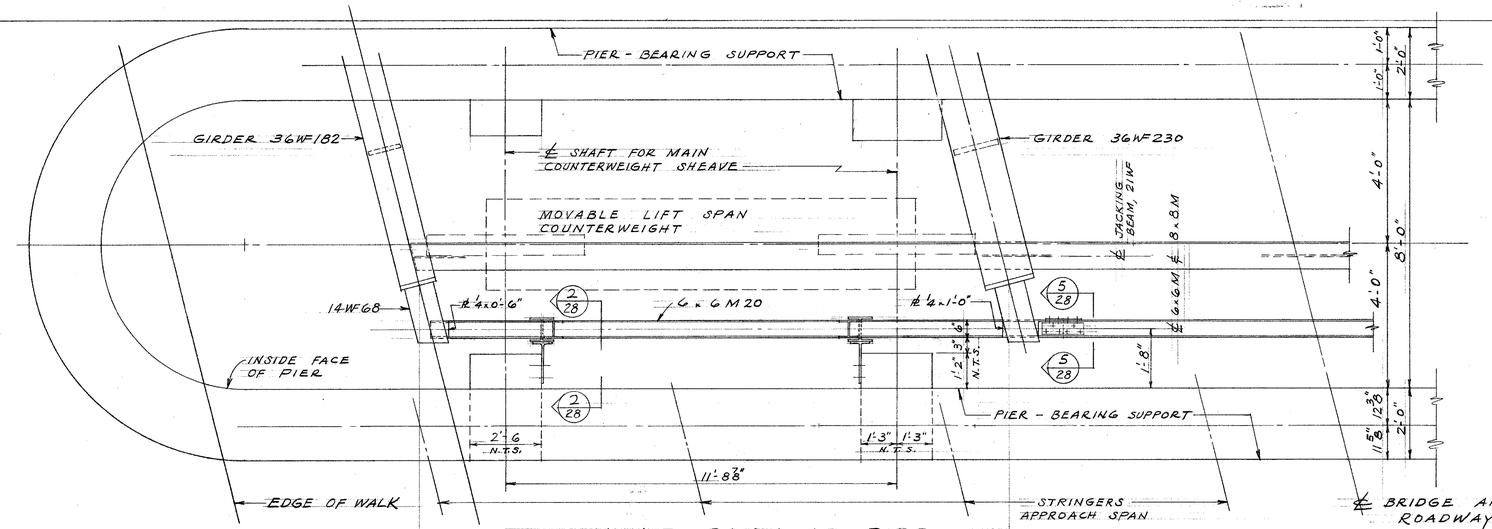

HALF PLAN AT PIER
SCALE: 1/2" = 1'-0"

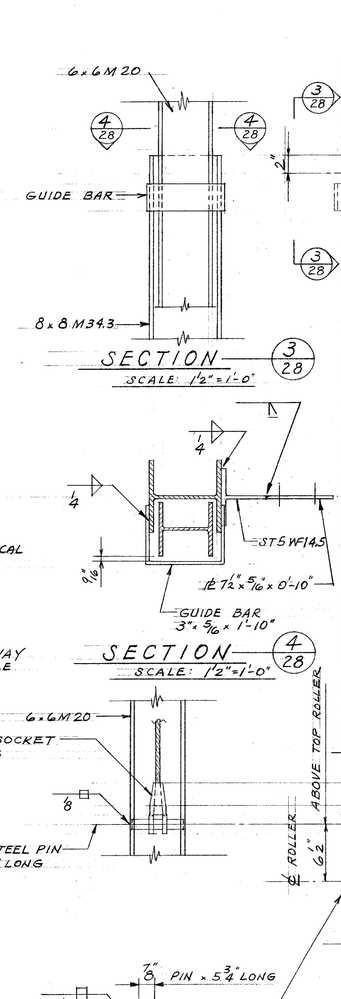

SECTION 3/28
SCALE: 1/2" = 1'-0"

SECTION 4/28
SCALE: 1/2" = 1'-0"

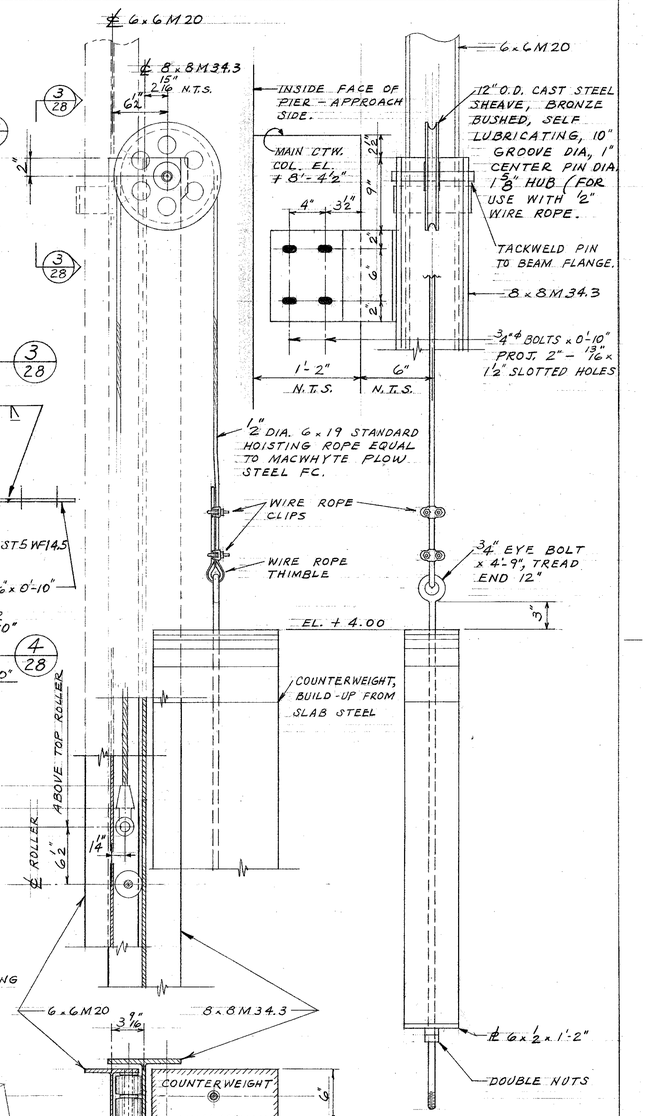

SECTION 2/28
SCALE: 1/2" = 1'-0"

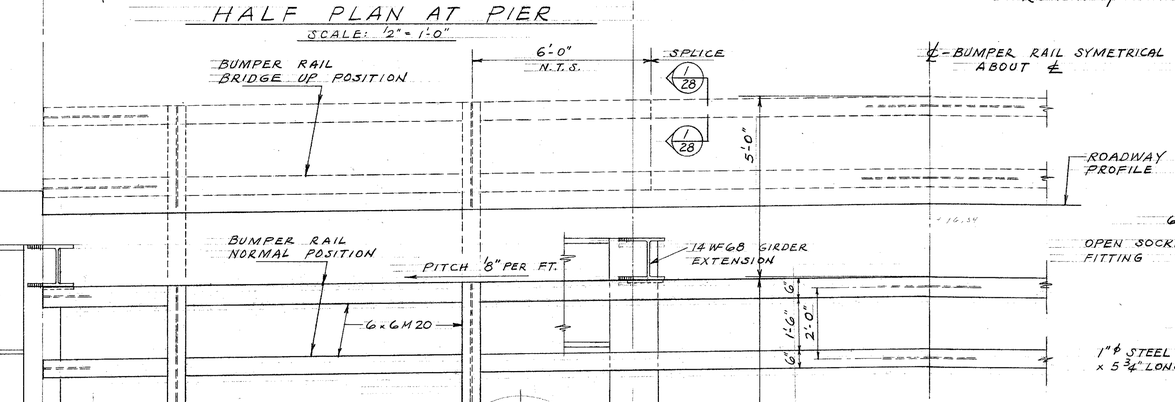

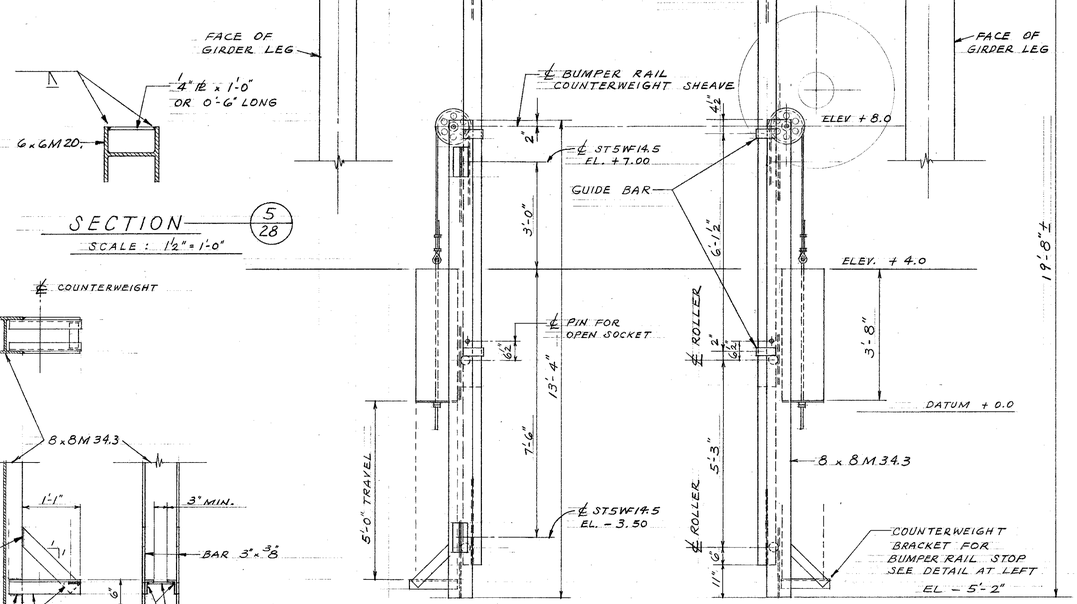

HALF ELEVATION BUMPER RAIL & DETAILS
SCALE: 1/2" = 1'-0"

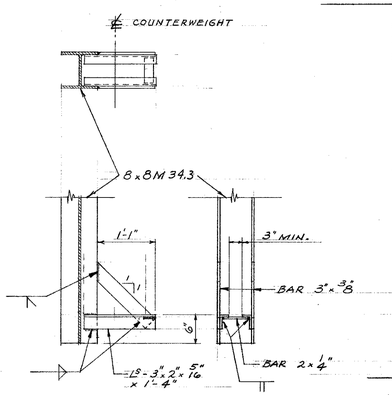

DETAILS — COUNTERWEIGHT BRACKET FOR BUMPER RAIL STOP
SCALE 3/4" = 1'-0"

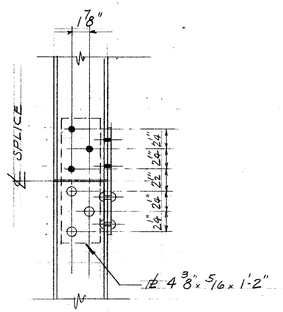

WEB SPLICE ℄
SCALE: 1/2" = 1'-0"

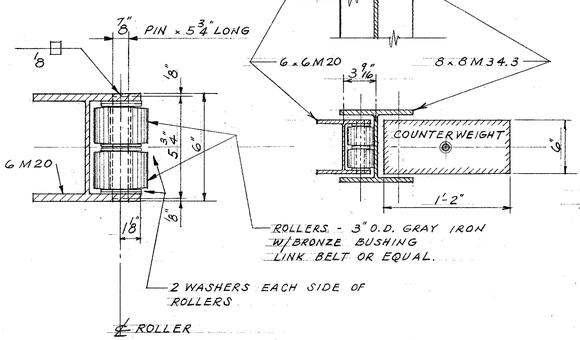

ROLLER GUIDE DETAILS
SCALE: 1/2" = 1'-0"

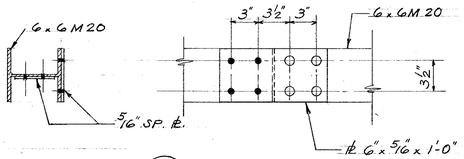

SECTION 1/28
SCALE: 1/2" = 1'-0"

FLANGE SPLICE ℄
SCALE: 1/2" = 1'-0"

WISCONSIN
GEORGE C. ASHTON
MILWAUKEE, WISCONSIN
PROFESSIONAL ENGINEER

DEPARTMENT OF PUBLIC WORKS
BUREAU OF BRIDGES AND PUBLIC BUILDINGS
CITY OF MILWAUKEE

REVISIONS		
MARK	DATE	BY
A		
B		
C		
D		
E		
F		
G		
H		
I		
J		
K		
L		
M		

W. ST. PAUL AVE.-E. DETROIT ST. VERTICAL LIFT BRIDGE
OVER MILWAUKEE RIVER

BUMPER BEAM-LIFT SPAN

DESIGNED BY: P.C.B. TRACED BY: DATE:
DRAWN BY: P.C.B. CHECKED BY: DATE: 4-26-65
APPROVED: SCALE:
DESIGNER IN CHARGE — DATE: 6-26-68 SHEET NUMBER 28
SUPV. BRIDGES AND PUBLIC BUILDINGS — DATE: 7-2-65 SET OF SHEETS
COMMISSIONER OF PUBLIC WORKS — DATE: 7-6-65 JOB NO. 522-001
Special Deputy

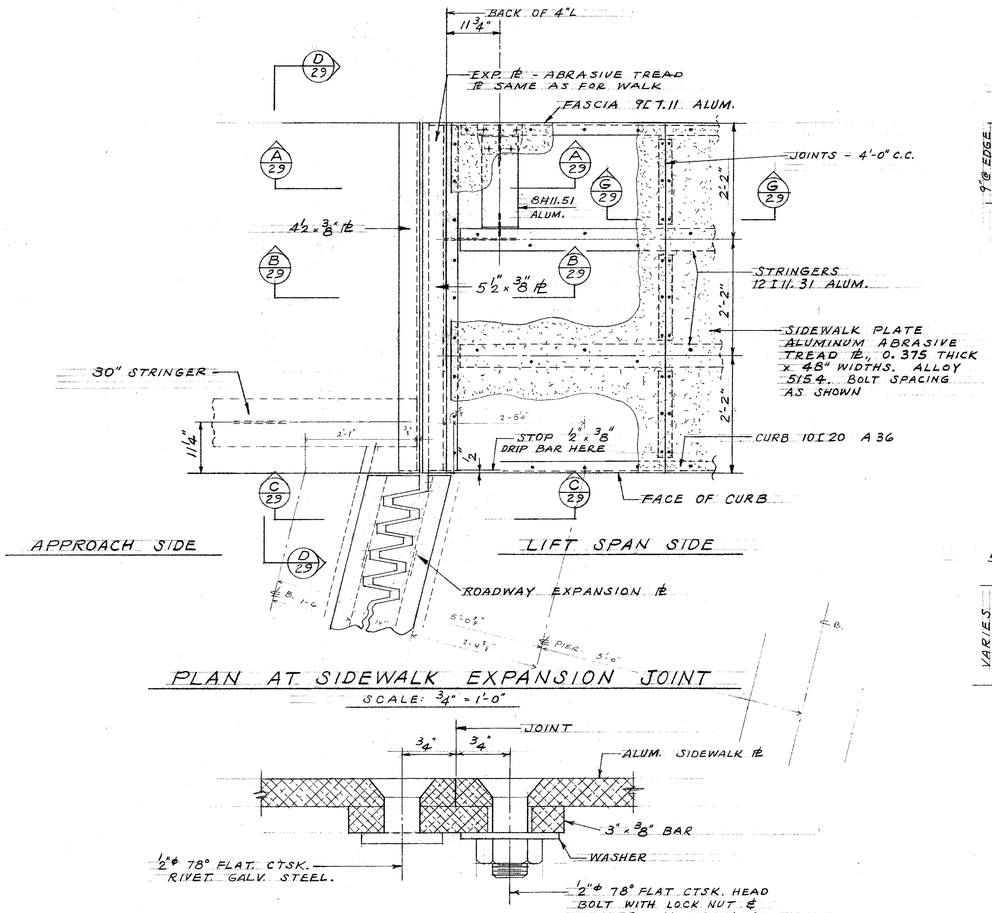

PLAN AT SIDEWALK EXPANSION JOINT
SCALE: ¾" = 1'-0"

SECTION G/29
FULL SCALE

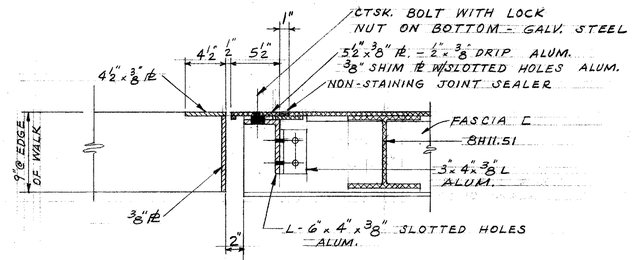

SECTION A/29
SCALE: 1½" = 1'-0"

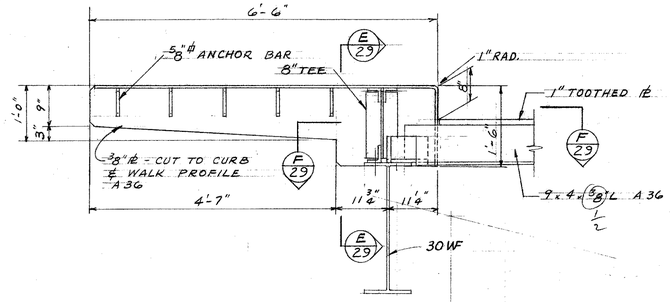

SECTION D/29
SCALE: 34" = 1'-0"

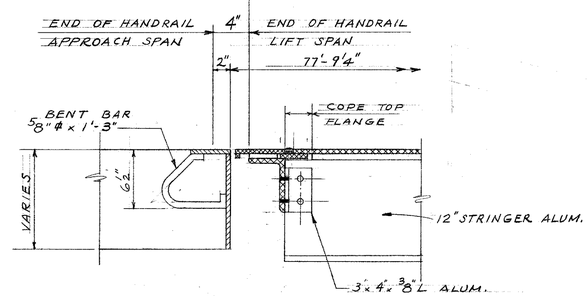

SECTION B/29
SCALE: 1½" = 1'-0"

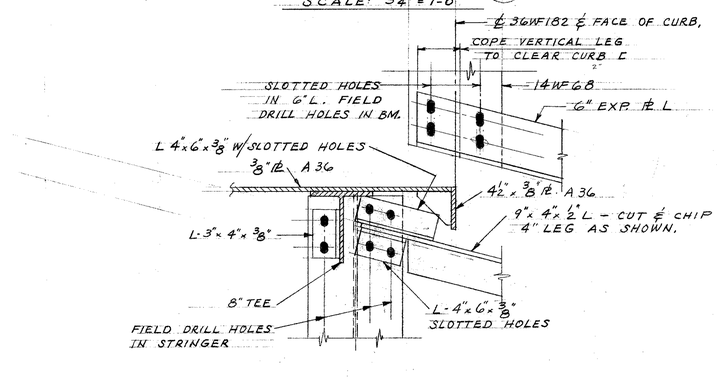

SECTION F/29
SCALE: 1½" = 1'-0"

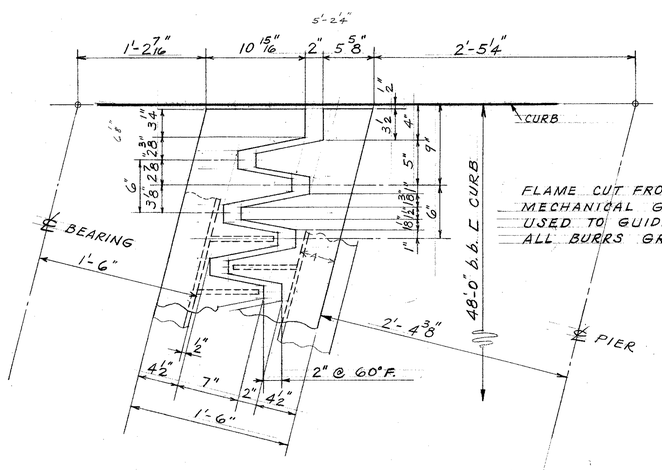

TOOTHED EXPANSION PLATE DETAIL
SCALE: 1½" = 1'-0"

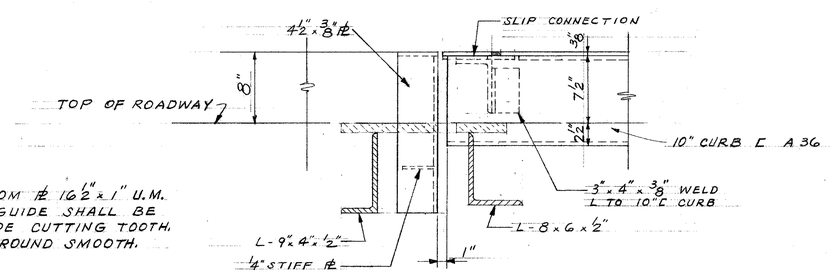

SECTION C/29
SCALE: 1½" = 1'-0"

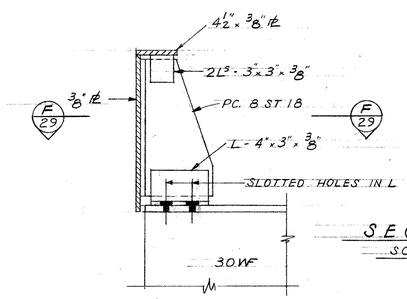

SECTION E/29
SCALE: 1½" = 1'-0"

NOTES:

NON STAIN JOINT SEALER:
NON STAINING GRAY TWO-COMPONENT POLYSULFIDE LIQUID POLYMER (GUN-GRADE) WITH SURFACE PRIMER MEETING APPROVAL OF ENGINEER.
ALL SHOP CONNECTIONS WELDED.
ALL FIELD CONNECTIONS HIGH STRENGTH BOLTS.

DEPARTMENT OF PUBLIC WORKS
BUREAU OF BRIDGES AND PUBLIC BUILDINGS
CITY OF MILWAUKEE

REVISIONS		
MARK	DATE	BY
A		
B		
C		
D		
E		
F		
G		
H		
I		
J		
K		
L		
M		

W. ST. PAUL AVE.-E. DETROIT ST. VERTICAL LIFT BRIDGE
OVER MILWAUKEE RIVER

EXPANSION JOINTS AT LIFT SPAN

DESIGNED BY: P.C.B. TRACED BY: DATE: 3-12-65
DRAWN BY: P.C.B. CHECKED BY: DATE:
APPROVED: SCALE:
DESIGNER IN CHARGE — DATE: 6-28-65 SHEET NUMBER 29
SUPT. BRIDGES AND PUBLIC BUILDINGS — DATE: 7-3-65 SHEET OF SHEETS
COMMISSIONER OF PUBLIC WORKS — DATE: 7-6-65 JOB NO. 522-001
Special Deputy

GEORGE C. ASHTON
MILWAUKEE, WISCONSIN
PROFESSIONAL ENGINEER

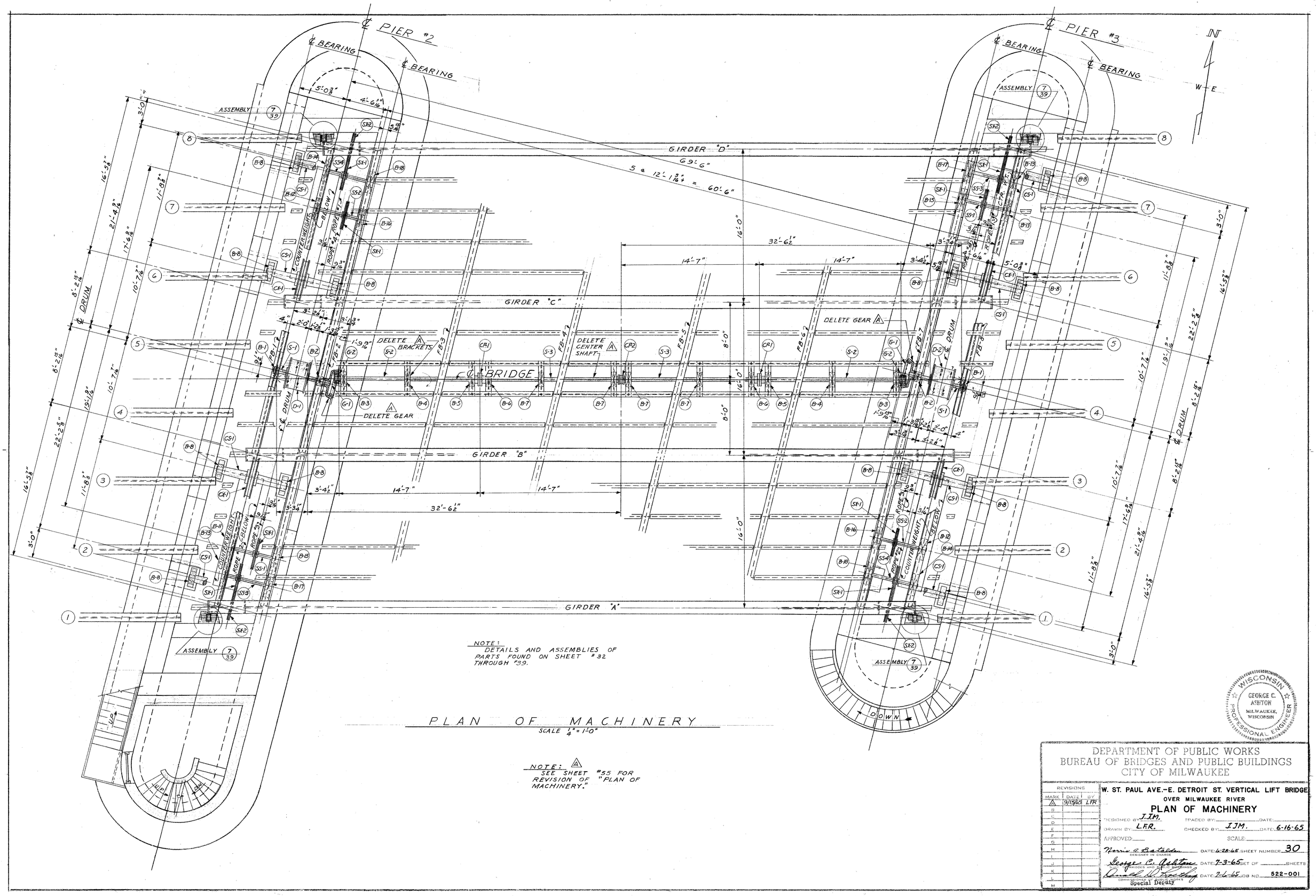

NOTE:
DETAILS AND ASSEMBLIES OF PARTS FOUND ON SHEET #32 THROUGH #39.

PLAN OF MACHINERY
SCALE 1/4" = 1'-0"

NOTE: △A
SEE SHEET #55 FOR REVISION OF "PLAN OF MACHINERY."

WISCONSIN
GEORGE C. ASHTON
MILWAUKEE, WISCONSIN
PROFESSIONAL ENGINEER

DEPARTMENT OF PUBLIC WORKS
BUREAU OF BRIDGES AND PUBLIC BUILDINGS
CITY OF MILWAUKEE

REVISIONS		
MARK	DATE	BY
△A	9/15/65	LFR
B		
C		
D		
E		
F		
G		
H		
I		
J		
K		
L		
M		

W. ST. PAUL AVE.-E. DETROIT ST. VERTICAL LIFT BRIDGE
OVER MILWAUKEE RIVER
PLAN OF MACHINERY

DESIGNED BY: J.J.M. TRACED BY: DATE:
DRAWN BY: L.F.R. CHECKED BY: J.J.M. DATE: 6-16-65
APPROVED: SCALE:
Norris A. Batalden DATE: 6-28-65 SHEET NUMBER 30
DESIGNER IN CHARGE
George C. Ashton DATE: 7-3-65 SET OF SHEETS
CITY BRIDGES AND PUBLIC BUILDINGS
Donald D. Lasting DATE: 7-6-65 JOB NO. 522-001
COMMISSIONER OF PUBLIC WORKS
Special Deputy

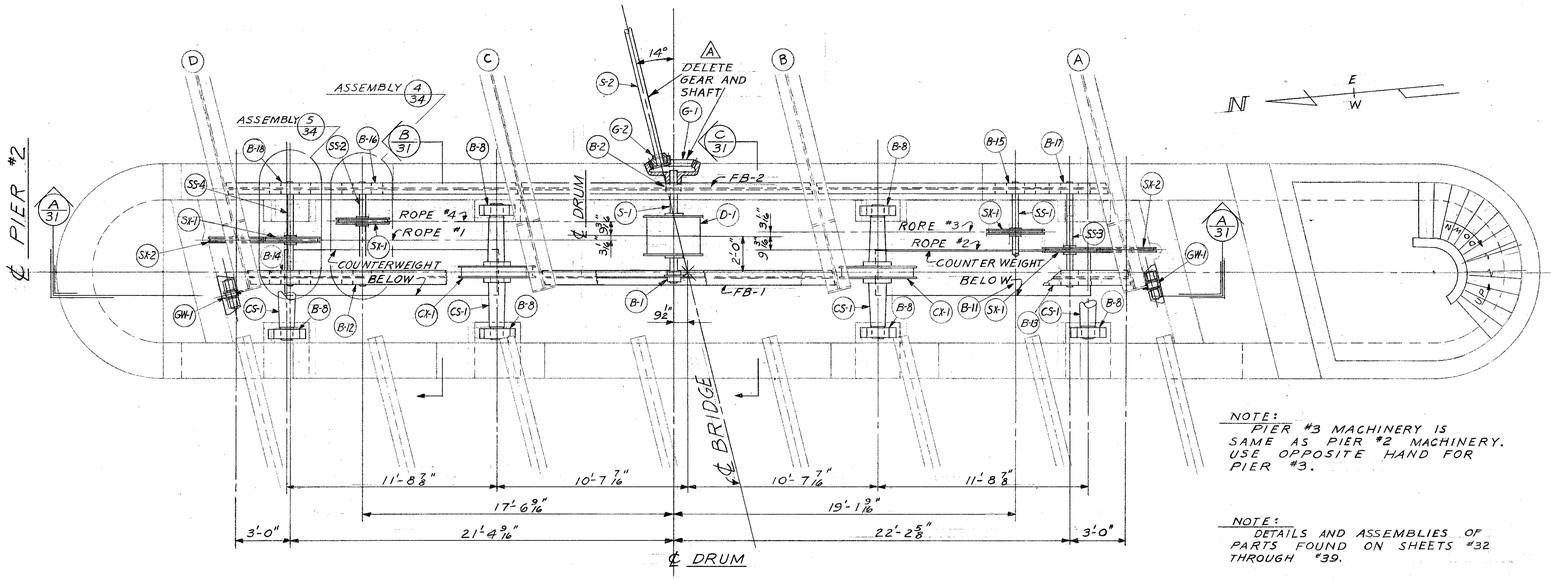

NOTE:
PIER #3 MACHINERY IS SAME AS PIER #2 MACHINERY. USE OPPOSITE HAND FOR PIER #3.

NOTE:
DETAILS AND ASSEMBLIES OF PARTS FOUND ON SHEETS #32 THROUGH #39.

PLAN OF MACHINERY AT PIER #2
SCALE 1/4"=1'-0"

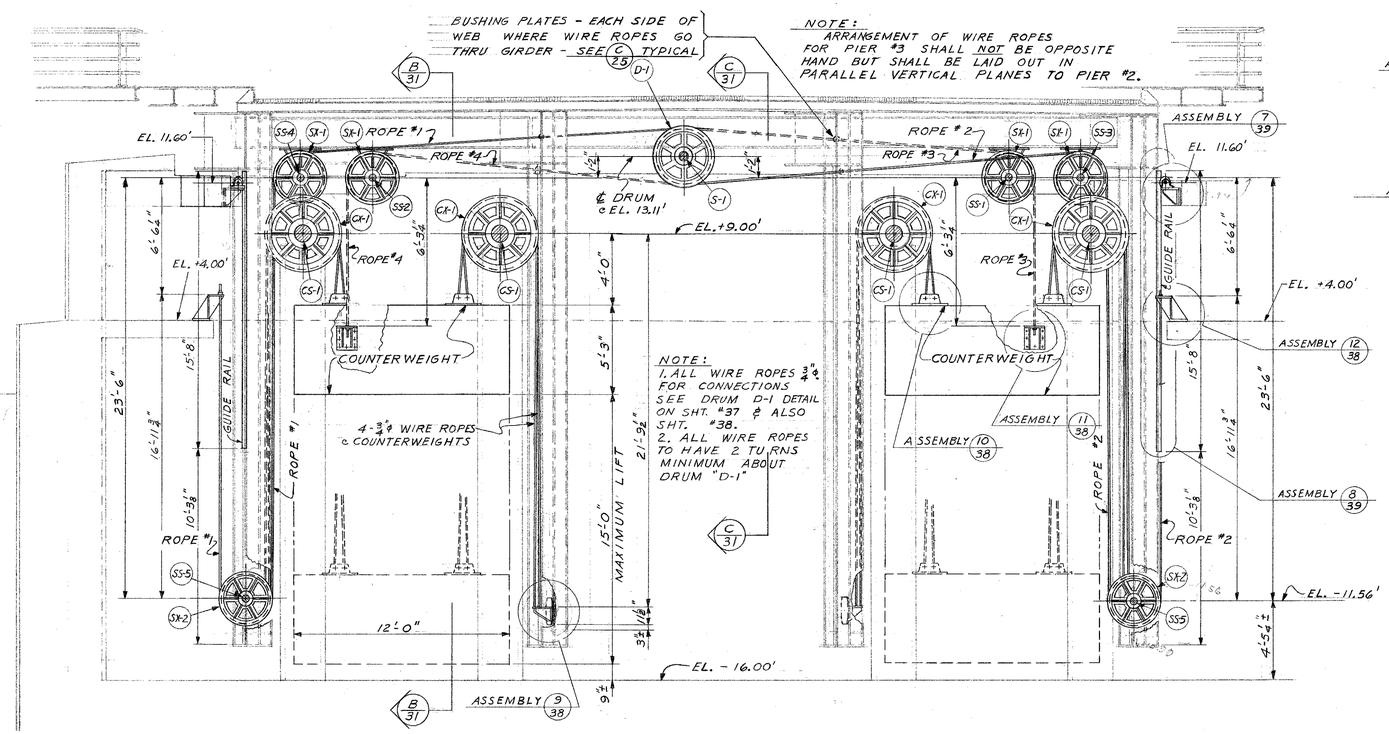

CROSS - SECTION A/31
SCALE 1/4"=1'-0"

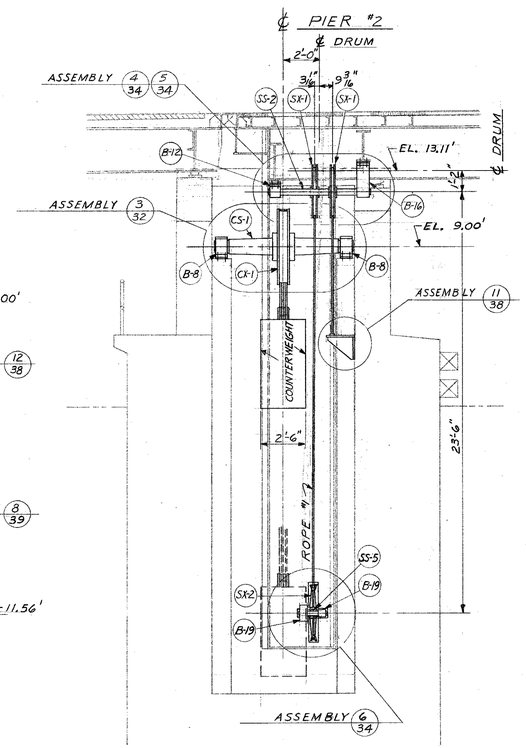

SECTION B/31
SCALE 1/4"=1'-0"

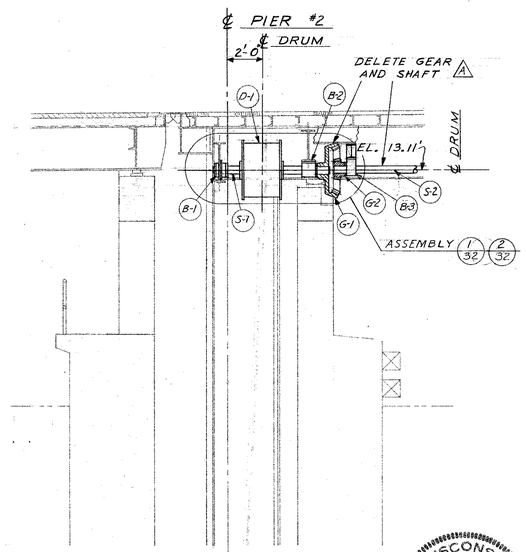

SECTION C/31
SCALE 1/4"=1'-0"

WISCONSIN
GEORGE C. ASHTON
MILWAUKEE, WISCONSIN
PROFESSIONAL ENGINEER

DEPARTMENT OF PUBLIC WORKS
BUREAU OF BRIDGES AND PUBLIC BUILDINGS
CITY OF MILWAUKEE

REVISIONS		
MARK	DATE	BY
A	9/15/65	LFR
B		
C		
D		
E		
F		
G		
H		
I		
J		
K		
L		
M		

W. ST. PAUL AVE.-E. DETROIT ST. VERTICAL LIFT BRIDGE
OVER MILWAUKEE RIVER
MACHINERY-CROSS SECTION THRU EQUALIZER

DESIGNED BY: J.J.M. TRACED BY: DATE:
DRAWN BY: L.F.R. CHECKED BY: J.J.M. DATE: 6-15-65
APPROVED: SCALE:
Norris A. Batalden DATE: 6-28-65 SHEET NUMBER 31
DESIGNER IN CHARGE
George C. Ashton DATE: 7-3-65 SET OF SHEETS
BRIDGES AND PUBLIC BUILDINGS
Donald D. Whitney DATE: 7-6-65 JOB NO. 522-001
COMMISSIONER OF PUBLIC WORKS
Special Deputy

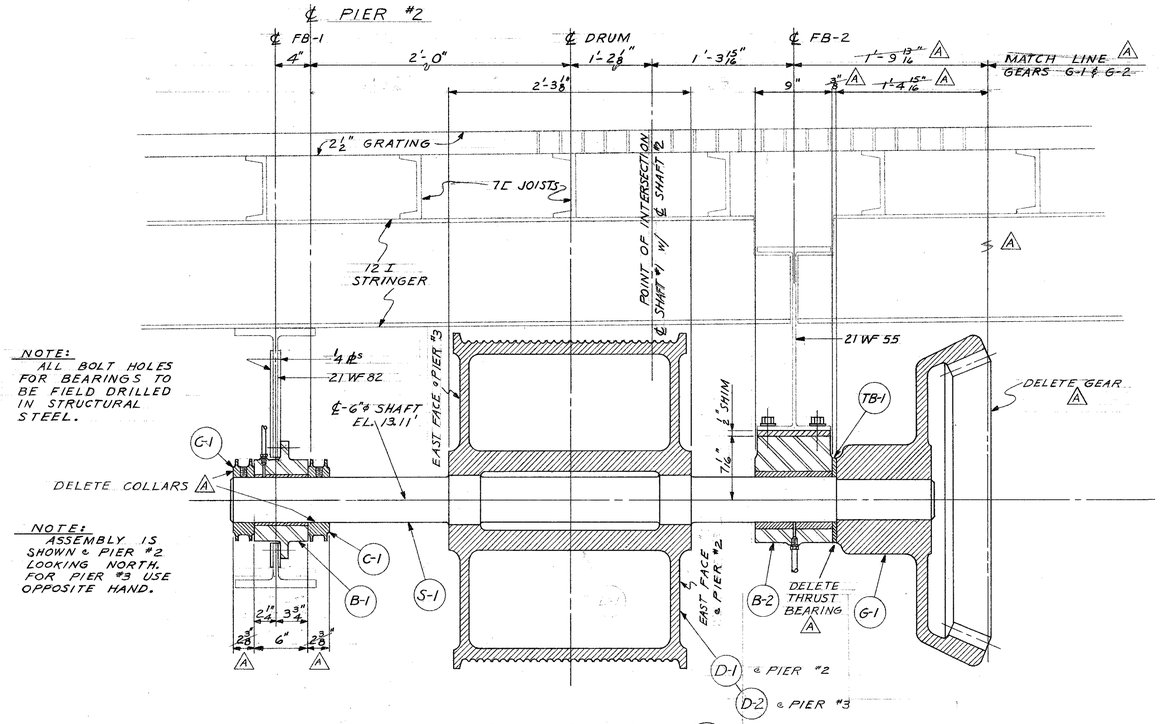

ASSEMBLY 1/31
SCALE 1½" = 1'-0"

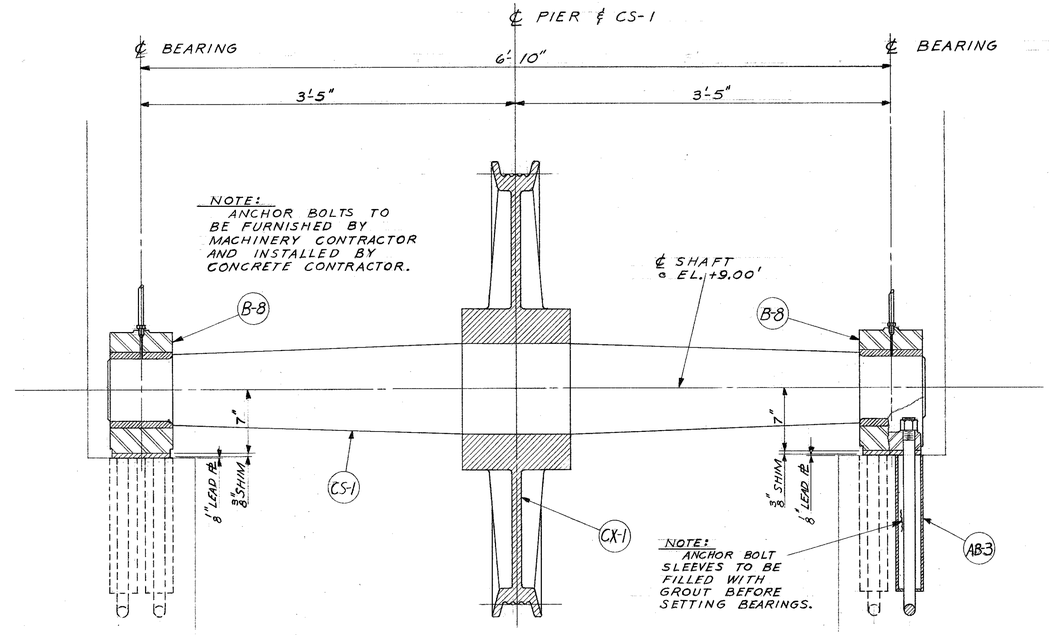

ASSEMBLY 3/31
SCALE 1½" = 1'-0"

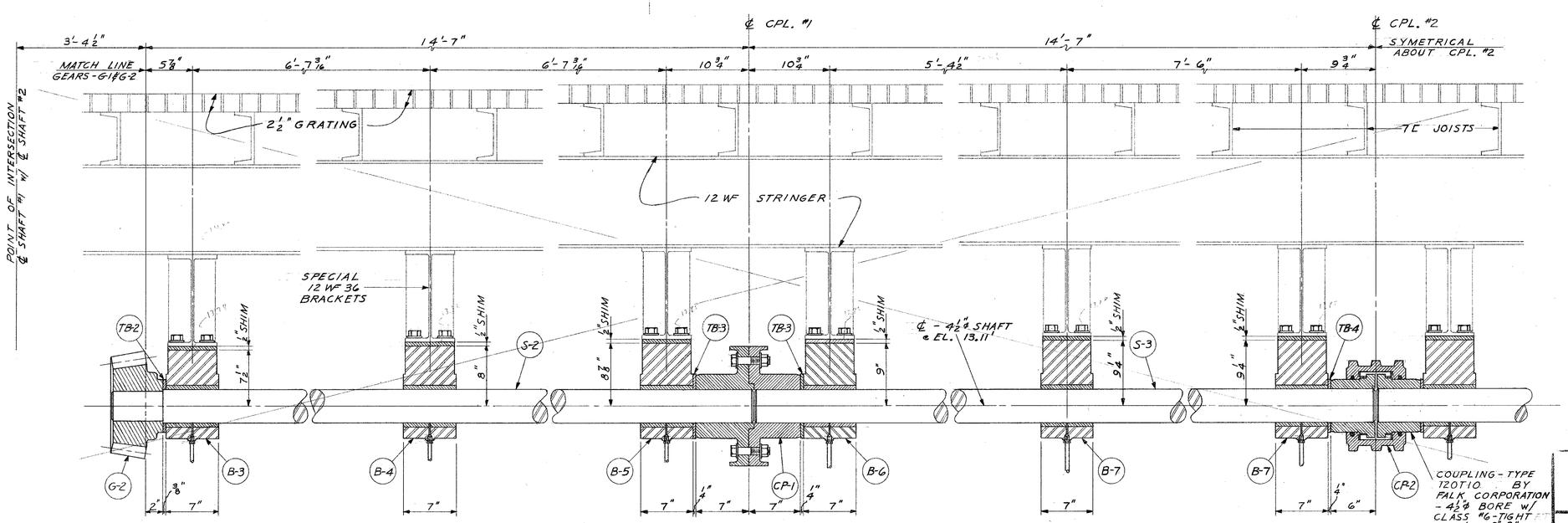

NOTE: ASSEMBLY IS SHOWN IN WEST HALF OF MOVABLE SPAN LOOKING NORTH. FOR EAST HALF USE OPPOSITE HAND.

NOTE: ALL BOLT HOLES FOR BEARINGS TO BE FIELD DRILLED IN STRUCTURAL STEEL.

ASSEMBLY 2/31
SCALE 1½" = 1'-0"

DELETE ASSEMBLY

WISCONSIN PROFESSIONAL ENGINEER GEORGE C. ASHTON MILWAUKEE, WISCONSIN

DEPARTMENT OF PUBLIC WORKS
BUREAU OF BRIDGES AND PUBLIC BUILDINGS
CITY OF MILWAUKEE

REVISIONS		
MARK	DATE	BY
A	9/15/65	LFR
B		
C		
D		
E		
F		
G		
H		
I		
J		
K		
L		
M		

W. ST. PAUL AVE.-E. DETROIT ST. VERTICAL LIFT BRIDGE
OVER MILWAUKEE RIVER
MACHINERY-LONGITUDINAL SHAFT-CWT SHEAVE

DESIGNED BY: J.J.M. TRACED BY: DATE:
DRAWN BY: L.F.R. CHECKED BY: J.J.M. DATE: 6-15-65
APPROVED: SCALE:
Norris A. Batalden DESIGNER IN CHARGE DATE: 6-28-65 SHEET NUMBER: 32
George C. Ashton CHIEF, BRIDGES AND PUBLIC BUILDINGS DATE: 7-3-65 SHEET OF SHEETS
Donald H. Ludwig COMMISSIONER OF PUBLIC WORKS DATE: 7-6-65 JOB NO. 522-001
Special Deputy

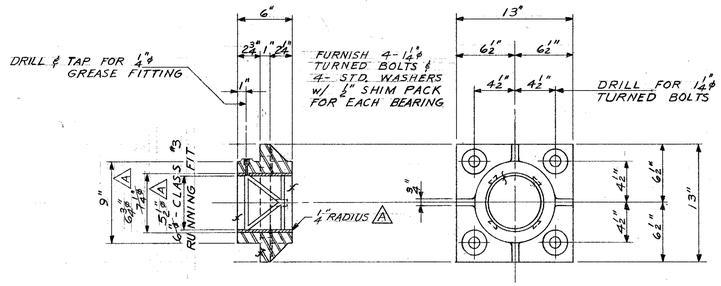

2 - BEARINGS "B-1"
CAST STEEL
PHOSPHOR BRONZE BUSHINGS

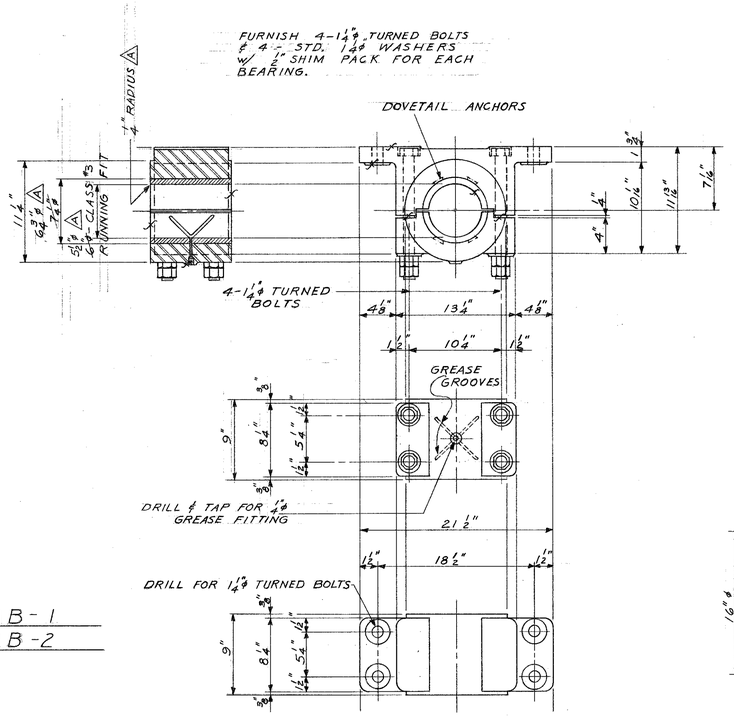

2 - BEARINGS "B-2"
CAST STEEL
PHOSPHOR BRONZE BUSHINGS

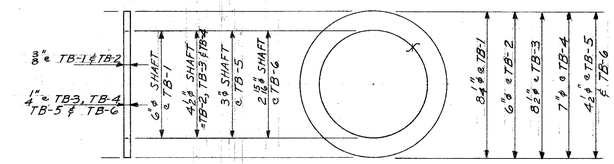

2 -	THRUST	BEARINGS	TB-1
2 -	"	"	TB-2
4 -	"	"	TB-3
2 -	"	"	TB-4
2 -	"	"	TB-5
2 -	"	"	TB-6

SELF LUBRICATING OILITE BRONZE
AMPLEX DIVISION - CHRYSLER CORPORATION

DELETE △ THRUST BEARINGS "TB-1", "TB-2", "TB-3" & "TB-4"

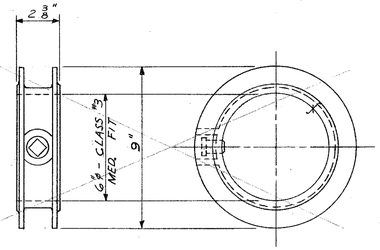

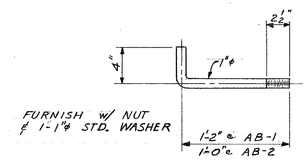

44 - ANCHOR BOLTS AB-1
20 " " AB-2

DELETE COLLAR "C-1" △

4 - COLLARS "C-1"
SOLID MALLEABLE IRON COLLARS
LINK BELT CO. OR EQUAL

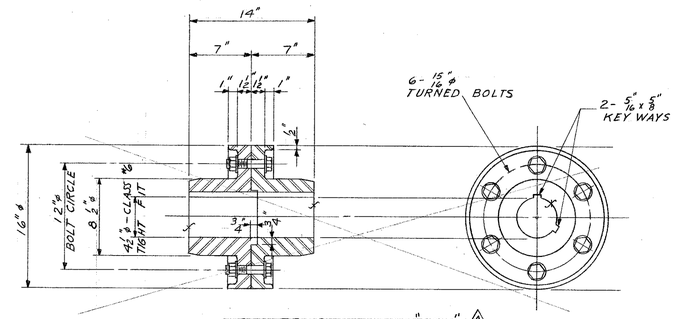

DELETE COUPLING "CP-1" △

2 - COUPLINGS "CP-1"
CAST STEEL

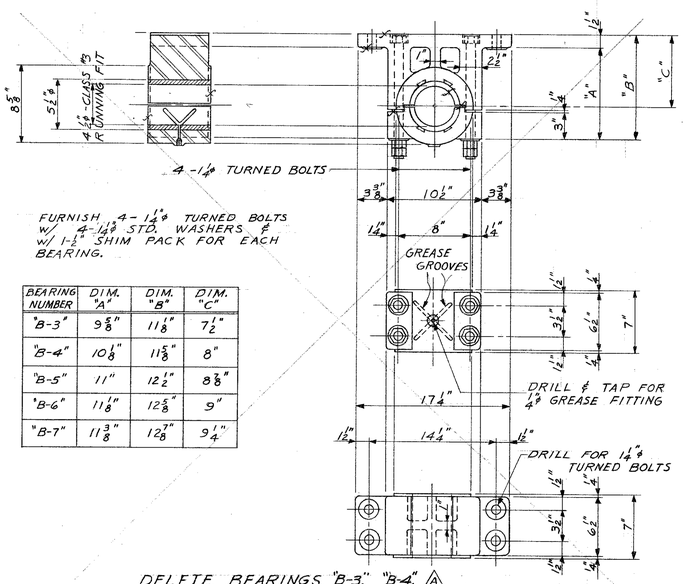

BEARING NUMBER	DIM. "A"	DIM. "B"	DIM. "C"
"B-3"	9 5/8"	11 1/8"	7 1/2"
"B-4"	10 1/8"	11 5/8"	8"
"B-5"	11"	12 1/2"	8 3/8"
"B-6"	11 1/8"	12 5/8"	9"
"B-7"	11 3/8"	12 7/8"	9 1/4"

DELETE BEARINGS "B-3", "B-4", "B-5", "B-6" & "B-7" △

2 - BEARINGS "B-3"
2 - BEARINGS "B-4" 2 - BEARINGS "B-5"
2 - BEARINGS "B-6" 4 - BEARINGS "B-7"
CAST STEEL
PHOSPHOR BRONZE BUSHINGS

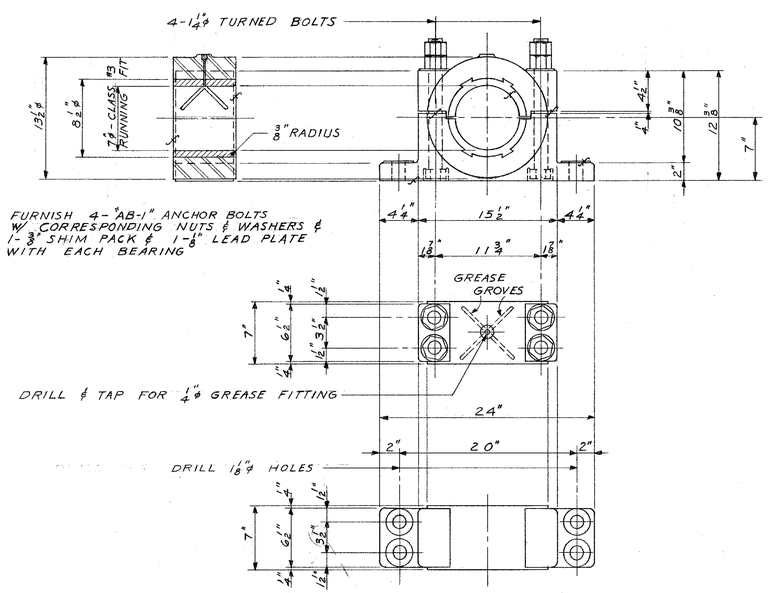

16 - BEARINGS "B-8"
CAST STEEL
PHOSPHOR BRONZE BUSHINGS

NOTE:
BEARINGS "B-9" & "B-10" ARE NON-EXISTENT

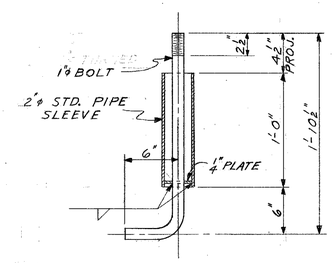

64 - ANCHOR BOLTS AB-3

WISCONSIN
GEORGE C. ASHTON
MILWAUKEE, WISCONSIN
PROFESSIONAL ENGINEER

DEPARTMENT OF PUBLIC WORKS
BUREAU OF BRIDGES AND PUBLIC BUILDINGS
CITY OF MILWAUKEE

REVISIONS		
MARK	DATE	BY
A	9/15/65	LFR
B		
C		
D		
E		
F		
G		
H		
I		
J		
K		
L		
M		

W. ST. PAUL AVE.-E. DETROIT ST. VERTICAL LIFT BRIDGE
OVER MILWAUKEE RIVER
MACHINERY-BEARINGS, COUPLINGS, ANCHOR BOLTS

DESIGNED BY: J.J.M. TRACED BY: DATE:
DRAWN BY: L.F.R. CHECKED BY: J.J.M. DATE: 6-15-65
APPROVED: SCALE:
Norris A. Batelden DESIGNER IN CHARGE DATE: 6-28-65 SHEET NUMBER 33
George C. Ashton CHIEF, BUREAU OF BRIDGES AND PUBLIC BUILDINGS DATE: 7-3-65 SET OF SHEETS
Randall R. Kinsley COMMISSIONER OF PUBLIC WORKS Special Deputy DATE: 7-6-65 JOB NO. 522-001

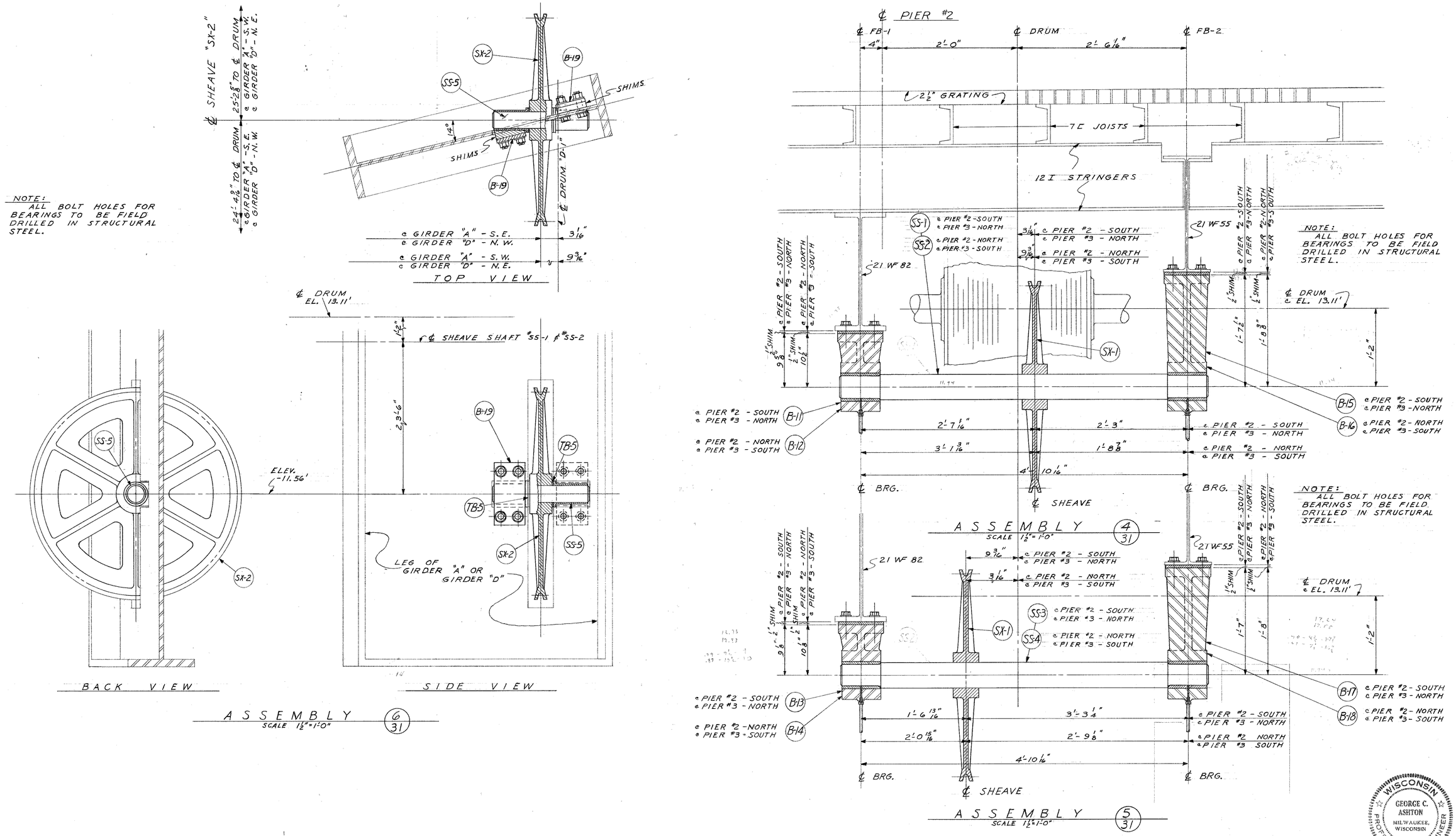

WISCONSIN
GEORGE C. ASHTON
MILWAUKEE, WISCONSIN
PROFESSIONAL ENGINEER

DEPARTMENT OF PUBLIC WORKS
BUREAU OF BRIDGES AND PUBLIC BUILDINGS
CITY OF MILWAUKEE

REVISIONS		
MARK	DATE	BY
A		
B		
C		
D		
E		
F		
G		
H		
I		
J		
K		
L		
M		

W. ST. PAUL AVE.-E. DETROIT ST. VERTICAL LIFT BRIDGE
OVER MILWAUKEE RIVER

MACHINERY-EQUALIZER SHEAVES

DESIGNED BY: J.J.M. TRACED BY: DATE:
DRAWN BY: L.F.R. CHECKED BY: J.J.M. DATE: 6-15-65
APPROVED: SCALE:
Norris A. Batallon DATE: 6-28-65 SHEET NUMBER 34
DESIGNER IN CHARGE
George C. Ashton DATE: 7-3-65 SET OF SHEETS
CHIEF OF BRIDGES AND PUBLIC BUILDINGS
Donald W. Loeding DATE: 7-6-65 JOB NO. 522-001
COMMISSIONER OF PUBLIC WORKS
Special Deputy

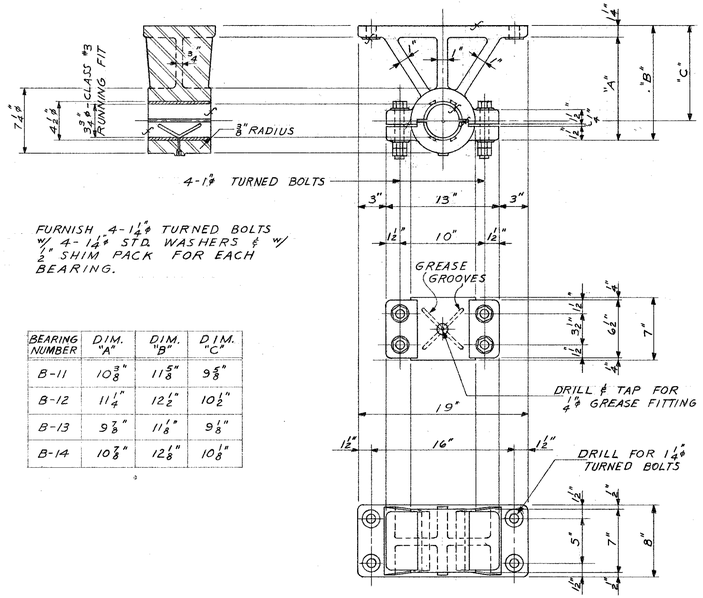

FURNISH 4-1 1/4" TURNED BOLTS W/ 4-1 1/4" STD. WASHERS & W/ 1/2" SHIM PACK FOR EACH BEARING.

BEARING NUMBER	DIM. "A"	DIM. "B"	DIM. "C"
B-11	10 3/8"	11 5/8"	9 5/8"
B-12	11 1/4"	12 1/2"	10 1/2"
B-13	9 7/8"	11 1/8"	9 1/8"
B-14	10 7/8"	12 1/8"	10 1/8"

2 -	BEARINGS	B-11
2 -	"	B-12
2 -	"	B-13
2 -	"	B-14

CAST STEEL
PHOSPHOR BRONZE BUSHINGS

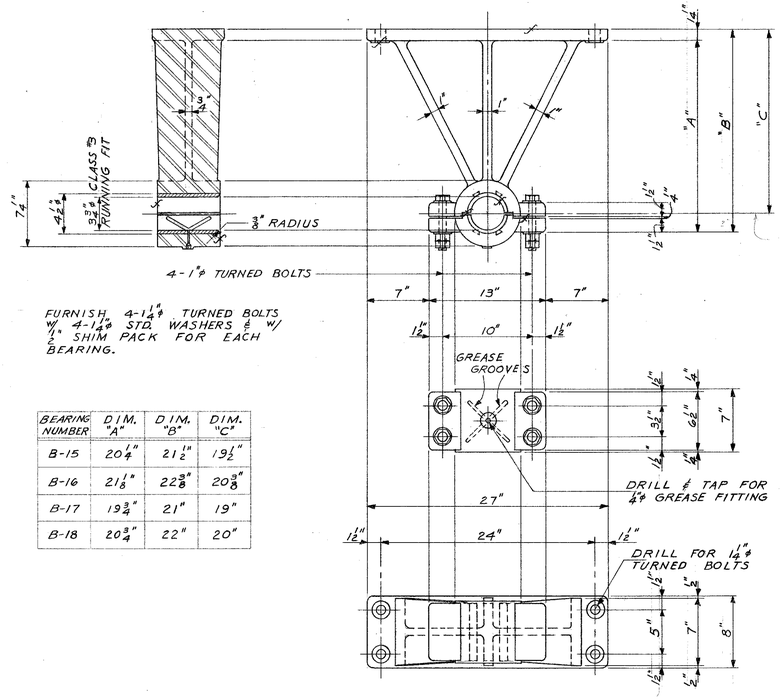

FURNISH 4-1 1/4" TURNED BOLTS W/ 4-1 1/4" STD. WASHERS & W/ 1/2" SHIM PACK FOR EACH BEARING.

BEARING NUMBER	DIM. "A"	DIM. "B"	DIM. "C"
B-15	20 1/4"	21 1/2"	19 1/2"
B-16	21 1/8"	22 3/8"	20 3/8"
B-17	19 3/4"	21"	19"
B-18	20 3/4"	22"	20"

2 -	BEARINGS	B-15
2 -	"	B-16
2 -	"	B-17
2 -	"	B-18

CAST STEEL
PHOSPHOR BRONZE BUSHINGS

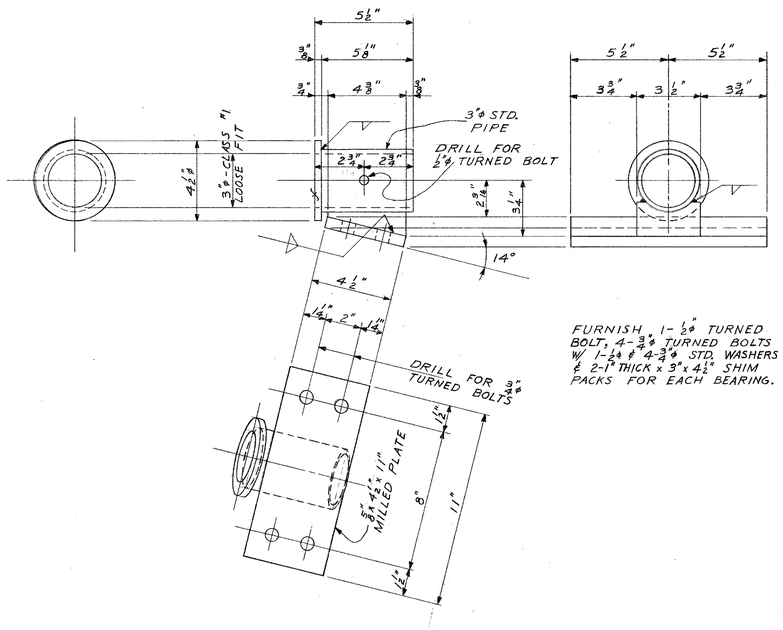

FURNISH 1-1/2" TURNED BOLT, 4-3/4" TURNED BOLTS W/ 1-1/2" & 4-3/4" STD. WASHERS & 2-1" THICK x 3" x 4 1/2" SHIM PACKS FOR EACH BEARING.

8 - BEARINGS "B-19"

WISCONSIN
GEORGE C. ASHTON
MILWAUKEE, WISCONSIN
PROFESSIONAL ENGINEER

DEPARTMENT OF PUBLIC WORKS
BUREAU OF BRIDGES AND PUBLIC BUILDINGS
CITY OF MILWAUKEE

REVISIONS		
MARK	DATE	BY
A		
B		
C		
D		
E		
F		
G		
H		
I		
J		
K		
L		
M		

W. ST. PAUL AVE.-E. DETROIT ST. VERTICAL LIFT BRIDGE
OVER MILWAUKEE RIVER

MACHINERY-BEARINGS

DESIGNED BY: J.J.M. TRACED BY: DATE:
DRAWN BY: L.F.R. CHECKED BY: J.J.M. DATE: 6-15-65
APPROVED: SCALE:
Morris A. Batelden DESIGNER IN CHARGE DATE: 6-28-65 SHEET NUMBER 35
George C. Ashton SUPT. OF BRIDGES AND PUBLIC BUILDINGS DATE: 7-3-65 SET OF SHEETS
Donald W. Hartley COMMISSIONER OF PUBLIC WORKS Special Deputy DATE: 7-6-65 JOB NO. 522-001

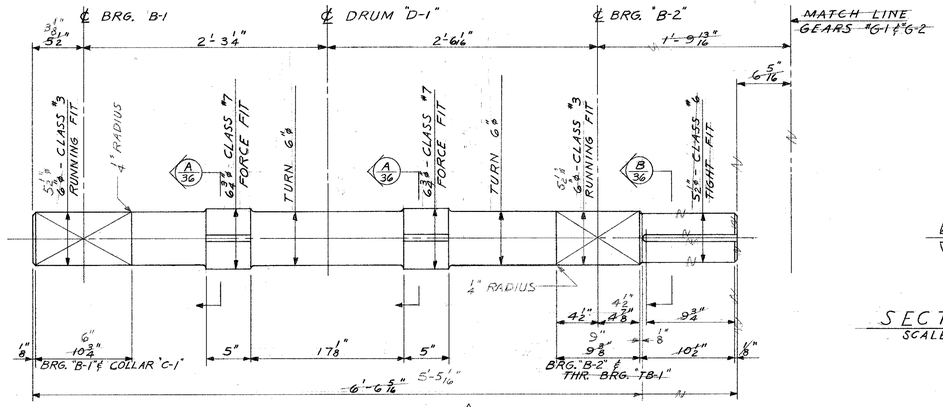

2 - S H A F T S S - 1

6 3/4" ϕ SHAFT

A I S I C 1018 S T E E L

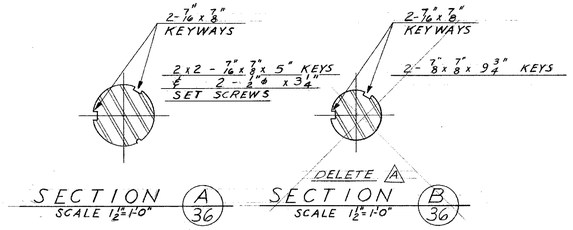

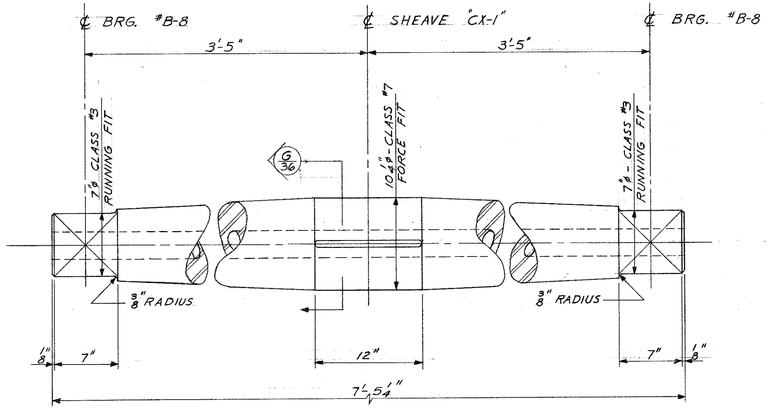

8 - S H A F T S C S - 1

F O R G E D S T E E L (A N N E A L E D)

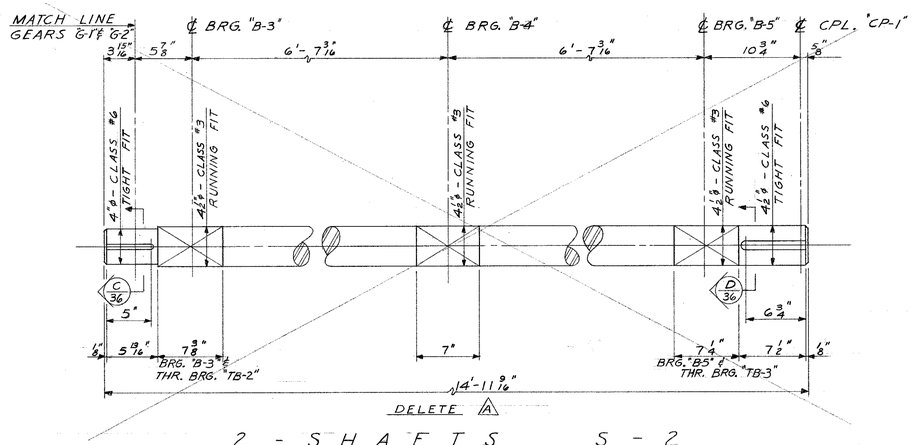

2 - S H A F T S S - 2

4 1/2" ϕ SHAFT

A I S I C 1018 S T E E L

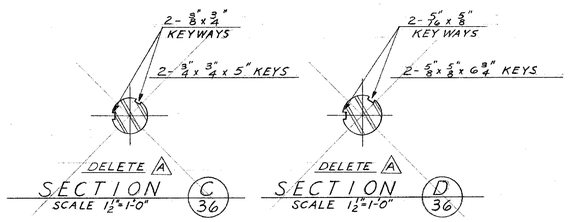

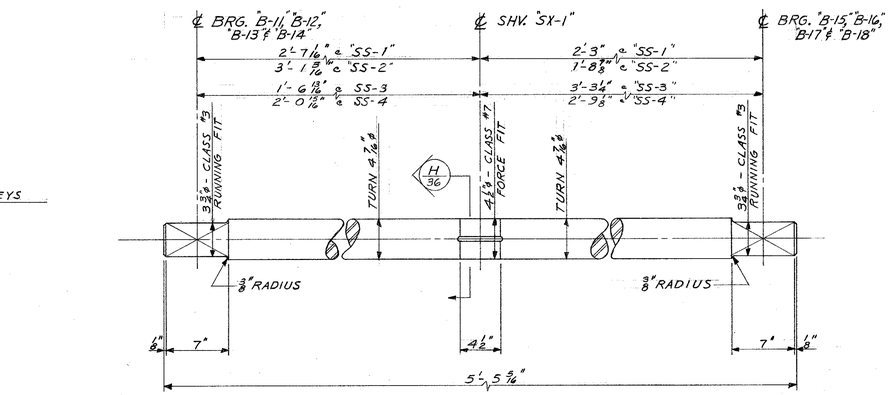

2 - S H A F T S SS - 1

2 - " SS - 3

A I S I C 1018 S T E E L

2 - S H A F T S SS - 2

2 - " SS - 4

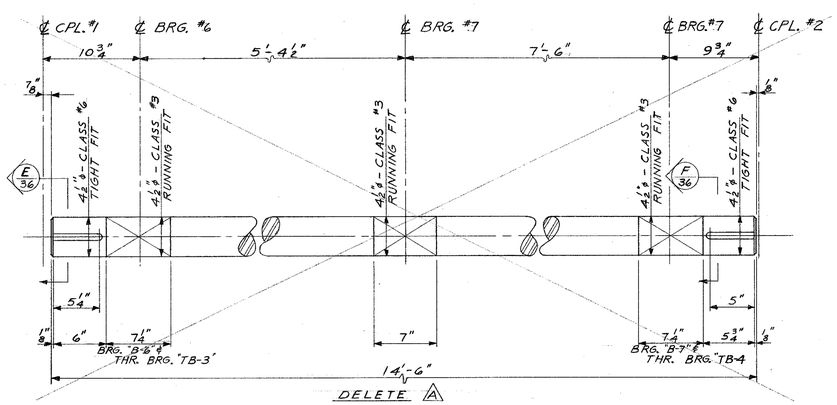

2 - S H A F T S S - 3

4 1/2" ϕ SHAFT

A I S I C 1018 S T E E L

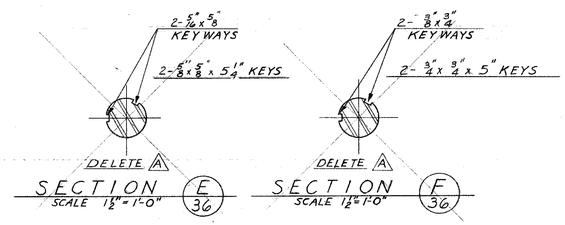

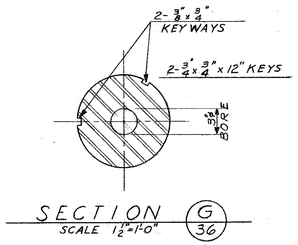

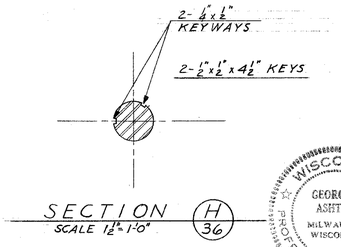

WISCONSIN
GEORGE C. ASHTON
MILWAUKEE, WISCONSIN
PROFESSIONAL ENGINEER

DEPARTMENT OF PUBLIC WORKS
BUREAU OF BRIDGES AND PUBLIC BUILDINGS
CITY OF MILWAUKEE

REVISIONS		
MARK	DATE	BY
A	9/15/65	L.F.R.
B		
C		
D		
E		
F		
G		
H		
I		
J		
K		
L		
M		

W. ST. PAUL AVE.-E. DETROIT ST. VERTICAL LIFT BRIDGE
OVER MILWAUKEE RIVER
MACHINERY-SHAFTS

DESIGNED BY: J. J. M. TRACED BY: DATE:
DRAWN BY: L.F.R. CHECKED BY: J. J. M. DATE: 6-15-65
APPROVED: SCALE:
Norris O. Batelder — DESIGNER IN CHARGE — DATE: 6-28-65 SHEET NUMBER: 36
George C. Ashton — SUPT. OF BRIDGES AND PUBLIC BUILDINGS — DATE: 7-3-65 SET OF SHEETS
Special Deputy — COMMISSIONER OF PUBLIC WORKS — DATE: 7-6-65 JOB NO. 522-001

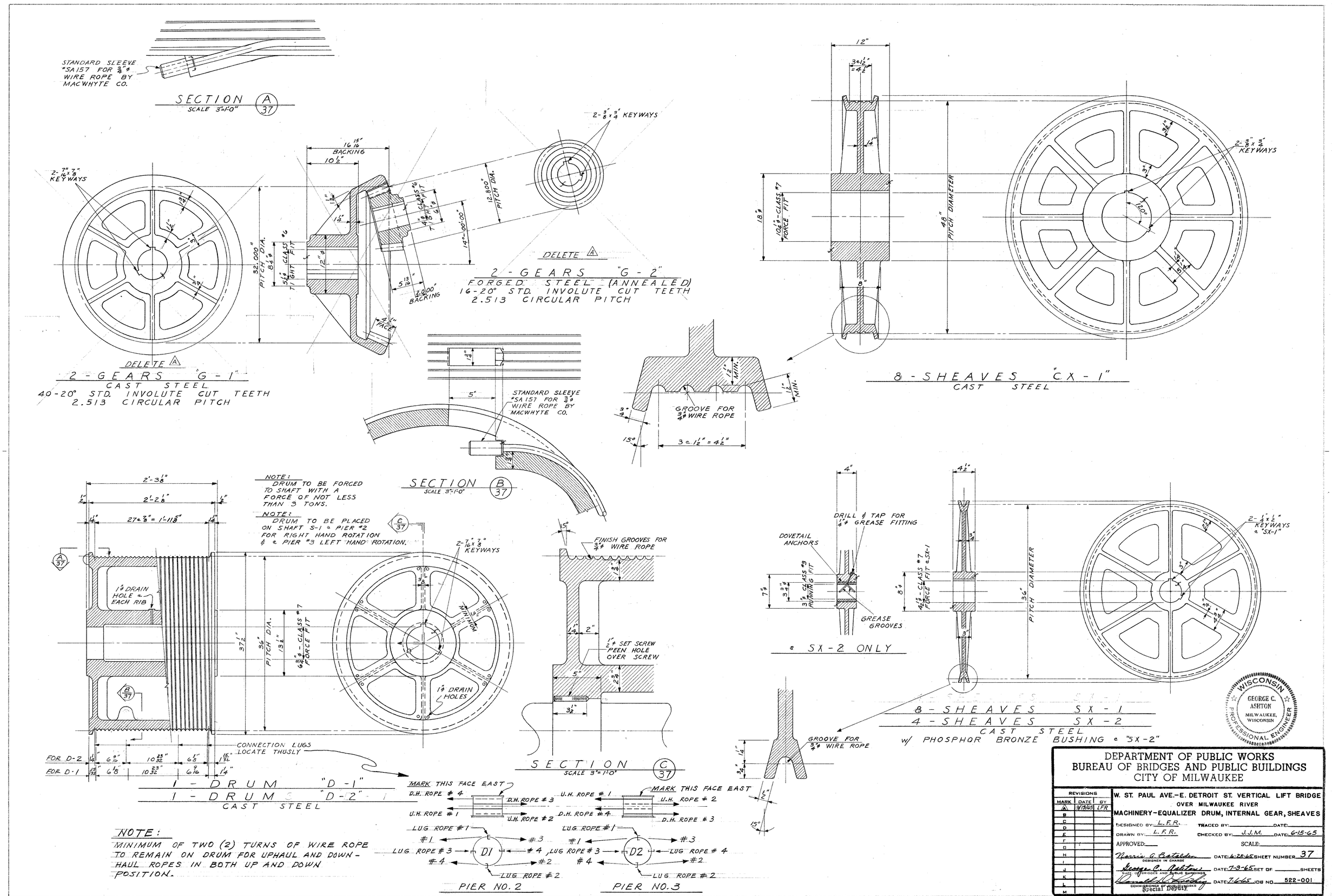

DEPARTMENT OF PUBLIC WORKS
BUREAU OF BRIDGES AND PUBLIC BUILDINGS
CITY OF MILWAUKEE

REVISIONS		
MARK	DATE	BY
A	9/15/65	LFR
B		
C		
D		
E		
F		
G		
H		
I		
J		
K		
L		
M		

W. ST. PAUL AVE.-E. DETROIT ST. VERTICAL LIFT BRIDGE
OVER MILWAUKEE RIVER
MACHINERY-EQUALIZER DRUM, INTERNAL GEAR, SHEAVES

DESIGNED BY: L.F.R. TRACED BY: DATE:
DRAWN BY: L.F.R. CHECKED BY: J.J.M. DATE: 6-15-65
APPROVED: SCALE:
Norris A. Batalden DATE: 6-28-65 SHEET NUMBER 37
DESIGNER IN CHARGE
George C. Ashton DATE: 7-3-65 SET OF SHEETS
SUPT. OF BRIDGES AND PUBLIC BUILDINGS
Donald D. Lichtig DATE: 7-6-65 JOB NO. 522-001
COMMISSIONER OF PUBLIC WORKS
Special Deputy

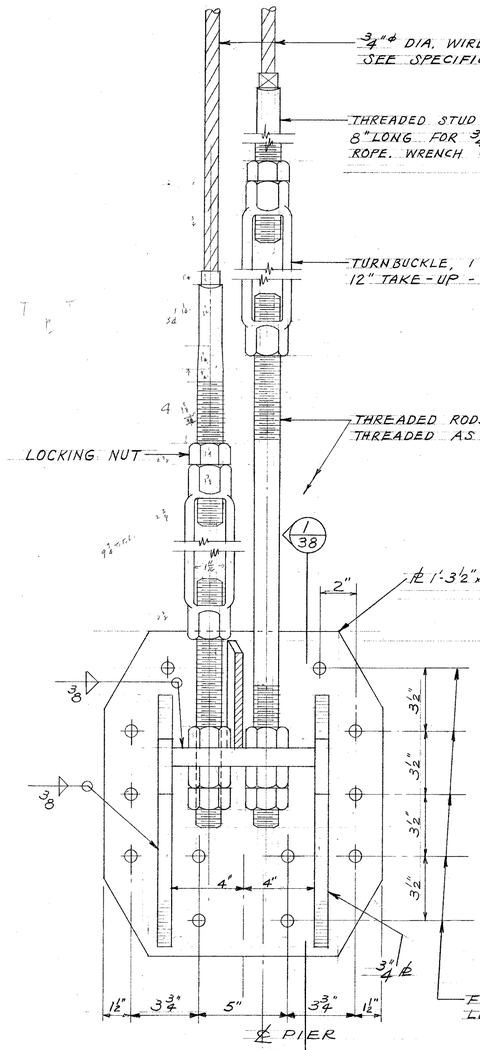

ELEVATION - ASSEMBLY # 9/31

SCALE: 3" = 1'-0"

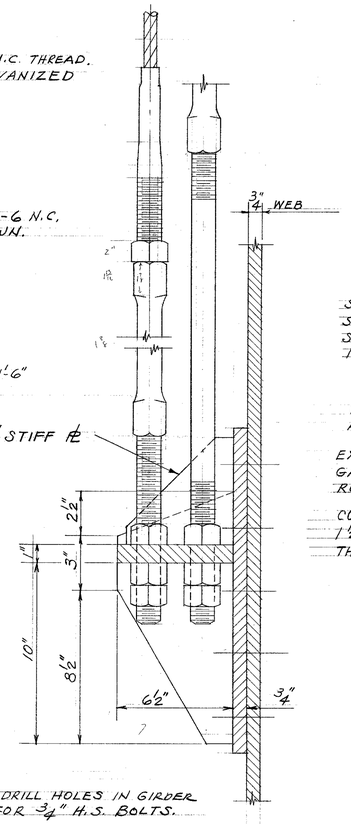

SECTION 1/38

SCALE: 3" = 1'-0"

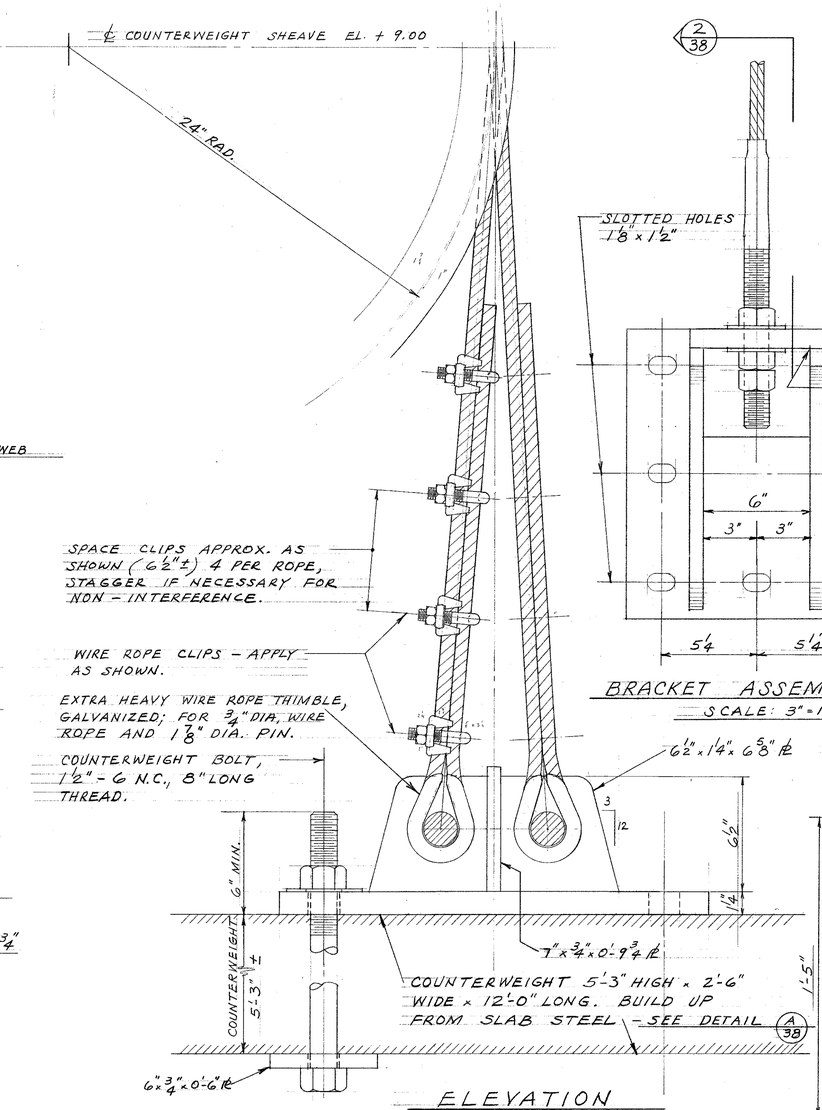

ELEVATION

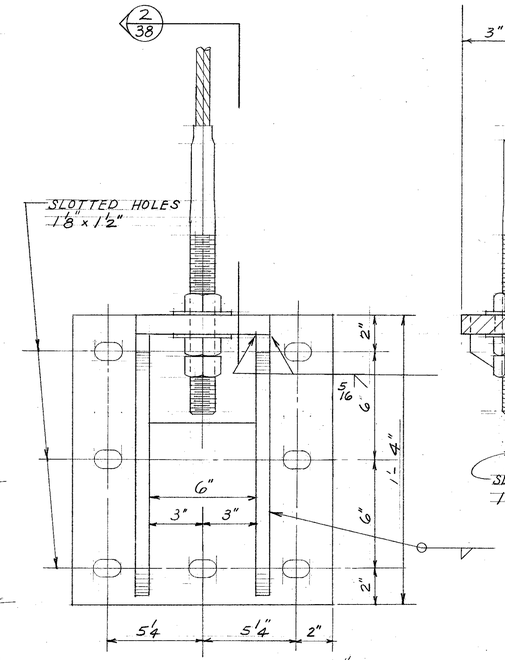

BRACKET ASSEMBLY # 11/31

SCALE: 3" = 1'-0"

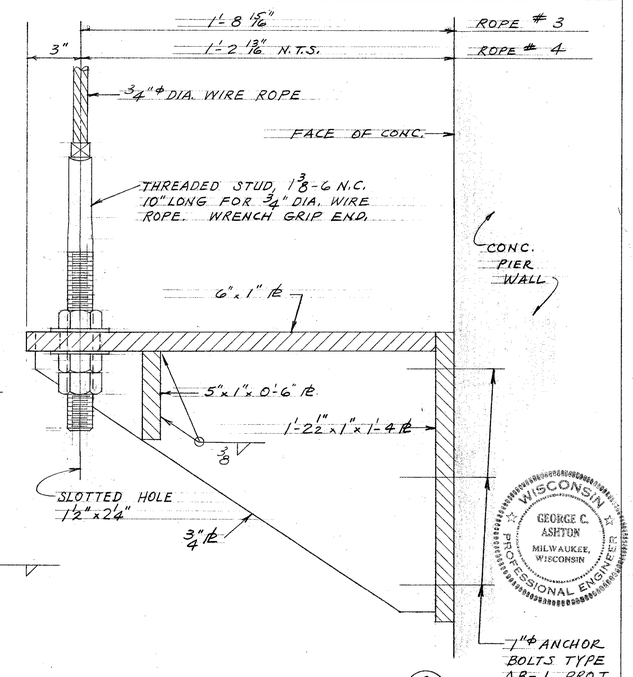

SECTION 2/38

SCALE: 3" = 1'-0"

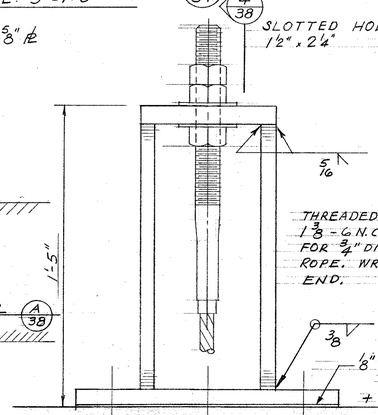

ELEVATION

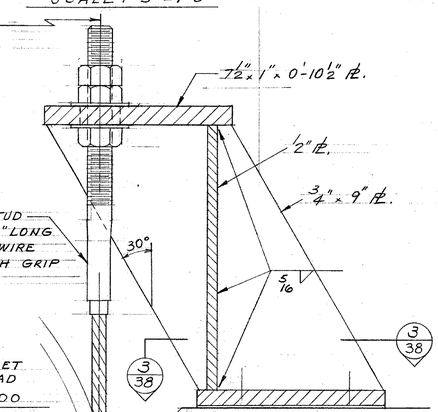

SECTION 4/38

SCALE: 3" = 1'-0"

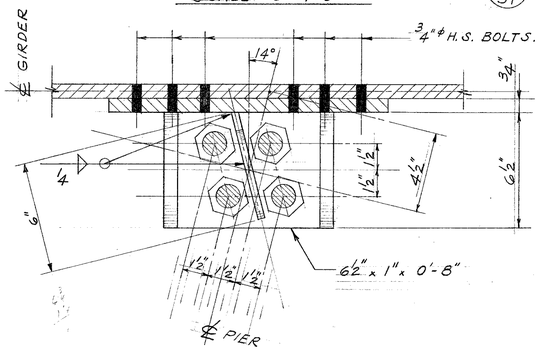

PLAN OF ASSEMBLY # 9/31

SCALE: 3" = 1'-0"

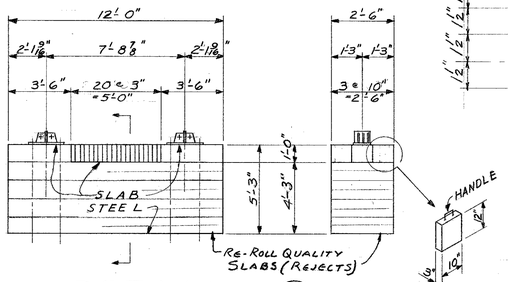

DETAIL A/38

SCALE 4" = 1'-0"

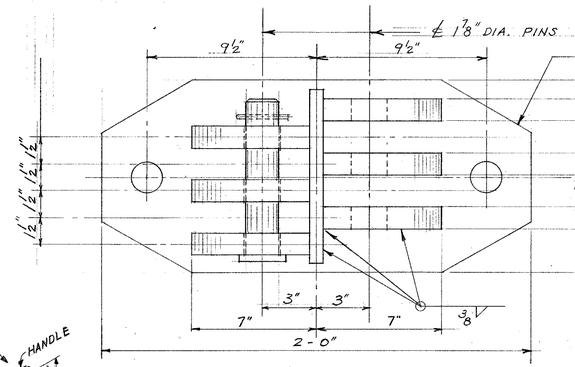

PLAN OF ASSEMBLY # 10/31

SCALE: 3" = 1'-0"

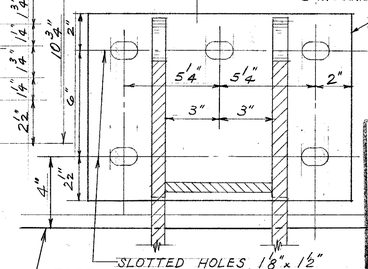

SECTION 3/38

SCALE: 3" = 1'-0

ASSEMBLY # 12/31

NOTE:

COUNTERWEIGHTS ARE NOT TO BE ASSEMBLED BEFORE HOIST CYLINDERS & PIPING ARE COMPLETELY ASSEMBLED & TESTED.

DEPARTMENT OF PUBLIC WORKS
BUREAU OF BRIDGES AND PUBLIC BUILDINGS
CITY OF MILWAUKEE

REVISIONS		
MARK	DATE	BY
A		
B		
C		
D		
E		
F		
G		
H		
I		
J		
K		
L		
M		

W. ST. PAUL AVE.-E. DETROIT ST. VERTICAL LIFT BRIDGE
OVER MILWAUKEE RIVER

MACHINERY-CABLE BRACKETS

DESIGNED BY: P.C.B. TRACED BY: DATE:
DRAWN BY: P.C.B. CHECKED BY: J. J. M. DATE: 6-15-65
APPROVED: SCALE:

Norris A. Batelden — DESIGNER IN CHARGE — DATE: 6-28-65 — SHEET NUMBER 38
George C. Ashton — CHIEF, BRIDGES AND PUBLIC BUILDINGS — DATE: 7-3-65 — SET OF SHEETS
Donald W. Seifert — COMMISSIONER OF PUBLIC WORKS — DATE: 7-6-65 — JOB NO. 522-001
Special Deputy

GEORGE C. ASHTON — MILWAUKEE, WISCONSIN — PROFESSIONAL ENGINEER — WISCONSIN

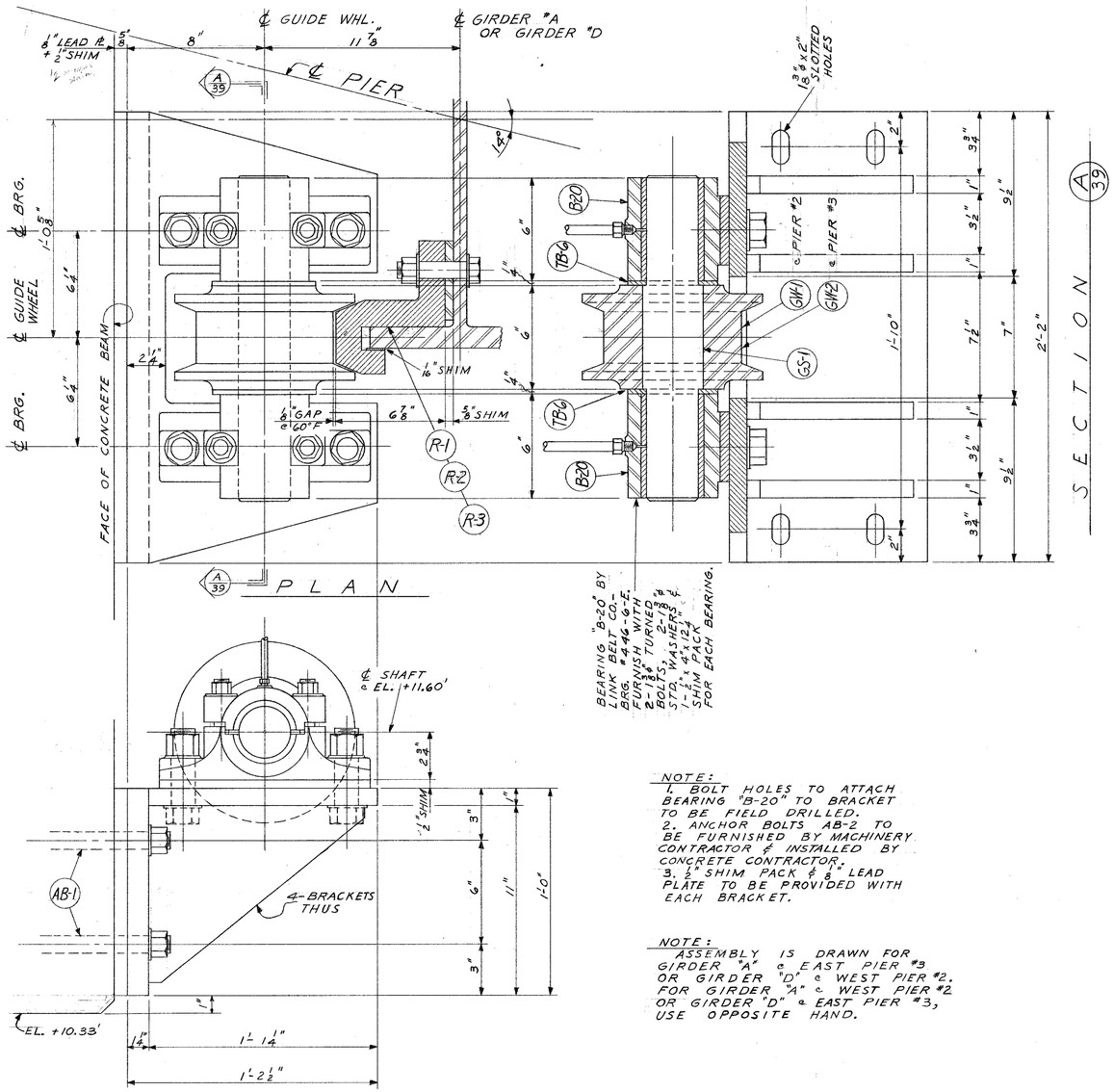

ASSEMBLY 7/30-31
SCALE 3"=1'-0"

NOTE:
1. BOLT HOLES TO ATTACH BEARING "B-20" TO BRACKET TO BE FIELD DRILLED.
2. ANCHOR BOLTS AB-2 TO BE FURNISHED BY MACHINERY CONTRACTOR & INSTALLED BY CONCRETE CONTRACTOR.
3. 1/2" SHIM PACK & 1/8" LEAD PLATE TO BE PROVIDED WITH EACH BRACKET.

NOTE:
ASSEMBLY IS DRAWN FOR GIRDER "A" @ EAST PIER #3 OR GIRDER "D" @ WEST PIER #2. FOR GIRDER "A" @ WEST PIER #2 OR GIRDER "D" @ EAST PIER #3, USE OPPOSITE HAND.

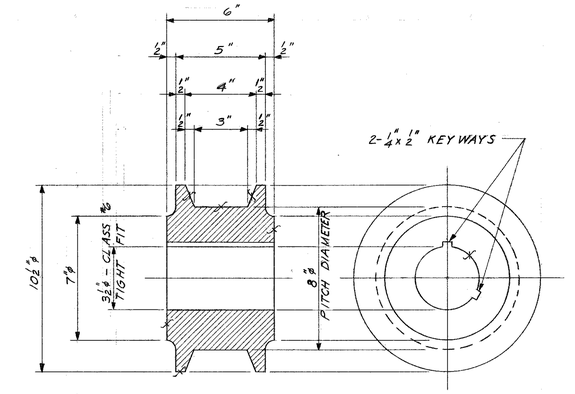

2-GUIDE WHEELS "GW-1"
CAST STEEL

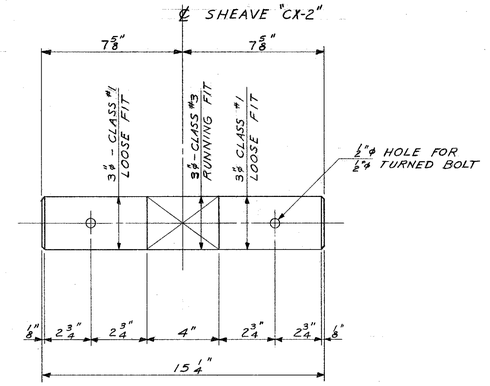

4-SHAFTS "SS-5"
AISC C 1018 STEEL

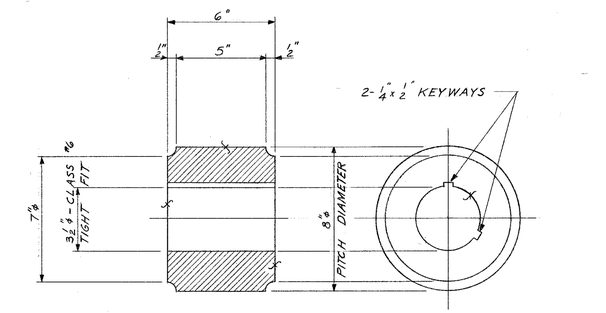

2-GUIDE WHEELS "GW-2"
CAST STEEL

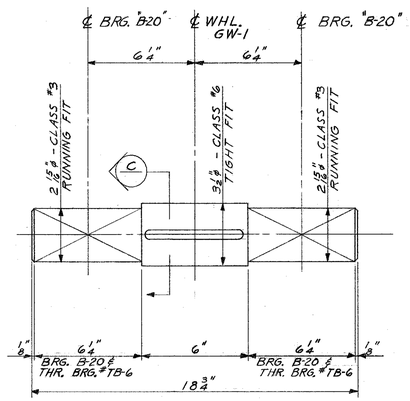

4-SHAFTS GS-1
AISC C 1018 STEEL

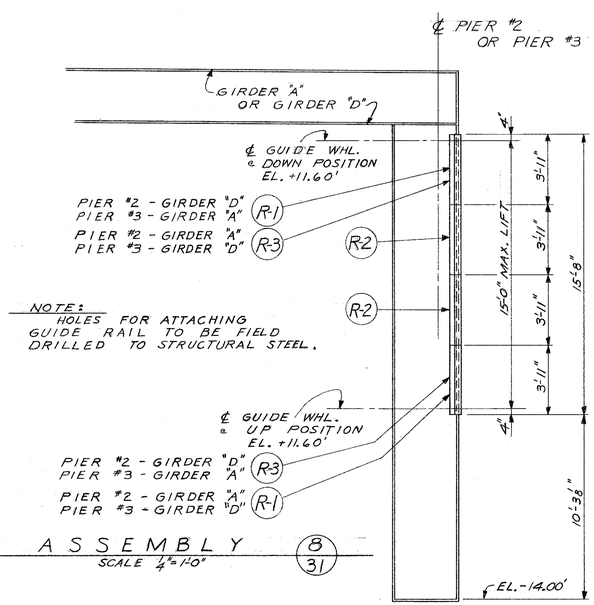

NOTE:
HOLES FOR ATTACHING GUIDE RAIL TO BE FIELD DRILLED TO STRUCTURAL STEEL.

ASSEMBLY 8/31
SCALE 1/4"=1'-0"

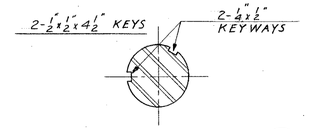

SECTION C/39
SCALE 3"=1'-0"

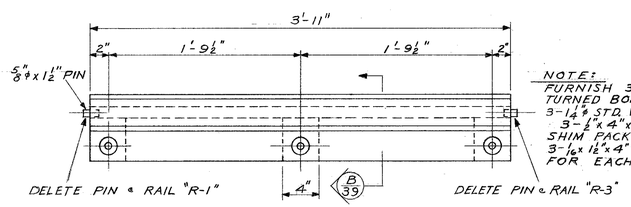

NOTE:
FURNISH 3-1 1/4"ø TURNED BOLTS, 3-1 1/4"ø STD. WASHERS, 3-1/2" x 4" x 5" SHIM PACKS & 3-1/16" x 1 1/2" x 4" SHIM FOR EACH RAIL.

4	- GUIDE	RAILS	R-1
8	- "	"	R-2
4	- "	"	R-3

CAST STEEL

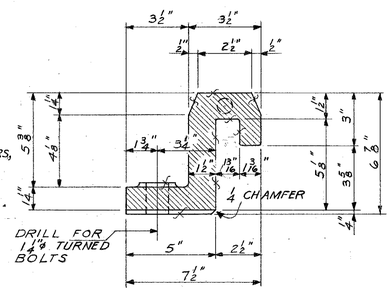

SECTION B/39
SCALE 3"=1'-0"

WISCONSIN
GEORGE C. ASHTON
MILWAUKEE, WISCONSIN
PROFESSIONAL ENGINEER

DEPARTMENT OF PUBLIC WORKS
BUREAU OF BRIDGES AND PUBLIC BUILDINGS
CITY OF MILWAUKEE

REVISIONS		
MARK	DATE	BY
A		
B		
C		
D		
E		
F		
G		
H		
I		
J		
K		
L		
M		

W. ST. PAUL AVE.-E. DETROIT ST. VERTICAL LIFT BRIDGE
OVER MILWAUKEE RIVER

MACHINERY-ROLLER GUIDE & SHAFTS

DESIGNED BY: J.J.M. TRACED BY: DATE:
DRAWN BY: L.F.R. CHECKED BY: J.J.M. DATE: 6-15-65
APPROVED: SCALE:
Norris A. Batalden, DESIGNER IN CHARGE — DATE: 6-28-65 SHEET NUMBER 39
George C. Ashton, BRIDGE & MUNICIPAL BUILDINGS — DATE: 7-3-65 SET OF SHEETS
Donald D. Lindley, COMMISSIONER OF PUBLIC WORKS, Special Deputy — DATE: 7-6-65 JOB NO. 522-001

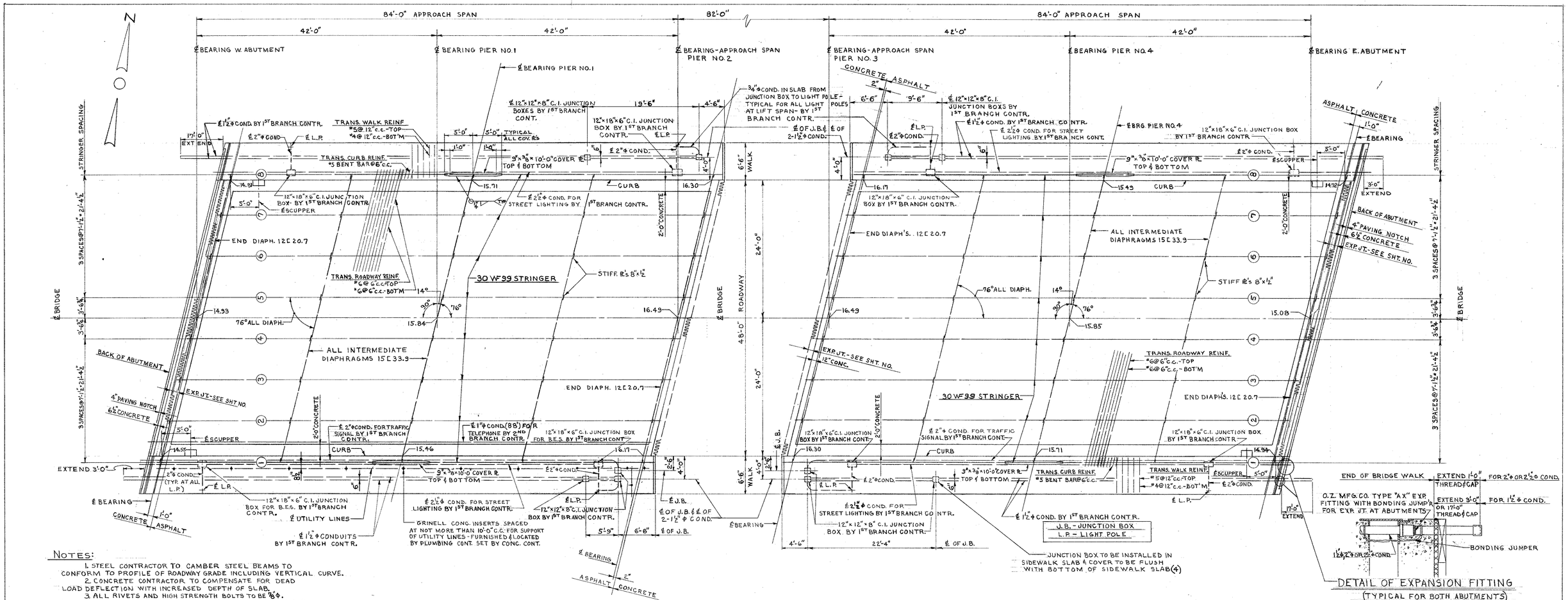

NOTES:

1. STEEL CONTRACTOR TO CAMBER STEEL BEAMS TO CONFORM TO PROFILE OF ROADWAY GRADE INCLUDING VERTICAL CURVE.
2. CONCRETE CONTRACTOR TO COMPENSATE FOR DEAD LOAD DEFLECTION WITH INCREASED DEPTH OF SLAB.
3. ALL RIVETS AND HIGH STRENGTH BOLTS TO BE ⅞" ϕ.
4. FOR ALL FINISHED ROADWAY ELEVATIONS SEE SHT. NO. 2.
5. PLACE TOP OF ALL END 12 [20.7 DIAPHRAGMS FLUSH WITH BOTTOM OF CONCRETE ROADWAY SLAB.

DECK AND STEEL FRAMING PLAN

SCALE: 1/8" = 1'-0"

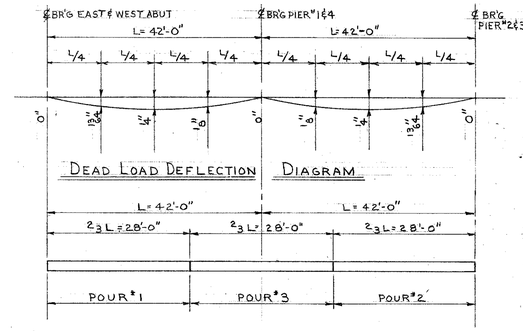

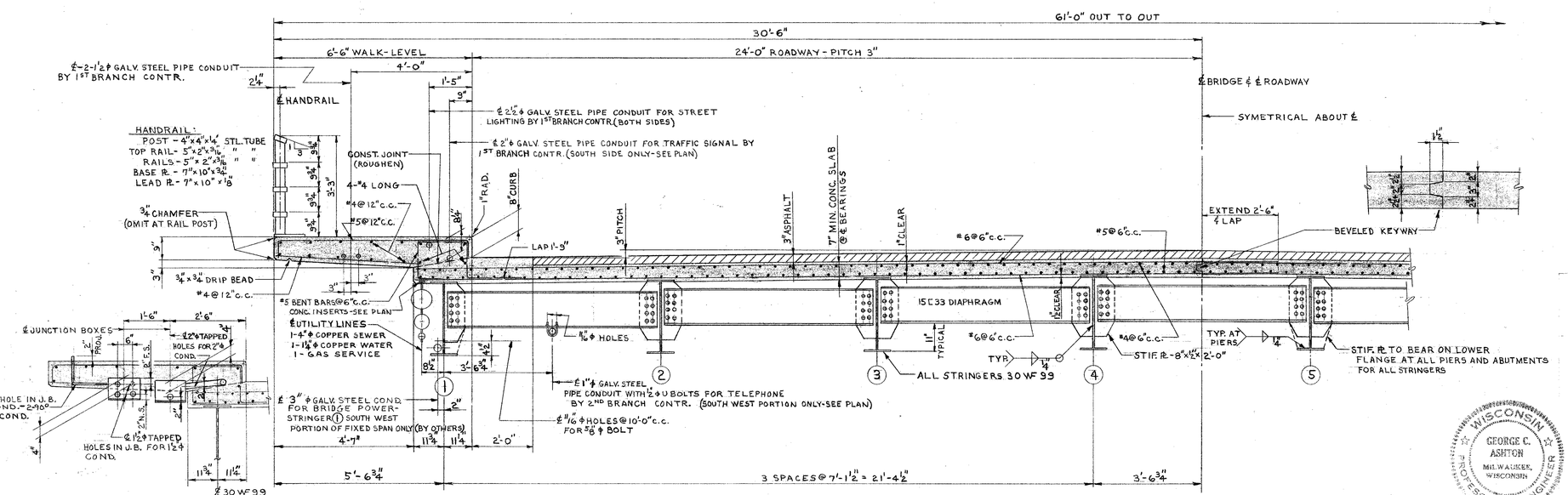

DEPARTMENT OF PUBLIC WORKS
BUREAU OF BRIDGES AND PUBLIC BUILDINGS
CITY OF MILWAUKEE

REVISIONS		
MARK	DATE	BY
A		
B		
C		
D		
E		
F		
G		
H		
I		
J		
K		
L		
M		

W. ST. PAUL AVE.-E. DETROIT ST. VERTICAL LIFT BRIDGE OVER MILWAUKEE RIVER

DECK PLAN & CROSS SECTION THRU ROADWAY

DESIGNED BY: RLK — TRACED BY: ____ DATE: ____
DRAWN BY: RLK — CHECKED BY: GCA. DATE: ____
APPROVED: ____ — SCALE: AS SHOWN
N. A. Batalden, DESIGNER IN CHARGE — DATE: 6-28-65 — SHEET NUMBER: 40
George C. Ashton, BUREAU OF BRIDGES AND PUBLIC BUILDINGS — DATE: 7-3-65 — SET OF ____ SHEETS
Donald D. Lasky, COMMISSIONER OF PUBLIC WORKS, Special Deputy — DATE: 7-6-65 — JOB NO. 522-001

WISCONSIN — GEORGE C. ASHTON — MILWAUKEE, WISCONSIN — PROFESSIONAL ENGINEER

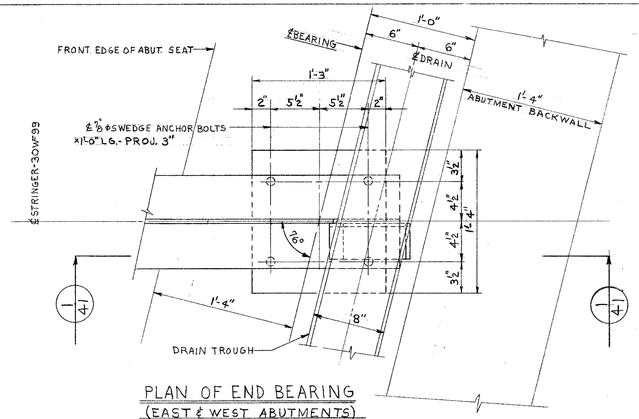

PLAN OF END BEARING
(EAST & WEST ABUTMENTS)
SCALE: 1½"=1'-0"

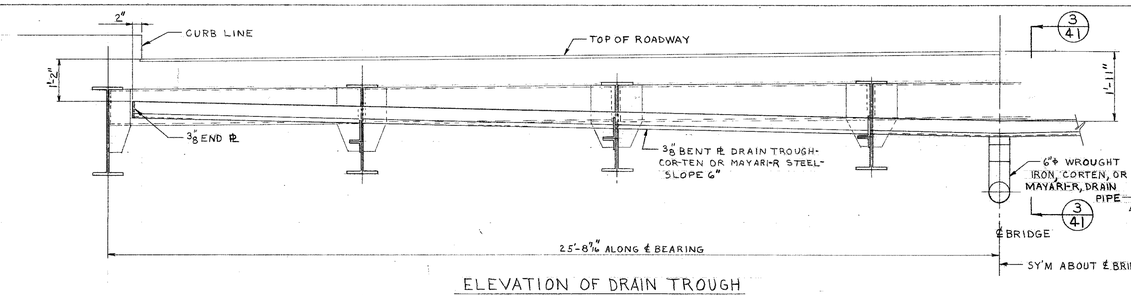

ELEVATION OF DRAIN TROUGH
(1 REQUIRED AT EACH ABUTMENT)
SCALE: 1½"=1'-0"

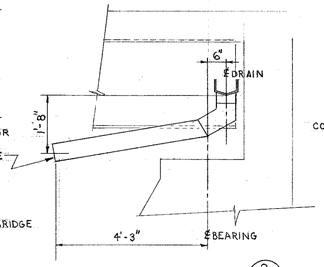

SECTION 3/41
SCALE: 1½"=1'-0"

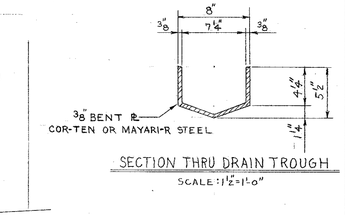

SECTION THRU DRAIN TROUGH
SCALE: 1½"=1'-0"

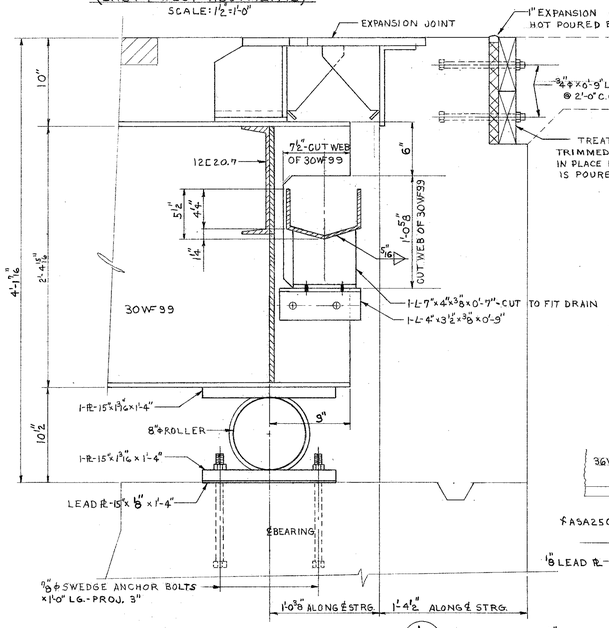

SECTION 1/41
SCALE: 1½"=1'-0"

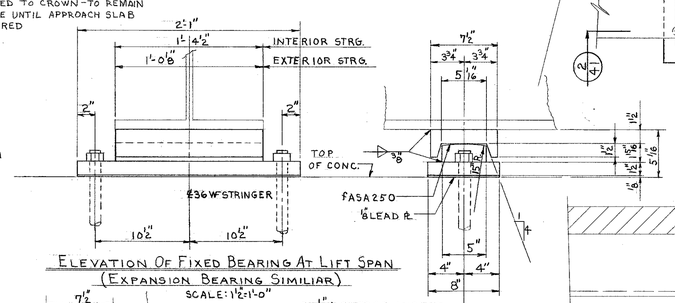

ELEVATION OF FIXED BEARING AT LIFT SPAN
(EXPANSION BEARING SIMILIAR)
SCALE: 1½"=1'-0"

FIXED BEARING
LIFT SPAN
SCALE: 1½"=1'-0"

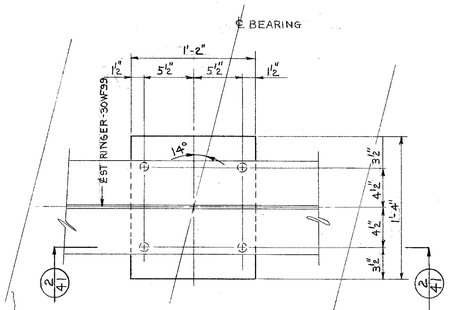

PLAN OF PIER BEARING
(PIERS #1 & #4)
SCALE: 1½"=1'-0"

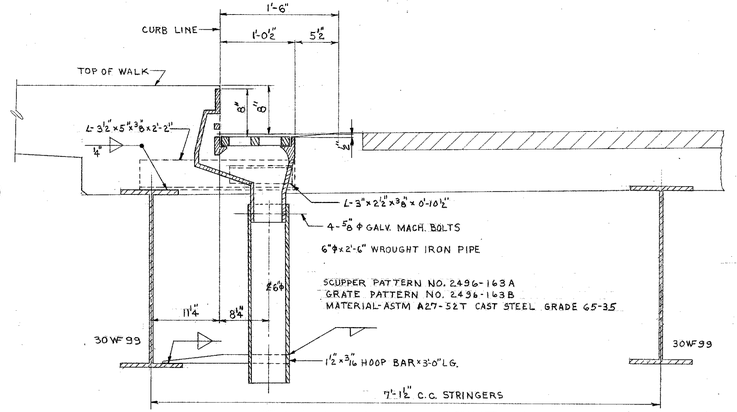

TYPICAL SCUPPER SECTION AT CURB (4 REQ'D.)
SCALE: 1"=1'-0"

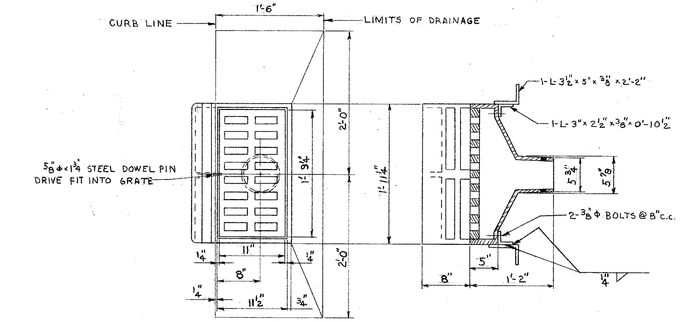

SCUPPER- PLAN & ELEVATION
SCALE: 1"=1'-0"

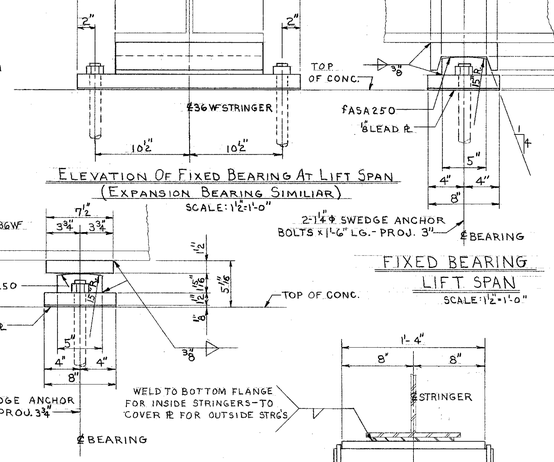

EXPANSION BEARING
LIFT SPAN
SCALE: 1½"=1'-0"

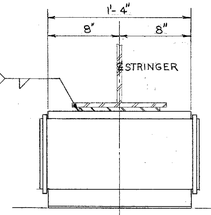

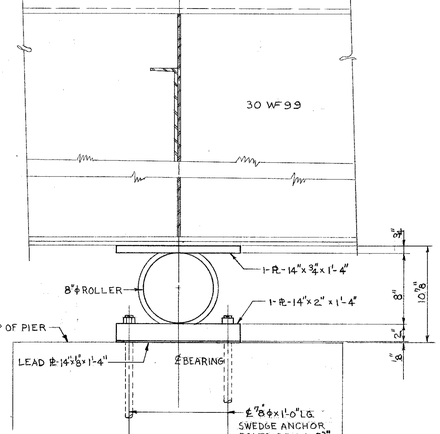

SECTION 2/4
SCALE: 1½"=1'-0"

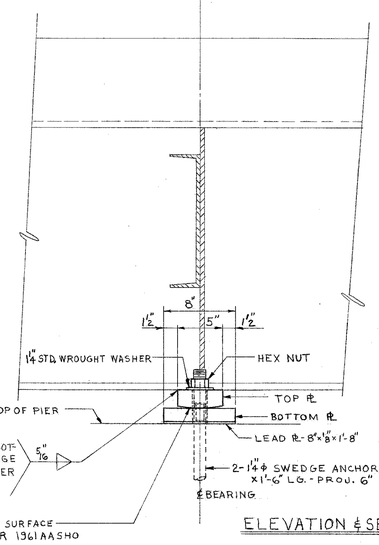

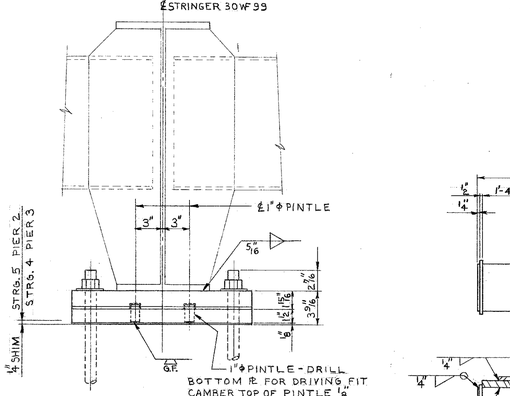

ELEVATION & SECTION THRU FIXED BEARING
SCALE: 1½"=1'-0"

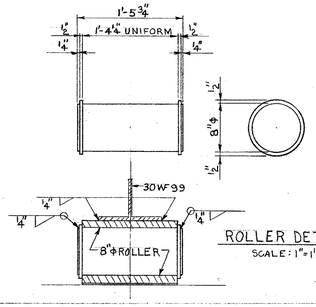

ROLLER DETAILS
SCALE: 1"=1'-0"

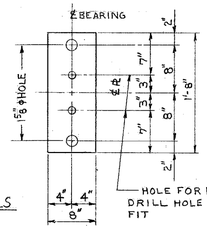

BOTTOM PL - PIERS NO. 2 & 3
SCALE: 1"=1'-0"

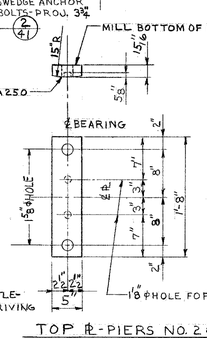

TOP PL - PIERS NO. 2 & 3
SCALE: 1"=1'-0"

GEORGE C. ASHTON
MILWAUKEE, WISCONSIN
WISCONSIN PROFESSIONAL ENGINEER

DEPARTMENT OF PUBLIC WORKS
BUREAU OF BRIDGES AND PUBLIC BUILDINGS
CITY OF MILWAUKEE

REVISIONS		
MARK	DATE	BY
A		
B		
C		
D		
E		
F		
G		
H		
I		
J		
K		
L		
M		

W. ST. PAUL AVE.-E. DETROIT ST. VERTICAL LIFT BRIDGE
OVER MILWAUKEE RIVER

DRAINAGE TROUGH, SCUPPER & BEARINGS

DESIGNED BY: R.L.K. TRACED BY: ____ DATE: ____
DRAWN BY: R.L.K. CHECKED BY: ____ DATE: ____
APPROVED: ____ SCALE: AS SHOWN
Norris A. Batalden, DESIGNER IN CHARGE — DATE: 6-28-65 SHEET NUMBER 41
George C. Ashton, SUPT. OF BRIDGES AND PUBLIC BUILDINGS — DATE: 7-3-65 SET OF ____ SHEETS
Donald D. Anthony, COMMISSIONER OF PUBLIC WORKS, Special Deputy — DATE: 7-6-65 JOB NO. 522-001

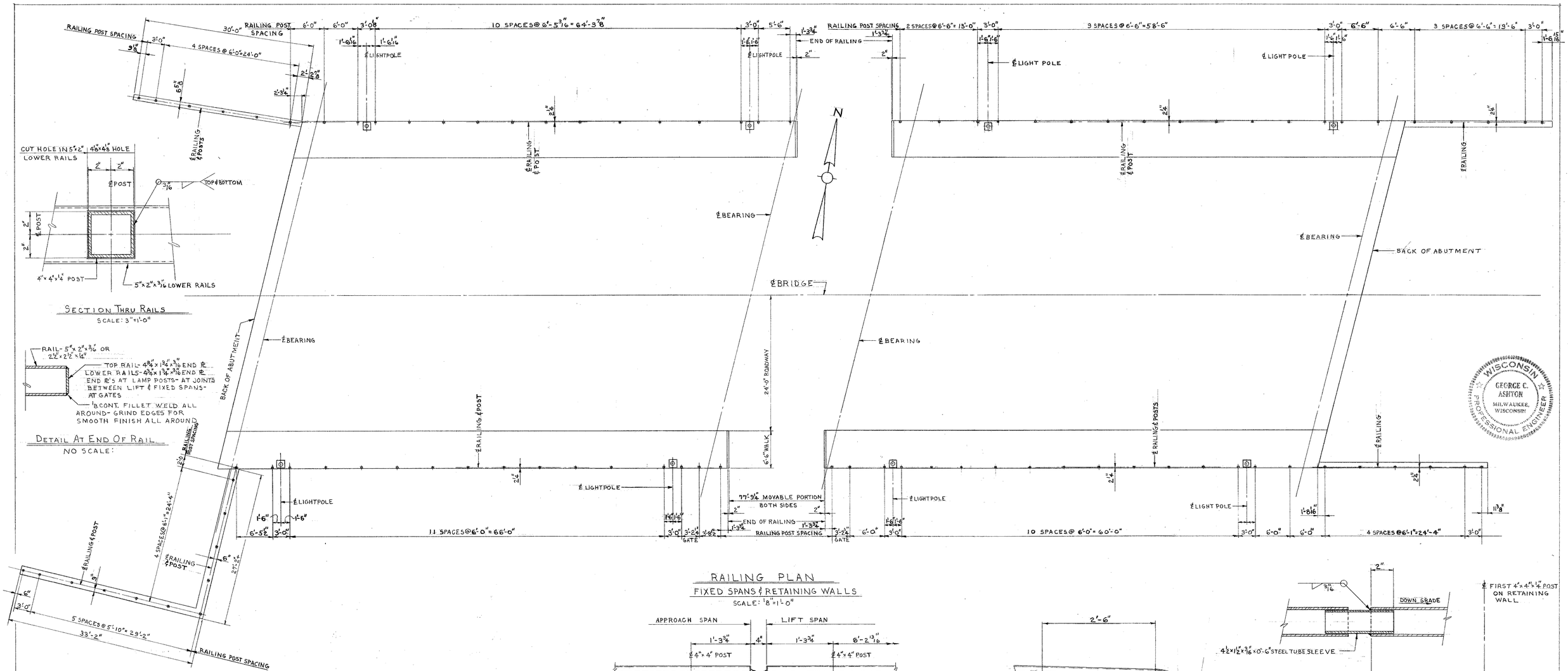

RAILING PLAN
FIXED SPANS & RETAINING WALLS
SCALE: 1/8" = 1'-0"

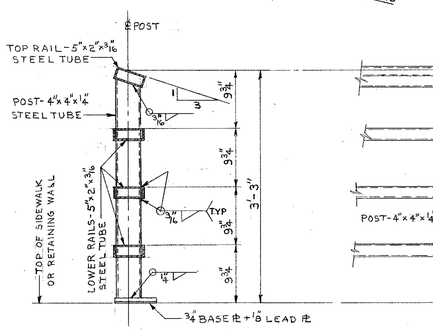

SECTION THRU RAILS
SCALE: 3" = 1'-0"

DETAIL AT END OF RAIL
NO SCALE

TYPICAL SECTION THRU RAILING
SCALE: 1" = 1'-0"

TYPICAL ELEVATION OF RAILING
SCALE: 1" = 1'-0"

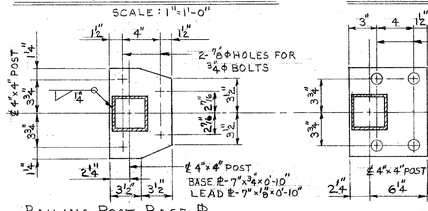

RAILING POST BASE PL
FOR LIFT SPAN
SCALE: 1 1/2" = 1'-0"

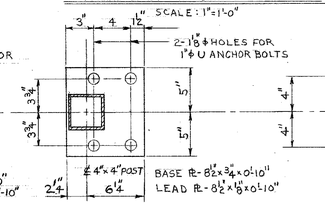

RAILING POST BASE PL FOR
APPROACH SPANS & EAST END RET. WALLS
SCALE: 1 1/2" = 1'-0"

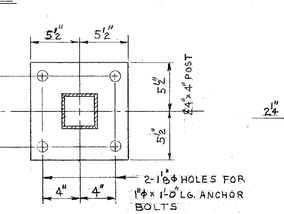

RAILING POST BASE PL FOR
WEST END RETAINING WALLS
SCALE: 1 1/2" = 1'-0"

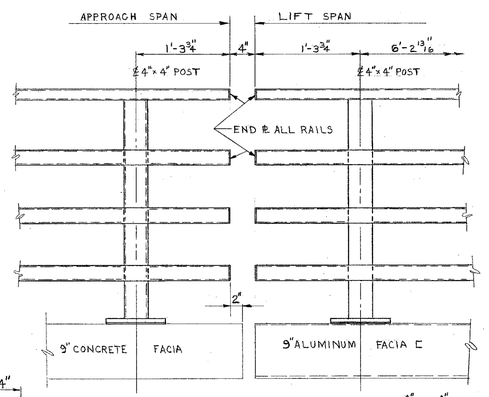

RAILING DETAIL AT JOINT BETWEEN
APPROACH & LIFT SPANS
SCALE: 1" = 1'-0"

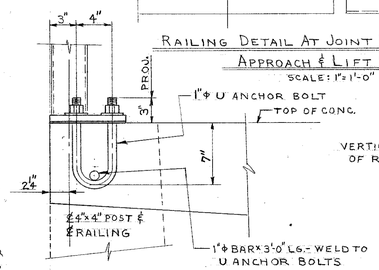

ANCHORING DETAIL OF BASE PL'S
FOR APPROACH SPANS & EAST END RET. WALLS
SCALE: 1 1/2" = 1'-0"

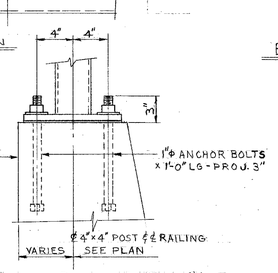

ANCHORING DETAIL OF BASE PL'S FOR
WEST END RETAINING WALLS
SCALE 1 1/2" = 1'-0"

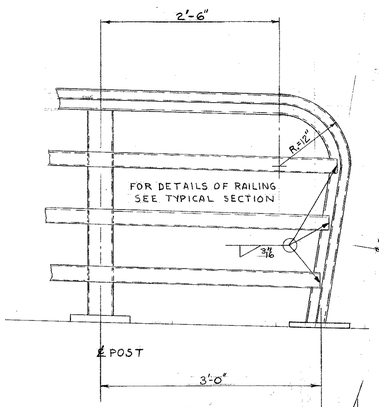

END DETAIL ON RETAINING WALLS
SCALE: 1" = 1'-0"

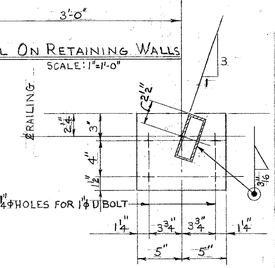

BASE PLATE FOR END DETAIL
SCALE: 1 1/2" = 1'-0"

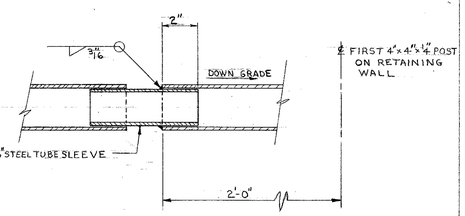

TYPICAL SPLICE DETAIL AT ABUTMENTS
NO SCALE

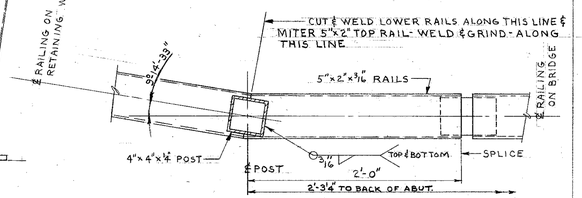

RAILING DETAIL AT NORTHWEST RETAINING WALL
SCALE: 1 1/2" = 1'-0"

DEPARTMENT OF PUBLIC WORKS
BUREAU OF BRIDGES AND PUBLIC BUILDINGS
CITY OF MILWAUKEE

W. ST. PAUL AVE.-E. DETROIT ST. VERTICAL LIFT BRIDGE
OVER MILWAUKEE RIVER

RAILING PLAN

REVISIONS		
MARK	DATE	BY
A		
B		
C		
D		
E		
F		
G		
H		
J		
K		
L		
M		

DESIGNED BY: RLK TRACED BY: DATE:
DRAWN BY: RLK CHECKED BY: DATE:
APPROVED: SCALE: AS SHOWN

Norris A. Batalden — DESIGNER IN CHARGE — DATE: 6-28-65 SHEET NUMBER: 42
George C. Ashton — BRIDGE ENGINEER — DATE: 7-3-65 SET OF: SHEET
Donald R. Keating — COMMISSIONER OF PUBLIC WORKS — DATE: 7-6-65 JOB NO. 522-
Special Deputy

GEORGE C. ASHTON
MILWAUKEE, WISCONSIN
WISCONSIN
PROFESSIONAL ENGINEER

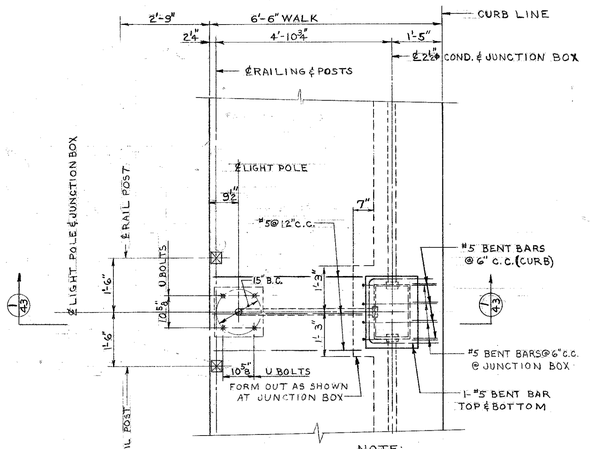

NOTE:
1. BOLTS FOR LIGHT POLE TO BE FURNISHED BY 2ND BRANCH CONTR. & SET BY 1ST BRANCH CONTR.
2. 1ST BRANCH CONTR. TO VERIFY LOCATION OF ANCHOR BOLTS WITH 2ND BRANCH CONT.
3. ADDITIONAL CURB & WALK REINF. SHOWN. TYPICAL WALK REINF. NOT SHOWN.

PLAN
SIDEWALK AT LIGHT POLE
SCALE: ½"=1'-0"

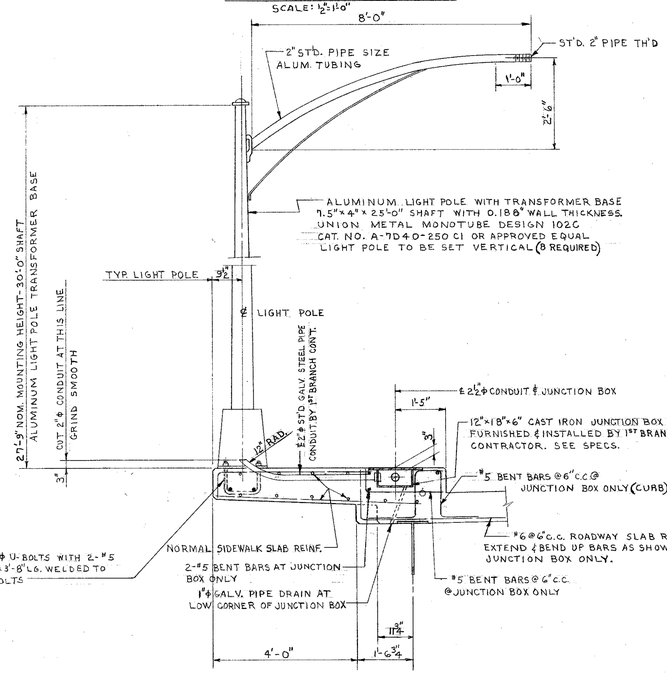

SECTION 1/43
SCALE: ½"=1'-0"

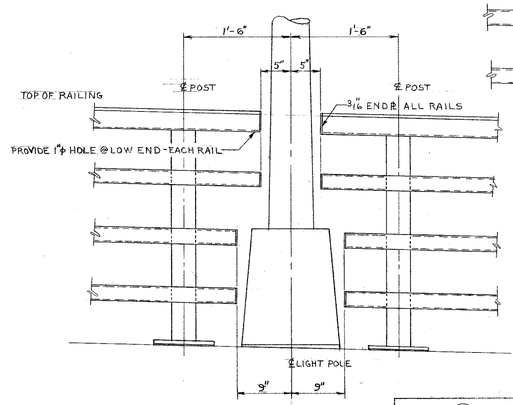

RAILING DETAIL AT LIGHT POLE
SCALE: 1"=1'-0"

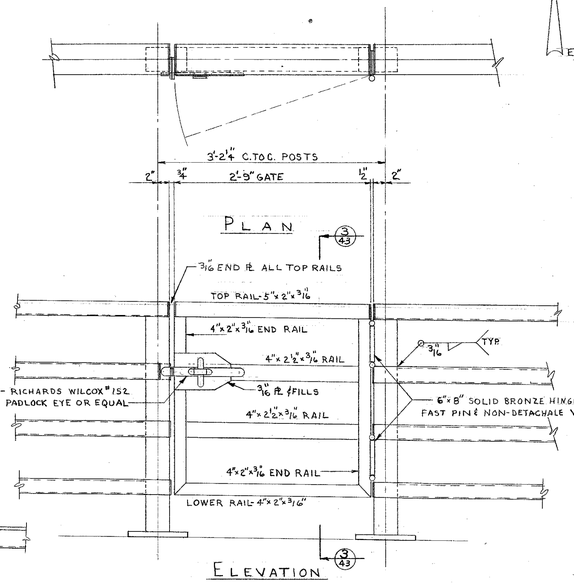

ELEVATION

RAILING GATE DETAILS
SCALE: 1"=1'-0"

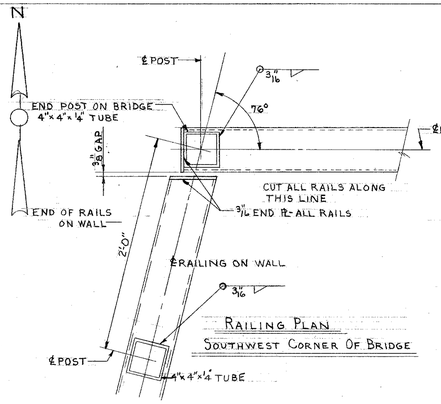

RAILING PLAN
SOUTHWEST CORNER OF BRIDGE

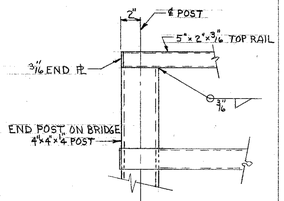

DETAIL FOR TOP RAIL
SOUTHWEST CORNER OF BRIDGE
SCALE: 1½"=1'-0"

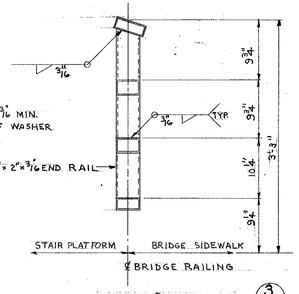

SECTION 3/43
SCALE: 1"=1'-0"

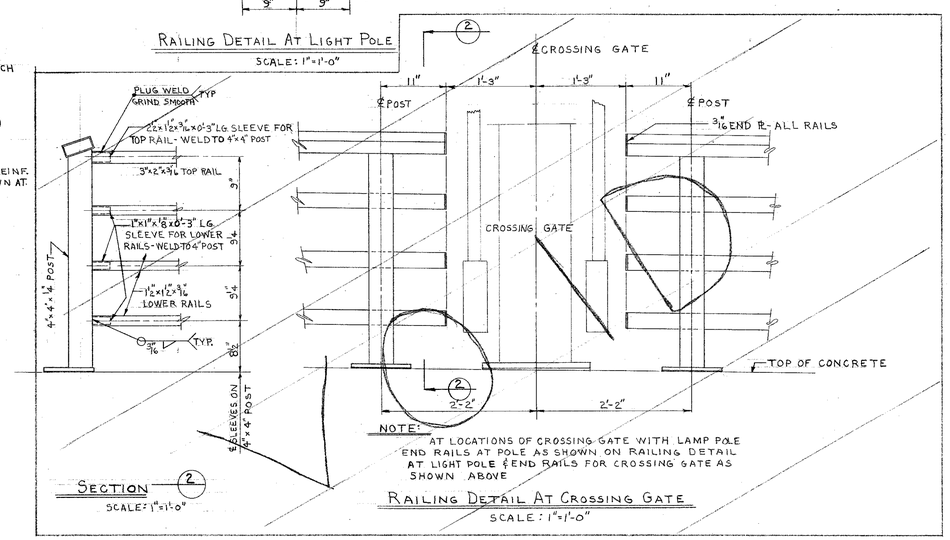

NOTE:
AT LOCATIONS OF CROSSING GATE WITH LAMP POLE END RAILS AT POLE AS SHOWN ON RAILING DETAIL AT LIGHT POLE & END RAILS FOR CROSSING GATE AS SHOWN ABOVE

SECTION 2
SCALE: 1"=1'-0"

RAILING DETAIL AT CROSSING GATE
SCALE: 1"=1'-0"

WISCONSIN
GEORGE C. ASHTON
MILWAUKEE, WISCONSIN
PROFESSIONAL ENGINEER

DEPARTMENT OF PUBLIC WORKS
BUREAU OF BRIDGES AND PUBLIC BUILDINGS
CITY OF MILWAUKEE

REVISIONS		
MARK	DATE	BY
A		
B		
C		
D		
E		
F		
G		
H		
I		
J		
K		
L		
M		

W. ST. PAUL AVE.-E. DETROIT ST. VERTICAL LIFT BRIDGE
OVER MILWAUKEE RIVER

LIGHT POLES & RAILING DETAILS

DESIGNED BY: BLK — TRACED BY: — DATE:
DRAWN BY: BLK — CHECKED BY: GCA — DATE:
APPROVED: — SCALE: As Shown
Norris O. Bataldon, DESIGNER IN CHARGE — DATE: 6-28-65 — SHEET NUMBER 43
George C. Ashton, CHIEF OF BRIDGES AND PUBLIC BUILDINGS — DATE: 7-3-65 — SET OF — SHEETS
Donald R. Lasky, COMMISSIONER OF PUBLIC WORKS, Special Deputy — DATE: 7-6-65 — JOB NO. 522-001

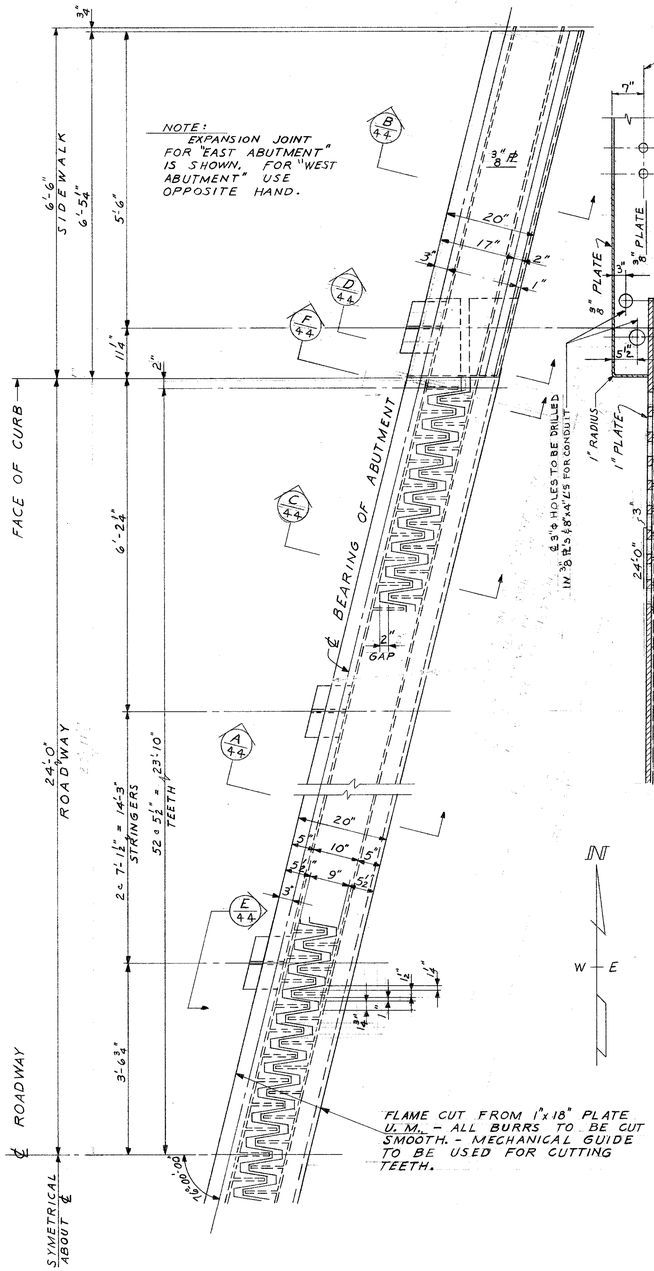

TYPICAL SIDEWALK & ROADWAY EXPANSION JOINT AT ABUTMENTS
SCALE ¾"=1'-0"

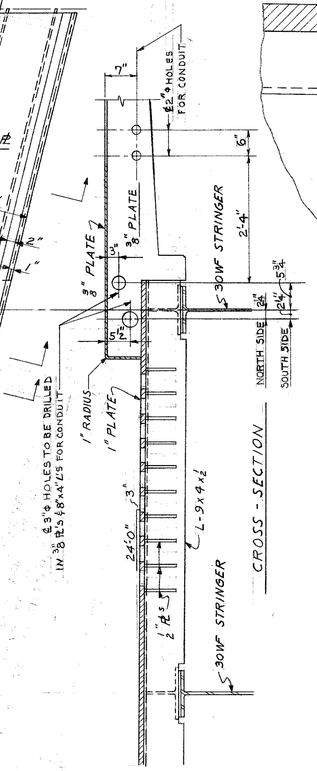

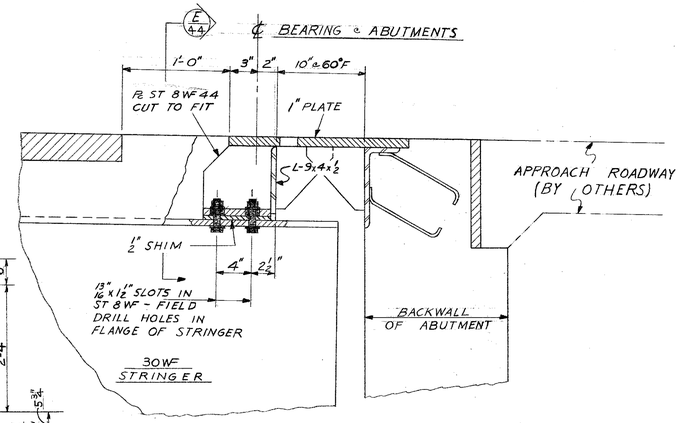

SECTION A 44
SCALE 1½"=1'-0"

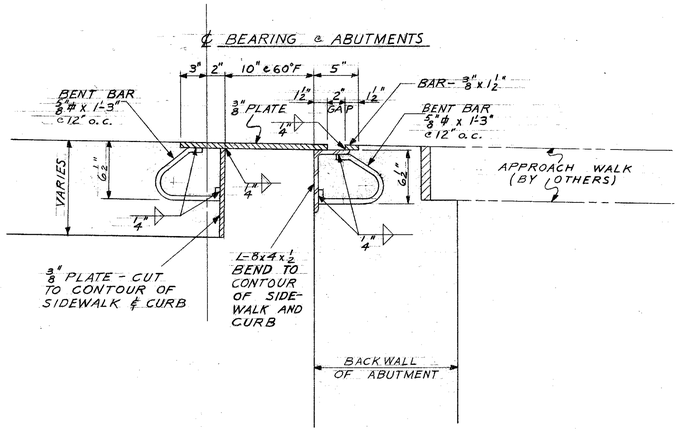

SECTION B 44
SCALE 1½"=1'-0"

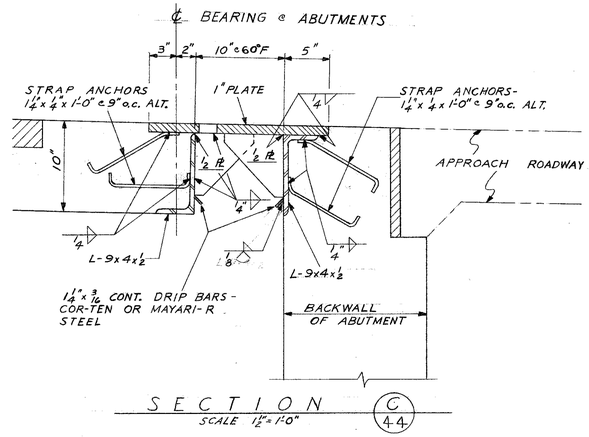

SECTION C 44
SCALE 1½"=1'-0"

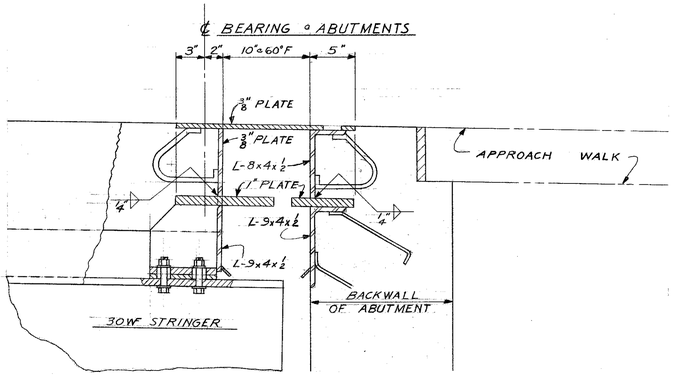

SECTION D 44
SCALE 1½"=1'-0"

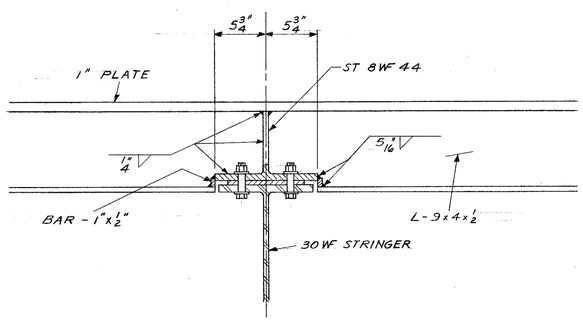

SECTION E 44
SCALE 1½"=1'-0"

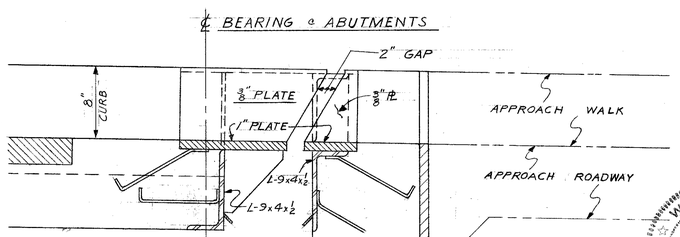

SECTION F 44
SCALE 1½"=1'-0"

WISCONSIN GEORGE C. ASHTON MILWAUKEE, WISCONSIN PROFESSIONAL ENGINEER

DEPARTMENT OF PUBLIC WORKS
BUREAU OF BRIDGES AND PUBLIC BUILDINGS
CITY OF MILWAUKEE

REVISIONS		
MARK	DATE	BY
A		
B		
C		
D		
E		
F		
G		
H		
I		
J		
K		
L		
M		

W. ST. PAUL AVE.-E. DETROIT ST. VERTICAL LIFT BRIDGE
OVER MILWAUKEE RIVER

EXPANSION JOINTS AT ABUTMENTS

DESIGNED BY: L.F.R. TRACED BY: DATE:
DRAWN BY: L.F.R. CHECKED BY: GCA DATE:
APPROVED: SCALE: As Shown
Norris C. Batalden (DESIGNER IN CHARGE) DATE: 6-28-65 SHEET NUMBER 44
George C. Ashton (BUREAU OF BRIDGES AND PUBLIC BUILDINGS) DATE: 7-3-65 SET OF SHEETS
Donald J. Foley (COMMISSIONER OF PUBLIC WORKS) Special Deputy DATE: 7-6-65 JOB NO. 522-001

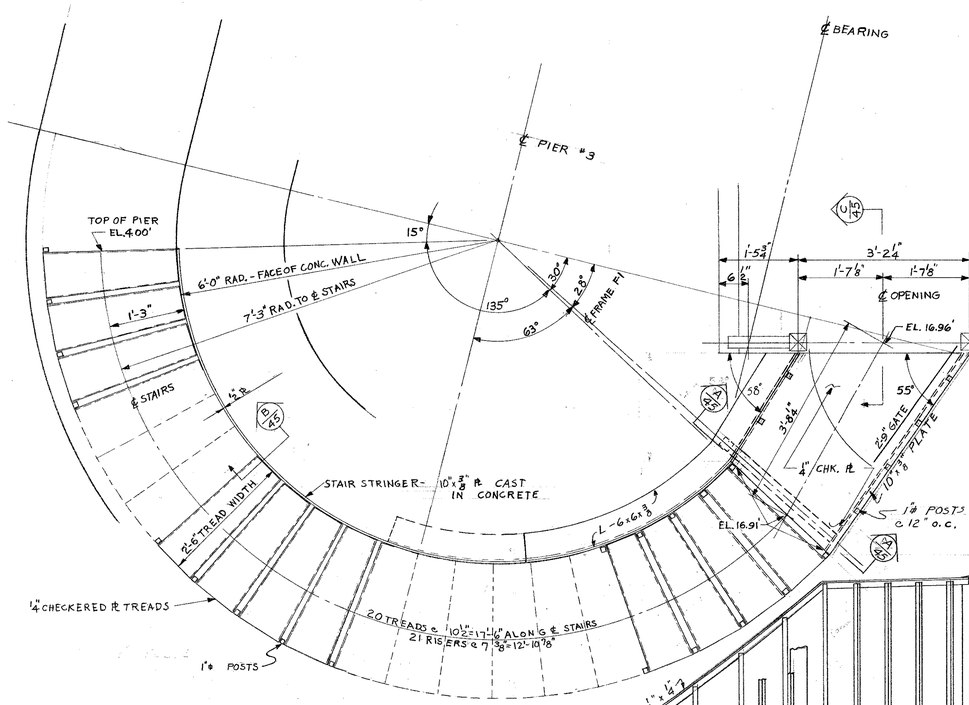

PLAN
SCALE ¾" = 1'-0"

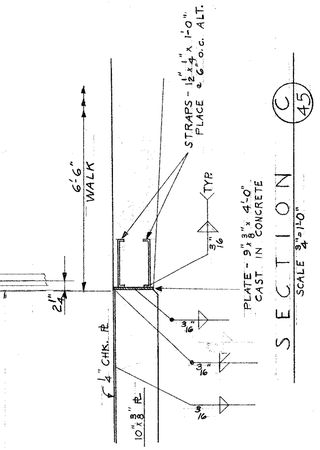

SECTION C/45
SCALE ¾" = 1'-0"

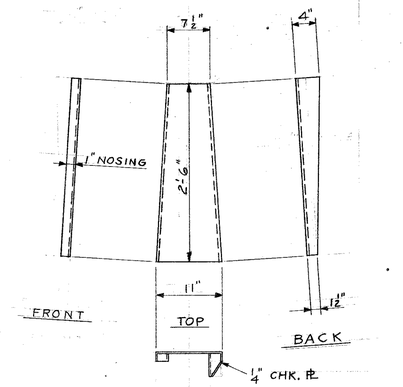

TYPICAL TREAD FOR CIRCULAR STAIR
SCALE 1" = 1'-0"

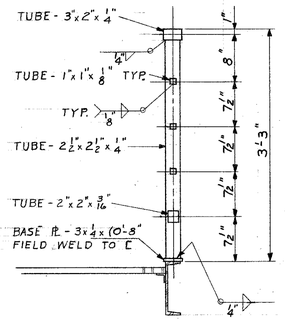

DETAIL D/45
SCALE 1" = 1'-0"

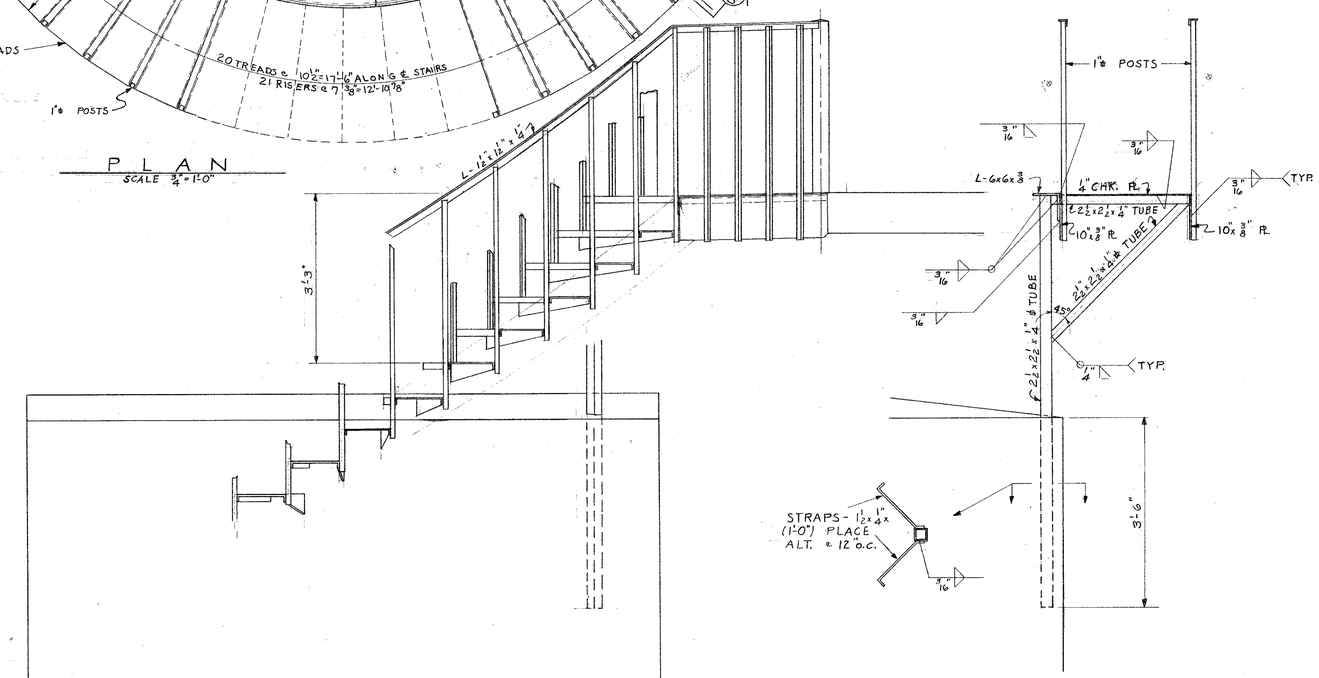

SECTION A/45
SCALE ¾" = 1'-0"

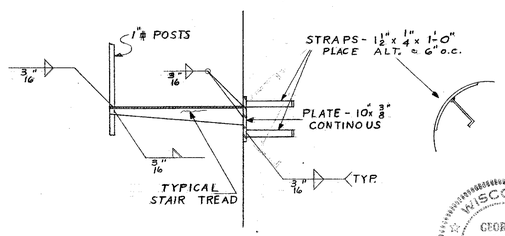

SECTION B/45
SCALE ¾" = 1'-0"

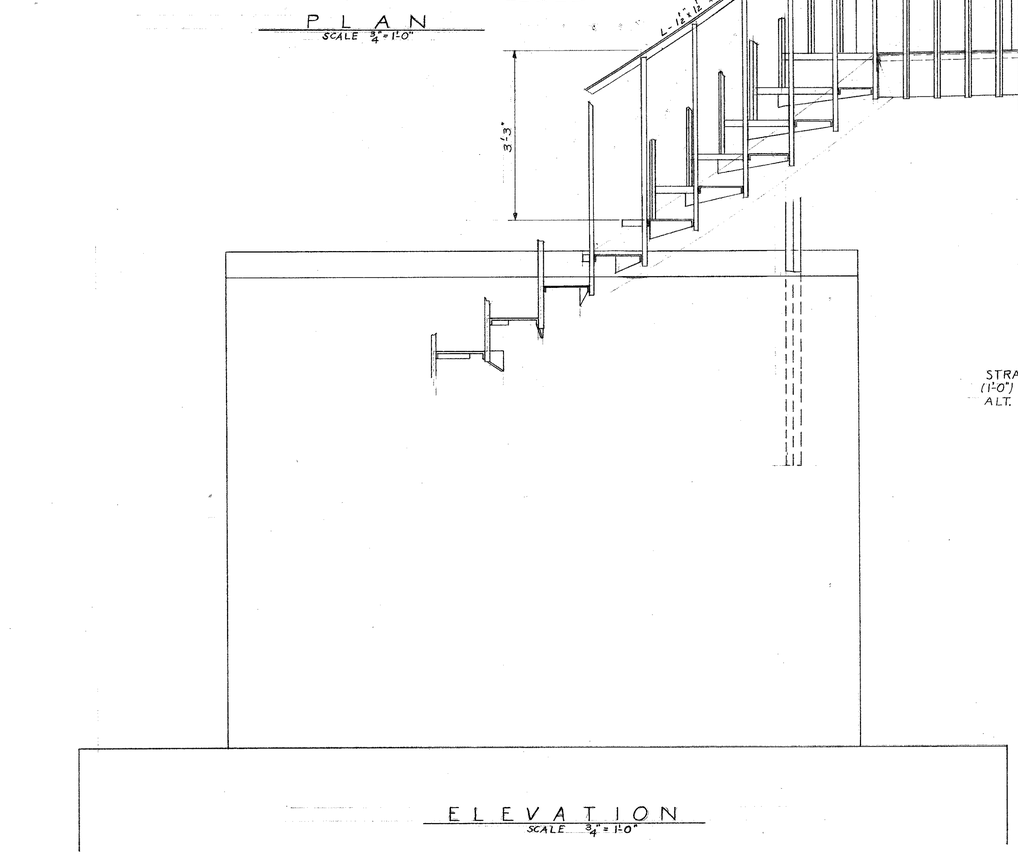

ELEVATION
SCALE ¾" = 1'-0"

NOTE:
ALL STAIR PLATFORMS SHALL BE IRVING CO. X-BAR PRESS LOCKED TYPE A-A WITH 1"x⅛" BARS AND CHECKERED ℞ NOSING UNLESS OTHERWISE CALLED FOR.

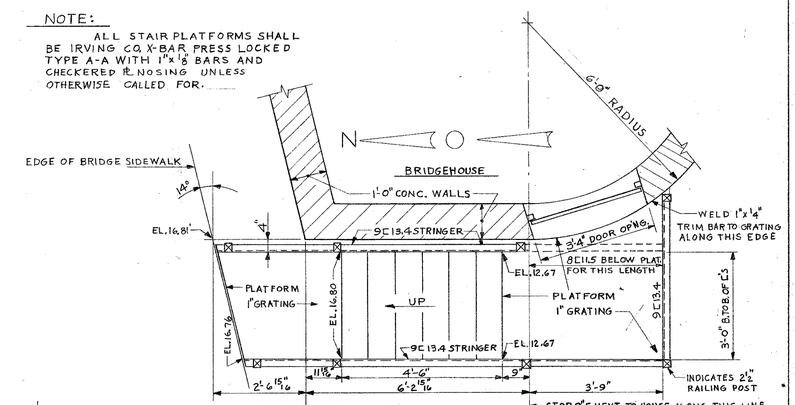

PLAN
EXTERIOR STAIR AT BRIDGE HOUSE
SCALE: ½" = 1'-0"

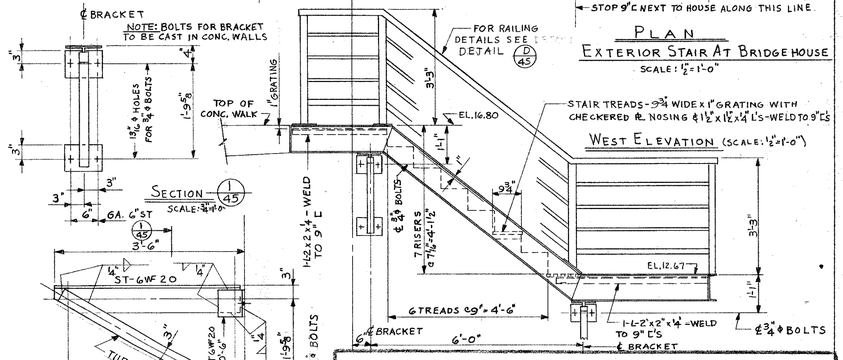

SECTION 1/45
SCALE: ¾" = 1'-0"

WEST ELEVATION (SCALE: ½" = 1'-0")

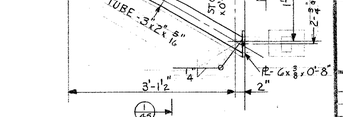

STAIR BRACKET DETAIL
SCALE: ¾" = 1'-0"

WISCONSIN
GEORGE C. ASHTON
MILWAUKEE, WISCONSIN
PROFESSIONAL ENGINEER

DEPARTMENT OF PUBLIC WORKS
BUREAU OF BRIDGES AND PUBLIC BUILDINGS
CITY OF MILWAUKEE

REVISIONS		
MARK	DATE	BY
A		
B		
C		
D		
E		
F		
G		
H		
I		
J		
K		
L		
M		

W. ST. PAUL AVE.-E. DETROIT ST. VERTICAL LIFT BRIDGE
OVER MILWAUKEE RIVER
CIRCULAR STAIR

DESIGNED BY: R.L.K. TRACED BY: DATE:
DRAWN BY: R.L.K. & L.P.R. CHECKED BY: GCA DATE:
APPROVED: SCALE:
Harris A. Bartelden — DESIGNER IN CHARGE — DATE: 7-7-65 SHEET NUMBER 45
George C. Ashton — CITY ENGINEER — DATE: 7-3-65 SET OF SHEETS
Donald P. Koehler — COMMISSIONER OF PUBLIC WORKS — DATE: 7-6-65 JOB NO. 522-001
Special Report

LEGEND

- FIXTURE TYPE — PANEL B, CIRCUIT 8, SWITCH c
- CONVIENCE OUTLET — PANEL B, CIRCUIT 7, SWITCH NO. b
- SWITCH — INDICATES 3 WAY SWITCH, SWITCH NUMBER 53a

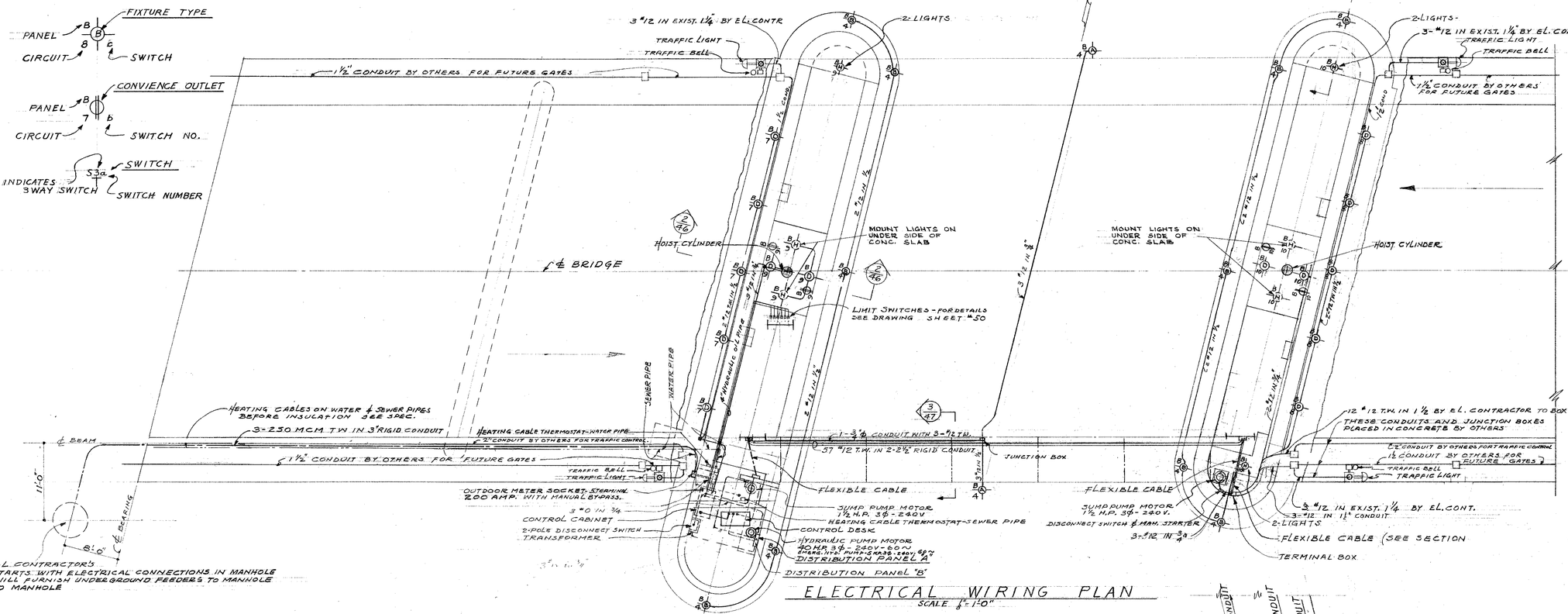

ELECTRICAL WIRING PLAN
SCALE ⅛" = 1'-0"

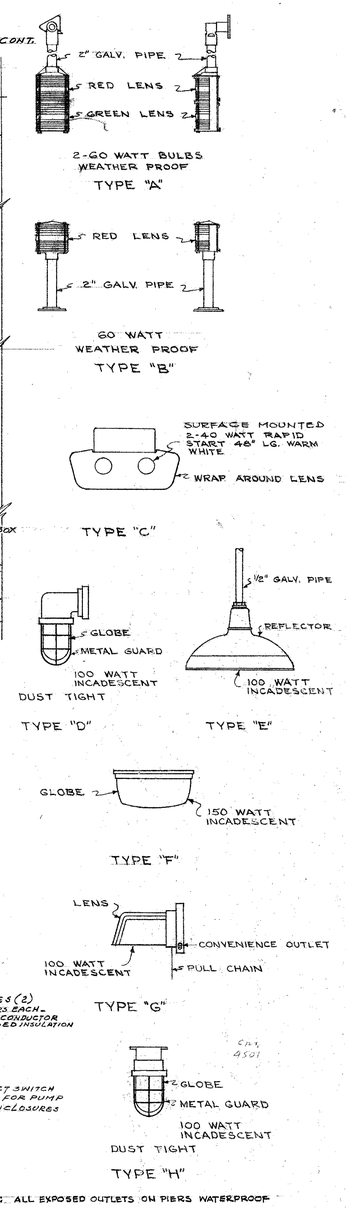

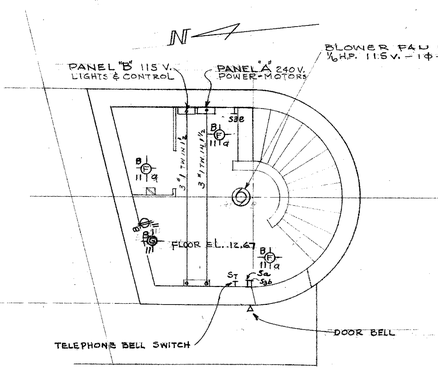

UTILITY ROOM LIGHTING
Scale ¼" = 1'-0"

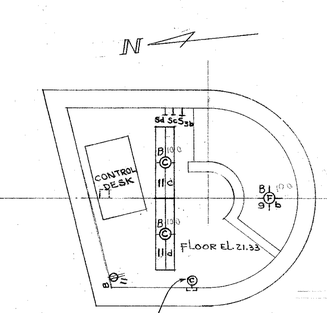

CONTROL ROOM LIGHTING
Scale ¼" = 1'-0"

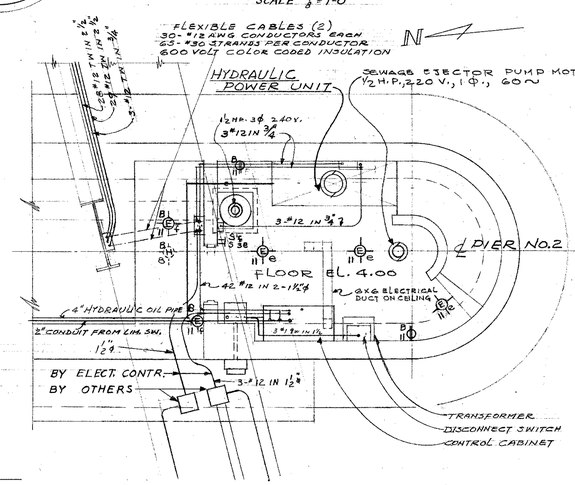

EQUIPMENT ROOM LIGHTING
SCALE ¼" = 1'-0"

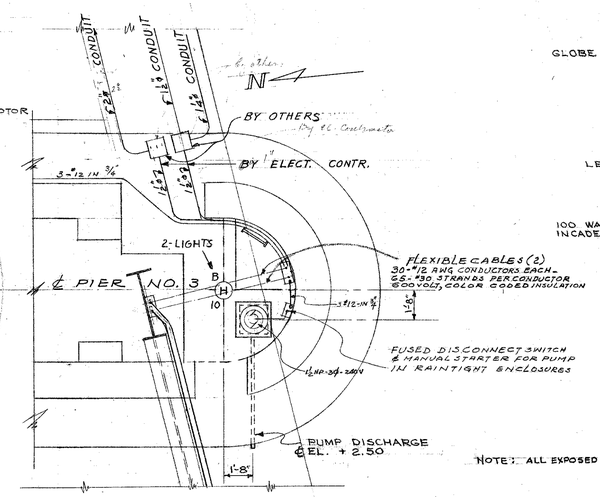

SOUTH END OF PIER #3
SCALE ¼" = 1'-0"

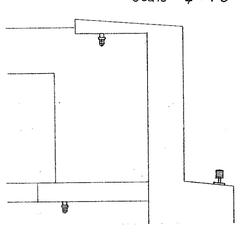

SECTION 1/46

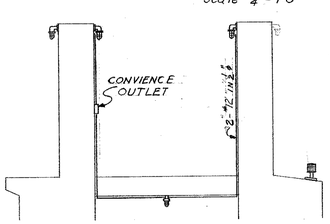

SECTION 2/46

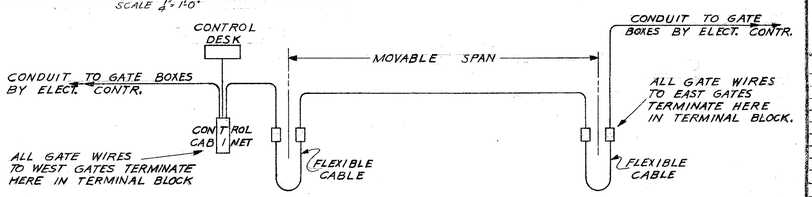

DIAGRAMMATIC SHOWING GATE CONTROL WIRE TERMINALS

WISCONSIN GEORGE C. ASHTON MILWAUKEE, WISCONSIN PROFESSIONAL ENGINEER

DEPARTMENT OF PUBLIC WORKS
BUREAU OF BRIDGES AND PUBLIC BUILDINGS
CITY OF MILWAUKEE

REVISIONS		
MARK	DATE	BY
A		
B		
C		
D		
E		
F		
G		
H		
I		
J		
K		
L		
M		

W. ST. PAUL AVE.-E. DETROIT ST. VERTICAL LIFT BRIDGE
OVER MILWAUKEE RIVER

ELECTRICAL-WIRING PLAN-LIGHTS

DESIGNED BY: J.D.P. TRACED BY: DATE:
DRAWN BY: J.D.P. CHECKED BY: J.J.M. DATE:
APPROVED: SCALE:
Norris A. Batalden — DESIGNER IN CHARGE — DATE: 6-28-65 SHEET NUMBER 46
George C. Ashton — CONSULTING ENGINEER — DATE: 7-3-65 SET OF SHEETS
Donald W. Seeley — COMMISSIONER OF PUBLIC WORKS — DATE: 7-6-65 JOB NO. 522-001
Special Deputy

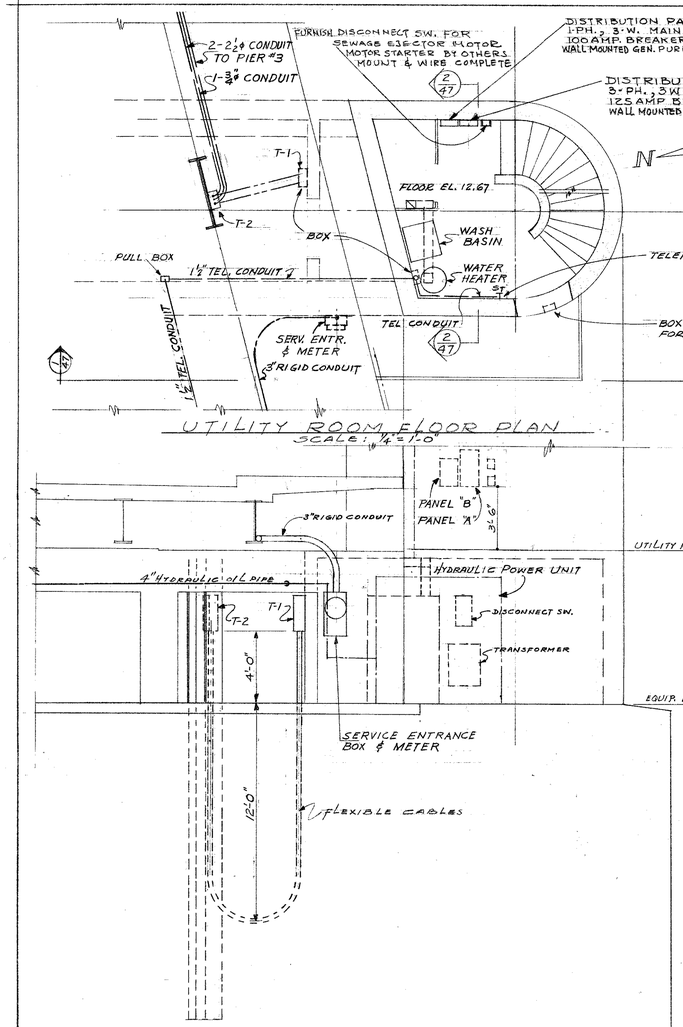

UTILITY ROOM FLOOR PLAN
SCALE ¼" = 1'-0"

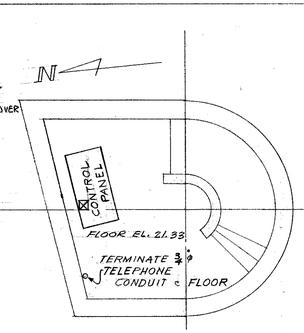

CONTROL ROOM FLOOR PLAN
SCALE ¼" = 1'-0"

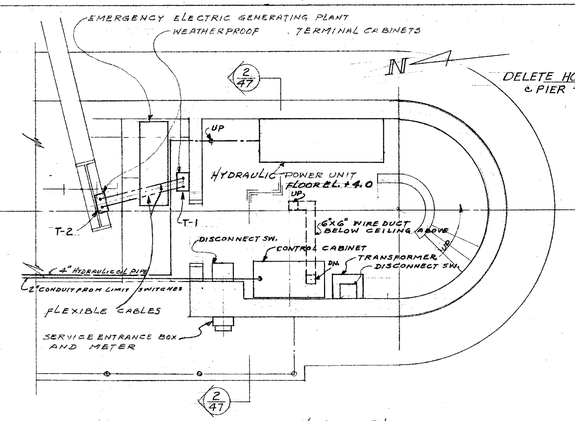

EQUIPMENT ROOM FLOOR PLAN
SCALE ¼" = 1'-0"

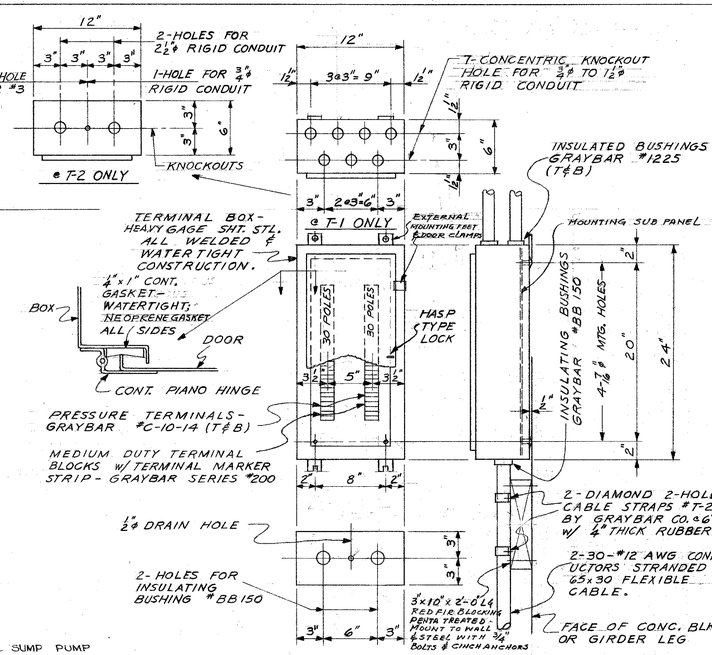

NOTE: TERMINAL CABINETS NEMA #12 AS MFD. BY GEO. E. ROHN CO.,

2-TERMINAL CABINETS T-1
2- " " T-2
SCALE 1½" = 1'-0"

SECTION 1/47
SCALE ¼" = 1'-0"

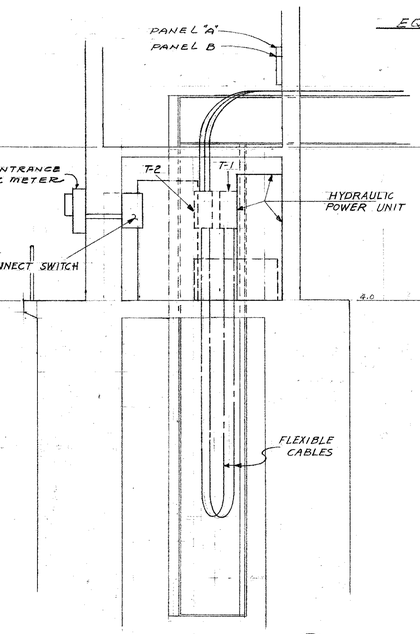

SECTION 2/47
SCALE ¼" = 1'-0"

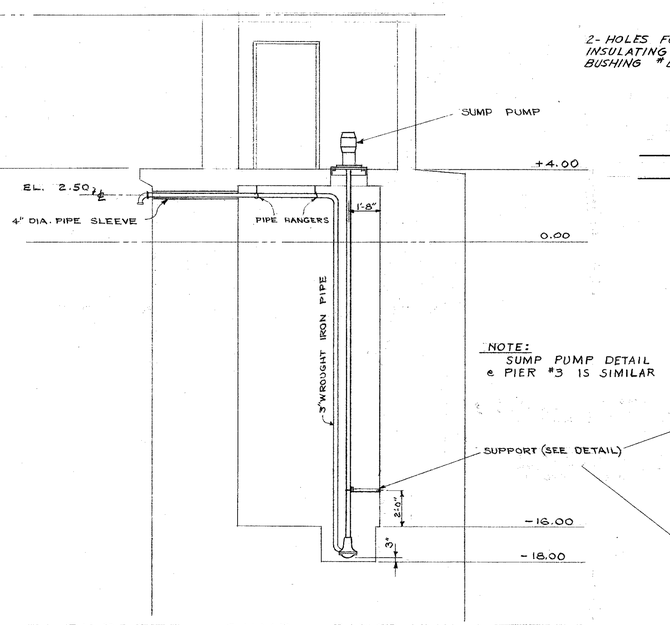

NOTE:
SUMP PUMP DETAIL @ PIER #3 IS SIMILAR

TYPICAL SUMP PUMP DETAIL SHOWN @ PIER #3
SCALE ¼" = 1'-0"

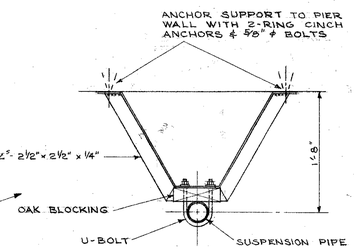

SUPPORT DETAIL @ PIER #2
SCALE 1" = 1'-0"

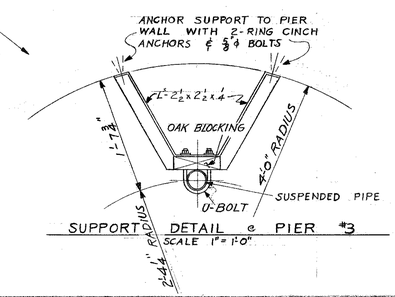

SUPPORT DETAIL @ PIER #3
SCALE 1" = 1'-0"

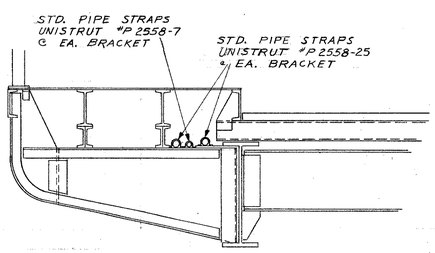

SECTION 3/47
SCALE ½" = 1'-0"

DEPARTMENT OF PUBLIC WORKS
BUREAU OF BRIDGES AND PUBLIC BUILDINGS
CITY OF MILWAUKEE

REVISIONS		
MARK	DATE	BY
A		
B		
C		
D		
E		
F		
G		
H		
I		
J		
K		
L		
M		

W. ST. PAUL AVE.-E. DETROIT ST. VERTICAL LIFT BRIDGE
OVER MILWAUKEE RIVER

ELECTRICAL-SECTIONS & DETAILS

DESIGNED BY: J. D. P. TRACED BY: DATE:
DRAWN BY: J. D. P. CHECKED BY: J. J. M. DATE:
APPROVED: SCALE:
Morris A. Batalden DESIGNER IN CHARGE DATE 6-28-65 SHEET NUMBER 47
George C. Ashton BRIDGE & PUBLIC BUILDINGS DATE 7-3-65 SET OF SHEETS
Donald W. Keachy CITY ENGINEER DATE 7-6-65 JOB NO. 522-001
Special Deputy

WISCONSIN GEORGE C. ASHTON MILWAUKEE, WISCONSIN PROFESSIONAL ENGINEER

NOTE: POSITION OF CONTACTS SHOWN FOR BRIDGE SPAN IN FULLY SEATED DOWN POSITION

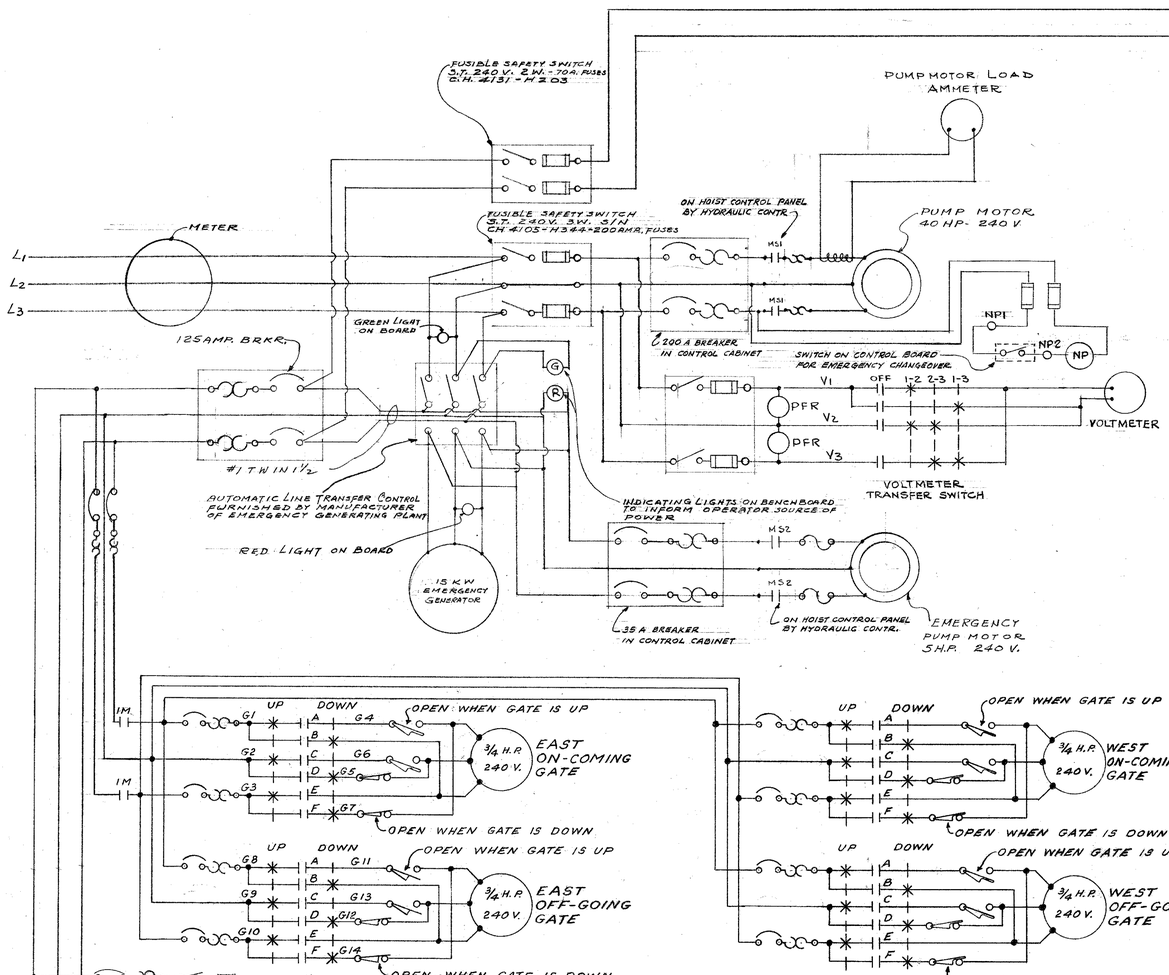

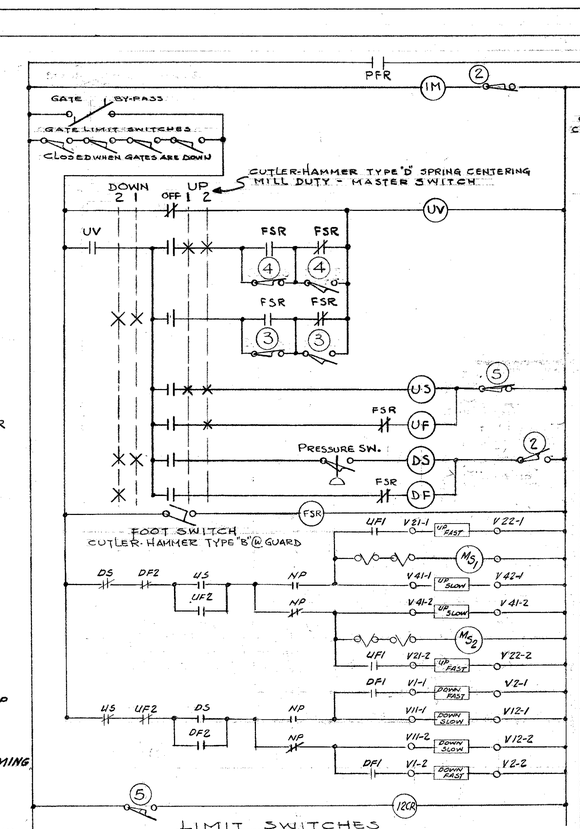

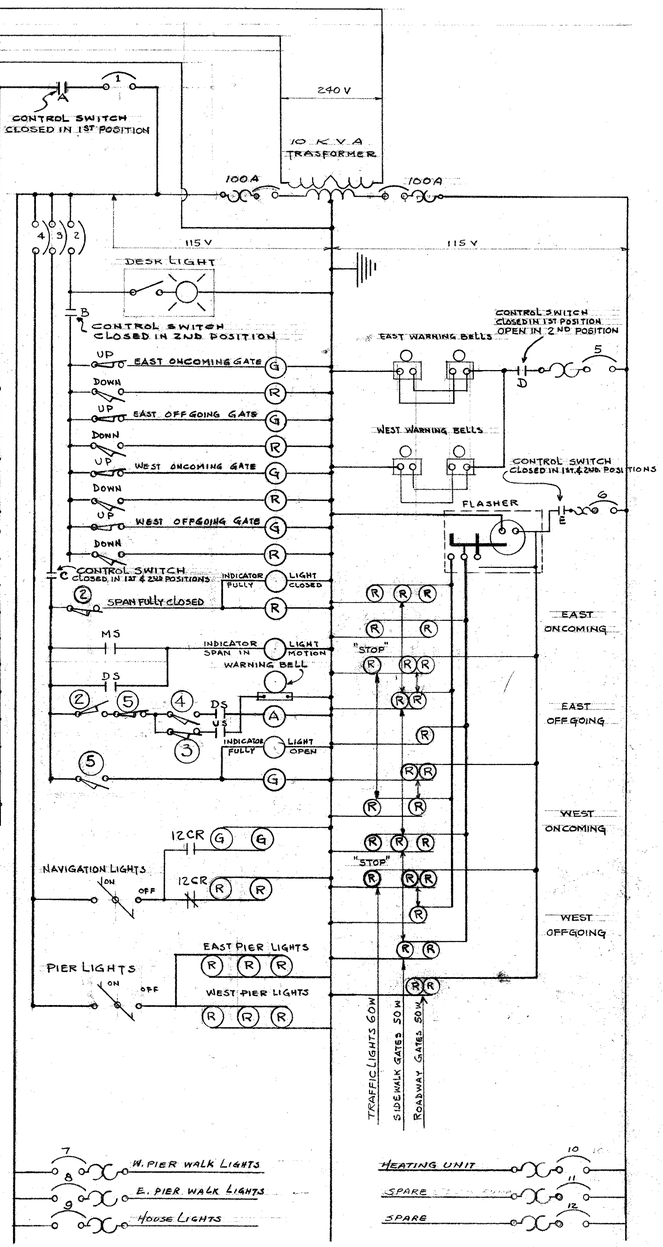

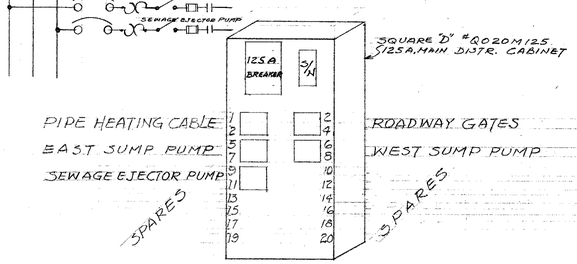

3-PHASE POWER DISTRIBUTION PANEL "A"

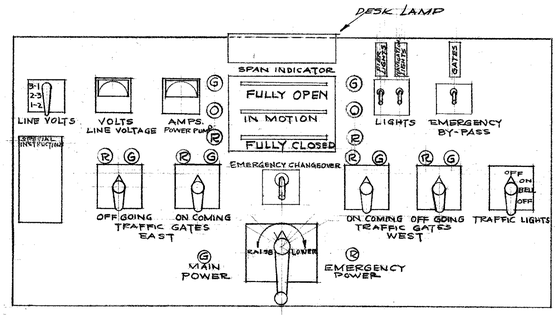

CONTROL DESK
SCALE: 1½" = 1'-0"

LIMIT SWITCHES

No	FUNCTION	NO. & TYPE CONTACTS
2	NORMAL DOWN STOP	2-N.C. & 2-N.O.
3	SLOW DOWNWARD TRAVEL	1-N.C. & 2-N.O.
4	SLOW UPWARD TRAVEL	1-N.C. & 2-N.O.
5	NORMAL UP STOP	2-N.C & 1-N.O.

NOTE: ALL LIMIT SWITCHES - 2-NC AND 2-NO CONTACTS

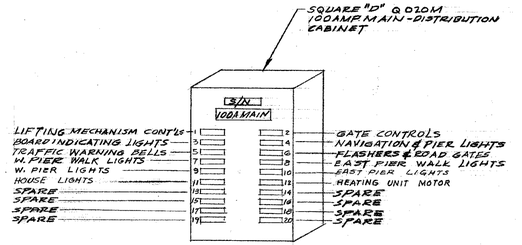

1-PHASE LIGHTING & CONTROL DISTRIBUTION PANEL "B"

DEPARTMENT OF PUBLIC WORKS
BUREAU OF BRIDGES AND PUBLIC BUILDINGS
CITY OF MILWAUKEE

W. ST. PAUL AVE.-E. DETROIT ST. VERTICAL LIFT BRIDGE
OVER MILWAUKEE RIVER

ELECTRICAL-SCHEMATIC DIAGRAM

DESIGNED BY: J.D.P. TRACED BY: DATE:
DRAWN BY: J.D.P. CHECKED BY: J.J.M. DATE:
APPROVED: SCALE:
Denis J. Dataldeu DATE: 6-28-65 SHEET NUMBER 48
George C. Ashton DATE: 7-3-65 SET OF SHEETS
Donald D. Lustig DATE: 7-6-65 JOB NO. 522-001
DESIGNER IN CHARGE
CITY BRIDGES AND PUBLIC BUILDINGS
COMMISSIONER OF PUBLIC WORKS
Special Deputy

REVISIONS

MARK	DATE	BY
A		
B		
C		
D		
E		
F		
G		
H		
I		
J		
K		
L		
M		

WISCONSIN GEORGE C. ASHTON MILWAUKEE, WISCONSIN PROFESSIONAL ENGINEER

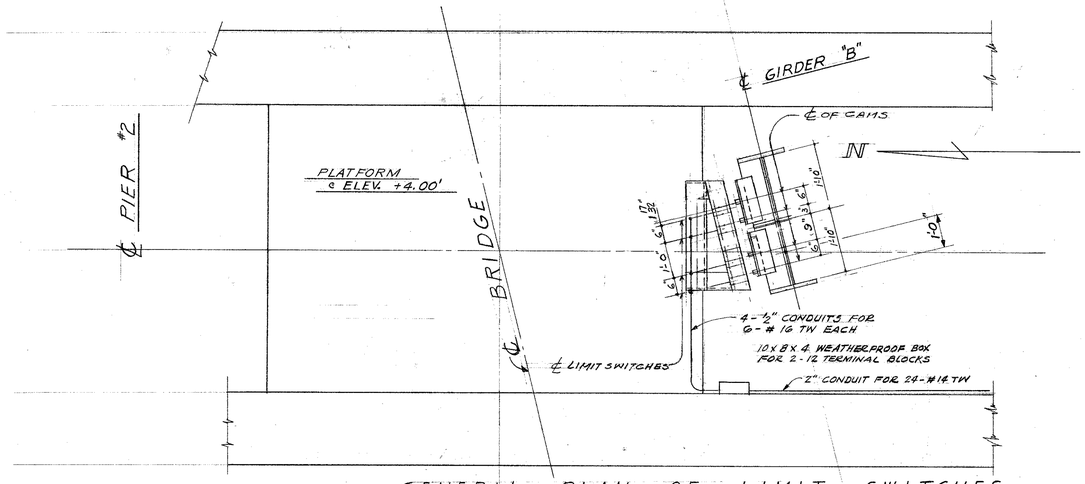

GENERAL PLAN OF LIMIT SWITCHES

SCALE ½" = 1'-0"

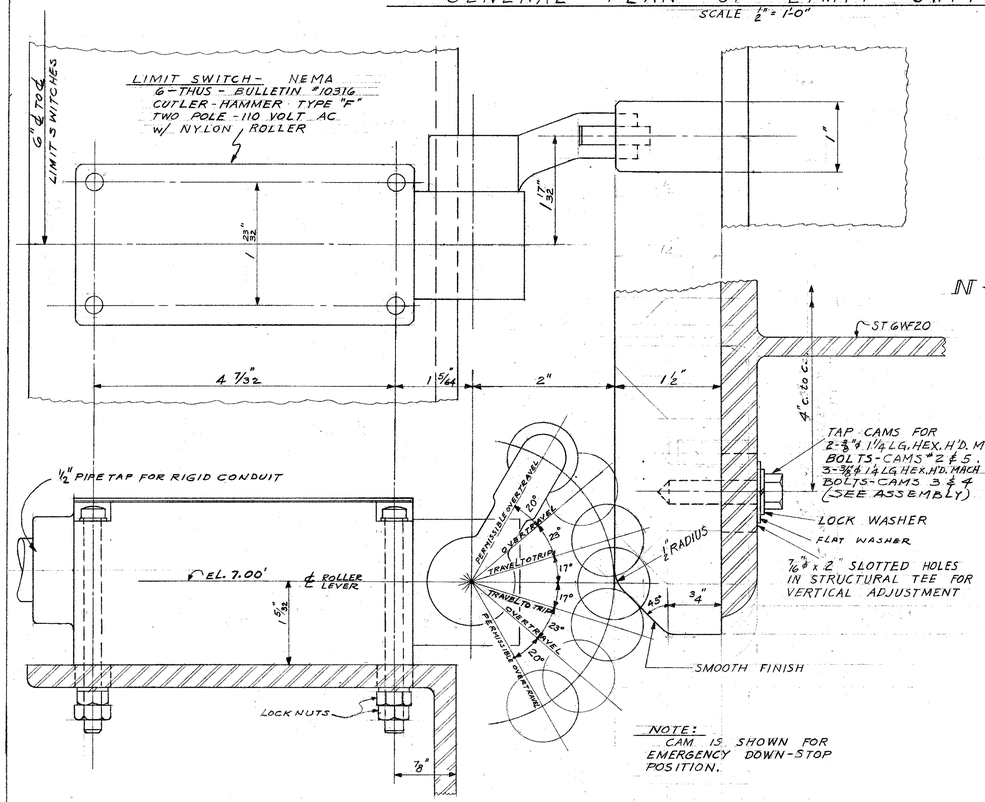

NOTE:
CAM IS SHOWN FOR
EMERGENCY DOWN-STOP
POSITION.

TYPICAL LIMIT SWITCH

SCALE - FULL

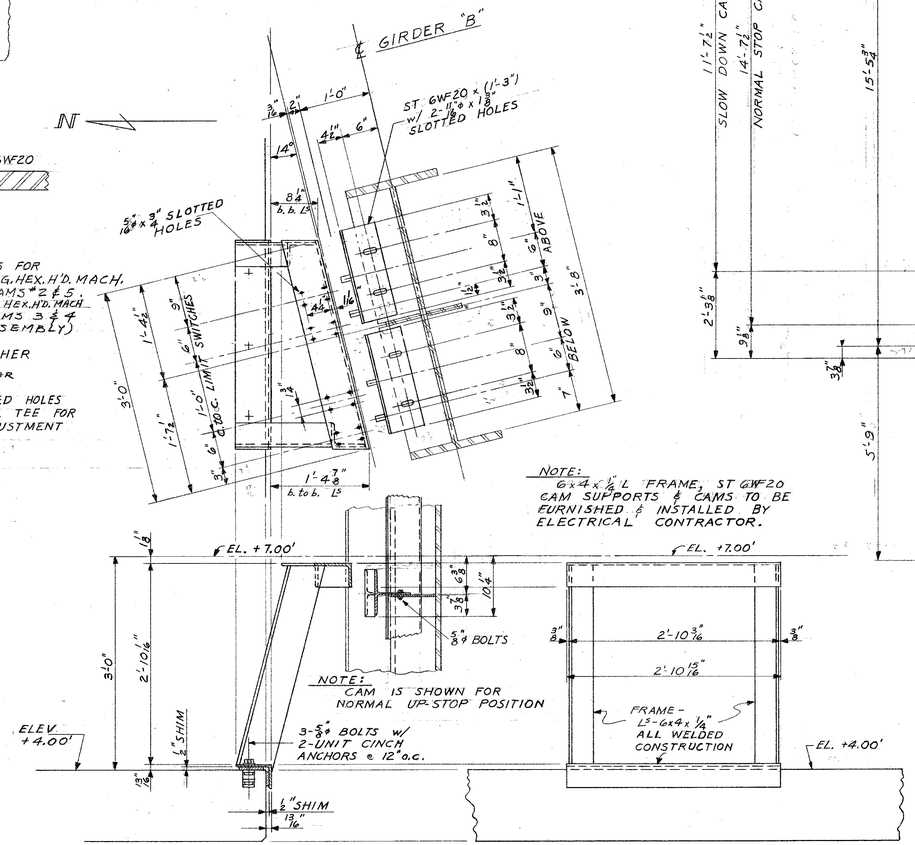

NOTE:
6 x 4 x ¼" L FRAME, ST 6WF20
CAM SUPPORTS & CAMS TO BE
FURNISHED & INSTALLED BY
ELECTRICAL CONTRACTOR.

NOTE:
CAM IS SHOWN FOR
NORMAL UP-STOP POSITION

ASSEMBLY OF LIMIT SWITCHES

SCALE 1" = 1'-0"

ASSEMBLY OF LIMIT SWITCH CAMS

SECTION A/22

SCALE ½" = 1'-0"

LOOKING SOUTH

LIMIT SWITCH POSITIONS	
POSITION	LIFT
2. - NORMAL DOWN-STOP	+0.12'
3. - SLOW DOWNWARD-TRAVEL	+1.62'
4. - SLOW UPWARD TRAVEL	+13.37'
5. - NORMAL UP-STOP	+14.87'

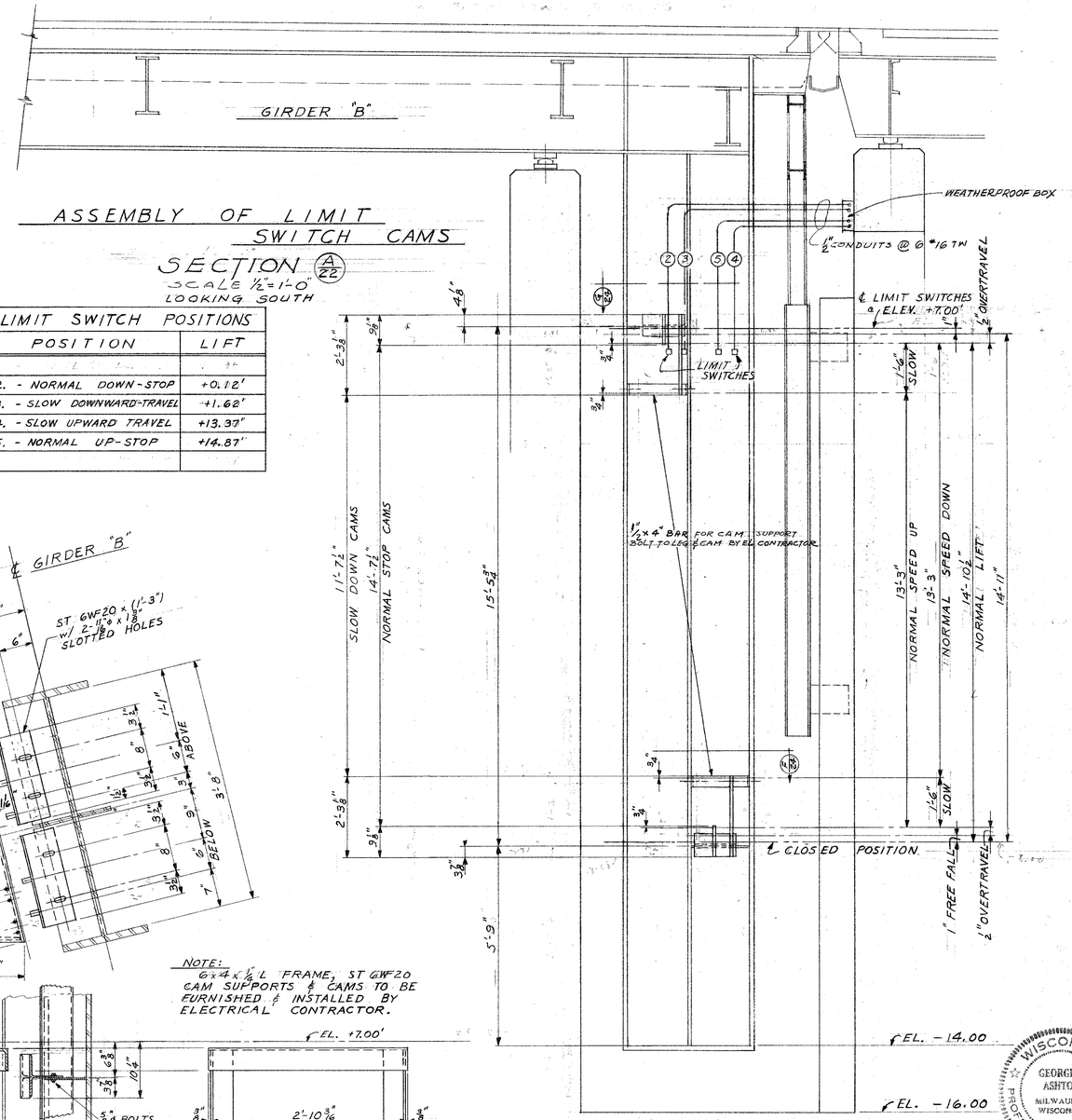

WISCONSIN PROFESSIONAL ENGINEER
GEORGE C. ASHTON
MILWAUKEE, WISCONSIN

DEPARTMENT OF PUBLIC WORKS
BUREAU OF BRIDGES AND PUBLIC BUILDINGS
CITY OF MILWAUKEE

REVISIONS		
MARK	DATE	BY
A		
B		
C		
D		
E		
F		
G		
H		
I		
J		
K		
L		
M		

W. ST. PAUL AVE.-E. DETROIT ST. VERTICAL LIFT BRIDGE
OVER MILWAUKEE RIVER
ELECTRICAL-LIMIT SWITCH MOUNTING DETAILS

DESIGNED BY: J.D.P. TRACED BY: DATE:
DRAWN BY: L.F.R. CHECKED BY: J.J.M. DATE:
APPROVED SCALE:
Norris A. Batalden DESIGNER IN CHARGE DATE: 6-28-65 SHEET NUMBER 49
George C. Ashton CHIEF BRIDGES AND PUBLIC BUILDINGS DATE: 7-3-65 SET OF SHEETS
Randall N. Sieving COMMISSIONER OF PUBLIC WORKS Special Deputy DATE: 7-6-65 JOB NO. 522-001

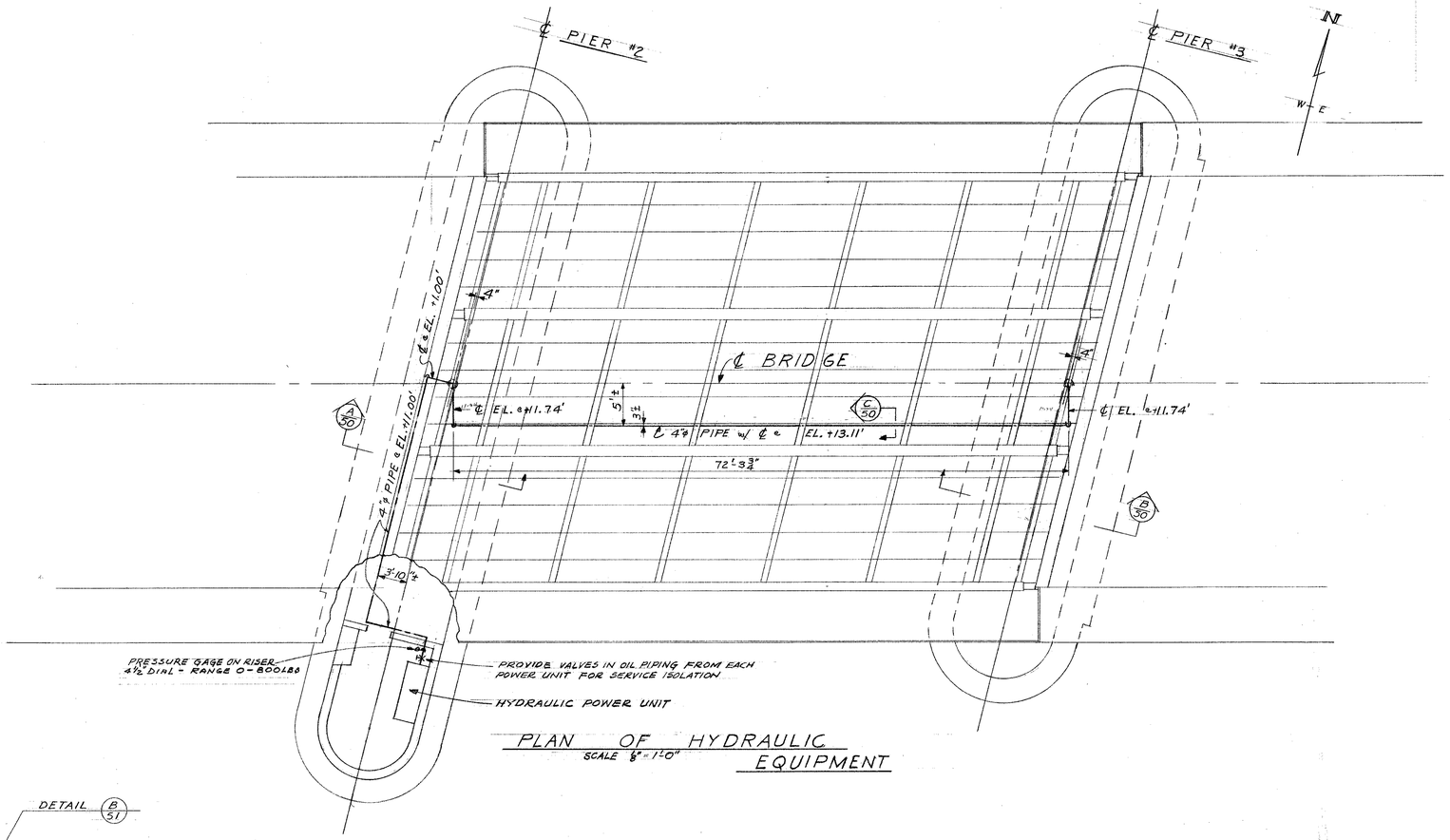

PLAN OF HYDRAULIC EQUIPMENT
SCALE ⅛" = 1'-0"

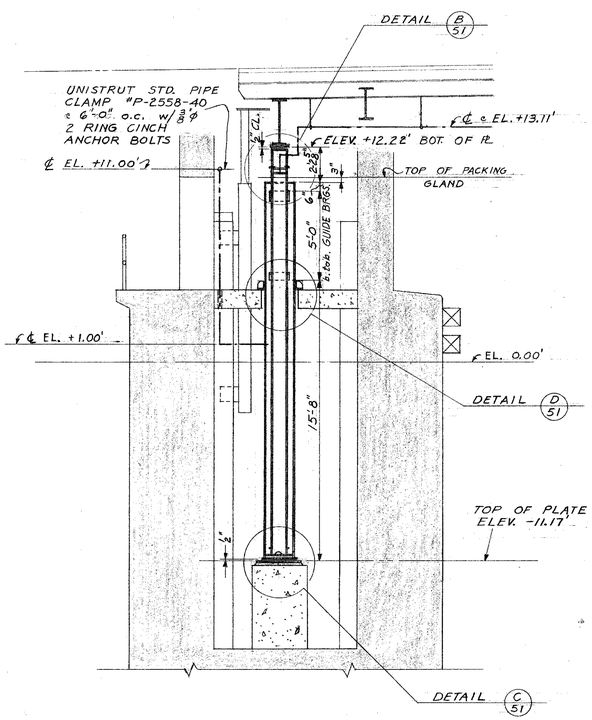

SECTION A/50
SCALE: ¼" = 1'-0"

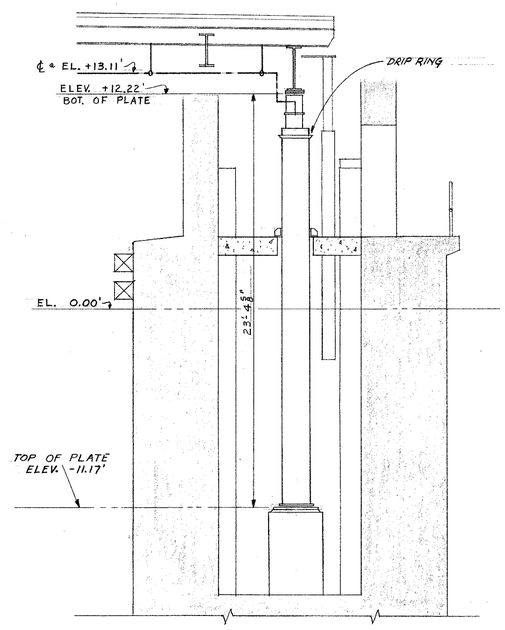

SECTION B/50
SCALE: ¼" = 1'-0"

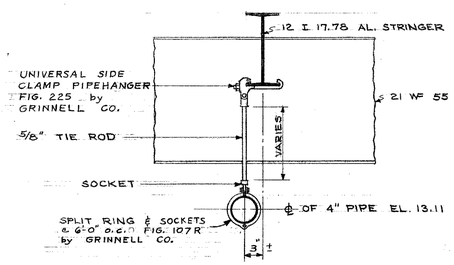

PIPE HANGER DETAIL C/50
SCALE: 1" = 1'-0"

NOTE:
AFTER HOIST CYLINDERS AND PISTONS ARE COMPLETELY ASSEMBLED, AND ALL PIPING IS IN PLACE FROM POWER UNITS TO HOISTS AND BEFORE STEEL CONTRACTOR HAS THE COUNTERWEIGHTS INSTALLED, HYDRAULIC CONTRACTOR SHALL FURNISH EQUIPMENT AND PRESSURE TEST HOISTS AND PIPING AT 500 PSI. THE EQUIPMENT UNDER TEST SHALL HOLD PRESSURE CONSTANT FOR 8 HOURS. IF DROP OF PRESSURE OVER 5% OCCURS DURING THIS INTERVAL, CONTRACTOR SHALL MAKE ALL NECESSARY ADJUSTMENTS AND REPEAT.

WISCONSIN GEORGE C. ASHTON MILWAUKEE, WISCONSIN PROFESSIONAL ENGINEER

DEPARTMENT OF PUBLIC WORKS
BUREAU OF BRIDGES AND PUBLIC BUILDINGS
CITY OF MILWAUKEE

REVISIONS		
MARK	DATE	BY
A		
B		
C		
D		
E		
F		
G		
H		
I		
J		
K		
L		
M		

W. ST. PAUL AVE.-E. DETROIT ST. VERTICAL LIFT BRIDGE
OVER MILWAUKEE RIVER

HYDRAULIC EQUIPMENT-PLAN

DESIGNED BY: J.D.P. TRACED BY: DATE:
DRAWN BY: L.F.R. CHECKED BY: J.J.M. DATE:
APPROVED: SCALE:
Norris A. Batalden DESIGNER IN CHARGE DATE: 6-28-65 SHEET NUMBER 50
George C. Ashton SUPV. OF BRIDGES AND PUBLIC BUILDINGS DATE: 7-3-65 SET OF SHEETS
Donald D. Sperling COMMISSIONER OF PUBLIC WORKS DATE: 7-6-65 JOB NO. 522-001
Special Deputy

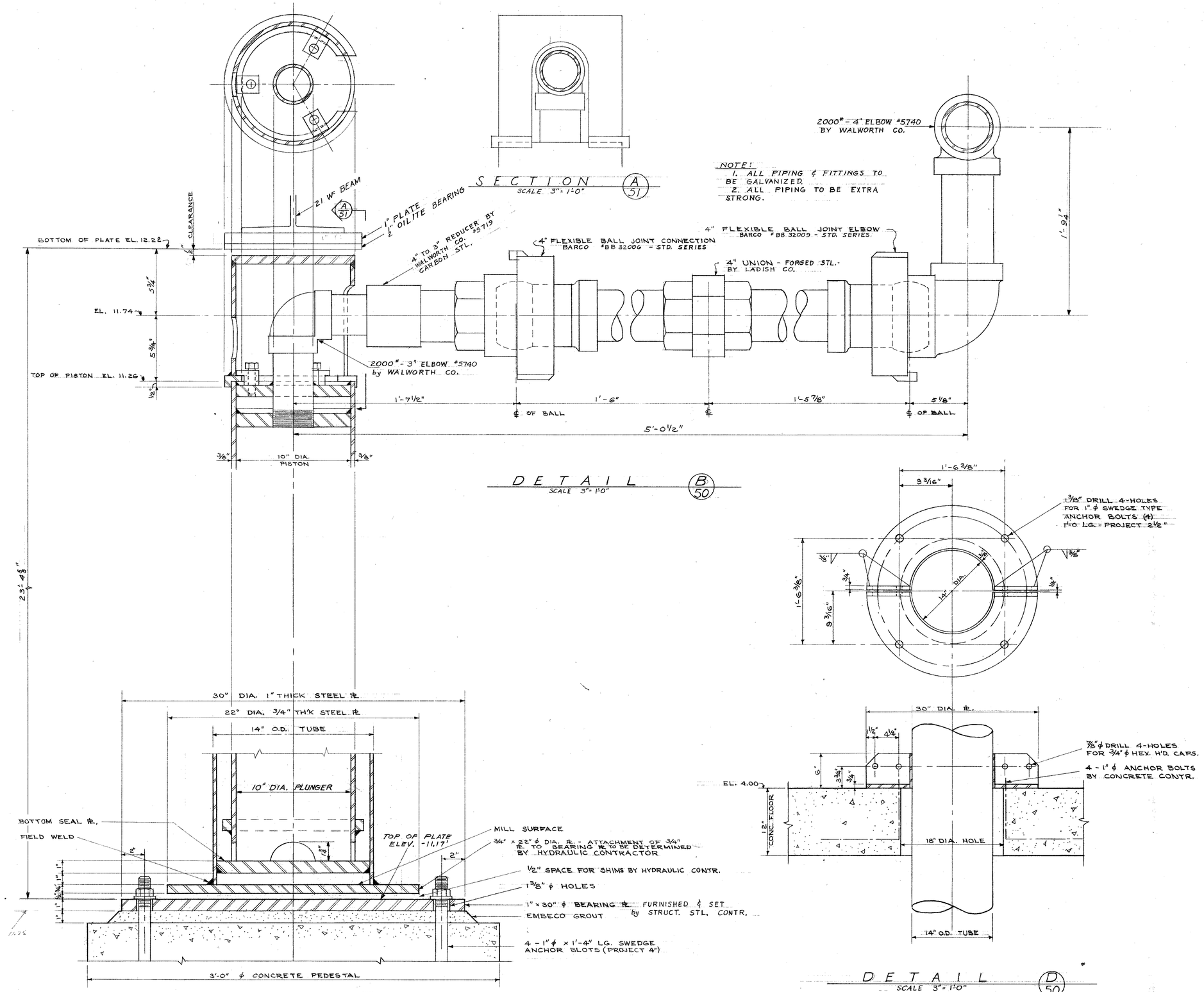

WISCONSIN
GEORGE C. ASHTON
MILWAUKEE, WISCONSIN
PROFESSIONAL ENGINEER

DEPARTMENT OF PUBLIC WORKS
BUREAU OF BRIDGES AND PUBLIC BUILDINGS
CITY OF MILWAUKEE

REVISIONS		
MARK	DATE	BY
A		
B		
C		
D		
E		
F		
G		
H		
I		
J		
K		
L		
M		

W. ST. PAUL AVE.-E. DETROIT ST. VERTICAL LIFT BRIDGE
OVER MILWAUKEE RIVER

HYDRAULIC EQUIPMENT-DETAILS

DESIGNED BY: J.D.P. TRACED BY: DATE:
DRAWN BY: L.F.R. CHECKED BY: J.J.M. DATE:
APPROVED: SCALE:

Norris A. Batallen — DESIGNER IN CHARGE — DATE: 6-28-65 SHEET NUMBER 51
George C. Ashton — SUPT. OF BRIDGES AND PUBLIC BUILDINGS — DATE: 7-3-65 SET OF SHEETS
Donald H. Lindsay — COMMISSIONER OF PUBLIC WORKS — DATE: 7-6-65 JOB NO. 522-001
Special Deputy

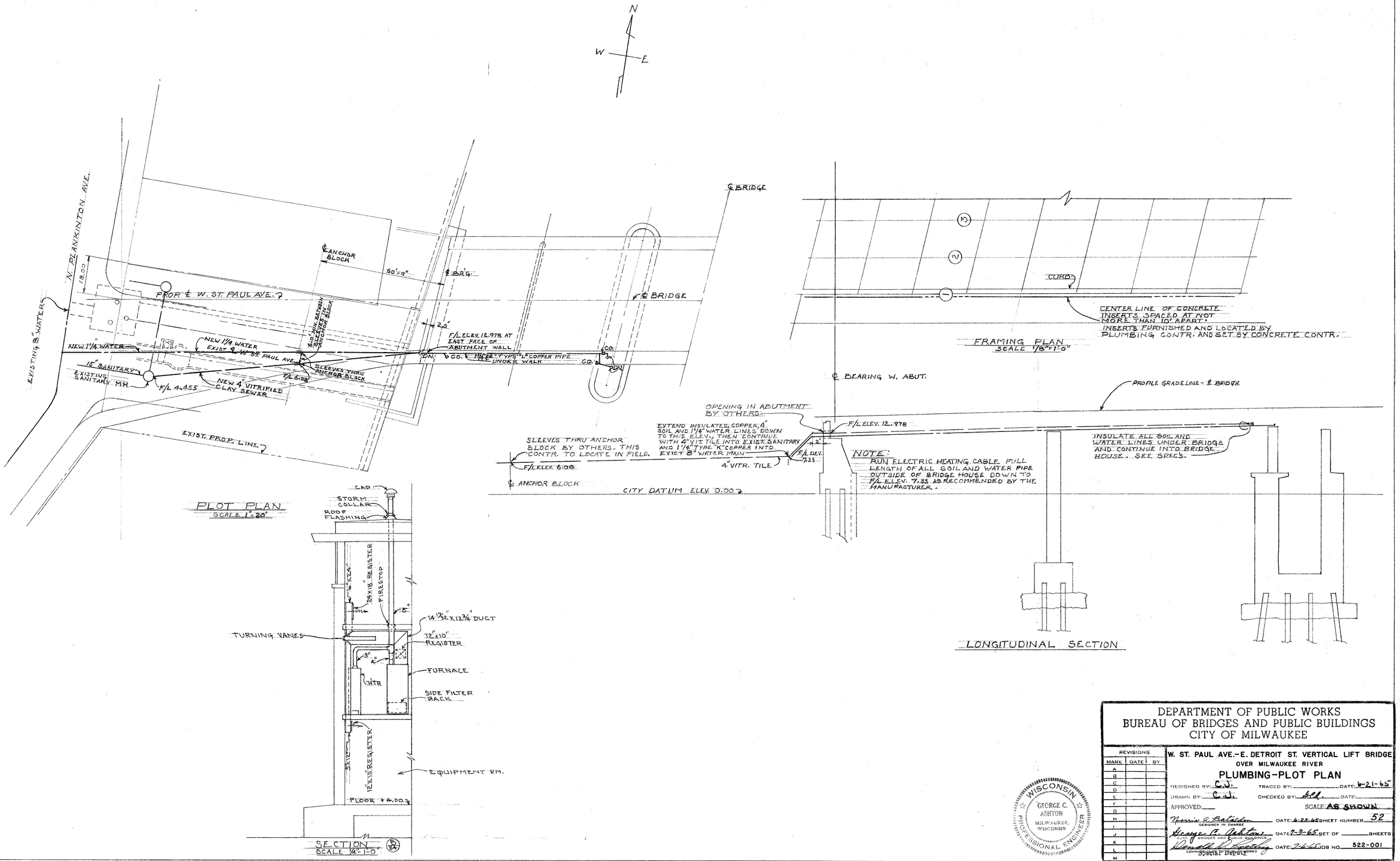

DEPARTMENT OF PUBLIC WORKS
BUREAU OF BRIDGES AND PUBLIC BUILDINGS
CITY OF MILWAUKEE

REVISIONS		
MARK	DATE	BY
A		
B		
C		
D		
E		
F		
G		
H		
I		
J		
K		
L		
M		

W. ST. PAUL AVE.-E. DETROIT ST. VERTICAL LIFT BRIDGE
OVER MILWAUKEE RIVER

PLUMBING-PLOT PLAN

DESIGNED BY: C.J. TRACED BY: DATE: 6-21-65
DRAWN BY: C.J. CHECKED BY: GCA DATE:
APPROVED: SCALE: AS SHOWN
Norris A. Batelden DATE: 6-28-65 SHEET NUMBER 52
DESIGNER IN CHARGE
George C. Ashton DATE: 7-3-65 SET OF SHEETS
SUPT. OF BRIDGES AND PUBLIC BUILDINGS
Donald D. Spalding DATE: 7-6-65 JOB NO. 522-001
COMMISSIONER OF PUBLIC WORKS

PLUMBING DRAWINGS SHEETS 52 & 53

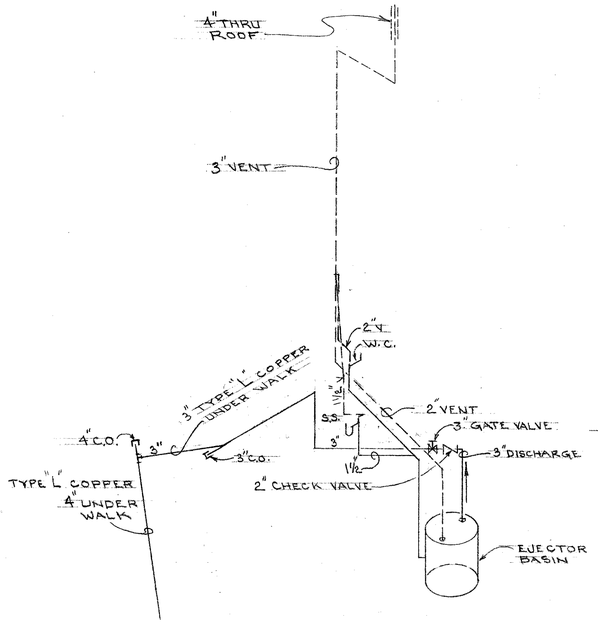

DIAGRAMMATIC DRAINS & VENTS
NO SCALE

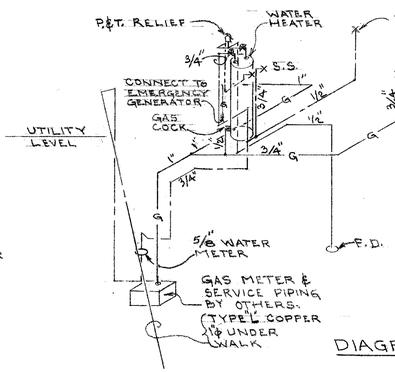

DIAGRAMMATIC WATER & GAS
NO SCALE

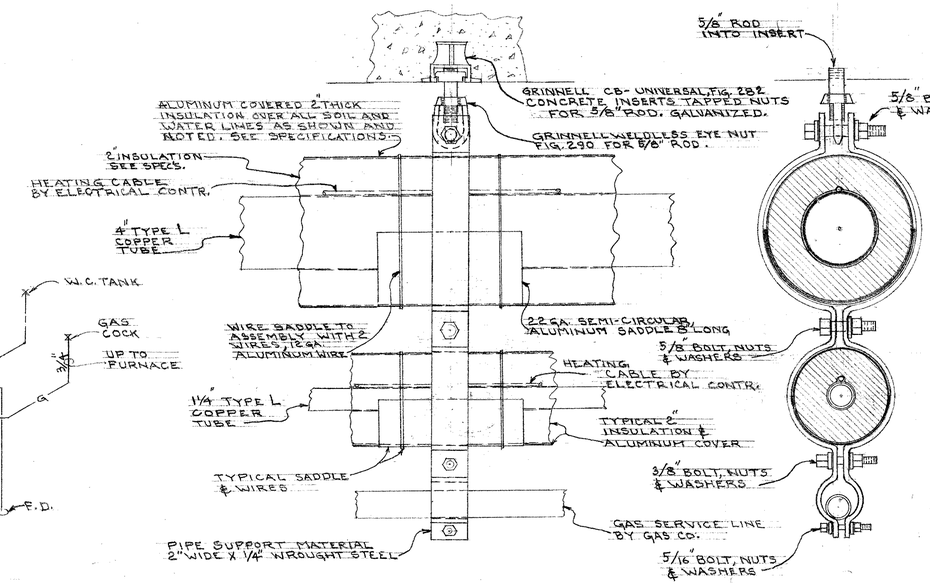

TYPICAL PIPE & SUPPORT ASSEMBLY
SCALE 3" = 1'-0"

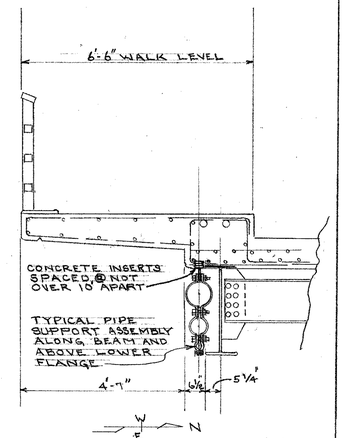

SECTION
SCALE 1/2" = 1'-0"

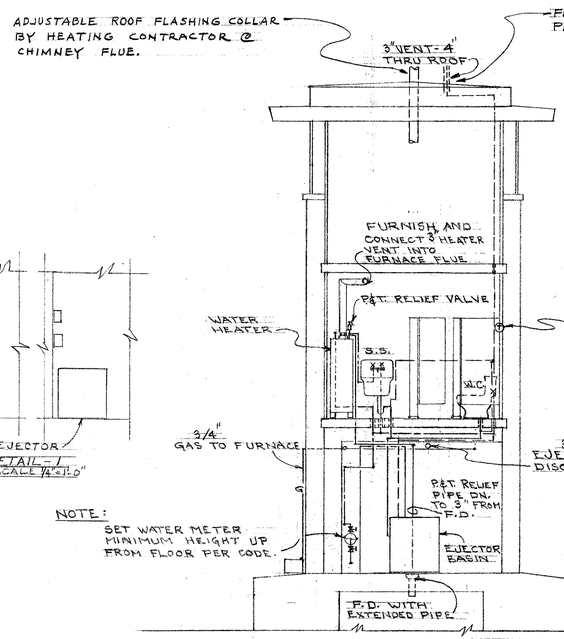

CROSS SECTION
SCALE 1/4" = 1'-0"

LEGEND:

- DRAIN LINES
- VENT
- COLD WATER
- HOT WATER
- G GAS
- GATE VALVE
- CHECK VALVE
- X GAS COCK
- W.C. WATER CLOSET
- S.S. SERVICE SINK
- F.D. FLOOR DRAIN
- P.T. PRESSURE & TEMPERATURE RELIEF VALVE
- T THERMOSTAT
- T.C.O. CLEANOUT

NOTE:
ALL INSULATION IN BRIDGE HOUSE IS 1/2" THICK ON PIPES.

NOTE:
PLUMBING CONTRACTOR RUN 1" GAS PIPE DOWN TO, AND MAKE FINAL CONNECTIONS TO, EMERGENCY GENERATOR AT SITE.

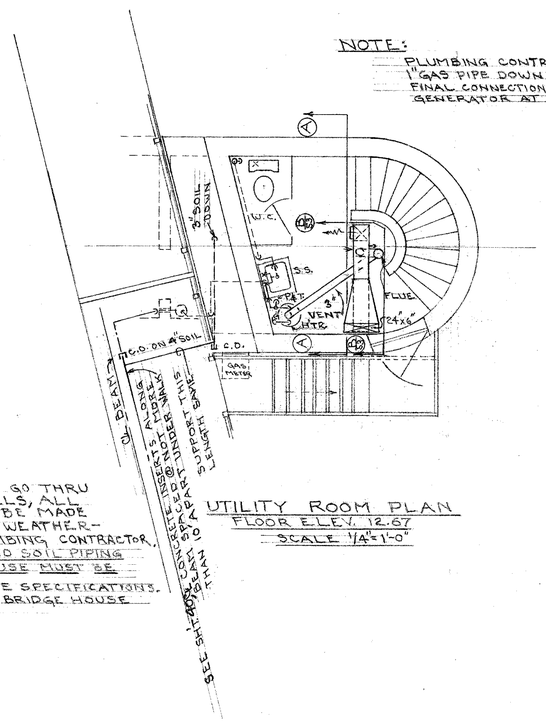

UTILITY ROOM PLAN
FLOOR ELEV. 12.67
SCALE 1/4" = 1'-0"

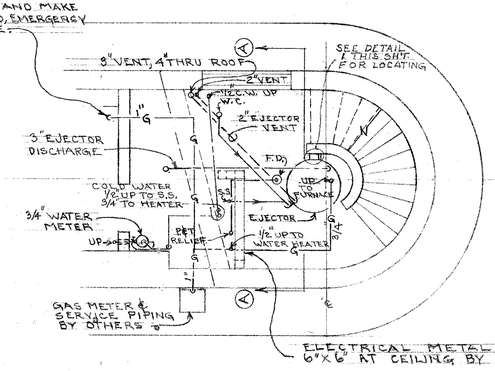

EQUIPMENT ROOM PLAN
FLOOR ELEV. +4.00
SCALE 1/4" = 1'-0"

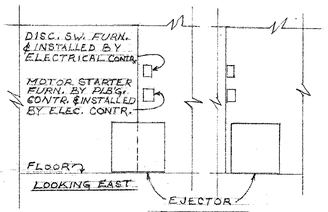

DETAIL 1
SCALE 1/4" = 1'-0"

NOTE:
SET WATER METER MINIMUM HEIGHT UP FROM FLOOR PER CODE.

NOTE:
WHERE PIPES GO THRU ROOF OR WALLS, ALL HOLES MUST BE MADE COMPLETELY WEATHER-TIGHT BY PLUMBING CONTRACTOR. ALL WATER AND SOIL PIPING IN BRIDGE HOUSE MUST BE INSULATED. SEE SPECIFICATIONS. INSULATION IN BRIDGE HOUSE 1/2" THICK.

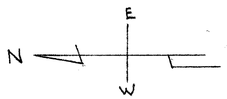

WISCONSIN
GEORGE C. ASHTON
MILWAUKEE, WISCONSIN
PROFESSIONAL ENGINEER

DEPARTMENT OF PUBLIC WORKS
BUREAU OF BRIDGES AND PUBLIC BUILDINGS
CITY OF MILWAUKEE

REVISIONS		
MARK	DATE	BY
A		
B		
C		
D		
E		
F		
G		
H		
I		
J		
K		
L		
M		

W. ST. PAUL AVE.-E. DETROIT ST. VERTICAL LIFT BRIDGE
OVER MILWAUKEE RIVER

PLUMBING & HEATING-OPERATOR'S HOUSE

DESIGNED BY C.N. TRACED BY ____ DATE 6-21-65
DRAWN BY C.N. CHECKED BY G.C.A. DATE ____
APPROVED ____ SCALE AS SHOWN
Norris A. Batalden, DESIGNER IN CHARGE — DATE 6-28-65 — SHEET NUMBER 53
George C. Ashton, CHIEF, BRIDGES AND PUBLIC BUILDINGS — DATE 7-3-65 — SET OF ____ SHEETS
Richard D. Buckley, COMMISSIONER OF PUBLIC WORKS, Special Deputy — DATE 7-6-65 — JOB NO. 522-001

PLUMBING DRAWINGS SHEETS 52 & 53

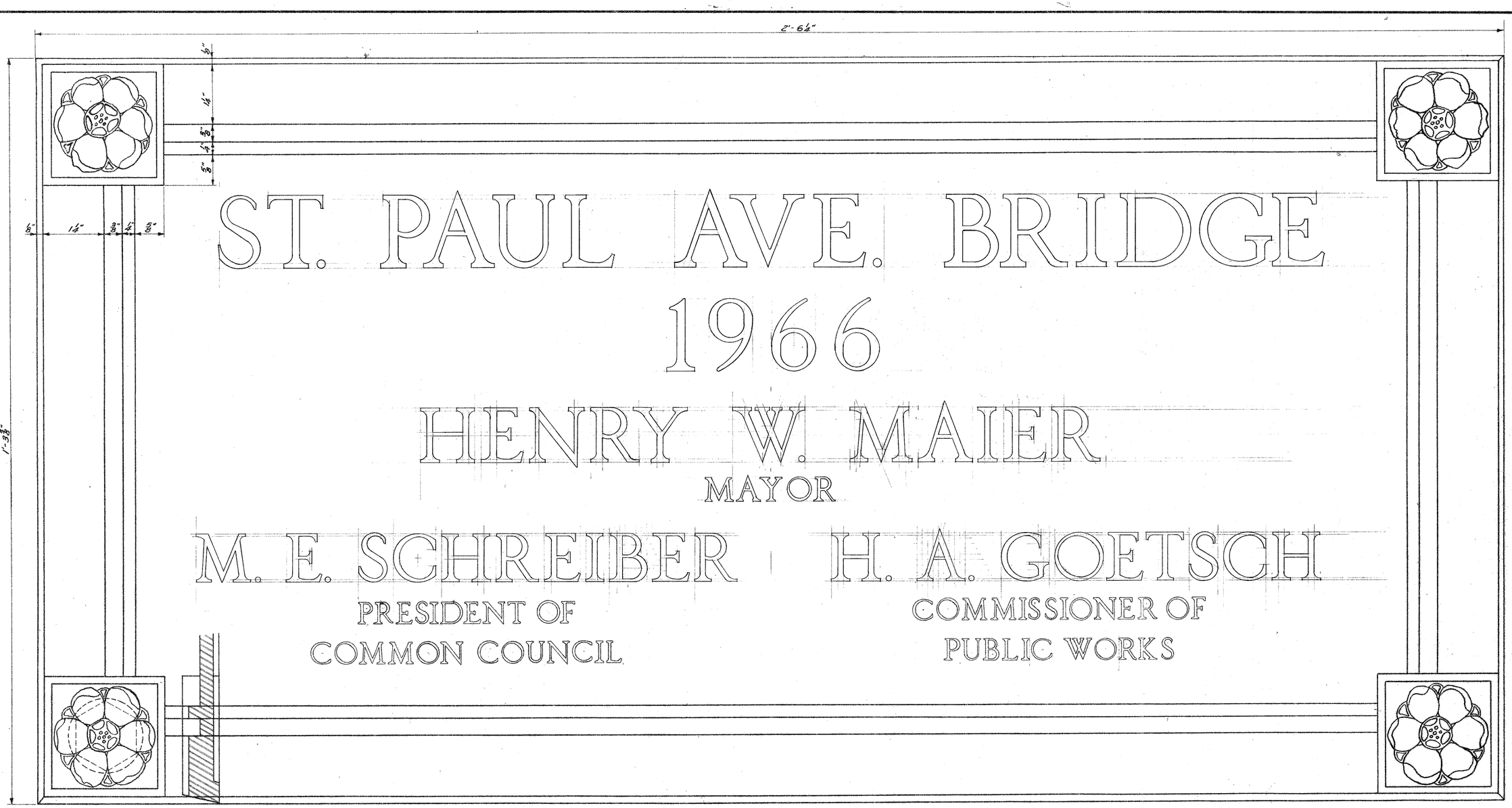

ST. PAUL AVE. BRIDGE
1966

HENRY W. MAIER
MAYOR

M. E. SCHREIBER
PRESIDENT OF
COMMON COUNCIL

H. A. GOETSCH
COMMISSIONER OF
PUBLIC WORKS

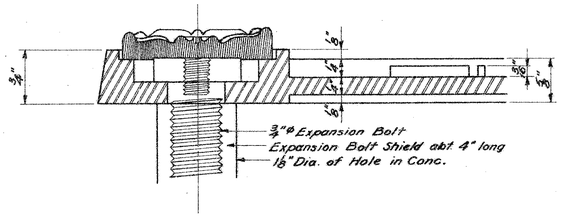

FULL SIZE DETAIL OF BRONZE NAME PLATE
1 REQUIRED

SEE SH. NO. 17 FOR LOCATION ON NORTH ELEVATION

Finish:
Highlights fine emery finish.
Background oxidized statuary bronze finish.

WISCONSIN
GEORGE C. ASHTON
MILWAUKEE, WISCONSIN
PROFESSIONAL ENGINEER

DEPARTMENT OF PUBLIC WORKS
BUREAU OF BRIDGES AND PUBLIC BUILDINGS
CITY OF MILWAUKEE

REVISIONS		
MARK	DATE	BY
A		
B		
C		
D		
E		
F		
G		
H		
I		
J		
K		
L		
M		

W. ST. PAUL AVE.-E. DETROIT ST. VERTICAL LIFT BRIDGE
OVER MILWAUKEE RIVER
NAME PLATE

DESIGNED BY: J. J. M. TRACED BY: _____ DATE: _____
DRAWN BY: P. C. B. CHECKED BY: GCA. DATE: _____
APPROVED: _____ SCALE: _____

Norris C. Batalden — DESIGNER IN CHARGE — DATE: 6-28-65 SHEET NUMBER 54
George C. Ashton — CHIEF OF BRIDGES AND PUBLIC BUILDINGS — DATE: 7-3-65 SET OF _____ SHEETS
Donald W. Lutting — COMMISSIONER OF PUBLIC WORKS — DATE: 7-6-65 JOB NO. 522-001
Special Deputy

NO. 125—200—4-27-55

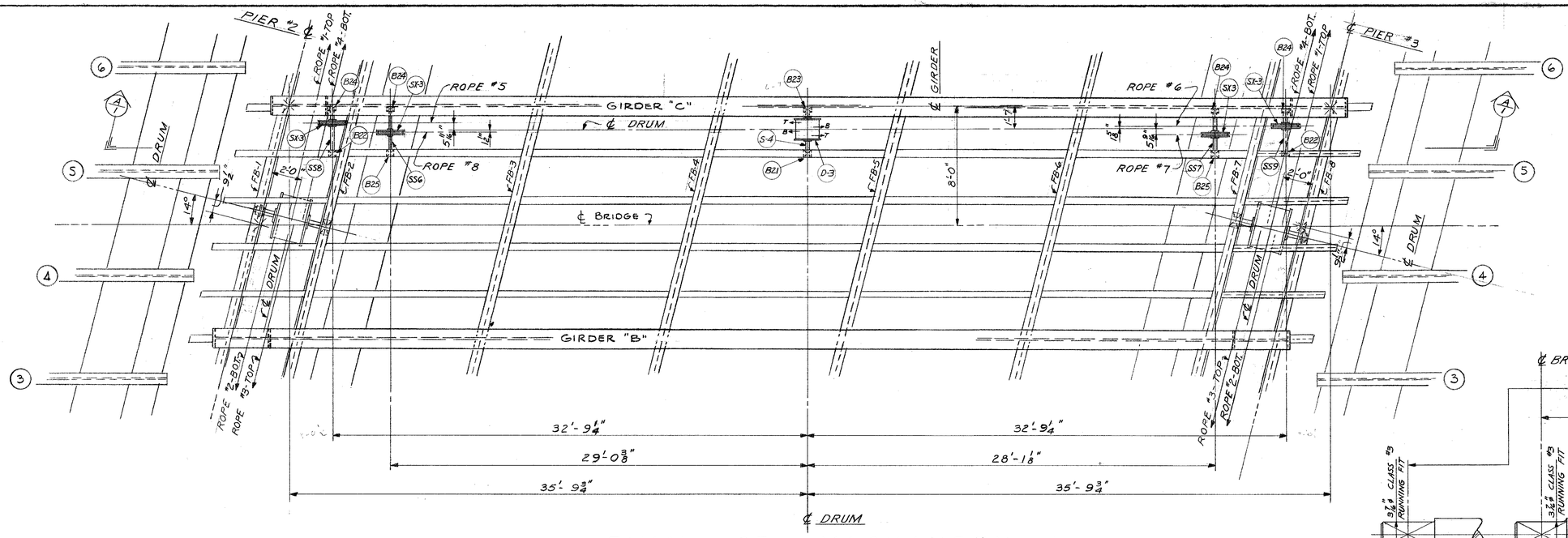

PLAN OF MACHINERY
SCALE 1/4"=1'-0"

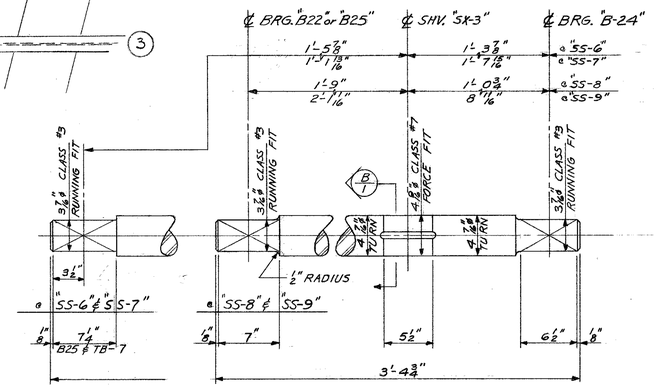

1 -	SHAFT	SS - 6
1 -	"	SS - 7
1 -	"	SS - 8
1 -	"	SS - 9

4½"φ SHAFT
AISI C 1018 STEEL

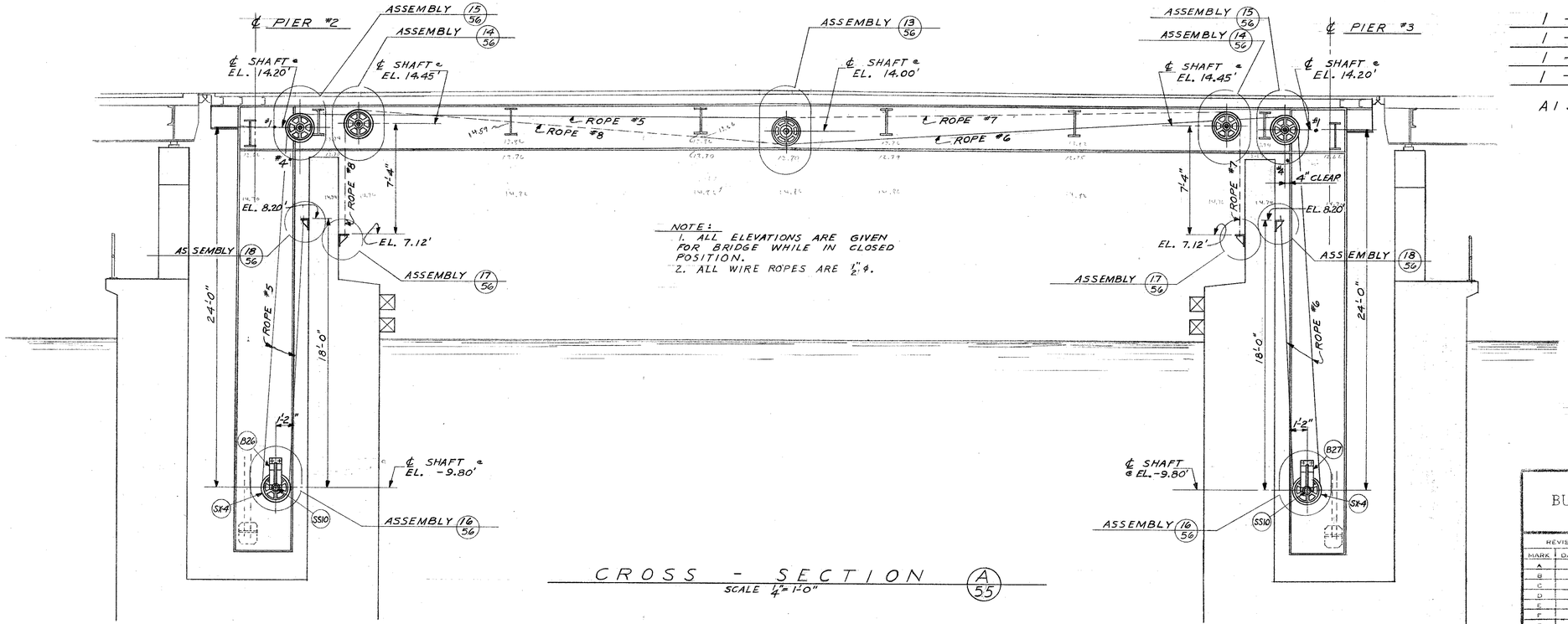

NOTE:
1. ALL ELEVATIONS ARE GIVEN FOR BRIDGE WHILE IN CLOSED POSITION.
2. ALL WIRE ROPES ARE ½"φ.

CROSS - SECTION A/55
SCALE 1/4"=1'-0"

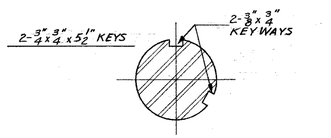

SECTION B/1
SCALE 3"=1'-0"

NOTE:
THE ADDITION OF SHEETS #55, #56 AND #57 HAS CAUSED CORRESPONDING REVISIONS IN SHEET #1, #13, #14, #16, #22, #23, #25, #27, #30, #31, #32, #33, #36 & #37.

DEPARTMENT OF PUBLIC WORKS
BUREAU OF BRIDGES AND PUBLIC BUILDINGS
CITY OF MILWAUKEE

REVISIONS		
MARK	DATE	BY
A		
B		
C		
D		
E		
F		
G		
H		
I		
J		
K		
L		
M		

W. ST. PAUL AVE.-E. DETROIT ST. VERTICAL LIFT BRIDGE
OVER MILWAUKEE RIVER

PLAN OF MACHINERY - REVISED

DESIGNED BY: J.J.M. TRACED BY: DATE:
DRAWN BY: L.F.R. CHECKED BY: J.J.M. DATE: 10-6-65
APPROVED: SCALE:
Morris A. Batelden DESIGNER IN CHARGE DATE: 10/6/65 SHEET NUMBER 55
George C. Ashton SUPT. OF BRIDGES AND PUBLIC BUILDINGS DATE: 10/4/65 SET OF SHEETS
COMMISSIONER OF PUBLIC WORKS DATE: JOB NO. 522-001

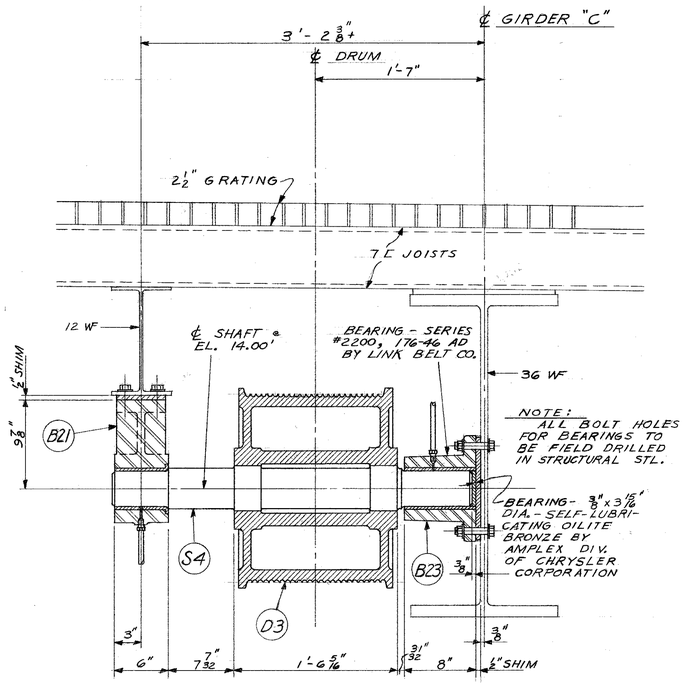

ASSEMBLY (13/55)
SCALE 1 1/2" = 1'-0"

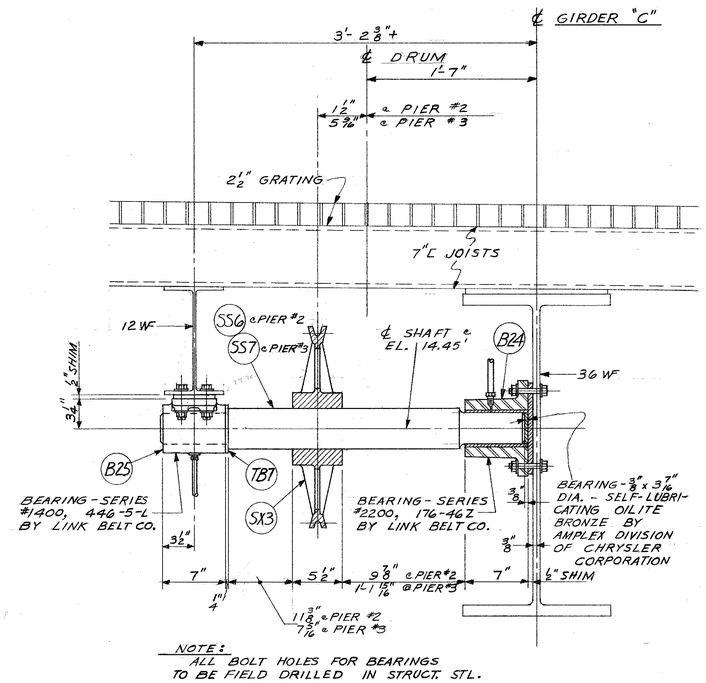

ASSEMBLY (14/55)
SCALE 1 1/2" = 1'-0"

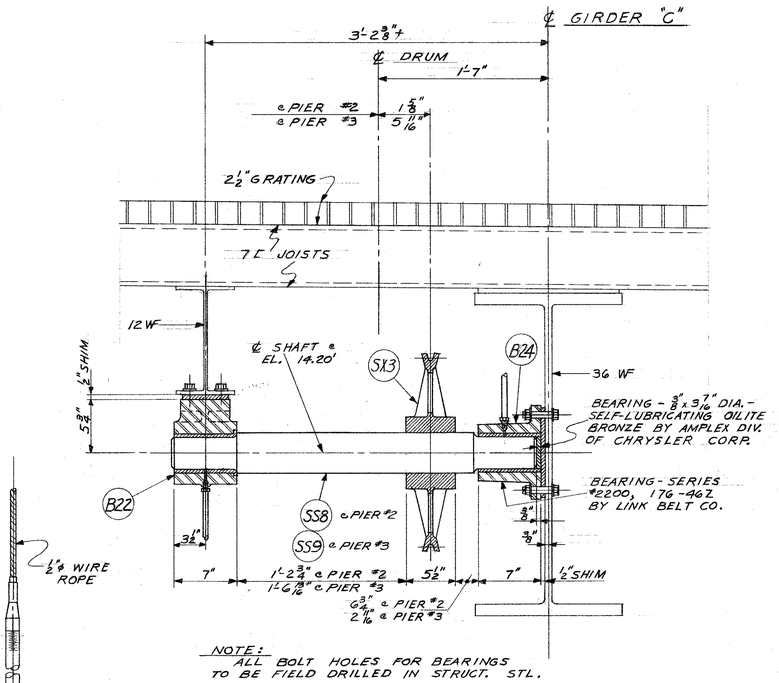

ASSEMBLY (15/55)
SCALE 1 1/2" = 1'-0"

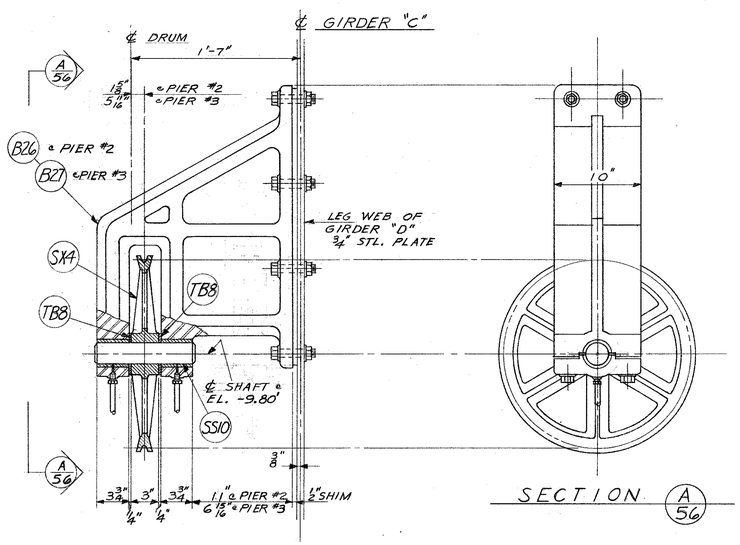

NOTE: ALL BOLTS FOR BEARINGS TO BE FIELD DRILLED IN STRUCT. STEEL.

ASSEMBLY (16/55)
SCALE 1 1/2" = 1'-0"

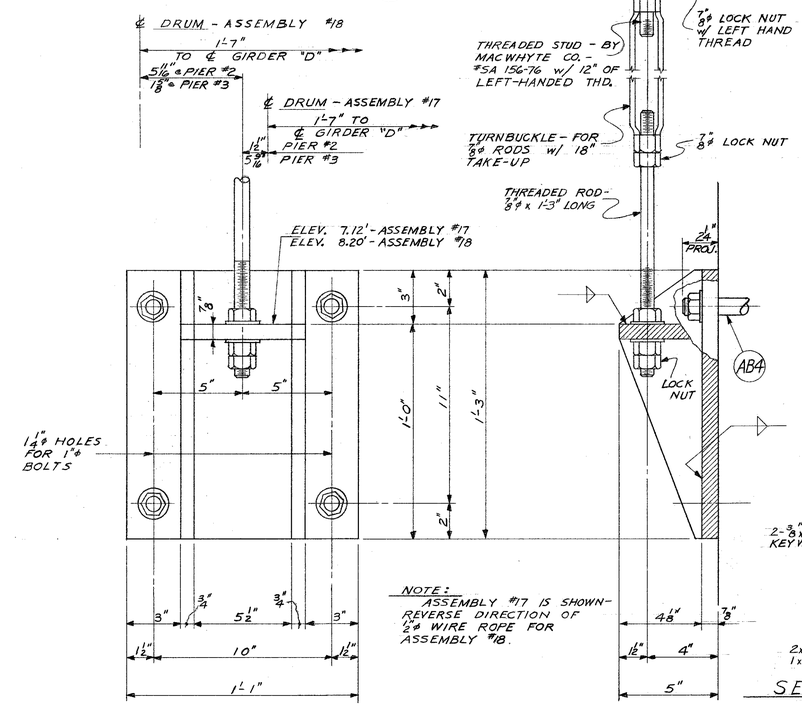

ASSEMBLY (17/55) (18/55)
SCALE 1 1/2" = 1'-0"

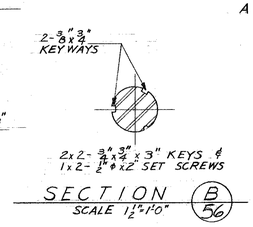

SECTION (B/56)
SCALE 1 1/2" = 1'-0"

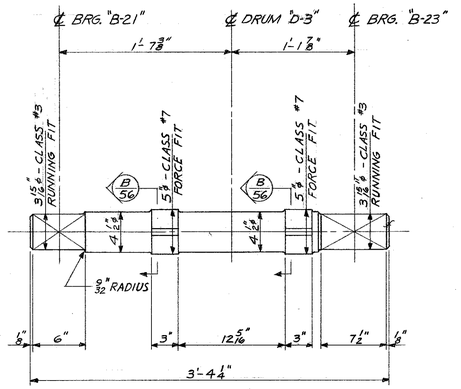

1 - SHAFT S-4
5" ø SHAFT
AISI C 1018 STEEL

DEPARTMENT OF PUBLIC WORKS
BUREAU OF BRIDGES AND PUBLIC BUILDINGS
CITY OF MILWAUKEE

REVISIONS		
MARK	DATE	BY
A		
B		
C		
D		
E		
F		
G		
H		
I		
J		
K		
L		
M		

W. ST. PAUL AVE. - E. DETROIT ST. VERTICAL LIFT BRIDGE
OVER MILWAUKEE RIVER

MACHINERY - ASSEMBLIES - ADDITIONAL

DESIGNED BY: J.J.M. TRACED BY: DATE:
DRAWN BY: L.F.R. CHECKED BY: J.J.M. DATE: 10-6-65
APPROVED: SCALE:
Morris C. Batalden, DESIGNER IN CHARGE — DATE: 10/4/65 — SHEET NUMBER 56
George C. Ashton, SUPT. OF BRIDGES AND PUBLIC BUILDINGS — DATE: 10/4/65 — SET OF SHEETS
COMMISSIONER OF PUBLIC WORKS — DATE: JOB NO. 522-001

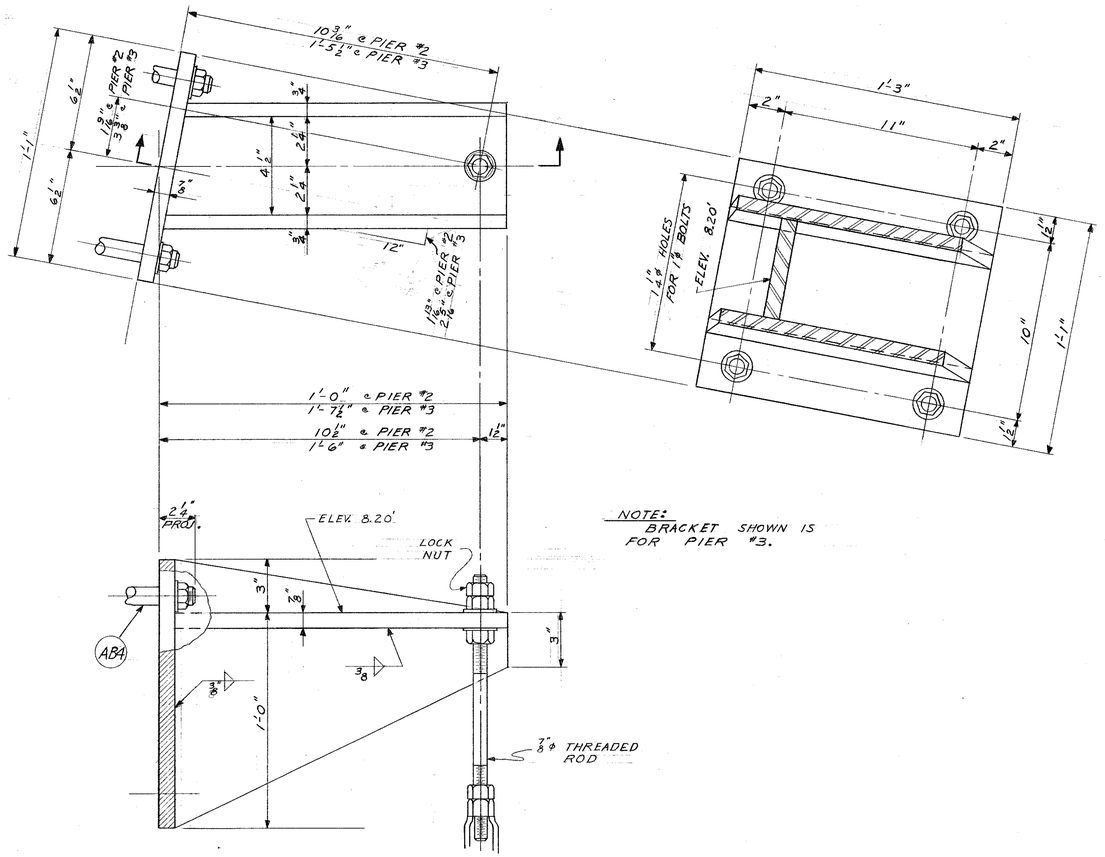

NOTE:
BRACKET SHOWN IS FOR PIER #3.

ASSEMBLY (18/56) REVISED
SCALE 3"=1'-0"

DEPARTMENT OF PUBLIC WORKS
BUREAU OF BRIDGES AND PUBLIC BUILDINGS
CITY OF MILWAUKEE

REVISIONS		
MARK	DATE	BY
A		
B		
C		
D		
E		
F		
G		
H		
I		
J		
K		
L		
M		

W. ST. PAUL AVE.-E. DETROIT ST. VERTICAL LIFT BRIDGE
OVER MILWAUKEE RIVER

MACHINERY - ASSEMBLIES - REVISIONS

DESIGNED BY: L.F.R. TRACED BY: DATE:
DRAWN BY: L.F.R. CHECKED BY: N.A.B. DATE: 9-8-66
APPROVED:— SCALE: AS NOTED

Norris A. Batelden — DESIGNER IN CHARGE — DATE: 9-8-66 SHEET NUMBER 56A
George C. Ashton — SUPT. OF BRIDGES AND PUBLIC BUILDINGS — DATE: 9-8-66 SET OF SHEETS
COMMISSIONER OF PUBLIC WORKS — DATE: JOB NO. 522-001

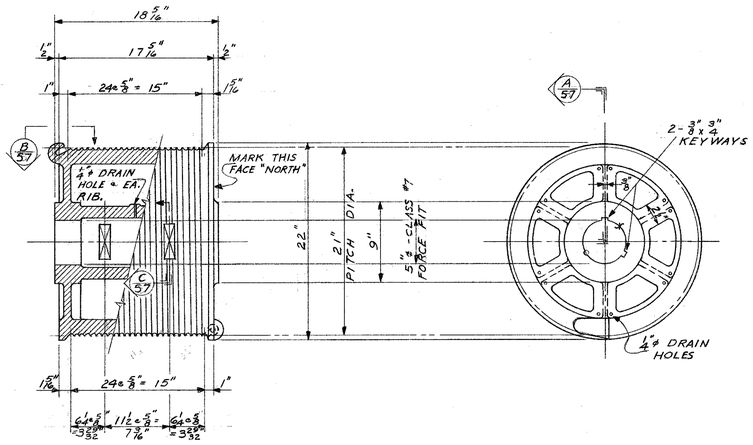

1 - DRUM "D-3"
CAST STEEL

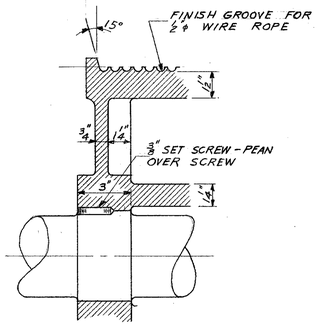

SECTION A 57
SCALE 3"=1'-0"

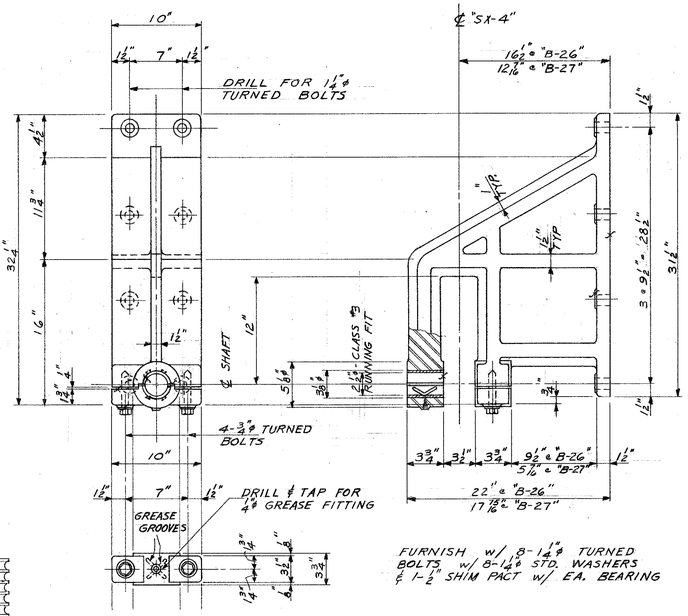

FURNISH w/ 8-1 1/4" TURNED BOLTS w/ 8-1 1/4" STD. WASHERS & 1-1/2" SHIM PACT w/ EA. BEARING

1 - BEARING "B-26"
1 - BEARING "B-27"
CAST STEEL
PHOSPHOR BRONZE BUSHINGS

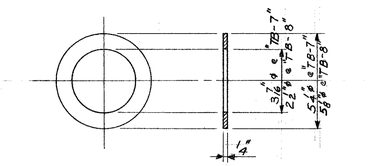

2 - THRUST BEARINGS TB-7
2 - " " TB-8
SELF LUBRICATING OILITE BRONZE
AMPLEX DIVISION - CHRYSLER CORPORATION

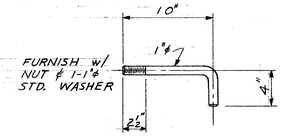

16 - ANCHOR BOLTS AB-4

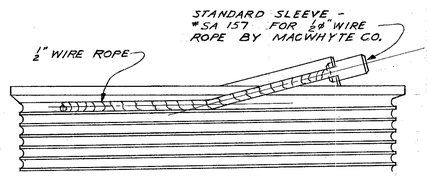

SECTION B 57
SCALE 3"=1'-0"

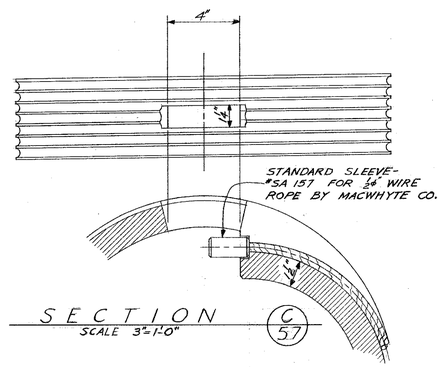

SECTION C 57
SCALE 3"=1'-0"

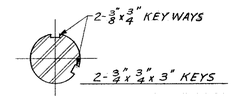

SECTION D 57
SCALE 3"=1'-0"

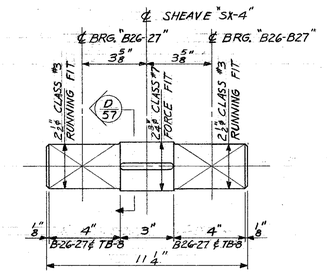

2 - SHAFTS "SS-10"
2 3/4" SHAFT
AISI C 1018 STEEL

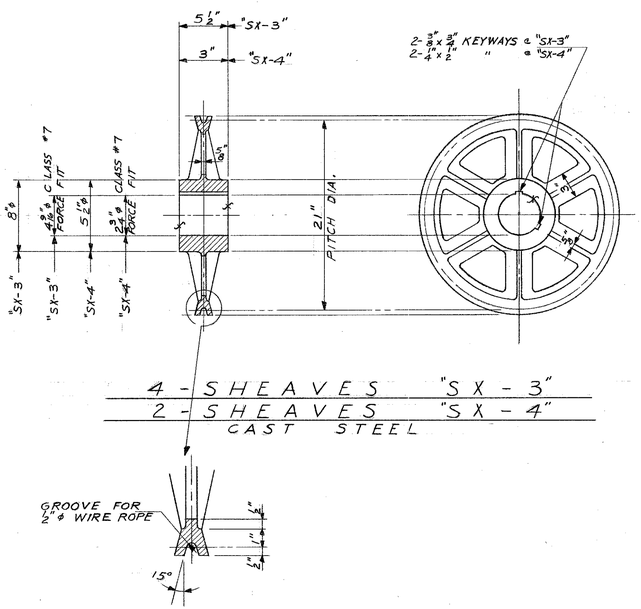

4 - SHEAVES "SX-3"
2 - SHEAVES "SX-4"
CAST STEEL

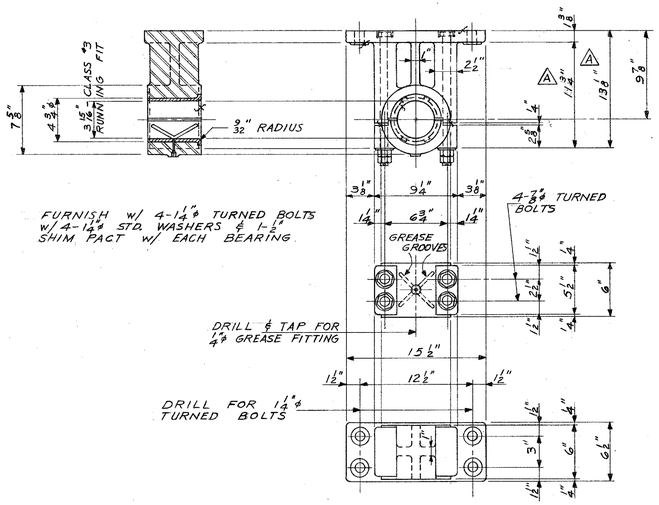

1 - BEARINGS "B-21"
CAST STEEL
PHOSPHOR BRONZE BUSHINGS

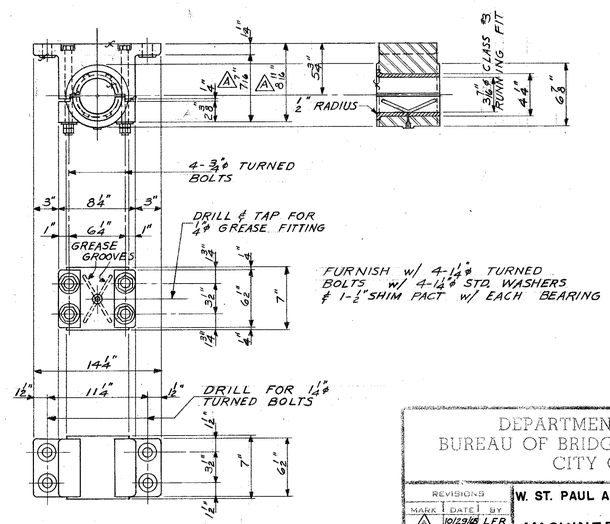

2 - BEARINGS "B-22"
CAST STEEL
PHOSPHOR BRONZE BUSHINGS

DEPARTMENT OF PUBLIC WORKS
BUREAU OF BRIDGES AND PUBLIC BUILDINGS
CITY OF MILWAUKEE

REVISIONS

MARK	DATE	BY
A	10/29/68	L.F.R.
B		
C		
D		
E		
F		
G		
H		
I		
J		
K		
L		
M		

W. ST. PAUL AVE. - E. DETROIT ST. VERTICAL LIFT BRIDGE
OVER MILWAUKEE RIVER
MACHINERY - PARTS - ADDITIONAL

DESIGNED BY: J.J.M. TRACED BY: DATE:
DRAWN BY: L.F.R. CHECKED BY: J.J.M. DATE: 10-6-65
APPROVED: SCALE:
Harry C. Batalden DATE: 12/4/65 SHEET NUMBER: 57
DESIGNER IN CHARGE
George P. Ashton DATE: 12/4/65 SHEET OF SHEETS
SUPT. OF BRIDGE AND PUBLIC BUILDINGS
DATE: JOB NO. 522-001
COMMISSIONER OF PUBLIC WORKS

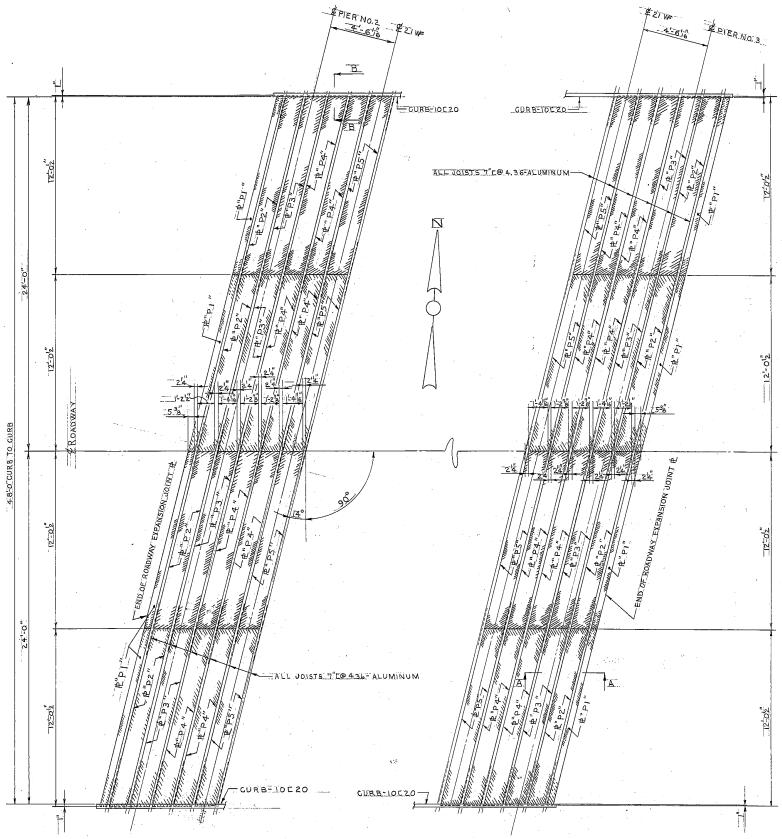

PLAN - ST. PAUL ST. BRIDGE
SCALE: 1/4" = 1'-0"

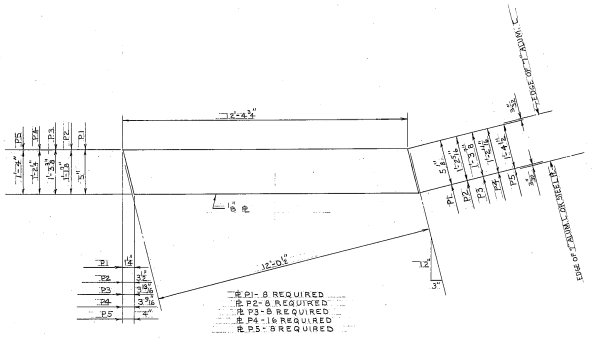

ASPHALT SUPPORT PLATES
NO SCALE

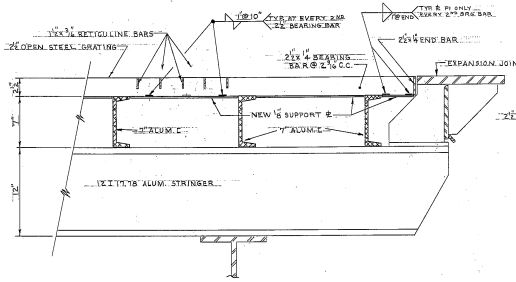

SECTION A-A
SCALE: 1 1/2" = 1'-0"

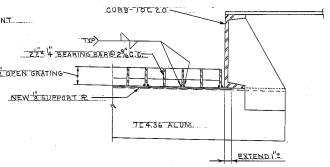

SECTION B-B
SCALE: 1 1/2" = 1'-0"

DEPARTMENT OF PUBLIC WORKS
BUREAU OF BRIDGES AND PUBLIC BUILDINGS
CITY OF MILWAUKEE

REVISIONS		
MARK	DATE	BY
A		
B		
C		
D		
E		
F		
G		
H		
I		
J		
K		
L		
M		

W. ST. PAUL AVE. VERTICAL LIFT BRIDGE
OVER MILWAUKEE RIVER
ASPHALT SUPPORT PLATES OVER PIER MACHINERY PITS

DESIGNED BY: _____ TRACED BY: _____ DATE: _____
DRAWN BY: R.L.K. CHECKED BY: N.A.B. DATE: 4-21-69
APPROVED:— SCALE: AS SHOWN
Norris A. Batalden — DESIGNER IN CHARGE — DATE: 4-21-69 SHEET NUMBER T
George C. Ashton — CHIEF OF BRIDGES AND PUBLIC BUILDINGS — DATE: 4-21-69 SET OF T SHEETS
_____ COMMISSIONER OF PUBLIC WORKS — DATE: _____ JOB NO. 522-13

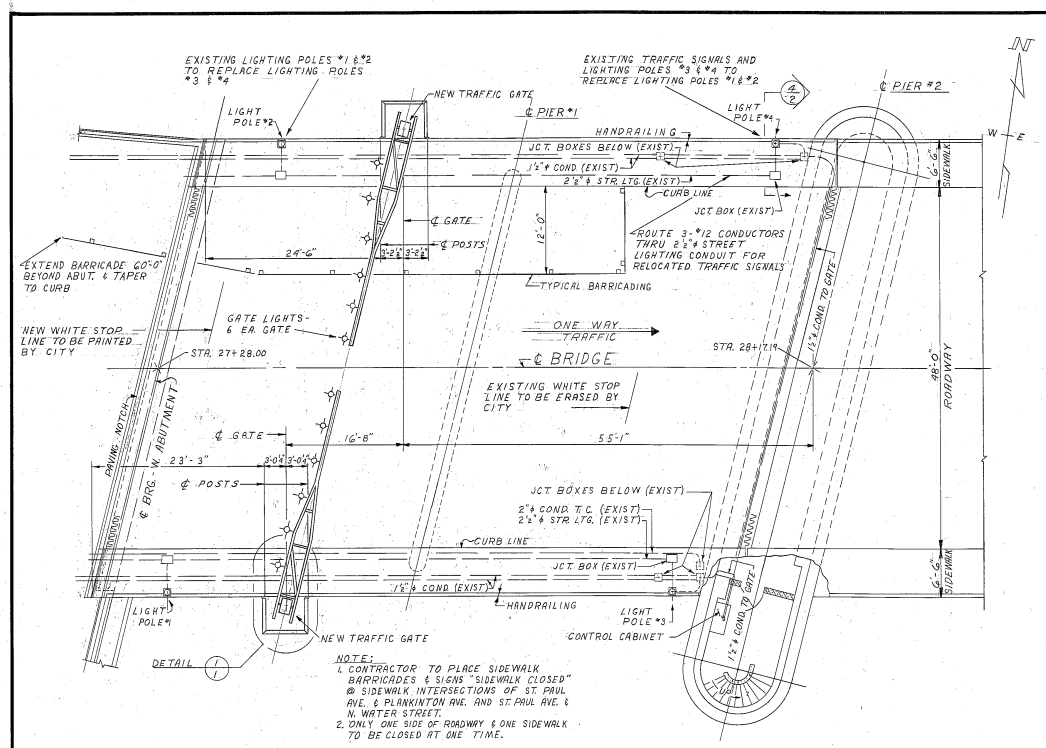

NOTE:
1. CONTRACTOR TO PLACE SIDEWALK BARRICADES & SIGNS "SIDEWALK CLOSED" @ SIDEWALK INTERSECTIONS OF ST. PAUL AVE. & PLANKINTON AVE. AND ST. PAUL AVE. & N. WATER STREET.
2. ONLY ONE SIDE OF ROADWAY & ONE SIDEWALK TO BE CLOSED AT ONE TIME.

PLAN OF TRAFFIC GATE INSTALLATION

SCALE 1/8" = 1'-0"

TRAFFIC GATES	
PROJECT A	
1. ST. PAUL AVE. VERT. LIFT BRIDGE	GENERAL PLAN
2. ST. PAUL AVE VERT. LIFT BRIDGE	SECT. & DETAILS
3. ST. PAUL AVE VERT. LIFT BRIDGE	WIRING
PROJECT B	
1. CLYBOURN AVE. VERT. LIFT BRIDGE	GENERAL PLAN
2. CLYBOURN AVE. VERT. LIFT BRIDGE	SECT. & DETAILS
3. CLYBOURN AVE. VERT. LIFT BRIDGE	WIRING
PROJECT C	
1. PLEASANT ST. VERT. LIFT BRIDGE	GENERAL PLAN
2. PLEASANT ST. VERT. LIFT BRIDGE	SECT. & DETAILS
3. PLEASANT ST. VERT. LIFT BRIDGE	WIRING

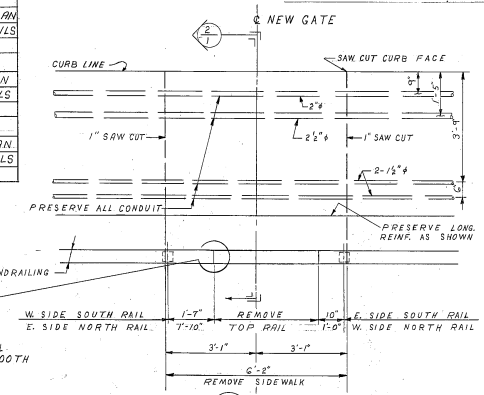

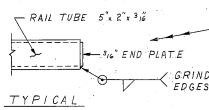

TYPICAL

DETAIL 1/1 EXISTING

SCALE 1/2" = 1'-0"

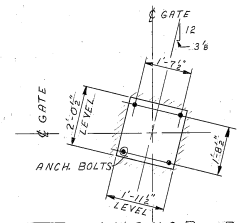

GATE ANCHOR BOLT SETTING DETAIL

SCALE 1/2" = 1'-0"

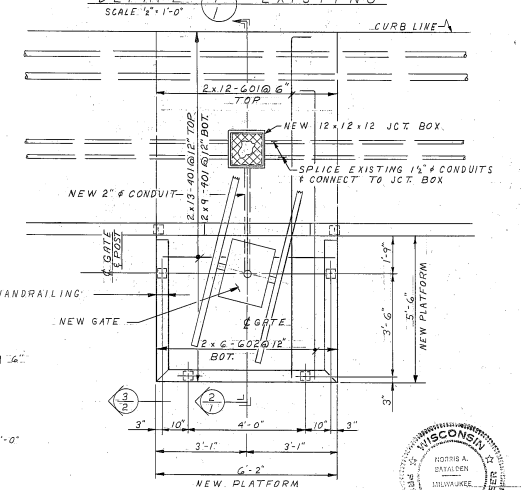

DETAIL 1/1 NEW

SCALE 1/2" = 1'-0"

BILL OF REINFORCEMENT			
MARK	NUMBER	LENGTH	TYPE
401	44	5'-10"	STR.
601	24	12'-2"	601
602	12	10'-11"	602

NOTE:
THE FIRST DIGIT OF A THREE DIGIT BAR MARK AND THE FIRST TWO DIGITS OF A FOUR DIGIT BAR MARK INDICATES THE SIZE OF THE BAR.

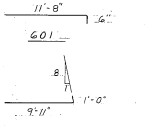

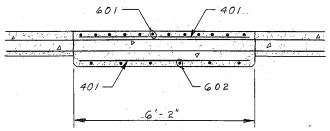

SECTION 3/1

SCALE 1/2" = 1'-0"

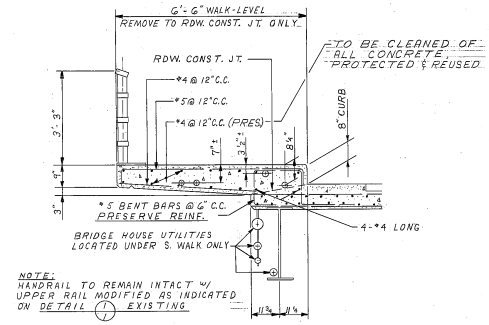

NOTE:
HANDRAIL TO REMAIN INTACT W/ UPPER RAIL MODIFIED AS INDICATED ON DETAIL 1/1 EXISTING

SECTION 2/1 EXISTING

SCALE 1/2" = 1'-0"

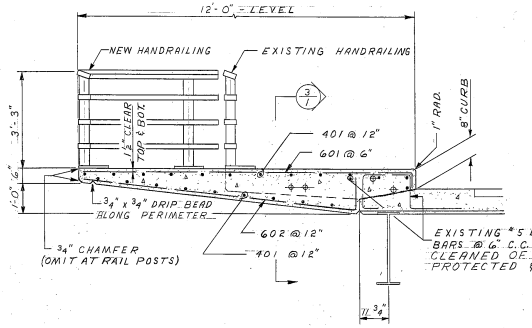

SECTION 2/1 NEW

SCALE 1/2" = 1'-0"

DEPARTMENT OF PUBLIC WORKS
BUREAU OF BRIDGES AND PUBLIC BUILDINGS
CITY OF MILWAUKEE

REVISIONS		
MARK	DATE	BY
A		
B		
C		
D		
E		
F		
G		
H		
I		
J		
K		
L		
M		

ST. PAUL AVE. VERTICAL LIFT BRIDGE
OVER MILWAUKEE RIVER

GENERAL PLAN

DESIGNED BY: R.W.M. TRACED BY: DATE:
DRAWN BY: R.W.M. CHECKED BY: L.F.R. DATE:
APPROVED:— SCALE: AS NOTED
DESIGNER IN CHARGE — DATE 4/25/77 SHEET NUMBER 1
ASST. CITY ENGINEER BRIDGES AND PUBLIC BUILDINGS — DATE 4-26-77 SET OF 3 SHEETS
COMMISSIONER OF PUBLIC WORKS — DATE 4-27-77 JOB NO. 522-38

CPE-2

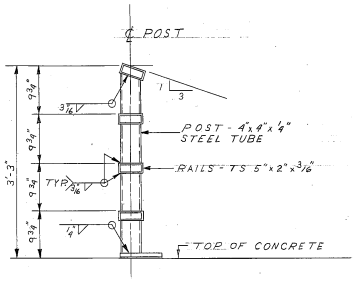

CROSS - SECTION
RAILING
SCALE 1" = 1'-0"

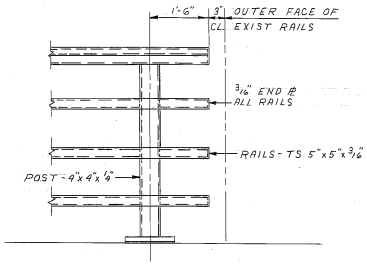

ELEVATION
RAILING
SCALE 1" = 1'-0"

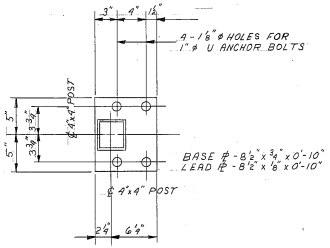

BASE PLATE DETAIL
RAILING
SCALE 1 1/2" = 1'-0"

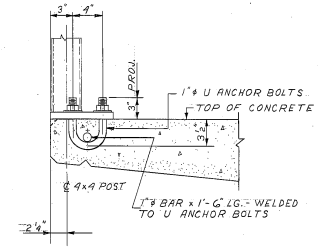

ANCHOR BOLT DETAIL
RAILING
SCALE 1 1/2" = 1'-0"

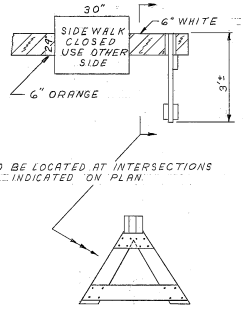

SIDEWALK BARRICADE
SCALE 1/2" = 1'-0"

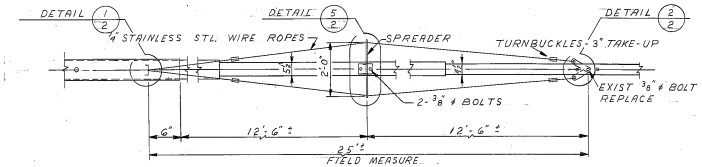

GATE ARM GUY-WIRE SUPPORT
HALF SECTION
SCALE 1/2" = 1'-0"

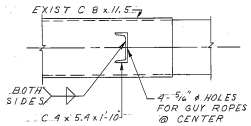

DETAIL 1/2
SCALE 1 1/2" = 1'-0"

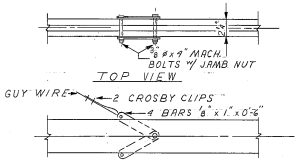

DETAIL 2/2
SCALE 1 1/2" = 1'-0"

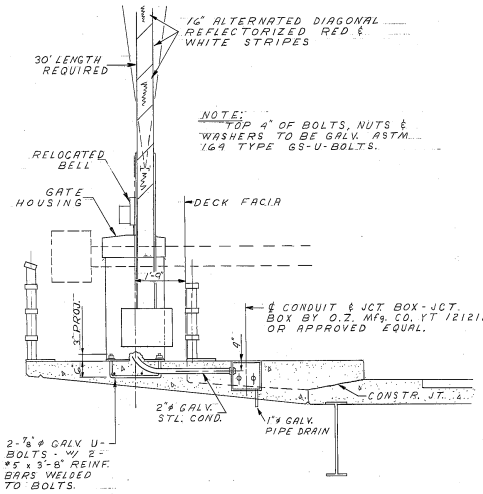

SECTION 3/1
SCALE 1/2" = 1'-0"

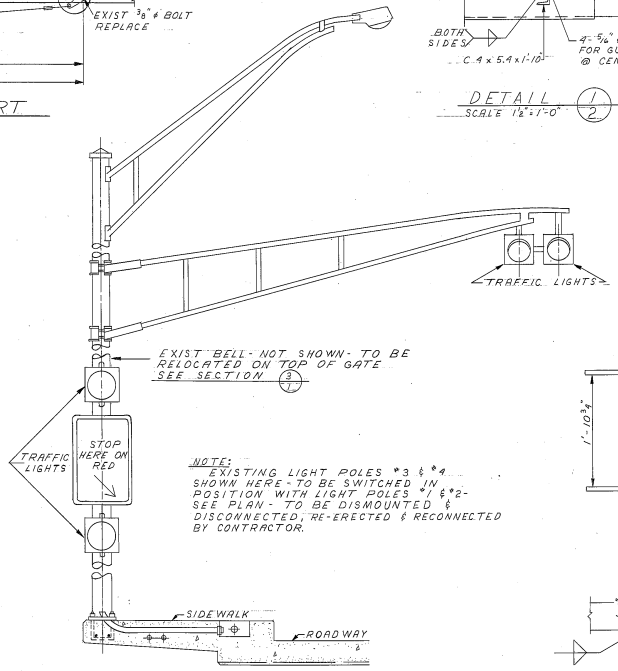

SECTION 4/1
SCALE 1/2" = 1'-0"

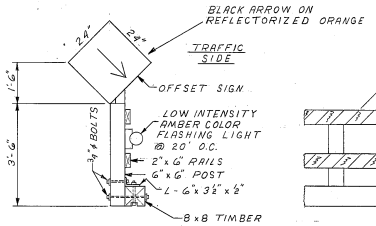

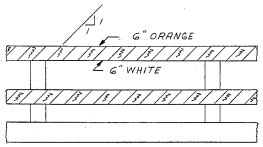

ALL BARRICADES CONFORM TO MINIMUM REQUIREMENTS FOR WARNING DEVICES, DEPARTMENT OF PUBLIC WORKS, CITY OF MILWAUKEE

ROADWAY BARRICADE
SCALE 1/2" = 1'-0"

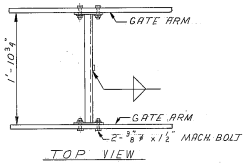

TOP VIEW

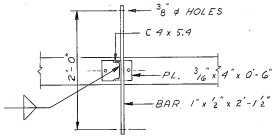

DETAIL 5/2
SCALE 1" = 1'-0"

DEPARTMENT OF PUBLIC WORKS
BUREAU OF BRIDGES AND PUBLIC BUILDINGS
CITY OF MILWAUKEE

REVISIONS		
MARK	DATE	BY
A		
B		
C		
D		
E		
F		
G		
H		
I		
J		
K		
L		
M		

ST. PAUL AVE. VERTICAL LIFT BRIDGE
OVER MILWAUKEE RIVER

SECTIONS & DETAILS

DESIGNED BY: R. W. M. TRACED BY: DATE:
DRAWN BY: R. W. M. CHECKED BY: L. F. R. DATE:
APPROVED:- SCALE: AS NOTED
DESIGNER IN CHARGE DATE: 4-25-77 SHEET NUMBER 2
ASSOCIATE ENGINEER OF BRIDGES AND PUBLIC BUILDINGS DATE: 4-26-77 SET OF 3 SHEETS
COMMISSIONER OF PUBLIC WORKS DATE: 4-27-77 JOB NO. 522-38

CPE-2

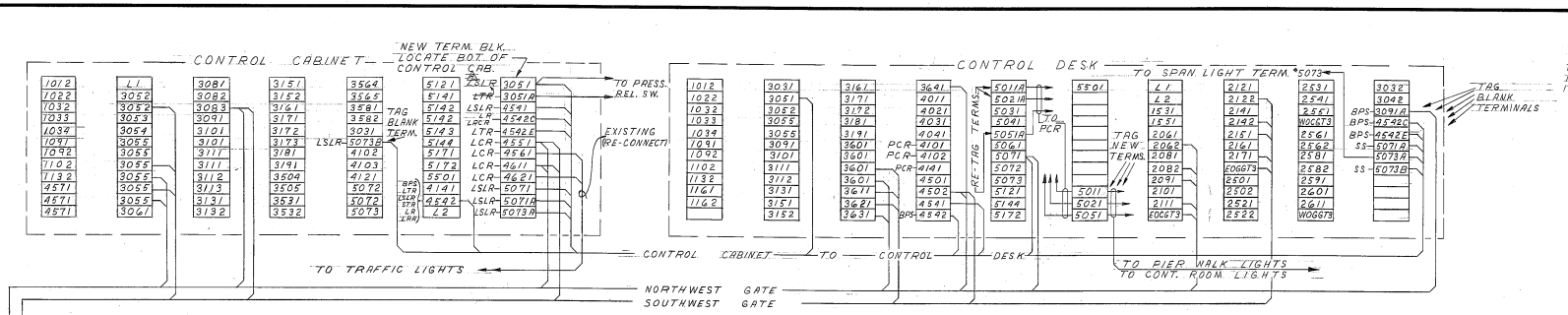

INTERCONNECTING DIAGRAM

NAMEPLATE MARKING:
4. PIER LIGHTS - TOGGLE SWITCH
5. NAVIGATION LIGHTS - TOGGLE SWITCH
6. EMERGENCY BY-PASS - TOGGLE SWITCH
15. SPAN FULLY CLOSED - LIGHT
18. OFF - ON - BELL OFF - LEVER SWITCH

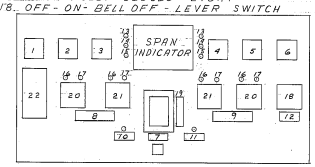

NOTE:
1. ITEM #15, (RED LIGHT). ATTACH CONDUCTOR 5073A AS SHOWN ON INTERCONNECTING DIAGRAM.
2. ITEMS #4, #5, #6, & #18 TO BE REPLACED WITH KEY LOCK SWITCHES. ITEMS 4 & 5 TO BE KEYED ALIKE-2:-RETRACTABLE KEY. ITEM #6 TO BE KEYED ALIKE-2:-NON-RETRACTABLE. ITEM #18 TO BE KEYED ALIKE-1:-NON-RETRACTABLE KEY. ITEMS #4, #5, #6, & #18 TO BE MASTER-KEYED. ALL KEYING TO BE THE SAME AS WISCONSIN AVE.- VERTICAL LIFT BRIDGE.

NOTE:
GATE DIAGRAMMED IN RAISED POSITION

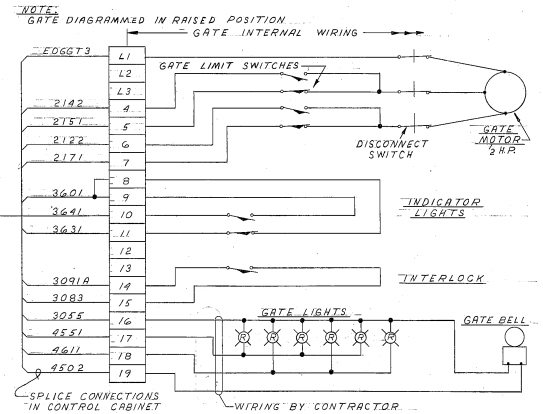

NORTHWEST GATE

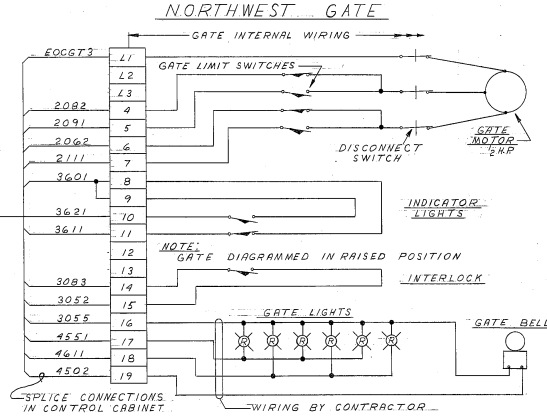

NOTE:
GATE DIAGRAMMED IN RAISED POSITION

SOUTHWEST GATE

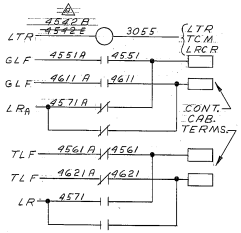

USE EXIST 4 POLE RELAY AND ADD 4 POLES OR USE NEW RELAY

LCR
LIGHT CONTROL RELAY

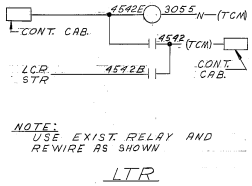

NOTE:
USE EXIST. RELAY AND REWIRE AS SHOWN

LTR
LIFT TIME RELAY

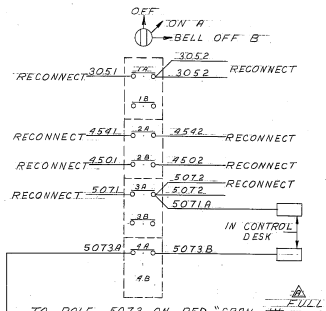

NOTE:
REPLACE WITH KEY LOCK SWITCH

SELECTOR SWITCH

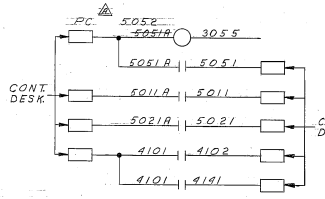

NOTE:
TO BE INSTALLED IN CONTROL DESK

PCR
PHOTO CELL RELAY

CONTROL DESK

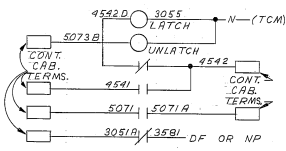

LSLR
LIFT SPAN LATCH RELAY

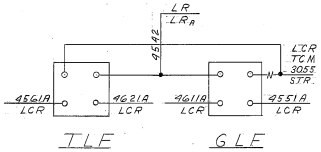

TLF TRAFFIC LIGHT
GLF GATE LIGHT
FLASHERS

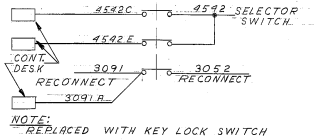

NOTE:
REPLACED WITH KEY LOCK SWITCH

BPS
EMERGENCY
BY-PASS SWITCH

NOTES:
1. ALL CONDUCTORS TO BE #12 THW WITH TERMINAL LUGS AND NUMERICALLY TAGGED BOTH ENDS.
2. CONTROL DESK LOCATED ON UPPER LEVEL (NOT SHOWN ON PLAN) APPROX. 18 FT. ABOVE CONTROL CABINET. ROUTE FROM CONTROL DESK THRU RACEWAY TO CONTROL CABINET TO GATES AND LIGHTS THRU EXISTING CONDUIT AND JUNCTION BOXES AS SHOWN ON PLAN.
3. EXISTING FLASHER TO BE REMOVED & EXISTING EQUIPMENT TO BE SLIGHTLY RELOCATED TO ACCOMODATE NEW EQUIPMENT IN CONTROL CABINET.

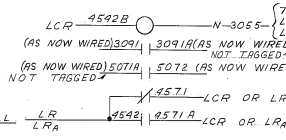

NOTE:
STR IS EXIST. AND NEED ONLY TO BE WIRED THUS.

STR
STREET TRAFFIC RELAY

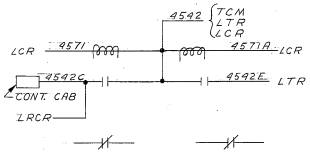

LR
LRA
DEAD BULB SENSOR

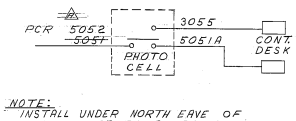

NOTE:
INSTALL UNDER NORTH EAVE OF BRIDGEHOUSE ROOF - ROUTE THRU BRIDGEHOUSE LIGHT FIXTURES. NO EXPOSED CONDUIT.

PC
PHOTO CELL

DEPARTMENT OF PUBLIC WORKS
BUREAU OF BRIDGES AND PUBLIC BUILDINGS
CITY OF MILWAUKEE

REVISIONS		
MARK	DATE	BY
A	10/4/77	R.W.M.
B		
C		
D		
E		
F		
G		
H		
I		
J		
K		
L		
M		

ST. PAUL AVE. VERTICAL LIFT BRIDGE
OVER MILWAUKEE RIVER

WIRING DIAGRAM

DESIGNED BY: R.W.M. TRACED BY: DATE:
DRAWN BY: R.W.M. CHECKED BY: L.F.R. DATE:
APPROVED:- SCALE: AS NOTED
DESIGNER IN CHARGE DATE: 4/26/77 SHEET NUMBER 3
CHIEF ENG. OF BRIDGES AND PUBLIC BUILDINGS DATE: 4-26-77 SET OF 3 SHEETS
COMMISSIONER OF PUBLIC WORKS DATE: 4-27-77 JOB NO. 522-38

CPE-2