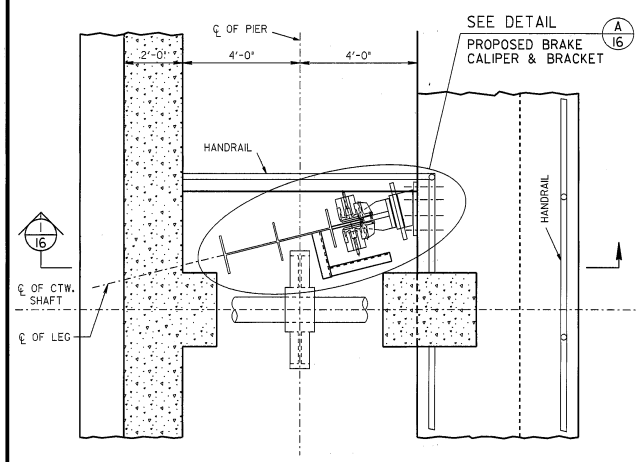

PLAN OF PIER 3 LIFT LEG 3
PIER 2 LIFT LEG 2
(180° OPPOSITE)
SCALE: 1/2" = 1'-0"

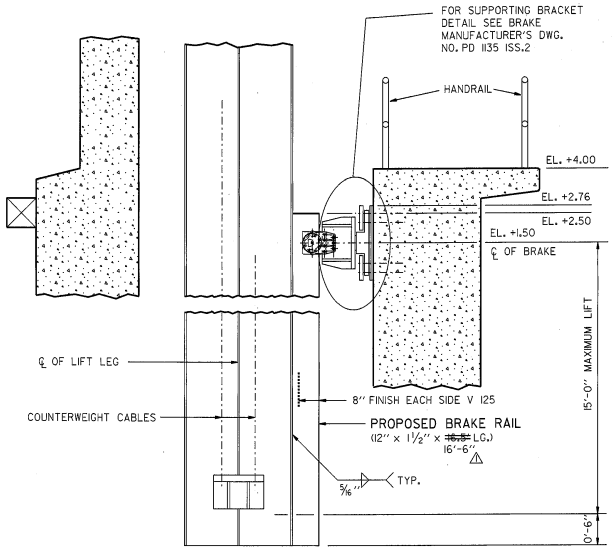

SECTION 1/16
SCALE: 1/2" = 1'-0"

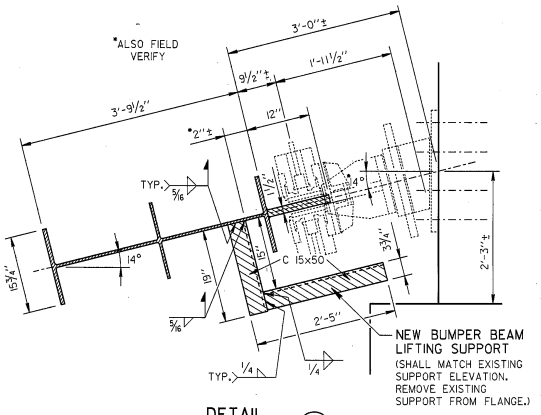

DETAIL A/16
SCALE: 1" = 1'-0"

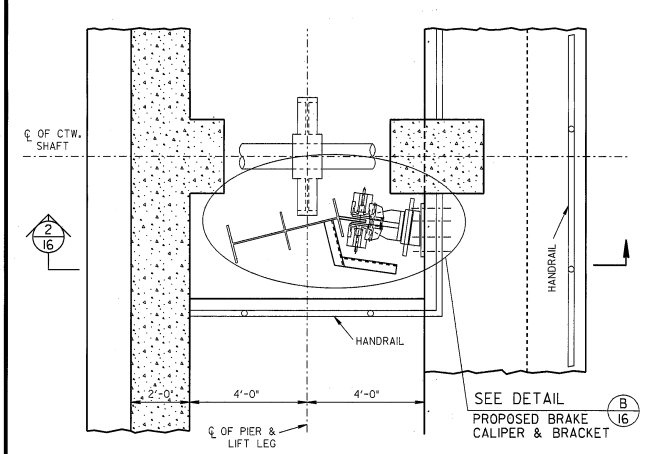

PLAN OF PIER 3 LIFT LEG 2
PIER 2 LIFT LEG 3
(180° OPPOSITE)
SCALE: 1/2" = 1'-0"

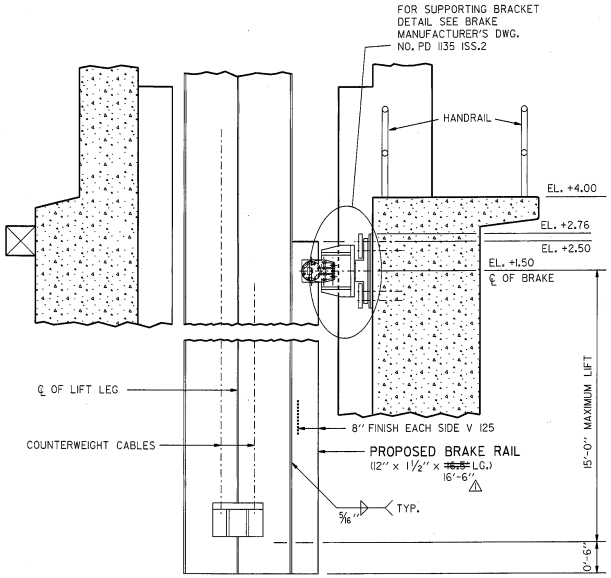

SECTION 2/16
SCALE: 1/2" = 1'-0"

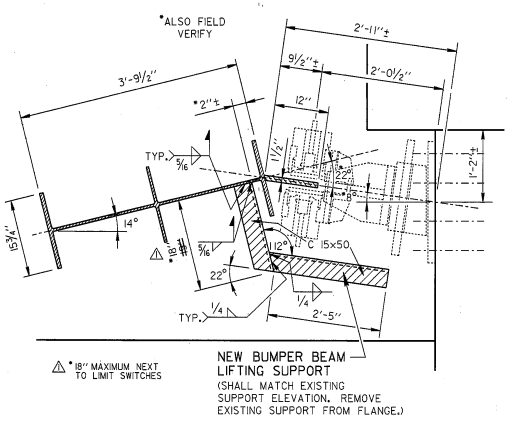

DETAIL B/16
SCALE: 1" = 1'-0"

CITY OF MILWAUKEE

Department of Public Works

Division of Engineers

ST. PAUL AVE. VERTICAL LIFT BRIDGE
OVER THE MILWAUKEE RIVER
GENERAL ARRANGEMENT FOR TWIFLEX BRAKE MODEL NO. VKSD 119
AUXILIARY BRAKE SYSTEM

REVISIONS
1 4/26/95 DIMENSIONS ARE CLARIFIED AND REVISED

DESIGNED BY M.P.T.	
DRAWN BY K.S./J.H.	
CHECKED BY A.R.	
DATE DEC. 1994	SCALE AS NOTED
JOB NUMBER 840-013	
SHEET NUMBER 16	
OF 20	

16_twlf.dgn 3/3/95

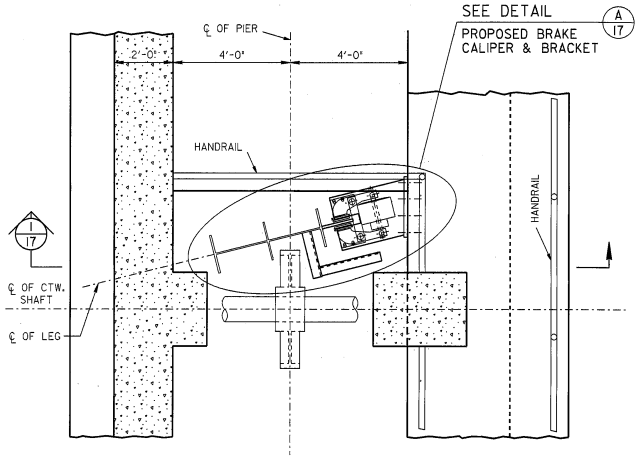

PLAN OF PIER 3 LIFT LEG 3
PIER 2 LIFT LEG 2
(180° OPPOSITE)
SCALE: 1/2" = 1'-0"

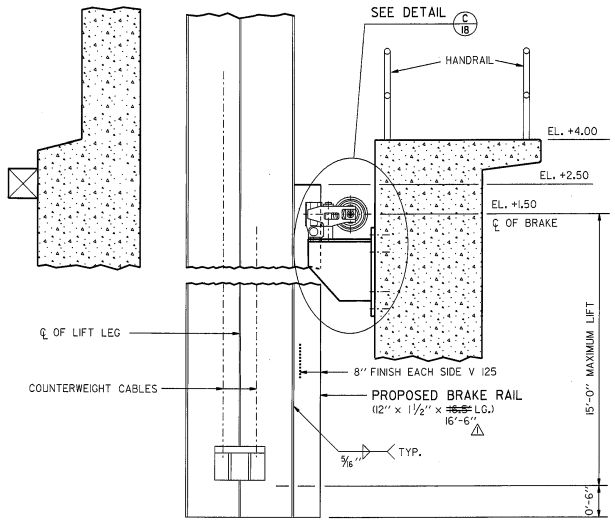

SECTION 1/17
SCALE: 1/2" = 1'-0"

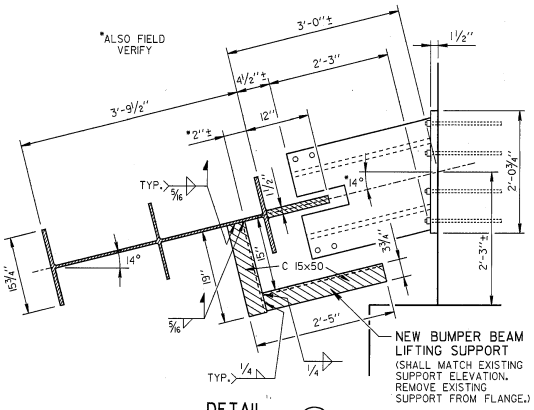

DETAIL A/17
SCALE: 1" = 1'-0"

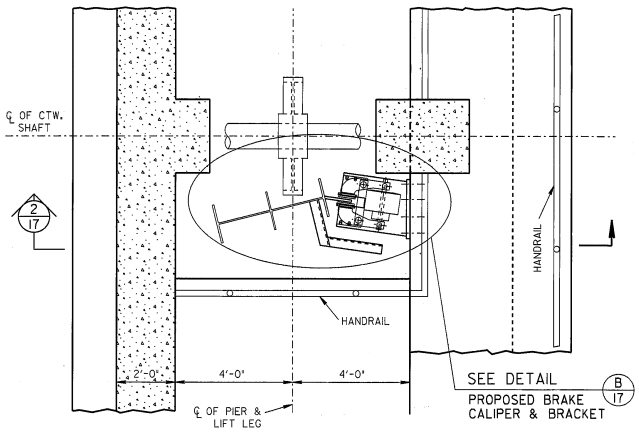

PLAN OF PIER 3 LIFT LEG 2
PIER 2 LIFT LEG 3
(180° OPPOSITE)
SCALE: 1/2" = 1'-0"

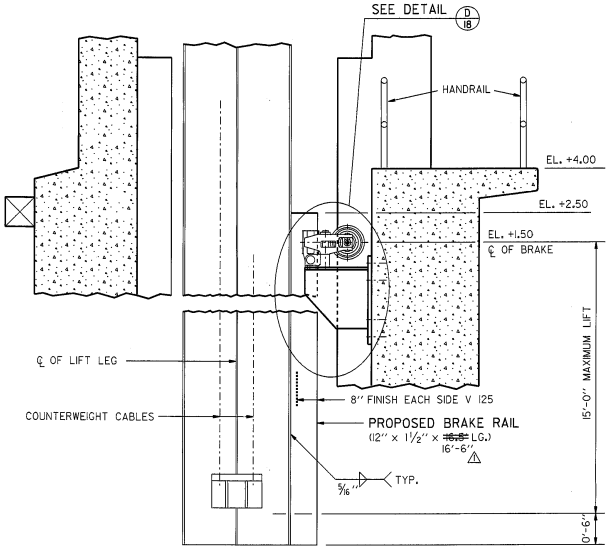

SECTION 2/17
SCALE: 1/2" = 1'-0"

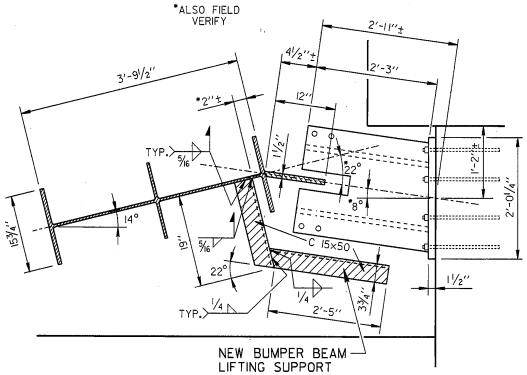

DETAIL B/17
SCALE: 1" = 1'-0"

CITY OF MILWAUKEE

Department of Public Works

Division of Engineers

ST. PAUL AVE. VERTICAL LIFT BRIDGE
OVER THE MILWAUKEE RIVER

GENERAL ARRANGEMENT FOR ENTEC BRAKE MODEL NO. 4600AR
AUXILIARY BRAKE SYSTEM

REVISIONS
△1 4/26/95 DIMENSIONS ARE CLARIFIED

DESIGNED BY M.P.T.	
DRAWN BY K.S./J.H.	
CHECKED BY A.R.	
DATE DEC. 1994	SCALE AS NOTED
JOB NUMBER 840-013	
SHEET NUMBER 17	
OF 20	

17_entc.dgn 3/2/95

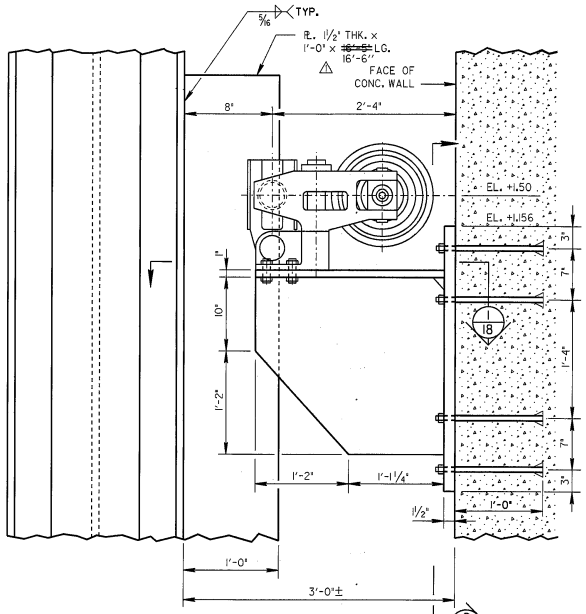

DETAIL (C/17)
SCALE: 1½" = 1'-0"

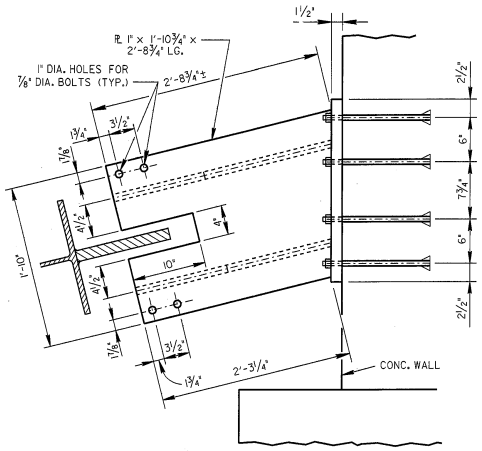

SECTION (1/18)
SCALE: 1½" = 1'-0"

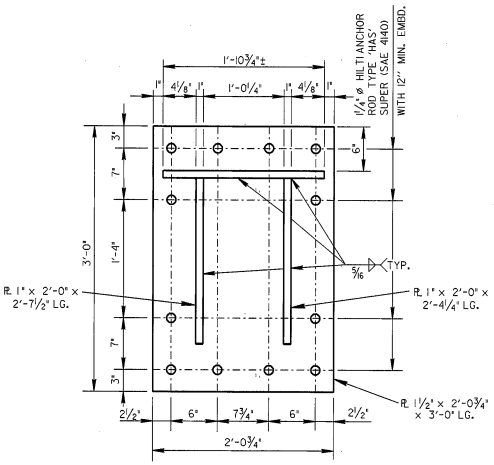

SECTION (2/18)
SCALE: 1½" = 1'-0"

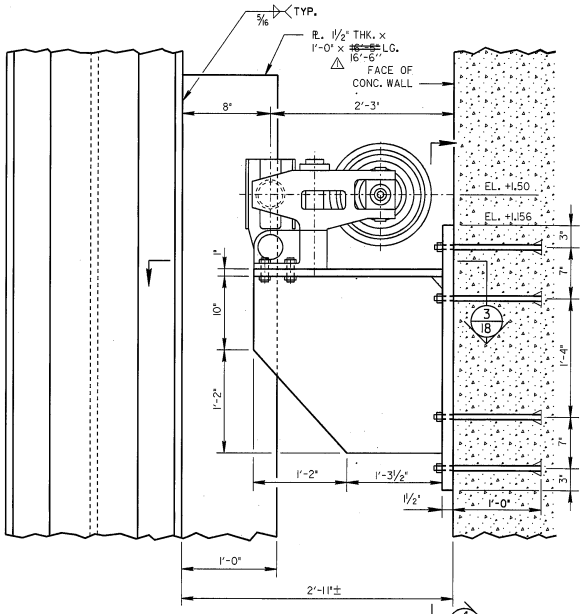

DETAIL (D/17)
SCALE: 1½" = 1'-0"

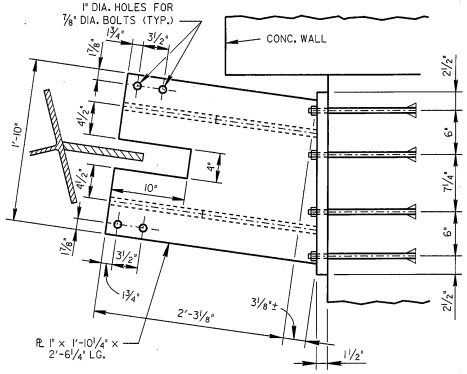

SECTION (3/18)
SCALE: 1½" = 1'-0"

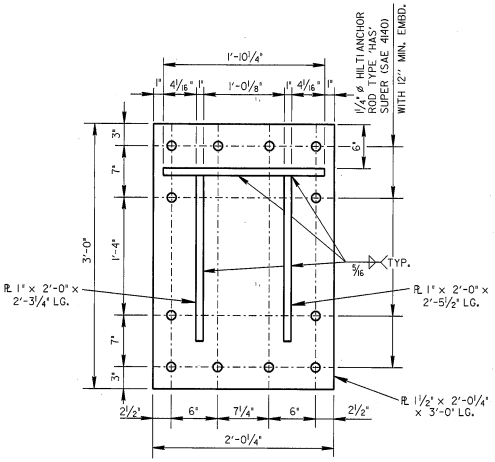

SECTION (4/18)
SCALE: 1½" = 1'-0"

CITY OF MILWAUKEE

Department of Public Works

Division of Engineers

ST. PAUL AVE. VERTICAL LIFT BRIDGE OVER THE MILWAUKEE RIVER
SUPPORTING BRACKET FOR ENTEC BRAKE AUXILIARY BRAKE SYSTEM

REVISIONS
⚠ 4/26/95 DIMENSIONS ARE REVISED

DESIGNED BY M.P.T.	
DRAWN BY K.S./J.H.	
CHECKED BY A.R.	
DATE DEC. 1994	SCALE AS NOTED
JOB NUMBER 840-013	
SHEET NUMBER 18	
OF 20	

18_plate.dgn 3/2/95

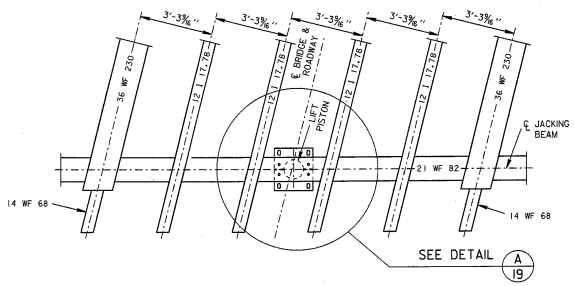

PLAN-LOCATION OF THE NEW PLATES ON THE JACKING BEAM

SCALE: ⅜" = 1'-0"

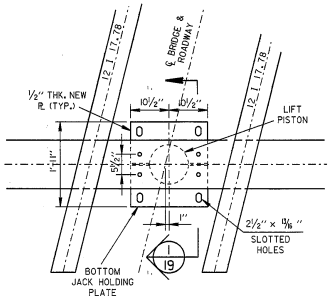

DETAIL A/19

SCALE: ¾" = 1'-0"

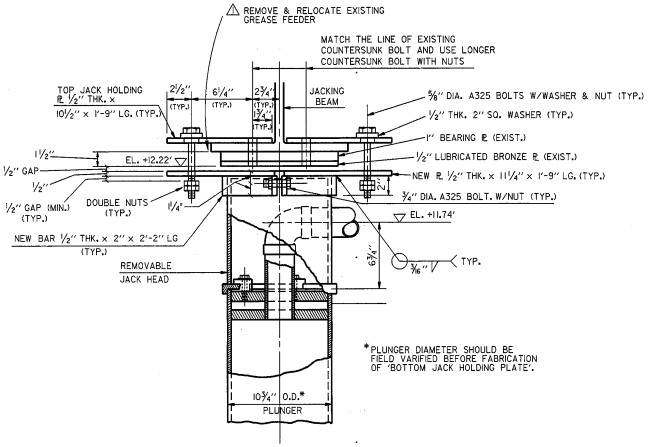

SECTION 1/19

HOLDING ARRANGEMENT OF THE HYDRAULIC JACK WITH THE JACKING BEAM

SCALE: 2" = 1'-0"

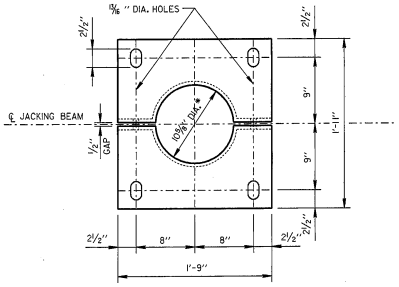

BOTTOM JACK HOLDING PLATE

(2 REQUIRED)

SCALE: 1½" = 1'-0"

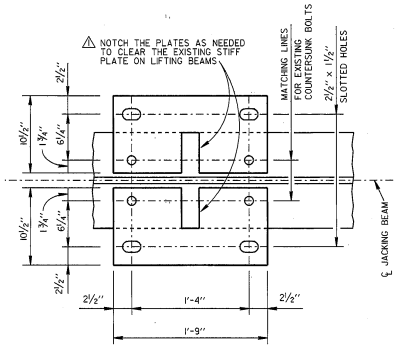

TOP JACK HOLDING PLATE

(2 REQUIRED)

SCALE: 1½" = 1'-0"

CITY OF MILWAUKEE

Department of Public Works

Division of Engineers

ST. PAUL AVE. VERTICAL LIFT BRIDGE OVER THE MILWAUKEE RIVER
HYDRAULIC JACK HOLDING ARRANGEMENT AUXILIARY BRAKE SYSTEM

REVISIONS

⚠ 4/26/95 REVISED DETAIL FOR TOP JACK HOLDING PLATE & ONE ADDITIONAL NOTE.

DESIGNED BY M.P.T.	
DRAWN BY K.S./J.H.	
CHECKED BY A.R.	
DATE DEC. 1994	SCALE AS NOTED
JOB NUMBER 840-013	
SHEET NUMBER 19	
OF 20	

19_jack.dgn 2/27/95

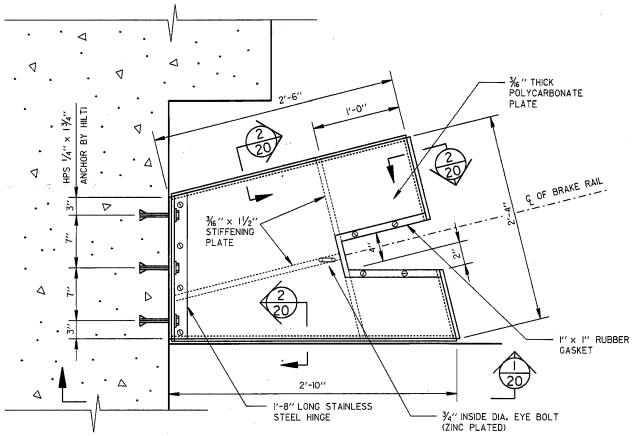

PLAN FOR TOP COVER
ARRANGEMENT OF AUXILIARY BRAKES

(PIER 2 LIFT LEG 2 & PIER 3 LIFT LEG 3)
(2 REQUIRED)
SCALE: 1" = 1 1/2'-0"

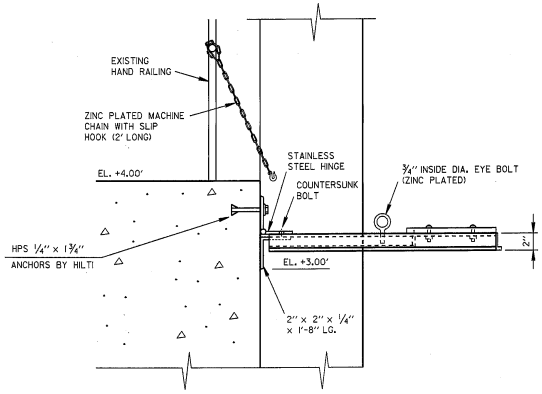

SECTION 1/20
SCALE: 1 1/2" = 1'-0"

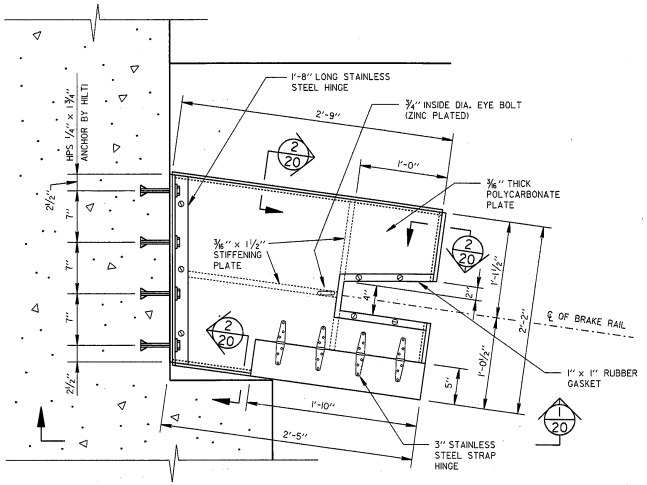

PLAN FOR TOP COVER
ARRANGEMENT OF AUXILIARY BRAKES

(PIER 2 LIFT LEG 3 & PIER 3 LIFT LEG 2)
(2 REQUIRED)
SCALE: 1" = 1 1/2'-0"

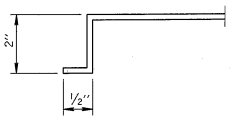

SECTION 2/20
SCALE: 6" = 1'-0"

CITY OF MILWAUKEE

Department of Public Works

Division of Engineers

ST. PAUL AVE. VERTICAL LIFT BRIDGE
OVER THE MILWAUKEE RIVER
BRAKE COVER ARRANGEMENT
AUXILARY BRAKE SYSTEM

REVISIONS

DESIGNED BY M.P.T.	
DRAWN BY K.S.	
CHECKED BY A.R.	
DATE DEC. 1994	SCALE AS NOTED
JOB NUMBER 840-013	
SHEET NUMBER 20	
OF 20	

20_det1.dgn 2/27/95

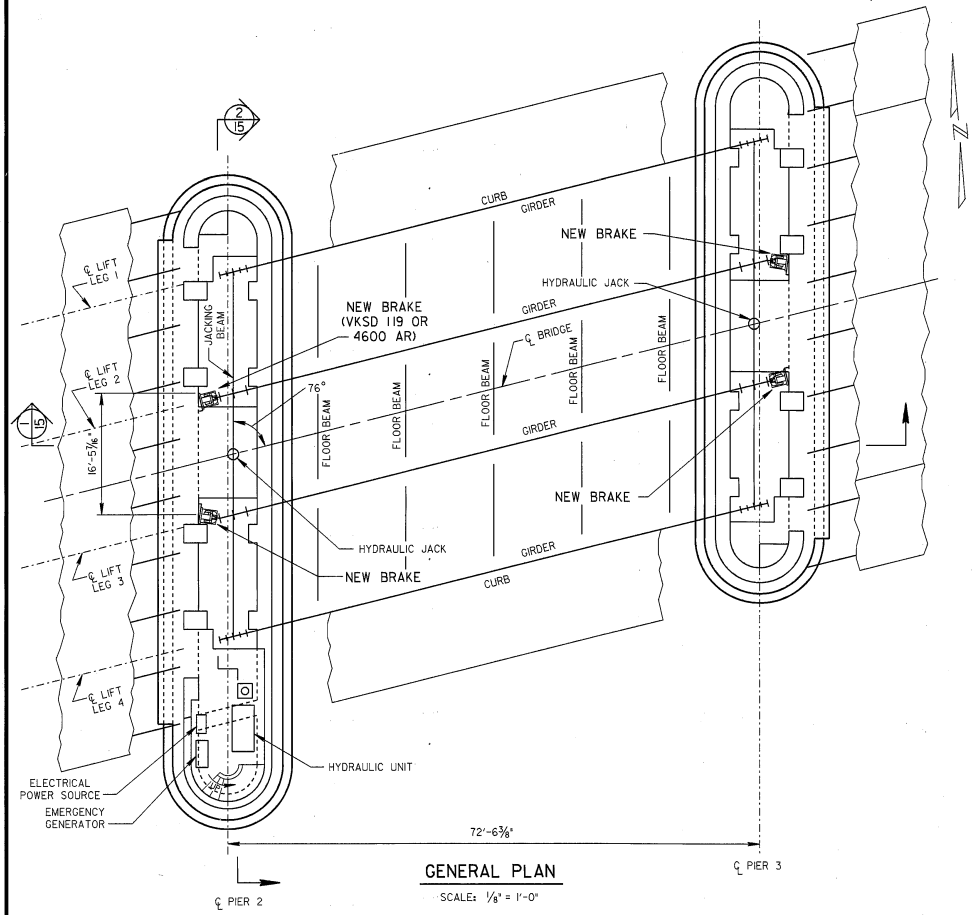

GENERAL PLAN
SCALE: ⅛" = 1'-0"

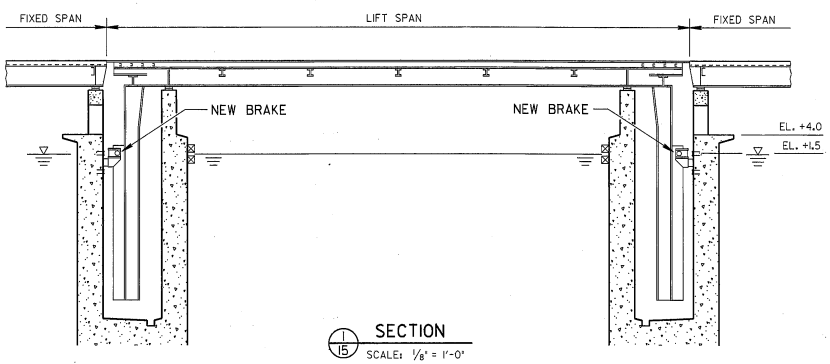

1/15 SECTION
SCALE: ⅛" = 1'-0"

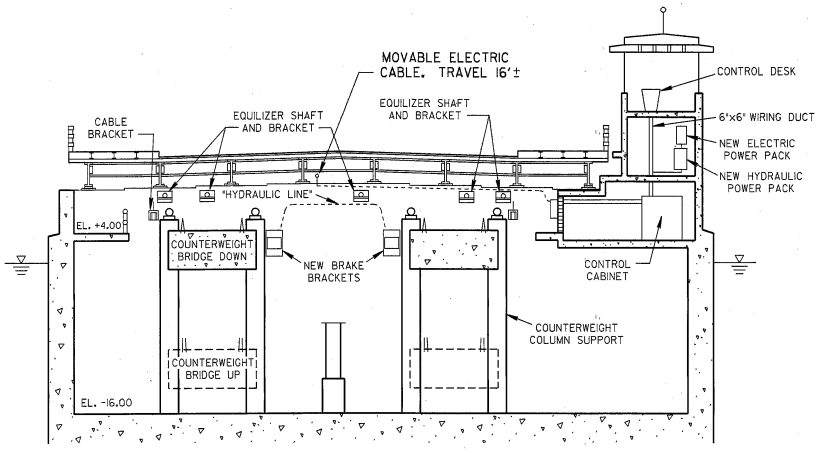

2/15 SECTION
SCALE: ⅛" = 1'-0"

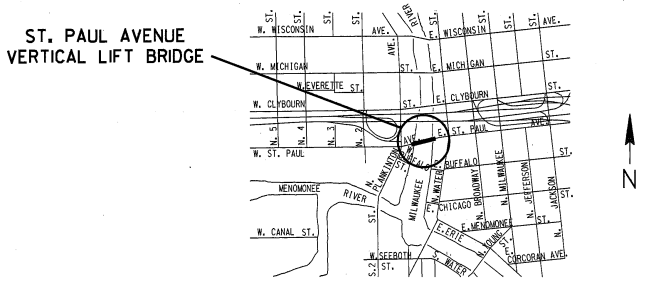

CITY OF MILWAUKEE

Department of Public Works

Division of Engineers

ST. PAUL AVE. VERTICAL LIFT BRIDGE OVER THE MILWAUKEE RIVER
GENERAL PLAN AUXILIARY BRAKE SYSTEM

REVISIONS

DESIGNED BY M.P.T.	
DRAWN BY K.S.	
CHECKED BY A.R.	
DATE DEC. 1994	SCALE AS NOTED
JOB NUMBER 840-013	
SHEET NUMBER 15	
OF 20	

15_site.dgn 2/27/95

STATE PROJECT NUMBER	SHEET NO.

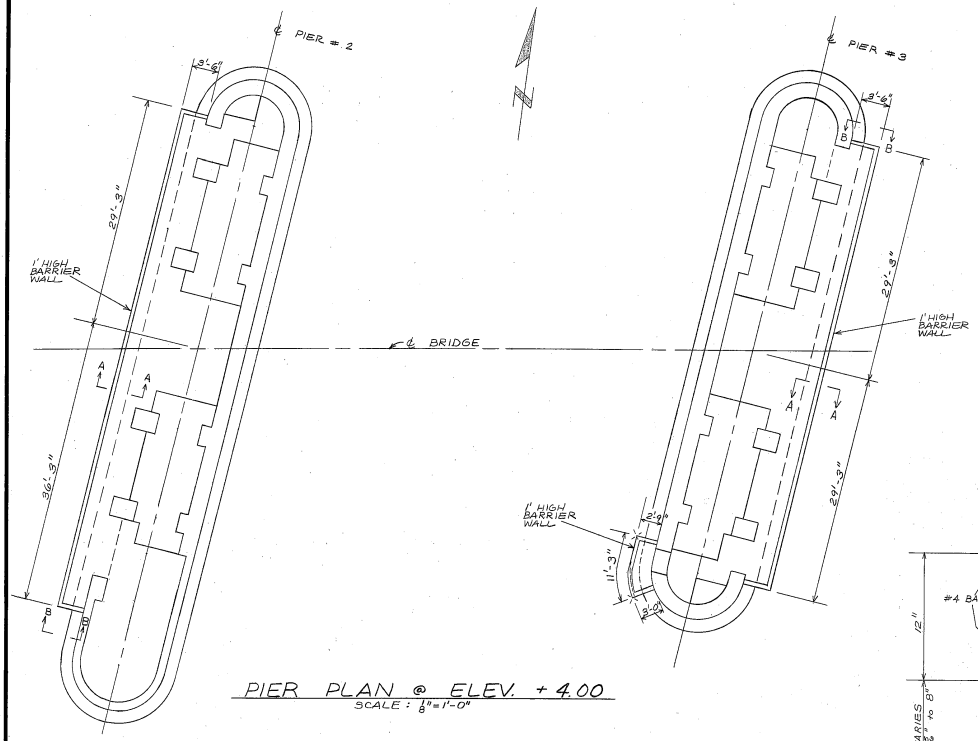

PIER PLAN @ ELEV. +4.00
SCALE: 1/8" = 1'-0"

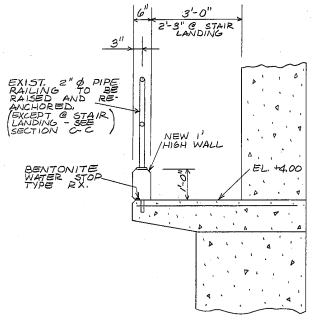

SECTION A-A
SCALE: 1/2" = 1'-0"

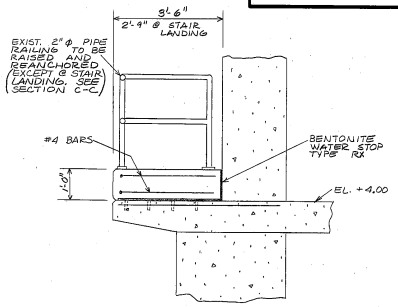

SECTION B-B
SCALE: 1/2" = 1'-0"

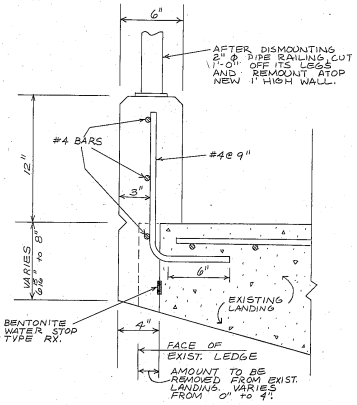

SECTION C-C
SCALE: 2" = 1'-0"

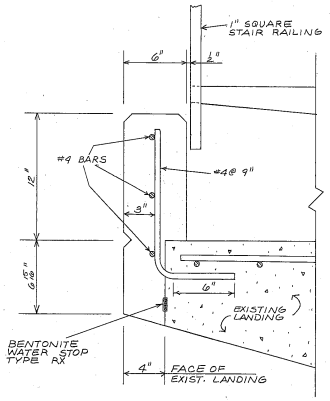

SECTION D-D
SCALE: 2" = 1'-0"

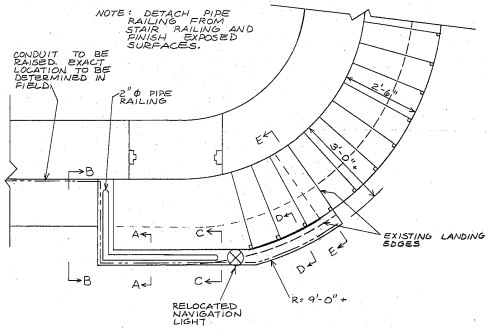

ENLARGED PLAN - STAIR LANDING
SCALE: 1/2" = 1'-0"

NOTES:

1. REPAIR SPALLED EDGES AND CORNERS OF PLATFORMS AND STAIR LANDING
2. BEVEL EXPOSED EDGES OF CONCRETE 3/4"
3. NAVIGATION LIGHT TO BE MOVED TO NEW LOCATION AS SHOWN AND MOUNTED ATOP NEW 1' HIGH WALL.
4. CONDUIT TO BE MOVED TO ACCOMMODATE NEW 1' HIGH WALL. EXACT LOCATION TO BE DETERMINED IN FIELD.

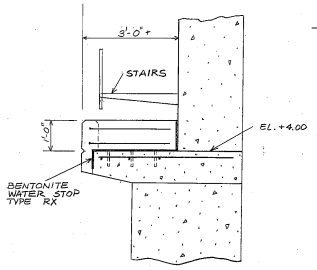

SECTION E-E
SCALE: 1/2" = 1'-0"

City of Milwaukee
Department of Public Works
Bureau of Bridges and Public Buildings

ST. PAUL AVENUE VERTICAL LIFT BRIDGE over the Milwaukee River

BARRIER WALL FOR HIGH WATER PROTECTION

REVISIONS

DESIGNED BY	M.F.S.
DRAWN BY	M.F.S.
CHECKED BY	
DATE 6/88	SCALE –
JOB NUMBER	52922
SHEET NUMBER	1
OF	1

Cat. No. 2130 – 0142

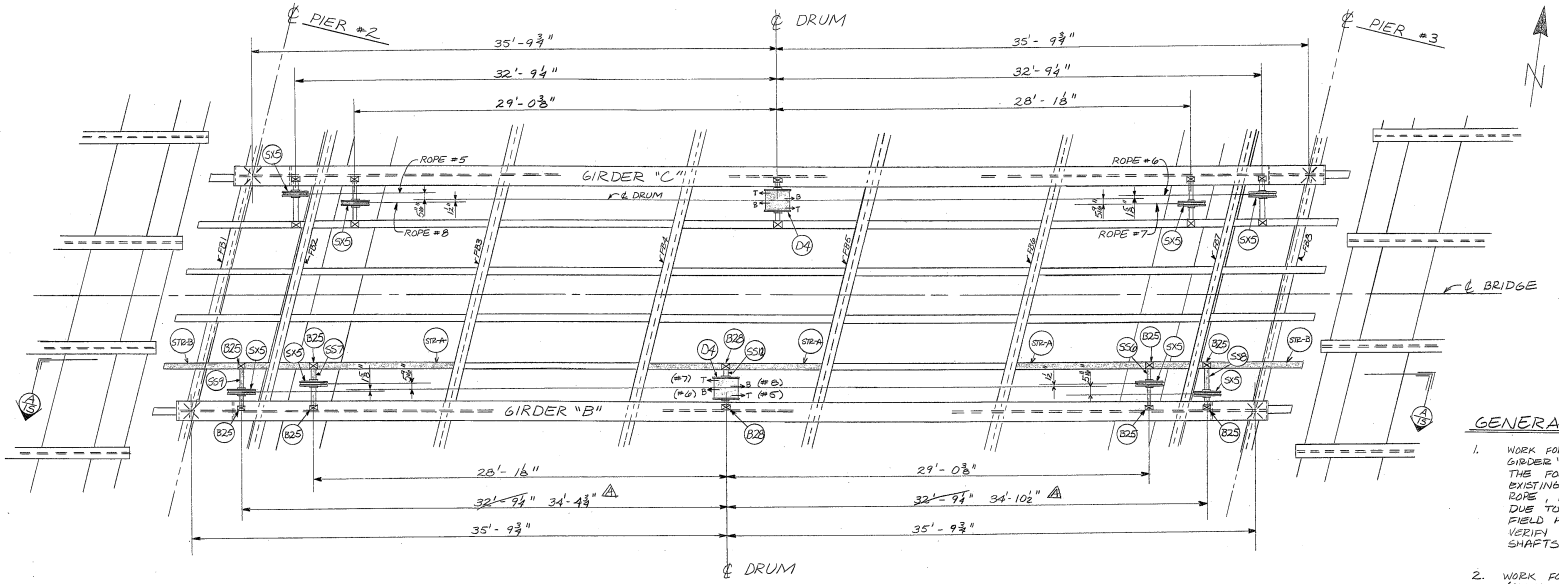

PLAN OF LONGITUDINAL EQUALIZERS

NOT TO SCALE

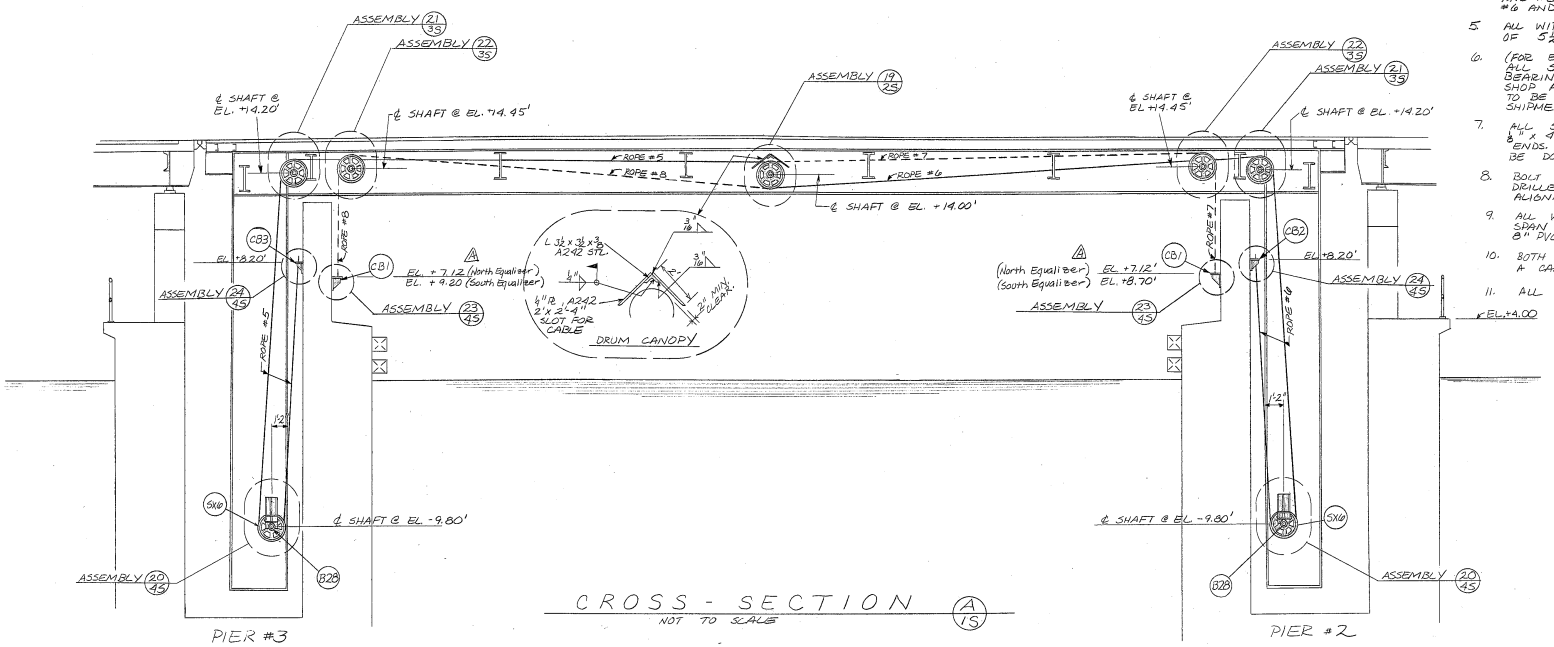

CROSS - SECTION (A/1S)

NOT TO SCALE

GENERAL NOTES

1. WORK FOR THE EXISTING EQUALIZER (ALONG GIRDER "C") SHALL CONSIST OF SUPPLYING THE FOLLOWING ITEMS TO REPLACE EXISTING ITEMS: DRUM, SHEAVES, WIRE ROPE, AND FITTINGS. DUE TO UNATTAINABLE SHOP DRAWINGS FIELD MEASUREMENTS ARE REQUIRED TO VERIFY THE DIMENSIONS OF THE EXISTING SHAFTS TO BE REUSED.
2. WORK FOR THE NEW LONGITUDINAL EQUALIZER (ALONG GIRDER "B") SHALL CONSIST OF SUPPLYING THE MATERIALS REQUIRED FOR A COMPLETE EQUALIZER INCLUDING: DRUM, SHEAVES, SHAFTS, BEARINGS, CABLE BRACKETS, WIRE ROPES, FITTINGS, STRINGERS, ETC.
3. ALL ELEVATIONS ARE GIVEN FOR BRIDGE WHEN IN CLOSED POSITION.
4. ALL WIRE ROPES TO BE 3/4" ϕ, ROPES #5 AND #8 TO BE CONTINUOUS AND ROPES #6 AND #7 TO BE CONTINUOUS.
5. ALL WIRE ROPES TO HAVE A MINIMUM OF 5 1/2 TURNS ABOUT THE DRUM
6. (FOR EQUALIZER ALONG GIRDER "B") ALL SHAFTS, SHEAVES, DRUMS, AND BEARINGS ARE TO BE ASSEMBLED IN SHOP AND MATCH MARKED. BEARINGS TO BE TAKEN OFF AND PACKED FOR SHIPMENT.
7. ALL SLEEVE BEARINGS TO HAVE A 1/8" x 45° CHAMFER ON I.D., BOTH ENDS. ALL REQUIRED CHAMFERING TO BE DONE AT SHOP
8. BOLT HOLES IN BEARINGS TO BE DRILLED AT ERECTION AFTER SHAFT ALIGNMENT IN FIELD.
9. ALL WIRE ROPES CROSSING THE LIFT SPAN SHALL BE SHIELDED ABOVE BY 8" PVC TUBING. (BOTH EQUALIZERS).
10. BOTH DRUMS SHALL BE SHIELDED BY A CANOPY.
11. ALL ITEMS TO BE DETERMINED IN FIELD SHALL BE APPROVED BY THE ENGINEER.

City of Milwaukee
Department of Public Works
Bureau of Bridges and Public Buildings

ST. PAUL AVENUE VERTICAL LIFT BRIDGE over the Milwaukee River
LONGITUDINAL EQUALIZER ADDITION / MODIFICATION
PLAN OF LONGITUDINAL EQUALIZERS

REVISIONS
A 11/23/88 RB

DESIGNED BY	M.F.S.
DRAWN BY	M.F.S.
CHECKED BY	D.S.L.
DATE 11/87	SCALE –
JOB NUMBER	52920
SHEET NUMBER	1 (S)
OF	7 (S)

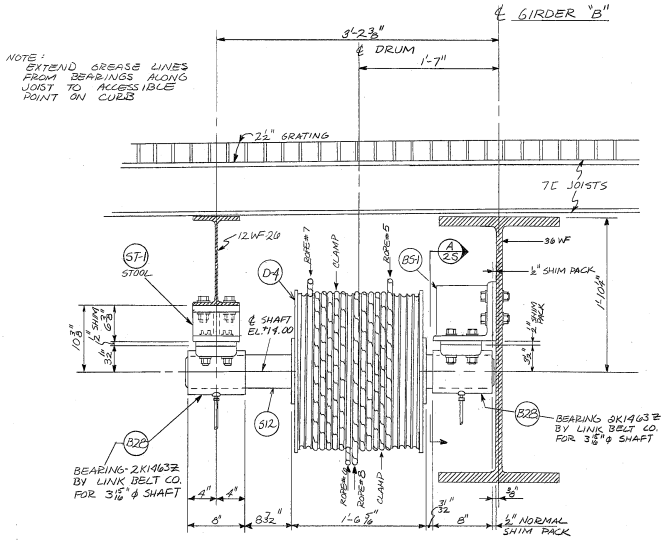

LONGITUDINAL EQUALIZER DRUM ASSEMBLY (19 2S)

SCALE: 1 1/2" = 1'-0"

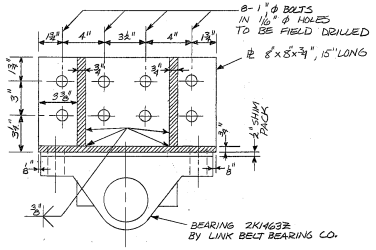

DRUM ASSEMBLY SECTION (A 2S)

(BEARING SEAT BS-1)

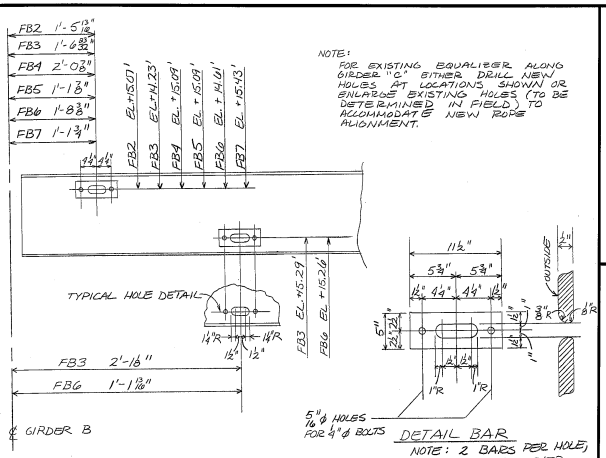

REQUIRED HOLES IN BEAMS

PLATE MAT'L: OILITE BRONZE A.S.T.M. B-202 GRADE #1 - CLASS "A"

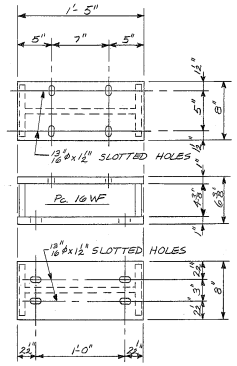

1 STOOL ST-1

N.T.S.

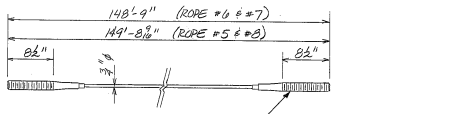

2- LONGITUDINAL CABLES (ROPES #6 & #7)

2- LONGITUDINAL CABLES (ROPES #5 & #8)

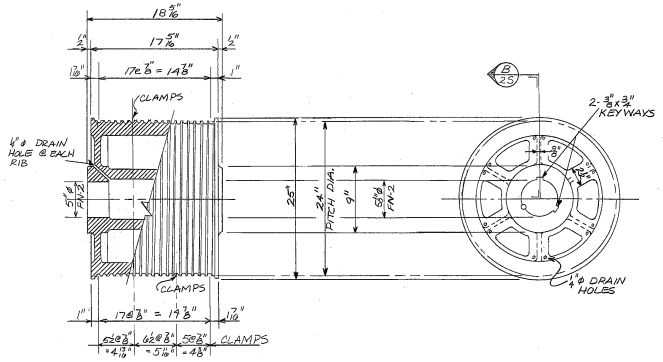

2 - EQUALIZER DRUMS D-4

CAST STEEL

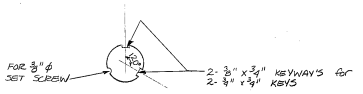

SECTION (C 2S)

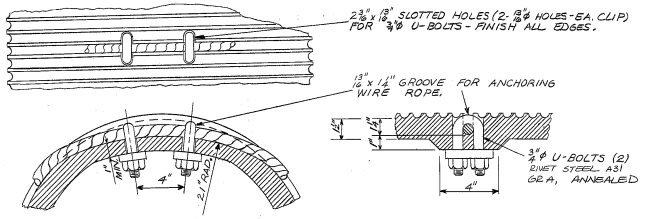

DRUM CABLE CLAMP CONNECTION

NOT TO SCALE

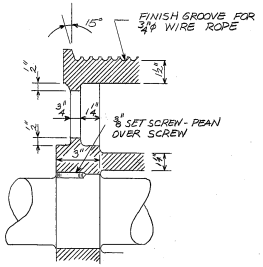

SECTION (B 2S)

SCALE: 3" = 1'-0"

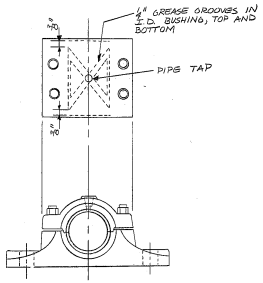

B-28 DRUM SHAFT BEARING

2 REQ'D

LINK BELT 2K14G3Z MODIFIED WITH GREASE GROOVES IN CAP AND BASE AND THE JUNCTION OF THE TWO AS SHOWN.

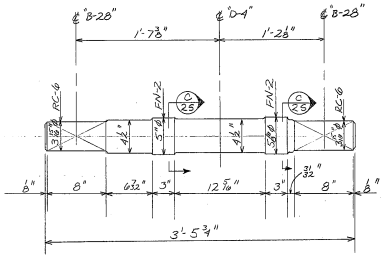

1- DRUM SHEAVE SHAFT SS-12

ASTM A 668 TURN AND POLISH

City of Milwaukee

Department of Public Works

Bureau of Bridges and Public Buildings

ST. PAUL AVENUE VERTICAL LIFT BRIDGE over the Milwaukee River

LONGITUDINAL EQUALIZER ADDITION / MODIFICATION

MACHINERY

REVISIONS

DESIGNED BY	M.F.S.
DRAWN BY	M.F.S.
CHECKED BY	C.S.L.
DATE 11/87	SCALE –
JOB NUMBER	52920
SHEET NUMBER	2 (S)
OF	7 (S)

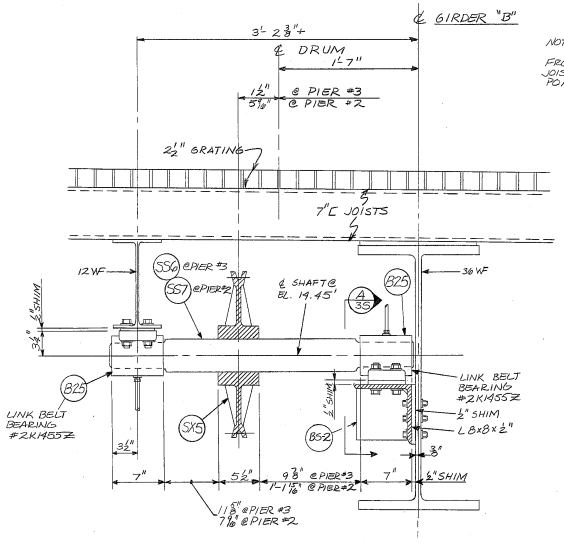

UPPER SHEAVE ASSEMBLY (22/3S)
- N.T.S. -

NOTE: EXTEND GREASE LINES FROM BEARINGS ALONG JOIST TO ACCESSIBLE POINT ON CURB.

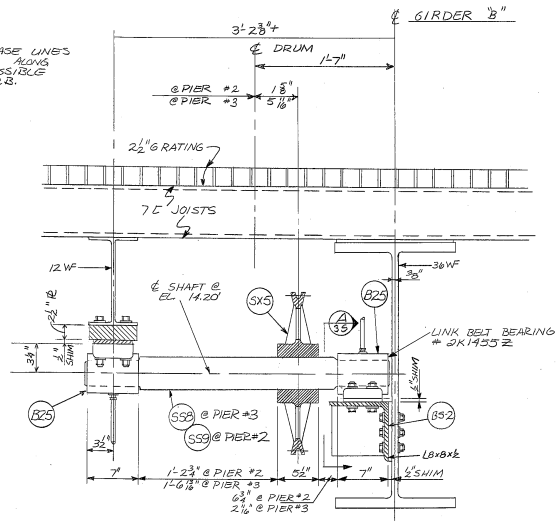

UPPER SHEAVE ASSEMBLY (21/3S)
- N.T.S. -

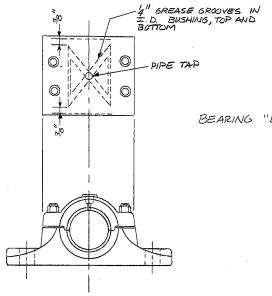

BEARING "B-25": LINK BELT 2K1455Z MODIFIED WITH GREASE GROOVES IN THE CAP & BASE AND THE JUNCTION OF THE TWO AS SHOWN.

8 UPPER SHEAVE BEARINGS "B-25"

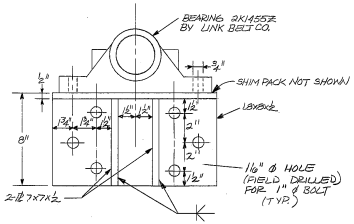

UPPER SHEAVE ASSEMBLY (A/3S)
(BEARING SEAT B5-2)

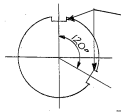

2 - 3/4" x 3/4" x 5 1/2" KEYS

SECTION (B/3S)

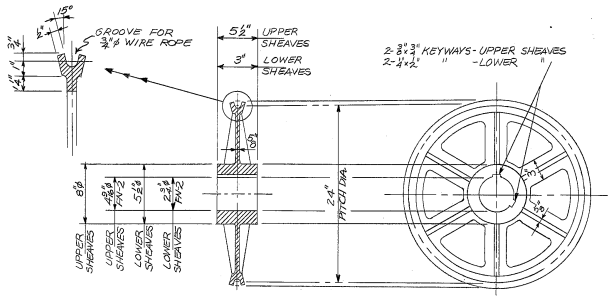

8 - UPPER SHEAVES "SX-5"
4 - LOWER SHEAVES "SX-6"
DRH/JOHNSON #26-250 MODIFIED ROUGH BORE 4 1/4" FOR SX-5 AND 2 1/4" FOR SX-6
FABRICATOR TO FINISH BORE AND KEYSEAT
FABRICATOR TO STAMP "ST. PAUL AVENUE"

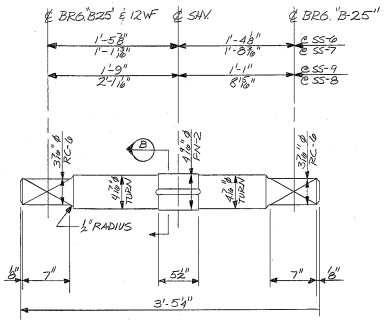

1 - SHAFT	SS - 6	
1 - SHAFT	SS - 7	
1 - SHAFT	SS - 8	
1 - SHAFT	SS - 9	

ASTM A668
TURN AND POLISH

BILL OF MATERIALS

QUANTITY	ITEM	DESIGNATION	PAGE
2	DRUM	D-4	2S
1	DRUM SHAFT	SS-12	2S
2	DRUM BEARING	B-28	2S
1	BEARING SEAT	B5-1	2S
1	BEARING STOOL	ST-1	2S
2	DRUM CANOPY		1S
4	3/4" ø U-BOLTS		2S
1	1/2" SHIM PACK FOR SEAT		2S
△1 2	1/2" SHIM PACK FOR BEARINGS		2S
16 8	1/2" ø TO SURROUND BEAM HOLES		2S
2	LONG. EQU. CABLE 148'9"	ROPES #6 & #7	2S
2	LONG. EQU. CABLE 149'8 9/16"	ROPES #5 & #8	2S
8	UPPER SHEAVE	SX-5	3S
4	LOWER SHEAVE	SX-6	3S
4	UPPER SHEAVE SHAFT	SS6, SS7, SS8, SS9	3S
2	LOWER SHEAVE SHAFT	SS-11	4S
8	UPPER BEARING	B-25	3S
4	LOWER BEARING	B-28	4S
2	LOWER SHEAVE SEAT/ASSEMBLY		4S
4	UPPER SHEAVE SEAT	B5-2	3S
2	2 1/4" THICK ø FOR UPPER BEARNG		3S
4	1/2" SHIM PACK FOR SEATS		3S
12	1/2" SHIM PACK FOR BEARINGS		3S, 4S
2	1/2" SHIM PACK FOR LOWER SHEAVE BRACKET		4S
2	CABLE BRACKET	CB-1	4S
1	CABLE BRACKET	CB-2	4S
△1 1	CABLE BRACKET	CB-3	4S
20 12	HILTI WALL ADHESIVE ANCHORS		4S
20 12	12" WALL ANCHOR BOLTS		4S
8 4	COMPRESSION SPRINGS		4S
8 4	3/4" ø FOR SPRINGS		4S
8 4	TURNBUCKLE BODIES		4S
8 4	2' THREADED RODS		4S
3	1'-2" THREADED RODS		5S
2	CAM SUPPORTS		5S
3	STRINGER	STR-A	6S
2	STRINGER	STR-B	6S
16	L 6x6x3/8"		6S

- ALSO-

APPROPRIATE FASTENING HARDWARE
GREASE LINES & HEAD BRACKETS
8" PVC TUBING AND SUPPORT BRACKETS

City of Milwaukee
Department of Public Works
Bureau of Bridges and Public Buildings

ST. PAUL AVENUE VERTICAL LIFT BRIDGE over the Milwaukee River
LONGITUDINAL EQUALIZER ADDITION / MODIFICATION
MACHINERY

REVISIONS
△3 3/88 MS
△2 11/88 MS

DESIGNED BY	M.F.S.
DRAWN BY	M.F.S.
CHECKED BY	C.S.L.
DATE 11/87	SCALE ~
JOB NUMBER	52920
SHEET NUMBER	3 (S)
OF	7 (S)

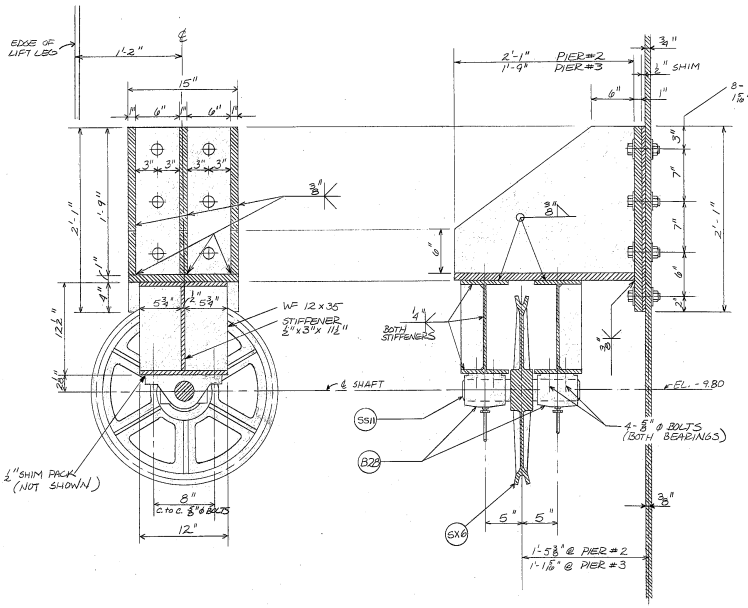

LOWER SHEAVE ASSEMBLY (20/45)
SCALE 1 1/2" = 1'-0"

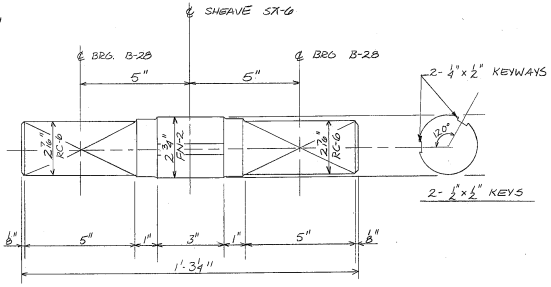

SHEAVE SHAFT SS-11
2-REQ'D
ASTM A668 STEEL - TURN & POLISH

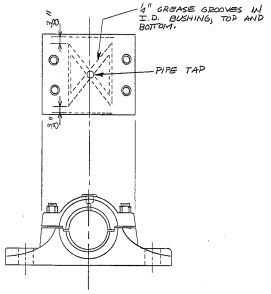

B-28 LOWER SHEAVE BEARINGS
4 REQ'D
LINK BELT #X14938 MODIFIED WITH GREASE GROOVE IN CAP, BASE, AND THE JUNCTION OF THE TWO AS SHOWN.

☆ ADD A 1" ϕ, SS304, ANCHOR BOLT (USING HILTI HVA-1") AS SHOWN TO THE TWO CORRESPONDING BRACKETS ON THE EXISTING EQUALIZER ALONG "GIRDER C."

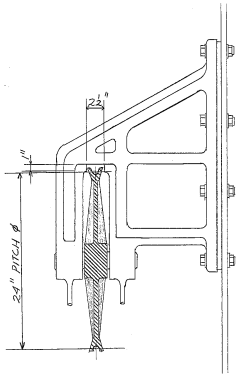

LOWER SHEAVE ASSEMBLY MODIFICATIONS FOR EQUALIZER ALONG GIRDER C

NOTE: CUT A 1"x2 1/2" NOTCH IN EXISTING LOWER SHEAVE BEARINGS AS SHOWN TO ACCOMMODATE THE 24" PITCH ϕ SHEAVES REPLACING THOSE WITH A 21" PITCH ϕ (TO BE DONE IN FIELD)

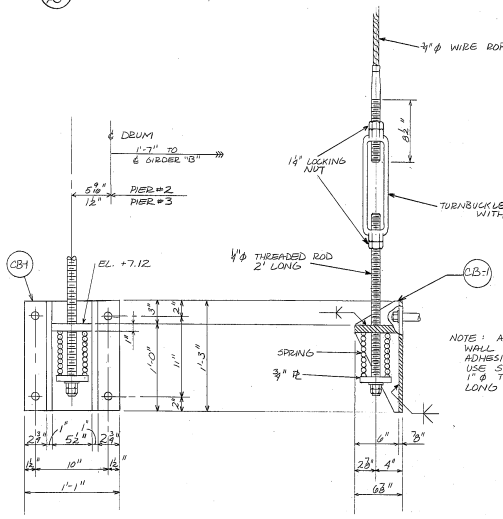

NOTE: ANCHOR BRACKETS TO WALL USING HILTI HVA ADHESIVE ANCHORS (HVA-1"). USE STAINLESS STEEL 304 1" ϕ THREADED RODS, 12" LONG AND 1" ϕ HEX NUTS.

WALL BRACKET ASSEMBLY (23/45)
SCALE: 1 1/2" = 1'-0"

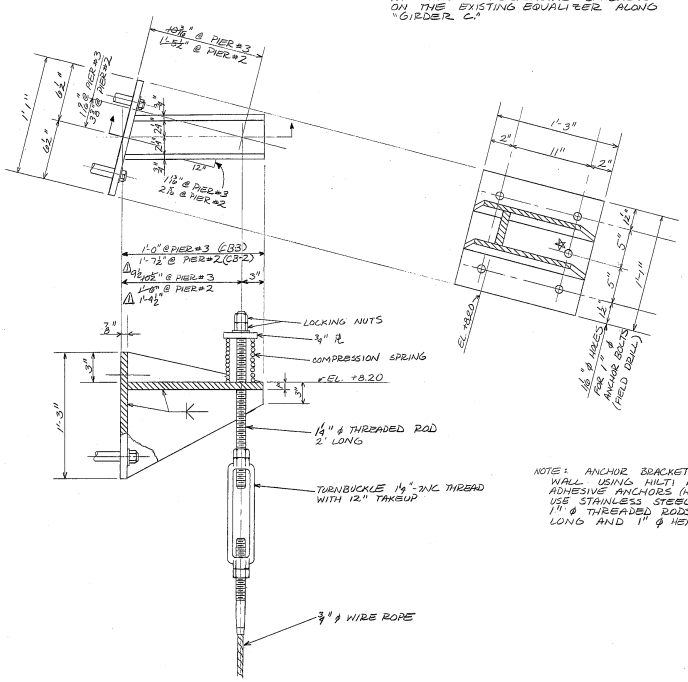

NOTE: ANCHOR BRACKET TO WALL USING HILTI HVA ADHESIVE ANCHORS (HVA-1"). USE STAINLESS STEEL 304 1" ϕ THREADED RODS, 12" LONG AND 1" ϕ HEX NUTS.

WALL BRACKET ASSEMBLY (24/45)
CB-3 @ PIER #3
CB-2 @ PIER #2

City of Milwaukee
Department of Public Works
Bureau of Bridges and Public Buildings

ST. PAUL AVENUE VERTICAL LIFT BRIDGE over the Milwaukee River
LONGITUDINAL EQUALIZER ADDITION / MODIFICATION
MACHINERY

REVISIONS
1 3/88 HS

DESIGNED BY	M.F.S.
DRAWN BY	M.F.S.
CHECKED BY	C.S.L.
DATE 11/87	SCALE -
JOB NUMBER	52920
SHEET NUMBER	4 (S)
OF	7 (S)

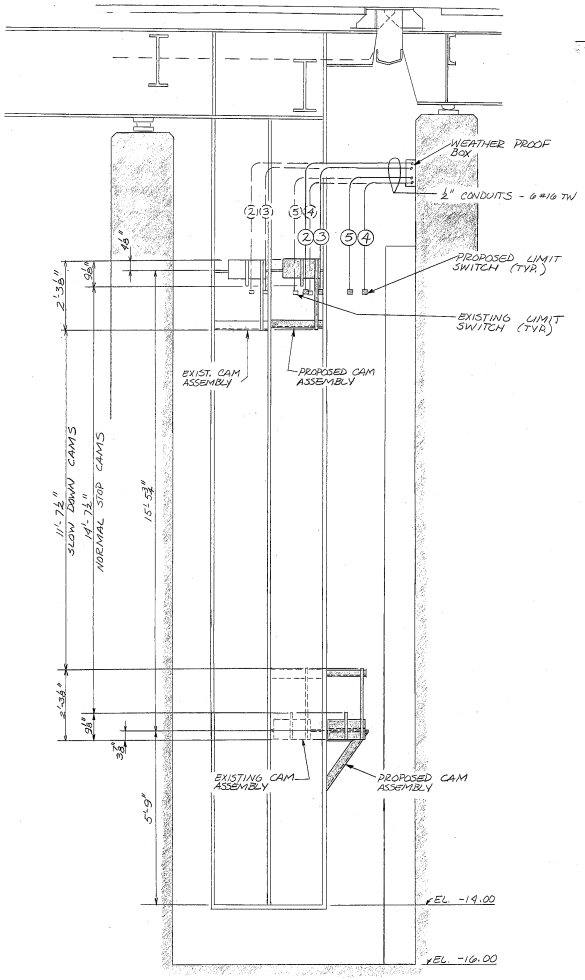

ASSEMBLY OF LIMIT SWITCH CAMS

SCALE: ½" = 1'-0"
(LOOKING SOUTH)

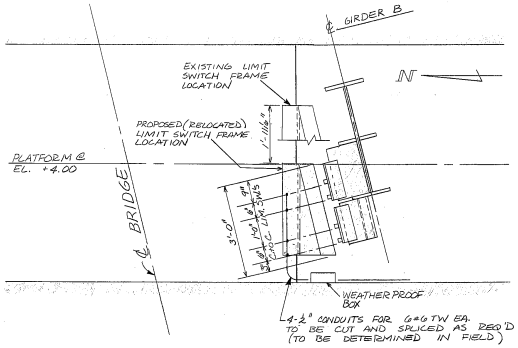

GENERAL PLAN OF LIMIT SWITCHES

SCALE ½" = 1'-0"

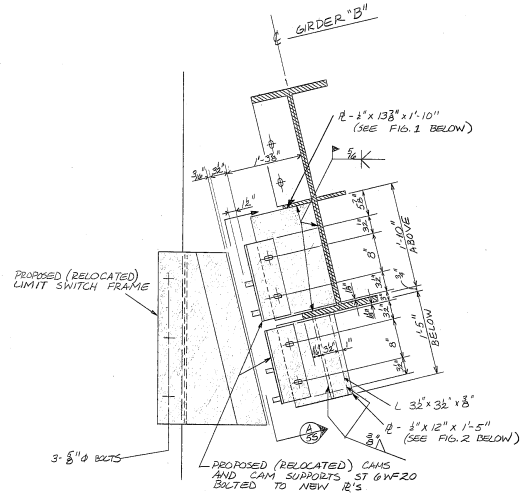

CAM SUPPORT ASSEMBLY

SCALE: 1" = 1'-0"

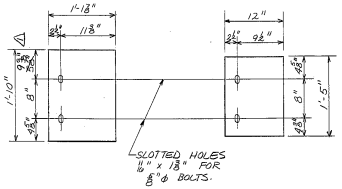

FIG. 1 FIG. 2

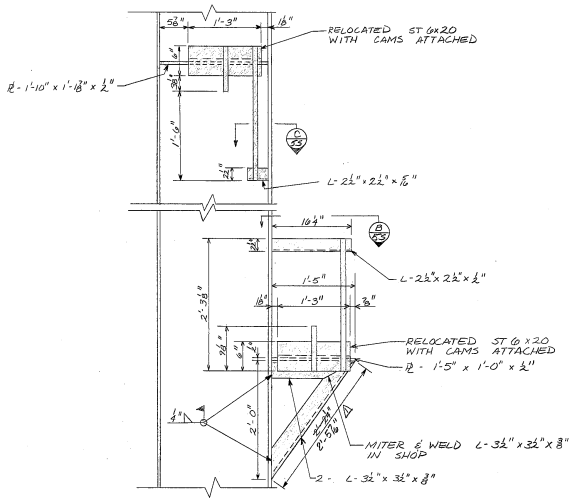

CAM SUPPORT SECTION (A 5S)

SCALE: 1" = 1'-0"

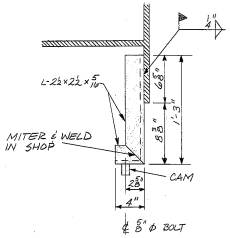

CAM SUPPORT SECTION (C 5S)

SCALE 12" = 1'0"

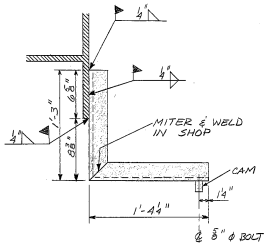

CAM SUPPORT SECTION (B 5S)

SCALE ½" = 1'0"

NOTES FOR WORK TO BE DONE ON LIMIT SWITCHES:

1. MOVE LIMIT SWITCH MOUNTING FRAME AS SHOWN AND WELD TO TOP OF RAILING AS IN EXISTING LOCATION
2. BOLT RELOCATED FRAME THROUGH FLOOR WITH 3 - ⅝"ϕ STAINLESS STEEL 304 BOLTS, 10" LONG. HOLES TO BE ⅝"ϕ AND FILLED WITH GROUT BEFORE FRAME IS SET.
3. PLACE ⅜" THICK PLATE 3'0" x 5" (WITH HOLES IN IT FOR BOLTS) ON UNDERSIDE OF FLOOR BENEATH LIMIT SWITCH FRAME
4. REMOVE AND REPLACE SECTIONS OF RAILING AS REQUIRED TO BE DETERMINED IN FIELD.
5. MOVE EXISTING CAMS AND THEIR MOUNTINGS (ST 6 x 20) TO NEW SUPPORTS. REMOVE OLD SUPPORTS.
6. CUT AND SPLICE WIRE AND CONDUIT FROM LIMIT SWITCH FRAME TO WEATHER PROOF BOX AS REQUIRED.

City of Milwaukee

Department of Public Works

Bureau of Bridges and Public Buildings

ST. PAUL AVENUE VERTICAL LIFT BRIDGE
over the Milwaukee River
LONGITUDINAL EQUALIZER ADDITION / MODIFICATION

LIMIT SWITCHES

REVISIONS
1 3/88 M.S.

DESIGNED BY	M.F.S.
DRAWN BY	M.F.S.
CHECKED BY	C.S.L.
DATE 11/87	SCALE –
JOB NUMBER	52920
SHEET NUMBER	5 (S)
OF	7 (S)

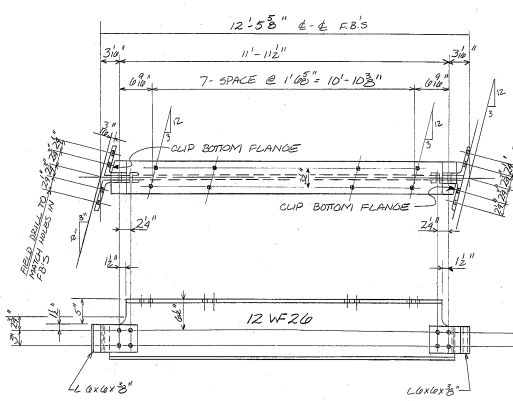

3 STRINGERS "STR-A"
N.T.S.

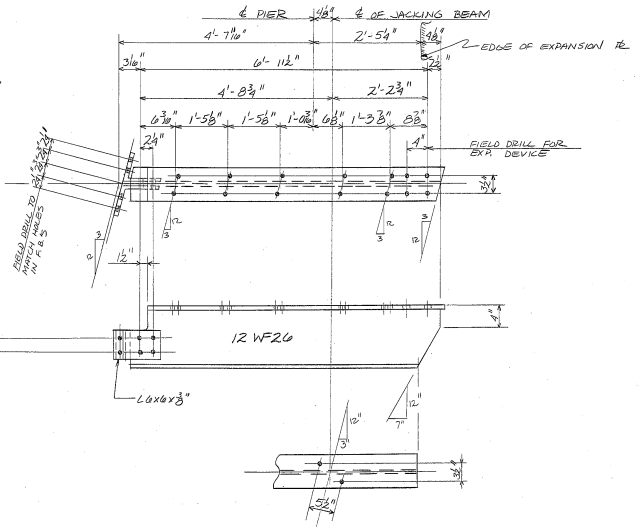

2- STRINGERS "STR-B"
N.T.S.

NOTES:

1- REPLACE EXISTING ALUMINUM STRINGERS WITH 12 WF26, A242 GR 50 STEEL STRINGERS AS SHOWN ALONG LINE JUST NORTH OF GIRDER "B" EXCEPT SPANS BETWEEN FB3 & FB4 AND BETWEEN FB5 & FB6. (AS SHOWN ON PAGE 15)

2- ALSO REPLACE CONNECTING ANGLES WITH A242 GR50 STEEL L 6x6x 3/8", 6" LONG, ON END(S) OF ALL NEW STRINGERS.

3. ALL FIELD CONNECTIONS BETWEEN STEEL MEMBERS TO BE 3/4" Ø A325 SQ.T.S.

City of Milwaukee

Department of Public Works

Bureau of Bridges and Public Buildings

ST. PAUL AVENUE VERTICAL LIFT BRIDGE over the Milwaukee River

LONGITUDINAL EQUALIZER ADDITION / MODIFICATION

STRINGER REPLACEMENT

REVISIONS

DESIGNED BY	M.F.S.
DRAWN BY	M.F.S.
CHECKED BY	C.S.L.
DATE 11/87	SCALE –
JOB NUMBER	52920
SHEET NUMBER	6 (S)
OF	7 (S)

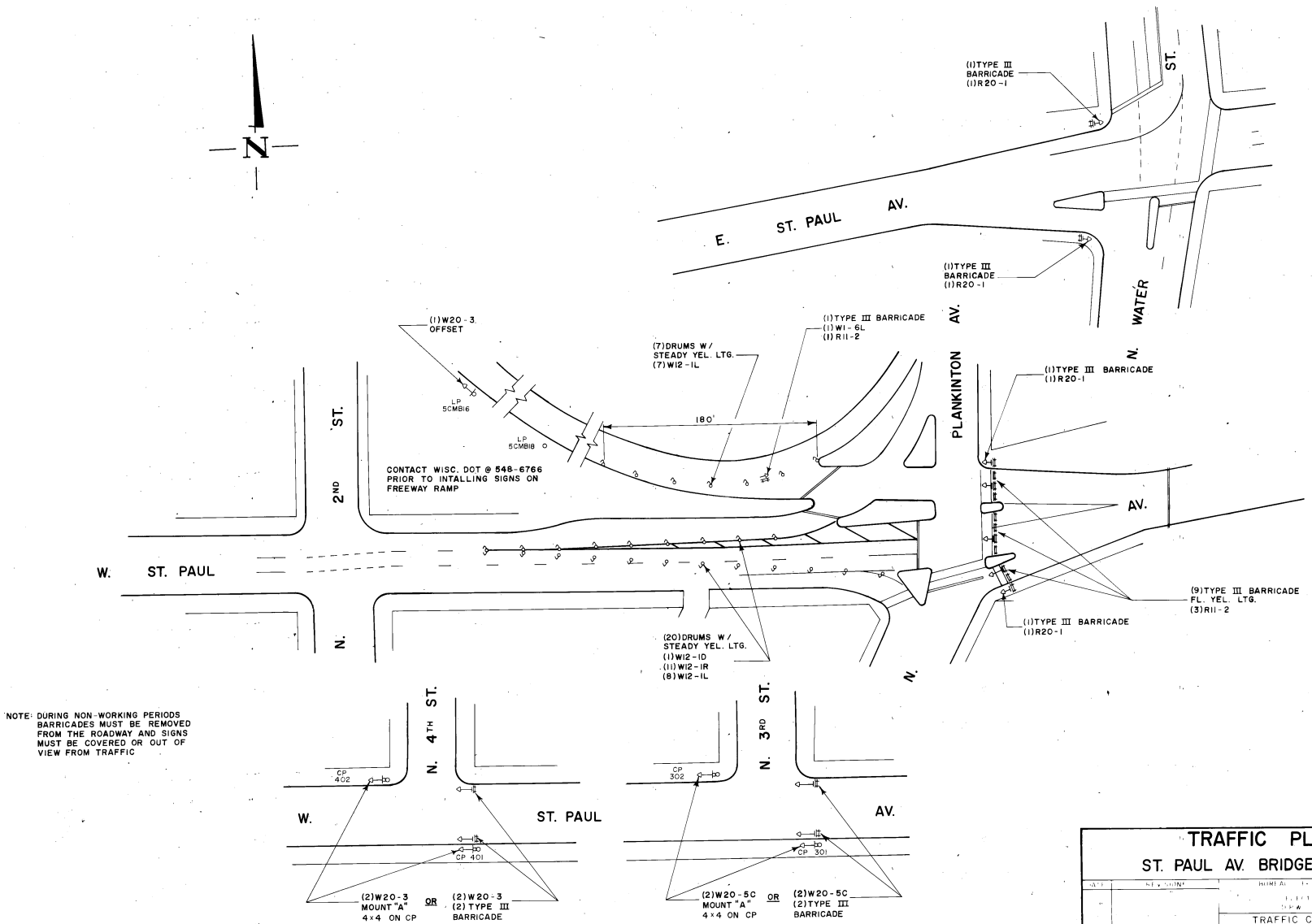

NOTE: DURING NON-WORKING PERIODS BARRICADES MUST BE REMOVED FROM THE ROADWAY AND SIGNS MUST BE COVERED OR OUT OF VIEW FROM TRAFFIC

City of Milwaukee

Department of Public Works

Bureau of Bridges and Public Buildings

ST. PAUL AVENUE VERTICAL LIFT BRIDGE over the Milwaukee River

LONGITUDINAL EQUALIZER ADDITION/MODIFICATION

TRAFFIC PLAN

REVISIONS

DESIGNED BY

DRAWN BY

CHECKED BY

DATE	SCALE
11/87	–

JOB NUMBER 52920

SHEET NUMBER 7 (S)

OF 7 (S)

TRAFFIC PLAN

ST. PAUL AV. BRIDGE CLOSING

DATE	REVISIONS

BUREAU OF TRAFFIC ENGINEERING AND ELECTRICAL SERVICES DEPT. OF CITY OF MILWAUKEE

TRAFFIC CONTROL MATERIAL

DATE	SCALE	DRAWN	DESIGN	CHECKED	APPROVED
12-23-87	NONE	D. J. D.	C. N. K	C. N. K.	J. H. I.

SUPERSEDES

SUPERSEDED BY

F-87-354-S

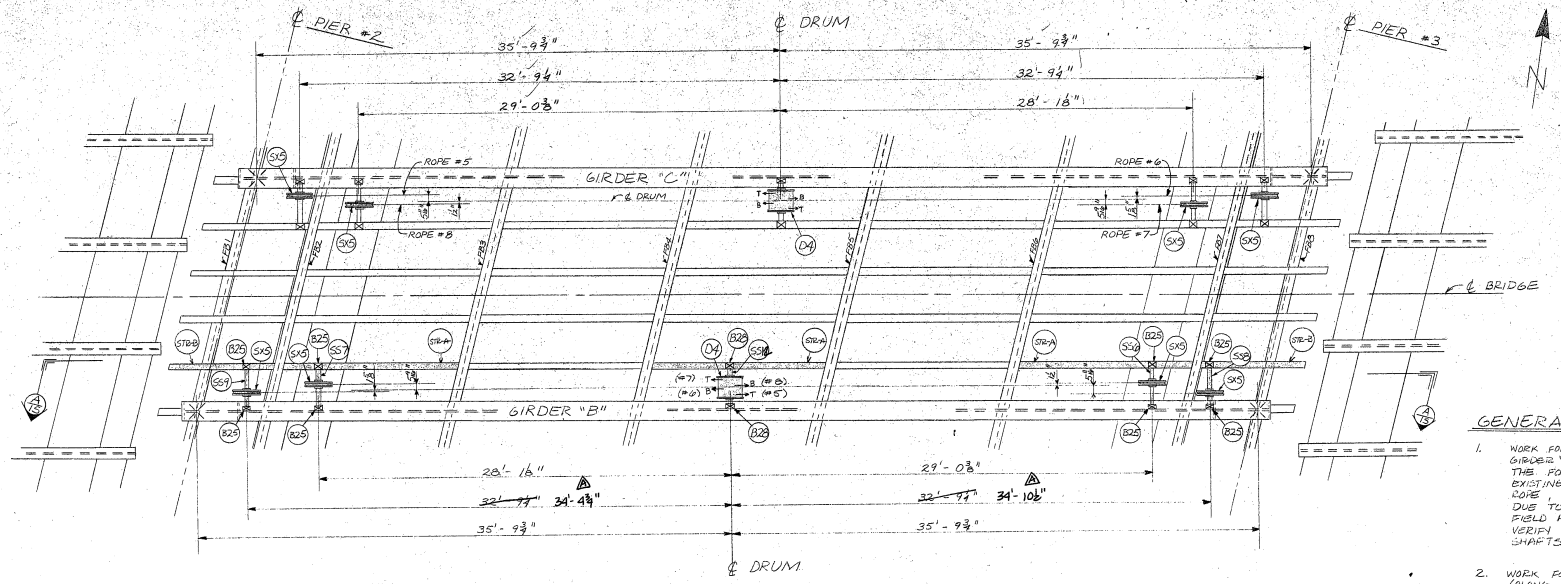

PLAN OF LONGITUDINAL EQUALIZERS

NOT TO SCALE

GENERAL NOTES

1. WORK FOR THE EXISTING EQUALIZER (ALONG GIRDER "C") SHALL CONSIST OF SUPPLYING THE FOLLOWING ITEMS TO REPLACE EXISTING ITEMS: DRUM, SHEAVES, WIRE ROPE, AND FITTINGS.
   DUE TO UNMTAINABLE SHOP DRAWINGS FIELD MEASUREMENTS ARE REQUIRED TO VERIFY THE DIMENSIONS OF THE EXISTING SHAFTS TO BE REUSED.
2. WORK FOR THE NEW LONGITUDINAL EQUALIZER (ALONG GIRDER "B") SHALL CONSIST OF SUPPLYING THE MATERIALS REQUIRED FOR A COMPLETE EQUALIZER INCLUDING: DRUM, SHEAVES, SHAFTS, BEARINGS, CABLE BRACKETS, WIRE ROPES, FITTINGS, STRINGERS, ETC.
3. ALL ELEVATIONS ARE GIVEN FOR BRIDGE WHEN IN CLOSED POSITION.
4. ALL WIRE ROPES TO BE 3/8" ϕ, ROPES #5 AND #8 TO BE CONTINUOUS AND ROPES #6 AND #7 TO BE CONTINUOUS.
5. ALL WIRE ROPES TO HAVE A MINIMUM OF 5 1/2 TURNS ABOUT THE DRUM.
6. (FOR EQUALIZER ALONG GIRDER "B") ALL SHAFTS, SHEAVES, DRUMS, AND BEARINGS ARE TO BE ASSEMBLED IN SHOP AND MATCH MARKED. BEARINGS TO BE TAKEN OFF AND PACKED FOR SHIPMENT.
7. ALL SLEEVE BEARINGS TO HAVE A 1/8" x 45° CHAMFER ON I.D. BOTH ENDS. ALL REQUIRED CHAMFERING TO BE DONE AT SHOP.
8. BOLT HOLES IN BEARINGS TO BE DRILLED AT ERECTION AFTER SHAFT ALIGNMENT IN FIELD.
9. ALL WIRE ROPES CROSSING THE LIFT SPAN SHALL BE SHIELDED ABOVE BY 8" PVC TUBING. (BOTH EQUALIZERS)
10. BOTH DRUMS SHALL BE SHIELDED BY A CANOPY.
11. ALL ITEMS TO BE DETERMINED IN FIELD SHALL BE APPROVED BY THE ENGINEER.

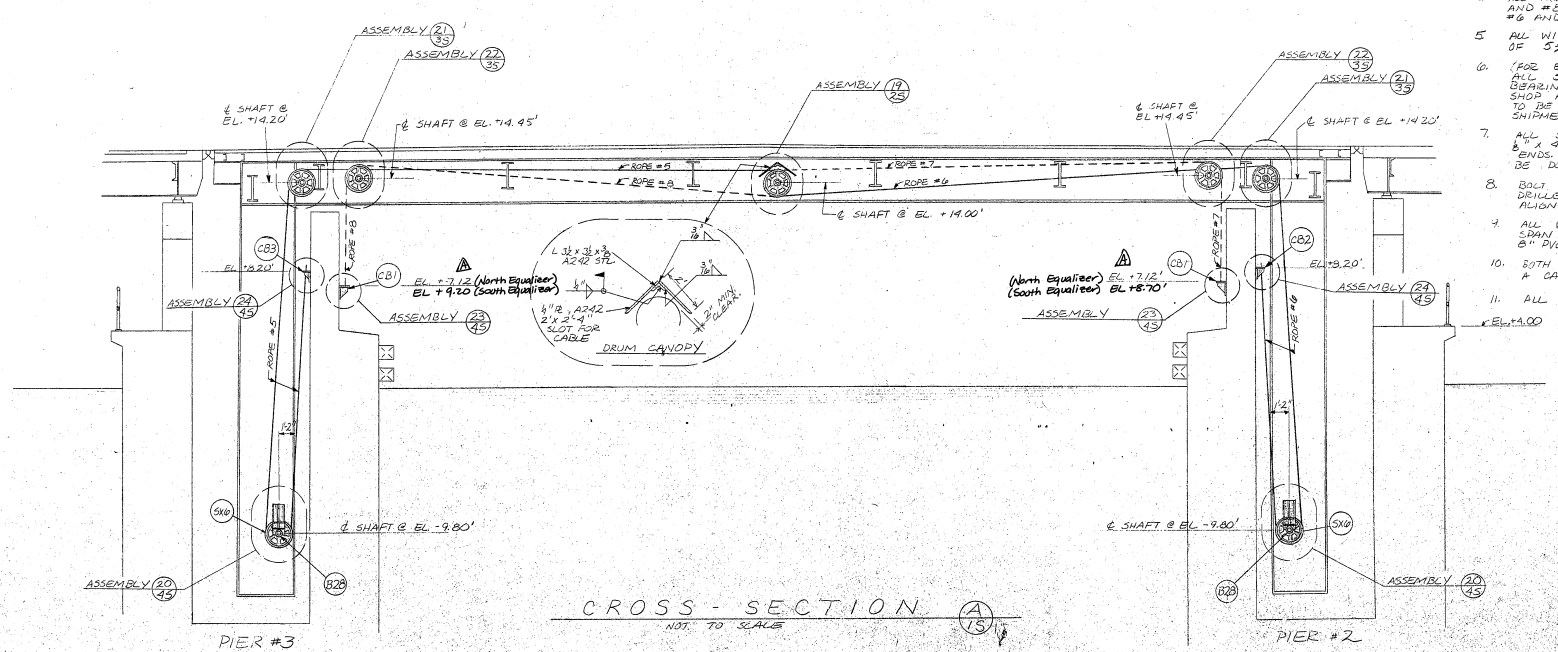

CROSS - SECTION A/15

NOT TO SCALE

City of Milwaukee

Department of Public Works

Bureau of Bridges and Public Buildings

ST. PAUL AVENUE VERTICAL LIFT BRIDGE over the Milwaukee River

LONGITUDINAL EQUALIZER ADDITION / MODIFICATION

PLAN OF LONGITUDINAL EQUALIZERS

REVISIONS: 1 11/23/88 WS

DESIGNED BY	M.F.S.
DRAWN BY	M.F.S.
CHECKED BY	C.S.L.
DATE 11/87	SCALE –
JOB NUMBER	52920
SHEET NUMBER	1 (S)
OF	7 (S)

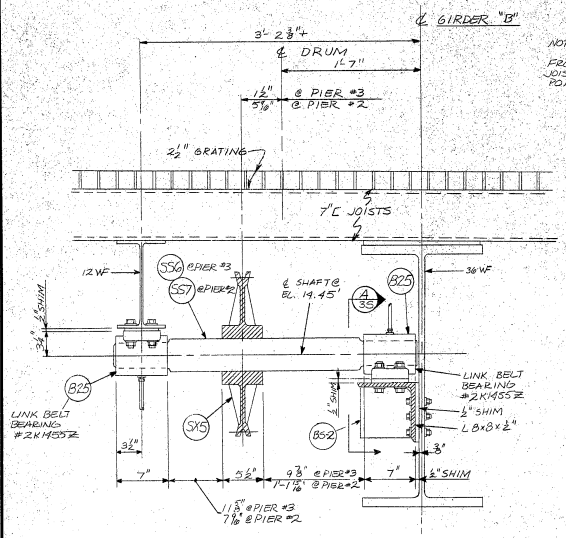

UPPER SHEAVE ASSEMBLY (22/3S)
- N.T.S. -

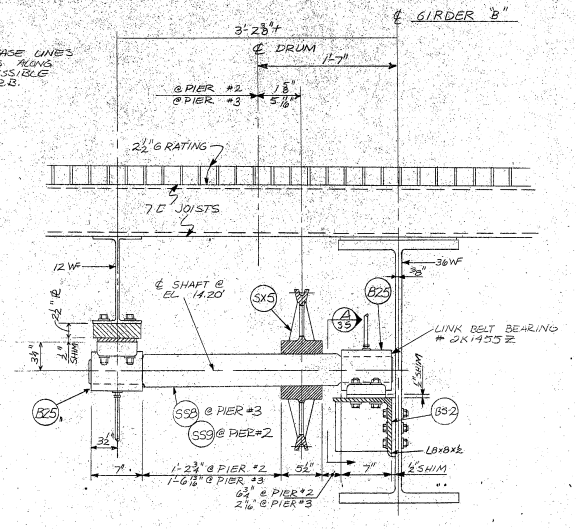

UPPER SHEAVE ASSEMBLY (21/3S)
- N.T.S. -

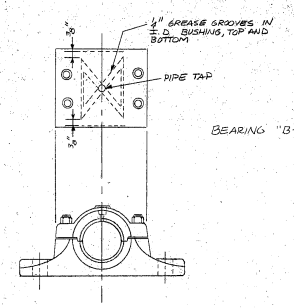

BEARING "B-25": LINK BELT 2K1455Z MODIFIED WITH GREASE GROOVES IN THE CAP, BASE, AND THE JUNCTION OF THE TWO AS SHOWN.

8 UPPER SHEAVE BEARINGS "B-25"

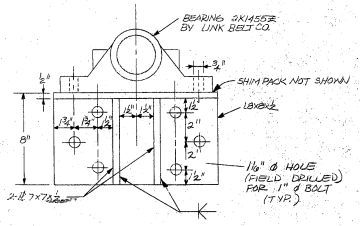

UPPER SHEAVE ASSEMBLY (A/3S)
(BEARING SEAT BS-2)

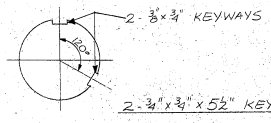

SECTION (B/3S)

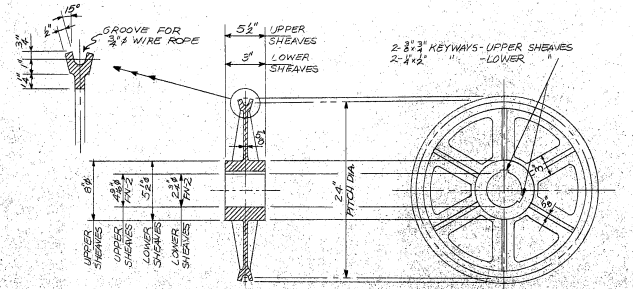

8 - UPPER SHEAVES "SX-5"
4 - LOWER SHEAVES "SX-6"
DRH/JOHNSON #26-230 MODIFIED ROUGH BORE 4 1/2" FOR SX-5 AND 2 1/2" FOR SX-6
FABRICATOR TO FINISH BORE AND KEYSEAT
FABRICATOR TO STAMP "ST. PAUL AVENUE"

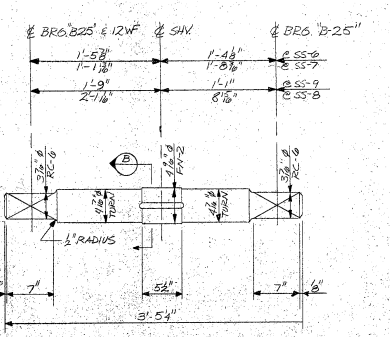

1 - SHAFT	SS - 6
1 - SHAFT	SS - 7
1 - SHAFT	SS - 8
1 - SHAFT	SS - 9

ASTM A668
TURN AND POLISH

BILL OF MATERIALS

QUANTITY	ITEM	DESIGNATION	PAGE
2	DRUM	D-4	2S
1	DRUM SHAFT	SS-12	2S
2	DRUM BEARING	B-25	2S
1	BEARING SEAT	BS-1	2S
1	BEARING STOOL	ST-1	2S
2	DRUM CANOPY		1S
4	3/4" ø U-BOLTS		2S
1	2" SHIM PACK FOR SEAT		2S
2	2" SHIM PACK FOR BEARINGS		2S
10	1/2" ø TO SURROUND BEAM HOLES		2S
2	LONG. EQU. CABLE 148'9"	ROPES #6 & #7	2S
2	LONG. EQU. CABLE 149'8 9/16"	ROPES #5 & #8	2S
8	UPPER SHEAVE	SX-5	3S
4	LOWER SHEAVE	SX-6	3S
4	UPPER SHEAVE SHAFT	SS6, SS7, SS8, SS9	3S
2	LOWER SHEAVE SHAFT	SS-11	4S
8	UPPER BEARING	B-25	3S
4	LOWER BEARING	B-28	4S
2	LOWER SHEAVE SEAT/ASSEMBLY		4S
4	UPPER SHEAVE SEAT	BS-2	3S
2	2 1/2" THICK ℄ FOR UPPER BEARING		3S
4	1/2" SHIM PACK FOR SEATS		3S
12	2" SHIM PACK FOR BEARINGS		3S, 4S
2	1/2" SHIM PACK FOR LOWER SHEAVE BRACKET		4S
2	CABLE BRACKET	CB-1	4S
1	CABLE BRACKET	CB-2	4S
1	CABLE BRACKET	CB-3	4S
20	12 HILTI WALL ADHESIVE ANCHORS		4S
20	12" WALL ANCHOR BOLTS		4S
8	4 COMPRESSION SPRINGS		4S
8	4 3/4" ℄ FOR SPRINGS		4S
8	4 TURNBUCKLE BODIES		4S
8	4 2" THREADED RODS		4S
3	1'-4" THREADED RODS		5S
2	CAM SUPPORTS		5S
3	STRINGER	STR-A	6S
2	STRINGER	STR-B	6S
16	L 6x6x3/8		6S

- ALSO -

APPROPRIATE FASTENING HARDWARE
GREASE LINES & HEAD BRACKETS
8" PVC TUBING AND SUPPORT BRACKETS

City of Milwaukee
Department of Public Works
Bureau of Bridges and Public Buildings

ST. PAUL AVENUE VERTICAL LIFT BRIDGE over the Milwaukee River
LONGITUDINAL EQUALIZER ADDITION / MODIFICATION
MACHINERY

REVISIONS
1 3/88 MS
2 11/88 MS

DESIGNED BY M.F.S.
DRAWN BY M.F.S.
CHECKED BY C.S.L.
DATE 11/87
SCALE 1"
JOB NUMBER 52920
SHEET NUMBER 3 (S)
OF 7 (S)

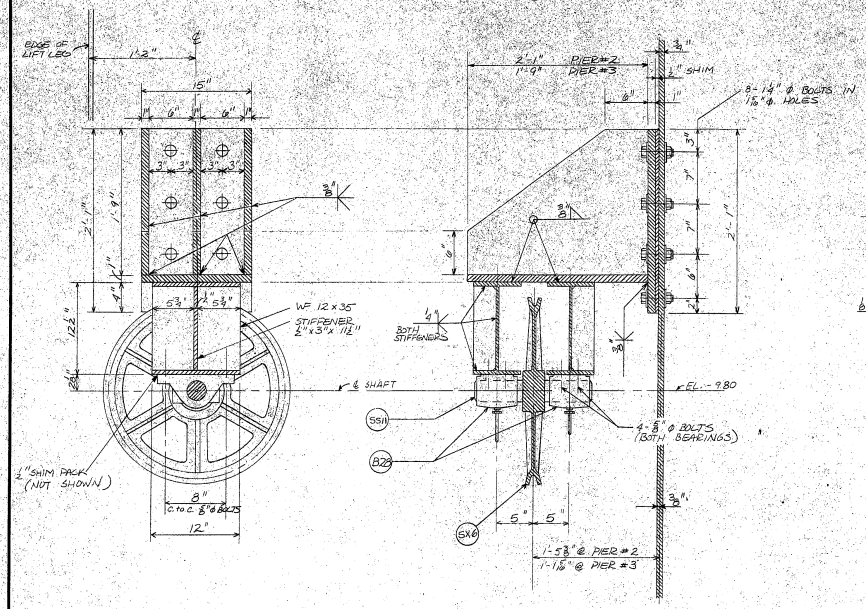

LOWER SHEAVE ASSEMBLY (20/45)
SCALE 1/2" = 1'-0"

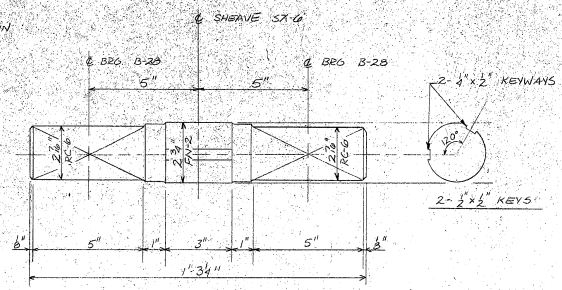

SHEAVE SHAFT SS-11
2 REQ'D
ASTM A668 STEEL - TURN & POLISH

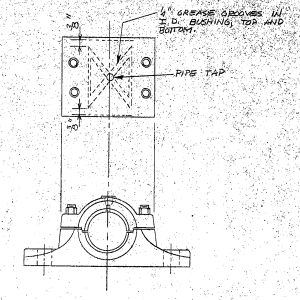

B-28 LOWER SHEAVE BEARINGS
4 REQ'D
LINK BELT 2M1298 MODIFIED WITH GREASE GROOVE IN CAP, BASE, AND THE JUNCTION OF THE TWO AS SHOWN.

☆ ADD A 1" ϕ, SS304, ANCHOR BOLT (USING HILTI HVA 1") AS SHOWN TO THE TWO CORRESPONDING BRACKETS ON THE EXISTING EQUALIZER ALONG "GIRDER C"

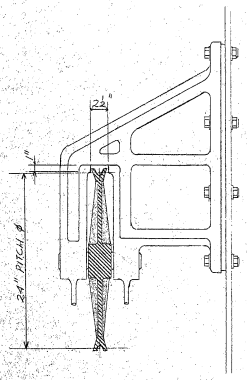

LOWER SHEAVE ASSEMBLY MODIFICATIONS FOR EQUALIZER ALONG GIRDER C

NOTE: CUT A 1" x 2 1/2" NOTCH IN EXISTING LOWER SHEAVE BEARINGS AS SHOWN TO ACCOMMODATE THE 24" PITCH ϕ SHEAVES REPLACING THOSE WITH A 21" PITCH ϕ (TO BE DONE IN FIELD)

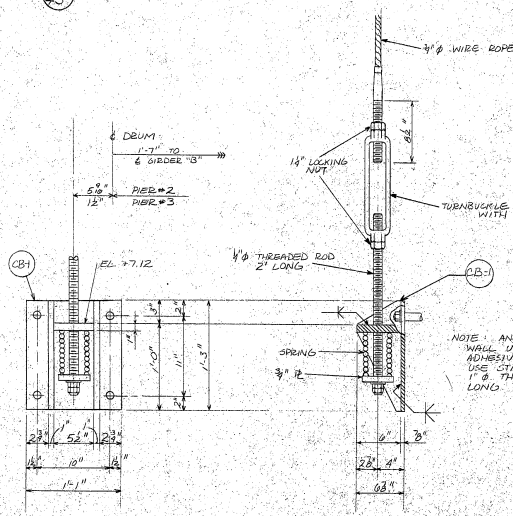

NOTE: ANCHOR BRACKETS TO WALL USING HILTI HVA ADHESIVE ANCHORS (HVA-1"). USE STAINLESS STEEL 304 1" ϕ THREADED RODS, 12" LONG AND 1" ϕ HEX NUTS.

WALL BRACKET ASSEMBLY (23/45)
SCALE: 1/2" = 1'-0"

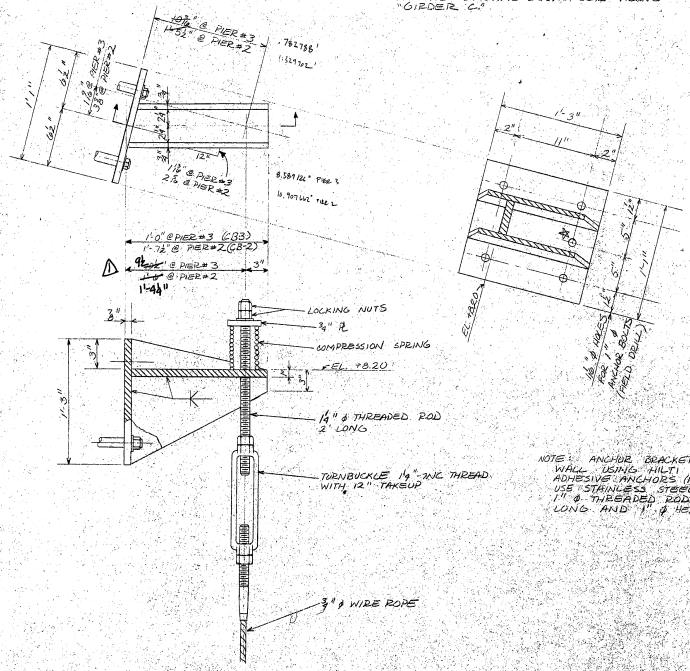

NOTE: ANCHOR BRACKET TO WALL USING HILTI HVA ADHESIVE ANCHORS (HVA1"). USE STAINLESS STEEL 304 1" ϕ THREADED RODS, 12" LONG AND 1" ϕ HEX NUTS.

WALL BRACKET ASSEMBLY (24/45)
CB-3 @ PIER #3
CB-2 @ PIER #2

City of Milwaukee
Department of Public Works
Bureau of Bridges and Public Buildings

ST. PAUL AVENUE VERTICAL LIFT BRIDGE
over the Milwaukee River
LONGITUDINAL EQUALIZER ADDITION / MODIFICATION
MACHINERY

REVISIONS
1 3/88 MS

DESIGNED BY	M.F.S.
DRAWN BY	M.F.S.
CHECKED BY	C.S.L.
DATE	1/1/87
SCALE	-
JOB NUMBER	52920
SHEET NUMBER	4 (S)
OF	7 (S)

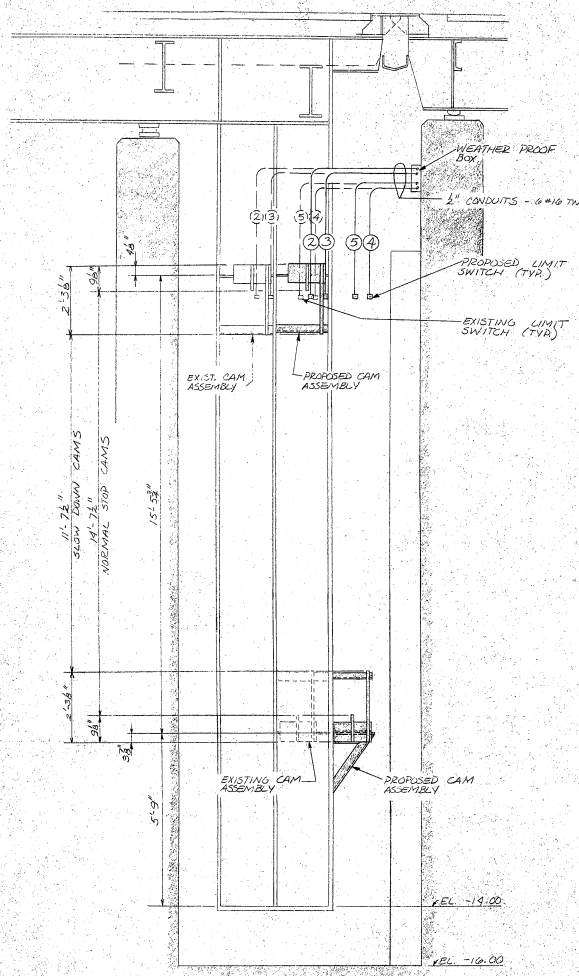

ASSEMBLY OF LIMIT SWITCH CAMS

SCALE: 1/2" = 1'-0"
(LOOKING SOUTH)

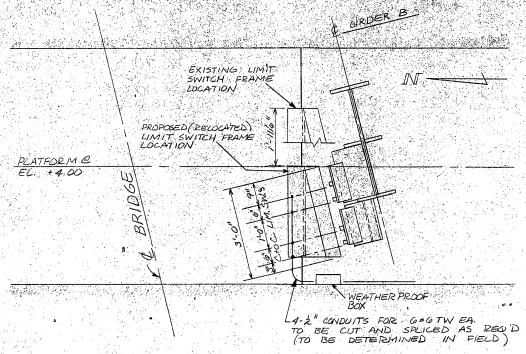

GENERAL PLAN OF LIMIT SWITCHES

SCALE 1/2" = 1'-0"

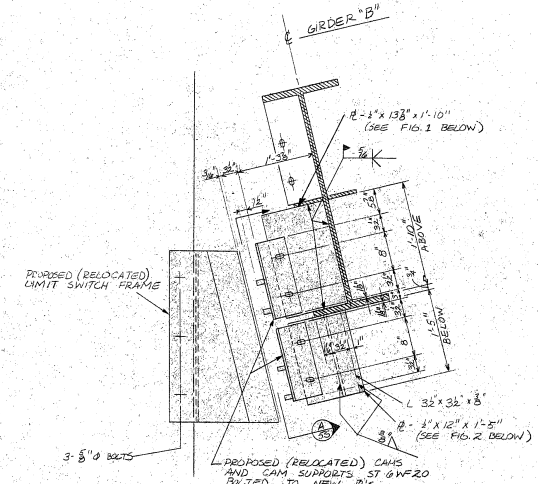

CAM SUPPORT ASSEMBLY

SCALE: 1" = 1'-0"

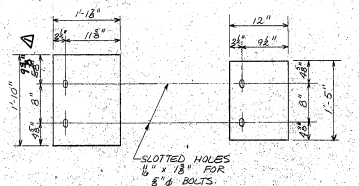

FIG. 1 FIG. 2

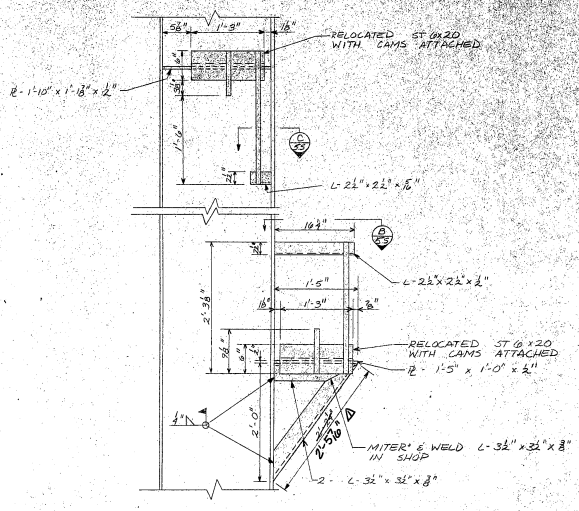

CAM SUPPORT SECTION (A/SS)

SCALE: 1" = 1'-0"

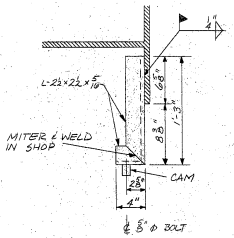

CAM SUPPORT SECTION (C/SS)

SCALE 12" = 1'-0"

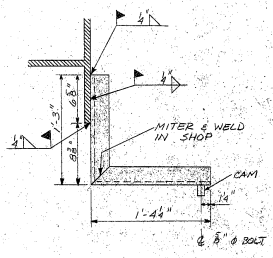

CAM SUPPORT SECTION (B/SS)

SCALE 12" = 1'-0"

NOTES FOR WORK TO BE DONE ON LIMIT SWITCHES:

1. MOVE LIMIT SWITCH MOUNTING FRAME AS SHOWN AND WELD TO TOP OF RAILING AS IN EXISTING LOCATION
2. BOLT RELOCATED FRAME THROUGH FLOOR WITH 3 - 5/8" ϕ STAINLESS STEEL 304 BOLTS, 10" LONG. HOLES TO BE 3/8" ϕ AND FILLED WITH GROUT BEFORE FRAME IS SET.
3. PLACE 1/2" THICK PLATE, 3'0" x 5", (WITH HOLES IN IT FOR BOLTS) ON UNDERSIDE OF FLOOR BENEATH LIMIT SWITCH FRAME
4. REMOVE AND REPLACE SECTIONS OF RAILING AS REQUIRED TO BE DETERMINED IN FIELD.
5. MOVE EXISTING CAMS AND THEIR MOUNTINGS (ST 6 x 20) TO NEW SUPPORTS. REMOVE OLD SUPPORTS.
6. CUT AND SPLICE WIRE AND CONDUIT FROM LIMIT SWITCH FRAME TO WEATHERPROOF BOX AS REQUIRED.

City of Milwaukee

Department of Public Works
Bureau of Bridges and Public Buildings

ST. PAUL AVENUE VERTICAL LIFT BRIDGE over the Milwaukee River
LONGITUDINAL EQUALIZER ADDITION / MODIFICATION
LIMIT SWITCHES

REVISIONS
1 3/88 MS

DESIGNED BY	M.F.S.
DRAWN BY	M.F.S.
CHECKED BY	C.S.L.
DATE 11/87	SCALE –
JOB NUMBER	52920
SHEET NUMBER	5 (S)
OF	7 (S)

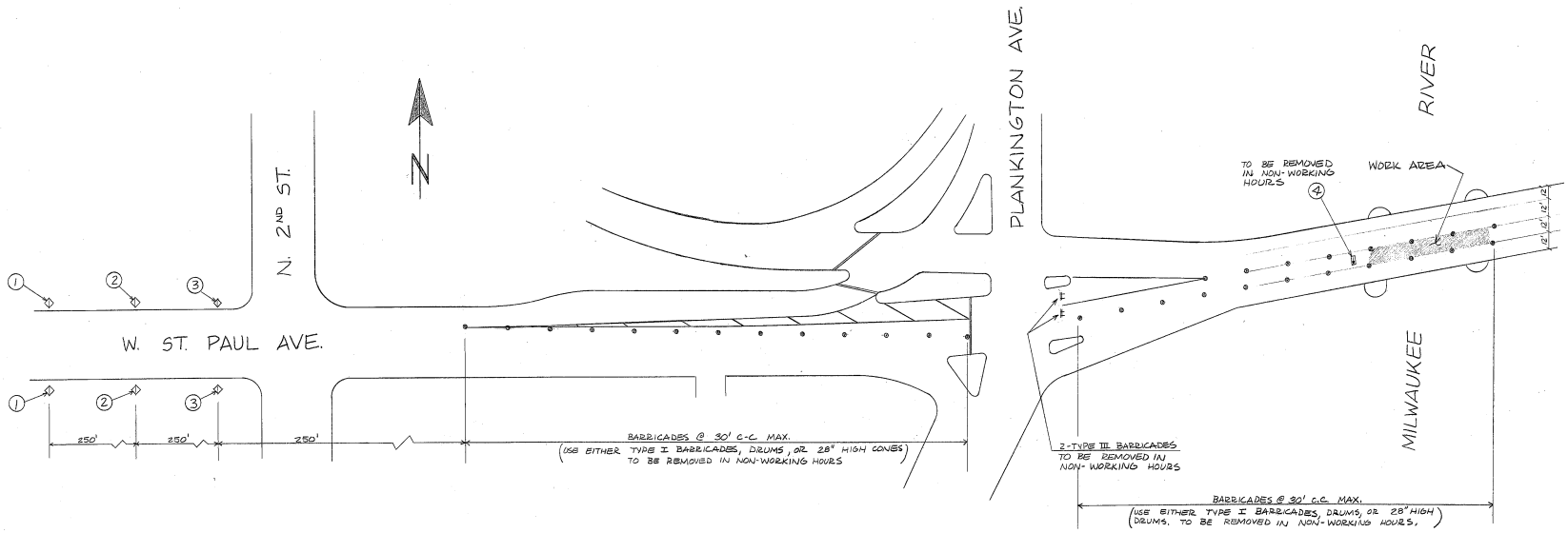

KEY

1. W20-1 48" x 48" "ROAD CONSTRUCTION AHEAD"
2. W20-5L 48" x 48" "LEFT LANE CLOSED AHEAD"
3. W14-2L 36" x 36" "⅄"
4. W1-6R 24" x 48" "→"

City of Milwaukee

Department of Public Works

Bureau of Bridges and Public Buildings

ST. PAUL AVENUE VERTICAL LIFT BRIDGE over the Milwaukee River

LONGITUDINAL EQUALIZER ADDITION / MODIFICATION

BARRICADE PLAN FOR SINGLE LANE CLOSURE

REVISIONS

DESIGNED BY	M.F.S.
DRAWN BY	M.F.S.
CHECKED BY	
DATE 10/88	SCALE 1"=40'
JOB NUMBER	52920
SHEET NUMBER	1
OF	1

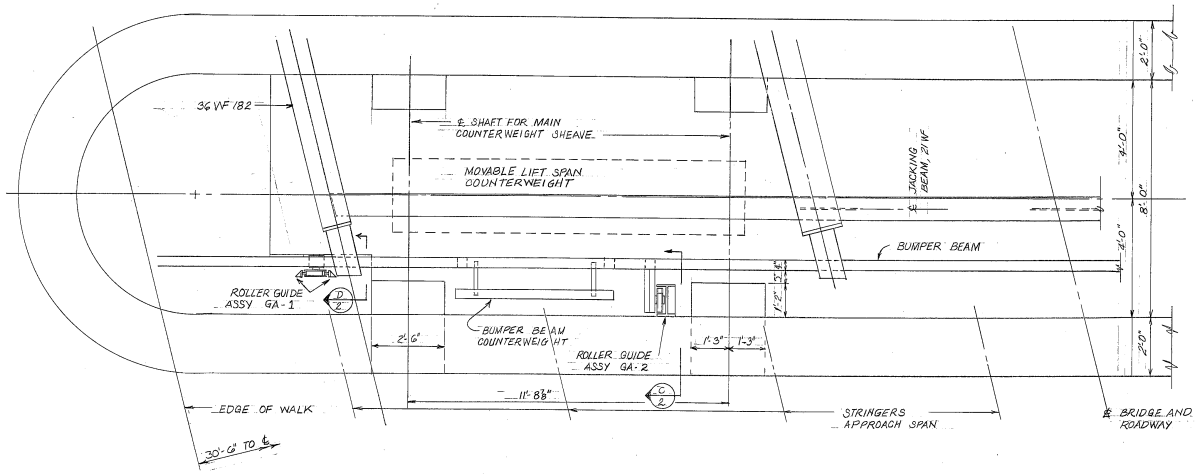

HALF PLAN BUMPER BEAM
SCALE ½" = 1'-0"

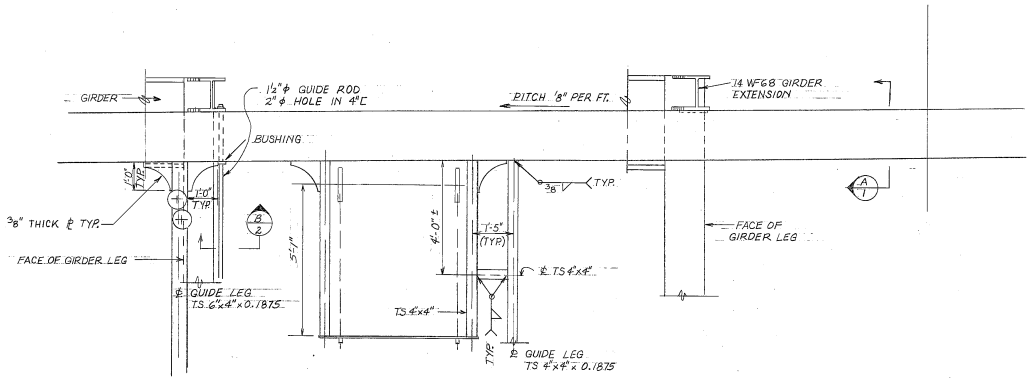

HALF ELEVATION
SCALE ½" = 1'-0"

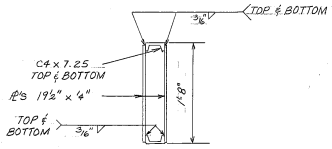

SECTION A/1
TYPICAL BUMPER BEAM CROSS-SECTION

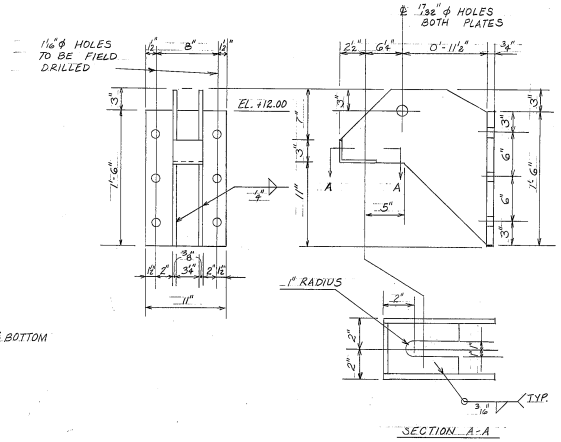

SHEAVE BRACKETS

City of Milwaukee
Department of Public Works
Bureau of Bridges and Public Buildings

ST. PAUL AVENUE VERTICAL LIFT BRIDGE
OVER THE MILWAUKEE RIVER
BUMPER BEAM MODIFICATIONS
PLAN AND ELEVATION

REVISIONS

DESIGNED BY	M.A.A./B & B
DRAWN BY	M.A.A.
CHECKED BY	G.R.
DATE 10/89	SCALE AS NOTED
JOB NUMBER	522-63
SHEET NUMBER	1
OF	3

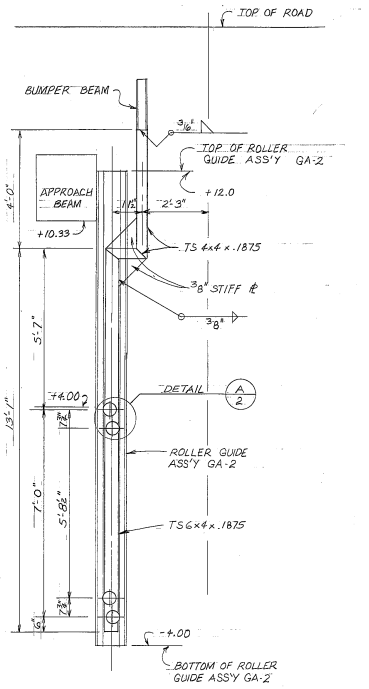

SECTION C/1
SCALE 1/2" = 1'-0"

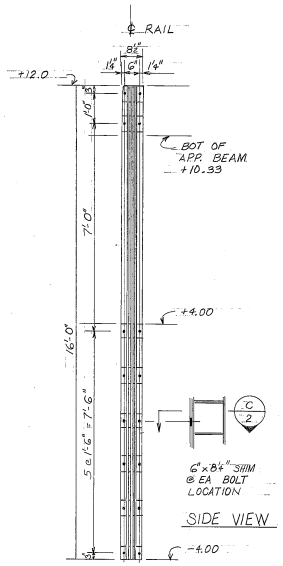

SIDE VIEW

ROLLER GUIDE ASSY. GA-2

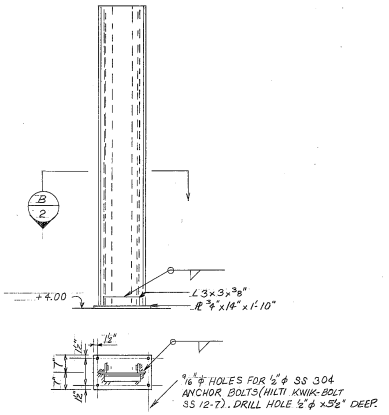

ROLLER GUIDE ASSY. GA-1
SCALE 1/2" = 1'-0"

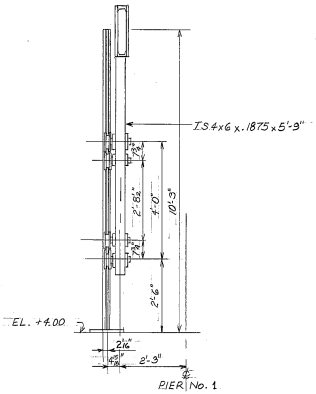

SECTION D/1
SCALE 1/2" = 1'-0"

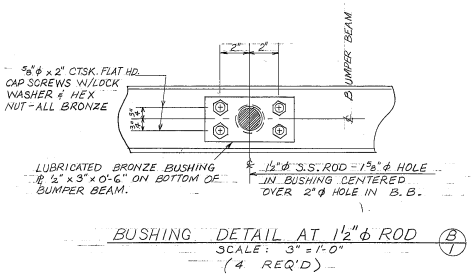

BUSHING DETAIL AT 1½" ϕ ROD B/1
SCALE: 3" = 1'-0"
(4 REQ'D)

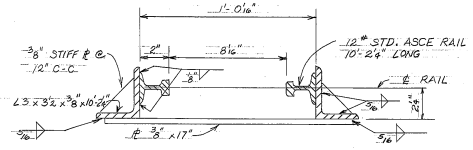

SECTION B/2 GA-1

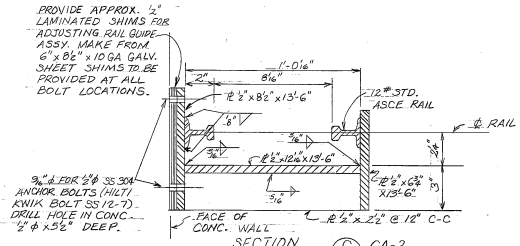

SECTION C/2 GA-2

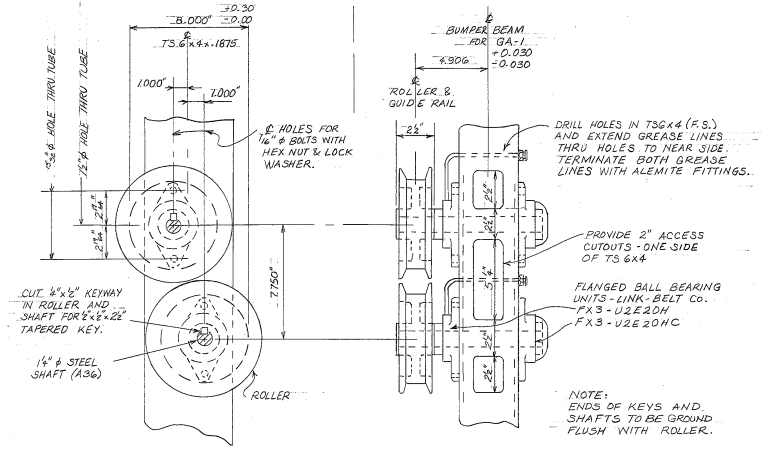

TWIN ROLLERS - DETAIL A/2
SCALE: 3" = 1'-0"

City of Milwaukee
Department of Public Works
Bureau of Bridges and Public Buildings

ST. PAUL AVENUE VERTICAL LIFT BRIDGE
OVER THE MILWAUKEE RIVER
BUMPER BEAM MODIFICATIONS
DETAILS

REVISIONS

DESIGNED BY	M.A.A./B & B
DRAWN BY	M.A.A.
CHECKED BY	G.R.
DATE 10/89	SCALE AS NOTED
JOB NUMBER	522-63
SHEET NUMBER	2
OF	3

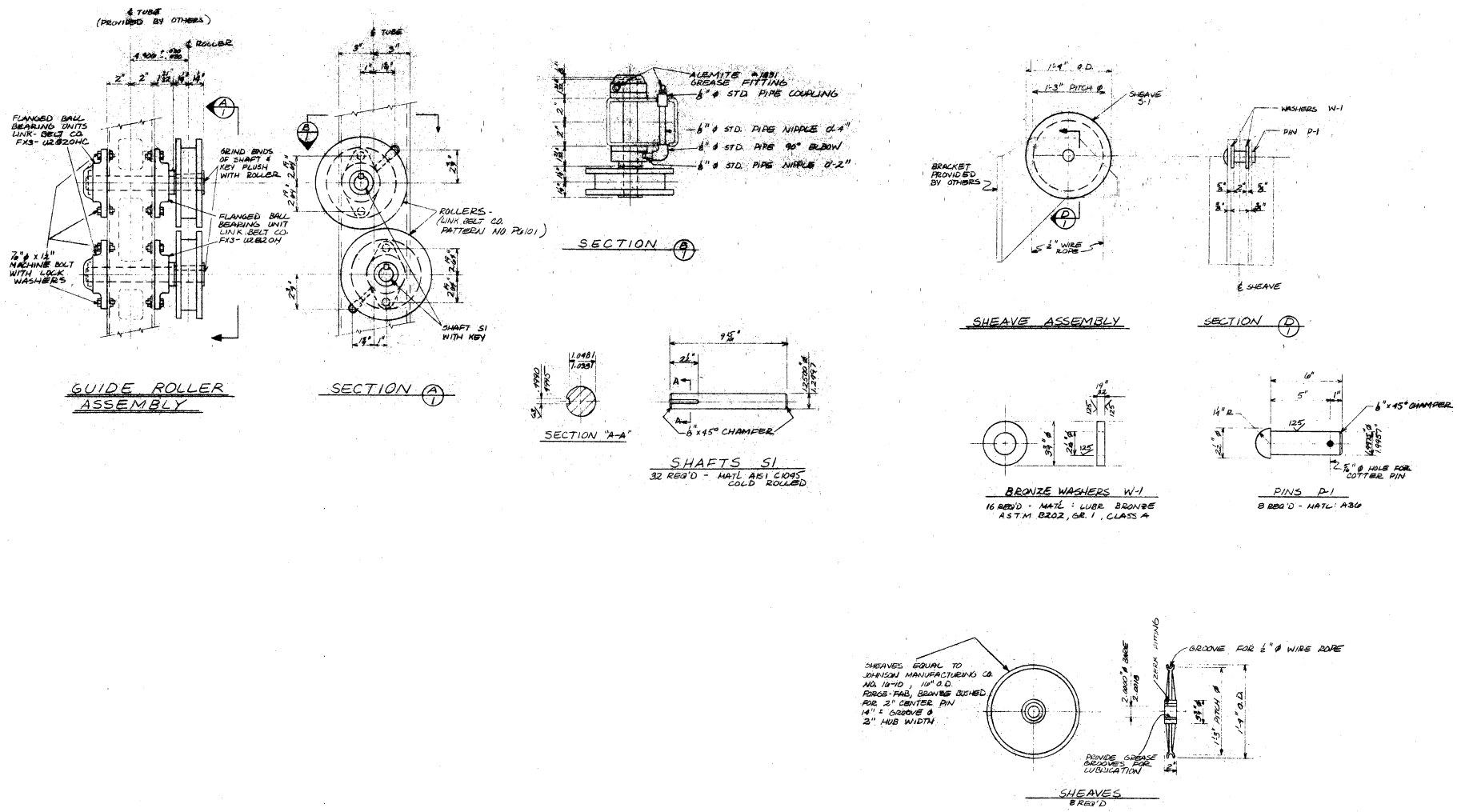

City of Milwaukee

Department of Public Works

Bureau of Bridges and Public Buildings

ST. PAUL AVENUE VERTICAL LIFT BRIDGE

OVER THE MILWAUKEE RIVER

BUMPER BEAM MODIFICATIONS

MACHINERY

REVISIONS

DESIGNED BY B & B.	
DRAWN BY B & B/M.A.A.	
CHECKED BY G.R.	
DATE 10/89	SCALE NONE
JOB NUMBER 522-63	
SHEET NUMBER 3	
OF 3	