W:\STR\B0100\ 2014\PAINTING\ C1_TITLE.DGN 01/29/2015

# CITY OF MILWAUKEE
# DEPARTMENT OF PUBLIC WORKS
# INFRASTRUCTURE SERVICES DIVISION

# PAINTING OF THE BROADWAY BASCULE BRIDGE OVER THE MILWAUKEE RIVER

# B-40-952

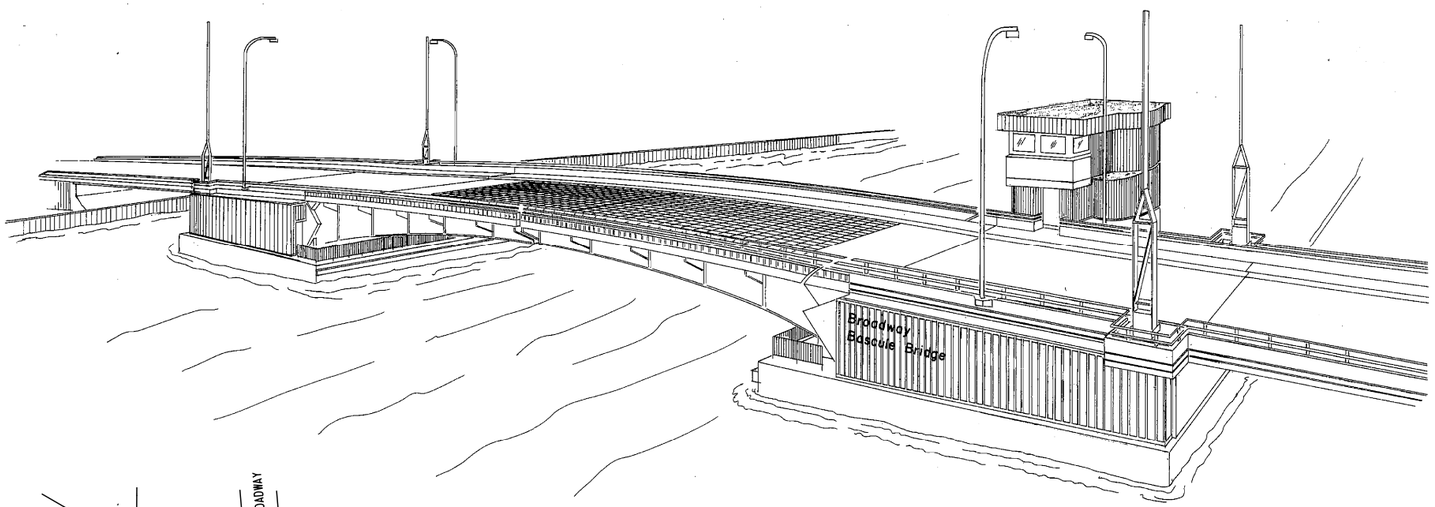


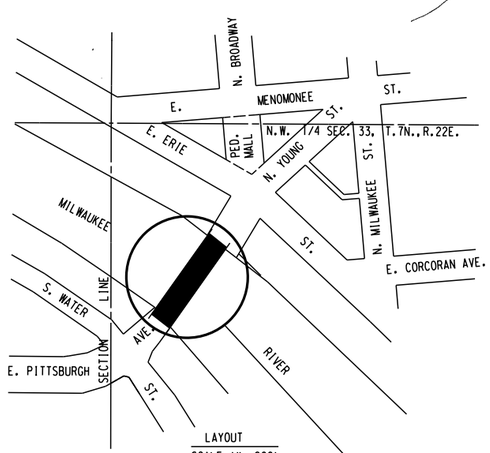


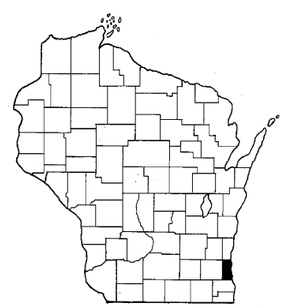

N

**PROJECT LOCATION**

## LIST OF DRAWINGS


C1. TITLE SHEET
T1. TRAFFIC CONTROL - STAGE 1
T2. TRAFFIC CONTROL - STAGE 2
T3. PAVEMENT MARKING AND MISCELLANEOUS QUANTITIES
1. SITE PLAN
2. TYPICAL CROSS SECTIONS
3. ESTIMATE OF QUANTITIES
4. NORTH AND SOUTH ABUTMENTS
5. PIER 1
6. PIER 2
7. BASCULE AND PIER SPANS - FRAMING PLAN
8. BASCULE SPAN SECTION - CENTERLINE ROADWAY
9. BASCULE SPAN - FLOOR BEAMS 1 TO 4
10. BASCULE SPAN - FLOOR BEAMS 5 AND 6
11. BASCULE SPAN - BASCULE GIRDER
12. BASCULE SPAN - COUNTERWEIGHT BOX
13. BASCULE SPAN - MISC. STEEL DETAILS
14. BASCULE SPAN - WIND BRACING
15. PIER SPAN - LOADING GIRDERS AND COLUMNS
16. PIER SPAN - CROSS SECTION - BENT 1
17. PIER SPAN - CROSS SECTION - BENTS 2 AND 3
18. REAR BREAK - ROADWAY
19. REAR BREAK - SIDEWALK
20. REAR BREAK - DETAILS AND REAR BUMPER
21. APPROACH SPANS - FRAMING PLAN
22. APPROACHES - DECK SECTION AND BEARING DETAILS
23. RAILING PLAN AND PARAPET DETAILS
24. MACHINERY - CENTERLOCK LAYOUT
25. MACHINERY - CENTERLOCK PARTS
26. MACHINERY - LAYOUT
27. MACHINERY - RACK ASSEMBLY
28. BIKE PLATE CONNECTION DETAILS
29. FIBERGLASS SIDEWALK PLATE PLAN
30. FIBERGLASS SIDEWALK PLATE DETAILS
31. CURB CHANNEL 1981 SHOP DRAWINGS


WISCONSIN
CRAIG S. LIBERTO
E-23746
MILWAUKEE
WIS.
PROFESSIONAL ENGINEER

Craig S. Liberto 1/30/2015

City of Milwaukee
Department of Public Works
Infrastructure Services Division

APPROVED BY:
FLAMES-OPERATIONS MANAGER DATE 1-30-15
CITY ENGINEER/DEPUTY COMMISSIONER OF PUBLIC WORKS DATE 1/30/15

BROADWAY BASCULE BRIDGE
OVER THE MILWAUKEE RIVER
TITLE SHEET

REVISIONS

| | |
|---|---|
| DESIGNED BY H.J.R. | |
| DRAWN BY S.D.B. | |
| CHECKED BY J.M.W. | |
| DATE FEB. 2015 | SCALE NONE |
| JOB NUMBER B10001401 10 | |
| SHEET NUMBER C1 OF C1 | |
| OF 35 | |

W:\STR\B0100\ 2014\PAINTING\ TC1_TRAFFIC CONTROL SHT 1.DGN 01-29-2015

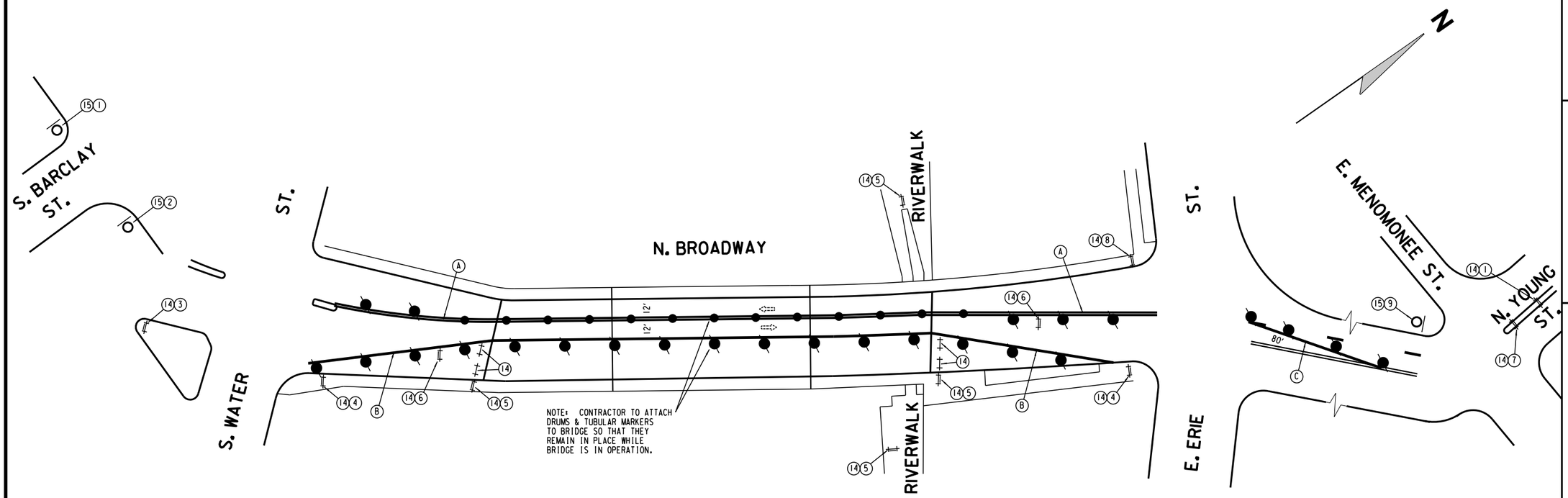


## LEGEND

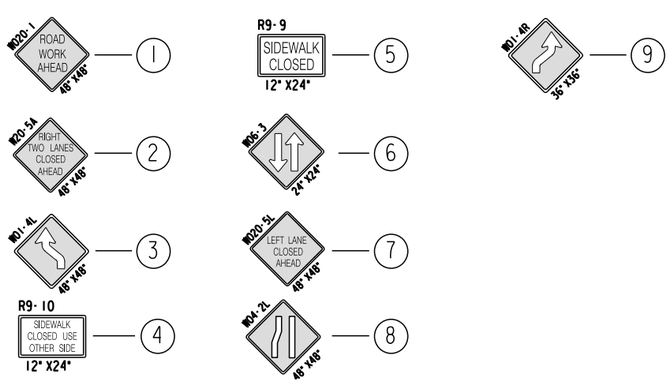


DRUMS W/LIGHTS 30' SPACING — (13)

TYPE III BARRICADES — (14)

TYPE III BARRICADES W/ SIGN — (14) + (X)

SIGNS BANDED TO UTILITY POLE — (15) + (X)

DIRECTION OF TRAFFIC

TUBULAR MARKERS 25' SPACING

CONCRETE BARRICADES WITH STEADY BURN LIGHTS

(A) TPM, REMOVABLE TAPE, 4" DOUBLE YELLOW

(B) TPM, REMOVABLE TAPE, 4" WHITE

(C) TPM, REMOVABLE TAPE, 4" YELLOW

NOTE: ALL SIGNING SHALL BE THE CONTRACTORS RESPONSIBILITY. ALL SIGNS SHALL BE BANDED TO EXISTING UTILITY POLES UNLESS OTHERWISE NOTED. CONTRACTOR RESPONSIBLE FOR COVERING ALL CONFLICTING PAVEMENT MARKINGS.

City of Milwaukee

Department of Public Works

Infrastructure Services Division

BROADWAY BASCULE BRIDGE OVER THE MILWAUKEE RIVER

TRAFFIC CONTROL - STAGE I

REVISIONS

DESIGNED BY S.M.B.

DRAWN BY S.J.S.

CHECKED BY

DATE FEB. 2015

SCALE NONE

JOB NUMBER BR100140110

SHEET NUMBER T1 OF T3

OF 35

W:\STR\B0100\ 2014\PAINTING\ TC2_TRAFFIC CONTROL SHT 2.DGN 01-29-2015

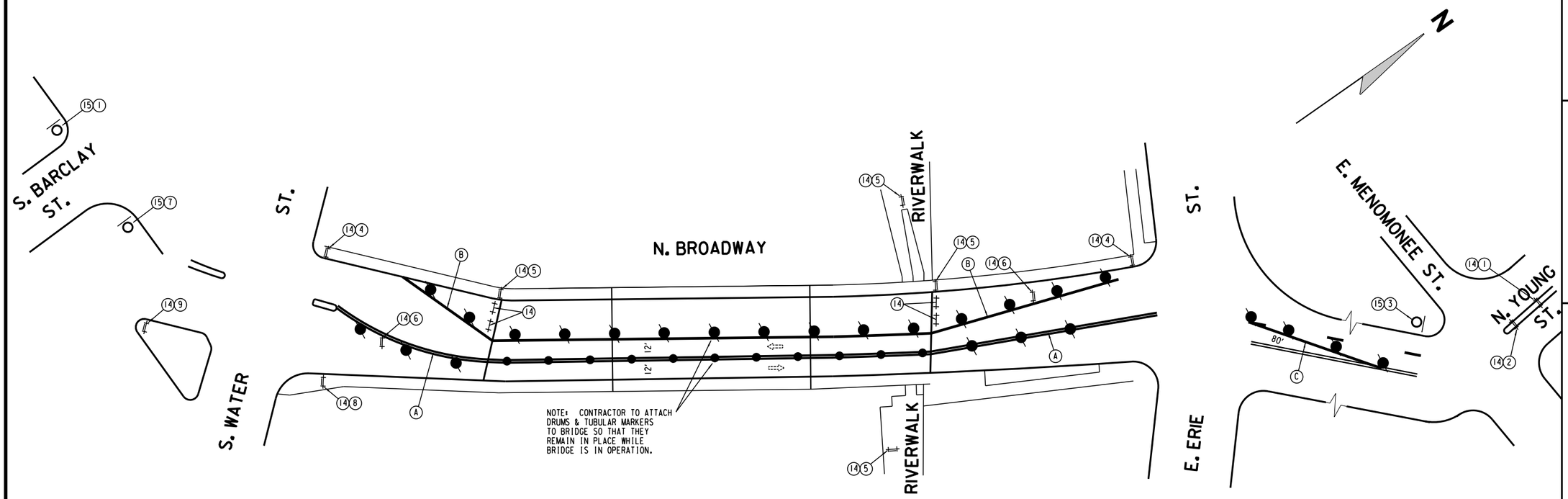


## LEGEND

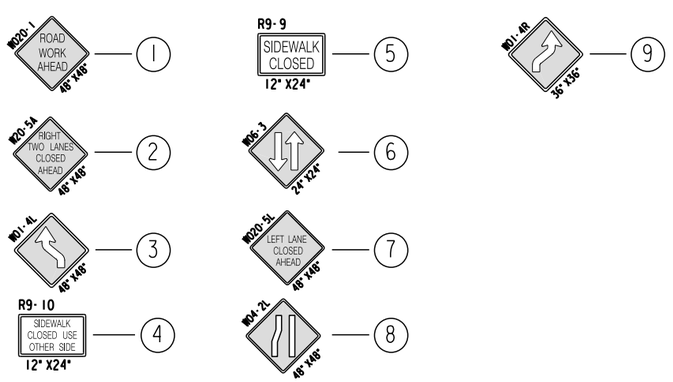


DRUMS W/LIGHTS 30' SPACING — (13)

TYPE III BARRICADES — (14)

TYPE III BARRICADES W/ SIGN — (14) + (X)

SIGNS BANDED TO UTILITY POLE — (15) + (X)

DIRECTION OF TRAFFIC

TUBULAR MARKERS 25' SPACING

CONCRETE BARRICADES WITH STEADY BURN LIGHTS

(A) TPM, REMOVABLE TAPE, 4" DOUBLE YELLOW

(B) TPM, REMOVABLE TAPE, 4" WHITE

(C) TPM, REMOVABLE TAPE, 4" YELLOW

NOTE: ALL SIGNING SHALL BE THE CONTRACTORS RESPONSIBILITY. ALL SIGNS SHALL BE BANDED TO EXISTING UTILITY POLES UNLESS OTHERWISE NOTED. CONTRACTOR RESPONSIBLE FOR COVERING ALL CONFLICTING PAVEMENT MARKINGS.

City of Milwaukee

Department of Public Works

Infrastructure Services Division

BROADWAY BASCULE BRIDGE
OVER THE MILWAUKEE RIVER
TRAFFIC CONTROL - STAGE 2

REVISIONS

DESIGNED BY S.M.B.

DRAWN BY S.J.S.

CHECKED BY

DATE FEB. 2015

SCALE NONE

JOB NUMBER BR100140110

SHEET NUMBER T2 OF T3

OF 35

W:\STR\B0100\ 2014\PAINTING\ TC3_PAVE MARK.DGN 01-13-2015

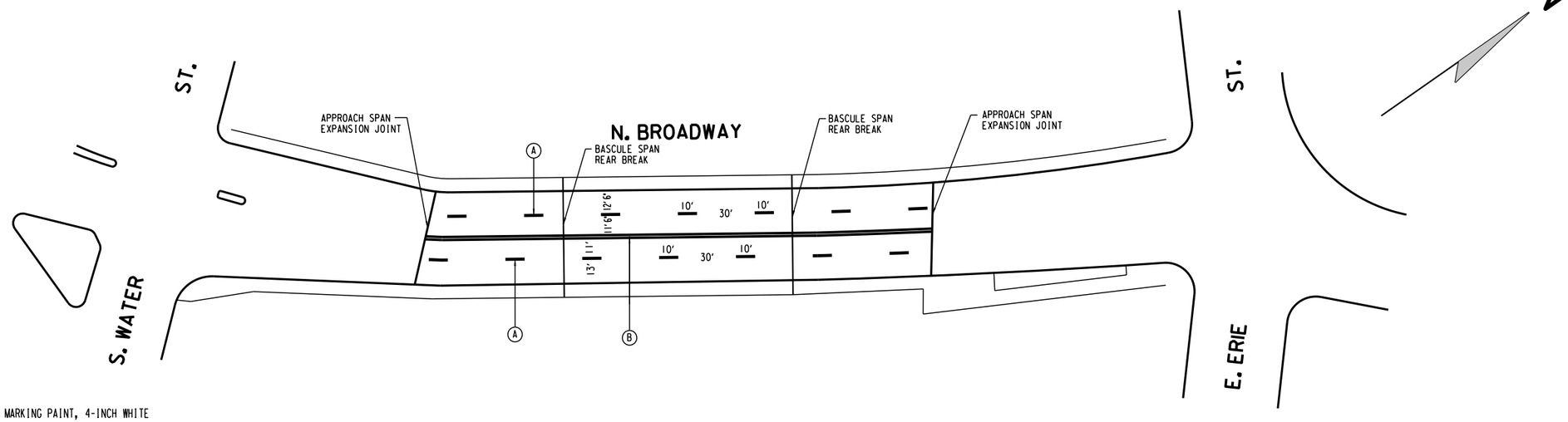


(A) PAVEMENT MARKING PAINT, 4-INCH WHITE
(B) PAVEMENT MARKING PAINT, 4-INCH DOUBLE YELLOW

| LOCATION | UNIT PAY | PAVEMENT MARKING EPOXY 4-INCH ITEM NO. 646.0106 |
|---|---|---|
| BRIDGE B-40-952 | LF | 316 |

| ITEMS | | STAGE 1 (EACH) | STAGE 1 (DAYS) | STAGE 2 (EACH) | STAGE 2 (DAYS) |
|---|---|---|---|---|---|
| # TRAFFIC CONTROL DRUMS (643.0300) | | 25 | 2250 | 25 | 2250 |
| ## TRAFFIC CONTROL BARRICADES TYPE III (643.0420) | | 16 | 1440 | 16 | 1440 |
| TRAFFIC CONTROL WARNING LIGHTS TYPE A (643.0705) | Flashing | 32 | 2880 | 32 | 2880 |
| TRAFFIC CONTROL WARNING LIGHTS TYPE C (643.0715) | Steady | 25 | 2250 | 25 | 2250 |
| ### TEMPORARY PAVEMENT MARKING | | | | | |
| TRAFFIC CONTROL, FLEXIBLE TUBULAR POSTS (643.0500) | | 13 | EACH | 11 | EACH |
| TRAFFIC CONTROL, FLEXIBLE TUBULAR BASES (643.0600) | | 13 | EACH | 11 | EACH |
| TEMPORARY PAVEMENT MARKING REMOVABLE TAPE 4-INCH, WHITE (649.0400) | | 162 | LF | 168 | LF |
| TEMPORARY PAVEMENT MARKING REMOVABLE TAPE 4-INCH, YELLOW (649.0400 | | 410 | LF | 416 | LF |
| TOTAL REMOVABLE TAPE (649.0400) | | 572 | LF | 584 | LF |

# ALL DRUMS HAVE ONE TYPE C YELLOW LIGHT (LIGHTS ARE TO BE PAID FOR SEPERATLY UNDER THEIR APPROPRIATE BID
## ALL TYPE III BARRICADES HAVE TWO TYPE A YELLOW LIGHTS (LIGHTS ARE TO BE PAID FOR SEPERATLY UNDER THEIR API
### WHEN PLACING TEMPORARY REMOVABLE TAPE, THE TAPE SHALL BE SLICED OR CUT ACROSS IT'S WIDTH EVERY TWENTY
### ALL TEMPORARY PAVEMENT MARKINGS MUST BE REMOVED PRIOR TO FINAL ACCEPTANCE OF PROJECT

| ITEM | SIZE | DESCRIPTION | STAGE 1 | STAGE 2 |
|---|---|---|---|---|
| R9-9 | 12"x24" | "SIDEWALK CLOSED" | 4 | 4 |
| R9-10 | 12"x24" | "SIDEWALK CLOSED USE OTHER SIDE" | 2 | 2 |
| WO1-4L | 48"x48" | "LANE SHIFT (LEFT)" | 1 | 1 |
| WO1-4R | 36"x36" | "LANE SHIFT (RIGHT)" | 1 | 1 |
| WO4-2L | 48"x48" | "PAVEMANT WIDTH TRANSITION (LEFT)" | 1 | 1 |
| WO6-3 | 24"x24" | "TWO WAY TRAFFIC" | 2 | 2 |
| WO20-1 | 48"x48" | "ROAD WORK AHEAD" | 2 | 1 |
| WO20-5L | 48"x48" | "LEFT LANE CLOSED AHEAD" | 1 | 1 |
| W20-5A | 48"x48" | "RIGHT TWO LANES CLOSED" | 1 | 2 |
| | | 643.0900 TOTAL | 15 | 15 |
| | | | 1350 (DAYS) | 1350 (DAYS) |

"RO" and "WO " SIGNS ARE THE SAME AS "R" and "W" SIGNS, EXCEPT THAT THE BACKGROUNDS ARE ORANGE

NOTE:
SIGN LAYOUT SHALL BE IN ACCORDANCE WITH THE FEDERAL HIGHWAY ADMINISTARTION (FHWA) MANUAL OF STANDARD HIGHWAY SIGNS, UNLESS OTHERWISE PROVIDED IN THE PLAN.

City of Milwaukee
Department of Public Works
Infrastructure Services Division

BROADWAY BASCULE BRIDGE
OVER THE MILWAUKEE RIVER
PAVEMENT MARKING AND
MISCELLANEOUS QUANTITIES

REVISIONS

DESIGNED BY S.M.B.
DRAWN BY S.J.S.
CHECKED BY
DATE FEB. 2015
SCALE NONE
JOB NUMBER BR100140110
SHEET NUMBER T3 OF T3
OF 35

# NORTH BROADWAY BASCULE BRIDGE OVER THE MILWAUKEE RIVER

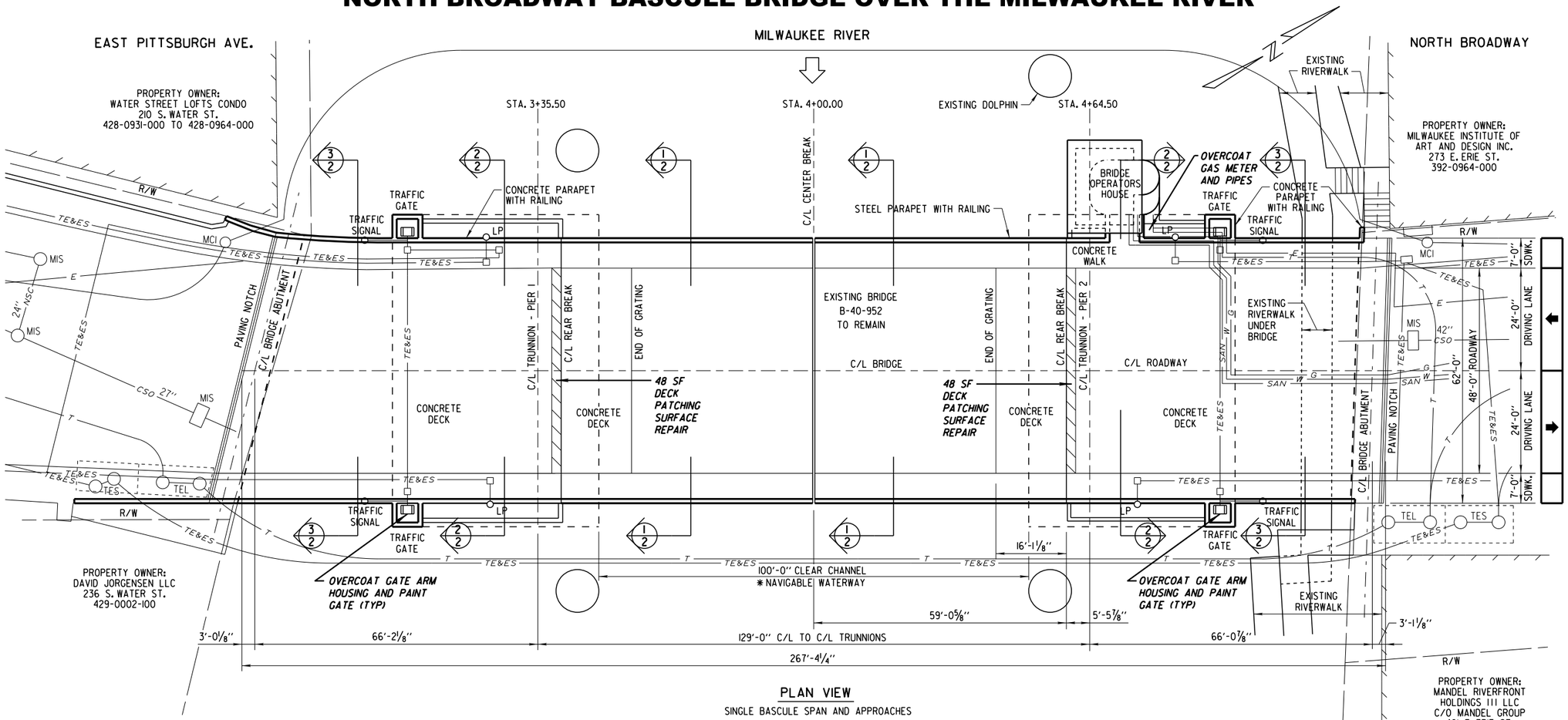


## PLAN VIEW

SINGLE BASCULE SPAN AND APPROACHES

*NAVIGABLE WATERWAY SHALL REMAIN OPEN AND ONE LEAF OF BASCULE SPAN OPERATIONAL AT ALL TIMES.

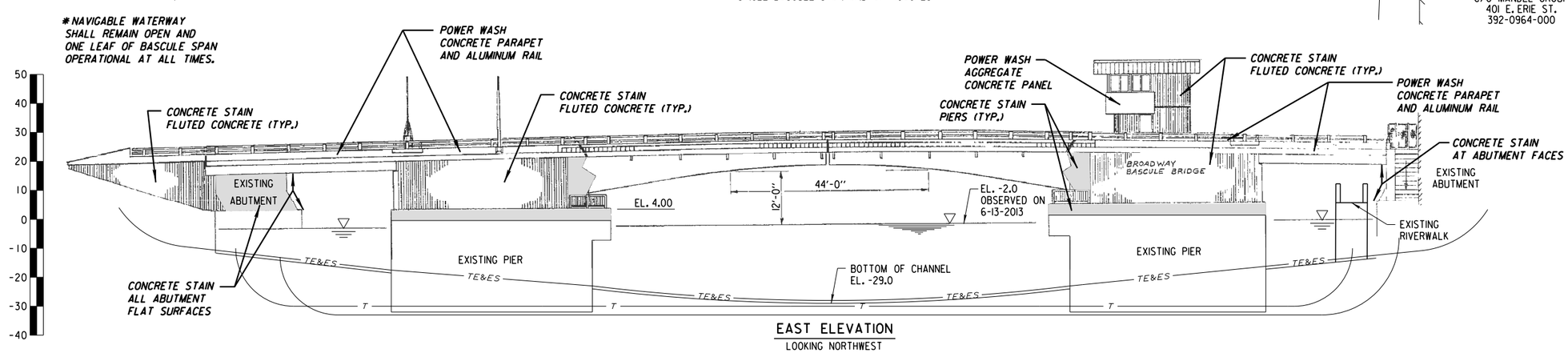


## EAST ELEVATION

LOOKING NORTHWEST

City of Milwaukee

Department of Public Works

Infrastructure Services Division

BROADWAY BASCULE BRIDGE OVER THE MILWAUKEE RIVER SITE PLAN

REVISIONS

| | |
|---|---|
| DESIGNED BY H.J.R. | |
| DRAWN BY S.D.B. | |
| CHECKED BY J.M.W. | |
| DATE FEB. 2015 | SCALE NONE |
| JOB NUMBER BR100140110 | |
| SHEET NUMBER 1 OF 31 | |
| OF 35 | |

W:\STRUBO100\ 2014\PAINTING\PLANS\ 01_SITE.DGN 01-29-2015

W:\STR\B0100\ 2014\PAINTING\PLANS\ 02_XSECT.DGN 1-29-2015

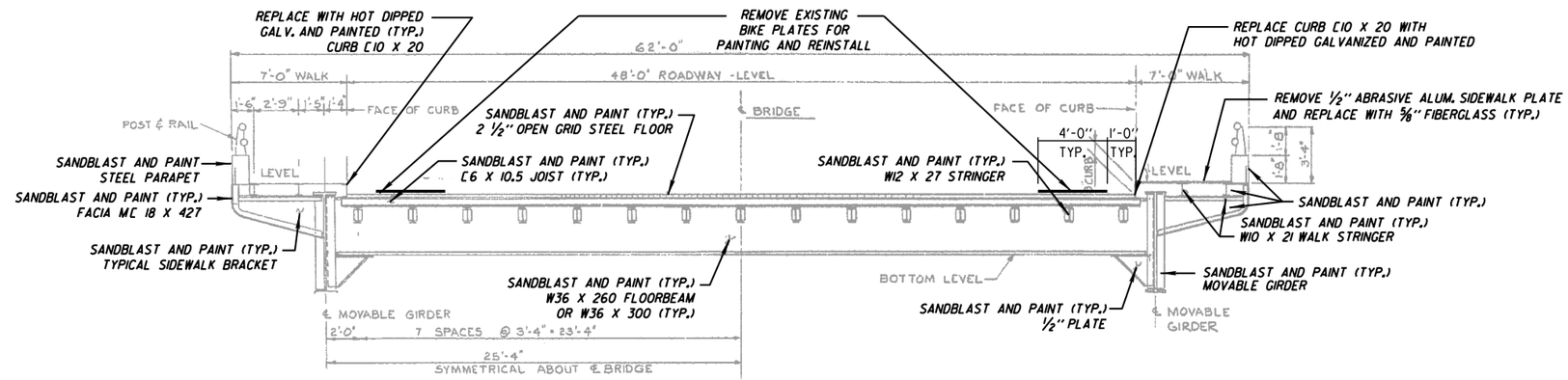


TYPICAL CROSS-SECTION - MOVABLE SPANS (1/2)

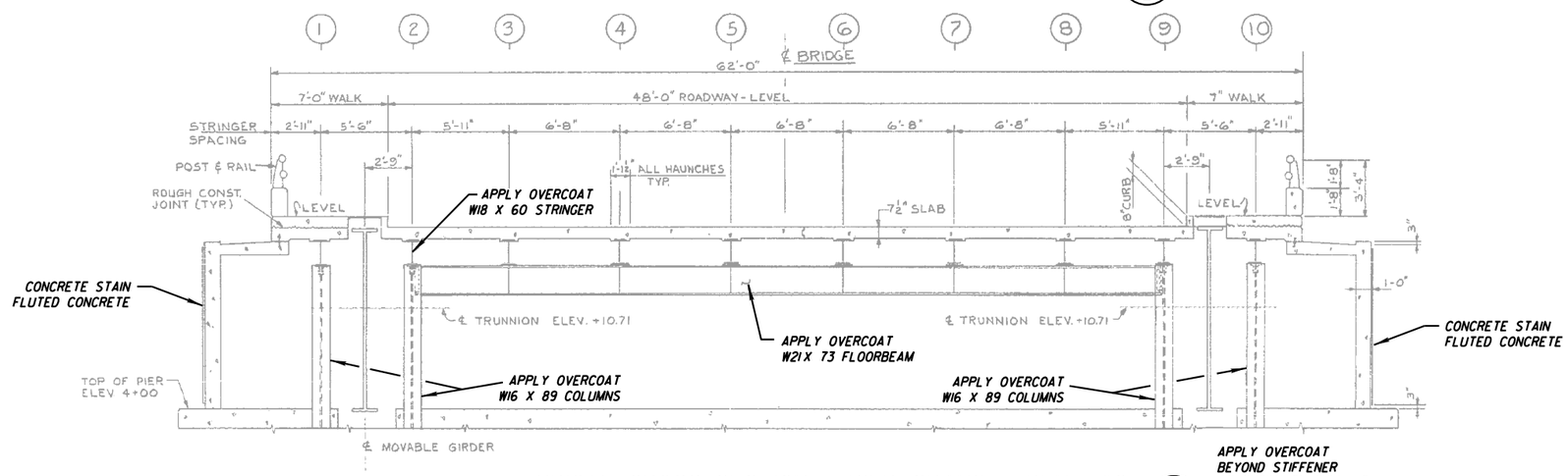


TYPICAL CROSS-SECTION - PIER SPANS - BENT #2 (2/2)

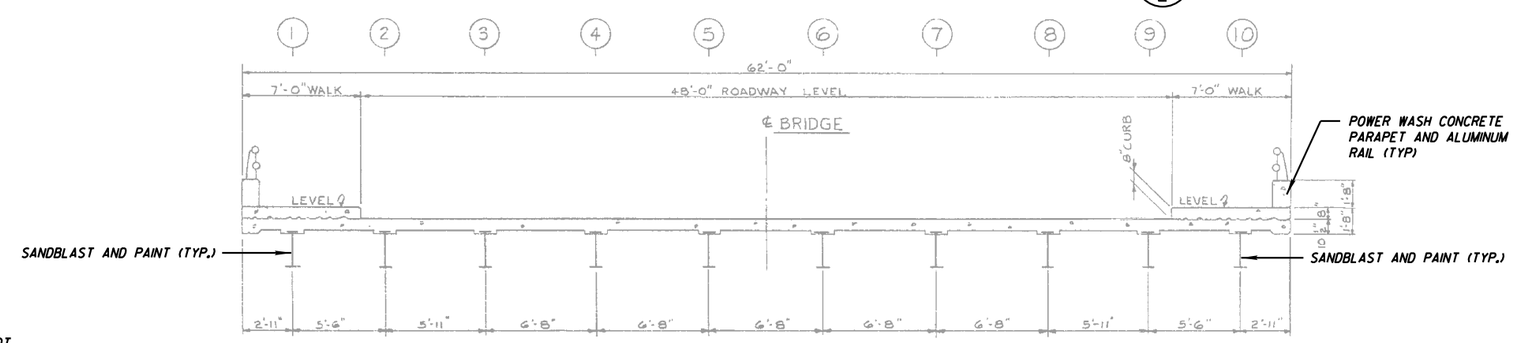


NOTE: UTILITIES NOT SHOWN FOR CLARITY.

TYPICAL CROSS-SECTION - APPROACH SPAN (3/2)

City of Milwaukee

Department of Public Works

Infrastructure Services Division

BROADWAY BASCULE BRIDGE
OVER THE MILWAUKEE RIVER
TYPICAL CROSS SECTIONS

REVISIONS

| | |
|---|---|
| DESIGNED BY H.J.R. | |
| DRAWN BY S.D.B. | |
| CHECKED BY J.M.W. | |
| DATE FEB. 2015 | SCALE NONE |
| JOB NUMBER BR100140110 | |
| SHEET NUMBER 2 OF 31 | |
| OF 35 | |

W:\STR\B0100\ 2011WORK\ 03_QUAN.DGN 01-29-2015

# ESTIMATED BRIDGE QUANTITIES

| ITEM NUMBER | BID ITEMS | UNIT | SUBSTRUCTURE | | | | SUPERSTRUCTURE | | | TOTAL |
|---|---|---|---|---|---|---|---|---|---|---|
| | | | NORTH ABUTMENT | PIER 1 | PIER 2 | SOUTH ABUTMENT | NORTH APPROACH | SOUTH APPROACH | BASCULE | |
| 203.0600.S | REMOVING OLD STRUCTURE OVER WATERWAY WITH MINIMAL DEBRIS | LS | | | | | | | | 1 |
| 502.2000 | COMPRESSION JOINT SEALER PREFORMED ELASTOMERIC (1 5/8") | LF | | | | | 53 | 53 | | 106 |
| 506.0105 | STRUCTURAL STEEL CARBON | LB | | | | | | | 4,760 | 4,760 |
| 509.1500 | CONCRETE SURFACE REPAIR | SF | 14 | 29 | 41 | | | | | 84 |
| 509.9025.S | EPOXY INJECTION CRACK REPAIR | LF | 11 | 50 | 32 | | | | | 93 |
| 517.0600 | PAINTING EPOXY SYSTEM (B-40-952) | LS | | | | | | | | 1 |
| 517.1010.S | CONCRETE STAINING | SF | 634 | 2,056 | 2,961 | 756 | | | | 6,407 |
| 517.1800.S | STRUCTURE REPAINTING RECYCLED ABRASIVE, STRUCTURE B-40-952 | LS | | | | | | | | 1 |
| 517.3000.S | STRUCTURE OVERCOATING CLEANING AND PRIMING STRUCTURE B-40-952 | LS | | | | | | | | 1 |
| 517.4000.S | CONTAINMENT AND COLLECTION OF WASTE MATERIALS STRUCTURE B-40-952 | LS | | | | | | | | 1 |
| SPV.0090.01 | JOINT SEALANT REPAIR | LF | | | | | 70 | 80 | | 150 |
| SPV.0105.01 | FIELD VERIFICATION SURVEY | LS | | | | | | | | 1 |
| SPV.0165.01 | FIBERGLASS SIDEWALK FLOOR PLATES | SF | | | | | | | 1,600 | 1,600 |
| SPV.0165.02 | DECK PATCHING B-40-952 | SF | | | | | 88 | 88 | | 176 |
| SPV.0165.03 | REMOVING AND REINSTALLING METAL PLATES FOR BIKE LANES | SF | | | | | | | 750 | 750 |
| SPV.0165.04 | POWER WASHING | SF | | | | | 1,352 | 1,595 | 808 | 3,755 |

## GENERAL NOTES

DIMENSIONS SHOWN ARE BASED ON THE ORIGINAL STRUCTURE PLANS.

VARIATIONS OVER 1/4" MUST BE SUBMITTED BY THE FIELD ENGINEER TO THE STRUCTURES DESIGN SECTION FOR REVIEW.

ALL EXISTING BASCULE AND APPROACH SPAN SUPERSTRUCTURE STEEL SHALL BE SANDBLASTED AND PAINTED UNDER BID ITEMS 517.1800.S "STRUCTURE REPAINTING RECYCLED ABRASIVE STRUCTURE B-40-952".

ALL EXISTING PIER SPAN STEEL, MACHINERY, MACHINERY HOUSES, DOORS, FRAMES, TRAFFIC GATES, TRAFFIC GATE HOUSINGS SHALL BE OVERCOATED UNDER BID ITEM 517.3000.S "STRUCTURE OVERCOATING CLEANING AND PRIMING STRUCTURE B-40-952".

CONCRETE STAIN COLOR SHALL MATCH COLOR AS OUTLINED IN SPECIAL PROVISIONS, PENDING ENGINEER'S APPROVAL OF 48" X 48" SAMPLE.

ALL DETAILS, MATERIALS AND FABRICATION SHALL CONFORM TO THE STANDARD SPECIFICATIONS FOR HIGHWAY AND STRUCTURE CONSTRUCTION OF THE STATE OF WISCONSIN DEPARTMENT OF TRANSPORTATION EDITION OF 2015 EXCEPT AS OTHERWISE NOTED.

ALL STATIONS AND ALL ELEVATIONS ARE IN FEET.

ALL ELEVATIONS ARE REFERRED TO CITY OF MILWAUKEE DATUM = 580.60 NGVD.

DRAWINGS SHALL NOT BE SCALED.

THE LOCATIONS OF EXISTING UTILITY INSTALLATIONS AS SHOWN ON THE PLANS ARE APPROXIMATE. THERE MAY BE OTHER UTILITY INSTALLATIONS WITHIN THE PROJECT AREA THAT ARE NOT SHOWN.

## HYDRAULIC DATA

INSTANTANEOUS PEAK DISCHARGE, 100 YEAR: 26,700 CFS
VELOCITY THRU BRIDGE: 7.0 FPS
WATERWAY AREA THRU BRIDGE: 4,806 SF
DRAINAGE AREA: 836 SQ.MI.
2-YEAR WATER SURFACE EL.: N/A
10-YEAR WATER SURFACE EL.: -1.00
100-YEAR WATER SURFACE EL.: -0.50
REGULATORY FLOOD STAGE (PER 2008 FIS): 3.7

## TRAFFIC DATA

EXISTING ADT (2014) = 6,600
PROJECTED ADT (2034) = 7,600
ROADWAY DESIGN SPEED = 35 MPH

## DESIGN DATA

### LIVE LOAD (HSIS)

DESIGN RATING: HS-20
INVENTORY RATING: HS-22
OPERATING RATING: HS-32

### ULTIMATE DESIGN STRESSES:

CONCRETE MASONRY (SUPERSTRUCTURE). f'c = 4,000 PSI
CONCRETE MASONRY (ALL OTHERS)..... f'c = 3,500 PSI
BAR STEEL REINFORCEMENT..... fy = 60,000 PSI
STRUCTURAL CARBON STEEL (A36)..... fs = 20,000 PSI

## WORK TO BE PERFORMED

SANDBLAST AND PAINT BASCULE AND APPROACH SPAN SUPERSTRUCTURE INCLUDING BUT NOT LIMITED TO GIRDERS, FLOORBEAMS, STRINGERS, PURLINS, GRATING, CHANNELS, LATERAL BRACING, DIAPHRAGMS AND GUSSET PLATES. (THIS WORK REQUIRES REMOVING EXISTING BIKE PLATES DURING PAINTING OPERATIONS AND REINSTALLING.)

APPLY OVERCOAT (TO SUPERSTRUCTURE AND SUBSTRUCTURE STEEL) AT SPANS OVER PIER INCLUDED BUT NOT LIMITED TO GIRDERS, FLOOR BEAMS, STRINGERS AND COLUMNS.

OVERCOAT TRAFFIC HOUSINGS, BELLS, TRAFFIC GATES, DOORS AND DOOR FRAMES.

REMOVE EXISTING ALUMINUM SIDEWALK PLATES AND REPLACE WITH 5/8" FIBERGLASS PLATES.

REMOVE EXISTING CURB CHANNELS AND REPLACE WITH HOT DIPPED GALVANIZED ASTM A709 STEEL (Fy=50,000 PSI) AND PAINTED.

CONCRETE STAIN IN SELECT AREAS.

POWER WASH CONCRETE PARAPETS AND ALUMINUM RAIL.

CONCRETE SURFACE REPAIRS AND EPOXY INJECTION AS SHOWN ON PLANS.

City of Milwaukee
Department of Public Works
Infrastructure Services Division

BROADWAY BASCULE BRIDGE
OVER THE MILWAUKEE RIVER
ESTIMATE OF QUANTITIES

REVISIONS

DESIGNED BY H.J.R.
DRAWN BY S.D.B.
CHECKED BY J.M.W.
DATE FEB. 2015 | SCALE NONE
JOB NUMBER BR100140110
SHEET NUMBER 3 OF 31
OF 35

LEGEND

- CONCRETE STAINING
- CONCRETE SURFACE REPAIR
- EPOXY INJECTION

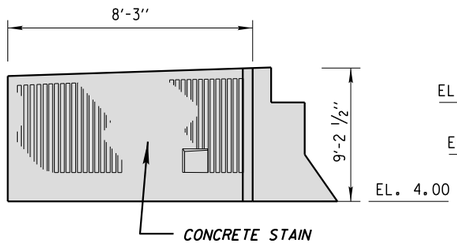


NORTHWEST WINGWALL

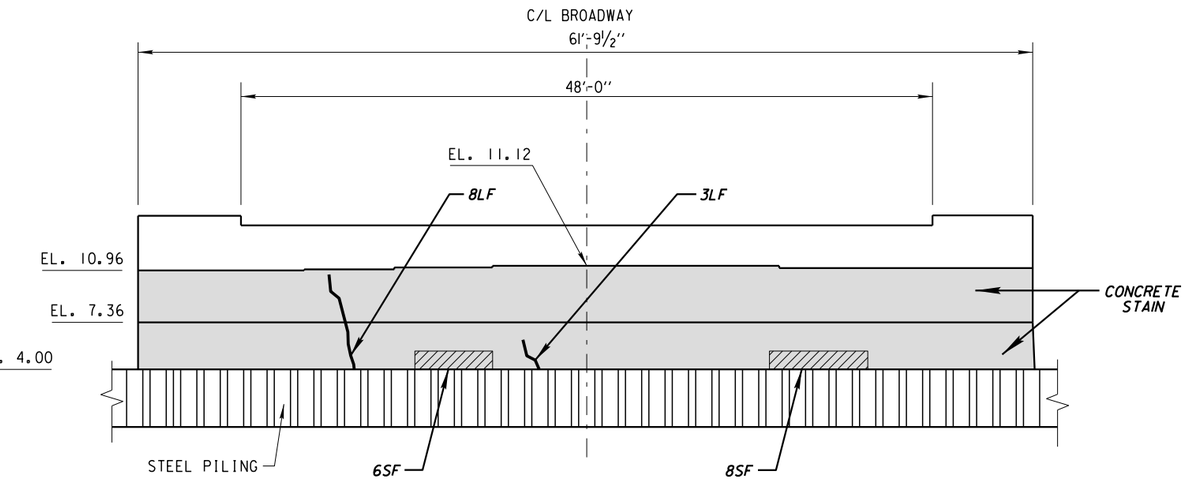


NORTH ABUTMENT

SOUTH ELEVATION

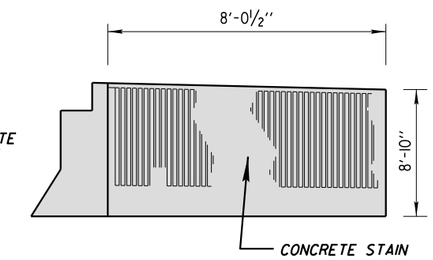


NORTHEAST WINGWALL

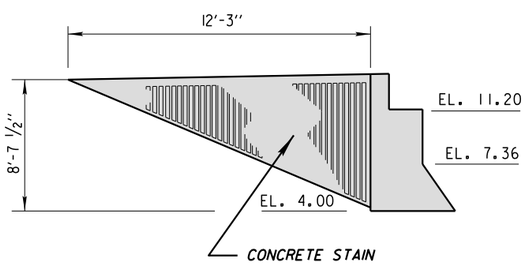


SOUTHEAST WINGWALL

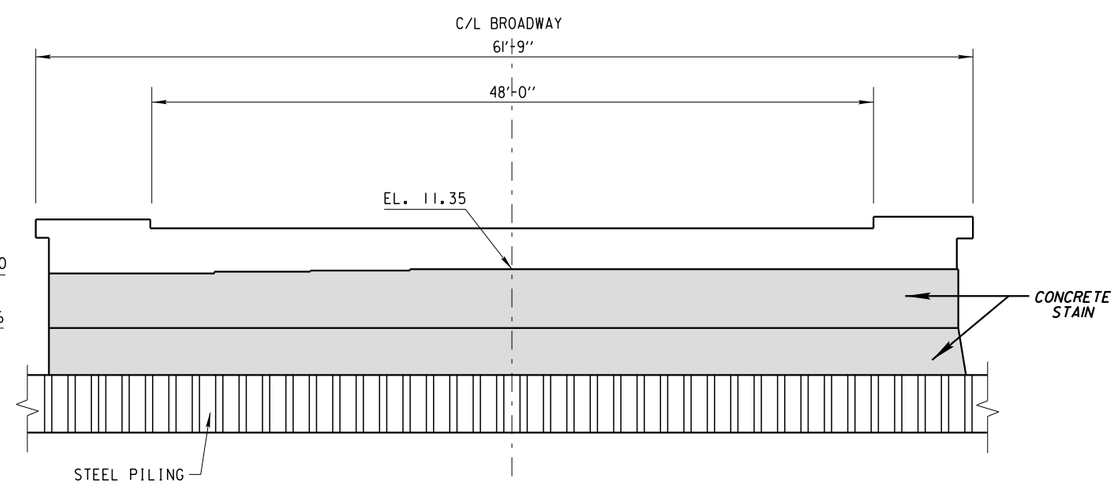


SOUTH ABUTMENT

NORTH ELEVATION

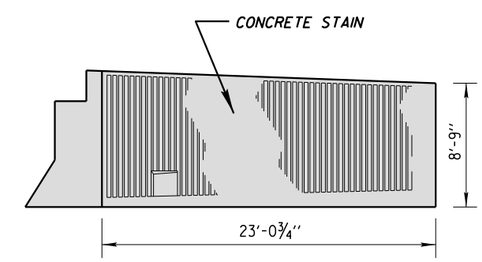


SOUTHWEST WINGWALL

NOTE: FLUTED CONCRETE STAINING QUANTITY SHALL BE MEASURED AS FLAT SURFACE. COORDINATE WORK AT ABUTMENTS AND WINGWALLS WITH CITY OF MILWAUKEE EXPANSION JOINT REPLACEMENT.

W:\STRXB0100\ 2014\PAINTING\ 04_NORTH & SOUTH ABUT.DGN 01-29-2015

City of Milwaukee

Department of Public Works

Infrastructure Services Division

BROADWAY BASCULE BRIDGE
OVER THE MILWAUKEE RIVER
NORTH AND SOUTH ABUTMENTS

REVISIONS

| | |
|---|---|
| DESIGNED BY H.J.R. | |
| DRAWN BY S.D.B. | |
| CHECKED BY J.M.W. | |
| DATE FEB. 2015 | SCALE NONE |
| JOB NUMBER BR100140110 | |
| SHEET NUMBER 4 OF 31 | |
| OF 35 | |

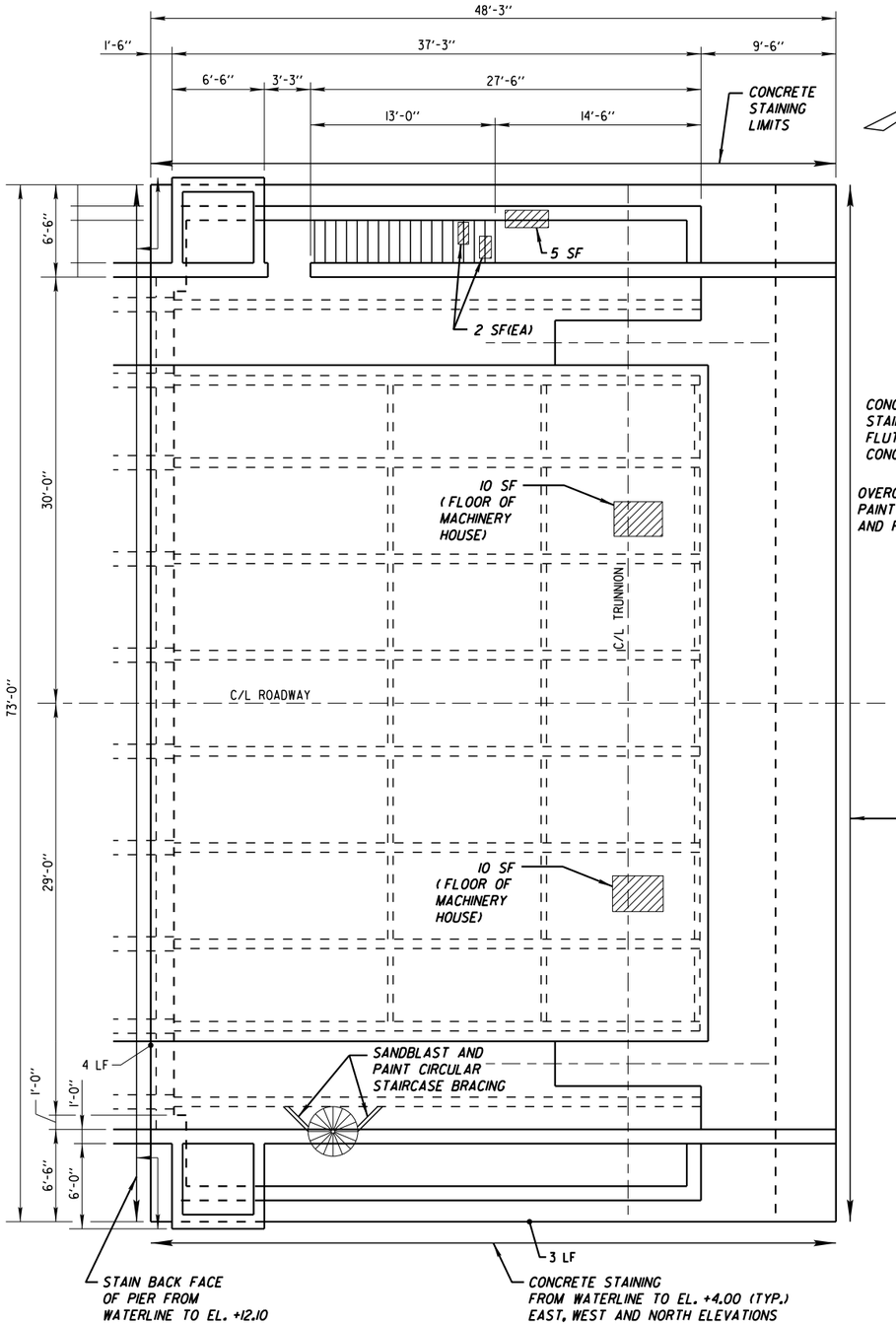


PIER I - PLAN VIEW

LEGEND

- CONCRETE STAINING
- EPOXY INJECTION
- CONCRETE SURFACE REPAIR

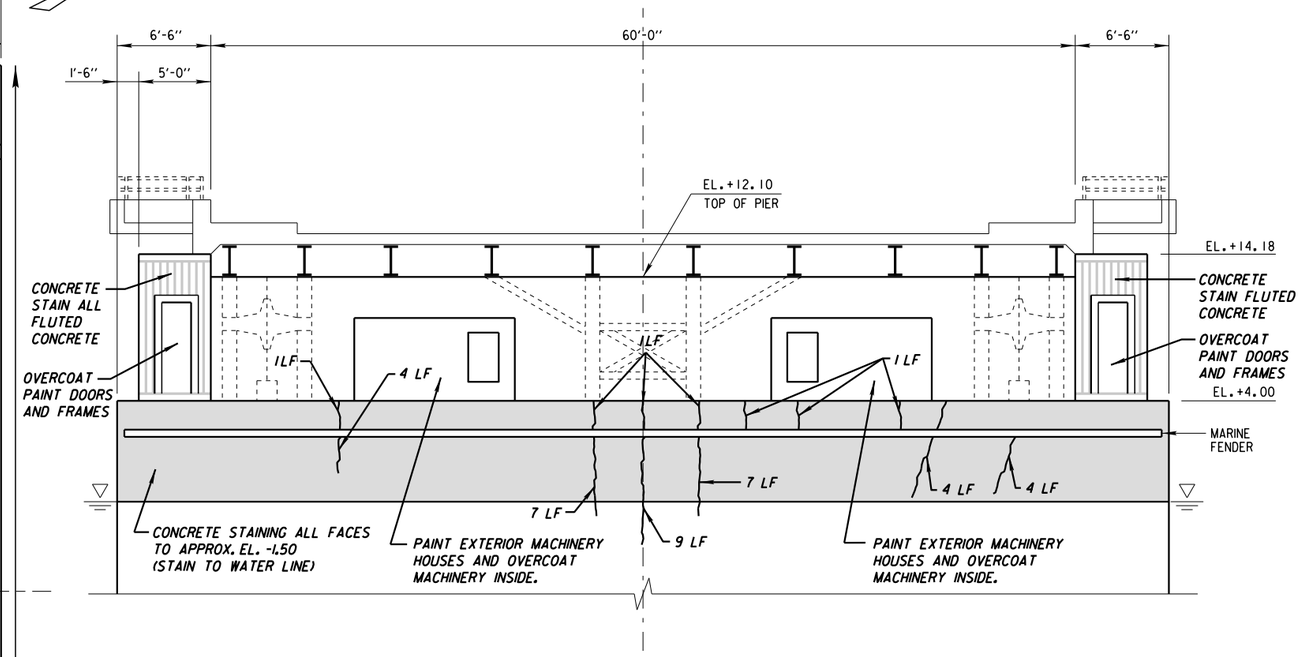


NORTH ELEVATION

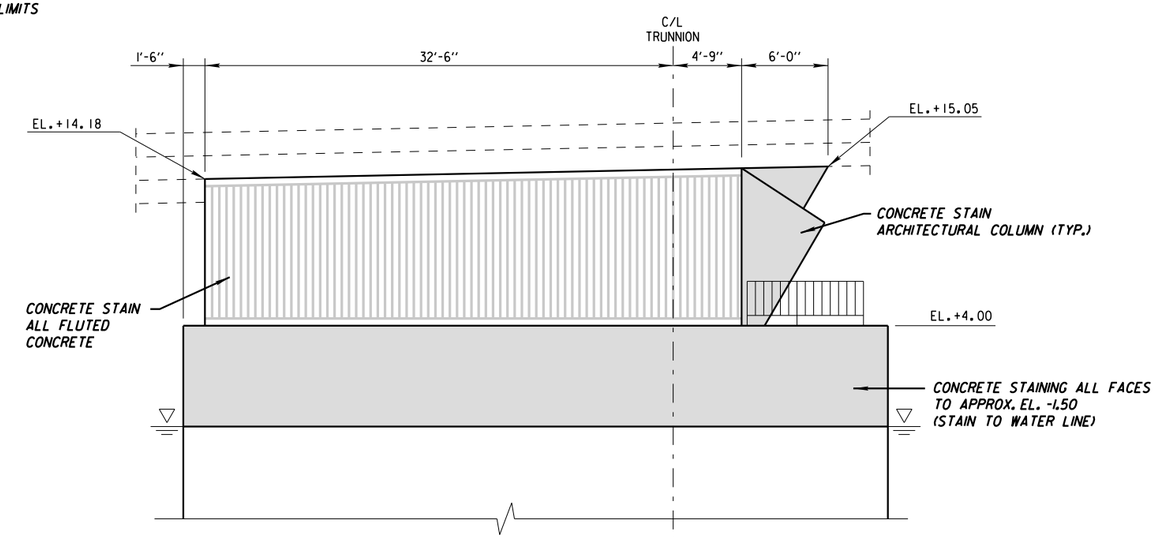


EAST ELEVATION

(WEST ELEVATION SIMILAR)

NOTE: FLUTED CONCRETE STAINING QUANTITY SHALL BE MEASURED AS FLAT SURFACE.

City of Milwaukee

Department of Public Works

Infrastructure Services Division

BROADWAY BASCULE BRIDGE OVER THE MILWAUKEE RIVER PIER I

REVISIONS

| | |
|---|---|
| DESIGNED BY H.J.R. | |
| DRAWN BY S.D.B. | |
| CHECKED BY J.M.W. | |
| DATE FEB. 2015 | SCALE NONE |
| JOB NUMBER BR100140110 | |
| SHEET NUMBER 5 OF 31 | |
| OF 35 | |

W:\STR\B0100\ 2014\PAINTING\ 05_PIER1.DGN 01-29-2015

W:\STR\B0100\ 2014\PAINTING_PIER2.DGN 01-29-2015

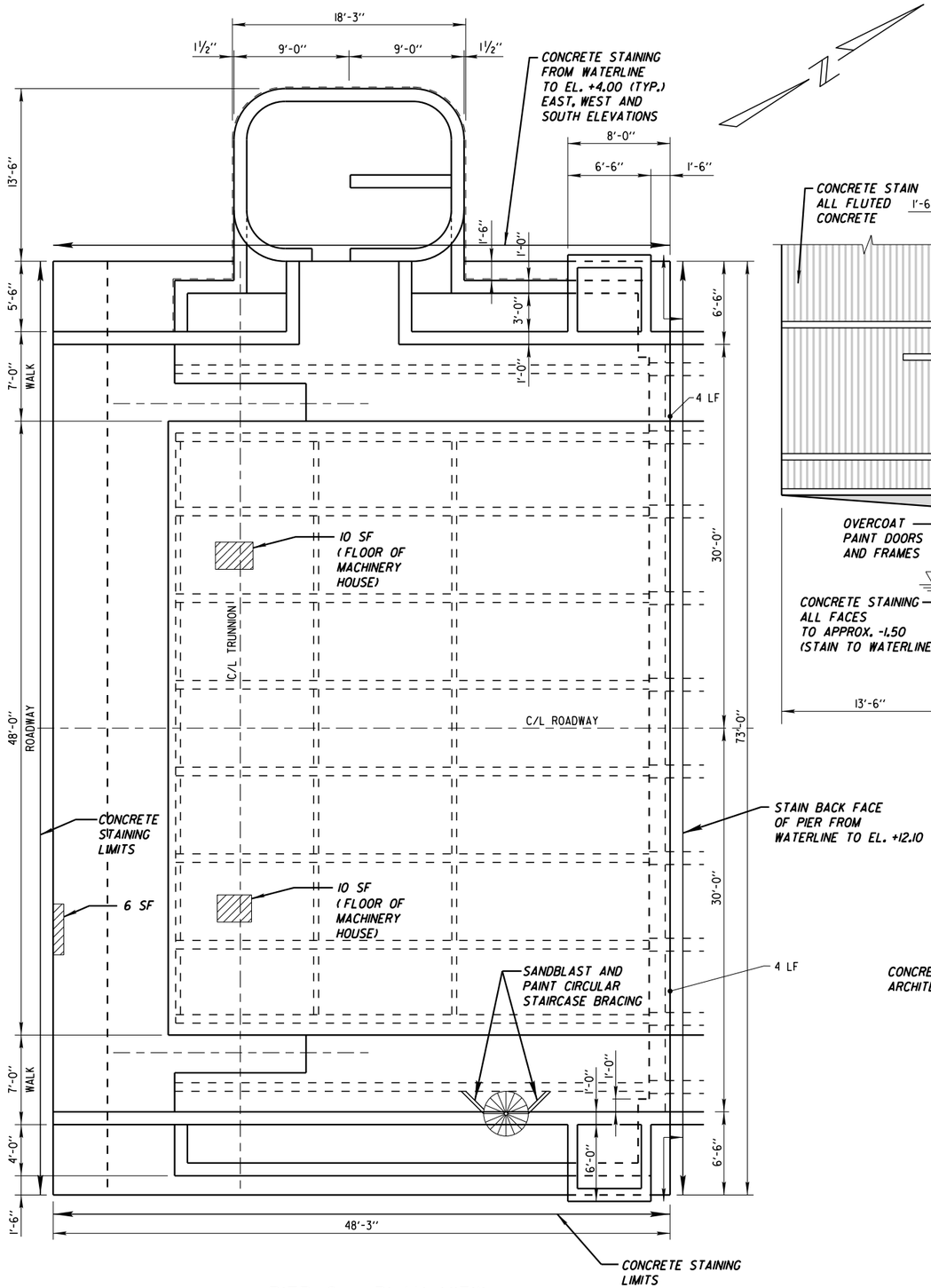


PIER 2 - PLAN VIEW

LEGEND

- CONCRETE STAINING
- EPOXY INJECTION
- CONCRETE SURFACE REPAIR

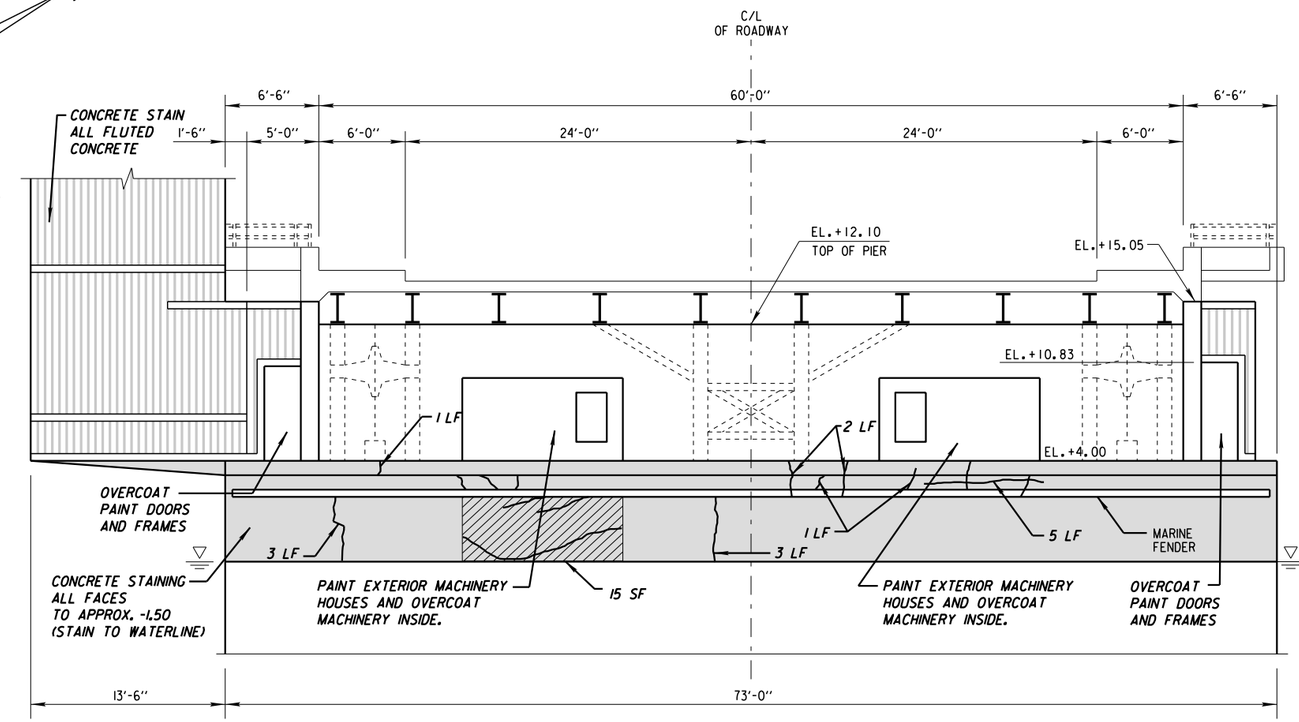


SOUTH ELEVATION

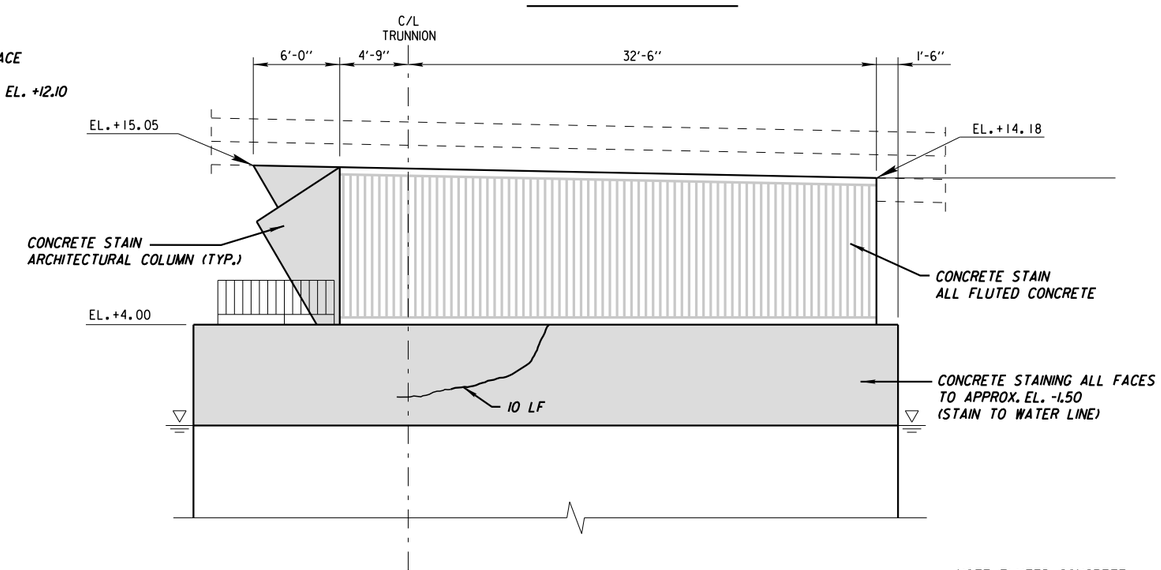


EAST ELEVATION

(WEST ELEVATION SIMILAR)

NOTE: FLUTED CONCRETE STAINING QUANTITY SHALL BE MEASURED AS FLAT SURFACE.

City of Milwaukee

Department of Public Works

Infrastructure Services Division

BROADWAY BASCULE BRIDGE OVER THE MILWAUKEE RIVER PIER 2

REVISIONS

| | |
|---|---|
| DESIGNED BY H.J.R. | |
| DRAWN BY S.D.B. | |
| CHECKED BY J.M.W. | |
| DATE FEB. 2015 | SCALE NONE |
| JOB NUMBER BR100140110 | |
| SHEET NUMBER 6 OF 31 | |
| OF 35 | |

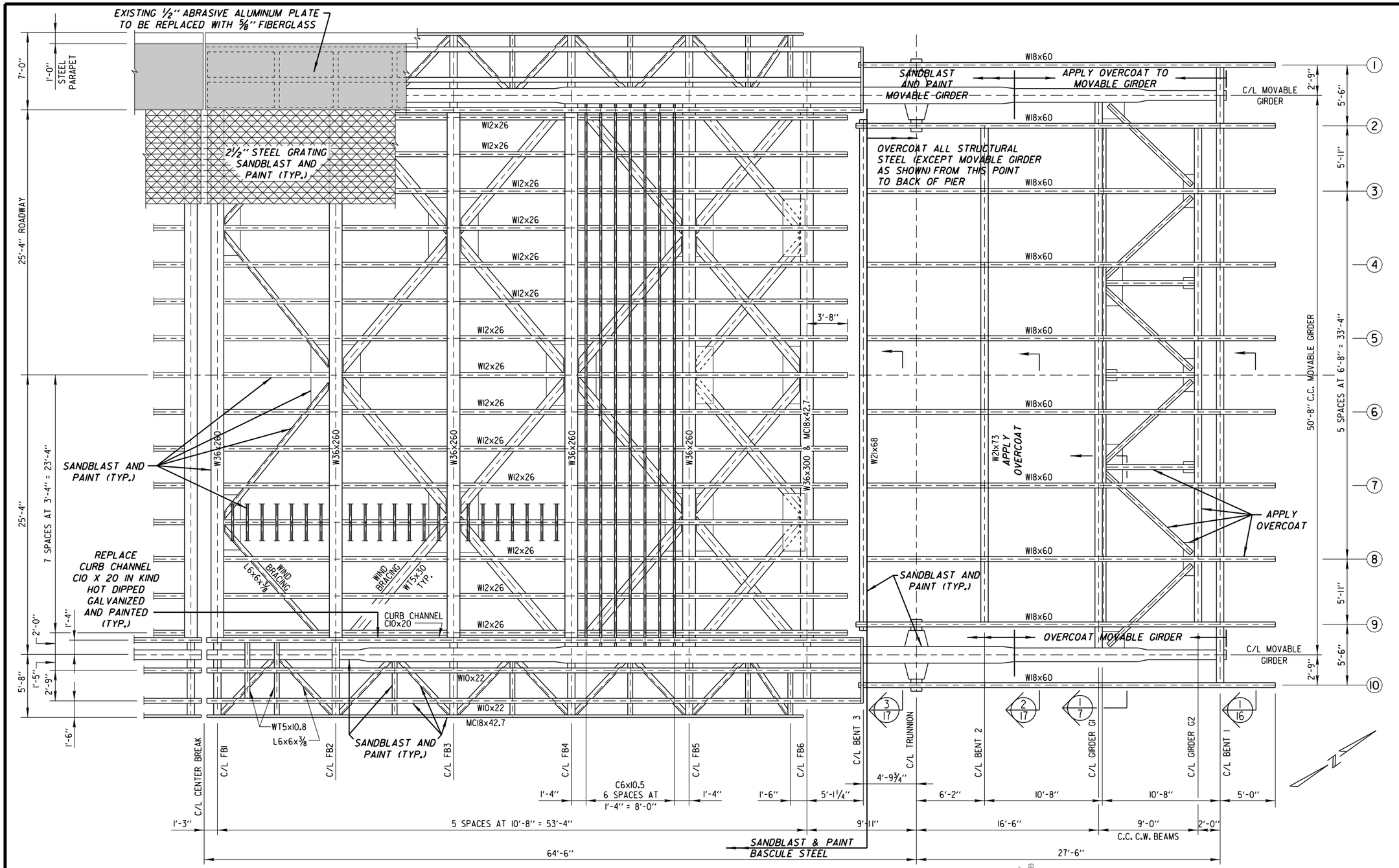


STEEL FRAMING PLAN

NOTES:
BIKE PLATES NOT SHOWN FOR CLARITY.
SEE SHEET 29.

PAINT GALVANIZED CONDUIT ON OUTSIDE FACE OF MOVABLE GIRDER TO MATCH SUPERSTRUCTURE.

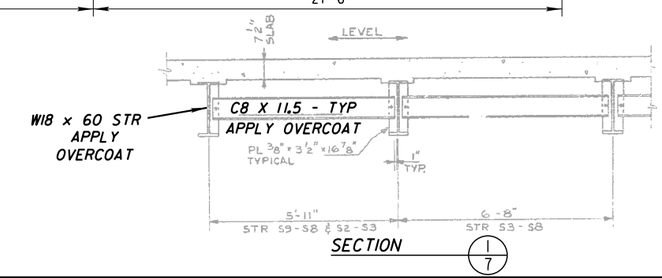


SECTION 1/7

City of Milwaukee

Department of Public Works

Infrastructure Services Division

# BROADWAY BASCULE BRIDGE OVER THE MILWAUKEE RIVER BASCULE AND PIER SPANS- FRAMING PLAN

REVISIONS

| | |
|---|---|
| DESIGNED BY H.J.R. | |
| DRAWN BY S.D.B. | |
| CHECKED BY J.M.W. | |
| DATE FEB. 2015 | SCALE NONE |
| JOB NUMBER BR100140110 | |
| SHEET NUMBER 7 OF 31 | |
| OF 35 | |

W:\STRUBO100\ 2014\PAINTING\ 07_BASCULE.DGN 01-29-2015

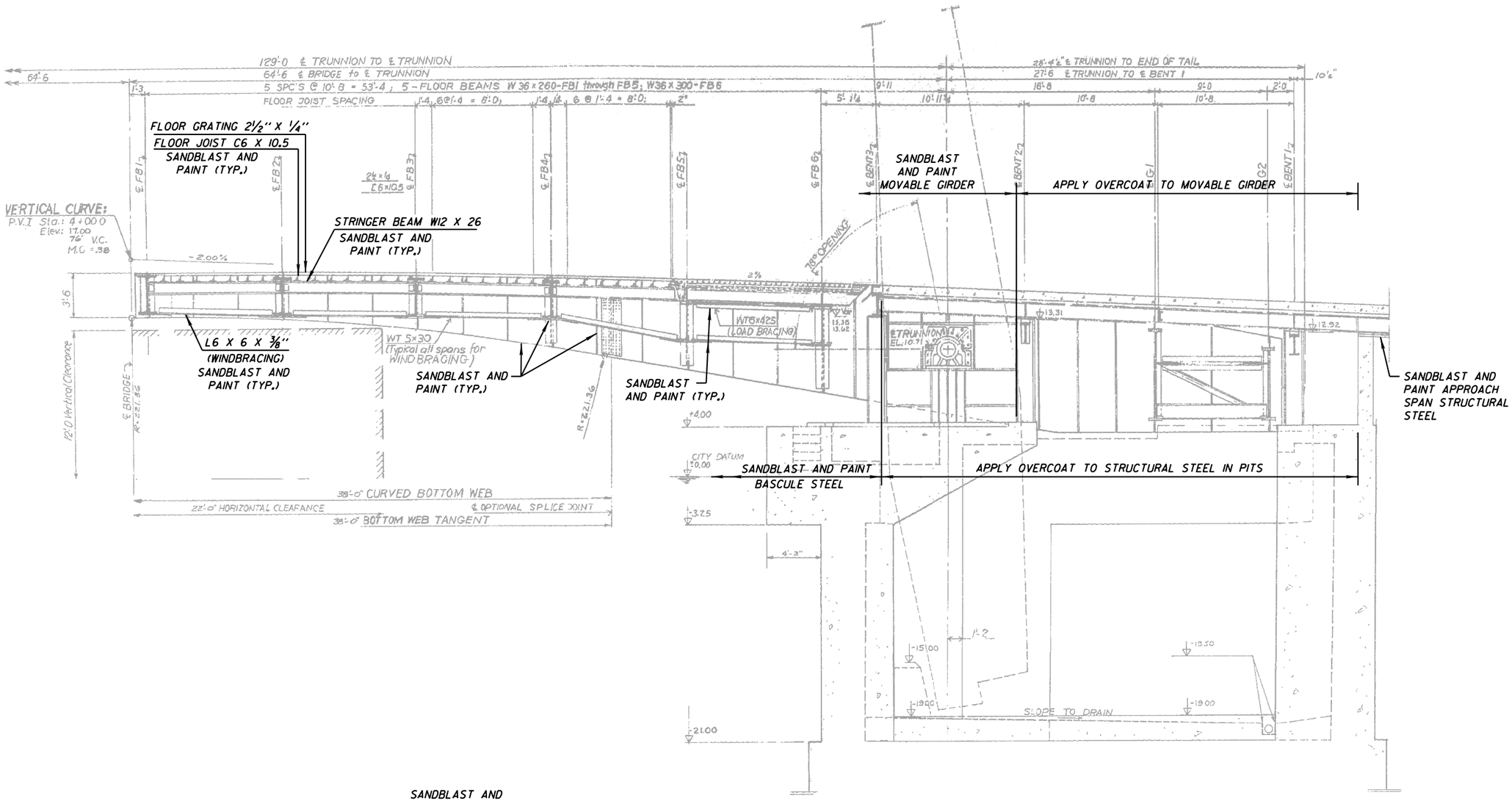


SECTION @ ℄ ROADWAY

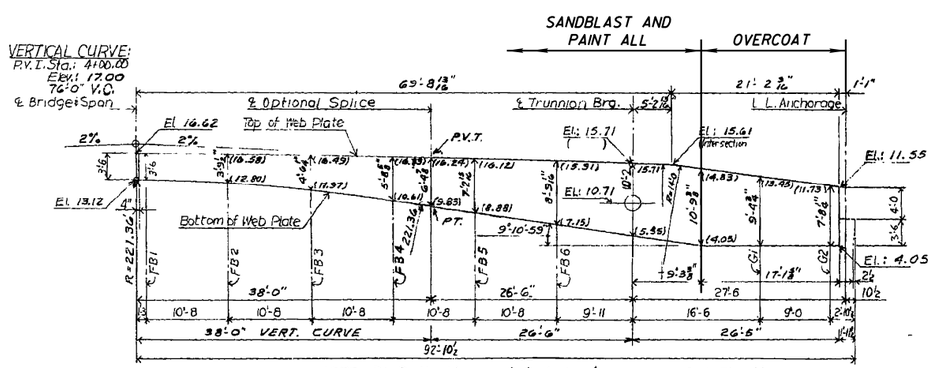


NOTE: DL Deflections not included in geometry. ( ) Elevations.

GEOMETRY OF BASCULE GIRDER

City of Milwaukee

Department of Public Works

Infrastructure Services Division

BROADWAY BASCULE BRIDGE
OVER THE MILWAUKEE RIVER
BASCULE AND PIER SPAN SECTION-
CENTERLINE ROADWAY

REVISIONS

| | |
|---|---|
| DESIGNED BY H.J.R. | |
| DRAWN BY S.D.B. | |
| CHECKED BY J.M.W. | |
| DATE FEB. 2015 | SCALE NONE |
| JOB NUMBER BR100140110 | |
| SHEET NUMBER 8 OF 31 | |
| OF 35 | |

W:\STR\B0100\ 2014\PAINTING\ 08_BASCULE2.DGN 01-29-2015

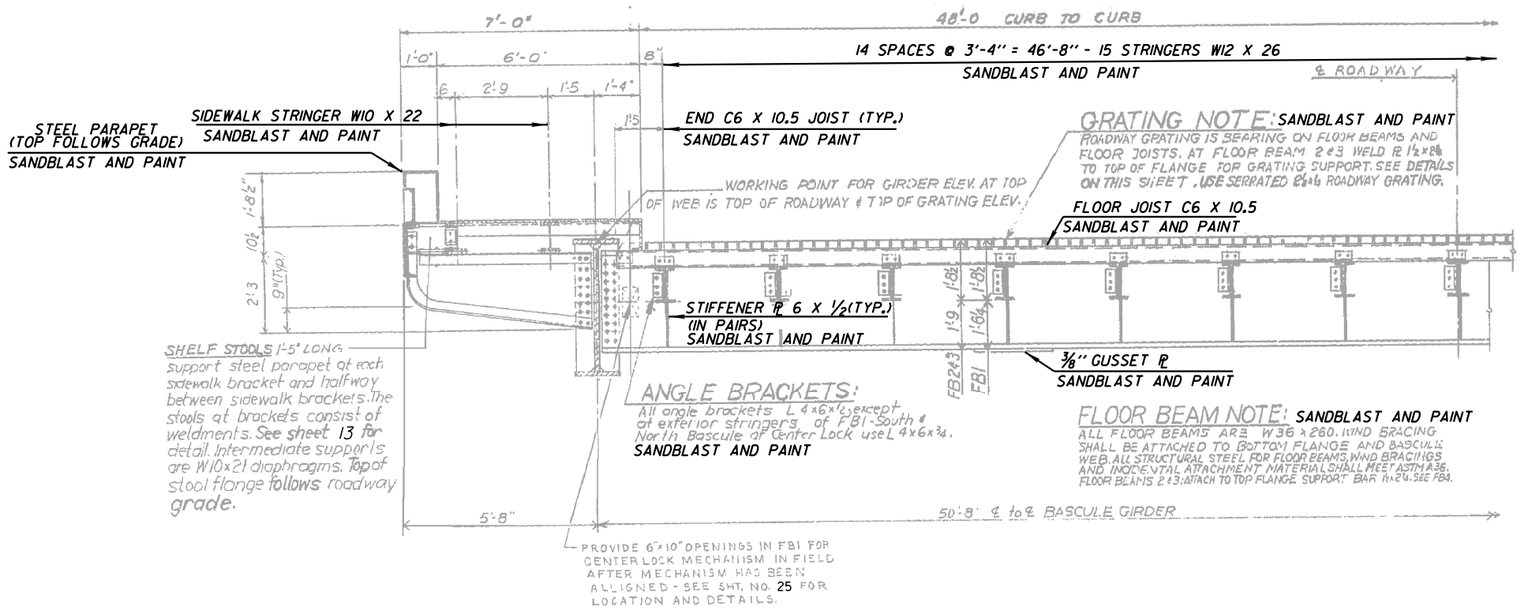


## SECTION: NEAR FLOOR BEAM 1,2&3

NOTE : Floor beam, FB1 is shown.
SANDBLAST AND PAINT ALL BASCULE SPAN STEEL.

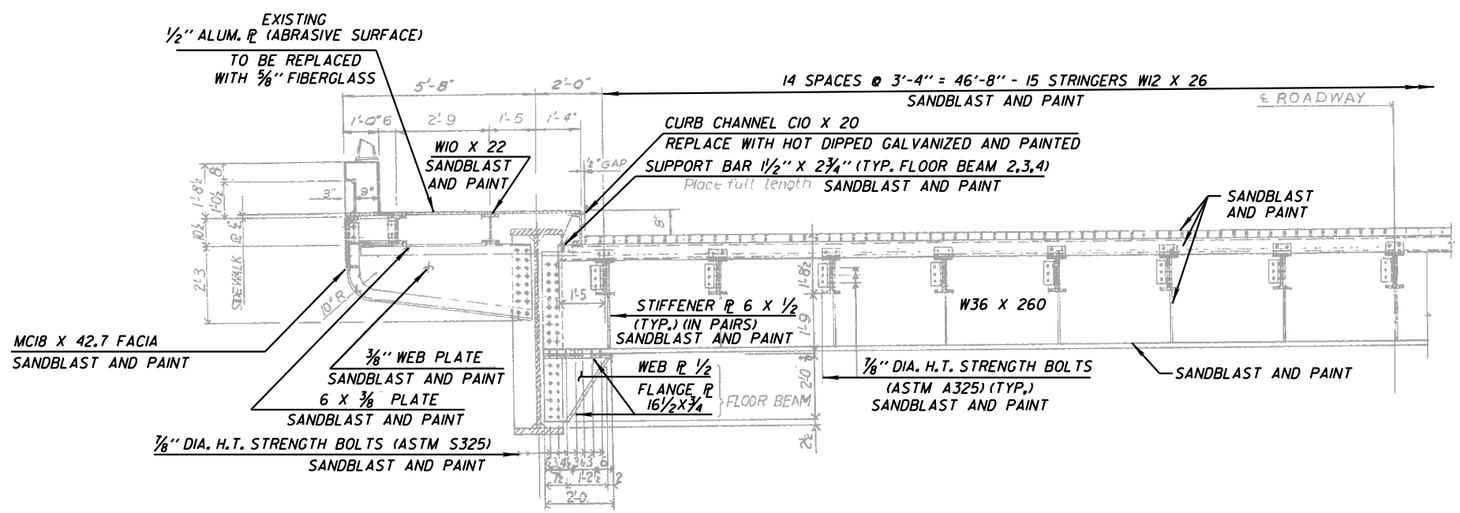


## SECTION NEAR FLOOR BEAM 4

NOTE: SANDBLAST AND PAINT ALL BASCULE SPAN STEEL.

City of Milwaukee

Department of Public Works

Infrastructure Services Division

BROADWAY BASCULE BRIDGE
OVER THE MILWAUKEE RIVER
BASCULE SPAN-
FLOOR BEAMS 1 TO 4

REVISIONS

| | |
|---|---|
| DESIGNED BY H.J.R. | |
| DRAWN BY S.D.B. | |
| CHECKED BY J.M.W. | |
| DATE FEB. 2015 | SCALE NONE |
| JOB NUMBER BR100140110 | |
| SHEET NUMBER 9 OF 31 | |
| OF 35 | |

W:\STR\B0100\ 2014\PAINTING\ 09_BASCULE3.DGN 01-29-2015

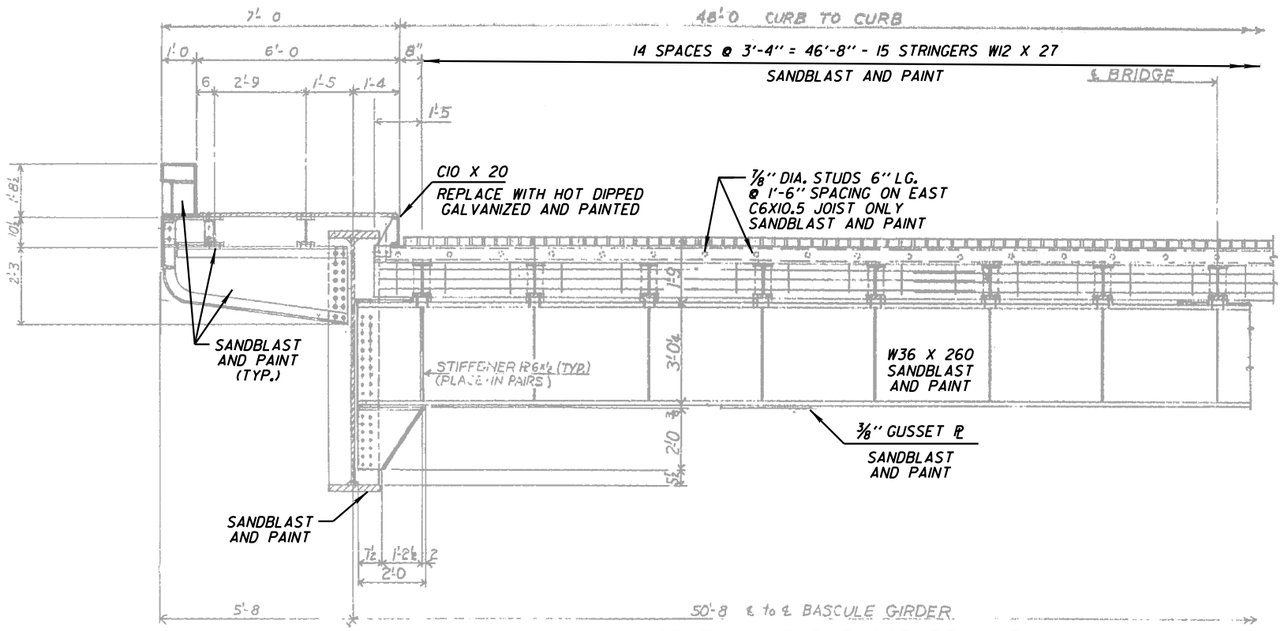


## SECTION NEAR FLOOR BEAM 5

NOTE: SANDBLAST AND PAINT ALL BASCULE SPAN STEEL.

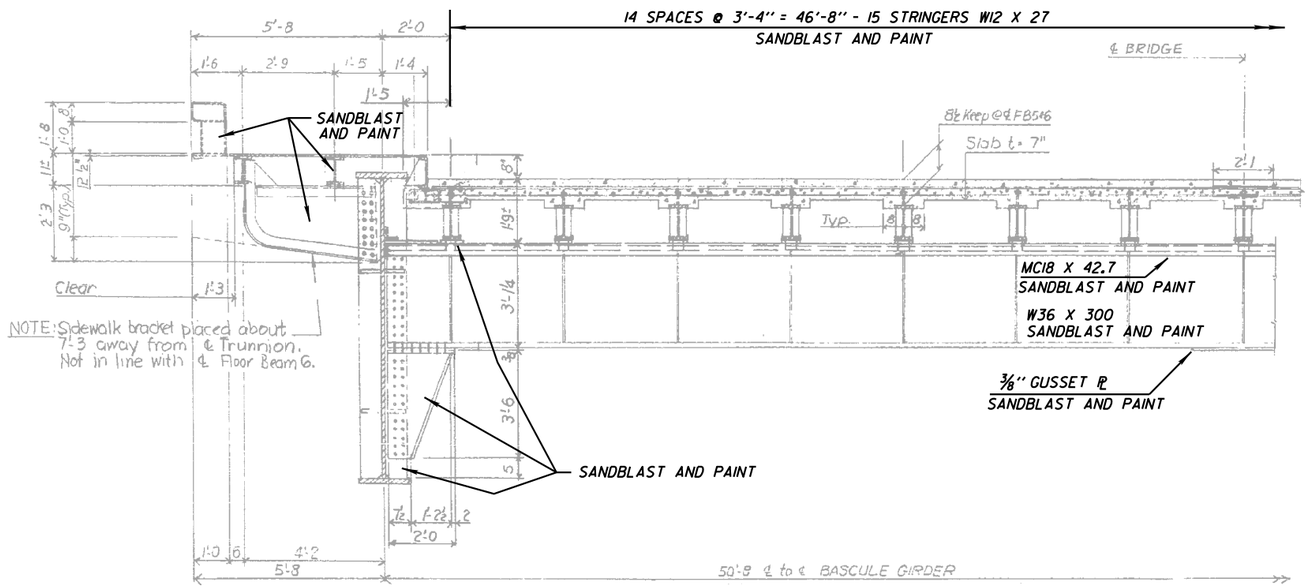


## SECTION NEAR FLOOR BEAM 6

NOTE: SANDBLAST AND PAINT ALL BASCULE SPAN STEEL.

City of Milwaukee

Department of Public Works

Infrastructure Services Division

BROADWAY BASCULE BRIDGE
OVER THE MILWAUKEE RIVER
BASCULE SPAN-
FLOOR BEAMS 5 AND 6

REVISIONS

| | |
|---|---|
| DESIGNED BY H.J.R. | |
| DRAWN BY S.D.B. | |
| CHECKED BY J.M.W. | |
| DATE FEB. 2015 | SCALE NONE |
| JOB NUMBER BR100140110 | |
| SHEET NUMBER 10 OF 31 | |
| OF 35 | |

W:\STR\B0100\ 2014\PAINTING\ 10_BASCULE4.DGN 01-29-2015

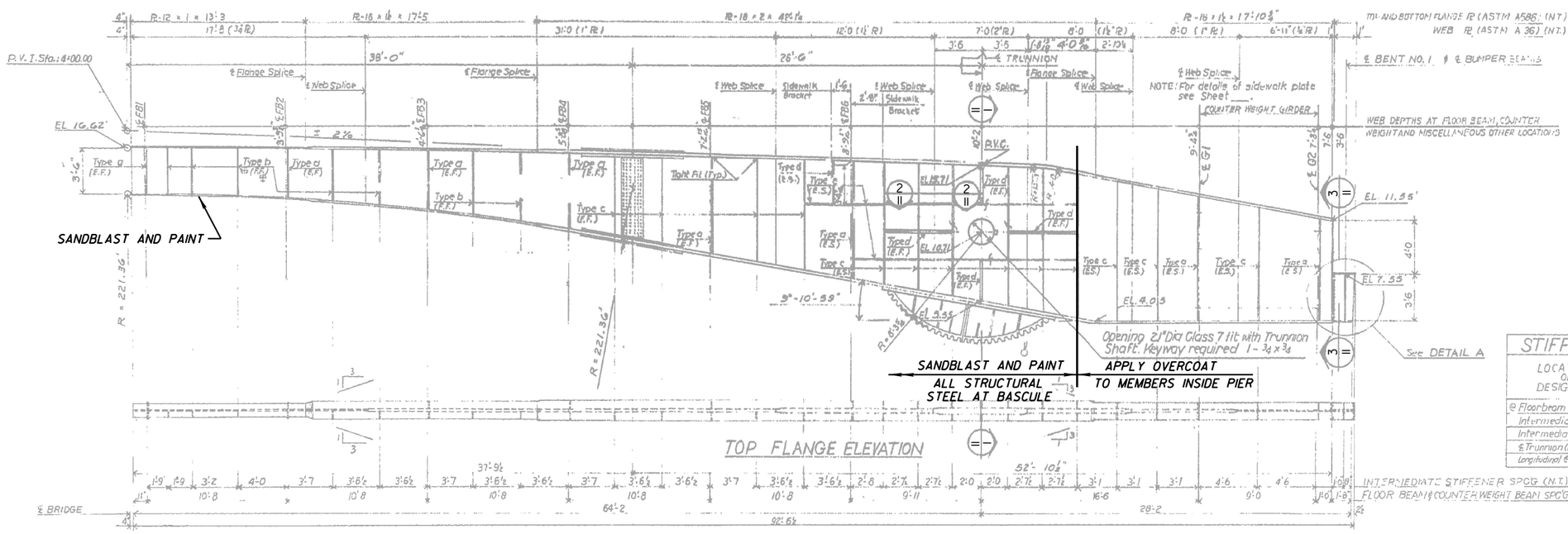


## BASCULE GIRDER - ELEVATION

LOOKING FROM ℄ ROADWAY TO THE WEST OR EAST

| STIFFENER PL SIZE TABLE | | | |
|---|---|---|---|
| LOCATION OR DESIGNATION | TYPE | SIZE PL (Width x Thickness) | |
| @ Floorbeam Connection | a | 4x3 x 3/4 (min.) | E.S. |
| Intermediate (FB1 to FB4) | b | 5 x 1/2 | F.S. |
| Intermediate (FB4 to LT) | c | 8 x 1/2 | F.S. |
| ℄ Trunnion (Horiz & Vert) | d | 8 x 1/2 | E.S. |
| Longitudinal ℄ Trunnion | e | 8 x 1/2 | E.S. |

Designation is:
E.S. = Each side of web
F.S. = Floorbeam side of web
S.S. = Sidewalk side of web
*Between FB6 and ℄ Trunnion to feet place PL 8 x 1/2 on S.S. also

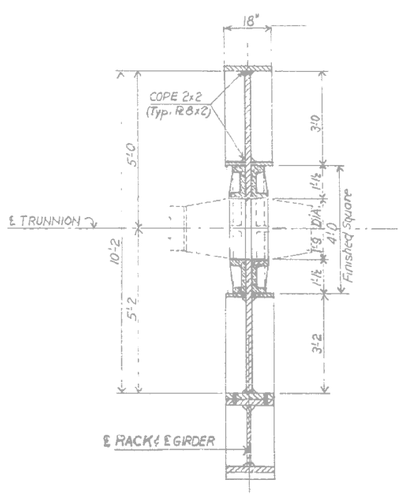


## SECTION 1/II

SANDBLAST AND PAINT ALL MEMBERS

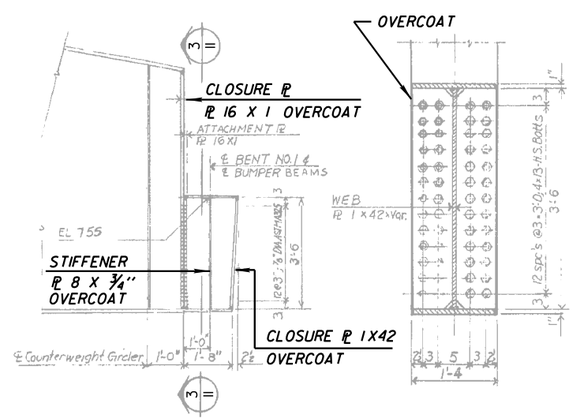


## DETAIL A

## SECTION 3/II

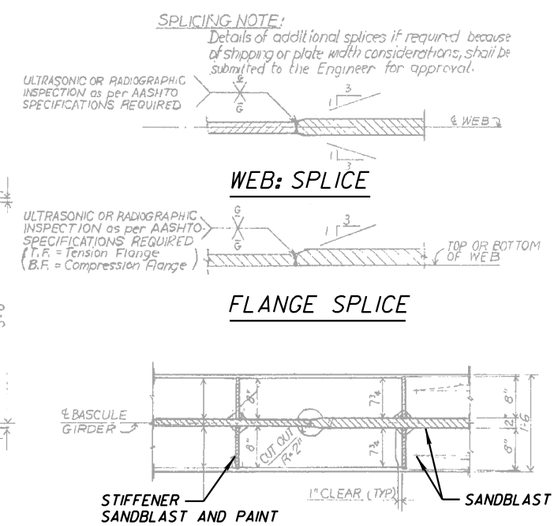


## SECTION 2/II

## WELD DETAILS

NOTE: PAINT CONDUIT ON OUTSIDE OF MOVABLE GIRDER TO MATCH SUPERSTRUCTURE STEEL.

City of Milwaukee

Department of Public Works

Infrastructure Services Division

# BROADWAY BASCULE BRIDGE OVER THE MILWAUKEE RIVER
## BASCULE SPAN
## BASCULE GIRDER

REVISIONS

| | |
|---|---|
| DESIGNED BY H.J.R. | |
| DRAWN BY S.D.B. | |
| CHECKED BY J.M.W. | |
| DATE FEB. 2015 | SCALE NONE |
| JOB NUMBER BR100140110 | |
| SHEET NUMBER 11 OF 31 | |
| OF 35 | |

W:\STR\B0100\2014\PAINTING\11_BASCULE5.DGN 01-29-2015

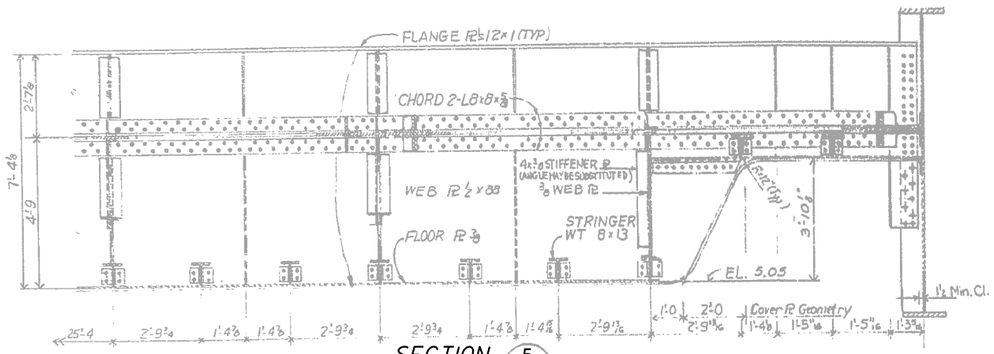


SECTION 5/12

APPLY OVERCOAT TO ALL

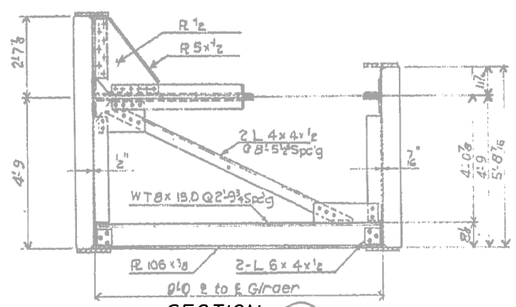


SECTION 3/12

APPLY OVERCOAT TO ALL

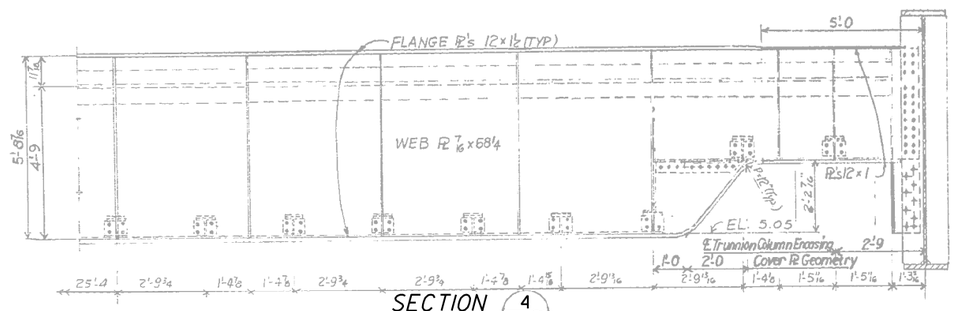


SECTION 4/12

APPLY OVERCOAT TO ALL

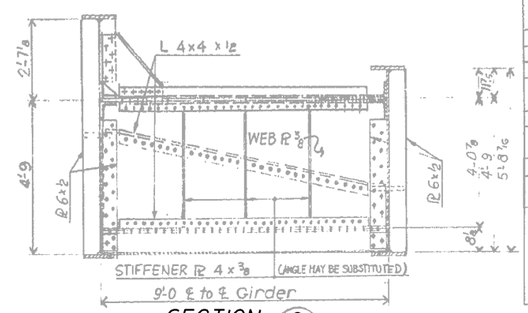


SECTION 2/12

APPLY OVERCOAT TO ALL

TRUSS FOR COUNTERWEIGHT FRAME (ASTM A36)

| Location | | TOP TRUSS | | | | | |
|---|---|---|---|---|---|---|---|
| | | $T_1$ | $T_2$ | $T_3$ | $T_4$ | $T_5$ | $T_6$ |
| DL | | +256.8 | −72.6 | −154.0 | −72.6 | +51.3 | −72.6 |
| 20% DL | | +51.3 | −14.5 | −30.8 | −14.5 | +10.2 | −14.5 |
| Total DL | | +308.1 | −87.1 | −184.8 | −87.1 | +61.5 | −87.1 |
| Area req'd | $A_G$ (□") | − | 7.5 | 11.2 | 7.5 | − | 7.5 |
| | $A_N$ (□") | 15.4 | − | − | − | 3.1 | − |
| Section Used | | 2-L 8×4×7/8 | 2-L 4×4×1/2 | 2-L 6×6×1/2 | 2-L 4×4×1/2 | 2-L 4×4×1/2 | 2-L 4×4×1/2 |
| Area furnd | $A_G$ (□") | 19.4 | 7.5 | 11.5 | 7.5 | 7.5 | 7.5 |
| | $A_N$ (□") | 18.1 | − | − | 6.5 | 6.5 | − |
| L/r | | 58 | 110 | 70 | 110 | 110 | 110 |
| Allowable Stress ksi | $f_t$ | 20.0 | − | − | − | 20.0 | − |
| | $f_c$ | − | −11.6 | −16.4 | −11.6 | − | −11.6 |
| End Shear | | DL : 181.5<br>20% DL : 36.3<br>Total : 217.8 K<br>A req'd @ 12 ksi : 18.15 □"<br>A prov'd (PL 1/2×36) : 18.00 □" | | | Top Flange : DL 613.0<br>20% DL 122.6<br>735.6 K<br>A req'd @ 20 ksi : 36.8 □"<br>A prov'd (PL + 2L) 38.0 □" | | |

GUSSET PLATE : All gusset plates shall be t = ½ in. min. Edge stiffened as per specification.

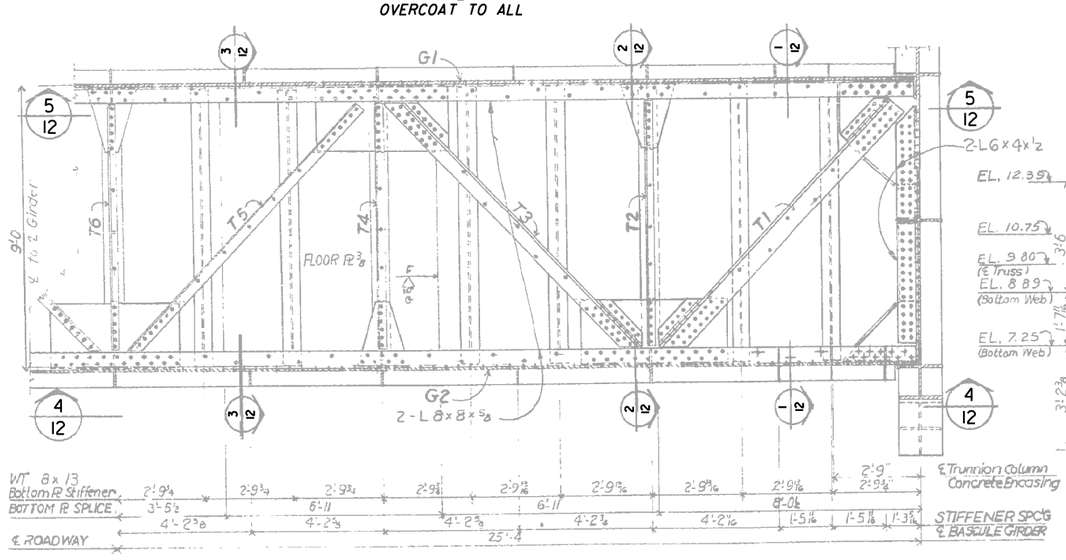


COUNTERWEIGHT GIRDER & BOX LAYOUT

APPLY OVERCOAT TO ALL

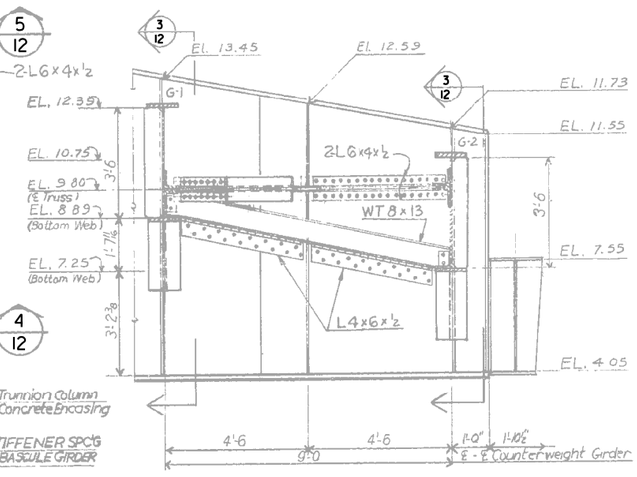


SECTION 1/12

APPLY OVERCOAT TO ALL

City of Milwaukee

Department of Public Works

Infrastructure Services Division

BROADWAY BASCULE BRIDGE OVER THE MILWAUKEE RIVER BASCULE SPAN-COUNTERWEIGHT BOX

REVISIONS

DESIGNED BY H.J.R.

DRAWN BY S.D.B.

CHECKED BY J.M.W.

DATE FEB. 2015 | SCALE NONE

JOB NUMBER BR100140110

SHEET NUMBER 12 OF 31

OF 35

W:\STR\B0100\2014\PAINTING\12_BASCULE7.DGN 01-29-2015

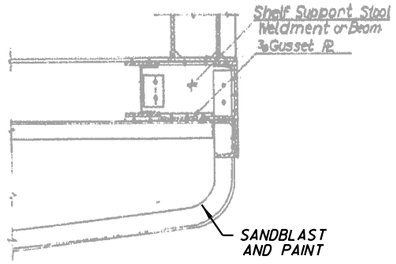


SECTION 4/13

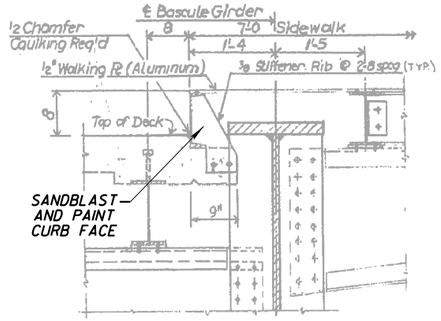


CURB DETAIL 3/13

SANDBLAST AND PAINT ALL MEMBERS

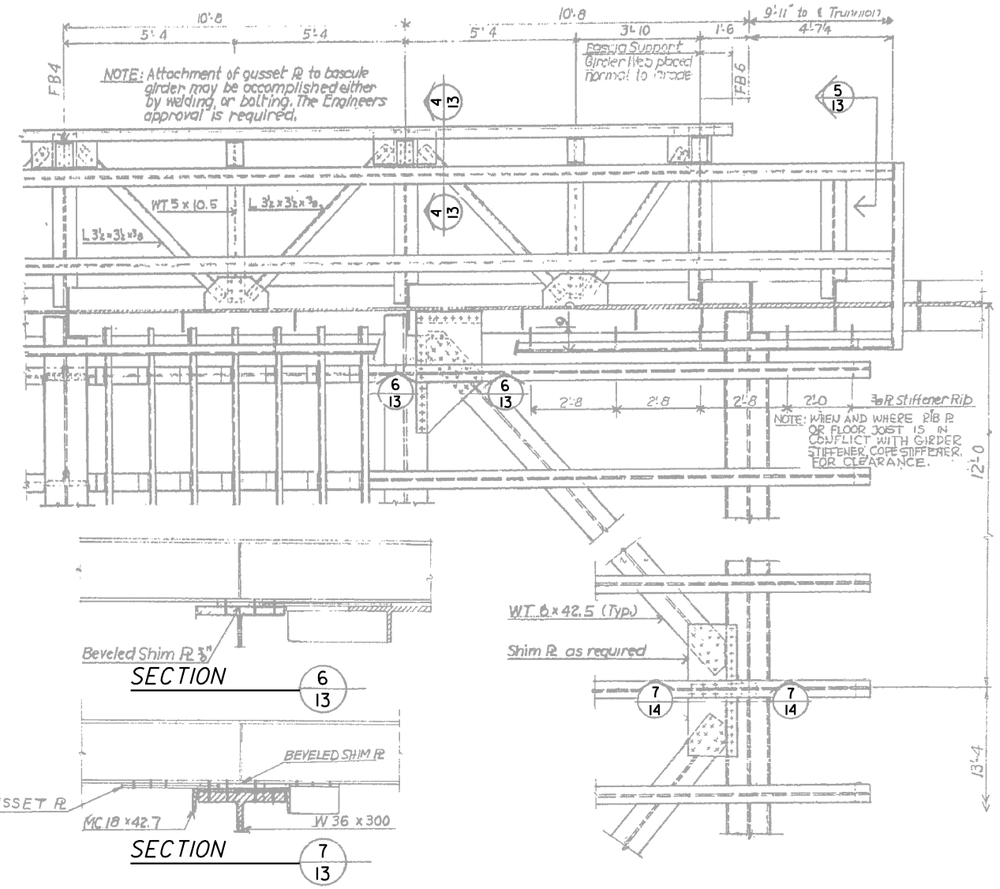


SECTION 6/13

SECTION 7/13

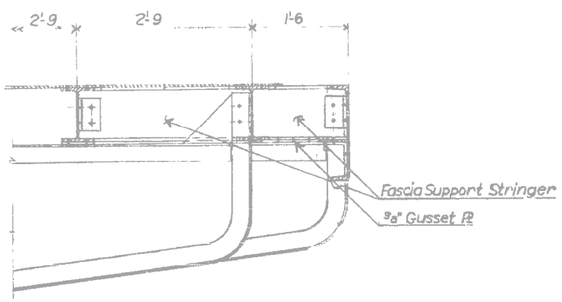


SECTION 5/13

SANDBLAST AND PAINT ALL MEMBERS

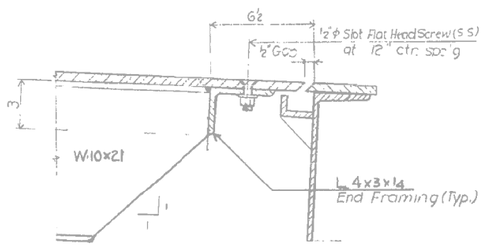


END BREAK 2/13

SANDBLAST AND PAINT ALL MEMBERS

BRACING LAYOUT & CONNECTIONS

SIDEWALK AND LOAD TRANSFER END TRUSS

ALL STRUCTURAL STEEL TO BE SANDBLASTED AND PAINTED

NOTE: On top of floor beam FB 5 & 6 place beveled min. 7/16 on FB6 and on FB5 5/8 shim plates to adjust for stringer grades (Typ.)

City of Milwaukee

Department of Public Works

Infrastructure Services Division

BROADWAY BASCULE BRIDGE
OVER THE MILWAUKEE RIVER
BASCULE SPAN-
MISC. STEEL DETAILS

REVISIONS

| | |
|---|---|
| DESIGNED BY H.J.R. | |
| DRAWN BY S.D.B. | |
| CHECKED BY J.M.W. | |
| DATE FEB. 2015 | SCALE NONE |
| JOB NUMBER BR100140110 | |
| SHEET NUMBER 13 OF 21 | |
| OF 35 | |

W:\STR\B0100\ 2014\PAINTING\ 13_BASCULE8.DGN 01-21-2015

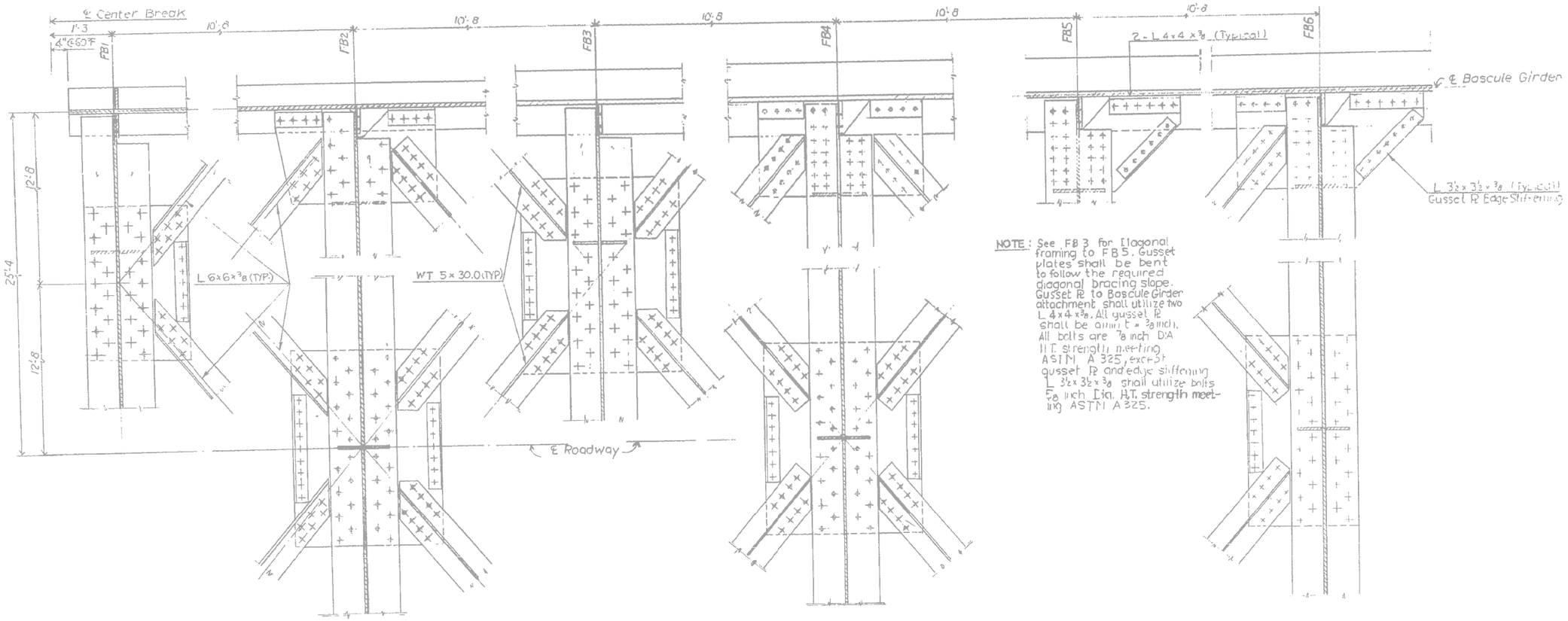


NOTE: Wind bracing shown only.

## LOWER BRACING LAYOUT & CONNECTIONS

SANDBLAST AND PAINT ALL CONNECTIONS INCLUDING BUT NOT LIMITED TO PLATES, BOLTS, GIRDERS, AND WIND BRACING

REPLACE [10 X 20 CURB CHANNEL HOT-DIPPED GALVANIZED AND PAINTED

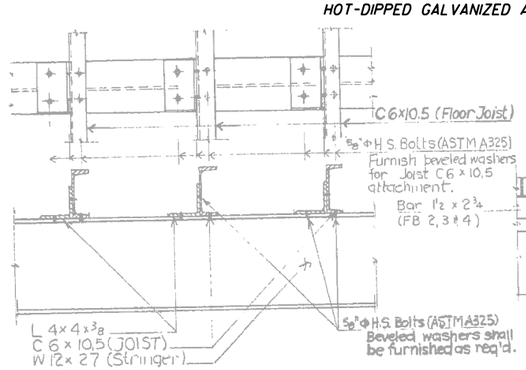


## JOIST ATTACHMENT

SANDBLAST AND PAINT ALL MEMBERS

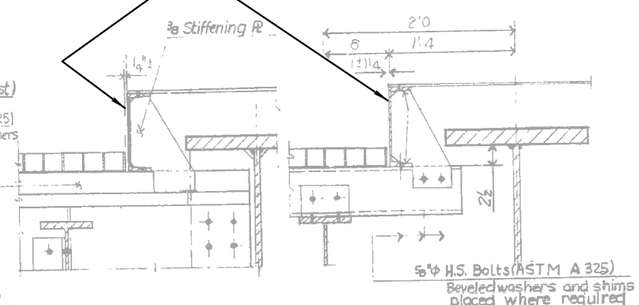


TO FLOOR BEAM TO JOIST

## CURB BEAM ATTACHMENT

SANDBLAST AND PAINT ALL MEMBERS
REPLACE CURB CHANNEL AS NOTED.

City of Milwaukee

Department of Public Works

Infrastructure Services Division

BROADWAY BASCULE BRIDGE
OVER THE MILWAUKEE RIVER
BASCULE SPAN-
WIND BRACING

REVISIONS

| | |
|---|---|
| DESIGNED BY H.J.R. | |
| DRAWN BY S.D.B. | |
| CHECKED BY J.M.W. | |
| DATE FEB. 2015 | SCALE NONE |
| JOB NUMBER BR100140110 | |
| SHEET NUMBER 14 OF 31 | |
| OF 35 | |

W:\STR\B0100\ 2014\PAINTING\ 14_BASCULE9.DGN 01-29-2015

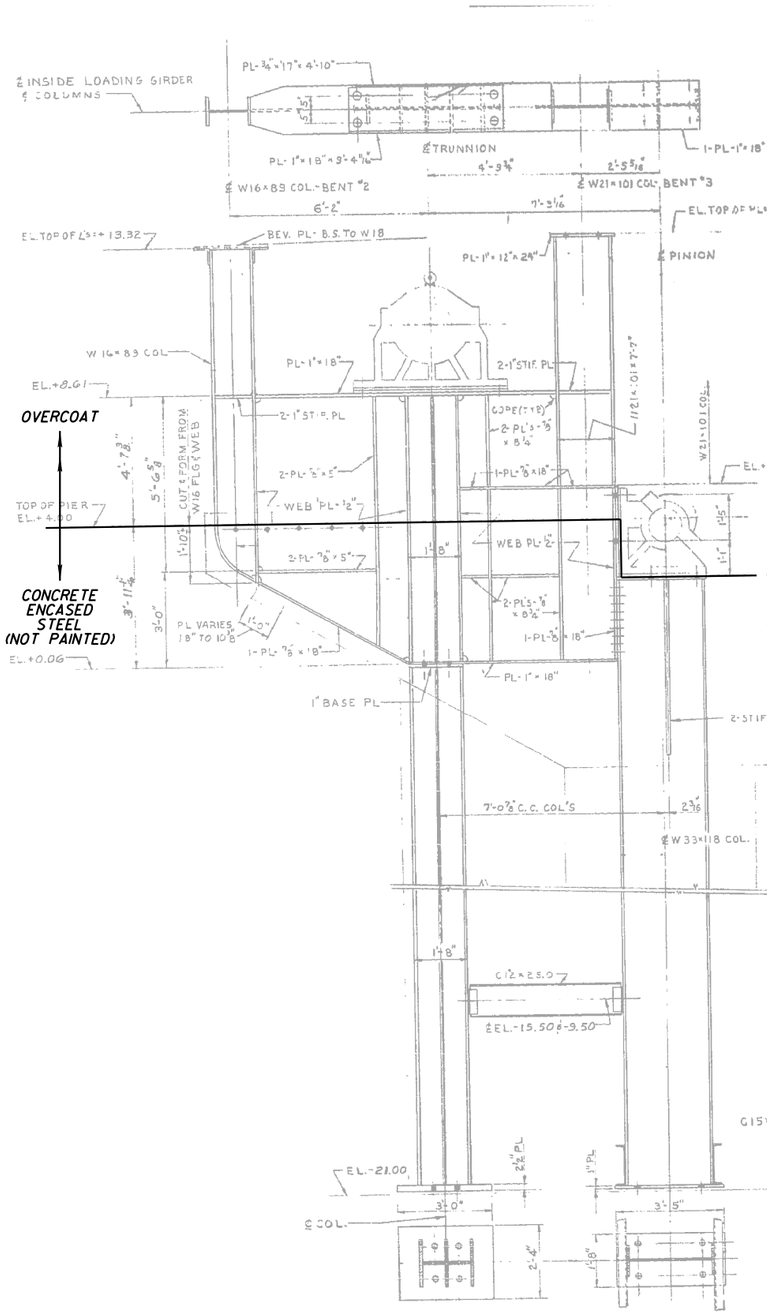


## INSIDE LOADING GIRDER G1

APPLY OVERCOAT TO ALL STRUCTURAL STEEL.

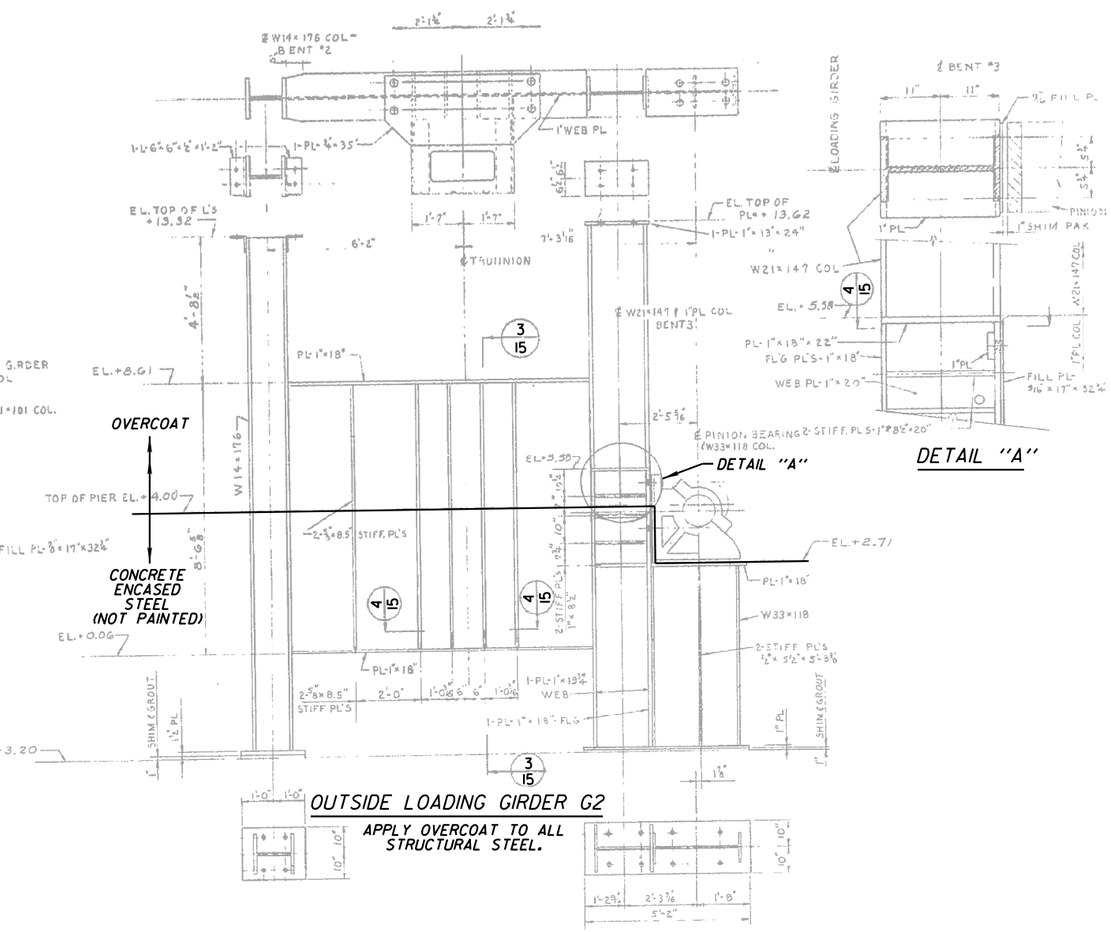


## OUTSIDE LOADING GIRDER G2

APPLY OVERCOAT TO ALL STRUCTURAL STEEL.

## DETAIL "A"

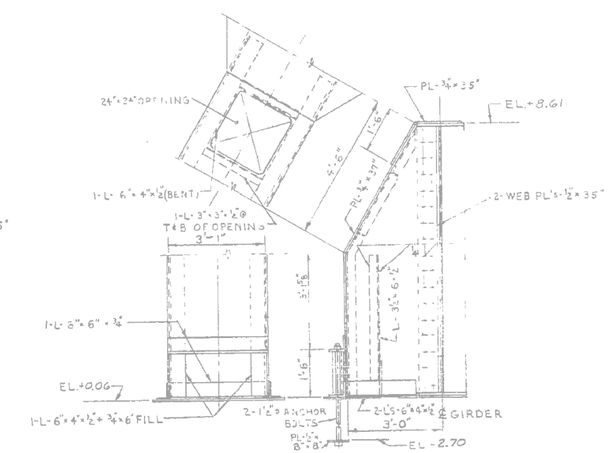


## SECTION 3/15

APPLY OVERCOAT TO ALL STEEL

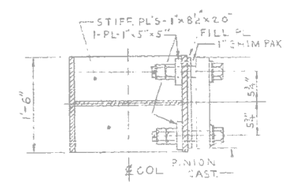


## SECTION 4/15

APPLY OVERCOAT TO ALL STEEL

City of Milwaukee

Department of Public Works

Infrastructure Services Division

BROADWAY BASCULE BRIDGE
OVER THE MILWAUKEE RIVER
PIER SPAN-
LOADING GIRDERS AND COLUMNS

REVISIONS

| | |
|---|---|
| DESIGNED BY H.J.R. | |
| DRAWN BY S.D.B. | |
| CHECKED BY J.M.W. | |
| DATE FEB. 2015 | SCALE NONE |
| JOB NUMBER BR100140110 | |
| SHEET NUMBER 15 OF 31 | |
| OF 35 | |

W:\STR\B0100\ 2014\PAINTING\ 15_PIERSPAN.DGN 01-29-2015

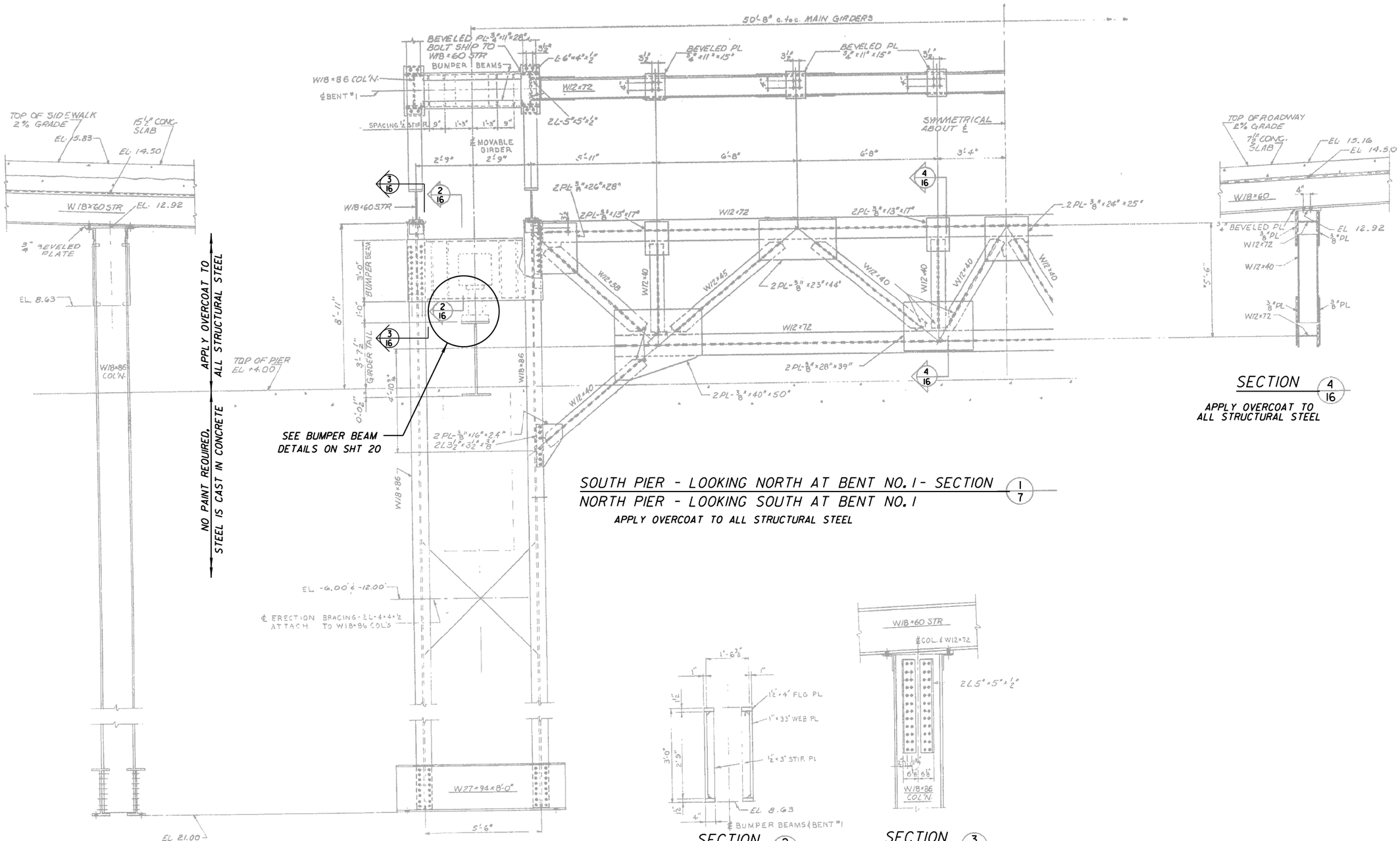


City of Milwaukee

Department of Public Works

Infrastructure Services Division

BROADWAY BASCULE BRIDGE
OVER THE MILWAUKEE RIVER
PIER SPAN-
CROSS SECTION - BENT I

REVISIONS

| | |
|---|---|
| DESIGNED BY H.J.R. | |
| DRAWN BY S.D.B. | |
| CHECKED BY J.M.W. | |
| DATE FEB. 2015 | SCALE NONE |
| JOB NUMBER BR100140110 | |
| SHEET NUMBER 16 OF 31 | |
| OF 35 | |

W:\STR\B0100\ 2014\PAINTING\ 16_PIERSPAN2.DGN 02-02-2015

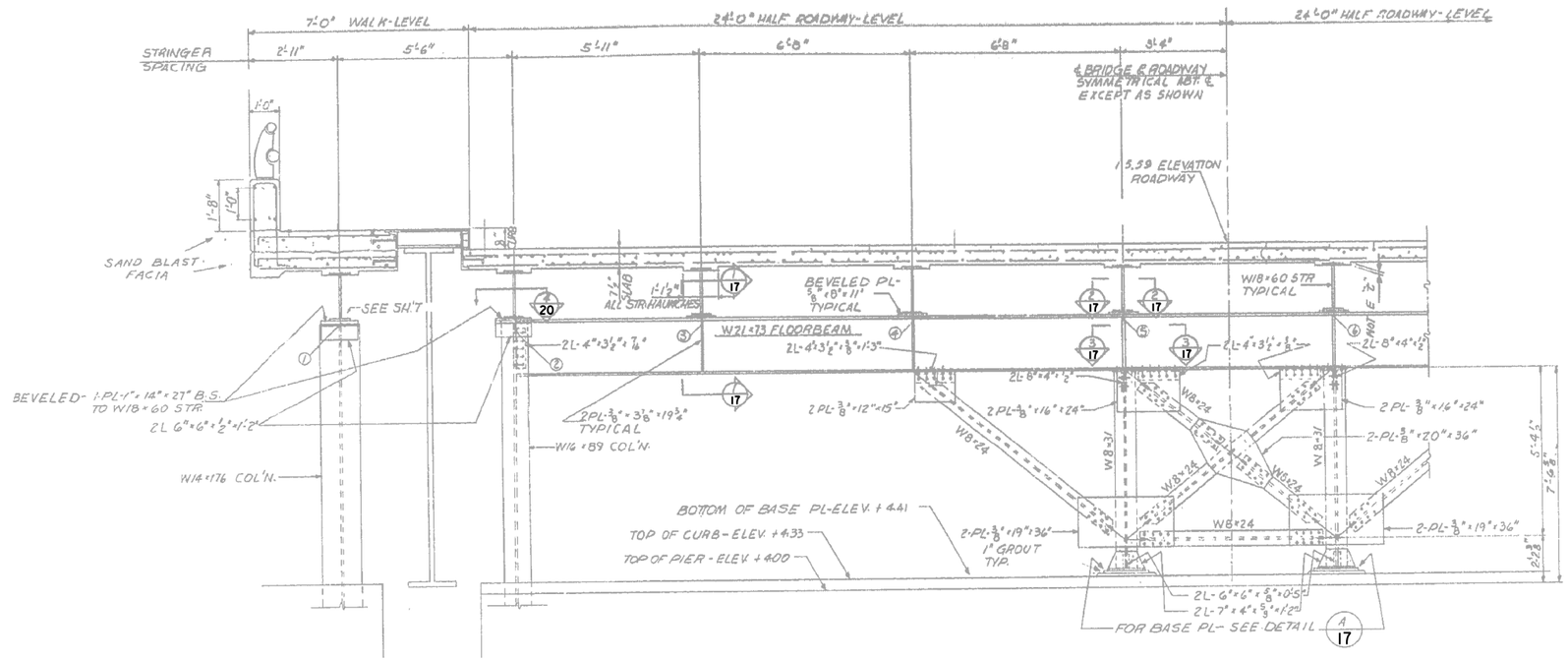


LOOKING NORTH AT BENT NO. 2 - SOUTH APPROACH - SECTION (2/7)

LOOKING SOUTH AT BENT NO. 2 - NORTH APPROACH

APPLY OVERCOAT TO ALL STRUCTURAL STEEL.

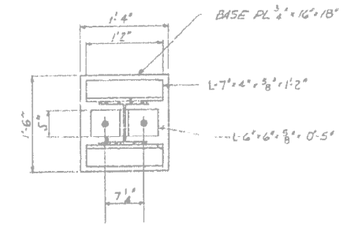


DETAIL A 17

APPLY OVERCOAT

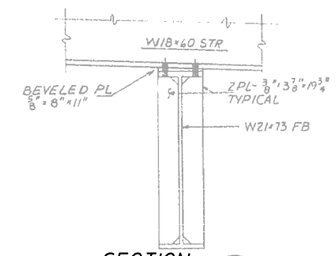


SECTION 1 17

APPLY OVERCOAT

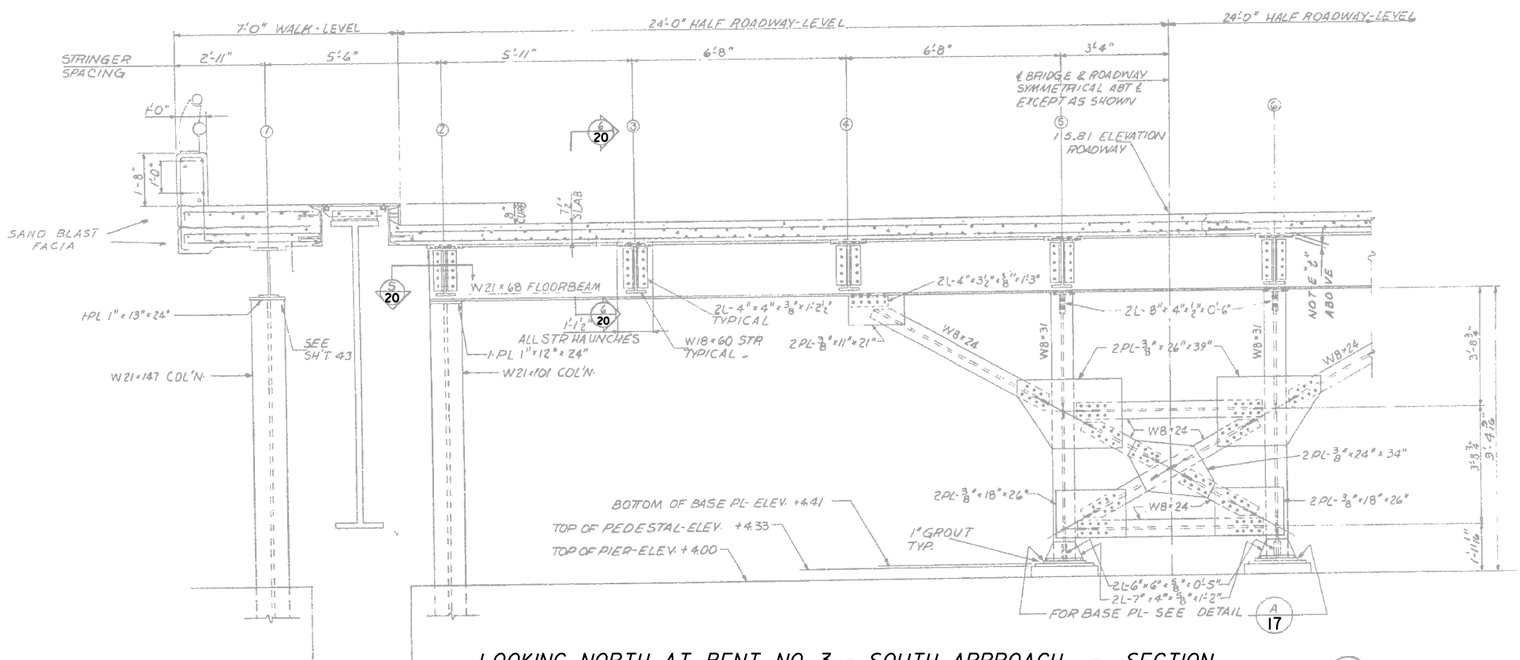


LOOKING NORTH AT BENT NO. 3 - SOUTH APPROACH - SECTION (3/7)

LOOKING SOUTH AT BENT NO. 3 - NORTH APPROACH

SANDBLAST AND PAINT ALL STRUCTURAL STEEL

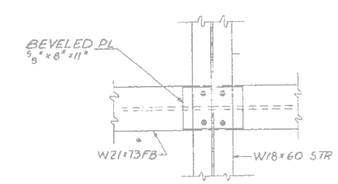


SECTION 2 17

APPLY OVERCOAT

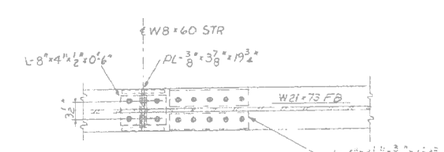


SECTION 3 17

APPLY OVERCOAT

City of Milwaukee

Department of Public Works

Infrastructure Services Division

BROADWAY BASCULE BRIDGE
OVER THE MILWAUKEE RIVER
PIER SPAN-
CROSS SECTION - BENTS 2 AND 3

REVISIONS

DESIGNED BY H.J.R.

DRAWN BY S.D.B.

CHECKED BY J.M.W.

DATE FEB. 2015 | SCALE NONE

JOB NUMBER BR100140110

SHEET NUMBER 17 OF 31

OF 35

W:\STR\B0100\ 2014\PAINTING\ 17_PIERSPAN3.DGN 01-30-2015

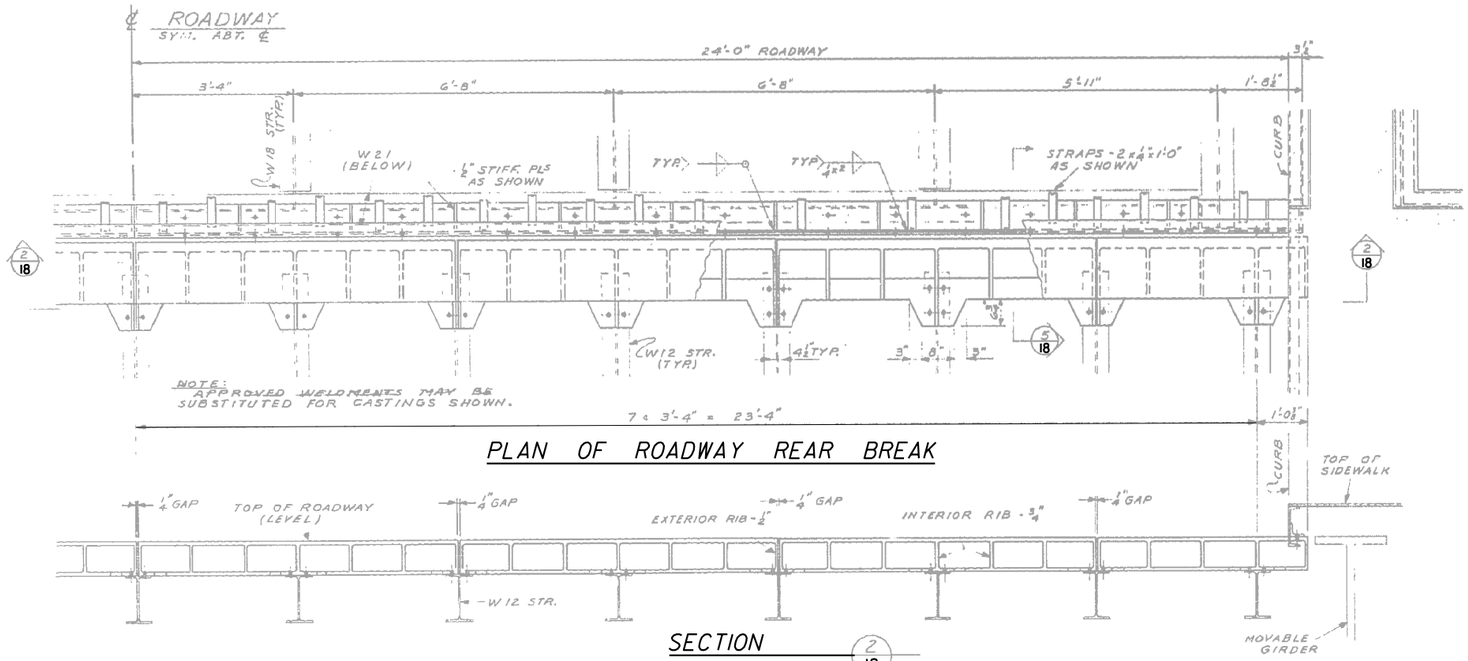


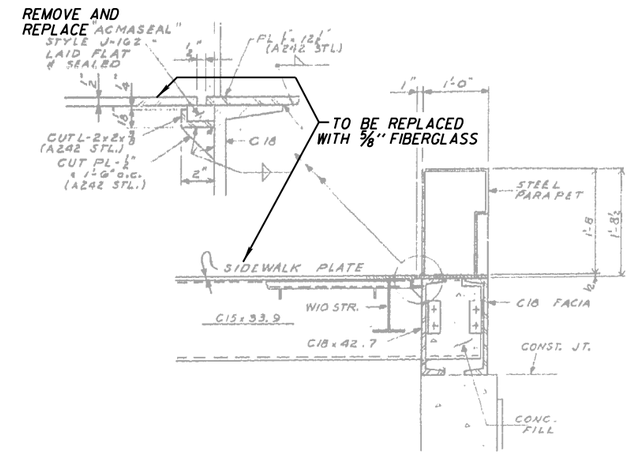


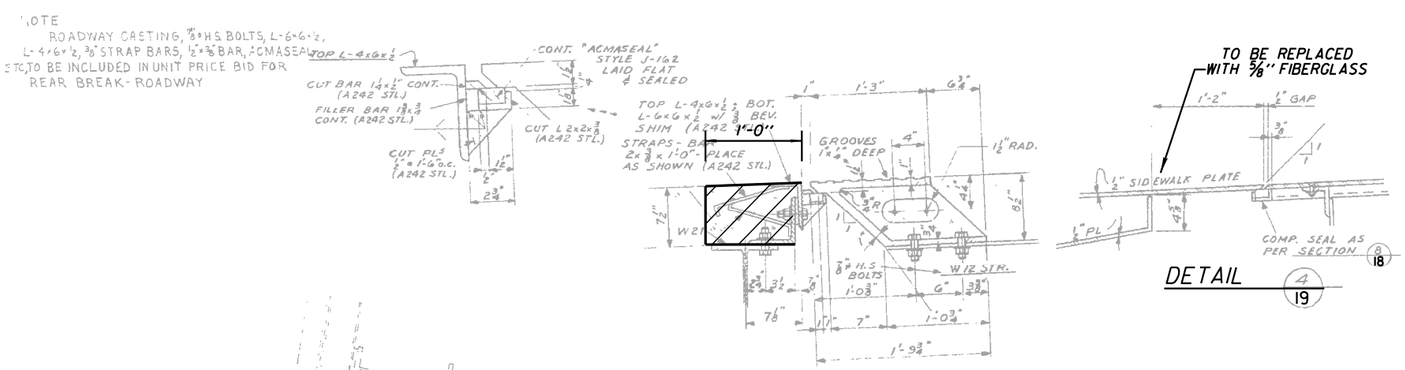


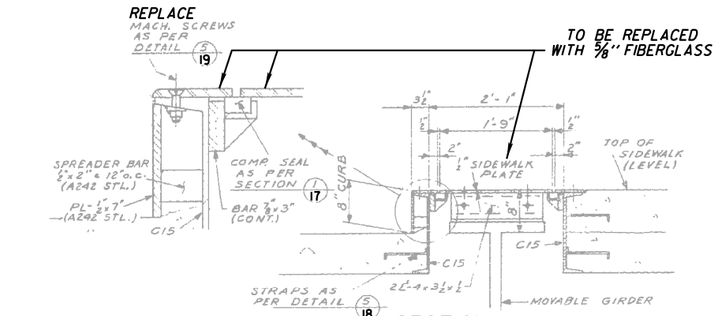


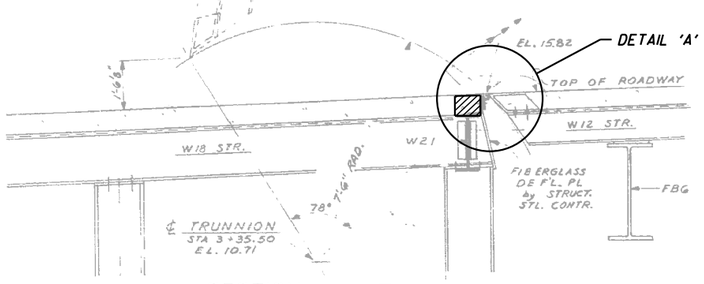


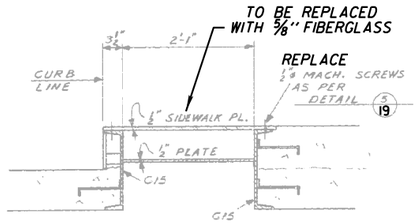


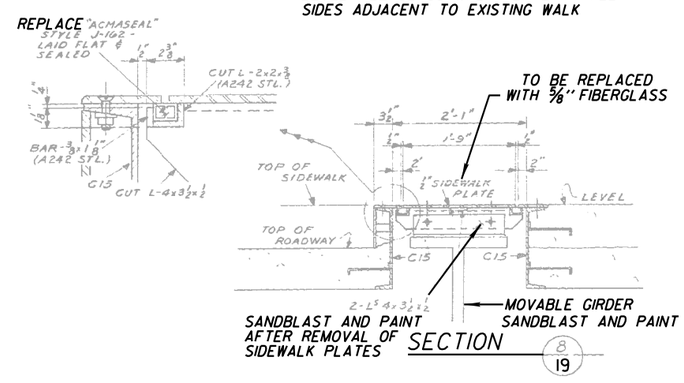


City of Milwaukee

Department of Public Works

Infrastructure Services Division

BROADWAY BASCULE BRIDGE
OVER THE MILWAUKEE RIVER
REAR BREAK - ROADWAY

REVISIONS

| | |
|---|---|
| DESIGNED BY H.J.R. | |
| DRAWN BY S.D.B. | |
| CHECKED BY J.M.W. | |
| DATE FEB. 2015 | SCALE NONE |
| JOB NUMBER BR100140110 | |
| SHEET NUMBER 18 OF 31 | |
| OF 35 | |

W:\STRUB0100\ 2014\PAINTING\ 18_BREAK.DGN 01-30-15

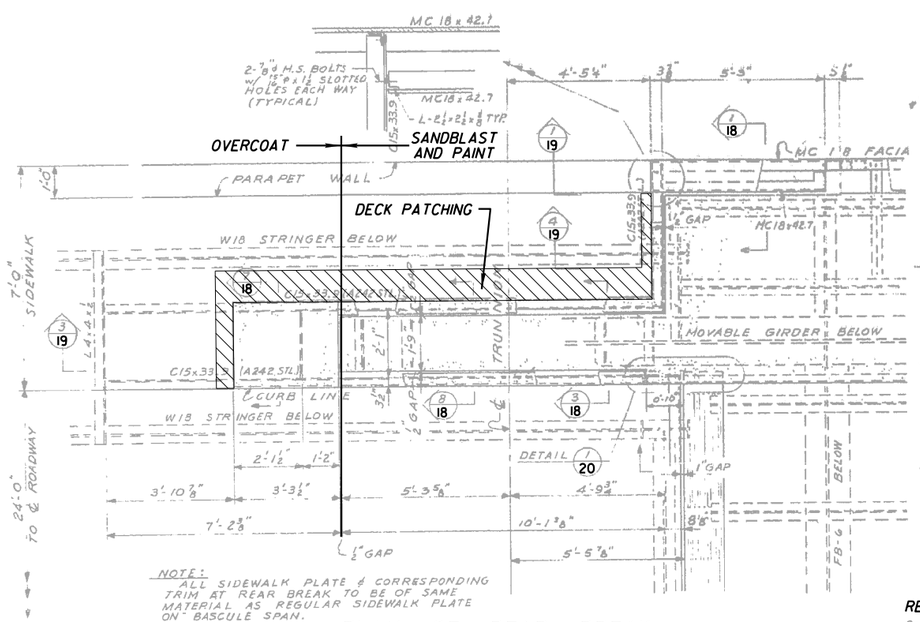


PLAN OF REAR BREAK

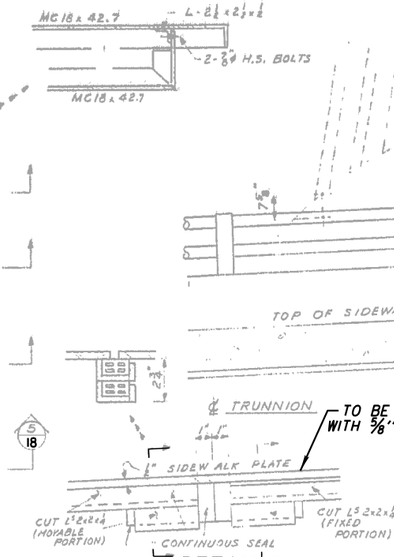


DETAIL 2/18

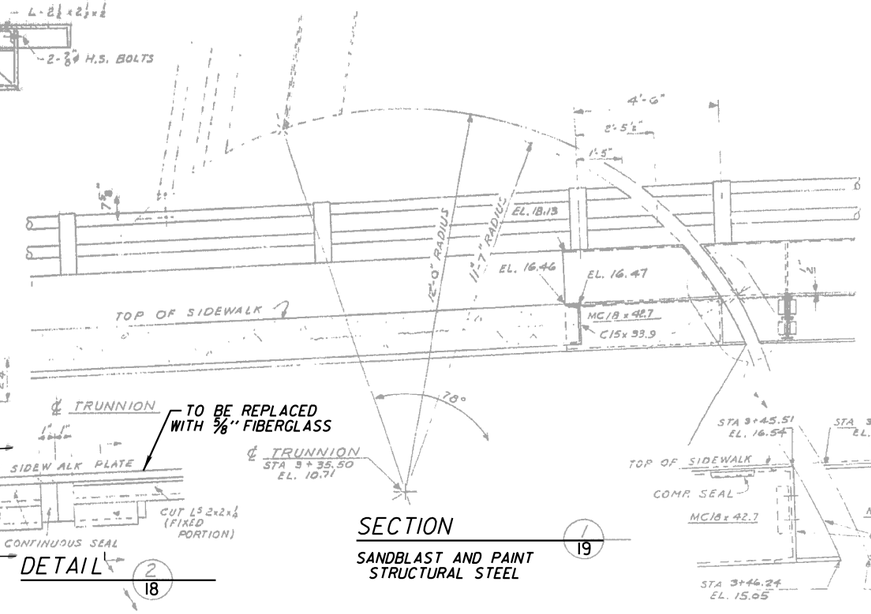


SECTION 1/19

SANDBLAST AND PAINT STRUCTURAL STEEL

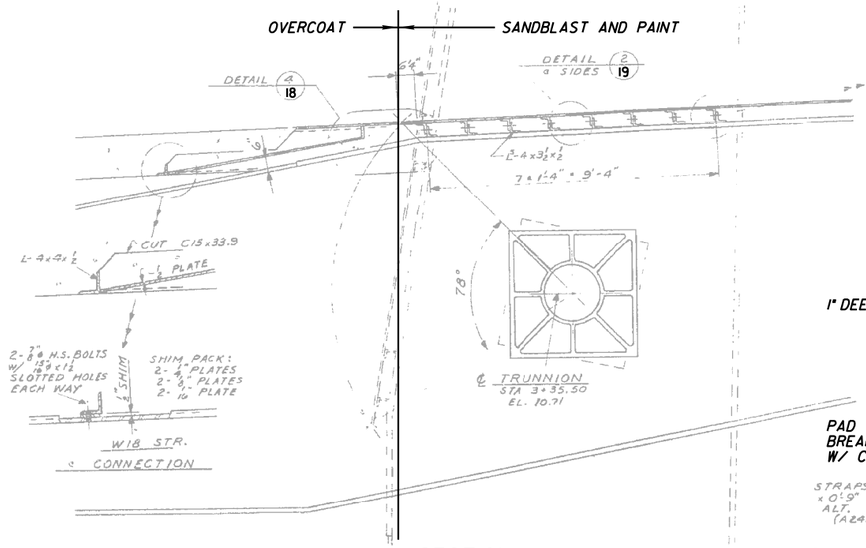


SECTION 3/19

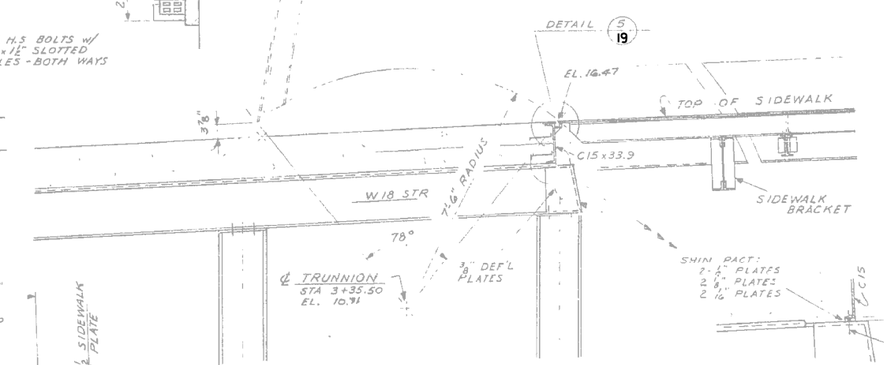


SECTION 4/19

SANDBLAST AND PAINT MOVABLE SPAN

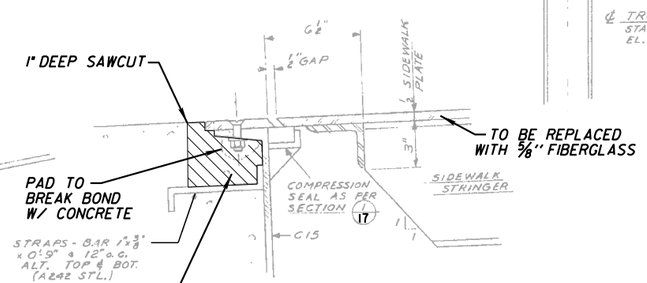


DETAIL 5/19

DECK PATCHING AT CONCRETE SIDEWALK. REMOVE CONCRETE, EXISTING FIBERGLASS OR ALUMINUM PLATES, NUTS, WASHERS AND BOLTS. REPLACE WITH NEW FIBERGLASS PLATE FOLLOWING DETAIL "B" ON SHEET 30. PATCH CONCRETE IN ACCORDANCE TO BID ITEM SPV.0165.02

City of Milwaukee

Department of Public Works

Infrastructure Services Division

BROADWAY BASCULE BRIDGE OVER THE MILWAUKEE RIVER REAR BREAK - SIDEWALK

REVISIONS

| | |
|---|---|
| DESIGNED BY H.J.R. | |
| DRAWN BY S.D.B. | |
| CHECKED BY J.M.W. | |
| DATE FEB. 2015 | SCALE NONE |
| JOB NUMBER BR100140110 | |
| SHEET NUMBER 19 OF 31 | |
| OF 35 | |

W:\STR\B0100\ 2014\PAINTING\ 19_BREAK.DGN 01-30-15

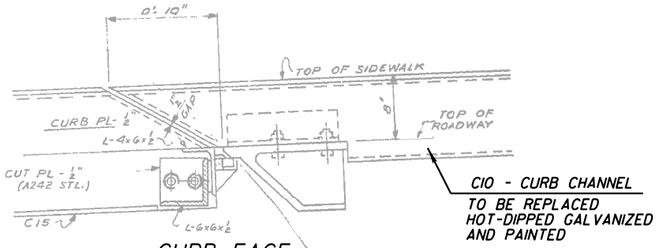


CURB FACE

TO BE SANDBLASTED AND PAINTED

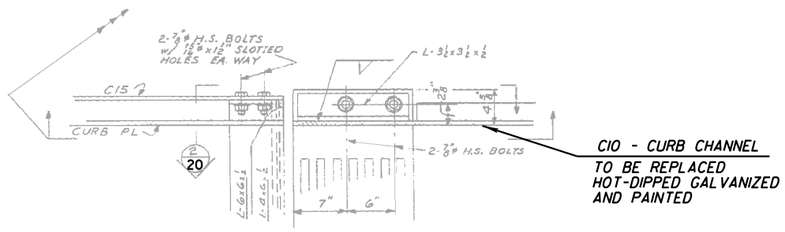


DETAIL 1/19

SANDBLAST AND PAINT
ALL STRUCTURAL STEEL

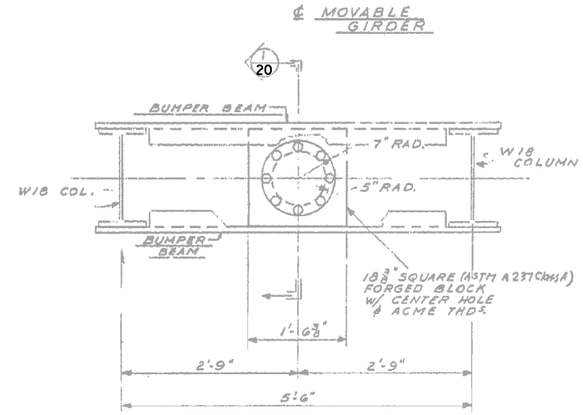


PLAN OF BUMPER BEAM

APPLY OVERCOAT TO
ALL STRUCTURAL STEEL

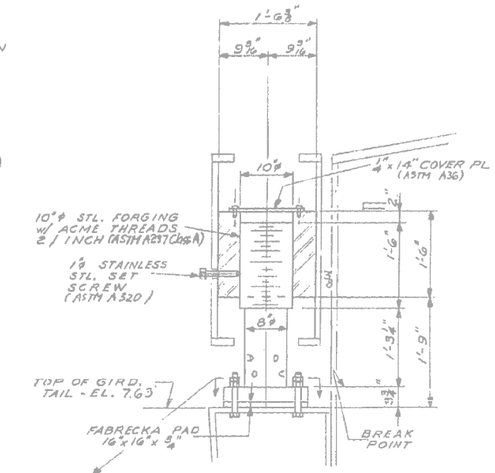


SECTION 1/20

APPLY OVERCOAT TO
ALL STRUCTURAL STEEL

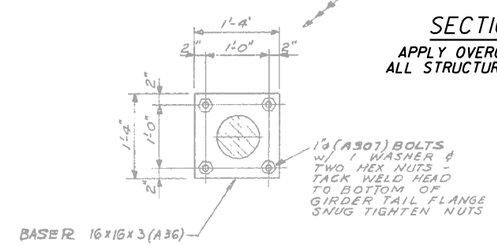


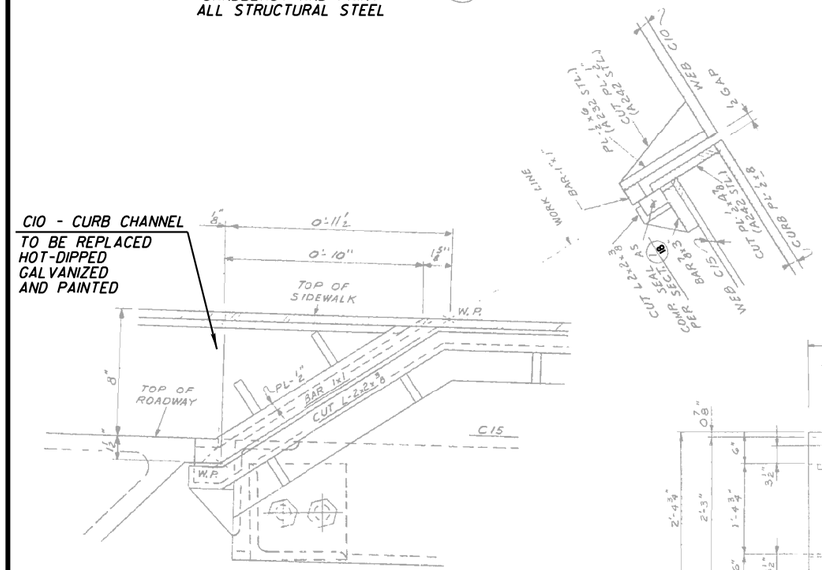


SECTION 2/20

SANDBLAST AND PAINT STRUCTURAL STEEL

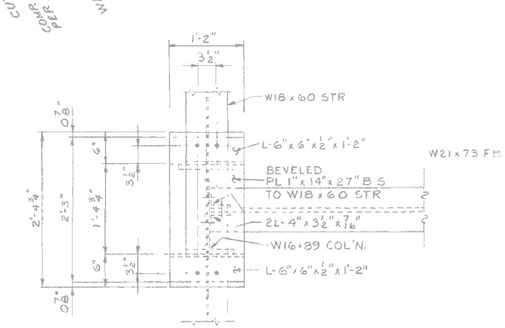


SECTION 4/17

APPLY OVERCOAT TO STRUCTURAL STEEL

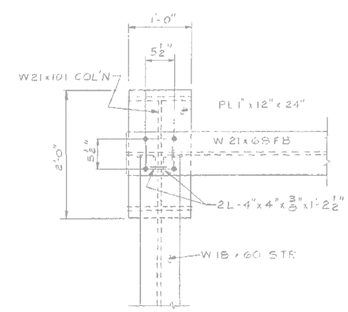


SECTION 5/17

SANDBLAST AND PAINT STRUCTURAL STEEL

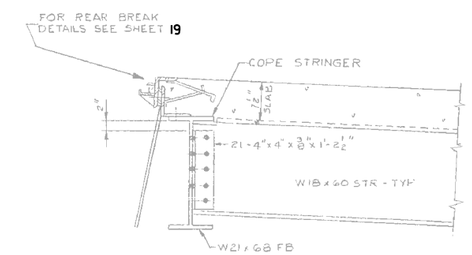


SECTION 6/17

SANDBLAST AND PAINT STRUCTURAL STEEL

W:\STRXB0100\ 2014PAINTING\ 20_BREAK.DGN 01-30-15

City of Milwaukee

Department of Public Works

Infrastructure Services Division

BROADWAY BASCULE BRIDGE
OVER THE MILWAUKEE RIVER
REAR BREAK DETAILS
AND REAR BUMPER

REVISIONS

| | |
|---|---|
| DESIGNED BY H.J.R. | |
| DRAWN BY S.D.B. | |
| CHECKED BY J.M.W. | |
| DATE FEB. 2015 | SCALE NONE |
| JOB NUMBER BR100140110 | |
| SHEET NUMBER 20 OF 31 | |
| OF 35 | |

NOTE: COORDINATE PAINTING STEEL NEAR ABUTMENTS WITH CITY OF MILWAUKEE EXPANSION JOINT REPLACEMENT.

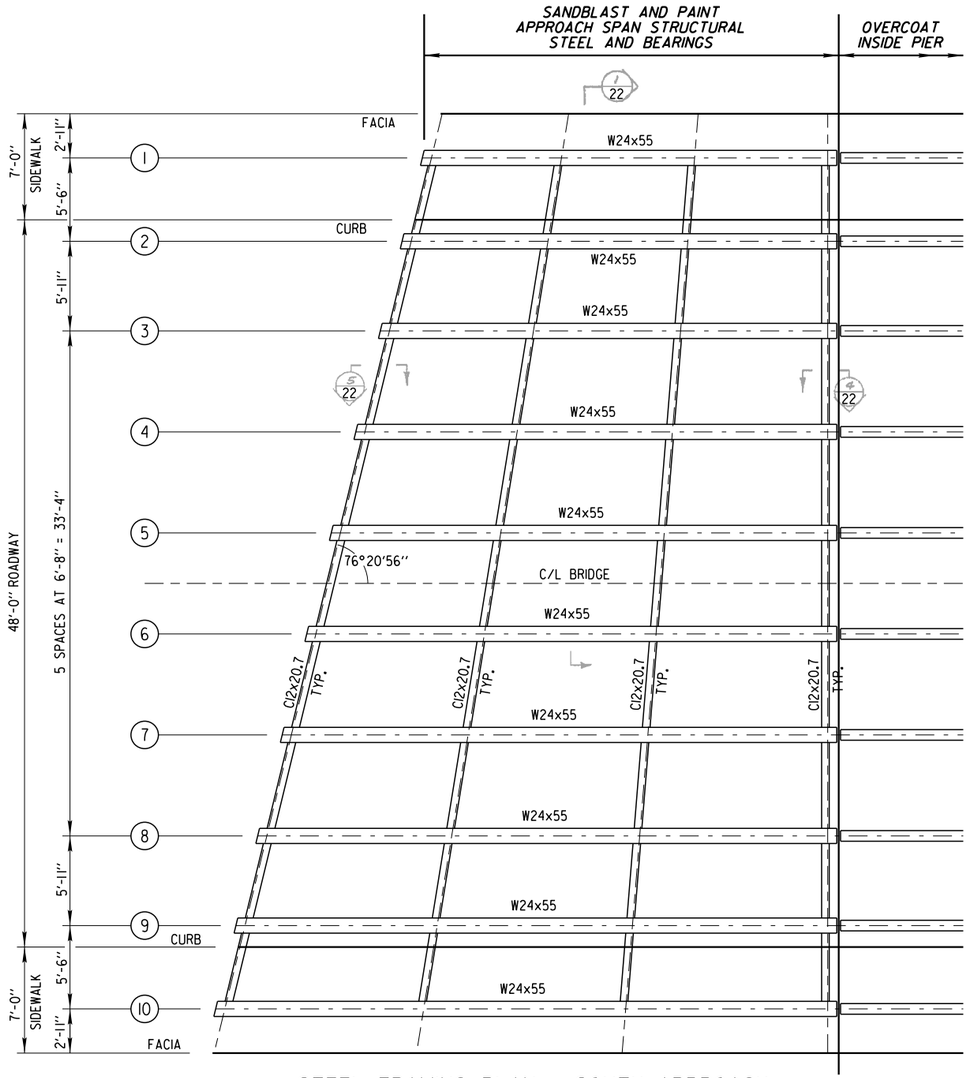


STEEL FRAMING PLAN - SOUTH APPROACH

SANDBLAST AND PAINT ALL STRUCTURAL STEEL INCLUDING, BUT NOT LIMITED TO BEARING ASSEMBLIES, STRINGERS, DIAPHRAGMS AND CONNECTIONS

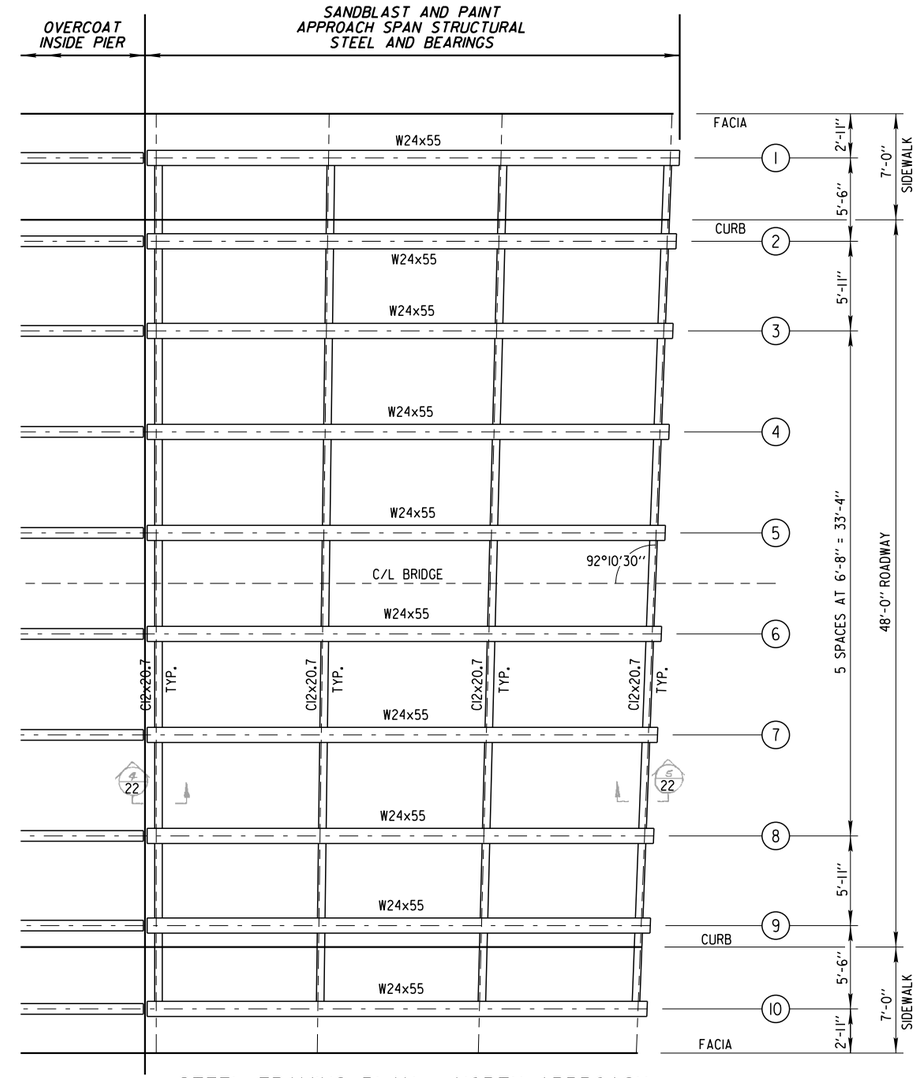


STEEL FRAMING PLAN - NORTH APPROACH

SANDBLAST AND PAINT ALL STRUCTURAL STEEL INCLUDING, BUT NOT LIMITED TO BEARING ASSEMBLIES, STRINGERS, DIAPHRAGMS AND CONNECTIONS

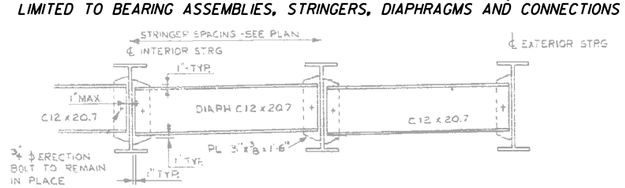


INTERMEDIATE DIAPHRAGM DETAIL

SANDBLAST AND PAINT ALL STRUCTURAL STEEL

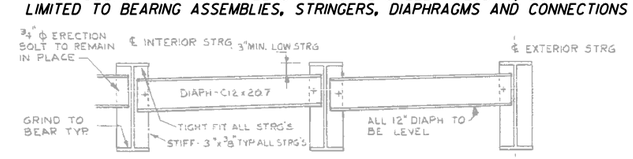


TYPICAL BEARING DIAPHRAGM DETAIL

SANDBLAST AND PAINT ALL STRUCTURAL STEEL

City of Milwaukee

Department of Public Works

Infrastructure Services Division

BROADWAY BASCULE BRIDGE OVER THE MILWAUKEE RIVER APPROACH SPANS FRAMING PLAN

REVISIONS

| | |
|---|---|
| DESIGNED BY H.J.R. | |
| DRAWN BY S.D.B. | |
| CHECKED BY J.M.W. | |
| DATE FEB. 2015 | SCALE NONE |
| JOB NUMBER BR100140110 | |
| SHEET NUMBER 21 OF 31 | |
| OF 35 | |

W:\STR\B0100\ 2014\PAINTING\ 21_APPRO.DGN 01-30-15

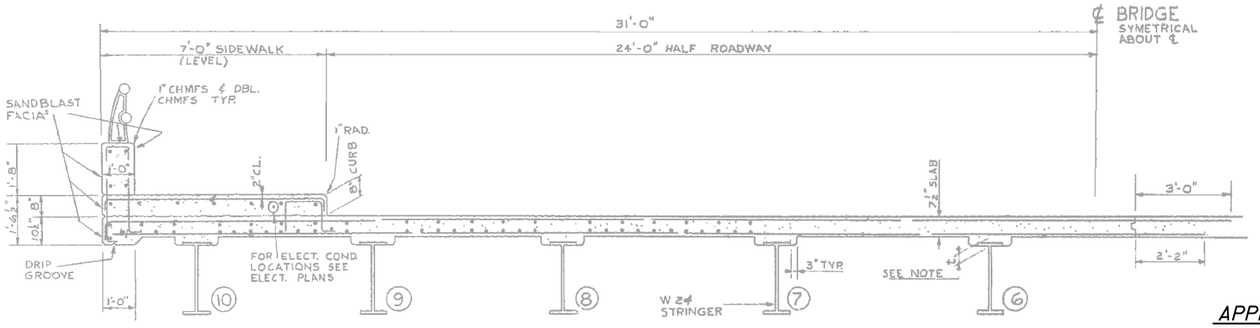


TYPICAL HALF SECTION (1/21)

SANDBLAST AND PAINT ALL STRUCTURAL STEEL

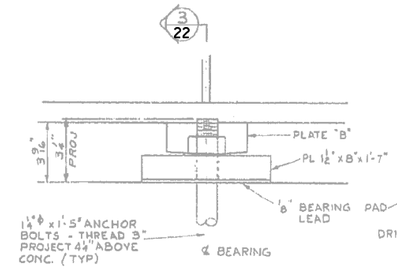


DETAIL (2/22)

APPROACH SPAN FIXED BEARINGS - PIERS

SANDBLAST AND PAINT BEARING ASSEMBLIES

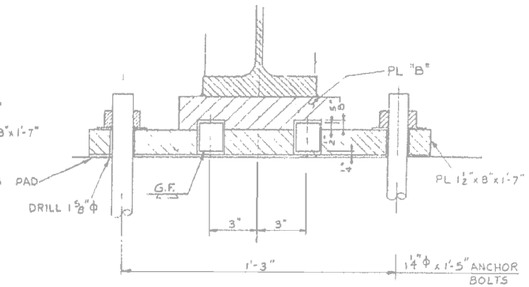


SECTION (3/22)

SANDBLAST AND PAINT BEARING ASSEMBLIES

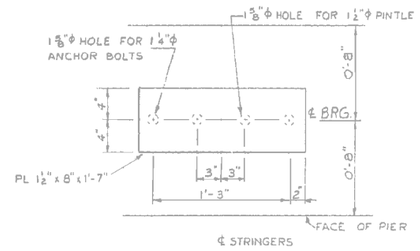


MASONRY PL @ PIERS

SANDBLAST AND PAINT

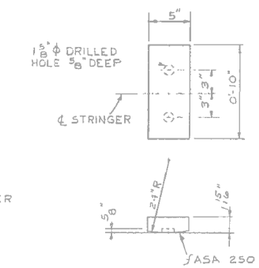


ROCKER PLATE "B"

SANDBLAST AND PAINT

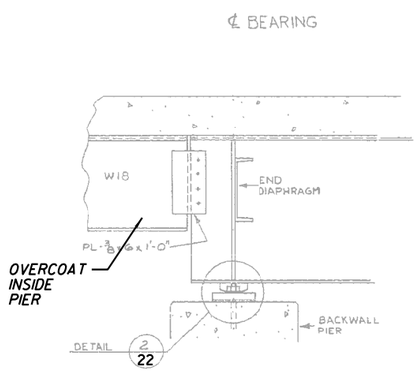


SECTION (4/21)

SANDBLAST AND PAINT ALL STRUCTURAL STEEL EXCEPT WHERE NOTED

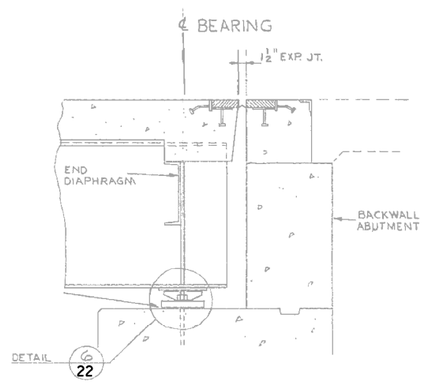


SECTION (5/21)

SANDBLAST AND PAINT STRINGER, DIAPHRAGM AND BEARING ASSEMBLIES

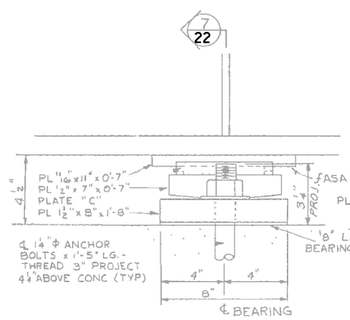


DETAIL (6/22)

EXPANSION BEARING ABUT.

SANDBLAST AND PAINT BEARING ASSEMBLIES

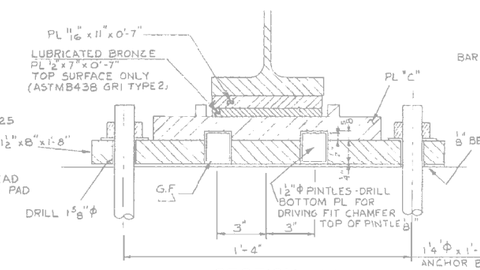


SECTION (7/22)

SANDBLAST AND PAINT BEARING ASSEMBLIES

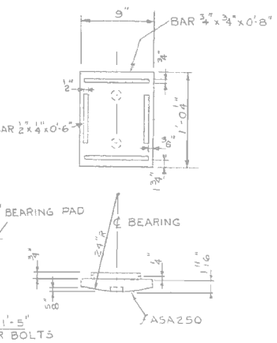


ROCKER PLATE "C"

SANDBLAST AND PAINT

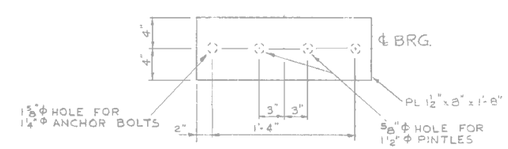


MASONRY PL @ ABUTMENTS

SANDBLAST AND PAINT ALL STRUCTURAL STEEL

City of Milwaukee

Department of Public Works

Infrastructure Services Division

BROADWAY BASCULE BRIDGE
OVER THE MILWAUKEE RIVER
APPROACHES - DECK SECTION
AND BEARING DETAILS

REVISIONS

| | |
|---|---|
| DESIGNED BY H.J.R. | |
| DRAWN BY S.D.B. | |
| CHECKED BY J.M.W. | |
| DATE FEB. 2015 | SCALE NONE |
| JOB NUMBER BR100140110 | |
| SHEET NUMBER 22 OF 31 | |
| OF 35 | |

W:\STR\B0100\2014\PAINTING\22_RAIL.DGN 01-30-15

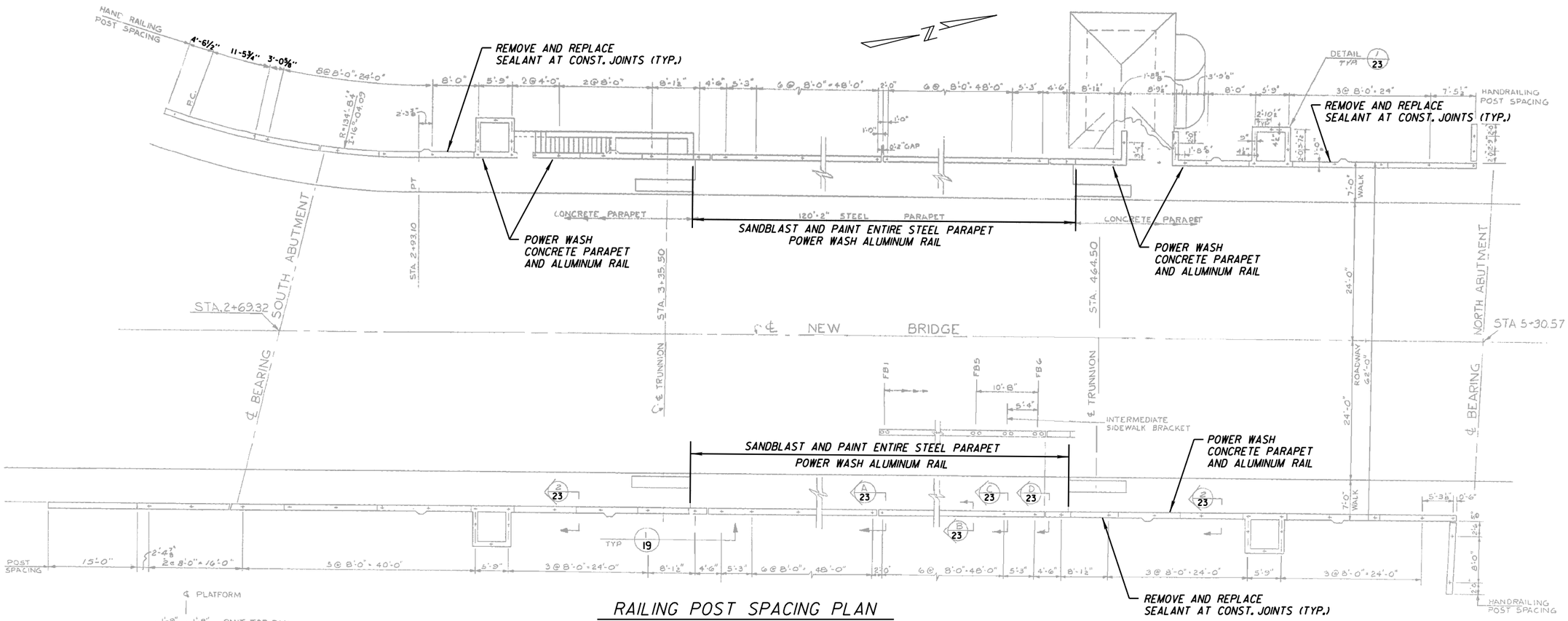


## RAILING POST SPACING PLAN

NOTE: REMOVE 1/2" ALUMINUM SIDEWALK PLATE, SANDBLAST AND PAINT STRUCTURAL STEEL, AND INSTALL NEW 5/8" FIBERGLASS SIDEWALK PLATES.

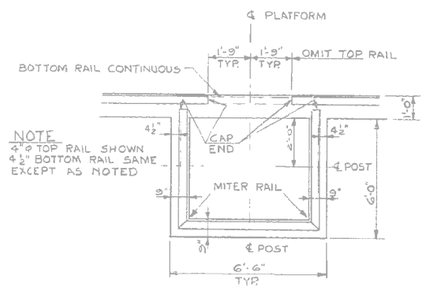


## DETAIL 1/23

POWER WASH ALUMINUM RAIL

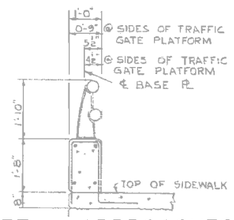


## PARAPET @ APPROACHES 2/23

POWER WASH CONCRETE PARAPET AND ALUMINUM RAIL

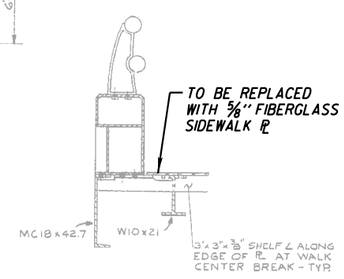


## CENTERBREAK SEC. A/23

POWER WASH ALUMINUM RAIL
SANDBLAST AND PAINT STEEL

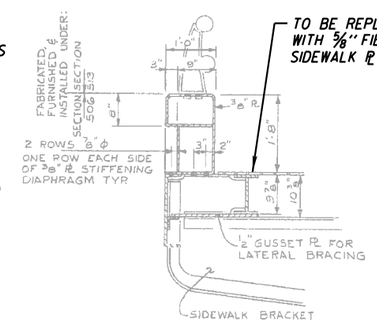


## SIDEWALK BRACKET SEC. B/23

POWER WASH ALUMINUM RAIL
SANDBLAST AND PAINT STEEL

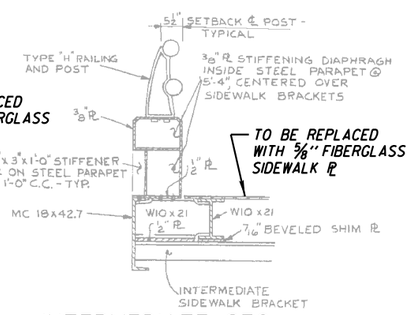


## INTERMEDIATE SEC. C/23

POWER WASH ALUMINUM RAIL
SANDBLAST AND PAINT STEEL

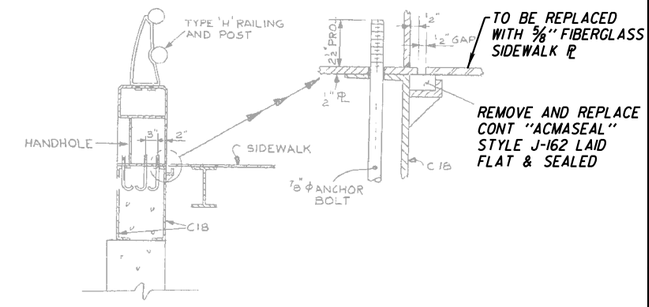


## REAR BREAK SEC. D/23

POWER WASH ALUMINUM RAIL
SANDBLAST AND PAINT STEEL

City of Milwaukee

Department of Public Works

Infrastructure Services Division

# BROADWAY BASCULE BRIDGE OVER THE MILWAUKEE RIVER
## RAILING PLAN AND PARAPET DETAILS

REVISIONS

| | |
|---|---|
| DESIGNED BY H.J.R. | |
| DRAWN BY S.D.B. | |
| CHECKED BY J.M.W. | |
| DATE FEB. 2015 | SCALE NONE |
| JOB NUMBER BR100140110 | |
| SHEET NUMBER 23 OF 31 | |
| OF 35 | |

W:\STR\B0100\ 2014\PAINTING\ 23_RAIL.DGN 01-30-15

NOTE: SANDBLAST AND PAINT ALL STEEL MACHINERY COMPONENTS FOR CENTERLOCK ASSEMBLY SHOWN ON SHEET 24-25. PROTECT MOTOR, GEAR TEETH, BRONZE WASHERS, THRUST BEARINGS, LIMIT SWITCH, ETC... FROM DAMAGE FROM BLAST MEDIA AND PAINT. POWER TOOL CLEANING AND BRUSH PAINTING WILL BE REQUIRED FOR THESE SENSITIVE COMPONENTS.

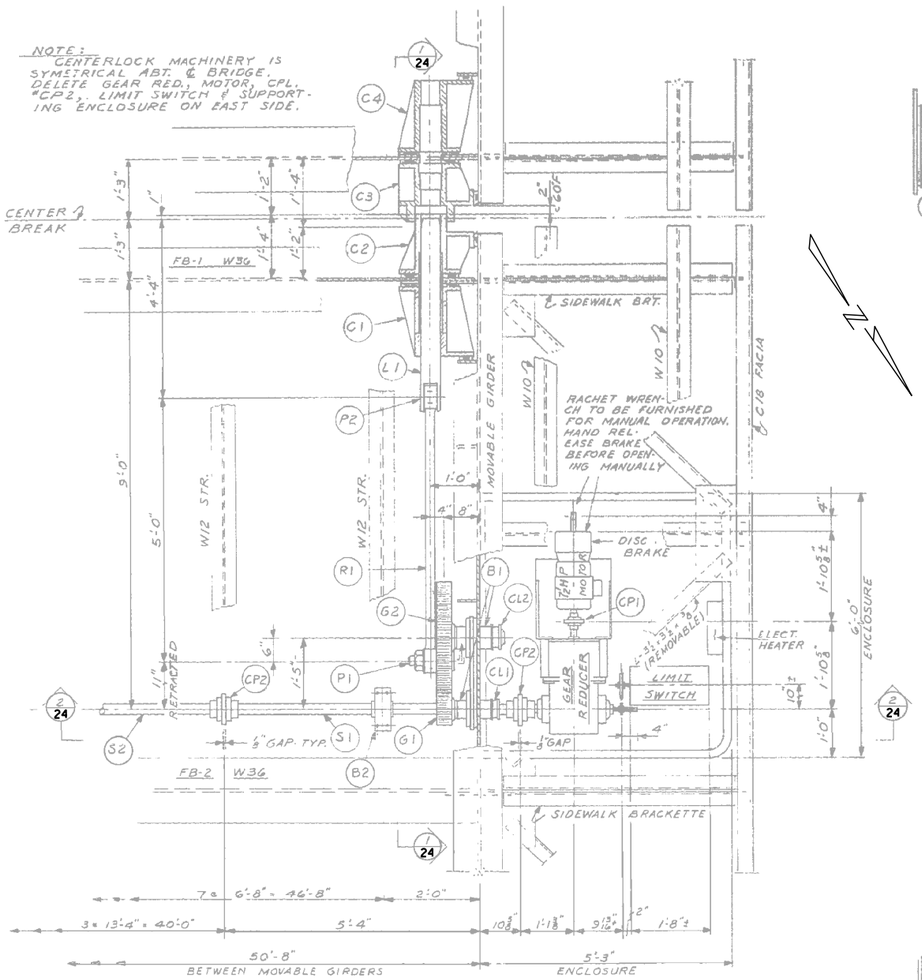


PARTIAL PLAN OF CENTERLOCK

SANDBLAST AND PAINT ALL STRUCTURAL STEEL AND MACHINERY

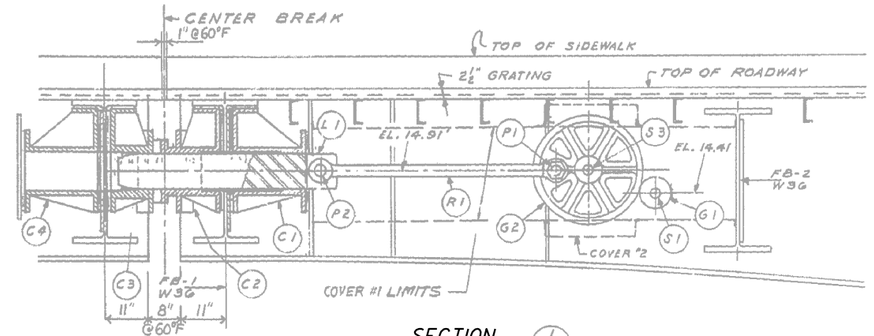


SECTION 1/24

SANDBLAST AND PAINT ALL STRUCTURAL STEEL AND MACHINERY

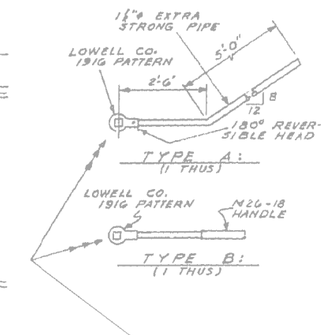


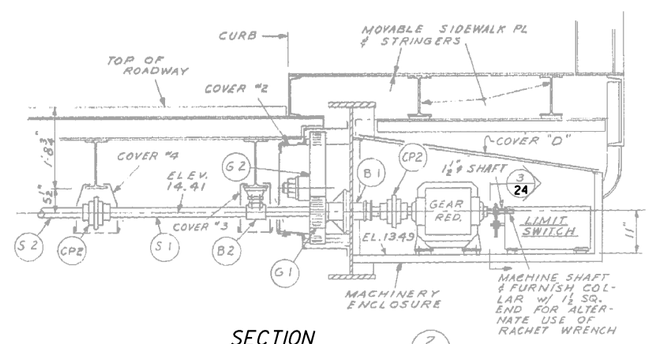


SECTION 2/24

SANDBLAST AND PAINT INCLUDING MACHINERY

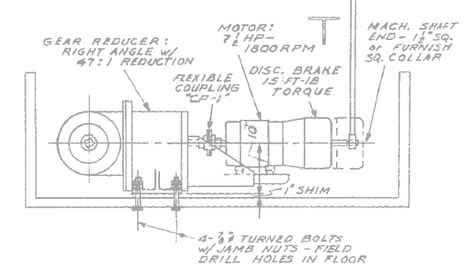


GEAR REDUCER ASSEMBLY

SANDBLAST AND PAINT

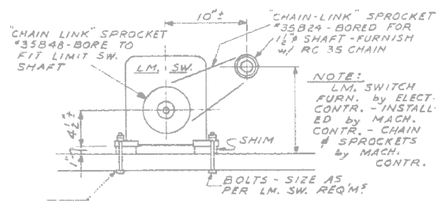


SECTION 3/24

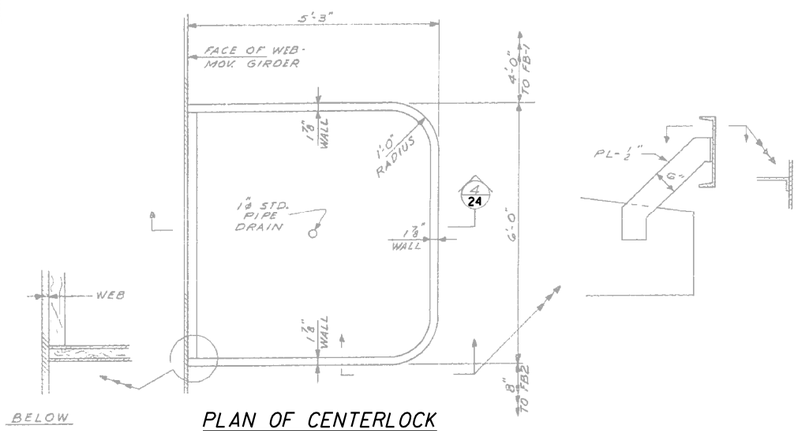


PLAN OF CENTERLOCK MACHINERY ENCLOSURE

SANDBLAST AND PAINT

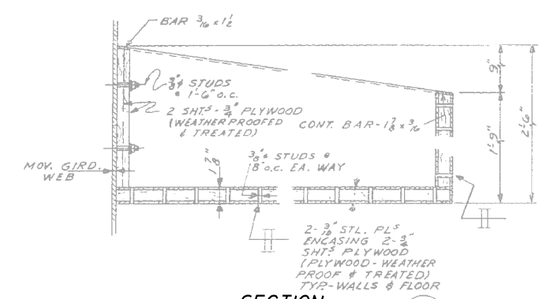


SECTION 4/24

SANDBLAST AND PAINT ALL STRUCTURAL STEEL

City of Milwaukee

Department of Public Works

Infrastructure Services Division

BROADWAY BASCULE BRIDGE OVER THE MILWAUKEE RIVER MACHINERY - CENTERLOCK LAYOUT

REVISIONS

| | |
|---|---|
| DESIGNED BY H.J.R. | |
| DRAWN BY S.D.B. | |
| CHECKED BY J.M.W. | |
| DATE FEB. 2015 | SCALE NONE |
| JOB NUMBER BR100140110 | |
| SHEET NUMBER 24 OF 31 | |
| OF 35 | |

W:\STR\B0100\ 2014\PAINTING\ 24_MACH7.DGN 01-30-2015

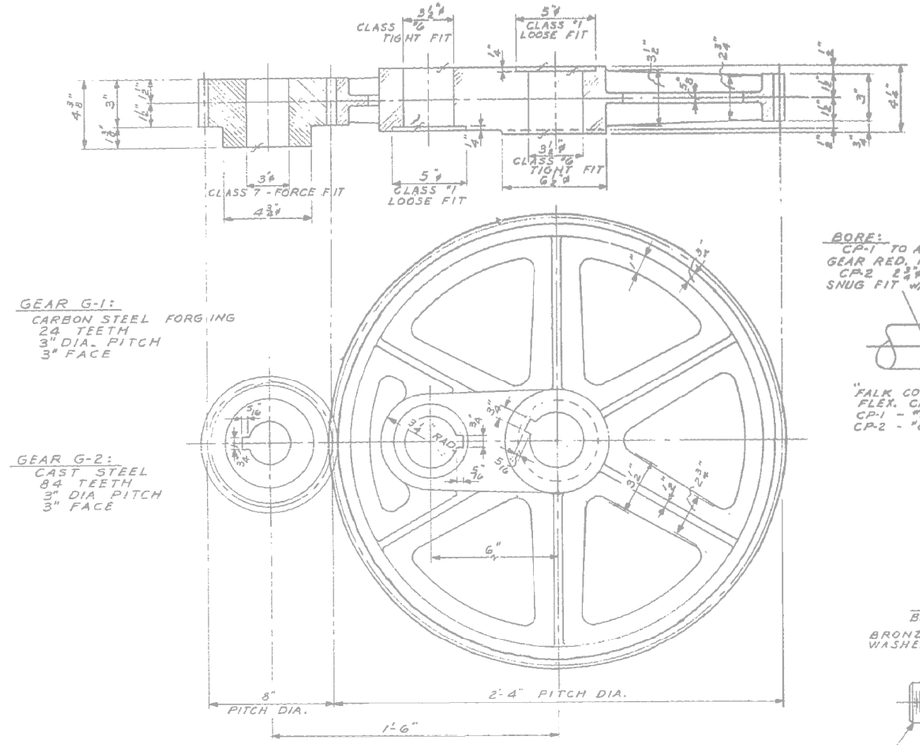


INVOLUTE STUB TEETH - 20° OBLIQUE CUT NUTTALL

GEAR G1
2 REQ'D

GEAR G2
2 REQ'D

SANDBLAST AND PAINT

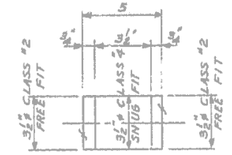


PIN "P-2"
SAE C1045 STL. - TURN & POLISH
2 REQ'D
SANDBLAST AND PAINT

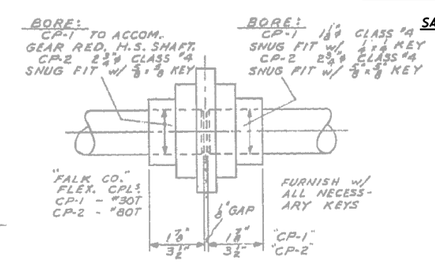


COUPLING "CP-1"
2 REQ'D

COUPLING "CP-1"
6 REQ'D
SANDBLAST AND PAINT

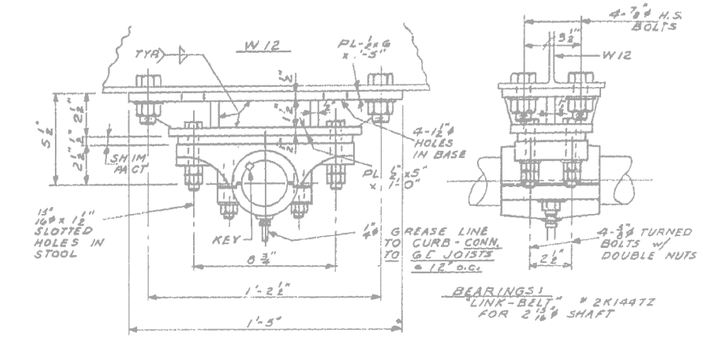


NOTE: SHOP ASSEMBLE STOOL - FIELD ASSEMBLE BRG.'S - ALL HOLES TO BE SHOP DRILLED.

BEARING "B-2"
8 REQ'D
SANDBLAST AND PAINT

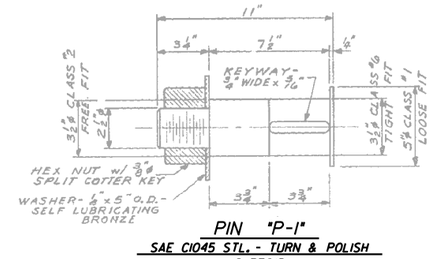


PIN "P-1"
SAE C1045 STL. - TURN & POLISH
2 REQ'D

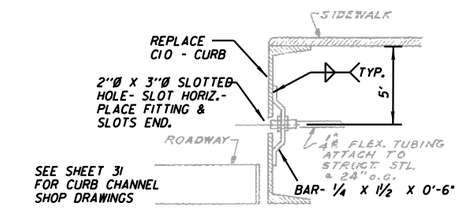


TYPICAL GREASE FITTING DETAIL

NOTE: COORDINATE THIS WORK WITH CITY OF MILWAUKEE GREASE FITTING REPLACEMENT

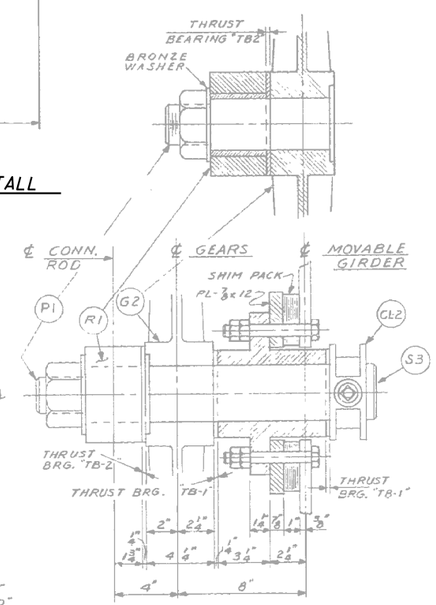


SECTION 1/25
SANDBLAST AND PAINT

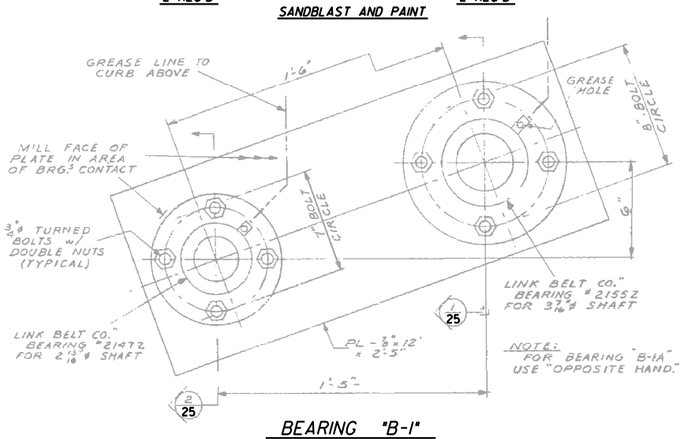


BEARING "B-1"
1 REQ'D
BEARING "B-1A"
1 REQ'D
SANDBLAST AND PAINT

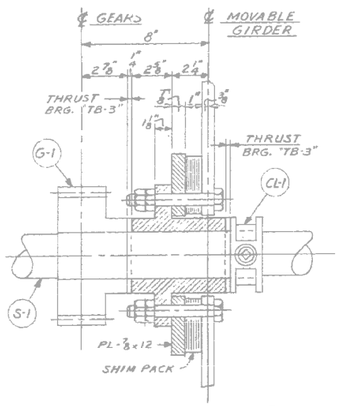


SECTION 2/25
SANDBLAST AND PAINT

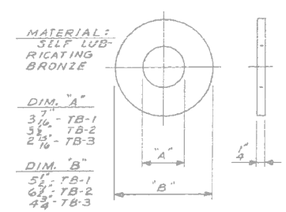


THRUST BEARING "TB-1"
4 REQ'D.

THRUST BEARING "TB-2"
2 REQ'D.

THRUST BEARING "TB-3"
4 REQ'D.

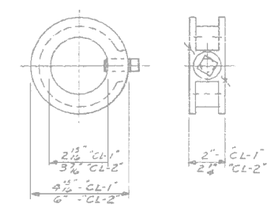


COLLARS: "LINK BELT" MALLEABLE IRON COLLARS.

COLLAR "CL-1"
2 REQ'D

COLLAR "CL-2"
2 REQ'D

City of Milwaukee

Department of Public Works

Infrastructure Services Division

BROADWAY BASCULE BRIDGE
OVER THE MILWAUKEE RIVER
MACHINERY - CENTERLOCK PARTS

REVISIONS

| | |
|---|---|
| DESIGNED BY H.J.R. | |
| DRAWN BY S.D.B. | |
| CHECKED BY J.M.W. | |
| DATE FEB. 2015 | SCALE NONE |
| JOB NUMBER BR100140110 | |
| SHEET NUMBER 25 OF 31 | |
| OF 35 | |

W:\STR\B0100\ 2014\PAINTING\ 25_MACH9.DGN 02-02-2015

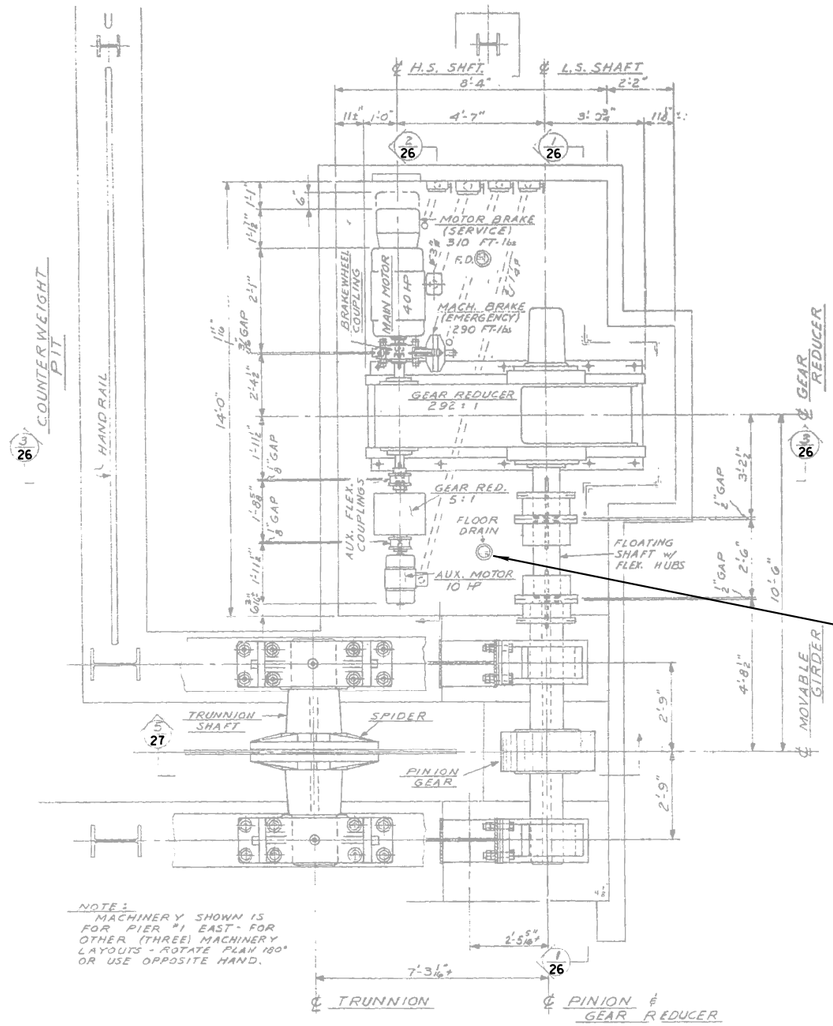


NOTE: MACHINERY SHOWN IS FOR PIER #1 EAST - FOR OTHER (THREE) MACHINERY LAYOUTS - ROTATE PLAN 180° OR USE OPPOSITE HAND.

## PLAN OF DRIVE MACHINERY

(4 LAYOUTS SIMILAR)

APPLY OVERCOAT TO MACHINERY WITHIN HOUSING UNLESS NOTED OTHERWISE
SANDBLAST AND PAINT TRUNNION SPIDER AND SHAFT,
RACK AND PINION ASSEMBLY.

CONCRETE SURFACE REPAIRS AROUND FLOOR DRAIN QUANTIFIED ON SHEETS 5 & 6.

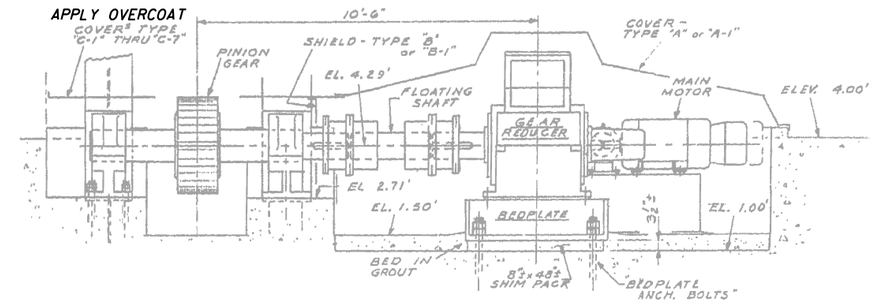


## SECTION 1/26

OVERCOAT MACHINERY WITHIN HOUSING
SEE NOTE BELOW
FOR RESTRICTIONS

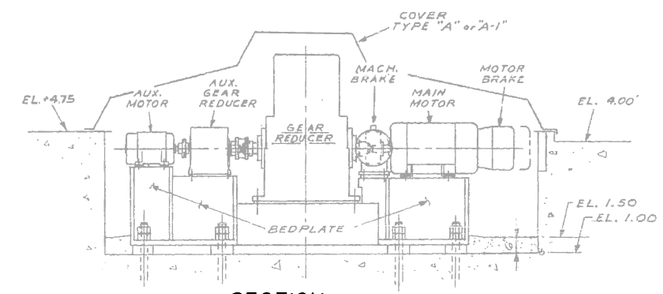


## SECTION 2/26

OVERCOAT MACHINERY WITHIN HOUSING
SEE NOTE BELOW
FOR RESTRICTIONS

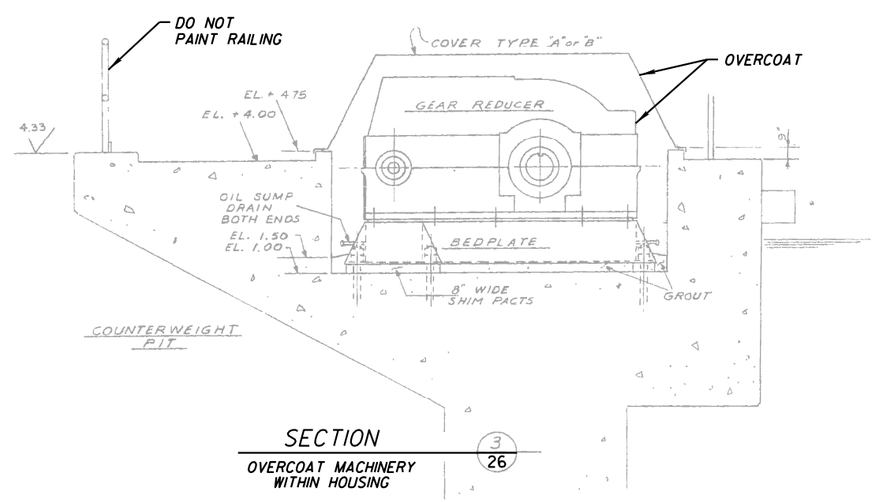


## SECTION 3/26

OVERCOAT MACHINERY
WITHIN HOUSING

NOTE: OVERCOAT ALL STEEL MACHINERY COMPONENTS AND MACHINERY COVERS FOR DRIVE MACHINERY AND HOUSING. PROTECT MOTOR, GEAR TEETH, BRONZE COMPONENTS, ETC... FROM DAMAGE FROM BLAST MEDIA, DETERGENT AND PAINT. POWER TOOL CLEANING AND BRUSH PAINTING WILL BE REQUIRED FOR SENSITIVE COMPONENTS. CLEAN ALL DEBRIS, BLAST MEDIA AND EXCESS PAINT BEFORE OPERATING BASCULE LEAF.

City of Milwaukee
Department of Public Works
Infrastructure Services Division

BROADWAY BASCULE BRIDGE
OVER THE MILWAUKEE RIVER
MACHINERY - LAYOUT

REVISIONS

| | |
|---|---|
| DESIGNED BY H.J.R. | |
| DRAWN BY S.D.B. | |
| CHECKED BY J.M.W. | |
| DATE FEB. 2015 | SCALE NONE |
| JOB NUMBER BR100140110 | |
| SHEET NUMBER 26 OF 31 | |
| OF 35 | |

W:\STR\B0100\ 2014\PAINTING\ 26_MACH10.DGN 02-02-2015

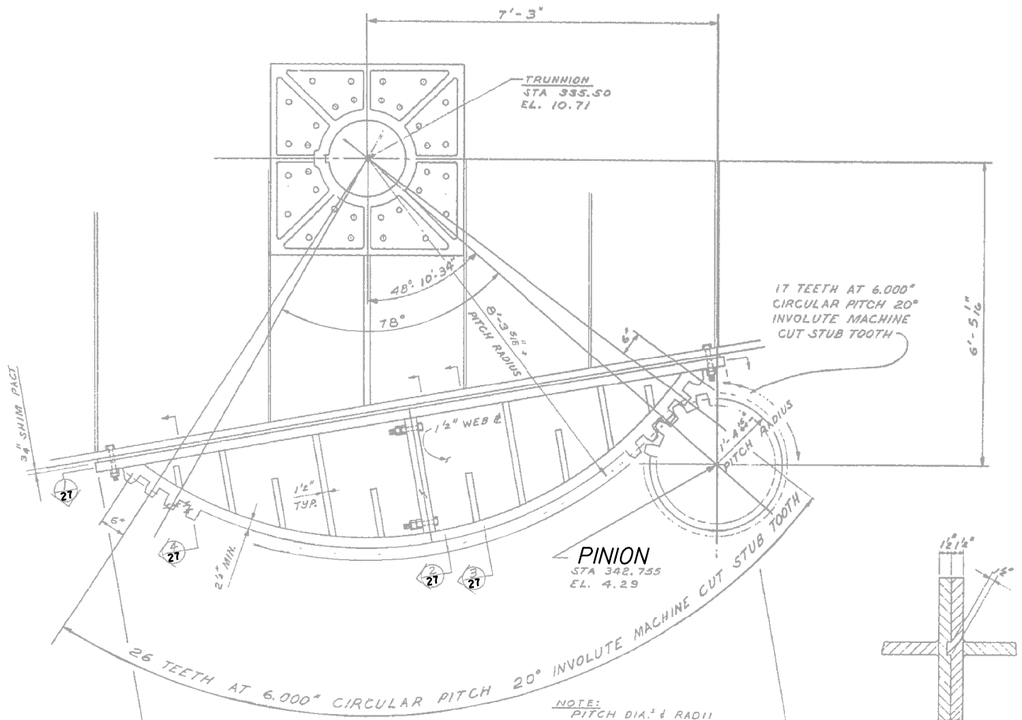


RACK ASSEMBLY (4)

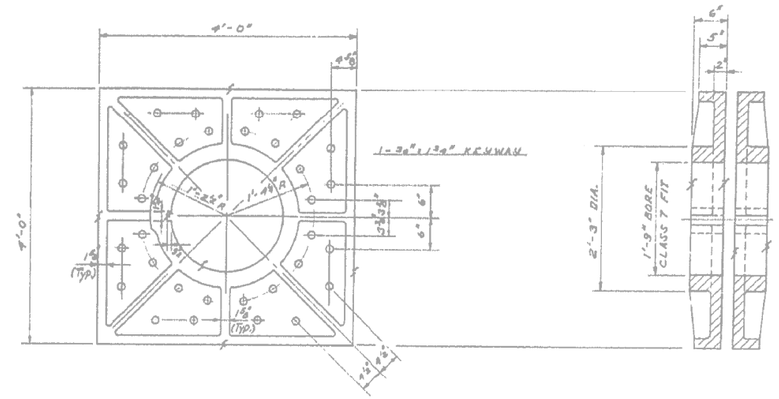


SPIDER (8)
CAST STEEL

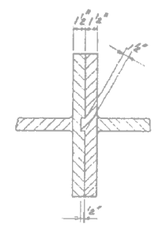

DETAIL A 27

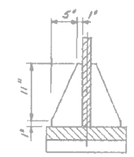

SECTION 3 27

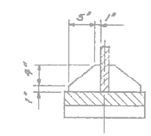

SECTION 4 27

NOTE: SANDBLAST AND PAINT MOVABLE GIRDER, TRUNNION SPIDER, TRUNNION RACK ASSEMBLY, PINION, PINION SHAFT, ETC... DO NOT PAINT GEAR TEETH AND REMOVE BLAST MEDIA AND PAINT OVERSPRAY BEFORE OPERATING THE BASCULE LEAF.

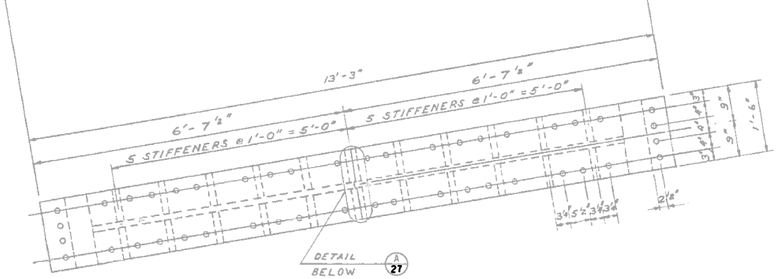


SECTION 1 27

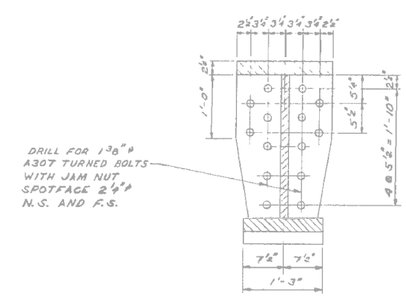


SECTION 2 27

City of Milwaukee

Department of Public Works

Infrastructure Services Division

BROADWAY BASCULE BRIDGE
OVER THE MILWAUKEE RIVER
MACHINERY - RACK ASSEMBLY

REVISIONS

| | |
|---|---|
| DESIGNED BY H.J.R. | |
| DRAWN BY S.D.B. | |
| CHECKED BY J.M.W. | |
| DATE FEB. 2015 | SCALE NONE |
| JOB NUMBER BR100140110 | |
| SHEET NUMBER 27 OF 31 | |
| OF 35 | |

W:\STR\B0100\ 2014\PAINTING\ 27_MACH4.DGN 01-30-2015

W:\STR\BO100\ 2014\PAINTING\ 28.CROSS.DGN 02-02-2015

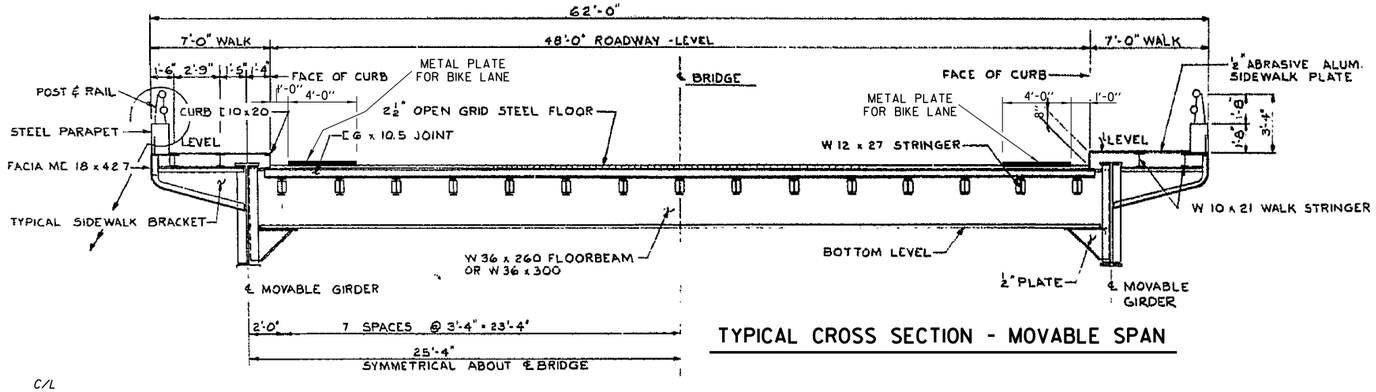


TYPICAL CROSS SECTION - MOVABLE SPAN

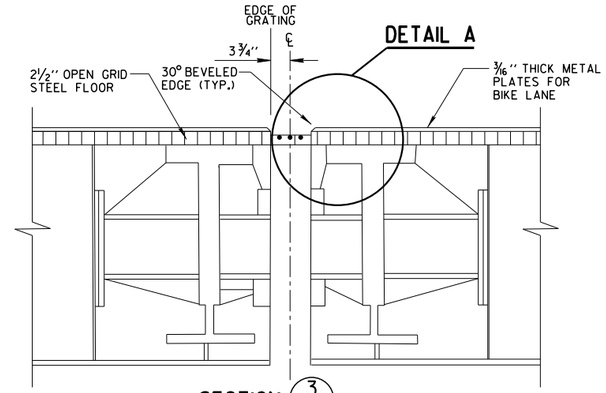


SECTION 3/28

NOTE: DIMENSIONS TO EDGE OF 2½" STEEL GRATING

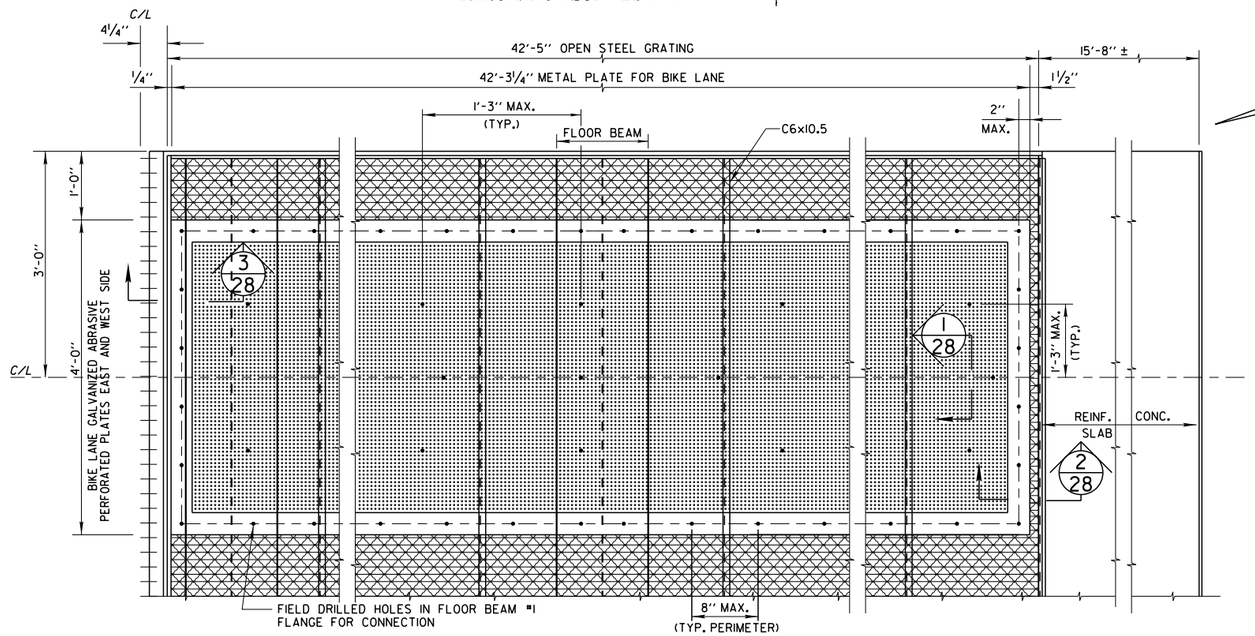


METAL PLATES FOR BIKE LANES GENERAL SCHEME
EAST BICYCLE LANE SHOWN, WEST BICYCLE LANE SIMILAR

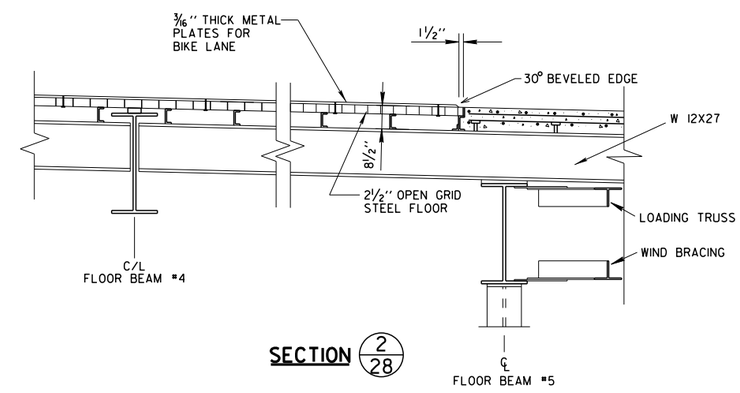


SECTION 2/28

*NOTE:*
*REMOVE EXISTING METAL PLATES AND HARDWARE AND SANDBLAST AND PAINT STEEL GRATING AND ALL SUPPORTING STEEL. REINSTALL METAL PLATES AND HARDWARE.*

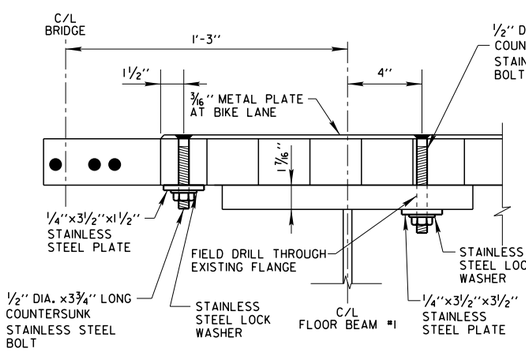


DETAIL A

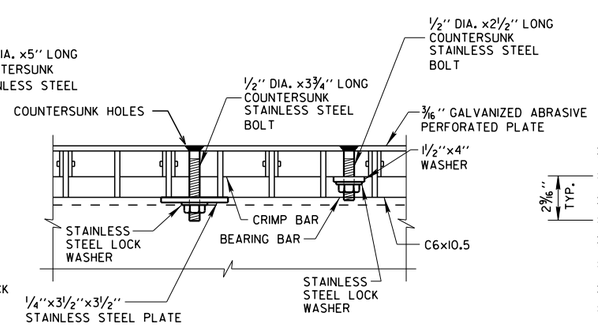


SECTION 1/28

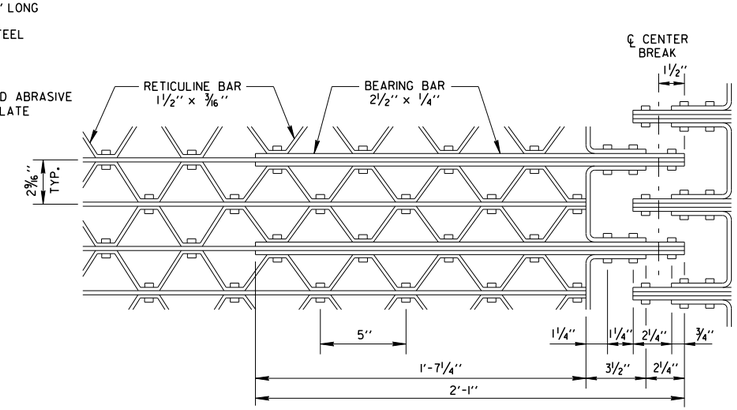


DETAIL OF CENTER BRAKE FOR STEEL GRATING

City of Milwaukee
Department of Public Works
Infrastructure Services Division

BROADWAY BASCULE BRIDGE OVER THE MILWAUKEE RIVER
BIKE PLATE CONNECTION DETAILS

REVISIONS

| | |
|---|---|
| DESIGNED BY H.J.R. | |
| DRAWN BY S.D.B. | |
| CHECKED BY J.M.W. | |
| DATE FEB. 2015 | SCALE NONE |
| JOB NUMBER BR100140110 | |
| SHEET NUMBER 28 OF 31 | |
| OF 35 | |

W:\STR\B0100\ 2014\PAINTING\ 30_SIDEWALK PLATE DETAILS.DGN 01-30-2015

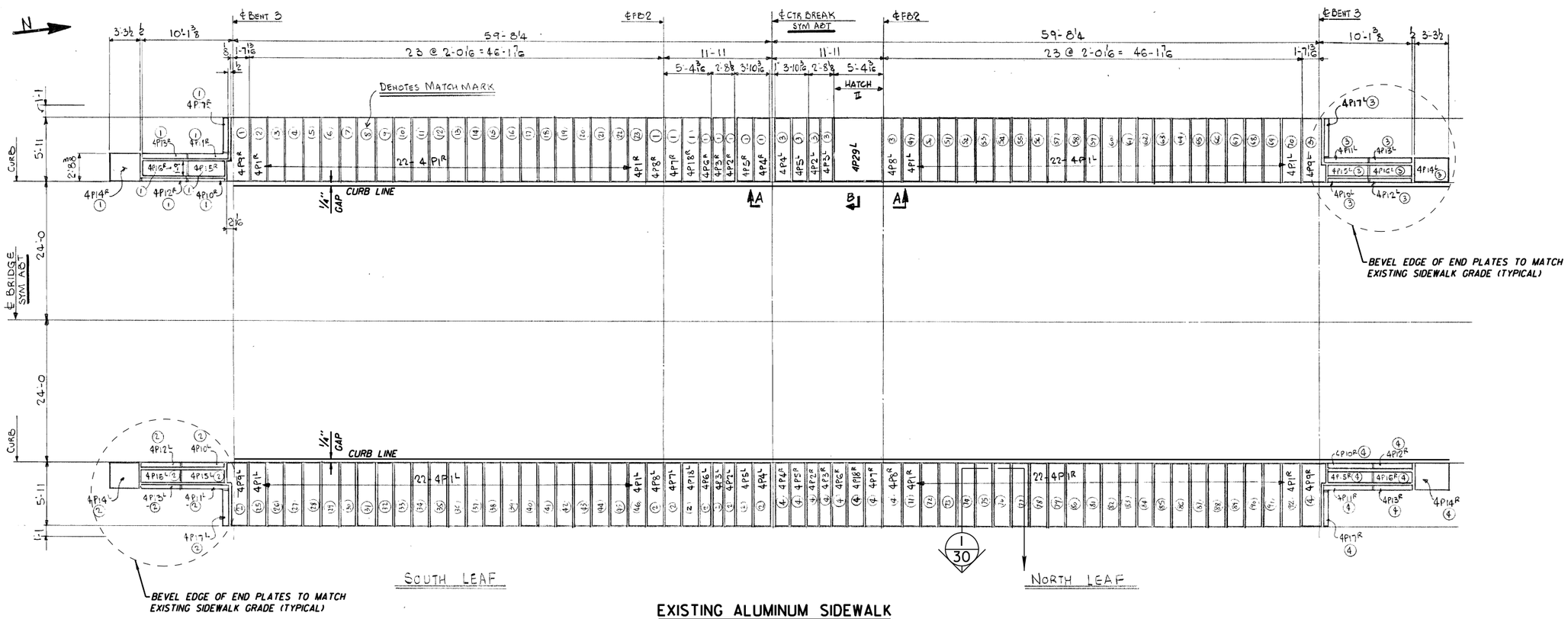


## EXISTING ALUMINUM SIDEWALK PLATE ERECTION PLAN

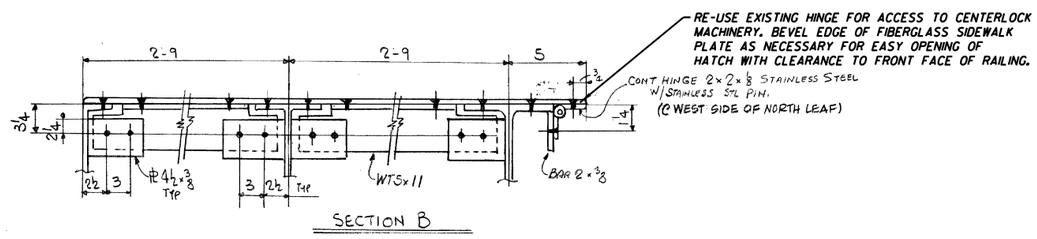


SECTION B

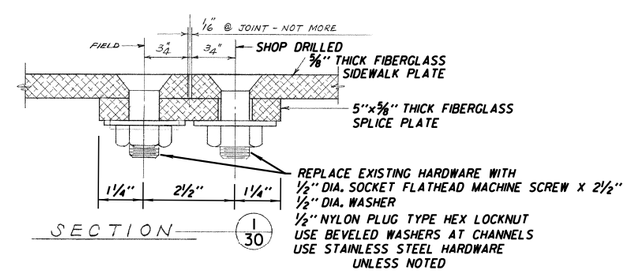


SECTION 1/30

City of Milwaukee

Department of Public Works

Infrastructure Services Division

BROADWAY BASCULE BRIDGE OVER THE MILWAUKEE RIVER

FIBERGLASS SIDEWALK PLATE PLAN

REVISIONS

| | |
|---|---|
| DESIGNED BY T.P.W. | |
| DRAWN BY S.D.B. | |
| CHECKED BY H.J.R. | |
| DATE FEB. 2015 | SCALE NONE |
| JOB NUMBER BR100140110 | |
| SHEET NUMBER 29 OF 31 | |
| OF 35 | |

W:\STR\B0100\ 2014\PAINTING\ 30 SIDEWALK PLATE DETAILS.DGN 02-02-2015

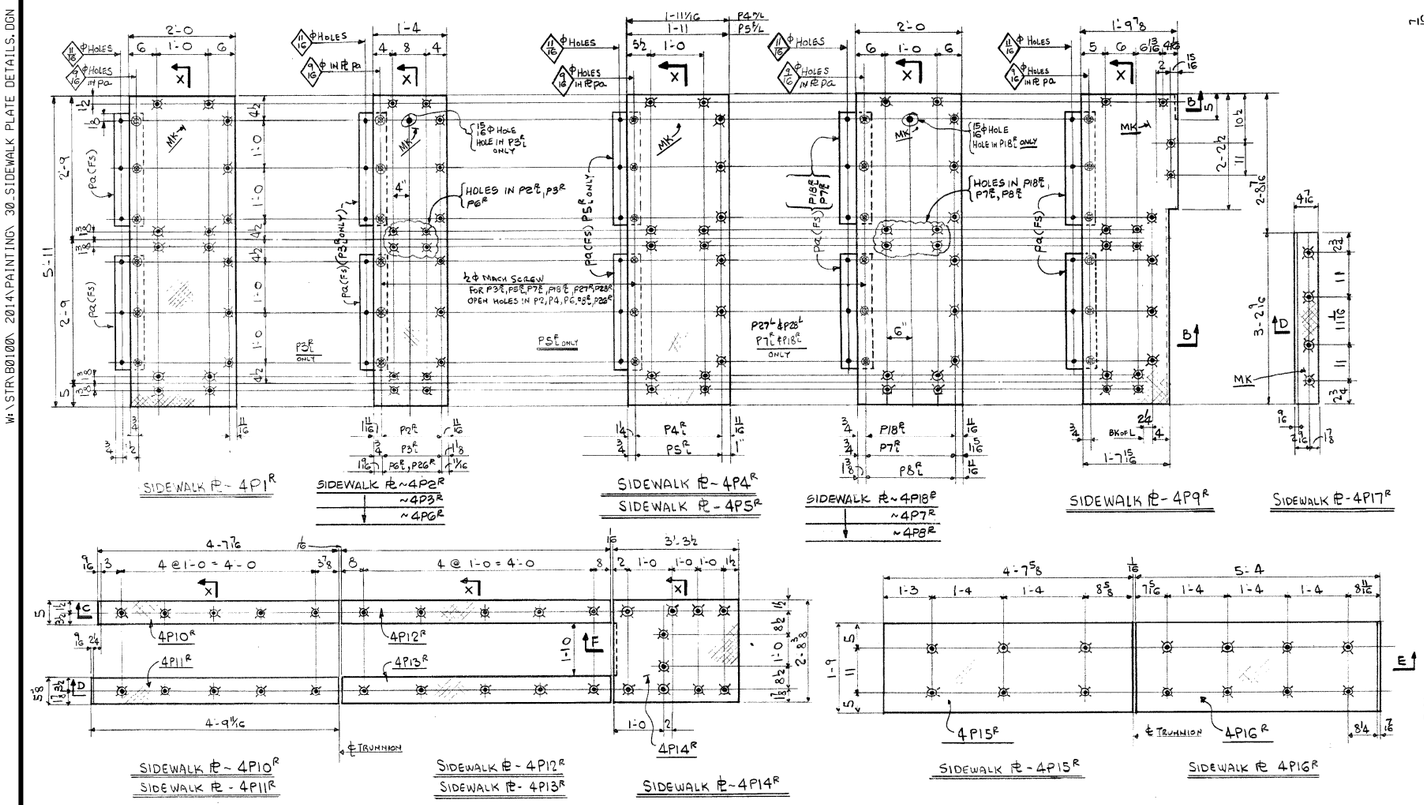


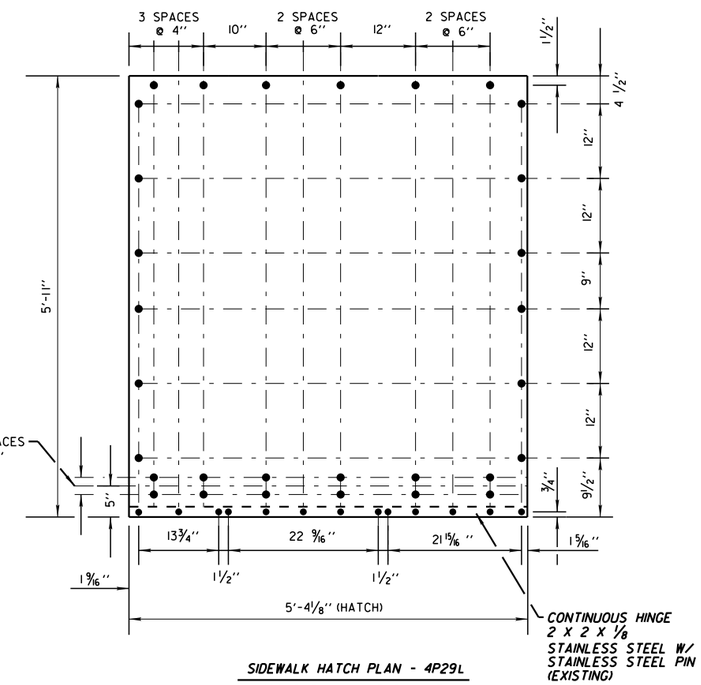


SIDEWALK HATCH PLAN - 4P29L

SEE DETAIL "B" FOR BOLT CONNECTION (AT CURB)

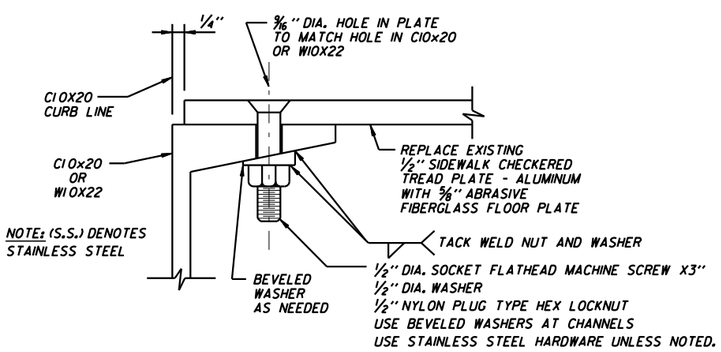


NOTE: (S.S.) DENOTES STAINLESS STEEL

DETAIL "B": BOLT CONNECTION

| LINE | MATERIAL: NO OF PCS | SHAPE | SIZE | LENGTH FT | LENGTH IN | ASSEMBLING MARK | REMARKS | P.B. SHT/LINE |
|---|---|---|---|---|---|---|---|---|
| 1 | 2/44 | PL | 24 x 5/8" | 5 | 11 | 4P1R L | | |
| 2 | | | | | | | | |
| 3 | 2/2 | PL | 16 x 5/8" | 5 | 11 | 4P2R L | | |
| 4 | | | | | | | | |
| 5 | 2/2 | PL | 16 x 5/8" | 5 | 11 | 4P3R/L | | |
| 6 | | | | | | | | |
| 7 | 2/2 | PL | 23 1/16 x 5/8" | 5 | 11 | 4P4R L | | |
| 8 | | | | | | | | |
| 9 | 2/2 | PL | 23 x 5/8" | 5 | 11 | 4P5R L | | |
| 10 | | | | | | | | |

| LINE | MATERIAL: NO OF PCS | SHAPE | SIZE | LENGTH FT | LENGTH IN | ASSEMBLING MARK | REMARKS | P.B. SHT/LINE |
|---|---|---|---|---|---|---|---|---|
| 11 | 2/1 | PL | 16 x 5/8" | 5 | 11 | 4P6R L | 2-R 1-L | |
| 12 | | | | | | | | |
| 13 | 2/1 | PL | 24 x 5/8" | 5 | 11 | 4P7R L | 2-R 1-L | |
| 14 | 2/1 | PL | 24 x 5/8" | 5 | 11 | 4P18R L | 2-R 1-L | |
| 15 | 2/2 | PL | 24 x 5/8" | 5 | 11 | 4P8R L | | |
| 16 | 1 | PL | 64 1/8" x 5/8" | 5' | 11" | 4P29L | | |
| 17 | | | | | | | | |
| 18 | 2/2 | PL | 21 3/8 x 5/8" | 5 | 11 | 4P9R L | | |
| 19 | 2/2 | PL | 5 x 5/8" | 4 | 7 1/16 | 4P10R L | | |
| 20 | | | | | | | | |

| LINE | MATERIAL: NO OF PCS | SHAPE | SIZE | LENGTH FT | LENGTH IN | ASSEMBLING MARK | REMARKS | P.B. SHT/LINE |
|---|---|---|---|---|---|---|---|---|
| 21 | 2/2 | PL | 53 3/8 x 5/8" | 4 | 11½ | 4P11R L | | |
| 22 | | | | | | | | |
| 23 | 2/2 | PL | 5 x 5/8" | 5 | 4 | 4P12R L | | |
| 24 | | | | | | | | |
| 25 | 2/2 | PL | 53 3/8 x 5/8" | 5 | 4 | 4P13R L | | |
| 26 | | | | | | | | |
| 27 | 2/2 | PL | 32 3/8 x 5/8" | 3 | 8½ | 4P14R L | | |
| 28 | | | | | | | | |
| 29 | 2/2 | PL | 21 x 5/8" | 4 | 7 3/8 | 4P15R L | | |
| 30 | | | | | | | | |

| LINE | MATERIAL: NO OF PCS | SHAPE | SIZE | LENGTH FT | LENGTH IN | ASSEMBLING MARK | REMARKS | P.B. SHT/LINE |
|---|---|---|---|---|---|---|---|---|
| 31 | 2/2 | PL | 21 x 5/8" | 5 | 4 | 4P16R L | | |
| 32 | | | | | | | | |
| 33 | 2/2 | PL | 4 7/16 x 5/8" | 3 | 2 9/16 | 4P17R L | | |
| 34 | | | | | | | | |
| 35 | 2/16 | PL | 6½" x 5/8" | 2 | 2¼ | PA | | |

NOTE:

SIDEWALK PLATE DIMENSIONS AND BOLT HOLE PATTERNS ARE BASED OFF OF ORIGINAL SHOP DRAWINGS OF ALUMINUM PLATES AND ARE MEANT FOR INFORMATIONAL PURPOSES ONLY. ACTUAL DIMENSIONS MAY VARY- PERFORM FIELD VERIFICATION SURVEY PRIOR TO FABRICATION

STUCTURAL STEEL SHOWN ON THIS SHEET SHALL BE SANDBLASTED AND PAINTED PRIOR TO PLACING NEW FIBERGLASS SIDEWALK PLATES

DRILL AND COUNTERSINK HOLES IN FIBERGLASS PLATES FOR ½" Ø SLOTTED FLAT HEAD MACH SCREWS

ENSURE HINGE ON SIDEWALK HATCH IS IN USABLE CONDITION

NO PAINT ON TOP SURFACES OF ALL FIBERGLASS PLATES

SEE DETAIL "B" FOR BOLT CONNECTIONS

City of Milwaukee

Department of Public Works

Infrastructure Services Division

BROADWAY BASCULE BRIDGE OVER THE MILWAUKEE RIVER
FIBERGLASS SIDEWALK PLATE DETAILS

REVISIONS

DESIGNED BY R.B.W.

DRAWN BY S.D.B.

CHECKED BY H.J.R.

DATE FEB. 2015 | SCALE NONE

JOB NUMBER B10014011O

SHEET NUMBER 30 OF 31

OF 35

W:\STR\B0100\ 2014\PAINTING\ 3L CURB CHANNEL SHOP DWGS.DGN 01-30-2015

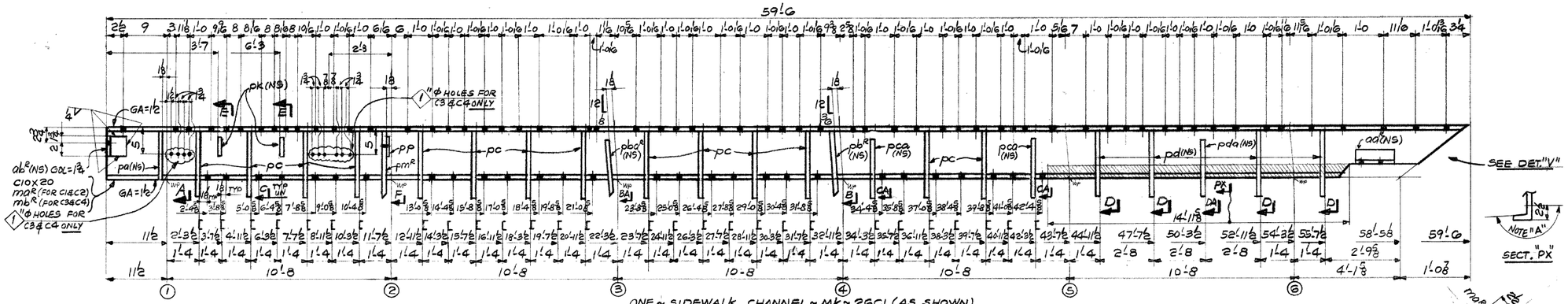


| | | | | | |
|---|---|---|---|---|---|
| ONE ~ | SIDEWALK | CHANNEL ~ | Mk ~ | 26C1 | (AS SHOWN) |
| ONE ~ | | ~ | ~ | 26C2 | (OPP. HAND) |
| ONE ~ | | ~ | ~ | 26C3 | (AS SHOWN) |
| ONE ~ | | ~ | ~ | 26C4 | (OPP. HAND) |

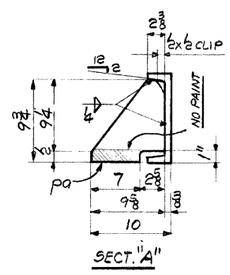


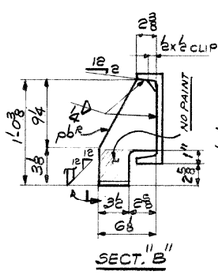


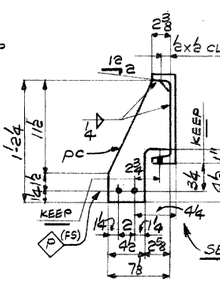


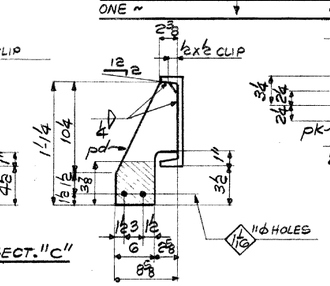


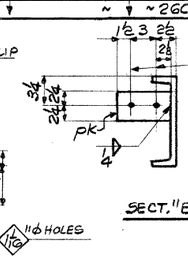


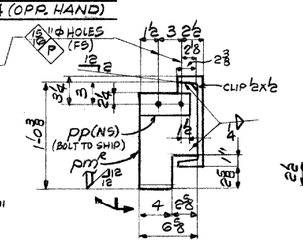


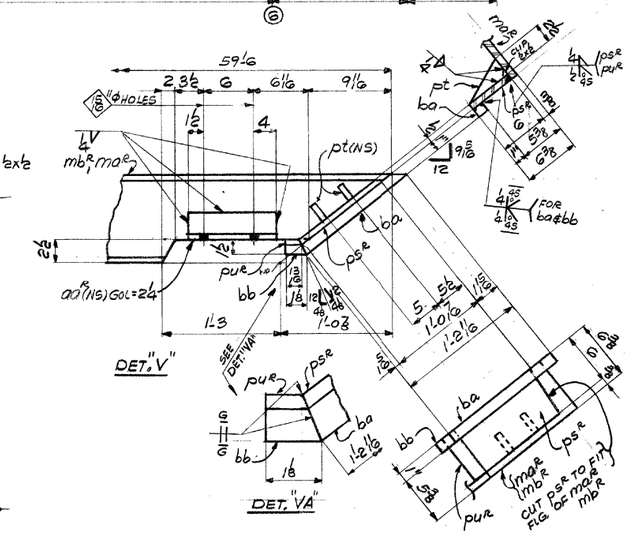


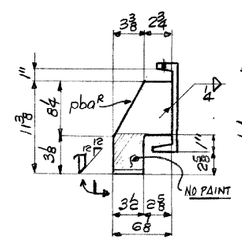


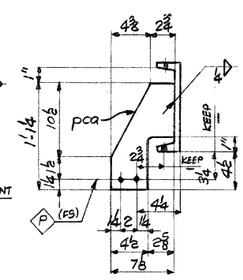


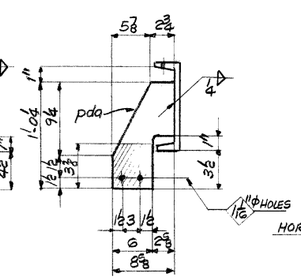


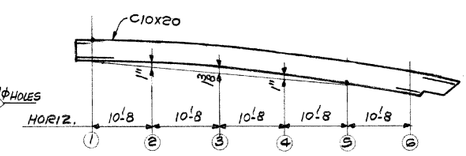


| LINE | MATERIAL: NO OF PCS | SHAPE | SIZE | LENGTH FT | LENGTH IN | ASSEMBLING MARK | REMARKS | PB SHT/LINE |
|---|---|---|---|---|---|---|---|---|
| 1 | 1 | | SIDEWALK CHANNEL | | | 26C1 | (AS SHOWN) | |
| 2 | 1 | | do. | | | 26C2 | (OPP. HAND) | |
| 3 | 1 | | do. | | | 26C3 | (AS SHOWN) | |
| 4 | 1 | | do. | | | 26C4 | (OPP. HAND) | |
| 5 | 1/1 | C | 10X20 | 59 | 6 | ma^R | FOR C1, C2 | 3/33 |
| 6 | 1/1 | C | 10X20 | 59 | 6 | mb^R | FOR C3, C4 | 3/33 |
| 7 | 56 | PL | 7/8 x 3/8 | 1 | 2 1/4 | pc | | 8/24 |
| 8 | 16 | PL | 8 3/8 x 3/8 | 1 | 1 1/4 | pd | | 8/24 |
| 9 | 8 | PL | 4 1/2 x 3/8 | 0 | 6 3/8 | pk | | 8/24 |
| 10 | 3/2 | PL | 6 3/8 x 3/8 | 1 | 0 3/8 | pm^R | | 8/24 |
| 11 | 4 | PL | 4 1/2 x 1" | 0 | 6 | pp | | |
| 12 | | | | | | | | |
| 13 | 3/2 | PL | 6 x 1/2 | 1 | 0 1/16 | ps^R | ASBB | 13/15 |
| 14 | 8 | PL | 22 x 1/2 | 0 | 6 | pt | ASBB | 13/17 |
| 15 | 3/2 | PL | 6 x 1/2 | 0 | 1 3/16 | pu^R | ASBB | 13/15 |
| 16 | 3/2 | PL | 6 1/4 x 3/8 | 0 | 11 3/8 | pba^R | | 8/24 |
| 17 | 8 | PL | 7 1/2 x 3/8 | 1 | 1 4 | pca | | 8/24 |
| 18 | 4 | PL | 8 3/8 x 3/8 | 1 | 0 4 | pda | | 8/24 |
| 19 | 4 | PL | 9 3/8 x 3/8 | 0 | 9 3/4 | pa | | 8/24 |
| 20 | 3/2 | PL | 6 1/8 x 3/8 | 1 | 0 3/8 | pb^R | | 8/24 |
| 21 | 4 | BAR | 1x1 | 1 | 2 1/16 | ba | | 24/2 |
| 22 | 4 | BAR | 1x1 | 0 | 1 1/2 | bb | | 24/2 |
| 23 | 3/2 | L | 3 1/2x3 1/2x1/2 | 0 | 11 1/2 | aa^R | | |
| 24 | 3/2 | L | 3x3x4 | 0 | 3 3/4 | ab^R | | |
| 25 | | | | | | | | |
| 26 | | | | | | | | |
| 27 | | | | | | | | |
| 28 | | | | | | | | |
| 29 | | | | | | | | |
| 30 | | | | | | | | |
| 31 | | | | | | | | |
| 32 | | | | | | | | |
| 33 | | | | | | | | |
| 34 | | | | | | | | |
| 35 | | | | | | | | |
| 36 | | | | | | | | |
| 37 | | | | | | | | |
| 38 | | | | | | | | |
| 39 | | | | | | | | |
| 40 | | | | | | | | |

MATERIAL ASTM A709

$F_y$ = 50,000 PSI

## REHAB NOTES:

1. PROVIDE OVERSIZED HOLES (7/8" DIAMETER HOLES FOR 3/4" DIAMETER BOLTS) IN NEW GALVANIZED STEEL WHERE NEW GALVANIZED STEEL IS FIELD BOLTED TO ORIGINAL STEEL.
2. NEW CURB CHANNEL STEEL SHALL BE HOT-DIPPED GALVANIZED AND PAINTED AND CONFORM TO ASTM A709.

City of Milwaukee

Department of Public Works

Infrastructure Services Division

BROADWAY BASCULE BRIDGE
OVER THE MILWAUKEE RIVER
CURB CHANNEL
1981 SHOP DRAWINGS

REVISIONS

DESIGNED BY H.J.R.

DRAWN BY S.D.B.

CHECKED BY J.M.W.

DATE FEB. 2015 | SCALE NONE

JOB NUMBER BR100140110

SHEET NUMBER 31 OF 31

OF 35