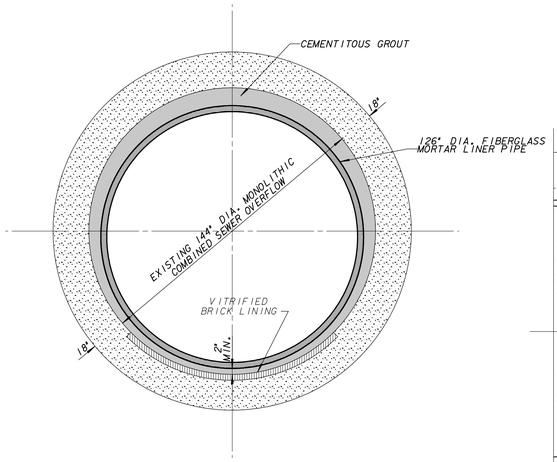

TYPICAL SECTION OF 144" DIA. MONOLITHIC COMBINED SEWER OVERFLOW WITH 126" DIA. FIBERGLASS MORTAR LINER PIPE

SCALE: 1" = 3' 0"

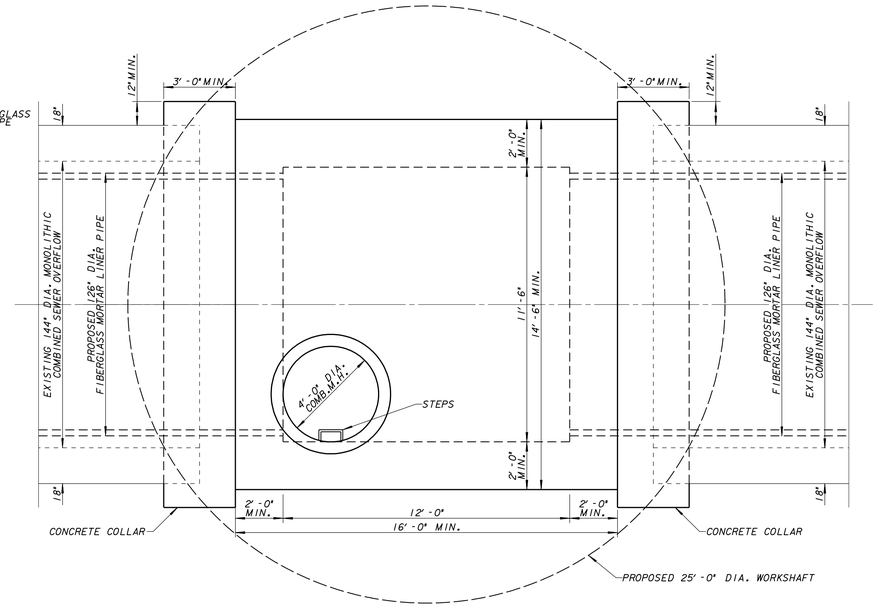

(PLAN VIEW)
TYPICAL DETAIL OF WORKSHAFT AT EXISTING MANHOLE

SCALE: 1" = 3' 0"

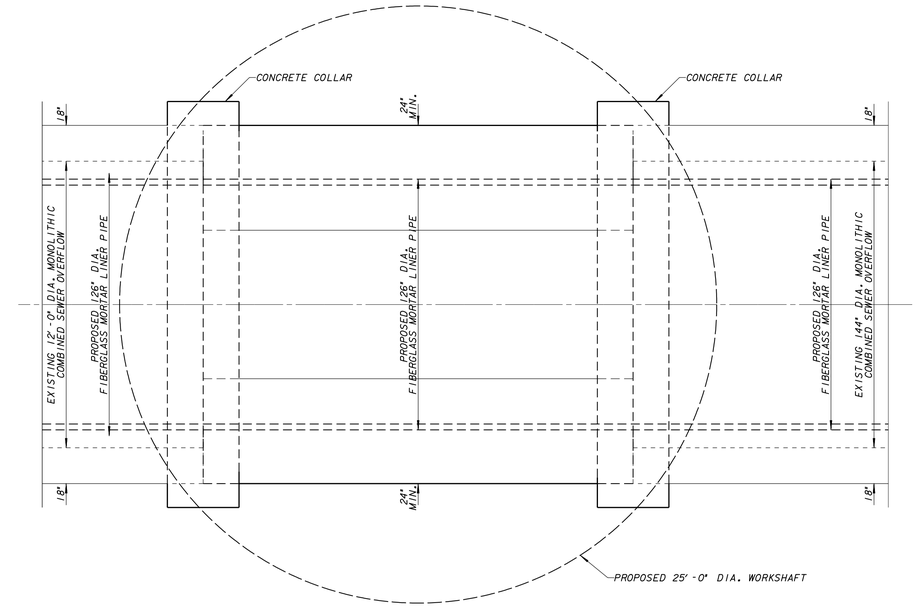

(PLAN VIEW)
TYPICAL DETAIL OF WORKSHAFT WITHOUT EXISTING MANHOLE

SCALE: 1" = 3' 0"

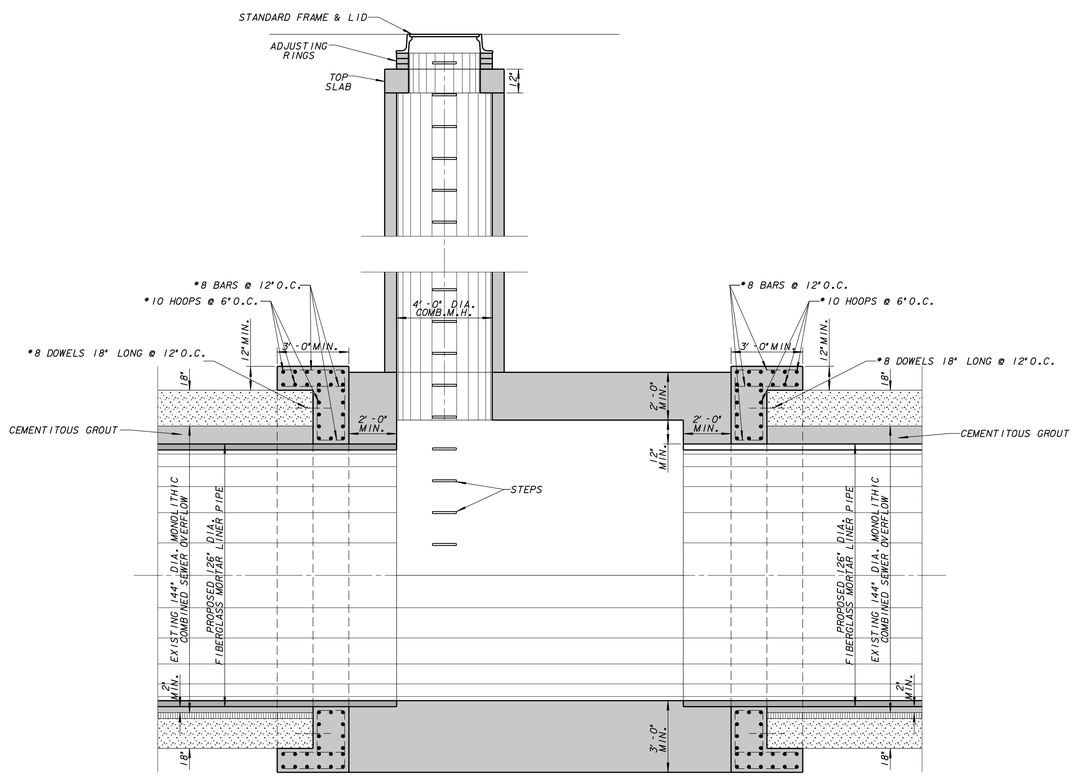

(SECTION)
TYPICAL DETAIL OF WORKSHAFT AT EXISTING MANHOLE

SCALE: 1" = 3' 0"

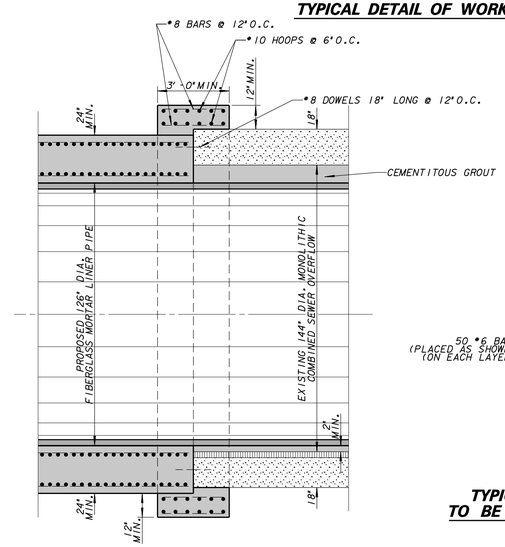

CONCRETE COLLAR SECTION

SCALE: 1" = 3' 0"

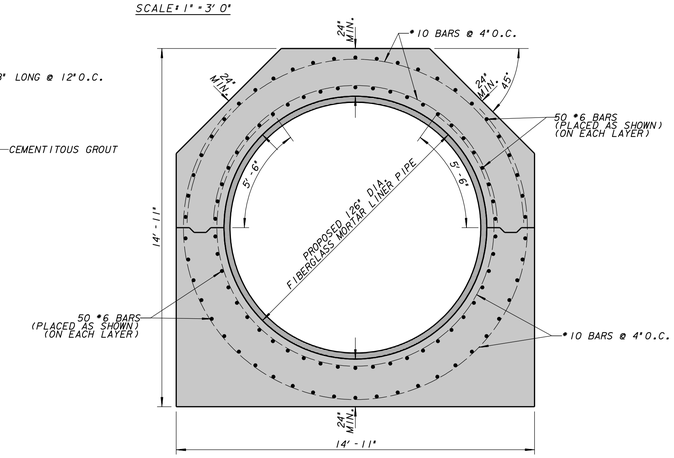

TYPICAL SECTION FOR 126" DIA. COMBINED SEWER OVERFLOW TO BE USED FOR WORKSHAFT AREA WITHOUT EXISTING MANHOLE

SCALE: 1" = 3' 0"

FOR SPECIAL PROVISIONS SEE PLAN FILE NO. 229-17A
SHEET NO. 1 OF 12 IS PLAN FILE NO. 228-59A
SHEET NO. 2 OF 12 IS PLAN FILE NO. 228-60A
SHEET NO. 3 OF 12 IS PLAN FILE NO. 228-61A
SHEET NO. 4 OF 12 IS PLAN FILE NO. 228-62A
SHEET NO. 5 OF 12 IS PLAN FILE NO. 228-63A
SHEET NO. 6 OF 12 IS PLAN FILE NO. 228-64
SHEET NO. 7 OF 12 IS PLAN FILE NO. 228-65
SHEET NO. 8 OF 12 IS PLAN FILE NO. 228-66
SHEET NO. 9 OF 12 IS PLAN FILE NO. 228-67
SHEET NO. 10 OF 12 IS PLAN FILE NO. 229-16
SHEET NO. 11 OF 12 IS PLAN FILE NO. 229-17A
SHEET NO. 12 OF 12 IS PLAN FILE NO. 229-21A

WISCONSIN
ZAFAR S. YOUSUF
E-30840
MILWAUKEE, WI
PROFESSIONAL ENGINEER

CALL DIGGERS HOTLINE
1-800-242-8511
TOLL FREE TO OBTAIN LOCATION OF UNDERGROUND BEFORE YOU DIG. WISCONSIN STATUTE 182.0175 REQUIRES MIN. OF 3 WORK DAYS NOTICE BEFORE YOU EXCAVATE

NO.	BY	REVISION	DATE

AS BUILT CONTRACT NO.
DATE ENT'D. ENT'D. BY

ENVIRONMENTAL ENGINEERING SECTION
INFRASTRUCTURE SERVICES DIVISION
DEPARTMENT OF PUBLIC WORKS
MILWAUKEE, WISCONSIN

DETAIL PLAN

IN **N. 26TH STREET**
FROM **W. SAINT PAUL AVENUE**
TO **W. MCKINLEY AVENUE**

		APPROVED	DATE
SCALE	AS SHOWN	Zafar Yousuf	2/3/2012 DESIGN ENGINEER
1/4 SEC. NO.	364,389,400	Timothy J. Thur	2/6/2012 CHIEF DESIGN ENGINEER
PLAN DATE	01-05-12	Martin Cegarra for	2/7/2012 ENGINEER IN CHARGE
DESIGNED BY	K.M.O'BRIEN		
DRAWN BY	J.A.WISE		
CHECKED BY	R.N.PARIKH		
SYSTEM NO.	3016		2/7/2012 CITY ENGINEER & SPECIAL DEPUTY COMMISSIONER OF PUBLIC WORKS
EASEMENT NO.			
CONTRACT NO.		PROJECT NO. 1	C.C. FILE NO. 111283
PROJ. ID.	SM495110087	OFF. NOTICE NO. 12-023	DATE ADOPTED 02-07-12

SHEET NO. 10 OF 12 PLAN FILE NO. 229-16

MMSD _____ SCANNED _____ MICROFILMED _____