STATE PROJECT NUMBER	SHEET NO.
2652-02-70	8.57

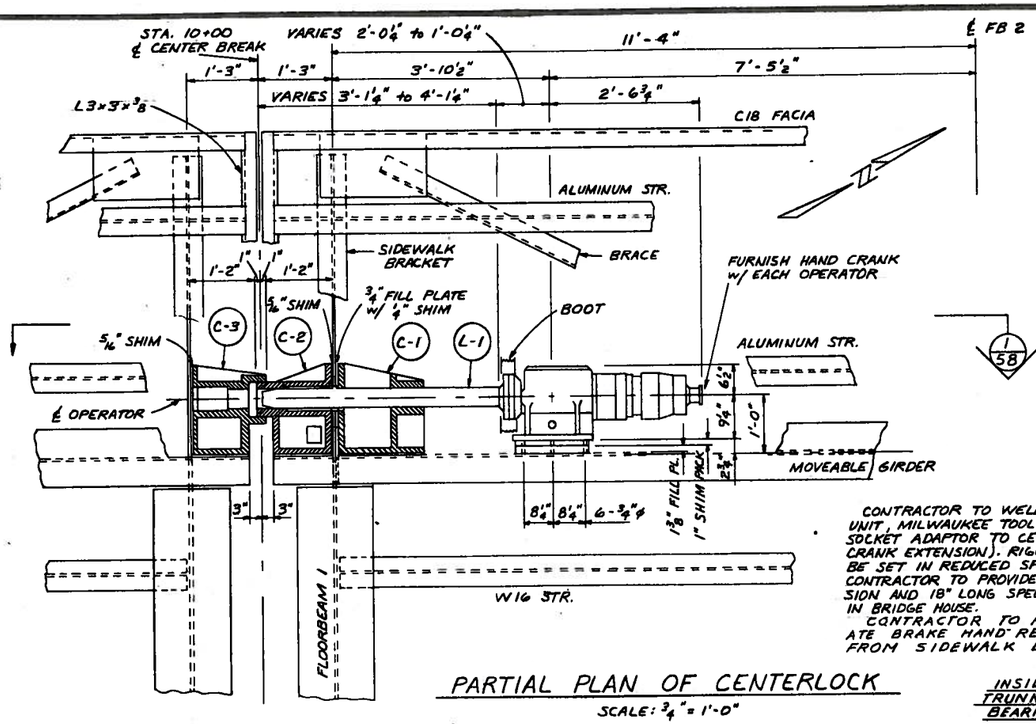

PARTIAL PLAN OF CENTERLOCK
SCALE: ¾" = 1'-0"

CONTRACTOR TO WELD A RIGHT ANGLE DRIVE UNIT, MILWAUKEE TOOL BRAND #48-06-2871, w/ SOCKET ADAPTOR TO CENTERLOCK ⅝" MALE (HAND CRANK EXTENSION). RIGHT ANGLE DRIVE UNIT TO BE SET IN REDUCED SPEED POSITION. IN ADDITION, CONTRACTOR TO PROVIDE A 36" LONG SOCKET EXTENSION AND 18" LONG SPEED HANDLE TO BE STORED IN BRIDGE HOUSE.
CONTRACTOR TO PROVIDE MEANS TO OPERATE BRAKE HAND RELEASE LOCATED ON UNIT FROM SIDEWALK LEVEL.

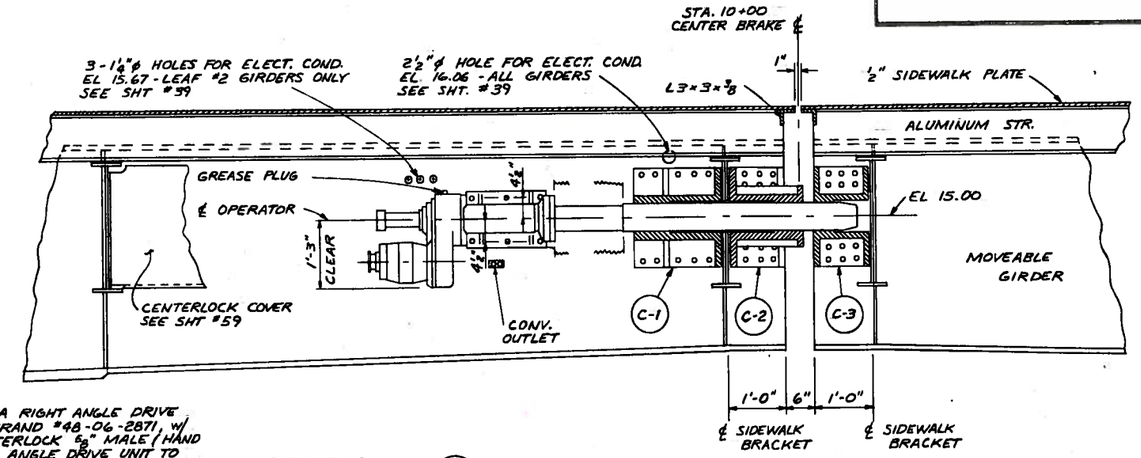

SECTION 1/58
SCALE: ¾" = 1'-0"

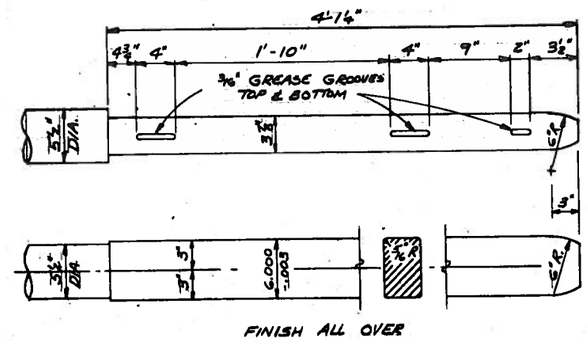

PLUNGER LOCK "L-1"
SCALE 1½" = 1'-0"

GENERAL NOTES:
1. CENTERLOCK OPERATOR SHOWN TO BE MOUNTED ON BOTH OF LEAF #2 - NORTH LEAF.
2. LIMIT SWITCH & SELSYN. TRANS. FURN. BY ELECT. CONTR. & SET BY MACH. CONTR. - CHAINS & SPROCKETS FURN. & INSTALLED BY MACH. CONTR. - ALL INSTALLATIONS BY MACH. CONTR. - FIELD DRILL CHAIN HOLES IN PLATFORM. ALL CHAINS & SPROCKETS TO BE STAINLESS STEEL.
3. A LIMIT SWITCH ASSEMBLY IS REQUIRED AT EACH LEAF.

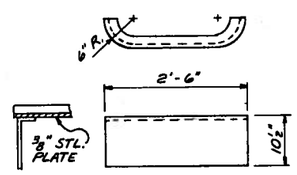

TYPE "F" SHIELD
⅜" FIBERGLASS - BROWN
4 - REQ'D

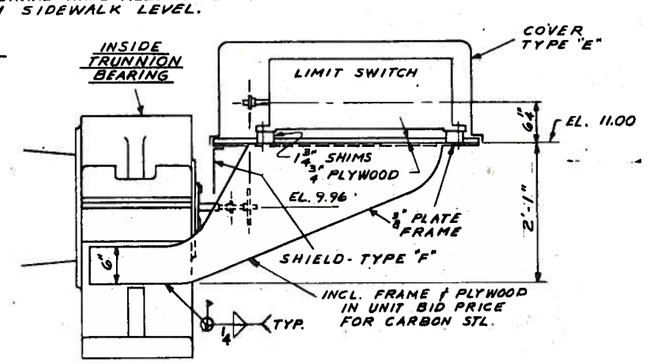

SECTION 2/58
N.T.S.

PAGE QUANTITIES	
STRUCTURAL CARBON STEEL (LIMIT SUPPORT)	4 × 272# = 1088#

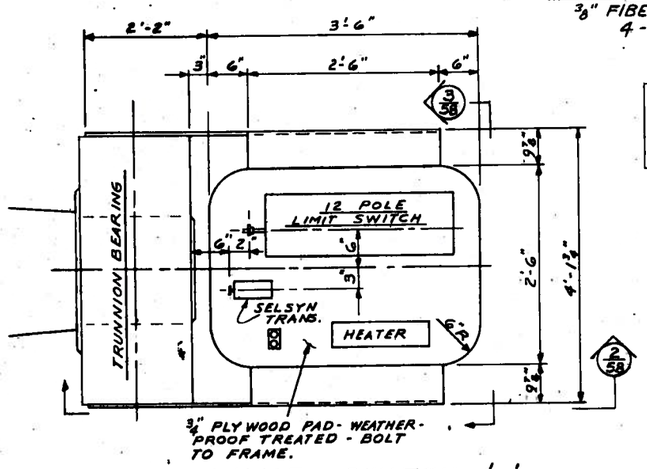

PLAN OF LIMIT SWITCH & LIMIT SWITCH SUPPORTS & TRUNNIONS
N.T.S.

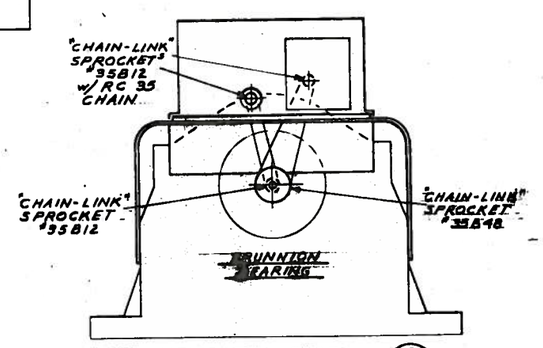

SECTION 3/58
N.T.S.

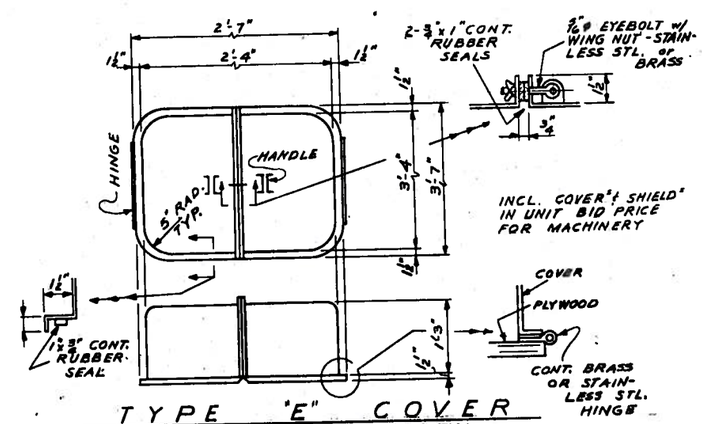

TYPE "E" COVER
3/16" FIBERGLASS - BROWN
4 REQ'D.

City of Milwaukee
Department of Public Works
Bureau of Bridges and Public Buildings

WATER ST. BASCULE BRIDGE
OVER MILWAUKEE RIVER
MACHINERY - CENTERLOCK LAYOUT
B40-0848

REVISIONS

DESIGNED BY	C.S.L.
DRAWN BY	C.S.L.
CHECKED BY	L.F.R.
DATE	1983/84
SCALE	AS NOTED
JOB NUMBER	502-53
SHEET NUMBER	58
OF	91

Cat No 2130 – 0142

J. T. Anderson

STATE PROJECT NUMBER	SHEET NO.
2652-02-70	8.58

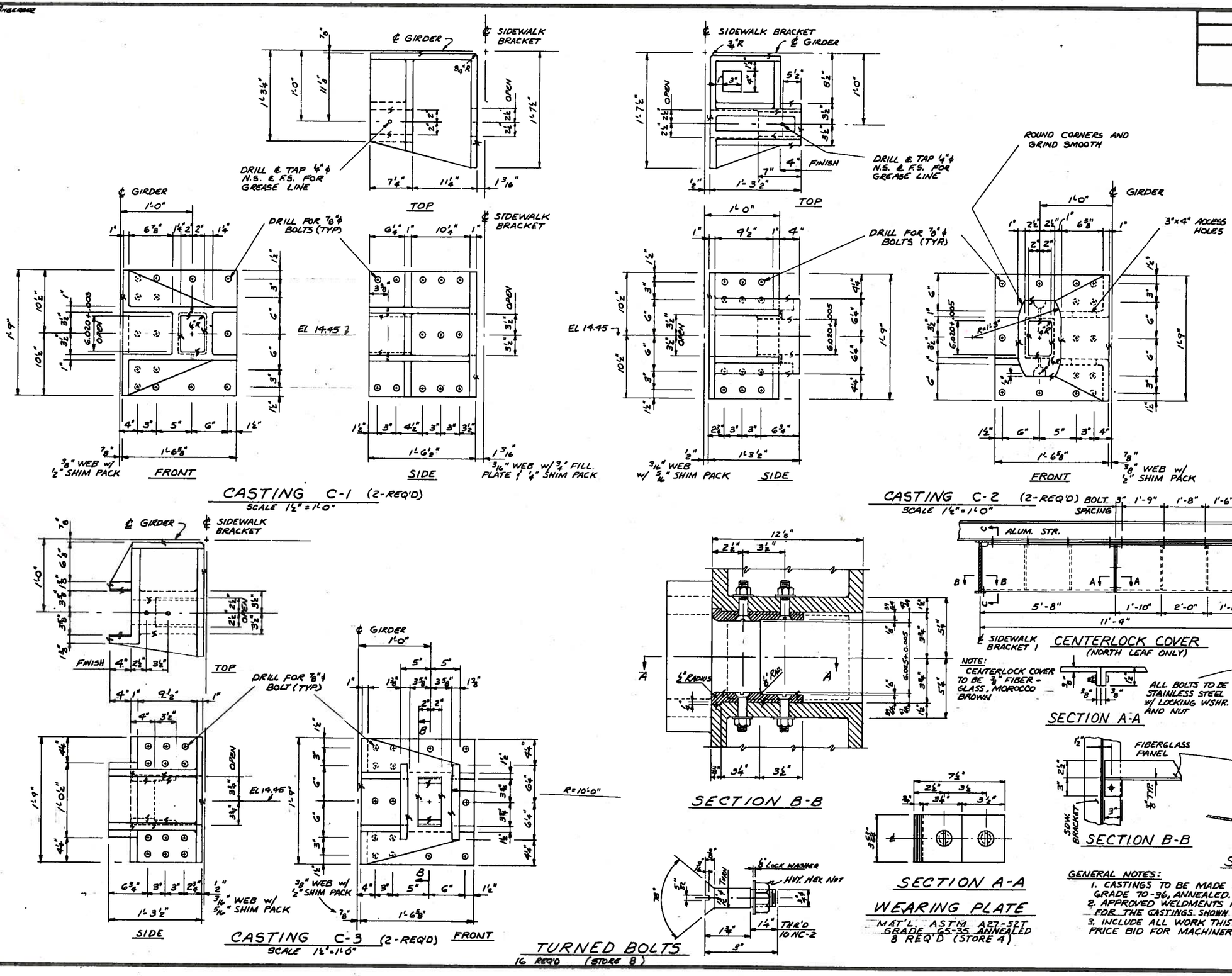

GENERAL NOTES:
1. CASTINGS TO BE MADE FROM CAST STEEL A27, GRADE 70-36, ANNEALED.
2. APPROVED WELDMENTS MAY BE SUBSTITUTED FOR THE CASTINGS SHOWN - SUBJECT TO 100% MT.
3. INCLUDE ALL WORK THIS SHEET, IN UNIT PRICE BID FOR MACHINERY, CENTERLOCK

City of Milwaukee
Department of Public Works
Bureau of Bridges and Public Buildings

WATER ST. BASCULE BRIDGE
OVER MILWAUKEE RIVER
MACHINERY - CENTERLOCK CASTINGS
B40-0848

REVISIONS

DESIGNED BY	J.T.A.
DRAWN BY	J.T.A.
CHECKED BY	L.F.R.
DATE	SCALE AS NOTED
JOB NUMBER	502-53
SHEET NUMBER	59
OF	91

Cat. No. 2130 - 0142

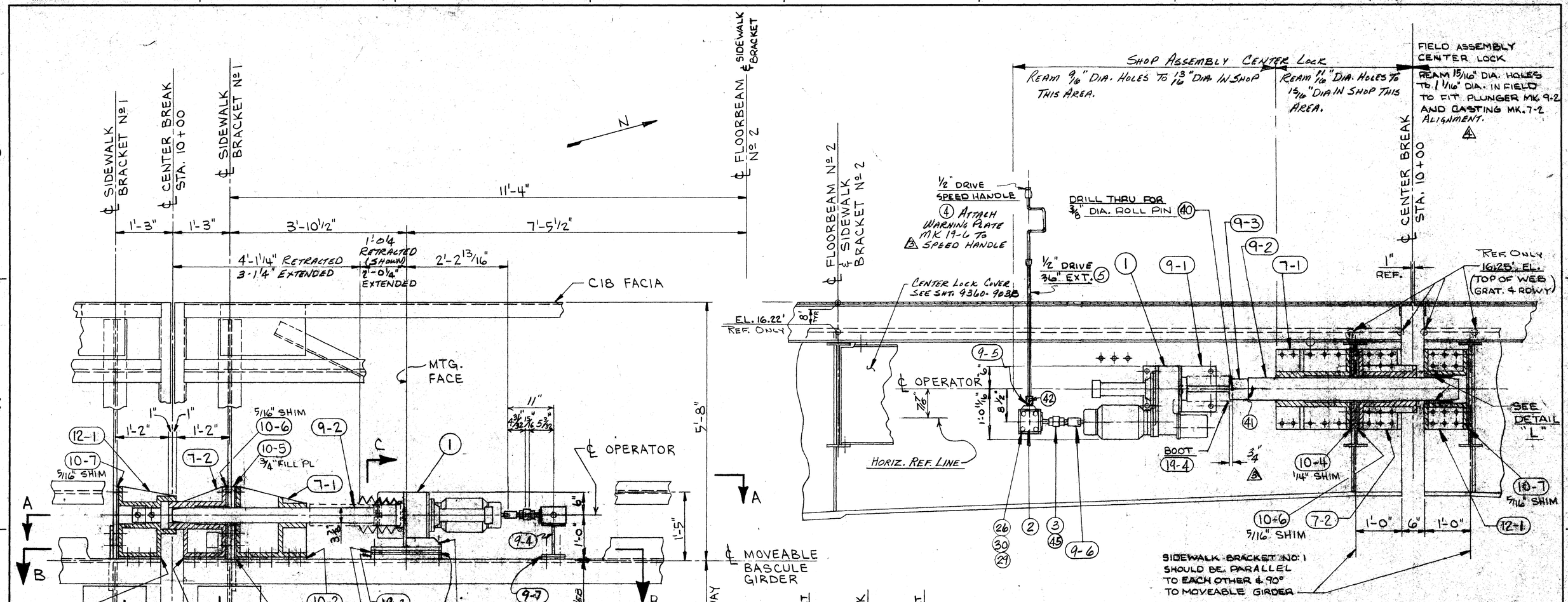

PARTIAL PLAN OF CENTERLOCK (COVER NOT SHOWN)

SECTION A-A

SECTION B-B (ROTATE 180°)

1-CENTER LOCK ASSY. 903-1 (AS SHOWN)
1-CENTER LOCK ASSY. 903-2 (OPPOSITE HAND)
1-CENTER LOCK COVER ASSY. 903-3 (AS SHOWN)
1-CENTER LOCK COVER ASSY. 903-4 (OPP. HAND)
(COVERS NORTH LEAF ONLY)

NOTE:
1.) REAM ALL CENTER LOCK MATERIAL HOLES FROM 11/16" DIA. TO 15/16" DIA. FOR 7/8" DIA. H.S. BOLTS, AS NOTED.
2.) HOLES IN CORRESPONDING STRUCTURAL PARTS ARE TO BE 11/16" DIA. IN THE SHOP UNTIL EITHER FINAL SHOP ASS'Y OR FIELD ERECTION AS NOTED.
3.) AFTER FIELD ASSEMBLY, CAULK EDGES OF SHIMS TO SEAL OUT MOISTURE.

STATE OF WISCONSIN PROJECT No. 2652-02-70

DESIGN DRWG. REF. CITY OF MILWAUKEE JOB No. 582-53 SHEET No. 58 & 59

OPEN HOLES UNLESS NOTED FOR GENERAL NOTES & PAINT NOTES SEE SHEET No. 9360-901

APPROVED NOV 6 1986 MILWAUKEE, WIS.

LAKESIDE BRIDGE & STEEL CO. MILWAUKEE, WISCONSIN 53209

CUSTOMER EDWARD KRAEMER & SONS, INC.
LOCATION AND WORK MILWAUKEE, WISCONSIN
DESCRIPTION NORTH WATER ST. BRIDGE
TITLE CENTER LOCK & COVER ASSY.
DRAWN BY RWK 10-17-85
CHECKED BY B.T. 10-29-85
DRAWING NUMBER 9360-903 NC

RECORD

REV.	MADE BY	DATE	CHKD BY	DATE
1	VAD	5-23-86	B.T.	5-27-86
Gasket Revised				
2	VAD	7-8-86	B.T.	7-10-86
Finish Revision				
3	VAD	7-28-86		7-28-86
Approval Change				
4	VAD	8-26-86		8-27-86

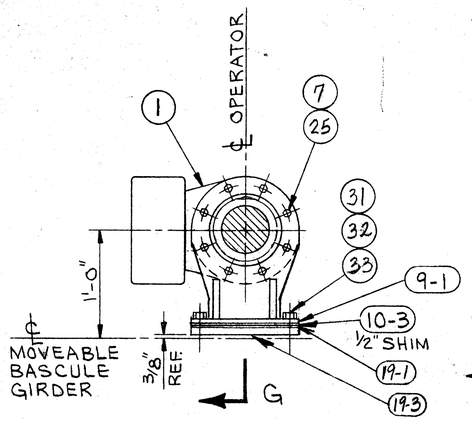

VIEW C

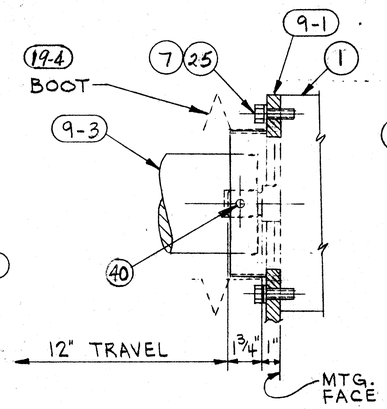

PARTIAL SECTION G
(ENLARGED)

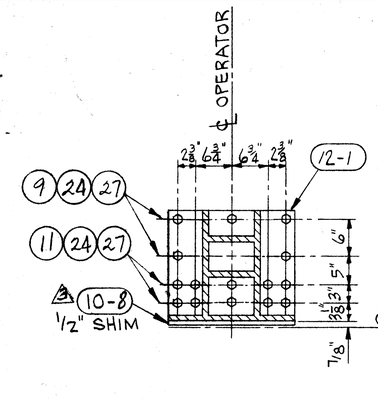

SECTION D
ROTATE 90°

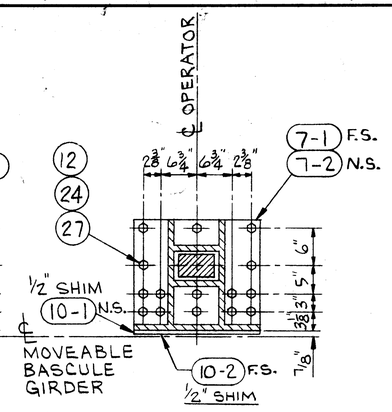

SECTION E
ROTATE 90°

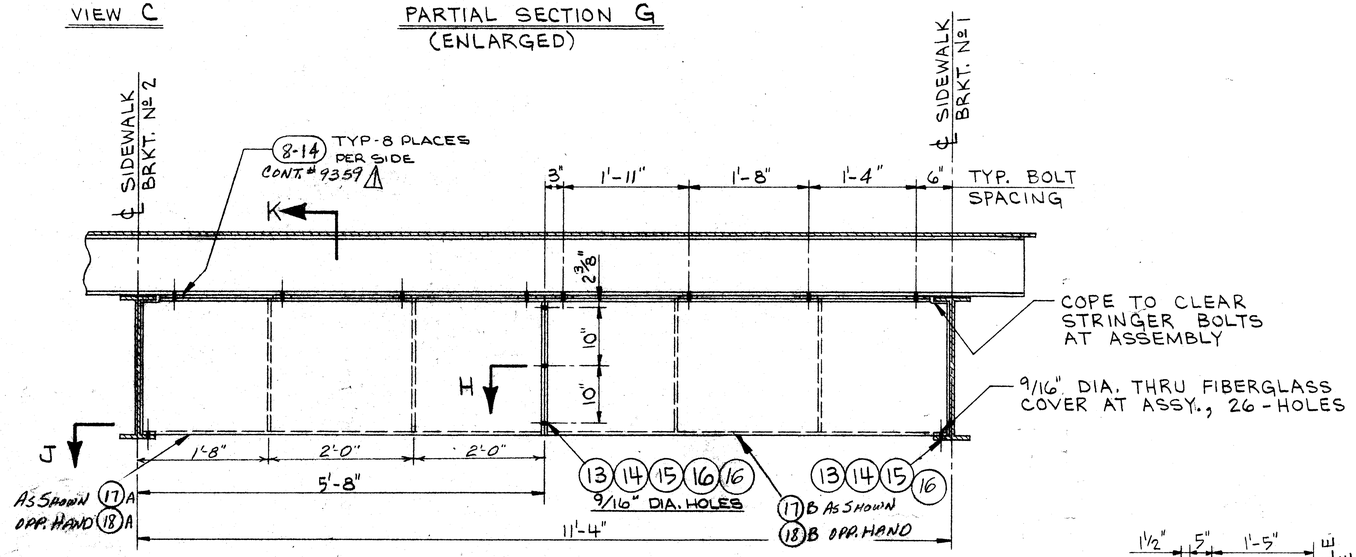

DETAIL F
(NORTH LEAF ONLY)

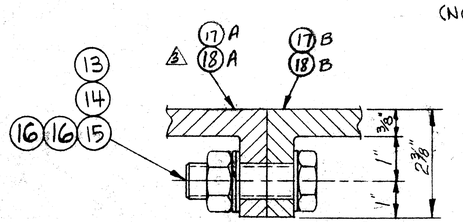

SECTION H
(ENLARGED)

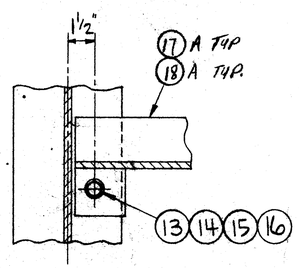

SECTION J
(ENLARGED)

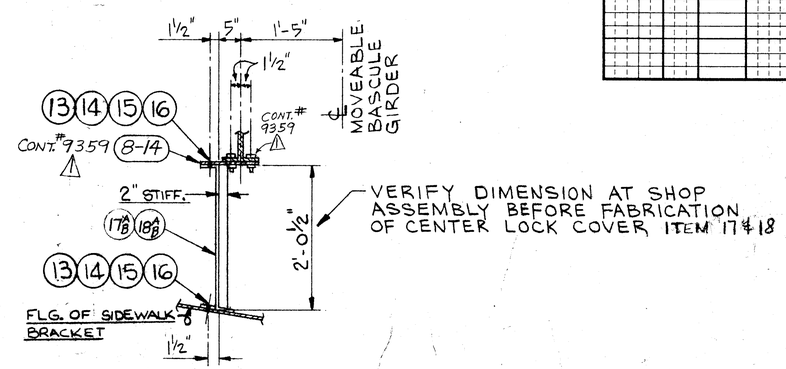

SECTION K

PIECE MARK SHT.	PIECE MARK DET.	ITEM	ON MARK	QUAN.	DESCRIPTION — ALL MATERIAL TO BE AS NOTED UNLESS NOTED.	WIDTH IN.	WIDTH DEC.	LENGTH FT.	LENGTH IN.	LENGTH DEC.	WEIGHT	SPEC. CODE	P-BILL NO.
903	1			1	CENTER LOCK ASSY (AS SHOWN)								
903	2			1	CENTER LOCK ASSY (OPP HAND)								
		1		2	LOCK BAR OPERATOR-LIMITORQUE CORP						300	901	
		1			DWG. 01-503-1383-4							901	
		1			DWG. 01-503-1079-4							901	
		1			DWG. 15-478-0044-B							901	
		2		2	SPIRAL BEVEL REDUCER HUB CITY						50	901	
		2			MODEL 150 STYLE "							901	
		3		2	COUPLING BOSTON GEAR MODEL FC25-FC25						10	901	
		3			BORE BOTH HALVES FOR 1" DIA STD KW & SS							901	
		4		1	SPEED HANDLE 1/2" DRIVE						4	901	
		4			PROTO MODEL 5480							901	
		5		1	DRIVE EXTENSION 1/2" FOR SPEED						2	901	
		5			HANDLE ITEM 4 PROTO MODEL 5465							901	
		5			36 IN. LONG							901	
		7		16	HEX CAPSCREW 5/8-11UNC-2A				1.75			915	
		9		10	HVY HEX BOLT 7/8-9UNC-2A				3.00			921	
		10		4	HVY HEX BOLT 7/8-9UNC-2A				3.75			921	
		11		20	HVY HEX BOLT 7/8-9UNC-2A				3.75			921	
		12		30	HVY HEX BOLT 7/8-9UNC-2A				5.00			921	
		24		134	HVY HEX NUT 7/8-9UNC-2B							922	
		25		16	LOCKWASHER 5/8							915	
		26		8	HEX CAPSCREW 3/8-16UNC-2A				1.25			915	
		27		134	HARD WASHER 7/8							923	
		28		8	HVY HEX BOLT 3/4-10UNC-2A (2" THD)				3.00			921	
		29		8	PLAIN WASHER 3/8							915	
		30		8	LOCKWASHER 3/8							915	
		31		20	HVY HEX NUT 3/4-10UNC-2B							922	
		32		20	HARD WASHER 3/4							923	
		33		12	HVY HEX BOLT 3/4-10UNC-2B (2" THD)				5.50			921	
		40		2	ROLL PIN 3/8 DIA X 5 1/4 MAX							2901	
		41		2	ROLL PIN 3/4 DIA X 3 7/8 MAX							2901	
		42		2	ROLL PIN 1/4 DIA				1.50			1901	
		A5		4	KEYSTOCK 1/4		25		1.56			1929	
903	3			1	CENTER LOCK COVER ASSY (AS SHOWN)								
903	4			1	CENTER LOCK COVER ASSY (OPP HAND)								
		13		20	HEX HD BOLT 1 1/2-13UNC-2A				1.75			915	
		14		20	HEX NUT 1 1/2-13UNC-2B							915	
		15		20	LOCKWASHER 1 1/2							915	
		16		33	FLAT WASHER 1 1/2							915	
		17		1	CENTERLOCK COVER AS SHOWN						25	901	
		17			POLYMER SYSTEMS DWG 14-00186-1							901	
		18		1	CENTERLOCK COVER OPP HAND						25	901	
		18			POLYMER SYSTEMS DWG 14-00186-1							901	
903					MFG STD							901	
					ASTM A325							921	
					ASTM A563							922	
					ASTM F436							923	
					COMM GRADE STAINLESS							915	
					STEEL FASTENERS							915	
					A.I.S.I. C 1045 (BHN 255-300)							929	

STATE OF WISCONSIN PROJECT
Nº 2652-02-70

DESIGN DRWG. REF. CITY OF MILWAUKEE
JOB Nº 502-53
SHEET Nº 58 & 59

OPEN HOLES UNLESS NOTED
FOR GENERAL NOTES & PAINT NOTES
SEE SHEET Nº 9360-901

APPROVED
NOV 6 1986
John A. Erickson
Bureau of Bridges & Public Buildings
MILWAUKEE, WIS.

CSL
CHECKED BY

RECORD

LAKESIDE BRIDGE & STEEL CO.
MILWAUKEE, WISCONSIN 53209

CUSTOMER	EDWARD KRAEMER & SONS, INC.
LOCATION OF WORK	MILWAUKEE, WISCONSIN
DESCRIPTION	NORTH WATER ST. BRIDGE
TITLE	CENTER LOCK & COVER ASSY.
DRAWN BY	RMK / MWH
DATE	6-4-85
DRAWING NUMBER	9360-903B
CHECKED BY	B.L.T.
DATE	10-30-85
INSP. BY	CITY OF MILWAUKEE
SYMBOL	K
UNIT	1

MARK	MADE BY	DATE	CHKD BY	DATE	REVISION
1	JRD	5-22 86	B.T.	5-27 86	SCHEDULE REVISION
2	JRD	7-10 86	B.T.	7-10 86	SEE SHEET 903AB FOR REVISION
3	JRD	7-18 86	RR	7-18 86	
4	JRD	11-20 86	RR	11-20 86	SEE SHEET 903AB FOR REVISION
5	JRD	10-27 86	RR	10-27 86	SEE SHEET 903AB FOR REVISION

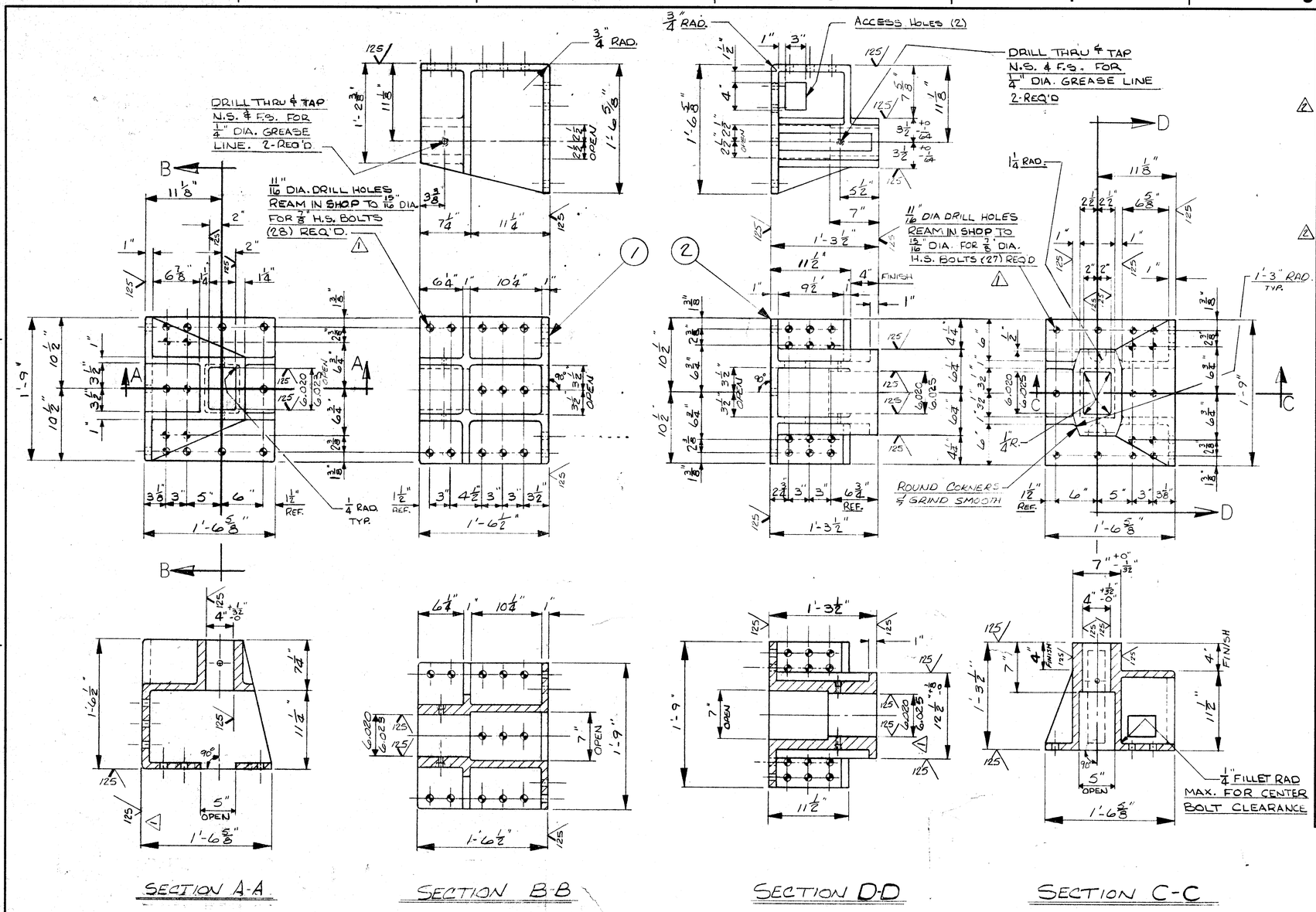

PIECE MARK SHT.	PIECE MARK DET.	ITEM	ON MARK	QUAN.	DESCRIPTION: ALL MATERIAL TO BE AS NOTED UNLESS NOTED.	WIDTH IN. DEC.	LENGTH FT. IN. DEC.	WEIGHT	SPEC. CODE	P-BILL NO.
7	1			2	CENTERLOCK CASTING					
		1		2	CASTING (PER DETAIL)			441	902	
7	2			2	CENTERLOCK CASTING					
		2		2	CASTING (PER DETAIL)			413	902	
7				2	CAST STEEL ASTM A27 GRADE 70-36 ANNEALED				902	

CASTING NOTE: 1) FILLETS TO BE 1/2" RAD. MAX. EXCEPT AS NOTED
2) ITEM (3) SHALL BE FITTED INTO EACH PATTERN

ASSEMBLY NOTE: MOUNT CASTINGS 7-1 (C-1) & 7-2 (C-2) ONTO GIRDER IN SHOP AND ALIGN WITH CENTERLOCK PLUNGER, REAM HOLES THRU GIRDER WITH CASTINGS IN PLACE.

2 - CENTERLOCK CASTING 7-1 (C-1)

(MAT'L: CAST STEEL A27 GRADE 70-36 ANNEALED)

2 - CENTERLOCK CASTING 7-2 (C-2)

MAT'L: CAST STEEL, A27 GRADE 70-36 ANNEALED

STATE OF WISCONSIN PROJECT
№: 2652-02-70
CITY OF MILWAUKEE
DESIGN DRWG. REF. JOB № 502-53 SHT. 59

OPEN HOLES UNLESS NOTED
FOR GENERAL NOTES & PAINT NOTES REFER TO SHEET 9360-901

APPROVED OCT 27 1986
John A. Erickson Supt.
Bureau of Bridges & Public Buildings
MILWAUKEE, WIS.

CSL
CHECKED BY

RECORD

REV.	MADE BY	DATE	CHKD BY	DATE
1	MWH	12/30/86	B.L.T.	12/30/86
	APPROVAL CHANGES AS RECEIVED OCT 28, 1985			
2	MWH	12/21/86	B.L.T.	12/21/86
	DELETE GOTHIC LETTERING AS REQ'D.			

LAKESIDE BRIDGE & STEEL CO.
MILWAUKEE, WISCONSIN 53209

CUSTOMER EDWARD KRAEMER & SONS, INC.
LOCATION OF WORK MILWAUKEE, WISCONSIN
DESCRIPTION NORTH WATER ST. BASCULE BRIDGE
TITLE CENTERLOCK CASTING DETAILS

DRAWN BY	DATE	DRAWING NUMBER
M.W. HYZER	5/24/85	9360-7
CHECKED BY B.L.T.	7-11-85	
INSP. BY CITY OF MILWAUKEE	SYMBOL D	UNIT 1

TELEDYNE POST P415374

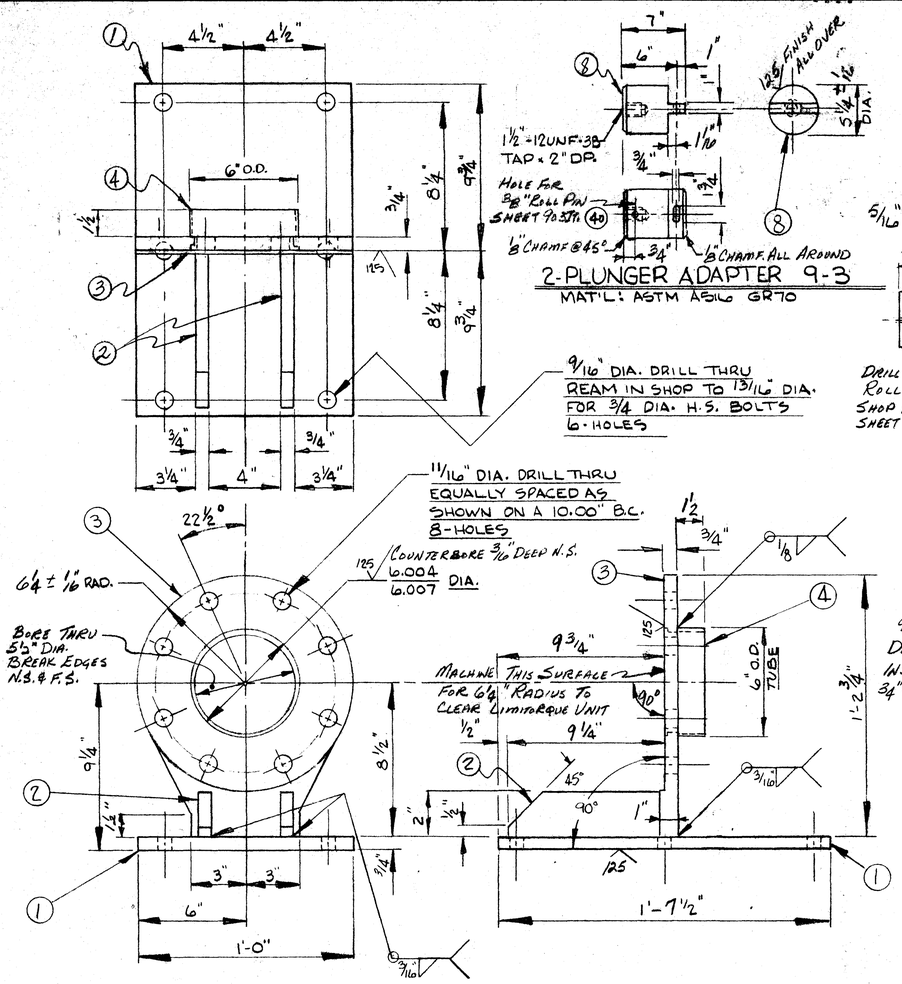

2 OPERATOR MOUNTING BRACKET 9-1

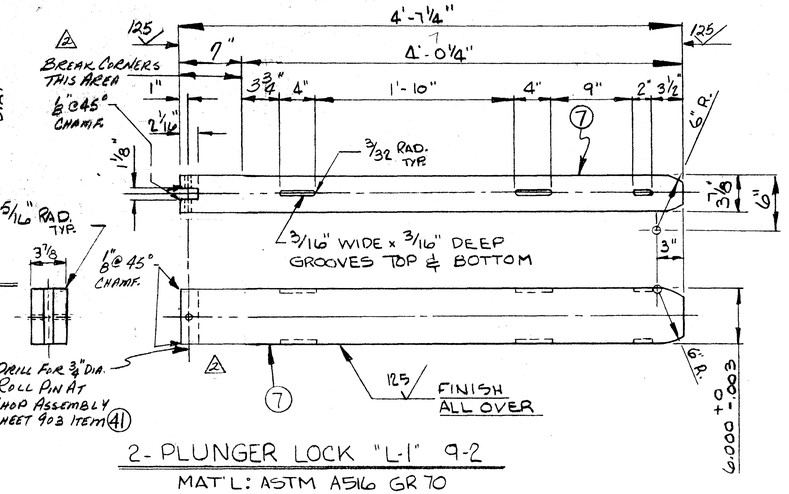

2-PLUNGER LOCK "L-1" 9-2

MAT'L: ASTM A516 GR 70

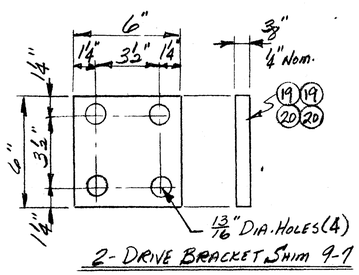

2- DRIVE BRACKET SHIM 9-7

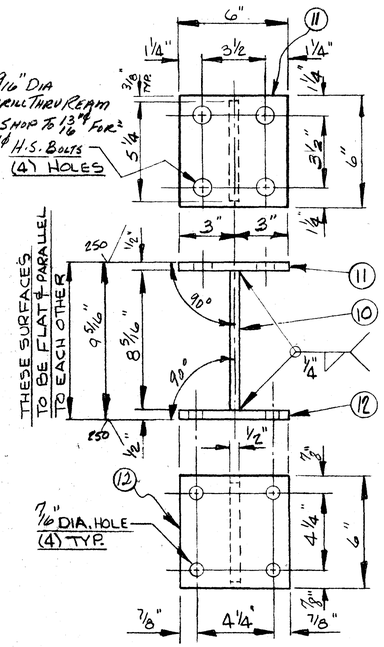

2 MANUAL DRIVE BRACKET 9-4

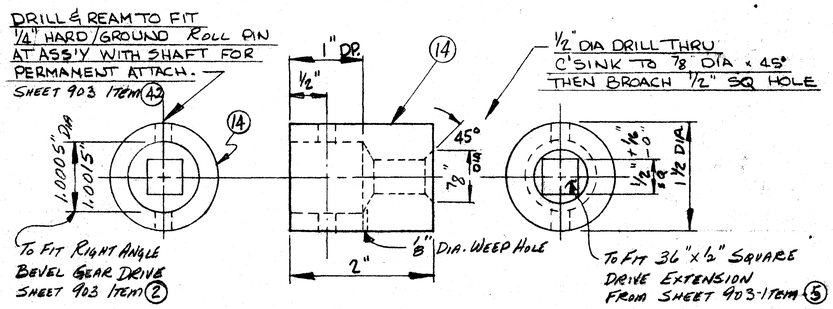

2- HAND CRANK ADAPTER 9-5

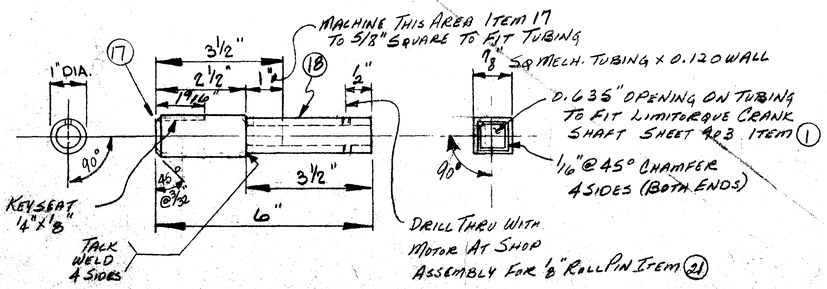

2 MANUAL DRIVE ADAPTER 9-6

PIECE MARK SHT.	PIECE MARK DET.	ITEM	ON MARK	QUAN.	DESCRIPTION (ALL MATERIAL TO BE 909 UNLESS NOTED)	WIDTH IN.	WIDTH DEC.	LENGTH FT. IN.	LENGTH DEC.	WEIGHT	SPEC. CODE	P-BILL NO.
9	1			2	OPERATOR MOUNTING BRACKET							
		1		2	PL 1	12	00	10	750			
		2		4	PL 3/4	2	00		400			
		3		2	PL 1	12	50	10	275			
		4		2	TUBING 6" O.D. x 1/8" WALL				150		2	933.2
		99			WW							7970
9	2			2	PLUNGER LOCK "L-1"							
		7		2	PL 4 3/8 PER DET	6	50	40	775			924
9	3			2	PLUNGER ADAPTER							
		8		2	PL 6 PER DET	6	00		750			924
9	4			2	MANUAL DRIVE BRACKET							
		10		2	PL 1/2	5	25	8	31			
		11		2	PL 3/4	6	00	6	00			
		12		2	PL 3/4	6	00	6	00			
		99			WW							1970
9	5			2	HAND CRANK ADAPTER							
		14		2	RD 1 1/2 DIA. PER DET				200		2	
9	6			2	MANUAL DRIVE ADAPTER							
		17		2	RD DIA PER DET				350		2	
		18		2	TUBE 7/8 SQ x 0.120 WALL				350		2	933
		21		2	ROLL PIN 1/8				88			907
		99			WW							1970
9	7			2	DRIVE BRACKET SHIM PACKS							
		19		4	PL 11 GA	6	00	6	00			910
		20		4	PL 16 GA	6	00	6	00			910
9					ASTM A36							909
					ASTM A516 GR 70							924
					WELDED DOM ROUND MECHANICAL TUBE							933
					ASTM A513 TYPE 5							932
					ASTM A500							933
					ASTM A36							910

STATE OF WISCONSIN PROJECT
NO/ 2692-02-70

CITY OF MILWAUKEE JOB: 502-53
DESIGN DRWG. REF. SHT: 98

OPEN HOLES — UNLESS NOTED
FOR GENERAL NOTES & PAINT NOTES
SEE SHT NO/ 9360-901

APPROVED
OCT 27 1986
Bureau of Bridges & Public Buildings
MILWAUKEE, WIS.

CSL
CHECKED BY

RECORD

LAKESIDE BRIDGE & STEEL CO.
MILWAUKEE, WISCONSIN 53209

CUSTOMER: EDWARD KRAEMER & SONS, INC.
LOCATION OF WORK: MILWAUKEE, WISCONSIN
DESCRIPTION: NORTH WATER ST. BRIDGE
TITLE: CENTER LOCK DETAILS
DRAWN BY: HUBER/DILLENSNEIDER 4/23/86
CHECKED BY: BOB THOMAS 5/23/86
DRAWING NUMBER: 9360-91
INSP. BY: CITY OF MILWAUKEE

REV.	MADE BY	DATE	CHKD BY	DATE	
1	JKD	5-27-86	B.T.	5-27-86	GENERAL REVISION
2	JKD	7-10-86	B.T.	7-10-86	REVISED PLUNGER

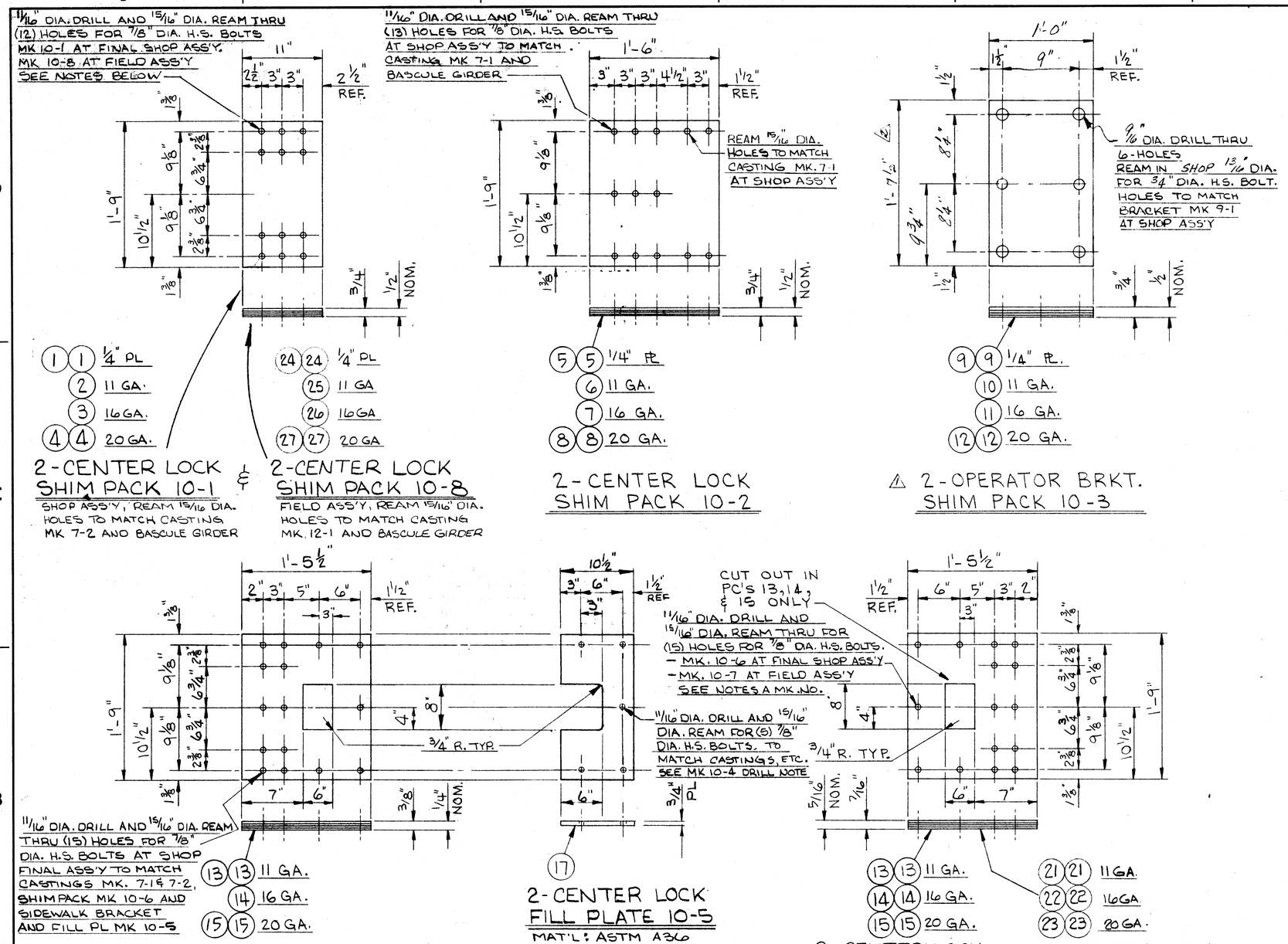

PIECE MARK SHT.	PIECE MARK DET.	ITEM	ON MARK	QUAN.	DESCRIPTION ALL MATERIAL TO BE AS NOTED UNLESS NOTED.	WIDTH IN. DEC.	LENGTH FT. IN. DEC.	WEIGHT	SPEC. CODE	P-BILL NO.
10	1			2	CENTER LOCK SHIM PACK					
		1		4	PL 1/4	11.00	10.900		909	
		2		2	PL 11 GA	11.00	10.900		910	
		3		2	PL 16 GA	11.00	10.900		910	
		4		4	PL 20 GA	11.00	10.900		910	
10	2			2	CENTER LOCK SHIM PACK					
		5		4	PL 1/4	18.00	10.900		909	
		6		2	PL 11 GA	18.00	10.900		910	
		7		2	PL 16 GA	18.00	10.900		910	
		8		4	PL 20 GA	18.00	10.900		910	
10	3			2	OPERATOR BRKT SHIM PACK					
		9		4	PL 1/4	12.00	17.050		909	
		10		2	PL 11 GA	12.00	17.050		910	
		11		2	PL 16 GA	12.00	17.050		910	
		12		4	PL 20 GA	12.00	17.050		910	
10	4			2	CENTER LOCK SHIM PACK					
		13		4	PL 11 GA	17.50	10.900		910	
		14		2	PL 16 GA	17.50	10.900		910	
		15		4	PL 20 GA	17.50	10.900		910	
10	5			2	CENTER LOCK FILL PLATE					
		17		2	PL 3/4	10.50	10.900		909	
10	6			2	CENTER LOCK SHIM PACK					
		13		4	PL 11 GA	17.50	10.900		910	
		14		4	PL 16 GA	17.50	10.900		910	
		15		4	PL 20 GA	17.50	10.900		910	
10	7			2	CENTER LOCK SHIM PACK					
		21		4	PL 11 GA	17.50	10.900		910	
		22		4	PL 16 GA	17.50	10.900		910	
		23		4	PL 20 GA	17.50	10.900		910	
10	8			2	CENTER LOCK SHIM PACK					
		24		4	PL 1/4	11.00	10.900		909	
		25		2	PL 11 GA	11.00	10.900		910	
		26		2	PL 16 GA	11.00	10.900		910	
		27		4	PL 20 GA	11.00	10.900		910	
10					ASTM A36				909	
					ASTM A366				910	

NOTE:
ASSEMBLY DWG. 9360-903

STATE OF WISCONSIN PROJECT
№ 2652-02-70

DESIGN DRWG. REF. CITY OF MILWAUKEE
JOB № 502-53
SHEET № 58 & 59

OPEN HOLES 11/16" UNLESS NOTED

FOR GENERAL NOTES & PAINT NOTES SEE SHEET № 9360-901

APPROVED
OCT 27, 1986
John A. Erickson
Bureau of Bridges & Public Buildings
MILWAUKEE, WIS.

CSL
CHECKED BY

RECORD

LAKESIDE BRIDGE & STEEL CO.
MILWAUKEE, WISCONSIN 53209

CUSTOMER	EDWARD KRAEMER & SONS, INC.
LOCATION OF WORK	MILWAUKEE, WISCONSIN
DESCRIPTION	NORTH WATER ST. BRIDGE
TITLE	CENTER LOCK SHIMS
DRAWN BY	RMK / MWH
DATE	6-6-85
CHECKED BY	B.L.T.
DATE	10/30/85
DRAWING NUMBER	9360-10
INSP. BY	CITY OF MILWAUKEE
SYMBOL	C
UNIT	1

REV	MARK BY	DATE	CHKD BY	DATE	
1	JRD	5-22-86	B.T.	5-23-86	REVISED MK 10-3
2	JRD	6-8-86	B.T.	6-8-86	Dimensional Change

TELEDYNE POST N41574

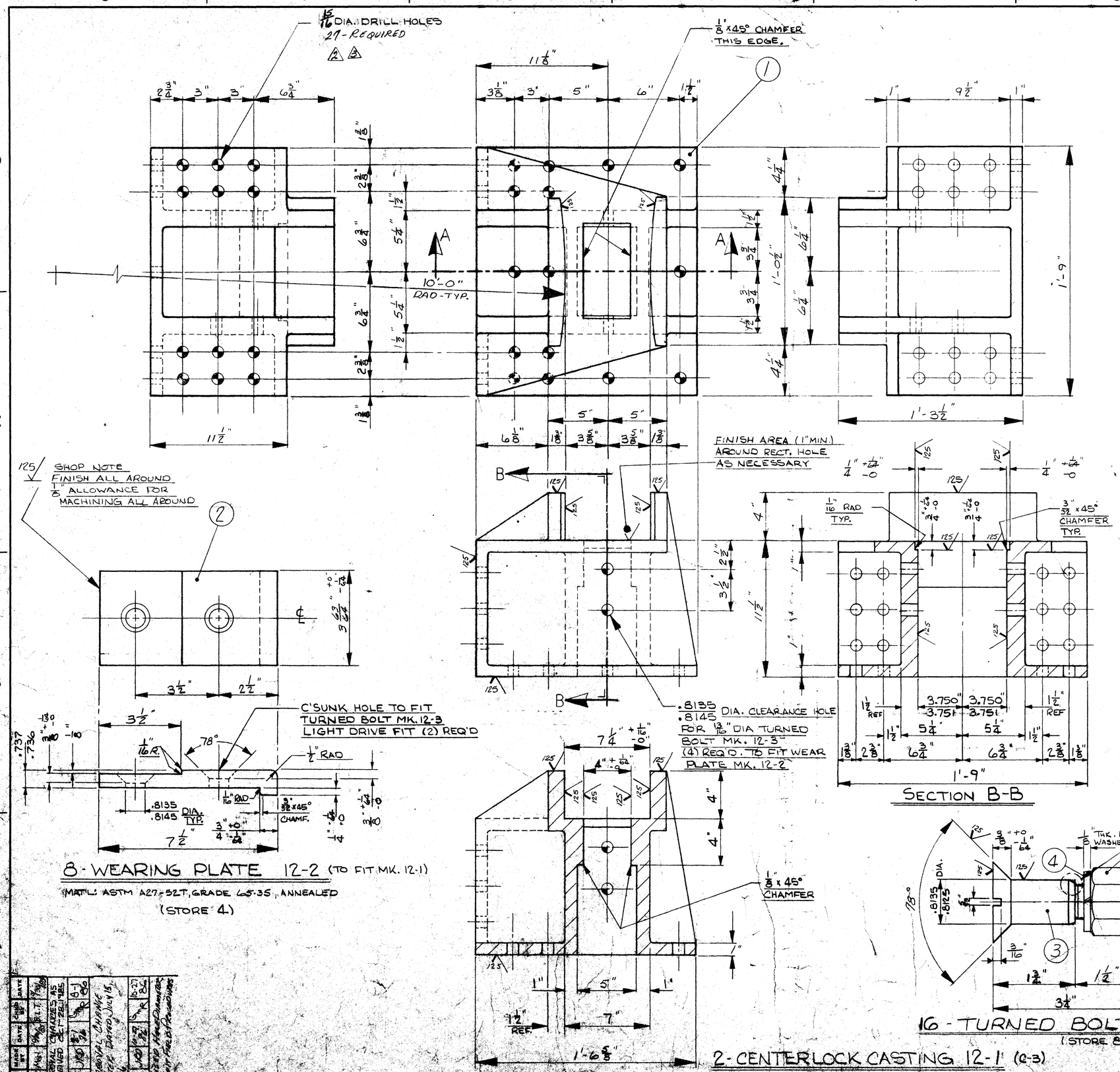

PIECE MARK SHT	PIECE MARK DET	ITEM	ON MARK	QUAN.	DESCRIPTION (ALL MATERIAL TO BE AS NOTED UNLESS NOTED)	WIDTH IN. DEC	LENGTH FT. IN. DEC	WEIGHT	SPEC. CODE	P-BILL NO.
12	1			2	CENTERLOCK CASTING					
		1		2	CASTING (PER DETAIL)			441	902	
		6		1	SET GOTHIC LETTERS 3/4 IN HIGH MIN SPELLING "WATER STREET BRIDGE" FOR PATTERN				901	
12	2			8	WEARING PLATE					
		7		8	BAR 1 1/4" PER DET	4.25	7.75	67.05		
12	3			16	TURNED BOLTS					
		3		16	TURNED BOLTS (PER DETAIL)				911	
		4		16	LOCK WASHER 1/8" THK				901	
		5		16	HEAVY HEX NUT 3/4-10 UNC-2A				911	
12					MFG STD					
					CAST STEEL ASTM A27 GRADE 70-36 ANNEALED				902	
					ASTM A27-52T GRADE 65-35 ANNEALED				905	
					ASTM A307 GR-B				911	

CASTING NOTE:
1) FILLETS 1/4" RAD. MAX. WHERE HOLES ARE 1 1/2" FROM STEEL. ALL OTHER FILLETS 1/2" RAD. MAX.
2) ITEM (6) SHALL BE FITTED INTO WOOD PATTERN.

⚠ ASSEMBLY NOTE: REAM HOLES THRU GIRDER WITH CASTING 12-1 (C-3) IN PLACE IN FIELD

STATE OF WISCONSIN PROJECT
№: 2652-02-70

CITY OF MILWAUKEE JOB №:
DESIGN DRWG. REF. 502-53 SHT #59

OPEN HOLES UNLESS NOTED
FOR GENERAL NOTES & PAINT NOTES, REFER TO SHEET 9360-901

APPROVED NOV 6 1986 John A. Erickson
Bureau of Bridges & Public Buildings
MILWAUKEE, WIS.

CSC CHECKED BY

RECORD

LAKESIDE BRIDGE & STEEL CO.
MILWAUKEE, WISCONSIN 53209

CUSTOMER	EDWARD KRAEMER & SONS, INC.
LOCATION OF WORK	MILWAUKEE, WISCONSIN
DESCRIPTION	NORTH WATER STREET BASCULE BRIDGE
TITLE	CENTER LOCK CASTING DETAILS
DRAWN BY	M.W. HYZER DATE 7/8/85
CHECKED BY	B.L.T. 9-11-85
DRAWING NUMBER	9360-12
INSP. BY	C.T.V. of Milwaukee
STAGE	2
UNIT	

REV.	PIECE MARK	DATE	CHG. BY	DESCRIPTION
1	1-W1	7/8/85	R.T.T.	REVISED CHAMFERS AS RECEIVED 3-27-85
2	1-W1	8/1/86		REVISED CHAMFER TITLE DATED JULY 15, 1986
3	1-W1	10-27-86		REVISED HOLE DIMENSIONS AS SHOWN ON REDLINES

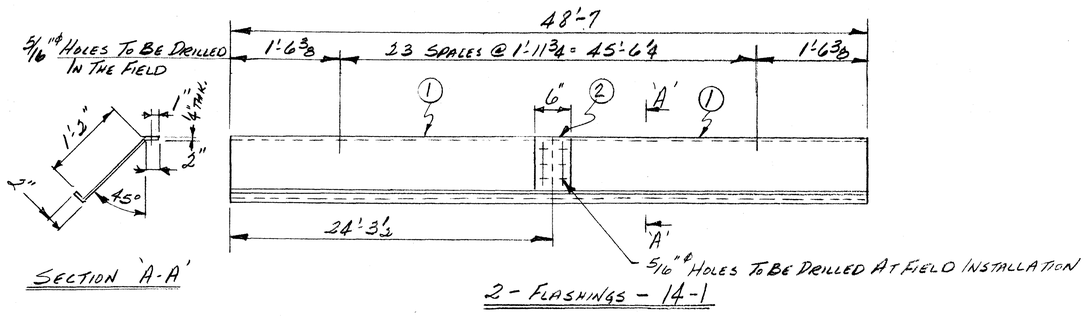

SECTION 'A-A'

2 - FLASHINGS - 14-1

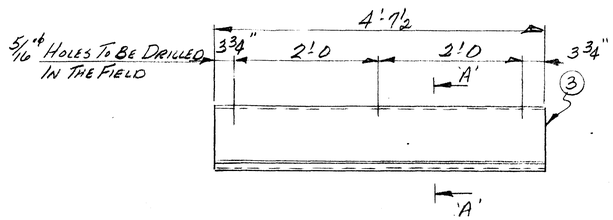

2 - FLASHINGS 14-2

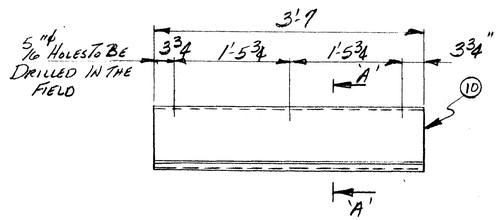

△1 2-FLASHINGS 14-6

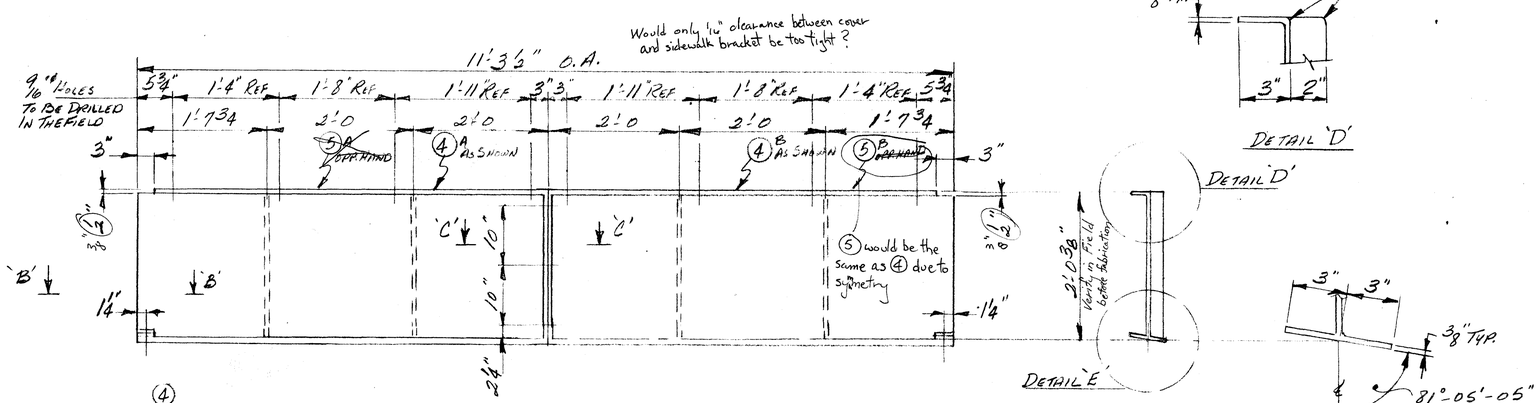

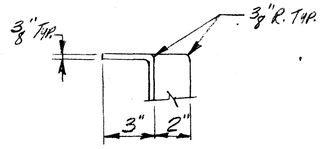

DETAIL 'D'

DETAIL 'D'

DETAIL 'E'

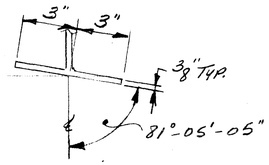

DETAIL 'E'

2 ~~1~~ - CENTERLOCK COVER 14-3 AS SHOWN

~~1 - CENTERLOCK COVER 14-4 OPP. HAND TO 14-3~~

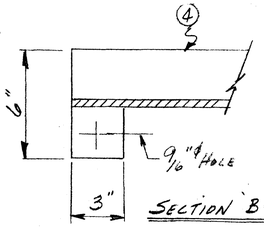

SECTION 'B-B'

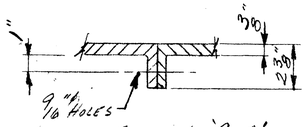

SECTION 'C-C'

PIECE MARK SHT.	PIECE MARK DET.	ITEM	ON MARK	QUAN.	DESCRIPTION (ALL MATERIAL TO BE ____ UNLESS NOTED.)	WIDTH IN. DEC.	LENGTH FT. IN. DEC.	WEIGHT	SPEC. CODE	P-BILL NO.
14	1			2	FLASHINGS					
		1		2	ANGLE SECTIONS EACH CONSISTING OF 2 PIECES 24-3 1/2 LONG PER DETAIL		40700		967	
		1							967	
		1							967	
		2		2	SPLICE SECTIONS 1/4-IN X 6-IN X 13-IN				967	
		2							967	
14	2			2	FLASHINGS					
		3		2	ANGLE SECTIONS PER DETAIL		40750		967	
14	3			2	~~1~~ CENTERLOCK COVER AS SHOWN					
14	4			~~1~~	~~CENTERLOCK COVER OPP HAND~~					
		4	14-3	2	CENTERLOCK COVER CONSISTING OF 2 PIECES AS SHOWN		110350		967	
		4							967	
		5	14-4	~~1~~	~~CENTERLOCK COVER CONSISTING OF 2 PIECES OPP HAND TO 14-3~~		110350		~~967~~	
		5							~~967~~	
14	5			1	LOT FASTENERS					
		6		12	HEX HD BOLT 1/4-20UNC-2A		100		915	
		7		12	HEX NUT 1/4-20UNC-2B				915	
		8		12	FLAT WASHER 1/4				915	
		9		12	LOCK WASHER 1/4				915	
△1 14	6			2	FLASHINGS					
		10		2	ANGLE SECTIONS PER DETAIL		30700		967	
					6mm GRADE STAINLESS STEEL FASTENERS FIBER GLASS PER SPEC PAGE 86 & 87 AND SHEET 57 & 59				915	
									915	
									967	
									967	

STATE OF WISCONSIN PROJECT No 2652-02-70

DESIGN DRWG. REF.

OPEN HOLES UNLESS NOTED

APPROVED AS CORRECTED JUL 13 1987 Don M. Keller Supervisor Bureau of Bridges and Public Buildings MILWAUKEE, WIS

OFFICE

CSC CHECKED BY

LAKESIDE BRIDGE & STEEL CO. MILWAUKEE, WISCONSIN 53209

CUSTOMER	EDWARD KRAEMER & SONS, INC.
LOCATION OF WORK	MILWAUKEE, WISCONSIN
DESCRIPTION	NORTH WATER STREET BRIDGE
TITLE	FLASHINGS & CENTERLOCK COVERS
DRAWN BY J. DILKINSON	DATE 1-12-87
CHECKED BY GMR	DATE 1-12-87
DRAWING NUMBER	9360-14
INSP. BY CITY of MILWAUKEE	SYMBOL C
UNIT	1

REV.	MADE BY	DATE	CHKD BY	DATE
△1	JRD	4-7-87	GMR	4-7-87

ADDED MARK 14-6

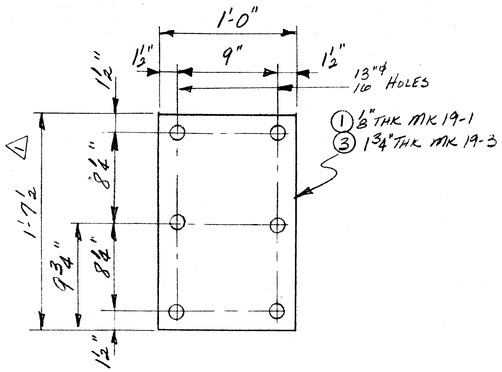

2 - FABREEKA PADS - 19-1
2 - SHIMS 19-3

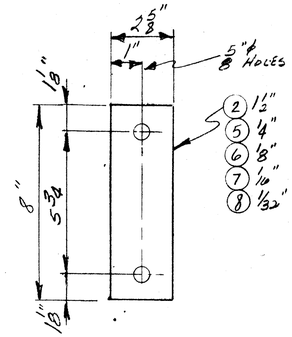

4 - SHIM PACKS - 19-2

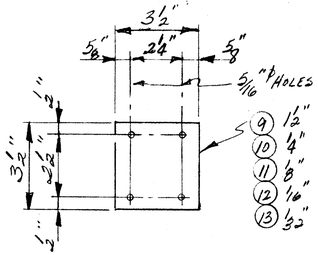

2 - SHIM PACKS - 19-5

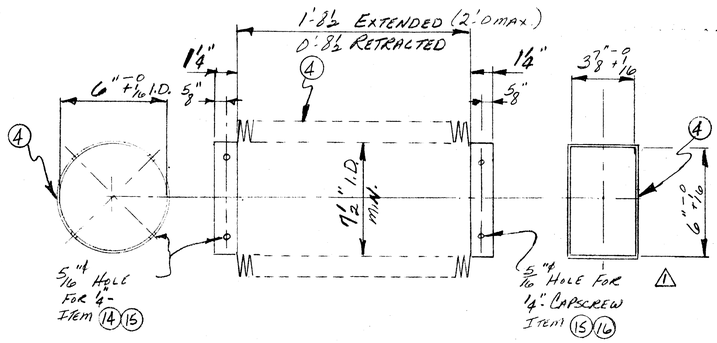

2 - ZIPPERED BOOT 19-4

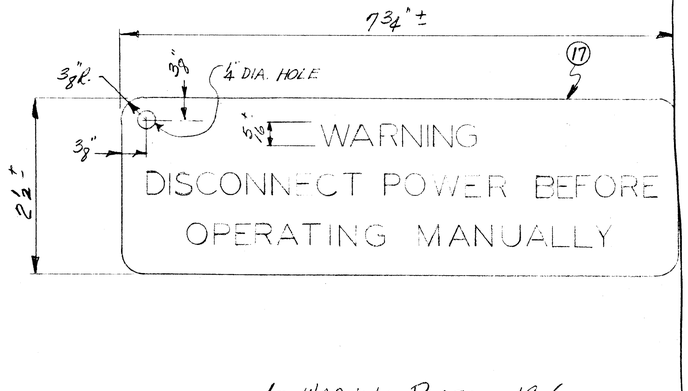

1 - WARNING PLATE - 19-6
RED BACKGROUND, WHITE LETTERS } METAL PLATE 1/16" THICK STAINLESS STEEL

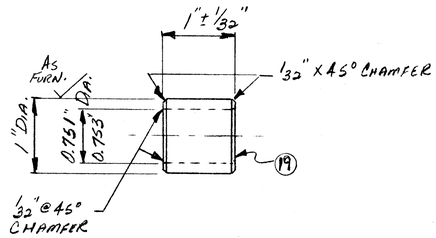

2 - SPACER - 19-7

PIECE MARK PAT.	DAT.	ITEM	SH MARK	QUAN.	DESCRIPTION ALL MATERIAL TO BE 9 I.D. UNLESS NOTED	WIDTH IN.	DEC	LENGTH FT.	IN.	DEC.	WEIGHT	SPEC. CODE	P-BILL NO.
19	1			2	FABREEKA PADS								
		1		2	FABREEKA PADS 1/8	12	00	10	7	50		6901	
19	2			4	SHIM PACKS								
		2		4	PL 1 1/2	2	63	8	00			909	
		3		4	PL 1 1/4	2	63	8	00			909	
		4		4	PL 11 GA	2	63	8	00				
		5		4	PL 16 GA	2	63	8	00				
		6		4	PL 20 GA	2	63	8	00				
19	3			2	SHIMS								
		3		2	PL 1 3/4	12	00	10	7	50		919	
19	4			2	ZIPPERED BOOT								
		4		2	ZIPPERED BOOT PER DET							10765	
		14		8	HEX HD CAPSCREW 1/4-20UNC				0	31		1915	
		15		16	LOCKWASHER 1/4							1915	
		16		8	HEX HD CAPSCREW 1/4-20UNC				0	50		1915	
19	5			2	SHIM PACKS								
		9		2	PL 1 1/2	3	50	3	5	0		909	
		10		2	PL 1 1/4	3	50	3	5	0		909	
		11		2	PL 11 GA	3	50	3	5	0			
		12		2	PL 16 GA	3	50	3	5	0			
		13		2	PL 20 GA	3	50	3	5	0			
19	6			1	WARNING PLATE								
		17		1	WARNING PLATE PER DET							901	
		18		1	SECURITY SEAL							901	
19	7			2	SPACER								
		19		2	RD 1				1	00		909	
19					MFG STD							901	
					ASTM A36							909	
					ASTM A346							910	
					COMM GR. FASTENER STAINLESS STL							965	
					0.332 THICK RUBBERIZED							965	
					NEOPRENE OVER NYLON							965	
					SORTITE 33NN OR EQUAL							965	

APPROVED
NOV 3 1988
John A. Erickson
Supt.
Bureau of Bridges & Public Buildings
MILWAUKEE, WIS

RECORD

DESIGN DRWG. REF.

OPEN HOLES UNLESS NOTED

REV.	MADE BY	DATE	CHKD BY	DATE	
1	JRD	7-10-86	B.T.	7-10-86	REVISED BOOT TO CONFORM TO REVISED PLUMBER REVISED DIMENSION FOR SHIMS

LAKESIDE BRIDGE & STEEL CO.
MILWAUKEE, WISCONSIN 53209

CUSTOMER EDWARD KRAEMER & SONS, INC.
LOCATION OF WORK MILWAUKEE, WISCONSIN
DESCRIPTION NORTH WATER STREET BRIDGE
TITLE MISCELLANEOUS DETAILS

DRAWN BY	DATE	DRAWING NUMBER
J. DICKINSON	5-21-86	9360-19
CHECKED BY BOB THOMAS	6-24-86	

INSP. BY CITY OF MILWAUKEE | SYMBOL C | UNIT 1

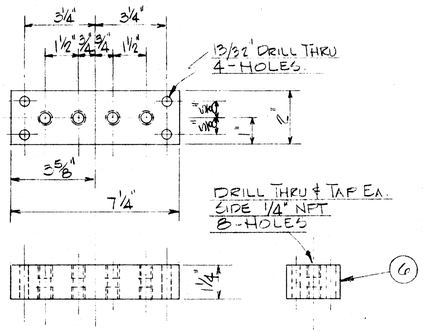

2-LUBRICATION HEADER 19-3

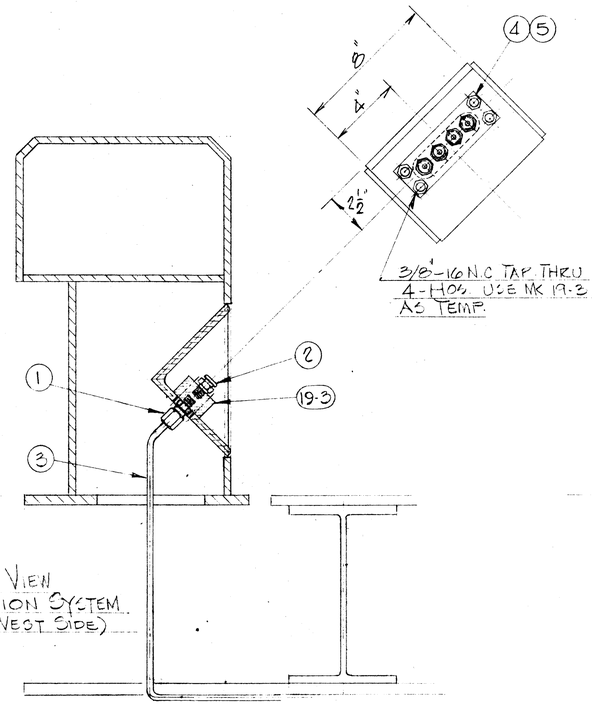

ENLARGED VIEW LUBRICATION SYSTEM (NO. SPAN - WEST SIDE)

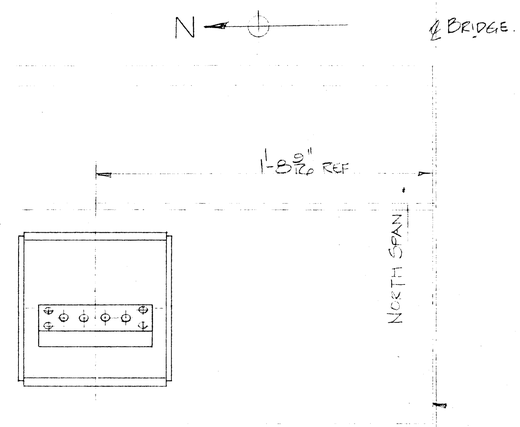

END OF PARAPET MK 35-7 (EAST) SHOWN
END OF PARAPET MK 35-6 (WEST) OPP
AT ℄ OF BRIDGE.

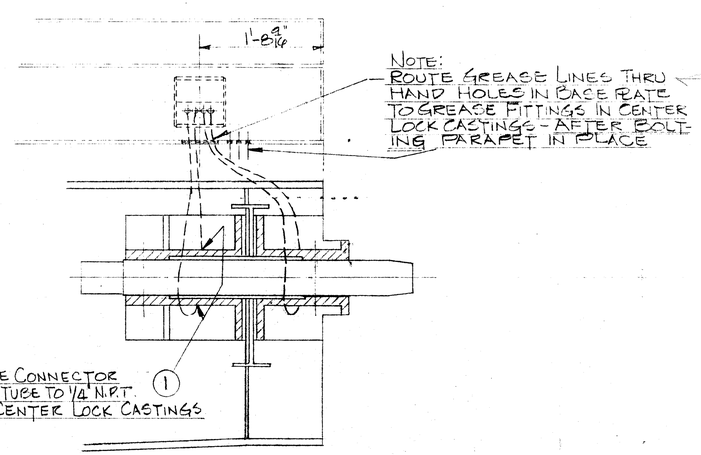

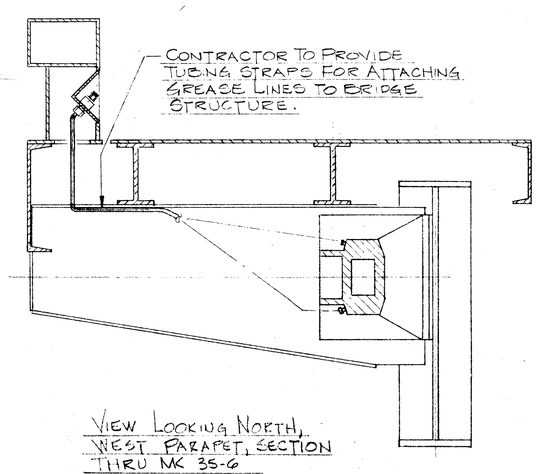

VIEW LOOKING NORTH, WEST PARAPET, SECTION THRU MK 35-6

1-LUBRICATION SYSTEM 20-2 (NORTH SPAN - EAST SIDE)

1-LUBRICATION SYSTEM 20-1 (NORTH SPAN - WEST SIDE)

PIECE MARK SHT.	PIECE MARK DET.	ITEM	ON MARK	QUAN.	DESCRIPTION (ALL MATERIAL TO BE UNLESS NOTED AS NOTED)	WIDTH IN.	WIDTH DEC.	LENGTH FT.	LENGTH IN.	LENGTH DEC.	WEIGHT	SPEC. CODE	P-BILL NO.
20	1			1	LUBRICATION SYSTEM (NO. SPAN WEST SIDE)								
20	2			1	LUBRICATION SYSTEM (NO. SPAN EAST SIDE)								
		1		16	MALE CONNECTOR 1/4" TUBE TO 1/4" MALE PIPE THD. PARKER HANN. # 4-4 FBD							901	
		2		8	GIANT BUTTON HD FITTING 1/4" ALEMITE # 1823							901	
		3		1	COPPER TUBING 1/4" X 60'0" LG.							901	
		4		8	CAP SCREW 3/8"-16 NC				2	25		915	
		5		8	LOCKWASHER 3/8"							915	
20	3			2	LUBRICATION HEADER								
		6		2	BAR 1 1/4"	2	00		7	25		933	
20					MFG STD.							901	
					ASTM A 588							933	
					COMM GR ST STL FASTENERS							915	

DESIGN DRWG. REF.

OPEN HOLES UNLESS NOTED

APPROVED
OCT 28 1986
John A. Erickson
Bureau of Bridges & Public Buildings
MILWAUKEE, WIS.

CSL LFR
CHECKED BY

RECORD

LAKESIDE BRIDGE & STEEL CO.
MILWAUKEE, WISCONSIN 53209

CUSTOMER EDWARD KRAEMER & SONS, INC.
LOCATION OF WORK MILWAUKEE, WISCONSIN
DESCRIPTION NORTH WATER ST. BASCULE BRIDGE
TITLE CENTER LOCK LUBRICATION SYSTEM

DRAWN BY	DATE	DRAWING NUMBER
N. J. Doss	8/21/86	9360-20
CHECKED BY J. DICKINSON	10-9-86	

INSP. BY	SYMBOL	UNIT
CITY OF MILW.	C	1

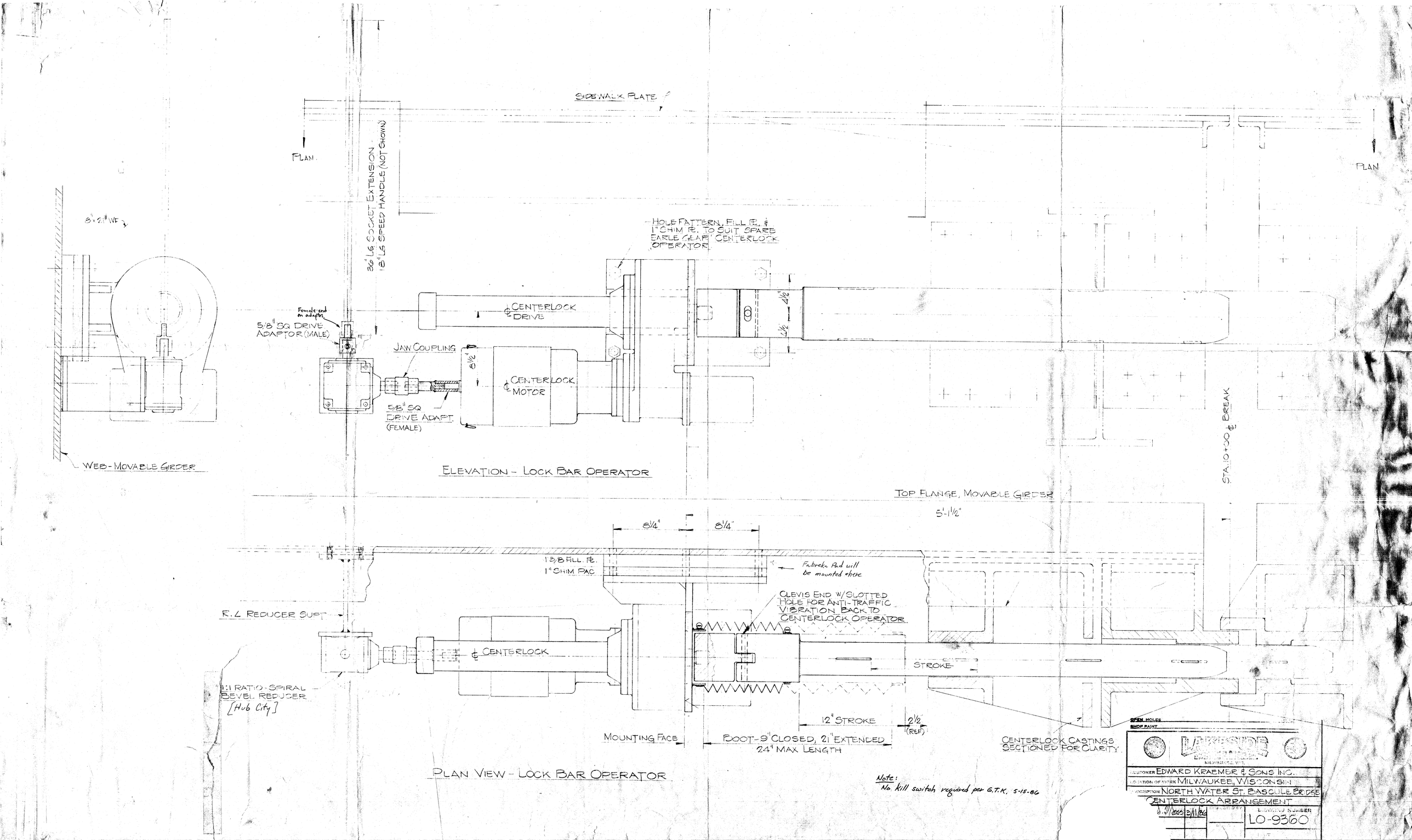
SIDEWALK PLATE
PLAN
PLAN
36" LG SOCKET EXTENSION
18" LG SPEED HANDLE (NOT SHOWN)
8"x21" WF
HOLE PATTERN, FILL PL. & 1" SHIM PL. TO SUIT SPARE EARLE GEAR CENTERLOCK OPERATOR
Female end on adaptor
5/8" SQ DRIVE ADAPTOR (MALE)
CENTERLOCK DRIVE
JAW COUPLING
8 1/2"
CENTERLOCK MOTOR
5/8" SQ DRIVE ADAPT. (FEMALE)
4 1/2"
4 1/2"
WEB-MOVABLE GIRDER
ELEVATION - LOCK BAR OPERATOR
STA. 10+00 ℄ BREAK
TOP FLANGE, MOVABLE GIRDER
5'-1 1/2"
8 1/4"
8 1/4"
1 3/8 FILL PL.
1" SHIM PAC
Fabreka Pad will be mounted here
CLEVIS END W/SLOTTED HOLE FOR ANTI-TRAFFIC VIBRATION BACK TO CENTERLOCK OPERATOR
R.L REDUCER SUPT
CENTERLOCK
STROKE
1:1 RATIO-SPIRAL BEVEL REDUCER [Hub City]
12" STROKE
2 1/2" (REF)
MOUNTING FACE
BOOT-9" CLOSED, 21" EXTENDED
24" MAX LENGTH
CENTERLOCK CASTINGS SECTIONED FOR CLARITY
PLAN VIEW - LOCK BAR OPERATOR
Note:
No kill switch required per G.T.K. 5-15-86
OPEN HOLES
SHOP PAINT
LAKESIDE
MILWAUKEE, WIS.
CUSTOMER EDWARD KRAEMER & SONS INC.
LOCATION OF WORK MILWAUKEE, WISCONSIN
DESCRIPTION NORTH WATER ST. BASCULE BRIDGE
CENTERLOCK ARRANGEMENT
3/11/86
DRAWING NUMBER
LO-9360

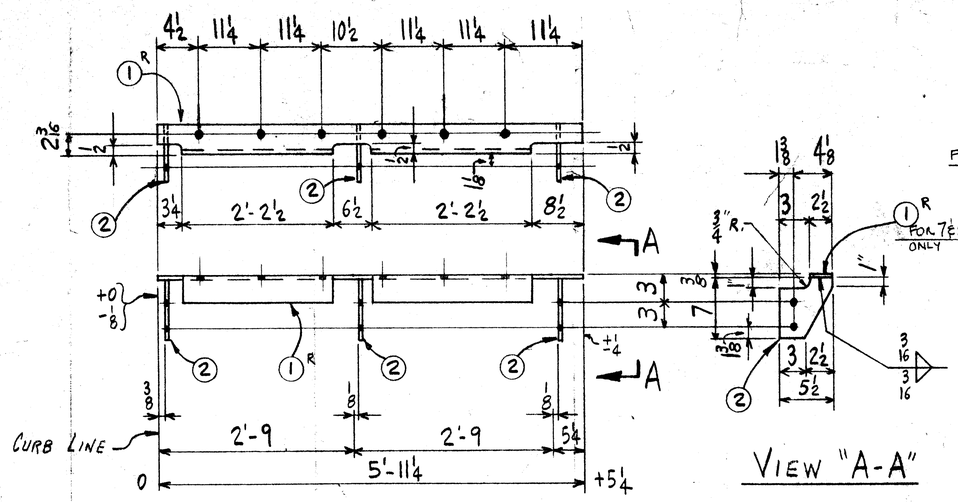

VIEW "A-A"

2 - ANGLES - 8-1 AS SHOWN

2 - do - 8-2 OPP. HAND TO 8-1

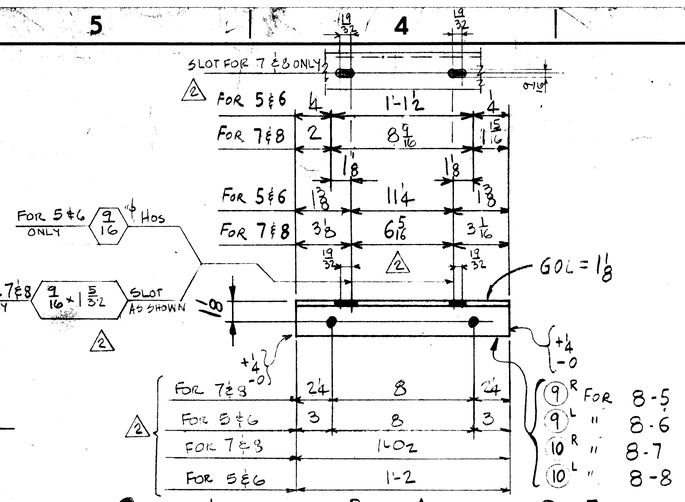

2 - JUNCTION BOX ANGLES - 8-5 AS SHOWN

2 - do - 8-6 OPP. HAND TO 8-5

2 - do - 8-7 AS SHOWN

2 - do - 8-8 OPP HAND TO 8-7

PIECE MARK SHT.	PIECE MARK DET.	ITEM	ON MARK	QUAN.	DESCRIPTION ALL MATERIAL TO BE ASTM-A36 UNLESS NOTED.	WIDTH IN.	WIDTH DEC.	LENGTH FT. IN. DEC.	WEIGHT	SPEC. CODE	P-BILL NO.
8	1			2	ANGLES						
8	2			2	do						
		1 R		4	L 3x3x3/8			51125		910	
		2		12	PL 3/8	550		00700		910	
		9.8			WW				1971		
8	3			2	ANGLES						
8	4			2	do						
		3 R		4	L4x3x1/4			30750		910	
		4		8	L6x4x3/8			00250		910	
		9.8			WW				1971		
8	5			2	JUNCTION BOX ANGLES						
8	6			2	do						
8	7			2	do						
8	8			2	do						
		9 R		4	ALUM. L 2x2x1/4			10200		910	
		10 L		4	ALUM. L 2x2x1/4			10050		910	
8	9			8	JUNCTION BOX SUPPORT ANGLES						
		11		8	ALUM. L 2x2x1/4			20800		910	
8	10			2	CHANNELS						
8	11			2	CHANNELS						
		12 R		4	MC 18 x 42.7			60500			403
		13 L		8	L 4 x 3 x 3/8			09900			
		9.9			WW				1970		
8	12			56	ELASTOMERIC PADS						
		14		56	ELASTOMERIC PADS 1/8	600		600		901	
8	13			8	ELASTOMERIC PADS						
		15		8	ELASTOMERIC PADS 1/8	600		900		901	
8	14			16	CENTERLOCK COVER CONN PL						
		16		16	PL 3/8	300		1100		910	
				8	6061-T6 ALUMINUM MFG STD					910 901	

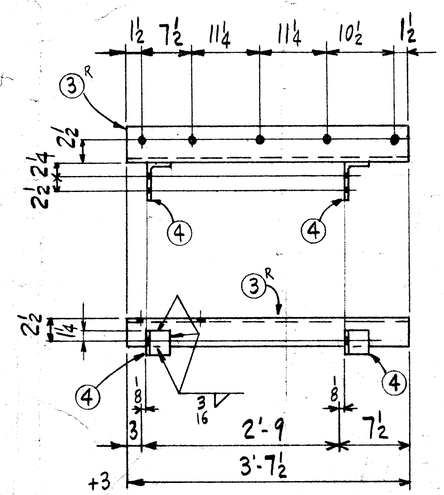

2 - ANGLES - 8-3 AS SHOWN

2 - do - 8-4 OPP. HAND TO 8-3

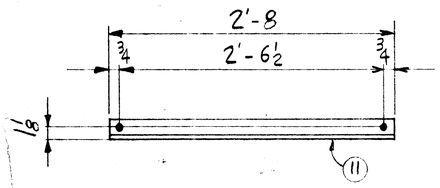

8 - JUNCTION BOX SUPPORT ANGLES - 8-9

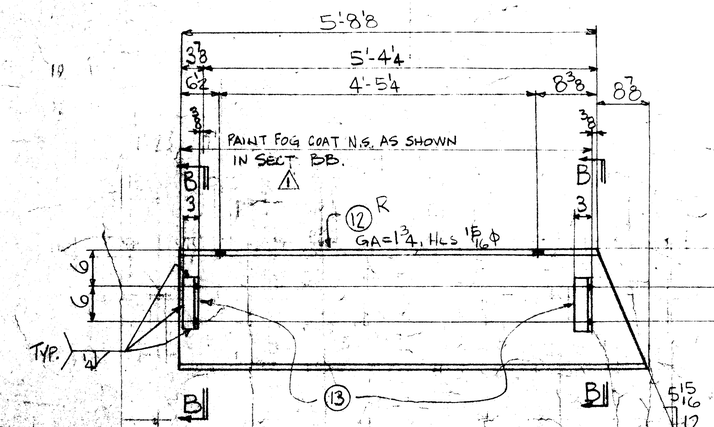

2-CHANNELS - 8-10 - AS SHOWN

2- do - 8-11 - OPP HAND TO 8-10

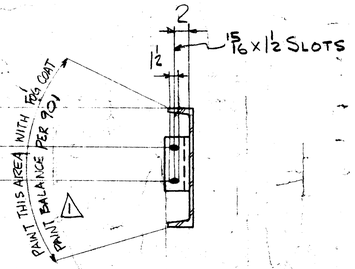

SECT. B-B

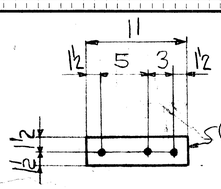

APPROVED FOR DISTRIBUTION BY WISCONSIN DEPT. of TRANS. DIVISION of HIGHWAYS
APPROVED AS TO COMPLIANCE WITH DESIGN DRAWINGS AND SPECIFICATIONS WITHIN THE LIMITS OF PARA. 1.06.3.2 OF THE STANDARD SPECIFICATIONS.
APPROVAL DOES NOT EXTEND TO DETAIL DIMENSIONS.
DATE NOV 19 1986 BY PHIL FISH

16 - CENTERLOCK COVER CONN. PL'S 8-14
(SHOWN ON DESIGN DWG. 59)

DESIGN DRWG. REF. 36, 38 & 61

OPEN HOLES 9/16 ϕ UNLESS NOTED

FOR GENERAL NOTES SEE 901

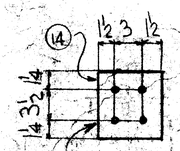

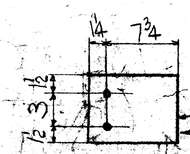

PADS WILL HAVE DUROMETER HARDNESS OF 60 ± 5

56-ELASTOMERIC PADS - 8-12

8-ELASTOMERIC PADS - 8-13

MARK	BY	DATE	CHKD BY	DATE	DESCRIPTION
1					
2					
3					
4					
5					
6					
7					
8					
9					
10					
11					
12					
13					
14					
15					
16					

ADDED NOTES
TO 16 SECT. D
ADDED ANGLES, M.S. & 6061 PLATES
REVISED NOTE OF ELASTOMERIC PADS FROM THE FIELD WIN. # SUPER. SEE DES. DWG. 61 DET. 1

LAKESIDE BRIDGE & STEEL CO.
MILWAUKEE, WISCONSIN 53209

CUSTOMER ED KRAEMER & SONS, INC.
LOCATION OF WORK MILWAUKEE, WI.
DESCRIPTION WATER ST. BASCULE BRIDGE (B-40-548)
TITLE WALKWAY DETAILS
DRAWN BY STEEL DETAILERS, INC. DATE
CHECKED BY LDH 7-30-85
DRAWING NUMBER 9359 - 8 R2
INSP. BY WIS D.O.T.
SYMBOL B
UNIT 1
(WAS 9359-40)

PROJECT # 2652-02-70

REF: 9358-E2, 9358-E3, 9359-E1, 9359-E2, 9359-E3