BIOSWALE DETAILS

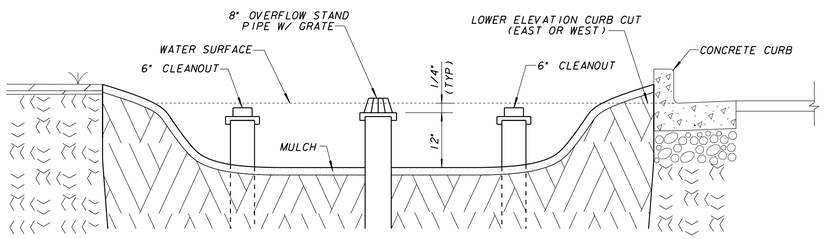

DETAIL OF 8" OVERFLOW STAND PIPE
SCALE • N.T.S.

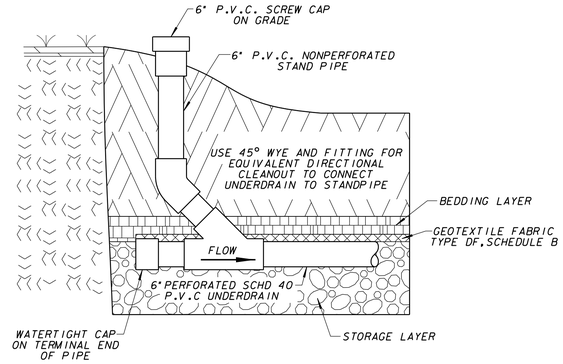

DETAIL OF CLEANOUT
SCALE • N.T.S.

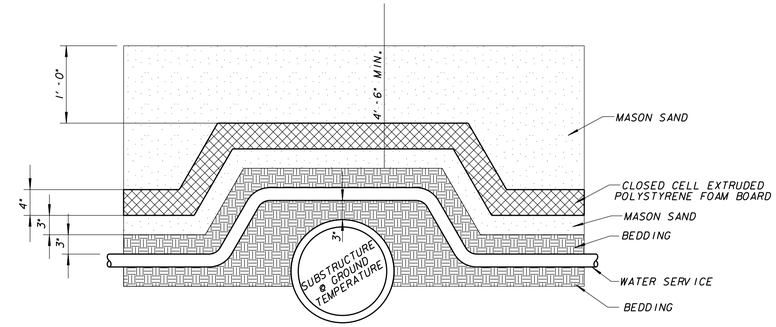

DETAIL OF WATER LATERAL SERVICE INSULATION
SCALE • N.T.S.

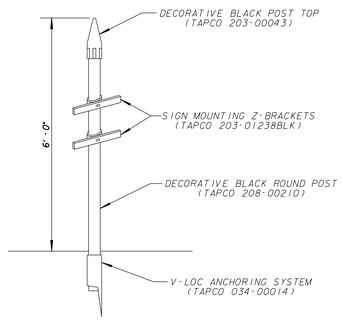

DETAIL OF INFORMATIONAL SIGN
SCALE • N.T.S.

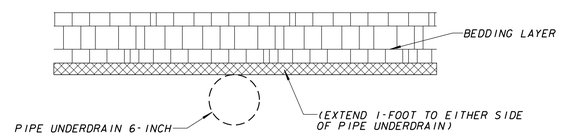

DETAIL OF GEOTEXTILE FABRIC
SCALE • N.T.S.

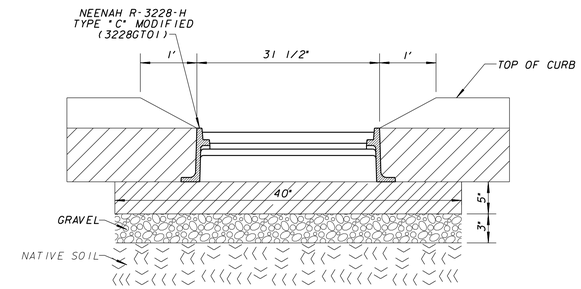

STORM CURB INLET WITH GRATE TYPE "A"
SECTION B–B
SCALE • N.T.S.

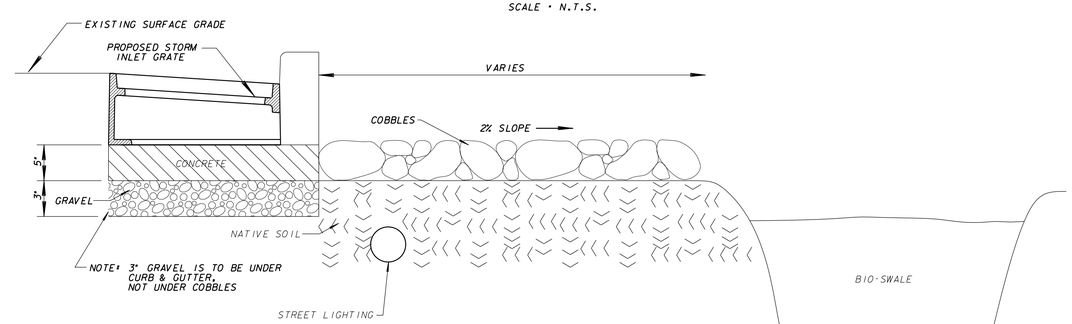

STORM CURB INLET WITH GRATE TYPE "A"
SECTION A–A
SCALE • N.T.S.

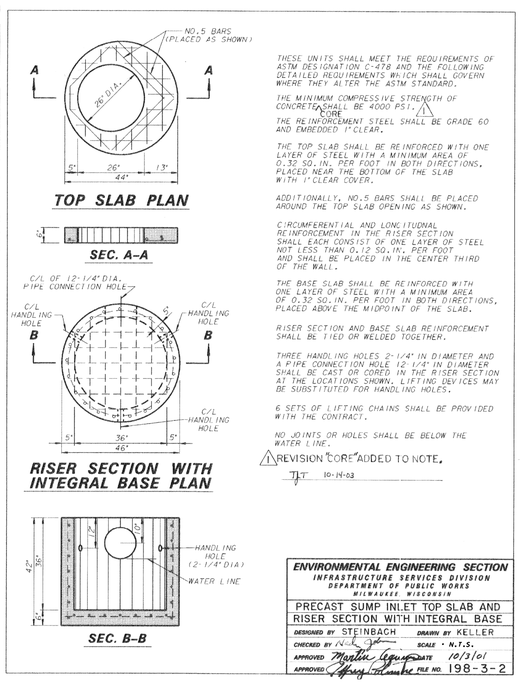

THESE UNITS SHALL MEET THE REQUIREMENTS OF ASTM DESIGNATION C-478 AND THE FOLLOWING DETAILED REQUIREMENTS WHICH SHALL GOVERN WHERE THEY ALTER THE ASTM STANDARD.

THE MINIMUM COMPRESSIVE STRENGTH OF CONCRETE CORE SHALL BE 4000 PSI. △1

THE REINFORCEMENT STEEL SHALL BE GRADE 60 AND EMBEDDED 1" CLEAR.

THE TOP SLAB SHALL BE REINFORCED WITH ONE LAYER OF STEEL WITH A MINIMUM AREA OF 0.32 SQ.IN. PER FOOT IN BOTH DIRECTIONS, PLACED NEAR THE BOTTOM OF THE SLAB WITH 1" CLEAR COVER.

ADDITIONALLY, NO.5 BARS SHALL BE PLACED AROUND THE TOP SLAB OPENING AS SHOWN.

CIRCUMFERENTIAL AND LONGITUDNAL REINFORCEMENT IN THE RISER SECTION SHALL EACH CONSIST OF ONE LAYER OF STEEL NOT LESS THAN 0.12 SQ.IN. PER FOOT AND SHALL BE PLACED IN THE CENTER THIRD OF THE WALL.

THE BASE SLAB SHALL BE REINFORCED WITH ONE LAYER OF STEEL WITH A MINIMUM AREA OF 0.32 SQ.IN. PER FOOT IN BOTH DIRECTIONS, PLACED ABOVE THE MIDPOINT OF THE SLAB.

RISER SECTION AND BASE SLAB REINFORCEMENT SHALL BE TIED OR WELDED TOGETHER.

THREE HANDLING HOLES 2-1/4" IN DIAMETER AND A PIPE CONNECTION HOLE 12 1/4" IN DIAMETER SHALL BE CAST OR CORED IN THE RISER SECTION AT THE LOCATIONS SHOWN. LIFTING DEVICES MAY BE SUBSTITUTED FOR HANDLING HOLES.

6 SETS OF LIFTING CHAINS SHALL BE PROVIDED WITH THE CONTRACT.

NO JOINTS OR HOLES SHALL BE BELOW THE WATER LINE.

△1 REVISION "CORE" ADDED TO NOTE.
TJT 10-14-03

ENVIRONMENTAL ENGINEERING SECTION INFRASTRUCTURE SERVICES DIVISION DEPARTMENT OF PUBLIC WORKS MILWAUKEE WISCONSIN	
PRECAST SUMP INLET TOP SLAB AND RISER SECTION WITH INTEGRAL BASE	
DESIGNED BY STEINBACH	DRAWN BY KELLER
CHECKED BY	SCALE • N.T.S.
APPROVED	DATE 10/3/01
APPROVED	FILE NO. 198-3-2

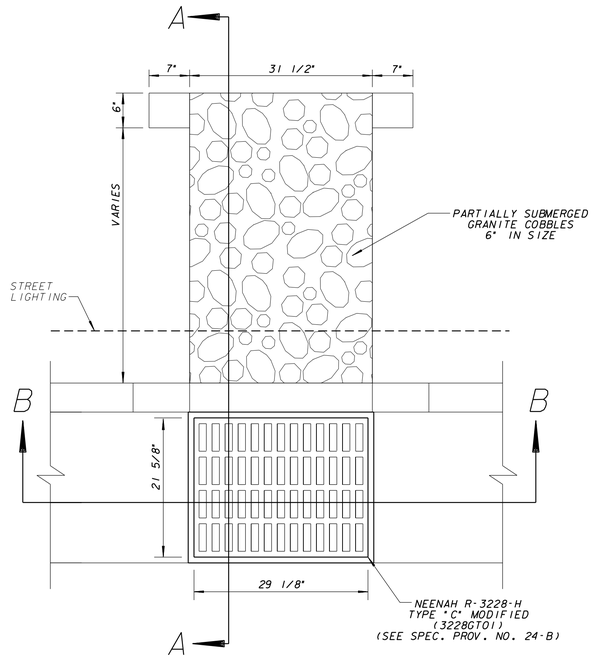

STORM CURB INLET WITH GRATE TYPE "A"
SCALE • N.T.S.

FOR SPECIAL PROVISIONS SEE PLAN FILE NO. 198-5-92
SHEET NO. 1 OF 9 IS PLAN FILE NO. 241-6
SHEET NO. 2 OF 9 IS PLAN FILE NO. 241-7
SHEET NO. 3 OF 9 IS PLAN FILE NO. 241-8
SHEET NO. 4 OF 9 IS PLAN FILE NO. 241-9
SHEET NO. 5 OF 9 IS PLAN FILE NO. 241-10
SHEET NO. 6 OF 9 IS PLAN FILE NO. 241-11
SHEET NO. 7 OF 9 IS PLAN FILE NO. 241-12
SHEET NO. 8 OF 9 IS PLAN FILE NO. 241-13
SHEET NO. 9 OF 9 IS PLAN FILE NO. 241-14

WISCONSIN
NADER M. JABER
E-33664
MILWAUKEE, WI
PROFESSIONAL ENGINEER

CALL DIGGERS HOTLINE
1-800-242-8511
TOLL FREE TO OBTAIN LOCATION OF UNDERGROUND BEFORE YOU DIG. WISCONSIN STATUTE 182.0715 REQUIRES MIN. OF 3 WORK DAYS NOTICE BEFORE YOU EXCAVATE

NO.	BY	REVISION	DATE
△			
△			

AS BUILT CONTRACT NO.
DATE ENT'D. ENT'D. BY

ENVIRONMENTAL ENGINEERING SECTION INFRASTRUCTURE SERVICES DIVISION DEPARTMENT OF PUBLIC WORKS MILWAUKEE, WISCONSIN		
BIOSWALE DETAILS		
IN / FROM / TO	N. TERRACE AVENUE E. BRADFORD AVENUE E. LA FAYETTE PLACE	
SCALE NTS	APPROVED	DATE
1/4 SEC. NO. 318,356	Nader Jaber	01-27-2016 DESIGN ENGINEER
PLAN DATE 12/1/2015		
DESIGNED BY S. GANTT	Timothy J. Thur	01-27-2016 ENGINEER IN CHARGE
DRAWN BY R. PEREZ		
CHECKED BY S. BEKELE		
SYSTEM NO.		01-27-2016
EASEMENT NO.	CITY ENGINEER & SPECIAL DEPUTY COMMISSIONER OF PUBLIC WORKS	
CONTRACT NO.	PROJECT NO. 1	C.C. FILE NO. 150323
PROJ. ID. SM499150106	OFF. NOTICE NO. 20-2016	DATE ADOPTED 6/23/2015
SHEET NO. 9 OF 9	PLAN FILE NO. 241-14	

MMSD _____ SCANNED _____ MICROFILMED _____