W:\STRUB0933\PLANS\C1_TITLESHEET.DGN 02-18-2014

DRAWING INDEX	
SHEET NO.	SHEET TITLE
C1	TITLE SHEET
C2	SILT FENCE
C3	CONCRETE PAVEMENT APPROACH SLAB
C4	NAME PLATE
C5	CITY UNDERGROUND CONDUIT
C6	CITY UNDERGROUND CONDUIT DETAILS
C7	ADJUSTING CUC MANHOLE COVERS
T1	PAVEMENT MARKING
T2	BRIDGE CLOSURE
T3	TRAFFIC DETOUR ROUTE
T4	MISCELLANEOUS QUANTITIES
1	BRIDGE TITLE SHEET
2	SITE AND ELEVATION PLAN
3	CROSS SECTION PLAN
4	ESTIMATE OF QUANTITIES
5	SUBSURFACE EXPLORATION
6	ABUTMENT FOOTING PLAN
7	EAST ABUTMENT ELEVATION
8	EAST ABUTMENT BILL OF BARS AND SECTION
9	WEST ABUTMENT ELEVATION
10	WEST ABUTMENT BILL OF BARS AND SECTION
11	DECK GRADES
12	DECK PLAN
13	DECK CROSS SECTIONS
14	DECK DETAILS AND BILL OF BARS
15	LIGHTING DETAILS
16	LIGHTING BILL OF BARS
17	RAILING ELEVATION, BAR DETAILS & PLAN
18	RAILING DETAILS AND BILL OF BARS
19	STEEL RAILING DETAILS
NE1	GENERAL PLAN AND ELEVATION
NE2	SUBSURFACE EXPLORATION
NE3	WALL DETAILS AND QUANTITIES
NE4	ANCHOR SLAB PLAN
NE5	RAILING ELEVATION, BAR DETAILS & PLAN
NE6	PARAPET DETAILS AND BILL OF BARS
NE7	STEEL RAILING DETAILS
SE1	GENERAL PLAN AND ELEVATION
SE2	SUBSURFACE EXPLORATION
SE3	WALL DETAILS AND QUANTITIES
SE4	ANCHOR SLAB PLAN
SE5	RAILING ELEVATION, BAR DETAILS & PLAN
SE6	PARAPET DETAILS AND BILL OF BARS
SE7	STEEL RAILING DETAILS
NW1	GENERAL PLAN AND ELEVATION
NW2	SUBSURFACE EXPLORATION
NW3	WALL DETAILS AND QUANTITIES
NW4	ANCHOR SLAB PLAN
NW5	RAILING ELEVATION, BAR DETAILS & PLAN
NW6	PARAPET DETAILS AND BILL OF BARS
NW7	STEEL RAILING DETAILS
SW1	GENERAL PLAN AND ELEVATION
SW2	SUBSURFACE EXPLORATION
SW3	WALL DETAILS AND QUANTITIES
SW4	ANCHOR SLAB PLAN
SW5	RAILING ELEVATION, BAR DETAILS & PLAN
SW6	PARAPET DETAILS AND BILL OF BARS
SW7	STEEL RAILING DETAILS

CITY OF MILWAUKEE

CONSTRUCTION OF

WEST LISBON AVENUE

BRIDGE, RETAINING WALLS AND APPROACHES

OVER CANADIAN PACIFIC RAILWAY

LOCAL STREET

MILWAUKEE COUNTY

STRUCTURE B-40-899

STA. 4+93.94

BEGIN PROJECT

STA. 4+04.59

END PROJECT

STA. 7+44.76

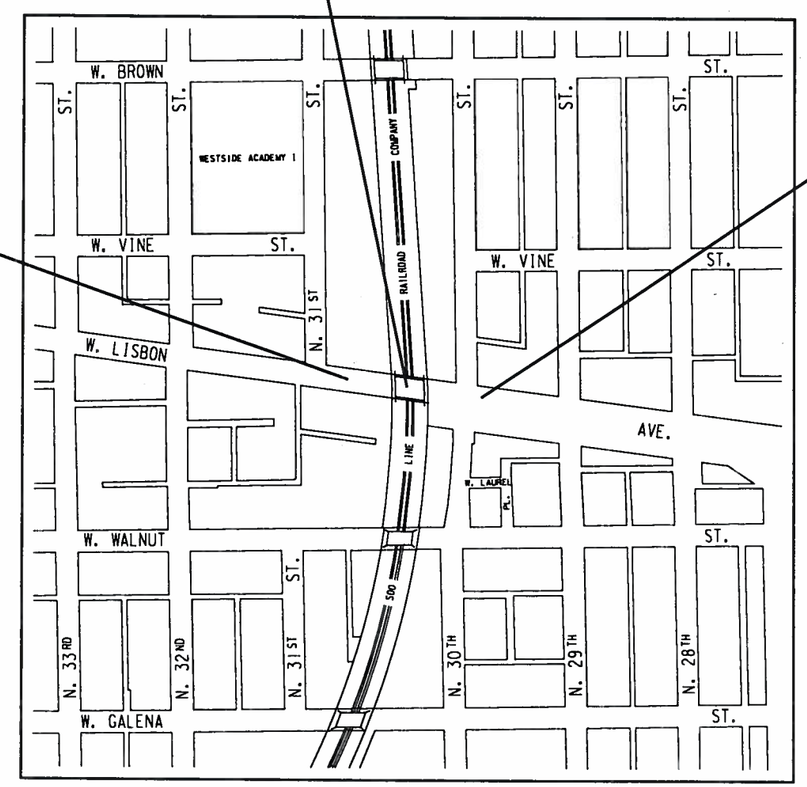

N

SCALE 0 200 400 FEET

TOTAL NET LENGTH OF CENTERLINE = 0.065 MI. (URBAN)

ELEVATIONS SHOWN ON THIS PLAN ARE REFERENCED TO THE CITY OF MILWAUKEE DATUM.

TO CONVERT ELEVATIONS SHOWN ON THIS PLAN TO NATIONAL GEODEDIC VERTICAL DATUM OF 1929, ADD 580.603 TO ELEVATIONS SHOWN ON THIS PLAN.

City of Milwaukee

Department of Public Works

Infrastructure Services Division

APPROVED BY:

STREET DESIGN SERVICES MANAGER — DATE 2/18/14

CITY ENGINEER & SPECIAL DEPUTY COMMISSIONER OF PUBLIC WORKS — DATE 2/19/14

WEST LISBON AVENUE
OVER CANADIAN PACIFIC RAILWAY
TITLE SHEET

REVISIONS

DESIGNED BY H.J.R.

DRAWN BY R.B.M.

CHECKED BY J.J.K.

DATE 02-2014 | SCALE NONE

JOB NUMBER BR100-14-0105

SHEET NUMBER C1 OF C7

OF 58

W:\STR\B0933\PLANS\C2_SILTFENCE.DGN 02-13-2014

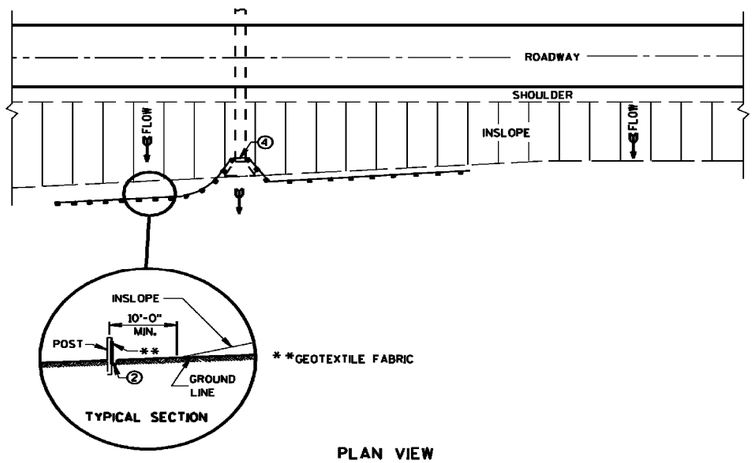

PLAN VIEW

TYPICAL APPLICATION OF SILT FENCE

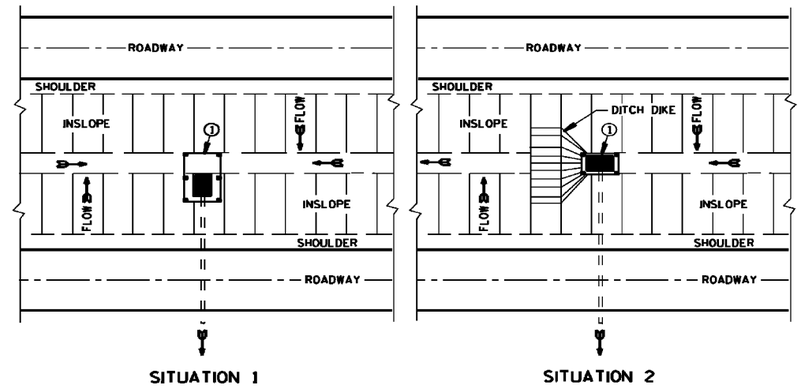

PLAN VIEW

SILT FENCE AT MEDIAN SURFACE DRAINS

GENERAL NOTES

DETAILS OF CONSTRUCTION NOT SHOWN ON THIS DRAWING SHALL CONFORM TO THE PERTINENT REQUIREMENTS OF THE STANDARD SPECIFICATIONS AND APPLICABLE SPECIAL PROVISIONS.

① HORIZONTAL BRACE REQUIRED WITH 2" X 4" WOODEN FRAME OR EQUIVALENT AT TOP OF POSTS.

② FOR MANUAL INSTALLATIONS THE TRENCH SHALL BE A MINIMUM OF 4" WIDE & 6" DEEP TO BURY AND ANCHOR THE GEOTEXTILE FABRIC. FOLD MATERIAL TO FIT TRENCH AND BACKFILL & COMPACT TRENCH WITH EXCAVATED SOIL.

③ WOOD POSTS SHALL BE A MINIMUM SIZE OF 1 1/8" X 1 1/8" OF OAK OR HICKORY.

④ SILT FENCE TO EXTEND ACROSS THE TOP OF THE PIPE.

⑤ CONSTRUCT SILT FENCE FROM A CONTINUOUS ROLL IF POSSIBLE BY CUTTING LENGTHS TO AVOID JOINTS. IF A JOINT IS NECESSARY USE ONE OF THE FOLLOWING TWO METHODS: A) OVERLAP THE END POSTS AND TWIST, OR ROTATE, AT LEAST 180 DEGREES. B) HOOK THE END OF EACH SILT FENCE LENGTH.

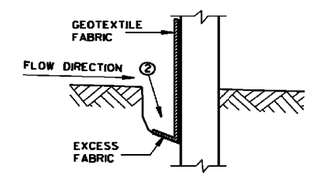

TRENCH DETAIL

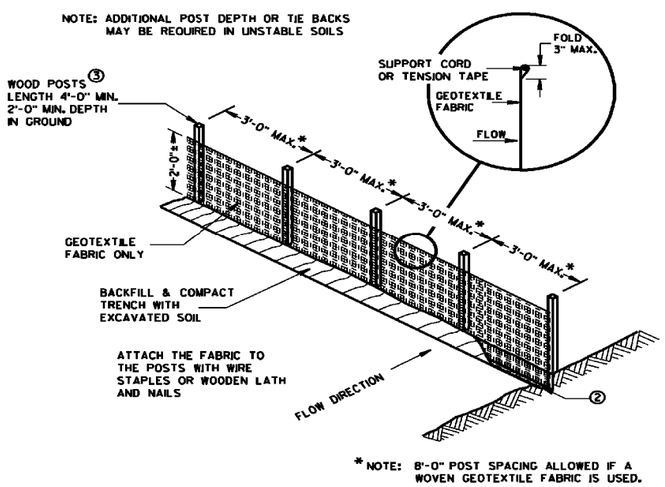

SILT FENCE

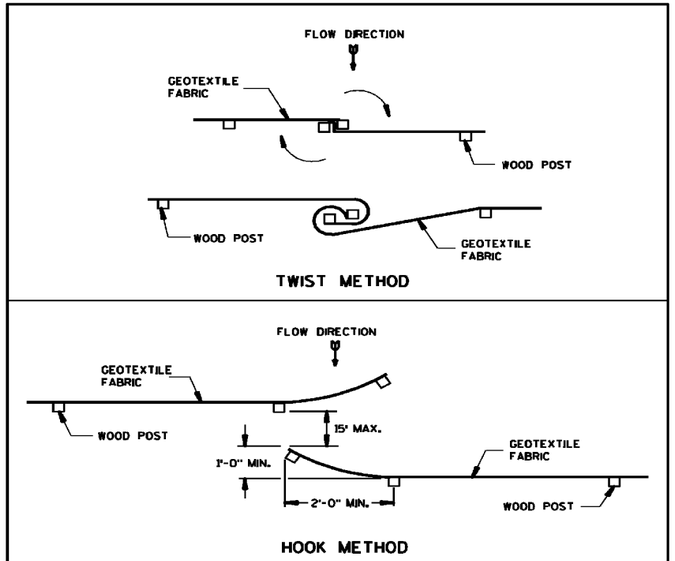

JOINING TWO LENGTHS OF SILT FENCE ⑤

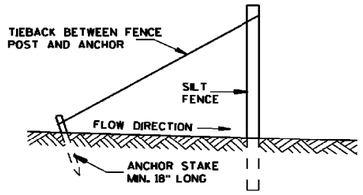

SILT FENCE TIE BACK
(WHEN REQUIRED BY THE ENGINEER)

City of Milwaukee

Department of Public Works

Infrastructure Services Division

WEST LISBON AVENUE
OVER CANADIAN PACIFIC RAILWAY
SILT FENCE

REVISIONS

DESIGNED BY H.J.R.	
DRAWN BY R.B.M.	
CHECKED BY J.J.K.	
DATE 02-2014	SCALE NONE
JOB NUMBER BR100-14-0105	
SHEET NUMBER C2 OF C7	
OF 58	

W:\STRX\B0933\PLANS\C3_CONCRETEPAVEMENTAPPROACHSLAB.DGN 02-13-2014

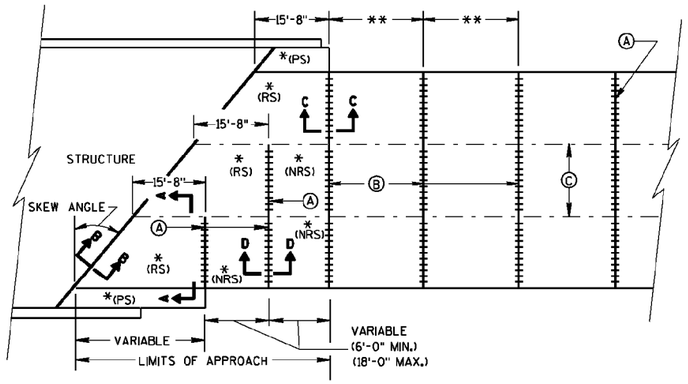

SKEWED APPROACH
(PAVEMENT MORE THAN 2 LANES)

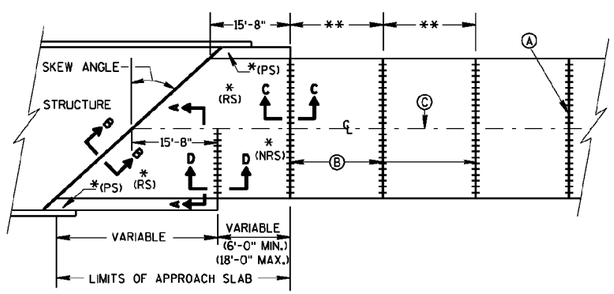

SKEWS >30°
(PAVEMENT WIDTH ≤30')

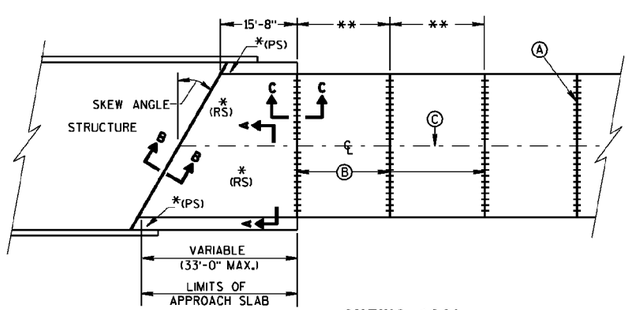

SKEWS ≤30°
(PAVEMENT WIDTH ≤30')

APPROACH SLAB AND ADJACENT PAVEMENT

*(RS) = REINFORCED CONCRETE SLAB
*(PS) = PAVED CONCRETE SHOULDER: CONCRETE PAVEMENT, OR CONCRETE SURFACE DRAIN (SEE DETAILS ELSEWHERE IN THE PLAN)
*(NRS) = NON-REINFORCED CONCRETE SLAB

**STANDARD TRANSVERSE JOINT SPACING (SEE SDD 13C4, SDD 13C11, & SDD 13C13)

Ⓐ STANDARD CONTRACTION JOINT NORMAL TO ℄ OR ℄
Ⓑ 1½" EXPANSION JOINT WITH DOWEL BARS NORMAL TO ℄ OR ℄
Ⓒ STANDARD LONGITUDINAL JOINT AND TIE BARS.

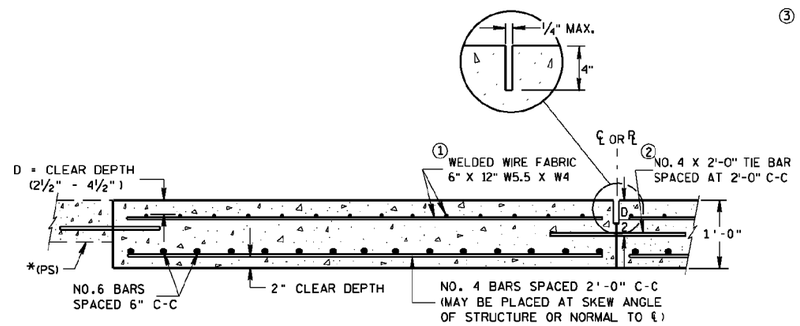

SECTION A-A
REINFORCEMENT POSITIONING DETAIL

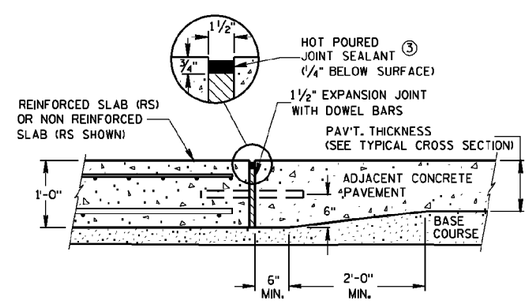

SECTION C-C
TRANSITION DETAIL
APPROACH SLAB TO ADJACENT PAVEMENT

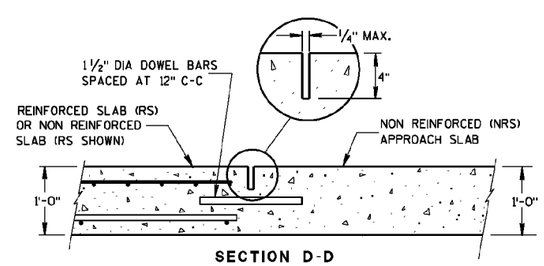

SECTION D-D
CONTRACTION JOINT

GENERAL NOTES

APPROACH SLABS ABUTTING AN HMA PAVEMENT OVER BASE COURSE DO NOT NEED TO BE DOWELED.

THE CONTRACTOR MAY SPLICE NO. 6 BARS IN THE APPROACH SLAB FOR SKEWED STRUCTURES ONLY. STAGGER SPLICES WITH A MAXIMUM OF ONE SPLICE PER BAR. THE LENGTH OF LAP IS 20 INCHES.

① THE CONTRACTOR MAY USE NO. 4 BARS SPACED AT 2'-0" C-C IN BOTH THE LONGITUDINAL AND TRANSVERSE DIRECTIONS FOR TOP REINFORCEMENT AS AN ALTERNATIVE TO THE WELDED WIRE FABRIC.

② THE CONTRACTOR MAY OMIT TIE BARS BETWEEN REINFORCED SLABS WHERE SLAB REINFORCEMENT BARS EXTEND ACROSS THE CENTERLINE OR REFERENCE LINE.

③ USE A JOINT SEALANT MEETING THE REQUIREMENTS OF ASTM D6690.

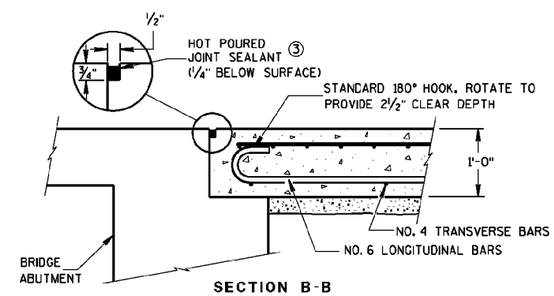

SECTION B-B
BEND DETAIL
BOTTOM REINFORCEMENT

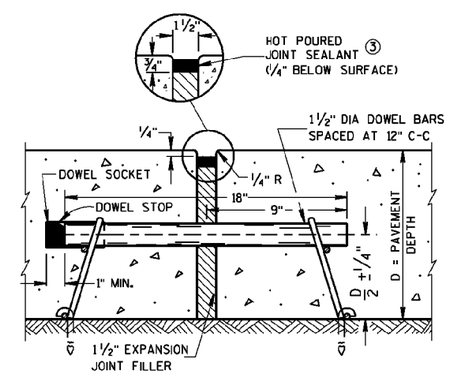

EXPANSION JOINT

City of Milwaukee

Department of Public Works

Infrastructure Services Division

WEST LISBON AVENUE
OVER CANADIAN PACIFIC RAILWAY
CONCRETE PAVEMENT APPROACH SLAB

REVISIONS

DESIGNED BY H.J.R.	
DRAWN BY R.B.M.	
CHECKED BY J.J.K.	
DATE 02-2014	SCALE NONE
JOB NUMBER BR100-14-0105	
SHEET NUMBER C3 OF C7	
OF 58	

W:\STR\B0933\PLANS\C4_NAMEPLATE.DGN 02-13-2014

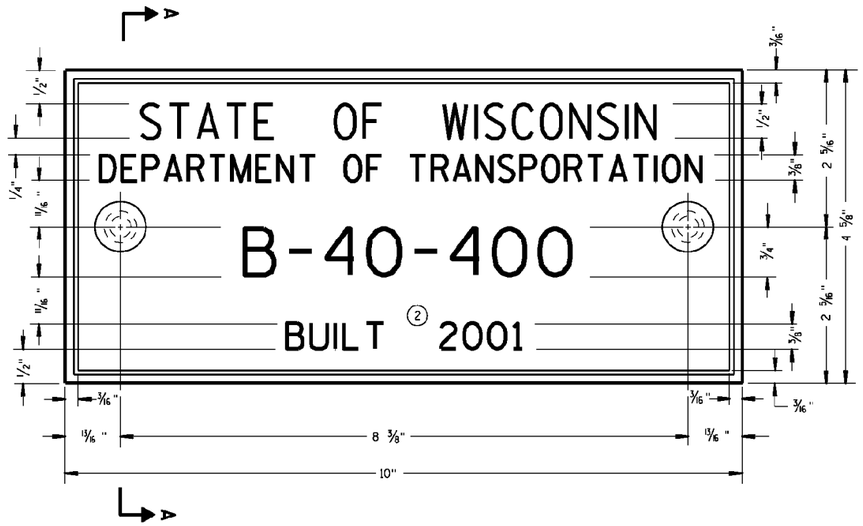

TYPICAL NAME PLATE
(BRIDGES, CULVERTS, AND RETAINING WALLS)

GENERAL NOTES

NAME PLATES TO BE INSTALLED ON BRIDGES, CULVERTS, AND RETAINING WALLS SHALL CONFORM TO THE REQUIREMENTS OF SECTION 502.3.11 OF THE STANDARD SPECIFICATIONS.

THE BRIDGE NUMBER AND YEAR BUILT SHOWN ON THIS DRAWING ARE EXAMPLES ONLY. SEE CONSTRUCTION PLANS FOR INDIVIDUAL NUMBERING AND YEAR BUILT.

① EPOXY RESIN SHALL BE FROM AN APPROVED MANUFACTURER AND USED IN ACCORDANCE WITH MANUFACTURER'S RECOMMENDATIONS.

② REHABILITATION OF AN EXISTING STRUCTURE SHOULD USE THE DATE OF ORIGINAL STRUCTURE CONSTRUCTION.

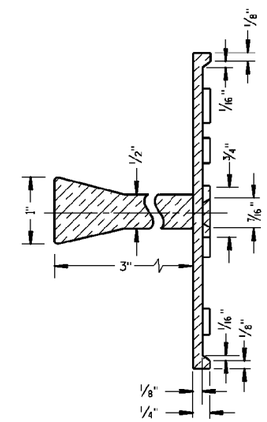

SECTION A-A

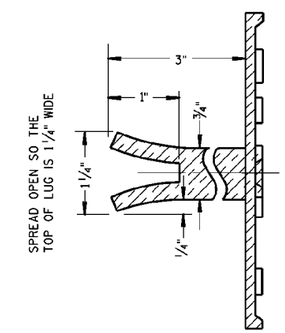

ALTERNATE LUG

FOR MULTI-UNIT STRUCTURES LINE 3 ABOVE SHALL READ

B = BRIDGE
C = CULVERT
R = RETAINING WALL

COUNTY NO.

BRIDGE NO.

UNIT NO. FOR MULTIPLE UNIT BRIDGE

B-40-400-1A

NUMBERING DESIGNATION
MULTI-UNIT STRUCTURES

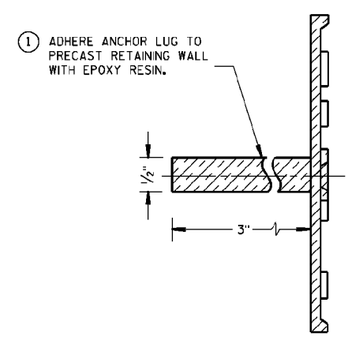

ALTERNATE LUG
(FOR ATTACHMENT TO PRECAST STRUCTURES)

City of Milwaukee

Department of Public Works

Infrastructure Services Division

WEST LISBON AVENUE
OVER CANADIAN PACIFIC RAILWAY
NAME PLATE

REVISIONS

DESIGNED BY H.J.R.	
DRAWN BY R.B.M.	
CHECKED BY J.J.K.	
DATE 02-2014	SCALE NONE
JOB NUMBER BR100-14-0105	
SHEET NUMBER C4 OF C7	
OF 58	

W:\STR\B0933\PLANS\C5_UGD CONDUIT.DGN 02-14-2014

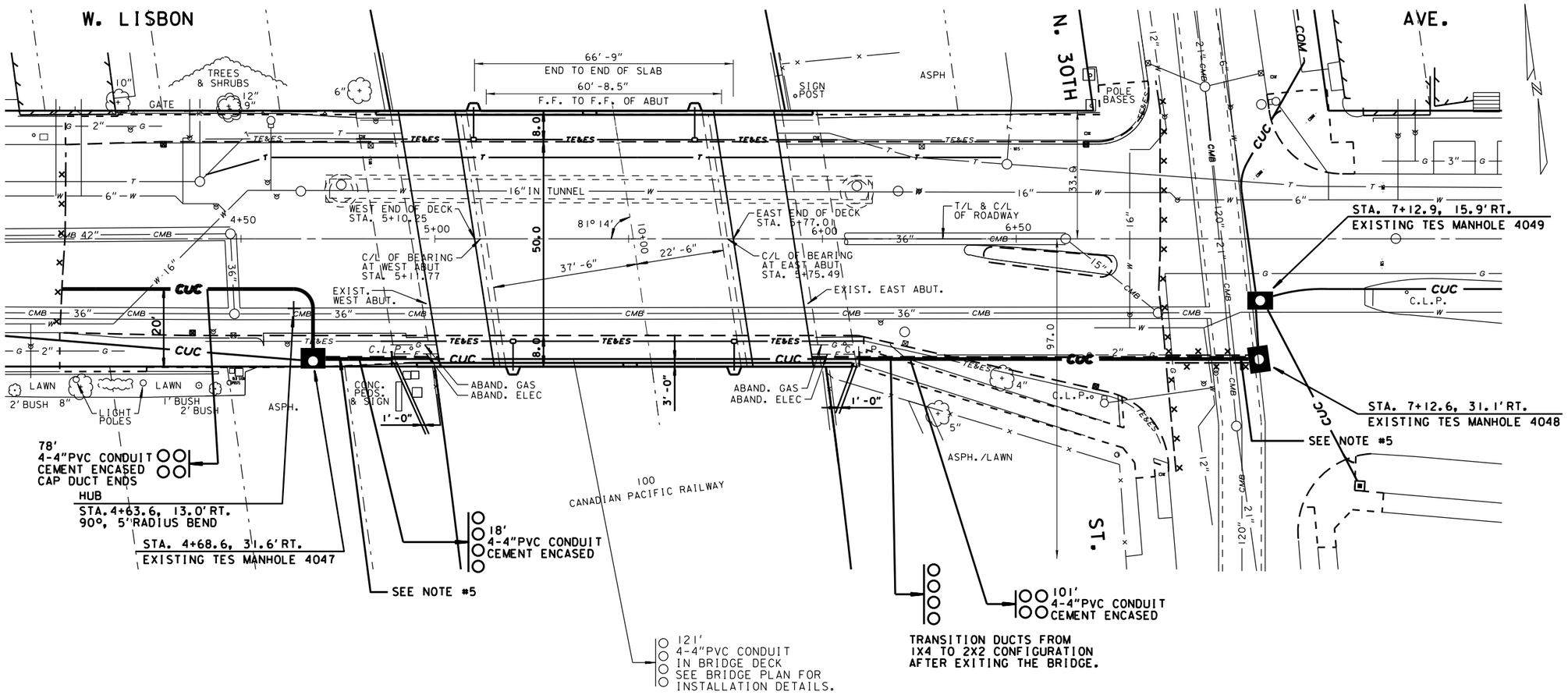

NOTES:

1) THE LOCATION OF EXISTING AND PROPOSED UTILITY INSTALLATIONS AS SHOWN ON THE PLANS IS APPROXIMATE. THERE MAY BE OTHER UTILITY INSTALLATIONS WITHIN THE PROJECT AREA WHICH ARE NOT SHOWN.
2) THE LOCATION OF THE EXISTING AND PROPOSED UTILITY INSTALLATIONS SHALL BE FIELD VERIFIED BY THE CONTRACTOR.
3) DIMENSIONS SHOWN ARE TO CENTER OF MANHOLE, DUCT PACKAGE OR UTILITY.
4) MAINTAIN A STANDARD DEPTH OF 39-INCHES BETWEEN FINISHED GRADE AND TOP OF CONDUIT.
5) REMOVE ABANDONED CONDUIT FROM THE MANHOLE WALL AS NEEDED. INSTALL THE PROPOSED CONDUIT INTO THE MANHOLE AT THE SAME LOCATION OF THE ABANDONED CONDUIT.

LEGEND

—— CUC ——	PROPOSED 4-INCH CEMENT ENCASED NONMETALLIC CONDUIT, NUMBER OF RUNS AS NOTED.
— — — — —	CONDUIT TO BE ABANDONED IN PLACE

City of Milwaukee

Department of Public Works

Infrastructure Services Division

WEST LISBON AVENUE OVER CANADIAN PACIFIC RAILWAY CITY UNDERGROUND CONDUIT

REVISIONS

DESIGNED BY K.L.R.

DRAWN BY S.J.S.

CHECKED BY

DATE	SCALE
02-2014	NONE

JOB NUMBER BR100-14-0105

SHEET NUMBER C5 OF C7

OF 58

W:\STR\B0933\PLANS\C6_UGD DETAILS.DGN 02-14-2014

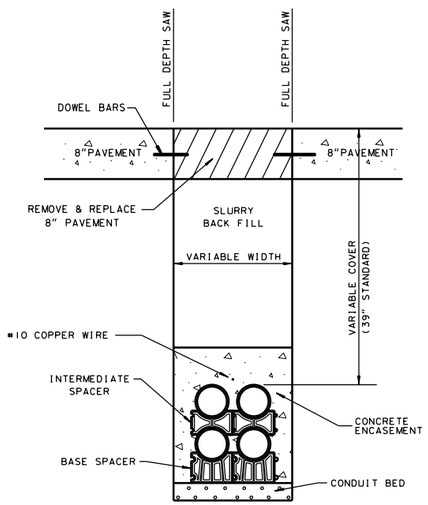

STA. 6+88 TO MANHOLE 4049

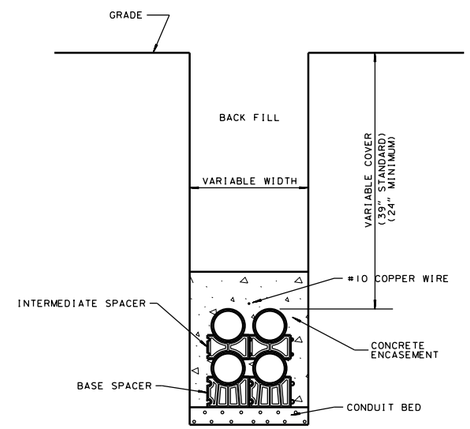

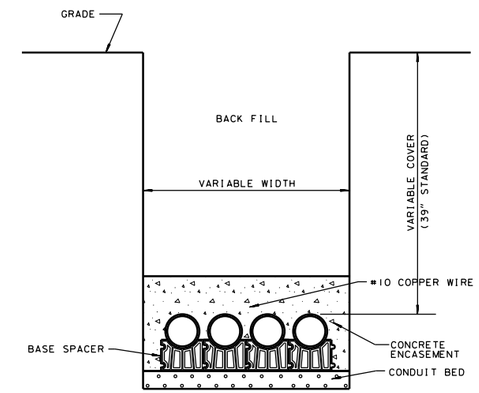

CROSS SECTION VIEW, TYP.
N.T.S.

COND.	3"	4"
A	10"	11 1/2"
B	5"	5 5/8"
C	1 1/2"	1 1/2"
D	3 1/2"	3 1/2"
E	1"	1"

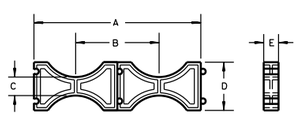

INTERMEDIATE SPACER

COND.	3"	4"
A	10"	11 1/2"
B	5"	5 5/8"
C	3"	3"
D	3 5/8"	4 1/4"
E	1"	1"
F	2 1/2"	2 1/2"

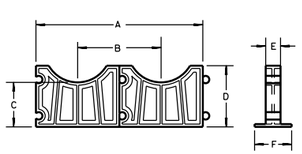

BASE SPACER

INTERMEDIATE AND BASE SPACER DETAIL

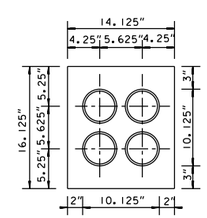

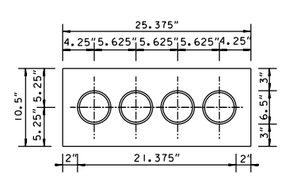

CROSS SECTION VIEW
N.T.S.

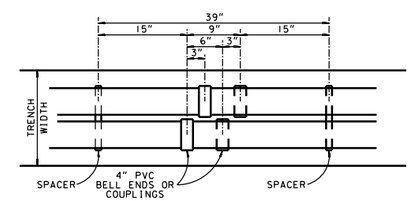

PLAN VIEW
N.T.S.

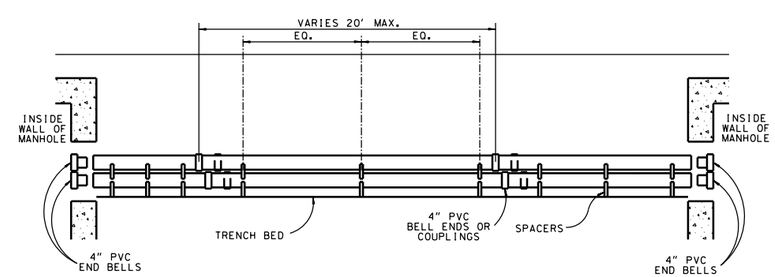

SECTION VIEW
N.T.S.

City of Milwaukee

Department of Public Works

Infrastructure Services Division

WEST LISBON AVENUE OVER CANADIAN PACIFIC RAILWAY CITY UNDERGROUND CONDUIT DETAILS

REVISIONS

DESIGNED BY K.L.R.

DRAWN BY S.J.S.

CHECKED BY

DATE 02-2014

SCALE NONE

JOB NUMBER BR100-14-0105

SHEET NUMBER C6 OF C7

OF 58

W:\STR\B0933\PLANS\C7_MANHOLE COVERS.DGN 02-14-2014

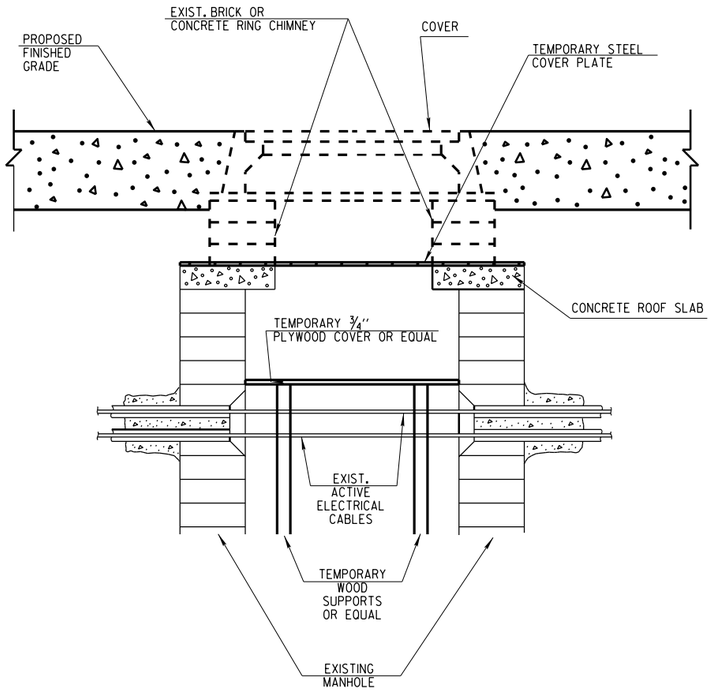

BLOCK OR PRECAST MANHOLE

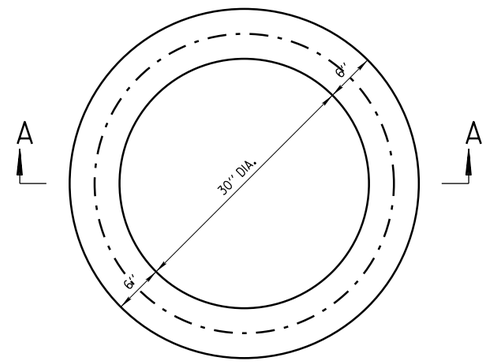

PLAN

CONCRETE ADJUSTING RING

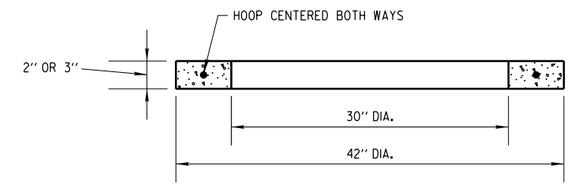

SECTION A-A

THE ADJUSTING RING SHALL BE 2" OR 3" IN HEIGHT.

THE CIRCUMFERENTIAL STEEL SHALL BE CENTERED WITHIN THE RING.

AREA OF CIRCUMFERENTIAL STEEL = 0.07 SQ. INCH PER VERTICAL FOOT WITH A MINIMUM OF .024 SQ. INCH IN ANY ONE RING.

THE MINIMUM COMPRESSIVE STRENGTH OF THE CONCRETE CORE SHALL BE 4000 P.S.I.

WEST LISBON AVE BRIDGE OVER CANADIAN PACIFIC RAILWAY					
NO.	LOCATION	MANHOLE ADJUSTMENT EACH	COVER	MANHOLE REPAIRS VF	REMARKS
4047	STA 4+68.6, 31.6 LT	1	NEW COVER	-	REMOVE CHIMNEY TO ROOF DECK
TOTAL		1			

ADJUSTING CUC MANHOLE COVERS

City of Milwaukee

Department of Public Works

Infrastructure Services Division

WEST LISBON AVENUE
OVER CANADIAN PACIFIC RAILWAY
ADJUSTING CUC MANHOLE COVERS

REVISIONS

DESIGNED BY K.L.R.

DRAWN BY S.J.S.

CHECKED BY

DATE 02-2014 | SCALE NONE

JOB NUMBER BR100-14-0105

SHEET NUMBER C7 OF C7

OF 58

W:\STR\B0933\PLANS\ T1_TRAFFIC.DGN 02-13-2014

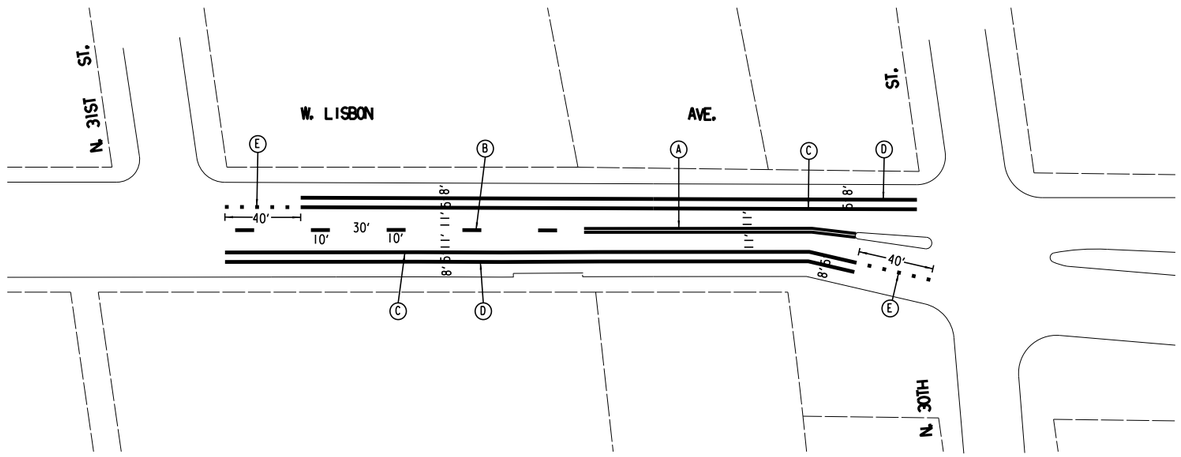

N

LEGEND

- (A) PAVEMENT MARKING EPOXY 4" DOUBLE YELLOW
- (B) PAVEMENT MARKING EPOXY 4" YELLOW
- (C) PAVEMENT MARKING EPOXY 6" WHITE (5 FT BIKE LANE)
- (D) PAVEMENT MARKING EPOXY 4" WHITE (8 FT PARKING LANE)
- (E) PAVEMENT MARKING EPOXY 6" DASHED WHITE

City of Milwaukee

Department of Public Works

Infrastructure Services Division

WEST LISBON AVENUE OVER CANADIAN PACIFIC RAILWAY PAVEMENT MARKING PLAN

REVISIONS

DESIGNED BY H.J.R.	
DRAWN BY K.P.S.	
CHECKED BY J.J.K.	
DATE 02-2014	SCALE NONE
JOB NUMBER BR100-14-0105	
SHEET NUMBER T1 OF T4	
OF 58	

W:\STR\B0933\PLANS\KAPUR\ T2_BRIDGE CLOSURE_02500I_TC.DGN 01-15-2014

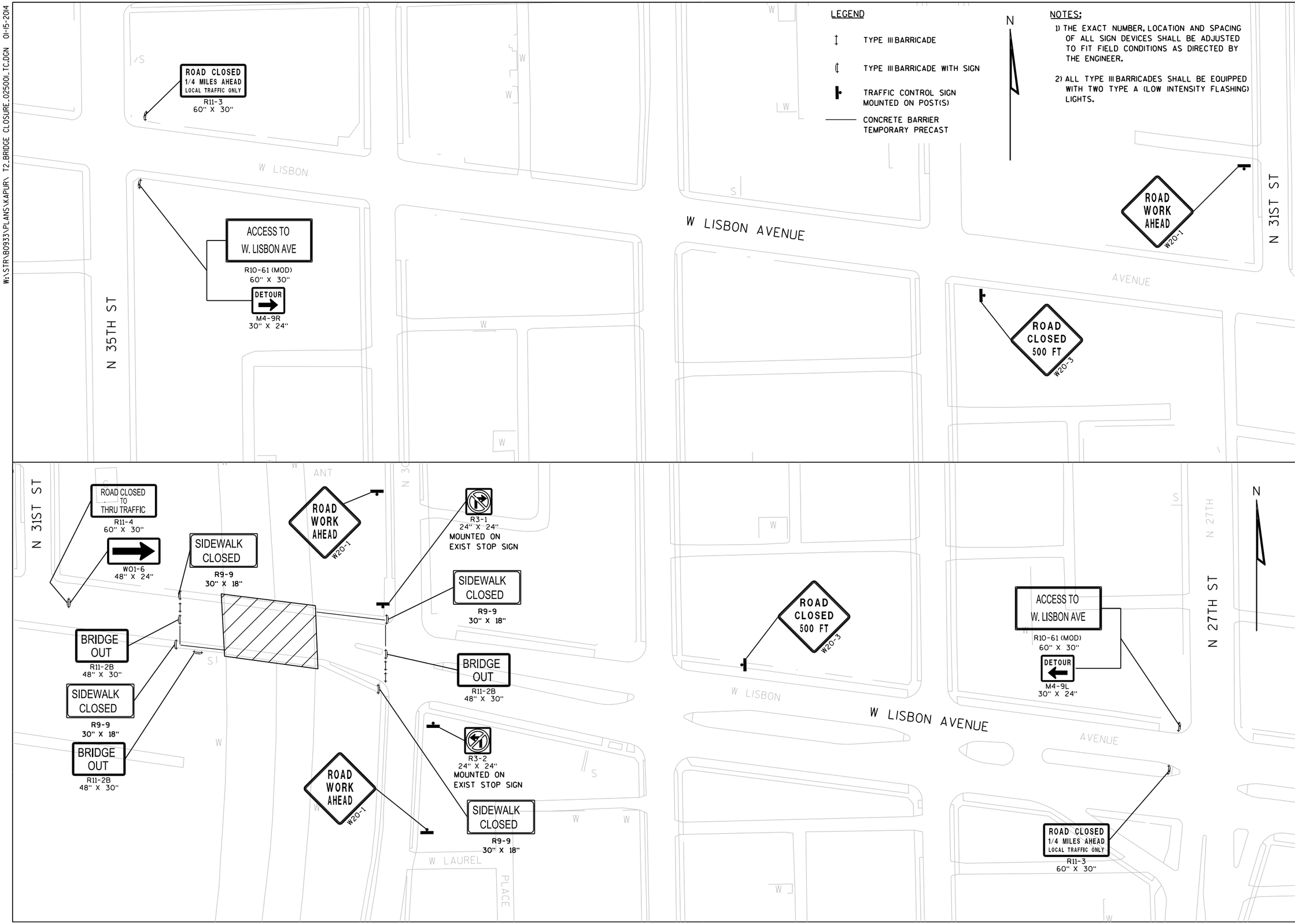

City of Milwaukee

Department of Public Works

Infrastructure Services Division

WEST LISBON AVENUE BRIDGE OVER CANADIAN PACIFIC RAILWAY BRIDGE CLOSURE

REVISIONS

DESIGNED BY SC KAPUR	
DRAWN BY MM KAPUR	
CHECKED BY SC KAPUR	
DATE 01/15/14	SCALE
JOB NUMBER BR100-14-0105	
SHEET NUMBER T2 OF T4	
OF 58	

W:\STR\B0933\PLANS\KAPUR\ T3_DETOUR_02TOOL_DT.DGN 01-15-2014

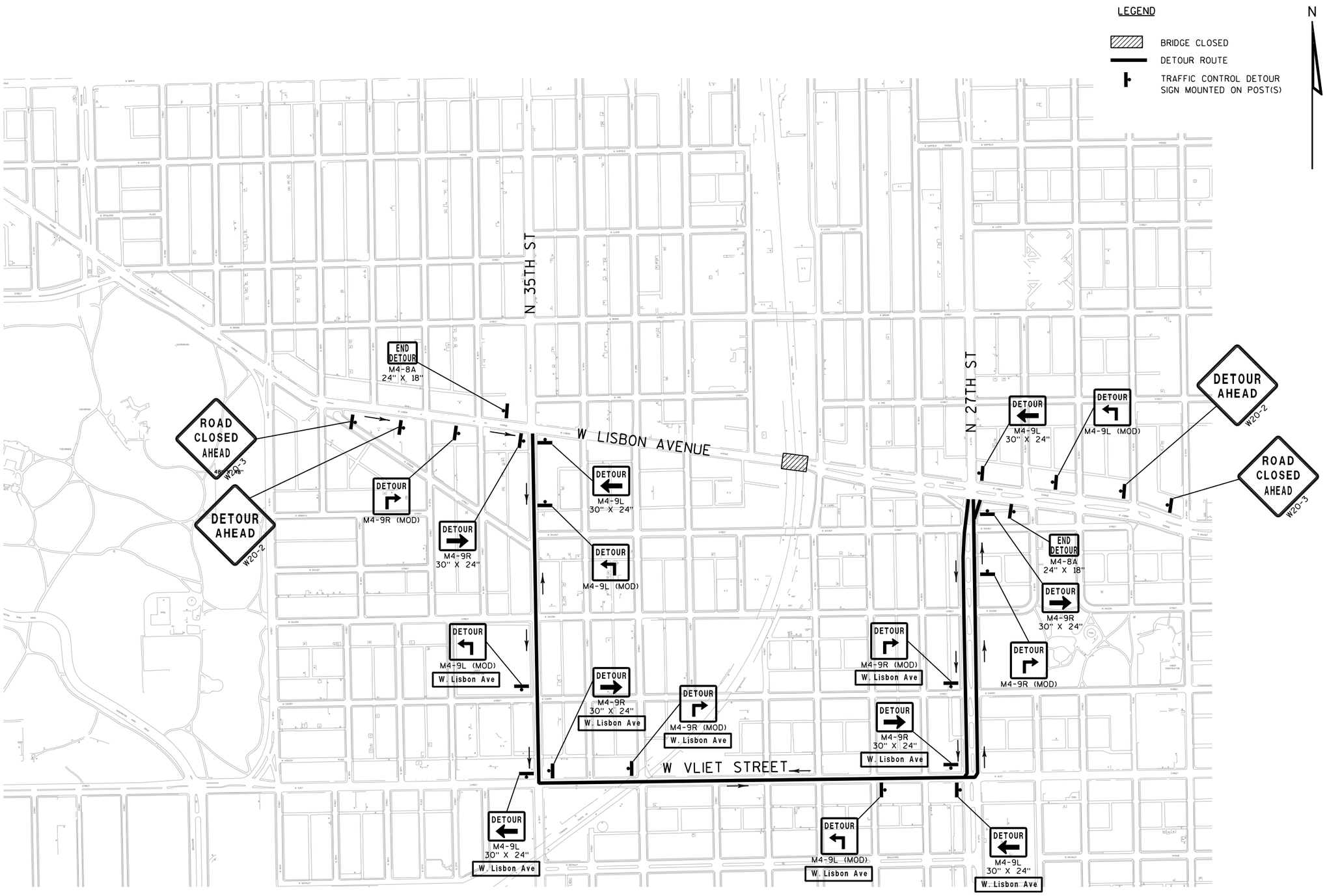

City of Milwaukee

Department of Public Works

Infrastructure Services Division

WEST LISBON AVENUE BRIDGE OVER CANADIAN PACIFIC RAILWAY TRAFFIC DETOUR ROUTE

REVISIONS

DESIGNED BY SC KAPUR	
DRAWN BY MM KAPUR	
CHECKED BY SC KAPUR	
DATE 01/15/14	SCALE
JOB NUMBER BR100-14-0105	
SHEET NUMBER T3 OF T4	
OF 58	

W:\STR\B0933\PLANS\KAPUR\ T3_DETOUR_02TOOL_DT.DGN 01-15-2014

TRAFFIC CONTROL

LOCATION	DURATION DAYS	603.8000 CONCRETE BARRIER TEMPORARY DELIVERED LF	603.8125 CONCRETE BARRIER TEMPORARY PRECAST INSTALLED LF	643.0420 TRAFFIC CONTROL BARRICADES TYPE III EACH	643.0420 DAYS	643.0705 TRAFFIC CONTROL WARNING LIGHTS TYPE A EACH	643.0705 DAYS	643.0900 TRAFFIC CONTROL SIGNS EACH	643.0900 DAYS	643.3000 TRAFFIC CONTROL DETOUR SIGNS EACH	643.3000 DAYS
W. LISBON AVENUE	225	188	188	15	3,375	30	6,750	22	4,950	30	6,750
PROJECT TOTAL		188	188		3,375		6,750		4,950		6,750

LIST OFTRAFFIC CONTROL AND DETOUR SIGNS:

ITEMS	AMOUNT	SIZE (")	ADDITIONAL NOTES:
M1-94	8	55x15	W. LISBON AVE
M4-8A	2	24x18	
M4-9L	5	30x24	
M4-9L (MOD)	4	30x24	
M4-9R	5	30x24	
M4-9R (MOD)	4	30x24	
R10-61 (MOD)	2	60x30	ACCESS TO W. LISBON AVE
R11-2B	3	48x30	
R11-3	2	60x30	
R11-4	1	60x30	
R3-1	1	24x24	
R3-2	1	24x24	
R9-9	4	30x18	
W20-1	3	48x48	
W20-2	2	48x48	
W20-3A	2	48x48	
W20-3D	2	48x48	
WO1-6	1	48x24	
	52		

TRAFFIC CONTROL PROJECT ITEMS

LOCATION	643.0100 TRAFFIC CONTROL PROJECT EACH	643.2000 TRAFFIC CONTROL DETOUR PROJECT EACH
W. LISBON AVENUE	1	1
PROJECT TOTAL	1	1

PAVEMENT MARKING

LOCATION	646.0106 PAVEMENT MARKING EPOXY 4-INCH (WHITE) LF	646.0106 PAVEMENT MARKING EPOXY 4-INCH (YELLOW) LF	646.0116 PAVEMENT MARKING EPOXY 6-INCH (WHITE) LF
W. LISBON AVENUE	660	340	680
PROJECT TOTAL	1,000		680

City of Milwaukee

Department of Public Works

Infrastructure Services Division

WEST LISBON AVENUE BRIDGE
OVER CANADIAN PACIFIC RAILWAY
MISCELLANEOUS QUANTITIES

REVISIONS

DESIGNED BY
SC KAPUR

DRAWN BY
MM KAPUR

CHECKED BY
SC KAPUR

DATE 01/15/14 | SCALE

JOB NUMBER
BR100-14-0105

SHEET NUMBER
T4 OF T4

OF
58

W:\STR\B0933\PLANS\ 01TITLE.DGN 02-13-2014

WEST LISBON AVENUE BRIDGE
OVER THE CANADIAN PACIFIC RAILWAY

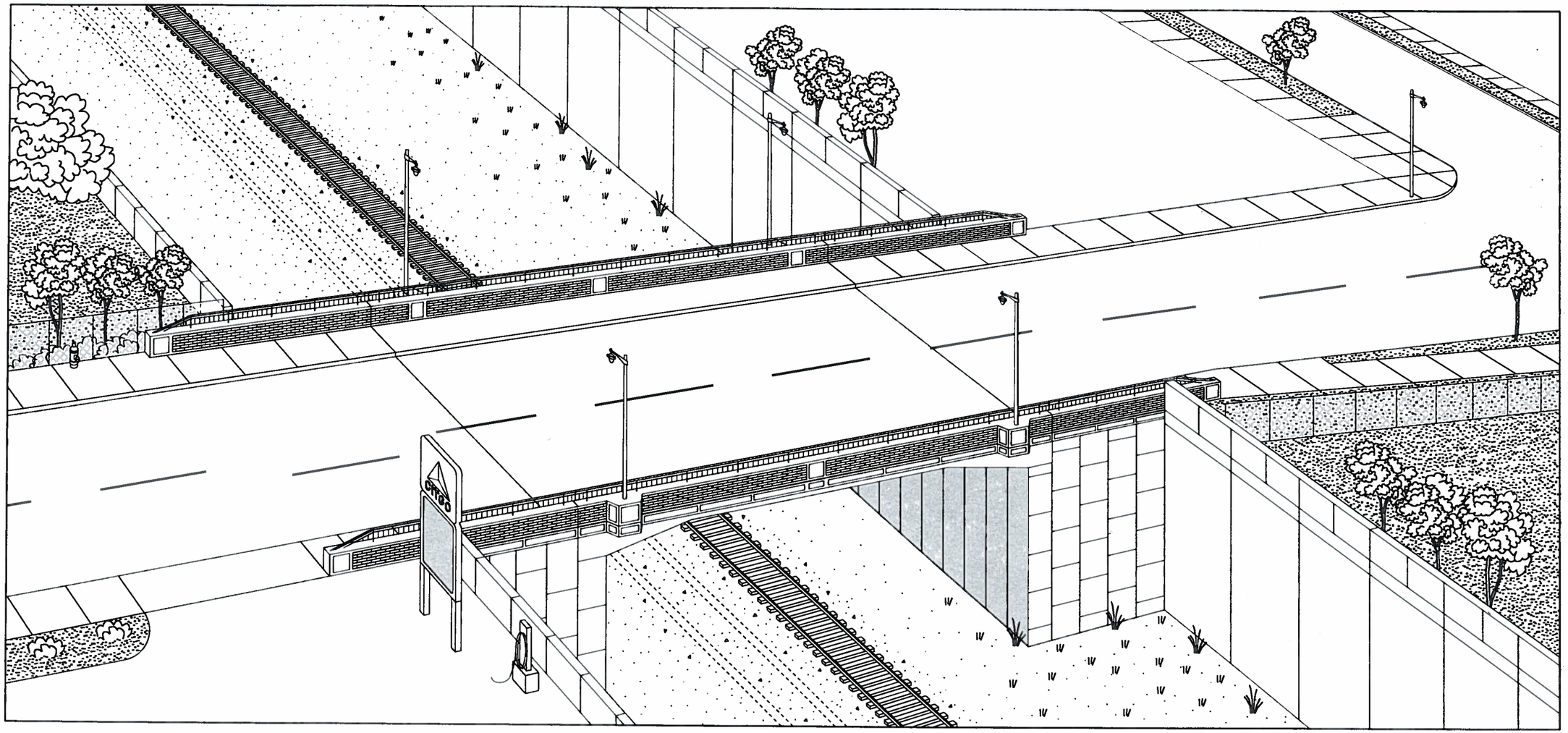

LIST OF DRAWINGS

1. BRIDGE TITLE SHEET
2. SITE AND ELEVATION PLAN
3. CROSS SECTION PLAN
4. ESTIMATE OF QUANTITIES
5. SUBSURFACE EXPLORATION
6. ABUTMENT FOOTING PLAN
7. EAST ABUTMENT ELEVATION
8. EAST ABUTMENT BILL OF BARS AND SECTION
9. WEST ABUTMENT ELEVATION
10. WEST ABUTMENT BILL OF BARS AND SECTION
11. DECK GRADES
12. DECK PLAN
13. DECK CROSS SECTIONS
14. DECK DETAILS AND BILL OF BARS
15. LIGHTING DETAILS
16. LIGHTING BILL OF BARS
17. RAILING ELEVATION, BAR DETAILS, AND PLAN
18. RAILING DETAILS AND BILL OF BARS
19. STEEL RAILING DETAILS

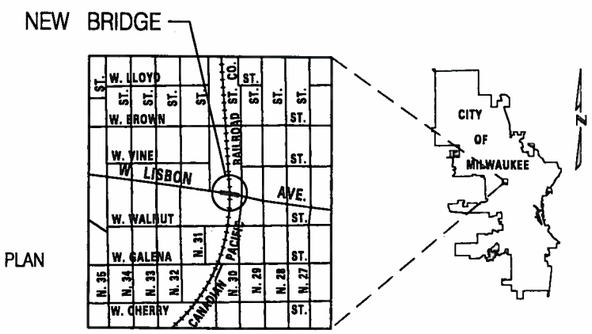

LOCATION MAP

WISCONSIN
CRAIG S. LIBERTO
E-23746
MILWAUKEE
WIS.
PROFESSIONAL ENGINEER

Craig S. Liberto 2/18/14

City of Milwaukee

Department of Public Works

Infrastructure Services Division

WEST LISBON AVENUE BRIDGE
OVER CANADIAN PACIFIC RAILWAY
B-40-899
BRIDGE TITLE SHEET

REVISIONS

DESIGNED BY H.J.R.	
DRAWN BY R.B.M.	
CHECKED BY J.J.K.	
DATE 02-2014	SCALE NONE
JOB NUMBER BR100-14-0105	
SHEET NUMBER 1 OF 19	
OF 58	

W:\STR\B0933\PLANS\ 02SITE.DGN 02-17-2014

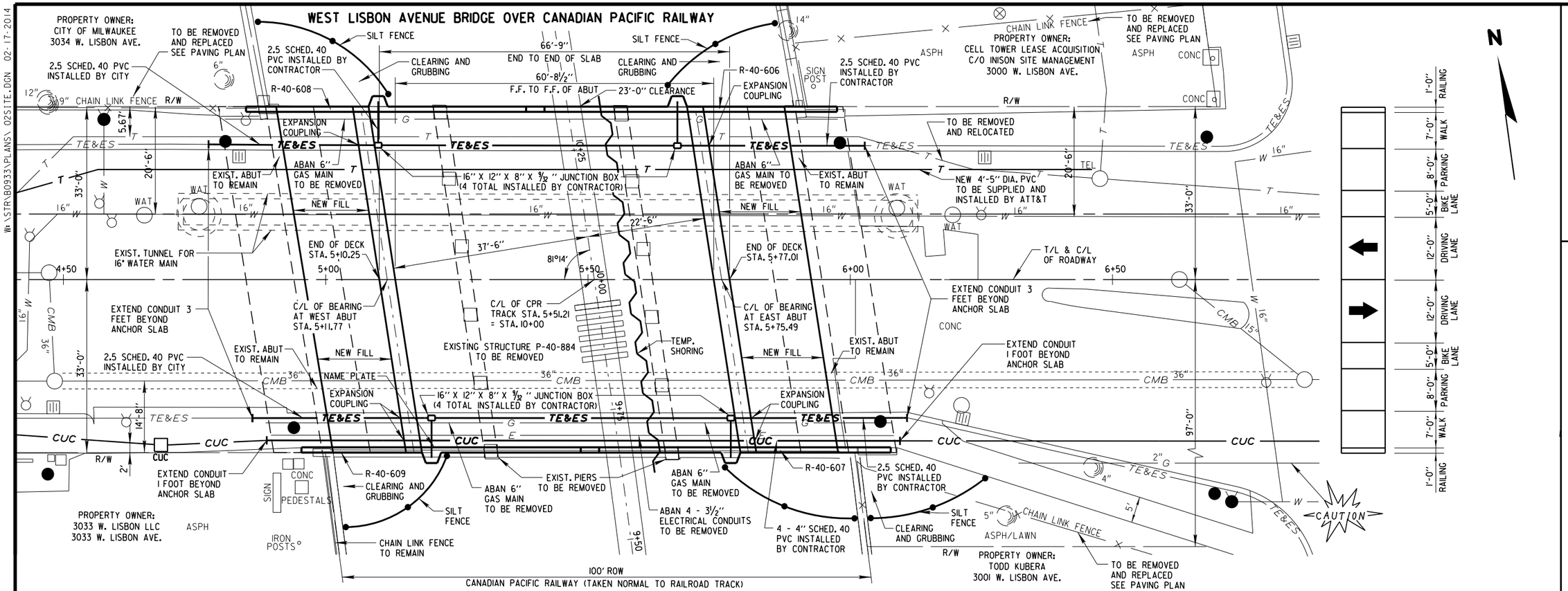

PLAN VIEW

(SINGLE SPAN RIGID FRAME)

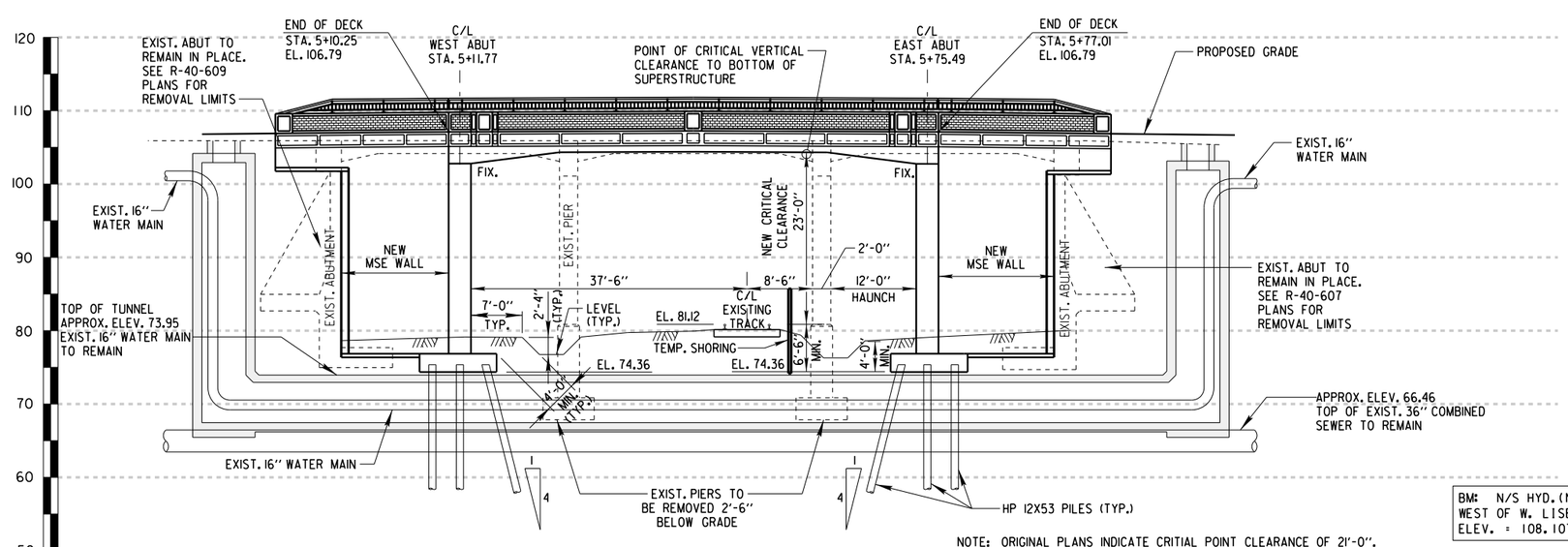

SOUTH ELEVATION

(TAKEN NORMAL TO TRACKS) LOOKING NORTH

BM: N/S HYD. (NNW BOLT) WEST OF W. LISBON AVE. BRIDGE ELEV. = 108.107

NOTE: ORIGINAL PLANS INDICATE CRITIAL POINT CLEARANCE OF 21'-0". EXISTING FIELD MEASURE CLEARANCE IS 21'-4½". ALLOWABLE TEMPORARY CLEARANCE IS 20'-0".

City of Milwaukee

Department of Public Works

Infrastructure Services Division

WEST LISBON AVENUE BRIDGE OVER CANADIAN PACIFIC RAILWAY B-40-899

SITE AND ELEVATION PLAN

REVISIONS

DESIGNED BY H.J.R.	
DRAWN BY R.B.M.	
CHECKED BY J.J.K.	
DATE 02-2014	SCALE NONE
JOB NUMBER BR100-14-0105	
SHEET NUMBER 2 OF 19	
OF 58	

W:\STR\B0933\PLANS\ 03SECTION.DGN 02-13-2014

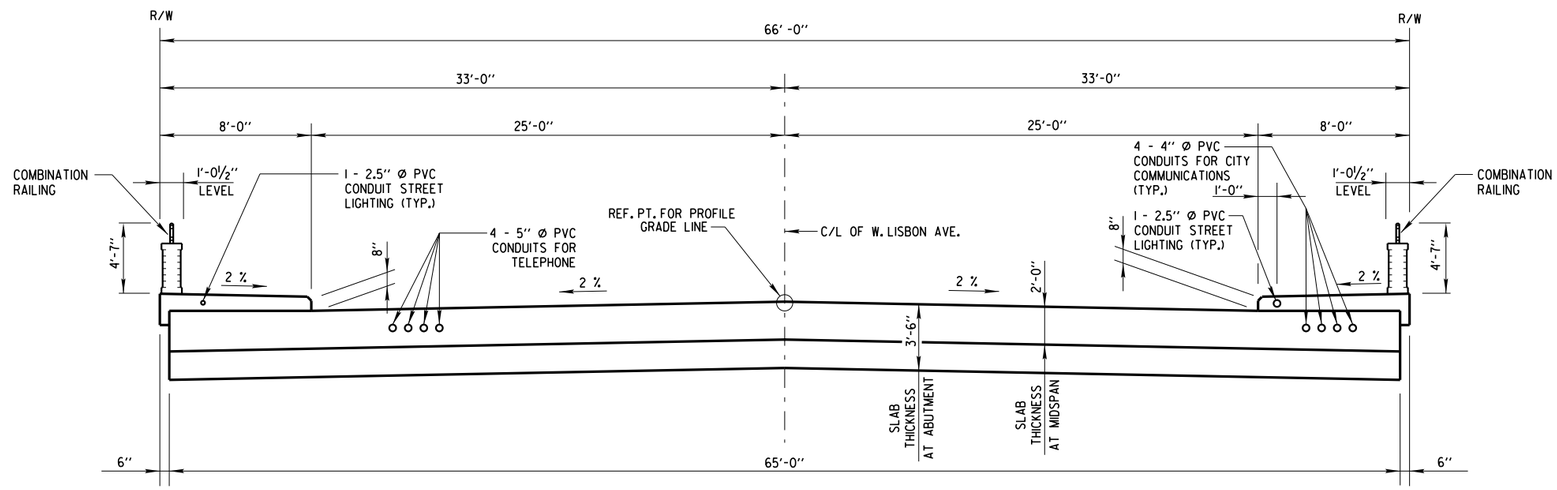

TYPICAL SECTION THRU NEW BRIDGE LOOKING EAST

(ALL DIMENSIONS NORMAL TO C/L OF BRIDGE)

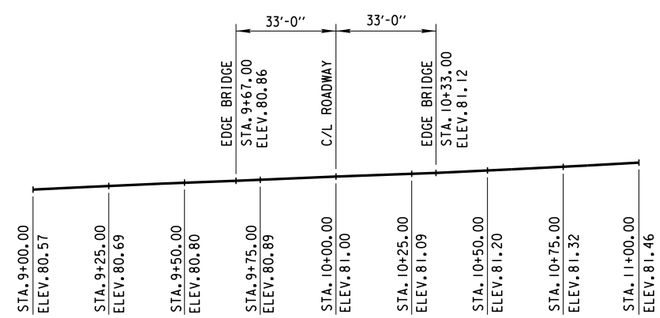

PROFILE GRADE LINE ALONG EAST TRACK, EAST RAIL, CPR

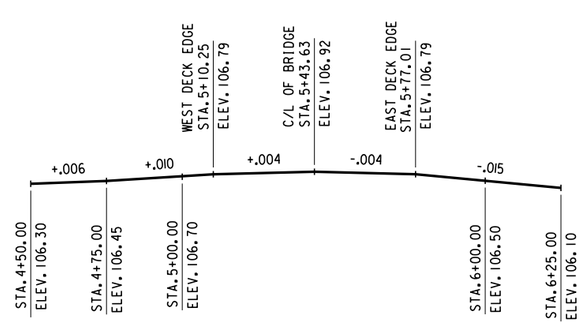

PROFILE GRADE LINE ALONG C/L OF W. LISBON AVE.

FOUNDATION DATA

ABUTMENTS TO BE SUPPORTED ON HP 12x53 PILES, ESTIMATED LENGTH 64 FT FOR THE EAST AND FOR THE WEST ABUTMENTS.

HP 12x53 STEEL PILING WITH REQUIRED DRIVING RESISTANCE OF 220 TONS* (FOR BATTERED AND FOR VERTICAL PILES) PER PILE ON EAST AND WEST ABUTMENTS AS DETERMINED BY MODIFIED GATES DYNAMIC EQUATION.

*FACTORED AXIAL RESISTANCE OF PILES IN COMMPRESSION USED FOR DESIGN IS REQUIRED DRIVING RESISTANCE MULTIPLIED BY RESISTANCE FACTOR OF 0.5 USING MODIFIED GATES TO DETERMINE DRIVEN PILE CAPACITY.

TRAFFIC VOLUME

YEAR

A.D.T. (2012) = 15,000
A.D.T. (2033) = 17,300
R.D.S. = 30 MPH

DESIGN DATA

DEAD LOAD

C.I.P. CONCRETE = 150 LBS./C.F.
F.W.S. = 20 LBS./S.F.
PARAPET = 430 LBS./L.F.

LIVE LOAD

DESIGN LOAD: HL93
INVENTORY RATING: RFI=1.09
OPERATIONAL RATING: RFO=1.42
MAX. STD. PERMIT VEHICLE LOAD = 240 KIPS

ULTIMATE DESIGN STRESSES

CONCRETE MASONRY SUPERSTRUCTURE f'c = 4,000 PSI
CONCRETE MASONRY (ALL OTHERS) f'c = 3,500 PSI
BAR STEEL REINFORCEMENT Fy = 60,000 PSI

GENERAL NOTES

ALL DETAILS, MATERIALS AND FABRICATION SHALL CONFORM TO THE STANDARD SPECIFICATIONS FOR HIGHWAY AND STRUCTURE CONSTRUCTION OF THE STATE OF WISCONSIN DEPARTMENT OF TRANSPORTATION EDITION OF 2014 OR CURRENT EDITION EXCEPT AS OTHERWISE NOTED.

ALL STATIONS AND ALL ELEVATIONS ARE IN FEET.

ALL ELEVATIONS ARE REFERRED TO CITY OF MILWAUKEE DATUM.

DRAWINGS SHALL NOT BE SCALED.

BEVEL EXPOSED EDGES OF CONCRETE 1" UNLESS OTHERWISE NOTED.

BENDING DIMENSIONS FOR REINFORCING BARS ARE OUT TO OUT.

ALL REINFORCING BARS ARE ENGLISH AND THE FIRST OR FIRST TWO DIGITS OF A BAR MARK SIGNIFIES THE SIZE OF THE BAR.

BAR STEEL REINFORCEMENT SHALL BE EMBEDDED 2" CLEAR OR 3" CLEAR COVER AGAINST EARTH UNLESS OTHERWISE NOTED.

THE EXISTING GROUND LINE SHALL BE THE UPPER LIMITS OF EXCAVATION FOR STRUCTURE.

ALL SPACES EXCAVATED AND NOT OCCUPIED BY THE NEW STRUCTURE SHALL BE BACKFILLED WITH STRUCTURE BACKFILL.

BACKFILL THE FRONT FACE OF WALLS BEFORE THE BACK FACE.

JOINT FILLER SHALL CONFORM TO AASHTO DESIGNATION M153 TYPE I, II, OR III, OR AASHTO DESIGNATION M213.

THE INFORMATION SHOWN ON THESE DRAWINGS CONCERNING TYPE AND LOCATION ON UNDERGROUND UTILITIES IS NOT GUARANTEED TO BE ACCURATE OR ALL-INCLUSIVE.

THE CONTRACTOR IS RESPONSIBLE FOR MAKING THEIR OWN DETERMINATIONS AS TO THE TYPE AND LOCATION OF UNDERGROUND UTILITIES AS MAY BE NECESSARY TO AVOID DAMAGES.

ALL RAILROAD SHORING SHALL CONFORM TO OSHA STANDARDS FOR EXCAVATION, AND MUST BE DESIGNED FOR RAILROAD LIVE LOAD SURCHARGE FOR A COOPER E-80. FINAL LOCATION AND TYPE OF SHORING SYSTEM TO BE DETERMINED BY THE CONTRACTOR. THE CONTRACTOR SHALL SUBMIT ALL DESIGN DRAWINGS AND CALCULATIONS DIRECTLY TO CANADIAN PACIFIC RAILWAY.

TEMPORARY MINIMUM CLEARANCE OF 20'-0" SHALL BE MAINTAINED ABOVE RAILROAD TRACKS AT ALL TIMES UNLESS PRIOR CONSENT GIVEN BY ENGINEER OR RAILROAD.

REMOVE STEEL PLATES IN TOP OF DECK AND SALVAGE FOR CITY. THIS SHALL BE PAID FOR UNDER "REMOVING OLD STRUCTURE" BID ITEM.

City of Milwaukee

Department of Public Works

Infrastructure Services Division

WEST LISBON AVENUE BRIDGE
OVER CANADIAN PACIFIC RAILWAY
B-40-899
CROSS SECTION PLAN

REVISIONS

DESIGNED BY H.J.R.
DRAWN BY R.B.M.
CHECKED BY J.J.K.
DATE 02-2014
SCALE NONE
JOB NUMBER BR100-14-0105
SHEET NUMBER 3 OF 19
OF 58

W:\STR\B0933\PLANS\ 04QUANTITIES.DGN 02-17-2014

ESTIMATE OF QUANTITIES

	ITEM NO.	BID ITEM	UNIT	WEST ABUTMENT	EAST ABUTMENT	SUPER-STRUCTURE	TOTAL
	201.0110	CLEARING	SY				207
	201.0210	GRUBBING	SY				207
	203.0200	REMOVING OLD STRUCTURE (STATION 4+90.68)	LS				1
	203.0225.S	DEBRIS CONTAINMENT (B-40-899)	LS				1
	205.0501.S.01	EXCAVATION, HAULING, AND DISPOSAL OF PETROLEUM CONTAMINATED SOIL	TON	566	566		1,132
	206.6000.S	TEMPORARY SHORING	SF		225		225
	210.0100	BACKFILL STRUCTURE	CY	586	623		1,209
	502.0100	CONCRETE MASONRY BRIDGES	CY	284	285	437	1,006
	502.3200	PROTECTIVE SURFACE TREATMENT	SY			483	483
	505.0405	BAR STEEL REINFORCEMENT HS BRIDGES	LB	20,674	20,674		41,348
	505.0605	BAR STEEL REINFORCEMENT HS COATED BRIDGES	LB	13,901	13,901	44,984	72,786
	516.0100	DAMPPROOFING	SY	216	217		433
	516.0500	RUBBERIZED MEMBRANE WATERPROOFING	SY	16	16		32
	517.1010.S.01	CONCRETE STAINING (B-40-899)	SF			718	718
	517.1015.S.01	CONCRETE STAINING MULTI-COLOR (B-40-899)	SF			468	468
	517.1050.S.01	ARCHITECTURAL SURFACE TREATMENT (B-40-899)	SF			468	468
*	550.0010	PRE-BORING UNCONSOLIDATED MATERIALS	LF	60	93		153
	550.1120	PIPING STEEL HP 12-INCH X 53 LB	LF	3,384	3,384		6,768
	612.0106	PIPE UNDERDRAIN 6-INCH	LF	65	65		130
	612.0206	PIPE UNDERDRAIN UNPERFORATED 6-INCH	LF	10	10		20
	625.0100	TOPSOIL	SY				20
	628.1504	SILT FENCE	LF				150
	628.1520	SILT FENCE MAINTENANCE	LF				150
	628.2023	EROSION MAT CLASS II TYPE B	SY				20
	630.0120	SEEDING MIXTURE NO. 20	LB				2
	645.0111	GEOTEXTILE FABRIC TYPE DF SCHEDULE A	SY	86	86		172
	652.0230	CONDUIT RIGID NONMETALLIC SCHEDULE 40 2 1/2-INCH	LF			238	238
	652.0240	CONDUIT RIGID NONMETALLIC SCHEDULE 40 4-INCH	LF			460	460
	SPV.0060.03	JUNCTION BOXES 12 X 16 X 8-INCH	EACH			4	4
	SPV.0105.01	RAILING STEEL TYPE C2 GALVANIZED (B-40-899)	LS			1	1

* INCLUDES PRE-BORING FOR DETERMINING UTILITY LOCATION PRIOR TO TEMPORARY SHORING PLACEMENT

City of Milwaukee

Department of Public Works

Infrastructure Services Division

WEST LISBON AVENUE BRIDGE
OVER CANADIAN PACIFIC RAILWAY
B-40-899
ESTIMATE OF QUANTITIES

REVISIONS

DESIGNED BY H.J.R.
DRAWN BY R.B.M.
CHECKED BY J.J.K.
DATE 02-2014
SCALE NONE
JOB NUMBER BR100-14-0105
SHEET NUMBER 4 OF 19
OF 58

W:\STR\B0933\PLANS\ 05SUBSURFACE.DGN 02-13-2014

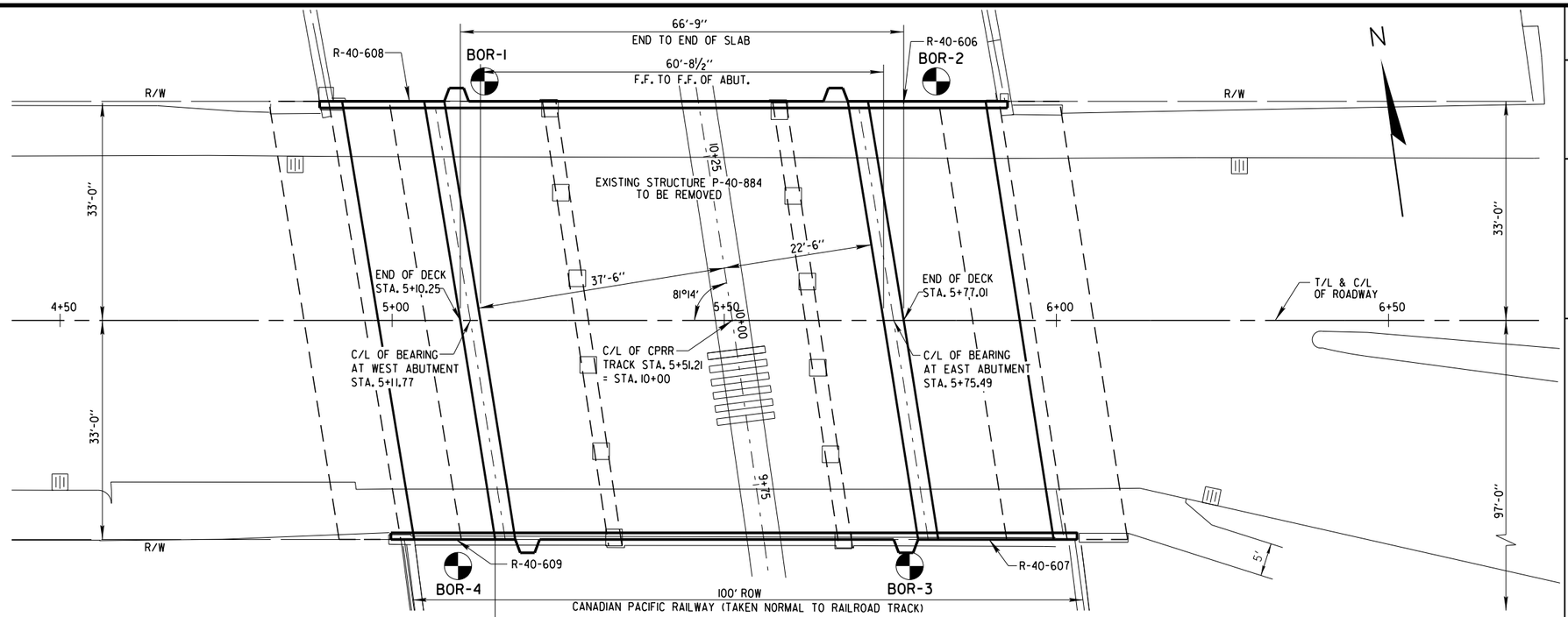

PLAN VIEW

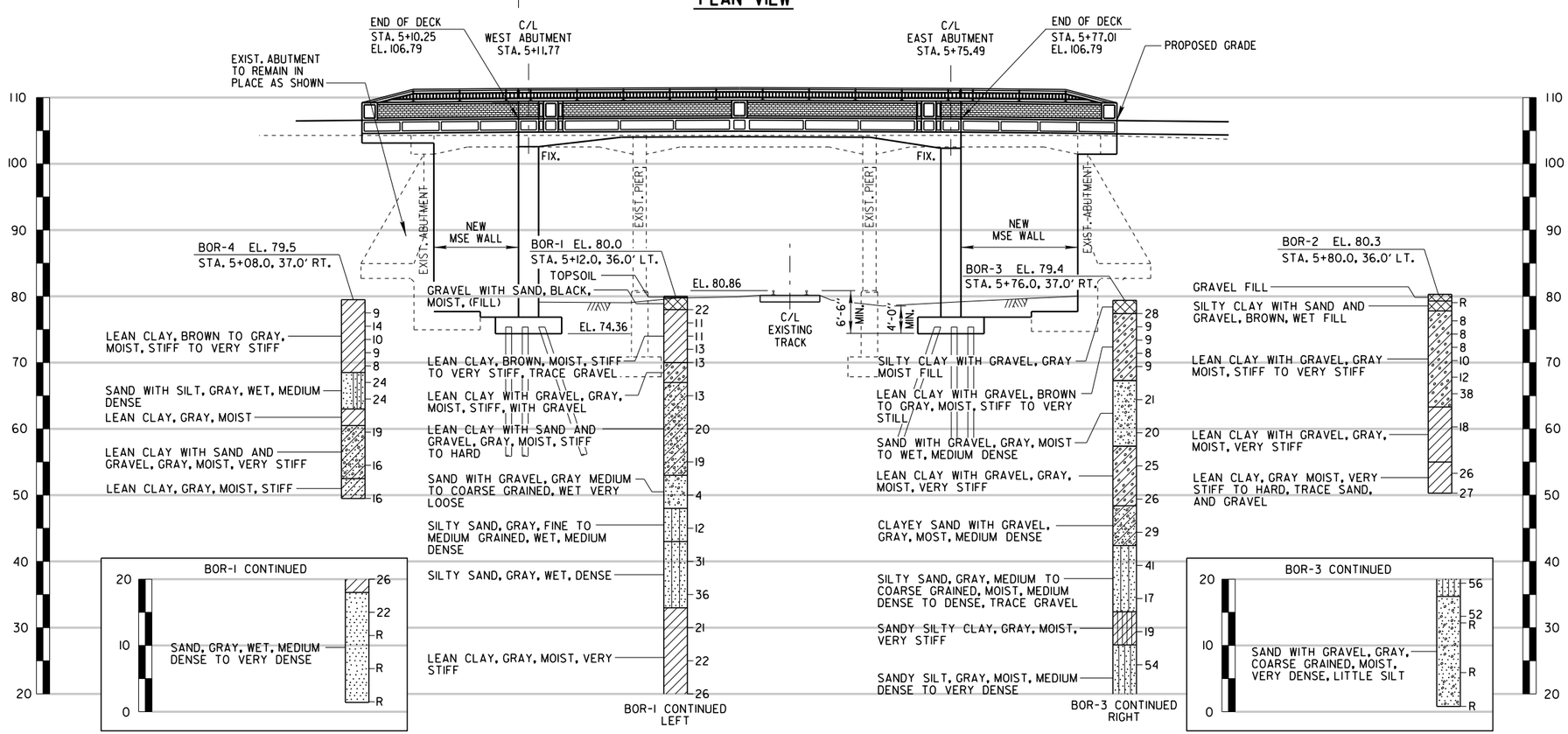

SOUTH ELEVATION

ABBREVIATIONS

F — FINE M — MEDIUM C — COARSE
WS — WEATHERED SO — SOUND

MATERIAL SYMBOLS

TOPSOIL, SILT, SANDSTONE, SAND, PEAT, LIMESTONE, GRAVEL, CLAY, IGNEOUS ROCK

LEGEND OF PROBING

95/6=95 BLOWS FOR 6" PENETRATION PROBING TAKEN WITH A 350# WT. FALLING 18" ON A 2" O.D. POINT.

PROBING NO.
STATION
ELEVATION
7 AVERAGE BLOWS PER FOOT
REFUSAL 95/6

LEGEND OF BORING

BORING NO.
STA.
ELEV.
UNCONFINED STRENGTH — 7.7
BLOWS PER FT. USING 140# WT. FALLING 30" — 7
WASH SAMPLE
SHELBY TUBE — S.T.
GROUND WATER ELEVATION
NO GROUND WATER OBSERVED ABOVE THIS ELEVATION
SANDY GRAVEL
F. BOULDERS OR COBBLES
SAND
SILTY CLAY
SO LIMESTONE

CONTRACTOR SHALL REFERENCE GESTRA GEOTECHNICAL REPORT AND ALL SUBSEQUENT ADDENDA DATED 01-30-2014. UNLESS OTHERWISE SPECIFIED, THE BLOWS PER FOOT AT THE LOCATIONS INDICATED ARE BASED ON DRIVING A 2" O.D. X 1.4" I.D. SPLIT SPOON SAMPLER WITH A 140# HAMMER HAVING A FREE FALL OF 30". THE BLOW COUNT IS TAKEN IN UNDISTURBED SOIL IMMEDIATELY BELOW A CASED OR OPEN HOLE ELIMINATING SIDE FRICTION ON THE DRIVE PIPE.

SUBSURFACE EXPLORATION FOR FOUNDATION DESIGN AND BIDDERS INFORMATION

TO OBTAIN RELATIVE DATA CONCERNING THE CHARACTER OF MATERIAL IN AND UPON WHICH THE FOUNDATION MIGHT BE BUILT, BORINGS AND/OR SOUNDINGS WERE MADE AT POINTS APPROXIMATELY AS INDICATED ON THIS DRAWING. THE DATA PRESENTED HEREIN REPRESENTS THE FINDINGS OF THE SUBSURFACE EXPLORATIONS MADE. HOWEVER, BECAUSE THE DEPTHS INVESTIGATED ARE LIMITED AND THE AREA OF THE BORINGS AND/OR SOUNDINGS IS VERY SMALL IN RELATION TO THE ENTIRE AREA, THE CITY OF MILWAUKEE DOES NOT WARRANT CONDITIONS BELOW THE DEPTHS INVESTIGATED OR THAT THE CLASSIFICATION OF MATERIAL ENCOUNTERED IN THESE INVESTIGATIONS IS NECESSARILY TYPICAL OF THE ENTIRE SITE. CONTACT MR. CRAIG LIBERTO AT (414) 286-0451 TO GET A COPY AND TO REVIEW THE GEOTECHNICAL REPORT.

City of Milwaukee
Department of Public Works
Infrastructure Services Division

WEST LISBON AVENUE BRIDGE OVER CANADIAN PACIFIC RAILWAY B-40-899 SUBSURFACE EXPLORATION

REVISIONS

DESIGNED BY H.J.R.	
DRAWN BY R.B.M.	
CHECKED BY J.J.K.	
DATE 02-2014	SCALE NONE
JOB NUMBER BR100-14-0105	
SHEET NUMBER 5 OF 19	
OF 58	

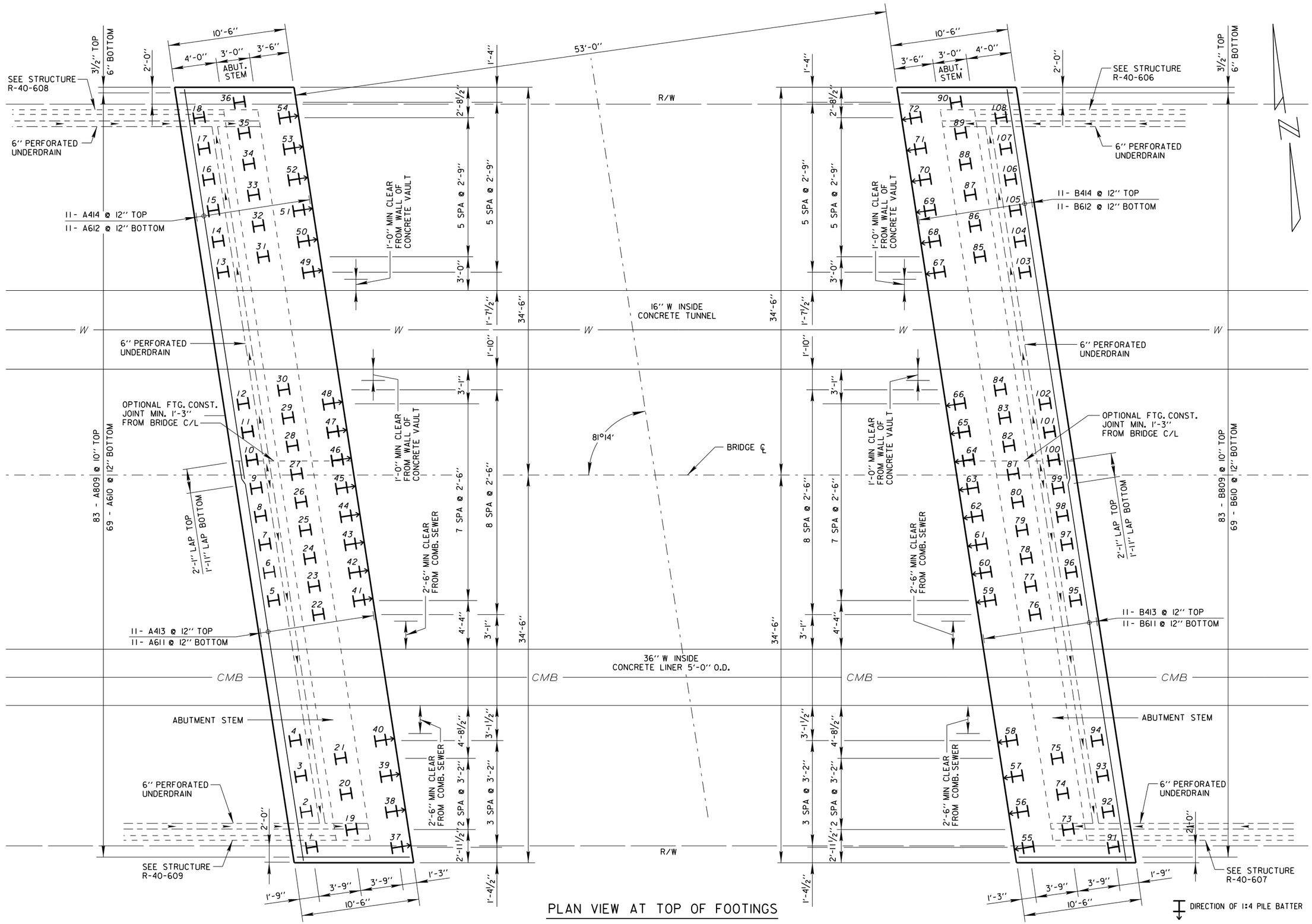

PLAN VIEW AT TOP OF FOOTINGS

City of Milwaukee

Department of Public Works

Infrastructure Services Division

WEST LISBON AVENUE BRIDGE OVER CANADIAN PACIFIC RAILWAY B-40-899 ABUTMENT FOOTING PLAN

REVISIONS

DESIGNED BY H.J.R.	
DRAWN BY R.B.M.	
CHECKED BY A.R.	
DATE 02-2014	SCALE NONE
JOB NUMBER BR100-14-0105	
SHEET NUMBER 6 OF 19	
OF 58	

W:\STR\B0933\PLANS\ 06ABUTFTG.DGN 02-17-2014

W:\STR\B0933\PLANS\ 07EABUT.DGN 02-13-2014

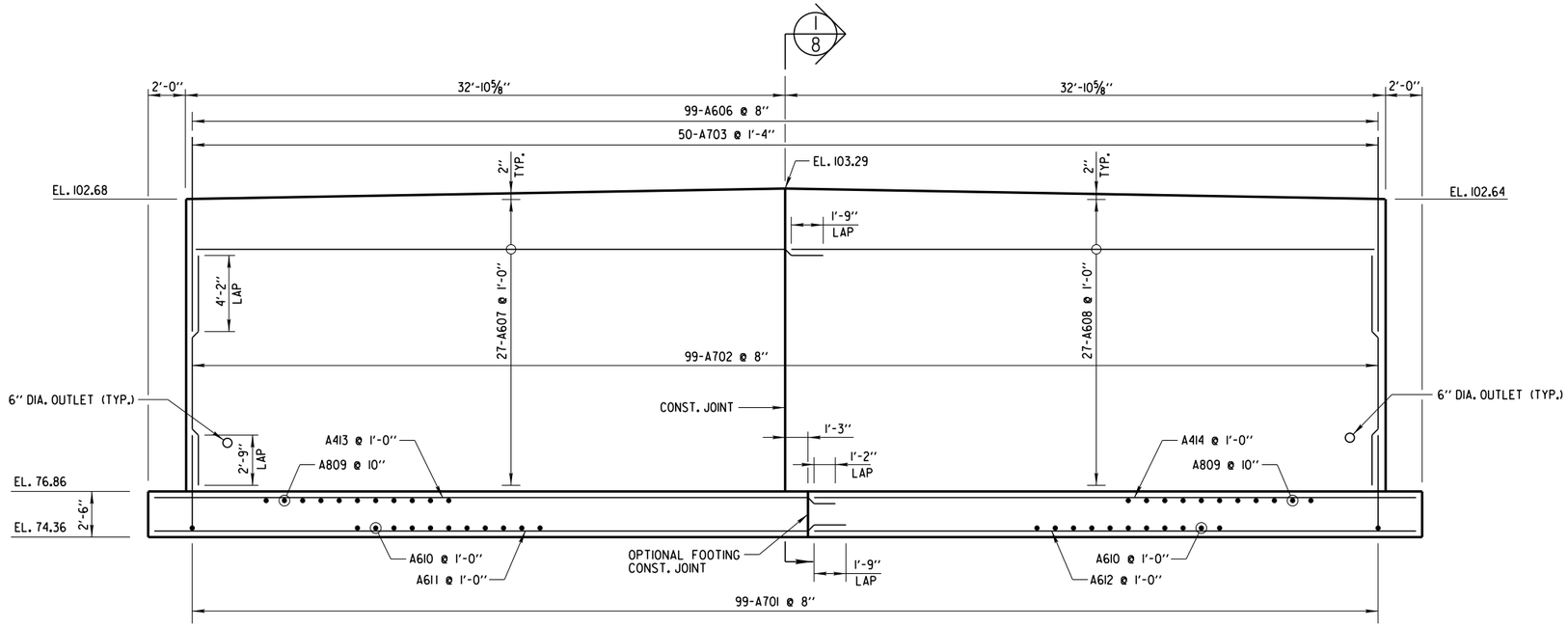

EAST ABUTMENT

FRONT FACE
LOOKING UPSTATION (EAST)

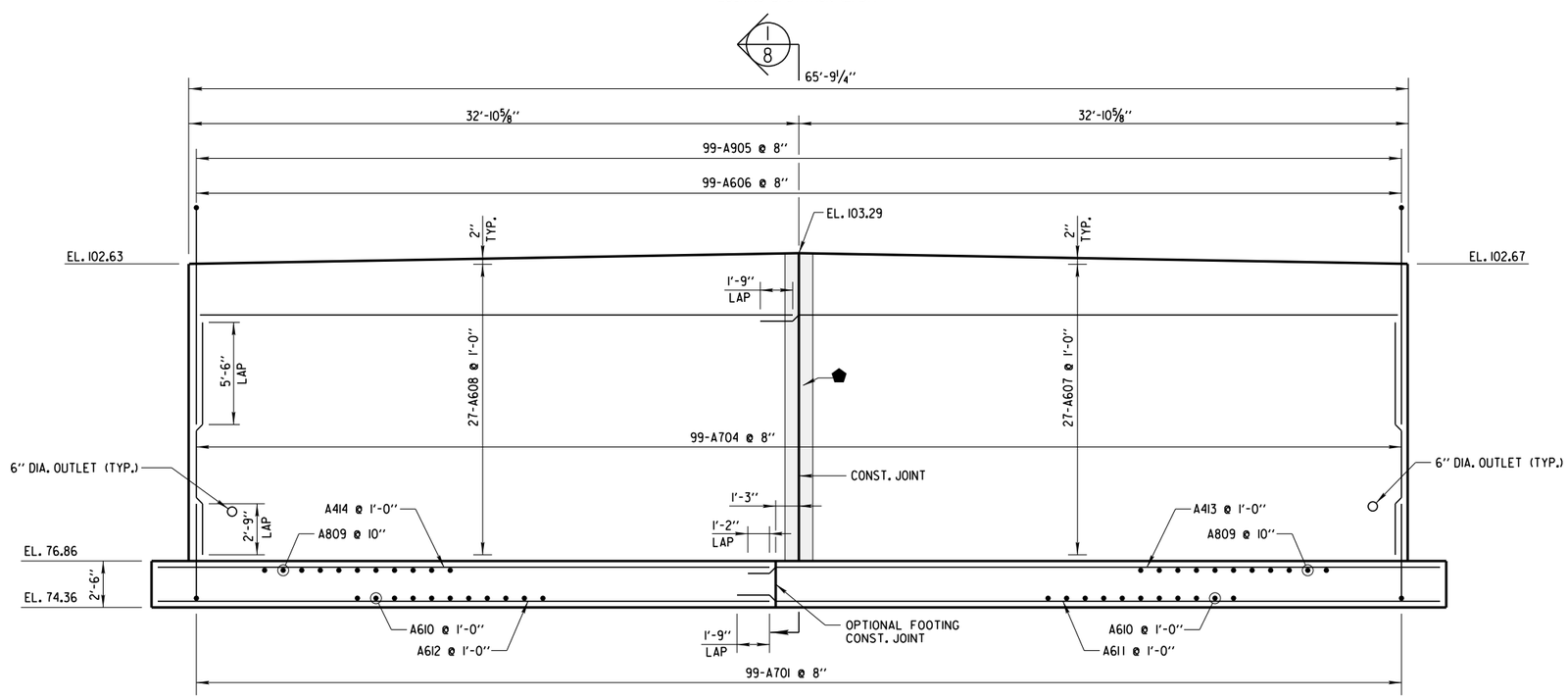

EAST ABUTMENT

BACK FACE
LOOKING DOWNSTATION (WEST)

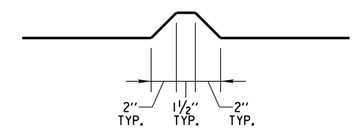

RUSTICATION DETAIL

NOTES: PLACE FULL HEIGHT VERTICAL RUSTICATION JOINT EVERY 4'-0" ALONG LENGTH OF FRONT FACE OF ABUTMENT.

PLACE FULL WIDTH HORIZONTAL RUSTICATION AT END FACE OF ABUTMENT TO MATCH MSE WALL PATTERN

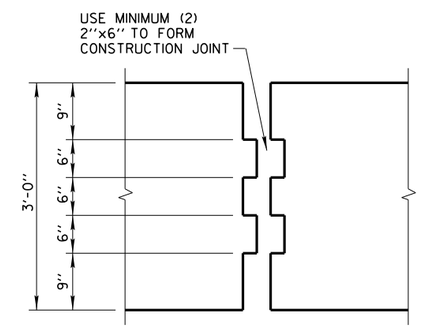

DETAIL PLAN VIEW ABUTMENT WALL CONSTRUCTION JOINT

LEGEND:

⬟ - 18" RUBBERIZED MEMBRANE WATERPROOFING

City of Milwaukee

Department of Public Works

Infrastructure Services Division

WEST LISBON AVENUE BRIDGE OVER CANADIAN PACIFIC RAILWAY B-40-899

EAST ABUTMENT ELEVATION

REVISIONS

DESIGNED BY J.J.K.	
DRAWN BY R.B.M.	
CHECKED BY A.R.	
DATE 02-2014	SCALE NONE
JOB NUMBER BR100-14-0105	
SHEET NUMBER 7 OF 19	
OF 58	

W:\STR\B0933\PLANS\ 08EABUTDET.DGN 02-17-2014

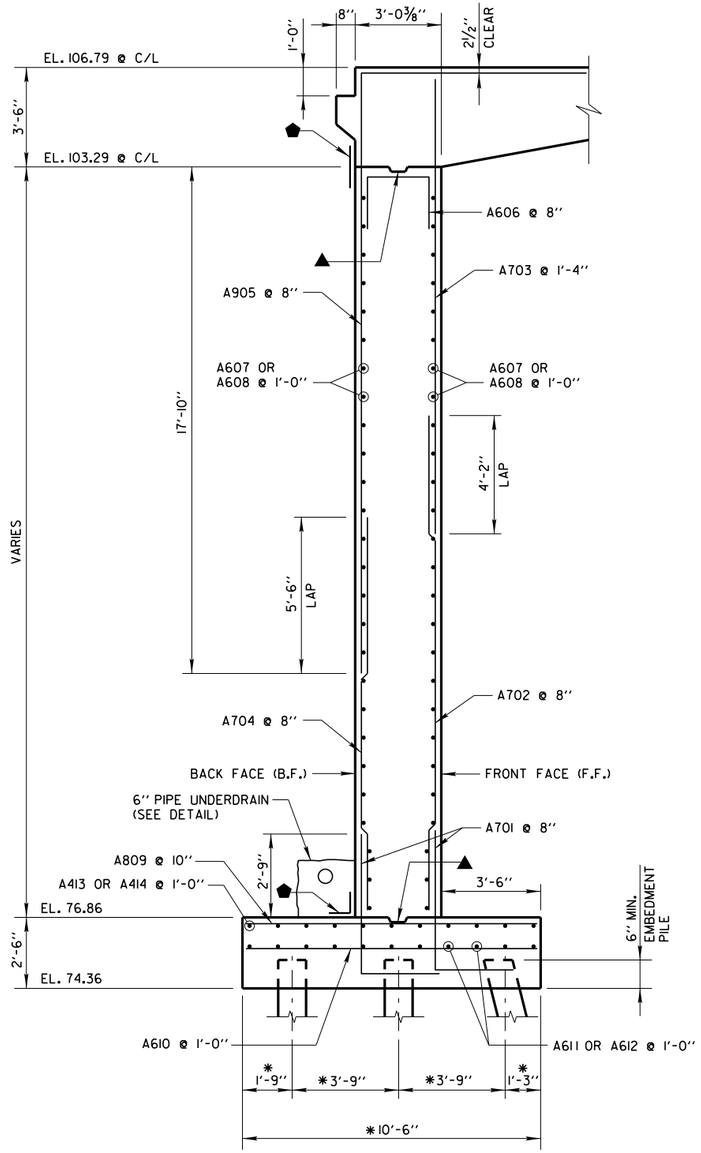

SECTION 1/7
LOOKING SOUTH AT CENTER LINE

LEGEND:

- ⬟ — 18" RUBBERIZED MEMBRANE WATERPROOFING
- ▲ — BEVELED KEY 2" x 6"
- * — DIMENSIONS ARE GIVEN NORMAL TO SUBSTRUCTURE

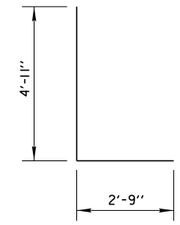

A701

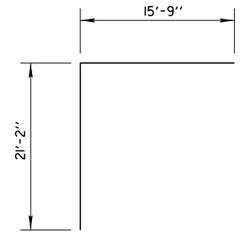

A905

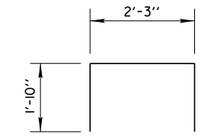

A606

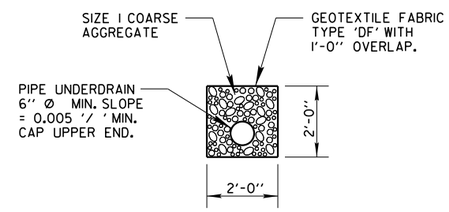

PIPE UNDERDRAIN DETAIL

PLACE CENTERLINE OF OUTFALL 1'-0" ABOVE FINISHED GRADE

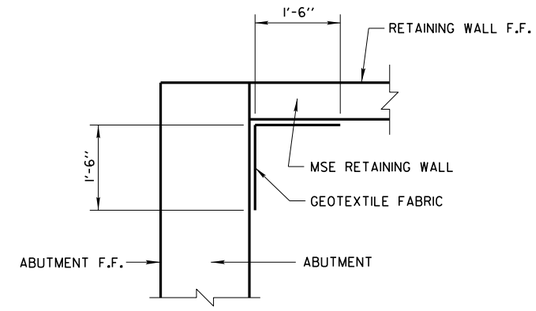

ABUTMENT - RETAINING WALL DETAIL

PLAN VIEW

BILL OF BARS - EAST ABUTMENT

BAR MARK	COAT	NO. REQ'D.	LENGTH	BENT	LOCATION
A701		198	7'-6"	X	ABUTMENT - FOOTING DOWEL
A702		99	14'-3"		ABUTMENT - VERTICAL F.F.
A703	X	50	15'-3"		ABUTMENT - VERTICAL F.F.
A704		99	13'-11"		ABUTMENT - VERTICAL B.F.
A905	X	99	36'-8"	X	ABUTMENT - VERTICAL B.F.
A606		99	5'-7"	X	ABUTMENT - CAP STIRRUP
A607		54	34'-6"		ABUTMENT - HORIZONTAL F.F. & B.F.
A608		54	32'-7"		ABUTMENT - HORIZONTAL F.F. & B.F.
A809		84	10'-3"		FOOTING - TRANSVERSE TOP
A610		70	10'-3"		FOOTING - TRANSVERSE BOTTOM
A611		11	35'-9"		FOOTING - LONGITUDINAL BOTTOM
A612		11	33'-7"		FOOTING - LONGITUDINAL BOTTOM
A413		11	35'-9"		FOOTING - LONGITUDINAL TOP
A414		11	33'-7"		FOOTING - LONGITUDINAL TOP

NOTES:

CLEAR COVER FOR ALL REINFORCEMENT IS 2" OR 3" CLEAR COVER FOR FACES EXPOSED TO SOIL UNLESS OTHERWISE NOTED

STAGGER TOP AND BOTTOM MAT REINFORCEMENT IN FOOTING TO PREVENT CRACKING

City of Milwaukee
Department of Public Works
Infrastructure Services Division

WEST LISBON AVENUE BRIDGE
OVER CANADIAN PACIFIC RAILWAY
B-40-899
EAST ABUTMENT BILL OF BARS AND SECTION

REVISIONS

DESIGNED BY J.J.K.
DRAWN BY R.B.M.
CHECKED BY A.R.
DATE 02-2014
SCALE NONE
JOB NUMBER BR100-14-0105
SHEET NUMBER 8 OF 19
OF 58

W:\STR\B0933\PLANS\ 09WABUT.DGN 02-13-2014

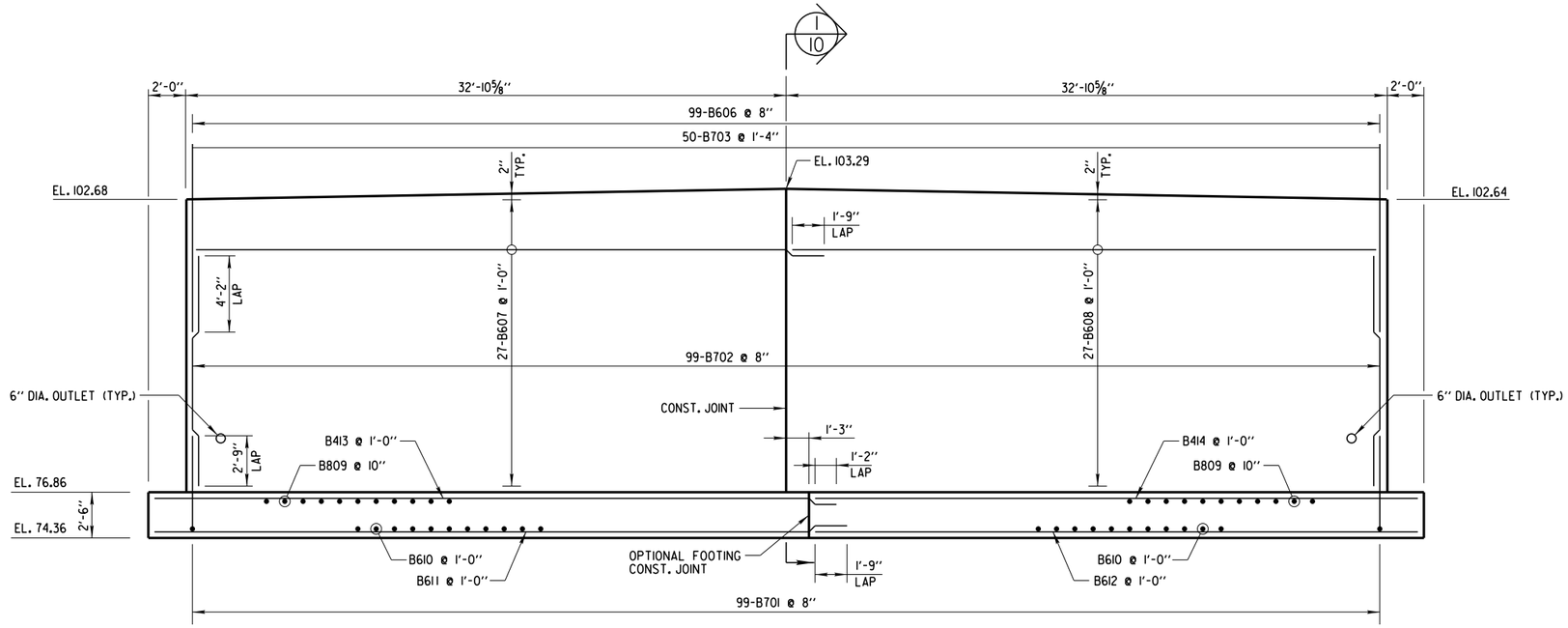

WEST ABUTMENT

FRONT FACE
LOOKING DOWNSTATION (WEST)

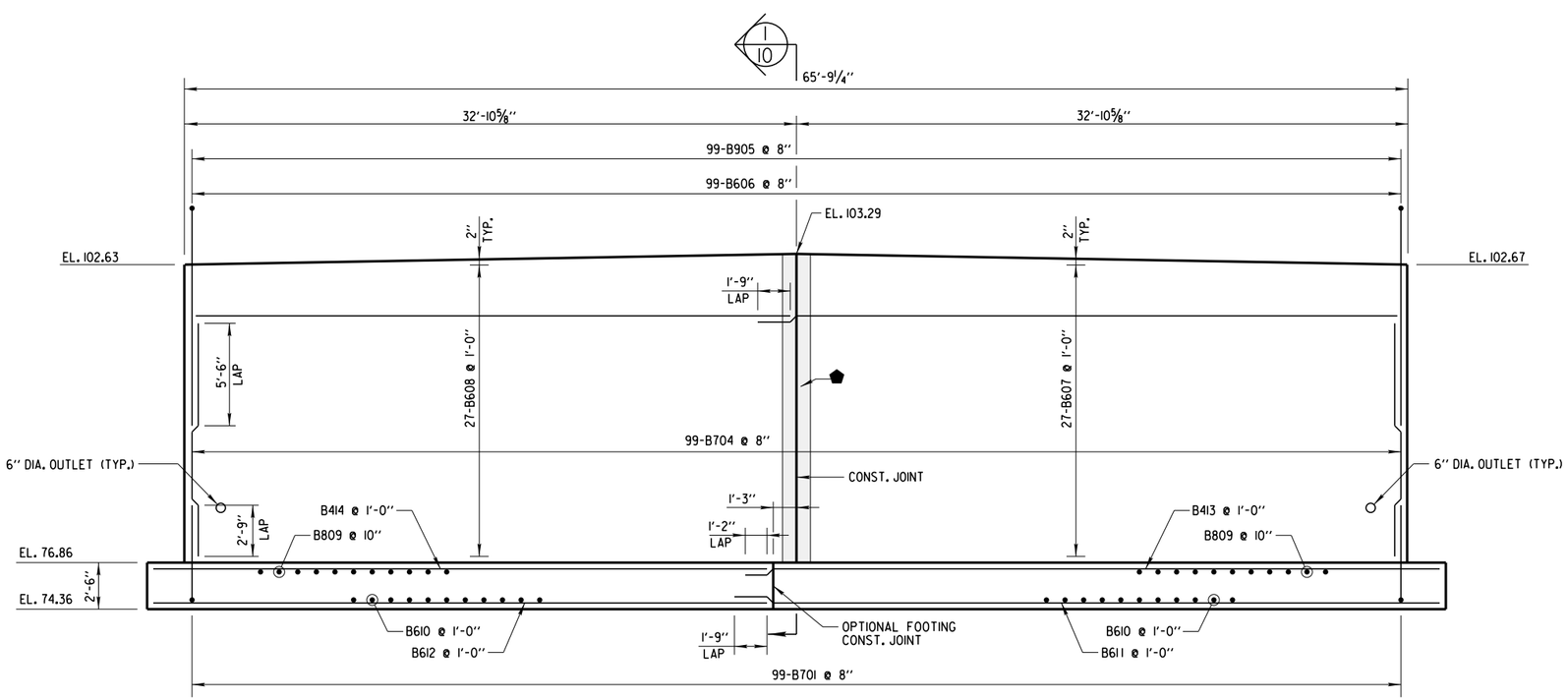

WEST ABUTMENT

BACK FACE
LOOKING UPSTATION (EAST)

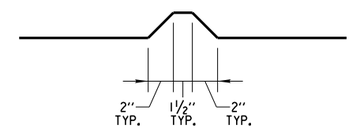

RUSTICATION DETAIL

NOTES: PLACE FULL HEIGHT VERTICAL RUSTICATION JOINT EVERY 4'-0" ALONG LENGTH OF FRONT FACE OF ABUTMENT.

PLACE FULL WIDTH HORIZONTAL RUSTICATION AT END FACE OF ABUTMENT TO MATCH MSE WALL PATTERN

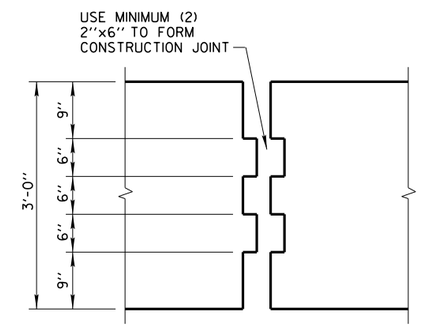

DETAIL PLAN VIEW ABUTMENT WALL CONSTRUCTION JOINT

LEGEND:

⬟ - 18" RUBBERIZED MEMBRANE WATERPROOFING

City of Milwaukee

Department of Public Works

Infrastructure Services Division

WEST LISBON AVENUE BRIDGE OVER CANADIAN PACIFIC RAILWAY B-40-899 WEST ABUTMENT ELEVATION

REVISIONS

DESIGNED BY J.J.K.	
DRAWN BY R.B.M.	
CHECKED BY A.R.	
DATE 02-2014	SCALE NONE
JOB NUMBER BR100-14-0105	
SHEET NUMBER 9 OF 19	
OF 58	

W:\STR\B0933\PLANS\ IOWABUTDET.DGN 02-17-2014

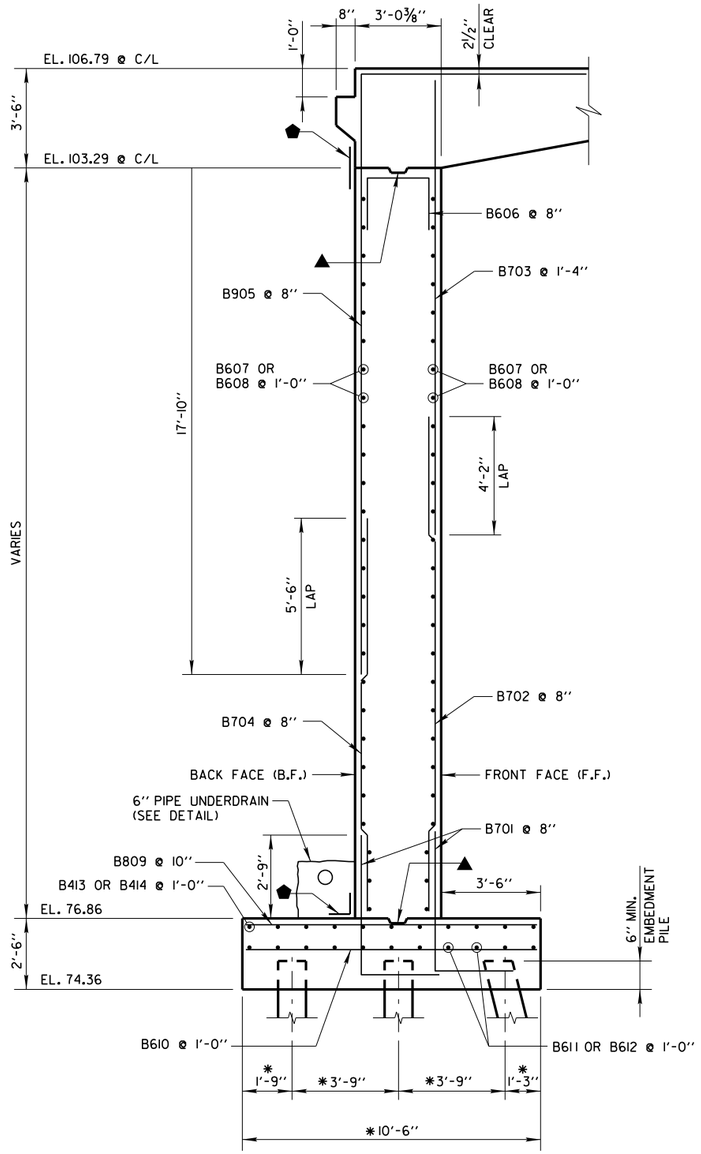

SECTION 1/9
LOOKING SOUTH AT CENTER LINE

LEGEND:

- ⬟ — 18" RUBBERIZED MEMBRANE WATERPROOFING
- ▲ — BEVELED KEY 2" x 6"
- * — DIMENSIONS ARE GIVEN NORMAL TO SUBSTRUCTURE

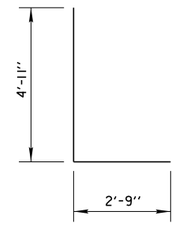

B701

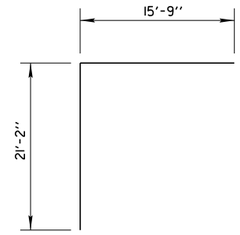

B905

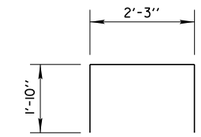

B606

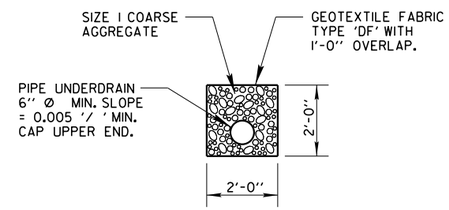

PIPE UNDERDRAIN DETAIL

PLACE CENTERLINE OF OUTFALL 1'-0" ABOVE FINISHED GRADE

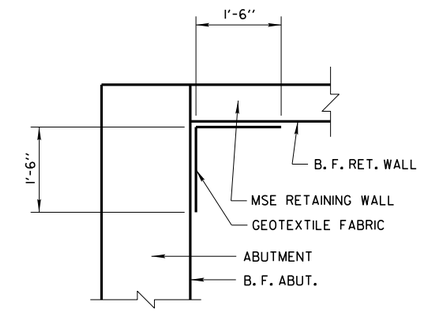

ABUTMENT - RETAINING WALL DETAIL

PLAN VIEW

BILL OF BARS - WEST ABUTMENT

BAR MARK	COAT	NO. REQ'D.	LENGTH	BENT	LOCATION
B701		198	7'-6"	X	ABUTMENT - FOOTING DOWEL
B702		99	14'-3"		ABUTMENT - VERTICAL F.F.
B703	X	50	15'-3"		ABUTMENT - VERTICAL F.F.
B704		99	13'-11"		ABUTMENT - VERTICAL B.F.
B905	X	99	36'-8"	X	ABUTMENT - VERTICAL B.F.
B606		99	5'-7"	X	ABUTMENT - CAP STIRRUP
B607		54	34'-6"		ABUTMENT - HORIZONTAL F.F. & B.F.
B608		54	32'-7"		ABUTMENT - HORIZONTAL F.F. & B.F.
B809		84	10'-3"		FOOTING - TRANSVERSE TOP
B610		70	10'-3"		FOOTING - TRANSVERSE BOTTOM
B611		11	35'-9"		FOOTING - LONGITUDINAL BOTTOM
B612		11	33'-7"		FOOTING - LONGITUDINAL BOTTOM
B413		11	35'-9"		FOOTING - LONGITUDINAL TOP
B414		11	33'-7"		FOOTING - LONGITUDINAL TOP

NOTES:

CLEAR COVER FOR ALL REINFORCEMENT IS 2" OR 3" CLEAR COVER FOR FACES EXPOSED TO SOIL UNLESS OTHERWISE NOTED

STAGGER TOP AND BOTTOM MAT REINFORCEMENT IN FOOTING TO PREVENT CRACKING

City of Milwaukee

Department of Public Works

Infrastructure Services Division

WEST LISBON AVENUE BRIDGE
OVER CANADIAN PACIFIC RAILWAY
B-40-899
WEST ABUTMENT BILL OF BARS AND SECTION

REVISIONS

DESIGNED BY J.J.K.
DRAWN BY R.B.M.
CHECKED BY A.R.
DATE 02-2014
SCALE NONE
JOB NUMBER BR100-14-0105
SHEET NUMBER 10 OF 19
OF 58

W:\STR\B0933\PLANS\11DECK.DGN 02-13-2014

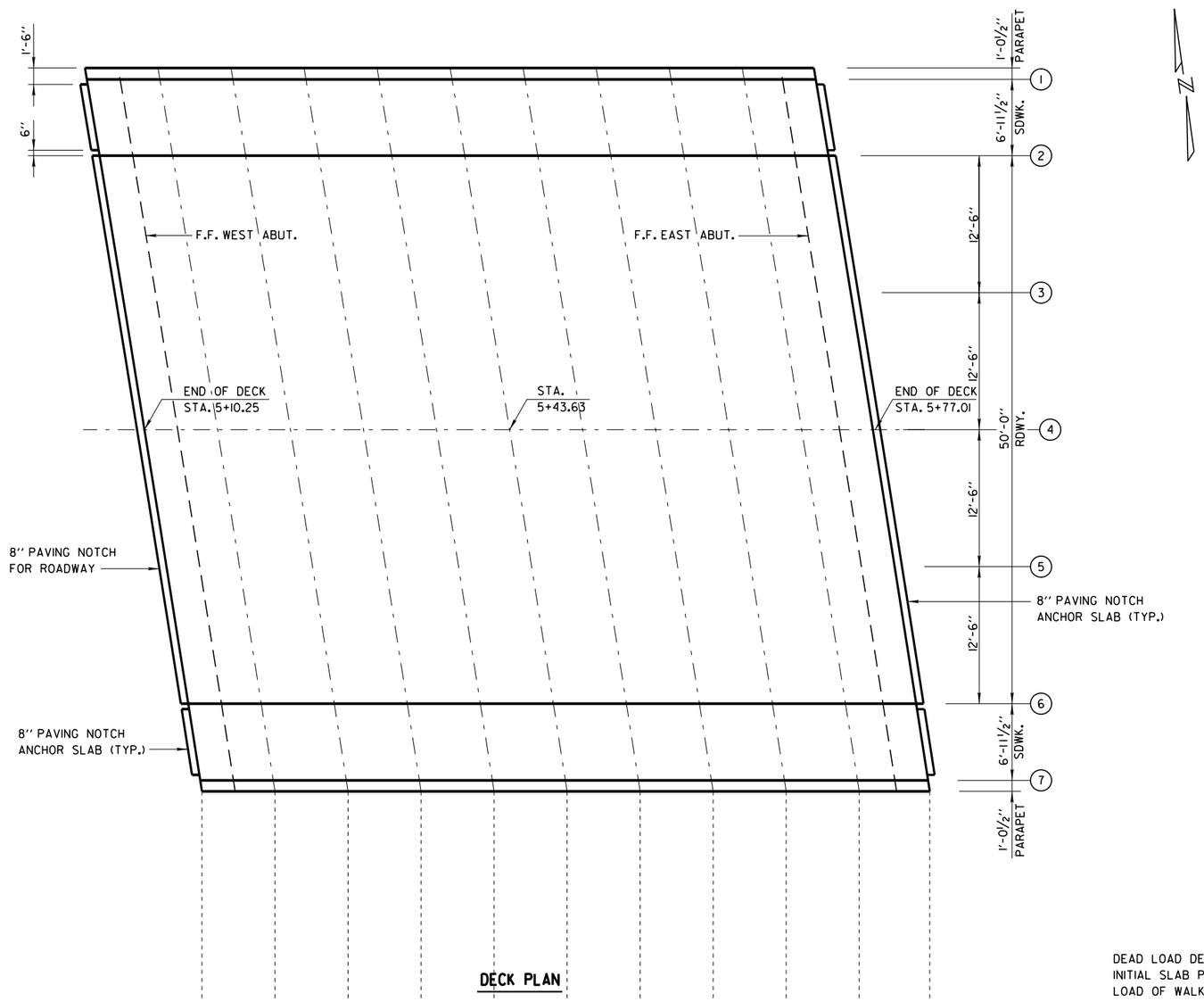

DECK PLAN

TOP OF DECK ELEVATIONS												
SPAN LENGTH 'L'	DECK LOCATION	W.ABUT END OF SLAB	0.1L	0.2L	0.3L	0.4L	0.5L	0.6L	0.7L	0.8L	0.9L	E.ABUT END OF SLAB
66'-9"	1	106.13	106.15	106.18	106.21	106.23	106.26	106.27	106.25	106.22	106.19	106.17
	2	106.27	106.30	106.32	106.35	106.38	106.40	106.41	106.38	106.36	106.33	106.30
	3	106.53	106.56	106.58	106.61	106.64	106.66	106.65	106.62	106.60	106.57	106.54
	4	106.79	106.81	106.84	106.87	106.89	106.92	106.89	106.87	106.84	106.81	106.79
	5	106.54	106.57	106.60	106.62	106.65	106.66	106.64	106.61	106.58	106.56	106.53
	6	106.30	106.33	106.36	106.38	106.41	106.40	106.38	106.35	106.32	106.30	106.27
	7	106.17	106.19	106.22	106.25	106.27	106.26	106.23	106.21	106.18	106.15	106.13

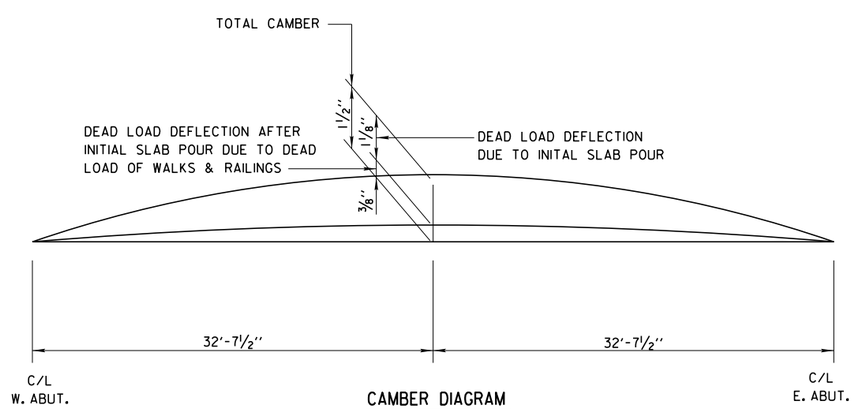

CAMBER DIAGRAM

City of Milwaukee

Department of Public Works

Infrastructure Services Division

WEST LISBON AVENUE BRIDGE OVER CANADIAN PACIFIC RAILWAY B-40-899 DECK GRADES

REVISIONS

DESIGNED BY H.J.R.

DRAWN BY R.B.M.

CHECKED BY A.R.

DATE 02-2014

SCALE NONE

JOB NUMBER BR100-14-0105

SHEET NUMBER 11 OF 19

OF 58

W:\STR\B0933\PLANS\12DECK PLAN.DGN 02-13-2014

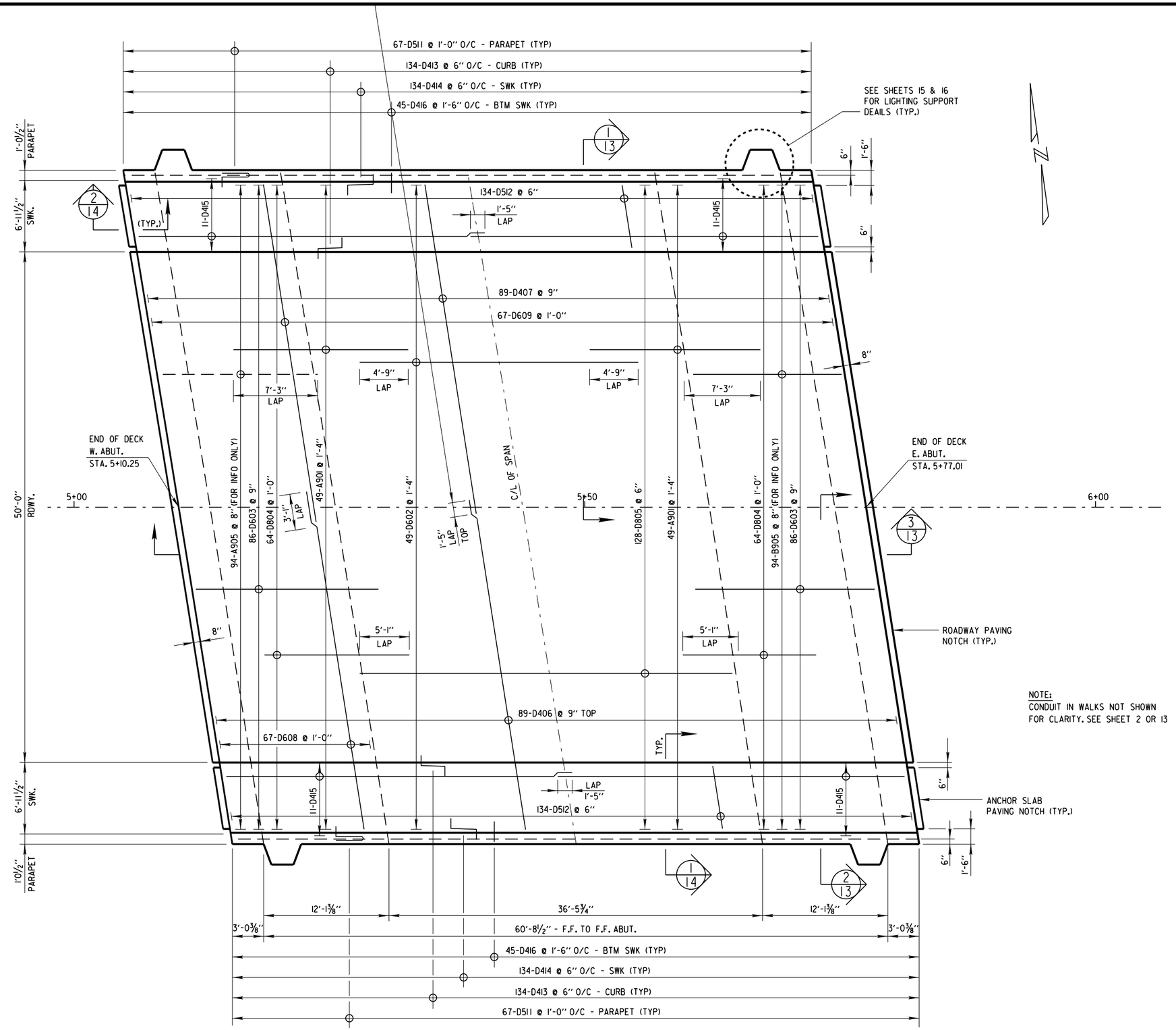

NOTE:
CONDUIT IN WALKS NOT SHOWN FOR CLARITY. SEE SHEET 2 OR 13

PLAN VIEW

City of Milwaukee

Department of Public Works

Infrastructure Services Division

WEST LISBON AVENUE BRIDGE OVER CANADIAN PACIFIC RAILWAY B-40-899 DECK PLAN

REVISIONS

DESIGNED BY H.J.R.	
DRAWN BY R.B.M.	
CHECKED BY A.R.	
DATE 02-2014	SCALE NONE
JOB NUMBER BR100-14-0105	
SHEET NUMBER 12 OF 19	
OF 58	

W:\STR\B0933\PLANS\ 13DECKSEC.DGN 02-14-2014

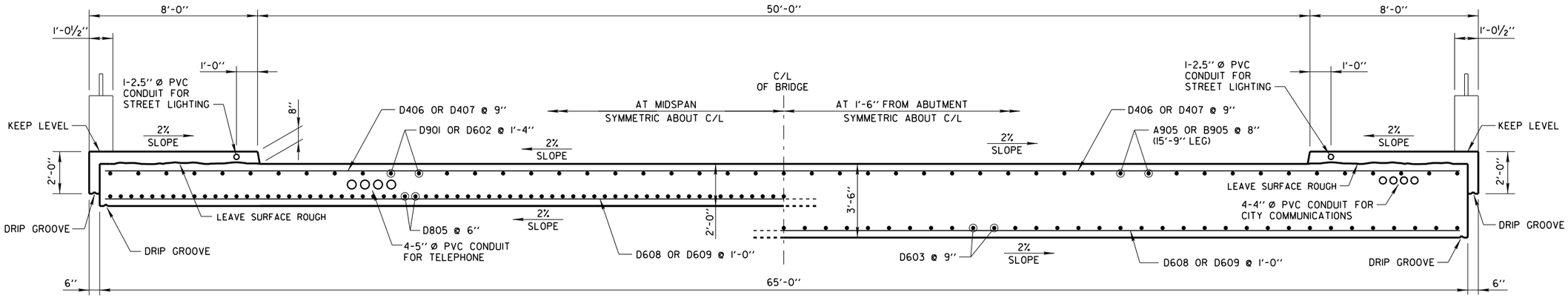

DECK CROSS SECTION (1/12)
AT MIDSPAN
LOOKING EAST

DECK CROSS SECTION (2/12)
AT 1'-6" FROM C/L ABUTMENT

NOTE:
WALK BARS AND EDGE BEAM BARS NOT SHOWN FOR CLARITY.

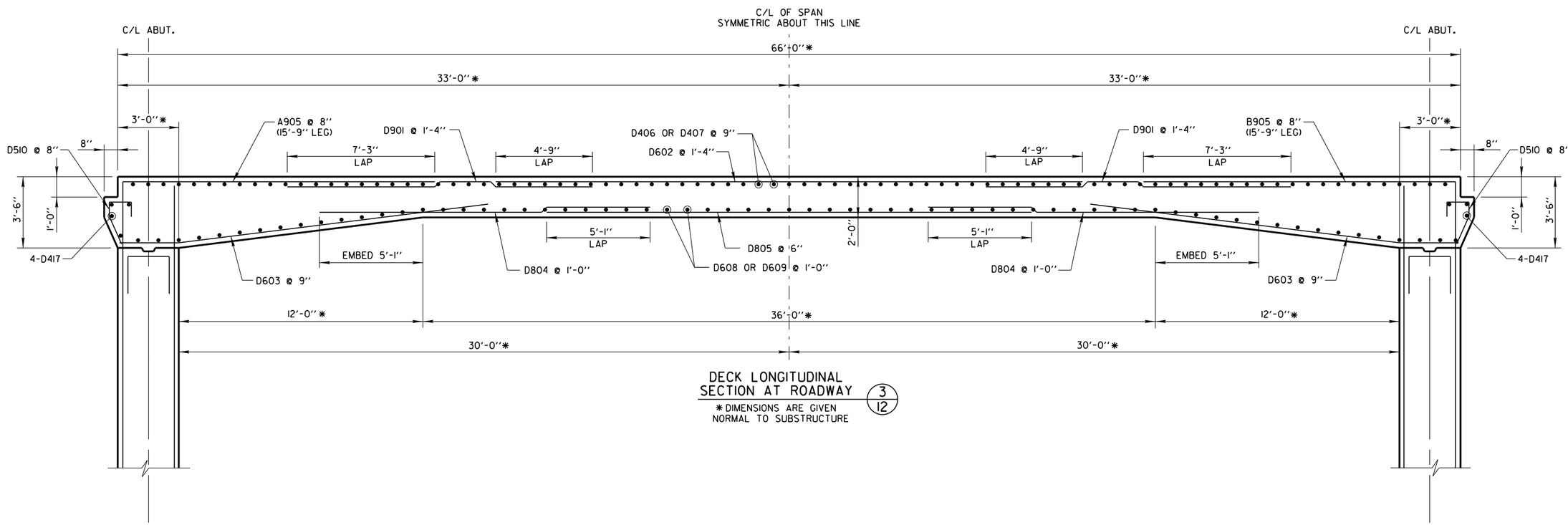

DECK LONGITUDINAL SECTION AT ROADWAY (3/12)
* DIMENSIONS ARE GIVEN NORMAL TO SUBSTRUCTURE

City of Milwaukee
Department of Public Works
Infrastructure Services Division

WEST LISBON AVENUE BRIDGE OVER CANADIAN PACIFIC RAILWAY B-40-899
DECK CROSS SECTIONS

REVISIONS

DESIGNED BY J.J.K.	
DRAWN BY R.B.M.	
CHECKED BY A.R.	
DATE 02-2014	SCALE NONE
JOB NUMBER BR100-14-0105	
SHEET NUMBER 13 OF 19	
OF 58	

W:\STR\B0933\PLANS\ 14DECKBAR.DGN 02-14-2014

BILL OF BARS - DECK

BAR MARK	COAT	NO. REQ'D.	LENGTH	BENT	LOCATION
D901	X	98	14'-5"		DECK - TOP LONGITUDINAL
D602	X	49	29'-8"		DECK - TOP LONGITUDINAL
D603	X	172	18'-2"	X	DECK - BOTTOM LONGITUDINAL - HAUNCH
D804	X	128	16'-7"		DECK - BOTTOM LONGITUDINAL
D805	X	128	25'-2"		DECK - BOTTOM LONGITUDINAL
D406	X	89	33'-0"		DECK - TOP TRANSVERSE
D407	X	89	32'-9"		DECK - TOP TRANSVERSE
D608	X	67	35'-9"		DECK - BOTTOM TRANSVERSE
D609	X	67	32'-9"		DECK - BOTTOM TRANSVERSE
D510	X	194	4'-1"	X	CORBEL - TRANSVERSE
D511	X	134	6'-6"	X	PARAPET DOWELS
D512	X	268	8'-4"	X	SIDEWALK - TRANSVERSE TOP
D413	X	268	4'-2"	X	CURB DOWELS
D414	X	268	4'-4"	X	SIDEWALK DOWELS
D415	X	56	33'-11"		SIDEWALK - LONGITUDINAL
D416	X	90	3'-1"	X	SIDEWALK - TRANSVERSE BOTTOM
D417	X	8	26'-0"		CORBEL - LONGITUDINAL
D418	X	24	3'-4"	X	CORBEL - ANCHOR SLAB
D419	X	8	5'-8"		CORBEL - ANCHOR SLAB LONGITUDINAL

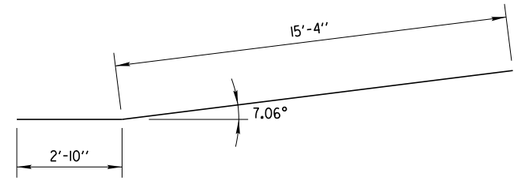

D603

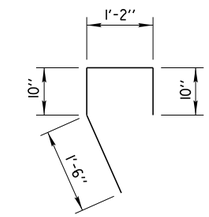

D510

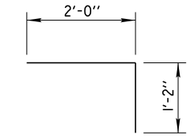

D416

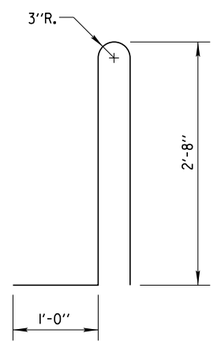

D511

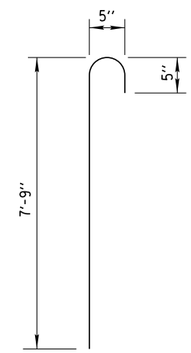

D512

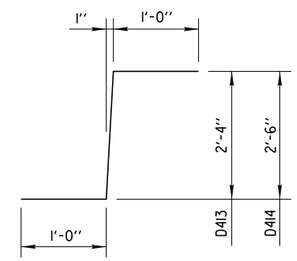

D413, D414

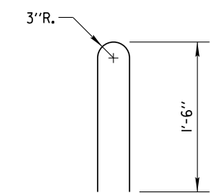

D418

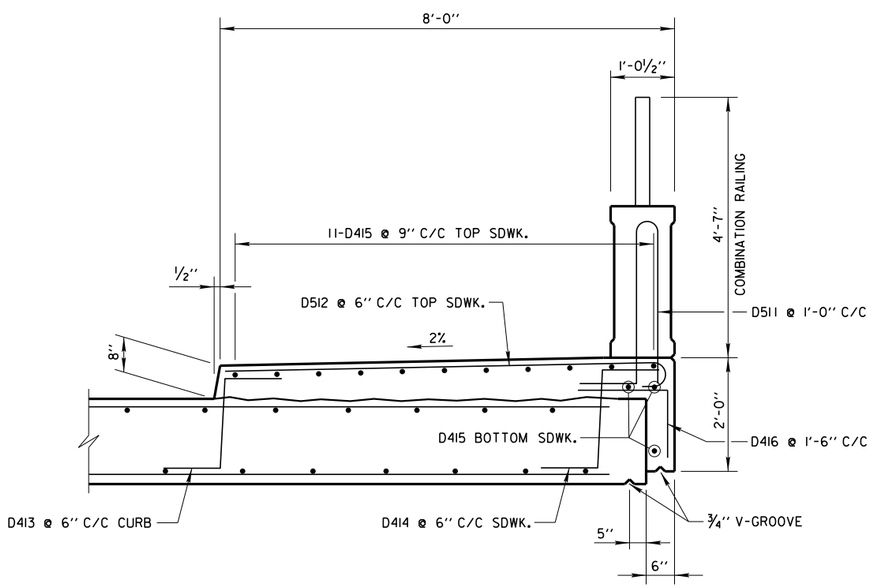

NOTE:
UTILITIES NOT SHOWN FOR CLARITY

SECTION 1/12
SIDEWALK, EDGE BEAM

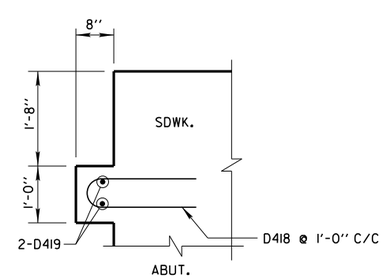

SECTION 2/12
ANCHOR SLAB PAVING NOTCH

City of Milwaukee
Department of Public Works
Infrastructure Services Division

WEST LISBON AVENUE BRIDGE
OVER CANADIAN PACIFIC RAILWAY
B-40-899
DECK DETAILS AND BILL OF BARS

REVISIONS

DESIGNED BY J.J.K.
DRAWN BY R.B.M.
CHECKED BY A.R.
DATE 02-2014
SCALE NONE
JOB NUMBER BR100-14-0105
SHEET NUMBER 14 OF 19
OF 58

W:\STRVB0933\PLANS\ 15 LIGHTINGDETAIL.DGN 02-14-2014

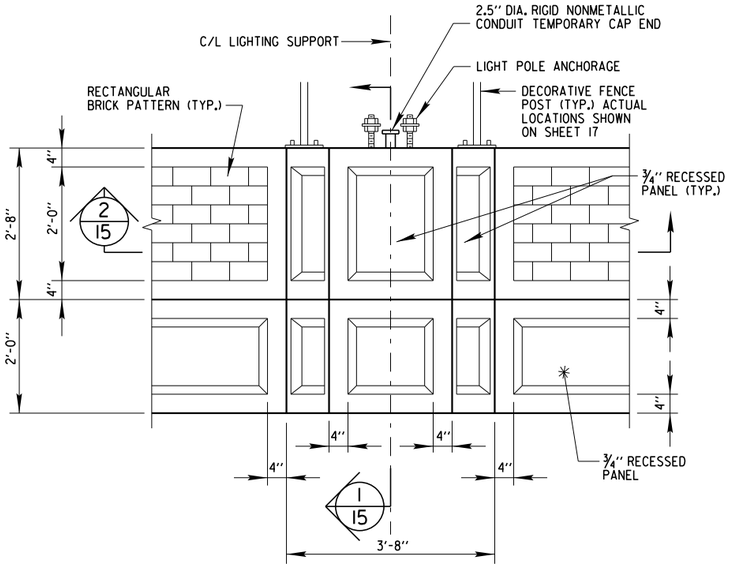

OUTSIDE ELEVATION AT LIGHT SUPPORT

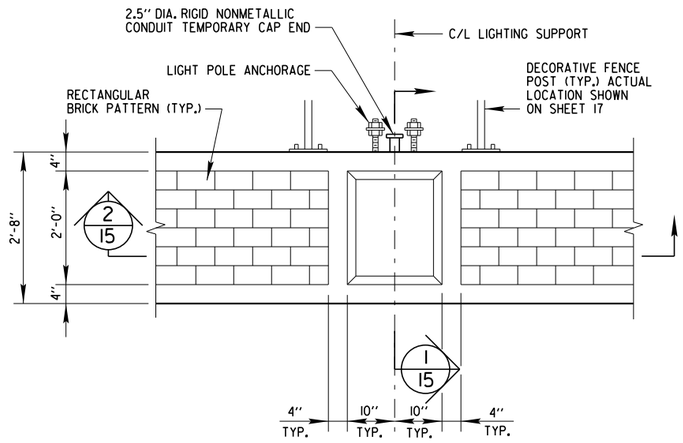

INSIDE ELEVATION AT LIGHT SUPPORT

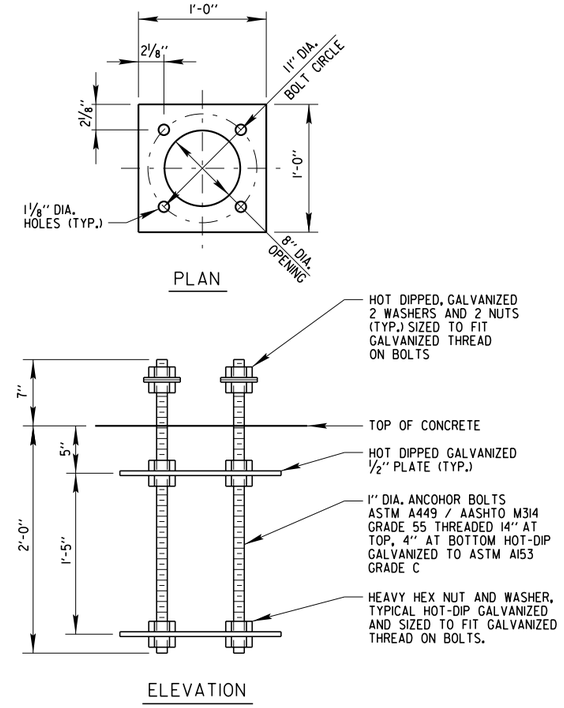

ANCHOR ASSEMBLY LIGHT POLE STRUCTURES

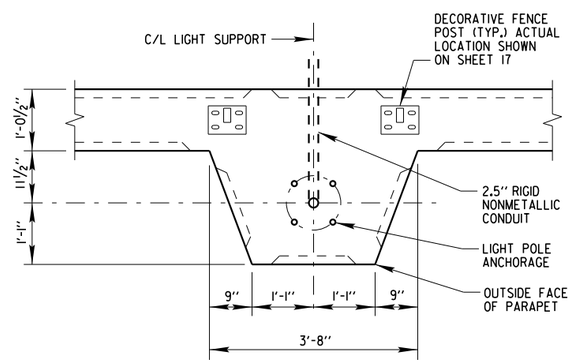

PLAN AT LIGHT SUPPORT

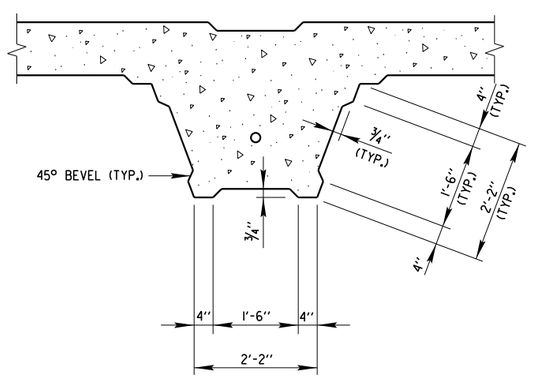

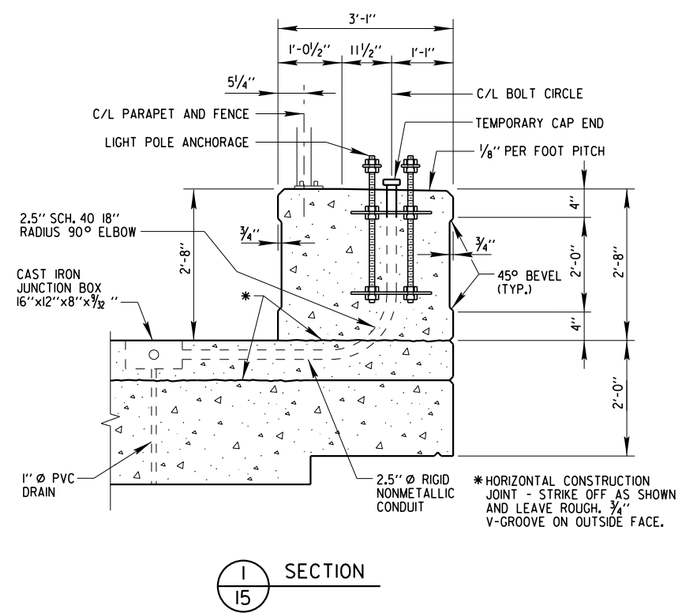

NOTE:

- CONTRACTOR TO PROVIDE 3/8" PULL ROPE IN ALL CONDUITS.
- INSTALL BOLTS PERPENDICULAR TO THE HORIZON.

City of Milwaukee

Department of Public Works

Infrastructure Services Division

WEST LISBON AVENUE BRIDGE
OVER CANADIAN PACIFIC RAILWAY
B-40-899
LIGHTING DETAILS

REVISIONS

DESIGNED BY J.J.K.

DRAWN BY K.P.S.

CHECKED BY H.J.R.

DATE 02-2014 | SCALE NONE

JOB NUMBER BR100-14-0105

SHEET NUMBER 15 OF 19

OF 58

W:\STRVB0933\PLANS\ 16 LIGHTINGDETAIL.DGN 02-14-2014

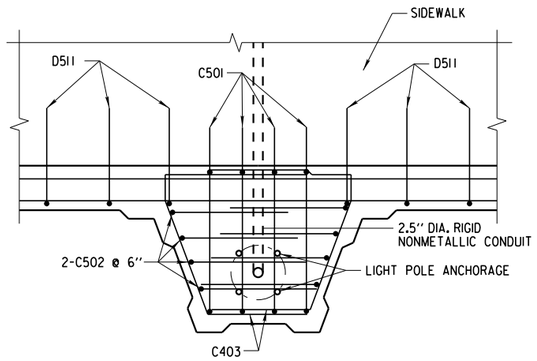

INSIDE PLAN AT LIGHTING SUPPORT

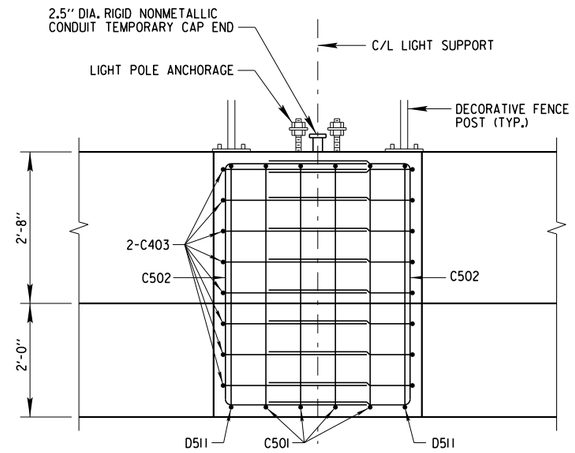

INSIDE ELEVATION AT LIGHTING SUPPORT

INSIDE ELEVATION

BILL OF BARS - LIGHTING SUPPORT

BAR MARK	COAT	NO. REQ'D.	LENGTH	BENT	BAR SERIES	LOCATION
C501	X	16	11'-3"	X		LIGHT BLISTER - VERTICAL - TRANSVERSE
C502	X	32	8'-1"	X		LIGHT BLISTER - VERTICAL - LONGITUDINAL
C403	X	64	7'-3"	X		LIGHT BLISTER - HORIZONTAL
C404	X	12	8'-0"			LIGHT BLISTER - HORIZONTAL - TRANSVERSE
C705	X	28	8'-9"	X		LIGHT BLISTER - HORIZONTAL - TRANSVERSE

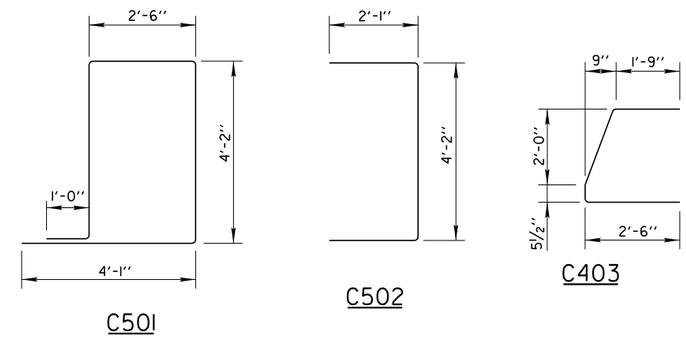

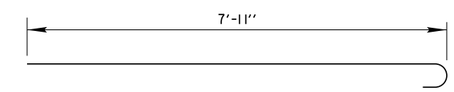

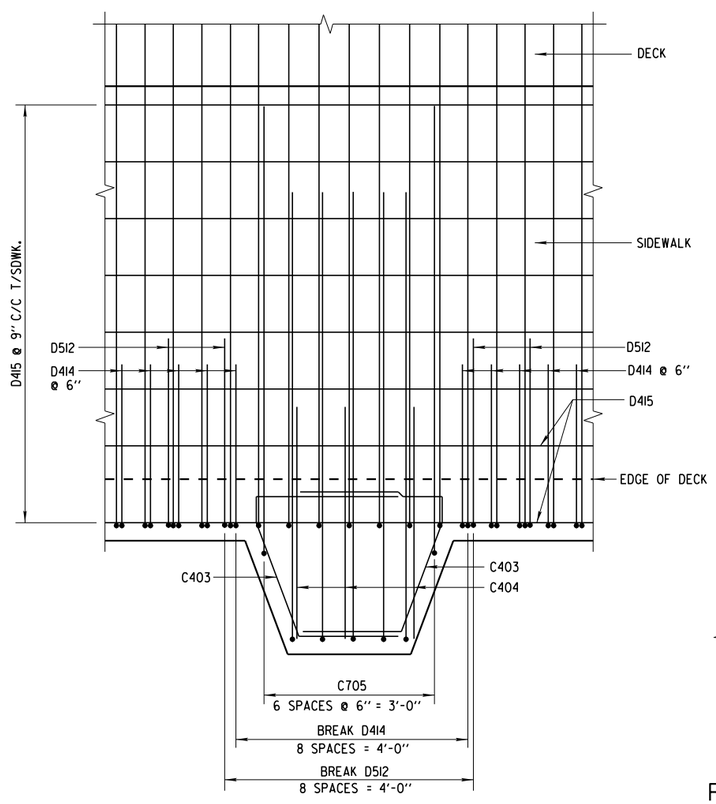

REINFORCEMENT IN SIDEWALK AT LIGHTING SUPPORT

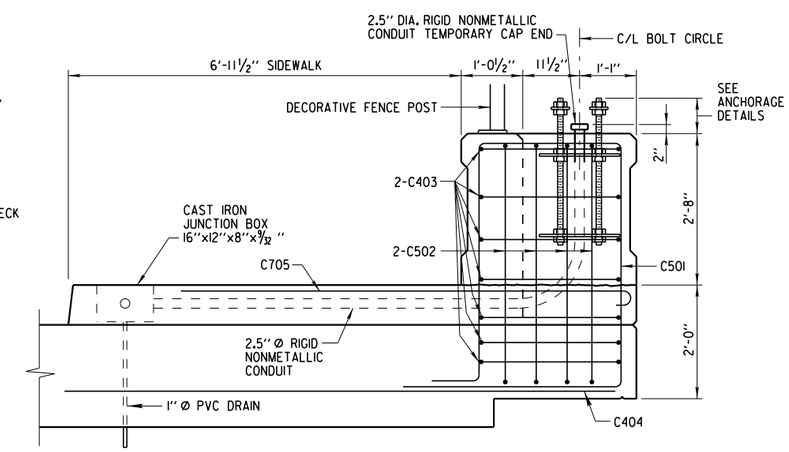

REINFORCEMENT IN SIDEWALK AND LIGHTING SUPPORT

CROSS SECTION AT LIGHT SUPPORT

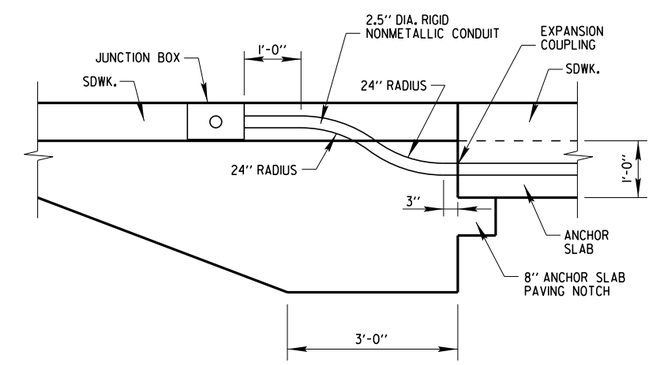

STREET LIGHTING DETAIL AT END OF BRIDGE

City of Milwaukee

Department of Public Works

Infrastructure Services Division

WEST LISBON AVENUE BRIDGE
OVER CANADIAN PACIFIC RAILWAY
B-40-899
LIGHTING BILL OF BARS

REVISIONS

DESIGNED BY J.J.K.

DRAWN BY K.P.S.

CHECKED BY H.J.R.

DATE 02-2014 | SCALE NONE

JOB NUMBER BR100-14-0105

SHEET NUMBER 16 OF 19

OF 58

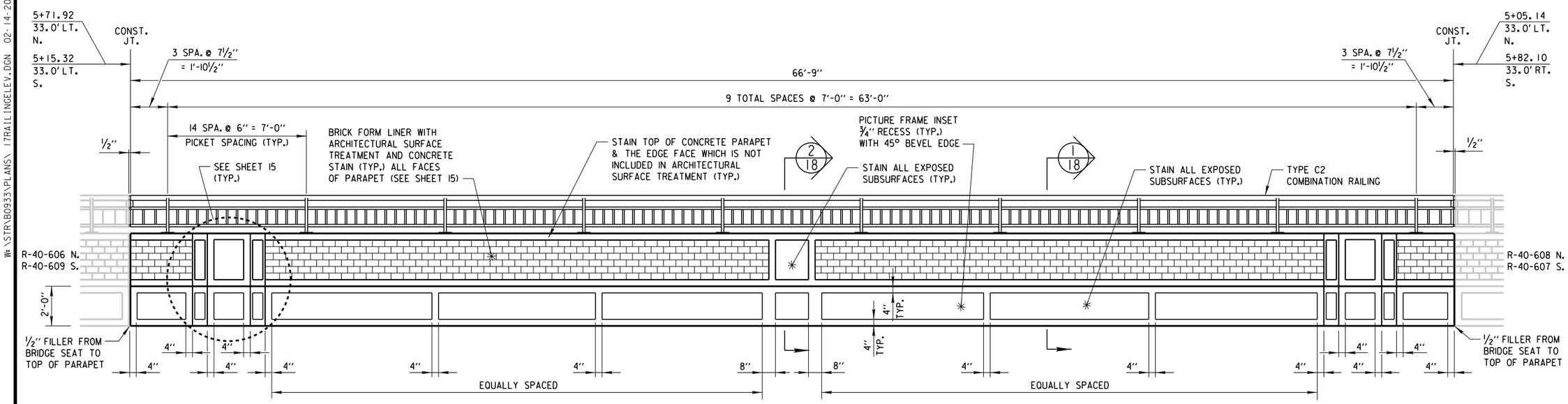

NORTH FACE OF NORTH BRIDGE RAILING - LOOKING SOUTH
SOUTH FACE OF SOUTH BRIDGE RAILING - LOOKING NORTH

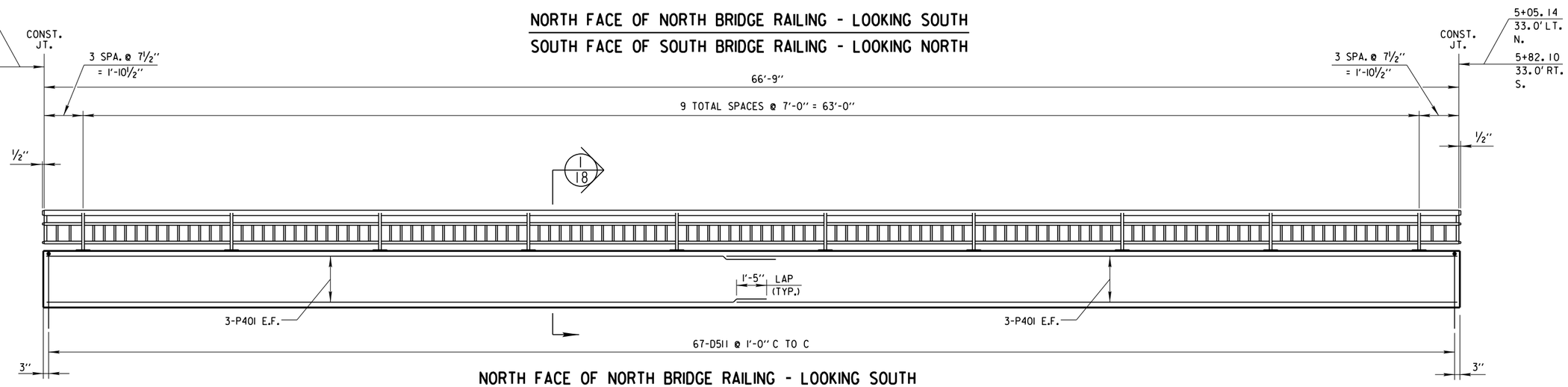

NORTH FACE OF NORTH BRIDGE RAILING - LOOKING SOUTH
SOUTH FACE OF SOUTH BRIDGE RAILING - LOOKING NORTH

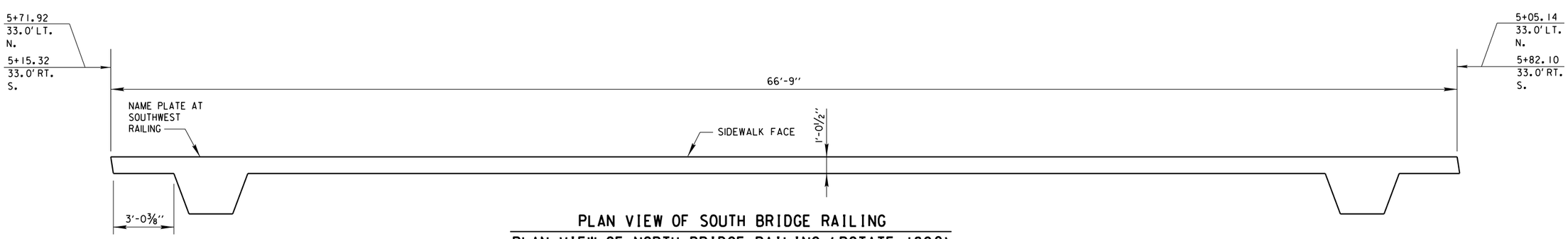

PLAN VIEW OF SOUTH BRIDGE RAILING
PLAN VIEW OF NORTH BRIDGE RAILING (ROTATE 180°)

City of Milwaukee

Department of Public Works

Infrastructure Services Division

WEST LISBON AVENUE BRIDGE
OVER CANADIAN PACIFIC RAILWAY
B-40-899
RAILING PLAN AND ELEVATIONS

REVISIONS

DESIGNED BY H.J.R.
DRAWN BY R.B.M.
CHECKED BY J.J.K.
DATE 02-2014
SCALE NONE
JOB NUMBER BR100-14-0105
SHEET NUMBER 17 OF 19
OF 58

W:\STR\B0933\PLANS\ 17RAILINGELEV.DGN 02-14-2014

W:\STR\B0933\PLANS\ 18RAILINGBILLOFBAR.DGN 02-14-2014

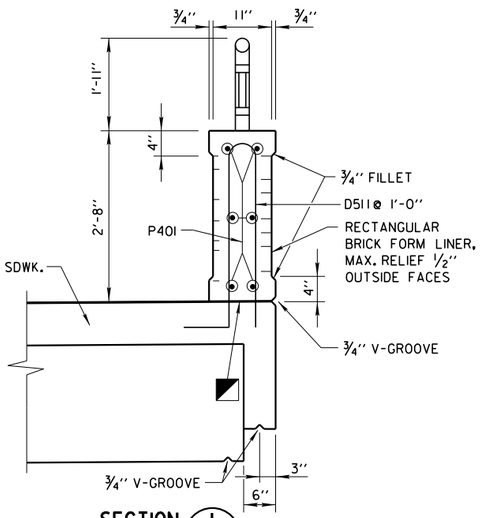

SECTION 1/17

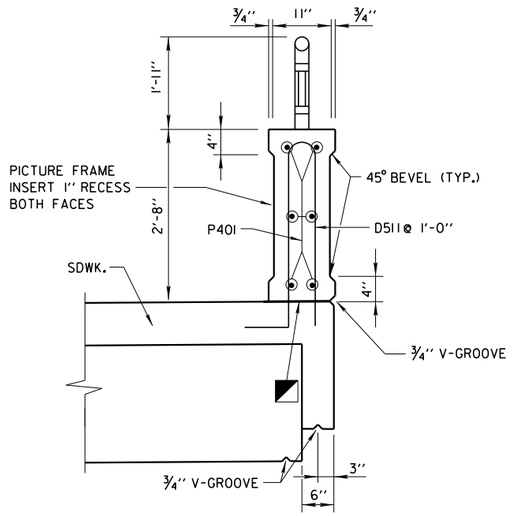

SECTION 2/17

BILL OF BARS - VERTICAL PARAPET WALL

BAR MARK	COAT	NO. REQ'D.	LENGTH	BENT	BAR SERIES	LOCATION
P401	X	24	34'-0"			PARAPET WALL - HORIZ.

HORIZ. CONST. JOINT-STRIKE OFF AS SHOWN & LEAVE ROUGH.

CAULK AROUND PERIMETER OF BASE PLATES, NO. 1, AND FILL BOLT SLOT OPENINGS IN SHIMS AND BASE PLATES WITH NON-STAINING GRAY NON-BITUMINOUS JOINT SEALER.

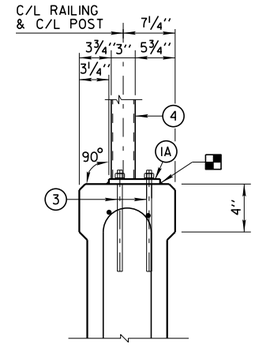

SECTION THRU PARAPET ON BRIDGE

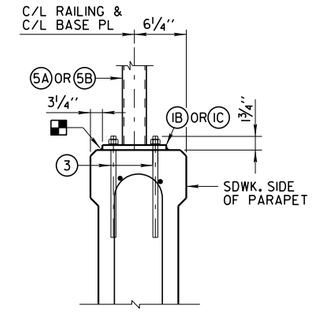

ANCHORAGE FOR END RAIL

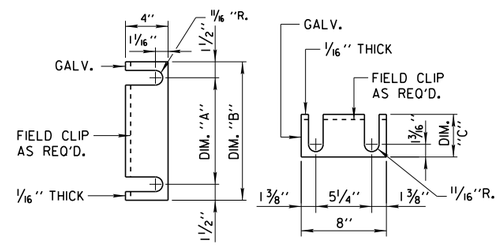

END RAIL SHIM DETAIL

8" X 1'-1" BASE PLATE (1B) DIM. "A" = 10", DIM. "B" = 1'-1", DIM. "C" = 6 1/2"
8" X 1'-6" BASE PLATE (1C) DIM. "A" = 1'-3", DIM. "B" = 1'-6", DIM. "C" = 9"
(2 SETS PER POST)

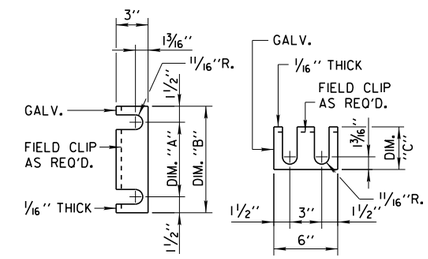

RAIL POST SHIM DETAIL

6" X 8" BASE PL (1A) DIM. "A" = 5", DIM. "B" = 8", DIM. "C" = 4".
(2 SETS PER POST)

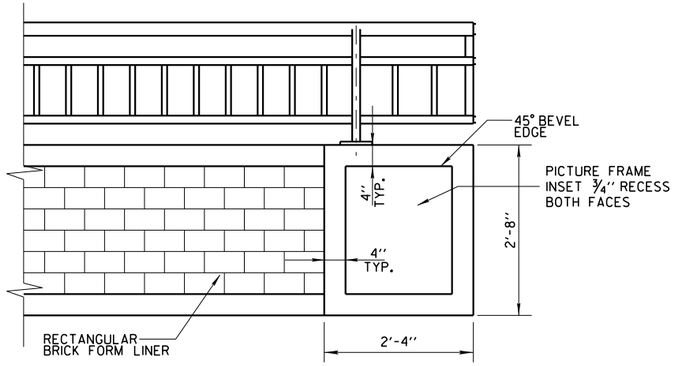

RAILING PICTURE FRAME INSET ELEVATION

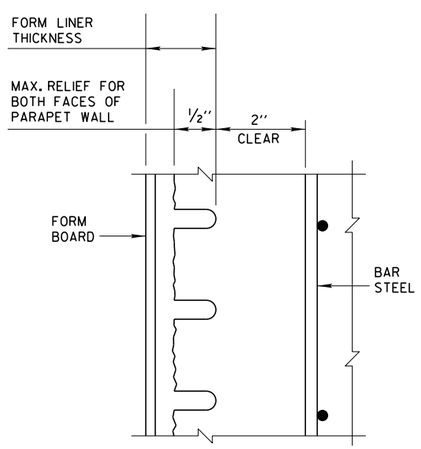

SECTION THRU FORM LINER

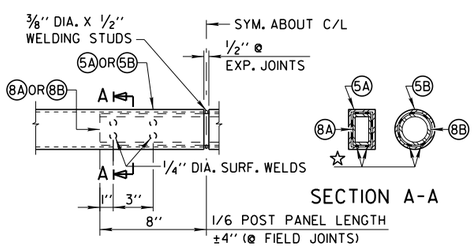

FIELD ERECTION JOINT DETAIL

☆ MIN. 5/8" FLAT SURF. DIA. PUNCHINGS OR STUDS MAY BE USED AS AN ALT.

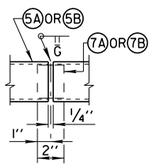

SHOP RAIL SPLICE DETAIL

(LOCATION MUST BE SHOWN ON SHOP DRAWINGS)

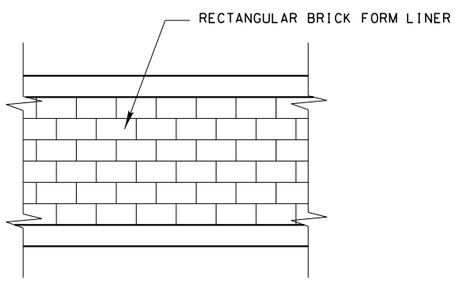

BRICK STONE FORM LINER

NOTE:
SEE LEGEND & RAILING NOTES ON SHEET 19

City of Milwaukee

Department of Public Works

Infrastructure Services Division

WEST LISBON AVENUE BRIDGE
OVER CANADIAN PACIFIC RAILWAY
B-40-899
RAILING DETAILS AND BILL OF BARS

REVISIONS

DESIGNED BY H.J.R.
DRAWN BY R.B.M.
CHECKED BY J.J.K.
DATE 02-2014
SCALE NONE
JOB NUMBER BR100-14-0105
SHEET NUMBER 18 OF 19
OF 58

W:\STRVB0933\PLANS\ 19STEELRAILINGDET.DGN 02-07-2014

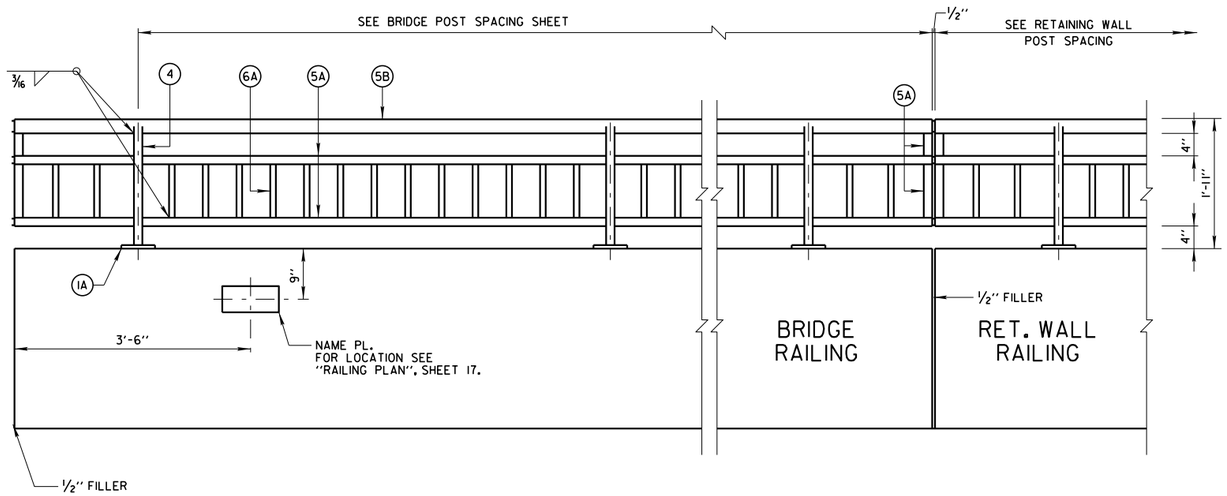

INSIDE ELEVATION OF PARAPET

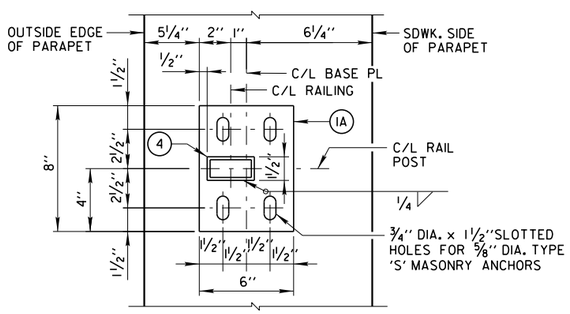

TYPICAL RAIL POST BASE PLATE

FOR 3" X 1 1/2" X 3/16" POSTS (4)

MATERIAL THICKNESS OF THICKER PART JOINED	MINIMUM SIZE OF FILLET WELD *
TO 1/2" INCLUSIVE	3/16"
OVER 1/2" TO 3/4"	1/4"
OVER 3/4" TO 1 1/2"	5/16"
OVER 1 1/2" TO 2 1/4"	3/8"
OVER 2 1/4" TO 6"	1/2"

* EXCEPT THAT WELD SIZE SHALL NOT EXCEED THICKNESS OF THINNER PART JOINED.

NOTES

RAILING SHALL BE HOT DIP GALVANIZED AND PAINTED WITH WISDOT APPROVED TWO COAT PAINT SYSTEM.

PAINT POSTS, RAILS, SHIMS, AND EXPOSED PORTIONS OF ANCHOR BOLTS. FINISH COAT COLOR SHALL BE FEDERAL STANDARD COLOR NO. 27038.

INCLUDE PAINTING COST IN BID ITEM "RAILING STEEL TYPE C2 GALVANIZED B-40-899".

5/8" DIA. CONCRETE MASONRY ANCHORS TYPE 'S': MINIMUM PULLOUT STRENGTH 13 KIPS, EMBED 7" MIN. FOR RAIL POSTS AND 5" MIN. FOR END RAILS. STAINLESS STEEL.

LEGEND

(1A) PLATE 5/8" x 6" x 8" WITH 3/4" x 1 1/2" SLOTTED HOLES.

(2) 1/4" x 2 1/2" x 7 1/4" ANCHOR PLATE WITH 11/16" DIA. HOLES FOR THREADED RODS NO. 3.

(3) 4 STAINLESS STEEL CONCRETE MASONRY ANCHORS (MIN. TENSILE STRENGTH = 70 KSI) TYPE 'S' (EPOXY), 5/8" DIA. MINIMUM PULLOUT CAPACITY OF 13 KIPS. EMBED A MIN. OF 7" FOR RAIL POSTS AND 5" FOR END RAILS.

(4) STRUCTURAL TUBING 3" x 1 1/2" x 3/16". PLACE VERTICAL. WELD TO NO. 1 & NO. 5.

(5A) STRUCTURAL TUBING 3" x 1 1/2" x 3/16" RAILS. WELD TO NO. 1 & NO. 4. INSIDE OF TUBE TO BE PAINTED AT ALL FIELD ERECTION & EXPANSION JOINTS.

(5B) STRUCTURAL TUBING 2 1/2" DIA. (STANDARD SIZE) (2.875" O.D.). WELD TO NO. 1 & NO. 4. INSIDE OF PIPE TO BE PAINTED AT ALL FIELD ERECTION & EXPANSION JOINTS.

(6A) BAR 1" x 1" PICKETS. WELD TO NO. 5 (SPACE AT 6" MAX. C/L TO C/L SPACING). PLACE VERTICAL.

(7A) RECTANGULAR SLEEVE FABRICATED FROM 3/16" PLATES. PROVIDE "SLIDING FIT".

(7B) CIRCULAR SLEEVE FABRICATED FROM STRUCTURAL TUBING 2" DIA. (STANDARD SIZE) (2.375" O.D.)

(8A) RECTANGULAR SLEEVE FABRICATED FROM 3/16" PLATES. (1'-4" AT FIELD ERECTION JOINTS)

(8B) CIRCULAR SLEEVE FABRICATED FROM STRUCTURAL TUBING 2" DIA. (STANDARD SIZE) (2.375" O.D.) (1'-4" AT FIELD ERECTION JOINTS)

RAILING NOTES

BID ITEM SHALL BE "RAILING STEEL TYPE C2 GALVANIZED B-40-899", WHICH SHALL INCLUDE ALL WORK SHOWN ON THIS SHEET.

POST BASE PLATES SHALL BE FLAT WITH ALL SURFACES SMOOTH AND FREE FROM WARP AND ALL EDGES SMOOTH, STRAIGHT AND VERTICAL. ALL PLATE CUTS SHALL BE MACHINE OR MACHINE FLAME CUTS.

NO. 1, 2, 6, 7 AND 8 SHALL CONFORM TO ASTM A709 GRADE 36. STRUCTURAL TUBING SHALL CONFORM TO ASTM A500 GRADE B (NO. 4 & NO. 5).

ANCHORAGES SHALL BE ACCURATELY PLACED TO PROVIDE CORRECT ALIGNMENT OF RAILING. SET NORMAL TO GRADE.

CUT BOTTOM OF POST TO MAKE POST VERTICAL IN BOTH TRANSVERSE AND LONGITUDINAL DIRECTION.

STEEL SHIMS SHALL BE PROVIDED & USED UNDER BASE PLATES WHERE REQUIRED FOR ALIGNMENT, AND SHALL BE GALVANIZED OR STAINLESS STEEL.

ALL JOINTS AND RECESSES IN CONCRETE PARAPET ARE TO BE VERTICAL.

ALL MATERIAL (EXCEPT NO. 3) SHALL BE GALVANIZED AFTER FABRICATION. PRIOR TO GALVANIZING THE STEEL RAILING SHALL BE GIVEN A NO. 6 BLAST CLEANING PER SPECIFICATIONS. PAINT OVER GALVANIZING WITH AN APPROVED TIE COAT AND TOP AS SPECIFIED IN THE "BRIDGE SPECIAL PROVISIONS". THE RAILING SHALL BE PAINTED FEDERAL STANDARD COLOR NO. 27038.

VENT HOLES SHALL BE DRILLED IN POST AND RAIL MEMBERS AS REQUIRED TO FACILITATE GALVANIZING AND DRAINAGE.

RAILING SHALL BE FABRICATED IN LENGTHS THAT INCLUDE 3 OR 4 POSTS.

TOUCH-UP PAINTING TO BE DONE AT COMPLETION OF STEEL RAILING INSTALLATION TO THE SATISFACTION OF THE ENGINEER AT NO EXTRA COST.

City of Milwaukee

Department of Public Works

Infrastructure Services Division

WEST LISBON AVENUE BRIDGE
OVER CANADIAN PACIFIC RAILWAY
B-40-899
STEEL RAILING DETAILS

REVISIONS

DESIGNED BY H.J.R.
DRAWN BY R.B.M.
CHECKED BY J.J.K.
DATE 02-2014
SCALE NONE
JOB NUMBER BR100-14-0105
SHEET NUMBER 19 OF 19
OF 58

W:\STR\B0933\PLANS\NERETWALL\ NE_ELEVATION.DGN 02-18-2014

GENERAL NOTES

DRAWINGS SHALL NOT BE SCALED.

ALL STATIONS AND ALL ELEVATIONS ARE IN FEET.
ALL ELEVATIONS ARE REFERRED TO CITY OF MILWAUKEE DATUM.
CITY OF MILWAUKEE DATUM = (NGVD29) -580.60

ALL DIMENSIONS ALONG THE FRONT FACE OF WALL UNLESS OTHERWISE SHOWN.

BAR REINFORCEMENT SHALL HAVE 2" CLEAR COVER UNLESS SHOWN OTHERWISE.

THESE PLANS ARE FOR A PRECAST CONCRETE PANEL MECHANICALLY STABILIZED EARTH (MSE) RETAINING WALL LRFD.

THE CONTRACTOR MUST COORDINATE THE CONSTRUCTION OF WALLS R-40-606, R-40-607, R-40-608, R-40-609, AND BRIDGE B-40-899.

THE CONTRACTOR SHALL PROVIDE COMPLETE DESIGN, PLANS, DETAILS, SPECIFICATIONS, AND SHOP DRAWINGS FOR THE RETAINING WALLS IN ACCORDANCE WITH THE SPECIAL PROVISIONS. THE RETAINING WALL MANUFACTURER SHALL PROVIDE TECHNICAL ASSISTANCE TO THE CONTRACTOR DURING CONSTRUCTION. THE COST OF FURNISHING THESE ITEMS SHALL BE INCLUDED IN THE BID ITEM, "WALL CONCRETE PANEL MECHANICALLY STABILIZED EARTH LRFD".

THE COST OF FURNISHING AND PLACING BACKFILL WITHIN THE REINFORCED SOIL ZONES, UNREINFORCED CONCRETE LEVELING PAD UNDER THE MSE PRECAST WALL PANELS, AND REINFORCEMENT, GEOTEXTILE FABRIC, ENGINEERED BACKFILL, JOINT MATERIAL, AND OTHER MISCELLANEOUS ITEMS IS INCLUDED IN THE COST OF BID ITEM "WALL CONCRETE PANEL MECHANICALLY STABILIZED EARTH LRFD".

ALL BAR STEEL REINFORCEMENT IS TO BE EPOXY COATED.

BEVEL ALL EXPOSED EDGES OF CONCRETE ¾" UNLESS NOTED OTHERWISE.

THE PLAN QUANTITY FOR THE ITEM "WALL CONCRETE PANEL MECHANICALLY STABILIZED EARTH LRFD" IS BASED ON A WALL HEIGHT MEASURED FROM THE TOP OF THE LEVELING PAD TO THE TOP OF WALL AS SHOWN IN THE PLANS.

PLANS, ELEVATIONS AND DETAILS SHOWN ON THESE DRAWINGS ARE INTENDED TO INDICATE WALL LOCATIONS, LENGTHS HEIGHTS, AND DETAILS COMMON TO THE WALL SYSTEM SELECTED. THE CONTRACTOR SHALL VERIFY THAT THE WALL SYSTEM SELECTED WILL CONFORM TO THE REQUIRED ALIGNMENTS AND DETAILS.

THE MAXIMUM VALUE OF THE ANGLE OF INTERNAL FRICTION OF THE WALL BACKFILL MATERIAL IN THE REINFORCED ZONE SHALL BE ASSUMED TO BE 30° WITHOUT CERTIFIED TEST VALUES.

PLACE BACKFILL IN SPECIFIED LAYER THICKNESS STARTING AT BACK FACE OF WALL AND WORKING AWAY FROM WALL.

UTILITY LOCATIONS SHOWN ARE APPROXIMATE. THE CONTRACTOR SHALL BE RESPONSIBLE FOR DETERMINING THE EXACT LOCATION OF ALL UTILIES PRIOR TO EXCAVATING. DAMAGE TO EXISTING UTILITES SHALL BE REPAIRED OR REPLACED AT THE CONTRACTORS EXPENSE.

THE RETAINING WALL IS TO BE DESIGNED USING THE ELEVATIONS GIVEN ON THIS SHEET.

SEE SPECIAL PROVISIONS FOR AESTHETIC TREATMENT TO WALL.

■ THE LENGTHS PROVIDED IN THE TABLE ARE THE MINIMUM REQUIRED REINFORCEMENT LENGTHS BASED UPON THE MINIMUM DESCRIBED IN THE WALL SYSTEM SPECIAL PROVISIONS OR EXTERNAL AND OVERALL STABILITY AT THE DESIGNATED LOCATIONS. THESE DESIGNATED LOCATIONS REPRESENT TYPICAL AND CRITICAL WALL LOCATIONS, BUT SHALL NOT BE CONSIDERED ALL INCLUSIVE. THE CONTRACTOR DESIGN LENGTHS SHALL MEET OR EXCEED THE MINIMUM VALUES REPRESENTED IN THE TABLE AT THESE DESIGNATED LOCATIONS.

DESIGN DATA

MATERIAL PROPERTIES:

CONCRETE MASONRY	f'c = 4,000 PSI
PRECAST CONCRETE WALL PANEL	f'c = 4,000 PSI
BAR STEEL REINFORCEMENT	Fy = 60,000 PSI

LIVE LOAD:

LIVE LOAD SURCHARGE	240 PSF

B.M. N/S HYD. (NNW BOLT)
WEST OF W. LISBON AVE. BRIDGE
ELEV. = 108.107

WEST LISBON AVENUE OVER CANADIAN PACIFIC RAILWAY

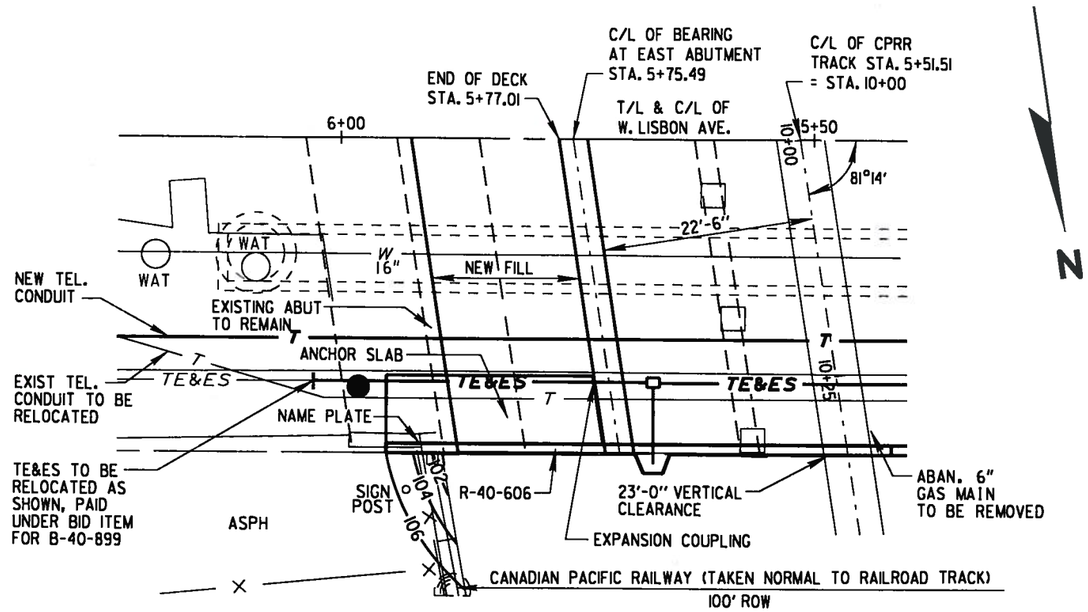

PLAN VIEW

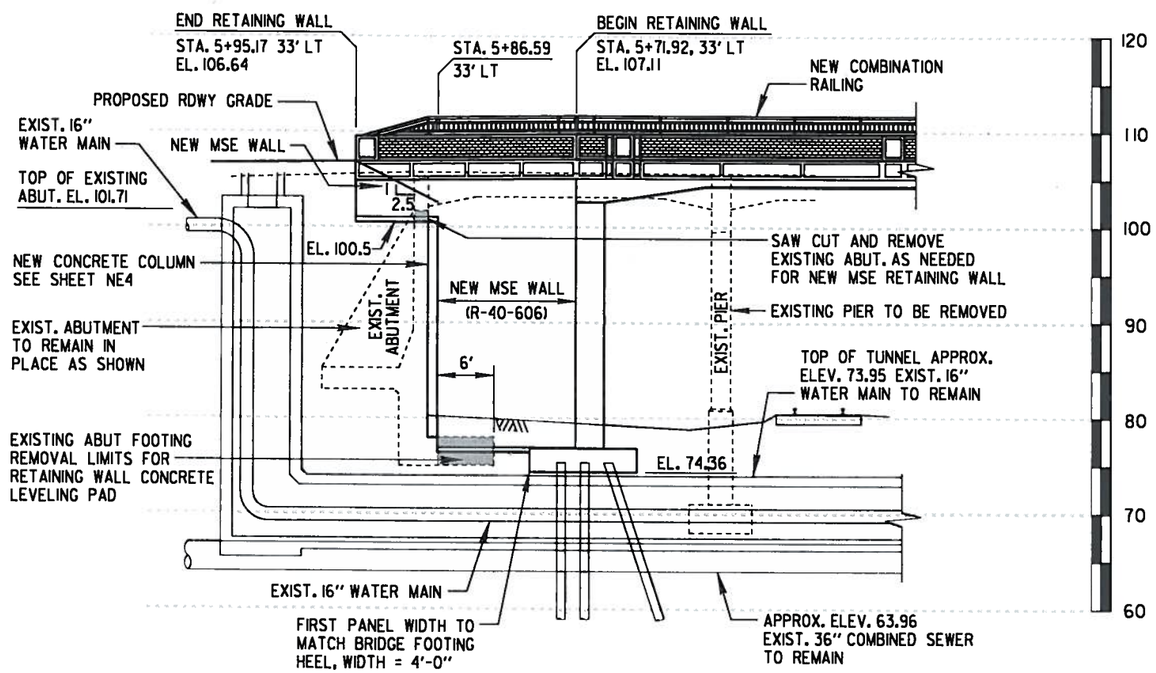

NOTE:
REMOVE TEMPORARY SHORING FROM EAST ABUTMENT AT NORTH SPANDREL BEAM AND SALVAGE FOR CITY. THIS REMOVAL AND PORTION OF REMOVAL OF THE EXISTING ABUTMENT AS SHOWN WILL BE PAID AS PART OF BRIDGE REMOVAL.

NORTH ELEVATION

LOOKING SOUTH

WALL EXTERNAL STABILITY EVALUATION

WALL HEIGHT (FEET)	28'-9"
EXPOSED WALL HEIGHT (FEET)	27'-3"
MINIMUM LENGTH OF REINFORCEMENT (FEET) ■	20'-2"
LENGTH OF REINFORCEMENT / WALL HEIGHT	0.70
WALL STATION	5+71.92
TEST BORING USED	BOR-2

SOIL PARAMETERS

STRATUM LOCATION & SOIL DESCRIPTION	UNIT DENSITY (PCF)	FRICTION ANGLE (DEGREES)	COHESION (PSF)
EXISTING CLAYEY FILL	125	28	1500
GRANULAR BACKFILL (REINFORCING ZONE OR BACKFILL)	120	30	0
(CLAY WITH GRAVEL) EL. 67.0 TO EL. 74.00	130	30	2500
(SAND WITH GRAVEL) EL. 57.0 TO EL. 67.00	125	30	0
(CLAY WITH GRAVEL) EL. 42.0 TO EL. 57.00	140	32	3500

CAPACITY TO DEMAND RATIO (CDR)

	DRAINED	UNDRAINED
SLIDING (CDR ≥ 1.0)	1.5	1.1
ECCENTRICITY (CDR > 1.0)	1.4	1.4
BEARING (CDR > 1.0)	1.8	1.0
GLOBAL STABILITY (CDR > 1.0)	1.3	1.7

GEOMETRY TABLE

STATION	OFFSET TO F.F. WALL	TOP OF WALL ELEV.	FINISHED GRADE ELEV.
5+72.00	32.5'LT.	107.11	78.36
5+86.59	32.5' LT.	106.81	78.46
5+95.17	32.5' LT.	106.64	107.01

WISCONSIN
CRAIG S. LIBERTO
E-23746
MILWAUKEE
WIS.
PROFESSIONAL ENGINEER

Craig S. Liberto 2/18/14

NORTHEAST RETAINING WALL LIST OF DRAWINGS

NE1. GENERAL PLAN AND ELEVATION
NE2. SUBSURFACE EXPLORATION
NE3. WALL DETAILS AND QUANTITIES
NE4. ANCHOR SLAB PLAN
NE5. RAILING ELEVATIONS, BAR DETAILS & PLAN
NE6. RAILING DETAILS AND BILL OF BARS
NE7. STEEL RAILING DETAILS

City of Milwaukee
Department of Public Works
Infrastructure Services Division

WEST LISBON AVENUE NORTHEAST RET. WALL
OVER CANADIAN PACIFIC RAILWAY
R-40-606
GENERAL PLAN AND ELEVATION

REVISIONS

DESIGNED BY H.J.R.	
DRAWN BY R.B.M.	
CHECKED BY A.R.	
DATE 02-2014	SCALE NONE
JOB NUMBER BR100-14-0105	
SHEET NUMBER NE1 OF NE7	
OF 58	

W:\STR\B0933\PLANS\NERETWALL\ 2NE_SUBSURFACE.DGN 02-13-2014

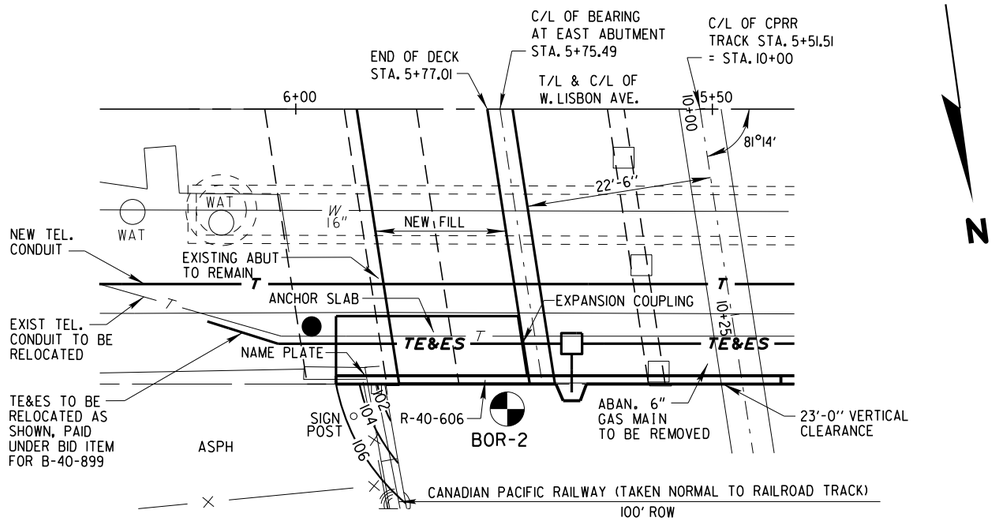

PLAN VIEW

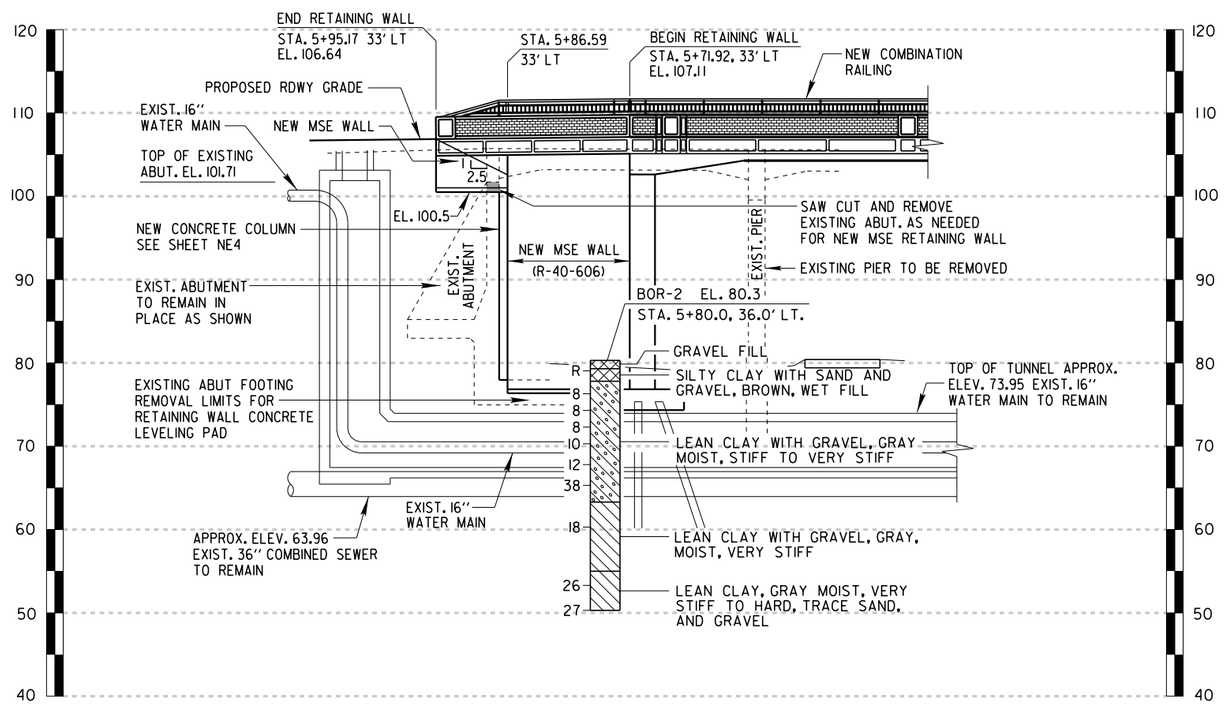

NORTH ELEVATION

LOOKING SOUTH

ABBREVIATIONS

F — FINE M — MEDIUM C — COARSE
WS — WEATHERED SO — SOUND

MATERIAL SYMBOLS

TOPSOIL, SILT, SANDSTONE, SAND, PEAT, LIMESTONE, GRAVEL, CLAY, IGNEOUS ROCK

LEGEND OF PROBING

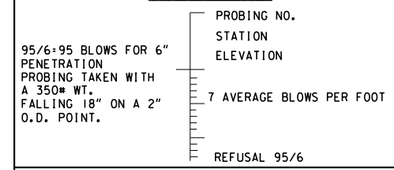

LEGEND OF BORING

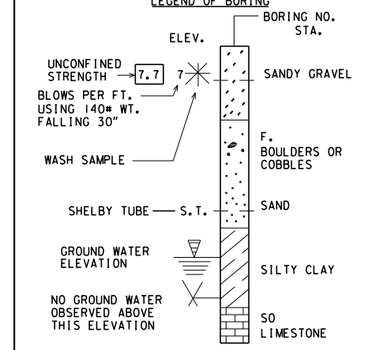

CONTRACTOR SHALL REFERENCE GESTRA GEOTECHNICAL REPORT AND ALL SUBSEQUENT ADDENDA DATED 12-24-2013. UNLESS OTHERWISE SPECIFIED, THE BLOWS PER FOOT AT THE LOCATIONS INDICATED ARE BASED ON DRIVING A 2" O.D. X 1.4" I.D. SPLIT SPOON SAMPLER WITH A 140# HAMMER HAVING A FREE FALL OF 30". THE BLOW COUNT IS TAKEN IN UNDISTURBED SOIL IMMEDIATELY BELOW A CASED OR OPEN HOLE ELIMINATING SIDE FRICTION ON THE DRIVE PIPE.

SUBSURFACE EXPLORATION FOR FOUNDATION DESIGN AND BIDDERS INFORMATION

TO OBTAIN RELATIVE DATA CONCERNING THE CHARACTER OF MATERIAL IN AND UPON WHICH THE FOUNDATION MIGHT BE BUILT, BORINGS AND/OR SOUNDINGS WERE MADE AT POINTS APPROXIMATELY AS INDICATED ON THIS DRAWING. THE DATA PRESENTED HEREIN REPRESENTS THE FINDINGS OF THE SUBSURFACE EXPLORATIONS MADE. HOWEVER, BECAUSE THE DEPTHS INVESTIGATED ARE LIMITED AND THE AREA OF THE BORINGS AND/OR SOUNDINGS IS VERY SMALL IN RELATION TO THE ENTIRE AREA, THE CITY OF MILWAUKEE DOES NOT WARRANT CONDITIONS BELOW THE DEPTHS INVESTIGATED OR THAT THE CLASSIFICATION OF MATERIAL ENCOUNTERED IN THESE INVESTIGATIONS IS NECESSARILY TYPICAL OF THE ENTIRE SITE. CONTACT MR. CRAIG LIBERTO AT (414) 286-0451 TO GET A COPY AND TO REVIEW THE GEOTECHNICAL REPORT.

City of Milwaukee

Department of Public Works

Infrastructure Services Division

WEST LISBON AVENUE NORTHEAST RET. WALL OVER CANADIAN PACIFIC RAILWAY R-40-606 SUBSURFACE

REVISIONS

DESIGNED BY H.J.R.	
DRAWN BY R.B.M.	
CHECKED BY A.R.	
DATE 02-2014	SCALE NONE
JOB NUMBER BR100-14-0105	
SHEET NUMBER NE2 OF NE7	
OF 58	

W:\STR\B0933\PLANS\NERETWALL\ 3NE_DETAILS.DGN 02-13-2014

BILL OF BARS - N.E. RETAINING WALL

BAR MARK	COAT	NO. REQ'D.	LENGTH	BENT	BAR SERIES	LOCATION
S401	X	12	22'-4"		▲	LONGITUDINAL
S402	X	19	6'-0"			TRANSVERSE - BOTTOM
S503	X	35	7'-11"	X		TRANSVERSE - TOP
S404	X	19	4'-3"	X		EDGE CAP
S505	X	28	7'-2"	X		RAILING DOWEL
S406	X	2	22'-9"			EDGE CAP - LONGITUDINAL

BAR MARK	NO. REQUIRED	LENGTH
S401	2 SERIES OF 6	21'-9" TO 22'-11"

▲ LENGTH SHOWN FOR BARS IS AN AVERAGE LENGTH AND SHOULD ONLY BE USED FOR BAR WEIGHT CALCULATIONS. SEE BAR SERIES TABLE FOR ACTUAL LENGTH.

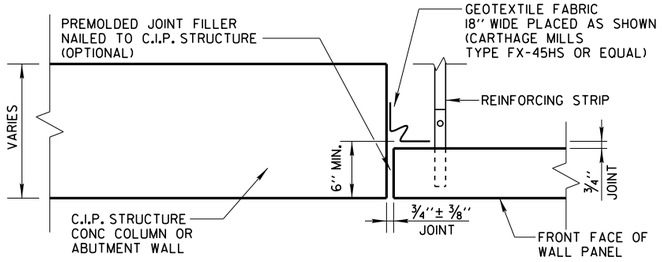

BUTT JOINT DETAIL AT C.I.P. STRUCTURES

(WITH LIP OR NOTCH)

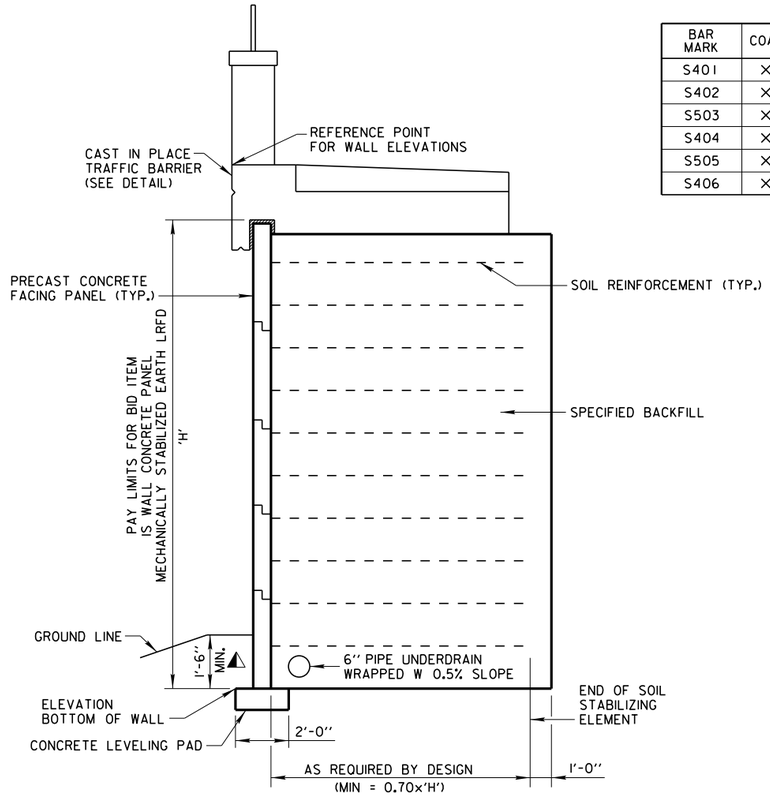

TYPICAL CROSS SECTION

⚠ MINIMUM EMBEDMENT BASED ON SITE SPECIFIC PARAMETERS (1'-6" MINIMUM FOR ALL WALLS ON LEVEL GROUND), FIELD EMBEDMENTS SHALL MEET OR EXCEED THE MINIMUM EMBEDMENT. FIELD EMBEDMENTS BELOW MINIMUM EMBEDMENT SHALL NOT BE INCLUDED IN THE PAY LIMITS.

NOTE:
TOP OF CONCRETE LEVELING PAD BETWEEN STATIONS SHALL BE SET AT SAME ELEVATION AS TOP OF BRIDGE FOOTING.

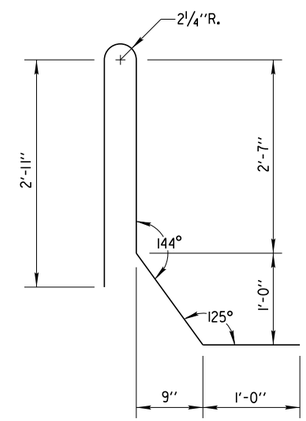

S505

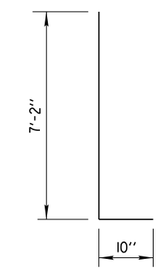

S503

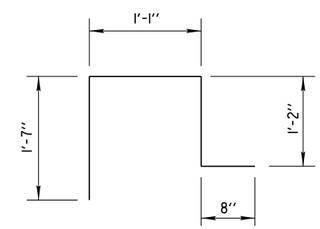

S404

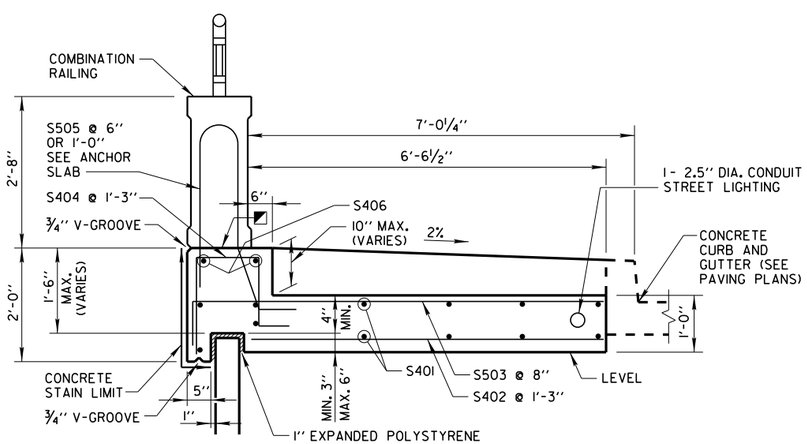

◩ HORIZ. CONST. JOINT-STRIKE OFF AS SHOWN & LEAVE ROUGH.

CAST IN PLACE CONCRETE BARRIER DETAIL 1/4

ESTIMATE OF QUANTITIES

ITEM NO.	BID ITEMS	UNIT	TOTAL
205.0501.S.02	EXCAVATION, HAULING AND DISPOSAL OF PETROLEUM CONTAMINATED SOIL	TON	16
504.0500	CONCRETE MASONRY RETAINING WALLS	CY	14
505.0615	BAR STEEL REINFORCEMENT HS COATED RETAINING WALLS	LB	1,147
517.1010.S.02	CONCRETE STAINING (R-40-606)	SF	130
517.1015.S.02	CONCRETE STAINING MULTI COLOR STRUCTURE (R-40-606)	SF	76
517.1050.S.02	ARCHITECTURAL SURFACE TREATMENT	SF	76
532.0500.S.01	WALL CONCRETE PANEL MECHANICALLY STABILIZED EARTH LRFD	SF	456
SPV.0105.02	RAILING STEEL TYPE C2 GALVANIZED R-40-606	LS	1

City of Milwaukee
Department of Public Works
Infrastructure Services Division

WEST LISBON AVENUE NORTHEAST RET. WALL
OVER CANADIAN PACIFIC RAILWAY
R-40-606
WALL DETAILS AND QUANTITIES

REVISIONS

DESIGNED BY H.J.R.
DRAWN BY R.B.M.
CHECKED BY A.R.
DATE 02-2014
SCALE NONE
JOB NUMBER BR100-14-0105
SHEET NUMBER NE3 OF NE7
OF 58

W:\STR\B0933\PLANS\NERETWALL\ 4NE_ANCHORSLAB.DGN 02-13-2014

BILL OF BARS - COLUMN

BAR MARK	COAT	NO. REQ'D.	LENGTH	BENT	BAR SERIES	LOCATION
E601	X	3	22'-8"			VERTICAL COLUMN
E402	X	24	2'-7"	X		STIRRUP
E503	X	2	1'-4"			DOWELS
E504	X	24	1'-10"			DOWELS
E505	X	24	1'-0"			DOWELS

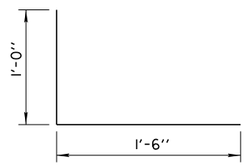

E402

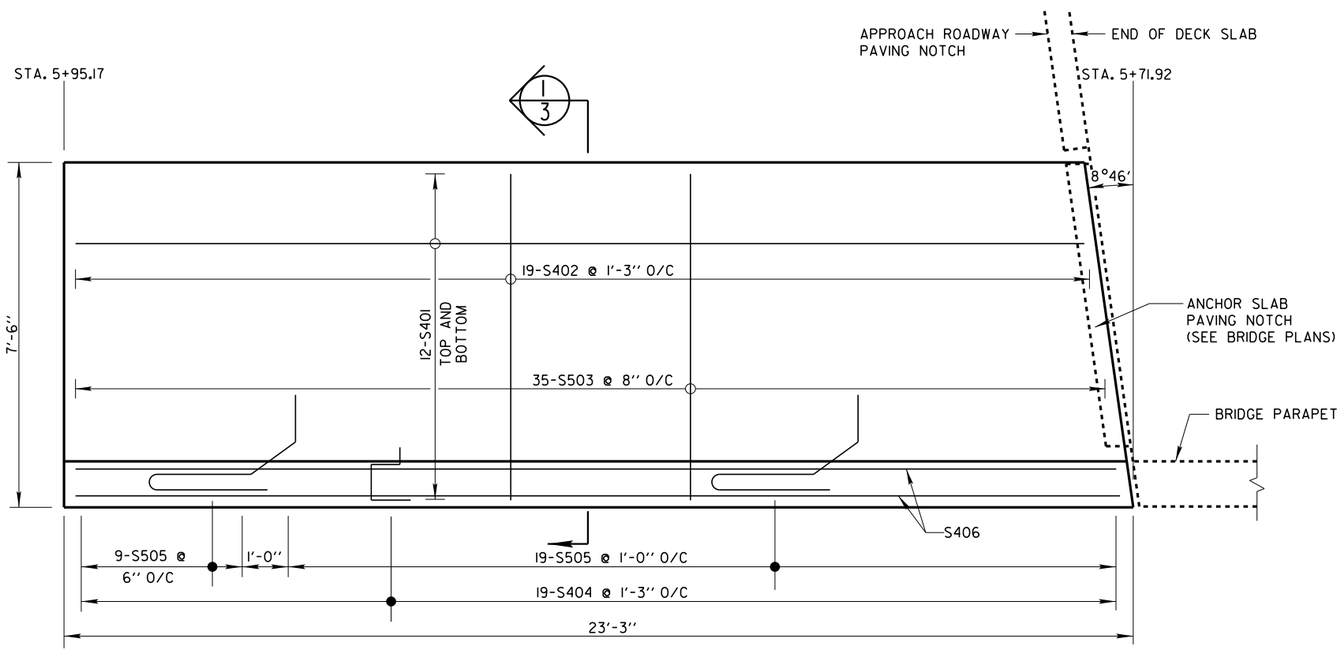

ANCHOR SLAB PLAN AT NORTHEAST RETAINING WALL

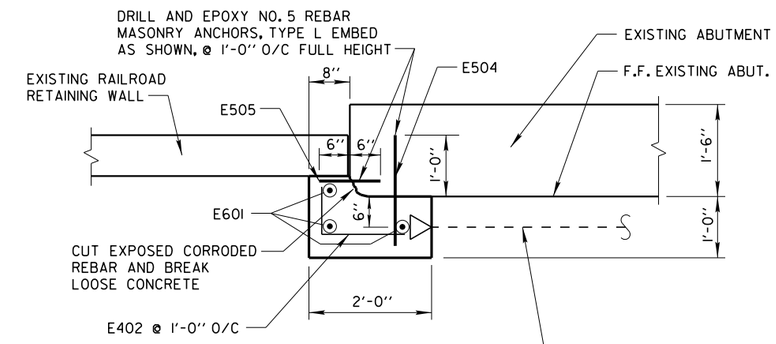

PLAN VIEW

(NEW CONCRETE COLUMN)

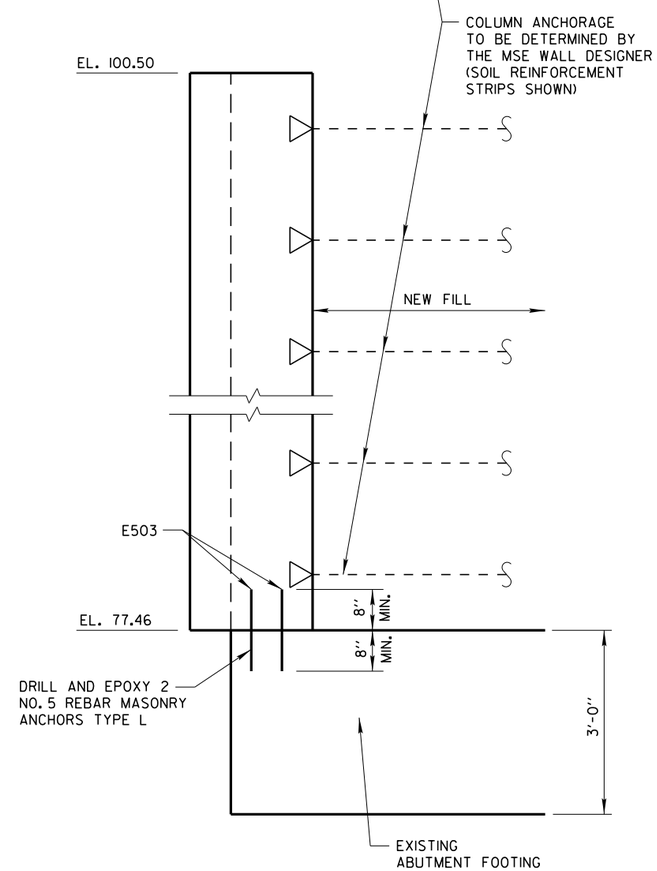

ELEVATION VIEW

(NEW CONCRETE COLUMN)

NOTE:
COLUMN THICKNESS MAY VARY AT TOP TO CREATE PLUMBNESS FOR THE BUTTING MSE WALL

City of Milwaukee

Department of Public Works

Infrastructure Services Division

WEST LISBON AVENUE NORTHEAST RET. WALL
OVER CANADIAN PACIFIC RAILWAY
R-40-606
ANCHOR SLAB PLAN

REVISIONS

DESIGNED BY H.J.R.
DRAWN BY R.B.M.
CHECKED BY A.R.
DATE 02-2014
SCALE NONE
JOB NUMBER BR100-14-0105
SHEET NUMBER NE4 OF NE7
OF 58

W:\STRVB0933\PLANS\NERETWALL\ 5NE_RAILINGELEV.DGN 02-13-2014

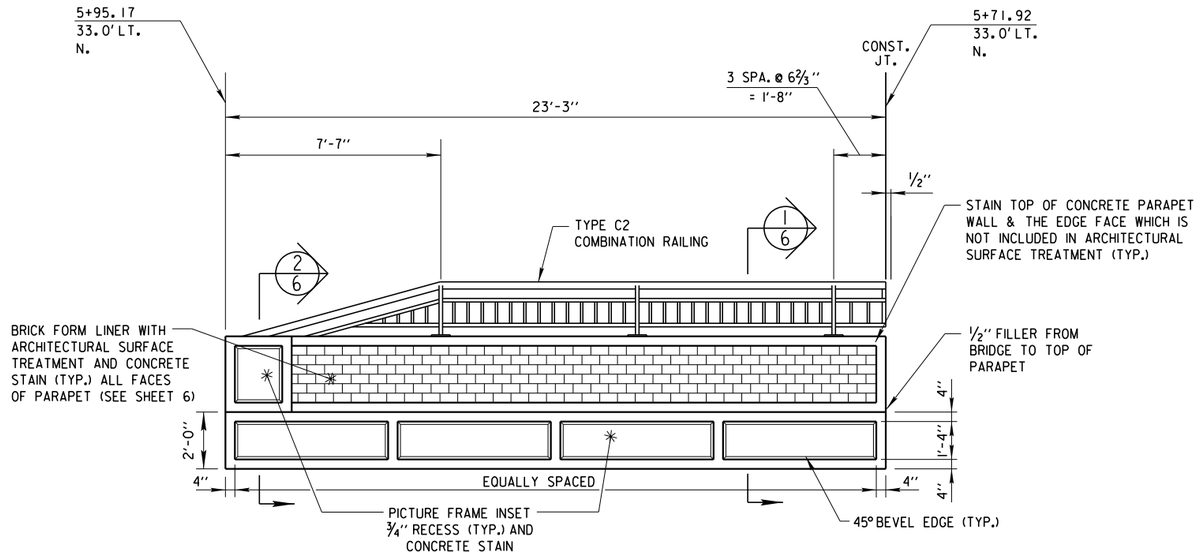

NORTH FACE OF NORTHEAST RETAINING WALL RAILING - LOOKING SOUTH

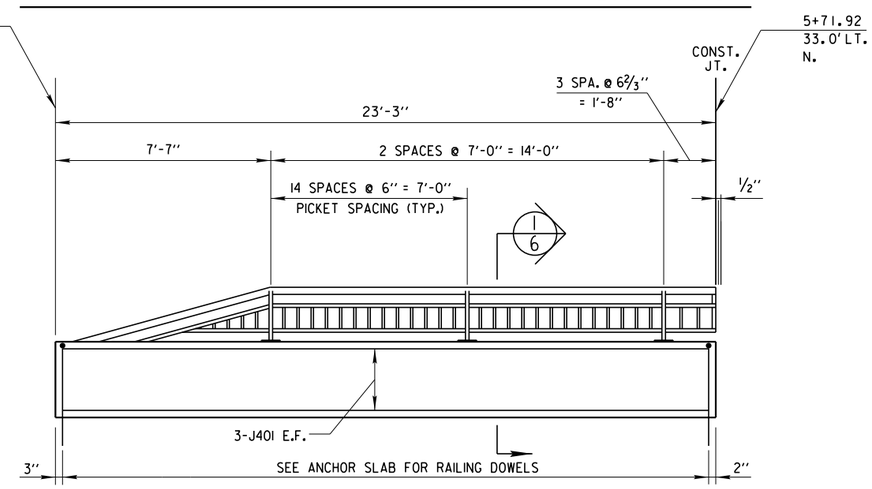

NORTH FACE OF NORTHEAST RETAINING WALL RAILING - LOOKING SOUTH
(REBAR DETAILS)

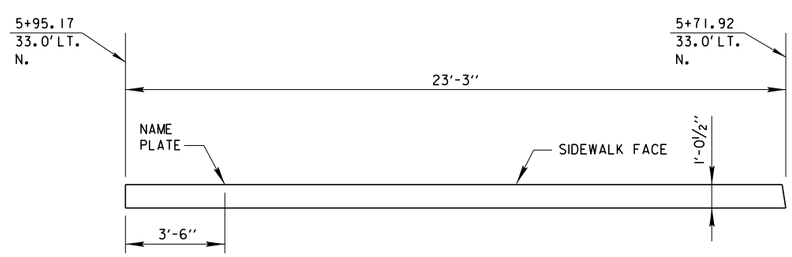

PLAN VIEW OF NORTHEAST RETAINING WALL RAILING

City of Milwaukee

Department of Public Works

Infrastructure Services Division

WEST LISBON AVENUE NORTHEAST RET. WALL
OVER CANADIAN PACIFIC RAILWAY
R-40-606
RAILING ELEVATIONS, BAR DETAILS & PLAN

REVISIONS

DESIGNED BY H.J.R.	
DRAWN BY R.B.M.	
CHECKED BY A.R.	
DATE 02-2014	SCALE NONE
JOB NUMBER BR100-14-0105	
SHEET NUMBER NE5 OF NE7	
OF 58	

W:\STRX\B0933\PLANS\NERETWALL\6NE_RAILINGBILLOFBAR.DGN 02-13-2014

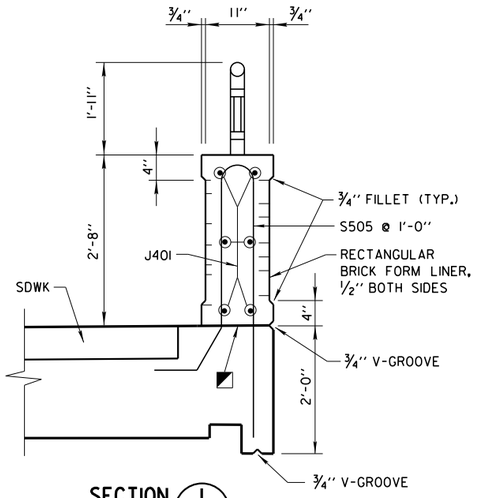

SECTION 1/5

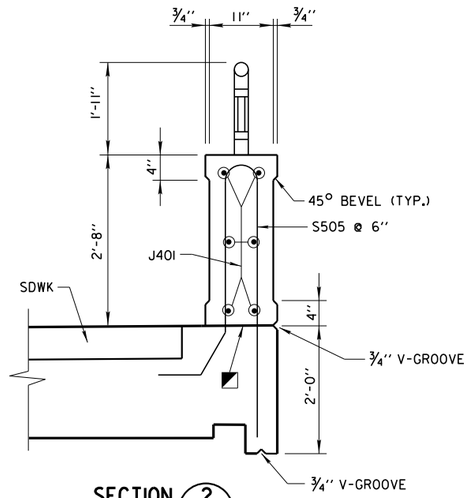

SECTION 2/5

BILL OF BARS - VERTICAL PARAPET WALL

BAR MARK	COAT	NO. REQ'D.	LENGTH	BENT	BAR SERIES	LOCATION
J401	X	6	22'-9"			PARAPET WALL - HORIZ.

◩ HORIZ. CONST. JOINT-STRIKE OFF AS SHOWN & LEAVE ROUGH.

◪ CAULK AROUND PERIMETER OF BASE PLATES, NO. 1 AND FILL BOLT SLOT OPENING IN SHIMS AND BASE PLATES WITH NON-STAINING GRAY NON-BITUMINOUS JOINT SEALER

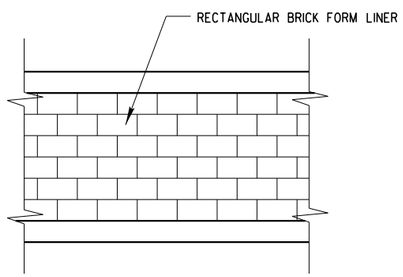

BRICK STONE FORM LINER

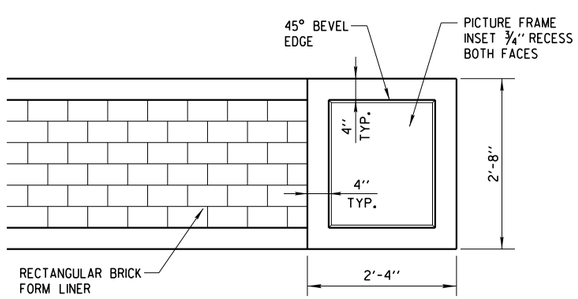

RAILING PICTURE FRAME INSET ELEVATION

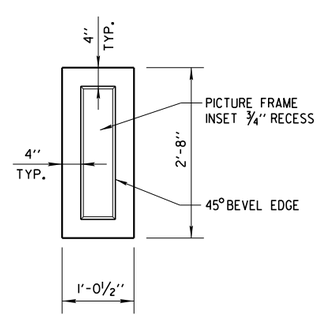

END RAILING PICTURE FRAME INSET ELEVATION

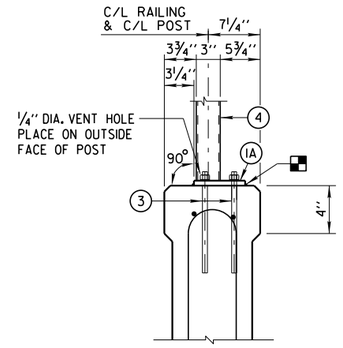

SECTION THRU PARAPET ON RETAINING WALL

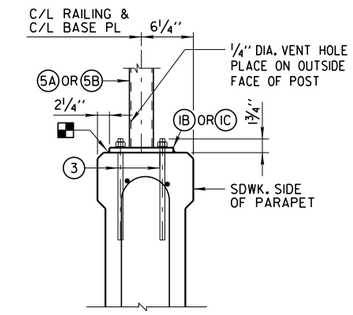

ANCHORAGE FOR END RAIL

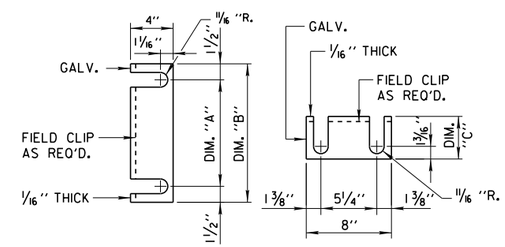

END RAIL SHIM DETAIL

8" X 1'-1" BASE PLATE (1B) DIM. "A" = 10", DIM. "B" = 1'-1", DIM. "C" = 6 1/2"
8" X 1'-6" BASE PLATE (1C) DIM. "A" = 1'-3", DIM. "B" = 1'-6", DIM. "C" = 9"
(2 SETS PER POST)

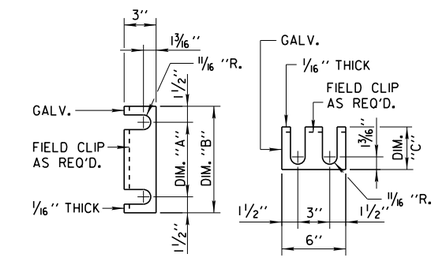

RAIL POST SHIM DETAIL

6" X 8" BASE PL (1A) DIM. "A" = 5", DIM. "B" = 8", DIM. "C" = 4".
(2 SETS PER POST)

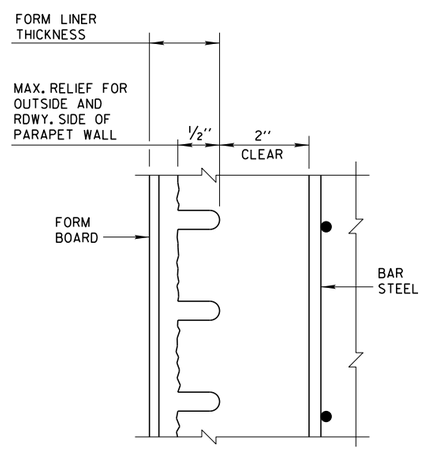

SECTION THRU FORM LINER

NOTE:
SEE LEGEND & RAILING NOTES ON SHEET NE7

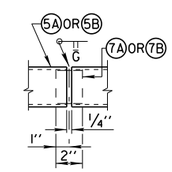

SHOP RAIL SPLICE DETAIL

(LOCATION MUST BE SHOWN ON SHOP DRAWINGS)

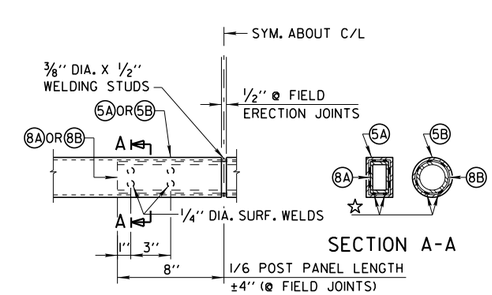

FIELD ERECTION JOINT DETAIL

☆ MIN. 5/8" FLAT SURF. DIA. PUNCHINGS OR STUDS MAY BE USED AS AN ALT.

City of Milwaukee

Department of Public Works

Infrastructure Services Division

WEST LISBON AVENUE NORTHEAST RET. WALL
OVER CANADIAN PACIFIC RAILWAY
R-40-606
RAILING DETAILS AND BILL OF BARS

REVISIONS

DESIGNED BY H.J.R.	
DRAWN BY R.B.M.	
CHECKED BY A.R.	
DATE 02-2014	SCALE NONE
JOB NUMBER BR100-14-0105	
SHEET NUMBER NE6 OF NE7	
OF 58	

W:\STR\B0933\PLANS\NERETWALL\ 7NE_STEELRAILINGDET.DGN 02-13-2014

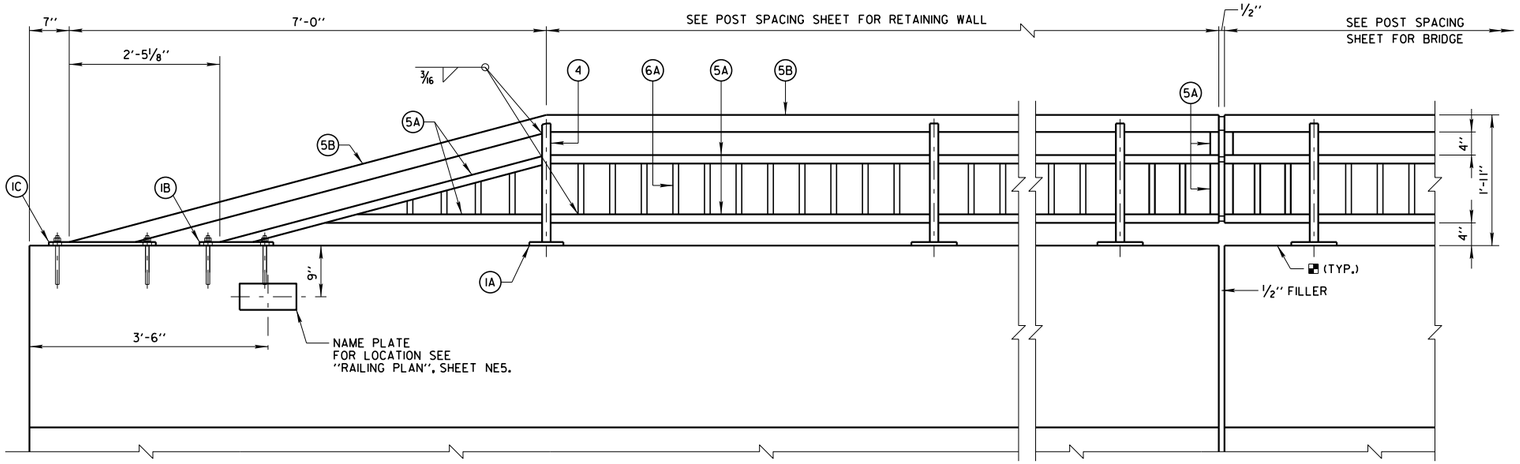

INSIDE ELEVATION OF PARAPET

LEGEND

- (IA) PLATE 5/8" x 6" x 8" WITH 3/4" x 1 1/2" SLOTTED HOLES.
- (IB) PLATE 5/8" x 8" x 1'-1" WITH 3/4" x 1 1/2" SLOTTED HOLES.
- (IC) PLATE 5/8" x 8" x 1'-6" WITH 3/4" x 1 1/2" SLOTTED HOLES.
- (2) 1/4" x 2 1/2" x 7 1/4" ANCHOR PLATE WITH 11/16" DIA. HOLES FOR THREADED RODS NO. 3.
- (3) 4 STAINLESS STEEL CONCRETE MASONRY ANCHORS (MIN. TENSILE STRENGTH = 70 KSI) TYPE 'S' (EPOXY), 5/8" DIA. MINIMUM PULLOUT CAPACITY OF 13 KIPS. EMBED A MIN. OF 7" FOR RAIL POSTS AND 5" FOR END RAILS.
- (4) STRUCTURAL TUBING 3" x 1 1/2" x 3/16". PLACE VERTICAL. WELD TO NO. 1 & NO. 5.
- (5A) STRUCTURAL TUBING 3" x 1 1/2" x 3/16" RAILS. WELD TO NO. 1 & NO. 4. INSIDE OF TUBE TO BE PAINTED AT ALL FIELD ERECTION & EXPANSION JOINTS.
- (5B) STRUCTURAL TUBING 2 1/2" DIA. (STANDARD SIZE) RAIL (2.875" O.D.). WELD TO NO. 1 & NO. 4. INSIDE OF PIPE TO BE PAINTED AT ALL FIELD ERECTION & EXPANSION JOINTS.
- (6A) BAR 1" x 1" PICKETS. WELD TO NO. 5 (SPACE AT 6" MAX. C/L TO C/L SPACING). PLACE VERTICAL.
- (7A) RECTANGULAR SLEEVE FABRICATED FROM 3/16" PLATES. PROVIDE "SLIDING FIT".
- (7B) CIRCULAR SLEEVE FABRICATED FROM STRUCTURAL TUBING 2" DIA. (STANDARD SIZE) (2.375" O.D.)
- (8A) RECTANGULAR SLEEVE FABRICATED FROM 3/16" PLATES. (1'-4" AT FIELD ERECTION JOINTS)
- (8B) CIRCULAR SLEEVE FABRICATED FROM STRUCTURAL TUBING 2" DIA. (STANDARD SIZE) (2.375" O.D.) (1'-4" AT FIELD ERECTION JOINTS)

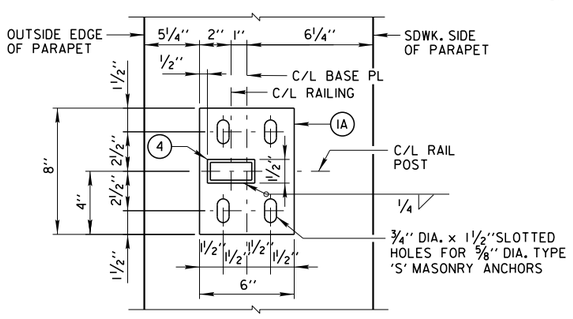

TYPICAL RAIL POST BASE PLATE

FOR 3" X 1 1/2" X 3/16" POSTS (4)

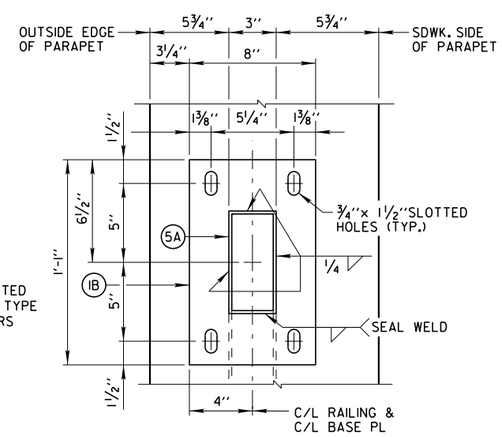

END RAIL BASE PLATE

FOR 3"x1 1/2"x3/16" POSTS (5A)

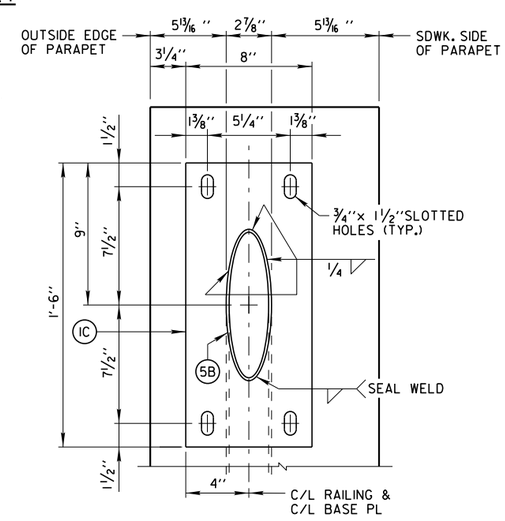

END RAIL BASE PLATE

FOR 2 1/2" DIA. STD. PIPE RAIL (5B)

RAILING NOTES

BID ITEM SHALL BE "RAILING STEEL TYPE C2 GALVANIZED R-40-606", WHICH SHALL INCLUDE ALL WORK SHOWN ON THIS SHEET.

POST BASE PLATES SHALL BE FLAT WITH ALL SURFACES SMOOTH AND FREE FROM WARP AND ALL EDGES SMOOTH, STRAIGHT AND VERTICAL. ALL PLATE CUTS SHALL BE MACHINE OR MACHINE FLAME CUTS.

NO. 1, 2, 6, 7 AND 8 SHALL CONFORM TO ASTM A709 GRADE 36. STRUCTURAL TUBING SHALL CONFORM TO ASTM A500 GRADE B (NO. 4 & NO. 5).

ANCHORAGES SHALL BE ACCURATELY PLACED TO PROVIDE CORRECT ALIGNMENT OF RAILING. SET NORMAL TO GRADE.

CUT BOTTOM OF POST TO MAKE POST VERTICAL IN BOTH TRANSVERSE AND LONGITUDINAL DIRECTION.

STEEL SHIMS SHALL BE PROVIDED & USED UNDER BASE PLATES WHERE REQUIRED FOR ALIGNMENT, AND SHALL BE GALVANIZED OR STAINLESS STEEL.

ALL JOINTS AND RECESSES IN CONCRETE PARAPET ARE TO BE VERTICAL.

ALL MATERIAL (EXCEPT NO. 3) SHALL BE GALVANIZED AFTER FABRICATION. PRIOR TO GALVANIZING THE STEEL RAILING SHALL BE GIVEN A NO. 6 BLAST CLEANING PER SPECIFICATIONS. PAINT OVER GALVANIZING WITH AN APPROVED TIE COAT AND TOP AS SPECIFIED IN THE "BRIDGE SPECIAL PROVISIONS". THE RAILING SHALL BE PAINTED FEDERAL STANDARD COLOR NO. 27038.

VENT HOLES SHALL BE DRILLED IN POST AND RAIL MEMBERS AS REQUIRED TO FACILITATE GALVANIZING AND DRAINAGE.

RAILING SHALL BE FABRICATED IN LENGTHS THAT INCLUDE 3 OR 4 POSTS.

TOUCH-UP PAINTING TO BE DONE AT COMPLETION OF STEEL RAILING INSTALLATION TO THE SATISFACTION OF THE ENGINEER AT NO EXTRA COST.

◘ CAULK AROUND PERIMETER OF BASE PLATES, NO.1 AND FILL BOLT SLOT OPENINGS IN SHIMS AND BASE PLATES WITH NON-STAINING GRAY NONBITUMINOUS JOINT SEALER.

NOTES

RAILING SHALL BE HOT DIP GALVANIZED AND PAINTED WITH WISDOT APPROVED TWO COAT PAINT SYSTEM.

PAINT POSTS, RAILS, SHIMS, AND EXPOSED PORTIONS OF ANCHOR BOLTS. FINISH COAT COLOR SHALL BE FEDERAL STANDARD COLOR NO. 27038.

INCLUDE PAINTING COST IN BID ITEM "RAILING STEEL TYPE C2 GALVANIZED R-40-606".

5/8" DIA. CONCRETE MASONRY ANCHORS TYPE 'S': MINIMUM PULLOUT STRENGTH 13 KIPS, EMBED 7" MIN. FOR RAIL POSTS AND 5" MIN. FOR END RAILS STAINLESS STEEL.

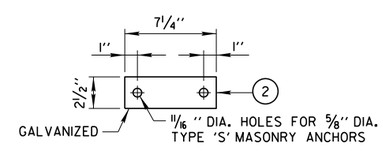

END RAIL ANCHOR PLATE

FOR END RAIL BASE PLATES (IB) (IC)

2 REQ'D PER END RAIL BASE PL

City of Milwaukee

Department of Public Works

Infrastructure Services Division

WEST LISBON AVENUE NORTHEAST RET. WALL
OVER CANADIAN PACIFIC RAILWAY
R-40-606
STEEL RAILING DETAILS

REVISIONS

DESIGNED BY H.J.R.	
DRAWN BY R.B.M.	
CHECKED BY A.R.	
DATE 02-2014	SCALE NONE
JOB NUMBER BR100-14-0105	
SHEET NUMBER NE7 OF NE7	
OF 58	

W:\STR\B0933\PLANS\SERETWALL\ ISE_ELEVATION.DGN 02-12-2014

GENERAL NOTES

DRAWINGS SHALL NOT BE SCALED.

ALL STATIONS AND ALL ELEVATIONS ARE IN FEET.
ALL ELEVATIONS ARE REFERRED TO CITY OF MILWAUKEE DATUM.
CITY OF MILWAUKEE DATUM = (NGVD29) -580.60

ALL DIMENSIONS ALONG THE FRONT FACE OF WALL UNLESS OTHERWISE SHOWN.

BAR REINFORCEMENT SHALL HAVE 2" CLEAR COVER UNLESS SHOWN OTHERWISE.

THESE PLANS ARE FOR A PRECAST CONCRETE PANEL MECHANICALLY STABILIZED EARTH (MSE) RETAINING WALL LRFD.

THE CONTRACTOR MUST COORDINATE THE CONSTRUCTION OF WALLS R-40-606, R-40-607, R-40-608, R-40-609, AND BRIDGE B-40-899.

THE CONTRACTOR SHALL PROVIDE COMPLETE DESIGN, PLANS, DETAILS, SPECIFICATIONS, AND SHOP DRAWINGS FOR THE RETAINING WALLS IN ACCORDANCE WITH THE SPECIAL PROVISIONS. THE RETAINING WALL MANUFACTURER SHALL PROVIDE TECHNICAL ASSISTANCE TO THE CONTRACTOR DURING CONSTRUCTION. THE COST OF FURNISHING THESE ITEMS SHALL BE INCLUDED IN THE BID ITEM, "WALL CONCRETE PANEL MECHANICALLY STABILIZED EARTH LRFD".

THE COST OF FURNISHING AND PLACING BACKFILL WITHIN THE REINFORCED SOIL ZONES, UNREINFORCED CONCRETE LEVELING PAD UNDER THE MSE PRECAST WALL PANELS, AND REINFORCEMENT, GEOTEXTILE FABRIC, ENGINEERED BACKFILL, JOINT MATERIAL, AND OTHER MISCELLANEOUS ITEMS IS INCLUDED IN THE COST OF BID ITEM "WALL CONCRETE PANEL MECHANICALLY STABILIZED EARTH LRFD".

ALL BAR STEEL REINFORCEMENT IS TO BE EPOXY COATED.

BEVEL ALL EXPOSED EDGES OF CONCRETE ¾" UNLESS NOTED OTHERWISE.

THE PLAN QUANTITY FOR THE ITEM "WALL CONCRETE PANEL MECHANICALLY STABILIZED EARTH LRFD" IS BASED ON A WALL HEIGHT MEASURED FROM THE TOP OF THE LEVELING PAD TO THE TOP OF WALL AS SHOWN IN THE PLANS.

PLANS, ELEVATIONS AND DETAILS SHOWN ON THESE DRAWINGS ARE INTENDED TO INDICATE WALL LOCATIONS, LENGTHS HEIGHTS, AND DETAILS COMMON TO THE WALL SYSTEM SELECTED. THE CONTRACTOR SHALL VERIFY THAT THE WALL SYSTEM SELECTED WILL CONFORM TO THE REQUIRED ALIGNMENTS AND DETAILS.

THE MAXIMUM VALUE OF THE ANGLE OF INTERNAL FRICTION OF THE WALL BACKFILL MATERIAL IN THE REINFORCED ZONE SHALL BE ASSUMED TO BE 30° WITHOUT CERTIFIED TEST VALUES.

PLACE BACKFILL IN SPECIFIED LAYER THICKNESS STARTING AT BACK FACE OF WALL AND WORKING AWAY FROM WALL.

UTILITY LOCATIONS SHOWN ARE APPROXIMATE. THE CONTRACTOR SHALL BE RESPONSIBLE FOR DETERMINING THE EXACT LOCATION OF ALL UTILIES PRIOR TO EXCAVATING. DAMAGE TO EXISTING UTILITES SHALL BE REPAIRED OR REPLACED AT THE CONTRACTORS EXPENSE.

THE RETAINING WALL IS TO BE DESIGNED USING THE ELEVATIONS GIVEN ON THIS SHEET.

SEE SPECIAL PROVISIONS FOR AESTHETIC TREATMENT TO WALL.

■ THE LENGTHS PROVIDED IN THE TABLE ARE THE MINIMUM REQUIRED REINFORCEMENT LENGTHS BASED UPON THE MINIMUM DESCRIBED IN THE WALL SYSTEM SPECIAL PROVISIONS OR EXTERNAL AND OVERALL STABILITY AT THE DESIGNATED LOCATIONS. THESE DESIGNATED LOCATIONS REPRESENT TYPICAL AND CRITICAL WALL LOCATIONS, BUT SHALL NOT BE CONSIDERED ALL INCLUSIVE. THE CONTRACTOR DESIGN LENGTHS SHALL MEET OR EXCEED THE MINIMUM VALUES REPRESENTED IN THE TABLE AT THESE DESIGNATED LOCATIONS.

DESIGN DATA

MATERIAL PROPERTIES:

CONCRETE MASONRY	f'c = 4,000 PSI
PRECAST CONCRETE WALL PANEL	f'c = 4,000 PSI
BAR STEEL REINFORCEMENT	Fy = 60,000 PSI

LIVE LOAD:

LIVE LOAD SURCHARGE	240 PSF

B.M. N/S HYD. (NNW BOLT)
WEST OF W. LISBON AVE. BRIDGE
ELEV. = 108.107

WEST LISBON AVENUE OVER CANADIAN PACIFIC RAILWAY

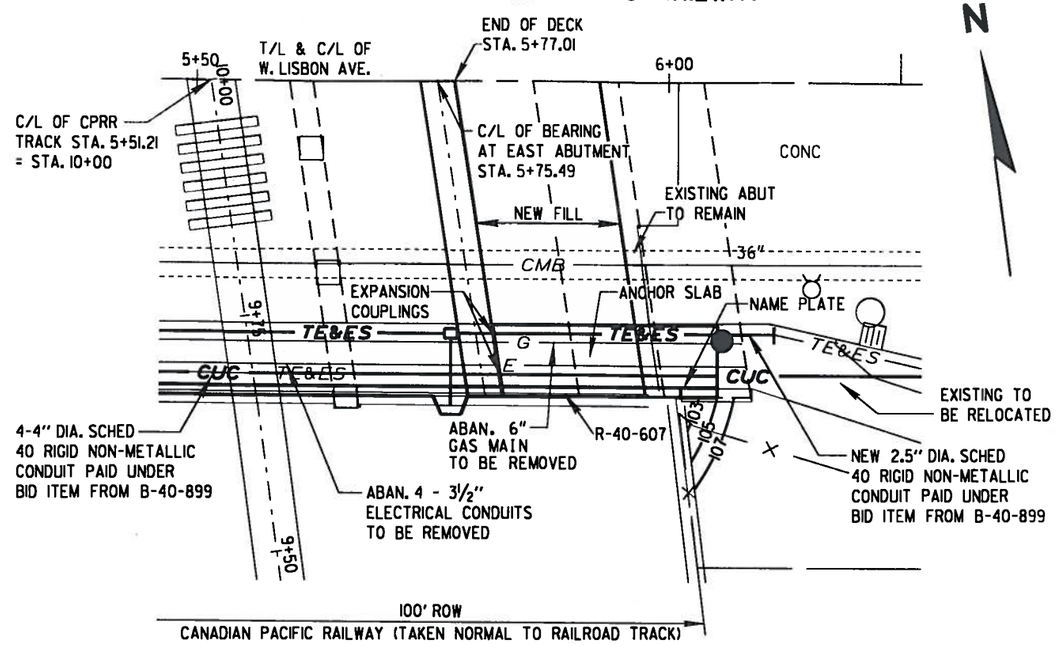

PLAN VIEW

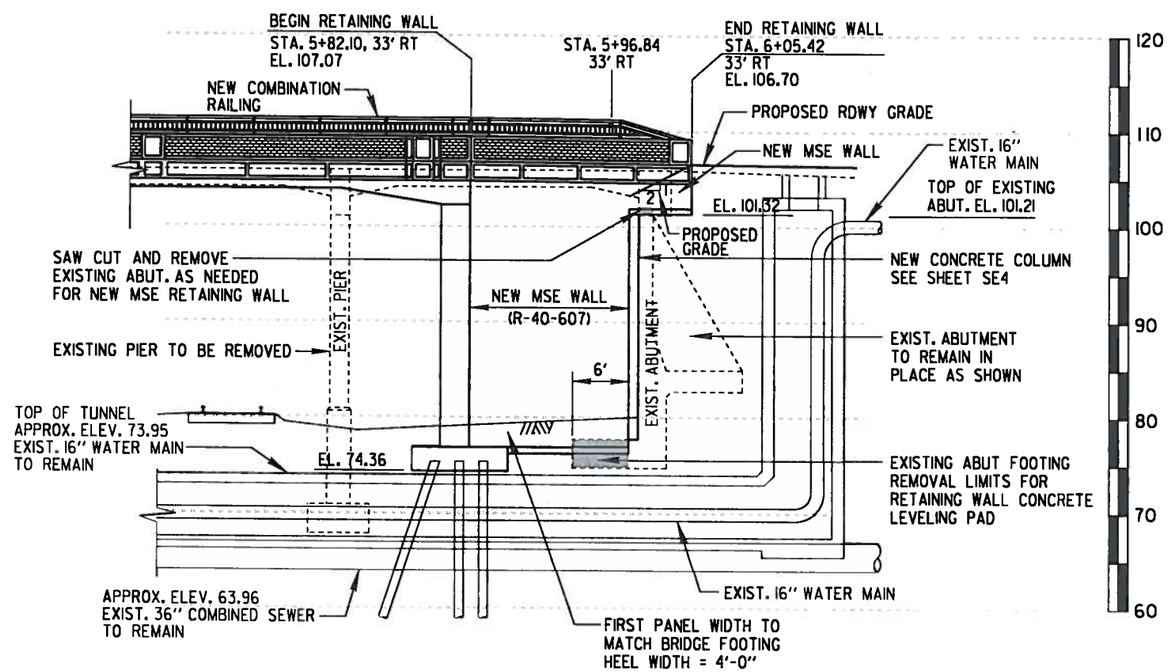

NOTE:
REMOVAL OF THE EXISTING ABUTMENT AS SHOWN WILL BE PAID AS PART OF BRIDGE REMOVAL.

SOUTH ELEVATION

LOOKING NORTH

WALL EXTERNAL STABILITY EVALUATION

WALL HEIGHT (FEET)	28'-9"
EXPOSED WALL HEIGHT (FEET)	27'-3"
MINIMUM LENGTH OF REINFORCEMENT (FEET) ■	20'-2"
LENGTH OF REINFORCEMENT / WALL HEIGHT	0.70
WALL STATION	5+82.10
TEST BORING USED	BOR-3

SOIL PARAMETERS

STRATUM LOCATION & SOIL DESCRIPTION	UNIT DENSITY (PCF)	FRICTION ANGLE (DEGREES)	COHESION (PSF)
EXISTING CLAYEY FILL	125	28	1500
GRANULAR BACKFILL (REINFORCING ZONE OR BACKFILL)	120	30	0
(CLAY WITH GRAVEL) EL. 67.0 TO EL. 74.00	130	30	2500
(SAND WITH GRAVEL) EL. 57.0 TO EL. 67.00	125	30	0
(CLAY WITH GRAVEL) EL. 42.0 TO EL. 57.00	140	32	3500

CAPACITY TO DEMAND RATIO (CDR)

	DRAINED	UNDRAINED
SLIDING (CDR ≥ 1.0)	1.5	1.1
ECCENTRICITY (CDR > 1.0)	1.4	1.4
BEARING (CDR > 1.0)	1.8	1.0
GLOBAL STABILITY (CDR > 1.0)	1.3	1.7

GEOMETRY TABLE

STATION	OFFSET TO F.F. WALL	TOP OF WALL ELEV.	FINISHED GRADE ELEV.
5+82.02	32.5'LT.	107.07	78.36
5+96.84	32.5' LT.	106.80	78.46
6+05.42	32.5' LT.	106.70	106.98

WISCONSIN
CRAIG S. LIBERTO
E-23746
MILWAUKEE
WIS.
PROFESSIONAL ENGINEER

Craig S. Liberto 2/18/14

SOUTHEAST RETAINING WALL LIST OF DRAWINGS

SE1. GENERAL PLAN AND ELEVATION
SE2. SUBSURFACE EXPLORATION
SE3. WALL DETAILS AND QUANTITIES
SE4. ANCHOR SLAB PLAN
SE5. RAILING ELEVATIONS, BAR DETAILS & PLAN
SE6. PARAPET DETAILS AND BILL OF BARS
SE7. STEEL RAILING DETAILS

City of Milwaukee
Department of Public Works
Infrastructure Services Division

WEST LISBON AVENUE SOUTHEAST RET. WALL
OVER CANADIAN PACIFIC RAILWAY
R-40-607
GENERAL PLAN AND ELEVATION

REVISIONS

DESIGNED BY H.J.R.
DRAWN BY R.B.M.
CHECKED BY A.R.
DATE 02-2014
SCALE NONE
JOB NUMBER BR100-14-0105
SHEET NUMBER SE1 OF SE7
OF 58

W:\STR\B0933\PLANS\SERETWALL\ 2SE_RWSUBSURFACE.DGN 02-12-2014

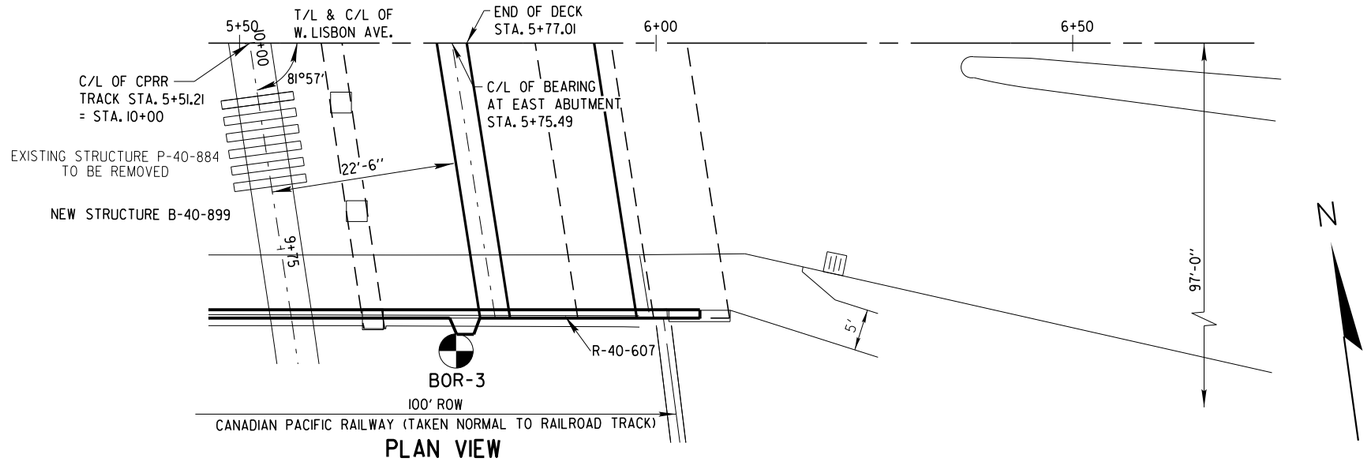

PLAN VIEW

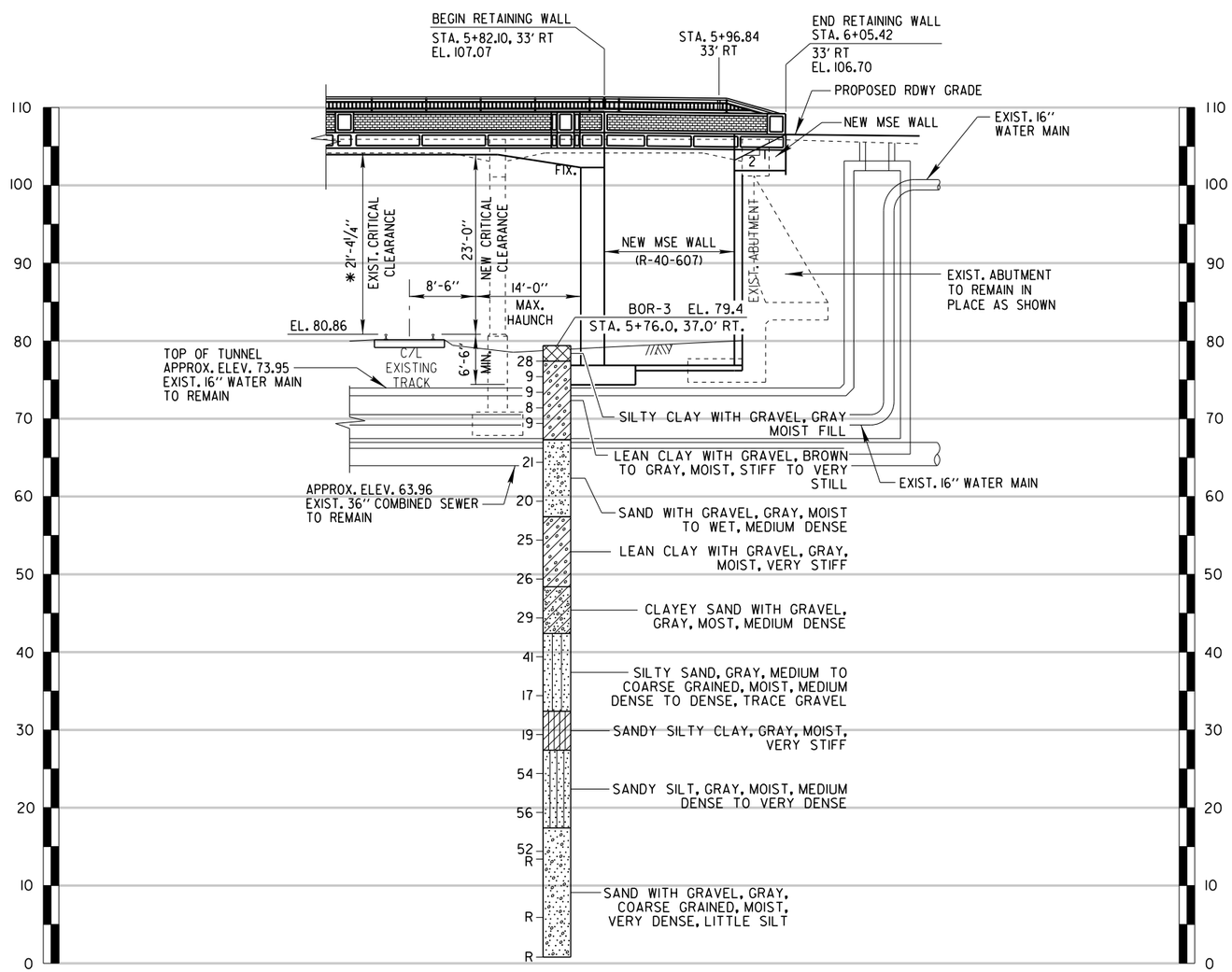

SOUTH ELEVATION

ABBREVIATIONS

F — FINE M — MEDIUM C — COARSE
WS — WEATHERED SO — SOUND

MATERIAL SYMBOLS

TOPSOIL, SILT, SANDSTONE, SAND, PEAT, LIMESTONE, GRAVEL, CLAY, IGNEOUS ROCK

LEGEND OF PROBING

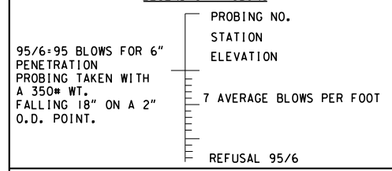

LEGEND OF BORING

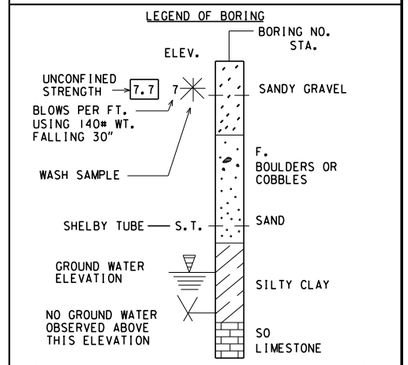

CONTRACTOR SHALL REFERENCE GESTRA GEOTECHNICAL REPORT AND ALL SUBSEQUENT ADDENDA DATED 12-24-2013. UNLESS OTHERWISE SPECIFIED, THE BLOWS PER FOOT AT THE LOCATIONS INDICATED ARE BASED ON DRIVING A 2" O.D. X 1.4" I.D. SPLIT SPOON SAMPLER WITH A 140# HAMMER HAVING A FREE FALL OF 30". THE BLOW COUNT IS TAKEN IN UNDISTURBED SOIL IMMEDIATELY BELOW A CASED OR OPEN HOLE ELIMINATING SIDE FRICTION ON THE DRIVE PIPE.

SUBSURFACE EXPLORATION FOR FOUNDATION DESIGN AND BIDDERS INFORMATION

TO OBTAIN RELATIVE DATA CONCERNING THE CHARACTER OF MATERIAL IN AND UPON WHICH THE FOUNDATION MIGHT BE BUILT, BORINGS AND/OR SOUNDINGS WERE MADE AT POINTS APPROXIMATELY AS INDICATED ON THIS DRAWING. THE DATA PRESENTED HEREIN REPRESENTS THE FINDINGS OF THE SUBSURFACE EXPLORATIONS MADE. HOWEVER, BECAUSE THE DEPTHS INVESTIGATED ARE LIMITED AND THE AREA OF THE BORINGS AND/OR SOUNDINGS IS VERY SMALL IN RELATION TO THE ENTIRE AREA, THE CITY OF MILWAUKEE DOES NOT WARRANT CONDITIONS BELOW THE DEPTHS INVESTIGATED OR THAT THE CLASSIFICATION OF MATERIAL ENCOUNTERED IN THESE INVESTIGATIONS IS NECESSARILY TYPICAL OF THE ENTIRE SITE. CONTACT MR. CRAIG LIBERTO AT (414) 286-0451 TO GET A COPY AND TO REVIEW THE GEOTECHNICAL REPORT.

City of Milwaukee

Department of Public Works

Infrastructure Services Division

WEST LISBON AVENUE SOUTHEAST RET. WALL OVER CANADIAN PACIFIC RAILWAY R-40-607 SUBSURFACE EXPLORATION

REVISIONS

DESIGNED BY H.J.R.	
DRAWN BY R.B.M.	
CHECKED BY A.R.	
DATE 02-2014	SCALE NONE
JOB NUMBER BR100-14-0105	
SHEET NUMBER SE2 OF SE7	
OF 58	

W:\STR\B0933\PLANS\SERETWALL\ 3SE_DETAILS.DGN 02-10-2014

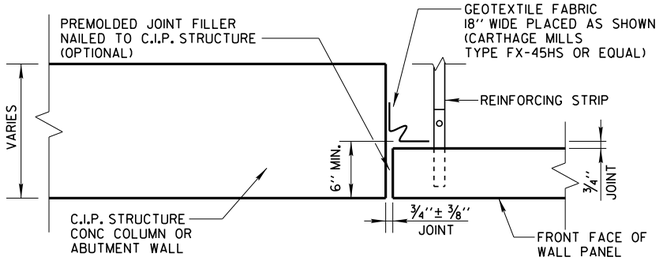

BUTT JOINT DETAIL AT C.I.P. STRUCTURES

(WITH LIP OR NOTCH)

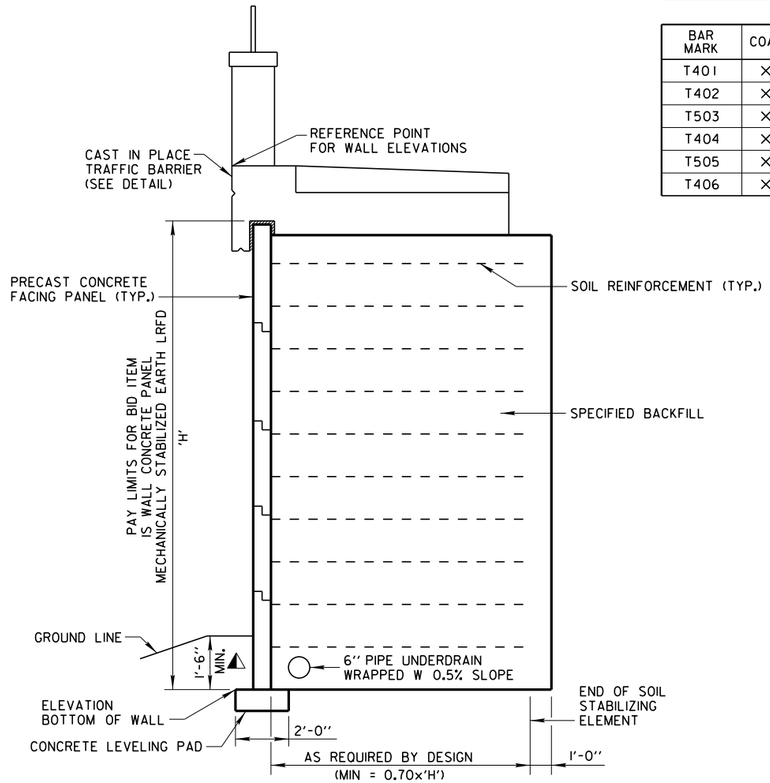

TYPICAL CROSS SECTION

MINIMUM EMBEDMENT BASED ON SITE SPECIFIC PARAMETERS (1'-6" MINIMUM FOR ALL WALLS ON LEVEL GROUND), FIELD EMBEDMENTS SHALL MEET OR EXCEED THE MINIMUM EMBEDMENT. FIELD EMBEDMENTS BELOW MINIMUM EMBEDMENT SHALL NOT BE INCLUDED IN THE PAY LIMITS.

NOTE:
TOP OF CONCRETE LEVELING PAD BETWEEN STATIONS SHALL BE SET AT SAME ELEVATION AS TOP OF BRIDGE FOOTING.

BILL OF BARS - S.E. RETAINING WALL

BAR MARK	COAT	NO. REQ'D.	LENGTH	BENT	BAR SERIES	LOCATION
T401	X	12	22'-4"		▲	LONGITUDINAL
T402	X	19	6'-0"			TRANSVERSE - BOTTOM
T503	X	35	7'-11"	X		TRANSVERSE - TOP
T404	X	19	4'-3"	X		EDGE CAP
T505	X	28	7'-2"	X		RAILING DOWEL
T406	X	2	22'-9"			EDGE CAP - LONGITUDINAL

BAR MARK	NO. REQUIRED	LENGTH
T401	2 SERIES OF 6	21'-9" TO 22'-11"

▲ LENGTH SHOWN FOR BARS IS AN AVERAGE LENGTH AND SHOULD ONLY BE USED FOR BAR WEIGHT CALCULATIONS. SEE BAR SERIES TABLE FOR ACTUAL LENGTH.

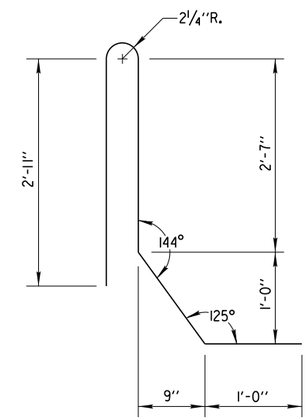

T505

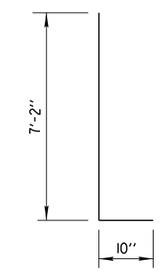

T503

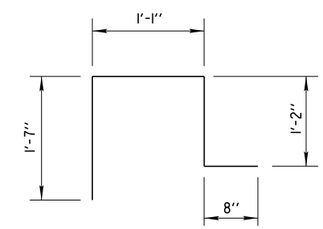

T404

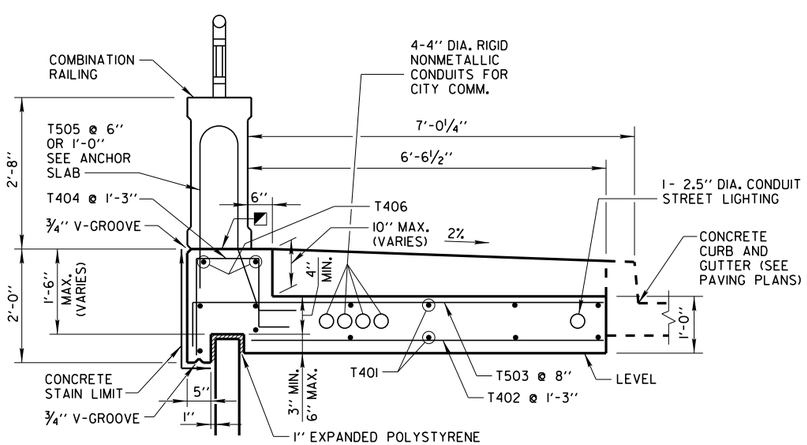

◪ HORIZ. CONST. JOINT-STRIKE OFF AS SHOWN & LEAVE ROUGH.

CAST IN PLACE CONCRETE BARRIER DETAIL 1/4

ESTIMATE OF QUANTITIES

ITEM NO.	BID ITEMS	UNIT	TOTAL
205.0501.S.03	EXCAVATION, HAULING AND DISPOSAL OF PETROLEUM CONTAMINATED SOIL	TON	16
504.0500	CONCRETE MASONRY RETAINING WALLS	CY	14
505.0615	BAR STEEL REINFORCEMENT HS COATED RETAINING WALLS	LB	1,150
517.1010.S.03	CONCRETE STAINING (R-40-607)	SF	130
517.1015.S.03	CONCRETE STAINING MULTI COLOR STRUCTURE (R-40-607)	SF	76
517.1050.S.03	ARCHITECTURAL SURFACE TREATMENT	SF	76
532.0500.S.02	WALL CONCRETE PANEL MECHANICALLY STABILIZED EARTH LRFD	SF	470
SPV.0105.03	RAILING STEEL TYPE C2 GALVANIZED R-40-607	LS	1

City of Milwaukee

Department of Public Works

Infrastructure Services Division

WEST LISBON AVENUE SOUTHEAST RET. WALL
OVER CANADIAN PACIFIC RAILWAY
R-40-607
WALL DETAILS AND QUANTITIES

REVISIONS

DESIGNED BY H.J.R.
DRAWN BY R.B.M.
CHECKED BY A.R.
DATE 02-2014
SCALE NONE
JOB NUMBER BR100-14-0105
SHEET NUMBER SE3 OF SE7
OF 58

W:\STR\B0933\PLANS\SERETWALL\ 4SE_ANCHORSLAB.DGN 02-12-2014

BILL OF BARS - COLUMN

BAR MARK	COAT	NO. REQ'D.	LENGTH	BENT	BAR SERIES	LOCATION
F601	X	3	23'-6"			VERTICAL COLUMN
F402	X	24	2'-7"	X		STIRRUP
F503	X	2	1'-4"			DOWELS
F504	X	24	1'-10"			DOWELS
F505	X	24	1'-0"			DOWELS

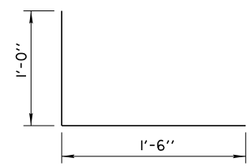

F402

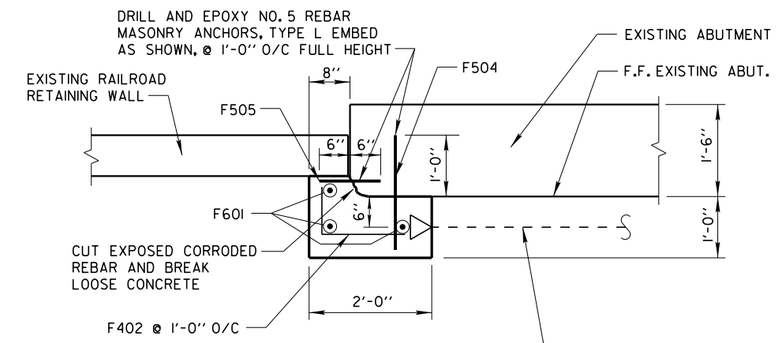

PLAN VIEW

(NEW CONCRETE COLUMN)

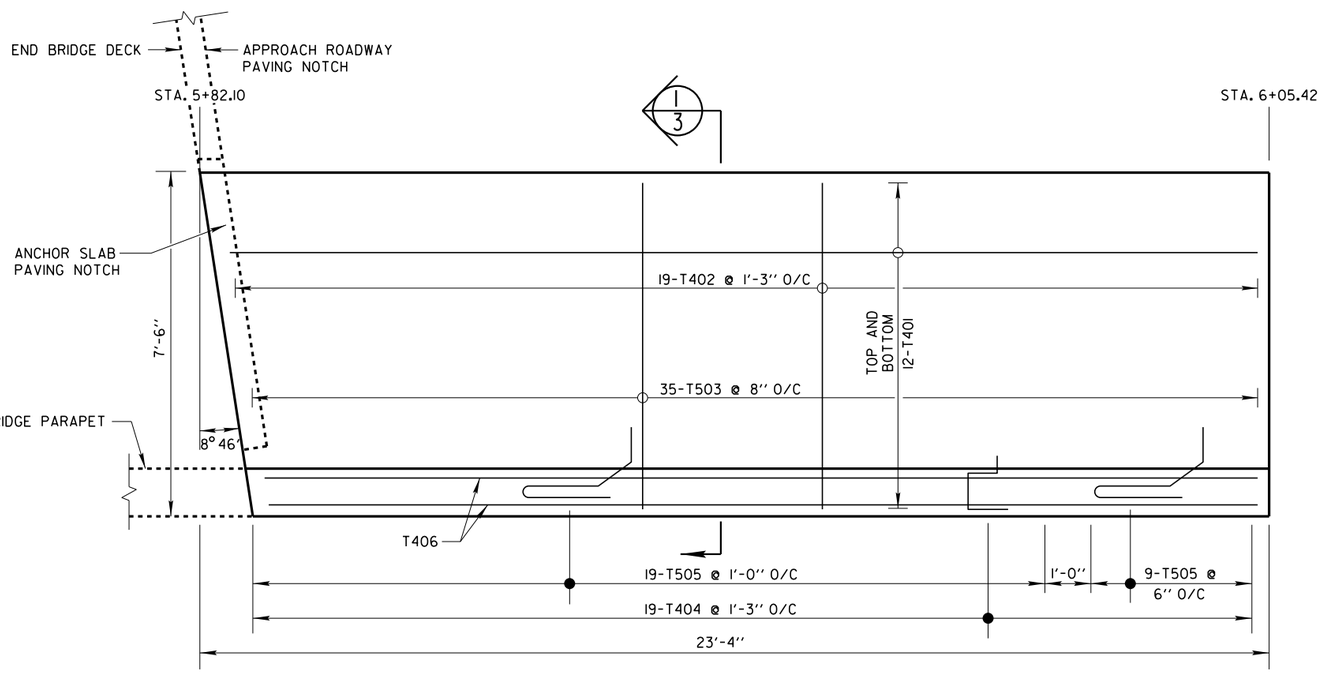

ANCHOR SLAB PLAN AT SOUTHEAST RETAINING WALL

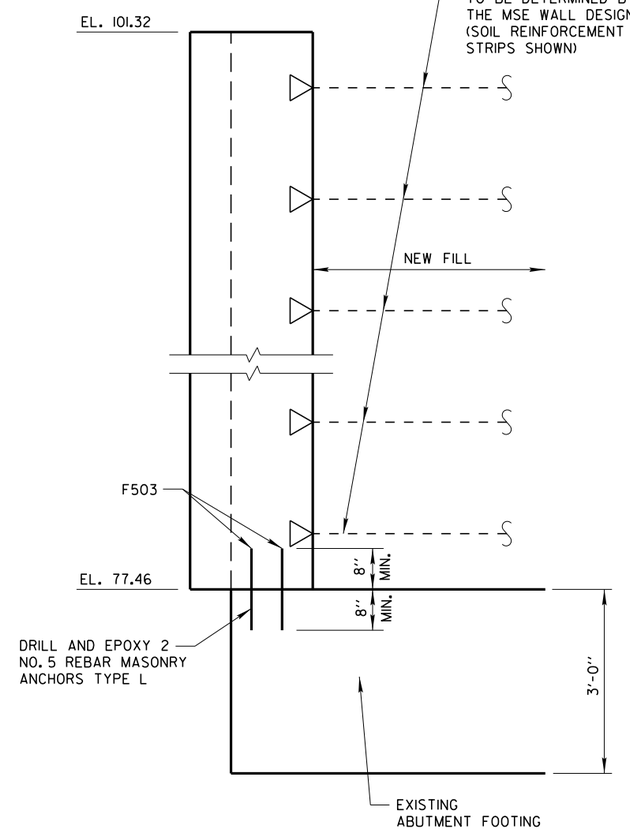

ELEVATION VIEW

(NEW CONCRETE COLUMN)

NOTE:
COLUMN THICKNESS MAY VARY AT TOP TO CREATE PLUMBNESS FOR THE BUTTING MSE WALL

City of Milwaukee

Department of Public Works

Infrastructure Services Division

WEST LISBON AVENUE SOUTHEAST RET. WALL
OVER CANADIAN PACIFIC RAILWAY
R-40-607
ANCHOR SLAB PLAN

REVISIONS

DESIGNED BY H.J.R.
DRAWN BY R.B.M.
CHECKED BY A.R.
DATE 02-2014
SCALE NONE
JOB NUMBER BR100-14-0105
SHEET NUMBER SE4 OF SE7
OF 58

W:\STRVB0933\PLANS\SERETWALL\ 5SE_RAILINGELEV.DGN 02-12-2014

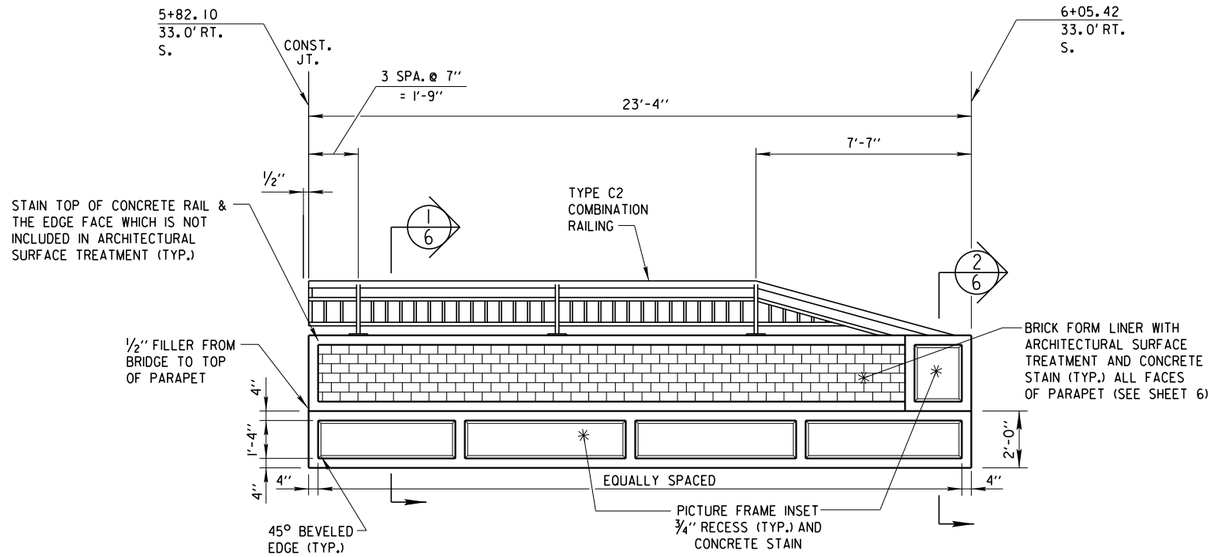

SOUTH FACE OF SOUTHEAST RETAINING WALL RAILING - LOOKING NORTH

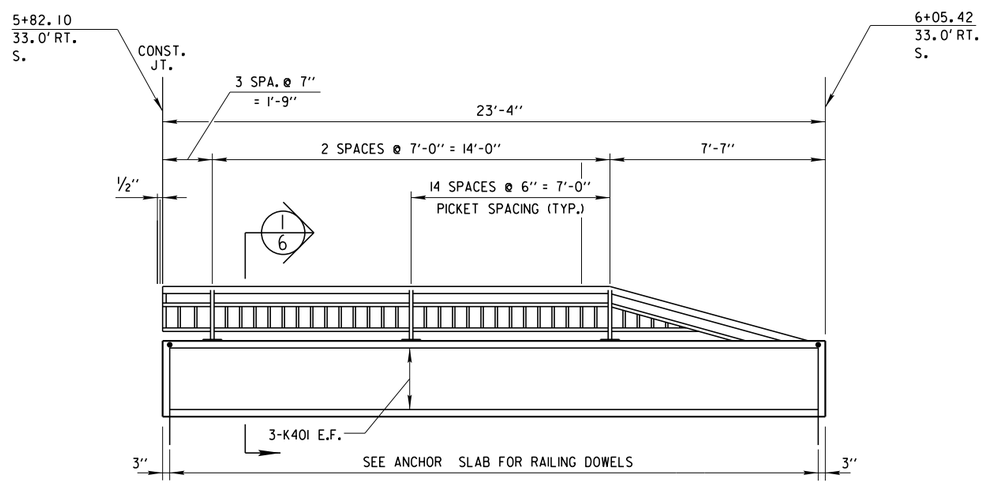

SOUTH FACE OF SOUTHEAST RETAINING WALL RAILING - LOOKING NORTH

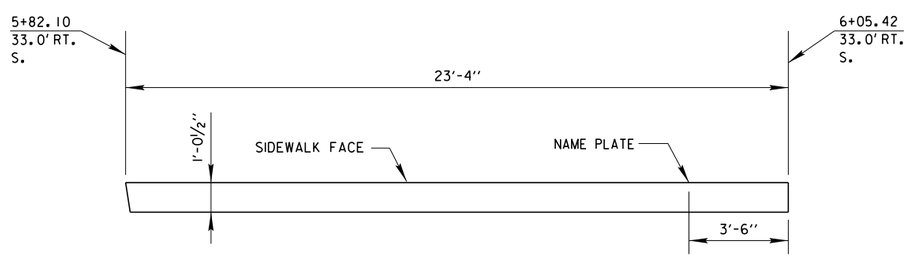

PLAN VIEW OF SOUTHEAST RETAINING WALL RAILING

City of Milwaukee

Department of Public Works

Infrastructure Services Division

WEST LISBON AVENUE SOUTHEAST RET. WALL
OVER CANADIAN PACIFIC RAILWAY
R-40-607
RAILING ELEVATIONS, BAR DETAILS & PLAN

REVISIONS

DESIGNED BY H.J.R.	
DRAWN BY R.B.M.	
CHECKED BY A.R.	
DATE 02-2014	SCALE NONE
JOB NUMBER BR100-14-0105	
SHEET NUMBER SE5 OF SE7	
OF 58	

W:\STRX\B0933\PLANS\SERETWALL\ 6SE_RAILINGBILLOFBAR.DGN 02-12-2014

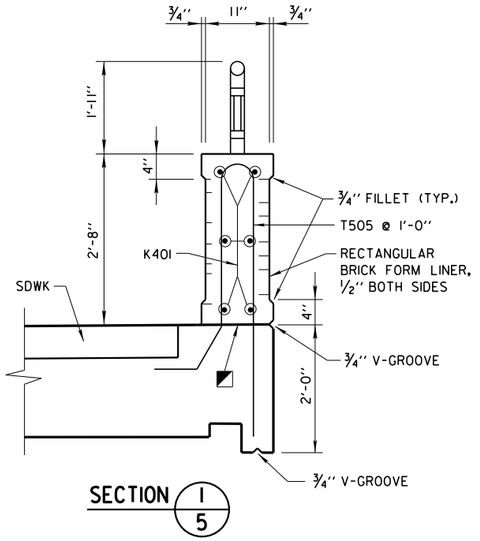

SECTION 1/5

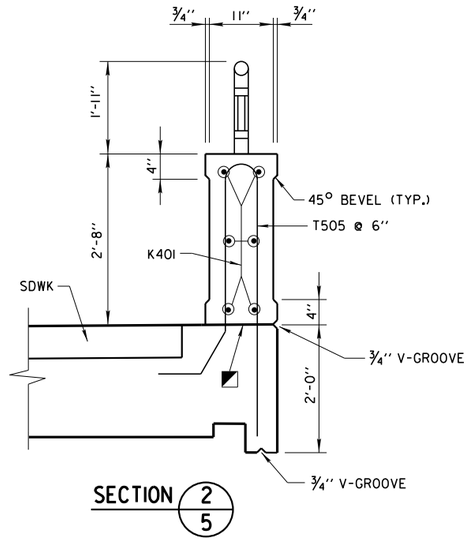

SECTION 2/5

BILL OF BARS - VERTICAL PARAPET WALL

BAR MARK	COAT	NO. REQ'D.	LENGTH	BENT	BAR SERIES	LOCATION
K401	X	6	22'-9"			PARAPET WALL - HORIZ.

◪ HORIZ. CONST. JOINT-STRIKE OFF AS SHOWN & LEAVE ROUGH.

▪ CAULK AROUND PERIMETER OF BASE PLATES, NO.1 AND FILL BOLT SLOT OPENING IN SHIMS AND BASE PLATES WITH NON-STAINING GRAY NON-BITUMINOUS JOINT SEALER

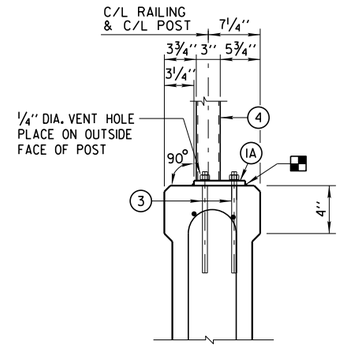

SECTION THRU PARAPET ON RETAINING WALL

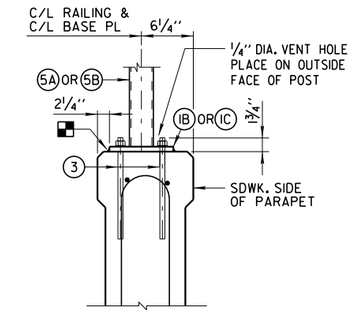

ANCHORAGE FOR END RAIL

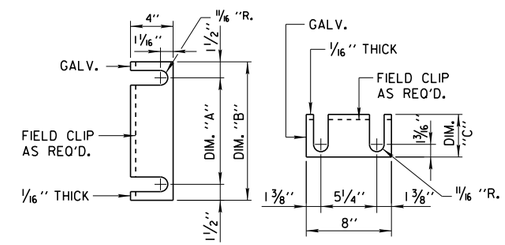

END RAIL SHIM DETAIL

8" X 1'-1" BASE PLATE (1B) DIM. "A" = 10", DIM. "B" = 1'-1", DIM. "C" = 6 1/2"
8" X 1'-6" BASE PLATE (1C) DIM. "A" = 1'-3", DIM. "B" = 1'-6", DIM. "C" = 9"
(2 SETS PER POST)

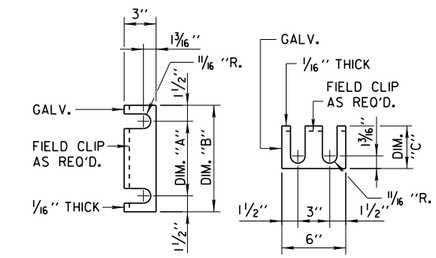

RAIL POST SHIM DETAIL

6" X 8" BASE PL (1A) DIM. "A" = 5", DIM. "B" = 8", DIM. "C" = 4".
(2 SETS PER POST)

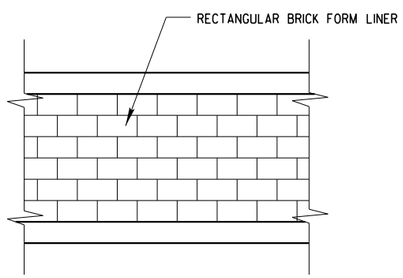

BRICK STONE FORM LINER

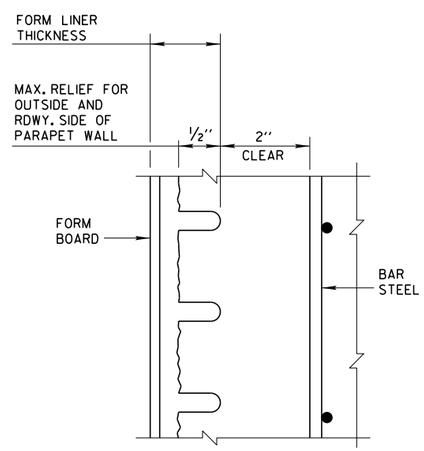

SECTION THRU FORM LINER

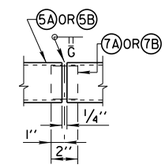

SHOP RAIL SPLICE DETAIL

(LOCATION MUST BE SHOWN ON SHOP DRAWINGS)

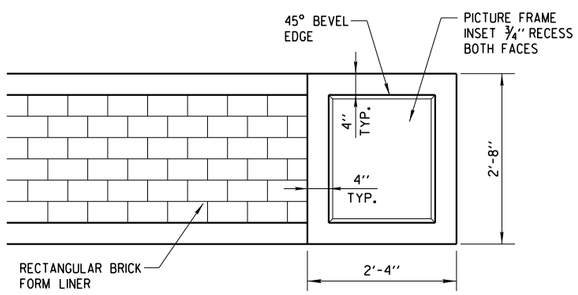

RAILING PICTURE FRAME INSET ELEVATION

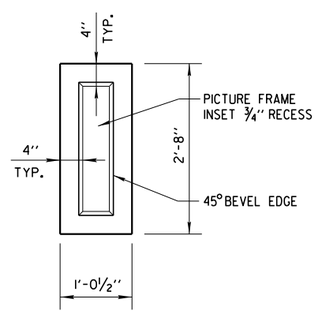

END RAILING PICTURE FRAME INSET ELEVATION

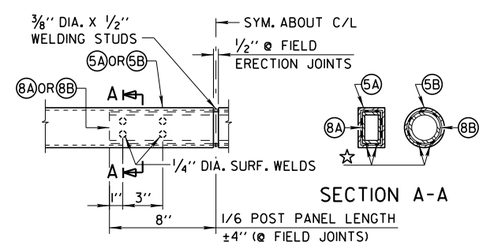

FIELD ERECTION JOINT DETAIL

☆ MIN. 5/8" FLAT SURF. DIA. PUNCHINGS OR STUDS MAY BE USED AS AN ALT.

NOTE:
SEE LEGEND & RAILING NOTES ON SHEET SE7

City of Milwaukee

Department of Public Works

Infrastructure Services Division

WEST LISBON AVENUE SOUTHEAST RET. WALL
OVER CANADIAN PACIFIC RAILWAY
R-40-607
PARAPET DETAILS AND BILL OF BARS

REVISIONS

DESIGNED BY H.J.R.	
DRAWN BY R.B.M.	
CHECKED BY A.R.	
DATE 02-2014	SCALE NONE
JOB NUMBER BR100-14-0105	
SHEET NUMBER SE6 OF SE7	
OF 58	

W:\STR\B0933\PLANS\SERETWALL\ 7SE_STEELRAILINGDET.DGN 02-12-2014

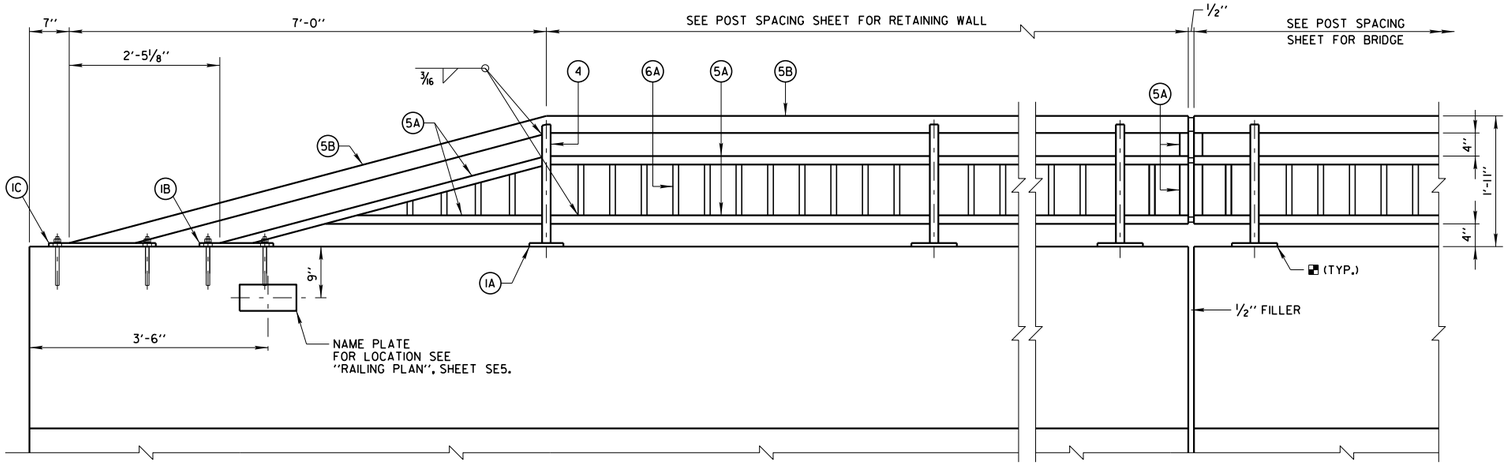

INSIDE ELEVATION OF PARAPET

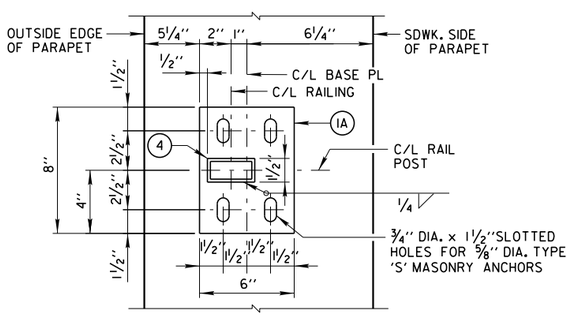

TYPICAL RAIL POST BASE PLATE

FOR 3" X 1 1/2" X 3/16" POSTS (4)

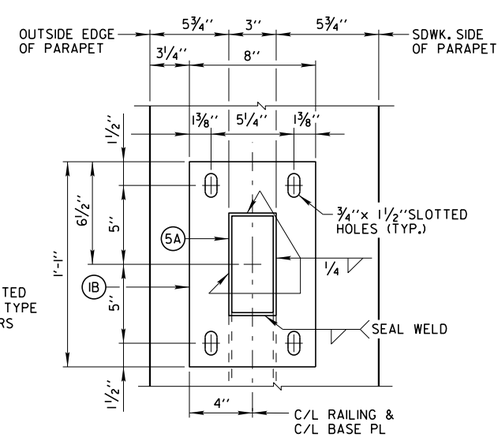

END RAIL BASE PLATE

FOR 3"x1 1/2"x3/16" POSTS (5A)

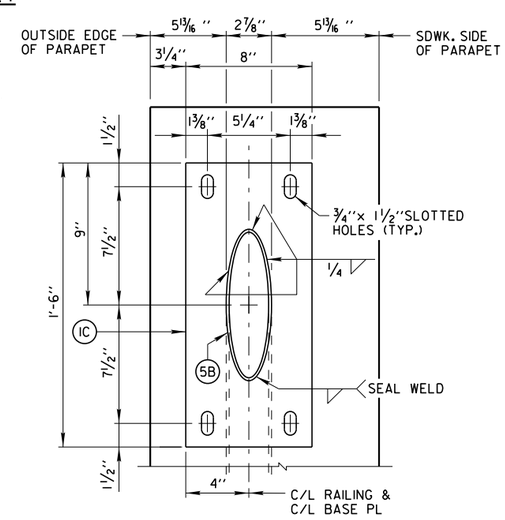

END RAIL BASE PLATE

FOR 2 1/2" DIA. STD. PIPE RAIL (5B)

NOTES

RAILING SHALL BE HOT DIP GALVANIZED AND PAINTED WITH WISDOT APPROVED TWO COAT PAINT SYSTEM.

PAINT POSTS, RAILS, SHIMS, AND EXPOSED PORTIONS OF ANCHOR BOLTS. FINISH COAT COLOR SHALL BE FEDERAL STANDARD COLOR NO. 27038.

INCLUDE PAINTING COST IN BID ITEM "RAILING STEEL TYPE C2 GALVANIZED R-40-607".

5/8" DIA. CONCRETE MASONRY ANCHORS TYPE 'S': MINIMUM PULLOUT STRENGTH 13 KIPS, EMBED 7" MIN. FOR RAIL POSTS AND 5" MIN. FOR END RAILS STAINLESS STEEL.

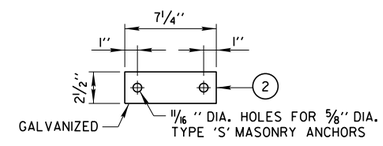

END RAIL ANCHOR PLATE

FOR END RAIL BASE PLATES (IB) (IC)

2 REQ'D PER END RAIL BASE PL

LEGEND

(IA) PLATE 5/8" x 6" x 8" WITH 3/4" x 1 1/2" SLOTTED HOLES.

(IB) PLATE 5/8" x 8" x 1'-1" WITH 3/4" x 1 1/2" SLOTTED HOLES.

(IC) PLATE 5/8" x 8" x 1'-6" WITH 3/4" x 1 1/2" SLOTTED HOLES.

(2) 1/4" x 2 1/2" x 7 1/4" ANCHOR PLATE WITH 11/16" DIA. HOLES FOR THREADED RODS NO. 3.

(3) 4 STAINLESS STEEL CONCRETE MASONRY ANCHORS (MIN. TENSILE STRENGTH = 70 KSI) TYPE 'S' (EPOXY), 5/8" DIA. MINIMUM PULLOUT CAPACITY OF 13 KIPS. EMBED A MIN. OF 7" FOR RAIL POSTS AND 5" FOR END RAILS.

(4) STRUCTURAL TUBING 3" x 1 1/2" x 3/16". PLACE VERTICAL. WELD TO NO. 1 & NO. 5.

(5A) STRUCTURAL TUBING 3" x 1 1/2" x 3/16" RAILS. WELD TO NO. 1 & NO. 4. INSIDE OF TUBE TO BE PAINTED AT ALL FIELD ERECTION & EXPANSION JOINTS.

(5B) STRUCTURAL TUBING 2 1/2" DIA. (STANDARD SIZE) RAIL (2.875" O.D.). WELD TO NO. 1 & NO. 4. INSIDE OF PIPE TO BE PAINTED AT ALL FIELD ERECTION & EXPANSION JOINTS.

(6A) BAR 1" x 1" PICKETS. WELD TO NO. 5 (SPACE AT 6" MAX. C/L TO C/L SPACING). PLACE VERTICAL.

(7A) RECTANGULAR SLEEVE FABRICATED FROM 3/16" PLATES. PROVIDE "SLIDING FIT".

(7B) CIRCULAR SLEEVE FABRICATED FROM STRUCTURAL TUBING 2" DIA. (STANDARD SIZE) (2.375" O.D.)

(8A) RECTANGULAR SLEEVE FABRICATED FROM 3/16" PLATES. (1'-4" AT FIELD ERECTION JOINTS)

(8B) CIRCULAR SLEEVE FABRICATED FROM STRUCTURAL TUBING 2" DIA. (STANDARD SIZE) (2.375" O.D.) (1'-4" AT FIELD ERECTION JOINTS)

RAILING NOTES

BID ITEM SHALL BE "RAILING STEEL TYPE C2 GALVANIZED R-40-606", WHICH SHALL INCLUDE ALL WORK SHOWN ON THIS SHEET.

POST BASE PLATES SHALL BE FLAT WITH ALL SURFACES SMOOTH AND FREE FROM WARP AND ALL EDGES SMOOTH, STRAIGHT AND VERTICAL. ALL PLATE CUTS SHALL BE MACHINE OR MACHINE FLAME CUTS.

NO. 1, 2, 6, 7 AND 8 SHALL CONFORM TO ASTM A709 GRADE 36. STRUCTURAL TUBING SHALL CONFORM TO ASTM A500 GRADE B (NO. 4 & NO. 5).

ANCHORAGES SHALL BE ACCURATELY PLACED TO PROVIDE CORRECT ALIGNMENT OF RAILING. SET NORMAL TO GRADE.

CUT BOTTOM OF POST TO MAKE POST VERTICAL IN BOTH TRANSVERSE AND LONGITUDINAL DIRECTION.

STEEL SHIMS SHALL BE PROVIDED & USED UNDER BASE PLATES WHERE REQUIRED FOR ALIGNMENT, AND SHALL BE GALVANIZED OR STAINLESS STEEL.

ALL JOINTS AND RECESSES IN CONCRETE PARAPET ARE TO BE VERTICAL.

ALL MATERIAL (EXCEPT NO. 3) SHALL BE GALVANIZED AFTER FABRICATION. PRIOR TO GALVANIZING THE STEEL RAILING SHALL BE GIVEN A NO. 6 BLAST CLEANING PER SPECIFICATIONS. PAINT OVER GALVANIZING WITH AN APPROVED TIE COAT AND TOP AS SPECIFIED IN THE "BRIDGE SPECIAL PROVISIONS". THE RAILING SHALL BE PAINTED FEDERAL STANDARD COLOR NO. 27038.

VENT HOLES SHALL BE DRILLED IN POST AND RAIL MEMBERS AS REQUIRED TO FACILITATE GALVANIZING AND DRAINAGE.

RAILING SHALL BE FABRICATED IN LENGTHS THAT INCLUDE 3 OR 4 POSTS.

TOUCH-UP PAINTING TO BE DONE AT COMPLETION OF STEEL RAILING INSTALLATION TO THE SATISFACTION OF THE ENGINEER AT NO EXTRA COST.

CAULK AROUND PERIMETER OF BASE PLATES, NO.1 AND FILL BOLT SLOT OPENINGS IN SHIMS AND BASE PLATES WITH NON-STAINING GRAY NONBITUMINOUS JOINT SEALER.

City of Milwaukee

Department of Public Works

Infrastructure Services Division

WEST LISBON AVENUE SOUTHEAST RET. WALL
OVER CANADIAN PACIFIC RAILWAY
R-40-607
STEEL RAILING DETAILS

REVISIONS

DESIGNED BY H.J.R.

DRAWN BY R.B.M.

CHECKED BY A.R.

DATE 02-2014 | SCALE NONE

JOB NUMBER BR100-14-0105

SHEET NUMBER SE7 OF SE7

OF 58

W:\STR\80933\PLANS\NWRETWALL\ NW_ELEVATION.DGN 02-13-2014

GENERAL NOTES

DRAWINGS SHALL NOT BE SCALED.

ALL STATIONS AND ALL ELEVATIONS ARE IN FEET.
ALL ELEVATIONS ARE REFERRED TO CITY OF MILWAUKEE DATUM.
CITY OF MILWAUKEE DATUM = (NGVD29) -580.60

ALL DIMENSIONS ALONG THE FRONT FACE OF WALL UNLESS OTHERWISE SHOWN.

BAR REINFORCEMENT SHALL HAVE 2" CLEAR COVER UNLESS SHOWN OTHERWISE.

THESE PLANS ARE FOR A PRECAST CONCRETE PANEL MECHANICALLY STABILIZED EARTH (MSE) RETAINING WALL LRFD.

THE CONTRACTOR MUST COORDINATE THE CONSTRUCTION OF WALLS R-40-606, R-40-607, R-40-608, R-40-609, AND BRIDGE B-40-899.

THE CONTRACTOR SHALL PROVIDE COMPLETE DESIGN, PLANS, DETAILS, SPECIFICATIONS, AND SHOP DRAWINGS FOR THE RETAINING WALLS IN ACCORDANCE WITH THE SPECIAL PROVISIONS. THE RETAINING WALL MANUFACTURER SHALL PROVIDE TECHNICAL ASSISTANCE TO THE CONTRACTOR DURING CONSTRUCTION. THE COST OF FURNISHING THESE ITEMS SHALL BE INCLUDED IN THE BID ITEM, "WALL CONCRETE PANEL MECHANICALLY STABILIZED EARTH LRFD".

THE COST OF FURNISHING AND PLACING BACKFILL WITHIN THE REINFORCED SOIL ZONES, UNREINFORCED CONCRETE LEVELING PAD UNDER THE MSE PRECAST WALL PANELS, AND REINFORCEMENT, GEOTEXTILE FABRIC, ENGINEERED BACKFILL, JOINT MATERIAL, AND OTHER MISCELLANEOUS ITEMS IS INCLUDED IN THE COST OF BID ITEM "WALL CONCRETE PANEL MECHANICALLY STABILIZED EARTH LRFD".

ALL BAR STEEL REINFORCEMENT IS TO BE EPOXY COATED.

BEVEL ALL EXPOSED EDGES OF CONCRETE ¾" UNLESS NOTED OTHERWISE.

THE PLAN QUANTITY FOR THE ITEM "WALL CONCRETE PANEL MECHANICALLY STABILIZED EARTH LRFD" IS BASED ON A WALL HEIGHT MEASURED FROM THE TOP OF THE LEVELING PAD TO THE TOP OF WALL AS SHOWN IN THE PLANS.

PLANS, ELEVATIONS AND DETAILS SHOWN ON THESE DRAWINGS ARE INTENDED TO INDICATE WALL LOCATIONS, LENGTHS HEIGHTS, AND DETAILS COMMON TO THE WALL SYSTEM SELECTED. THE CONTRACTOR SHALL VERIFY THAT THE WALL SYSTEM SELECTED WILL CONFORM TO THE REQUIRED ALIGNMENTS AND DETAILS.

THE MAXIMUM VALUE OF THE ANGLE OF INTERNAL FRICTION OF THE WALL BACKFILL MATERIAL IN THE REINFORCED ZONE SHALL BE ASSUMED TO BE 30° WITHOUT CERTIFIED TEST VALUES.

PLACE BACKFILL IN SPECIFIED LAYER THICKNESS STARTING AT BACK FACE OF WALL AND WORKING AWAY FROM WALL.

UTILITY LOCATIONS SHOWN ARE APPROXIMATE. THE CONTRACTOR SHALL BE RESPONSIBLE FOR DETERMINING THE EXACT LOCATION OF ALL UTILIES PRIOR TO EXCAVATING. DAMAGE TO EXISTING UTILITES SHALL BE REPAIRED OR REPLACED AT THE CONTRACTORS EXPENSE.

THE RETAINING WALL IS TO BE DESIGNED USING THE ELEVATIONS GIVEN ON THIS SHEET.

SEE SPECIAL PROVISIONS FOR AESTHETIC TREATMENT TO WALL.

■ THE LENGTHS PROVIDED IN THE TABLE ARE THE MINIMUM REQUIRED REINFORCEMENT LENGTHS BASED UPON THE MINIMUM DESCRIBED IN THE WALL SYSTEM SPECIAL PROVISIONS OR EXTERNAL AND OVERALL STABILITY AT THE DESIGNATED LOCATIONS. THESE DESIGNATED LOCATIONS REPRESENT TYPICAL AND CRITICAL WALL LOCATIONS, BUT SHALL NOT BE CONSIDERED ALL INCLUSIVE. THE CONTRACTOR DESIGN LENGTHS SHALL MEET OR EXCEED THE MINIMUM VALUES REPRESENTED IN THE TABLE AT THESE DESIGNATED LOCATIONS.

DESIGN DATA

MATERIAL PROPERTIES:

CONCRETE MASONRY	f'c = 4,000 PSI
PRECAST CONCRETE WALL PANEL	f'c = 4,000 PSI
BAR STEEL REINFORCEMENT	Fy = 60,000 PSI

LIVE LOAD:

LIVE LOAD SURCHARGE	240 PSF

B.M. N/S HYD. (NNW BOLT)
WEST OF W. LISBON AVE. BRIDGE
ELEV. = 108.107

WEST LISBON AVENUE OVER CANADIAN PACIFIC RAILWAY

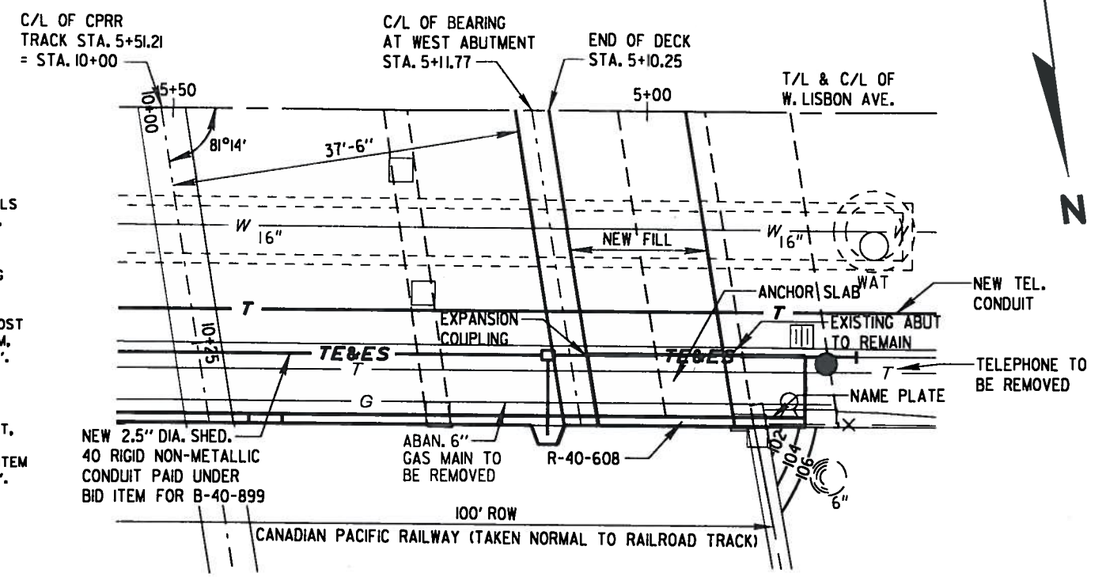

PLAN VIEW

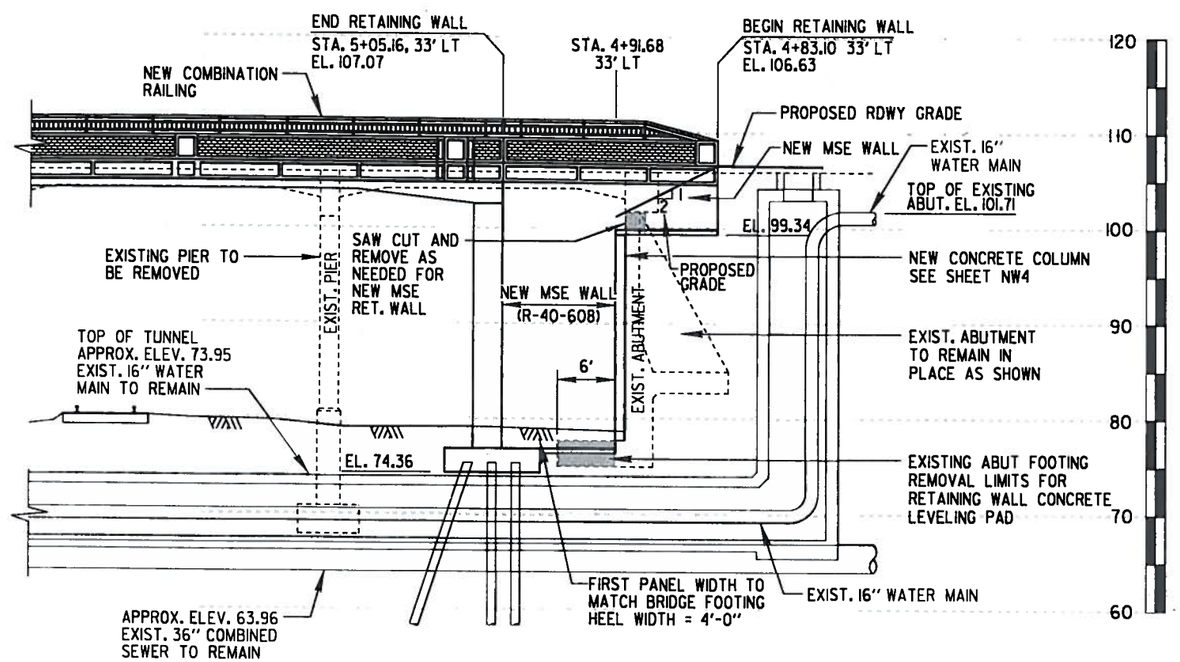

NOTE:
THIS REMOVAL OF THE EXISTING ABUTMENT AS SHOWN WILL BE PAID AS PART OF BRIDGE REMOVAL.

NORTH ELEVATION

LOOKING SOUTH

WALL EXTERNAL STABILITY EVALUATION

WALL HEIGHT (FEET)	28'-9"
EXPOSED WALL HEIGHT (FEET)	27'-3"
MINIMUM LENGTH OF REINFORCEMENT (FEET) ■	20'-2"
LENGTH OF REINFORCEMENT / WALL HEIGHT	0.70
WALL STATION	4+83.10
TEST BORING USED	BOR-1

SOIL PARAMETERS

STRATUM LOCATION & SOIL DESCRIPTION	UNIT DENSITY (PCF)	FRICTION ANGLE (DEGREES)	COHESION (PSF)
EXISTING CLAYEY FILL	125	28	1500
GRANULAR BACKFILL (REINFORCING ZONE OR BACKFILL)	120	30	0
(LEAN CLAY) EL. 67.0 TO EL. 74.0	130	30	2500
(CLAY WITH SAND AND GRAVEL) EL. 53.0 TO EL. 67.0	130	31	3000
(SILTY SAND) EL. 42.0 TO EL. 53.0	125	30	0

CAPACITY TO DEMAND RATIO (CDR)

	DRAINED	UNDRAINED
SLIDING (CDR ≥ 1.0)	1.5	1.1
ECCENTRICITY (CDR > 1.0)	1.4	1.4
BEARING (CDR > 1.0)	1.8	1.0
GLOBAL STABILITY (CDR > 1.0)	1.3	1.7

GEOMETRY TABLE

STATION	OFFSET TO F.F. WALL	TOP OF WALL ELEV.	FINISHED GRADE ELEV.
5+05.24	32.5'LT.	107.07	78.36
4+91.68	32.5' LT.	106.78	78.46
4+83.10	32.5' LT.	106.63	106.66

WISCONSIN
CRAIG S. LIBERTO
E-23746
MILWAUKEE
WIS.
PROFESSIONAL ENGINEER

Craig S. Liberto 2/18/14

NORTHWEST RETAINING WALL LIST OF DRAWINGS

NW1. GENERAL PLAN AND ELEVATION
NW2. SUBSURFACE EXPLORATION
NW3. WALL DETAILS AND QUANTITIES
NW4. ANCHOR SLAB PLAN
NW5. RAILING ELEVATIONS, BAR DETAILS & PLAN
NW6. PARAPET DETAILS AND BILL OF BARS
NW7. STEEL RAILING DETAILS

City of Milwaukee
Department of Public Works
Infrastructure Services Division

WEST LISBON AVENUE NORTHWEST RET. WALL
OVER CANADIAN PACIFIC RAILWAY
R-40-608
GENERAL PLAN AND ELEVATION

REVISIONS

DESIGNED BY H.J.R.	
DRAWN BY R.B.M.	
CHECKED BY A.R.	
DATE 02-2014	SCALE NONE
JOB NUMBER BR100-14-0105	
SHEET NUMBER NW1 OF NW7	
OF 58	

W:\STR\B0933\PLANS\NWRETWALL\ 2NW_RWSUBSURFACE.DGN 02-13-2014

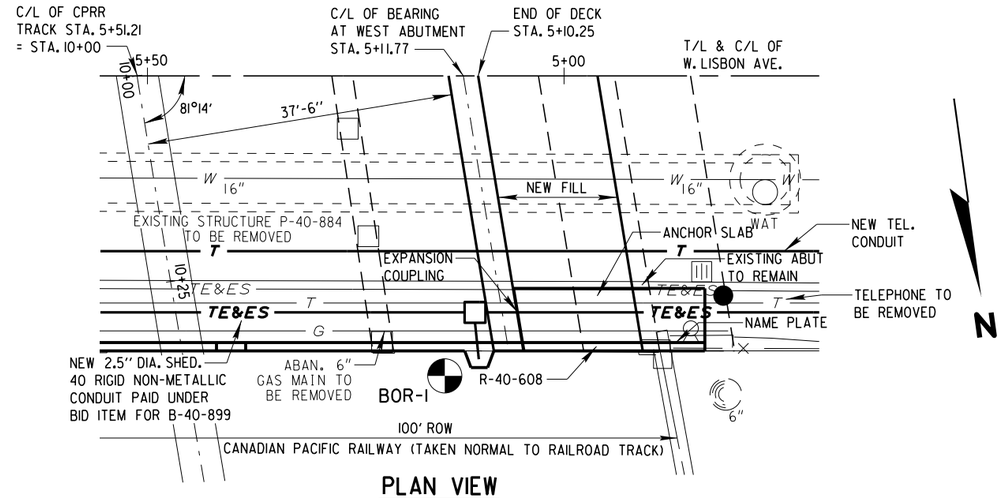

PLAN VIEW

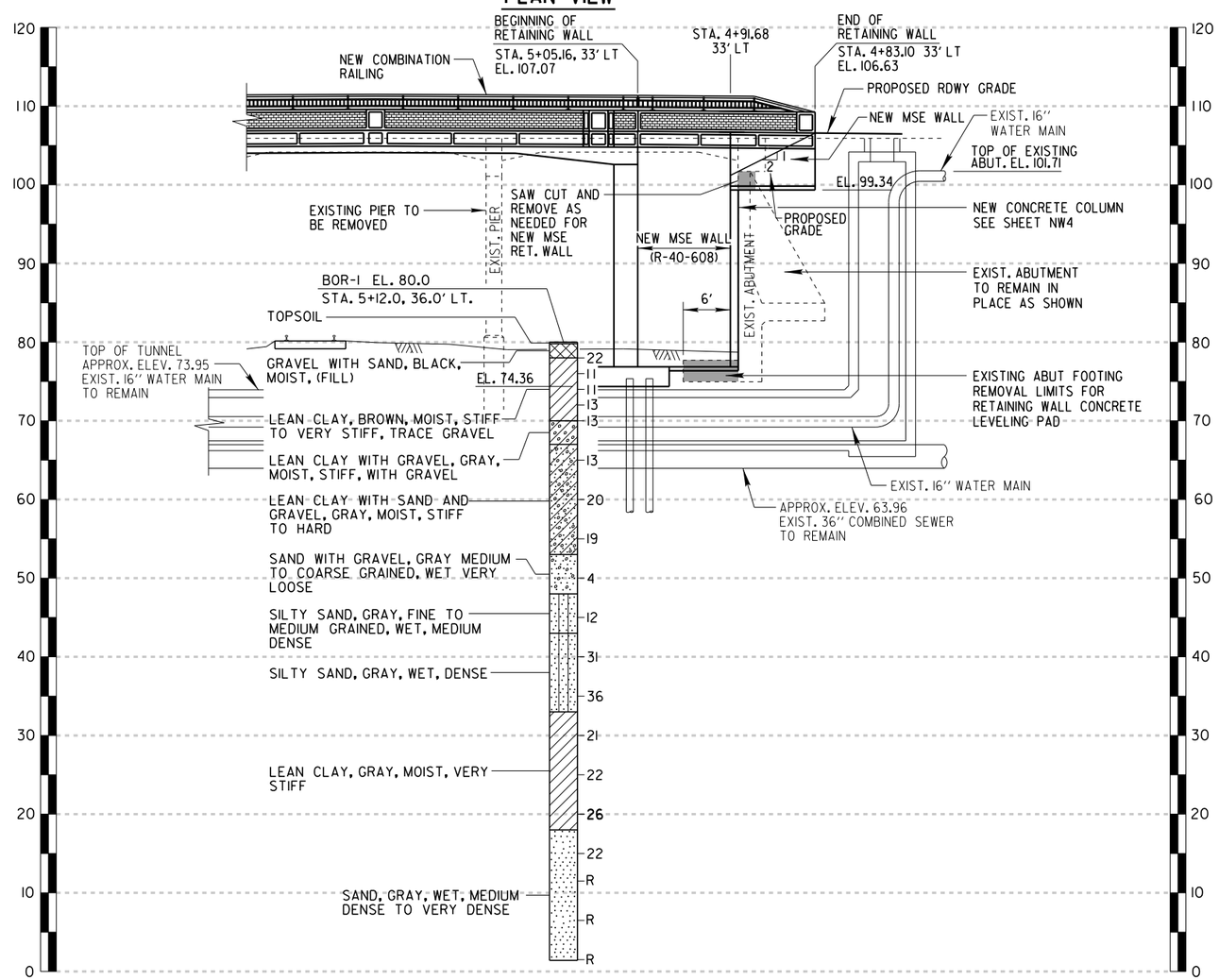

NORTH ELEVATION

LOOKING SOUTH

ABBREVIATIONS

F — FINE M — MEDIUM C — COARSE
WS — WEATHERED SO — SOUND

MATERIAL SYMBOLS

TOPSOIL, SILT, SANDSTONE, SAND, PEAT, LIMESTONE, GRAVEL, CLAY, IGNEOUS ROCK

LEGEND OF PROBING

95/6=95 BLOWS FOR 6" PENETRATION PROBING TAKEN WITH A 350# WT. FALLING 18" ON A 2" O.D. POINT.

PROBING NO.
STATION
ELEVATION
7 AVERAGE BLOWS PER FOOT
REFUSAL 95/6

LEGEND OF BORING

BORING NO.
STA.
ELEV.
UNCONFINED STRENGTH 7.7
BLOWS PER FT. USING 140# WT. FALLING 30"
WASH SAMPLE
SHELBY TUBE — S.T.
GROUND WATER ELEVATION
NO GROUND WATER OBSERVED ABOVE THIS ELEVATION
SANDY GRAVEL
F. BOULDERS OR COBBLES
SAND
SILTY CLAY
SO LIMESTONE

CONTRACTOR SHALL REFERENCE GESTRA GEOTECHNICAL REPORT AND ALL SUBSEQUENT ADDENDA DATED 12-24-2013. UNLESS OTHERWISE SPECIFIED, THE BLOWS PER FOOT AT THE LOCATIONS INDICATED ARE BASED ON DRIVING A 2" O.D. X 1.4" I.D. SPLIT SPOON SAMPLER WITH A 140# HAMMER HAVING A FREE FALL OF 30". THE BLOW COUNT IS TAKEN IN UNDISTURBED SOIL IMMEDIATELY BELOW A CASED OR OPEN HOLE ELIMINATING SIDE FRICTION ON THE DRIVE PIPE.

SUBSURFACE EXPLORATION FOR FOUNDATION DESIGN AND BIDDERS INFORMATION

TO OBTAIN RELATIVE DATA CONCERNING THE CHARACTER OF MATERIAL IN AND UPON WHICH THE FOUNDATION MIGHT BE BUILT, BORINGS AND/OR SOUNDINGS WERE MADE AT POINTS APPROXIMATELY AS INDICATED ON THIS DRAWING. THE DATA PRESENTED HEREIN REPRESENTS THE FINDINGS OF THE SUBSURFACE EXPLORATIONS MADE. HOWEVER, BECAUSE THE DEPTHS INVESTIGATED ARE LIMITED AND THE AREA OF THE BORINGS AND/OR SOUNDINGS IS VERY SMALL IN RELATION TO THE ENTIRE AREA, THE CITY OF MILWAUKEE DOES NOT WARRANT CONDITIONS BELOW THE DEPTHS INVESTIGATED OR THAT THE CLASSIFICATION OF MATERIAL ENCOUNTERED IN THESE INVESTIGATIONS IS NECESSARILY TYPICAL OF THE ENTIRE SITE. CONTACT MR. CRAIG LIBERTO AT (414) 286-0451 TO GET A COPY AND TO REVIEW THE GEOTECHNICAL REPORT.

City of Milwaukee
Department of Public Works
Infrastructure Services Division

WEST LISBON AVENUE NORTHWEST RET. WALL OVER CANADIAN PACIFIC RAILWAY R-40-608 SUBSURFACE EXPLORATION

REVISIONS

DESIGNED BY H.J.R.	
DRAWN BY R.B.M.	
CHECKED BY A.R.	
DATE 02-2014	SCALE NONE
JOB NUMBER BR100-14-0105	
SHEET NUMBER NW2 OF NW7	
OF 58	

W:\STR\B0933\PLANS\NWRETWALL\ 3NW_DETAILS.DGN 02-10-2014

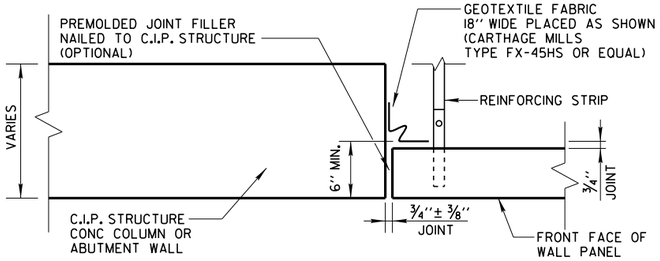

BUTT JOINT DETAIL AT C.I.P. STRUCTURES

(WITH LIP OR NOTCH)

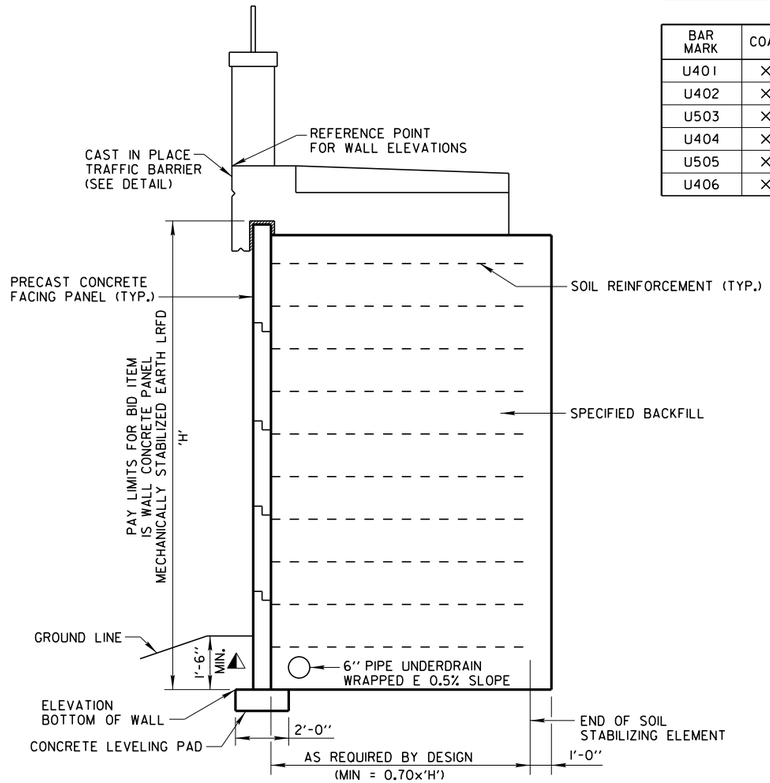

TYPICAL CROSS SECTION

BILL OF BARS - N.W. RETAINING WALL

BAR MARK	COAT	NO. REQ'D.	LENGTH	BENT	BAR SERIES	LOCATION
U401	X	12	22'-3"		▲	LONGITUDINAL
U402	X	19	6'-0"			TRANSVERSE - BOTTOM
U503	X	34	7'-11"	X		TRANSVERSE - TOP
U404	X	19	4'-3"	X		EDGE CAP
U505	X	27	7'-2"	X		RAILING DOWEL
U406	X	2	22'-8"			EDGE CAP - LONGITUDINAL

BAR MARK	NO. REQUIRED	LENGTH
U401	2 SERIES OF 6	21'-8" TO 22'-9"

▲ LENGTH SHOWN FOR BARS IS AN AVERAGE LENGTH AND SHOULD ONLY BE USED FOR BAR WEIGHT CALCULATIONS. SEE BAR SERIES TABLE FOR ACTUAL LENGTH.

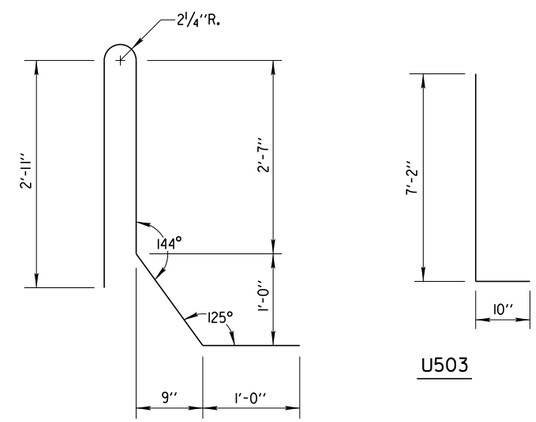

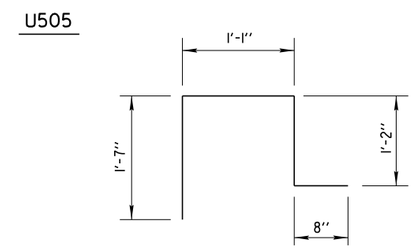

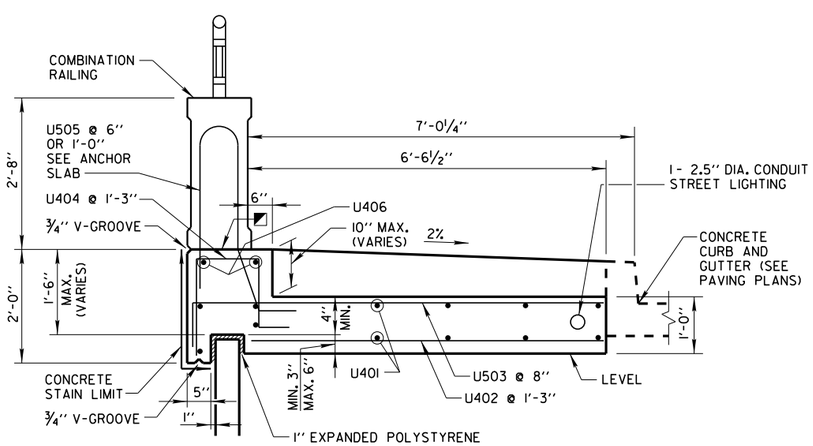

◪ HORIZ. CONST. JOINT-STRIKE OFF AS SHOWN & LEAVE ROUGH.

CAST IN PLACE CONCRETE BARRIER DETAIL 1/4

⚠ MINIMUM EMBEDMENT BASED ON SITE SPECIFIC PARAMETERS (1'-6" MINIMUM FOR ALL WALLS ON LEVEL GROUND). FIELD EMBEDMENTS SHALL MEET OR EXCEED THE MINIMUM EMBEDMENT. FIELD EMBEDMENTS BELOW MINIMUM EMBEDMENT SHALL NOT BE INCLUDED IN THE PAY LIMITS.

NOTE:
TOP OF CONCRETE LEVELING PAD BETWEEN STATIONS SHALL BE SET AT SAME ELEVATION AS TOP OF BRIDGE FOOTING.

ESTIMATE OF QUANTITIES

ITEM NO.	BID ITEMS	UNIT	TOTAL
205.0501.S.04	EXCAVATION, HAULING AND DISPOSAL OF PETROLEUM CONTAMINATED SOIL	TON	16
504.0500	CONCRETE MASONRY RETAINING WALLS	CY	13
505.0615	BAR STEEL REINFORCEMENT HS COATED RETAINING WALLS	LB	1,109
517.1010.S.04	CONCRETE STAINING (R-40-608)	SF	124
517.1015.S.04	CONCRETE STAINING MULTI COLOR STRUCTURE (R-40-608)	SF	71
517.1050.S.04	ARCHITECTURAL SURFACE TREATMENT	SF	71
532.0500.S.03	WALL CONCRETE PANEL MECHANICALLY STABILIZED EARTH LRFD	SF	434
SPV.0105.04	RAILING STEEL TYPE C2 GALVANIZED R-40-608	LS	1

City of Milwaukee

Department of Public Works

Infrastructure Services Division

WEST LISBON AVENUE NORTHWEST RET. WALL
OVER CANADIAN PACIFIC RAILWAY
R-40-608
WALL DETAILS AND QUANTITIES

REVISIONS

DESIGNED BY H.J.R.
DRAWN BY R.B.M.
CHECKED BY A.R.
DATE 02-2014
SCALE NONE
JOB NUMBER BR100-14-0105
SHEET NUMBER NW3 OF NW7
OF 58

W:\STR\B0933\PLANS\NWRETWALL\ 4NW_ANCHORSLAB.DGN 02-13-2014

BILL OF BARS - COLUMN

BAR MARK	COAT	NO. REQ'D.	LENGTH	BENT	BAR SERIES	LOCATION
G601	X	3	21'-0"			VERTICAL COLUMN
G402	X	22	2'-7"	X		STIRRUP
G503	X	2	1'-4"			DOWELS
G504	X	22	1'-10"			DOWELS
G505	X	22	1'-0"			DOWELS

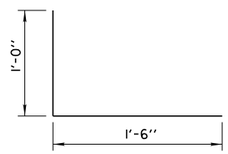

G402

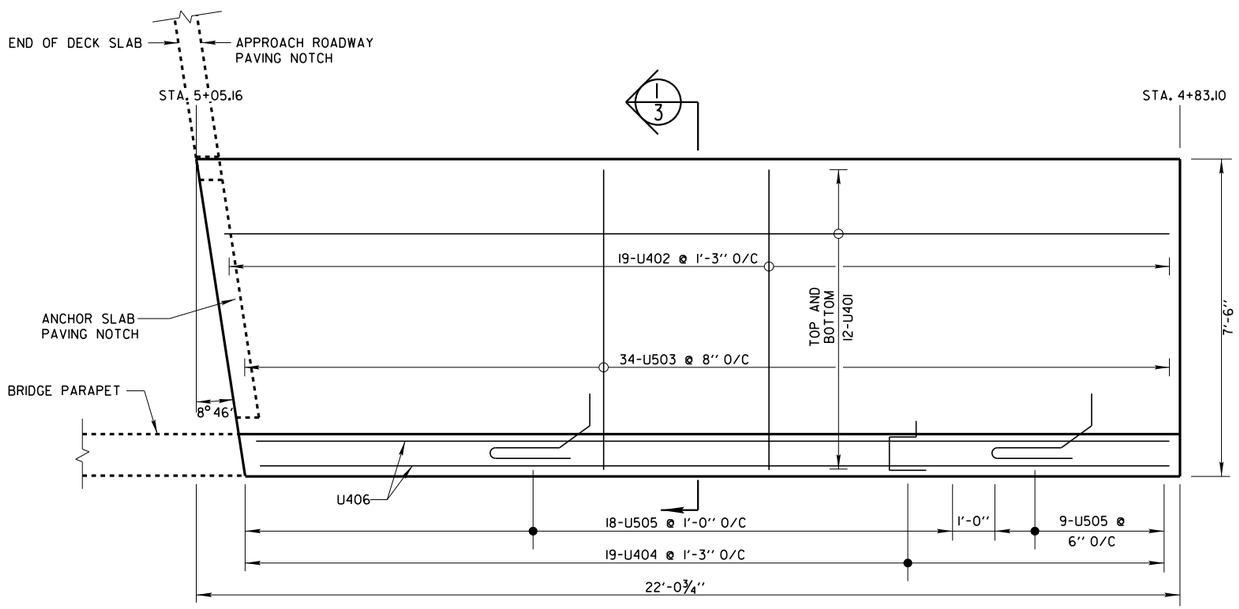

ANCHOR SLAB PLAN AT NORTHWEST RETAINING WALL

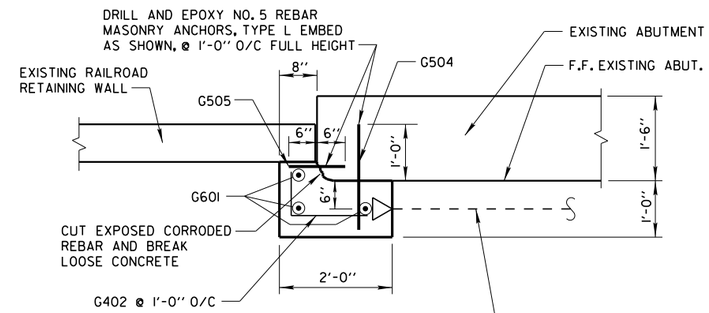

PLAN VIEW

(NEW CONCRETE COLUMN)

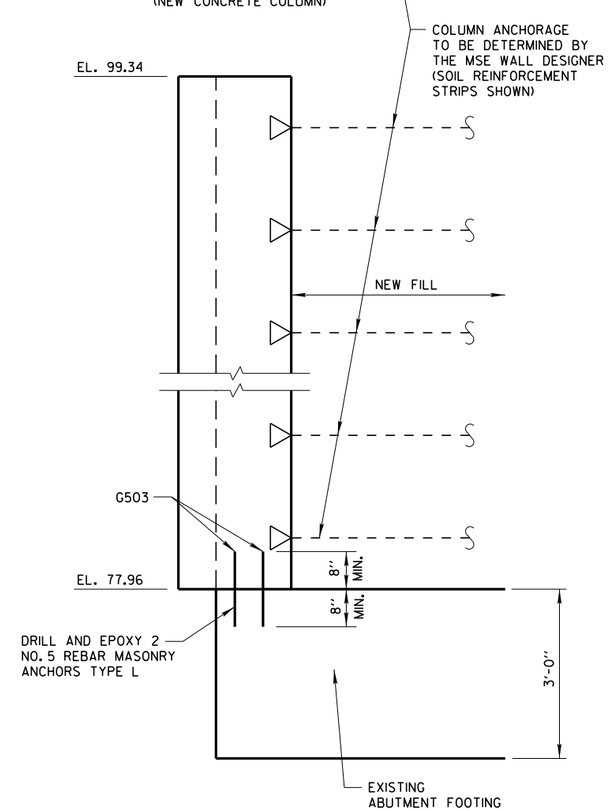

ELEVATION VIEW

(NEW CONCRETE COLUMN)

NOTE:
COLUMN THICKNESS MAY VARY AT TOP TO CREATE PLUMBNESS FOR THE BUTTING MSE WALL

City of Milwaukee

Department of Public Works

Infrastructure Services Division

WEST LISBON AVENUE NORTHWEST RET. WALL
OVER CANADIAN PACIFIC RAILWAY
R-40-608
ANCHOR SLAB PLAN

REVISIONS

DESIGNED BY H.J.R.
DRAWN BY R.B.M.
CHECKED BY A.R.
DATE 02-2014
SCALE NONE
JOB NUMBER BR100-14-0105
SHEET NUMBER NW4 OF NW7
OF 58

W:\STR\B0933\PLANS\NWRETWALL\ 5NW_RAILINGELEV.DGN 02-13-2014

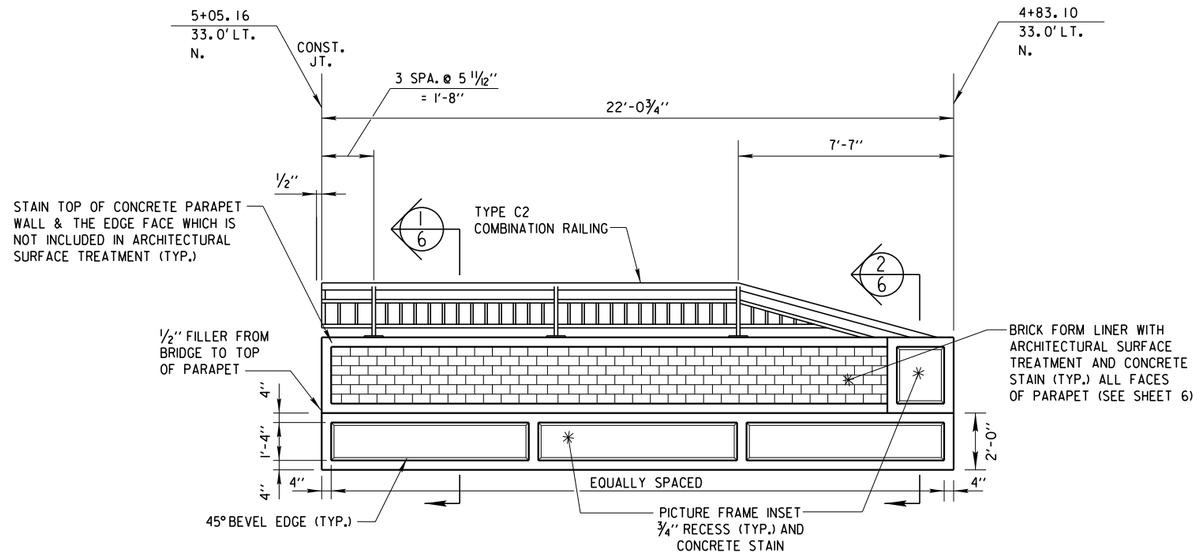

NORTH FACE OF NORTHWEST RETAINING WALL RAILING - LOOKING SOUTH

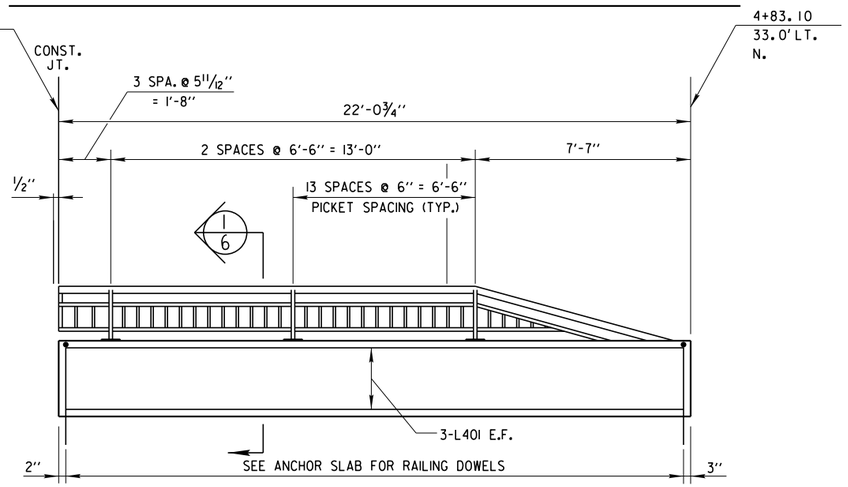

NORTH FACE OF NORTHWEST RETAINING WALL RAILING - LOOKING SOUTH
(REBAR DETAILS)

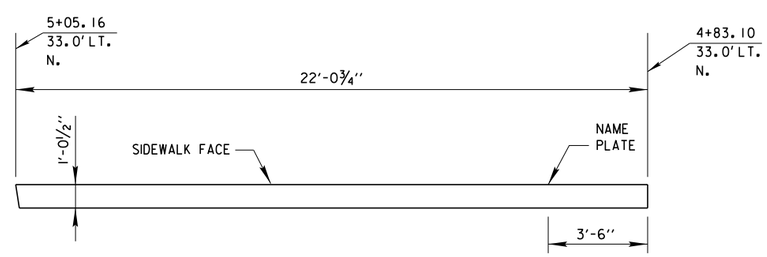

PLAN VIEW OF NORTHWEST RETAINING WALL RAILING

City of Milwaukee

Department of Public Works

Infrastructure Services Division

WEST LISBON AVENUE NORTHWEST RET. WALL
OVER CANADIAN PACIFIC RAILWAY
R-40-608
RAILING ELEVATIONS, BAR DETAILS & PLAN

REVISIONS

DESIGNED BY H.J.R.	
DRAWN BY R.B.M.	
CHECKED BY A.R.	
DATE 02-2014	SCALE NONE
JOB NUMBER BR100-14-0105	
SHEET NUMBER NW5 OF NW7	
OF 58	

W:\STRX\B0933\PLANS\NWRETWALL\ 6NW_RAILINGBILLOFBAR.DGN 02-13-2014

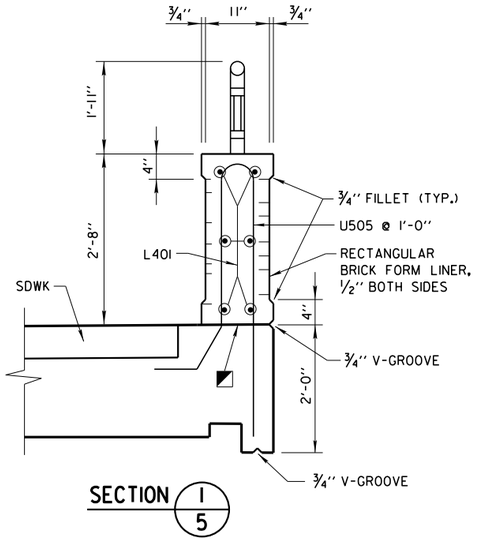

SECTION 1/5

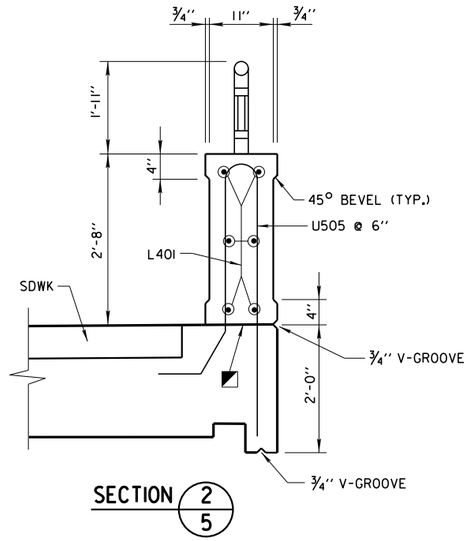

SECTION 2/5

BILL OF BARS - VERTICAL PARAPET WALL

BAR MARK	COAT	NO. REQ'D.	LENGTH	BENT	BAR SERIES	LOCATION
L401	X	6	21'-8"			PARAPET WALL - HORIZ.

◪ HORIZ. CONST. JOINT-STRIKE OFF AS SHOWN & LEAVE ROUGH.

▣ CAULK AROUND PERIMETER OF BASE PLATES, NO. 1 AND FILL BOLT SLOT OPENING IN SHIMS AND BASE PLATES WITH NON-STAINING GRAY NON-BITUMINOUS JOINT SEALER

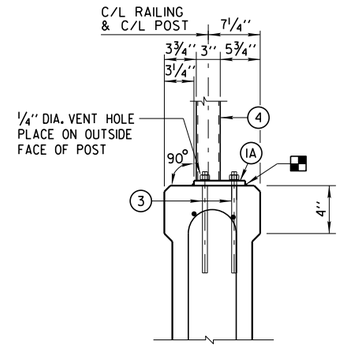

SECTION THRU PARAPET ON RETAINING WALL

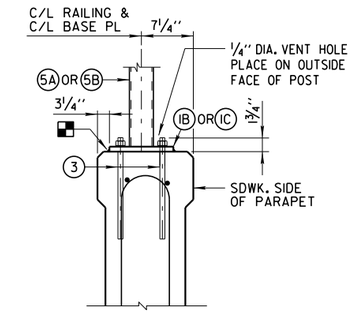

ANCHORAGE FOR END RAIL

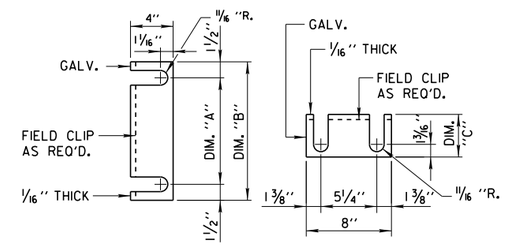

END RAIL SHIM DETAIL

8" X 1'-1" BASE PLATE (1B) DIM. "A" = 10", DIM. "B" = 1'-1", DIM. "C" = 6 1/2"
8" X 1'-6" BASE PLATE (1C) DIM. "A" = 1'-3", DIM. "B" = 1'-6", DIM. "C" = 9"
(2 SETS PER POST)

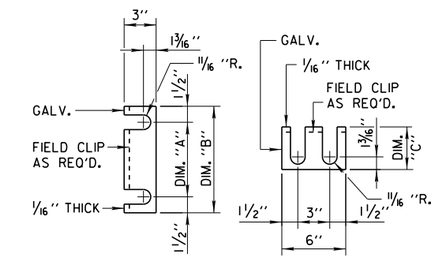

RAIL POST SHIM DETAIL

6" X 8" BASE PL (1A) DIM. "A" = 5", DIM. "B" = 8", DIM. "C" = 4".
(2 SETS PER POST)

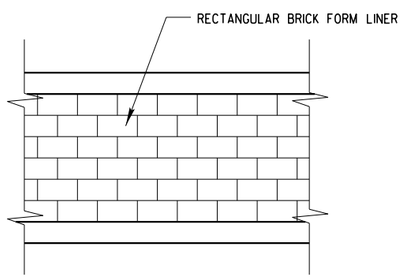

BRICK STONE FORM LINER

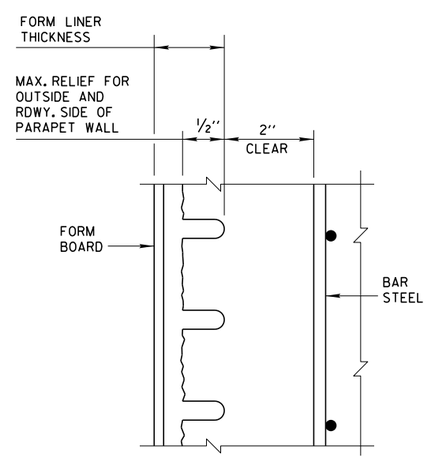

SECTION THRU FORM LINER

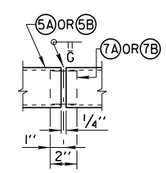

SHOP RAIL SPLICE DETAIL

(LOCATION MUST BE SHOWN ON SHOP DRAWINGS)

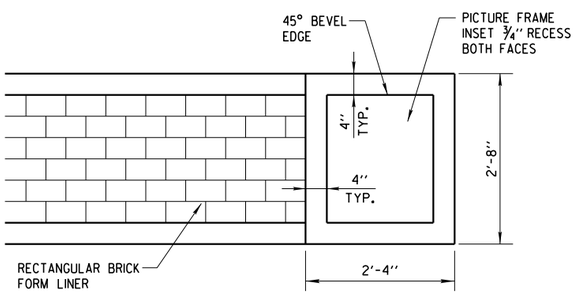

RAILING PICTURE FRAME INSET ELEVATION

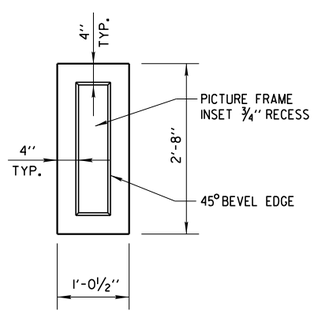

END RAILING PICTURE FRAME INSET ELEVATION

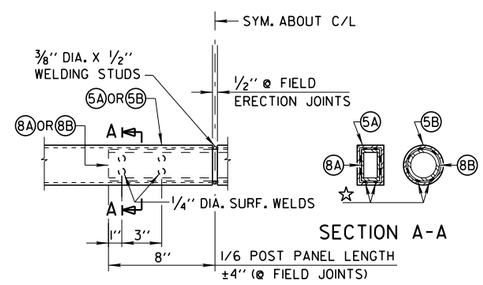

FIELD ERECTION JOINT DETAIL

☆ MIN. 5/8" FLAT SURF. DIA. PUNCHINGS OR STUDS MAY BE USED AS AN ALT.

NOTE:
SEE LEGEND & RAILING NOTES ON SHEET NW7

City of Milwaukee

Department of Public Works

Infrastructure Services Division

WEST LISBON AVENUE NORTHWEST RET. WALL
OVER CANADIAN PACIFIC RAILWAY
R-40-608
PARAPET DETAILS AND BILL OF BARS

REVISIONS

DESIGNED BY H.J.R.	
DRAWN BY R.B.M.	
CHECKED BY A.R.	
DATE 02-2014	SCALE NONE
JOB NUMBER BR100-14-0105	
SHEET NUMBER NW6 OF NW7	
OF 58	

W:\STR\B0933\PLANS\NWRETWALL\ 7NW_STEELRAILINGDET.DGN 02-13-2014

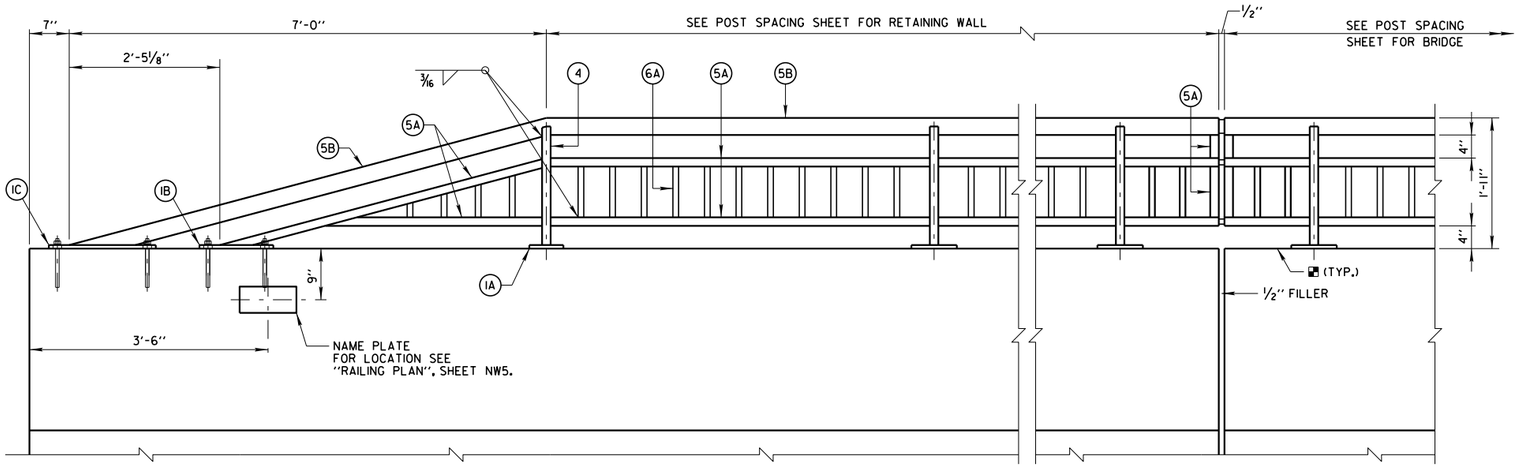

INSIDE ELEVATION OF PARAPET

LEGEND

- (IA) PLATE 5/8" x 6" x 8" WITH 3/4" x 1 1/2" SLOTTED HOLES.
- (IB) PLATE 5/8" x 8" x 1'-1" WITH 3/4" x 1 1/2" SLOTTED HOLES.
- (IC) PLATE 5/8" x 8" x 1'-6" WITH 3/4" x 1 1/2" SLOTTED HOLES.
- (2) 1/4" x 2 1/2" x 7 1/4" ANCHOR PLATE WITH 11/16" DIA. HOLES FOR THREADED RODS NO. 3.
- (3) 4 STAINLESS STEEL CONCRETE MASONRY ANCHORS (MIN. TENSILE STRENGTH = 70 KSI) TYPE 'S' (EPOXY), 5/8" DIA. MINIMUM PULLOUT CAPACITY OF 13 KIPS. EMBED A MIN. OF 7" FOR RAIL POSTS AND 5" FOR END RAILS.
- (4) STRUCTURAL TUBING 3" x 1 1/2" x 3/16". PLACE VERTICAL. WELD TO NO. 1 & NO. 5.
- (5A) STRUCTURAL TUBING 3" x 1 1/2" x 3/16" RAILS. WELD TO NO. 1 & NO. 4. INSIDE OF TUBE TO BE PAINTED AT ALL FIELD ERECTION & EXPANSION JOINTS.
- (5B) STRUCTURAL TUBING 2 1/2" DIA. (STANDARD SIZE) RAIL (2.875" O.D.). WELD TO NO. 1 & NO. 4. INSIDE OF PIPE TO BE PAINTED AT ALL FIELD ERECTION & EXPANSION JOINTS.
- (6A) BAR 1" x 1" PICKETS. WELD TO NO. 5 (SPACE AT 6" MAX. C/L TO C/L SPACING). PLACE VERTICAL.
- (7A) RECTANGULAR SLEEVE FABRICATED FROM 3/16" PLATES. PROVIDE "SLIDING FIT".
- (7B) CIRCULAR SLEEVE FABRICATED FROM STRUCTURAL TUBING 2" DIA. (STANDARD SIZE) (2.375" O.D.)
- (8A) RECTANGULAR SLEEVE FABRICATED FROM 3/16" PLATES. (1'-4" AT FIELD ERECTION JOINTS)
- (8B) CIRCULAR SLEEVE FABRICATED FROM STRUCTURAL TUBING 2" DIA. (STANDARD SIZE) (2.375" O.D.) (1'-4" AT FIELD ERECTION JOINTS)

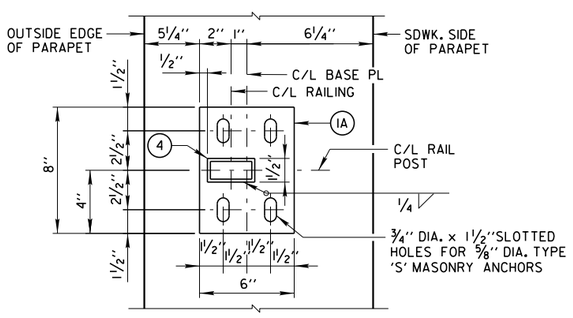

TYPICAL RAIL POST BASE PLATE

FOR 3" X 1 1/2" X 3/16" POSTS (4)

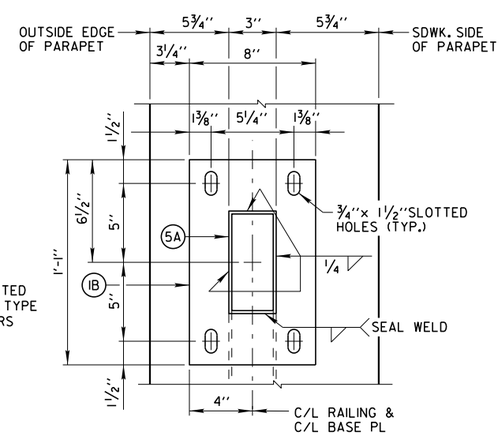

END RAIL BASE PLATE

FOR 3"x1 1/2"x3/16" POSTS (5A)

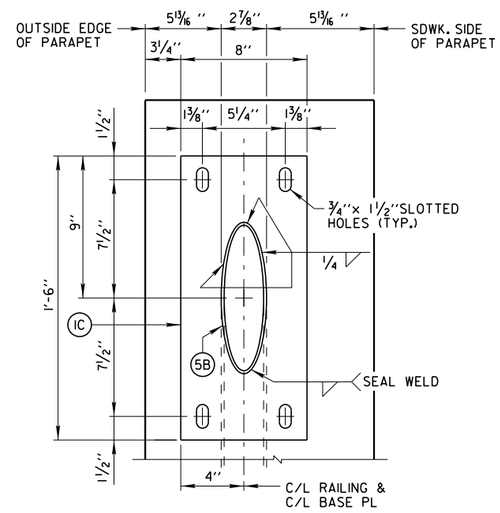

END RAIL BASE PLATE

FOR 2 1/2" DIA. STD. PIPE RAIL (5B)

RAILING NOTES

BID ITEM SHALL BE "RAILING STEEL TYPE C2 GALVANIZED R-40-608", WHICH SHALL INCLUDE ALL WORK SHOWN ON THIS SHEET.

POST BASE PLATES SHALL BE FLAT WITH ALL SURFACES SMOOTH AND FREE FROM WARP AND ALL EDGES SMOOTH, STRAIGHT AND VERTICAL. ALL PLATE CUTS SHALL BE MACHINE OR MACHINE FLAME CUTS.

NO. 1, 2, 6, 7 AND 8 SHALL CONFORM TO ASTM A709 GRADE 36. STRUCTURAL TUBING SHALL CONFORM TO ASTM A500 GRADE B (NO. 4 & NO. 5).

ANCHORAGES SHALL BE ACCURATELY PLACED TO PROVIDE CORRECT ALIGNMENT OF RAILING. SET NORMAL TO GRADE.

CUT BOTTOM OF POST TO MAKE POST VERTICAL IN BOTH TRANSVERSE AND LONGITUDINAL DIRECTION.

STEEL SHIMS SHALL BE PROVIDED & USED UNDER BASE PLATES WHERE REQUIRED FOR ALIGNMENT, AND SHALL BE GALVANIZED OR STAINLESS STEEL.

ALL JOINTS AND RECESSES IN CONCRETE PARAPET ARE TO BE VERTICAL.

ALL MATERIAL (EXCEPT NO. 3) SHALL BE GALVANIZED AFTER FABRICATION. PRIOR TO GALVANIZING THE STEEL RAILING SHALL BE GIVEN A NO. 6 BLAST CLEANING PER SPECIFICATIONS. PAINT OVER GALVANIZING WITH AN APPROVED TIE COAT AND TOP AS SPECIFIED IN THE "BRIDGE SPECIAL PROVISIONS". THE RAILING SHALL BE PAINTED FEDERAL STANDARD COLOR NO. 27038.

VENT HOLES SHALL BE DRILLED IN POST AND RAIL MEMBERS AS REQUIRED TO FACILITATE GALVANIZING AND DRAINAGE.

RAILING SHALL BE FABRICATED IN LENGTHS THAT INCLUDE 3 OR 4 POSTS.

TOUCH-UP PAINTING TO BE DONE AT COMPLETION OF STEEL RAILING INSTALLATION TO THE SATISFACTION OF THE ENGINEER AT NO EXTRA COST.

CAULK AROUND PERIMETER OF BASE PLATES, NO.1 AND FILL BOLT SLOT OPENINGS IN SHIMS AND BASE PLATES WITH NON-STAINING GRAY NONBITUMINOUS JOINT SEALER.

NOTES

RAILING SHALL BE HOT DIP GALVANIZED AND PAINTED WITH WISDOT APPROVED TWO COAT PAINT SYSTEM.

PAINT POSTS, RAILS, SHIMS, AND EXPOSED PORTIONS OF ANCHOR BOLTS. FINISH COAT COLOR SHALL BE FEDERAL STANDARD COLOR NO. 27038.

INCLUDE PAINTING COST IN BID ITEM "RAILING STEEL TYPE C2 GALVANIZED R-40-608".

5/8" DIA. CONCRETE MASONRY ANCHORS TYPE 'S': MINIMUM PULLOUT STRENGTH 13 KIPS, EMBED 7" MIN. FOR RAIL POSTS AND 5" MIN. FOR END RAILS STAINLESS STEEL.

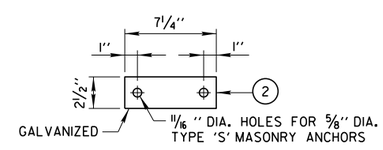

END RAIL ANCHOR PLATE

FOR END RAIL BASE PLATES (IB) (IC)

2 REQ'D PER END RAIL BASE PL

City of Milwaukee

Department of Public Works

Infrastructure Services Division

WEST LISBON AVENUE NORTHWEST RET. WALL
OVER CANADIAN PACIFIC RAILWAY
R-40-608
STEEL RAILING DETAILS

REVISIONS

DESIGNED BY H.J.R.	
DRAWN BY R.B.M.	
CHECKED BY A.R.	
DATE 02-2014	SCALE NONE
JOB NUMBER BR100-14-0105	
SHEET NUMBER NW7 OF NW7	
OF 58	

W:\STR\B0933\PLANS\SWRETWALL\ISW_ELEVATION.DGN 02-13-2014

GENERAL NOTES

DRAWINGS SHALL NOT BE SCALED.

ALL STATIONS AND ALL ELEVATIONS ARE IN FEET.
ALL ELEVATIONS ARE REFERRED TO CITY OF MILWAUKEE DATUM.
CITY OF MILWAUKEE DATUM = (NGVD29) -580.60

ALL DIMENSIONS ALONG THE FRONT FACE OF WALL UNLESS OTHERWISE SHOWN.

BAR REINFORCEMENT SHALL HAVE 2" CLEAR COVER UNLESS SHOWN OTHERWISE.

THESE PLANS ARE FOR A PRECAST CONCRETE PANEL MECHANICALLY STABILIZED EARTH (MSE) RETAINING WALL LRFD.

THE CONTRACTOR MUST COORDINATE THE CONSTRUCTION OF WALLS R-40-606, R-40-607, R-40-608, R-40-609, AND BRIDGE B-40-899.

THE CONTRACTOR SHALL PROVIDE COMPLETE DESIGN, PLANS, DETAILS, SPECIFICATIONS, AND SHOP DRAWINGS FOR THE RETAINING WALLS IN ACCORDANCE WITH THE SPECIAL PROVISIONS. THE RETAINING WALL MANUFACTURER SHALL PROVIDE TECHNICAL ASSISTANCE TO THE CONTRACTOR DURING CONSTRUCTION. THE COST OF FURNISHING THESE ITEMS SHALL BE INCLUDED IN THE BID ITEM, "WALL CONCRETE PANEL MECHANICALLY STABILIZED EARTH LRFD".

THE COST OF FURNISHING AND PLACING BACKFILL WITHIN THE REINFORCED SOIL ZONES, UNREINFORCED CONCRETE LEVELING PAD UNDER THE MSE PRECAST WALL PANELS, AND REINFORCEMENT, GEOTEXTILE FABRIC, ENGINEERED BACKFILL, JOINT MATERIAL, AND OTHER MISCELLANEOUS ITEMS IS INCLUDED IN THE COST OF BID ITEM "WALL CONCRETE PANEL MECHANICALLY STABILIZED EARTH LRFD".

ALL BAR STEEL REINFORCEMENT IS TO BE EPOXY COATED.

BEVEL ALL EXPOSED EDGES OF CONCRETE ¾" UNLESS NOTED OTHERWISE.

THE PLAN QUANTITY FOR THE ITEM "WALL CONCRETE PANEL MECHANICALLY STABILIZED EARTH LRFD" IS BASED ON A WALL HEIGHT MEASURED FROM THE TOP OF THE LEVELING PAD TO THE TOP OF WALL AS SHOWN IN THE PLANS.

PLANS, ELEVATIONS AND DETAILS SHOWN ON THESE DRAWINGS ARE INTENDED TO INDICATE WALL LOCATIONS, LENGTHS HEIGHTS, AND DETAILS COMMON TO THE WALL SYSTEM SELECTED. THE CONTRACTOR SHALL VERIFY THAT THE WALL SYSTEM SELECTED WILL CONFORM TO THE REQUIRED ALIGNMENTS AND DETAILS.

THE MAXIMUM VALUE OF THE ANGLE OF INTERNAL FRICTION OF THE WALL BACKFILL MATERIAL IN THE REINFORCED ZONE SHALL BE ASSUMED TO BE 30° WITHOUT CERTIFIED TEST VALUES.

PLACE BACKFILL IN SPECIFIED LAYER THICKNESS STARTING AT BACK FACE OF WALL AND WORKING AWAY FROM WALL.

UTILITY LOCATIONS SHOWN ARE APPROXIMATE. THE CONTRACTOR SHALL BE RESPONSIBLE FOR DETERMINING THE EXACT LOCATION OF ALL UTILIES PRIOR TO EXCAVATING. DAMAGE TO EXISTING UTILITES SHALL BE REPAIRED OR REPLACED AT THE CONTRACTORS EXPENSE.

THE RETAINING WALL IS TO BE DESIGNED USING THE ELEVATIONS GIVEN ON THIS SHEET.

SEE SPECIAL PROVISIONS FOR AESTHETIC TREATMENT TO WALL.

■ THE LENGTHS PROVIDED IN THE TABLE ARE THE MINIMUM REQUIRED REINFORCEMENT LENGTHS BASED UPON THE MINIMUM DESCRIBED IN THE WALL SYSTEM SPECIAL PROVISIONS OR EXTERNAL AND OVERALL STABILITY AT THE DESIGNATED LOCATIONS. THESE DESIGNATED LOCATIONS REPRESENT TYPICAL AND CRITICAL WALL LOCATIONS, BUT SHALL NOT BE CONSIDERED ALL INCLUSIVE. THE CONTRACTOR DESIGN LENGTHS SHALL MEET OR EXCEED THE MINIMUM VALUES REPRESENTED IN THE TABLE AT THESE DESIGNATED LOCATIONS.

DESIGN DATA

MATERIAL PROPERTIES:

CONCRETE MASONRY	f'c = 4,000 PSI
PRECAST CONCRETE WALL PANEL	f'c = 4,000 PSI
BAR STEEL REINFORCEMENT	Fy = 60,000 PSI

LIVE LOAD:

LIVE LOAD SURCHARGE	240 PSF

B.M. N/S HYD. (NNW BOLT)
WEST OF W. LISBON AVE. BRIDGE
ELEV. = 108.107

WEST LISBON AVENUE OVER CANADIAN PACIFIC RAILWAY

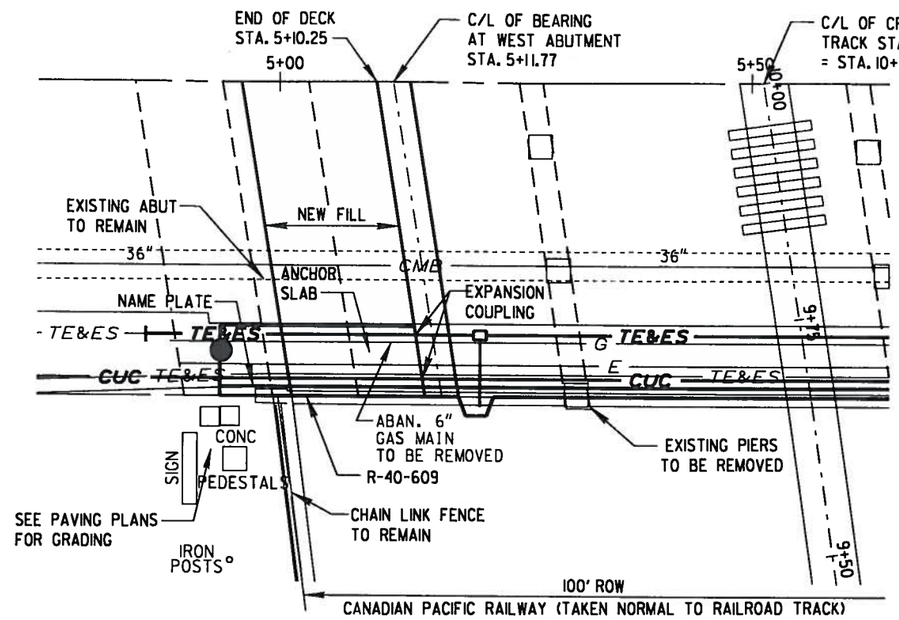

PLAN VIEW

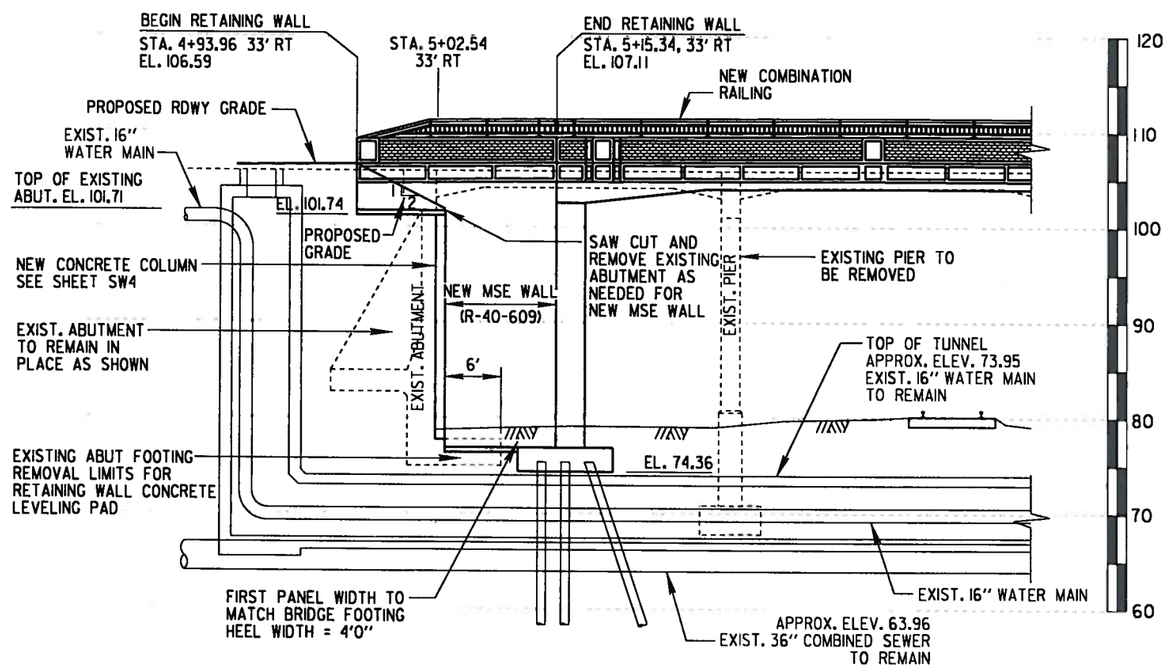

SOUTH ELEVATION

LOOKING NORTH

NOTE:
THIS REMOVAL OF THE EXISTING ABUTMENT AS SHOWN WILL BE PAID AS PART OF BRIDGE REMOVAL.

SOUTHWEST RETAINING WALL LIST OF DRAWINGS

SW1. GENERAL PLAN AND ELEVATION
SW2. SUBSURFACE EXPLORATION
SW3. WALL DETAILS AND QUANTITIES
SW4. ANCHOR SLAB PLAN
SW5. RAILING ELEVATIONS, BAR DETAILS & PLAN
SW6. PARAPET DETAILS AND BILL OF BARS
SW7. STEEL RAILING DETAILS

WALL EXTERNAL STABILITY EVALUATION

WALL HEIGHT (FEET)	28'-9"
EXPOSED WALL HEIGHT (FEET)	27'-3"
MINIMUM LENGTH OF REINFORCEMENT (FEET) ■	20'-2"
LENGTH OF REINFORCEMENT / WALL HEIGHT	0.70
WALL STATION	4+93.96
TEST BORING USED	BOR-4

SOIL PARAMETERS

STRATUM LOCATION & SOIL DESCRIPTION	UNIT DENSITY (PCF)	FRICTION ANGLE (DEGREES)	COHESION (PSF)
EXISTING CLAYEY FILL	125	28	1500
GRANULAR BACKFILL (REINFORCING ZONE OR BACKFILL)	120	30	0
(LEAN CLAY) EL. 67.0 TO EL. 74.00	130	30	2500
(CLAY WITH SAND AND GRAVEL) EL. 53.0 TO EL. 67.00	130	31	3000
(SILTY SAND) EL. 42.0 TO EL. 53.00	125	30	0

CAPACITY TO DEMAND RATIO (CDR)

	DRAINED	UNDRAINED
SLIDING (CDR ≥ 1.0)	1.5	1.1
ECCENTRICITY (CDR > 1.0)	1.4	1.4
BEARING (CDR > 1.0)	1.8	1.0
GLOBAL STABILITY (CDR > 1.0)	1.3	1.7

GEOMETRY TABLE

STATION	OFFSET TO F.F. WALL	TOP OF WALL ELEV.	FINISHED GRADE ELEV.
5+15.26	32.5'LT.	107.11	78.36
5+02.54	32.5' LT.	106.80	78.46
4+93.96	32.5' LT.	106.59	107.01

WISCONSIN
CRAIG S. LIBERTO
E-23746
MILWAUKEE
WIS.
PROFESSIONAL ENGINEER
Craig S. Liberto 2/18/14

City of Milwaukee
Department of Public Works
Infrastructure Services Division

WEST LISBON AVENUE SOUTHWEST RET. WALL
OVER CANADIAN PACIFIC RAILWAY
R-40-609
GENERAL PLAN AND ELEVATION

REVISIONS

DESIGNED BY H.J.R.
DRAWN BY R.B.M.
CHECKED BY A.R.
DATE 02-2014
SCALE NONE
JOB NUMBER BR100-14-0105
SHEET NUMBER SW1 OF SW7
OF 58

W:\STR\B0933\PLANS\SWRETWALL\ 2SW_RWSUBSURFACE.DGN 02-13-2014

WEST LISBON AVENUE OVER CANADIAN PACIFIC RAILWAY

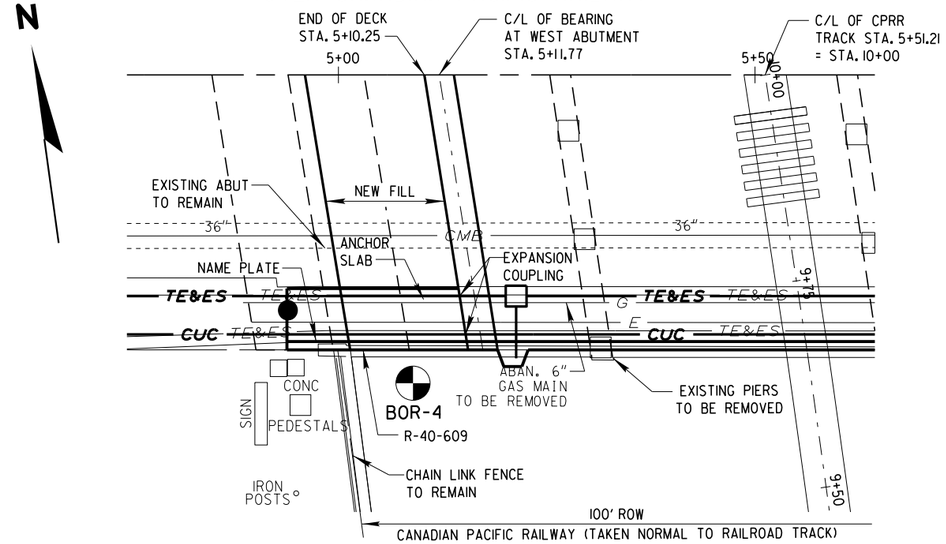

PLAN VIEW

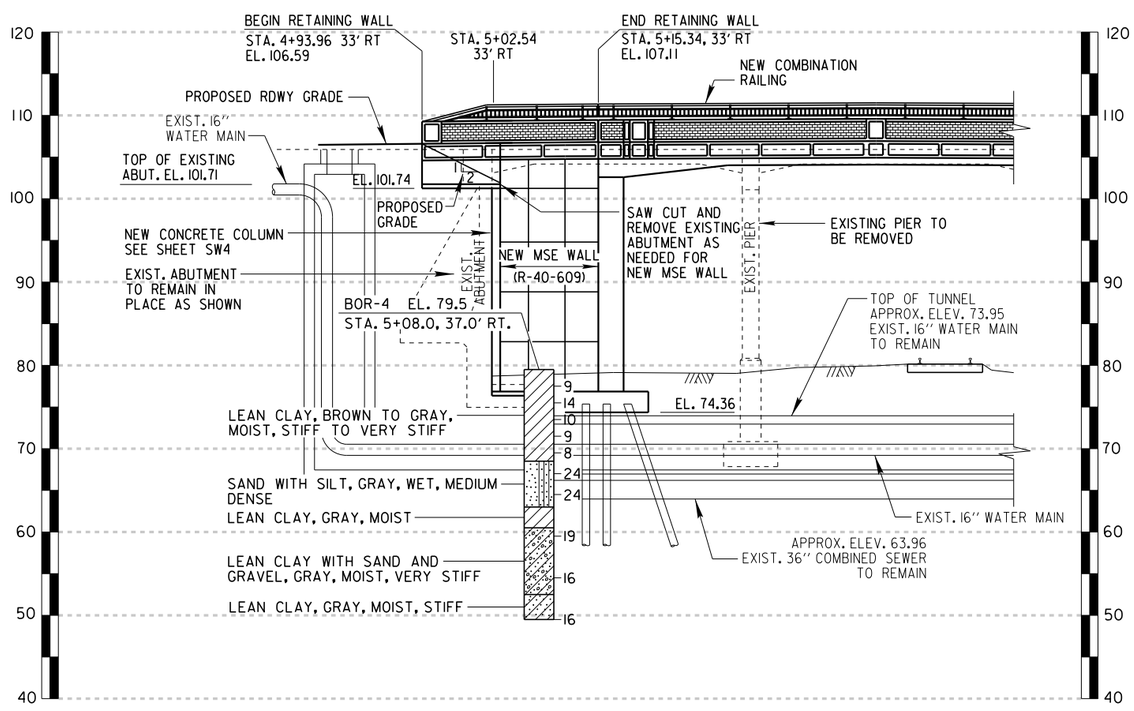

SOUTH ELEVATION

LOOKING NORTH

ABBREVIATIONS

F — FINE M — MEDIUM C — COARSE
WS — WEATHERED SO — SOUND

MATERIAL SYMBOLS

TOPSOIL, SILT, SANDSTONE, SAND, PEAT, LIMESTONE, GRAVEL, CLAY, IGNEOUS ROCK

LEGEND OF PROBING

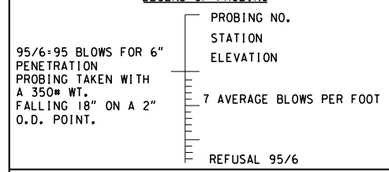

LEGEND OF BORING

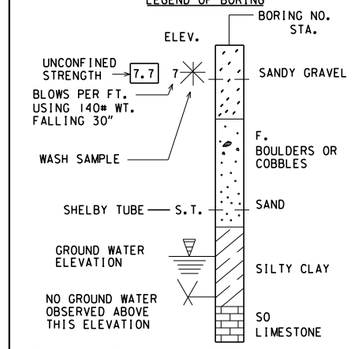

CONTRACTOR SHALL REFERENCE GESTRA GEOTECHNICAL REPORT AND ALL SUBSEQUENT ADDENDA DATED 12-24-2013. UNLESS OTHERWISE SPECIFIED, THE BLOWS PER FOOT AT THE LOCATIONS INDICATED ARE BASED ON DRIVING A 2" O.D. X 1.4" I.D. SPLIT SPOON SAMPLER WITH A 140# HAMMER HAVING A FREE FALL OF 30". THE BLOW COUNT IS TAKEN IN UNDISTURBED SOIL IMMEDIATELY BELOW A CASED OR OPEN HOLE ELIMINATING SIDE FRICTION ON THE DRIVE PIPE.

SUBSURFACE EXPLORATION FOR FOUNDATION DESIGN AND BIDDERS INFORMATION

TO OBTAIN RELATIVE DATA CONCERNING THE CHARACTER OF MATERIAL IN AND UPON WHICH THE FOUNDATION MIGHT BE BUILT, BORINGS AND/OR SOUNDINGS WERE MADE AT POINTS APPROXIMATELY AS INDICATED ON THIS DRAWING. THE DATA PRESENTED HEREIN REPRESENTS THE FINDINGS OF THE SUBSURFACE EXPLORATIONS MADE. HOWEVER, BECAUSE THE DEPTHS INVESTIGATED ARE LIMITED AND THE AREA OF THE BORINGS AND/OR SOUNDINGS IS VERY SMALL IN RELATION TO THE ENTIRE AREA, THE CITY OF MILWAUKEE DOES NOT WARRANT CONDITIONS BELOW THE DEPTHS INVESTIGATED OR THAT THE CLASSIFICATION OF MATERIAL ENCOUNTERED IN THESE INVESTIGATIONS IS NECESSARILY TYPICAL OF THE ENTIRE SITE. CONTACT MR. CRAIG LIBERTO AT (414) 286-0451 TO GET A COPY AND TO REVIEW THE GEOTECHNICAL REPORT.

City of Milwaukee
Department of Public Works
Infrastructure Services Division

WEST LISBON AVENUE SOUTHWEST RET. WALL
OVER CANADIAN PACIFIC RAILWAY
R-40-609
SUBSURFACE EXPLORATION

REVISIONS

DESIGNED BY H.J.R.	
DRAWN BY R.B.M.	
CHECKED BY A.R.	
DATE 02-2014	SCALE NONE
JOB NUMBER BR100-14-0105	
SHEET NUMBER SW2 OF SW7	
OF 58	

W:\STR\B0933\PLANS\SWRETWALL\ 3SW_DETAILS.DGN 02-13-2014

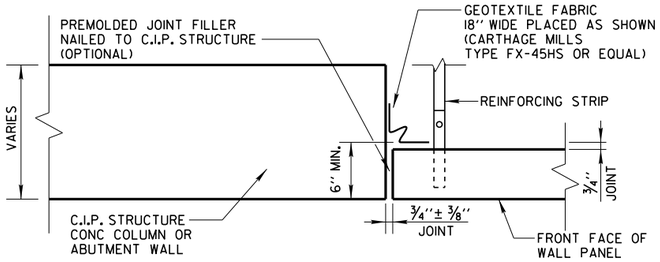

BUTT JOINT DETAIL AT C.I.P. STRUCTURES

(WITH LIP OR NOTCH)

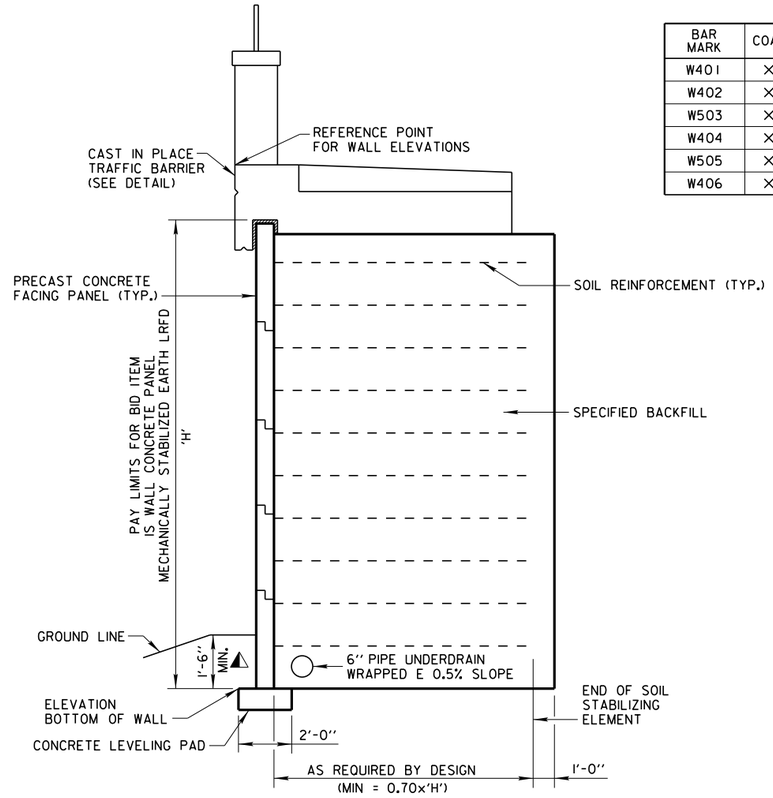

TYPICAL CROSS SECTION

MINIMUM EMBEDMENT BASED ON SITE SPECIFIC PARAMETERS (1'-6" MINIMUM FOR ALL WALLS ON LEVEL GROUND), FIELD EMBEDMENTS SHALL MEET OR EXCEED THE MINIMUM EMBEDMENT. FIELD EMBEDMENTS BELOW MINIMUM EMBEDMENT SHALL NOT BE INCLUDED IN THE PAY LIMITS.

NOTE:
TOP OF CONCRETE LEVELING PAD BETWEEN STATIONS SHALL BE SET AT SAME ELEVATION AS TOP OF BRIDGE FOOTING.

BILL OF BARS - S.W. RETAINING WALL

BAR MARK	COAT	NO. REQ'D.	LENGTH	BENT	BAR SERIES	LOCATION
W401	X	12	20'-6"		▲	LONGITUDINAL
W402	X	17	6'-0"			TRANSVERSE - BOTTOM
W503	X	32	7'-11"	X		TRANSVERSE - TOP
W404	X	17	4'-3"	X		EDGE CAP
W505	X	27	7'-2"	X		RAILING DOWEL
W406	X	2	21'-0"			EDGE CAP - LONGITUDINAL

BAR MARK	NO. REQUIRED	LENGTH
W401	2 SERIES OF 6	20'-0" TO 21'-0"

▲ LENGTH SHOWN FOR BARS IS AN AVERAGE LENGTH AND SHOULD ONLY BE USED FOR BAR WEIGHT CALCULATIONS. SEE BAR SERIES TABLE FOR ACTUAL LENGTH.

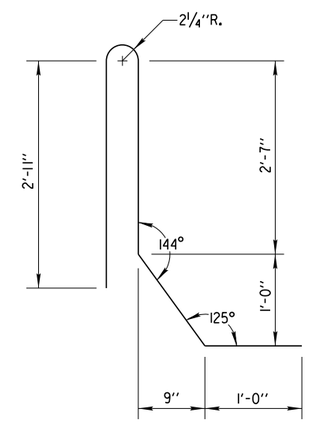

W505

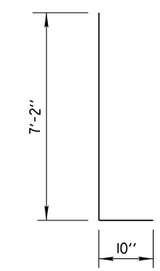

W503

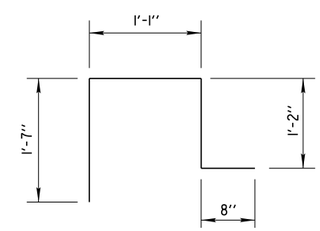

W404

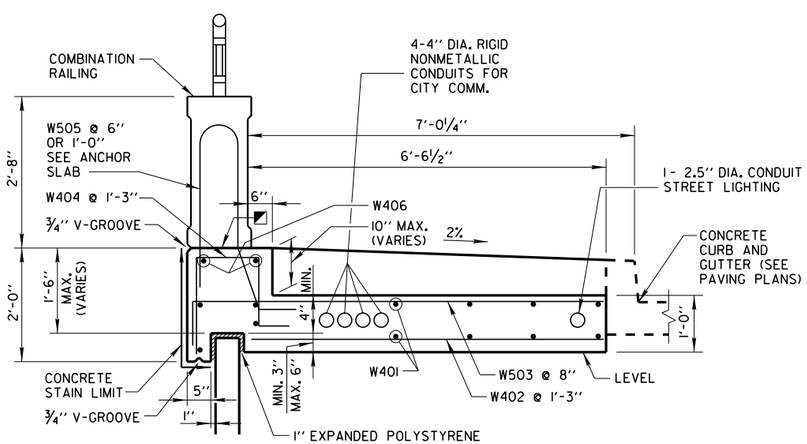

◩ HORIZ. CONST. JOINT-STRIKE OFF AS SHOWN & LEAVE ROUGH.

CAST IN PLACE CONCRETE BARRIER DETAIL 1/4

ESTIMATE OF QUANTITIES

ITEM NO.	BID ITEMS	UNIT	TOTAL
205.0501.S.05	EXCAVATION, HAULING AND DISPOSAL OF PETROLEUM CONTAMINATED SOIL	TON	16
504.0500	CONCRETE MASONRY RETAINING WALLS	CY	13
505.0615	BAR STEEL REINFORCEMENT HS COATED RETAINING WALLS	LB	1,050
517.1010.S.05	CONCRETE STAINING (R-40-609)	SF	120
517.1015.S.05	CONCRETE STAINING MULTI COLOR STRUCTURE (R-40-609)	SF	68
517.1050.S.05	ARCHITECTURAL SURFACE TREATMENT	SF	68
532.0500.S.04	WALL CONCRETE PANEL MECHANICALLY STABILIZED EARTH LRFD	SF	395
SPV.0105.05	RAILING STEEL TYPE C2 GALVANIZED R-40-609	LS	1

City of Milwaukee

Department of Public Works

Infrastructure Services Division

WEST LISBON AVENUE SOUTHWEST RET. WALL
OVER CANADIAN PACIFIC RAILWAY
R-40-609
WALL DETAILS AND QUANTITIES

REVISIONS

DESIGNED BY H.J.R.
DRAWN BY R.B.M.
CHECKED BY A.R.
DATE 02-2014
SCALE NONE
JOB NUMBER BR100-14-0105
SHEET NUMBER SW3 OF SW7
OF 58

W:\STR\B0933\PLANS\SWRETWALL\ 4SW_ANCHORSLAB.DGN 02-13-2014

BILL OF BARS - COLUMN

BAR MARK	COAT	NO. REQ'D.	LENGTH	BENT	BAR SERIES	LOCATION
H601	X	2	23'-5"			VERTICAL COLUMN
H402	X	24	2'-1"	X		STIRRUP
H503	X	2	1'-4"			DOWELS
H504	X	24	1'-10"			DOWELS

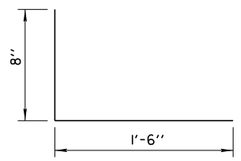

H402

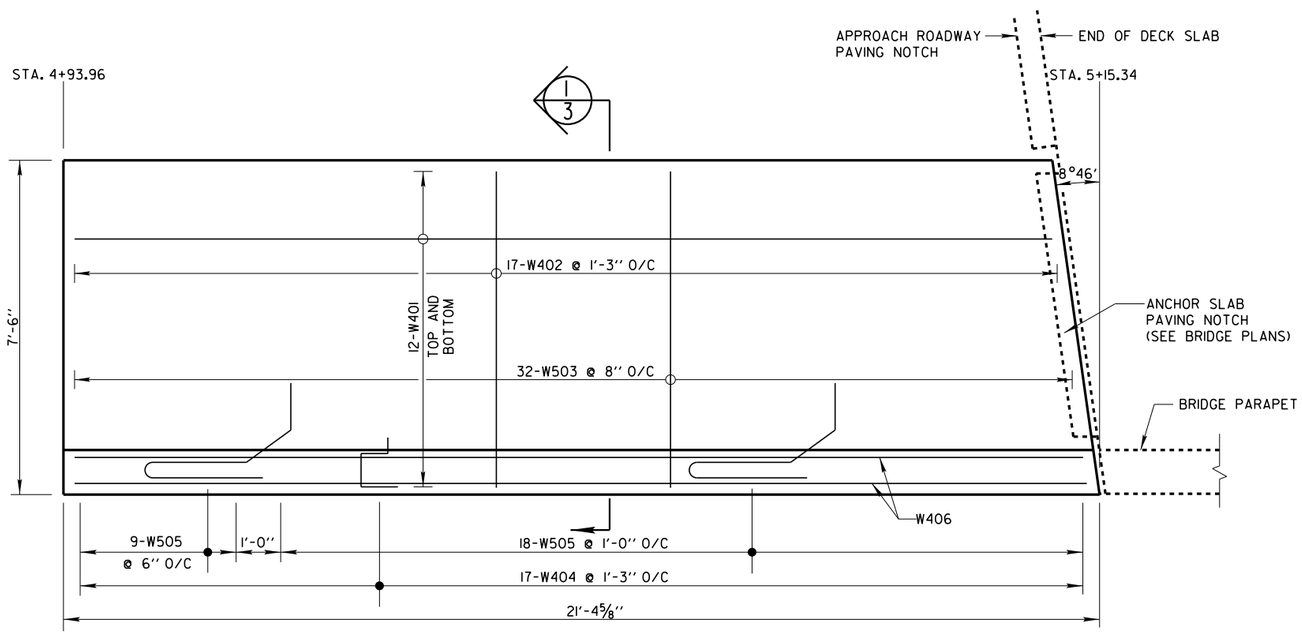

ANCHOR SLAB PLAN AT SOUTHWEST RETAINING WALL

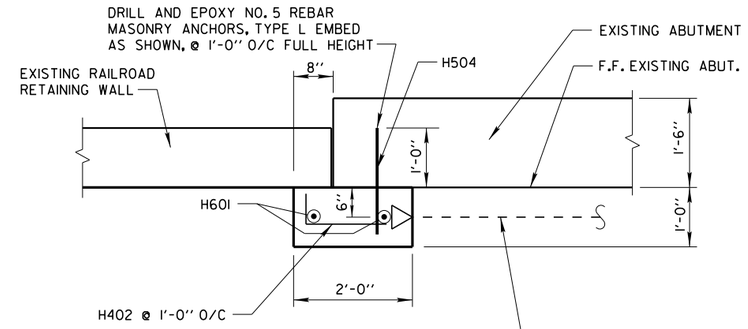

PLAN VIEW

(NEW CONCRETE COLUMN)

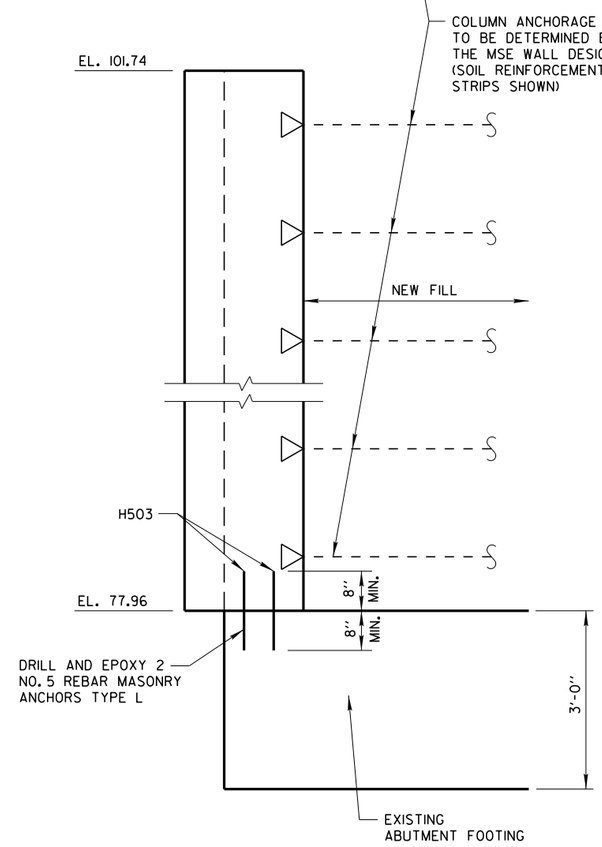

ELEVATION VIEW

(NEW CONCRETE COLUMN)

NOTE:
COLUMN THICKNESS MAY VARY AT TOP TO CREATE PLUMBNESS FOR THE BUTTING MSE WALL

City of Milwaukee

Department of Public Works

Infrastructure Services Division

WEST LISBON AVENUE SOUTHWEST RET. WALL
OVER CANADIAN PACIFIC RAILWAY
R-40-609
ANCHOR SLAB PLAN

REVISIONS

DESIGNED BY H.J.R.
DRAWN BY R.B.M.
CHECKED BY A.R.
DATE 02-2014
SCALE NONE
JOB NUMBER BR100-14-0105
SHEET NUMBER SW4 OF SW7
OF 58

W:\STR\B0933\PLANS\SWRETWALL\ SSW_RAILINGELEV.DGN 02-13-2014

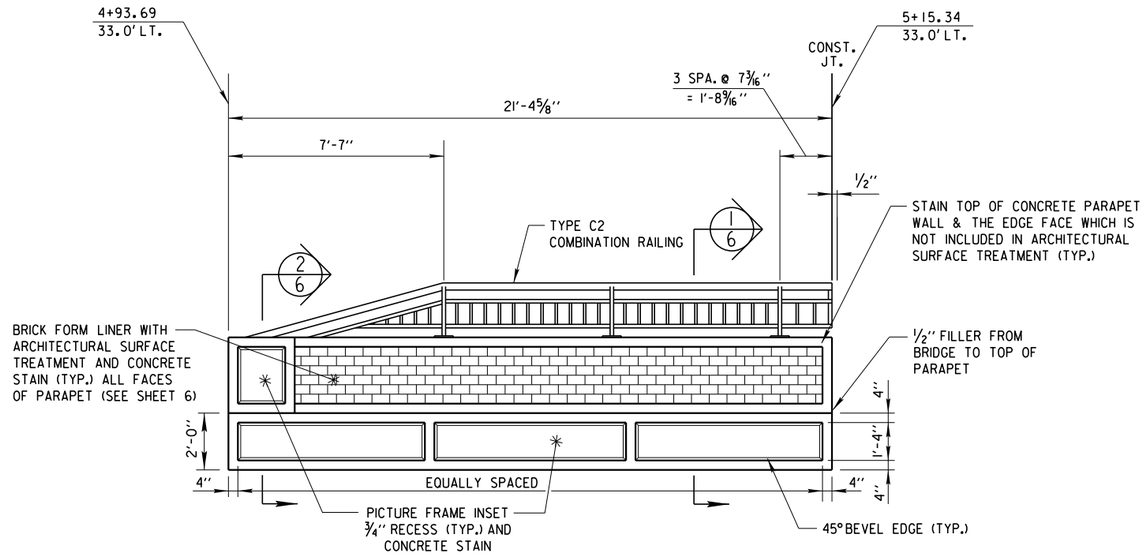

NORTH FACE OF SOUTHWEST RETAINING WALL RAILING - LOOKING SOUTH

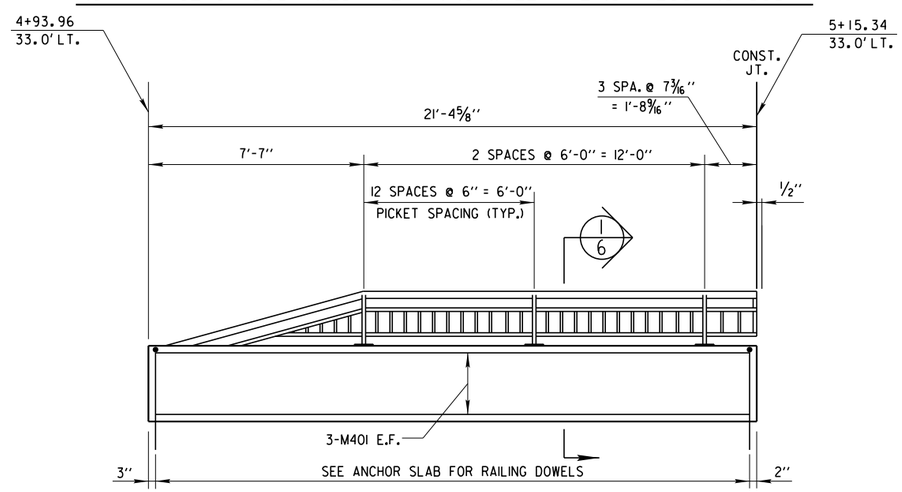

NORTH FACE OF SOUTHWEST RETAINING WALL RAILING - LOOKING SOUTH
(REBAR DETAILS)

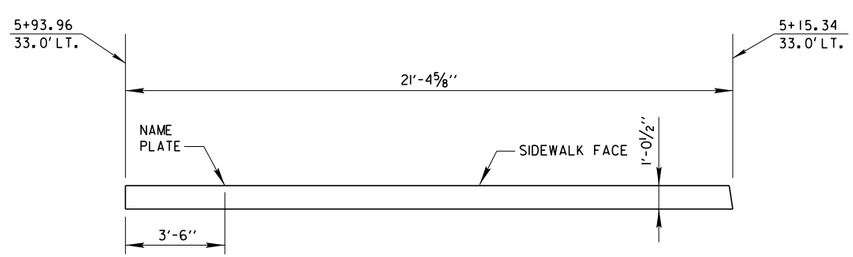

PLAN VIEW OF SOUTHWEST RETAINING WALL RAILING

City of Milwaukee

Department of Public Works

Infrastructure Services Division

WEST LISBON AVENUE SOUTHWEST RET. WALL
OVER CANADIAN PACIFIC RAILWAY
R-40-609
RAILING ELEVATIONS, BAR DETAILS & PLAN

REVISIONS

DESIGNED BY H.J.R.	
DRAWN BY R.B.M.	
CHECKED BY A.R.	
DATE 02-2014	SCALE NONE
JOB NUMBER BR100-14-0105	
SHEET NUMBER SW5 OF SW7	
OF 58	

W:\STRX\B0933\PLANS\SWRETWALL\ 6SW_RAILINGBILLOFBAR.DGN 02-13-2014

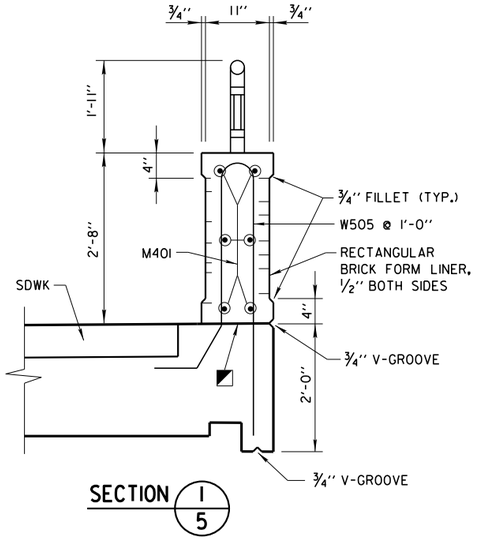

SECTION 1/5

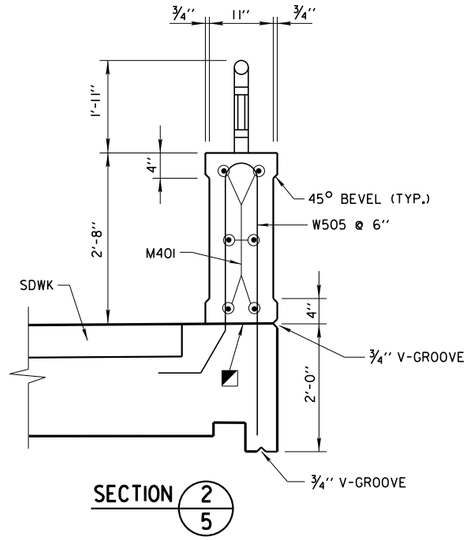

SECTION 2/5

BILL OF BARS - VERTICAL PARAPET WALL

BAR MARK	COAT	NO. REQ'D.	LENGTH	BENT	BAR SERIES	LOCATION
M401	X	6	21'-0"			PARAPET WALL - HORIZ.

◪ HORIZ. CONST. JOINT-STRIKE OFF AS SHOWN & LEAVE ROUGH.

▣ CAULK AROUND PERIMETER OF BASE PLATES, NO. 1 AND FILL BOLT SLOT OPENING IN SHIMS AND BASE PLATES WITH NON-STAINING GRAY NON-BITUMINOUS JOINT SEALER

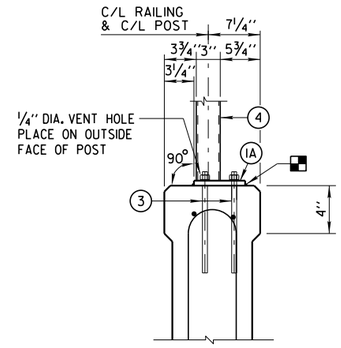

SECTION THRU PARAPET ON RETAINING WALL

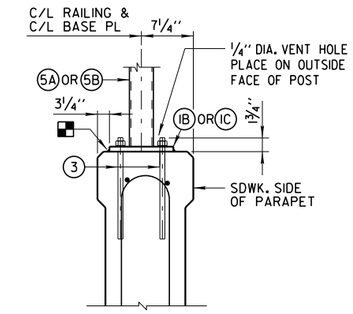

ANCHORAGE FOR END RAIL

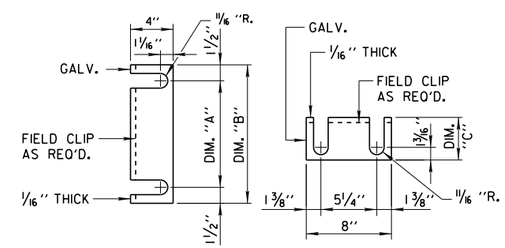

END RAIL SHIM DETAIL

8" X 1'-1" BASE PLATE (1B) DIM. "A" = 10", DIM. "B" = 1'-1", DIM. "C" = 6 1/2"
8" X 1'-6" BASE PLATE (1C) DIM. "A" = 1'-3", DIM. "B" = 1'-6", DIM. "C" = 9"
(2 SETS PER POST)

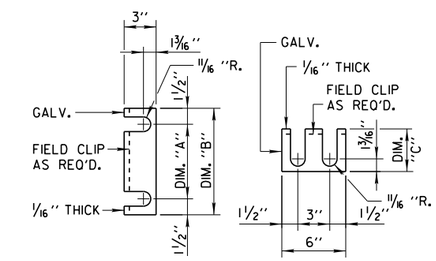

RAIL POST SHIM DETAIL

6" X 8" BASE PL (1A) DIM. "A" = 5", DIM. "B" = 8", DIM. "C" = 4".
(2 SETS PER POST)

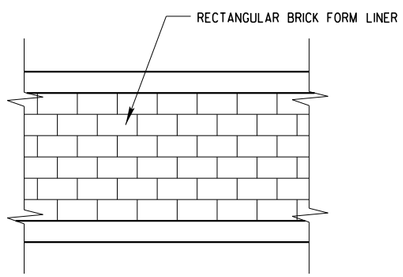

BRICK STONE FORM LINER

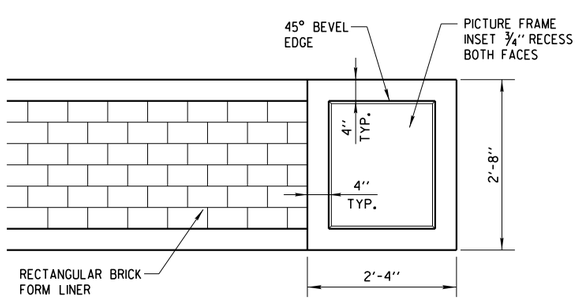

RAILING PICTURE FRAME INSET ELEVATION

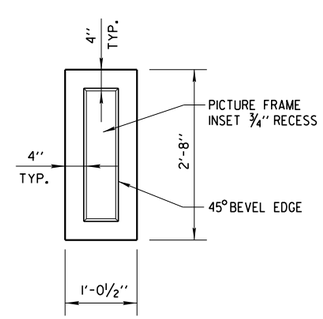

END RAILING PICTURE FRAME INSET ELEVATION

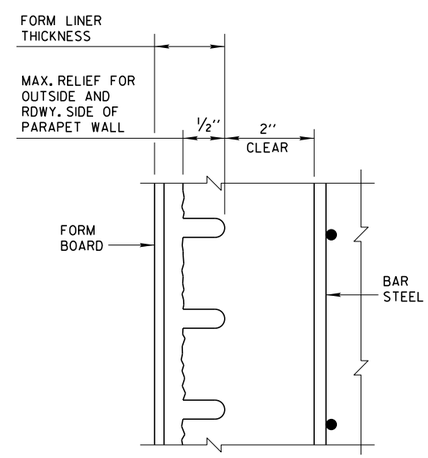

SECTION THRU FORM LINER

NOTE:
SEE LEGEND & RAILING NOTES ON SHEET SW7

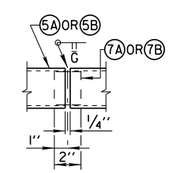

SHOP RAIL SPLICE DETAIL

(LOCATION MUST BE SHOWN ON SHOP DRAWINGS)

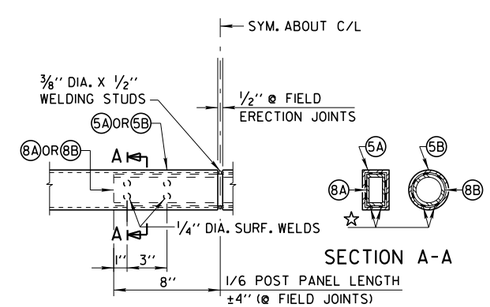

FIELD ERECTION JOINT DETAIL

☆ MIN. 5/8" FLAT SURF. DIA. PUNCHINGS OR STUDS MAY BE USED AS AN ALT.

City of Milwaukee

Department of Public Works

Infrastructure Services Division

WEST LISBON AVENUE SOUTHWEST RET. WALL OVER CANADIAN PACIFIC RAILWAY R-40-609

PARAPET DETAILS AND BILL OF BARS

REVISIONS

DESIGNED BY H.J.R.	
DRAWN BY R.B.M.	
CHECKED BY A.R.	
DATE 02-2014	SCALE NONE
JOB NUMBER BR100-14-0105	
SHEET NUMBER SW6 OF SW7	
OF 58	

W:\STR\B0933\PLANS\SWRETWALL\ TSW_STEELRAILINGDET.DGN 02-13-2014

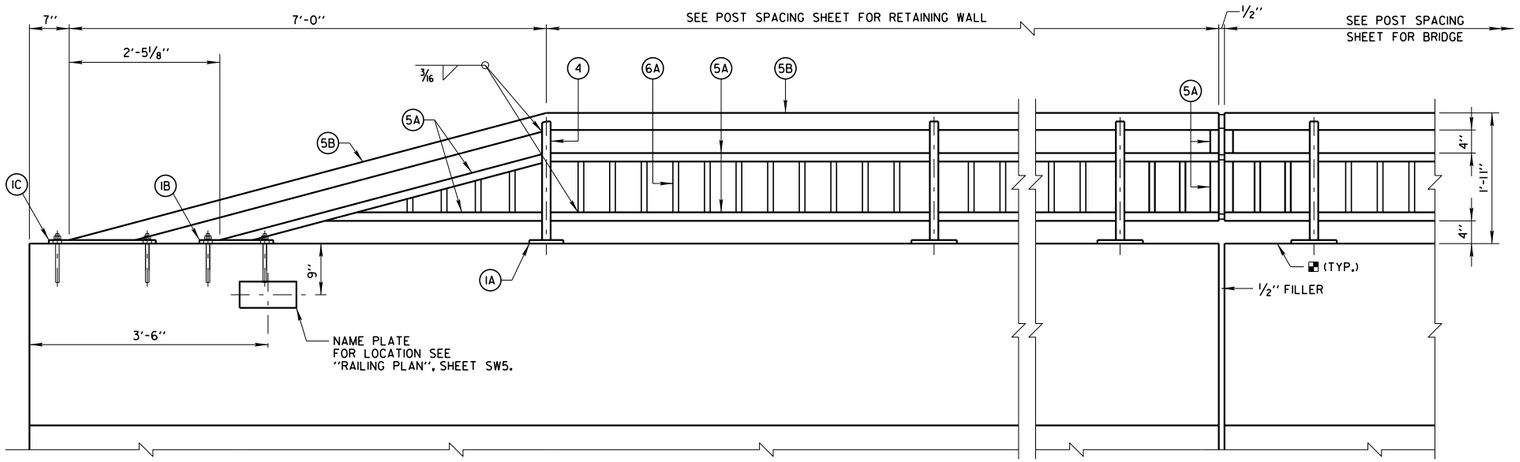

INSIDE ELEVATION OF PARAPET

LEGEND

(IA) PLATE 5/8" x 6" x 8" WITH 3/4" x 1 1/2" SLOTTED HOLES.

(IB) PLATE 5/8" x 8" x 1'-1" WITH 3/4" x 1 1/2" SLOTTED HOLES.

(IC) PLATE 5/8" x 8" x 1'-6" WITH 3/4" x 1 1/2" SLOTTED HOLES.

(2) 1/4" x 2 1/2" x 7 1/4" ANCHOR PLATE WITH 11/16" DIA. HOLES FOR THREADED RODS NO. 3.

(3) 4 STAINLESS STEEL CONCRETE MASONRY ANCHORS (MIN. TENSILE STRENGTH = 70 KSI) TYPE 'S' (EPOXY), 5/8" DIA. MINIMUM PULLOUT CAPACITY OF 13 KIPS. EMBED A MIN. OF 7" FOR RAIL POSTS AND 5" FOR END RAILS.

(4) STRUCTURAL TUBING 3" x 1 1/2" x 3/16". PLACE VERTICAL. WELD TO NO. 1 & NO. 5.

(5A) STRUCTURAL TUBING 3" x 1 1/2" x 3/16" RAILS. WELD TO NO. 1 & NO. 4. INSIDE OF TUBE TO BE PAINTED AT ALL FIELD ERECTION & EXPANSION JOINTS.

(5B) STRUCTURAL TUBING 2 1/2" DIA. (STANDARD SIZE) RAIL (2.875" O.D.). WELD TO NO. 1 & NO. 4. INSIDE OF PIPE TO BE PAINTED AT ALL FIELD ERECTION & EXPANSION JOINTS.

(6A) BAR 1" x 1" PICKETS. WELD TO NO. 5 (SPACE AT 6" MAX. C/L TO C/L SPACING). PLACE VERTICAL.

(7A) RECTANGULAR SLEEVE FABRICATED FROM 3/16" PLATES. PROVIDE "SLIDING FIT".

(7B) CIRCULAR SLEEVE FABRICATED FROM STRUCTURAL TUBING 2" DIA. (STANDARD SIZE) (2.375" O.D.)

(8A) RECTANGULAR SLEEVE FABRICATED FROM 3/16" PLATES. (1'-4" AT FIELD ERECTION JOINTS)

(8B) CIRCULAR SLEEVE FABRICATED FROM STRUCTURAL TUBING 2" DIA. (STANDARD SIZE) (2.375" O.D.) (1'-4" AT FIELD ERECTION JOINTS)

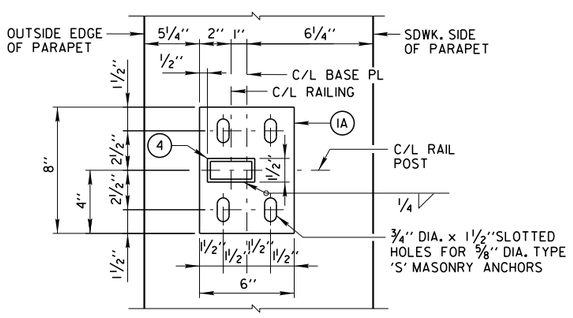

TYPICAL RAIL POST BASE PLATE

FOR 3" X 1 1/2" X 3/16" POSTS (4)

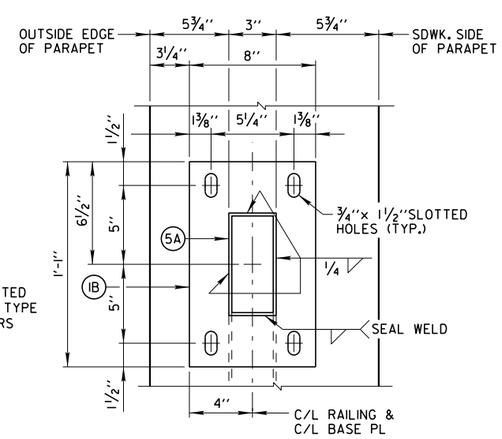

END RAIL BASE PLATE

FOR 3"x1 1/2"x3/16" POSTS (5A)

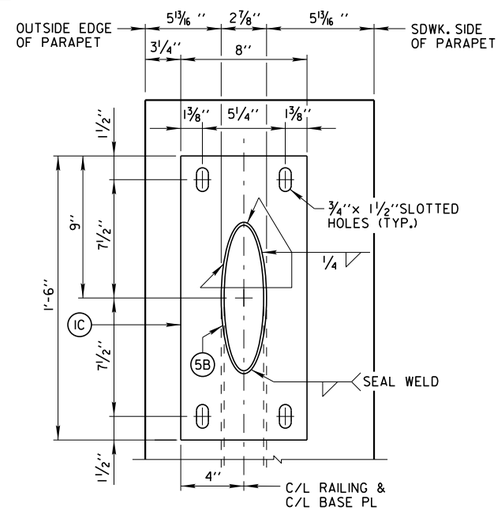

END RAIL BASE PLATE

FOR 2 1/2" DIA. STD. PIPE RAIL (5B)

NOTES

RAILING SHALL BE HOT DIP GALVANIZED AND PAINTED WITH WISDOT APPROVED TWO COAT PAINT SYSTEM.

PAINT POSTS, RAILS, SHIMS, AND EXPOSED PORTIONS OF ANCHOR BOLTS. FINISH COAT COLOR SHALL BE FEDERAL STANDARD COLOR NO. 27038.

INCLUDE PAINTING COST IN BID ITEM "RAILING STEEL TYPE C2 GALVANIZED R-40-609".

5/8" DIA. CONCRETE MASONRY ANCHORS TYPE 'S': MINIMUM PULLOUT STRENGTH 13 KIPS, EMBED 7" MIN. FOR RAIL POSTS AND 5" MIN. FOR END RAILS STAINLESS STEEL.

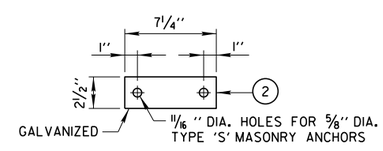

END RAIL ANCHOR PLATE

FOR END RAIL BASE PLATES (IB) (IC)

2 REQ'D PER END RAIL BASE PL

RAILING NOTES

BID ITEM SHALL BE "RAILING STEEL TYPE C2 GALVANIZED R-40-606", WHICH SHALL INCLUDE ALL WORK SHOWN ON THIS SHEET.

POST BASE PLATES SHALL BE FLAT WITH ALL SURFACES SMOOTH AND FREE FROM WARP AND ALL EDGES SMOOTH, STRAIGHT AND VERTICAL. ALL PLATE CUTS SHALL BE MACHINE OR MACHINE FLAME CUTS.

NO. 1, 2, 6, 7 AND 8 SHALL CONFORM TO ASTM A709 GRADE 36. STRUCTURAL TUBING SHALL CONFORM TO ASTM A500 GRADE B (NO. 4 & NO. 5).

ANCHORAGES SHALL BE ACCURATELY PLACED TO PROVIDE CORRECT ALIGNMENT OF RAILING. SET NORMAL TO GRADE.

CUT BOTTOM OF POST TO MAKE POST VERTICAL IN BOTH TRANSVERSE AND LONGITUDINAL DIRECTION.

STEEL SHIMS SHALL BE PROVIDED & USED UNDER BASE PLATES WHERE REQUIRED FOR ALIGNMENT, AND SHALL BE GALVANIZED OR STAINLESS STEEL.

ALL JOINTS AND RECESSES IN CONCRETE PARAPET ARE TO BE VERTICAL.

ALL MATERIAL (EXCEPT NO. 3) SHALL BE GALVANIZED AFTER FABRICATION. PRIOR TO GALVANIZING THE STEEL RAILING SHALL BE GIVEN A NO. 6 BLAST CLEANING PER SPECIFICATIONS. PAINT OVER GALVANIZING WITH AN APPROVED TIE COAT AND TOP AS SPECIFIED IN THE "BRIDGE SPECIAL PROVISIONS". THE RAILING SHALL BE PAINTED FEDERAL STANDARD COLOR NO. 27038.

VENT HOLES SHALL BE DRILLED IN POST AND RAIL MEMBERS AS REQUIRED TO FACILITATE GALVANIZING AND DRAINAGE.

RAILING SHALL BE FABRICATED IN LENGTHS THAT INCLUDE 3 OR 4 POSTS.

TOUCH-UP PAINTING TO BE DONE AT COMPLETION OF STEEL RAILING INSTALLATION TO THE SATISFACTION OF THE ENGINEER AT NO EXTRA COST.

CAULK AROUND PERIMETER OF BASE PLATES, NO.1 AND FILL BOLT SLOT OPENINGS IN SHIMS AND BASE PLATES WITH NON-STAINING GRAY NONBITUMINOUS JOINT SEALER.

City of Milwaukee

Department of Public Works

Infrastructure Services Division

WEST LISBON AVENUE SOUTHWEST RET. WALL
OVER CANADIAN PACIFIC RAILWAY
R-40-609
STEEL RAILING DETAILS

REVISIONS

DESIGNED BY H.J.R.	
DRAWN BY R.B.M.	
CHECKED BY A.R.	
DATE 02-2014	SCALE NONE
JOB NUMBER BR100-14-0105	
SHEET NUMBER SW7 OF SW7	
OF 58	