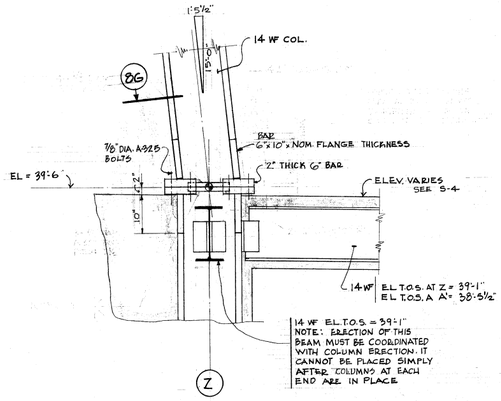

SECTION 8E S-9
¾" = 1'-0"

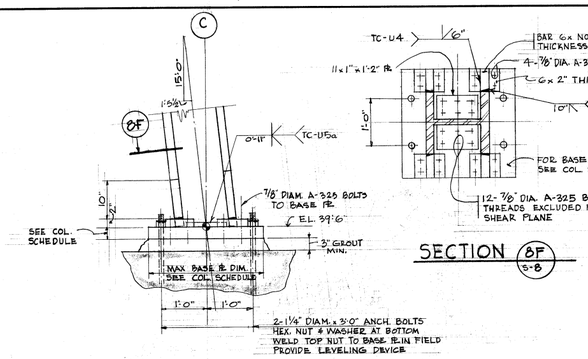

DETAIL 8A S-9

NOTE: ALL COLUMNS ON LINE B ARE SIMILAR TO THIS DETAIL. COLUMNS ON LINE B ARE VERTICAL, ALSO 11"x1"x1'-2" SHEAR PLATE MAY BE OMITTED ON LINE B

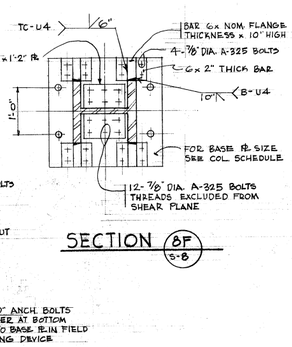

SECTION 8F S-8

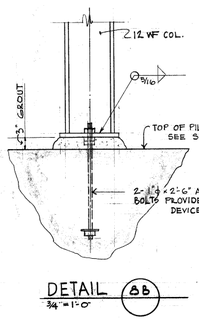

DETAIL 8B
¾" = 1'-0"

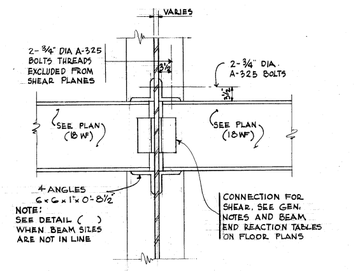

8TH FLOOR TO 4TH FLOOR FRAMING INCL.
ALONG COL. LINES A' & B
(ALSO ALONG C' & Z' AT ROOF)

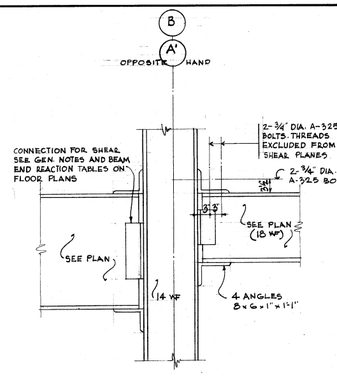

8TH FLOOR TO 4TH FLOOR INCL.
ALONG COL. LINES 15 TO 23

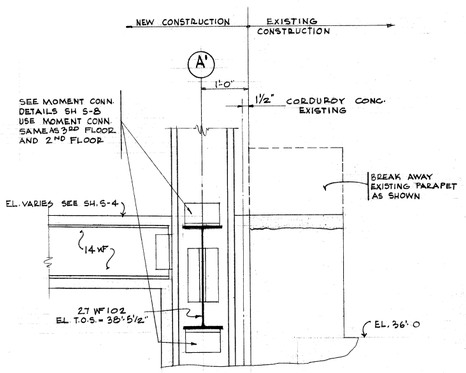

TYP. SECTION 8H S-3 & 4
¾" = 1'-0"

SECTION 8G S-8

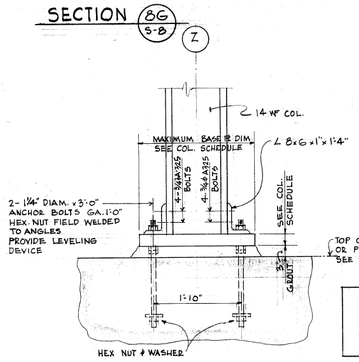

DETAIL 8C S-9
¾" = 1'-0"

NOTE: ANCHOR BOLTS HAVE NOT BEEN DESIGNED FOR WIND FORCES DEVELOPING DURING CONSTRUCTION

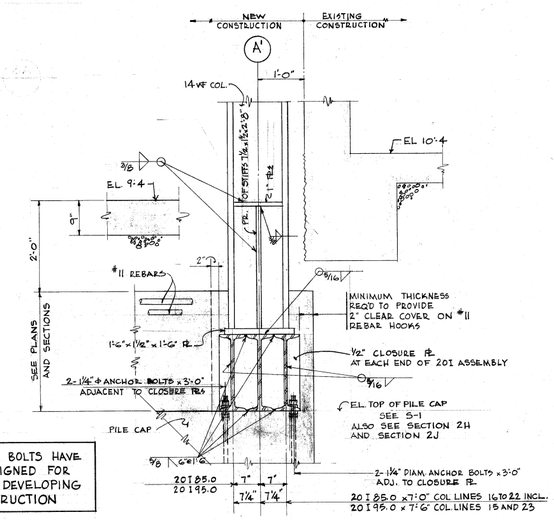

DETAIL 8D S-2
¾" = 1'-0"

BASE PLATE DETAILS

STEEL COLUMN INDEX

	15	16	17	18	19	20	21	22	23
Y					n	n	n	n	n
Z'	e	c	c	c	g	c	c	c	f
A'	d	b	b	b	a	a	b	b	d
B	k	k	k	k	k	J	k	k	k
C'	m	l	l	l	l	l	l	l	m

STEEL COLUMN SCHEDULE

STORY	a	b	c	d	e	f	g	h	J	k	l	m	n
8	14 WF 111	14 WF 78	14 WF 111	14 WF 167	14 WF 142	14 WF 142	14 WF 111	14 WF 78	14 WF 111	14 WF 167	14 WF 111	14 WF 142	
7	14 WF 111	14 WF 78	14 WF 111	14 WF 167	14 WF 142	14 WF 142	14 WF 111	14 WF 78	14 WF 111	14 WF 167	14 WF 111	14 WF 142	
6	14 WF 136	14 WF 119	14 WF 111	14 WF 193	14 WF 142	14 WF 142	14 WF 111	14 WF 119	14 WF 136	14 WF 193	14 WF 111	14 WF 142	
5	14 WF 136	14 WF 119	14 WF 142	14 WF 193	14 WF 184	14 WF 184	14 WF 142	14 WF 119	14 WF 136	14 WF 193	14 WF 142	14 WF 184	
4	14 WF 158	14 WF 158	14 WF 142	14 WF 219	14 WF 184	14 WF 184	14 WF 142	14 WF 158	14 WF 158	14 WF 246	14 WF 142	14 WF 184	
3	14 WF 158	14 WF 158	14 WF 202	14 WF 219	14 WF 228	14 WF 228	14 WF 202	14 WF 158	14 WF 158	14 WF 246	14 WF 202	14 WF 228	
2	14 WF 246	14 WF 246	14 WF 202	14 WF 257	14 WF 228	14 WF 228	14 WF 202	14 WF 246	14 WF 246	14 WF 314	14 WF 202	14 WF 228	12 WF 106
MALL	14 WF 246	14 WF 246	14 WF 246	14 WF 287	14 WF 314	14 WF 314	14 WF 246	14 WF 246	14 WF 246	14 WF 314	14 WF 246	14 WF 314	12 WF 106
BASEMENT	14 WF 246	14 WF 246	14 WF 246	14 WF 287	14 WF 314	14 WF 314	14 WF 246						12 WF 106
MEZZANINE	14 WF 246	14 WF 246	14 WF 246	14 WF 287	14 WF 314	14 WF 314	14 WF 246						
SUB-BASMT	14 WF 246	14 WF 246	14 WF 246	14 WF 287	14 WF 314	14 WF 314	14 WF 246						
BASE PL	—	—	30x30x¾	—	30x30x¾	33x33x3½	30x30x¾	27x30x3 SEE NOTE	27x30x3 SEE NOTE	33x33x3½ SEE NOTE	30x30x2¼	32x36x4	15x15x1
BASE DET.	8D	8D	8C	8D	8C	8C	8C	8A	8A	8A	8A	8A	8B

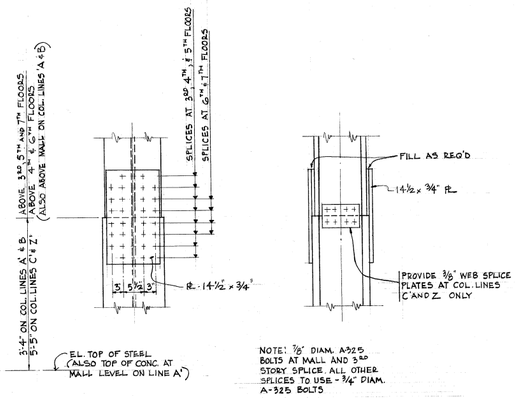

COLUMN SPLICE DETAIL

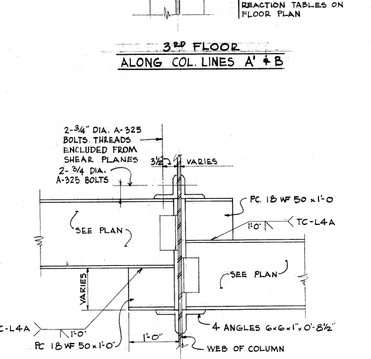

3RD FLOOR
ALONG COL. LINES A' & B

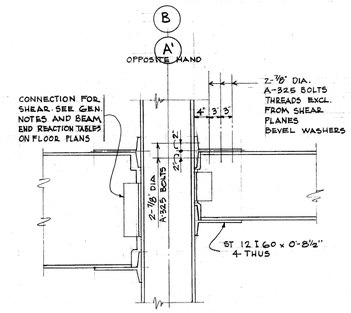

3RD FLOOR
ALONG COL. LINES 15 TO 23

GENERAL DETAIL ALONG LINES A' & B
WHERE BEAM FLANGES ARE NOT AT SAME ELEV.

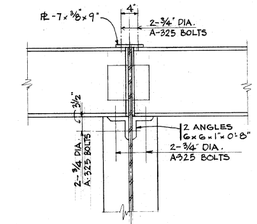

ROOF FRAMING PLAN
ALONG COLUMN LINES A' AND B

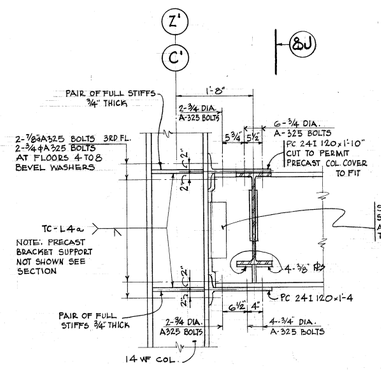

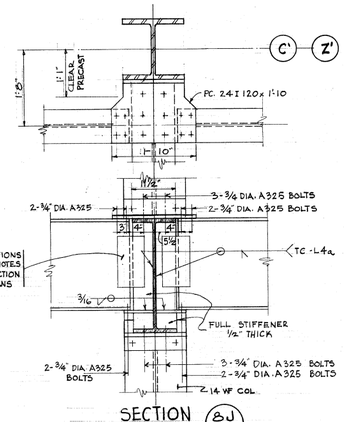

SECTION 8J S-8

8TH FLOOR TO 3RD FLOOR FRAMING
ALONG COL. LINES C' AND Z'

MOMENT CONNECTION DETAILS
SCALE ¾" = 1'-0"

⚠ SHEET S-8 - COLUMN SCHEDULE:

SECTION 8H OCCURS ALONG COLUMN LINE A' AT BASEMENT MEZZANINE AND WALL LEVELS.

MOMENT CONNECTION DETAILS 8H FLOOR TO 3RD FLOOR ALONG LINES C AND Z: WELD SYMBOL TC-L4a TO BE ALL AROUND. STIFFENER PLATES TO SHOW IN COLUMN; PLAN VIEW OVER SECTION 8J.

NOTE:
⚠ AS BUILT

SHEET NO. S-8

STEEL DETAILS

SHEET NO.

JOB No. 6718

DATE 1-24-69

PREPARED FOR
DEPARTMENT OF PUBLIC WORKS
BUREAU OF BRIDGES AND PUBLIC BUILDINGS
CITY OF MILWAUKEE

POLICE ADMINISTRATION BUILDING
LOCATED ON THE MILWAUKEE CIVIC CENTER PLAZA
SEVENTH & STATE STREETS
MILWAUKEE, WISCONSIN

GRELLINGER - ROSE - JURENEC - KLUMB - RAPPL - HAAS, INC.
ARCHITECTS - ENGINEERS
MILWAUKEE, WISCONSIN

NOTE:
PRECAST WALL PANEL SHOWN IN ARCHITECTUAL SECTION 2-A26 MUST BE MODIFIED TO PERMIT 8WF28 STUBS AND 3X3X¼ ANGLES TO PROJECT IN CORRIDOR.

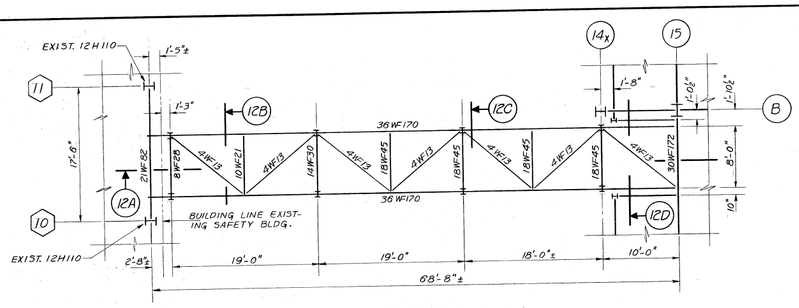

FLOOR FRAMING PLAN
SCALE: ⅛"=1'-0"

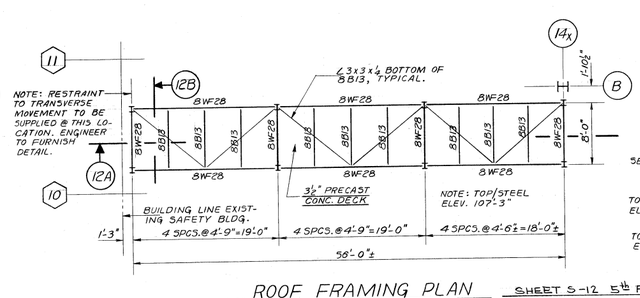

ROOF FRAMING PLAN
SCALE: ⅛"=1'-0"

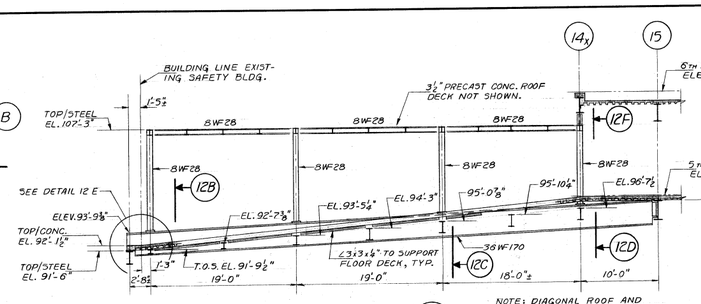

SECTION 12A
SCALE: ½"=1'-0" 5-12

NOTE: DIAGONAL ROOF AND FLOOR BRACING NOT SHOWN.

SHEET S-12 5TH FLOOR FRAMING:

BEAM AT LINE 16 BETWEEN LINES B AND C' TO BE 24WF160. (30WF116 SHOWN ON PLANS.)

TOP OF STEEL ELEVATIONS OF ALL SPANDREL AND FLOOR BEAMS TO BE 97'-5⅜".

SECTION 12B: PROVIDE 8WF28 GIRTS. SEE ARCHITECTUAL SECTION 3-A26 FOR LOCATION.

ROOF FRAMING PLAN: FASTEN ANGLES 3"x3"x1/4" TO BOTTOM FLANGE OF INTERSECTING 8B13.

SLIDING DOOR SUPPORT: REFERENCE DETAIL 15/A-56. PROVIDE 12" CHANNEL AT 20.7 lbs., 1'-2" EAST OF COLUMN LINE 16. TOP OF CHANNEL AT BOTTOM OF 18WF40 BEAMS. CHANNEL RUNS PARALLEL TO COLUMN LINE 16, FROM A POINT 7'-0" SOUTH OF LINE B TO 2'-10" NORTH OF 24"WF SPANDREL BEAM AT SOUTH BUILDING LINE. ENGINEER SHALL PROVIDE SUPPORT DETAIL FOR FREE END OF CHANNEL. THIS CONTRACTOR TO PROVIDE FOR SAME.

CONNECTING BRIDGE PLANS

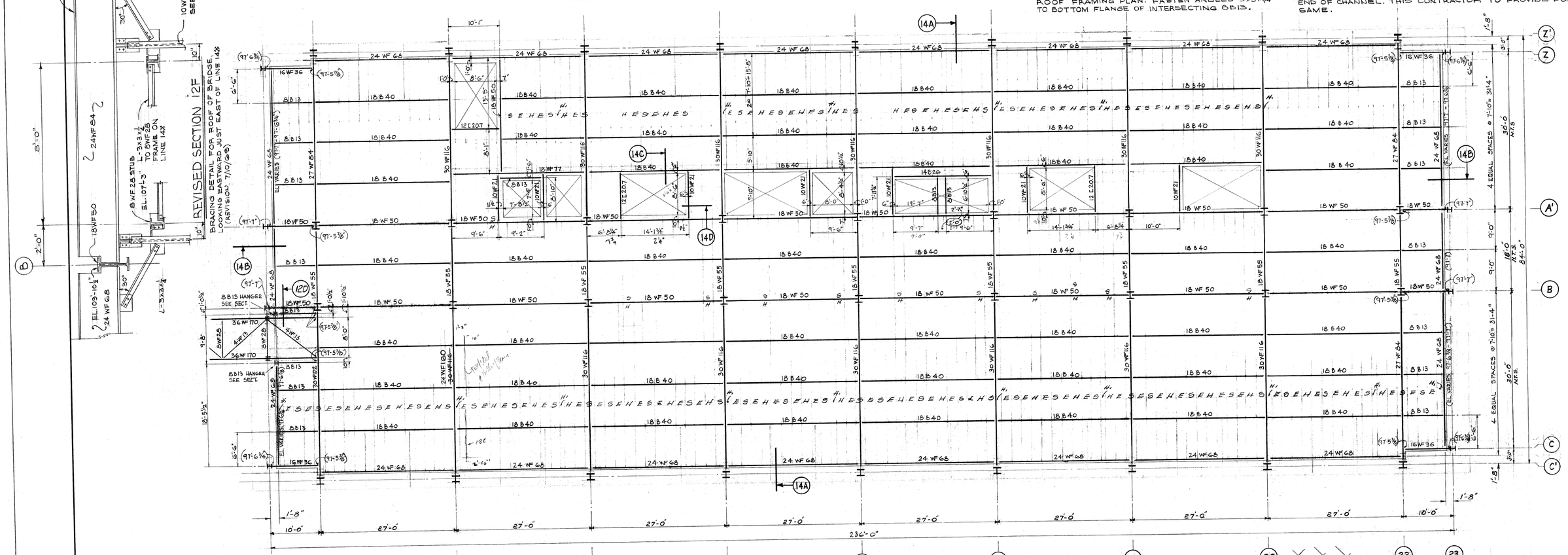

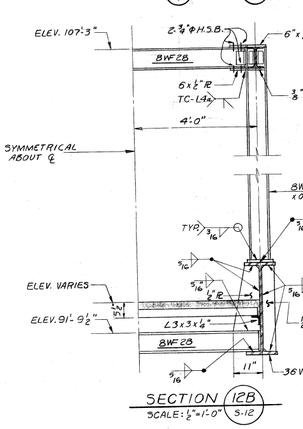

SECTION 12B
SCALE: ½"=1'-0" 5-12

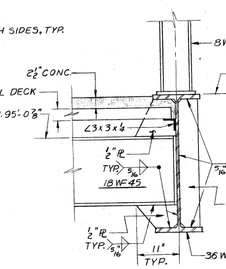

SECTION 12C
SCALE: ¾"=1'-0" 5-12

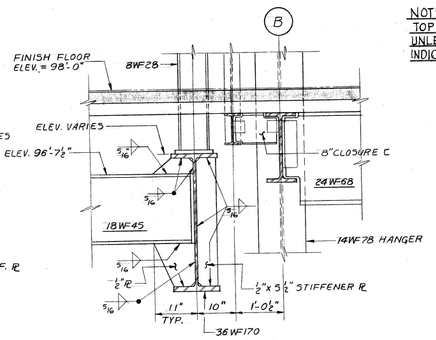

SECTION 12D
SCALE: ¾"=1'-0" 5-12

NOTE:
TOP OF STEEL ELEV. = 97'-5⅞" UNLESS SHOWN OTHERWISE INDICATED THUS (97-7)

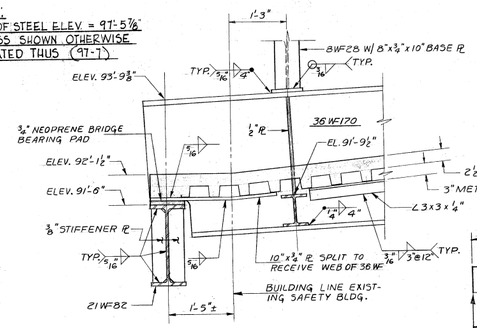

DETAIL 12E
SCALE: ¾"=1'-0" 5-12

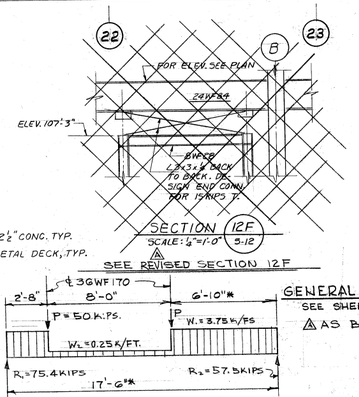

SECTION 12F
SCALE: ½"=1'-0" 5-12

BEAM END REACTIONS:

BEAM	SPAN	END REACTION
16WF36	10'-0"	50 KIPS
18B40	27'-0"	25 KIPS
18WF50	10'-0"	90 KIPS
24WF68	ALL SPANS	45 KIPS
27WF84	33'-0"	55 KIPS
30WF116	33'-0"	85 KIPS
30WF172	33'-0"	160 KIPS

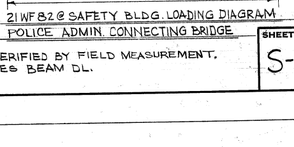

POLICE ADMINISTRATION BUILDING
LOCATED ON THE MILWAUKEE CIVIC CENTER PLAZA
SEVENTH & STATE STREETS MILWAUKEE, WISCONSIN

GENERAL NOTES:
SEE SHEET S-14 FOR FLOOR DECK SCHEDULE.
⚠ AS BUILT.

* TO BE VERIFIED BY FIELD MEASUREMENT. W INCLUDES BEAM DL.

POLICE ADMIN. CONNECTING BRIDGE

SHEET NO. S-12

5TH FLOOR FRAMING PLAN

GRELLINGER - ROSE - JURENEC - KLUMB - RAPPL - HAAS, INC.
ARCHITECTS - ENGINEERS
MILWAUKEE, WISCONSIN

PREPARED FOR
DEPARTMENT OF PUBLIC WORKS
BUREAU OF BRIDGES AND PUBLIC BUILDINGS
CITY OF MILWAUKEE

SHEET NO.
JOB No. 6718
DATE 1-24-69

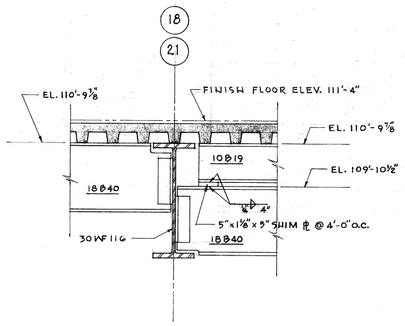

SECTION 13A
3/4" = 1'-0"
5-13

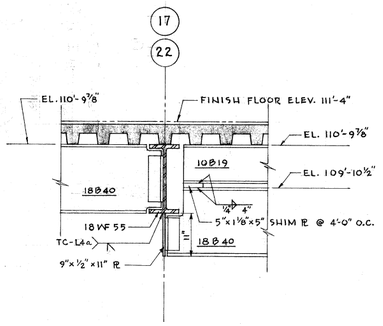

SECTION 13B
3/4" = 1'-0"
5-13

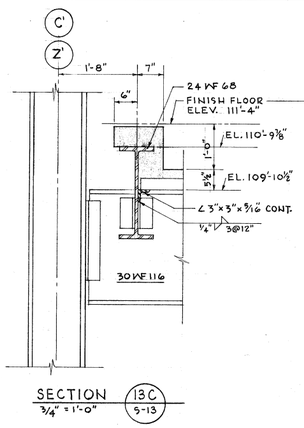

SECTION 13C
3/4" = 1'-0"
5-13

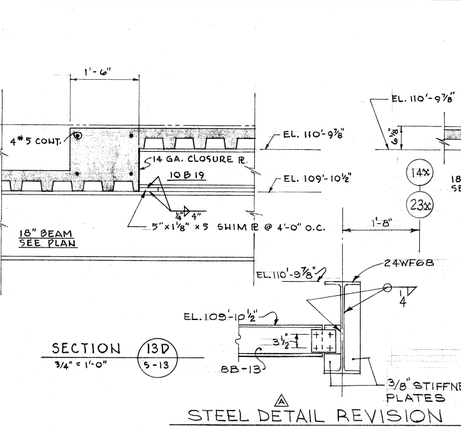

SECTION 13D
3/4" = 1'-0"
5-13

SECTION 13E
3/4" = 1'-0"
5-13

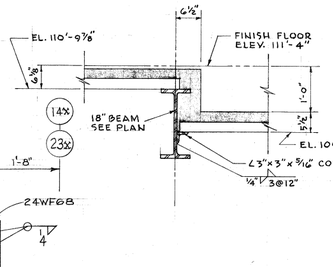

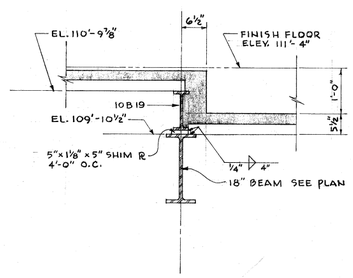

SECTION 13F
3/4" = 1'-0"
5-13

STEEL DETAIL REVISION TO SECTION 13K

METAL DECK AND CONCRETE REMAIN AS ORIGINALLY SHOWN (REVISION 7/3/69)

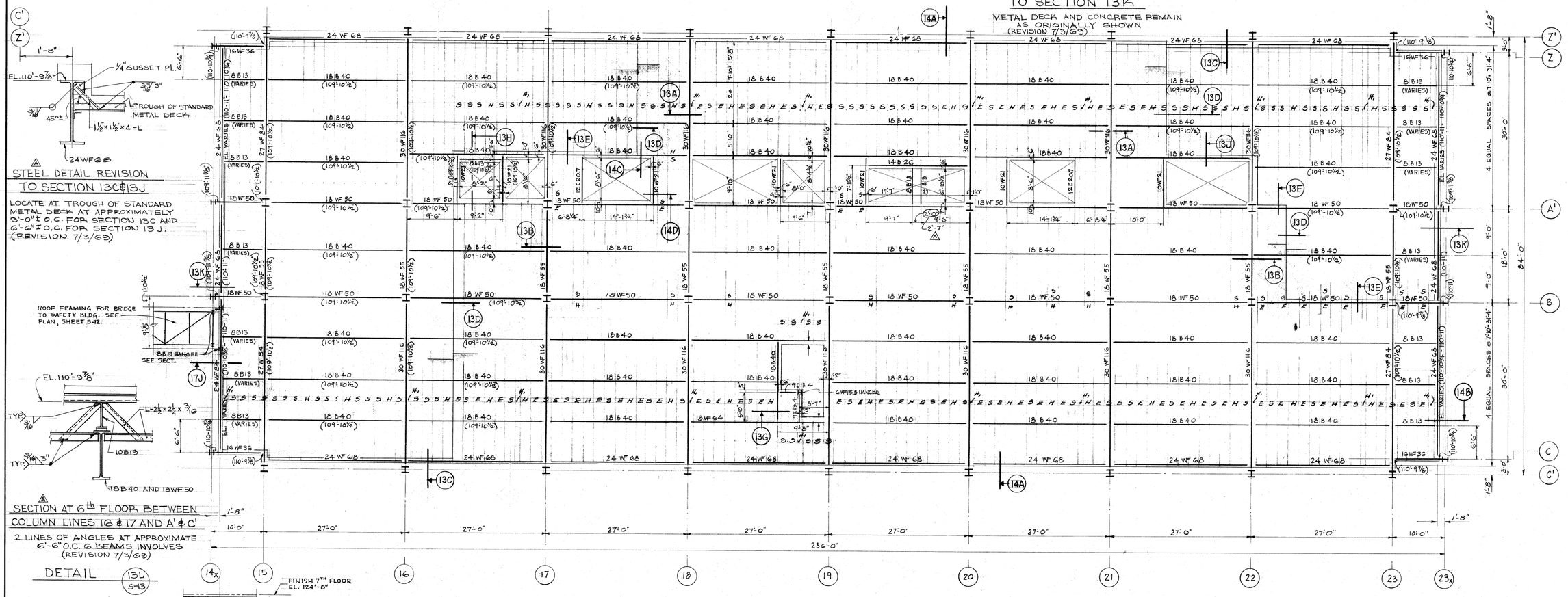

STEEL DETAIL REVISION TO SECTION 13C & 13J

LOCATE AT TROUGH OF STANDARD METAL DECK AT APPROXIMATELY 8'-0" ± O.C. FOR SECTION 13C AND 6'-6" ± O.C. FOR SECTION 13J. (REVISION 7/3/69)

SECTION AT 6th FLOOR BETWEEN COLUMN LINES 16 & 17 AND A' & C'

2 LINES OF ANGLES AT APPROXIMATE 6'-6" O.C. @ BEAMS INVOLVES (REVISION 7/3/69)

DETAIL 13L 5-13

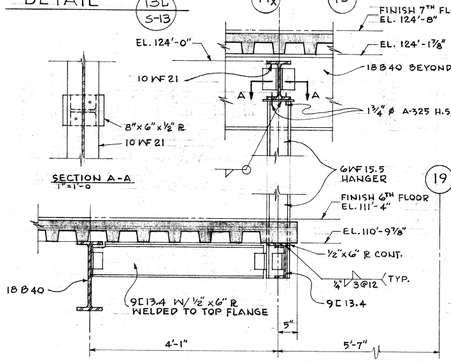

SECTION 13G
3/4"=1'-0"
5-13, 5-14

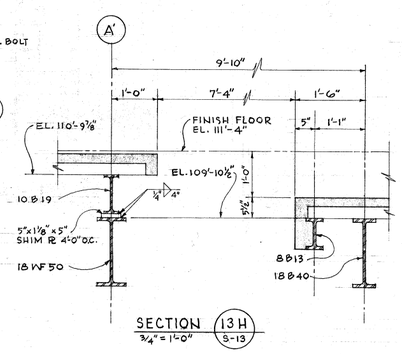

SECTION 13H
3/4"=1'-0"
5-13

NOTE: TOP OF STEEL ELEV= 110'-9⅞" UNLESS SHOWN OTHERWISE. INDICATED THUS (109'-10½")

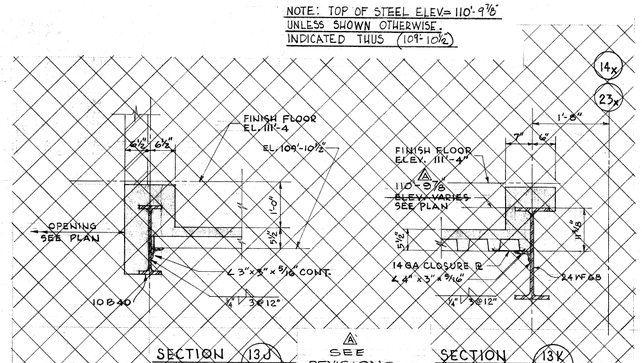

SECTION 13J
3/4"=1'-0"
5-13

SEE REVISIONS

SECTION 13K
3/4"=1'-0"
5-13

SHEET S-13 - 6th FLOOR PLAN

AT CONNECTING BRIDGE PARTIAL ROOF PLAN, LINE 14x, HANGER 8B13 TO BE 10WF21. SEE SECTION 17J.

SECTION THROUGH LINE 14x LOOKING NORTH, SEE SECTION 17J.

TOP OF STEEL ELEVATIONS OF SPANDREL BEAMS AT WEST AND EAST ENDS TO BE 109'-9⅞".

TOP OF STEEL ELEVATIONS OF FLOOR BEAMS IN DEPRESSED AREAS IN BAYS 14x TO 15 AND 23 TO 23x TO BE 109'-10½".

SECTION 13K: TOP OF STEEL ELEVATION OF 24WF68 TO BE 110'-9⅞". (SHOWN AS VARIES.)

BEAM END REACTIONS:

BEAM	SPAN	END REACTION
16 WF 36	10'-0"	50 KIPS
18 B 40	27'-0"	25 KIPS
18 WF 50	10'-0"	90 KIPS
24 WF 68	ALL SPANS	45 KIPS
27 WF 84	33'-0"	55 KIPS
30 WF 116	33'-0"	85 KIPS

GENERAL NOTES:

SEE SHEET S-14 FOR FLOOR DECK SCHEDULE.

AS BUILT.

SHEET NO. S-13

6TH FLOOR FRAMING PLAN

SHEET NO.

JOB No. 6718

DATE 1-24-69

DEPARTMENT OF PUBLIC WORKS
BUREAU OF BRIDGES AND PUBLIC BUILDINGS
CITY OF MILWAUKEE

POLICE ADMINISTRATION BUILDING
LOCATED ON THE MILWAUKEE CIVIC CENTER PLAZA
SEVENTH & STATE STREETS
MILWAUKEE, WISCONSIN

GRELLINGER - ROSE - JURENEC - KLUMB - RAPPL - HAAS, INC.
ARCHITECTS - ENGINEERS
MILWAUKEE, WISCONSIN

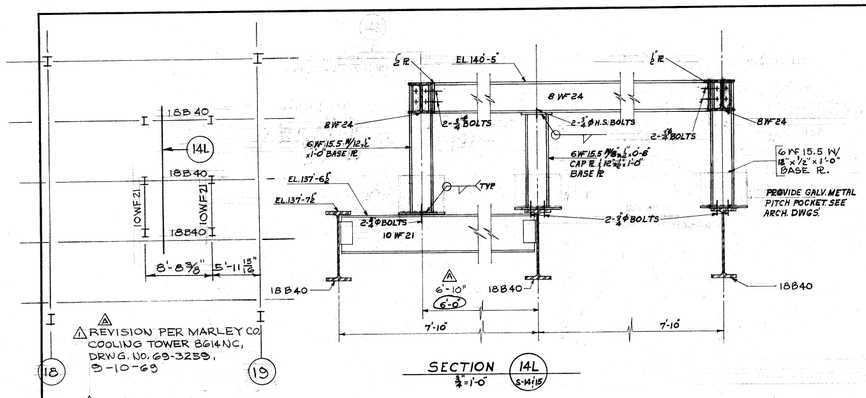

△1 REVISION PER MARLEY CO. COOLING TOWER BG14NC, DRWG. NO. 69-3259, 9-10-69

PARTIAL 8th FLOOR PLAN
SCALE: 1/8"=1'-0"

SECTION 14L
3/4"=1'-0"
S-14 & 15

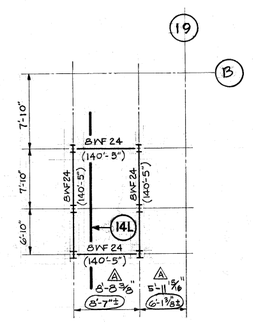

COOLING TOWER SUPPORT PLAN
1/8"=1'-0"

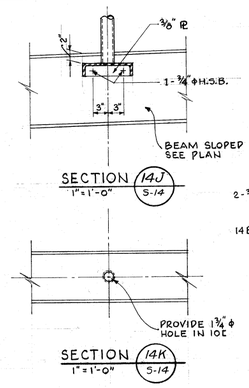

SECTION 14J
1"=1'-0"
S-14

SECTION 14K
1"=1'-0"
S-14

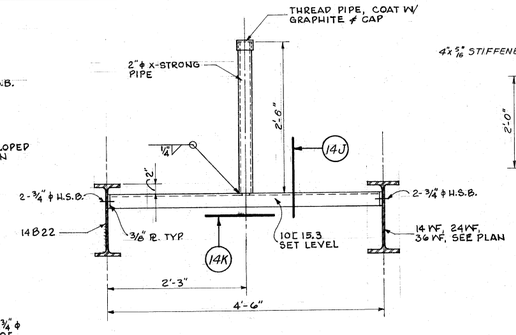

SECTION ANTENNA STANDARD 14H
1"=1'-0"
S-16

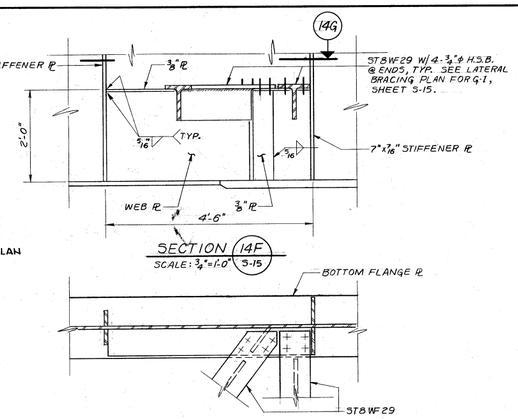

SECTION 14F
SCALE: 3/4"=1'-0"
S-15

SECTION 14G
SCALE: 3/4"=1'-0"
S-14

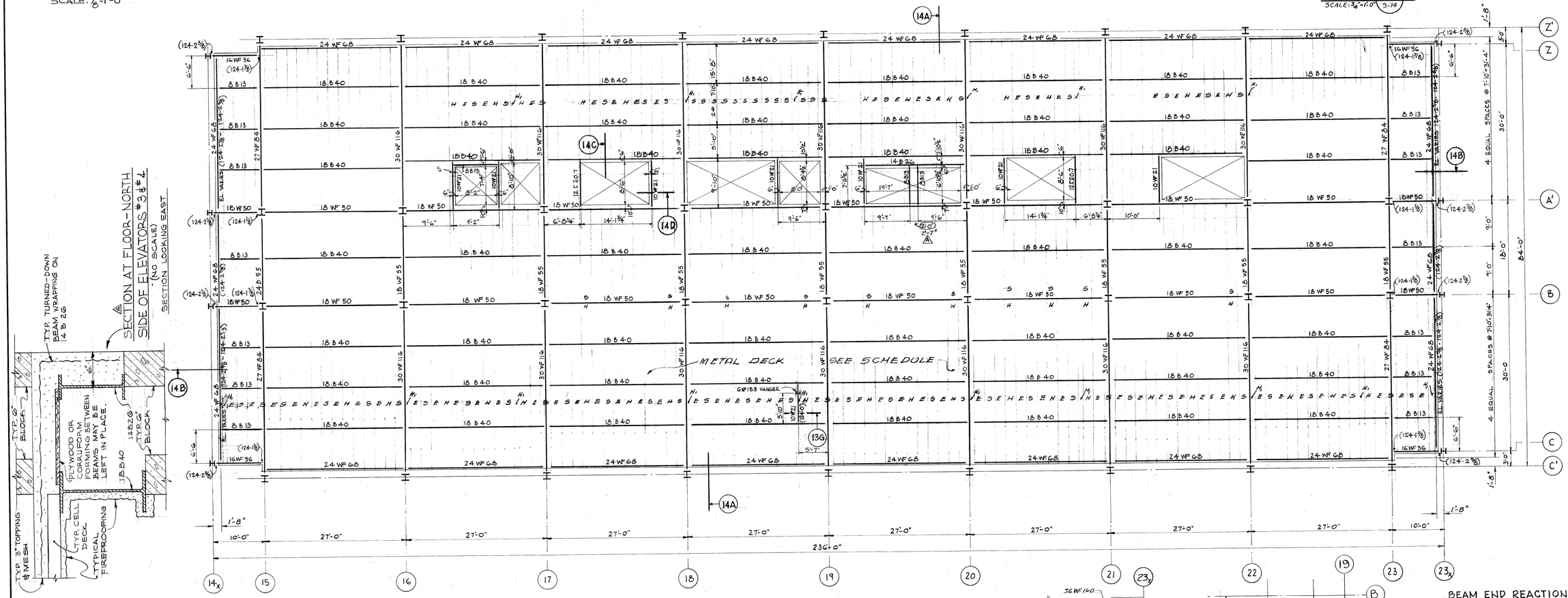

METAL FLOOR DECK SCHEDULE

MARK	SECTION	METAL GAUGE Top Elem.	Bot Elem.	MIN. SECT. MOD.
H	8" 1'-0" 1'-0"	14	16	2.36
H_1	8" 1'-0"	14	16	1.18
E	3" 2'-0"	16	16	1.26
S	3" 2'-0"	14		1.26

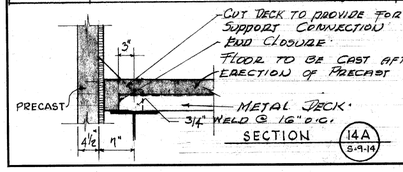

SECTION 14A
S-9-14

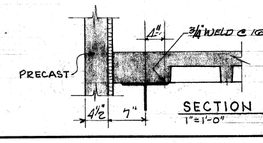

SECTION 14B
1"=1'-0"
S-9-14

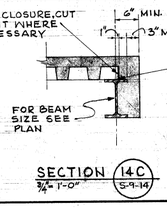

SECTION 14C
3/4"=1'-0"
S-9-14

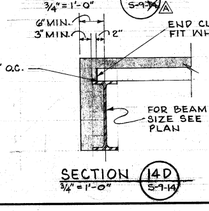

SECTION 14D
3/4"=1'-0"
S-9-14

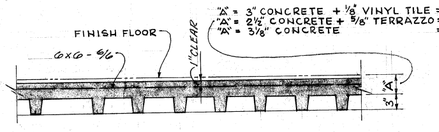

TYPICAL FLOOR CONSTRUCTION

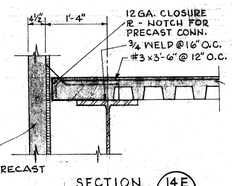

SECTION 14E
3/4"=1'-0"
S-9-14

NOTE: TOP OF STEEL ELEV = 124'-1 7/8" UNLESS SHOWN OTHERWISE INDICATED THUS (124'-0")

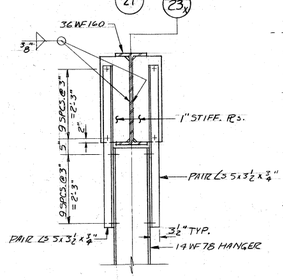

SECTION 14M
SCALE: 1/2"=1'-0"
S-15 & 16

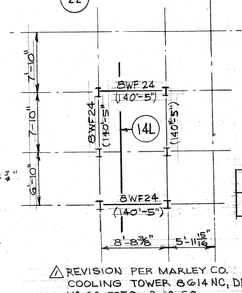

△ REVISION PER MARLEY CO. COOLING TOWER BG14 NC, DRWG. NO. 69-3259, 9-10-69

COOLING TOWER SUPPORT PLAN
SCALE: 1/8"=1'-0"

△ END REACTION

AT A'&B'	AT Z&C	
38 KIPS	68 KIPS	27 WF 84 33'-0" ~~55 KIPS~~
56 KIPS	111 KIPS	30 WF 116 33'-0" ~~85 KIPS~~

BEAM END REACTIONS:

BEAM	SPAN	END REACTION
16WF36	10'-0"	50 KIPS
18B40	27'-0"	25 KIPS
18WF50	10'-0"	90 KIPS
24WF68	ALL SPANS	45 KIPS

NOTES:
△ AS BUILT.

SHEET S-14 - 7th FLOOR FRAMING

SECTION 14M: BOLTS TO BE 7/8" DIAMETER, A-325 HIGH STRENGTH BOLTS.

ELEVATIONS OF TOP OF STEEL, LINE 14x TO 15 AND LINE 23 TO 23x TO BE 124'-1 7/8".

SHEET NO. S-14

7TH FLOOR FRAMING PLAN

PREPARED FOR DEPARTMENT OF PUBLIC WORKS
BUREAU OF BRIDGES AND PUBLIC BUILDINGS
CITY OF MILWAUKEE

SHEET NO.

JOB No. 6718

DATE 1-24-69

POLICE ADMINISTRATION BUILDING
LOCATED ON THE MILWAUKEE CIVIC CENTER PLAZA
SEVENTH & STATE STREETS
MILWAUKEE, WISCONSIN

GRELLINGER - ROSE - JURENEC - KLUMB - RAPPL - HAAS, INC.
ARCHITECTS - ENGINEERS
MILWAUKEE, WISCONSIN

SHEET A-9 - 5TH FLOOR PLAN:
CORRIDOR 542A: ADD DOOR DESIGNATION TO THE THREE CELLS OPENING OFF OF THIS CORRIDOR IN THE AREA OF COLUMN 16B.
ADD DOOR 563 BETWEEN ROOMS 521 AND 521A.
CORRIDOR 501 SHALL BE 8'-7½" IN LIEU OF 8'-6".
RELOCATE PHONE BOOTH FROM ROOM 601C.
SEE R-13 ATTACHED.

PARTIAL REVISED 5TH FLR. PLAN
SEE SHT. A-9 FOR REST OF DIM.

NOTE
SWITCHES & OUTLETS ON THE FLOOR TO REMAIN AS SHOWN ON PLAN.

REVISION TO 5TH FLR. PLAN SHT. #A-9

PART. 5TH FLR. PLAN THICKEN WALL TO RECESS F.E.CAB.

KEC NOTES.

1	THE F.E. CABT. IS 8½" DEEP, SO THICKEN CONCRETE BLOCK WALL TO 12" IN LIEU OF THE 6" BLOCK WALL SHOWN ON SHEET A-9

PART. 5TH FLR. PLAN DIM. CHANGE

2	THE CELL IS REDUCED FROM 6'-6" AS SHOWN ON SHEET A-9 TO 6'-2" - THIS ALSO AFFECTS THE BOOK FROM DIMENSION AND CORRIDOR.
3	DOOR NO. 510 IS REDUCED FROM 7'-2" HIGH TO 5'-10" HIGH. THIS DOOR LEADS FROM CORRIDOR #542 TO JANITORS CLOSE #541, SHOWN ON SHT. A-9.

PART. 6th FLR. PLAN OMIT RM 605
DOOR 608 SHOWN DOTTED

REVISION TO DIM. & ROOM LAYOUT
5TH & 6TH FLR   SHT. NO. RA-40

4	BY OMITTING DOOR NO. 608 AND THE 6" BLOCK WALL THE TOILET ENTRY # 605 IS OMITTED. SEE SHT A-10.

N

AS BUILT.

5TH FLOOR PLAN
SCALE: 1/8" = 1'-0"

SHEET NO. A9

SHEET NO. A 9
JOB No. 6718
DATE JAN. 24, 1969

PREPARED FOR
DEPARTMENT OF PUBLIC WORKS
BUREAU OF BRIDGES AND PUBLIC BUILDINGS
CITY OF MILWAUKEE

POLICE ADMINISTRATION BUILDING
LOCATED ON THE MILWAUKEE CIVIC CENTER PLAZA
SEVENTH & STATE STREETS   MILWAUKEE, WISCONSIN

GRELLINGER - ROSE - JURENEC - KLUMB - RAPPL - HAAS, INC.
ARCHITECTS - ENGINEERS
MILWAUKEE, WISCONSIN

MICROFILMED 10-1-69
270:139

SHEET NO. A-10 | JOB No. 6718 | DATE JAN. 24, 1969

DEPARTMENT OF PUBLIC WORKS
BUREAU OF BRIDGES AND PUBLIC BUILDINGS
CITY OF MILWAUKEE

POLICE ADMINISTRATION BUILDING
LOCATED ON THE MILWAUKEE CIVIC CENTER PLAZA
SEVENTH & STATE STREETS MILWAUKEE, WISCONSIN

GRELLINGER - ROSE - JURENEC - KLUMB - RAPPL - HAAS, INC.
ARCHITECTS - ENGINEERS
MILWAUKEE, WISCONSIN

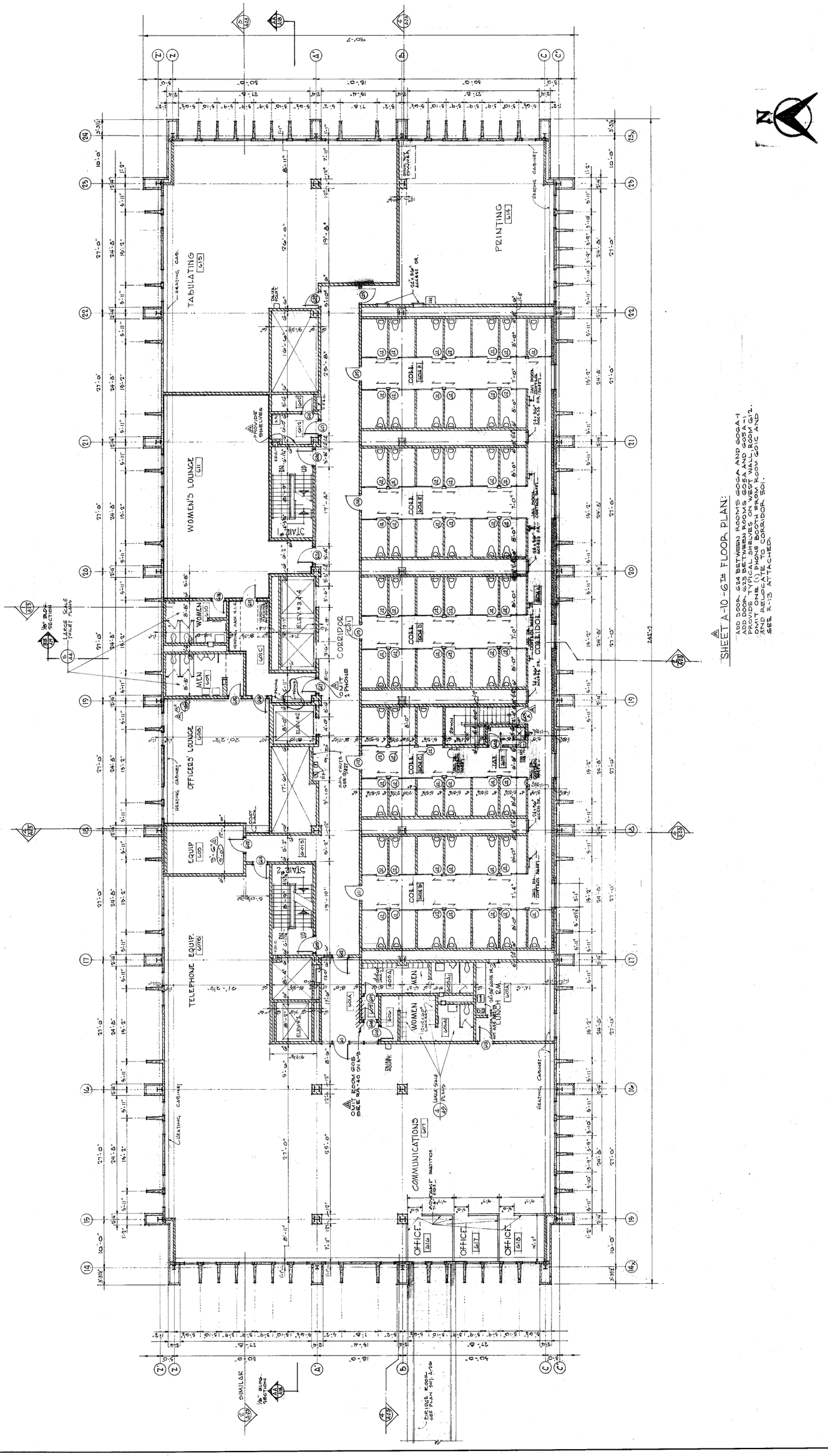

SHEET A-10-6TH FLOOR PLAN:

ADD DOOR 624 BETWEEN ROOMS 606A AND 606A-1
ADD DOOR 625 BETWEEN ROOMS 605A AND 605A-1
PROVIDE TYPICAL SHELVES ON WEST WALL, ROOM 612.
OMIT ONE (1) PHONE BOOTH FROM ROOM 601C AND
AND RELOCATE TO CORRIDOR 501.
SEE R-13 ATTACHED.

AS BUILT.

SHEET NO. A-10 6TH FLOOR PLAN
SCALE: 1/8" = 1'-0"

MICROFILMED 10-1-69 270:140

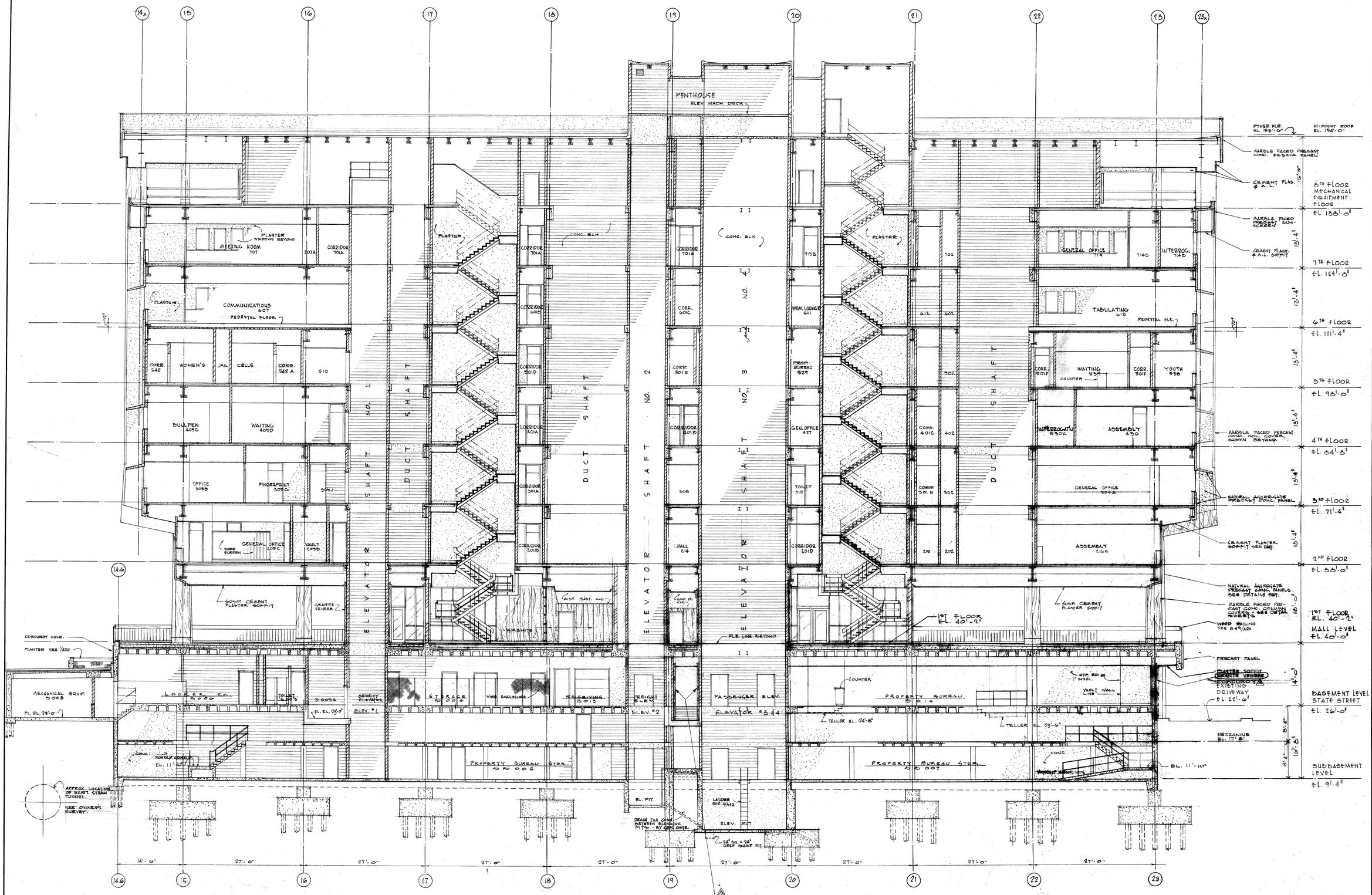

SHEET A-18-SECTION
SMALL STAIR CORRIDOR BETWEEN ELEVATORS 2 AND 3, AT BASEMENT LEVEL:
OMIT GRANITE WALL FACING. SEE PLAN.

△ AS BUILT.

SHEET NO. A-18

SECTION A-A
SCALE 1/8" = 1'-0"

SHEET NO. A-18
JOB No. 6718
DATE JAN. 22, 1969

DEPARTMENT OF PUBLIC WORKS
BUREAU OF BRIDGES AND PUBLIC BUILDINGS
CITY OF MILWAUKEE

POLICE ADMINISTRATION BUILDING
LOCATED ON THE MILWAUKEE CIVIC CENTER PLAZA
SEVENTH & STATE STREETS
MILWAUKEE, WISCONSIN

GRELLINGER - ROSE - JURENEC - KLUMB - RAPPL - HAAS, INC.
ARCHITECTS - ENGINEERS
MILWAUKEE, WISCONSIN

NOTE: 1. SEE SCHEDULE ON HV-11 FOR COIL DATA
2. PROVIDE AN AIR VENT ON EA. COIL
3. PROVIDE A DRAIN VALVE ON EACH COIL

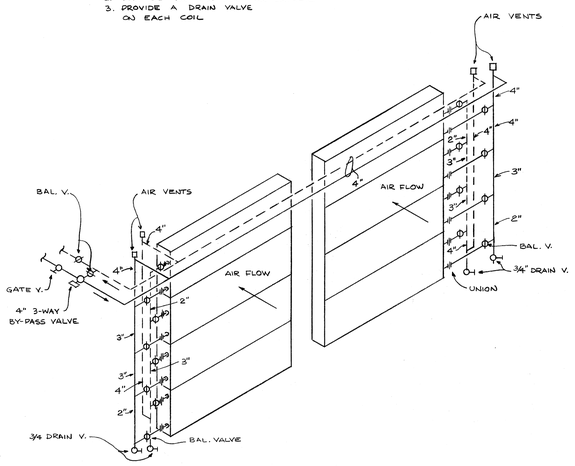

PIPING CONNS. AT HTG. COILS HC1 & HC2

— NO SCALE —

NOTE: 1. SEE SCHEDULE ON HV-11 FOR COIL DATA
2. PROVIDE INDIVIDUAL DR. V. FROM EA. ROW OF EA. COIL OF BOTH BANKS
3. PROVIDE INDIVIDUAL AIR VENTS FROM EA. ROW OF EA. COIL OF BOTH BANKS.
4. SEE DETAIL ON SHT. HV-12 FOR DR. PAN).

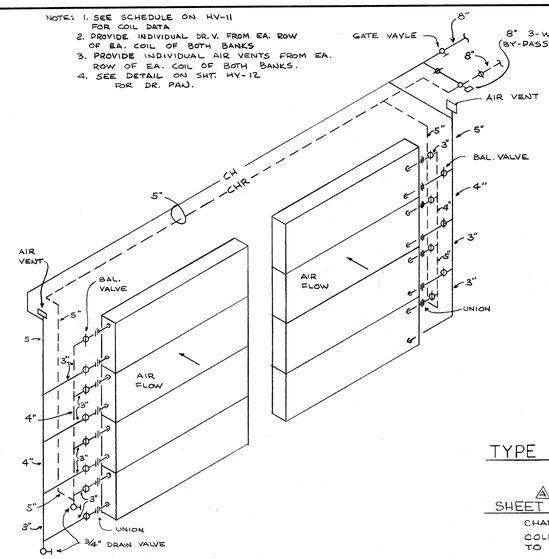

PIPING CONNS. AT COOLING COILS CC1 & CC2

— NO SCALE —

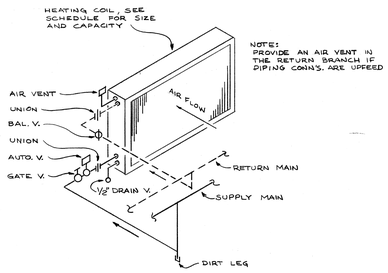

NOTE: PROVIDE AN AIR VENT IN THE RETURN BRANCH IF PIPING CONNS. ARE UPFEED

TYPE WS HTG. COIL PIPING CONNS.

— NO SCALE —

SHEET HV-6

CHANGE 14/22 DUCT AT SHAFT #2 TO 15/20.

COLD SUPPLY DUCT AT SHAFT #1: CHANGE 34/16 DUCT TO 35/14; 28/12 TO 30/10; 26/12 TO 28/8.

SQUARED ROOM 404M AND 404N: LOCATE THERMOSTATS ON EAST WALL.

COOLING COIL PIPING CONN'S. AT UNIT AHS 3

— NO SCALE —

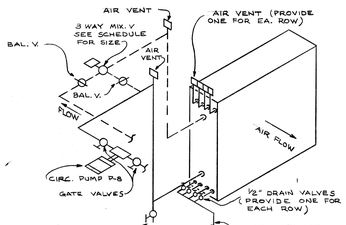

BRANCH & VALVE SIZE SCHEDULE		
AHS	BRANCH SIZE IN.	3-WAY VALVE SIZE IN.
3	3"	2"

NOTE:
* SEE HTG. & A.C. UNIT SCHEDULE FOR COIL DATA & SIZE
* EXTEND COIL VENT & DRAIN THRU UNIT CASING
* DRAIN COIL & FILL WITH ANTI-FREEZE FOR WINTER OPERATION

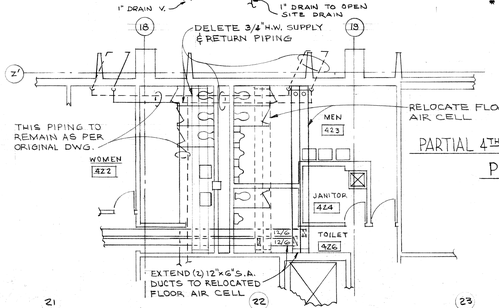

PARTIAL 4TH FLOOR SHOWING REVISED PIPING & DUCTWORK

SCALE: 1/8"=1'-0"

NOTE:
SEE SHEET HV-5 FOR SYMBOL SCHEDULE & NOTES

△ AS BUILT.

SHEET NO. HV-6

4TH FLOOR PLAN

SCALE 1/8"=1'-0"

SHEET NO. HV-6
JOB No. 6718
DATE JAN. 24, 89

PREPARED FOR
DEPARTMENT OF PUBLIC WORKS
BUREAU OF BRIDGES AND PUBLIC BUILDINGS
CITY OF MILWAUKEE

POLICE ADMINISTRATION BUILDING

LOCATED ON THE MILWAUKEE CIVIC CENTER PLAZA
SEVENTH & STATE STREETS
MILWAUKEE, WISCONSIN

GRELLINGER - ROSE - JURENEC - KLUMB - RAPPL - HAAS, INC.
ARCHITECTS - ENGINEERS
MILWAUKEE, WISCONSIN

SHEET HV-7:

EXAMINATION ROOM 526A: CONVECTOR TYPE W, CHANGE TO SEMI-RECESSED TYPE DOOR.

EQUIPMENT ROOM 503: ADD NOTE: LOCATE 20"x8" DUCT TO CLEAR DOOR.

WOMEN'S JAIL CELL AREA CORRIDOR: CHANGE ALL CONVECTORS, TYPE W TO SEMI-RECESSED; TYPICAL FOR FOUR (4) UNITS.

MEN'S JAIL CELL AREA CORRIDOR: CHANGE ALL CONVECTORS, TYPE W TO SEMI-RECESSED; TYPICAL FOR FOUR (4) UNITS.

BRIDGE PLAN: RECESS TWO (2) F.F.U.H. AND REMOVE EXISTING RADIATOR AND PIPING AT NEW DOOR IN EXISTING SAFETY BUILDING.

MEN'S JAIL CELL AREA: SUPPLY GRILLE, TYPE CAA, TO BE 2-SLOT.

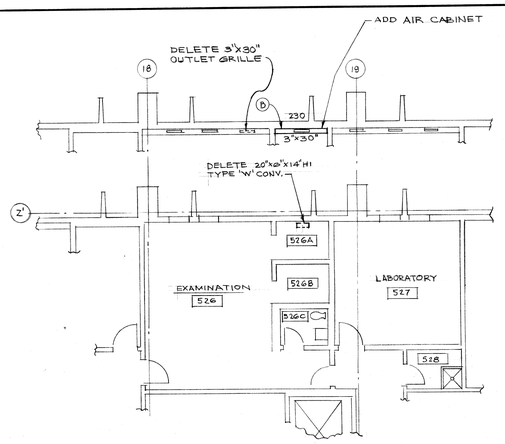

△ PARTIAL 5TH FLOOR PLAN SHOWING REVISED PERIMETER AIR CABINET

SCALE: 1/8"=1'-0"

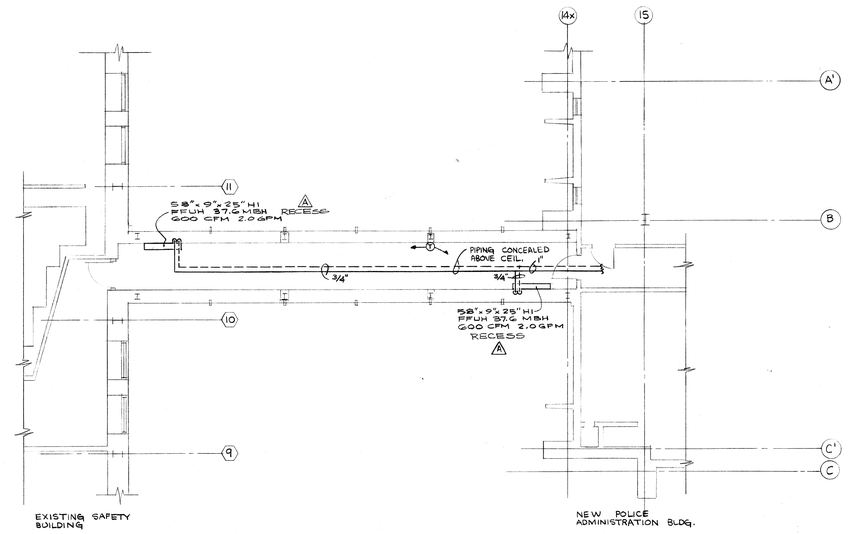

BRIDGE PLAN

SCALE 1/8"=1'-0"

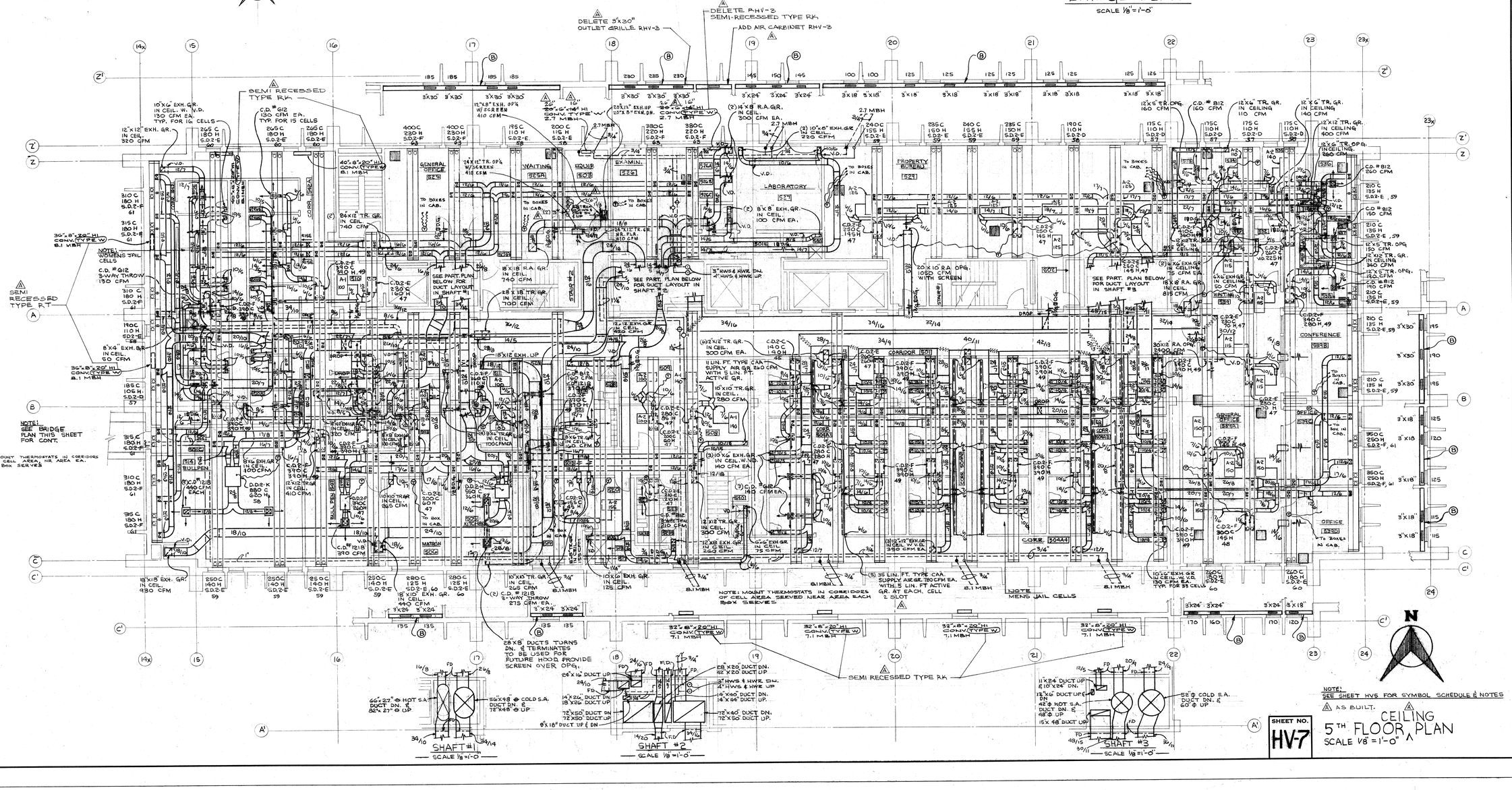

NOTE: SEE SHEET HV5 FOR SYMBOL SCHEDULE & NOTES

△ AS BUILT. △

5TH FLOOR CEILING PLAN

SCALE 1/8"=1'-0"

SHEET NO. HV-7

GRELLINGER - ROSE - JURENEC - KLUMB - RAPPL - HAAS, INC.
ARCHITECTS - ENGINEERS
MILWAUKEE, WISCONSIN

POLICE ADMINISTRATION BUILDING
LOCATED ON THE MILWAUKEE CIVIC CENTER PLAZA
SEVENTH & STATE STREETS
MILWAUKEE, WISCONSIN

PREPARED FOR
DEPARTMENT OF PUBLIC WORKS
BUREAU OF BRIDGES AND PUBLIC BUILDINGS
CITY OF MILWAUKEE

SHEET NO. HV-7
JOB No. 6718
DATE JAN. 24, 89

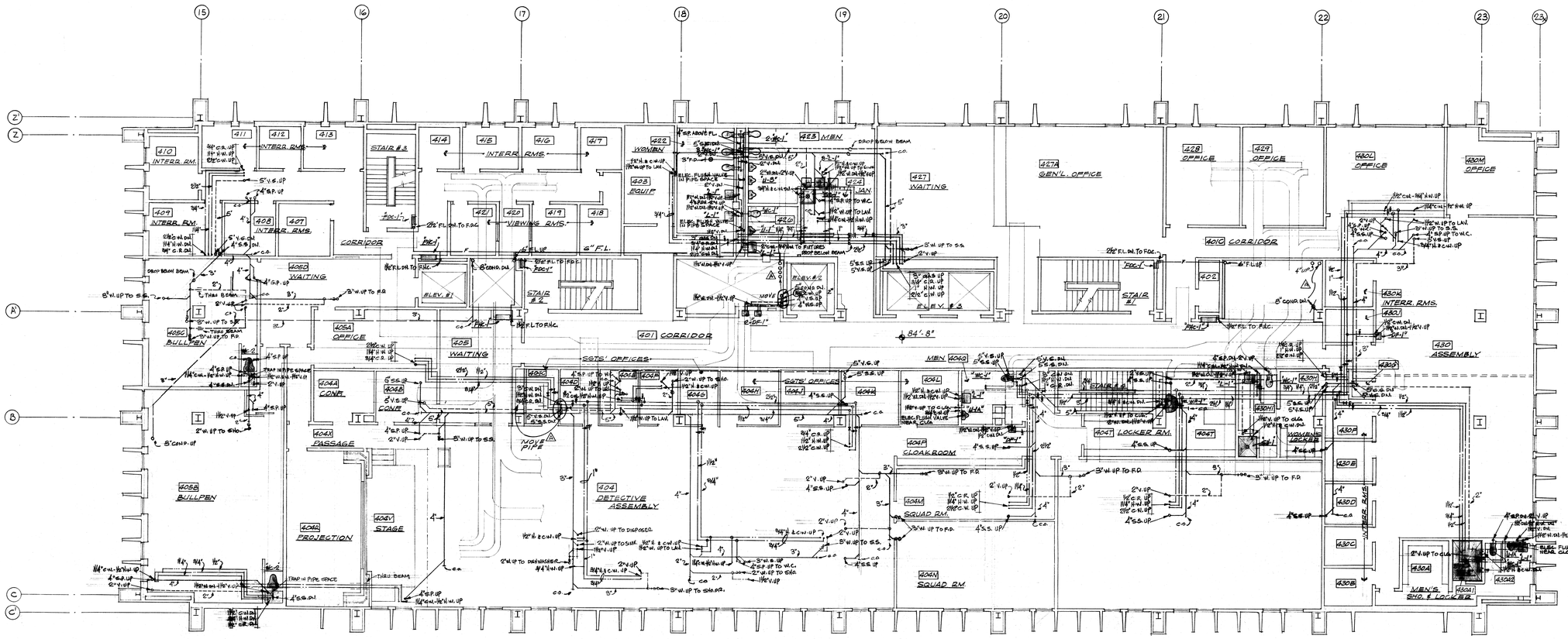

△ AS BUILT

NORTH

SHEET NO. P8

PLUMBING . . .
FOURTH FLOOR PLAN
SCALE: 1/8" = 1'-0"

PREPARED FOR
DEPARTMENT OF PUBLIC WORKS
BUREAU OF BRIDGES AND PUBLIC BUILDINGS
CITY OF MILWAUKEE

POLICE ADMINISTRATION BUILDING
LOCATED ON THE MILWAUKEE CIVIC CENTER PLAZA
SEVENTH & STATE STREETS MILWAUKEE, WISCONSIN

GRELLINGER - ROSE - JURENEC - KLUMB - RAPPL - HAAS, INC.
ARCHITECTS - ENGINEERS
MILWAUKEE, WISCONSIN

SHEET NO. P8
JOB No. 6718
DATE JAN. 24, 1969

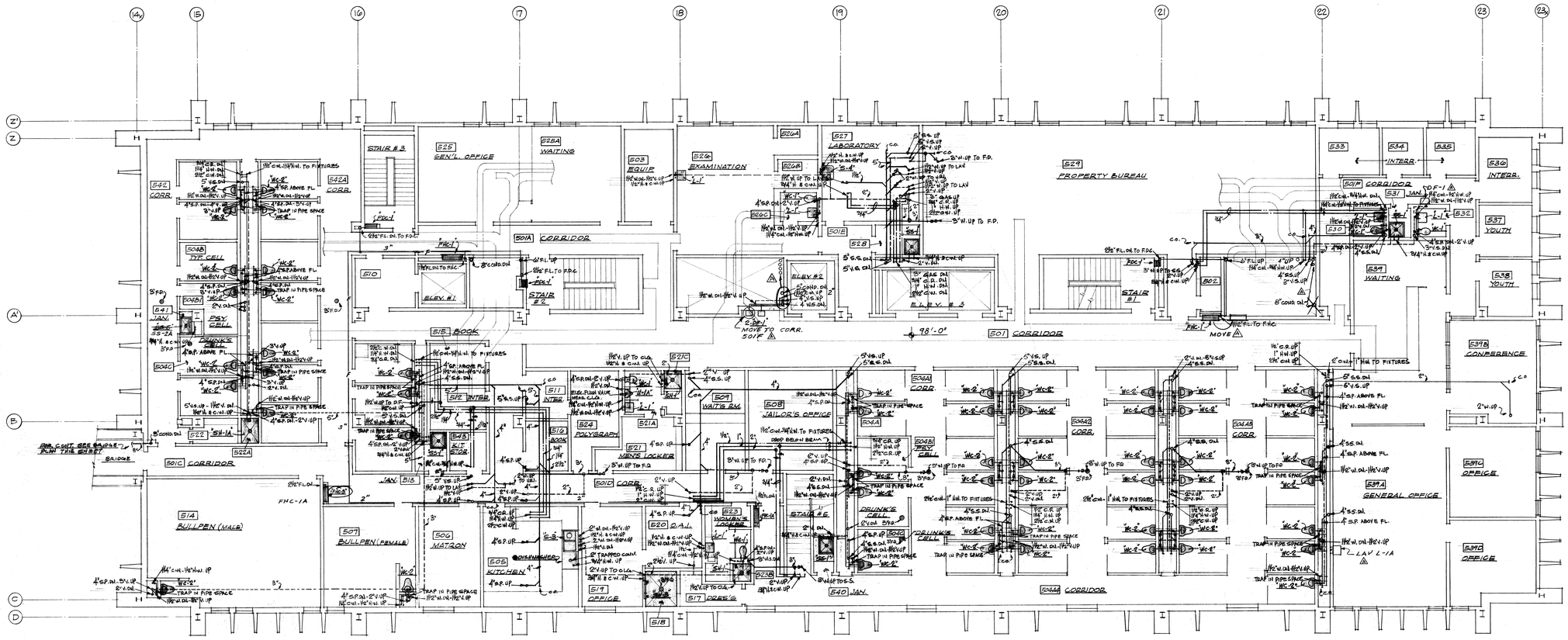

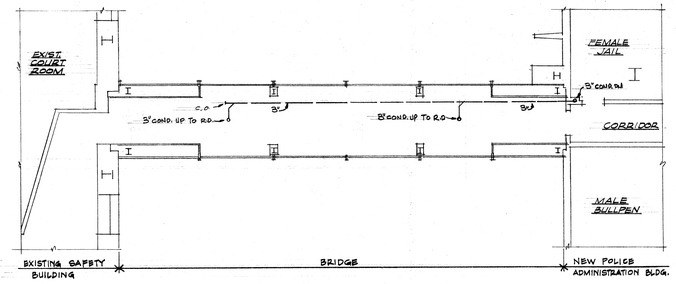

CONNECTING BRIDGE PLAN

SCALE: 1/8" = 1'-0"

NOTE:

SHEET P-9

FIRE LINE SHOWN FROM 6" RISER, IN PIPE SHAFT, WEST OF STAIR #2, TO FHC-1A OUTSIDE ROOM 523 WILL REQUIRE PASSING THROUGH 5 BEAMS IN THIS ROOM. SIZE OF THIS FIRE LINE IS AS FOLLOWS: 3" FROM 6" RISER TO "FHC-3" OUTSIDE OF ROOM 507, AND 2" FROM THERE TO "FHC-1A" OUTSIDE OF ROOM 523.

THE 5" VENT FROM CELLS BETWEEN COLUMN 15 AND 16 TO THE RISE IN CEILING OUTSIDE OF ROOM 543 WILL 543 WILL REQUIRE PASSING THROUGH 3 BEAMS.

CHANGE SERVICE SINK NUMBER IN ROOM 541 FROM SS-5 TO SS-2A.

RELOCATE ONE "DF-1" FROM CORRIDOR 501 TO CORRIDE 501F. UNIT SHALL BE PLACE ON SOUTH WALL OF EAST-WEST PASSAGE ADJACENT TO DOOR AT JANITOR CLOSET, COMPLETE.

ROOM 539A: ADD ONE (1) LAVATOVY TYPE "L-1A" ON WEST, APPROXIMATELY 10' NORTH OF SOUTH WALL. SEE DESCRIPTION FOLLOWING.

AS BUILT

NORTH

SHEET NO. P9

PLUMBING . . .

FIFTH FLOOR PLAN

SCALE: 1/8" = 1'-0"

SHEET NO. P9

JOB No. 6718

DATE JAN. 24, 1969

PREPARED FOR DEPARTMENT OF PUBLIC WORKS
BUREAU OF BRIDGES AND PUBLIC BUILDINGS
CITY OF MILWAUKEE

POLICE ADMINISTRATION BUILDING
LOCATED ON THE MILWAUKEE CIVIC CENTER PLAZA
SEVENTH & STATE STREETS MILWAUKEE, WISCONSIN

GRELLINGER - ROSE - JURENEC - KLUMB - RAPPL - HAAS, INC.
ARCHITECTS - ENGINEERS
MILWAUKEE, WISCONSIN