Milwaukee Water Works

HOWARD AVENUE PURIFICATION PLANT

HP–181: HOWARD FLOW MONITORING

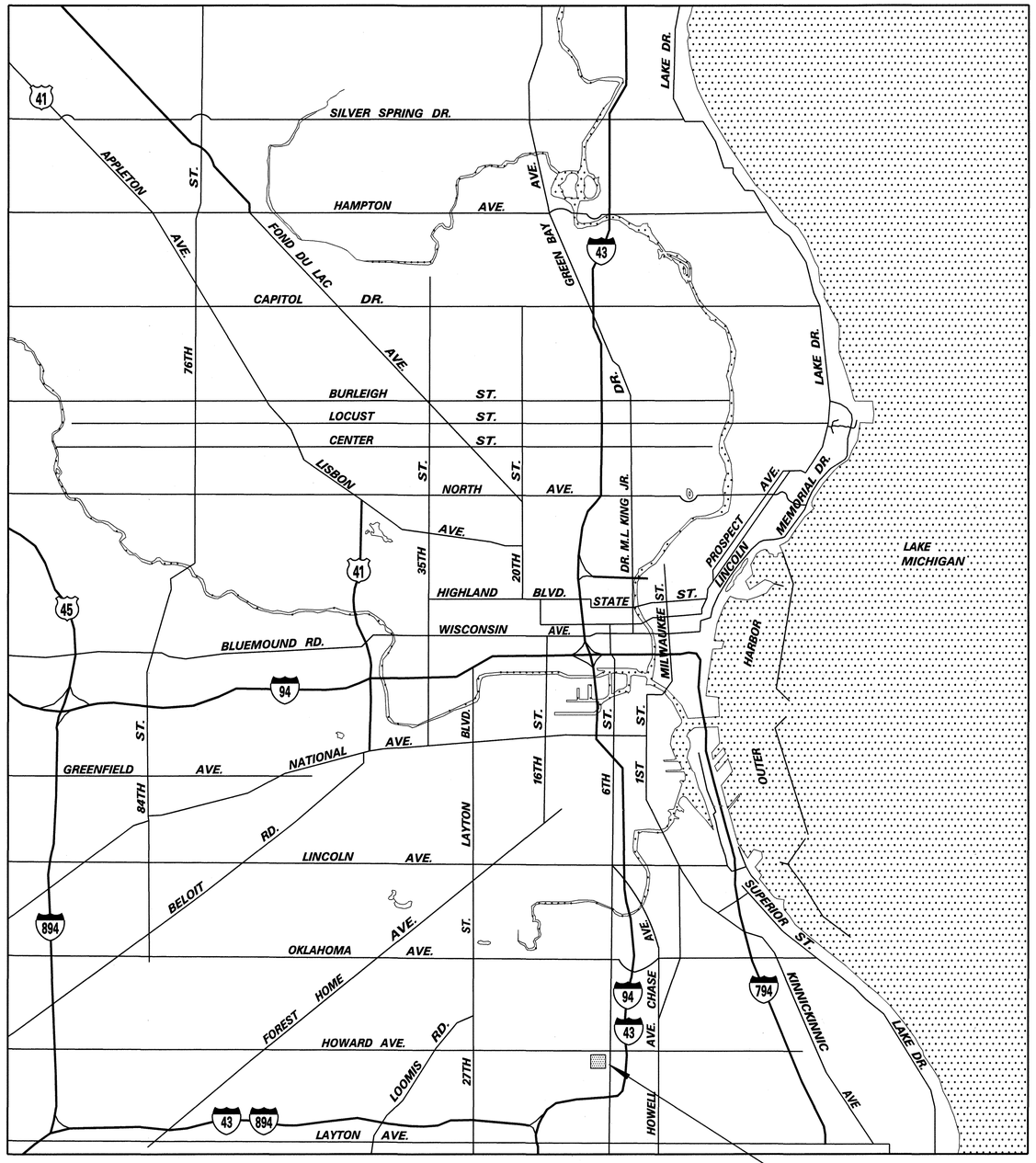

MILWAUKEE, WISCONSIN

LOCATION MAP

HOWARD AVENUE PURIFICATION PLANT – PROJECT LOCATION

0 0.5 1.0 1.5

APPROX SCALE IN MILES

DRAWING INDEX

DRAWING NO.	TITLE
CONTRACT DRAWINGS	
HP–181–01	LOCATION MAP & DRAWING INDEX
HP–181–02	GENERAL LAYOUT
HP–181–03	DETAILS

WISCONSIN
DINAH G. GANT
E-24682
MILWAUKEE, WI
PROFESSIONAL ENGINEER
10/10/11

NO.	BY	REVISION	DATE

Milwaukee Water Works — Water Engineering, Department of Public Works

HOWARD AVENUE PURIFICATION PLANT

HOWARD FLOW MONITORING

LOCATION MAP & DRAWING INDEX

DESIGNED BY	K.S.R.
DRAWN BY	S. MILLER
CHECKED BY	K.S.R.
DATE	9-22-2011
SCALE	AS SHOWN
WORK ORDER	WT450114200
OFFICIAL NOTICE	167-2011
FILE NO.	

APPROVED — DATE
Anthony J. Sugimoto 10/10/2011 — PLANTS PROJECT ENGINEER
Dinah G. Gant 10/10/11 — CHIEF DESIGN ENGINEER
C. Lewis 10/10/11 — SPECIAL DEPUTY COMMISSIONER OF PUBLIC WORKS

DRAWING NO. HP-181-01

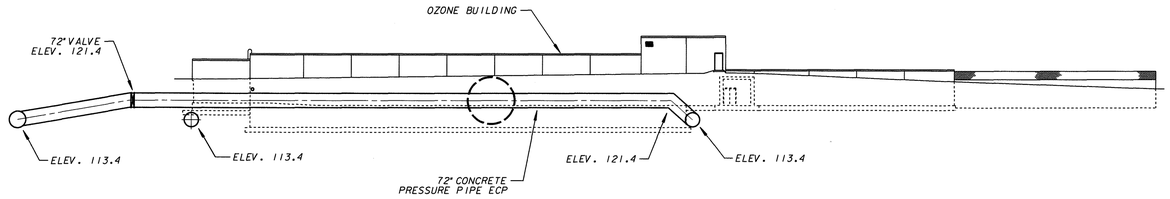

LOOKING WEST

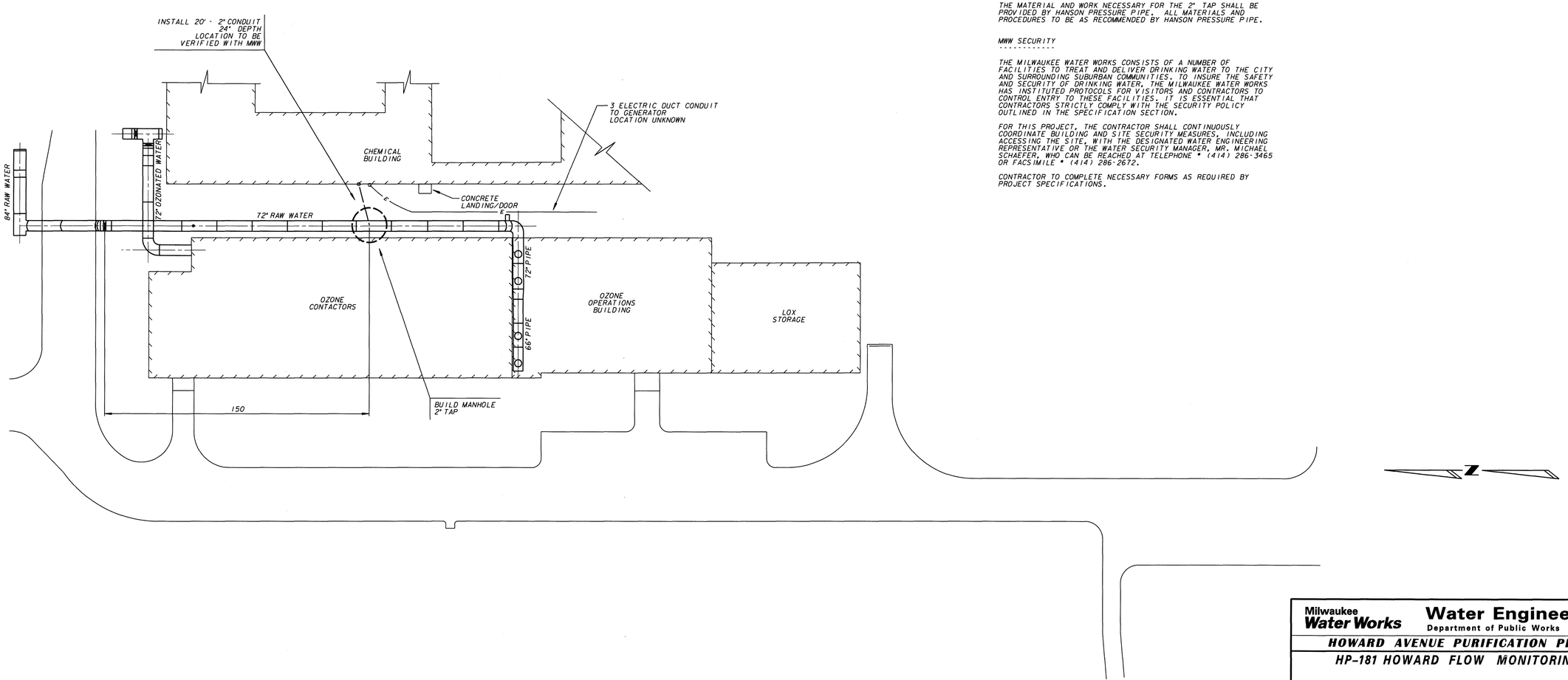

GENERAL NOTES

ALL WORK SHALL BE DONE IN ACCORDANCE WITH THE CITY OF MILWAUKEE "WATER MAIN INSTALLATION SPECIFICATIONS", DATED JANUARY 2, 1987. ADDITIONALLY, ALL WORK SHALL BE DONE IN ACCORDANCE WITH "THE MILWAUKEE WATER WORKS STANDARD PLAN NOTES REGARDING WATER MAIN CONSTRUCTION", WHICH IS ATTACHED AND MADE PART OF THESE WATER MAIN PLANS AND CONTRACT DOCUMENTS.

THE DEPARTMENT OF PUBLIC WORKS GENERAL SPECIFICATIONS, DATED JANUARY 31, 1992, LATEST REVISION, APPLIES TO THIS CONTRACT AND WILL SUPERSEDE ANY PART OF THE SPECIFICATIONS WHICH DIFFERS THEREFROM.

THE CONTRACTOR SHALL FURNISH ALL ITEMS REQUIRED TO COMPLETE THIS PROJECT.

BACKFILL AND BEDDING MATERIAL

THE REQUIREMENTS FOR BACKFILL AND BEDDING MATERIAL SHALL BE AS STATED IN THE "THE MILWAUKEE WATER WORKS STANDARD PLAN NOTES REGARDING WATER MAIN CONSTRUCTION".

JOB REQUIREMENTS

JOB REQUIREMENTS ARE AS STATED ON PLANS AND IN BID DOCUMENTS.

FORM OF BID

LUMP SUM FOR ALL WORK REQUIRED TO COMPLETE PROJECT AS SPECIFIED.

GENERAL DESCRIPTION OF WORK

THE CONTRACTOR SHALL FURNISH AND INSTALL ALL MATERIALS AND EQUIPMENT REQUIRED TO CONSTRUCT A MANHOLE, COMPLETE A 2" TAP ON THE 72" RAW WATER LINE, AND INSTALL 2" CONDUIT FROM THE MANHOLE TO THE CHEMICAL BUILDING AS DETAILED IN THE CONTRACT DRAWINGS AND SPECIFICATIONS. SITE SHALL BE RESTORED TO ORIGINAL CONDITION.

THE MATERIAL AND WORK NECESSARY FOR THE 2" TAP SHALL BE PROVIDED BY HANSON PRESSURE PIPE. ALL MATERIALS AND PROCEDURES TO BE AS RECOMMENDED BY HANSON PRESSURE PIPE.

MWW SECURITY

THE MILWAUKEE WATER WORKS CONSISTS OF A NUMBER OF FACILITIES TO TREAT AND DELIVER DRINKING WATER TO THE CITY AND SURROUNDING SUBURBAN COMMUNITIES. TO INSURE THE SAFETY AND SECURITY OF DRINKING WATER, THE MILWAUKEE WATER WORKS HAS INSTITUTED PROTOCOLS FOR VISITORS AND CONTRACTORS TO CONTROL ENTRY TO THESE FACILITIES. IT IS ESSENTIAL THAT CONTRACTORS STRICTLY COMPLY WITH THE SECURITY POLICY OUTLINED IN THE SPECIFICATION SECTION.

FOR THIS PROJECT, THE CONTRACTOR SHALL CONTINUOUSLY COORDINATE BUILDING AND SITE SECURITY MEASURES, INCLUDING ACCESSING THE SITE, WITH THE DESIGNATED WATER ENGINEERING REPRESENTATIVE OR THE WATER SECURITY MANAGER, MR. MICHAEL SCHAEFER, WHO CAN BE REACHED AT TELEPHONE # (414) 286-3465 OR FACSIMILE # (414) 286-2672.

CONTRACTOR TO COMPLETE NECESSARY FORMS AS REQUIRED BY PROJECT SPECIFICATIONS.

SCHEDULE

ALL WORK ON THIS PROJECT TO BE COMPLETED BY JANUARY 13, 2011

MANDATORY PRE-BID MEETING

THURSDAY OCTOBER 27, 2011 10:00AM

A MANDATORY PRE-BID MEETING WILL BE HELD IN THE HOWARD AVENUE PURIFICATION PLANT CONFERENCE ROOM, 3929 SOUTH 6TH STREET, MILWAUKEE, WI 53221. THE CITY OF MILWAUKEE WILL ONLY RECEIVE BIDS FROM PROSPECTIVE BIDDERS WHO ARE IN ATTENDANCE AT THE MANDATORY PRE-BID MEETING. THE OFFICIAL ENVELOPE FOR SUBMITTING A BID WILL BE AVAILABLE AT THE MANDATORY PRE-BID MEETING. ALL ATTENDEES ARE REQUIRED TO E-MAIL

ANTHONY.J.SUPINSKI@MILWAUKEE.GOV
KARL.ROHRBACH@MILWAUKEE.GOV
PHILLIP.GREUEL@MILWAUKEE.GOV

NO LATER THAN OCTOBER 25, 2011 BY 4:00PM FOR COORDINATION AND TO BE PLACED ON THE VISITOR LIST FOR ACCESS TO THE HOWARD AVENUE PURIFICATION PLANT.

SITE VISIT: A SITE VISIT WILL BE AVAILABLE AT THE CONCLUSION OF THE MANDATORY PRE-BID MEETING.

PRECONSTRUCTION MEETING

PRIOR TO THE START OF CONSTRUCTION A MEETING SHALL BE HELD AT THE JOB SITE TO DISCUSS SECURITY REQUIREMENTS, SCHEDULING OF WORK, EQUIPMENT DELIVERY AND STORAGE, AND OTHER CONSTRUCTION DETAILS OF THE PROJECT.

Milwaukee **Water Works** — **Water Engineering** Department of Public Works

HOWARD AVENUE PURIFICATION PLANT

HP-181 HOWARD FLOW MONITORING

GENERAL LAYOUT

DESIGNED BY	K.S.R.
DRAWN BY	S. MILLER
CHECKED BY	K.S.R.
DATE	9-26-2011
SCALE	1" = 30'
WORK ORDER	WT450114200
OFFICIAL NOTICE	167-2011
FILE NO.	

APPROVED — DATE 10/10/2011 — PLANTS PROJECT ENGINEER
10/10/11 — CHIEF DESIGN ENGINEER
10/10/11 — SPECIAL DEPUTY COMMISSIONER OF PUBLIC WORKS

DRAWING NO. **HP-181-02**

GENERAL

LOCATION OF TAP AND MANHOLE TO BE VERIFIED WITH THE CITY OF MILWAUKEE WATER PLANT STAFF PRIOR TO INSTALLATION.

PRIOR TO CONSTRUCTION SUBMIT ANY NECESSARY SHOP DRAWINGS AND DETAIL DRAWINGS TO MWW FOR REVIEW.

EXCAVATION AND CONSTRUCTION OF MANHOLE SHALL NOT DAMAGE THE EXISTING BUILDINGS, WATER MAIN, OR ADDITIONAL MWW FACILITIES ON SITE. CONTRACTOR SHALL BE RESPONSIBLE FOR ANY DAMAGES.

TAPPING CONCRETE MAIN

THE EXISTING CONCRETE MAIN WAS INSTALLED IN 1997, AND PROVIDED BY CRETEX PRESSURE PIPE, INC. THE ORGINAL LAYING SCHEDULE AND ASBUILT DRAWING ARE INCLUDED IN THE PROJECT SPECIFICATIONS.

JOB NUMBER SB-97-13
PROJECT HOWARD AVE PURIFICATION PLANT OZONATION FACILITIES

2" TAP IN 72" CONCRETE MAIN TO BE PERFORMED BY HANSON PRESSURE PIPE.

ALL MATERIALS NECESSARY TO PERFORM 2" TAP TO BE PROVIDED BY CONTRACTOR.

2" FULL PORT BALL VALVE ¼ TURN TO BE PROVIDED BY CONTRACTOR. BRONZE BODY, 2" NPT FEMALE BY 2" NPT MALE.

TAPPING SADDLE AS PROVIDED BY HANSON SHALL HAVE 2" FEMALE OUTLET FOR THE 2" BALL VALVE.

BACKFILL

SLURRY BACKFILL WILL BE REQUIRED AFTER THE 2" TAP HAS BEEN COMPLETED. SLURRY IS REQUIRED IN EXCAVATION TO TOP OF MAIN. SPOIL BACKFILL MATERIAL MAY BE USED FOR THE REMAINING EXCAVATION. SPOIL TOP SOIL MAY BE USED FOR THE TOP 2FT OF THE EXCAVATION. ALL ADDITIONAL MATERIALS NOT USED TO BE REMOVED BY CONTRACTOR.

CONDUIT INSTALLATION

LOCATION OF CONDUIT TO BE VERIFIED AND CONFIRMED WITH CITY OF MILWAUKEE WATER PLANT STAFF PRIOR TO INSTALLATION.

2" SCHEDULE 40 RIGID PVC CONDUIT
TOP OF CONDUIT MINIMUM 24" IN DEPTH

ALL CUT ENDS SHALL BE TRIMMED INSIDE AND OUTSIDE TO REMOVE ALL ROUGH EDGES.

ALL CONDUIT BEING FURNSIHED AND INSTALLED SHALL HAVE THE UL LABEL FIRMLY ATTACHED

CONDUIT SHALL BE INSTALLED THROUGH WALL TO CHEMICAL BUILDING. LOCATION TO BE VERIFIED WITH CITY OF MILWAUKEE WATER PLANTS SECTION. HOLE SHALL BE SEALED WITH 4" LINK SEAL

HANSON PRESSURE PIPE

SCOTT T. NOONAN
PIPELINE SERVICES MANAGER
HANSON PRESSURE PIPE
PIPELINE SERVICES
PO BOX 101
COLDWATER , OH 45828

PH(419) 678-2596
FAX (419)678-2917
SCOTT.NOONAN@HANSON.COM

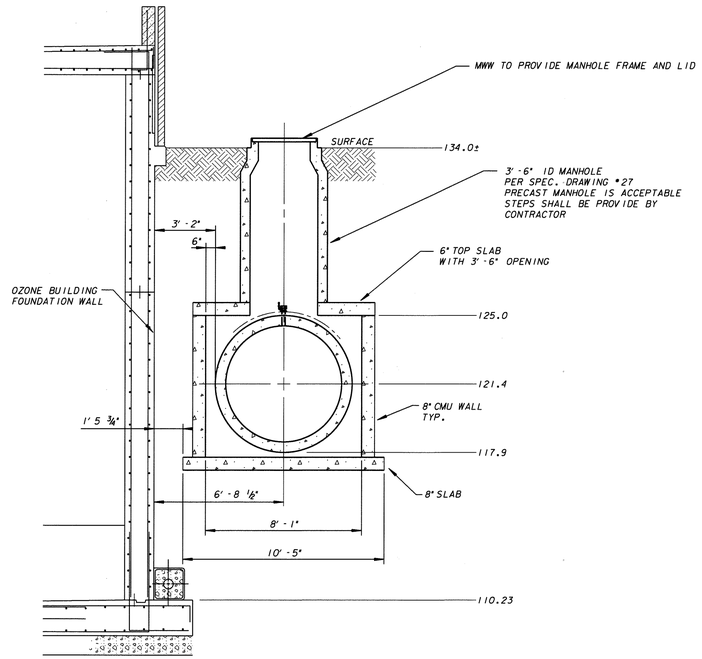

LOOKING NORTH

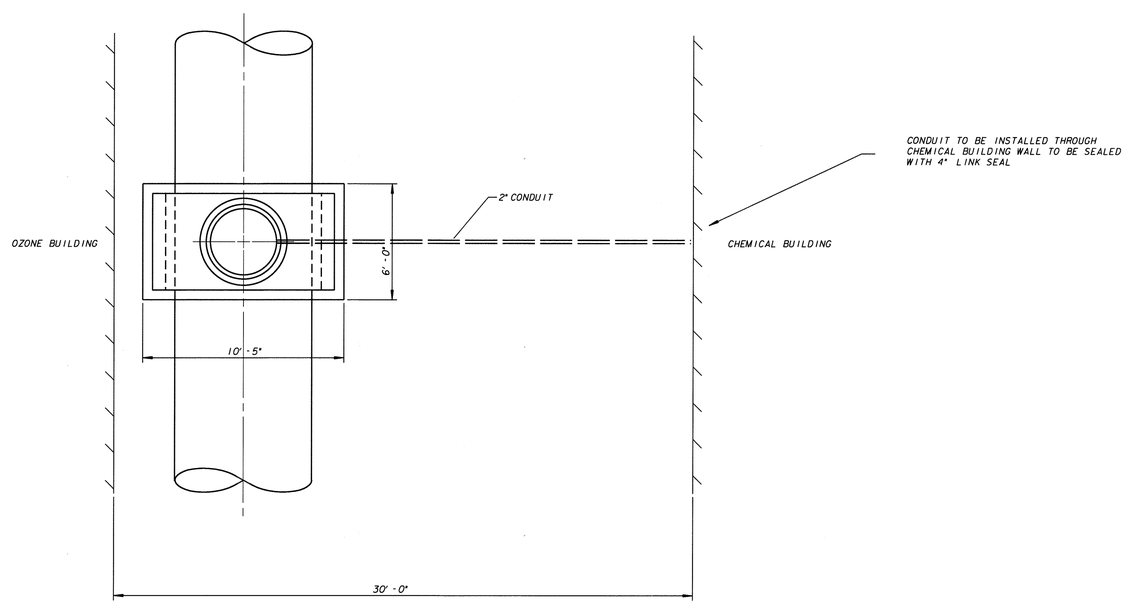

Milwaukee **Water Works** — **Water Engineering** Department of Public Works

HOWARD AVENUE PURIFICATION PLANT

HP-181 HOWARD FLOW MONITORING

DETAILS

DESIGNED BY	K.S.R.
DRAWN BY	S. MILLER
CHECKED BY	K.S.R
DATE	9-26-2011
SCALE	NOT TO SCALE
WORK ORDER	WT450114200
OFFICIAL NOTICE	167-2011
FILE NO.	

APPROVED — DATE
10/10/2011 — PLANT PROJECT ENGINEER
10/10/11 — CHIEF DESIGN ENGINEER
10/10/11 — SPECIAL DEPUTY COMMISSIONER OF PUBLIC WORKS

DRAWING NO. **HP-181-03**

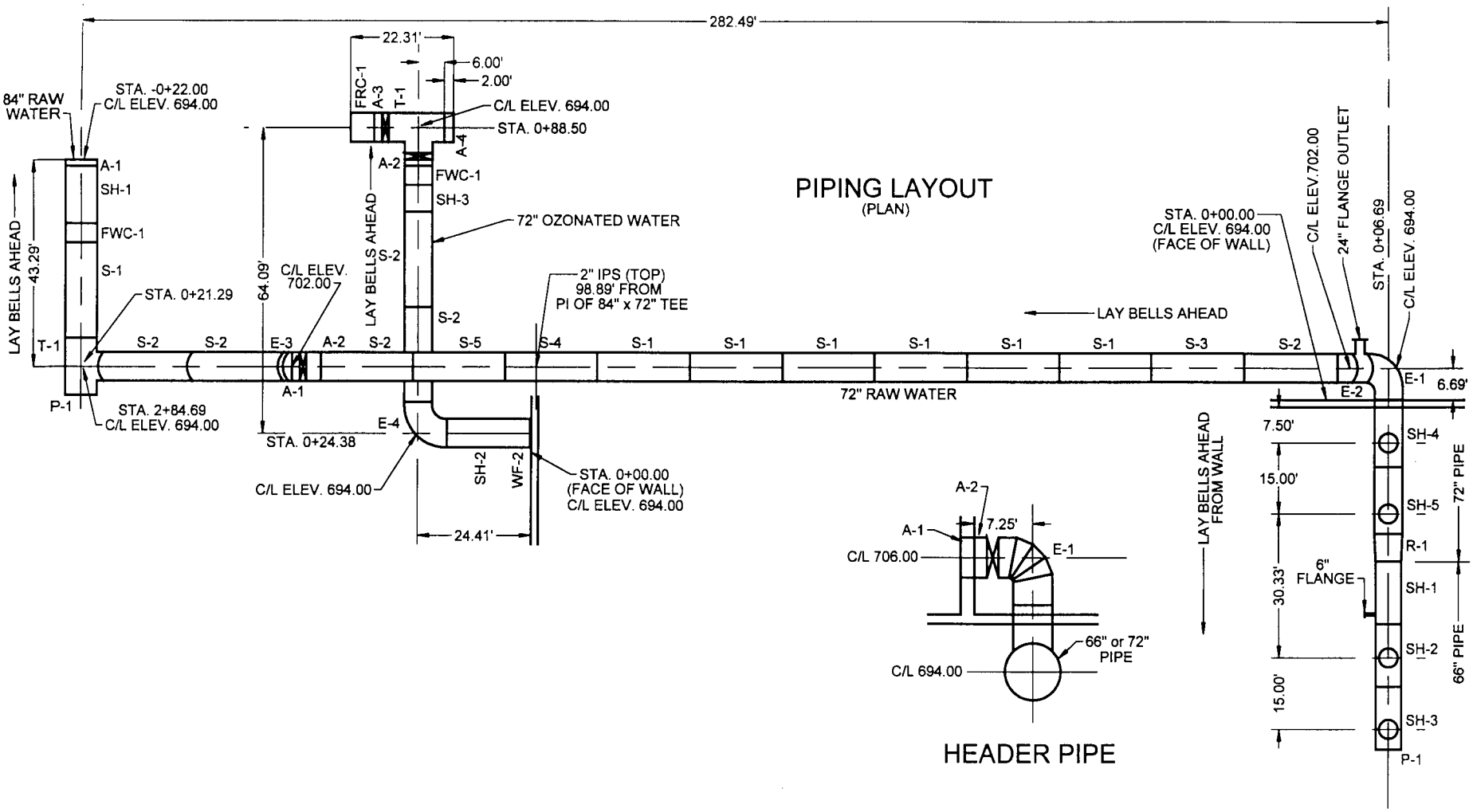

CRETEX PRESSURE PIPE, INC.	
JOB NAME: MILWAUKEE, WI	JOB NO.: SB-97-13
72"/84" RAW WATER & 72" OZONATED LINE LAYOUT HOWARD AVE. PURIFICATION PLANT	
DATE:	
DRAWN BY: KLH	APP.: KLH
DRAWING NO: SB-97-13-D24	REV.: C

REV. C REVISED PER GRUNAU FIELD SURVEY KLH 9/8/97

CRETEX PRESSURE PIPE, INC.

P.O. BOX 67
SOUTH BELOIT, ILLINOIS 61080
(815) 389-4800

PIPE LAYING SCHEDULE

JOB NAME: **MILWAUKEE, WI**

PROJECT: **HOWARD AVE. PURIFICATION PLANT OZONATION FACILITIES**

JOB NUMBER: **SB-97-13**

AGENCY: **CITY OF MILWAUKEE, WI**

ENGINEER: **KEVIN L. HEASLEY**

CONSULTANT: **BLACK & VEATCH**

DATE: **SEPTEMBER 26, 1997**

CRETEX PRESSURE PIPE, INC.

MILWAUKEE, WI
SB-97-13
HOWARD AVE. PURIFICATION PLANT — DATE: 05-09-1997
OZONATION FACILITIES — ENGINEER: KLH
PROJECT — SHEET: 1

REV	DESCRIPTION	DATE	BY
A	REVISED PIPE DESIGNS, HEADER PIPING AND ADDED OUTLETS PER NEW PLANS	05/23/97	KLH
B	REVISED LAYOUT PER NEW PLANS	06/06/97	KLH
C	REVISED PIPE DESIGNS PER B&V LOADS	07/10/97	KLH

PIECE DESIG	QTY	DESCRIPTION	RPL APL HPL	STATION	DEFLECTION DATA	C/L ELEV	SLOPE TAN COS	COMMENTS
		BEGIN LAYING FROM THE 72" PIPE AT OZONE OPERATIONS BUILDING AND LAY PIPE BELLS AHEAD (NORTH) TO 84".		0+00.09		694.00		
E-1	1	B CLASS A 72" ECP BQBxBQB ELBOW 90°00' B W/ BELL BOLT QT BELLS (56 BOLTS)	6.60 6.60 6.60 6.60 6.60 4.67	HPI 0+06.69 0+11.36	/45°00'UP DEFL 90°00'LT \90°00'CB	694.00 698.67	0°00' 0.00000 1.00000 +45°00' 1.00000 0.70711	
E-2	1	(2.03' EXT) S CLASS A 72" ECP BQSxBQB ELBOW 45°00 B W/ BELL BOLT QT JOINTS (56 BOLTS) OUT: 24" FLANGE RT 2.00' FFS	4.71 4.71 3.33 3.09 3.09 3.09	HPI 0+14.69 OUT (0+12.77) 0+17.78	DEFL 45°00'DN	702.00 702.00	0°00' 0.00000 1.00000	5.18' SPIGOT OA
S-2	1	CLASS A (As=0.340) 72" ECP BQSxBQB STRAIGHT W/ BELL BOLT QT JOINTS (56 BOLTS)	19.92 19.92 19.92	0+37.70		702.00		
97-13								

CRETEX PRESSURE PIPE, INC.

MILWAUKEE, WI
SB-97-13
HOWARD AVE. PURIFICATION PLANT DATE: 05-09-1997
OZONATION FACILITIES ENGINEER: KLH
PROJECT SHEET: 2

REV	DESCRIPTION	DATE	BY
A	REVISED PIPE DESIGNS, HEADER PIPING AND ADDED OUTLETS PER NEW PLANS	05/23/97	KLH
B	REVISED LAYOUT PER NEW PLANS	06/06/97	KLH
C	REVISED PIPE DESIGNS PER B&V LOADS	07/10/97	KLH
D	REVISED SH-1 TO STRAIGHT PER GRUNAU SURVEY	09/08/97	KLH

PIECE DESIG	QTY	DESCRIPTION	RPL APL HPL	STATION	DEFLECTION DATA	C/L ELEV	SLOPE TAN COS	COMMENTS
				0+37.70		702.00		
S-3	1	CLASS A (As=0.340) 72" ECP BQSxQTB STRAIGHT W/ BELL BOLT QT SPIGOT W/ QUICK TEST BELL	19.92 19.92 19.92				0°00' 0.00000 1.00000	
				0+57.62		702.00		
S-1	6	CLASS A (As=0.340) 72" ECP QTSxQTB STRAIGHTS W/ QUICK TEST JOINTS	19.91 119.46 119.46					
				1+77.08		702.00		
S-4	1	CLASS A (As=0.340) 72" ECP QTSxQTB STRAIGHT OUT: 2" IPS TOP 6.70' FFB W/ QUICK TEST JOINTS	19.91 19.91 19.91	OUT (1+90.29)				
				1+96.99		702.00		
S-5	1	CLASS A (As=0.340) 72" ECP QTSxBQB STRAIGHT W/ BELL BOLT QT BELL (56 BOLTS)	19.91 19.91 19.91					
				2+16.90		702.00		

97-13

CRETEX PRESSURE PIPE, INC.

MILWAUKEE, WI
SB-97-13
HOWARD AVE. PURIFICATION PLANT — DATE: 05-09-1997
OZONATION FACILITIES — ENGINEER: KLH
PROJECT — SHEET: 3

REV	DESCRIPTION	DATE	BY
A	REVISED PIPE DESIGNS, HEADER PIPING AND ADDED OUTLETS PER NEW PLANS	05/23/97	KLH
B	REVISED LAYOUT PER NEW PLANS	06/06/97	KLH
C	REVISED PIPE DESIGNS PER B&V LOADS	07/10/97	KLH
D	REVISED A-2 LL PER GRUNAU SURVEY	09/08/97	KLH

PIECE DESIG	QTY	DESCRIPTION	RPL APL HPL	STATION	DEFLECTION DATA	C/L ELEV	SLOPE TAN COS	COMMENTS
				2+16.90		702.00		
S-2	1	CLASS A (As=0.340) 72" ECP BQSxBQB STRAIGHT W/ BELL BOLT QT JOINTS (56 BOLTS)	19.92 19.92 19.92				0°00' 0.00000 1.00000	
				2+36.82		702.00		
A-2	1	CLASS A 72" ECP BQSxFLG BELL BOLT QT SPIGOT x FLANGE ADAPTER (3.60' OA)	3.13 3.13 3.13					
				2+39.95		702.00		
	1	72" FLANGE x FLANGE BUTTERFLY VALVE (BY OTHERS)	1.50 1.50 1.50					
				2+41.45		702.00		
A-1	1	CLASS A 72" ECP FLGxBQB FLANGE x BELL BOLT QT BELL ADAPTER (1.65' OA) W/ BELL BOLT QT BELL (56 BOLTS)	1.65 1.65 1.65					
				2+43.10		702.00		
E-3	1	CLASS A 72" ECP BQSxBQB ELBOW 10°00' W/ BELL BOLT QT JOINTS (56 BOLTS)	S 0.71 0.71 0.71 ——— 1.12 B 1.12 1.10	HPI 2+43.81	DEFL 10°00'DN	702.00	——— -10°00' 0.17633 0.98481	1.18' SPIGOT OA
				2+44.91		701.81		
97-13								

CRETEX PRESSURE PIPE, INC.

MILWAUKEE, WI
SB-97-13
HOWARD AVE. PURIFICATION PLANT
OZONATION FACILITIES
PROJECT

DATE: 05-09-1997
ENGINEER: KLH
SHEET: 4

REV	DESCRIPTION	DATE	BY
A	REVISED PIPE DESIGNS, HEADER PIPING AND ADDED OUTLETS PER NEW PLANS	05/23/97	KLH
B	REVISED LAYOUT PER NEW PLANS	06/06/97	KLH
C	REVISED PIPE DESIGNS PER B&V LOADS	07/10/97	KLH
D	REVISED STATIONING/LENGTHS PER GRUNAU SURVEY	09/08/97	KLH

PIECE DESIG	QTY	DESCRIPTION	RPL APL HPL	STATION	DEFLECTION DATA	C/L ELEV	SLOPE TAN COS	COMMENTS
				2+44.91		701.81		
S-2	2	CLASS A (As=0.340) 72" ECP BQSxBQB STRAIGHT W/ BELL BOLT QT JOINTS (56 BOLTS)	19.92 39.84 39.24				-10°00' 0.17633 0.98481	
				2+84.15		694.89		
	1	72" BB QT SPIGOT BRANCH OF T-1	5.11 5.11 5.03					
				2+89.18		694.00		

97-13

CRETEX PRESSURE PIPE, INC.

MILWAUKEE, WI
SB-97-13
HOWARD AVE. PURIFICATION PLANT
OZONATION FACILITIES
PROJECT

DATE: 05-09-1997
ENGINEER: KLH
SHEET: 5

REV	DESCRIPTION	DATE	BY
A	REVISED PIPE DESIGNS, HEADER PIPING AND ADDED OUTLETS PER NEW PLANS	05/23/97	KLH
B	REVISED LAYOUT PER NEW PLANS	06/06/97	KLH
C	REVISED PIPE DESIGNS PER B&V LOADS	07/10/97	KLH
D	REVISED STATIONING/LENGTHS PER GRUNAU SURVEY	09/08/97	KLH

PIECE DESIG	QTY	DESCRIPTION	RPL APL HPL	STATION	DEFLECTION DATA	C/L ELEV	SLOPE TAN COS	COMMENTS
		BEGIN @ 84" TEE AND LAY PIPE BELLS AHEAD TO CLOSURE AT EXISTING 84" PIPE.		0+27.29		694.00		
P-1	1	CLASS A 84" ECP BQS 84" BELL BOLT QT SPIGOT PLUG	0.00 0.00 0.00	0+27.29		694.00	0°00' 0.00000 1.00000	
T-1	1	CLASS A 84" ECP BQBxBQB 84" BQB x 84" BQB x 72" BQS TEE RUN ENDS W/ BBQT BELLS (84 BOLTS) RUN LL = 6.00' BCH END WITH BBQT SPIGOT BRANCH LL = 5.11; OA = 5.58'	12.00 12.00 12.00	EQU (2+89.18BK) (0+21.29AH) BCH (0+21.29)				ROTATE TEE 7.3/4" CCW (10°00' SLOPE)
S-1	1	CLASS A (As=0.383) 84" ECP BQSxBQB STRAIGHT W/ BELL BOLT QT JOINTS (84 BOLTS)	19.95 19.95 19.95	0+15.29		694.00		
FWC-1	1	CLASS A 84" ECP BQSxBQB FIELD WELDED CLOSURE W/ (2) DOUBLE QT SPIGOT ADAPTERS (SUPPLY 6' CLOSURE CYLINDER)	4.00 4.00 4.00	-0+04.66		694.00		
				-0+08.66		694.00		

97-13

CRETEX PRESSURE PIPE, INC.

MILWAUKEE, WI
SB-97-13
HOWARD AVE. PURIFICATION PLANT
OZONATION FACILITIES
PROJECT

DATE: 05-09-1997
ENGINEER: KLH
SHEET: 6

REV	DESCRIPTION	DATE	BY
A	REVISED PIPE DESIGNS, HEADER PIPING AND ADDED OUTLETS PER NEW PLANS	05/23/97	KLH
B	REVISED LAYOUT PER NEW PLANS	06/06/97	KLH
C	REVISED PIPE DESIGNS PER B&V LOADS	07/10/97	KLH
D	REVISED STATIONING/LENGTHS PER GRUNAU SURVEY	09/08/97	KLH

PIECE DESIG	QTY	DESCRIPTION	RPL APL HPL	STATION	DEFLECTION DATA	C/L ELEV	SLOPE TAN COS	COMMENTS
				-0+08.66		694.00		
SH-1	1	CLASS A (As=0.383) 84" ECP BQSxBQB SHORT (12.55' OA) W/ BELL BOLT QT JOINTS (84 BOLTS)	12.07 12.07 12.07				0°00' 0.00000 1.00000	
				-0+20.73		694.00		
A-1	1	CLASS A 84" ECP BQSxFLG BELL BOLT QT SPIGOT x FLANGE ADAPTER (1.74' OA)	1.27 1.27 1.27					
				-0+22.00		694.00		

97-13

CRETEX PRESSURE PIPE, INC.

MILWAUKEE, WI
SB-97-13
HOWARD AVE. PURIFICATION PLANT
OZONATION FACILITIES
PROJECT

DATE: 05-09-1997
ENGINEER: KLH
SHEET: 7

REV	DESCRIPTION	DATE	BY
A	REVISED PIPE DESIGNS, HEADER PIPING AND ADDED OUTLETS PER NEW PLANS	05/23/97	KLH
B	REVISED LAYOUT PER NEW PLANS	06/05/97	KLH
C	REVISED PIPE DESIGNS PER B&V LOADS	07/10/97	KLH

PIECE DESIG	QTY	DESCRIPTION	RPL APL HPL	STATION	DEFLECTION DATA	C/L ELEV	SLOPE TAN COS	COMMENTS
		BEGIN @ 72" 90° ELBOW AND LAY HEADER PIPE WEST.		0+00.09		694.00		
SH-4	1	CLASS A (As=0.340) 72" ECP BQSxCRB SHORT (14.64' OA) OUT: 48" STEEL TOP 5.08' FFB 50.3/4" STEEL OD W/ BELL BOLT QT SPIGOT W/ FIELD WELDED BELL	14.17 14.17 14.17	OUT (-0+09.00) -0+14.08		694.00	0°00' 0.00000 1.00000	
SH-5	1	CLASS A (As=0.340) 72" ECP CRSxCRB SHORT (14.42' OA) OUT: 48" STEEL TOP 4.25' FFB 50.3/4" STEEL OD W/ FIELD WELDED JOINTS	14.17 14.17 14.17	OUT (-0+24.00) -0+28.25		694.00		2" JOINT OPENING FOR FIELD WELDING
R-1	1	CLASS A 72" ECP CRSxCRB 72" CRS x 66" CRB CONCENTRIC REDUCER (6.06' OA) W/ FIELD WELDED JOINTS	5.81 5.81 5.81	-0+34.06		694.00		2" JOINT OPENING FOR FIELD WELDING
SH-1	1	CLASS A (As=0.319) 66" ECP CRSxCRB SHORT (13.37' OA) OUT: 6" FLANGE RT 2.00' FFB W/ FIELD WELDED JOINTS	13.17 13.17 13.17	(-0+45.23) -0+47.23		694.00		2" JOINT OPENING FOR FIELD WELDING
97-13								

CRETEX PRESSURE PIPE, INC.

MILWAUKEE, WI
SB-97-13
HOWARD AVE. PURIFICATION PLANT
OZONATION FACILITIES
PROJECT

DATE: 05-09-1997
ENGINEER: KLH
SHEET: 8

REV	DESCRIPTION	DATE	BY
A	REVISED PIPE DESIGNS, HEADER PIPING AND ADDED OUTLETS PER NEW PLANS	05/23/97	KLH
B	REVISED LAYOUT PER NEW PLANS	06/06/97	KLH
C	REVISED PIPE DESIGNS PER B&V LOADS	07/10/97	KLH

PIECE DESIG	QTY	DESCRIPTION	RPL APL HPL	STATION	DEFLECTION DATA	C/L ELEV	SLOPE TAN COS	COMMENTS
				-0+47.23		694.00		
SH-2	1	CLASS A (As=0.319) 66" ECP CRSxCRB SHORT (13.37' OA) OUT: 48" STEEL TOP 6.07' FFB 50.3/4" STEEL OD W/ FIELD WELDED JOINTS	13.17 13.17 13.17	OUT (-0+54.33)			0°00' 0.00000 1.00000	2" JOINT OPENING FOR FIELD WELDING
				-0+60.40		694.00		
SH-3	1	CLASS A (As=0.319) 66" ECP CRSxCRB SHORT (13.37' OA) OUT: 48" STEEL TOP 4.24' FFB 50.3/4" STEEL OD W/ FIELD WELDED SPIGOT W/ SHOP WELDED BELL	13.17 13.17 13.17	OUT (-0+69.33)				2" JOINT OPENING FOR FIELD WELDING
				-0+73.57		694.00		
P-1	1	CLASS A 66" ECP CRS 66" CR SPIGOT PLUG (EXTERNALLY BRACED BY CONTRACTOR) (SHOP WELDED TO SH-3)	0.00 0.00 0.00					
				-0+73.57		694.00		
97-13								

CRETEX PRESSURE PIPE, INC.

MILWAUKEE, WI
SB-97-13
HOWARD AVE. PURIFICATION PLANT
OZONATION FACILITIES
PROJECT

DATE: 05-09-1997
ENGINEER: KLH
SHEET: 9

REV	DESCRIPTION	DATE	BY
A	REVISED PIPE DESIGNS, HEADER PIPING AND ADDED OUTLETS PER NEW PLANS	05/23/97	KLH
B	REVISED LAYOUT PER NEW PLANS	06/06/97	KLH
C	ADDED 1' SHORT PER B&V FAX	06/30/97	KLH

PIECE DESIG	QTY	DESCRIPTION	RPL APL HPL	STATION	DEFLECTION DATA	C/L ELEV	SLOPE TAN COS	COMMENTS
		HEADER RISER #4		-0+09.00		694.00		
	1	72" x 48" STEEL OUTLET	7.00 7.00 0.00				+90°00' INFINIT 0.00000	
				-0+09.00		701.00		
BRC-1	1	CLASS A 48" ECP BCOxBCO RESTRAINED BRICO COUPLING	0.00 0.00 0.00					
				-0+09.00		701.00		
E-1 C	1	(2.33' EXT) S CLASS A 48" ECP BCOxFLG ELBOW 90°00' (RADIUS = 2.67') (1.00' EXT) F VERT. LEG W/ REST. BRICO END HORZ. LEG W/ FLANGE	5.00 5.00 0.00 4.67 4.67 4.67	HPI -0+09.00	DEFL 90°00'DN	706.00	0°00' 0.00000 1.00000	
				-0+09.00 (4.67'RT)		706.00		
	1	48" BUTTERFLY VALVE (BY CONTRACTOR)	1.25 1.25 1.25					
				-0+09.00 (5.92'RT)		706.00		
A-2	1	CLASS A 48" ECP FLGxBCO FLANGE x REST. BRICO ADAPTER (1.09' OA)	1.09 1.09 1.09					
				-0+09.00 (7.01'RT)		706.00		
A-1	1	CLASS A 48" ECP BCOxPE REST. BRICO x PLAIN END WALL FITTING (2.25' OA - 18" WALL)	0.24 0.24 0.24					
				-0+24.00 (7.25'RT)		706.00		
97-13								

CRETEX PRESSURE PIPE, INC.

MILWAUKEE, WI
SB-97-13
HOWARD AVE. PURIFICATION PLANT
OZONATION FACILITIES
PROJECT

DATE: 05-09-1997
ENGINEER: KLH
SHEET: 10

REV	DESCRIPTION	DATE	BY
A	REVISED PIPE DESIGNS, HEADER PIPING AND ADDED OUTLETS PER NEW PLANS	05/23/97	KLH
B	REVISED LAYOUT PER NEW PLANS	06/06/97	KLH
C	ADDED 1' SHORT PER B&V FAX	06/30/97	KLH

PIECE DESIG	QTY	DESCRIPTION	RPL APL HPL	STATION	DEFLECTION DATA	C/L ELEV	SLOPE TAN COS	COMMENTS
		HEADER RISER #3		-0+24.00		694.00		
	1	72" x 48" STEEL OUTLET	7.00 7.00 0.00				+90°00' INFINIT 0.00000	
				-0+24.00		701.00		
BRC-1	1	CLASS A 48" ECP BCOxBCO RESTRAINED BRICO COUPLING	0.00 0.00 0.00					
				-0+24.00		701.00		
E-1 C	1	(2.33' EXT) S CLASS A 48" ECP BCOxFLG ELBOW 90°00' (RADIUS = 2.67') (1.00' EXT) F VERT. LEG W/ REST. BRICO END HORZ. LEG W/ FLANGE	5.00 5.00 0.00 4.67 4.67 4.67	HPI -0+24.00	DEFL 90°00'DN	706.00	0°00' 0.00000 1.00000	
				-0+24.00 (4.67'RT)		706.00		
	1	48" BUTTERFLY VALVE (BY CONTRACTOR)	1.25 1.25 1.25					
				-0+24.00 (5.92'RT)		706.00		
A-2	1	CLASS A 48" ECP FLGxBCO FLANGE x REST. BRICO ADAPTER (1.09' OA)	1.09 1.09 1.09					
				-0+24.00 (7.01'RT)		706.00		
A-1	1	CLASS A 48" ECP BCOxPE REST. BRICO x PLAIN END WALL FITTING (2.25' OA - 18" WALL)	0.24 0.24 0.24					
				-0+24.00 (7.25'RT)		706.00		
97-13								

CRETEX PRESSURE PIPE, INC.

MILWAUKEE, WI
SB-97-13
HOWARD AVE. PURIFICATION PLANT — DATE: 05-09-1997
OZONATION FACILITIES — ENGINEER: KLH
PROJECT — SHEET: 11

REV	DESCRIPTION	DATE	BY
A	REVISED PIPE DESIGNS, HEADER PIPING AND ADDED OUTLETS PER NEW PLANS	05/23/97	KLH
B	REVISED LAYOUT PER NEW PLANS	06/06/97	KLH
C	ADDED 1' SHORT PER B&V FAX	06/30/97	KLH

PIECE DESIG	QTY	DESCRIPTION	RPL APL HPL	STATION	DEFLECTION DATA	C/L ELEV	SLOPE TAN COS	COMMENTS
		HEADER RISER #2		-0+54.33		694.00		
	1	66" x 48" STEEL OUTLET	7.00 7.00 0.00				+90°00' INFINIT 0.00000	
				-0+54.33		701.00		
BRC-1	1	CLASS A 48" ECP BCOxBCO RESTRAINED BRICO COUPLING	0.00 0.00 0.00					
				-0+54.33		701.00		
E-1 C	1	(2.33' EXT) S CLASS A 48" ECP BCOxFLG ELBOW 90°00' (RADIUS = 2.67') (1.00' EXT) F VERT. LEG W/ REST. BRICO END HORZ. LEG W/ FLANGE	5.00 5.00 0.00 ——— 4.67 4.67 4.67	HPI -0+54.33	DEFL 90°00'DN	706.00	——— 0°00' 0.00000 1.00000	
				-0+54.33 (4.67'RT)		706.00		
	1	48" BUTTERFLY VALVE (BY CONTRACTOR)	1.25 1.25 1.25					
				-0+54.33 (5.92'RT)		706.00		
A-2	1	CLASS A 48" ECP FLGxBCO FLANGE x REST. BRICO ADAPTER (1.09' OA)	1.09 1.09 1.09					
				-0+54.33 (7.01'RT)		706.00		
A-1	1	CLASS A 48" ECP BCOxPE REST. BRICO x PLAIN END WALL FITTING (2.25' OA - 18" WALL)	0.24 0.24 0.24					
				-0+54.33 (7.25'RT)		706.00		
97-13								

CRETEX PRESSURE PIPE, INC.

MILWAUKEE, WI
SB-97-13
HOWARD AVE. PURIFICATION PLANT
OZONATION FACILITIES
PROJECT

DATE: 05-09-1997
ENGINEER: KLH
SHEET: 12

REV	DESCRIPTION	DATE	BY
A	REVISED PIPE DESIGNS, HEADER PIPING AND ADDED OUTLETS PER NEW PLANS	05/23/97	KLH
B	REVISED LAYOUT PER NEW PLANS	06/06/97	KLH
C	ADDED 1' SHORT PER B&V FAX	06/30/97	KLH

PIECE DESIG	QTY	DESCRIPTION	RPL APL HPL	STATION	DEFLECTION DATA	C/L ELEV	SLOPE TAN COS	COMMENTS
		HEADER RISER #1		-0+69.33		694.00		
	1	66" x 48" STEEL OUTLET	7.00 7.00 0.00	-0+69.33		701.00	+90°00' INFINIT 0.00000	
BRC-1	1	CLASS A 48" ECP BCOxBCO RESTRAINED BRICO COUPLING	0.00 0.00 0.00	-0+69.33		701.00		
E-1 C	1	(2.33' EXT) S CLASS A 48" ECP BCOxFLG ELBOW 90°00' (RADIUS = 2.67') (1.00' EXT) F VERT. LEG W/ REST. BRICO END HORZ. LEG W/ FLANGE	5.00 5.00 0.00 4.67 4.67 4.67	HPI -0+69.33	DEFL 90°00'DN	706.00	0°00' 0.00000 1.00000	
	1	48" BUTTERFLY VALVE (BY CONTRACTOR)	1.25 1.25 1.25	-0+69.33 (4.67'RT)		706.00		
A-2	1	CLASS A 48" ECP FLGxBCO FLANGE x REST. BRICO ADAPTER (1.09' OA)	1.09 1.09 1.09	-0+69.33 (5.92'RT)		706.00		
A-1	1	CLASS A 48" ECP BCOxPE REST. BRICO x PLAIN END WALL FITTING (2.25' OA - 18" WALL)	0.24 0.24 0.24	-0+69.33 (7.01'RT)		706.00		
97-13				-0+69.33 (7.25'RT)		706.00		

CRETEX PRESSURE PIPE, INC.

MILWAUKEE, WI
SB-97-13
HOWARD AVE. PURIFICATION PLANT — DATE: 05-09-1997
OZONATION FACILITIES — ENGINEER: KLH
PROJECT — SHEET: 13

REV	DESCRIPTION	DATE	BY
A	REVISED PIPE DESIGNS, HEADER PIPING AND ADDED OUTLETS PER NEW PLANS	05/23/97	KLH
B	REVISED LAYOUT PER NEW PLANS	06/06/97	KLH
C	REVISED PIPE DESIGNS PER B&V LOADS	07/10/97	KLH
D	REVISED SH-2 LL / STATIONING PER GRUNAU SURVEY	09/08/97	KLH

PIECE DESIG	QTY	DESCRIPTION	RPL APL HPL	STATION	DEFLECTION DATA	C/L ELEV	SLOPE TAN COS	COMMENTS
		BEGIN @ NORTH END OF OZONE CONTACTORS AND LAY 72" PIPE NORTH AND EAST TO EXISTING 72" PIPE.		0+00.00		694.00		
WF-2	1	CLASS A 72" ECP BQB BELL BOLT QT BELL WALL FITTING (TYPE II - 18" WALL) (1.79' OA) W/ BELL BOLT QT BELL (56 BOLTS)	0.29 0.29 0.29	0+00.29		694.00	0°00' 0.00000 1.00000	
SH-2	1	CLASS A (As=0.340) 72" ECP BQSxBQB SHORT (18.40' OA) W/ BELL BOLT QT JOINTS (56 BOLTS)	17.93 17.93 17.93	0+18.22		694.00		HOLD FOR FIELD VERIFICATION
E-4	1	CLASS A 72" ECP BQSxBQB ELBOW 90°00' W/ BELL BOLT QT JOINTS (56 BOLTS)	6.19 6.19 S 6.19 ——— 6.60 6.60 B 6.60	HPI 0+24.41 0+31.01	DEFL 90°00'RT	694.00 694.00	———	6.66' SPIGOT OA
S-2	2	CLASS A (As=0.340) 72" ECP BQSxBQB STRAIGHTS W/ BELL BOLT QT JOINTS (56 BOLTS)	19.92 39.84 39.84	0+70.85		694.00		
97-13								

CRETEX PRESSURE PIPE, INC.

MILWAUKEE, WI
SB-97-13
HOWARD AVE. PURIFICATION PLANT DATE: 05-09-1997
OZONATION FACILITIES ENGINEER: KLH
PROJECT SHEET: 14

REV	DESCRIPTION	DATE	BY
B	REVISED LAYOUT PER NEW PLANS	06/06/97	KLH
C	ADDED CLOSURE	06/24/97	KLH
D	REVISED PIPE DESIGNS PER B&V LOADS	07/10/97	KLH
E	REVISED SH-3 LL / STATIONING PER GRUNAU SURVEY	09/08/97	KLH

PIECE DESIG	QTY	DESCRIPTION	RPL APL HPL	STATION	DEFLECTION DATA	C/L ELEV	SLOPE TAN COS	COMMENTS
				0+70.85		694.00		
SH-3	1	CLASS A (As=0.340) 72" ECP BQSxBQB SHORT (6.13' OA) W/ BELL BOLT QT JOINTS (56 BOLTS)	5.66 5.66 5.66				0°00' 0.00000 1.00000	
				0+76.51		694.00		
FWC-1	1	CLASS A 72" ECP BQSxBQB FIELD WELDED CLOSURE W/ (1) DOUBLE SPIGOT ADAPTER (SUPPLY 6' CLOSURE CYLINDER)	4.00 4.00 4.00					
				0+80.51		694.00		
A-2	1	CLASS A 72" ECP BQSxFLG BELL BOLT QT SPIGOT x FLANGE ADAPTER (1.71' OA)	1.24 1.24 1.24					
				0+81.75		694.00		
	1	72" FLANGE x FLANGE BUTTERFLY VALVE (BY OTHERS)	1.50 1.50 1.50					
				0+83.25		694.00		
	1	72" FLANGE BRANCH OF T-1	5.25 5.25 5.25					
				0+88.50		694.00		
97-13								

CRETEX PRESSURE PIPE, INC.

MILWAUKEE, WI
SB-97-13
HOWARD AVE. PURIFICATION PLANT DATE: 05-09-1997
OZONATION FACILITIES ENGINEER: KLH
PROJECT SHEET: 15

REV	DESCRIPTION	DATE	BY
A	REVISED PIPE DESIGNS, HEADER PIPING AND ADDED OUTLETS PER NEW PLANS	05/23/97	KLH
B	REVISED LAYOUT PER NEW PLANS	06/06/97	KLH
C	REVISED PIPE DESIGNS PER B&V LOADS	07/10/97	KLH
D	ELIMINATED SH-6, ADDED A-4 PER GRUNAU SURVEY	09/08/97	KLH

PIECE DESIG	QTY	DESCRIPTION	RPL APL HPL	STATION	DEFLECTION DATA	C/L ELEV	SLOPE TAN COS	COMMENTS
		BEGIN @ EXISTING 72" STEEL PIPE AND LAY 72" PIPE TO CLOSURE.		0+02.00		694.00		
A-4	1	CLASS A 72" ECP STLxQTS STEEL PIPE x QUICK TEST SPIGOT ADAPTER (2.48' OA) W/ 1/2" x 6" W BUTT STRAP	2.00 2.00 2.00				0°00' 0.00000 1.00000	
				0+04.00		694.00		
T-1	1	CLASS A 72" ECP QTBxFLG 72" QTB x 72" FLG x 72" FLG TEE SOTH RUN W/ QUICK TEST BELL SOUTH RUN LL = 6.00' NORTH RUN W/ FLANGE; LL = OA = 6.00' BCH END W/ FLANGE BRANCH LL = OA = 5.25' ********** CONTRACTOR TO VERIFY EXISTING 72" JOINT LOCATION & TYPE. **********	12.00 12.00 12.00	EQU (0+88.50BK) (0+10.00AH) BCH (0+10.00)				
				0+16.00		694.00		
	1	72" FLANGE x FLANGE BUTTERFLY VALVE (BY OTHERS)	1.50 1.50 1.50					
				0+17.50		694.00		
A-3	1	CLASS A 72" ECP FLGxQTB FLANGE x QUICK TEST BELL ADAPTER (1.65' OA)	1.65 1.65 1.65					
				0+19.15		694.00		
97-13								

CRETEX PRESSURE PIPE, INC.

MILWAUKEE, WI
SB-97-13
HOWARD AVE. PURIFICATION PLANT DATE: 05-09-1997
OZONATION FACILITIES ENGINEER: KLH
PROJECT SHEET: 16

REV	DESCRIPTION	DATE	BY
A	REVISED PIPE DESIGNS, HEADER PIPING AND ADDED OUTLETS PER NEW PLANS	05/23/97	KLH
B	REVISED LAYOUT PER NEW PLANS	06/06/97	KLH
C	REVISED PIPE DESIGNS PER B&V LOADS	07/10/97	KLH
D	REVISED LENGTHS/STATIIONING PER GRUNAU SURVEY	09/08/97	KLH

PIECE DESIG	QTY	DESCRIPTION	RPL APL HPL	STATION	DEFLECTION DATA	C/L ELEV	SLOPE TAN COS	COMMENTS
				0+19.15		694.00		
FRC-1	1	CLASS A 72" ECP QTSxQTB FOLLOWER RING CLOSURE W/ (2) DOUBLE QT SPIGOT ADAPTERS (SUPPLY 6' CLOSURE CYLINDER)	5.16 5.16 5.16				0°00' 0.00000 1.00000	
				0+24.31		694.00		

97-13

CRETEX PRESSURE PIPE, INC

AWWA C301-92
DESIGN SPECIFICATION SHEETS FOR:

CITY OF
MILWAUKEE, WI

HOWARD AVE. PURIFICATION PLANT
OZONATION FACILITIES PROJECT

BVCI/JSA JOINT VENTURE

CRETEX PRESSURE PIPE, INC.

SPECIFICATION NO. SB-97-13

66", 72" PRESTRESSED CONCRETE CYLINDER PIPE W / RUBBER & STEEL JOINTS
MILWAUKEE, WI
HOWARD AVE. PURIFICATION PLANT
RAW WATER & OZONATION PIPING
CITY OF MILWAUKEE, WI
BLACK & VEATCH / JSA JOINT VENTURE

NOMINAL DIAMETER - inches	66	72
PIPE TYPE	ECP	ECP
CLASS DESIGNATION	A	A
APPROXIMATE FOOTAGE - feet	40	430
NOM. CYL "t", (t_y) - inches (+/-.006") ASTM A570 Gr. 33 and ASTM A568	0.0598	0.0598
NOMINAL CYLINDER DIAMETER - inches	69.25	75.5
CYLINDER TEST PRESSURE - psi	39	36
WIRE SIZE - ASTM A648	No. 6	No. 6
WIRE CLASS	III	III
WIRE AREA, (A_s) - in²/ft	0.319	0.340
NO. OF WRAPS OF WIRE PER FT.	11.02	11.74
MIN. ULTIMATE WIRE STRENGTH, (f_{su}) - psi	252,000	252,000
WIRE WRAPPING STRESS, (f_{sg}) - psi	189,000	189,000
DYNANOMETER (1 wire) - lbs	5,472	5,472
DECOMPRESSION PRESSURE, (P_0) - psi	97	97
FINAL PRESTRESS IN CORE CONCRETE, (f_{cr}) - psi	600	600
MIN. CORE CONCRETE COMPRESSIVE STRENGTH AT WRAPPING (Rodded Cyl.), (f_{ci}') - psi	3,000	3,000
MIN. 28-DAY COMPRESSIVE STRENGTH OF CORE CONCRETE (Rodded Cyl.), (f_c') - psi	4,500	4,500
CORE THICKNESS, (h_c) - inches	5	5.5
MIN. COATING THICKNESS OVER WIRE - inches	0.750	0.750
ZINC COATED JOINT RINGS:		
SPIGOT RING WIDTH - inches	7.25	7.25
BELL RING WIDTH - inches	8	8
BELL RING THICKNESS - inches	0.25	0.25
JOINT DIAMETER - inches	70.125	76.375
SECONDARY GASKET DIAMETER - inches	21/32	21/32
PRIMARY GASKET DIAMETER - inches	25/32	25/32
JOINT DEPTH - inches	6.25	6.25
SPIGOT DEPTH - inches	6.75	6.75
CREEP - inches	0.375	0.375
AVERAGE PIPE LAID LENGTH - feet	13.38	19.91

MANUFACTURED IN ACCORDANCE WITH AWWA C301 - 92 & CONTRACT DOCUMENTS
DESIGNED IN ACCORDANCE WITH AWWA C304 - 92 & CONTRACT DOCUMENTS

WORKING PRESSURE, (P_w) - psi	10	10
TRANSIENT PRESSURE, (P_t) - psi	0	10
EXTERNAL DEAD LOAD, (W_e) - lbs/ft	10,600	18,400
TRANSIENT LOAD, (W_t) - lbs/ft	2,600	1,000

REV. B REVISED 72" LIVE LOAD KLH 9/26/97

COMPILED Klg APPROVED Klg DATE: 9/26/97

CRETEX PRESSURE PIPE, INC.

SPECIFICATION NO. SB-97-13
DESIGN COMPUTATIONS
AWWA C304-92

MILWAUKEE, WI

PRESTRESSED CONCRETE CYLINDER PIPE W/ RUBBER & STEEL JOINTS

PIPE DATA

NOMINAL DIAMETER - inches	66	72
PIPE TYPE	ECP	ECP
CLASS DESIGNATION	A	A
CORE THICKNESS, (h_c) - inches	5	5.5
MIN. COATING THICKNESS OVER WIRE - inches	0.750	0.750
NOM. CYL "t", (t_y) - inches"	0.0598	0.0598
WIRE AREA, (A_s) - in²/ft	0.319	0.340
CYLINDER AREA, (A_y) - in²/ft	0.7176	0.7176
CORE AREA, (A_c) - in²/ft	59.2824	65.2824

MATERIAL PROPERTIES

MIN. CORE CONCRETE COMP. STRENGTH AT WRAPPING AT WRAPPING (Rodded Cyl.), (f_{ci}') - psi	3,000	3,000
MIN. DESIGN 28-DAY COMP. STRENGTH OF CORE (Rodded Cyl.), (f_c') - psi	4,500	4,500
DESIGN 28-DAY TEN. STRENGTH OF CORE, (f_t') - psi	470	470
MIN. DESIGN 28-DAY COMP. STRENGTH OF COATING, (f_m') - psi	5,500	5,500
DESIGN 28-DAY TEN. STRENGTH OF COATING, (f_{tm}') - psi	519	519
DESIGN CYLINDER YIELD STRENGTH, (f_{yy}) - psi	33,000	33,000
MIN. ULTIMATE WIRE STRENGTH, (f_{su}) - psi	252,000	252,000
WIRE WRAPPING STRESS, (f_{sg}) - psi	189,000	189,000
PRESTRESS WIRE TO CORE MODULAR RATIO, (n)	7.742	7.742
STEEL CYLINDER TO CORE MODULAR RATIO, (n')	8.295	8.295
CONCRETE CREEP FACTOR MULTIPLIER, (C_ϕ)	1.00	1.00
CONCRETE SHRINKAGE STRAIN MULTIPLIER, (C_s)	1.00	1.00
CONCRETE MODULUS OF ELASTICITY MULTIPLIER, (C_e)	1.00	1.00
WIRE INTRINSIC RELAXATION MULTIPLIER, (C_r)	1.00	1.00

EXPOSURE

RELATIVE HUMIDITY, (RH) - percent	60	60
TIME PERIOD OF EXPOSURE OF PIPE TO OUTDOOR ENVIRONMENT, (t_1) - days	270	270
TIME PERIOD OF EXPOSURE OF PIPE TO BURIAL ENVIRONMENT BEFORE WATER FILLING, (t_2) - days	90	90

REV. A REVISED 72" LIVE LOAD KLH 9/26/97

COMPILED KLH APPROVED KLH DATE: 9/26/97

CRETEX PRESSURE PIPE, INC.

SPECIFICATION NO. SB-97-13
DESIGN COMPUTATIONS
AWWA C304-92

MILWAUKEE, WI

PRESTRESSED CONCRETE CYLINDER PIPE W/ RUBBER & STEEL JOINTS

NOMINAL DIAMETER - inches	66	72
PIPE TYPE	ECP	ECP
CLASS DESIGNATION	A	A

INTERNAL PRESSURES

WORKING PRESSURE, (P_w) - psi	10	10
TRANSIENT PRESSURE, (P_t) - psi	0	10

BEDDING CONDITIONS

BEDDING TYPE	Olander	Olander
BEDDING ANGLE - degrees	120	120
@ INVERT		
MOMENT COEF. FROM EXTERNAL LOAD, (C_{m1e})	0.1089	0.1089
MOMENT COEF. FROM PIPE WEIGHT, (C_{m1p})	0.2157	0.2157
MOMENT COEF. FROM FLUID WEIGHT, (C_{m1f})	0.0911	0.0911
THRUST COEF. FROM EXTERNAL LOAD, (C_{n1e})	0.3155	0.3155
THRUST COEF. FROM PIPE WEIGHT, (C_{n1p})	0.1029	0.1029
THRUST COEF. FROM FLUID WEIGHT, (C_{n1f})	-0.2326	-0.2326
@ SPRINGLINE		
MOMENT COEF. FROM EXTERNAL LOAD, (C_{m2e})	0.0912	0.0912
MOMENT COEF. FROM PIPE WEIGHT, (C_{m2p})	0.1016	0.1016
MOMENT COEF. FROM FLUID WEIGHT, (C_{m2f})	0.0770	0.0770
THRUST COEF. FROM EXTERNAL LOAD, (C_{n2e})	0.5157	0.5157
THRUST COEF. FROM PIPE WEIGHT, (C_{n2p})	0.3026	0.3026
THRUST COEF. FROM FLUID WEIGHT, (C_{n2f})	-0.0645	-0.0645

EXTERNAL LOADS

EXTERNAL DEAD LOAD, (W_e) - lbs/ft	10,600	18,400
FLUID WEIGHT, (W_f) - lbs/ft	1,483	1,764
PIPE WEIGHT, (W_p) - lbs/ft	1,391	1,642
TRANSIENT LOAD, (W_t) - lbs/ft	2,600	1,000

REV. A REVISED 72" LIVE LOAD KLH 9/26/97

COMPILED KLH APPROVED KLH DATE: 9/26/97

CRETEX PRESSURE PIPE, INC.

SPECIFICATION NO. SB-97-13
DESIGN COMPUTATIONS
AWWA C304-92

MILWAUKEE, WI

PRESTRESSED CONCRETE CYLINDER PIPE W/ RUBBER & STEEL JOINTS

NOMINAL DIAMETER - inches	66	72
PIPE TYPE	ECP	ECP
CLASS DESIGNATION	A	A

INITIAL PRESTRESS

INTIAL PRESTRESS IN CORE CONCRETE, (f_{ic}) - psi	876	857
INTIAL PRESTRESS IN STEEL CYLINDER, (f_{iy}) - psi	8,220	8,039
INTIAL STRESS IN PRESTRESS WIRE, (f_{is}) - psi	-181,342	-181,511
PRESTRESS WIRE TO CORE MODULAR RATIO AT WRAPPING, (n_i)	8.739	8.739
STEEL CYLINDER TO CORE MODULAR RATIO AT WRAPPING, (n_i')	9.380	9.380

FINAL PRESTRESS

DECOMPRESSION PRESSURE, (P_0) - psi	97	97
FINAL PRESTRESS IN CORE CONCRETE, (f_{cr}) - psi	600	600
FINAL PRESTRESS IN STEEL CYLINDER, (f_{yr}) - psi	18,851	18,474
FINAL STRESS IN PRESTRESS WIRE, (f_{sr1}) - psi	-153,659	-153,902
WIRE RELAXATION FACTOR, (R)	0.092166	0.092772
DESIGN CREEP FACTOR FOR BURIED PIPE, (ϕ)	1.416	1.392
DESIGN SHRINKAGE STRAIN FOR BURIED PIPE, (s)	0.000203	0.000195
PRESTRESS WIRE TO CORE MODULAR RATIO AT MATURITY, (n_r)	7.456	7.456
STEEL CYLINDER TO CORE MODULAR RATIO AT MATURITY, (n_r')	7.937	7.937

PIPE CHARACTERISTICS

MAX. PRESSURE LIMIT WORKING PLUS TRANS. COND., (P_k') - psi	152	152
BURST PRESSURE, (P_b) - psi	271	260

REV. A REVISED 72" LIVE LOAD KLH 9/26/97

COMPILED KLH APPROVED KLH DATE: 9/26/97

CRETEX PRESSURE PIPE, INC.

SPECIFICATION NO. SB-97-13

84" PRESTRESSED CONCRETE CYLINDER PIPE W / RUBBER & STEEL JOINTS
MILWAUKEE, WI
HOWARD AVE. PURIFICATION PLANT
RAW WATER & OZONATION PIPING
CITY OF MILWAUKEE, WI
BLACK & VEATCH / JSA JOINT VENTURE

NOMINAL DIAMETER - inches	84
PIPE TYPE	ECP
CLASS DESIGNATION	A
APPROXIMATE FOOTAGE - feet	52
NOM. CYL "t", (t_y) - inches (+/-.006") ASTM A570 Gr. 33 and ASTM A568	0.0598
NOMINAL CYLINDER DIAMETER - inches	87.875
CYLINDER TEST PRESSURE - psi	31
WIRE SIZE - ASTM A648	No. 6
WIRE CLASS	III
WIRE AREA, (A_s) - in²/ft	0.383
NO. OF WRAPS OF WIRE PER FT.	13.23
MIN. ULTIMATE WIRE STRENGTH, (f_{su}) - psi	252,000
WIRE WRAPPING STRESS, (f_{sg}) - psi	189,000
DYNANOMETER (1 wire) - lbs	5,472
DECOMPRESSION PRESSURE, (P_0) - psi	98
FINAL PRESTRESS IN CORE CONCRETE, (f_{cr}) - psi	601
MIN. CORE CONCRETE COMPRESSIVE STRENGTH AT WRAPPING (Rodded Cyl.), (f_{ci}') - psi	3,000
MIN. 28-DAY COMPRESSIVE STRENGTH OF CORE CONCRETE (Rodded Cyl.), (f_c') - psi	4,500
CORE THICKNESS, (h_c) - inches	6.5
MIN. COATING THICKNESS OVER WIRE - inches	0.750
ZINC COATED JOINT RINGS:	
SPIGOT RING WIDTH - inches	7.25
BELL RING WIDTH - inches	8
BELL RING THICKNESS - inches	0.25
JOINT DIAMETER - inches	88.75
SECONDARY GASKET DIAMETER - inches	21/32
PRIMARY GASKET DIAMETER - inches	25/32
JOINT DEPTH - inches	6.25
SPIGOT DEPTH - inches	6.75
CREEP - inches	0.5
AVERAGE PIPE LAID LENGTH - feet	19.95

MANUFACTURED IN ACCORDANCE WITH AWWA C301 - 92 & CONTRACT DOCUMENTS
DESIGNED IN ACCORDANCE WITH AWWA C304 - 92 & CONTRACT DOCUMENTS

WORKING PRESSURE, (P_w) - psi	15
TRANSIENT PRESSURE, (P_t) - psi	15
EXTERNAL DEAD LOAD, (W_e) - lbs/ft	13,000
TRANSIENT LOAD, (W_t) - lbs/ft	1,100

REV. A REVISED PIPE DESIGNS PER NEW B&V LOADS KLH 7/10/97

COMPILED [illegible] APPROVED [illegible] DATE: 7/10/97

CRETEX PRESSURE PIPE, INC.

SPECIFICATION NO. SB-97-13
DESIGN COMPUTATIONS
AWWA C304-92

MILWAUKEE, WI

PRESTRESSED CONCRETE CYLINDER PIPE W/ RUBBER & STEEL JOINTS

PIPE DATA

NOMINAL DIAMETER - inches	84
PIPE TYPE	ECP
CLASS DESIGNATION	A
CORE THICKNESS, (h_c) - inches	6.5
MIN. COATING THICKNESS OVER WIRE - inches	0.750
NOM. CYL "t", (t_y) - inches"	0.0598
WIRE AREA, (A_s) - in²/ft	0.383
CYLINDER AREA, (A_y) - in²/ft	0.7176
CORE AREA, (A_c) - in²/ft	77.2824

MATERIAL PROPERTIES

MIN. CORE CONCRETE COMP. STRENGTH AT WRAPPING AT WRAPPING (Rodded Cyl.), (f_{ci}') - psi	3,000
MIN. DESIGN 28-DAY COMP. STRENGTH OF CORE (Rodded Cyl.), (f_c') - psi	4,500
DESIGN 28-DAY TEN. STRENGTH OF CORE, (f_t') - psi	470
MIN. DESIGN 28-DAY COMP. STRENGTH OF COATING, (f_m') - psi	5,500
DESIGN 28-DAY TEN. STRENGTH OF COATING, (f_{tm}') - psi	519
DESIGN CYLINDER YIELD STRENGTH, (f_{yy}) - psi	33,000
MIN. ULTIMATE WIRE STRENGTH, (f_{su}) - psi	252,000
WIRE WRAPPING STRESS, (f_{sg}) - psi	189,000
PRESTRESS WIRE TO CORE MODULAR RATIO, (n)	7.742
STEEL CYLINDER TO CORE MODULAR RATIO, (n')	8.295
CONCRETE CREEP FACTOR MULTIPLIER, (C_ϕ)	1.00
CONCRETE SHRINKAGE STRAIN MULTIPLIER, (C_s)	1.00
CONCRETE MODULUS OF ELASTICITY MULTIPLIER, (C_e)	1.00
WIRE INTRINSIC RELAXATION MULTIPLIER, (C_r)	1.00

EXPOSURE

RELATIVE HUMIDITY, (RH) - percent	60
TIME PERIOD OF EXPOSURE OF PIPE TO OUTDOOR ENVIRONMENT, (t_1) - days	270
TIME PERIOD OF EXPOSURE OF PIPE TO BURIAL ENVIRONMENT BEFORE WATER FILLING, (t_2) - days	90

REV. A REVISED PIPE DESIGNS PER NEW B&V LOADS KLH 7/10/97

COMPILED KLH APPROVED KLH DATE: 7/10/97

CRETEX PRESSURE PIPE, INC.

SPECIFICATION NO. SB-97-13
DESIGN COMPUTATIONS
AWWA C304-92

MILWAUKEE, WI

PRESTRESSED CONCRETE CYLINDER PIPE W/ RUBBER & STEEL JOINTS

NOMINAL DIAMETER - inches	84
PIPE TYPE	ECP
CLASS DESIGNATION	A

INTERNAL PRESSURES

WORKING PRESSURE, (P_w) - psi	15
TRANSIENT PRESSURE, (P_t) - psi	15

BEDDING CONDITIONS

BEDDING TYPE	Olander
BEDDING ANGLE - degrees	120
@ INVERT	
MOMENT COEF. FROM EXTERNAL LOAD, (C_{m1e})	0.1089
MOMENT COEF. FROM PIPE WEIGHT, (C_{m1p})	0.2157
MOMENT COEF. FROM FLUID WEIGHT, (C_{m1f})	0.0911
THRUST COEF. FROM EXTERNAL LOAD, (C_{n1e})	0.3155
THRUST COEF. FROM PIPE WEIGHT, (C_{n1p})	0.1029
THRUST COEF. FROM FLUID WEIGHT, (C_{n1f})	-0.2326
@ SPRINGLINE	
MOMENT COEF. FROM EXTERNAL LOAD, (C_{m2e})	0.0912
MOMENT COEF. FROM PIPE WEIGHT, (C_{m2p})	0.1016
MOMENT COEF. FROM FLUID WEIGHT, (C_{m2f})	0.0770
THRUST COEF. FROM EXTERNAL LOAD, (C_{n2e})	0.5157
THRUST COEF. FROM PIPE WEIGHT, (C_{n2p})	0.3026
THRUST COEF. FROM FLUID WEIGHT, (C_{n2f})	-0.0645

EXTERNAL LOADS

EXTERNAL DEAD LOAD, (W_e) - lbs/ft	13,000
FLUID WEIGHT, (W_f) - lbs/ft	2,401
PIPE WEIGHT, (W_p) - lbs/ft	2,206
TRANSIENT LOAD, (W_t) - lbs/ft	1,100

REV. A REVISED PIPE DESIGNS PER NEW B&V LOADS KLH 7/10/97

COMPILED KLH APPROVED KLH DATE: 7/10/97

CRETEX PRESSURE PIPE, INC.

SPECIFICATION NO. SB-97-13
DESIGN COMPUTATIONS
AWWA C304-92

MILWAUKEE, WI

PRESTRESSED CONCRETE CYLINDER PIPE W/ RUBBER & STEEL JOINTS

NOMINAL DIAMETER - inches	84
PIPE TYPE	ECP
CLASS DESIGNATION	A

INITIAL PRESTRESS

INTIAL PRESTRESS IN CORE CONCRETE, (f_{ic}) - psi	829.
INTIAL PRESTRESS IN STEEL CYLINDER, (f_{iy}) - psi	7,773
INTIAL STRESS IN PRESTRESS WIRE, (f_{is}) - psi	-181,759
PRESTRESS WIRE TO CORE MODULAR RATIO AT WRAPPING, (n_i)	8.739
STEEL CYLINDER TO CORE MODULAR RATIO AT WRAPPING, (n_i')	9.380

FINAL PRESTRESS

DECOMPRESSION PRESSURE, (P_0) - psi	98
FINAL PRESTRESS IN CORE CONCRETE, (f_{cr}) - psi	601
FINAL PRESTRESS IN STEEL CYLINDER, (f_{yr}) - psi	17,810
FINAL STRESS IN PRESTRESS WIRE, (f_{sr1}) - psi	-154,370
WIRE RELAXATION FACTOR, (R)	0.093655
DESIGN CREEP FACTOR FOR BURIED PIPE, (ϕ)	1.353
DESIGN SHRINKAGE STRAIN FOR BURIED PIPE, (s)	0.000180
PRESTRESS WIRE TO CORE MODULAR RATIO AT MATURITY, (n_r)	7.456
STEEL CYLINDER TO CORE MODULAR RATIO AT MATURITY, (n_r')	7.937

PIPE CHARACTERISTICS

MAX. PRESSURE LIMIT WORKING PLUS TRANS. COND., (P_k') - psi	152
BURST PRESSURE, (P_b) - psi	244

REV. A REVISED PIPE DESIGNS PER NEW B&V LOADS KLH 7/10/97

COMPILED KLH APPROVED KLH DATE: 7/10/97