City of Milwaukee

Department of Public Works

Infrastructure Services Division

Bridges & Buildings Section

7th District Police Station RTUs Replacement

Issued For Bid

3626 W. Fond du Lac Ave.
Milwaukee, Wisconsin

December 28, 2015

Project Number
PL120130100

SHEET INDEX

Drawing Number	Description
T001	TITLE SHEET
A110	PARTIAL BASEMENT FLOOR DEMOLITION & NEW WORK PLAN
A120	PARTIAL FIRST FLOOR DEMOLITION & NEW WORK PLAN
A130	ROOF DEMOLITION & NEW WORK PLAN
M001	MECHANICAL SYMBOLS & ABBREVIATIONS
MD101	MECHANICAL BASEMENT DEMOLITION PLAN
MD102	MECHANICAL OVERALL FIRST FLOOR DEMOLITION PLAN
MD103	MECHANICAL PARTIAL FIRST FLOOR DEMOLITION PLAN - AREA A
MD104	MECHANICAL PARTIAL FIRST FLOOR DEMOLITION PLAN - AREA B
MD105	MECHANICAL OVERALL ROOF DEMOLITION PLAN
MD106	MECHANICAL PARTIAL ROOF DEMOLITION PLAN - AREA A
M101	MECHANICAL BASEMENT PLAN
M102	MECHANICAL OVERALL FIRST FLOOR PLAN
M103	MECHANICAL PARTIAL FIRST FLOOR PLAN - AREA A
M104	MECHANICAL PARTIAL FIRST FLOOR PLAN - AREA B
M105	MECHANICAL OVERALL ROOF PLAN
M106	MECHANICAL PARTIAL ROOF PLAN - AREA A
M107	MECHANICAL PARTIAL ROOF PLAN - AREA B
M501	MECHANICAL DETAILS
M502	MECHANICAL DETAILS
M601	MECHANICAL SCHEDULES
E001	ELECTRICAL SYMBOLS & ABBREVIATIONS
ED101	ELECTRICAL BASEMENT DEMOLITION PLAN
ED102	ELECTRICAL PARTIAL FIRST FLOOR DEMOLITION PLAN - AREA A
ED103	ELECTRICAL PARTIAL FIRST FLOOR DEMOLITION PLAN - AREA B
ED104	ELECTRICAL PARTIAL ROOF DEMOLITION PLAN - AREA A
ED105	ELECTRICAL PARTIAL ROOF DEMOLITION PLAN - AREA B
E101	ELECTRICAL BASEMENT PLAN
E102	ELECTRICAL PARTIAL FIRST FLOOR PLAN - AREA A
E103	ELECTRICAL PARTIAL FIRST FLOOR PLAN - AREA B
E104	ELECTRICAL PARTIAL ROOF PLAN - AREA A
E105	ELECTRICAL PARTIAL ROOF PLAN - AREA B
E501	MECHANICAL EQUIPMENT SCHEDULE
E601	ELECTRICAL PANEL SCHEDULES
E602	ELECTRICAL PANEL SCHEDULES
E603	ELECTRICAL PANEL SCHEDULES
E701	ELECTRICAL ONE-LINE DIAGRAM

GENERAL NOTES:

1. BEFORE SUBMITTING A BID, THE CONTRACTOR SHALL OBTAIN A COMPLETE SET OF BIDDING DOCUMENTS TO DEVELOP A COMPLETE UNDERSTANDING OF THE ENTIRE PROJECT. THE CONTRACTOR SHALL VISIT THE WORK SITE FOR AN UNDERSTANDING OF SITE CONDITIONS AND PERFORM ANY INVESTIGATIONS NECESSARY TO DEVELOP A COST PROPOSAL FOR THE WORK. THE SUBMISSION OF A PROPOSAL WILL BE CONSTRUED AS EVIDENCE THAT SUCH AN EXAMINATION HAS BEEN MADE. NO CONSIDERATION OR ALLOWANCE WILL BE MADE FOR CLAIMS FOR LABOR, EQUIPMENT, OR MATERIALS REQUIRED OR FOR DIFFICULTIES ENCOUNTERED THAT COULD HAVE BEEN FORESEEN HAD A SITE EXAMINATION BEEN MADE.
2. EXISTING CONDITIONS ARE SHOWN BASED ON INFORMATION OBTAINED FROM FIELD SURVEYS AND EXISTING BUILDING DOCUMENTS. CONTRACTOR SHALL VERIFY EXISTING CONDITIONS BEFORE PROCEEDING WITH WORK. IF EXISTING CONDITIONS DIFFER FROM DRAWINGS TO THE EXTENT THAT THE DRAWING INTENTION CANNOT BE ACHIEVED, CONTACT THE ENGINEER FOR DIRECTION.
3. WHERE DEMOLITION OF EQUIPMENT OR SYSTEMS IS CALLED FOR ON THE DRAWINGS THE INTENTION OF THIS WORK IS THAT ALONG WITH THE ITEMS IDENTIFIED FOR DEMOLITION RELATED SUPPORTS, PIPING, AND MISCELLANEOUS RELATED ITEMS THAT WILL NO LONGER HAVE A PURPOSE AFTER DEMOLITION OF THE EQUIPMENT OR SYSTEM WILL ALSO BE DEMOLISHED.
4. EXISTING SYSTEMS SERVE OCCUPIED AREAS. DEMOLITION WORK AND INSTALLATION OF NEW SYSTEMS NEED TO BE COORDINATED DURING CONSTRUCTION TO MINIMIZE DOWNTIME. COORDINATE SCHEDULE WITH CITY FOR TYING OF EXISTING TO NEW SYSTEMS. THE LOCATION OF NEW ROOFTOP EQUIPMENT ALLOWS THE NEW EQUIPMENT TO BE INSTALLED BEFORE DEMOLITION OF EXISTING RTUS.
5. CONTRACTOR SHALL REMOVE ALL DEBRIS RESULTING FROM DEMOLITION AND INSTALLATION OF NEW WORK DAILY. THE WORK AREAS SHALL BE KEPT CLEAN AT ALL TIMES TO THE SATISFACTION OF THE CITY.
6. ANY PENETRATIONS OF THE ELEVATOR MACHINE ROOM WALLS SHALL BE FIRESTOPPED CONSISTENT WITH A 2 HOUR RATED WALL USING UL LISTED MATERIALS AND METHODS.
7. THE CONTRACTOR SHALL SIGN IN AND IDENTIFY ALL PERSONNEL WORKING AT THE SITE ON A DAILY BASIS WITH THE SUPERVISOR IN CHARGE AT THE SITE. ALL PERSONNEL LEAVING THE SITE WILL SIGN OUT PRIOR TO DEPARTURE.
8. IF HAZARDOUS MATERIALS ARE IN ANY WAY SUSPECTED, INCLUDING BUT NOT LIMITED TO ASBESTOS, POLLUTANTS OR PCB, INFORM THE CITY IMMEDIATELY AND SUSPEND PROGRESS ON THAT PORTION OF WORK.

LOCATION MAPS

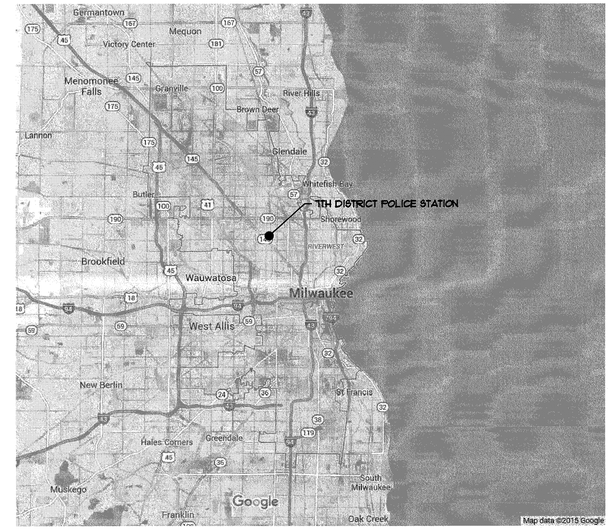

AREA MAP

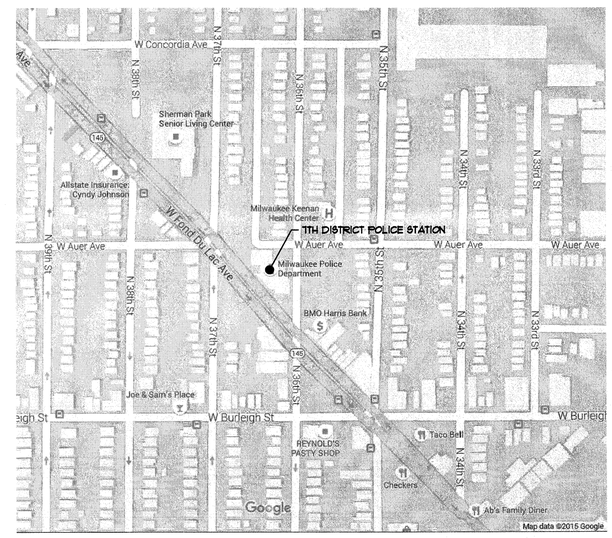

VICINITY MAP

City of Milwaukee
Department of Public Works
Infrastructure Services Division
Bridges & Buildings Section

GRUMMAN/BUTKUS ASSOCIATES
Energy Efficiency Consultants and Sustainable Design Engineers
1011 North Mayfair Road, Suite 300
414 475.8990
Copyright © 2015 Grumman/Butkus Associates

WISCONSIN KAREN J. LONG 42811-6 WAUWATOSA, WI PROFESSIONAL ENGINEER
1/12/16
E001 - E701

WISCONSIN RICHARD D. KATZUNG 28268 WAUKESHA, WI PROFESSIONAL ENGINEER
1-12-16
M001 - M601

7th District Police Station RTUs Replacement
3626 West Fond du Lac Avenue
TITLE SHEET

DESIGNED BY	DEB
DRAWN BY	DEB
CHECKED BY	RDK
DATE 12/28/15	SCALE NONE
JOB NUMBER	PL120130100
SHEET NUMBER	T001

GENERAL DEMOLITION NOTES TO CONTRACTOR(S):

1. DRAWINGS WERE PREPARED BASED ON AVAILABLE EXISTING BUILDING DOCUMENTATION AND FIELD MEASUREMENTS. PRIOR TO CONSTRUCTION, CONTRACTOR SHALL FIELD VERIFY EXISTING CONDITIONS AND DIMENSIONS TO SATISFY THEIR EXECUTION OF WORK. ANY DISCREPANCIES SHALL BE REPORTED TO THE ARCHITECT IMMEDIATELY.
2. EXISTING WALLS, DOORS, FRAMES, ETC. THAT ARE SCHEDULED TO BE REMOVED ARE SHOWN BY DASHED LINE TYPES. SEE DEMOLITION KEY NOTES FOR SPECIFIC INSTRUCTIONS.
3. EXISTING WALLS, DOORS, FRAMES, ETC. THAT ARE SCHEDULED TO REMAIN, SHOWN IN A LIGHT LINE WEIGHT, ARE TO BE PROTECTED FROM DAMAGE DURING DEMOLITION AND CONSTRUCTION. ANY SUCH EXISTING CONDITIONS WHICH ARE DAMAGED OR BECOME UNSTABLE DUE TO OTHER DEMOLITION SHALL BE REPLACED AT NO COST TO THE OWNER, WITH NEW CONSTRUCTION TO MATCH.
4. REMOVAL OF ALL HAZARDOUS MATERIALS IS THE SOLE RESPONSIBILITY OF THE OWNER. THE EXISTING BUILDING IS ASSUMED "NOT TO" CONTAIN SUCH MATERIALS. SHOULD ANY MATERIAL BE FOUND, OR IS SUSPECTED TO CONTAIN BE HAZARDOUS MATERIAL, THE CONTRACTOR SHOULD STOP WORK IMMEDIATELY AND NOTIFY OWNER AND ARCHITECT.
5. SEE MEP DRAWINGS FOR ELECTRICAL, PLUMBING, AND HVAC REMOVAL. THESE FIXTURES AND THEIR RELATED SYSTEMS ARE NOT A REPRESENTATION OF ALL FIXTURES & SYSTEMS AND ARE SHOWN ON SHOWN ON THIS SHEET FOR COORDINATION PURPOSES ONLY.
6. SEE REFLECTED CEILING PLANS FOR THE REMOVAL OR RELOCATION OF CEILING RELATED ITEMS. SEE MEP DRAWINGS FOR THE REMOVAL OF THEIR SYSTEMS.
7. REMOVE AND SALVAGE ALL MISCELLANEOUS ITEMS FROM AREAS WHERE WORK IS SCHEDULED. I.E. CLOCKS, COAT HOOKS, TACK BOARDS, BULLETIN BOARDS, WHITE BOARD, SIGNAGE, SPEAKERS, ETC.

GENERAL NOTES TO CONTRACTOR(S):

1. THESE DRAWINGS ARE DIAGRAMMATIC AND SHOW THE INTENT OF THE PROJECT, BUT DO NOT NECESSARILY INDICATE ALL MATERIALS OR METHODS OF CONSTRUCTION. ALL CONTRACTORS ARE RESPONSIBLE TO REVIEW THE DOCUMENTS THOROUGHLY, AND FOR PROVIDING ALL MATERIALS AND MEANS OF CONSTRUCTION NECESSARY FOR THE COMPLETION OF THE WORK IN ACCORDANCE WITH THE INTENT OF THE DRAWINGS.
2. ALL WORK, OF ALL TRADES, SHALL BE COMPLETED IN ACCORDANCE WITH ALL LOCAL GOVERNING CODES AND ORDINANCES.
3. EACH CONTRACTOR SHALL COORDINATE THEIR WORK WITH THE OWNER, THE OWNER'S OTHER CONTRACTORS, AND ALL OTHERS AT THE SITE.
4. EACH CONTRACTOR IS TO OBTAIN AND PAY FOR PERMITS, LICENSES, FEES, ETC. AS REQUIRED FOR THE COMPLETION OR THEIR PORTION OF WORK.
5. EACH CONTRACTOR SHALL VERIFY ALL CONDITIONS AND DIMENSIONS AT THE SITE TO SATISFY THEIR EXECUTION OF THE WORK. ANY DISCREPANCIES SHALL BE REPORTED TO THE ARCHITECT. NEITHER THE OWNER NOR THE ARCHITECT ASSUMES RESPONSIBILITY FOR CONDITIONS OR DIMENSIONS SHOWN AS EXISTING.
6. IF ANY CONTRACTOR OBSERVES THAT ANY OF THE CONTRACT DOCUMENTS ARE AT VARIANCE WITH APPLICABLE LAWS, STATUES, BUILDING CODES, OR ORDINANCES, THEY SHALL PROMPTLY NOTIFY THE ARCHITECT.
7. UNLESS NOTED OTHERWISE, ALL HOLES FOR PLUMBING, ELECTRICAL, HVAC, FIRE PROTECTION CONDUIT, PIPING, OR DUCTWORK ARE TO BE REPAIRED BY THE ASSOCIATED TRADE.
8. ALL TRADES SHALL TAKE CARE TO MAKE HOLES ONLY AS LARGE AS NECESSARY. ALL HOLES SHALL BE NEATLY CUT. DO NOT PUNCH OR POUND HOLES IN WALLS OR ROOF DECK.
9. ANY HOLES OR PENETRATIONS THROUGH FIRE RATED CONSTRUCTION SHALL BE APPROPRIATELY FIRE STOPPED, DAMPENED, OR SEALED AS REQUIRED BY CODE.
10. EACH CONTRACTOR SHALL INCLUDE NECESSARY DEMOLITION AND REMOVAL OF ALL MATERIAL AS REQUIRED TO PERFORM THEIR WORK.
11. REMOVAL OF ALL HAZARDOUS CONTAINING MATERIALS IS THE SOLE RESPONSIBILITY OF THE OWNER. SHOULD ANY MATERIALS BE ENCOUNTERED DURING ANY OF THE CONSTRUCTION PHASES CONTAINING, OR SUSPECTED TO BE HAZARDOUS; CONTRACTOR SHALL STOP WORK IMMEDIATELY AND NOTIFY OWNER AND ARCHITECT.
12. DO NOT SCALE DRAWINGS.
13. CONTRACTOR TO PROVIDE SOLID WOOD BLOCKING IN STUD WALLS WHICH ARE TO RECEIVE SURFACE MOUNTED EQUIPMENT, ACCESSORIES, CASEWORK, AND OWNER FURNISHED FURNISHED FURNITURE.
14. CONTRACTOR SHALL PATCH, LEVEL, AND PREPARE ALL WALLS AND FLOORS AS SCHEDULED AND REQUIRED TO RECEIVE NEW FINISHES.
15. NOT USED.
16. NOT USED.

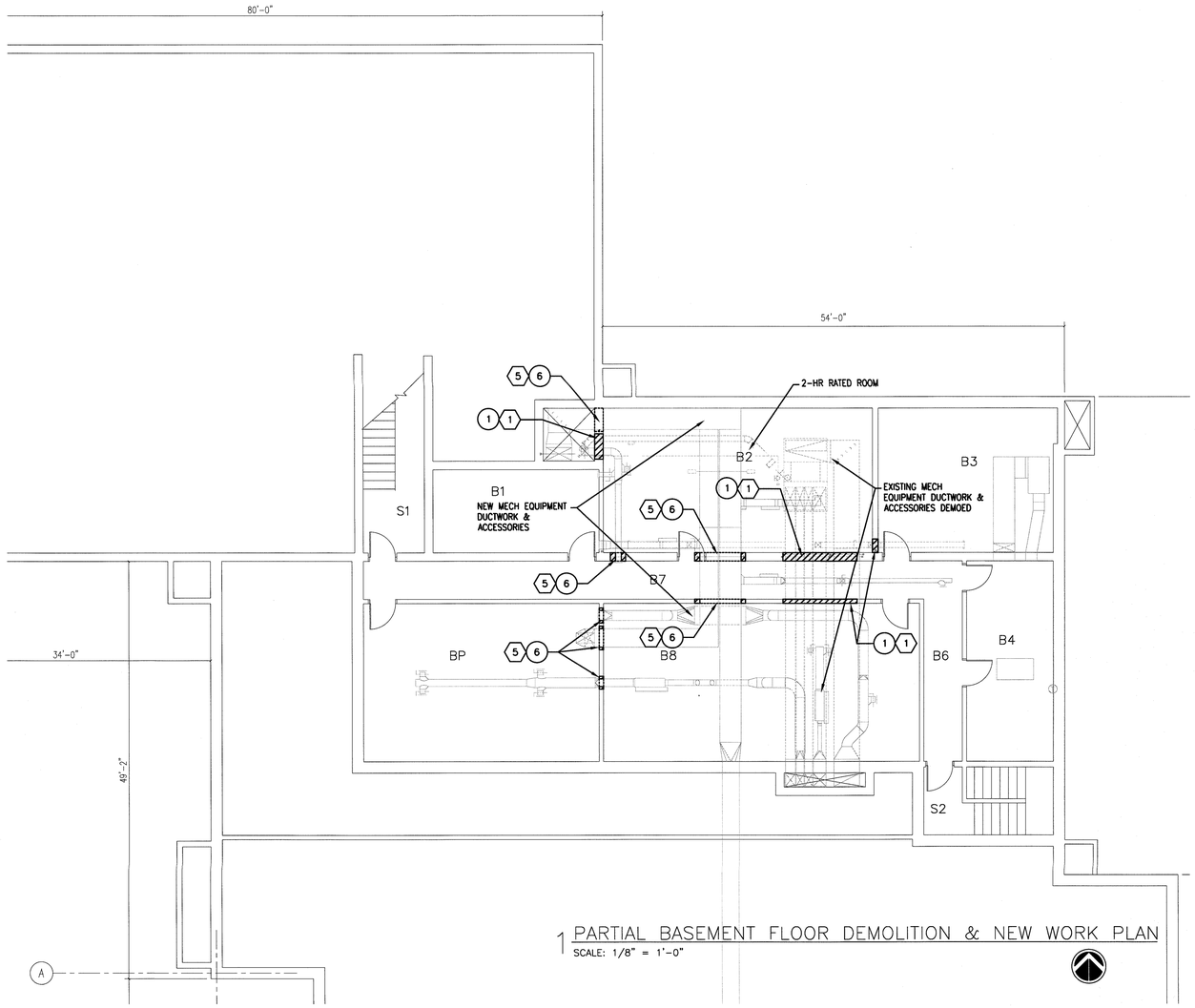

1 PARTIAL BASEMENT FLOOR DEMOLITION & NEW WORK PLAN
SCALE: 1/8" = 1'-0"

DEMOLITION KEY NOTES

PROJECT GENERAL DEMOLITION INFORMATION SHEET A110, APPLY TO THESE NOTES.

KEY NOTES APPLY TO ALL DEMOLITION DRAWINGS AND MAY NOT BE USED ON EVERY SHEET.

1. EXISTING MECHANICAL EQUIPMENT, DEMOED BY MECH CONTRACTOR. COORDINATE WITH GENERAL CONSTRUCTION SCOPE OF WORK ACCORDINGLY.
2. PROTECT EXISTING MEP, SCHEDULED TO REMAIN TO REMAIN THROUGHOUT ROOM.
3. SELECTIVELY DEMO & SALVAGE EXISTING ACT CEILING AS REQUIRED FOR MECH CONTRACTORS. REFER TO MEP DRAWINGS AND DETAILS FOR EXACT EXTENT OF SELECTIVE DEMO REQUIRED.
4. SELECTIVELY DEMO & SALVAGE EXISTING LINIER METAL CEILING AS REQUIRED FOR MECH CONTRACTORS. REFER TO MEP DRAWINGS AND DETAILS FOR EXACT EXTENT OF SELECTIVE DEMO REQUIRED.
5. SELECTIVELY DEMO & SALVAGE EXISTING DETENTION, METAL PAN SECURITY CEILING AS REQUIRED FOR MECH CONTRACTORS. REFER TO MECH DRAWINGS AND DETAILS FOR EXACT EXTENT OF SELECTIVE DEMO REQUIRED. DRILL OUT SPOT WELDS AS NEEDED TO PERFORM SCOPE OF WORK.
6. SELECTIVELY DEMO EXISTING MASONRY WALL AS NEEDED FOR NEW HVAC DUCTWORK. COORDINATE EXACT SIZE & LOCATION WITH MECH.
7. NOT USED.
10. SELECTIVELY CUT & REMOVE EXISTING BALLASTED RUBBER ROOF SYSTEM AND EQUIPMENT RAILS, FOLLOWING MECH EQUIPMENT REMOVAL.
11. SELECTIVELY REMOVE EXISTING BALLASTED RUBBER ROOF SYSTEM, AS REQUIRED FOR NEW MECH EQUIPMENT ROOF CURB AND ACCESSORIES. ROOF CURB PROVIDED BY MECH CONTRACTOR. INSTALLED BY GC.

DEMOLITION LEGEND

- EXISTING TO BE REMOVED, REFER TO PLANS FOR EXTENTS.
- EXISTING TO REMAIN
- (X) → DEMOLITION KEY NOTE (SPECIFIC TO CONDITION)
- (X) DEMOLITION KEY NOTE (GENERAL TO ROOM OR AREA)

NEW WORK KEY NOTES

PROJECT GENERAL CONDITIONS, GENERAL INFORMATION ON SHEET A110, APPLY TO THESE NOTES.

NEW WORK KEY NOTES APPLY TO ALL NEW WORK PLANS AND MAY NOT BE USED ON EVERY SHEET.

1. FOLLOWING MECH DEMOLITION, CUT PATCH AND RETURN EXISTING CMU WALL, IN KIND, TO MATCH EXISTING. FIRE STOP AT RATED CONDITIONS. CAULK & SEAL AT NON RATED CONDITIONS.
2. PATCH & RETURN EXISTING ACT CEILING SYSTEM FOLLOWING MECH NEW WORK.
3. PATCH & RETURN EXISTING LINEAR METAL CEILING SYSTEM FOLLOWING MEP NEW WORK.
4. PATCH & RETURN EXISTING DETENTION METAL PAN SECURITY CEILING FOLLOWING MEP NEW WORK. REWELD IN KIND WHERE WELDS WERE REMOVED.
5. PATCH & RETURN MASONRY WALL FOLLOWING HVAC INSTALL. FIRESTOP AT RATED WALLS. CAULK & SEAL AT NON RATED WALLS.
6. NOT USED
10. PATCH AND RETURN EXISTING BALLASTED RUBBER ROOF SYSTEM FOLLOWING MECH CURB AND EQUIPMENT REMOVAL
11. PATCH AND RETURN EXISTING BALLASTED RUBBER ROOF SYSTEM FOLLOWING MECH NEW CURB INSTALLATION.
12. REPOSITION EXISTING ROOFTOP WALKWAY PAVERS TO NEW EQUIPMENT LOCATIONS.
13. ADD NEW ROOFTOP PAVERS, IN KIND, TO REACH NEW EQUIPMENT LOCATION.

NEW WORK LEGEND

- EXISTING TO REMAIN
- MASONRY PARTITION, SEE PARTITION TYPES FOR DETAILS
- METAL STUD PARTITION, SEE PARTITION TYPES FOR DETAILS
- TYPE (A3) — U.N.O.

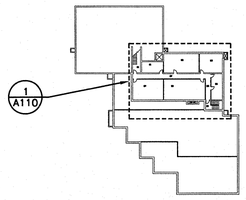

KEY PLAN

CONTINUUM
ARCHITECTS + PLANNERS, S.C.
T 414.220.9640
F 414.220.9595
P.O. BOX 510663
MILWAUKEE, WI 53203

PARTIAL BASEMENT LEVEL FLOOR PLAN - DEMO & NEW WORK

City of Milwaukee
Department of Public Works
Infrastructure Services Division
Bridges & Buildings Section

GRUMMAN /BUTKUS ASSOCIATES
Energy Efficiency Consultants and Sustainable Design Engineers
1011 North Mayfair Road, Suite 300
414.476.8980

Copyright © 2015 Grumman/Butkus Associates

7th District Police Station RTUs Replacement
3626 West Fond du Lac Avenue

DESIGNED BY	
DRAWN BY	
CHECKED BY	
DATE 12-28-15	SCALE
JOB NUMBER PL120130100	
SHEET NUMBER A110	
OF	

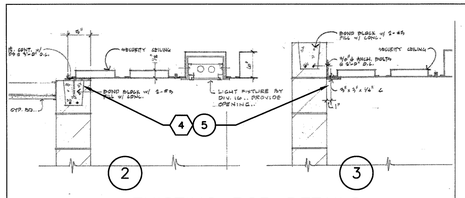

2 3

EXISTING RCP DETAILS
NTS (FOR INFORMATIONAL PURPOSES ONLY)

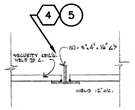

4 EXISTING RCP DETAILS
NTS (FOR INFORMATIONAL PURPOSES ONLY)

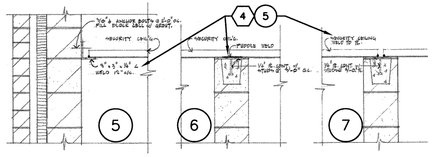

5 6 7

EXISTING RCP DETAILS
NTS (FOR INFORMATIONAL PURPOSES ONLY)

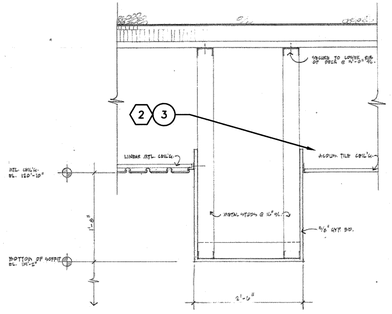

2 3

8 EXISTING RCP DETAILS
NTS (FOR INFORMATIONAL PURPOSES ONLY)

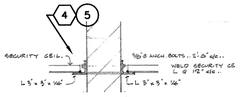

9 EXISTING RCP DETAILS
NTS (FOR INFORMATIONAL PURPOSES ONLY)

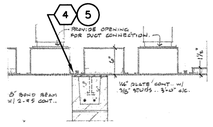

10 EXISTING RCP DETAILS
NTS (FOR INFORMATIONAL PURPOSES ONLY)

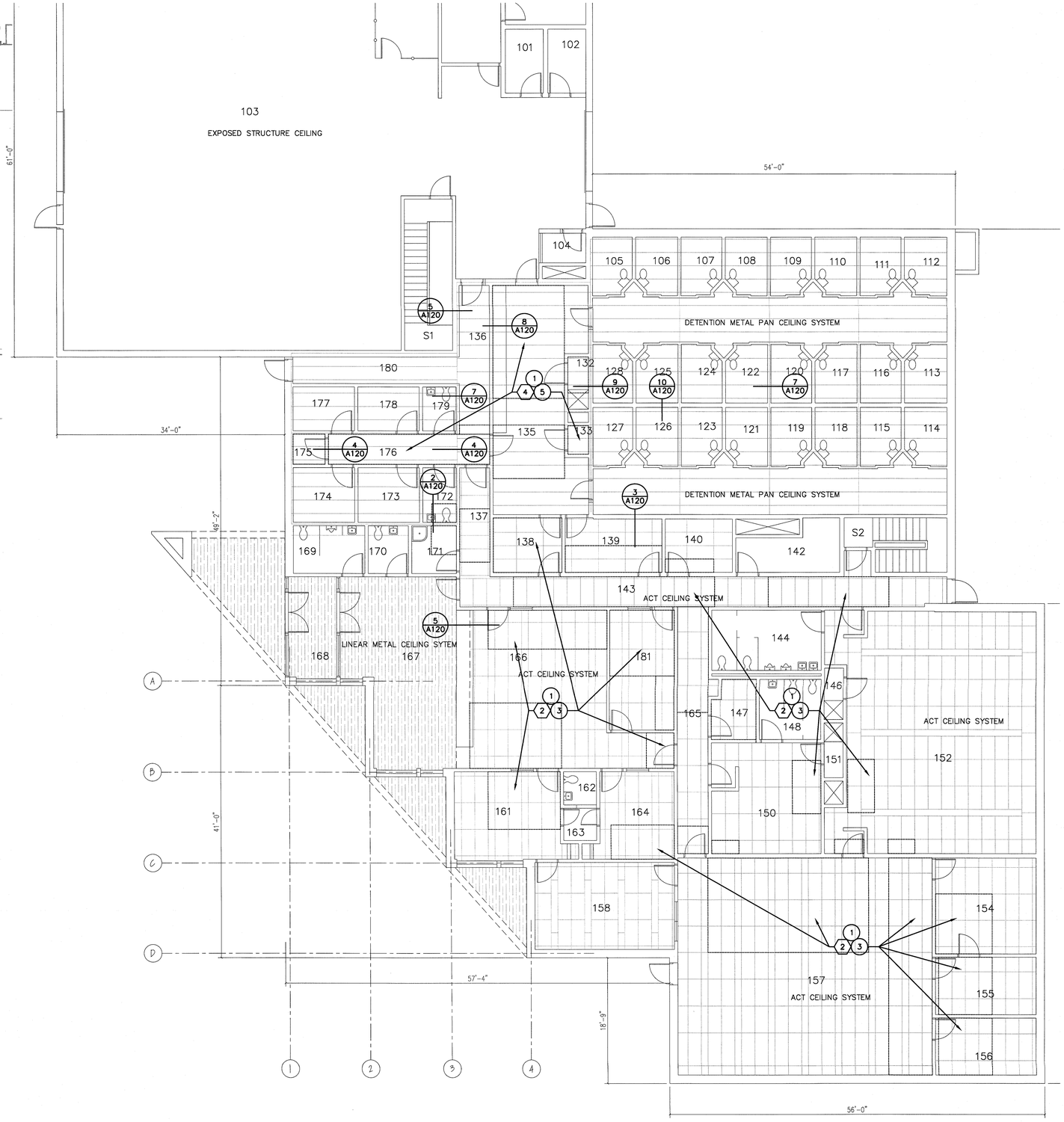

1 PARTIAL FIRST FLOOR DEMOLITION & NEW WORK PLAN
SCALE: 1/8" = 1'-0"

DEMOLITION KEY NOTES

PROJECT GENERAL DEMOLITION INFORMATION SHEET A110, APPLY TO THESE NOTES.

KEY NOTES APPLY TO ALL DEMOLITION DRAWINGS AND MAY NOT BE USED ON EVERY SHEET.

1. EXISTING MECHANICAL EQUIPMENT, DEMOED BY MECH CONTRACTOR. COORDINATE WITH GENERAL CONSTRUCTION SCOPE OF WORK ACCORDINGLY.
2. PROTECT EXISTING MEP, SCHEDULED TO REMAIN TO REMAIN THROUGHOUT ROOM.
3. SELECTIVELY DEMO & SALVAGE EXISTING ACT CEILING AS REQUIRED FOR MECH CONTRACTORS. REFER TO MEP DRAWINGS AND DETAILS FOR EXACT EXTENT OF SELECTIVE DEMO REQUIRED.
4. SELECTIVELY DEMO & SALVAGE EXISTING LINIER METAL CEILING AS REQUIRED FOR MECH CONTRACTORS. REFER TO MEP DRAWINGS AND DETAILS FOR EXACT EXTENT OF SELECTIVE DEMO REQUIRED.
5. SELECTIVELY DEMO & SALVAGE EXISTING DETENTION, METAL PAN SECURITY CEILING AS REQUIRED FOR MECH CONTRACTORS. REFER TO MECH DRAWINGS AND DETAILS FOR EXACT EXTENT OF SELECTIVE DEMO REQUIRED. DRILL OUT SPOT WELDS AS NEEDED TO PERFORM SCOPE OF WORK.
6. SELECTIVELY DEMO EXISTING MASONRY WALL AS NEEDED FOR NEW HVAC DUCTWORK. COORDINATE EXACT SIZE & LOCATION WITH MECH.
7. NOT USED.
10. SELECTIVELY CUT & REMOVE EXISTING BALLASTED RUBBER ROOF SYSTEM AND EQUIPMENT RAILS, FOLLOWING MECH EQUIPMENT REMOVAL.
11. SELECTIVELY REMOVE EXISTING BALLASTED RUBBER ROOF SYSTEM, AS REQUIRED FOR NEW MECH EQUIPMENT ROOF CURB AND ACCESSORIES. ROOF CURB PROVIDED BY MECH CONTRACTOR. INSTALLED BY GC.

DEMOLITION LEGEND

- EXISTING TO BE REMOVED, REFER TO PLANS FOR EXTENTS.
- EXISTING TO REMAIN
- (X) → DEMOLITION KEY NOTE (SPECIFIC TO CONDITION)
- (X) DEMOLITION KEY NOTE (GENERAL TO ROOM OR AREA)

NEW WORK KEY NOTES

PROJECT GENERAL CONDITIONS, GENERAL INFORMATION ON SHEET A110, APPLY TO THESE NOTES.

NEW WORK KEY NOTES APPLY TO ALL NEW WORK PLANS AND MAY NOT BE USED ON EVERY SHEET.

1. FOLLOWING MECH DEMOLITION, CUT PATCH AND RETURN EXISTING CMU WALL, IN KIND, TO MATCH EXISTING. FIRE STOP AT RATED CONDITIONS. CAULK & SEAL AT NON RATED CONDITIONS.
2. PATCH & RETURN EXISTING ACT CEILING SYSTEM FOLLOWING MECH NEW WORK.
3. PATCH & RETURN EXISTING LINEAR METAL CEILING SYSTEM FOLLOWING MEP NEW WORK.
4. PATCH & RETURN EXISTING DETENTION METAL PAN SECURITY CEILING FOLLOWING MEP NEW WORK. REWELD IN KIND WHERE WELDS WERE REMOVED.
5. PATCH & RETURN MASONRY WALL FOLLOWING HVAC INSTALL. FIRESTOP AT RATED WALLS. CAULK & SEAL AT NON RATED WALLS.
6. NOT USED
10. PATCH AND RETURN EXISTING BALLASTED RUBBER ROOF SYSTEM FOLLOWING MECH CURB AND EQUIPMENT REMOVAL
11. PATCH AND RETURN EXISTING BALLASTED RUBBER ROOF SYSTEM FOLLOWING MECH NEW CURB INSTALLATION.
12. REPOSITION EXISTING ROOFTOP WALKWAY PAVERS TO NEW EQUIPMENT LOCATIONS.
13. ADD NEW ROOFTOP PAVERS, IN KIND, TO REACH NEW EQUIPMENT LOCATION.

NEW WORK LEGEND

- EXISTING TO REMAIN
- MASONRY PARTITION, SEE PARTITION TYPES FOR DETAILS
- METAL STUD PARTITION, SEE PARTITION TYPES FOR DETAILS
- TYPE A3 — U.N.O.

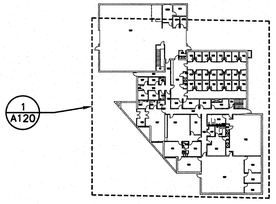

KEY PLAN

CONTINUUM
ARCHITECTS + PLANNERS, S.C.
T 414.220.9640
F 414.220.9595
P.O. BOX 510663
MILWAUKEE, WI 53203

PARTIAL FIRST LEVEL FLOOR PLAN - DEMO & NEW WORK

City of Milwaukee
Department of Public Works
Infrastructure Services Division
Bridges & Buildings Section

GRUMMAN /BUTKUS ASSOCIATES
Energy Efficiency Consultants and Sustainable Design Engineers
1011 North Mayfair Road, Suite 300
414 476.8980

Copyright © 2015 Grumman/Butkus Associates

7th District Police Station RTUs Replacement
3626 West Fond du Lac Avenue

DESIGNED BY	
DRAWN BY	
CHECKED BY	
DATE 12-28-15	SCALE
JOB NUMBER PL120130100	
SHEET NUMBER A120	
OF	

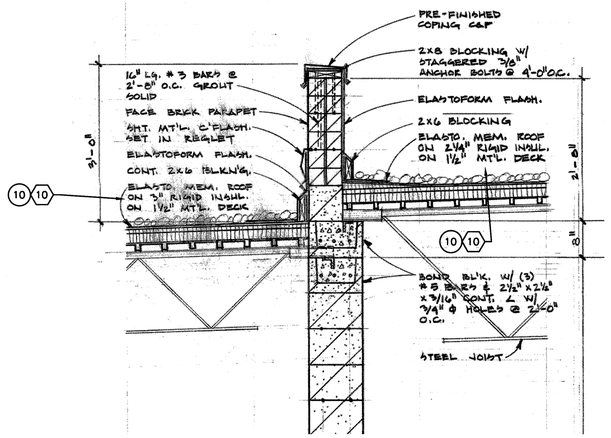

4 EXISTING ROOF DETAIL
NTS (FOR INFORMATIONAL PURPOSES ONLY)

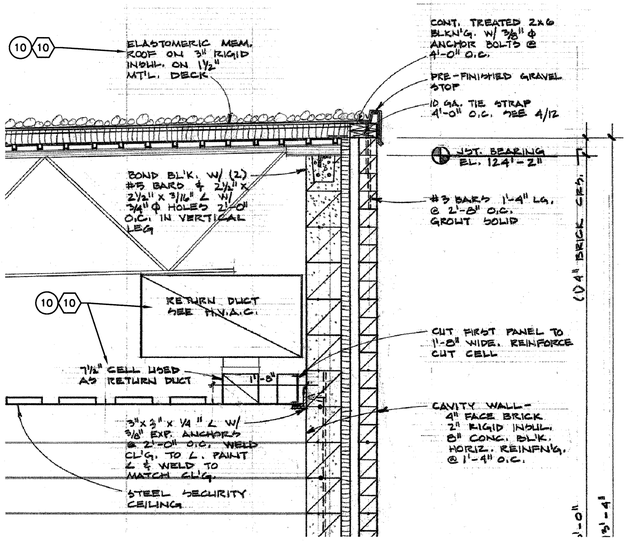

5 EXISTING ROOF DETAIL
NTS (FOR INFORMATIONAL PURPOSES ONLY)

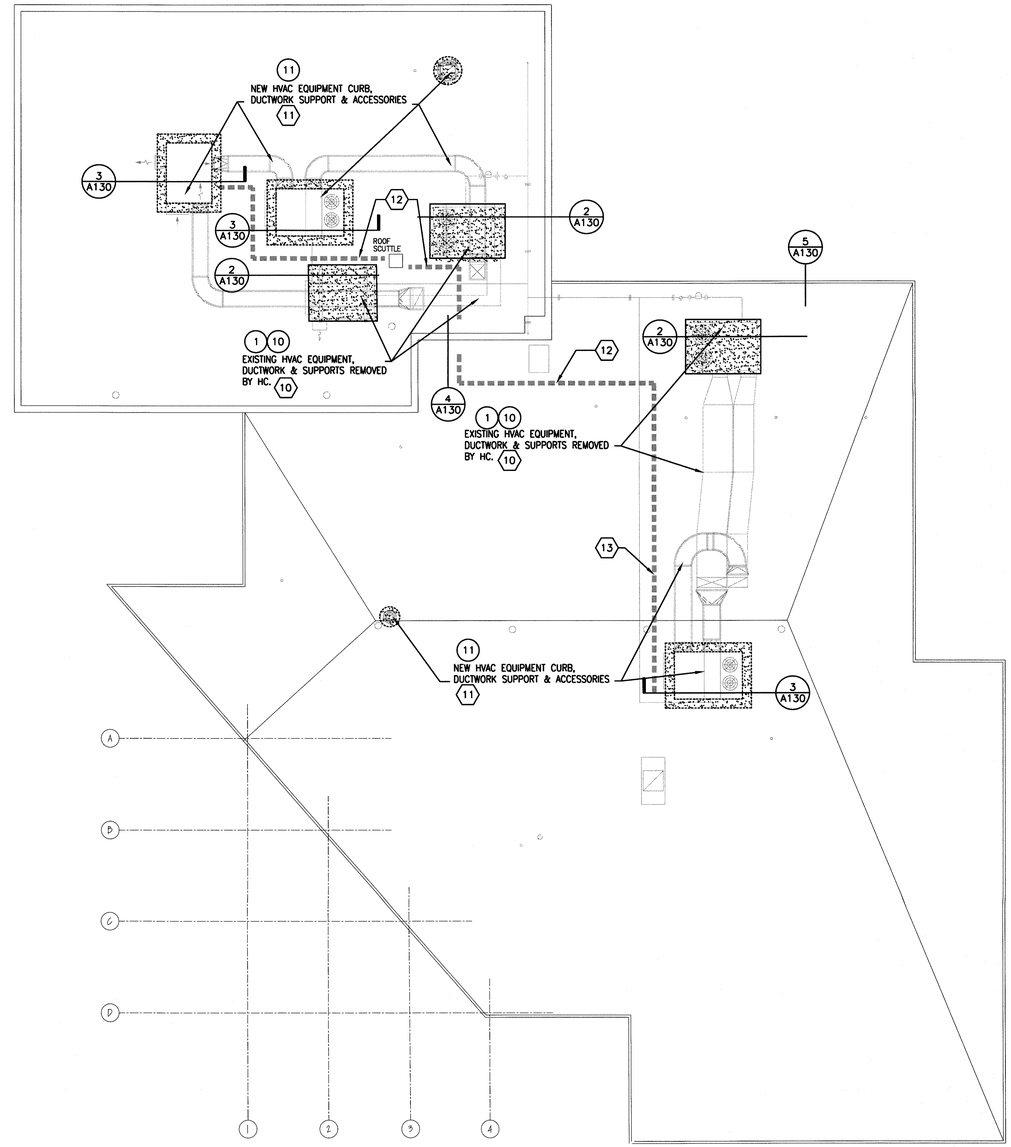

1 ROOF DEMOLITION & NEW WORK PLAN
SCALE: 3/32 = 1'-0"

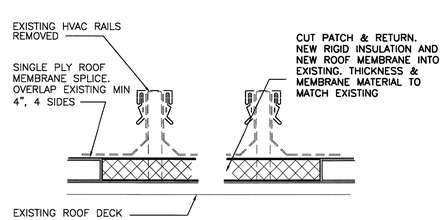

2 DECK INFILL DETAIL
NTS

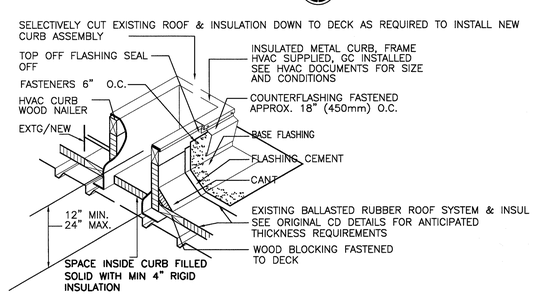

3 PREFABRICATED CURB SUPPORT
NTS

DEMOLITION KEY NOTES

PROJECT GENERAL DEMOLITION INFORMATION SHEET A110, APPLY TO THESE NOTES.

KEY NOTES APPLY TO ALL DEMOLITION DRAWINGS AND MAY NOT BE USED ON EVERY SHEET.

1. EXISTING MECHANICAL EQUIPMENT, DEMOED BY MECH CONTRACTOR. COORDINATE WITH GENERAL CONSTRUCTION SCOPE OF WORK ACCORDINGLY.
2. PROTECT EXISTING MEP, SCHEDULED TO REMAIN TO REMAIN THROUGHOUT ROOM.
3. SELECTIVELY DEMO & SALVAGE EXISTING ACT CEILING AS REQUIRED FOR MECH CONTRACTORS. REFER TO MEP DRAWINGS AND DETAILS FOR EXACT EXTENT OF SELECTIVE DEMO REQUIRED.
4. SELECTIVELY DEMO & SALVAGE EXISTING LINIER METAL CEILING AS REQUIRED FOR MECH CONTRACTORS. REFER TO MEP DRAWINGS AND DETAILS FOR EXACT EXTENT OF SELECTIVE DEMO REQUIRED.
5. SELECTIVELY DEMO & SALVAGE EXISTING DETENTION, METAL PAN SECURITY CEILING AS REQUIRED FOR MECH CONTRACTORS. REFER TO MECH DRAWINGS AND DETAILS FOR EXACT EXTENT OF SELECTIVE DEMO REQUIRED. DRILL OUT SPOT WELDS AS NEEDED TO PERFORM SCOPE OF WORK.
6. SELECTIVELY DEMO EXISTING MASONRY WALL AS NEEDED FOR NEW HVAC DUCTWORK. COORDINATE EXACT SIZE & LOCATION WITH MECH.
7. NOT USED.
10. SELECTIVELY CUT & REMOVE EXISTING BALLASTED RUBBER ROOF SYSTEM AND EQUIPMENT RAILS, FOLLOWING MECH EQUIPMENT REMOVAL.
11. SELECTIVELY REMOVE EXISTING BALLASTED RUBBER ROOF SYSTEM, AS REQUIRED FOR NEW MECH EQUIPMENT ROOF CURB AND ACCESSORIES. ROOF CURB PROVIDED BY MECH CONTRACTOR. INSTALLED BY GC.

DEMOLITION LEGEND

- EXISTING TO BE REMOVED, REFER TO PLANS FOR EXTENTS.
- EXISTING TO REMAIN
- (X) → DEMOLITION KEY NOTE (SPECIFIC TO CONDITION)
- (X) DEMOLITION KEY NOTE (GENERAL TO ROOM OR AREA)

NEW WORK KEY NOTES

PROJECT GENERAL CONDITIONS, GENERAL INFORMATION ON SHEET A110, APPLY TO THESE NOTES.

NEW WORK KEY NOTES APPLY TO ALL NEW WORK PLANS AND MAY NOT BE USED ON EVERY SHEET.

1. FOLLOWING MECH DEMOLITION, CUT PATCH AND RETURN EXISTING CMU WALL, IN KIND, TO MATCH EXISTING. FIRE STOP AT RATED CONDITIONS. CAULK & SEAL AT NON RATED CONDITIONS.
2. PATCH & RETURN EXISTING ACT CEILING SYSTEM FOLLOWING MECH NEW WORK.
3. PATCH & RETURN EXISTING LINEAR METAL CEILING SYSTEM FOLLOWING MEP NEW WORK.
4. PATCH & RETURN EXISTING DETENTION METAL PAN SECURITY CEILING FOLLOWING MEP NEW WORK. REWELD IN KIND WHERE WELDS WERE REMOVED.
5. PATCH & RETURN MASONRY WALL FOLLOWING HVAC INSTALL. FIRESTOP AT RATED WALLS. CAULK & SEAL AT NON RATED WALLS.
6. NOT USED
10. PATCH AND RETURN EXISTING BALLASTED RUBBER ROOF SYSTEM FOLLOWING MECH CURB AND EQUIPMENT REMOVAL
11. PATCH AND RETURN EXISTING BALLASTED RUBBER ROOF SYSTEM FOLLOWING MECH NEW CURB INSTALLATION.
12. REPOSITION EXISTING ROOFTOP WALKWAY PAVERS TO NEW EQUIPMENT LOCATIONS.
13. ADD NEW ROOFTOP PAVERS, IN KIND, TO REACH NEW EQUIPMENT LOCATION.

NEW WORK LEGEND

- EXISTING TO REMAIN
- MASONRY PARTITION, SEE PARTITION TYPES FOR DETAILS
- METAL STUD PARTITION, SEE PARTITION TYPES FOR DETAILS
- TYPE (A3) — U.N.O.

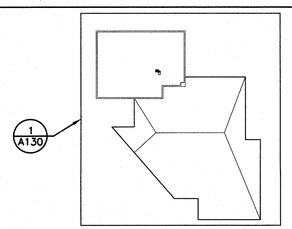

KEY PLAN

CONTINUUM ARCHITECTS + PLANNERS, S.C.
T 414.220.9640
F 414.220.9595
P.O. BOX 510663
MILWAUKEE, WI 53203

ROOF PLAN - DEMO & NEW WORK

City of Milwaukee
Department of Public Works
Infrastructure Services Division
Bridges & Buildings Section

GRUMMAN /BUTKUS ASSOCIATES
Energy Efficiency Consultants and Sustainable Design Engineers
1011 North Mayfair Road, Suite 300
414 476.8980

Copyright © 2015 Grumman/Butkus Associates

7th District Police Station RTUs Replacement
3626 West Fond du Lac Avenue

DESIGNED BY	
DRAWN BY	
CHECKED BY	
DATE 12-28-15	SCALE
JOB NUMBER PL120130100	
SHEET NUMBER A130	
OF	

ABBREVIATIONS — SYM-ABBREV

DESIGNATION	DESCRIPTION
ABV	ABOVE
ADJ	ADJUSTABLE
AFF	ABOVE FINISHED FLOOR
BAS	BUILDING AUTOMATION SYSTEM
BDD	BACKDRAFT DAMPER
BHP	BRAKE HORSEPOWER
BTU	BRITISH THERMAL UNIT
CFM	CUBIC FEET PER MINUTE
CLG	CEILING
CONC	CONCRETE
CSFD	COMBINATION SMOKE/FIRE DAMPER
DB	DRY BULB
DDC	DIRECT DIGITAL CONTROL
DIA	DIAMETER
DWG	DRAWING
EL	ELEVATION
ELEC	ELECTRICAL
EQ	EQUIPMENT
EXH	EXHAUST
FD	FIRE DAMPER
FLA	FULL LOAD AMPS
FLR	FLOOR
FOB	FLAT ON BOTTOM
FOT	FLAT ON TOP
FPM	FEET PER MINUTE
FT	FEET OR FOOT
GA	GAUGE
GAL	GALLONS
GPM	GALLONS PER MINUTE
HP	HORSEPOWER
HTG	HEATING
HVAC	HEATING VENTILATING AND AIR CONDITIONING
ID	INSIDE DIAMETER
KW	KILOWATT
LCP	LOCAL CONTROL PANEL
LRA	LOCK ROTOR AMPS
MAT	MIXED AIR TEMPERATURE
MAX	MAXIMUM
MCC	MOTOR CONTROL CENTER
MHP	MOTOR HORSEPOWER
MIN	MINIMUM
MOD	MOTOR OPERATED DAMPER
NC	NORMALLY CLOSED
NIC	NOT IN CONTRACT
NO	NORMALLY OPEN
NTS	NOT TO SCALE
OA	OUTDOOR AIR
OD	OUTSIDE DIAMETER
PSI(G)	POUNDS PER SQUARE INCH (GAUGE)
RH	RELATIVE HUMIDITY
RPM	REVOLUTIONS PER MINUTE
SD	SMOKE DAMPER
SQ	SQUARE
TP	TOTAL PRESSURE
TYP	TYPICAL
UNO	UNLESS NOTED OTHERWISE
VAV	VARIABLE AIR VOLUME
VD	VOLUME DAMPER
VSC	VARIABLE SPEED CONTROLLER
WB	WET BULB
W/	WITH
W/O	WITHOUT
WG	WATER GAUGE

PIPING LEGEND — SYM-PIPE

DESIGNATION	DESCRIPTION
BBD	BOILER BLOW DOWN
BF	BOILER FEED
CO_2	CARBON DIOXIDE
CF	CHEMICAL FEED
CHWR	CHILLED WATER RETURN
CHWS	CHILLED WATER SUPPLY
MS-A	MEDICAL-SURGICAL AIR
MS-VAC	MEDICAL-SURGICAL VACUUM
CA	COMPRESSED AIR
CD	CONDENSATE DRAIN ABOVE FLOOR OR GRADE
CD	CONDENSATE DRAIN BELOW FLOOR OR DRAIN
CWR	CONDENSER WATER RETURN
CWS	CONDENSER WATER SUPPLY
DIR	DEIONIZED WATER RETURN
DIS	DEIONIZED WATER SUPPLY
DWR	DISTILLED WATER SUPPLY
DWS	DISTILLED WATER RETURN
DCW	DOMESTIC COLD WATER
D	DRAIN
FOF	FUEL OIL FILL
FOG	FUEL OIL GAUGE
FOR	FUEL OIL RETURN
FOS	FUEL OIL SUPPLY
FOV	FUEL OIL VENT
GR	GLYCOL RETURN
GS	GLYCOL SUPPLY
HPC	HIGH PRESSURE CONDENSATE
HPS	HIGH PRESSURE STEAM
HTWR	HIGH TEMPERATURE HOT WATER RETURN
HTWS	HIGH TEMPERATURE HOT WATER SUPPLY
LPC	LOW PRESSURE CONDENSATE
LPS	LOW PRESSURE STEAM
LPS(C)	LOW PRESSURE CLEAN HUMIDIFICATION STEAM
HWR	LOW TEMPERATURE HOT WATER RETURN
HWS	LOW TEMPERATURE HOT WATER SUPPLY
MU	MAKE-UP WATER
MPR	MEDIUM PRESSURE CONDENSATE
MPS	MEDIUM PRESSURE STEAM
G	NATURAL GAS
N_2	NITROGEN
N_2O	NITROUS OXIDE
O_2	OXYGEN
PCHWR	PRIMARY CHILLED WATER RETURN
PCHWS	PRIMARY CHILLED WATER SUPPLY
CPD	PUMPED CONDENSATE
RG	REFRIGERANT HOT GAS
RL	REFRIGERANT LIQUID
RS	REFRIGERANT SUCTION
RV	REFRIGERANT VENT
ROR	REVERSE OSMOSIS RETURN
RO	REVERSE OSMOSIS SUPPLY
SCHWR	SECONDARY CHILLED WATER RETURN
SCHWS	SECONDARY CHILLED WATER SUPPLY
V	VENT TO ATMOSPHERE
WAGD	WASTE ANESTHESIA GAS DISPOSAL

PIPEWORK SYMBOLS — SYM-MECH

DESIGNATION	DESCRIPTION
	PUMP
	GATE VALVE
	GLOBE VALVE
	BALL VALVE
	BUTTERFLY VALVE
	THREE WAY VALVE
	ANGLE GATE VALVE
	ANGLE GLOBE VALVE
	PLUG VALVE (GAS SERVICE)
	PRECALIBRATED MANUAL BALANCING VALVE W/PRESSURE SENSING PORTS
	AUTOMATIC FLOW CONTROL VALVE
M	2-WAY CONTROL VALVE (ELECTRIC OR ELECTRONIC ACTUATION)
M	3-WAY CONTROL VALVE (ELECTRIC OR ELECTRONIC ACTUATION)
S	SOLENOID VALVE (ELECTRIC OR ELECTRONIC ACTUATION)
M	2-WAY CONTROL VALVE (PNEUMATIC ACTUATION)
M	3-WAY CONTROL VALVE (PNEUMATIC ACTUATION)
	PRESSURE REDUCING VALVE
	PRESSURE RELIEF OR SAFETY VALVE
	SWING GATE CHECK VALVE
	SPRING CHECK VALVE
	STEAM TRAP (SEE SPECIFICATIONS FOR TYPE)
	HOSE END DRAIN VALVE
	Y-TYPE STRAINER (W/BLOWOFF VALVE)
	ELECTRIC HEAT TRACE
	FLEXIBLE CONNECTOR
AV	AIR VENT (AUTOMATIC)
MV	AIR VENT (MANUAL)
	FLOW METER, ORIFICE
	FLOW METER, VENTURI
	THERMOMETER
	HYDRONIC PRESSURE GAUGE & NEEDLE VALVE
	STEAM PRESSURE GAUGE & NEEDLE VALVE
PT	UNIVERSAL PORT FOR PRESSURE GAUGE OR THERMOMETER WELL

PIPEWORK FITTINGS — SYM-FITTINGS

NOTE:
ALL FITTINGS SHOWN BELOW ARE FOR USE IN SCREWED PIPING SYSTEMS UNO. REFER TO SPECIFICATION FOR SPECIFIC PIPING SYSTEM REQUIREMENTS (SCREWED VS. FLANGED VS. WELDED VS. SOLDERED).

DESIGNATION	DESCRIPTION
	CAP
	CONNECTION, BOTTOM
	CONNECTION, TOP
	ELBOW, 90°
	ELBOW TURNED UP
	ELBOW TURNED DOWN
2 4	ELBOW, REDUCING (SHOW SIZES)
	ELBOW, LONG RADIUS
	ELBOW, SIDE OUTLET, OUTLET UP
	ELBOW, SIDE OUTLET, OUTLET DOWN
	LATERAL BRANCH
	REDUCER, CONCENTRIC
	INCREASER, CONCENTRIC
	REDUCER, ECCENTRIC STRAIGHT INVERT
	REDUCER, ECCENTRIC STRAIGHT CROWN
	TEE
	TEE, OUTLET UP
	TEE, OUTLET DOWN
6 4 2	TEE, REDUCING (SHOW SIZES)
	TEE, SIDE OUTLET, OUTLET UP
	TEE, SIDE OUTLET, OUTLET DOWN
	UNION, SCREWED
R	PITCH OF PIPE - RISE (R), DROP (D)

EQUIPMENT TAGS — SYM-EQUIP

B / 1 — DESIGNATION / NUMBER

DESIGNATION	DESCRIPTION
AB	AIR BLENDER
AC	AIR COMPRESSOR
ACC	AIR-COOLED CONDENSER
ACCU	AIR-COOLED CONDENSING UNIT
ACU	AIR CONDITIONING UNIT
AHU	AIR HANDLING UNIT
AP	MEDICAL GAS/VACUUM AREA ALARM PANEL
B	BOILER
BB	BASEBOARD RADIATION
CC	CHILLED WATER COOLING COIL
CCHR	CLOSED CIRCUIT HEAT REJECTOR
CH	CHILLER
CT	COOLING TOWER
CV	CONTROL VALVE
DX	DIRECT EXPANSION COOLING COIL
E	EXHAUST FAN
EC	EVAPORATIVE CONDENSER
E/R	EXHAUST/RETURN FAN
FCU	FAN COIL UNIT
FIL	FILTER
HC	HEATING COIL
HP	HEAT PUMP (AIR-SOURCED OR WATER-SOURCED)
HUM	HUMIDIFIER
HX	HEAT EXCHANGER
IO	MEDICAL GAS/VACUUM INLET/OUTLET
IU	INDUCTION UNIT
KE	KITCHEN EXHAUST FAN
MU	GAS-FIRED MAKEUP AIR UNIT
P	PUMP
PH	INTAKE & EXHAUST PENTHOUSE
PRV	PRESSURE REDUCING VALVE
RCP	RADIANT CEILING HEATING/COOLING PANEL
RTU	PACKAGED ROOFTOP UNIT
S	SUPPLY FAN
SA	SOUND ATTENUATOR
SC	SHELL AND TUBE STEAM CONVERTOR
T	TANK
TD	TERMINAL DEVICE
TE	TOILET EXHAUST FAN
TU	TERMINAL UNIT
UH	UNIT HEATER

DUCTWORK SYMBOLS — SYM-DUCT

DESIGNATION	DESCRIPTION
AD 10x10	ACCESS DOOR OR PANEL, VERTICAL OR HORIZONTAL
	ACOUSTICAL LINING: DIMENSIONS SHOWN ARE CLEAR AIR PATH
D	DUCT OFFSET (DOWN) IN DIRECTION OF FLOW
R	DUCT OFFSET (UP) IN DIRECTION OF FLOW
	RECTANGULAR SUPPLY DUCT ELBOW TURNED DOWN
	RECTANGULAR SUPPLY DUCT ELBOW TURNED UP
	RECTANGULAR EXHAUST/RETURN DUCT ELBOW TURNED DOWN
	RECTANGULAR EXHAUST/RETURN DUCT ELBOW TURNED UP
	ROUND DUCT ELBOW TURNED DOWN
	ROUND DUCT ELBOW TURNED UP
	DIRECTION OF FLOW
20x12	DUCT AIR PATH SIZE, FIRST FIGURE IS SIDE SHOWN
	FLEXIBLE CONNECTION
	FLEXIBLE DUCT
36"x12"	DUCT SECTION, POSITIVE PRESSURE, FIRST FIGURE IS TOP
36"x12"	DUCT SECTION, NEGATIVE PRESSURE, FIRST FIGURE IS TOP
20x10 15x8	TRANSITION WITH DUCT SIZE
	RECTANGULAR ELBOWS WITH TURNING VANES
	RECTANGULAR ELBOWS WITHOUT TURNING VANES
	DUCT PENETRATION THROUGH BEAM
	CAPPED DUCT - RECTANGULAR OR ROUND
	MOTOR OPERATED DAMPER
	CEILING-MOUNTED SUPPLY AIR TERMINAL DEVICE
	CEILING-MOUNTED EXHAUST/RETURN AIR TERMINAL DEVICE
	WALL OR DUCT MOUNTED EXHAUST/RETURN AIR TERMINAL DEVICE
	WALL OR DUCT MOUNTED SUPPLY AIR TERMINAL DEVICE
30"x12"	TRANSFER AIR DOOR GRILLE
1/2" 100 CFM	UNDERCUT DOOR
30"x12"	WALL MOUNTED TRANSFER AIR ASSEMBLY INCLUDING SHEETMETAL SLEEVE AND TWO (2) REGISTERS
	LINEAR SUPPLY AIR DIFFUSER
	LINEAR RETURN AIR DIFFUSER
VD	VOLUME DAMPER
SD	SMOKE DAMPER
FD	FIRE DAMPER
CSFD	COMBINATION SMOKE/FIRE DAMPER

GENERAL — SYM-REF

DESIGNATION	DESCRIPTION
1	DETAIL OR ENLARGED PLAN (SAME DRAWING)
1 / M2.6	DETAIL OR ENLARGED PLAN (DIFFERENT DRAWING)
A	SECTION OR ELEVATION (SAME DRAWING)
A / M3.4	SECTION OR ELEVATION (DIFFERENT DRAWING)
	(HEAVY LINES) - NEW PIPING/DUCTWORK/EQUIPMENT
	(THIN LINES) - EXISTING PIPING/DUCTWORK/ EQUIPMENT TO REMAIN
	(HEAVY DASHED LINES) - EXISTING PIPING/DUCTWORK/ EQUIPMENT TO BE DEMOLISHED
	POINT OF CONNECTION BETWEEN NEW/DEMO WORK AND EXISTING
	MATCH LINE

City of Milwaukee
Department of Public Works
Infrastructure Services Division
Bridges & Buildings Section

GRUMMAN/BUTKUS ASSOCIATES
Energy Efficiency Consultants and Sustainable Design Engineers
1011 North Mayfair Road, Suite 300
414 476.5990
Copyright © 2015 Grumman/Butkus Associates

7th District Police Station RTUs Replacement
3626 West Fond du Lac Avenue
MECHANICAL SYMBOLS & ABBREVIATIONS

REVISIONS

DESIGNED BY	DEB
DRAWN BY	DEB
CHECKED BY	RDK
DATE 12/28/15	SCALE NONE
JOB NUMBER	PL120130100
SHEET NUMBER	M001
OF	

WISCONSIN RICHARD D. KATZUNG 28266 WAUKESHA, WI PROFESSIONAL ENGINEER
1-12-16

M001 - M601

KEYED NOTES

1. DEMOLISH AHU AND CONNECTED DUCTWORK AND PIPING AS SHOWN.
2. DEMOLISH ALL CONTROL DEVICES, CONDUIT, AND WIRE ASSOCIATED WITH MULTIZONE UNIT.
3. ALTERNATE BID #1 - REMOVE DAMPER ACTUATOR, WIRE, AND CONDUIT BACK TO SOURCE. LOCK DAMPER IN FULL OPEN POSITION.
4. ALTERNATE BID #2 - REMOVE EXISTING BCU AND REPLACE WITH NEW SC CONTROLLER. INTEGRATE ALL EXISTING TRANE FIELD CONTROLLERS AND DEVICES. NEW SC CONTROLLER SHALL BE CONTROLLED AND MONITORED AT THE PAB (MAIN BUILDING) BAS COMPUTERS (QTY. OF 4)
5. EXISTING TO REMAIN.
6. BASE BID - SUPPLY GRILLE SHALL REMAIN TO SERVE ROOM B8.
7. ALTERNATE BID #1 - DEMOLISH SUPPLY GRILLE AND ASSOCIATED ACCESSORIES BACK TO DUCT MAIN. PATCH REMAINING DUCT OPENING.
8. BASE BID - RETURN DUCT AND GRILLE SHALL REMAIN TO SERVE ROOM B7. DEMOLISH DUCTWORK TO LOCATION INDICATED. CAP DUCT AT TERMINATION POINT.
9. ALTERNATE BID #1 - DEMOLISH RETURN DUCT AND GRILLE AS SHOWN.

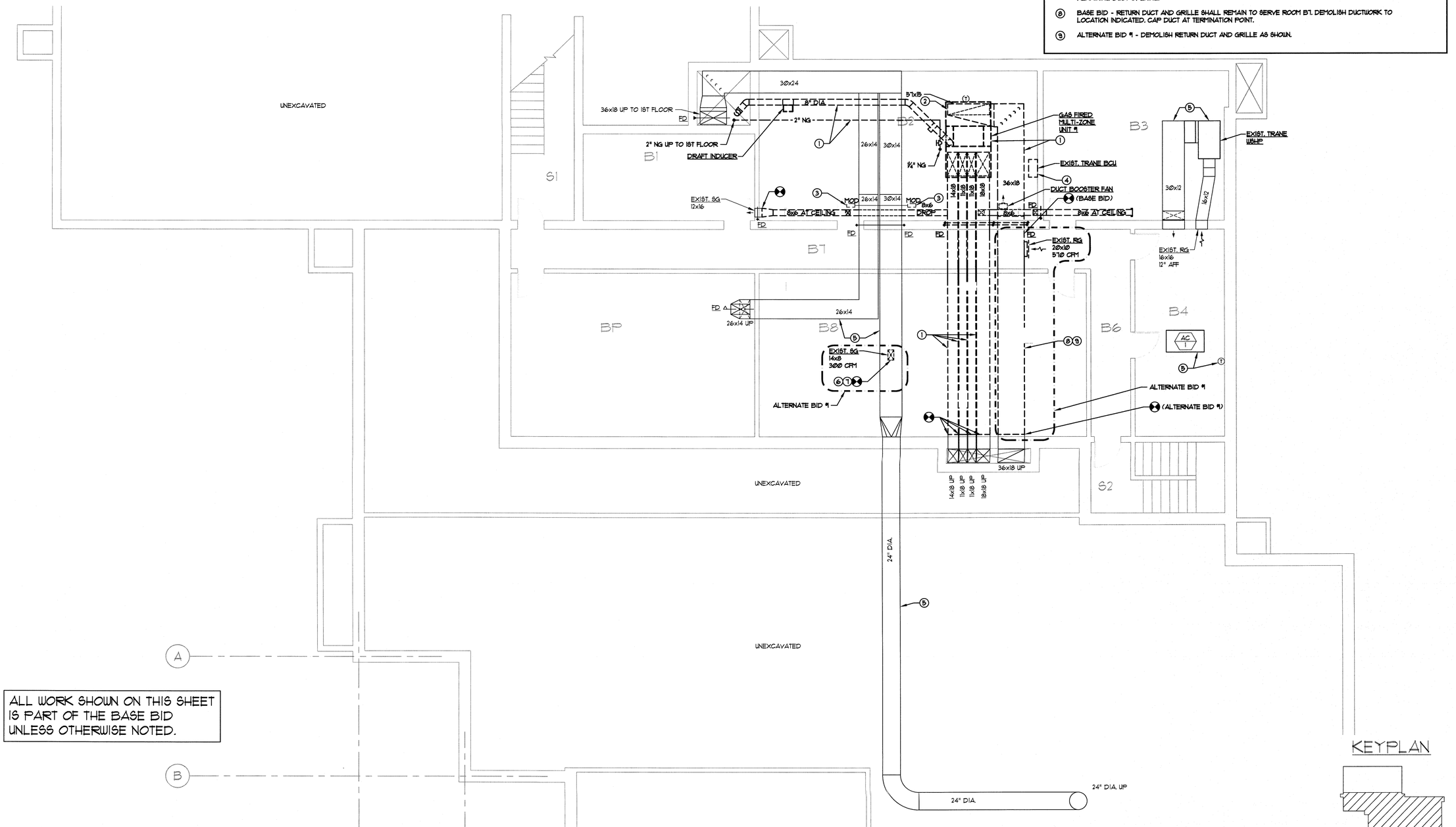

ALL WORK SHOWN ON THIS SHEET IS PART OF THE BASE BID UNLESS OTHERWISE NOTED.

MD101 MECHANICAL BASEMENT DEMOLITION PLAN

SCALE: 3/16" = 1'-0"

PLAN NORTH

KEYPLAN

City of Milwaukee
Department of Public Works
Infrastructure Services Division
Bridges & Buildings Section

GRUMMAN /BUTKUS ASSOCIATES
Energy Efficiency Consultants and Sustainable Design Engineers
1011 North Mayfair Road, Suite 300
414 476.8980
Copyright © 2015 Grumman/Butkus Associates

7th District Police Station RTUs Replacement
3626 West Fond du Lac Avenue
MECHANICAL BASEMENT DEMOLITION PLAN

REVISIONS

DESIGNED BY	DEB
DRAWN BY	DEB
CHECKED BY	RDK
DATE 12/28/15	SCALE 3/16"=1'-0"
JOB NUMBER	PL120130100
SHEET NUMBER	MD101
OF	

GENERAL NOTES

1. OVERALL PLAN PROVIDED FOR REFERENCE ONLY. REFER TO INDICATED PARTIAL PLANS FOR DEMOLITION AND NEW WORK.

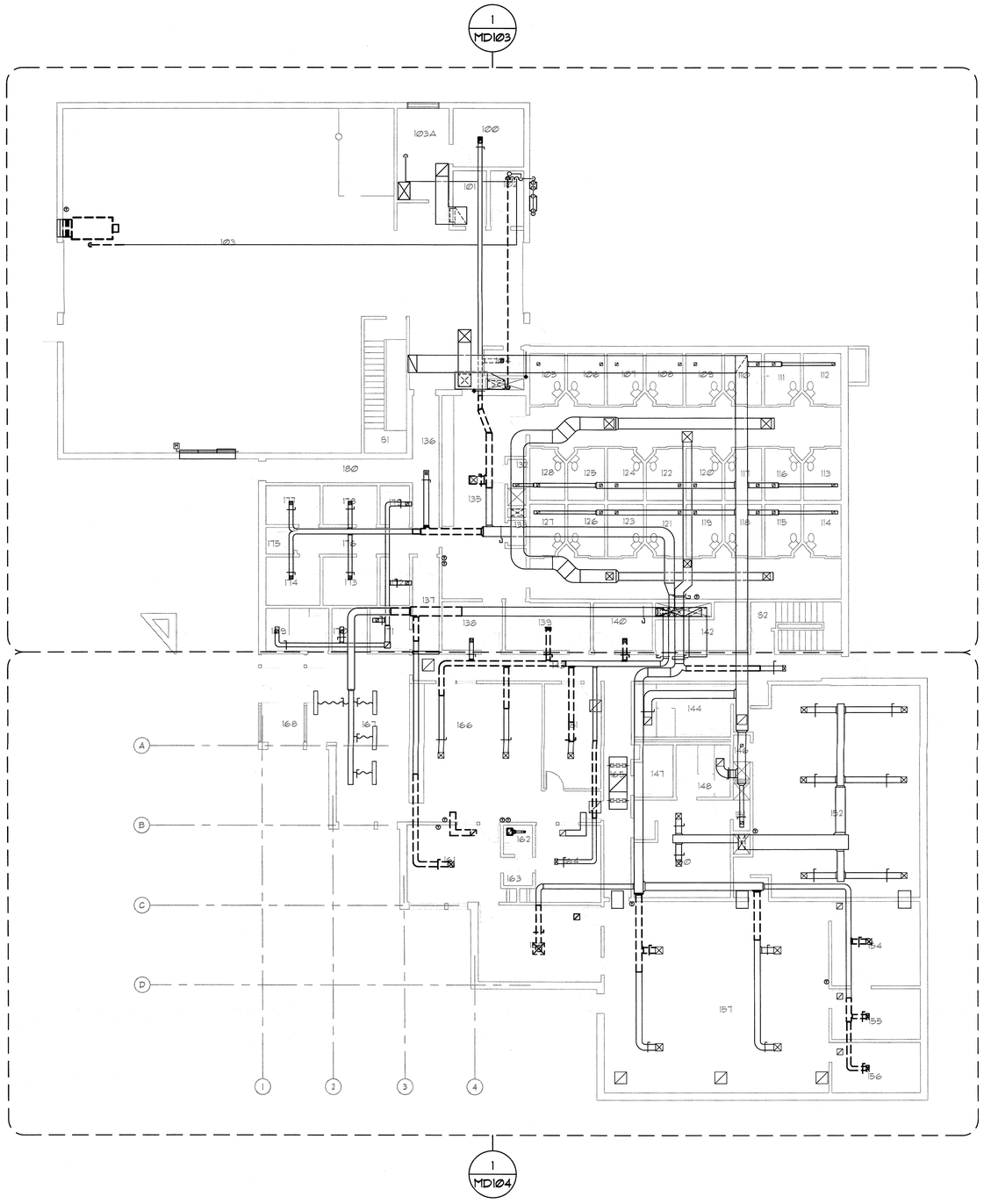

1 MECHANICAL OVERALL FIRST FLOOR DEMOLITION PLAN

SCALE: 3/32" = 1'-0"

PLAN NORTH

City of Milwaukee

Department of Public Works
Infrastructure Services Division

Bridges & Buildings Section

GRUMMAN /BUTKUS ASSOCIATES

Energy Efficiency Consultants and Sustainable Design Engineers

1011 North Mayfair Road, Suite 300

414 476.8980

Copyright © 2015 Grumman/Butkus Associates

7th District Police Station RTUs Replacement
3626 West Fond du Lac Avenue

MECHANICAL OVERALL FIRST FLOOR DEMOLITION PLAN

REVISIONS

DESIGNED BY	DEB
DRAWN BY	DEB
CHECKED BY	RDK
DATE 12/28/15	SCALE 3/32"=1'-0"
JOB NUMBER	PL120130100
SHEET NUMBER	MD102
OF	

KEYED NOTES

1. DEMOLISH THIS SECTION OF DUCTWORK AS REQUIRED FOR INSTALLATION OF NEW VAV BOX.
2. GAS PIPING DOWN TO BASEMENT. DEMOLITION IS PART OF THE BASE BID OF THIS PROJECT.
3. DEMOLISH MAKE-UP AHU AND CONNECTED DUCTWORK AS SHOWN.
4. REMOVE HONEYWELL THERMOSTAT, WIRING, AND CONDUIT BACK TO SOURCE.
5. REMOVE DAMPER ACTUATOR, WIRE, AND CONDUIT BACK TO SOURCE. LOCK DAMPER IN FULL OPEN POSITION.
6. REMOVE TRANE ZONE CONTROL THERMOSTAT, WIRING, AND CONDUIT BACK TO SOURCE.

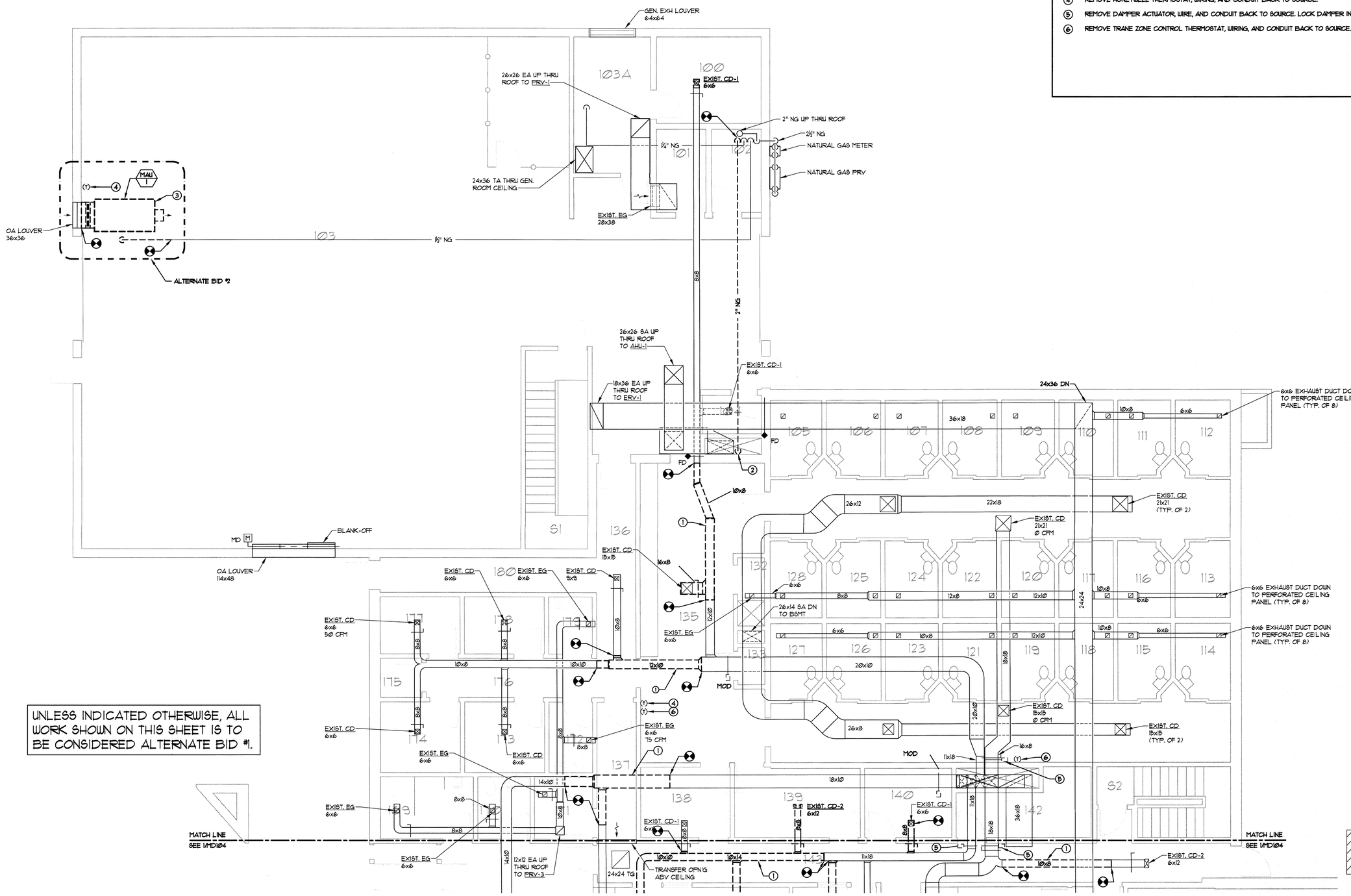

UNLESS INDICATED OTHERWISE, ALL WORK SHOWN ON THIS SHEET IS TO BE CONSIDERED ALTERNATE BID #1.

1 MECHANICAL PARTIAL FIRST FLOOR DEMOLITION PLAN - AREA A

SCALE: 3/16" = 1'-0"

PLAN NORTH

KEYPLAN

AREA A

AREA B

City of Milwaukee
Department of Public Works
Infrastructure Services Division
Bridges & Buildings Section

GRUMMAN /BUTKUS ASSOCIATES

Energy Efficiency Consultants and Sustainable Design Engineers
1011 North Mayfair Road, Suite 300
414 476.8980

Copyright © 2015 Grumman/Butkus Associates

7th District Police Station RTUs Replacement
3626 West Fond du Lac Avenue
MECHANICAL PARTIAL FIRST FLOOR DEMOLITION PLAN - AREA A

REVISIONS

DESIGNED BY	DEB
DRAWN BY	DEB
CHECKED BY	RDK
DATE 12/28/15	SCALE 3/16"=1'-0"
JOB NUMBER	PL120130100
SHEET NUMBER	MD103
OF	

KEYED NOTES

1. DEMOLISH THIS SECTION OF DUCTWORK AS REQUIRED FOR INSTALLATION OF NEW VAV BOX.
2. REMOVE HONEYWELL THERMOSTAT, WIRING, AND CONDUIT BACK TO SOURCE.
3. REMOVE DAMPER ACTUATOR, WIRE, AND CONDUIT BACK TO SOURCE. LOCK DAMPER IN FULL OPEN POSITION.
4. REMOVE TRANE ZONE CONTROL THERMOSTAT, WIRING, AND CONDUIT BACK TO SOURCE.
5. DEMOLISH EXHAUST FAN AS SHOWN. ASSOCIATED DUCTWORK AND ROOF CAP SHALL REMAIN FOR REUSE.

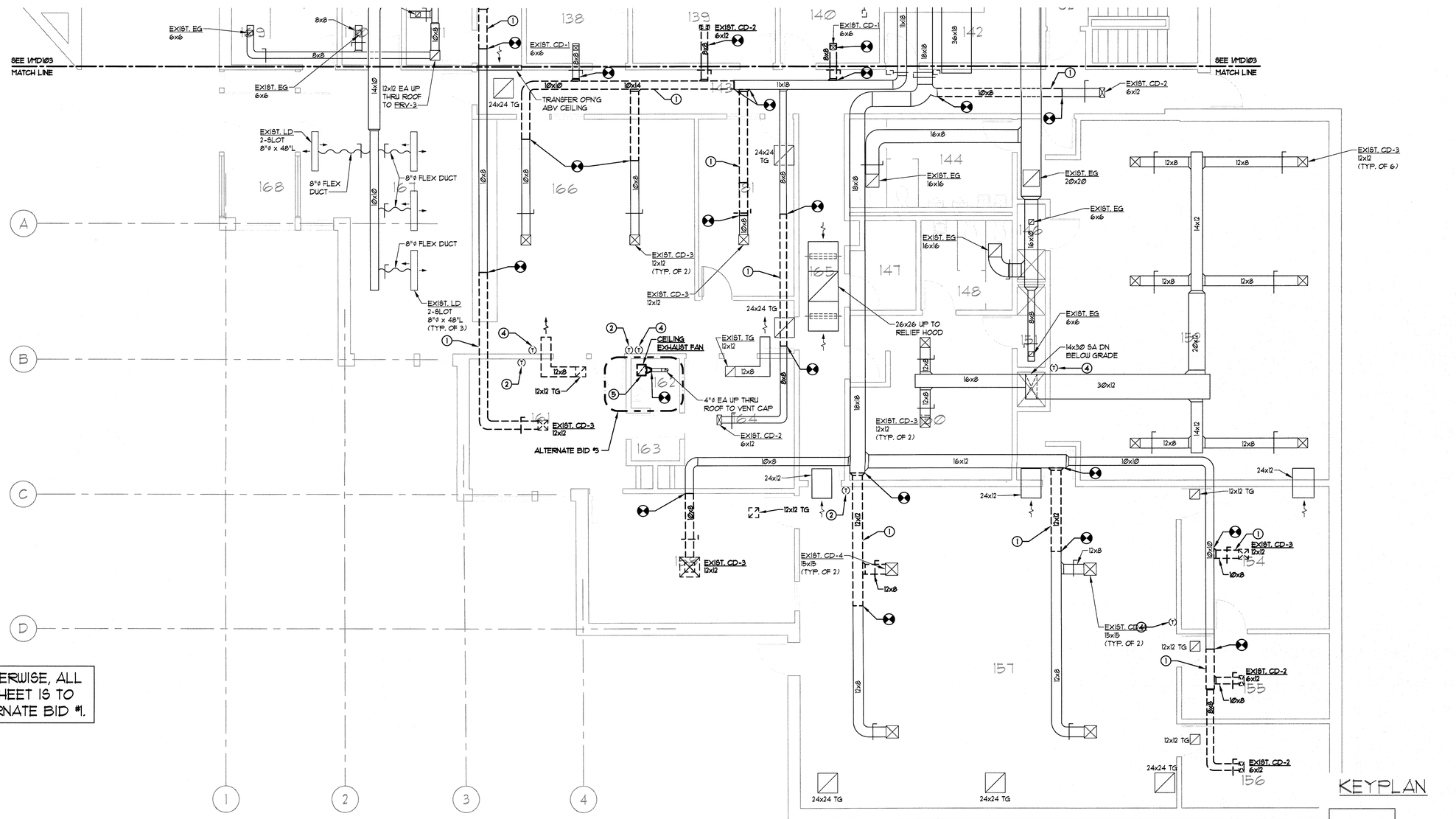

UNLESS INDICATED OTHERWISE, ALL WORK SHOWN ON THIS SHEET IS TO BE CONSIDERED ALTERNATE BID #1.

1 MECHANICAL PARTIAL FIRST FLOOR DEMOLITION PLAN - AREA B

SCALE: 3/16" = 1'-0"

PLAN NORTH

KEYPLAN

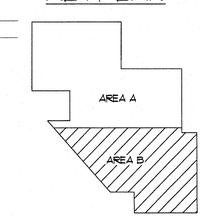

City of Milwaukee
Department of Public Works
Infrastructure Services Division
Bridges & Buildings Section

GRUMMAN /BUTKUS ASSOCIATES
Energy Efficiency Consultants and Sustainable Design Engineers
1011 North Mayfair Road, Suite 300
414 476.8980
Copyright © 2015 Grumman/Butkus Associates

7th District Police Station RTUs Replacement
3626 West Fond du Lac Avenue
MECHANICAL PARTIAL FIRST FLOOR DEMOLITION PLAN - AREA B

REVISIONS

DESIGNED BY	DEB
DRAWN BY	DEB
CHECKED BY	RDK
DATE 12/28/15	SCALE 3/16"=1'-0"
JOB NUMBER	PL120130100
SHEET NUMBER	MD104
OF	

GENERAL NOTES

1. OVERALL PLAN PROVIDED FOR REFERENCE ONLY. REFER TO INDICATED PARTIAL PLANS FOR DEMOLITION AND NEW WORK.

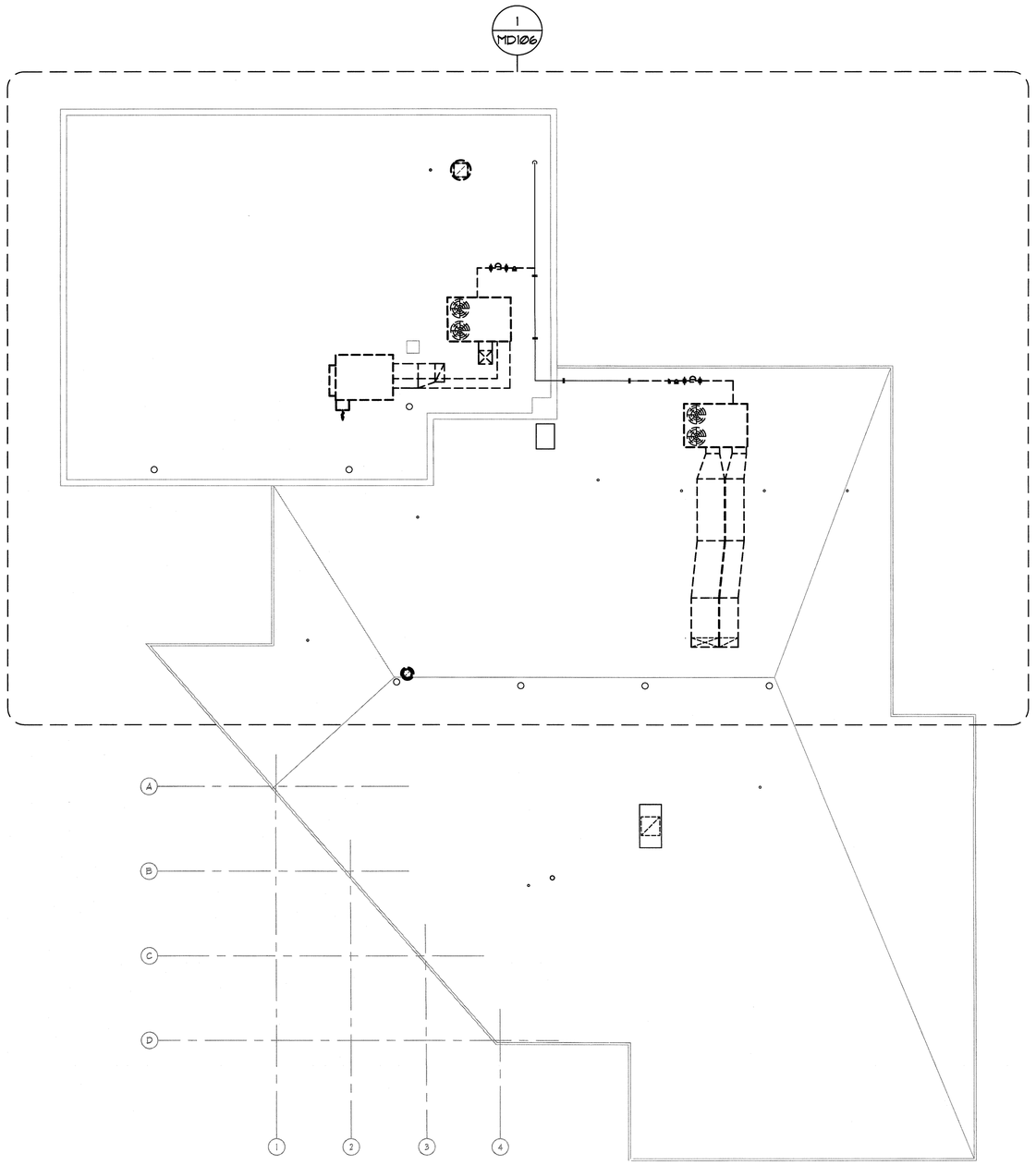

1 MECHANICAL OVERALL ROOF DEMOLITION PLAN

SCALE: 3/32" = 1'-0"

PLAN NORTH

City of Milwaukee

Department of Public Works
Infrastructure Services Division

Bridges & Buildings Section

GRUMMAN /BUTKUS ASSOCIATES

Energy Efficiency Consultants and Sustainable Design Engineers

1011 North Mayfair Road, Suite 300

414.475.8980

Copyright © 2015 Grumman/Butkus Associates

7th District Police Station RTUs Replacement
3626 West Fond du Lac Avenue
MECHANICAL OVERALL
ROOF DEMOLITION PLAN

REVISIONS

DESIGNED BY	DEB
DRAWN BY	DEB
CHECKED BY	RDK
DATE 12/28/15	SCALE 3/32"=1'-0"
JOB NUMBER	PL120130100
SHEET NUMBER	MD105
OF	

KEYED NOTES

1. DEMOLISH EXISTING AHU AND CONNECTED DUCTWORK AND PIPING AS SHOWN. DEMOLITION SHALL OCCUR AFTER THE REPLACEMENT AHU HAS BEEN INSTALLED, POWERED, AND TESTED FOR PROPER OPERATION.
2. DEMOLISH EXISTING ENERGY RECOVERY VENTILATOR AND CONNECTED DUCTWORK AS SHOWN. DEMOLITION SHALL OCCUR AFTER THE REPLACEMENT ERV HAS BEEN INSTALLED, POWERED, AND TESTED FOR PROPER OPERATION.
3. DEMOLISH CONDUIT AND CONTROL WIRING TO ERV OR RTU.
4. DEMOLISH EXISTING EXHAUST FAN. NEW EXHAUST FAN TO BE INSTALLED IN THIS LOCATION.

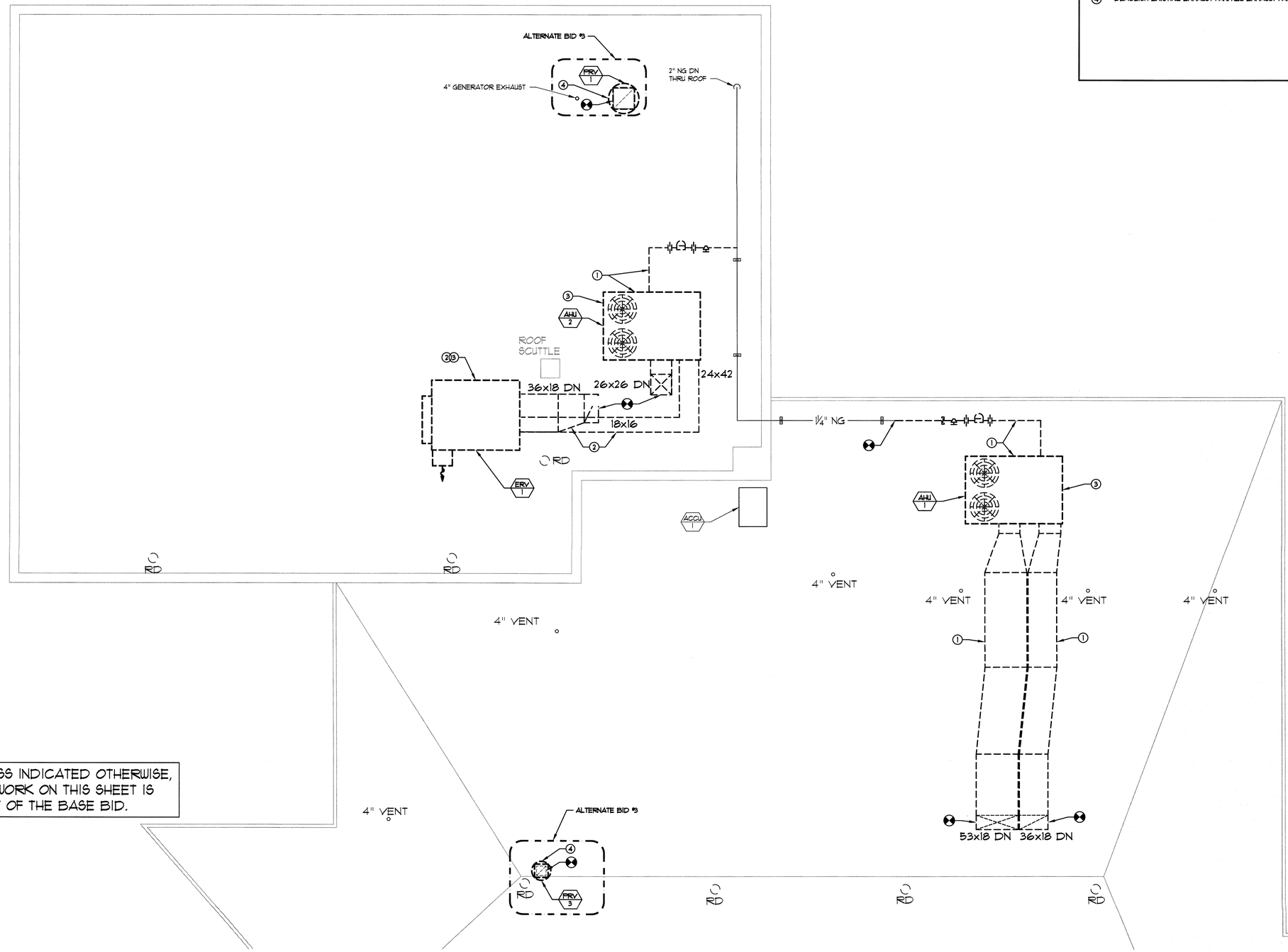

UNLESS INDICATED OTHERWISE, ALL WORK ON THIS SHEET IS PART OF THE BASE BID.

1 MECHANICAL PARTIAL ROOF DEMOLITION PLAN - AREA A

SCALE: 3/16" = 1'-0"

PLAN NORTH

KEYPLAN

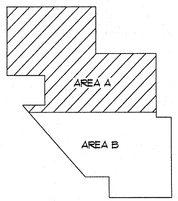

City of Milwaukee
Department of Public Works
Infrastructure Services Division
Bridges & Buildings Section

GRUMMAN /BUTKUS ASSOCIATES
Energy Efficiency Consultants and Sustainable Design Engineers
1011 North Mayfair Road, Suite 300
414.476.8980
Copyright © 2015 Grumman/Butkus Associates

7th District Police Station RTUs Replacement
3626 West Fond du Lac Avenue
MECHANICAL PARTIAL ROOF DEMOLITION PLAN - AREA A

REVISIONS

DESIGNED BY	DEB
DRAWN BY	DEB
CHECKED BY	RDK
DATE 12/28/15	SCALE 3/16"=1'-0"
JOB NUMBER	PL120130100
SHEET NUMBER	MD106
OF	

KEYED NOTES

1. PROVIDE NEW VAV BOX. INSTALL WITH SUFFICIENT CLEARANCE TO PROVIDE ACCESS TO CONTROL BOX.
2. PROVIDE NEW ELECTRIC HEATING COIL. INSTALL WITH SUFFICIENT CLEARANCE TO PROVIDE ACCESS TO CONTROL BOX.
3. PROVIDE SPACE TEMPERATURE SENSOR AND ASSOCIATE VAV CONTROLLER, POWER, AND COMMUNICATION BUS.

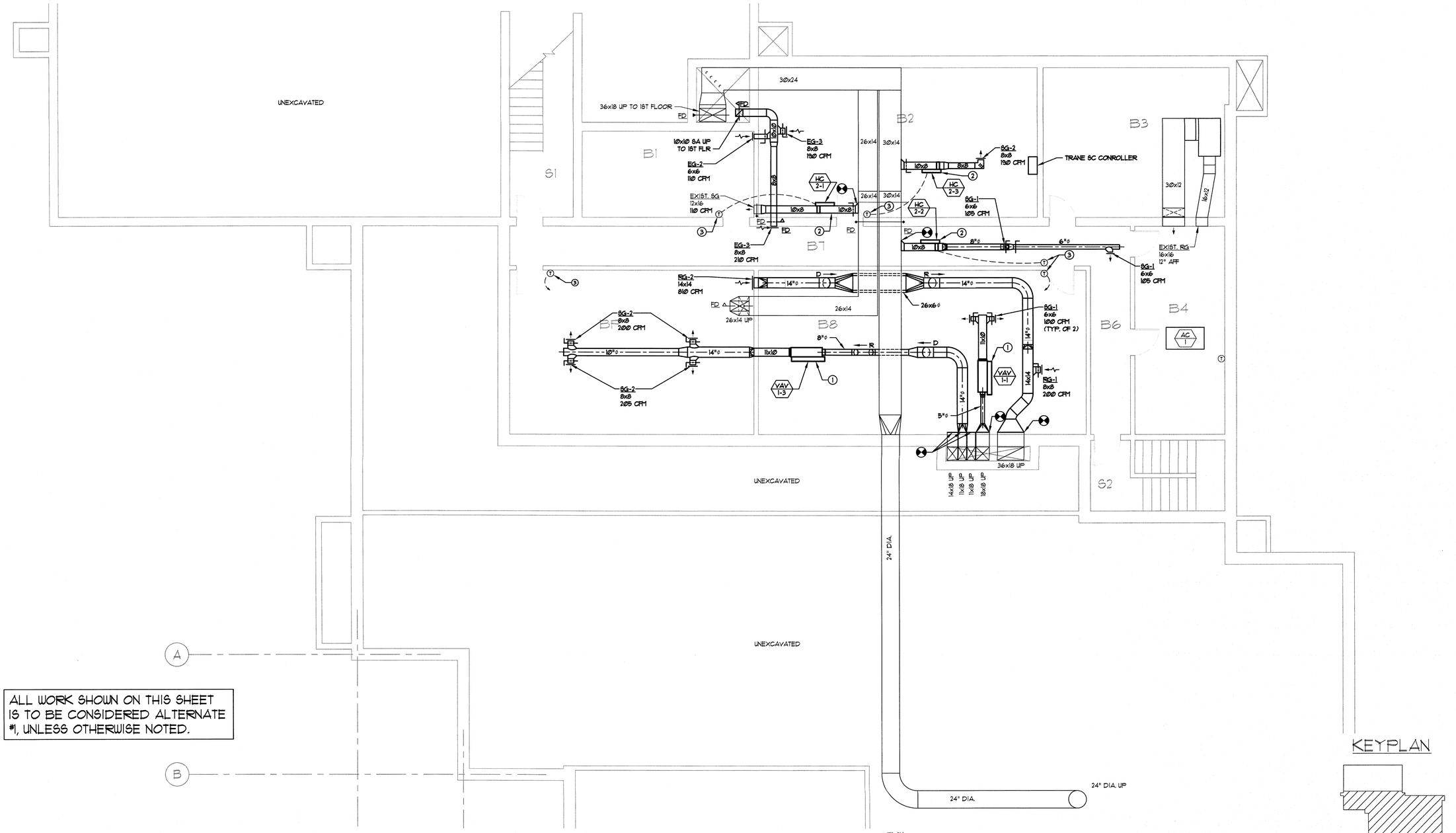

ALL WORK SHOWN ON THIS SHEET IS TO BE CONSIDERED ALTERNATE #1, UNLESS OTHERWISE NOTED.

1 MECHANICAL BASEMENT PLAN

SCALE: 3/16" = 1'-0"

KEYPLAN

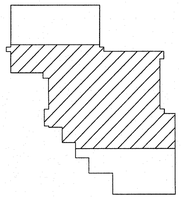

City of Milwaukee
Department of Public Works
Infrastructure Services Division
Bridges & Buildings Section

GRUMMAN /BUTKUS ASSOCIATES
Energy Efficiency Consultants and Sustainable Design Engineers
1011 North Mayfair Road, Suite 300
414 476.8980
Copyright © 2015 Grumman/Butkus Associates

7th District Police Station RTUs Replacement
3626 West Fond du Lac Avenue
MECHANICAL BASEMENT PLAN

REVISIONS

DESIGNED BY	DEB
DRAWN BY	DEB
CHECKED BY	RDK
DATE 12/28/15	SCALE 3/16"=1'-0"
JOB NUMBER	PL120130100
SHEET NUMBER	M101
OF	

GENERAL NOTES

1. OVERALL PLAN PROVIDED FOR REFERENCE ONLY. REFER TO INDICATED PARTIAL PLANS FOR DEMOLITION AND NEW WORK.

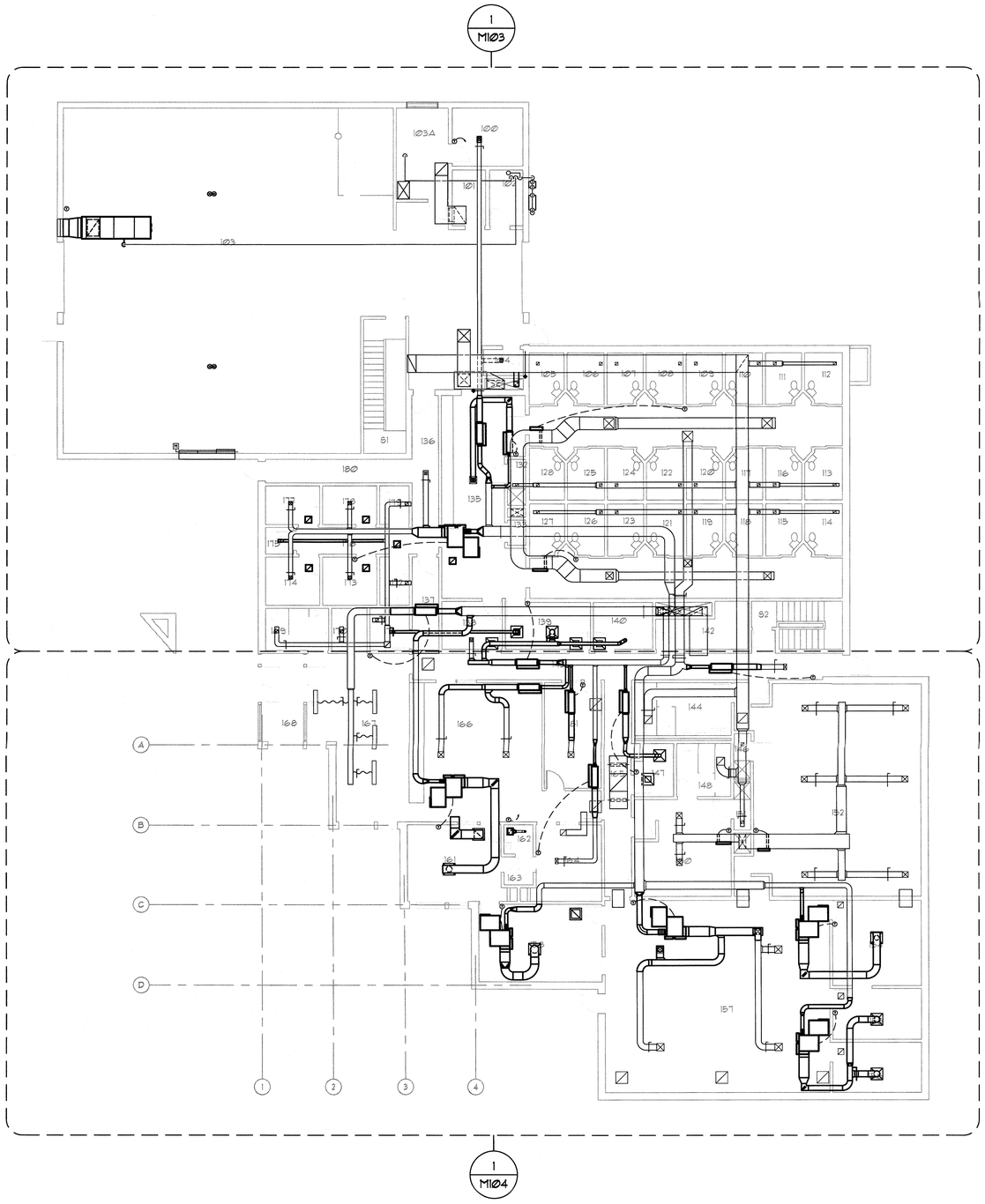

1 MECHANICAL OVERALL FIRST FLOOR PLAN

SCALE: 3/32" = 1'-0"

PLAN NORTH

City of Milwaukee

Department of Public Works
Infrastructure Services Division

Bridges & Buildings Section

GRUMMAN /BUTKUS ASSOCIATES

Energy Efficiency Consultants and Sustainable Design Engineers

1011 North Mayfair Road, Suite 300

414 476.8980

Copyright © 2015 Grumman/Butkus Associates

7th District Police Station RTUs Replacement
3626 West Fond du Lac Avenue

MECHANICAL OVERALL FIRST FLOOR PLAN

REVISIONS

DESIGNED BY	DEB
DRAWN BY	DEB
CHECKED BY	RDK
DATE 12/28/15	SCALE 3/32"=1'-0"
JOB NUMBER	PL120130100
SHEET NUMBER	M102
OF	

KEYED NOTES

1. PROVIDE NEW VAV BOX. INSTALL WITH SUFFICIENT CLEARANCE TO PROVIDE ACCESS TO CONTROL BOX.
2. PROVIDE NEW ELECTRIC HEATING COIL. INSTALL WITH SUFFICIENT CLEARANCE TO PROVIDE ACCESS TO CONTROL BOX.
3. PROVIDE NEW CEILING MOUNTED GAS-FIRED MAKE UP AIR UNIT AND CONNECT DUCTWORK AND PIPING. MAU SHALL HAVE MIXING BOX FURNISHED. (ALTERNATE BID 2)
4. ALTERNATE #1: PROVIDE SPACE TEMPERATURE SENSOR AND ASSOCIATE VAV CONTROLLER, POWER, AND COMMUNICATION BUS.
5. ALTERNATE #2: DISCARD AND RECONNECT MAU CONTROLS.
6. ALTERNATE #3: PROVIDE VENTILATION CONTROLS TO INCORPORATE THE FRV, MAU, OA VENTILATION DAMPER, CARBON MONOXIDE AND NITROGEN DIOXIDE (DIESEL) GAS DETECTION.

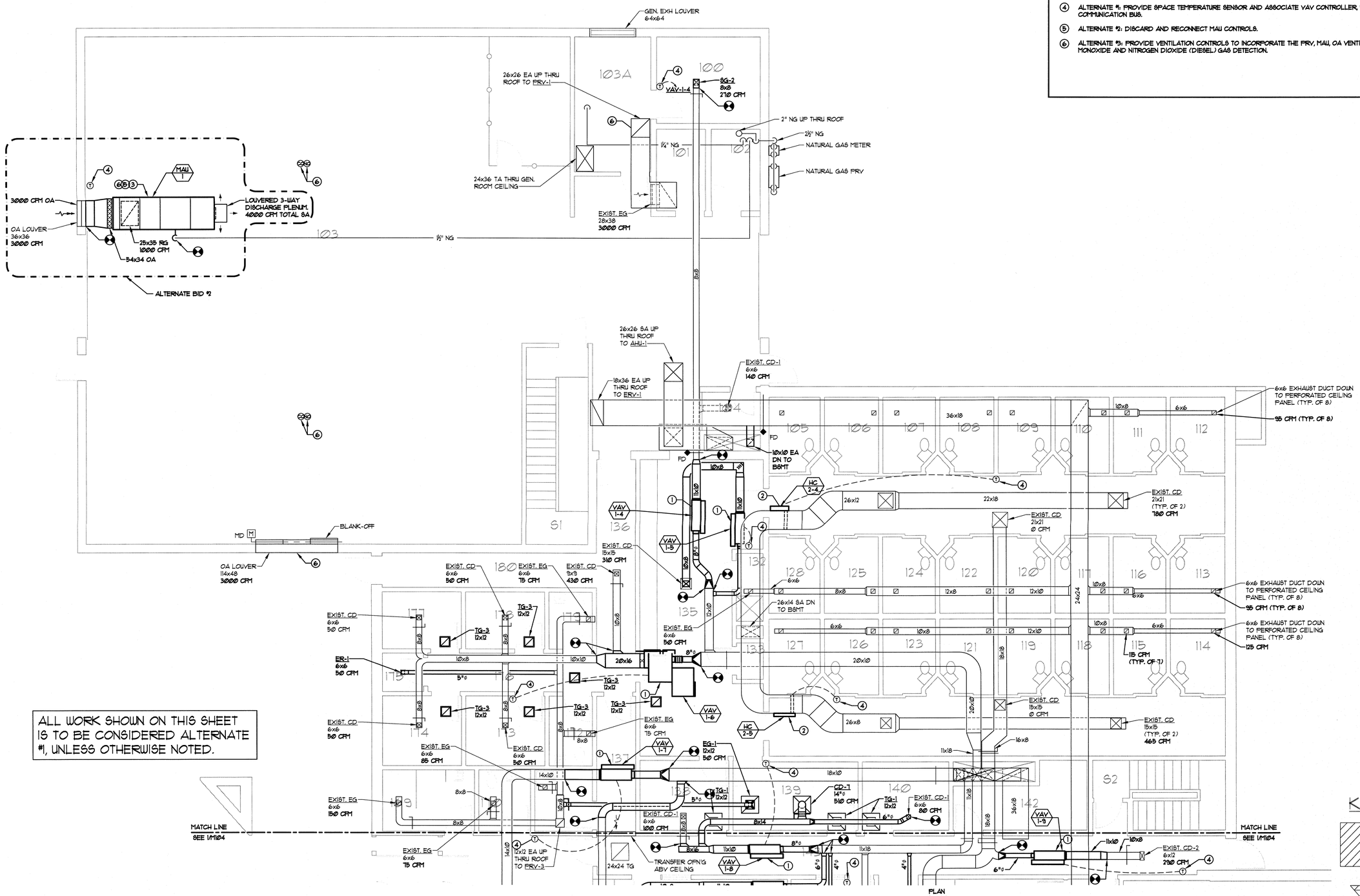

ALL WORK SHOWN ON THIS SHEET IS TO BE CONSIDERED ALTERNATE #1, UNLESS OTHERWISE NOTED.

1 MECHANICAL PARTIAL FIRST FLOOR PLAN - AREA A

SCALE: 3/16" = 1'-0"

PLAN NORTH

KEYPLAN

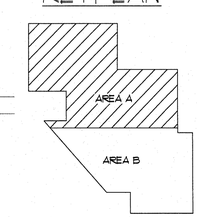

City of Milwaukee
Department of Public Works
Infrastructure Services Division
Bridges & Buildings Section

GRUMMAN /BUTKUS ASSOCIATES
Energy Efficiency Consultants and Sustainable Design Engineers
1011 North Mayfair Road, Suite 300
414.476.8980
Copyright © 2015 Grumman/Butkus Associates

7th District Police Station RTUs Replacement
3626 West Fond du Lac Avenue
MECHANICAL PARTIAL FIRST FLOOR PLAN - AREA A

REVISIONS

DESIGNED BY	DEB
DRAWN BY	DEB
CHECKED BY	RDK
DATE 12/28/15	SCALE 3/16"=1'-0"
JOB NUMBER	PL120130100
SHEET NUMBER	M103
OF	

KEYED NOTES

1. PROVIDE NEW VAV BOX. INSTALL WITH SUFFICIENT CLEARANCE TO PROVIDE ACCESS TO CONTROL BOX.
2. PROVIDE NEW ELECTRIC HEATING COIL. INSTALL WITH SUFFICIENT CLEARANCE TO PROVIDE ACCESS TO CONTROL BOX.
3. ALTERNATE #1: PROVIDE SPACE TEMPERATURE SENSOR AND ASSOCIATE VAV CONTROLLER, POWER, AND COMMUNICATION BUS.

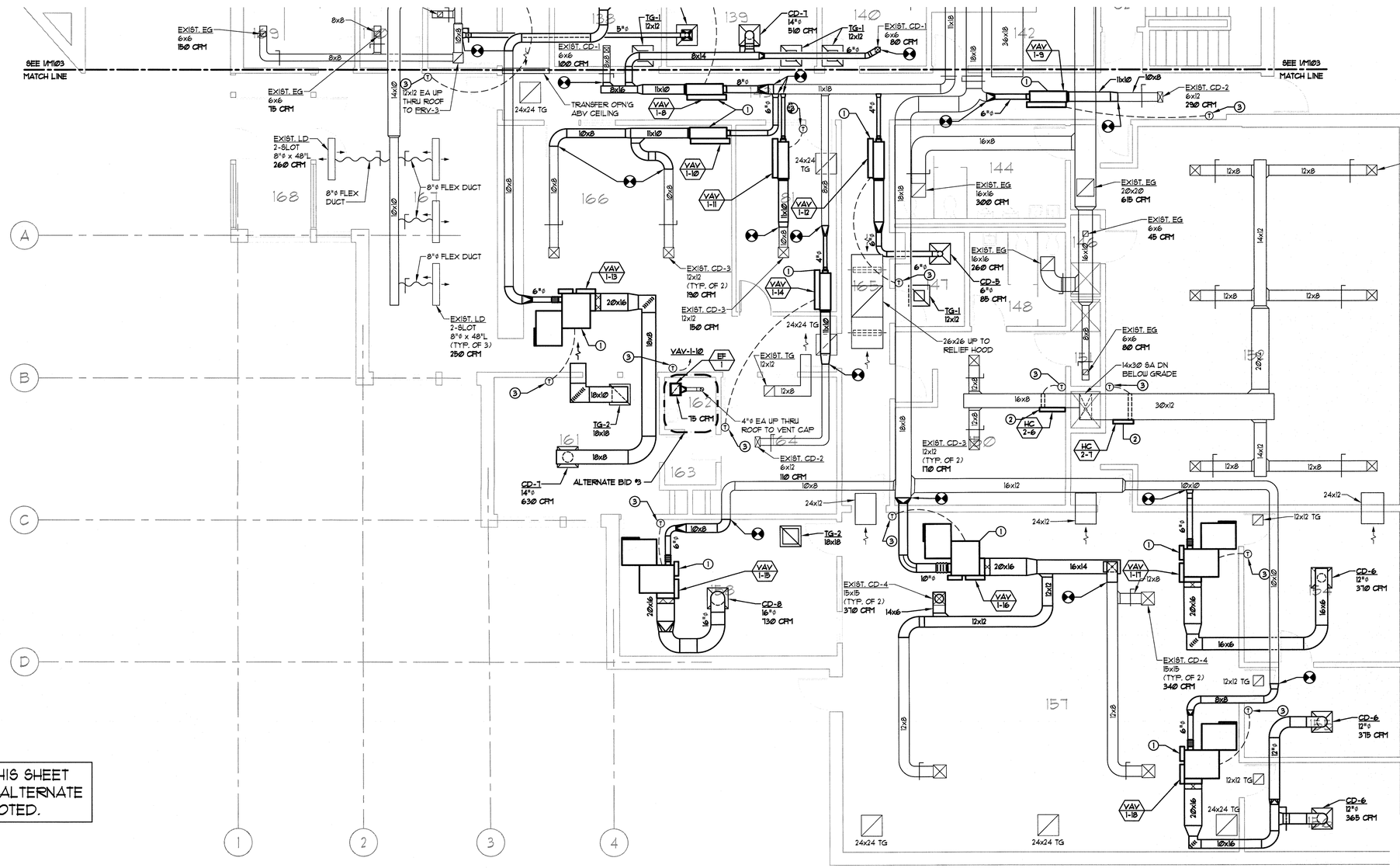

ALL WORK SHOWN ON THIS SHEET IS TO BE CONSIDERED ALTERNATE #1, UNLESS OTHERWISE NOTED.

1 MECHANICAL PARTIAL FIRST FLOOR PLAN - AREA B

SCALE: 3/16" = 1'-0"

PLAN NORTH

KEYPLAN

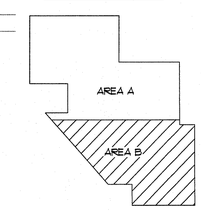

City of Milwaukee
Department of Public Works
Infrastructure Services Division
Bridges & Buildings Section

GRUMMAN /BUTKUS ASSOCIATES
Energy Efficiency Consultants and Sustainable Design Engineers
1011 North Mayfair Road, Suite 300
414.476.8980

Copyright © 2015 Grumman/Butkus Associates

7th District Police Station RTUs Replacement
3626 West Fond du Lac Avenue
MECHANICAL PARTIAL FIRST FLOOR PLAN - AREA B

REVISIONS

DESIGNED BY	DEB
DRAWN BY	DEB
CHECKED BY	RDK
DATE 12/28/15	SCALE 3/16"=1'-0"
JOB NUMBER	PL120130100
SHEET NUMBER	M104
OF	

GENERAL NOTES

1. OVERALL PLAN PROVIDED FOR REFERENCE ONLY. REFER TO INDICATED PARTIAL PLANS FOR DEMOLITION AND NEW WORK.

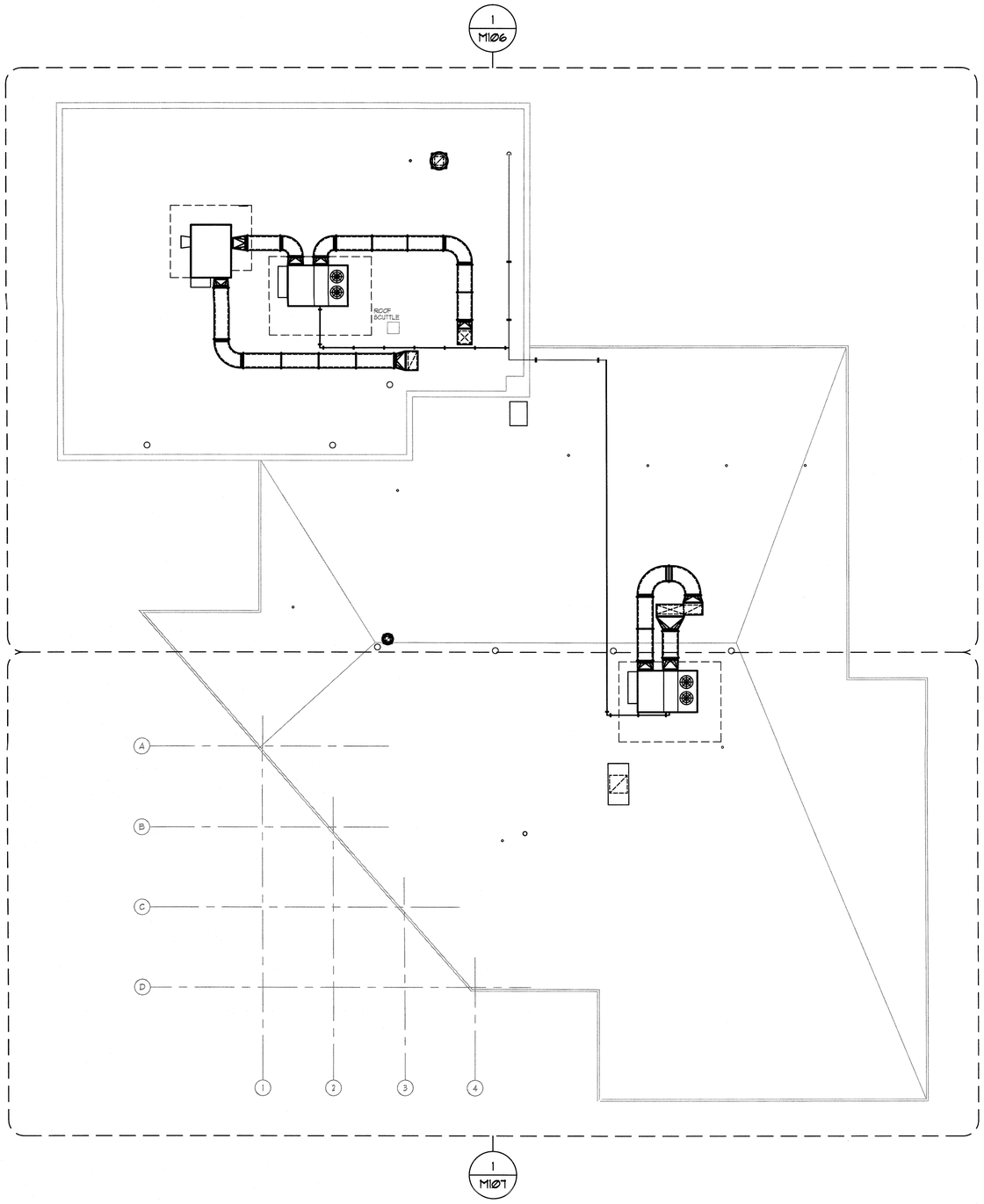

1 MECHANICAL OVERALL ROOF PLAN

SCALE: 3/32" = 1'-0"

PLAN NORTH

City of Milwaukee

Department of Public Works
Infrastructure Services Division

Bridges & Buildings Section

GRUMMAN /BUTKUS ASSOCIATES

Energy Efficiency Consultants and Sustainable Design Engineers

1011 North Mayfair Road, Suite 300

414 476.8980

Copyright © 2015 Grumman/Butkus Associates

7th District Police Station RTUs Replacement
3626 West Fond du Lac Avenue

MECHANICAL OVERALL ROOF PLAN

REVISIONS

DESIGNED BY	DEB
DRAWN BY	DEB
CHECKED BY	RDK
DATE 12/28/15	SCALE 3/32"=1'-0"
JOB NUMBER	PL120130100
SHEET NUMBER	M105
OF	

KEYED NOTES

1. PROVIDE NEW ROOFTOP AHU AND CONNECTED DUCTWORK AND GAS PIPING. INSTALL AHU, POWER AND AS MUCH DUCTWORK AND PIPING AS POSSIBLE BEFORE BEGINNING DEMOLITION OF EXISTING AHU TO BE REPLACED. TEST NEW AHU FOR PROPER OPERATION BEFORE REMOVING AHU TO BE REPLACED.
2. PROVIDE NEW ROOFTOP ENERGY RECOVERY VENTILATOR AND CONNECTED DUCTWORK. INSTALL ERV, POWER AND AS MUCH DUCTWORK AS POSSIBLE BEFORE BEGINNING DEMOLITION OF EXISTING ERV. TEST FOR PROPER OPERATION OF NEW ERV BEFORE REMOVING ERV TO BE REPLACED.
3. PROVIDE NEW ROOFTOP EXHAUST FAN. (ALTERNATE BID #3)
4. PROVIDE DOUBLE-WALL DUCTWORK.

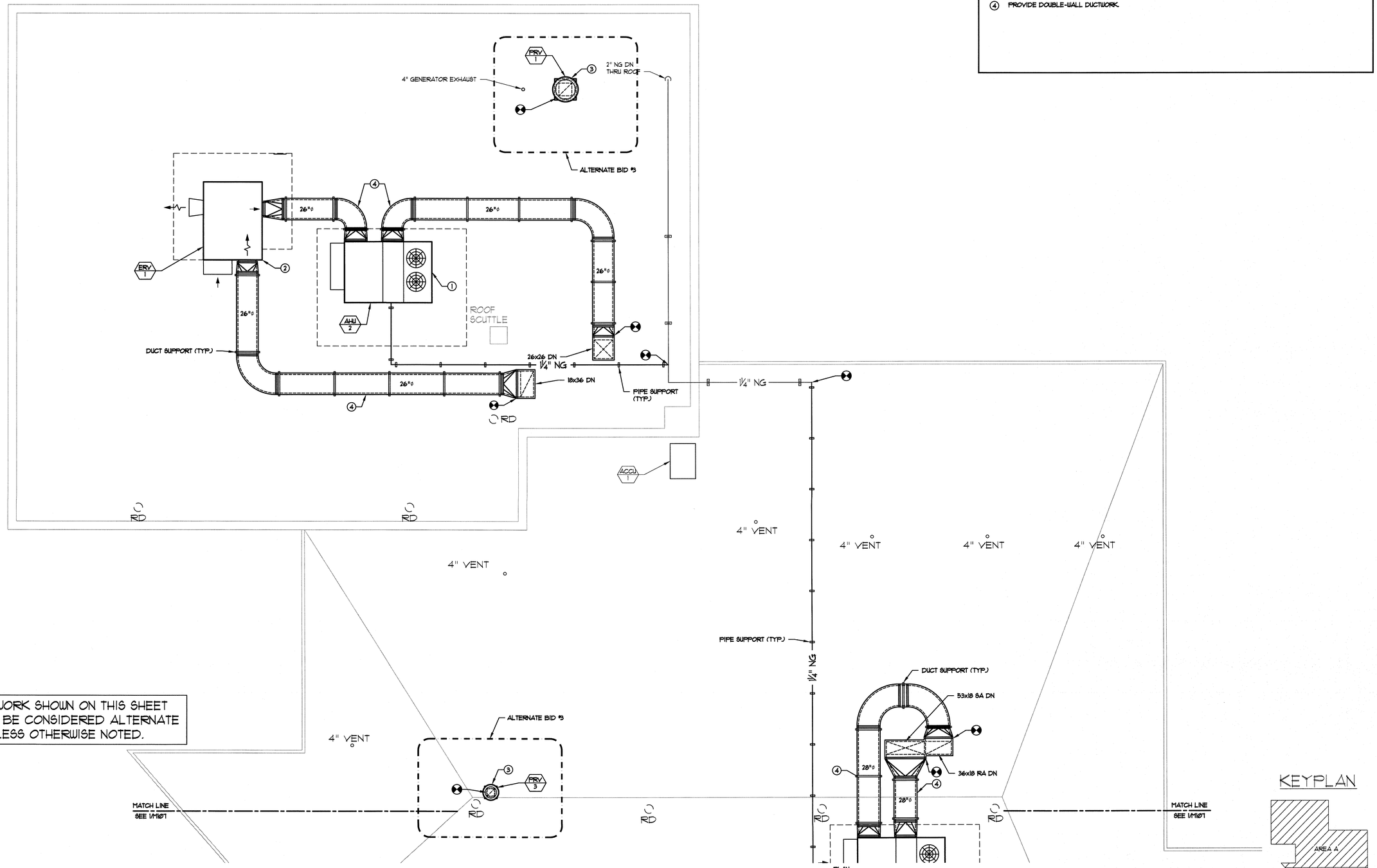

ALL WORK SHOWN ON THIS SHEET IS TO BE CONSIDERED ALTERNATE #1, UNLESS OTHERWISE NOTED.

1 MECHANICAL PARTIAL ROOF PLAN - AREA A

SCALE: 3/16" = 1'-0"

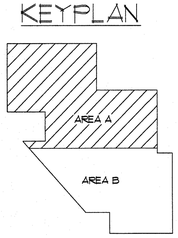

City of Milwaukee
Department of Public Works
Infrastructure Services Division
Bridges & Buildings Section

GRUMMAN /BUTKUS ASSOCIATES
Energy Efficiency Consultants and Sustainable Design Engineers
1011 North Mayfair Road, Suite 300
414.476.8980
Copyright © 2015 Grumman/Butkus Associates

7th District Police Station RTUs Replacement
3626 West Fond du Lac Avenue
MECHANICAL PARTIAL ROOF PLAN - AREA A

REVISIONS

DESIGNED BY	DEB
DRAWN BY	DEB
CHECKED BY	RDK
DATE 12/28/15	SCALE 3/16"=1'-0"
JOB NUMBER	PL120130100
SHEET NUMBER	M106
OF	

KEYED NOTES

1. PROVIDE NEW ROOFTOP AHU AND CONNECTED DUCTWORK AND GAS PIPING. INSTALL AHU, POWER AND AS MUCH DUCTWORK AND PIPING AS POSSIBLE BEFORE BEGINNING DEMOLITION OF EXISTING AHU TO BE REPLACED. TEST NEW AHU FOR PROPER OPERATION BEFORE REMOVING AHU TO BE REPLACED.
2. PROVIDE NEW ROOFTOP EXHAUST FAN. (ALTERNATE BID #3)

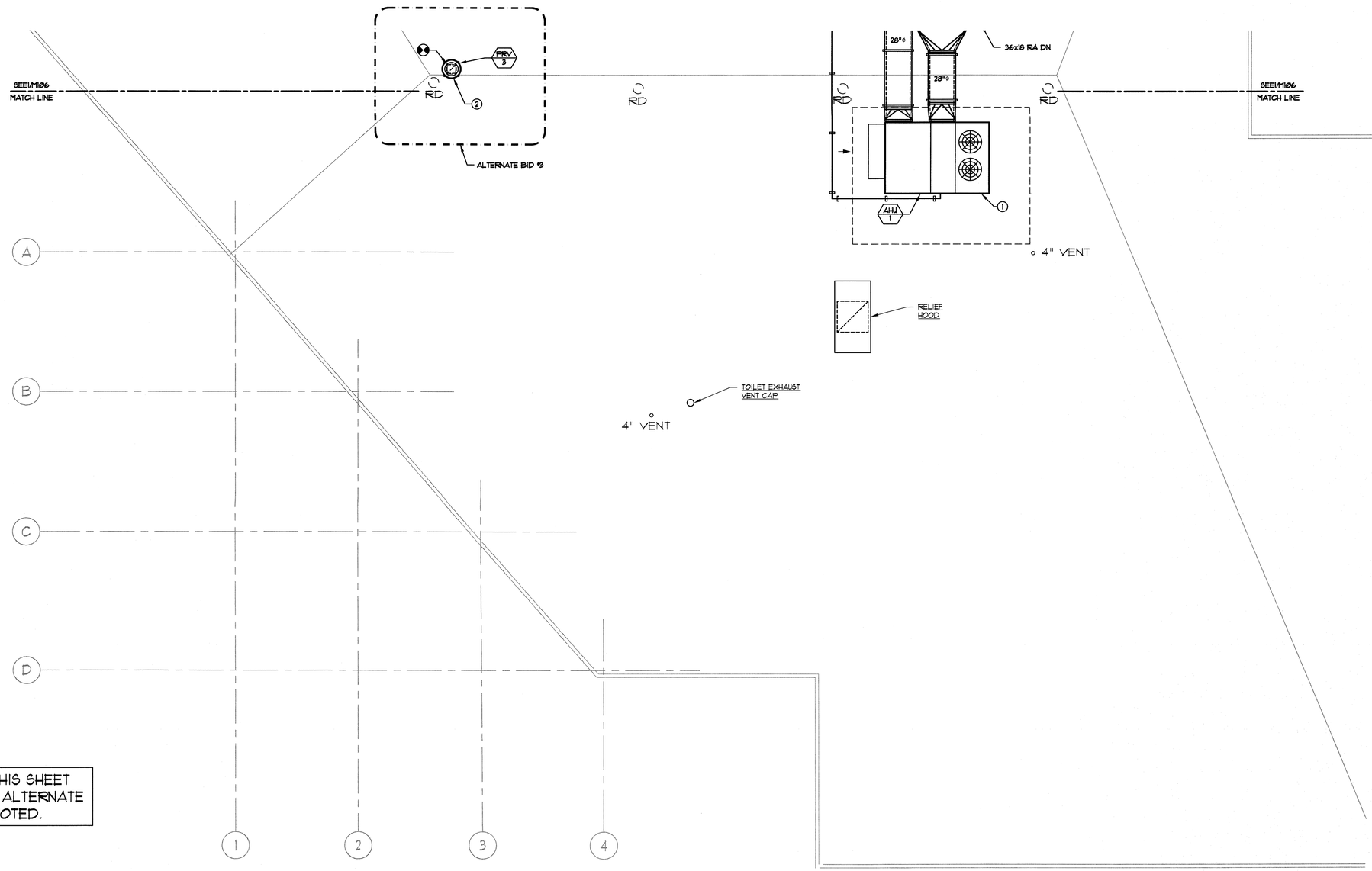

ALL WORK SHOWN ON THIS SHEET IS TO BE CONSIDERED ALTERNATE #1, UNLESS OTHERWISE NOTED.

1 MECHANICAL PARTIAL ROOF PLAN - AREA B

SCALE: 3/16" = 1'-0"

PLAN NORTH

KEYPLAN

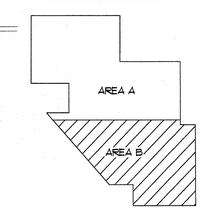

City of Milwaukee

Department of Public Works
Infrastructure Services Division

Bridges & Buildings Section

GRUMMAN /BUTKUS ASSOCIATES

Energy Efficiency Consultants and Sustainable Design Engineers

1011 North Mayfair Road, Suite 300

414 476.8980

Copyright © 2015 Grumman/Butkus Associates

7th District Police Station RTUs Replacement
3626 West Fond du Lac Avenue
MECHANICAL PARTIAL ROOF PLAN - AREA B

REVISIONS

DESIGNED BY	DEB
DRAWN BY	DEB
CHECKED BY	RDK
DATE 12/28/15	SCALE 3/16"=1'-0"
JOB NUMBER	PL120130100
SHEET NUMBER	M107
OF	

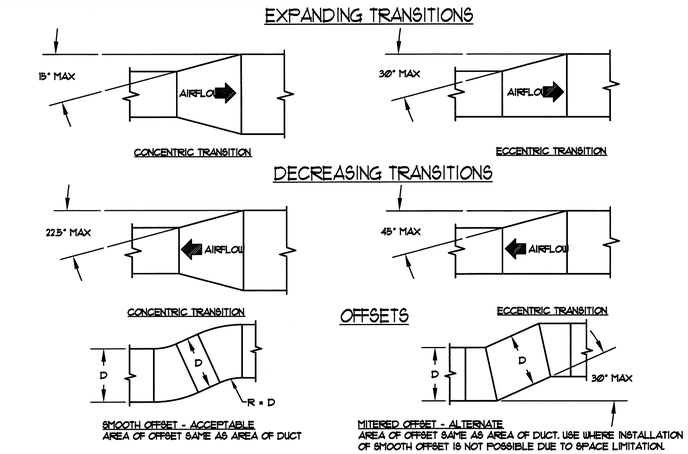

1 DUCT TRANSITION AND OFFSET DETAILS

SCALE: NONE

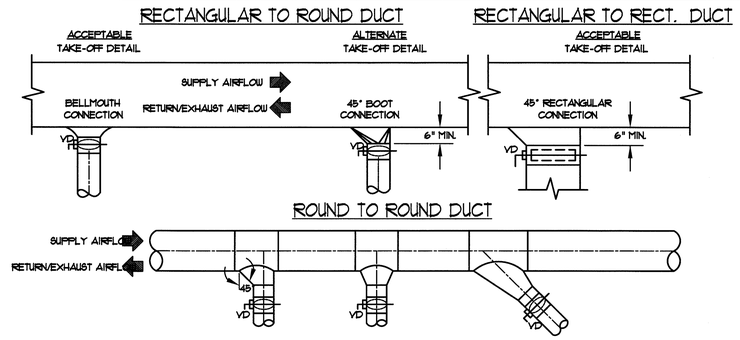

NOTES:

1. PROVIDE RUSKIN MODEL MDR825 MANUAL VOLUME DAMPER FOR RECTANGULAR TO ROUND AND ROUND TO ROUND DUCT BRANCH TAKE-OFFS WITH A LOCKING TYPE HAND QUADRANT OPERATOR WITH LEVER HANDLE, POSITION INDICATOR AND LOCK NUT; PROVIDE A MINIMUM OF A 2" HAND QUADRANT STAND-OFF ELEVATED PLATFORM WHERE DAMPER IS LOCATED IN INSULATED DUCTS.
2. PROVIDE RUSKIN MODEL MD35 MANUAL VOLUME DAMPER FOR RECTANGULAR TO RECTANGULAR DUCT BRANCH TAKE-OFF WITH A LOCKING TYPE HAND QUADRANT OPERATOR WITH LEVER HANDLE, POSITION INDICATOR AND LOCK NUT; PROVIDE A MINIMUM OF A 2" HAND QUADRANT STAND-OFF ELEVATED PLATFORM WHERE DAMPER IS LOCATED IN INSULATED DUCTS.
3. ALTERNATE RECTANGULAR TO ROUND TAKE-OFF FITTING TO BE USED WHEN DUCT HEIGHT DOES NOT PERMIT THE USE OF A FULL-SIZE BELLMOUTH.
4. SPIN-IN FITTING WITH INTEGRAL MANUAL VOLUME DAMPER WITH WING NUT IS NOT ALLOWED.
5. NO STRAIGHT TAP, BUTT FLANGE OR CINCH LOCK IS ALLOWED FOR RECTANGULAR TO ROUND DUCT TAKE-OFFS.
6. NO 90 DEGREE OR 45 DEGREE TAP IS ALLOWED FOR ROUND TO ROUND DUCT TAKE-OFFS.

2 DUCT TAKE-OFF DETAILS

SCALE: NONE

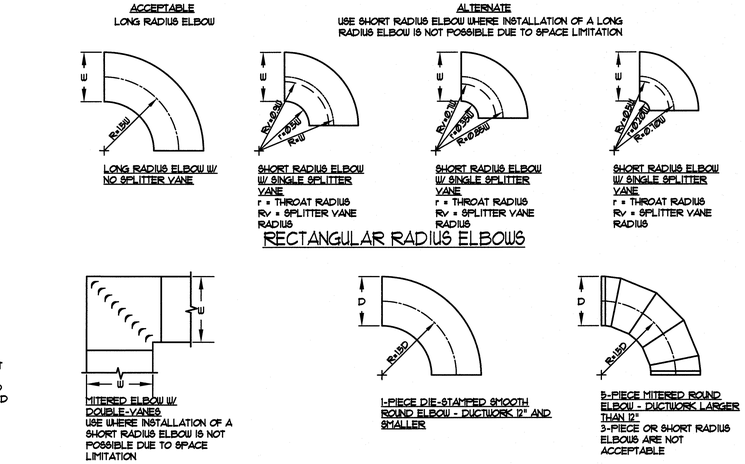

3 RECT. AND ROUND DUCT ELBOW DETAILS

SCALE: NONE

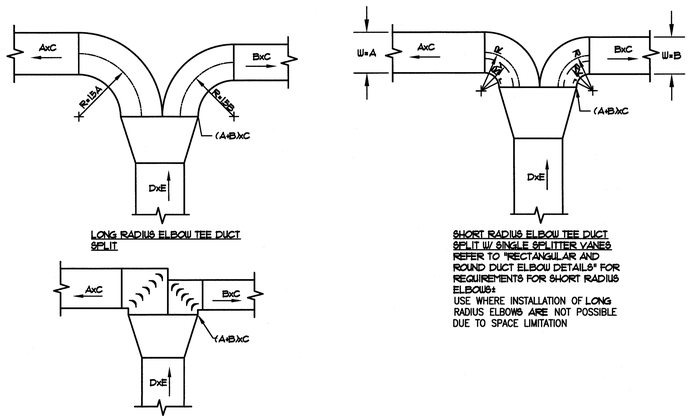

5 RECTANGULAR DUCT TEE FITTING DETAILS

SCALE: NONE

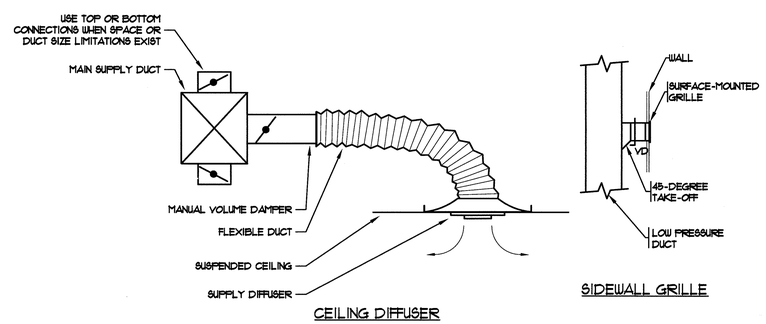

NOTES:

1. LENGTH OF FLEXIBLE DUCTS SHALL NOT EXCEED 5'-0" INCLUDING ELBOWS.
2. THIS DETAIL DOES NOT APPLY TO OPERATING ROOM DIFFUSERS WHERE HARD DUCT CONNECTIONS SHALL BE MADE.

7 SUPPLY DIFFUSER CONNECTION DETAIL

SCALE: NONE

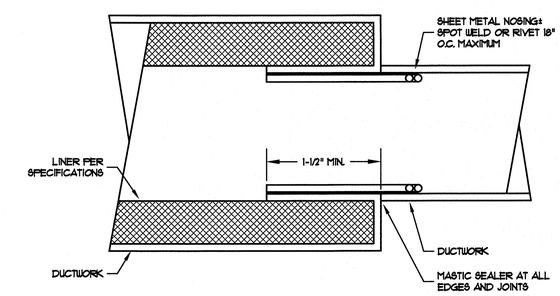

8 DUCT LINER TERMINATION DETAIL

SCALE: NONE

NOTES:

1. INSTALL PLENUM RETURN ATTENUATING BOOTS WHERE INDICATED ON DRAWINGS.
2. MINIMUM DUCT INTERIOR DIMENSIONS SHALL BE AS FOLLOWS: 1 SQFT. FOR EACH 400 CFM (E.G. PROVIDE 12"x12" TRANSFER DUCT FOR 400 CFM RETURN AIR, 24"x12" FOR 800 CFM, ETC.)
3. DIRECT PLENUM TERMINATION AS FOLLOWS (AS MUCH AS PRACTICAL):
   - TURN IN OPPOSITE DIRECTION FROM MAIN RETURN OPENINGS ABOVE CEILING
   - TURN IN OPPOSITE DIRECTION FROM ANOTHER TRANSFER BOOT TERMINATION
   - TURN IN OPPOSITE DIRECTION FROM SOURCE OF NOISE (VAV BOX, ABOVE-CEILING FAN, ETC.)
   - TURN IN OPPOSITE DIRECTION FROM ADJACENT OFFICE OCCUPANT
4. PROVIDE TRANSFER TWO-ELBOW PLENUM (Z-CONFIGURATION) WHERE HIGHER SOUND PROTECTION IS REQUIRED.
5. UNLESS NOTED OTHERWISE, RETURN REGISTER SHALL BE SIZED AS FOLLOWS:
   UP TO 299 CFM - 12"x24"
   300-899 CFM - 24"x24"
   900-1299 CFM - 36"x24"
   1300-1800 CFM - 48"x24"

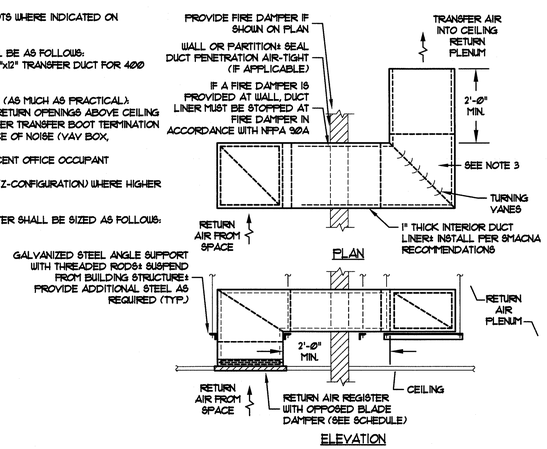

4 RETURN AIR GRILLE WITH TRANSFER DUCT DETAIL

SCALE: NONE

NOTES:

1. INSTALL PLENUM RETURN ATTENUATING BOOTS WHERE INDICATED ON DRAWINGS.
2. MINIMUM DUCT INTERIOR DIMENSIONS SHALL BE AS FOLLOWS: 1 SQFT. FOR EACH 400 CFM (E.G. PROVIDE 12"x12" TRANSFER DUCT FOR 400 CFM RETURN AIR, 24"x12" FOR 800 CFM, ETC.)
3. DIRECT PLENUM TERMINATION AS FOLLOWS (AS MUCH AS PRACTICAL):
   - TURN IN OPPOSITE DIRECTION FROM MAIN RETURN OPENINGS ABOVE CEILING
   - TURN IN OPPOSITE DIRECTION FROM ANOTHER TRANSFER BOOT TERMINATION
   - TURN IN OPPOSITE DIRECTION FROM SOURCE OF NOISE (VAV BOX, ABOVE-CEILING FAN, ETC.)
   - TURN IN OPPOSITE DIRECTION FROM ADJACENT OFFICE OCCUPANT
5. UNLESS NOTED OTHERWISE, RETURN REGISTER SHALL BE SIZED AS FOLLOWS:
   UP TO 299 CFM - 12"x24"
   300-899 CFM - 24"x24"
   900-1299 CFM - 36"x24"
   1300-1800 CFM - 48"x24"

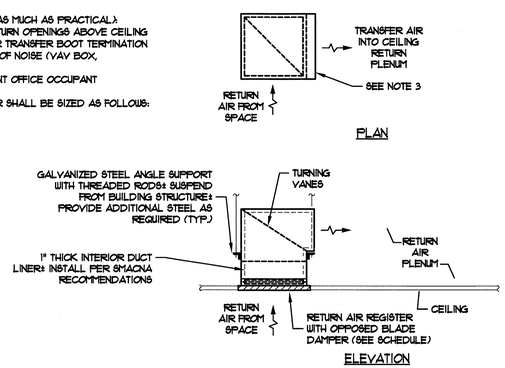

6 PLENUM RETURN GRILLE DETAIL

SCALE: NONE

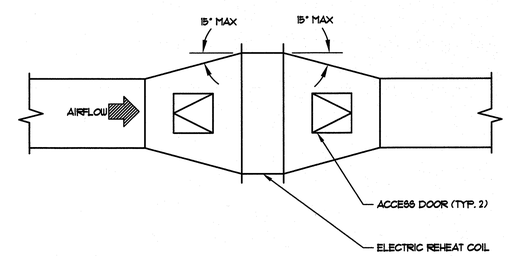

NOTES:

1. PROVIDE ACCESS DOORS ON BOTH UPSTREAM AND DOWNSTREAM SIDE OF REHEAT COIL.
2. LOCATE ACCESS DOORS ON EITHER SIDE OR BOTTOM OF DUCT IN LOCATIONS THAT PROVIDES ADEQUATE SPACE FOR ACCESS.

9 DUCT MOUNTED REHEAT COIL DETAIL

SCALE: NONE

City of Milwaukee
Department of Public Works
Infrastructure Services Division
Bridges & Buildings Section

GRUMMAN/BUTKUS ASSOCIATES
Energy Efficiency Consultants and Sustainable Design Engineers
1011 North Mayfair Road, Suite 300
414 476.8980
Copyright © 2015 Grumman/Butkus Associates

7th District Police Station RTUs Replacement
3626 West Fond du Lac Avenue
MECHANICAL DETAILS

REVISIONS

DESIGNED BY	DEB
DRAWN BY	DEB
CHECKED BY	RDK
DATE 12/28/15	SCALE NONE
JOB NUMBER	PL120130100
SHEET NUMBER	M501
OF	

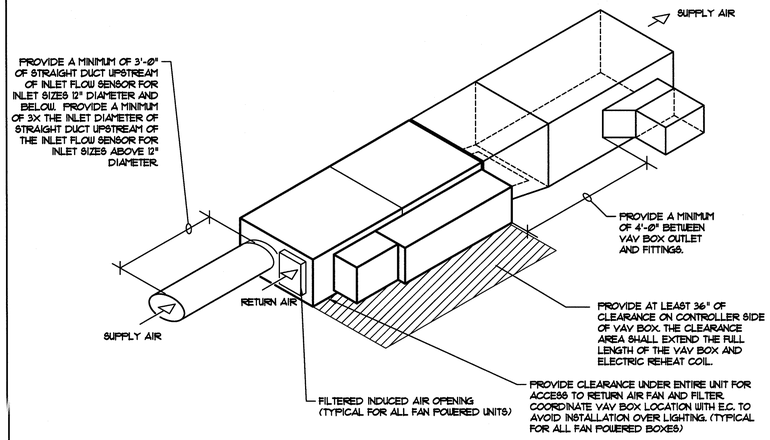

1 AIR TERMINAL UNIT DETAIL

SCALE: NONE

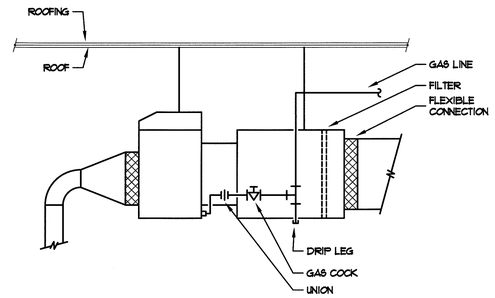

2 MAU-1 INSTALLATION DETAIL

SCALE: NONE

NOTES:

1. INSTALL CURB FOLLOWING MANUFACTURER RECOMMENDATIONS.
2. THIS CONTRACTOR SHALL PROVIDE ROOF CURBS AND OPENINGS. CURBS SHALL INCLUDE CANT AND ROOFING NAILER. CURBS SHALL HAVE A CONTINUOUS 1" BEARING ALL AROUND ON THE ROOF DECK AND WILL BE INSTALLED IN COMPLIANCE WITH THE NATIONAL ROOFING CONTRACTORS ASSOCIATION. MINIMUM HEIGHT SHALL BE 12". ALL WORK SHALL BE PERFORMED IN THE ABSENCE OF MOISTURE WITH NO LOW SPOTS.

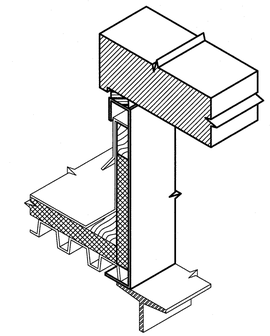

3 ROOF CURB INSTALLATION DETAIL

SCALE: NONE

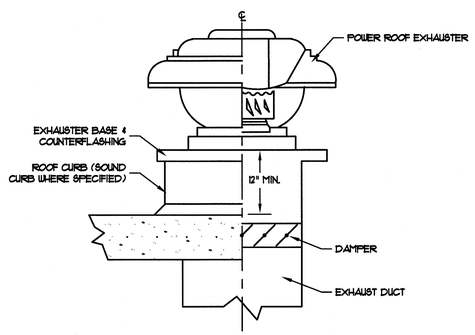

4 POWER ROOF VENTILATOR DETAIL

SCALE: NONE

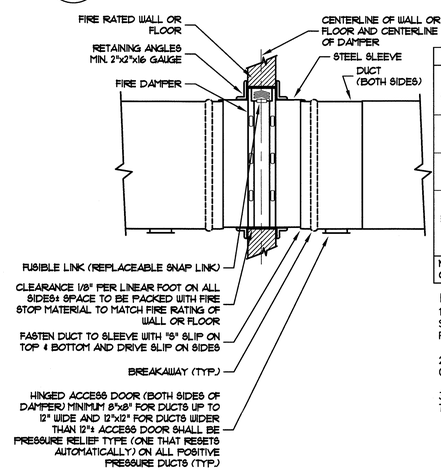

MINIMUM SLEEVE THICKNESS				
TYPE OF CONNECTION	DUCT DIMENSION	SLEEVE GAGE	MINIMUM SLEEVE THICKNESS	
			UNCOATED STEEL	COATED STEEL
RIGID	24" MAX. DIA. 24" MAX. HEIGHT AND 36" MAX. WIDTH	16	0.054"	0.058"
RIGID	OVER 24" DIA. OVER 24" HEIGHT AND OVER 36" WIDTH	14	0.069"	0.071"
BREAKAWAY	12" AND LESS 13"-30" 31"-54" 55"-84" 85" AND GREATER	26 24 22 20 18	0.018" 0.024" 0.030" 0.036" 0.041"	
NOTE: SLEEVE THICKNESS MUST NOT BE LESS THAN GAGE OF THE CONNECTING DUCT.				

NOTES:

1. INSTALL ALL FIRE DAMPERS IN ACCORDANCE WITH NFPA-90A, UL555, SMACNA RECOMMENDATIONS AND THE LOCAL CODES PREVALENT IN PROJECT AREA.
2. ALL DUCT CONNECTIONS MADE TO DAMPER/SLEEVE ASSEMBLY SHALL CONFORM TO UL555 AND NFPA-90A.
3. CONTRACTOR SHALL PREPARE A FIRE DAMPER SCHEDULE AS PART OF THE SHOP DRAWINGS SUBMITTAL.

5 FIRE DAMPER IN WALL DETAIL

SCALE: NONE

MINIMUM SLEEVE THICKNESS				
TYPE OF CONNECTION	DUCT DIMENSION	SLEEVE GAGE	MINIMUM SLEEVE THICKNESS	
			UNCOATED STEEL	COATED STEEL
RIGID	24" MAX. DIA. 24" MAX. HEIGHT AND 36" MAX. WIDTH	16	0.054"	0.058"
RIGID	OVER 24" DIA. OVER 24" HEIGHT AND OVER 36" WIDTH	14	0.069"	0.071"
BREAKAWAY	12" AND LESS 13"-30" 31"-54" 55"-84" 85" AND GREATER	26 24 22 20 18	0.018" 0.024" 0.030" 0.036" 0.041"	
NOTE: SLEEVE THICKNESS MUST NOT BE LESS THAN GAGE OF THE CONNECTING DUCT.				

NOTES:

1. INSTALL ALL FIRE DAMPERS IN ACCORDANCE WITH NFPA PAMPHLET NO. 90A, UL555, SMACNA RECOMMENDATIONS AND THE LOCAL CODES PREVALENT IN PROJECT AREA.
2. ALL DUCT CONNECTIONS MADE TO DAMPER/SLEEVE ASSEMBLY SHALL CONFORM TO UL555 AND NFPA-90A.
3. CONTRACTOR SHALL PREPARE A FIRE DAMPER SCHEDULE AS PART OF THE SHOP DRAWINGS SUBMITTAL.

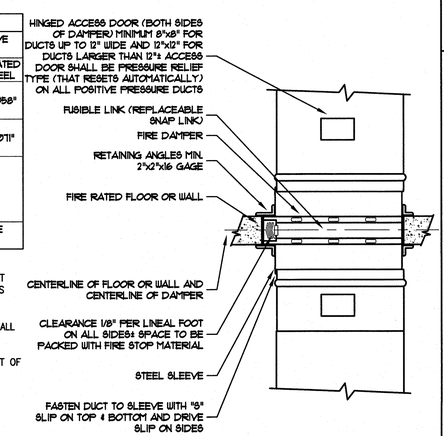

6 FIRE DAMPER IN FLOOR SLAB DETAIL

SCALE: NONE

UNIT TYPE	A	B
DRAW THRU	3/4(SP X -1 7/8 +1")	(Ø.5XA)
BLOW THRU	1" MIN.	1" + SP

SP = STATIC PRESSURE IN PAN, "H2O (NEGATIVE NUMBER FOR DRAW THRU POSITIVE NUMBER FOR BLOW THRU)

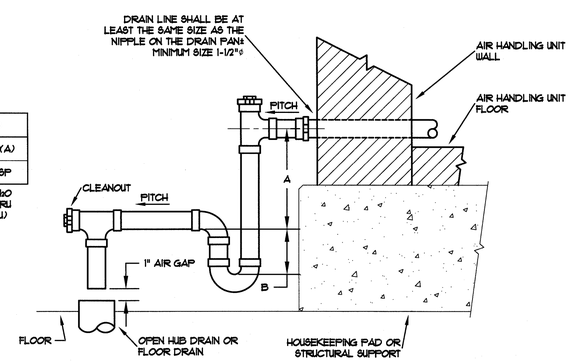

NOTES:

1. COIL MUST BE MOUNTED HIGH ENOUGH TO PERMIT TRAP TO BE INSTALLED.
2. WHERE APPLICABLE, PROVIDE STRUCTURAL STEEL OR CONCRETE PAD AS REQUIRED TO ELEVATE AIR HANDLING UNITS TO OBTAIN REQUIRED TRAP HEIGHT.
3. DRAIN PIPE CONNECTION MUST BE LOCATED AT LOW POINT OF COOLING COIL DRAIN PAN.

7 AHU CONDENSATE DRAIN TRAP DETAIL

SCALE: NONE

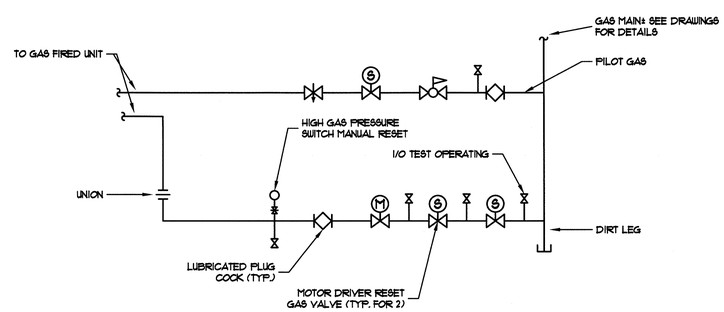

8 MAU AND AHU GAS TRAIN DETAIL

SCALE: NONE

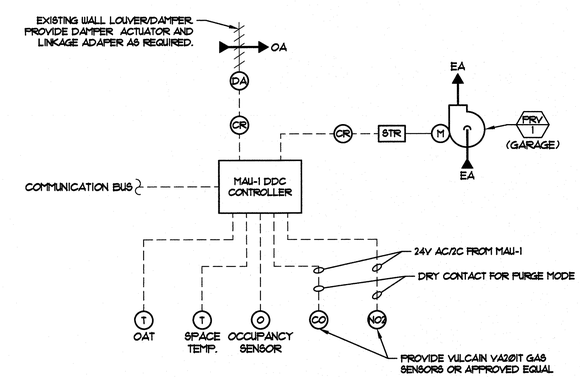

9 MAU-1 CONTROL WIRING DIAGRAM

SCALE: NONE

City of Milwaukee
Department of Public Works
Infrastructure Services Division
Bridges & Buildings Section

GRUMMAN/BUTKUS ASSOCIATES
Energy Efficiency Consultants and Sustainable Design Engineers
1011 North Mayfair Road, Suite 300
414 476.8980

Copyright © 2015 Grumman/Butkus Associates

7th District Police Station RTUs Replacement
3626 West Fond du Lac Avenue
MECHANICAL DETAILS

REVISIONS

DESIGNED BY	DEB
DRAWN BY	DEB
CHECKED BY	RDK
DATE 12/28/15	SCALE NONE
JOB NUMBER	PL120130100
SHEET NUMBER	M502
OF	

SELF-CONTAINED AIR HANDLING UNIT SCHEDULE (1 OF 2)

TAG	SERVICE	LOCATION	MINIMUM OUTSIDE AIR (CFM)	SUPPLY FAN				MOTOR DATA				FILTER					COOLING COIL								COMPRESSOR DATA				EER	SEE NEXT SCHEDULE FOR CONTINUATION
				AIRFLOW (CFM)	EXTERNAL STATIC PRESSURE (IN WG)	WHEEL DIA (IN)	ABSORBED POWER (BHP)	RATED POWER (HP)	SPEED (RPM)	V/Ø/Hz	CONNECTED TO VFD? (YES OR NO)	TYPE	MINIMUM EFFICIENCY REPORTING VALUE	MAXIMUM FACE VELOCITY (FPM)	MINIMUM FACE AREA (SQ IN)	FILTER DEPTH (IN)	MAXIMUM FACE VELOCITY (FPM)	REFRIGERANT TYPE	NET SENSIBLE COOLING CAPACITY (MBH)	NET TOTAL COOLING CAPACITY (MBH)	ENTERING AIR DRY BULB (°F)	ENTERING AIR WET BULB (°F)	LEAVING AIR DRY BULB (°F)	LEAVING AIR WET BULB (°F)	NUMBER OF COMPRESSORS	RATED LOAD CAPACITY (AMPS)	LOCKED ROTOR CAPACITY (AMPS)	COMPRESSOR OUTPUT (KW)		
AHU-1	ADMINISTRATIVE AREAS	ROOF	2400	7000	1.40	18	3.5	7 1/2	1750	208/3/60	YES	PANEL	MERV 7	210	4800	2	223	R-410A	184.4	287.9	82.7	69.9	58.2	57.1	2	44.2/25.0	315.0/164.0	21.16	10.6	
AHU-2	LOCKER ROOMS AND CELLS	ROOF	4300	4300	0.75	18	1.5	3	1750	208/3/60	NO	PANEL	MERV 7	155	4000	2	137	R-410A	88.8	150.1	79.1	70.3	59.8	59.2	2	25.0/14.5	164.0/98.0	10.14	12.1	

NOTES:

SELF-CONTAINED AIR HANDLING UNIT SCHEDULE (2 OF 2)

TAG	CONTINUED FROM ABOVE	CONDENSER DATA			GAS HEAT					OVERALL UNIT ELECTRTICAL DATA			OPERATING WEIGHT (LBS)	OVERALL DIMENSIONS W x H x L (IN x IN x IN)	MANUFACTURER	MODEL NUMBER	NOTES
		AMBIENT AIR TEMP (°F)	NUMBER OF FANS	RATED POWER (HP)	OUTPUT CAPACITY (MBH)	GAS INPUT (MBH)	ENTERING AIR TEMP (°F)	LEAVING AIR TEMP (°F)	MINIMUM REQUIRED GAS PRESSURE (IN WG)	MINIMUM CIRCUIT CAPACITY (AMPS)	MAXIMUM OVERCURRENT PROTECTION	V/Ø/Hz					
AHU-1		95	2	1	335.7	400	39.6	82.2	2.5	116	150	208/3/60	2440	85 x 64 x 141	TRANE	YHH300	(1) (2)
AHU-2		95	2	0.5	292.7	350	46.6	107.8	2.5	63	80	208/3/60	2335	85 x 54 x 141	TRANE	YHH150	(1)

NOTES:

(1) PROVIDE UNIT WITH HORIZONTAL RETURN AND SUPPLY CONNECTIONS ROOF CURB, STAGED NATURAL GAS HEAT, AND DX COOLING MODULE.

(2) PROVIDE UNIT WITH COMPARATIVE ENTHALPY ECONOMIZER MODULE.

FAN SCHEDULE (ALT. BID 3)

TAG	SERVICE	LOCATION	TYPE	DRIVE (BELT OR DIRECT)	AIR QUANTITY (CFM)		EXTERNAL STATIC PRESSURE (IN. W.C.)	WHEEL DIAMETER (IN)	DISCHARGE DIRECTION	MOTOR								NOTES
					SYSTEM DEMAND	EQUIPMENT CAPACITY				ABSORBED POWER (BHP)	RATED POWER (HP)	SPEED (RPM)	VOLTAGE (V)	PHASE (Ø)	FREQUENCY (HZ)	ALTERNATE POWER SOURCE REQUIRED (YES OR NO)	MOTOR LOCATION WITH RESPECT TO AIRSTREAM	
EF-1	RESTROOM EXHAUST	RESTROOM	CEILING	DIRECT	75	75	0.20	-	HORIZONTAL	-	52.5 W	1100	115	1	60	NO	INSIDE	(1) (2)
PRV-1	GARAGE EXHAUST	ROOF	ROOF UPBLAST	DIRECT	3000	3000	0.40	18	UPBLAST	0.49	1	1000	115	1	60	NO	INSIDE	(3)
PRV-3	RESTROOM EXHAUST	ROOF	ROOF DOWNBLAST	DIRECT	560	560	0.25	9	DOWNBLAST	0.06	1/6	1725	115	1	60	NO	INSIDE	(3)

NOTES:

(1) PROVIDE FAN WITH INTERNAL SOLID STATE SPEED CONTROLLER.

(2) PROVIDE FAN WITH DISCHARGE BACKDRAFT DAMPER.

(3) PROVIDE FAN WITH ECM MOTOR AND MOTOR MOUNTED SPEED SELECTOR.

ENERGY RECOVERY VENTILATOR SCHEDULE

TAG	LOCATION	SERVICE	SUPPLY FAN		EXHAUST FAN		FILTER DATA		ELECTRICAL DATA			COOLING SEASON PERFORMANCE										HEATING SEASON PERFORMANCE									MAXIMUM OVERALL DIMENSIONS WxLxH (IN)	OPERATING WEIGHT (LBS)	MANUFACTURER	MODEL	NOTES
												OUTSIDE AIR				EXHAUST AIR		HEAT TRANSFER			TOTAL HEAT EXCHANGER EFFECTIVENESS	OUTSIDE AIR				EXHAUST AIR		HEAT TRANSFER			TOTAL HEAT EXCHANGER EFFECTIVENESS				
												INTAKE		DISCHARGE		INTAKE						INTAKE		DISCHARGE		INTAKE									
			AIRFLOW (CFM)	EXTERNAL STATIC PRESSURE (IN. W.C.)	AIRFLOW (CFM)	EXTERNAL STATIC PRESSURE (IN. W.C.)	SUPPLY AIR FILTER	RETURN AIR FILTER	VOLTS/PH/HZ	MCA	MOP	TEMP. (°F DB)	TEMP. (°F WB)	TEMP. (°F DB)	TEMP. (°F WB)	TEMP. (°F DB)	TEMP. (°F WB)	SENS. (MBH)	LAT. (MBH)	TOTAL (MBH)		TEMP. (°F DB)	TEMP. (°F WB)	TEMP. (°F DB)	TEMP. (°F WB)	TEMP. (°F DB)	TEMP. (°F WB)	SENS. (MBH)	LAT. (MBH)	TOTAL (MBH)					
ERV-1	ROOF	AHU-2	4300	0.40	4310	0.10	MERV 7	MERV 7	208/3/60	33.8	45	89.0	77.0	79.1	70.3	75.0	62.6	46.0	74.4	120.4	51%	-10.0	-11.1	46.6	36.3	70.0	51.5	262.7	41.1	303.8	68%	86x113x79	2410	RENEWAIRE	HE8XRT	(1)

NOTES:

(1) PROVIDE UNIT WITH HORIZONTAL CONNECTIONS, EXHAUST AND INTAKE HOODS, EXHAUST AND INTAKE ISOLATION DAMPERS, AND ROOF CURB.

DIFFUSERS, REGISTERS, AND GRILLES SCHEDULE (ALT. BID 1)

TAG	SERVICE	TYPE	AIRFLOW RANGE (CFM)	DIMENSIONAL DATA		FINISH OR COLOR	INTEGRAL VOLUME DAMPER (Y OR N)	MANUFACTURER	MODEL NUMBER	NOTES
				FACE SIZE (IN x IN)	NECK SIZE (IN x IN) OR (IN DIA)					
CD-5	CEILING DIFFUSER	SQUARE LOUVERED	0-150	24x24	6" DIA.	WHITE	N	TITUS	TDC-AA	(1) (2)
CD-6	CEILING DIFFUSER	SQUARE LOUVERED	155-490	24x24	12" DIA.	WHITE	N	TITUS	TDC-AA	(1) (2)
CD-7	CEILING DIFFUSER	SQUARE LOUVERED	495-685	24x24	14" DIA.	WHITE	N	TITUS	TDC-AA	(1) (2)
CD-8	CEILING DIFFUSER	SQUARE LOUVERED	690-895	24x24	16" DIA.	WHITE	N	TITUS	TDC-AA	(1) (2)
EG-1	EXHAUST GRILLE	1/2" x 1/2" EGGCRATE	0-725	24x24	12x12	WHITE	N	TITUS	50F	(2)
EG-2	EXHAUST GRILLE	3/4" SINGLE DEFLECTION	0-245	9 3/4 x 9 3/4	8x8	WHITE	N	TITUS	350FL	(3)
EG-3	EXHAUST GRILLE	3/4" SINGLE DEFLECTION	250-395	11 3/4 x 11 3/4	10x10	WHITE	N	TITUS	350FL	
ER-1	EXHAUST REGISTER	13/16" SQUARE PERFORATED	0-205	8 3/8 x 8 3/8	6x6	WHITE	Y	TITUS	SG-LFF	(4)
RG-1	RETURN GRILLE	3/4" SINGLE DEFLECTION	0-160	9 3/4 x 9 3/4	8x8	WHITE	N	TITUS	350RL	(3)
RG-2	RETURN GRILLE	3/4" SINGLE DEFLECTION	165-380	13 3/4 x 13 3/4	12x12	WHITE	N	TITUS	350RL	(3)
SG-1	SUPPLY GRILLE	3/4" DOUBLE DEFLECTION	0-315	9 3/4 x 9 3/4	8x8	WHITE	N	TITUS	300RS	(3)
SG-2	SUPPLY GRILLE	3/4" DOUBLE DEFLECTION	320-500	11 3/4 x 11 3/4	10x10	WHITE	N	TITUS	300RS	(3)
TG-1	TRANSFER GRILLE	1/2" x 1/2" EGGCRATE	0-510	24x24	12x12	WHITE	N	TITUS	50R	(3)
TG-2	TRANSFER GRILLE	1/2" x 1/2" EGGCRATE	515-1310	24x24	18x18	WHITE	N	TITUS	50R	(3)
TG-3	TRANSFER GRILLE	13/16" SQUARE PERFORATED	0-580	14 3/8 x 14 3/8	12x12	WHITE	N	TITUS	SG-LFF	(4)

NOTES:

(1) PROVIDE WITH 18x18 CORE.

(2) PROVIDE WITH LAY-IN CEILING BORDER.

(3) PROVIDE WITH BORDER SUITABLE FOR SURFACE OR DUCT MOUNTING.

(4) PROVIDE WITH MINIMIMUM SECURITY TAMPER RESISTANT SCREW MOUNTED BORDER SUITABLE FOR SURFACE MOUNTING.

SINGLE DUCT VAV TERMINAL UNITS WITH ELECTRIC REHEAT COIL (ALT. BID 1)

TAG	ACCEPTABLE RANGE OF MAXIMUM AIRFLOW (CFM - CFM)	TERMINAL UNIT AIRFLOW SETTINGS			MINIMUM PRESSURE REQUIRED AT INLET FOR MAXIMUM AIRFLOW (IN WG)	INLET DUCT DIAMETER (IN)	DISCHARGE DUCT DIMENSION W x H (IN x IN)	ELECTRIC REHEAT COIL						SOUND ATTENUATOR(2) (YES OR NO)	TYPE OF CONTROL (DDC, ELECTRICAL PNEUMATIC)	MANUFACTURER	MODEL NUMBER	NOTES
									AIR SIDE									
		MAXIMUM (CFM)	MINIMUM (CFM)	HEATING MAXIMUM(1) (CFM)				HEATING CAPACITY (kW)	ENTERING TEMP (°F)	LEAVING TEMP (°F)	MAX PRESSURE DROP AT MAX AIRFLOW (IN WG)	V/Ø/Hz	NUMBER OF CONTROL STEPS					
VAV-1-1	200	200	70	200	0.75	5	11x10	2.5	55	95.3	0.01	208/3/60	SCR	YES	DDC	TRANE	VCEF06	(1) (2)
VAV-1-2	-	-	-	-	-	-	-	-	-	-	-	-	-	-	-	-	-	FUTURE
VAV-1-3	810	810	345	345	0.75	8	11x10	3.5	55	87.7	0.09	208/3/60	SCR	YES	DDC	TRANE	VCEF08	(1) (2)
VAV-1-4	410	410	125	410	0.75	8	11x10	5.0	55	94.4	0.02	208/3/60	SCR	YES	DDC	TRANE	VCEF08	(1) (2)
VAV-1-5	310	310	110	110	0.75	5	11x10	1.0	55	84.3	0.02	208/3/60	SCR	YES	DDC	TRANE	VCEF05	(1) (2)
VAV-1-7	1,010	1010	305	820	0.75	10	14x12	10.0	55	94.4	0.03	208/3/60	SCR	YES	DDC	TRANE	VCEF10	(1) (2)
VAV-1-8	690	690	300	300	0.75	8	11x10	2.5	55	81.9	0.07	208/3/60	SCR	YES	DDC	TRANE	VCEF08	(1) (2)
VAV-1-9	290	290	70	290	0.75	6	11x10	3.5	55	94.0	0.07	208/3/60	SCR	YES	DDC	TRANE	VCEF06	(1) (2)
VAV-1-10	380	380	115	165	0.75	6	11x10	1.5	55	84.3	0.13	208/3/60	SCR	YES	DDC	TRANE	VCEF06	(1) (2)
VAV-1-11	150	150	65	85	0.75	4	11x10	1.0	55	93.0	0.01	208/3/60	SCR	YES	DDC	TRANE	VCEF04	(1) (2)
VAV-1-12	85	85	50	85	0.75	4	11x10	1.0	55	93.0	0.01	208/3/60	SCR	YES	DDC	TRANE	VCEF04	(1) (2)
VAV-1-14	110	110	50	85	0.75	4	11x10	1.0	55	93.0	0.01	208/3/60	SCR	YES	DDC	TRANE	VCEF04	(1) (2)

NOTES:

(1) HEATING MAXIMUM ONLY APPLIES IF TERMINAL UNIT CONTROLS ALLOW FOR REOPENING OF THE DAMPER ON A CALL FOR HEAT

(2) SEE SPECIFICATIONS FOR ACOUSTIC PERFORMANCE DATA

SERIES FAN POWERED TERMINAL UNITS WITH ELECTRIC REHEAT COIL (ALT. BID 1)

TAG	MAXIMUM AIRFLOW (CFM)	AIRFLOW SETTINGS		FAN				MINIMUM PRESSURE REQUIRED AT INLET FOR MAXIMUM AIRFLOW (IN WG)	INLET DUCT DIAMETER (IN)	DISCHARGE DUCT DIMENSION W x H (IN x IN)	ELECTRIC REHEAT COIL						SOUND ATTENUATOR (YES OR NO)	TYPE OF CONTROL (DDC, ELECTRICAL PNEUMATIC)	MANUFACTURER	MODEL NUMBER	NOTES
												AIR SIDE									
		PRIMARY MAXIMUM (CFM)	PRIMARY MINIMUM (CFM)	AIRFLOW (CFM)	EXTERNAL STATIC PRESSURE (IN WG)	MOTOR RATED POWER (HP)	V/Ø/Hz				HEATING CAPACITY (kW)	ENTERING AIR TEMP (°F)	LEAVING AIR TEMP (°F)	MAX PRESSURE DROP AT MAX AIRFLOW (IN WG)	V/Ø/Hz	NUMBER OF CONTROL STEPS				
VAV-1-6	630	520	250	380	0.40	1/3	208/3/60	0.75	8	20x16	6.5	62.8	95.3	0.07	208/3/60	SCR	YES	DDC	TRANE	VPEF08	(1)
VAV-1-13	630	230	70	560	0.40	1/3	208/3/60	0.75	6	20x16	5.5	66.6	94.7	0.08	208/3/60	SCR	YES	DDC	TRANE	VPEF06	(1)
VAV-1-15	730	360	110	620	0.40	1/3	208/3/60	0.75	6	20x16	6.5	66.0	94.8	0.20	208/3/60	SCR	YES	DDC	TRANE	VPEF06	(1)
VAV-1-16	1420	910	275	1145	0.40	1/2	208/3/60	0.75	10	20x16	13.0	65.5	95.0	0.03	208/3/60	SCR	YES	DDC	TRANE	VPEF10	(1)
VAV-1-17	370	310	105	265	0.40	1/3	208/3/60	0.75	6	20x16	3.5	64.3	94.8	0.15	208/3/60	SCR	YES	DDC	TRANE	VPEF06	(1)
VAV-1-18	740	290	90	650	0.40	1/3	208/3/60	0.75	6	20x16	6.5	66.4	94.8	0.13	208/3/60	SCR	YES	DDC	TRANE	VPEF06	(1)

NOTES:

(1) SEE SPECIFICATIONS FOR ACOUSTIC PERFORMANCE DATA

ELECTRIC REHEAT COILS (ALTERNATE BID 1)

TAG	SERVICE	LOCATION	AIRFLOW (CFM)	HEATING CAPACITY (kW)	MAXIMUM FACE VELOCITY (FPM)	COIL DIMENSIONS W x H (IN x IN)	AIR SIDE			ELECTRICAL		NOTES
							ENTERING TEMP (°F)	LEAVING TEMP (°F)	MAXIMUM PRESSURE DROP (IN WG)	V/Ø/Hz	NUMBER OF CONTROL STEPS	
HC-2-1	B1	B7	110	1.5	198	10x8	55.0	97.9	0.01	208/3/60	SCR	
HC-2-2	B7	B7	210	3.0	378	10x8	55.0	99.9	0.01	208/3/60	SCR	
HC-2-3	B2	B2	190	2.5	342	10x8	55.0	96.4	0.01	208/3/60	SCR	
HC-2-4	129	129	1560	18.5	720	26x12	55.0	92.3	0.02	208/3/60	SCR	
HC-2-5	141	141	930	8.0	644	26x8	55.0	82.1	0.02	208/3/60	SCR	
HC-2-6	152	152	340	3.0	383	16x8	55.0	82.7	0.01	208/3/60	SCR	
HC-2-7	150	150	960	14.0	384	30x12	55.0	100.9	0.01	208/3/60	SCR	

NOTES:

GAS-FIRED MAKEUP AIR HANDLING UNITS SCHEDULE (ALT. BID 2)

TAG	SERVICE	LOCATION	FAN DATA			FILTER DATA					GAS HEAT					MOTOR DATA				OVERALL UNIT DATA		MANUFACTURER	MODEL NUMBER	NOTES
			AIRFLOW (CFM)	EXTERNAL STATIC PRESSURE (IN WG)	WHEEL DIAMETER (IN)	TYPE	MINIMUM EFFICIENCY REPORTING VALUE (MERV)	MAXIMUM FACE VELOCITY (FPM)	MINIMUM FACE AREA (SQ IN)	FILTER DEPTH (IN)	OUTPUT CAPACITY (MBH)	INPUT CAPACITY (MBH)	ENTERING AIR TEMP (°F)	LEAVING AIR TEMP (°F)	MINIMUM REQUIRED GAS PRESSURE (IN WG)	RATED POWER (HP)	SPEED (RPM)	V/Ø/Hz	CONNECTED TO VFD? (YES OR NO)	OVERALL DIMENSIONS W x H x L (IN x IN x IN)	OPERATING WEIGHT (LBS)			
MAU-1	GARAGE	GARAGE	4000	0.25	12.0	PANEL	7	360	11.1	2	450	550	10.3	114	10	3	1750	208/3/60	NO	45 x 54 x 158	840	TRANE	DFIA112	(1)

NOTES:

(1) HORIZONTAL, INDOOR, CEILING SUSPENDED UNIT. PROVIDE WITH INLET DAMPER, RETURN AIR MIXING BOX, AND 3-WAY DISCHARGE LOUVER.

City of Milwaukee
Department of Public Works
Infrastructure Services Division
Bridges & Buildings Section

GRUMMAN /BUTKUS ASSOCIATES
Energy Efficiency Consultants and Sustainable Design Engineers
1011 North Mayfair Road, Suite 300
414 476.8980
Copyright © 2015 Grumman/Butkus Associates

7th District Police Station RTUs Replacement
3626 West Fond du Lac Avenue
MECHANICAL SCHEDULES

REVISIONS

DESIGNED BY: DEB
DRAWN BY: DEB
CHECKED BY: RDK
DATE: 12/28/15
SCALE: NONE
JOB NUMBER: PL120130100
SHEET NUMBER: M601
OF

ELECTRICAL ABBREVIATIONS

DESIGNATION	DESCRIPTION
AC	ALTERNATING CURRENT
ACF	ABOVE CONCRETE FLOOR
AF	AMPERE FUSE
AFF	ABOVE FINISHED FLOOR
AHU	AIR HANDLING UNIT
AMP	AMPERE
APPROX	APPROXIMATE
AT	AMPERE TRIP
ATS	AUTOMATIC TRANSFER SWITCH
AWG	AMERICAN WIRING GAUGE
BLDG	BUILDING
BP	BRANCH CIRCUIT PANEL
BRKR	BREAKER
C	CONDUIT
C/B	CIRCUIT BREAKER
CKT OR CIR	CIRCUIT
CONTR	CONTRACTOR
CUH	CABINET UNIT HEATER
DET	DETAIL
DISC	DISCONNECT
DN	DOWN
DWG	DRAWING
EF	EXHAUST FAN
EMERG	EMERGENCY
EMT	ELECTRIC METALLIC TUBING
ETR	EXISTING TO REMAIN
EXH	EXHAUST
EXIST OR E	EXISTING
F	FUSE
FA	FIRE ALARM
FLA	FULL LOAD AMPERES
FLR	FLOOR
FLUOR	FLUORESCENT
FMC	FLEXIBLE METAL CONDUIT
FREQ	FREQUENCY
FUT	FUTURE
GA	GAGE, GAUGE
GEN	GENERATOR
GF	GROUND FAULT
GFCI	GROUND FAULT CIRCUIT INTERRUPTER
GRD	GROUND
HOA	HAND OFF AUTO
HP	HORSEPOWER
HTG	HEATING
HZ	HERTZ (CYCLE)
IC	INTERRUPTING CAPACITY
IEEE	INSTITUTE OF ELECTRICAL AND ELECTRONICS ENGINEERS
IG	ISOLATED GROUND
IMC	INTERMEDIATE METAL CONDUIT
JB	JUNCTION BOX
KV	KILOVOLT
KVA	KILOVOLT-AMPERE
KW	KILOWATT
KWHR	KILOWATT-HOUR
LP	LIGHTING PANEL
LRA	LOCKED ROTOR AMPERES
LTG	LIGHTING
MAN	MANUAL
MCB	MAIN CIRCUIT BREAKER
MCC	MOTOR CONTROL CENTER
MLO	MAIN LUGS ONLY
MIN	MINIMUM
MSB	MAIN SWITCH BOARD
MSS	MAIN SERVICE SWITCHBOARD/SWITCHGEAR
MTD	MOUNTED
MTG	MOUNTING
MTR	MOTOR
N/A	NOT APPLICABLE
NEC	NATIONAL ELECTRIC CODE
NEMA	NATIONAL ELECTRICAL MANUFACTURERS ASSOCIATION
NEUT	NEUTRAL
NF	NON-FUSED
NO	NORMALLY OPEN
PB	PULL BOX
PF	POWER FACTOR
PH	PHASE
PNL	PANELBOARD
PP	POWER PANEL
PRI	PRIMARY
PVC	POLYVINYL CHLORIDE CONDUIT
RECP	RECEPTACLE
RF	RETURN FAN
RGS	RIGID GALVANIZED STEEL CONDUIT
RM	ROOM
RMC	RIGID METAL CONDUIT
RP	RECEPTACLE PANEL
SEC	SECONDARY
SP	SINGLE POLE
SPR	SPARE
SW	SWITCH
SWBD	SWITCHBOARD
TP	TAMPER PROOF
TRANS	TRANSFORMER
UH	UNIT HEATER
UNO	UNLESS NOTED OTHERWISE
V	VOLTAGE
VA	VOLT-AMPERE
VD	VOLTAGE DROP
VFD	VARIABLE FREQUENCY DRIVE
W	WATT
WG	WIRE GUARD
WP	WEATHERPROOF
XFMR	TRANSFORMER

POWER

SYMBOL	DESCRIPTION
X Y X Y	SURFACE MOUNTED RACEWAY DEVICES INSTALLED 18" O.C. UNLESS NOTED OTHERWISE
	TELEPHONE/POWER POLE
J	CEILING MOUNTED JUNCTION BOX
J	WALL MOUNTED JUNCTION BOX
J	FLOOR MOUNTED JUNCTION BOX
X Y	EQUIPMENT TAG SEE EQUIPMENT SCHEDULE
PB	WALL MOUNTED PULL BOX
PB	CEILING MOUNTED PULL BOX
	MAGNETIC STARTER
	DISCONNECT SWITCH (NON-FUSED)
	COMBINATION STARTER AND DISCONNECT SWITCH
	FUSE DISCONNECT SWITCH
	BREAKER DISCONNECT
MH	MANHOLE
HH	HANDHOLE
	CONDUIT RUN EXPOSED
	CONDUIT CONCEALED IN CEILING OR WALLS
	CONDUIT CONCEALED IN OR UNDER FLOOR
	CONDUIT UP
	CONDUIT DOWN
	FLEXIBLE CONDUIT
DP-X	POWER DISTRIBUTION PANELBOARD
LP-X	LIGHTING PANELBOARD
BP-X	BRANCH CIRCUIT PANELBOARD
X Y	DUPLEX RECEPTACLE X=CIRCUIT NUMBER Y=MODIFIER
X Y	TRIPLEX OUTLET X=CIRCUIT NUMBER Y=MODIFIER
X Y	QUADRUPLEX RECEPTACLE X=CIRCUIT NUMBER Y=MODIFIER
X Y	DUPLEX RECEPTACLE ON UPS POWER X=CIRCUIT NUMBER Y=MODIFIER
X Y	QUADRUPLEX RECEPTACLE ON UPS POWER X=CIRCUIT NUMBER Y=MODIFIER
X Y	DUPLEX OUTLET SPLIT WIRED X=CIRCUIT NUMBER Y=MODIFIER
X Y	SINGLE SPECIAL OUTLET
X Y	DUPLEX SPECIAL OUTLET
T	TRANSFORMER
M	MOTOR M=HP
VFD	VARIABLE FREQUENCY DRIVE
B B	BUSWAY

ONE LINE

SYMBOL	DESCRIPTION
	POTHEAD (CABLE TERMINATION)
	STRESSCONE
CT	CURRENT TRANSFORMER
PT	POTENTIAL TRANSFORMER
	FUSE
X	SWITCH X=AMPERE RATING
X Y	FUSED SWITCH X=SWITCH AMPERE Y=FUSE AMPERE OR TYPE
X Y	CIRCUIT BREAKER X=AMPERE FRAME (AF) Y=AMPERE TRIP (AT)
X Y	DRAWOUT CIRCUIT BREAKER X=AMPERE FRAME (AF) Y=AMPERE TRIP (AT)
X	PROTECTIVE RELAY X=PROTECTIVE DEVICE NUMBER EX. 59 = UNDERVOLTAGE
	GROUND
	THERMAL OVERLOAD
NO	NORMALLY OPENED CONTACT
NC	NORMALLY CLOSED CONTACT
SPD X	SURGE PROTECTION DEVICE (TVSS) X=A,B,C
A	AMMETER
V	VOLTMETER
PM	POWER METER
Δ Y X Y Z	TRANSFORMER X=PRIMARY VOLTAGE Y=SECONDARY VOLTAGE Z=KVA RATING
Δ Y X Y Z Z	ISOLATION TRANSFORMER K RATED X=PRIMARY VOLTAGE Y=SECONDARY VOLTAGE Z=KVA RATING
M	MOTOR M=HP
	GENERATOR
N E L	AUTOMATIC TRANSFER SWITCH
XX XX	PANELBOARD PP=POWER PANEL LP=LIGHTING PANEL RP=RECEPTACLE PANEL
I	CABLE AND CONDUIT TAG SEE SCHEDULE
GF	GROUND FAULT PROTECTIVE DEVICE
	BATTERY
X Y	EQUIPMENT TAG SEE EQUIPMENT SCHEDULE
K	KEY INTERLOCK

LIGHTING

SYMBOL	DESCRIPTION
X S	SWITCH & SINGLE RECEPTACLE
X S	SWITCH & DUPLEX RECEPTACLE
OC	CEILING MOUNTED OCCUPANCY SENSOR
X OC Y	WALL MOUNTED OCCUPANCY SENSOR
	WALL MOUNTED INCANDESCENT FIXTURE
X	SWITCH. NO MODIFIER EQUALS SINGLE POLE SWITCH. 2=DOUBLE POLE 3=THREE WAY 4=FOUR WAY D=AUTOMATIC DOOR K=KEY OPERATED P=SWITCH & PILOT LIGHT CB=CIRCUIT BREAKER WCB=WEATHER PROOF CB MC=MOMENTARY CONTACT RC=REMOTE CONTROL F=FUSED LV=LOW VOLTAGE OC=WITH OCCUPANCY SENSOR T=TIME TH=THERMAL RATED MOTOR WP=WEATHER PROOF DM=INCADESENT DIMMER FDM=FLUORESCENT DIMMER M=MOTOR RATED LOCKABLE TOGGLE SWITCH
X Y	2x4 FLUORESCENT FIXTURE
X Y	1x4 FLUORESCENT FIXTURE
X Y	2x2 FLUORESCENT FIXTURE FLUORESCENT STRIP FIXTURE
X Y	2x4 FLUORESCENT FIXTURE ON EMERGENCY POWER
X Y	1x4 FLUORESCENT FIXTURE ON EMERGENCY POWER
X Y	2x2 FLUORESCENT FIXTURE ON EMERGENCY POWER
X Y	SELF-CONTAINED EMERGENCY LIGHT UNIT
X Y	WALL MOUNTED SINGLE FACED EXIT SIGN
X Y	CEILING MOUNTED SINGLE FACED EXIT SIGN
X Y	WALL MOUNTED DOUBLE FACED EXIT SIGN
X Y	CEILING MOUNTED DOUBLE FACED EXIT SIGN

FIRE ALARM SYSTEM SYMBOLS

DESIGNATION	DESCRIPTION
S	EXISTING SMOKE DETECTOR
S	NEW SMOKE DETECTOR
H	EXISTING FIRE ALARM HORN/STROBE
H	NEW FIRE ALARM HORN/STROBE
	EXISTING PULL STATION
	NEW PULL STATION
	EXISTING FIRE ALARM STROBE
	NEW FIRE ALARM STROBE
M	EXISTING FIRE ALARM MINI HORN
M	NEW FIRE ALARM MINI HORN
FACP	EXISTING FIRE ALARM CONTROL PANEL
FAAP	EXISTING FIRE ALARM ANNUNCIATOR PANEL

NOTE: FIRE ALARM DEVICES WHICH ARE TO BE DEMOLISHED ALSO USE THE "EXISTING" SYMBOLS.

ELECTRICAL GENERAL NOTES

1. CODES

THE WORK SHALL COMPLY WITH ALL APPLICABLE LOCAL, MUNICIPAL, AND NATIONAL CODES. WHERE THE CONSTRUCTION DOCUMENTS INDICATE MORE RESTRICTIVE REQUIREMENTS THE CONSTRUCTION DOCUMENTS SHALL GOVERN. HOWEVER, THE CONSTRUCTION DOCUMENTS SHALL NOT BE INTERPRETED AS AUTHORITY TO VIOLATE AND CODE OR REGULATION.

2. DRAWINGS AND SPECIFICATIONS

THE CONTRACTOR SHALL BE RESPONSIBLE FOR READING AND COMPLYING WITH BOTH THE DRAWINGS AND SPECIFICATIONS. IN THE EVENT OF A CONFLICT OR INCONSISTENCY BETWEEN THE DRAWINGS, NOTES, SPECIFICATIONS, OR CODES, THE REFERENCE WHICH PROVIDES THE MORE COMPLETE OR HIGHER STANDARD SHALL PREVAIL.

3. INTERPRETATION OF THE DOCUMENTS

CAREFULLY COMPARE THE DRAWINGS AND SPECIFICATIONS, CHECKING MEASUREMENTS AND CONDITIONS UNDER WHICH THIS INSTALLATION IS TO BE MADE. FOR CLARIFICATION BETWEEN VARIOUS DRAWINGS, BETWEEN DRAWINGS OR SPECIFICATION, OR BETWEEN SECTIONS OF THE SPECIFICATION, THE MATTER SHALL BE REFERRED TO THE ENGINEER BEFORE ANY WORK IS EXECUTED. THE CONTRACTOR SHALL STATE IN THEIR PROPOSAL ANY EXCEPTIONS NECESSARY TO MAKE THIS A COMPLETE, READY TO USE INSTALLATION. IF NOT STATED IN THE PROPOSAL, IT WILL NOT BE CONSIDERED EXTRA.

4. ELECTRICAL DRAWINGS

THE ELECTRICAL DRAWINGS ARE DIAGRAMMATIC AND SHALL NOT BE SCALED. THE CONTRACTOR SHALL DETERMINE THE EXACT LOCATION OF ALL DOORS, WALLS, FURNITURE, EQUIPMENT, ETC. THE LOCATION OF RACEWAY SYSTEM COMPONENTS IS SCHEMATIC. THE EXACT LOCATION OF RACEWAY SYSTEM COMPONENTS SHALL BE DETERMINED BY THE CONTRACTOR IN THE FIELD. THE CONTRACTOR SHALL CONFIRM THE DIMENSIONS OF THE ACTUAL EQUIPMENT TO BE SUPPLIED FOR THIS PROJECT, AND VERIFY CLEARANCES AND ROUGH-INS PRIOR TO STARTING WORK.

5. SITE EXAMINATION

BEFORE SUBMITTING A BID, THE CONTRACTOR SHALL VISIT THE SITE, EXAMINE THE PREMISES, AND MAKE A THOROUGH SURVEY OF THE EXISTING CONDITIONS. THE SUBMISSION OF A PROPOSAL WILL BE CONSTRUED AS EVIDENCE THAT SUCH AN EXAMINATION HAS BEEN SCALED. NO CONSIDERATION OR ALLOWANCE WILL BE GRANTED FOR FAILURE TO VISIT THE SITE OR FOR LATER CLAIMS FOR LABOR, EQUIPMENT, MATERIALS REQUIRED, OR FOR DIFFICULTIES ENCOUNTERED WHICH COULD HAVE BEEN FORESEEN HAD SUCH AN SITE EXAMINATION BEEN MADE.

6. COORDINATION WITH OTHER TRADES

THE ELECTRICAL CONTRACTOR SHALL OBTAIN A COMPLETE SET OF ARCHITECTURAL AND ENGINEERING DOCUMENTS AND COORDINATE WITH MECHANICAL, PLUMBING, ARCHITECTURAL, AND OTHER TRADES FOR EXACT DIMENSIONS, CLEARANCES, ROUGH-IN LOCATIONS, AND OTHER ADDITIONAL SCOPES OF WORK THAT MAY NOT BE SHOWN ON THE ELECTRICAL PLANS. THE ELECTRICAL CONTRACTOR SHALL BE RESPONSIBLE FOR ALL 120 VOLT (AND HIGHER) AC POWER TO OTHER TRADES EQUIPMENT AND HARDWARE. THIS SHALL INCLUDE, BUT NOT BE LIMITED TO, CONTROLS, FIRE AND SECURITY SYSTEMS, MOTORIZED DOORS, DAMPERS, LIFTS, AND OTHER SYSTEMS. UNLESS SPECIFICALLY NOTED OTHERWISE ON THE ELECTRICAL PLANS, THE ELECTRICAL CONTRACTOR SHALL FURNISH ALL SAFETY DISCONNECT SWITCHES TO MECHANICAL EQUIPMENT.

7. PERMITS, APPLICATIONS AND RELEASES

THE CONTRACTOR SHALL OBTAIN AND PAY FOR ALL PERMITS INSPECTIONS, APPLICATIONS, RELEASES AND FEES REQUIRED BY LOCAL, STATE AND FEDERAL AGENCIES FOR THE EXECUTION OF THIS WORK. SCHEDULING OF ALL REQUIRED INSPECTIONS SHALL BE THE RESPONSIBILITY OF THE CONTRACTOR.

8. FIRE STOPPING

ALL PENETRATIONS IN WALL, FLOOR OR CEILINGS SHALL BE SUITABLY CLOSED UP AND SEALED WITH AN INTUMESCENT FIRE STOPPING COMPOUND LISTED IN THE MOST RECENT FACTORY MUTUAL RESEARCH CORPORATION (FMRC) APPROVAL GUIDE.

9. ELECTRICAL SERVICE DISRUPTIONS

ALL WORK WHICH EXPOSES ACTIVE BUS REQUIRES A WRITTEN NOTIFICATION TO THE OWNER WHICH WILL OUTLINE THE METHOD OF PROCEDURE FOR THE WORK. THE CONTRACTOR SHALL PROVIDE A MINIMUM OF 5 DAYS NOTICE TO THE OWNER BEFORE WORKING ON ANY ENERGIZED ELECTRICAL SYSTEM. NO POWER DISRUPTIONS ARE ACCEPTABLE.

10. EQUIPMENT

ALL MATERIALS AND EQUIPMENT USED IN THIS INSTALLATION SHALL BE NEW, AND HAVE THE APPROPRIATE UL LISTING AND LABEL.

11. MISCELLANEOUS SUPPORTING MEMBERS

ALL ANGLES CHANNELS, AND OTHER MISCELLANEOUS STEEL, BOLTS, RODS, ETC. REQUIRED TO SUPPORT LIGHT FIXTURE, CONDUIT, RACEWAY, LADDER TRAY, OR OTHER ELECTRICAL EQUIPMENT OR DEVICES SHALL BE FURNISHED AND INSTALLED BY THE CONTRACTOR.

12. PANEL BOARDS

ALL PANEL BOARDS SHALL BE PROVIDED WITH TYPEWRITTEN DIRECTORIES. SEE PANEL SCHEDULES ON THE DRAWINGS AND THE SPECIFICATION FOR COMPLETE IDENTIFICATION AND LABELING REQUIREMENTS.

13. SAFETY

THE CONTRACTOR SHALL TAKE ALL STEPS NECESSARY TO ENSURE THE SAFETY OF THE OWNERS EMPLOYEES, BUILDING EMPLOYEES AND GUESTS. AS WELL AS THEIR OWN FORCES, BY ADEQUATELY PROTECTING ANY EXPOSED LIVE CONDUCTORS, OR DEVICES THROUGHOUT THE COURSE OF THIS WORK.

14. EQUIPMENT CONNECTIONS

PROVIDE FINAL CONNECTIONS FOR ALL EQUIPMENT FURNISHED UNDER OTHER DIVISIONS AND FOR ALL OWNER FURNISHED EQUIPMENT. PROVIDE A FLEXIBLE LIQUID TIGHT CONNECTION TO ALL VIBRATION PRODUCING EQUIPMENT.

15. CABLING

BRANCH CIRCUITS TO RECEPTACLES, LIGHTING AND MISC. SMALL LOADS (15 OR 20 AMP CIRCUITS), UNLESS SPECIFICALLY NOTED OTHERWISE, SHALL BE 2 - #12, 1 - #12 GRD., 1/2" C. A SEPARATE NEUTRAL AND GROUND SHALL BE RUN FOR EACH CIRCUIT. SEE NOTE BELOW FOR ADDITIONAL REQUIREMENTS.

16. CABLING SIZES

BRANCH CIRCUIT CABLE SIZING SHALL BE ADJUSTED BASED ON THE VALUES INDICATED BELOW:

A. 120/208V CABLING FROM PANEL TO THE ELECTRICAL LOAD SHALL BE AS FOLLOWS UNLESS SPECIFICALLY NOTED OTHERWISE:

0' - 100' #12 AWG MINIMUM
100' - 200' #10 AWG MINIMUM
200' - 250' #8 AWG MINIMUM

17. SEE ARCHITECTURAL DRAWINGS FOR PHASING AND SCHEDULE OF WORK.

WISCONSIN KAREN J. LONG 42811-6 WAUWATOSA, WI PROFESSIONAL ENGINEER

E001-E701

City of Milwaukee
Department of Public Works
Infrastructure Services Division
Bridges & Buildings Section

GRUMMAN /BUTKUS ASSOCIATES
Energy Efficiency Consultants and Sustainable Design Engineers
1011 North Mayfair Road, Suite 300
414.476.8980
Copyright © 2015 Grumman/Butkus Associates

7th District Police Station RTUs Replacement
3626 West Fond du Lac Avenue
ELECTRICAL SYMBOLS & ABBREVIATIONS

REVISIONS

DESIGNED BY	NJP
DRAWN BY	NJP
CHECKED BY	BMW
DATE 12/28/15	SCALE NONE
JOB NUMBER	PL120130100
SHEET NUMBER	E001
OF	

SHEET NOTES

1. SEE SHEET E0.01 FOR ELECTRICAL EQUIPMENT AND DEVICE SYMBOLS.
2. ALL WORK ON THIS SHEET SHOWN WITH A BOLD DASHED LINE SHALL BE DEMOLISHED, UNLESS NOTED OTHERWISE. ALL EXISTING SHOWN WITH LIGHT LINE WEIGHT ARE EXISTING DEVICES TO REMAIN OR MODIFIED AS NOTED TO FACILITATE NEW WORK AS SHOWN ON SHEET E1.01.
3. EQUIPMENT OR ELECTRICAL DEVICES DESIGNATED TO BE RELOCATED SHALL BE CLEANED, STORED, AND PROTECTED FROM DAMAGE UNTIL REINSTALLED. REPLACE ANY EQUIPMENT OR DEVICES IF DAMAGED DURING RELOCATION.
4. MAINTAIN EXISTING CIRCUIT CONTINUITY ON CIRCUITS SERVING BRANCH POWER TO EQUIPMENT OR ELECTRICAL DEVICES OUTSIDE THE AREA OF WORK EXISTING TO REMAIN.
5. THE CONTRACTOR IS RESPONSIBLE FOR SUPPORTING ALL CONDUIT AND BOXES AFTER CEILING IS REMOVED IN RENOVATED AREAS TO MEET CURRENT NEC REQUIREMENTS.

KEYED NOTES

1. SEE E6.01 FOR MDP PANELBOARD DEMOLITION WORK.
2. DISCONNECT AND REMOVE ALL POWER AND CONTROL RACEWAY AND WIRING ASSOCIATED WITH THE EXISTING GAS FIRED MULTI-ZONE UNIT IN ITS ENTIRETY BACK TO THEIR SOURCE. DEMOLISH ALL ASSOCIATED CONTROL DEVICES, BOXES AND WIRING AS DIRECTED BY MC.
3. ALTERNATE BID #3: EC AND SIMPLEX FIRE ALARM SYSTEM SUPPLIER SHALL CONDUCT A FIELD SURVEY OF THE EXISTING FIRE ALARM DETECTION, NOTIFICATION APPLIANCE DEVICE(S) AND ZONE(S) WITHIN THE BUILDING. CONFIRM EXISTING COMPONENT LOCATION(S) CURRENTLY IN USE. INDIVIDUALLY TEST EACH EXISTING DETECTOR AND NOTIFICATION APPLIANCE FOR PROPER ZONE OPERATION. SEE DRAWINGS FOR REQUIRED MODIFICATIONS TO EXISTING AND NEW SMOKE DETECTOR(S) AS A RESULT OF HVAC EQUIPMENT REPLACEMENTS AND FA SYSTEM TESTING.
4. ALTERNATE BID #3: EXISTING FIRE ALARM SYSTEM SMOKE DETECTOR. SEE SHEET E1.01 FOR PROVISIONS REQUIRED FOR PROPER DEVICE OPERATION.
5. DISCONNECT AND REMOVE ALL POWER AND CONTROL RACEWAY AND WIRING ASSOCIATED WITH THE EXISTING DRAFT INDUCER IN ITS ENTIRETY BACK TO THEIR SOURCE. DEMOLISH ALL ASSOCIATED CONTROL DEVICES, BOXES AND WIRING AS DIRECTED BY MC. RELABEL BREAKER AS SPARE.
6. DISCONNECT AND REMOVE ALL POWER AND CONTROL RACEWAY AND WIRING ASSOCIATED WITH THE EXISTING DUCT BOOSTER FAN IN ITS ENTIRETY BACK TO THEIR SOURCE. DEMOLISH ALL ASSOCIATED CONTROL DEVICES, BOXES AND WIRING AS DIRECTED BY MC. RELABEL BREAKER AS SPARE.

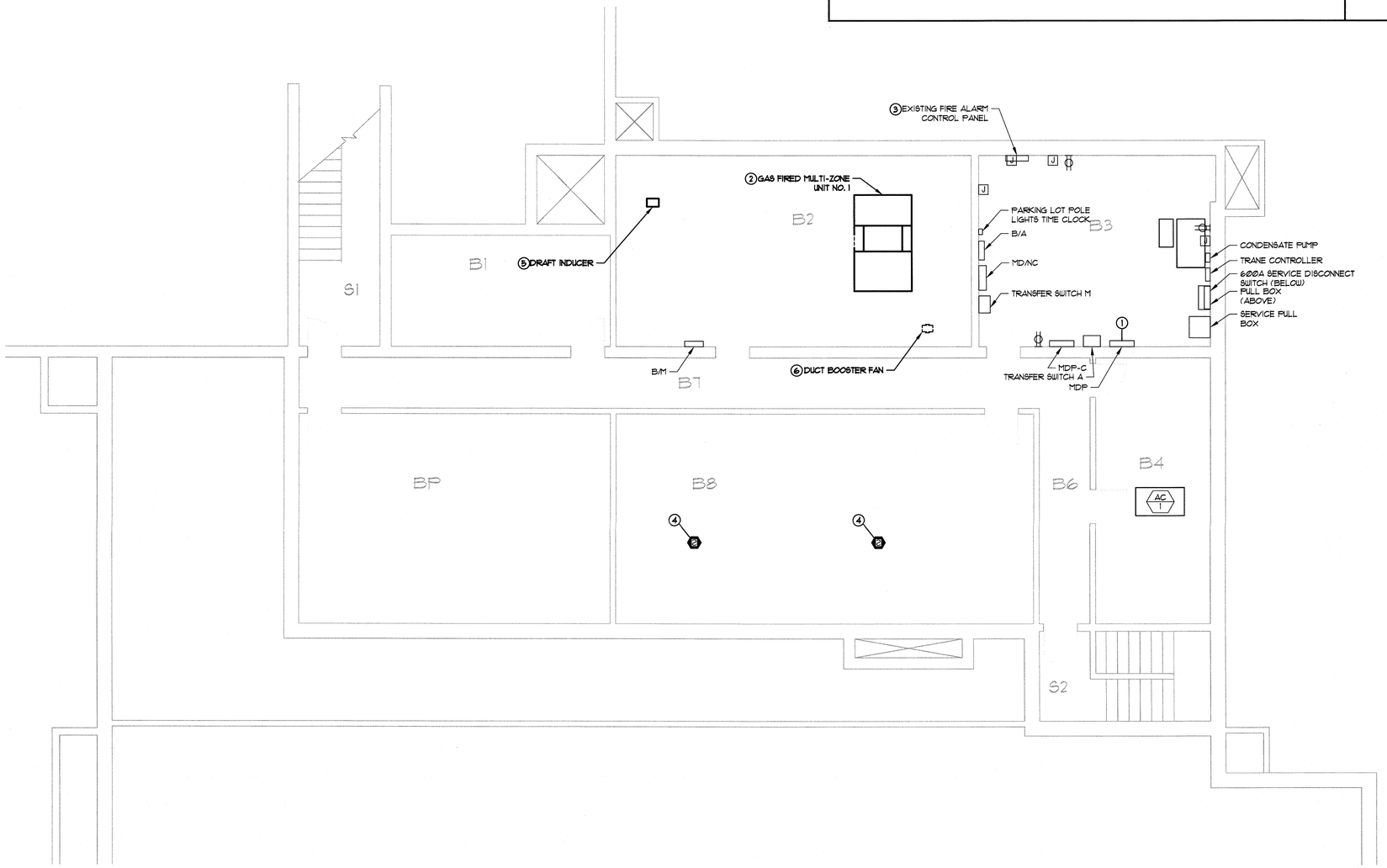

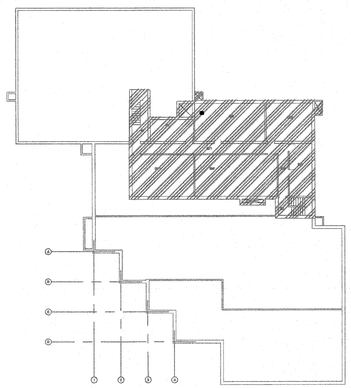

KEY PLAN: GROUND FLOOR

NTS

PLAN NORTH

1 ELECTRICAL BASEMENT DEMOLITION PLAN

SCALE: 3/16" = 1'-0"

PLAN NORTH

City of Milwaukee

Department of Public Works
Infrastructure Services Division

Bridges & Buildings Section

GRUMMAN /BUTKUS ASSOCIATES

Energy Efficiency Consultants and Sustainable Design Engineers

1011 North Mayfair Road, Suite 300

414.476.8980

Copyright © 2015 Grumman/Butkus Associates

7th District Police Station RTUs Replacement
3626 West Fond du Lac Avenue
ELECTRICAL BASEMENT DEMOLITION PLAN

REVISIONS

DESIGNED BY	NJP
DRAWN BY	NJP
CHECKED BY	BMW
DATE 12/28/15	SCALE 3/16"=1'-0"
JOB NUMBER	PL120130100
SHEET NUMBER	ED101
OF	

SHEET NOTES

1. SEE SHEET E001 FOR ELECTRICAL EQUIPMENT AND DEVICE SYMBOLS.
2. ALL WORK ON THIS SHEET SHOWN WITH A BOLD DASHED LINE SHALL BE DEMOLISHED, UNLESS NOTED OTHERWISE. ALL EXISTING SHOWN WITH LIGHT LINE WEIGHT ARE EXISTING DEVICES TO REMAIN OR MODIFIED AS NOTED TO FACILITATE NEW WORK AS SHOWN ON SHEET E002.
3. EQUIPMENT OR ELECTRICAL DEVICES DESIGNATED TO BE RELOCATED SHALL BE CLEANED, STORED, AND PROTECTED FROM DAMAGE UNTIL REINSTALLED. REPLACE ANY EQUIPMENT OR DEVICES IF DAMAGED DURING RELOCATION.
4. MAINTAIN EXISTING CIRCUIT CONTINUITY ON CIRCUITS SERVING BRANCH POWER TO EQUIPMENT OR ELECTRICAL DEVICES OUTSIDE THE AREA OF WORK EXISTING TO REMAIN.
5. THE CONTRACTOR IS RESPONSIBLE FOR SUPPORTING ALL CONDUIT AND BOXES AFTER CEILING IS REMOVED IN RENOVATED AREAS TO MEET CURRENT NEC REQUIREMENTS.

KEYED NOTES

1. DEMOLISH MAU-1 BRANCH POWER CIRCUIT CONDUCTORS BACK TO PANELBOARD SOURCE. FIELD VERIFY EXISTING FEEDER SOURCE PANELBOARD. MAINTAIN EXISTING FEEDER RACEWAY IN PLACE TO REFEED NEW MAU-1 AS INDICATED ON SHEET E002.
2. ALTERNATE BID #1: EC SHALL COORDINATE WITH MC MODIFICATIONS TO EXISTING CEILING SPACES WHERE NEW VAV UNITS ARE BEING INSTALLED. REMOVE EXISTING LIGHT FIXTURES REQUIRED AS A RESULT OF DUCT WORK MODIFICATIONS. SALVAGE LIGHT FIXTURES TO BE REINSTALLED AS INDICATED ON SHEET E002.
3. ALTERNATE BID #2: EXISTING FIRE ALARM SYSTEM SMOKE DETECTOR. SEE SHEET E002 FOR PROVISIONS REQUIRED FOR PROPER DEVICE OPERATION.

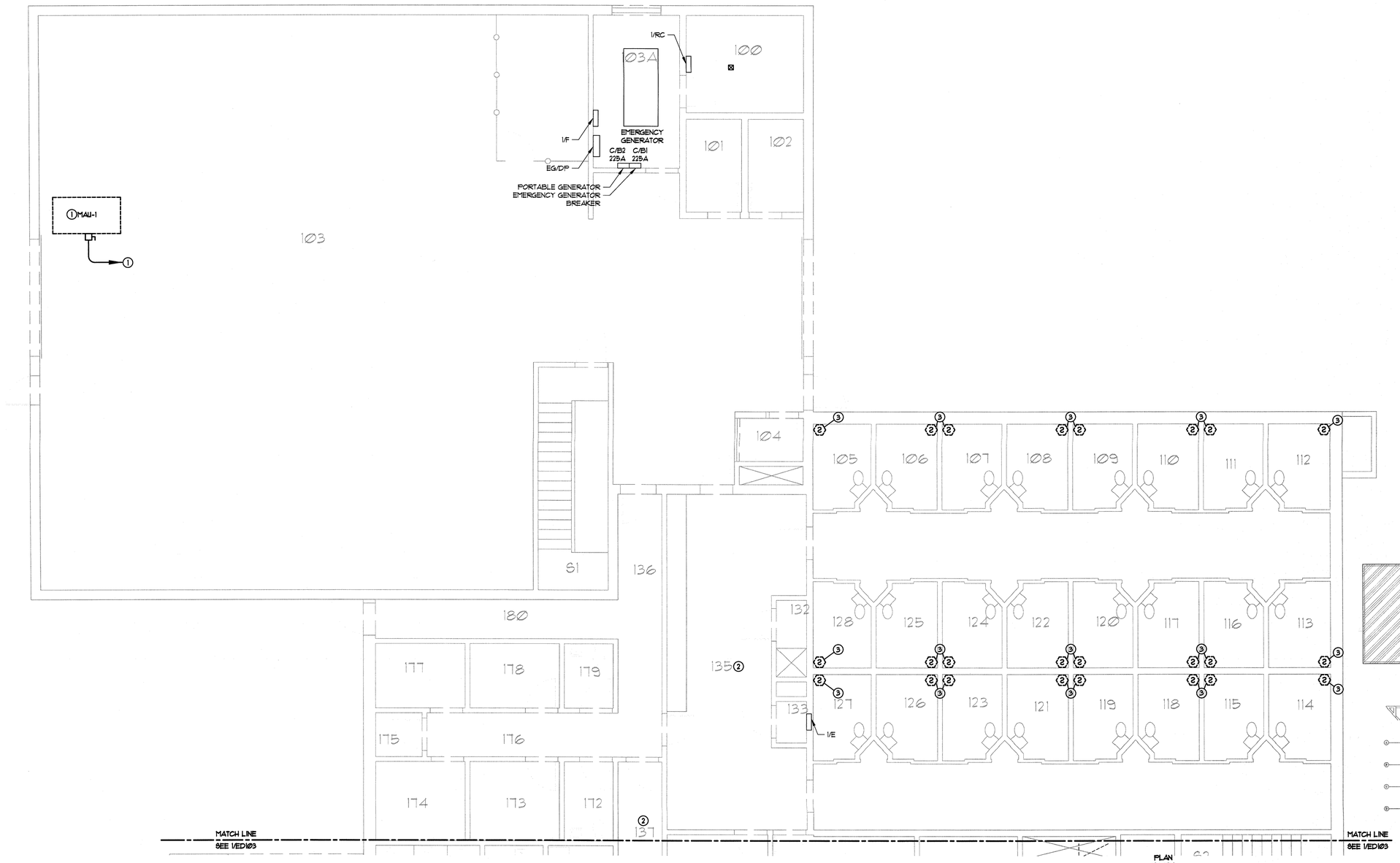

1 ELECTRICAL PARTIAL FIRST FLOOR DEMOLITION PLAN - AREA A

SCALE: 3/16" = 1'-0"

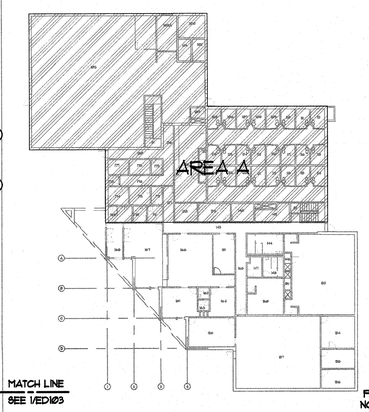

KEY PLAN: 1ST FLOOR

NTS

PLAN NORTH

City of Milwaukee

Department of Public Works
Infrastructure Services Division

Bridges & Buildings Section

GRUMMAN /BUTKUS ASSOCIATES

Energy Efficiency Consultants and Sustainable Design Engineers

1011 North Mayfair Road, Suite 300

414 476.8980

Copyright © 2015 Grumman/Butkus Associates

7th District Police Station RTUs Replacement
3626 West Fond du Lac Avenue
ELECTRICAL PARTIAL FIRST FLOOR
DEMOLITION PLAN - AREA A

REVISIONS

DESIGNED BY	NJP
DRAWN BY	NJP
CHECKED BY	BMW
DATE 12/28/15	SCALE 3/16"=1'-0"
JOB NUMBER	PL120130100
SHEET NUMBER	ED102
OF	

SHEET NOTES

1. SEE SHEET E001 FOR ELECTRICAL EQUIPMENT AND DEVICE SYMBOLS.
2. ALL WORK ON THIS SHEET SHOWN WITH A BOLD DASHED LINE SHALL BE DEMOLISHED, UNLESS NOTED OTHERWISE. ALL EXISTING SHOWN WITH LIGHT LINE WEIGHT ARE EXISTING DEVICES TO REMAIN OR MODIFIED AS NOTED TO FACILITATE NEW WORK AS SHOWN ON SHEET E103.
3. EQUIPMENT OR ELECTRICAL DEVICES DESIGNATED TO BE RELOCATED SHALL BE CLEANED, STORED, AND PROTECTED FROM DAMAGE UNTIL REINSTALLED. REPLACE ANY EQUIPMENT OR DEVICES IF DAMAGED DURING RELOCATION.
4. MAINTAIN EXISTING CIRCUIT CONTINUITY ON CIRCUITS SERVING BRANCH POWER TO EQUIPMENT OR ELECTRICAL DEVICES OUTSIDE THE AREA OF WORK EXISTING TO REMAIN.
5. THE CONTRACTOR IS RESPONSIBLE FOR SUPPORTING ALL CONDUIT AND BOXES AFTER CEILING IS REMOVED IN RENOVATED AREAS TO MEET CURRENT NEC REQUIREMENTS.

KEYED NOTES

1. ALTERNATE BID #1: EC SHALL COORDINATE WITH MC MODIFICATIONS TO EXISTING CEILING SPACES WHERE NEW VAV UNITS ARE BEING INSTALLED. REMOVE EXISTING LIGHT FIXTURES REQUIRED AS A RESULT OF DUCT WORK MODIFICATIONS. SALVAGE LIGHT FIXTURES TO BE REINSTALLED AS INDICATED ON SHEET E103.
2. ALTERNATE BID #2: DISCONNECT AND REMOVE EXISTING CAPTAIN AND LIEUTENANT BATH EXHAUST FAN BRANCH CIRCUIT FED FROM PANEL B/M. MAINTAIN EXISTING BRANCH CIRCUIT RACEWAY SYSTEM TO BE REUSED TO FEED NEW EXHAUST FAN AS INDICATED ON SHEET E103.
3. ALTERNATE BID #3: EXISTING FIRE ALARM SYSTEM SMOKE DETECTOR. SEE SHEET E103 FOR PROVISIONS REQUIRED FOR PROPER DEVICE OPERATION.

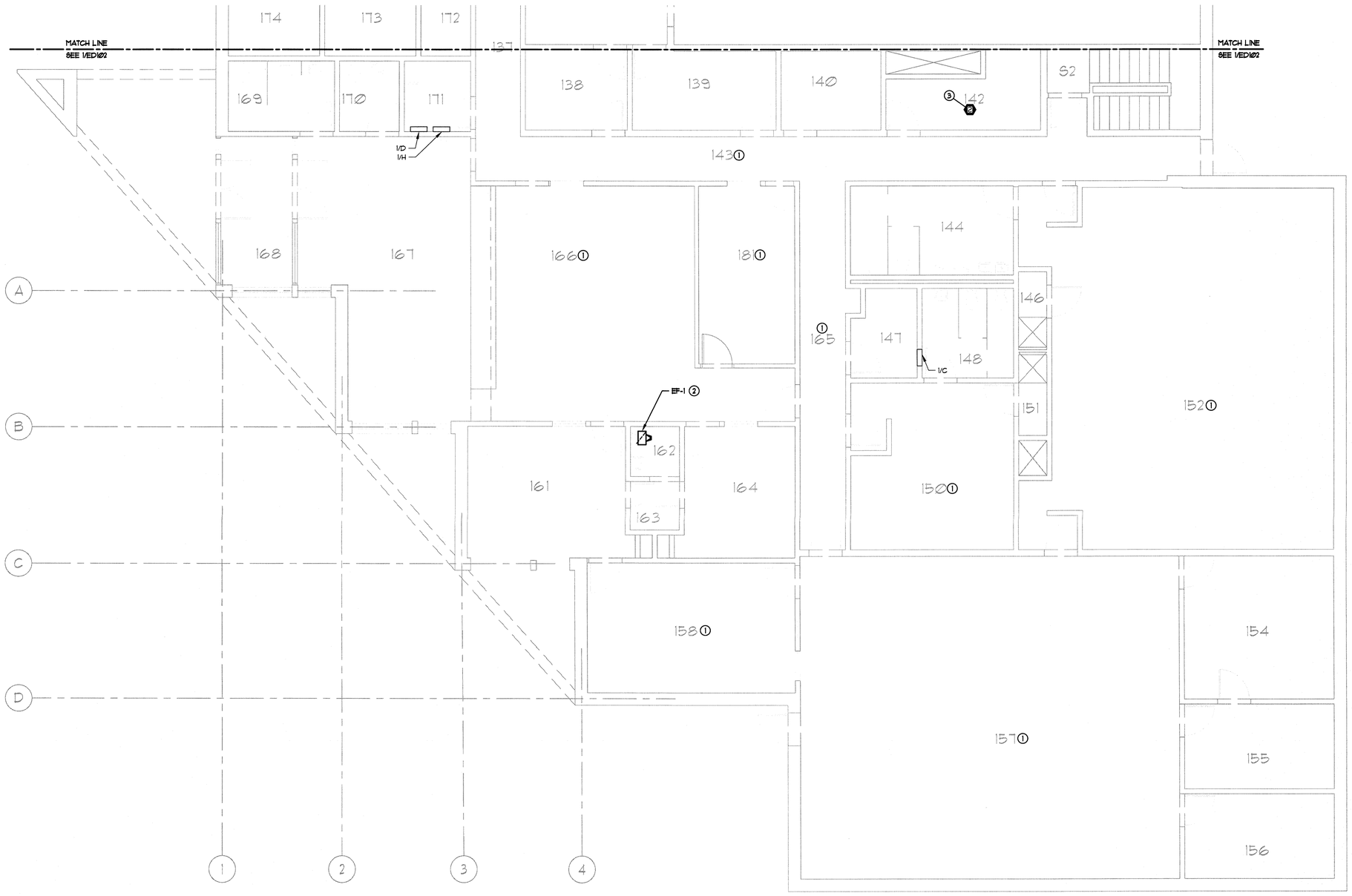

1 ELECTRICAL PARTIAL FIRST FLOOR DEMOLITION PLAN - AREA B

SCALE: 3/16" = 1'-0"

PLAN NORTH

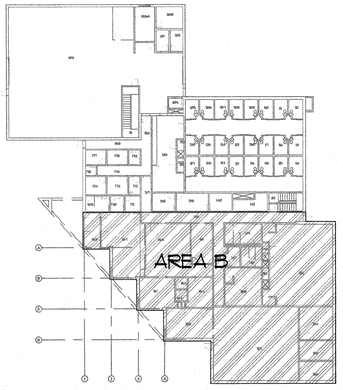

KEY PLAN: 1ST FLOOR

NTS

PLAN NORTH

City of Milwaukee
Department of Public Works
Infrastructure Services Division
Bridges & Buildings Section

GRUMMAN /BUTKUS ASSOCIATES
Energy Efficiency Consultants and Sustainable Design Engineers
1011 North Mayfair Road, Suite 300
414.476.8980
Copyright © 2015 Grumman/Butkus Associates

7th District Police Station RTUs Replacement
3626 West Fond du Lac Avenue
ELECTRICAL PARTIAL FIRST FLOOR DEMOLITION PLAN - AREA B

REVISIONS

DESIGNED BY	NJP
DRAWN BY	NJP
CHECKED BY	BMW
DATE 12/28/15	SCALE 3/16"=1'-0"
JOB NUMBER	PL120130100
SHEET NUMBER	E103
OF	

SHEET NOTES

1. SEE SHEET E000 FOR ELECTRICAL EQUIPMENT AND DEVICE SYMBOLS.
2. ALL WORK ON THIS SHEET SHOWN WITH A BOLD DASHED LINE SHALL BE DEMOLISHED, UNLESS NOTED OTHERWISE. ALL EXISTING SHOWN WITH LIGHT LINE WEIGHT ARE EXISTING DEVICES TO REMAIN OR MODIFIED AS NOTED TO FACILITATE NEW WORK AS SHOWN ON SHEET E104.
3. EQUIPMENT OR ELECTRICAL DEVICES DESIGNATED TO BE RELOCATED SHALL BE CLEANED, STORED, AND PROTECTED FROM DAMAGE UNTIL REINSTALLED. REPLACE ANY EQUIPMENT OR DEVICES IF DAMAGED DURING RELOCATION.
4. MAINTAIN EXISTING CIRCUIT CONTINUITY ON CIRCUITS SERVING BRANCH POWER TO EQUIPMENT OR ELECTRICAL DEVICES OUTSIDE THE AREA OF WORK EXISTING TO REMAIN.
5. THE CONTRACTOR IS RESPONSIBLE FOR SUPPORTING ALL CONDUIT AND BOXES AFTER CEILING IS REMOVED IN RENOVATED AREAS TO MEET CURRENT NEC REQUIREMENTS.

KEYED NOTES

1. DISCONNECT AND REMOVE BRANCH POWER AND CONTROL WIRING FROM EXISTING AHU-1 AND AHU-2. MAINTAIN EXISTING RACEWAY SYSTEM FROM PANEL MDP (LOCATED IN BASEMENT ROOM B3) TO EXISTING ROOF PULLBOX FOR REUSE TO FEED NEW EQUIPMENT INSTALLATIONS, AS INDICATED ON SHEET E104. COORDINATE EQUIPMENT SHUTDOWN AND REMOVAL WITH MC CONSTRUCTION SCHEDULE AND COM/MPD APPROVAL PRIOR TO COMMENCING DEMOLITION WORK.
2. DISCONNECT AND REMOVE EXISTING BRANCH POWER AND CONTROL WIRING FROM EXISTING ERV-1 UNIT. MAINTAIN EXISTING FEEDER RACEWAY SYSTEM FROM MDP (LOCATED IN BASEMENT ROOM B3) TO EXISTING ROOF PULLBOX FOR REUSE TO FEED NEW EQUIPMENT INSTALLATION, AS INDICATED ON SHEET E104. COORDINATE DEMOLITION ACTIVITIES WITH MC CONSTRUCTION PHASING SCHEDULE AND COM-MPD APPROVAL PRIOR TO COMMENCING DEMOLITION WORK.
3. <u>ALTERNATE BID #3:</u> DISCONNECT AND REMOVE EXISTING ROOF POWER VENTILATOR BRANCH POWER CIRCUIT AND CONTROL WIRING FED FROM PANEL B/M (LOCATED IN BASEMENT ROOM B2). MAINTAIN EXISTING RACEWAY SYSTEM TO REFEED NEW EQUIPMENT AS INDICATED ON SHEET E104. COORDINATE DEMOLITION ACTIVITIES WITH MC CONSTRUCTION SCHEDULE AND COM-MPD APPROVAL PRIOR TO COMMENCING DEMOLITION WORK.
4. <u>ALTERNATE BID #3:</u> DISCONNECT AND REMOVE EXISTING DUCT SMOKE DETECTOR(S). SALVAGE EXISTING DETECTOR RACEWAYS ON ROOF TO BE EXTENDED TO NEW DETECTOR LOCATIONS AS INDICATED ON SHEET E104.

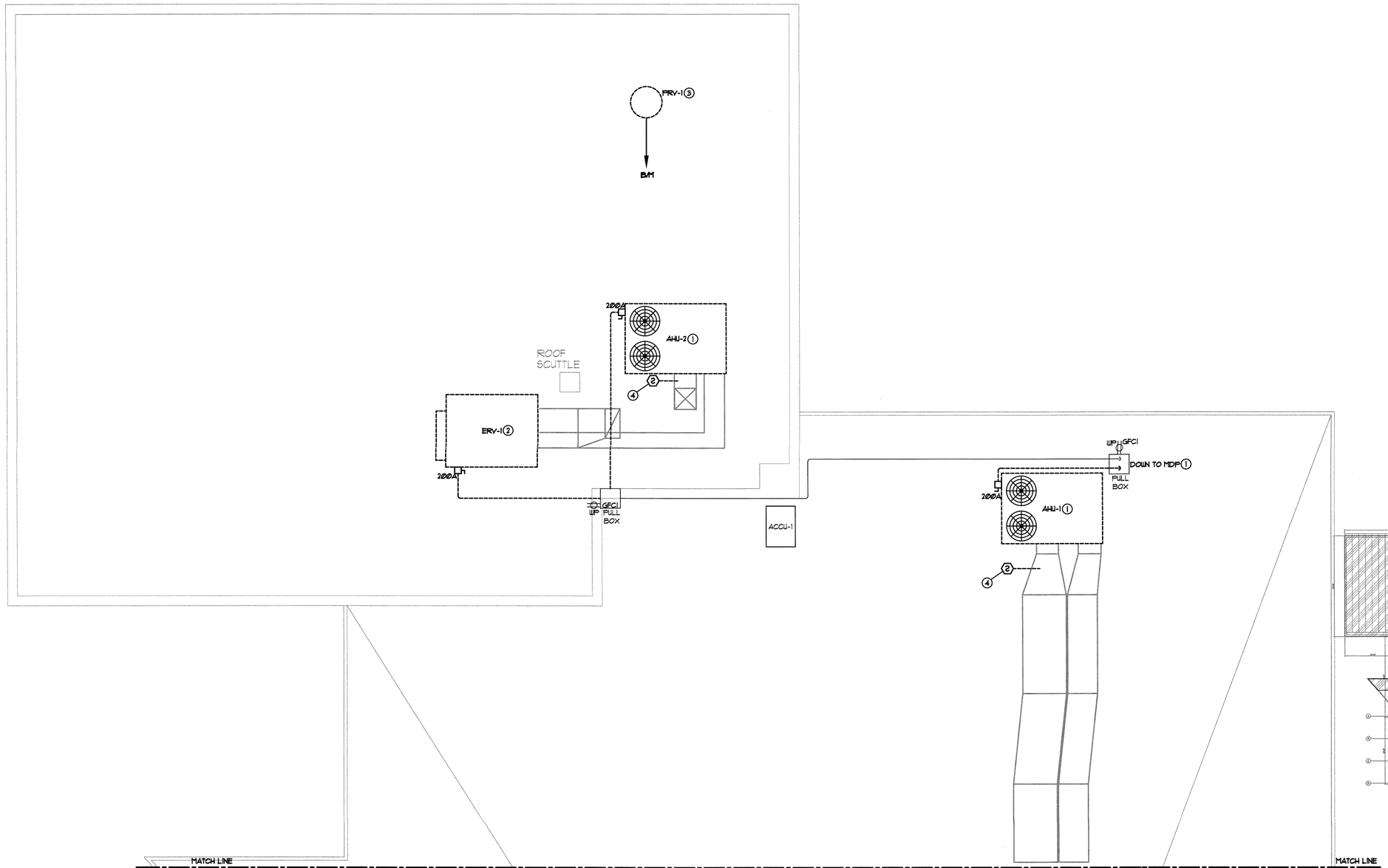

1 ELECTRICAL PARTIAL ROOF DEMOLITION PLAN - AREA A

SCALE: 3/16" = 1'-0"

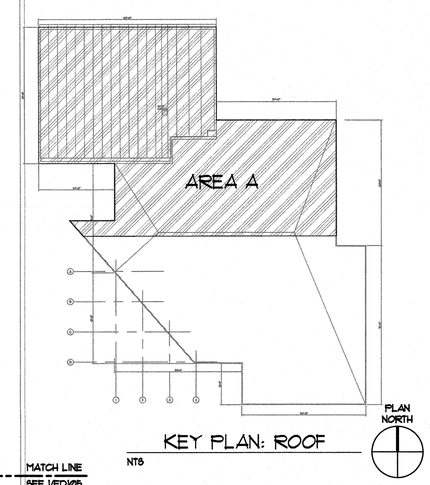

KEY PLAN: ROOF

NTS

City of Milwaukee

Department of Public Works
Infrastructure Services Division

Bridges & Buildings Section

GRUMMAN /BUTKUS ASSOCIATES

Energy Efficiency Consultants and Sustainable Design Engineers

1011 North Mayfair Road, Suite 300

414 476.8980

Copyright © 2015 Grumman/Butkus Associates

7th District Police Station RTUs Replacement
3626 West Fond du Lac Avenue
ELECTRICAL PARTIAL ROOF DEMOLITION PLAN - AREA A

REVISIONS

DESIGNED BY	NJP
DRAWN BY	NJP
CHECKED BY	BMW
DATE 12/28/15	SCALE 3/16"=1'-0"
JOB NUMBER	PL120130100
SHEET NUMBER	ED104
OF	

SHEET NOTES

1. SEE SHEET E001 FOR ELECTRICAL EQUIPMENT AND DEVICE SYMBOLS.
2. ALL WORK ON THIS SHEET SHOWN WITH A BOLD DASHED LINE SHALL BE DEMOLISHED, UNLESS NOTED OTHERWISE. ALL EXISTING SHOWN WITH LIGHT LINE WEIGHT ARE EXISTING DEVICES TO REMAIN OR MODIFIED AS NOTED TO FACILITATE NEW WORK AS SHOWN ON SHEET E103.
3. EQUIPMENT OR ELECTRICAL DEVICES DESIGNATED TO BE RELOCATED SHALL BE CLEANED, STORED, AND PROTECTED FROM DAMAGE UNTIL REINSTALLED. REPLACE ANY EQUIPMENT OR DEVICES IF DAMAGED DURING RELOCATION.
4. MAINTAIN EXISTING CIRCUIT CONTINUITY ON CIRCUITS SERVING BRANCH POWER TO EQUIPMENT OR ELECTRICAL DEVICES OUTSIDE THE AREA OF WORK EXISTING TO REMAIN.
5. THE CONTRACTOR IS RESPONSIBLE FOR SUPPORTING ALL CONDUIT AND BOXES AFTER CEILING IS REMOVED IN RENOVATED AREAS TO MEET CURRENT NEC REQUIREMENTS.

○ KEYED NOTES

1. ALTERNATE BID #2 - DISCONNECT AND REMOVE EXISTING ROOF POWER VENTILATOR BRANCH POWER CIRCUIT AND CONTROL WIRING FED FROM PANEL B/M (LOCATED IN BASEMENT ROOM B2). MAINTAIN EXISTING RACEWAY SYSTEM TO REFEED NEW EQUIPMENT AS INDICATED ON SHEET E104. COORDINATE DEMOLITION ACTIVITIES WITH MC CONSTRUCTION SCHEDULE AND COM-MPD APPROVAL PRIOR TO COMMENCING DEMOLITION WORK.
2. ALTERNATE BID #3 - DISCONNECT AND REMOVE EXISTING EXHAUST FAN EF-1 BRANCH POWER CIRCUIT WIRING FED FROM PANEL B/M (LOCATED IN BASEMENT ROOM B2). MAINTAIN EXISTING RACEWAY SYSTEM TO REFEED NEW EQUIPMENT AS INDICATED ON SHEET E103. COORDINATE DEMOLITION ACTIVITIES WITH MC CONSTRUCTION SHECULE AND COM-MPD APPROVAL PRIOR TO COMMENCING DEMOLITION WORK.

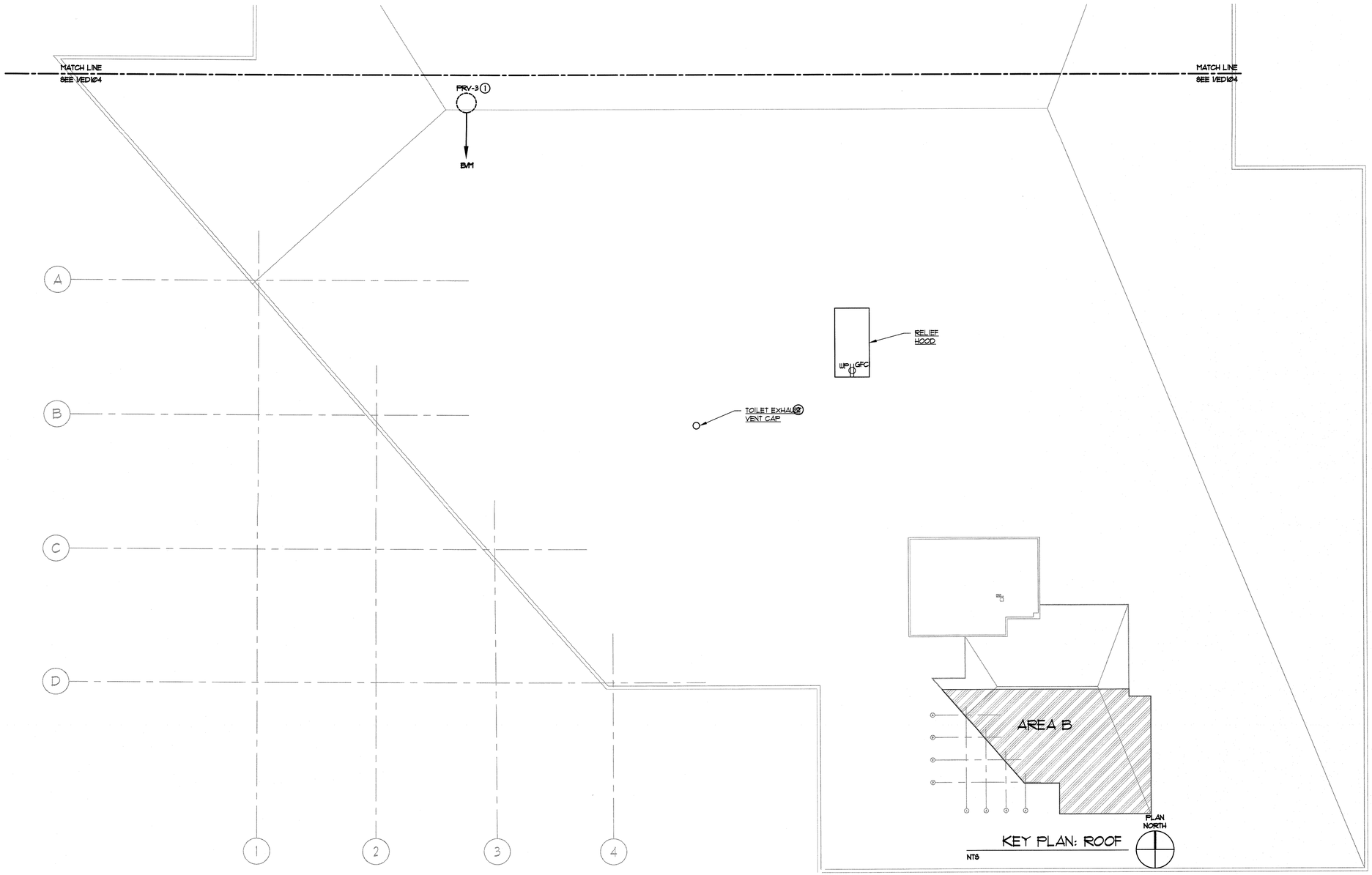

1 ELECTRICAL PARTIAL ROOF DEMOLITION PLAN - AREA B

SCALE: 3/16" = 1'-0"

PLAN NORTH

City of Milwaukee

Department of Public Works
Infrastructure Services Division

Bridges & Buildings Section

GRUMMAN /BUTKUS ASSOCIATES

Energy Efficiency Consultants and Sustainable Design Engineers

1011 North Mayfair Road, Suite 300

414 476.8980

Copyright © 2015 Grumman/Butkus Associates

7th District Police Station RTUs Replacement
3626 West Fond du Lac Avenue
ELECTRICAL PARTIAL ROOF DEMOLITION PLAN - AREA B

REVISIONS

DESIGNED BY	NJP
DRAWN BY	NJP
CHECKED BY	BMW
DATE 12/28/15	SCALE 3/16"=1'-0"
JOB NUMBER	PL120130100
SHEET NUMBER	ED105
OF	

SHEET NOTES

1. EXISTING ELECTRICAL EQUIPMENT SIZES AND RATINGS ARE BASED ON COM-MPD RECORD DRAWING DOCUMENTATION AND ENGINEER'S SITE WALK-DOWN OBSERVATIONS. EC SHALL FIELD VERIFY INDICATED EXISTING FEEDER CIRCUIT BREAKER RATINGS, LOCATIONS AND OPERATION WITHIN EXISTING SWITCHBOARD/PANELBOARD PRIOR TO COMMENCING DEMOLITION WORK.
2. ALL NEW WORK SHALL BE INSTALLED PRIOR TO DEMOLITION OR CUT-OVER OF EXISTING BRANCH CIRCUITS TO NEW POWER SOURCES AS INDICATED IN ONE-LINE DIAGRAM - NEW WORK.
3. THE ELECTRICAL WORK ASSOCIATED WITH THIS PROJECT WILL INTERRUPT POWER TO SELECT DEPARTMENTS ON THE BASEMENT AND FIRST FLOOR, DUE TO RELOCATION OF EXISTING EQUIPMENT WITHIN THE WORK AREAS. EC SHALL SCHEDULE AND COORDINATE ALL POWER INTERRUPTIONS WITH CITY OF MILWAUKEE OPERATIONS AND MAINTENANCE STAFF PRIOR TO COMMENCING ANY SUBJECT WORK ACTIVITIES.
4. EC SHALL COORDINATE ALL DEMOLITION WORK WITH OTHER TRADES TO AVOID CONFLICT WITH EXISTING EQUIPMENT OPERATION AND/OR MPD OPERATIONS.
5. IT IS THE EC RESPONSIBILITY TO FIELD VERIFY ALL EXISTING EQUIPMENT SIZE, RATINGS AND PHYSICAL CONDITIONS PRIOR TO BIDDING THE WORK. COORDINATE WITH COM-MPD MAINTENANCE STAFF FOR SCHEDULING SITE VISITS.

KEYED NOTES

1. SEE SHEET E101 ONE-LINE DIAGRAM AND SHEET E601 MDP PANELBOARD SCHEDULE FOR MODIFICATIONS TO MAIN DISTRIBUTION PANELBOARD. COORDINATE WITH MECHANICAL CONTRACTOR FOR CONSTRUCTION SEQUENCE SCHEDULING AND COM/MPD FOR APPROVAL OF ELECTRICAL SERVICE SHUTDOWN(S) AND EQUIPMENT CUTOVER MAINTENANCE WINDOW(S). PREPARE A NEW PANELBOARD DIRECTORY WITH NEW AND EXISTING LOADS.
2. ALTERNATE BID #3: SEE SHEET E602 FOR PANELBOARD MODIFICATIONS TO SERVE NEW EF-1, PRV-1 AND PRV-3 FEEDER CIRCUIT BREAKER(S) FOR SPECIFIC CIRCUIT ASSIGNMENTS.
3. ALTERNATE BID #4: SEE SHEET E501 FOR BRANCH CIRCUIT/RACEWAY, ELECTRIAL DISCONNECT SWITCH AND FEEDER BREAKER SIZINGS. SEE SHEET E603 FOR NEW PANELBOARD VMEP LOAD ASSIGNMENTS.
4. ALTERNATE BID #5: EC SHALL CONDUCT AN OVERALL FIRE ALARM SYSTEM FUNCTIONAL AND OPERATIONAL TESTING WITH LOCAL SIMPLEX REPRESENTATIVE/SUPPLIER. PROVIDE TROUBLESHOOTING AND REPAIR OF ANY MALFUNCTIONS DISCOVERED AS A RESULT OF THE SYSTEM FUNCTIONAL AND OPERATIONAL TESTING.
5. ALTERNATE BID #5: CLEAN AND RECALIBRATE EXISTING FIRE SMOKE DETECTOR. EACH DETECTOR SHALL BE TESTED TO MEET PROPER OPERATIONAL AND PERFORMANCE DETECTION STANDARDS.

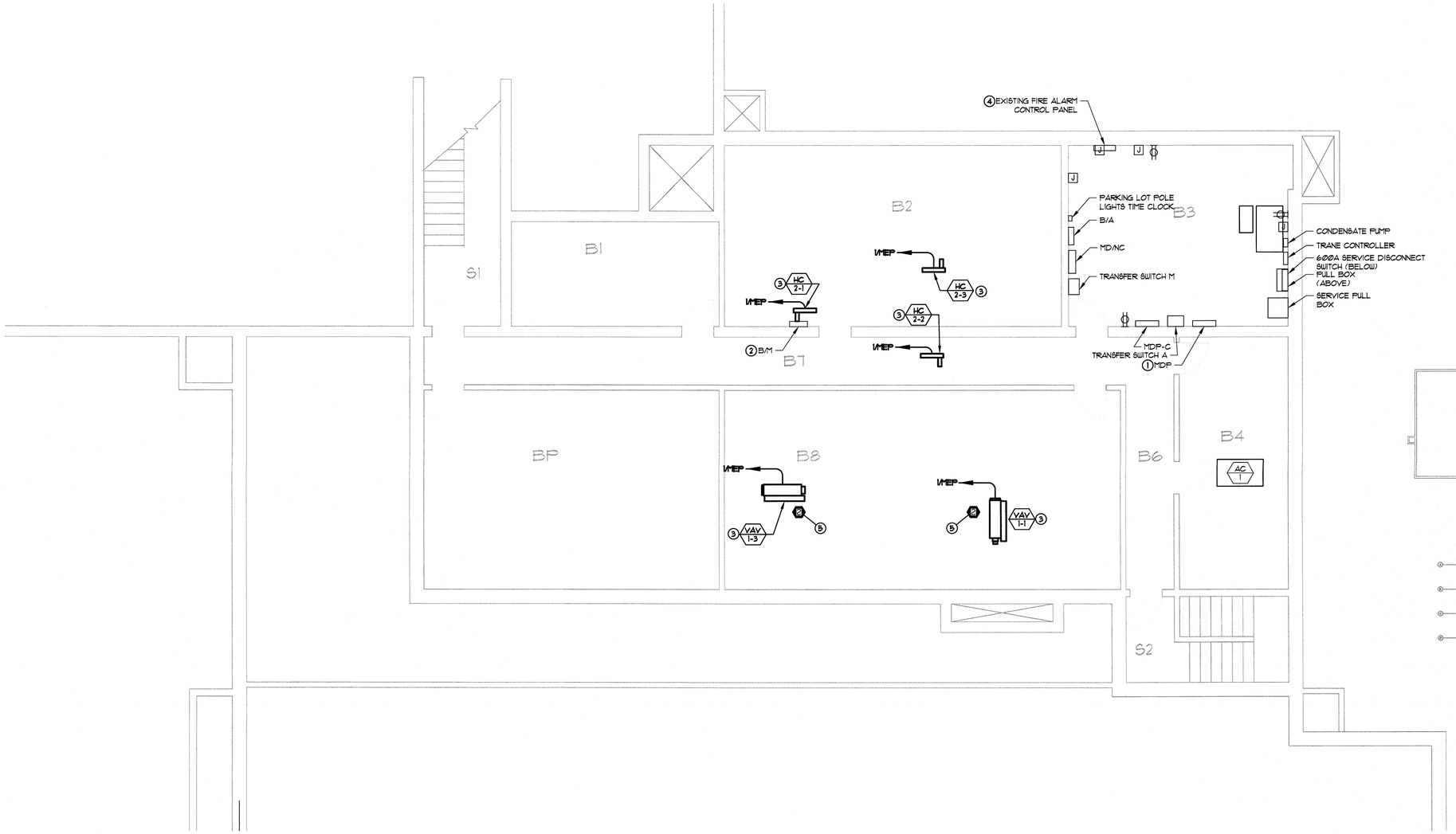

1 ELECTRICAL BASEMENT PLAN
SCALE: 3/16" = 1'-0"

PLAN NORTH

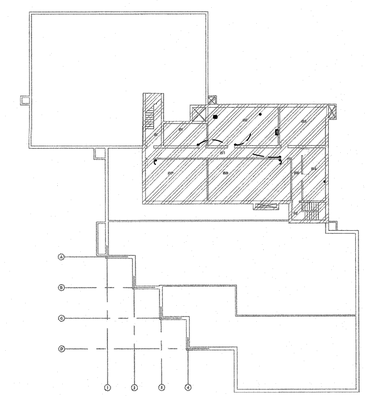

KEY PLAN: GROUND FLOOR
NTS

PLAN NORTH

City of Milwaukee
Department of Public Works
Infrastructure Services Division
Bridges & Buildings Section

GRUMMAN /BUTKUS ASSOCIATES
Energy Efficiency Consultants and Sustainable Design Engineers
1011 North Mayfair Road, Suite 300
414 476.8980
Copyright © 2015 Grumman/Butkus Associates

7th District Police Station RTUs Replacement
3626 West Fond du Lac Avenue
ELECTRICAL BASEMENT PLAN

REVISIONS

DESIGNED BY	NJP
DRAWN BY	NJP
CHECKED BY	BMW
DATE 12/28/15	SCALE 3/16"=1'-0"
JOB NUMBER	PL120130100
SHEET NUMBER	E101
OF	

SHEET NOTES

1. EXISTING ELECTRICAL EQUIPMENT SIZES AND RATINGS ARE BASED ON COM-MPD RECORD DRAWING DOCUMENTATION AND ENGINEER'S SITE WALK-DOWN OBSERVATIONS. EC SHALL FIELD VERIFY INDICATED EXISTING FEEDER CIRCUIT BREAKER RATINGS, LOCATIONS AND OPERATION WITHIN EXISTING SWITCHBOARD/PANELBOARD PRIOR TO COMMENCING DEMOLITION WORK.
2. ALL NEW WORK SHALL BE INSTALLED PRIOR TO DEMOLITION OR CUT-OVER OF EXISTING BRANCH CIRCUITS TO NEW POWER SOURCES AS INDICATED IN ONE-LINE DIAGRAM - NEW WORK.
3. THE ELECTRICAL WORK ASSOCIATED WITH THIS PROJECT WILL INTERRUPT POWER TO SELECT DEPARTMENTS ON THE BASEMENT AND FIRST FLOOR, DUE TO RELOCATION OF EXISTING EQUIPMENT WITHIN THE WORK AREAS. EC SHALL SCHEDULE AND COORDINATE ALL POWER INTERRUPTIONS WITH CITY OF MILWAUKEE OPERATIONS AND MAINTENANCE STAFF PRIOR TO COMMENCING ANY SUBJECT WORK ACTIVITIES.
4. EC SHALL COORDINATE ALL DEMOLITION WORK WITH OTHER TRADES TO AVOID CONFLICT WITH EXISTING EQUIPMENT OPERATION AND/OR MPD OPERATIONS.
5. IT IS THE EC RESPONSIBILITY TO FIELD VERIFY ALL EXISTING EQUIPMENT SIZE, RATINGS AND PHYSICAL CONDITIONS PRIOR TO BIDDING THE WORK. COORDINATE WITH COM-MPD MAINTENANCE STAFF FOR SCHEDULING SITE VISITS.

KEYED NOTES

1. ALTERNATE BID #2 - REFEED NEW MAU-1 FROM PANEL 1/E AS DENOTED IN MECHANICAL EQUIPMENT SCHEDULE ON SHEET E5Ø1. EXISTING MAU-1 IS BELIEVED TO BE FED FROM PANEL 1/F. FIELD CONFIRM THAT THE EXISTING MAU-1 POWER SOURCE IS FED FROM PANEL 1/F. SEE SHEET E6Ø1 FOR NEW MAU-1 BRANCH CIRCUIT/RACEWAY, DISCONNECT SWITCH, AND FEEDER CIRCUIT BREAKER SIZINGS. REUSE EQUIPMENT EXISTING RACEWAY AND EXTEND FOR REQUIRED FINAL CONNECTION.
2. ALTERNATE BID #1: SEE SHEET E6Ø1 FOR BRANCH CIRCUIT/RACEWAY, ELECTRIAL DISCONNECT SWITCH AND FEEDER BREAKER SIZINGS. SEE SHEET E6Ø3 FOR NEW PANELBOARD 1/MEP LOAD ASSIGNMENTS.
3. ALTERNATE BID #1: REINSTALL EXISTING LIGHTING REMOVED DUE TO DUCT MODIFICATIONS. SEE ARCHITECTURAL DRAWING A1Ø FOR ACTUAL CEILING MODIFICATIONS.
4. ALTERNATE BID #5: REPLACE EXISTING DUCT SMOKE DETECTOR(S) WITH NEW IONIZATION TYPE, DUCT SMOKE DETECTOR(S), SAMPLING TUBE, REMOTE TESTING STATION (RTS) AND HVAC EQUIPMENT SHUTDOWN INTERLOCKING TO NEW EQUIPMENT (STARTER, VFD, ETC.).

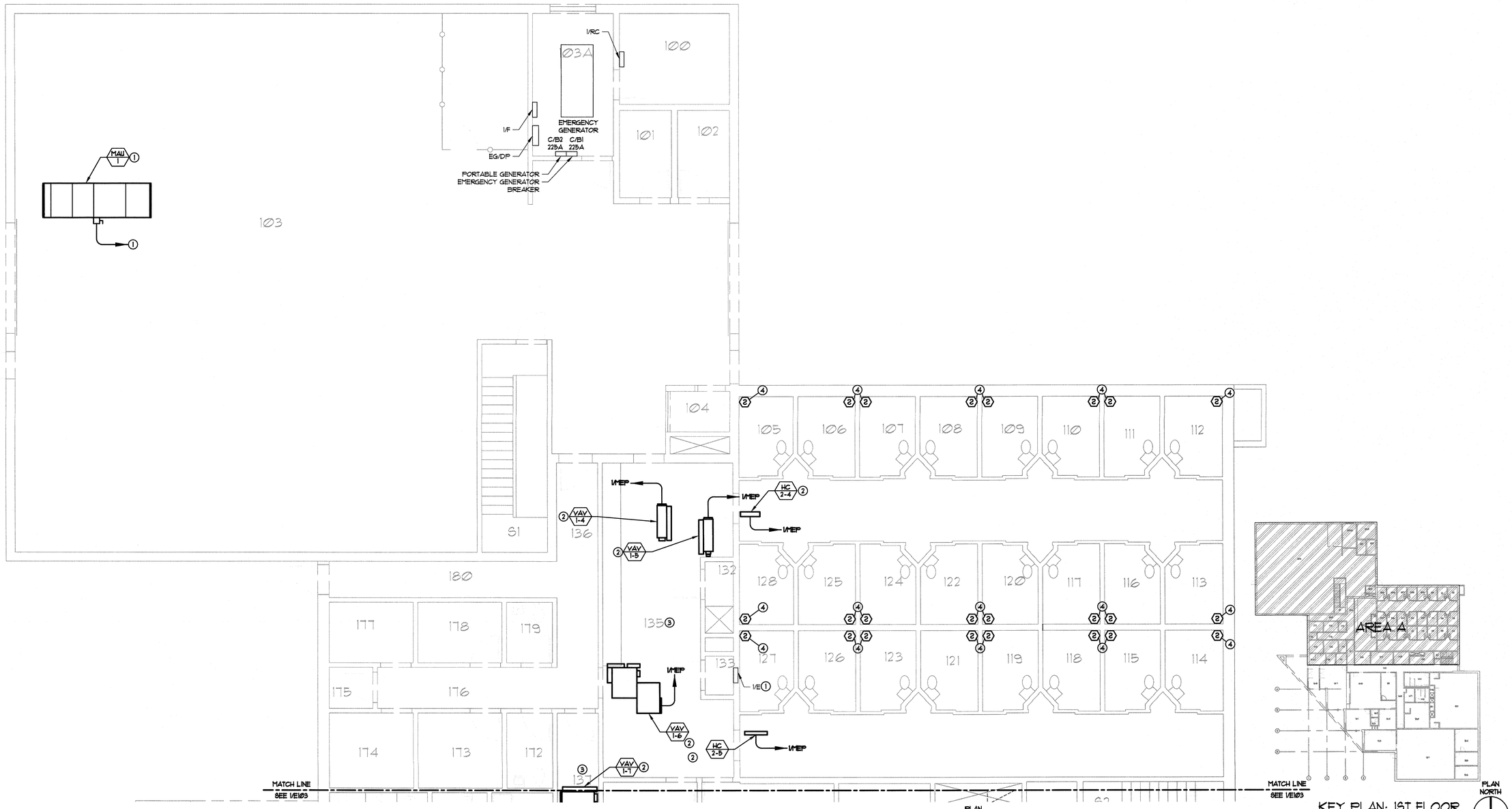

1 ELECTRICAL PARTIAL FIRST FLOOR PLAN - AREA A

SCALE: 3/16" = 1'-Ø"

City of Milwaukee

Department of Public Works
Infrastructure Services Division

Bridges & Buildings Section

GRUMMAN /BUTKUS ASSOCIATES

Energy Efficiency Consultants and Sustainable Design Engineers

1011 North Mayfair Road, Suite 300

414 476.8980

Copyright © 2015 Grumman/Butkus Associates

7th District Police Station RTUs Replacement
3626 West Fond du Lac Avenue
ELECTRICAL PARTIAL FIRST FLOOR PLAN - AREA A

REVISIONS

DESIGNED BY	NJP
DRAWN BY	NJP
CHECKED BY	BMW
DATE 12/28/15	SCALE 3/16"=1'-Ø"
JOB NUMBER	PL120130100
SHEET NUMBER	E1Ø2
OF	

SHEET NOTES

1. EXISTING ELECTRICAL EQUIPMENT SIZES AND RATINGS ARE BASED ON CCM-MPD RECORD DRAWING DOCUMENTATION AND ENGINEER'S SITE WALK-DOWN OBSERVATIONS. EC SHALL FIELD VERIFY INDICATED EXISTING FEEDER CIRCUIT BREAKER RATINGS, LOCATIONS AND OPERATION WITHIN EXISTING SWITCHBOARD/PANELBOARD PRIOR TO COMMENCING DEMOLITION WORK.
2. ALL NEW WORK SHALL BE INSTALLED PRIOR TO DEMOLITION OR CUT-OVER OF EXISTING BRANCH CIRCUITS TO NEW POWER SOURCES AS INDICATED IN ONE-LINE DIAGRAM - NEW WORK.
3. THE ELECTRICAL WORK ASSOCIATED WITH THIS PROJECT WILL INTERRUPT POWER TO SELECT DEPARTMENTS ON THE BASEMENT AND FIRST FLOOR, DUE TO RELOCATION OF EXISTING EQUIPMENT WITHIN THE WORK AREAS. EC SHALL SCHEDULE AND COORDINATE ALL POWER INTERRUPTIONS WITH CITY OF MILWAUKEE OPERATIONS AND MAINTENANCE STAFF PRIOR TO COMMENCING ANY SUBJECT WORK ACTIVITIES.
4. EC SHALL COORDINATE ALL DEMOLITION WORK WITH OTHER TRADES TO AVOID CONFLICT WITH EXISTING EQUIPMENT OPERATION AND/OR MPD OPERATIONS.
5. IT IS THE EC RESPONSIBILITY TO FIELD VERIFY ALL EXISTING EQUIPMENT SIZE, RATINGS AND PHYSICAL CONDITIONS PRIOR TO BIDDING THE WORK. COORDINATE WITH CCM-MPD MAINTENANCE STAFF FOR SCHEDULING SITE VISITS.

KEYED NOTES

1. ALTERNATE BID #1: SEE SHEET E501 FOR BRANCH CIRCUIT/RACEWAY, ELECTRIAL DISCONNECT SWITCH AND FEEDER BREAKER SIZINGS. SEE SHEET E603 FOR NEW PANELBOARD 1/MEP LOAD ASSIGNMENTS.
2. ALTERNATE BID #2: REFEED NEW EXHAUST FAN EF-1 FROM EXISTING PANEL B/M A3 INDICATED. SEE SHEET E501 FOR BRANCH CIRCUIT/RACEWAY, DISCONNECT SWITCH AND FEEDER CIRCUIT BREAKER SIZINGS. SEE SHEET E602 FOR PANELBOARD SCHEDULE CIRCUIT BREAKER LOAD ASSIGNMENT.
3. ALTERNATE BID #1: REINSTALL EXISTING LIGHTING REMOVED DUE TO DUCT MODIFICATIONS. SEE ARCHITECTURAL DRAWING A120 FOR ACTUAL CEILING MODIFICATIONS.
4. LOCATE PANELBOARDS BETWEEN EXISTING DUCTWORK ABOVE. MAINTAIN PROPER CLEARANCE WITH DUCTS TO ROUTE NEW CIRCUITS TO LOADS.
5. ALTERNATE BID #2: CLEAN AND RECALIBRATE EXISTING FIRE SMOKE DETECTOR. EACH DETECTOR SHALL BE TESTED TO MEET PROPER OPERATIONAL AND PERFORMANCE DETECTION STANDARDS.

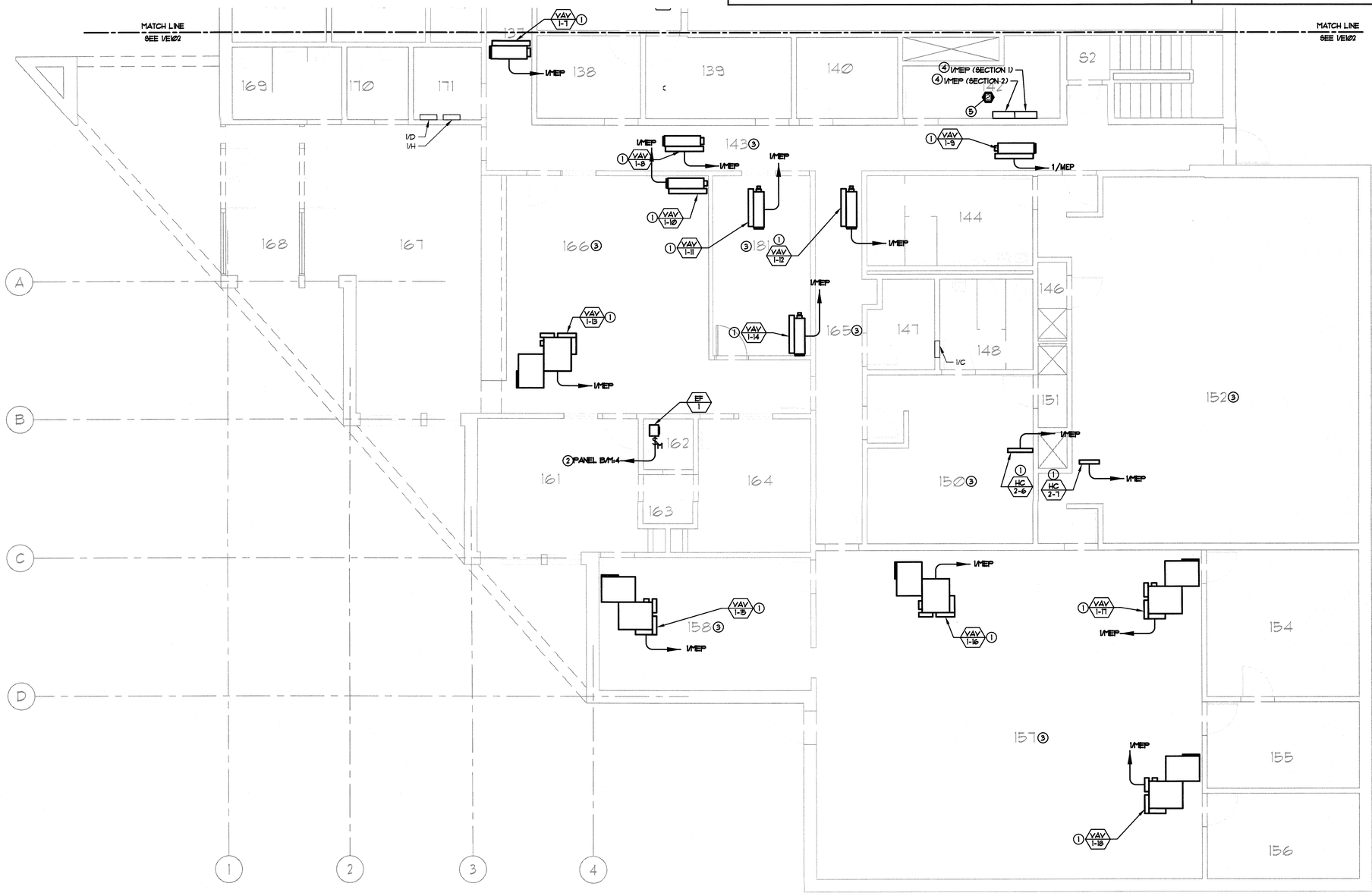

1 ELECTRICAL PARTIAL FIRST FLOOR PLAN - AREA B

SCALE: 3/16" = 1'-0"

PLAN NORTH

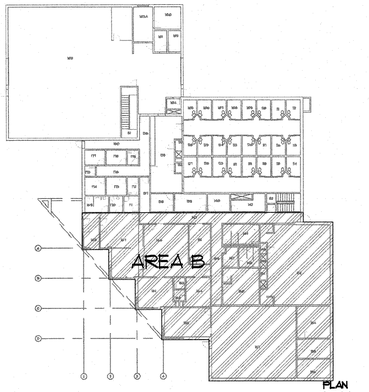

KEY PLAN: 1ST FLOOR

NTS

PLAN NORTH

City of Milwaukee

Department of Public Works
Infrastructure Services Division

Bridges & Buildings Section

GRUMMAN /BUTKUS ASSOCIATES

Energy Efficiency Consultants and Sustainable Design Engineers

1011 North Mayfair Road, Suite 300

414 476.8980

Copyright © 2015 Grummer/Butkus Associates

7th District Police Station RTUs Replacement
3626 West Fond du Lac Avenue
ELECTRICAL PARTIAL FIRST FLOOR PLAN - AREA B

REVISIONS

DESIGNED BY	NJP
DRAWN BY	NJP
CHECKED BY	BMW
DATE 12/28/15	SCALE 3/16"=1'-0"
JOB NUMBER	PL120130100
SHEET NUMBER	E103
OF	

SHEET NOTES

1. EXISTING ELECTRICAL EQUIPMENT SIZES AND RATINGS ARE BASED ON COM-MPD RECORD DRAWING DOCUMENTATION AND ENGINEER'S SITE WALK-DOWN OBSERVATIONS. EC SHALL FIELD VERIFY INDICATED EXISTING FEEDER CIRCUIT BREAKER RATINGS, LOCATIONS AND OPERATION WITHIN EXISTING SWITCHBOARD/PANELBOARD PRIOR TO COMMENCING DEMOLITION WORK.
2. ALL NEW WORK SHALL BE INSTALLED PRIOR TO DEMOLITION OR CUT-OVER OF EXISTING BRANCH CIRCUITS TO NEW POWER SOURCES AS INDICATED IN ONE-LINE DIAGRAM - NEW WORK.
3. THE ELECTRICAL WORK ASSOCIATED WITH THIS PROJECT WILL INTERRUPT POWER TO SELECT DEPARTMENTS ON THE BASEMENT AND FIRST FLOOR, DUE TO RELOCATION OF EXISTING EQUIPMENT WITHIN THE WORK AREAS. EC SHALL SCHEDULE AND COORDINATE ALL POWER INTERRUPTIONS WITH CITY OF MILWAUKEE OPERATIONS AND MAINTENANCE STAFF PRIOR TO COMMENCING ANY SUBJECT WORK ACTIVITIES.
4. EC SHALL COORDINATE ALL DEMOLITION WORK WITH OTHER TRADES TO AVOID CONFLICT WITH EXISTING EQUIPMENT OPERATION AND/OR MPD OPERATIONS.
5. IT IS THE EC RESPONSIBILITY TO FIELD VERIFY ALL EXISTING EQUIPMENT SIZE, RATINGS AND PHYSICAL CONDITIONS PRIOR TO BIDDING THE WORK. COORDINATE WITH COM-MPD MAINTENANCE STAFF FOR SCHEDULING SITE VISITS.

KEYED NOTES

1. REFEED NEW AHU-2 AND ERV-1 FROM SWITCHBOARD MDP AS INDICATED ON SHEET E601 AND E101. REUSE EXISTING RACEWAY SYSTEM AND EXTEND WITH NEW RACEWAYS TO NEW EQUIPMENT LOCATIONS SHOWN.
2. ALTERNATE BID #3: REFEED NEW PRV-1 FROM PANEL B/M AS INDICATED ON SHEET E601. SEE SHEET E602 FOR PANELBOARD B/M SCHEDULE LOAD ASSIGNMENT.
3. ALTERNATE BID #5: PROVIDE AND INSTALL NEW DUCT SMOKE DETECTOR. EXTEND EXISTING SMOKE DETECTOR ROOF RACEWAY TO NEW DETECTOR LOCATION WITH NEW RACEWAY. PROVIDE NEW SMOKE DETECTOR FIRE ALARM WIRING TO EXISTING FACP LOCATED IN ROOM B3. PROVIDE ADDITIONAL CIRCUIT TO INTERLOCK WITH AHU STARTER FOR SHUTDOWN UPON DETECTION, AS REQUIRED.

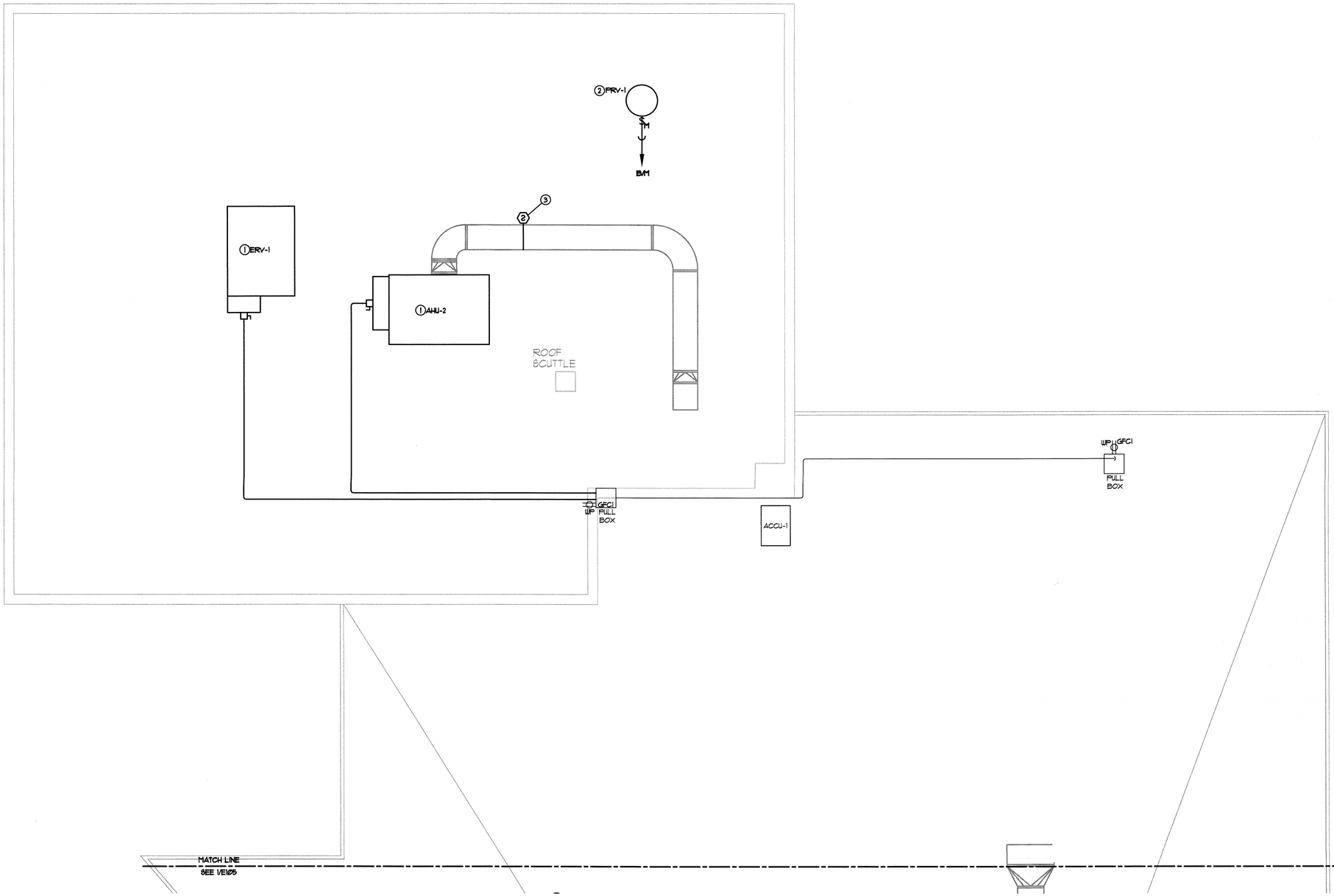

1 ELECTRICAL PARTIAL ROOF PLAN - AREA A

SCALE: 3/16" = 1'-0"

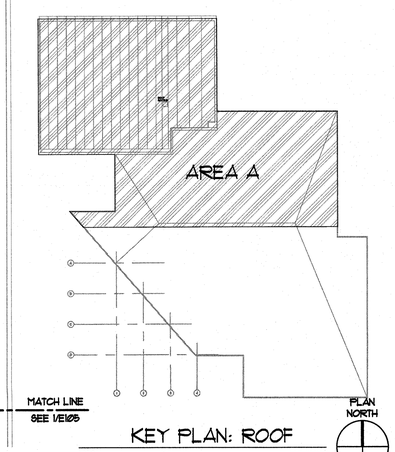

KEY PLAN: ROOF

NTS

City of Milwaukee

Department of Public Works
Infrastructure Services Division

Bridges & Buildings Section

GRUMMAN /BUTKUS ASSOCIATES

Energy Efficiency Consultants and Sustainable Design Engineers

1011 North Mayfair Road, Suite 300

414 476.8980

Copyright © 2015 Grumman/Butkus Associates

7th District Police Station RTUs Replacement
3626 West Fond du Lac Avenue
ELECTRICAL PARTIAL ROOF PLAN - AREA A

REVISIONS

DESIGNED BY	NJP
DRAWN BY	NJP
CHECKED BY	BMW
DATE 12/28/15	SCALE 3/16"=1'-0"
JOB NUMBER	PL120130100
SHEET NUMBER	E104
OF	

SHEET NOTES

1. EXISTING ELECTRICAL EQUIPMENT SIZES AND RATINGS ARE BASED ON COM-MPD RECORD DRAWING DOCUMENTATION AND ENGINEER'S SITE WALK-DOWN OBSERVATIONS. EC SHALL FIELD VERIFY INDICATED EXISTING FEEDER CIRCUIT BREAKER RATINGS, LOCATIONS AND OPERATION WITHIN EXISTING SWITCHBOARD/PANELBOARD PRIOR TO COMMENCING DEMOLITION WORK.
2. ALL NEW WORK SHALL BE INSTALLED PRIOR TO DEMOLITION OR CUT-OVER OF EXISTING BRANCH CIRCUITS TO NEW POWER SOURCES AS INDICATED IN ONE-LINE DIAGRAM - NEW WORK.
3. THE ELECTRICAL WORK ASSOCIATED WITH THIS PROJECT WILL INTERRUPT POWER TO SELECT DEPARTMENTS ON THE BASEMENT AND FIRST FLOOR, DUE TO RELOCATION OF EXISTING EQUIPMENT WITHIN THE WORK AREAS. EC SHALL SCHEDULE AND COORDINATE ALL POWER INTERRUPTIONS WITH CITY OF MILWAUKEE OPERATIONS AND MAINTENANCE STAFF PRIOR TO COMMENCING ANY SUBJECT WORK ACTIVITIES.
4. EC SHALL COORDINATE ALL DEMOLITION WORK WITH OTHER TRADES TO AVOID CONFLICT WITH EXISTING EQUIPMENT OPERATION AND/OR MPD OPERATIONS.
5. IT IS THE EC RESPONSIBILITY TO FIELD VERIFY ALL EXISTING EQUIPMENT SIZE, RATINGS AND PHYSICAL CONDITIONS PRIOR TO BIDDING THE WORK. COORDINATE WITH COM-MPD MAINTENANCE STAFF FOR SCHEDULING SITE VISITS.

KEYED NOTES

1. REFEED NEW AHU-1 FROM SWITCHBOARD MDP AS INDICATED ON SHEET E501 AND E101. REUSE EXISTING RACEWAY SYSTEM AND EXTEND WITH NEW RACEWAYS TO NEW EQUIPMENT LOCATIONS SHOWN.
2. ALTERNATE BID #2: REFEED NEW PRV-3 FROM PANEL B/M AS INDICATED ON SHEET E501. SEE SHEET E602 FOR PANELBOARD B/M SCHEDULE LOAD ASSIGNMENT.
3. ALTERNATE BID #5: PROVIDE AND INSTALL NEW DUCT SMOKE DETECTOR. EXTEND EXISTING SMOKE DETECTOR ROOF RACEWAY TO NEW DETECTOR LOCATION WITH NEW RACEWAY. PROVIDE NEW SMOKE DETECTOR FIRE ALARM WIRING TO EXISTING FACP LOCATED IN ROOM B3. PROVIDE ADDITIONAL CIRCUIT TO INTERLOCK WITH AHU STARTER FOR SHUTDOWN UPON DETECTION, AS REQUIRED.

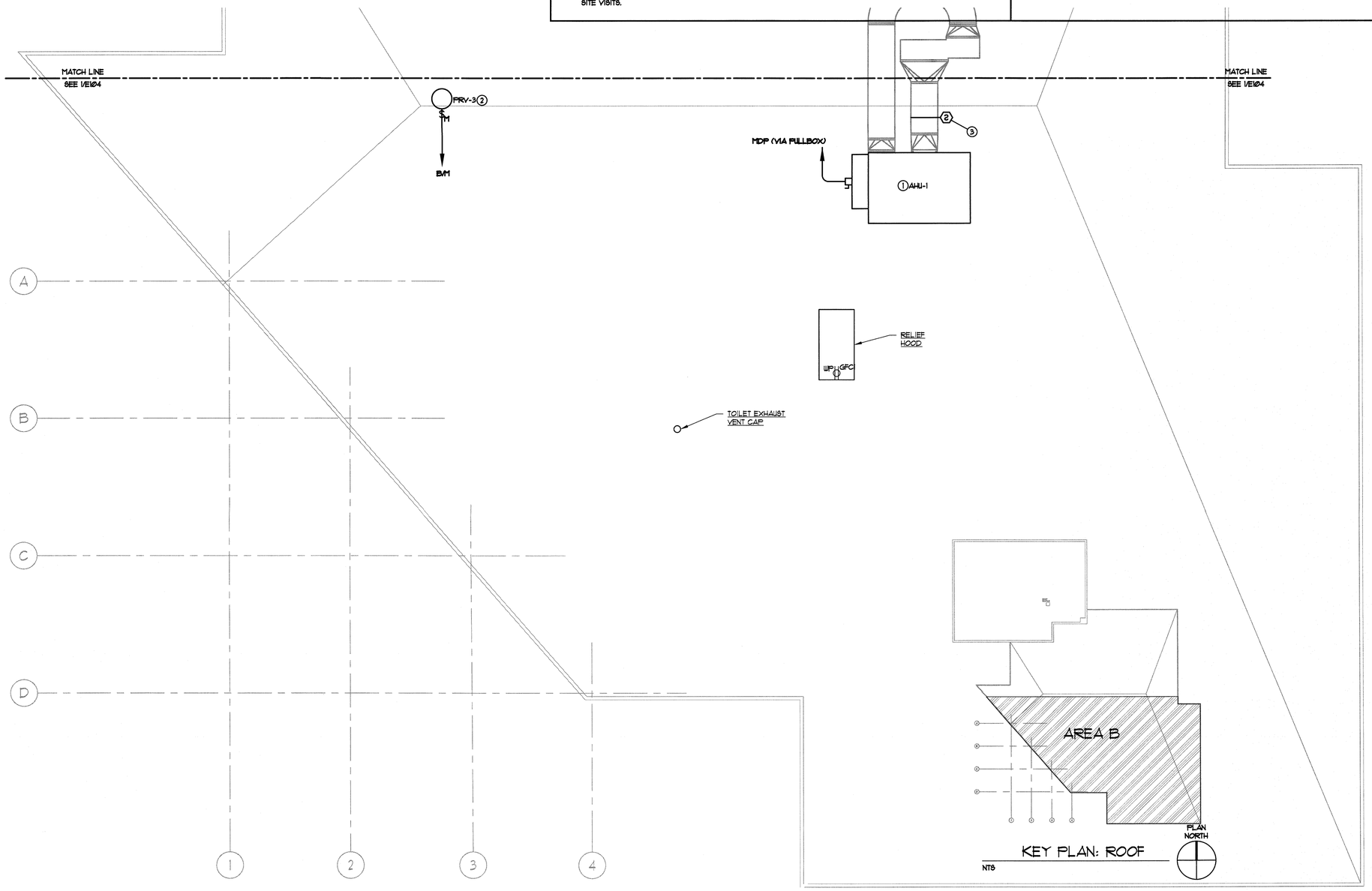

1 ELECTRICAL PARTIAL ROOF PLAN - AREA B

SCALE: 3/16" = 1'-0"

PLAN NORTH

City of Milwaukee

Department of Public Works
Infrastructure Services Division

Bridges & Buildings Section

GRUMMAN /BUTKUS ASSOCIATES

Energy Efficiency Consultants and Sustainable Design Engineers

1011 North Mayfair Road, Suite 300

414 476.8980

Copyright © 2013 Grumman/Butkus Associates

7th District Police Station RTUs Replacement
3626 West Fond du Lac Avenue
ELECTRICAL PARTIAL ROOF PLAN - AREA B

REVISIONS

DESIGNED BY	NJP
DRAWN BY	NJP
CHECKED BY	BMW
DATE 12/28/15	SCALE 3/16"=1'-0"
JOB NUMBER	PL120130100
SHEET NUMBER	E105
OF	

NEW MECHANICAL EQUIPMENT SCHEDULE

TAG	EQUIPMENT	LOCATION	LOAD					FED FROM	CIRCUIT BREAKER	CONDUIT & CONDUCTOR SIZE	DISCONNECT				COMBINATION STARTER		SINGLE PHASE PROTECTION	REMARKS
			PHASE	VOLTS	FLA	MCA	HP/kW				SIZE	FUSE	NEMA ENCLOSURE	FURNISHED BY (M / E)	SIZE	FURNISHED BY (M / E)	FURNISHED BY (M / E)	
AHU-1	AIR HANDLING UNIT	ROOF	3	208	-	116	-	MDP	150	(3) #3/0 AWG & (1) #6 GND IN 2" C	200A	-	3R	E	-	-	N/A	
AHU-2	AIR HANDLING UNIT	ROOF	3	208	-	63	-	MDP	80	(3) #3 AWG & (1) #8 GND IN 1-1/2" C	100A	-	3R	E	-	-	N/A	
ERV-1	ENERGY RECOVERY VENTILATOR	ROOF	3	208	-	33.8	-	1/MEP	45	(3) #6 AWG & (1) #10 GND IN 1-1/4" C	60A	-	3R	E	-	-	N/A	FIELD VERIFY POWER SOURCE
MAU-1	MAKEUP AIR UNIT	GARAGE	3	208	10.6	-	3	1/E	20	(3) #12 AWG & (1) #12 GND IN 3/4" C	30A	-	1	E	-	-	N/A	
VAV-1-1	VAV BOX	B8 STORAGE	3	208	6.94	-	2.5	1/MEP-1	15	(3) #12 AWG & (1) #12 GND IN 3/4" C	30A	-	1	E	-	-	N/A	
VAV-1-2	VAV BOX	FUTURE	3	208	--	-		1/MEP-1	--	--			--		-	-	N/A	
VAV-1-3	VAV BOX	B8 STORAGE	3	208	9.72	-	3.5	1/MEP-1	15	(3) #10 AWG & (1) #10 GND IN 3/4" C	30A	-	1	E	-	-	N/A	
VAV-1-4	VAV BOX	135 BOOKING	3	208	13.88	-	5	1/MEP-1	20	(3) #12 AWG & (1) #12 GND IN 3/4" C	30A	-	1	E	-	-	N/A	
VAV-1-5	VAV BOX	135 BOOKING	3	208	2.78	-	1	1/MEP-1	15	(3) #12 AWG & (1) #12 GND IN 3/4" C	30A	-	1	E	-	-	N/A	
VAV-1-6	VAV BOX	135 BOOKING	3	208	22.54	-	6.5	1/MEP-1	30	(3) #10 AWG & (1) #10 GND IN 3/4" C	30A	-	1	E	-	-	N/A	
VAV-1-7	VAV BOX	137 CORRIDOR	3	208	27.76	-	10	1/MEP-1	35	(3) #8 AWG & (1) #10 GND IN 1" C	60A	-	1	E	-	-	N/A	
VAV-1-8	VAV BOX	143 CORRIDOR	3	208	6.94	-	2.5	1/MEP-1	15	(3) #12 AWG & (1) #12 GND IN 3/4" C	30A	-	1	E	-	-	N/A	
VAV-1-9	VAV BOX	143 CORRIDOR	3	208	9.72	-	3.5	1/MEP-1	15	(3) #12 AWG & (1) #12 GND IN 3/4" C	30A	-	1	E	-	-	N/A	
VAV-1-10	VAV BOX	166	3	208	4.16	-	1.5	1/MEP-1	15	(3) #12 AWG & (1) #12 GND IN 3/4" C	30A	-	1	E	-	-	N/A	
VAV-1-11	VAV BOX	181 OFFICE	3	208	2.78	-	1	1/MEP-1	15	(3) #12 AWG & (1) #12 GND IN 3/4" C	30A	-	1	E	-	-	N/A	
VAV-1-12	VAV BOX	165 CORRIDOR	3	208	2.78	-	1	1/MEP-1	15	(3) #12 AWG & (1) #12 GND IN 3/4" C	30A	-	1	E	-	-	N/A	
VAV-1-13	VAV BOX	166 OFFICE	3	208	19.77	-	5.5	1/MEP-1	25	(3) #10 AWG & (1) #10 GND IN 3/4" C	30A	-	1	E	-	-	N/A	
VAV-1-14	VAV BOX	181 OFFICE	3	208	2.78	-	1	1/MEP-1	15	(3) #12 AWG & (1) #12 GND IN 3/4" C	30A	-	1	E	-	-	N/A	
VAV-1-15	VAV BOX	164 LT OFFICE	3	208	22.54	-	6.5	1/MEP-2	30	(3) #10 AWG & (1) #10 GND IN 3/4" C	30A	-	1	E	-	-	N/A	
VAV-1-16	VAV BOX	157 ASSEMBLY	3	208	42.58	-	13	1/MEP-2	60	(3) #4 AWG & (1) #10 GND IN 1-1/4" C	60A	-	1	E	-	-	N/A	
VAV-1-17	VAV BOX	157 ASSEMBLY	3	208	14.22	-	3.5	1/MEP-2	20	(3) #12 AWG & (1) #12 GND IN 3/4" C	30A	-	1	E	-	-	N/A	
VAV-1-18	VAV BOX	154 OFFICE	3	208	22.54	-	6.5	1/MEP-2	30	(3) #10 AWG & (1) #10 GND IN 3/4" C	30A	-	1	E	-	-	N/A	
HC-2-1	ELECTRIC DUCT HEATER	B-1 CORRIDOR	3	208	4.164	-	1.5	1/MEP-2	15	(3) #12 AWG & (1) #12 GND IN 3/4" C	30A	-	1	E	-	-	N/A	
HC-2-2	ELECTRIC DUCT HEATER	B-7 CORRIDOR	3	208	8.327	-	3	1/MEP-2	15	(3) #12 AWG & (1) #12 GND IN 3/4" C	30A	-	1	E	-	-	N/A	
HC-2-3	ELECTRIC DUCT HEATER	B-2 MECH ROOM	3	208	-	-	2.5	1/MEP-2	15	(3) #12 AWG & (1) #12 GND IN 3/4" C	30A	-	1	E	-	-	N/A	
HC-2-4	ELECTRIC DUCT HEATER	132 SHOWER	3	208	51.36	-	18.5	1/MEP-2	80	(3) #3 AWG & (1) #8 GND IN 1-1/2" C	100A	-	1	E	-	-	N/A	
HC-2-5	ELECTRIC DUCT HEATER	133 STORAGE	3	208	22.206	-	8	1/MEP-2	35	(3) #8 AWG & (1) #10 GND IN 1" C	60A	-	1	E	-	-	N/A	
HC-2-6	ELECTRIC DUCT HEATER	150 WOMEN'S LOCKER	3	208	8.327	-	3	1/MEP-2	15	(3) #12 AWG & (1) #12 GND IN 3/4" C	30A	-	1	E	-	-	N/A	
HC-2-7	ELECTRIC DUCT HEATER	152 MEN'S LOCKER	3	208	38.861	-	14	1/MEP-2	60	(3) #4 AWG & (1) #10 GND IN 1-1/4" C	60A	-	1	E	-	-	N/A	
EF-1	EXHAUST FAN	CAPTAIN'S RESTROOM	1	120	-	-	0.0525	B/M	15	(2) #12 AWG & (1) #12 GND IN 3/4" C	MOTOR RATED TOGGLE SWITCH - E				-	-	N/A	NEMA 3R ENCLOSURE
PRV-1	POWER ROOF VENTILATOR	ROOF	1	120	12.4	-	1	B/M	20	(2) #12 AWG & (1) #12 GND IN 3/4" C	MOTOR RATED TOGGLE SWITCH - E				-	-	N/A	NEMA 3R ENCLOSURE
PRV-3	POWER ROOF VENTILATOR	ROOF	1	120	3.4	-	1/6	B/M	15	(2) #12 AWG & (1) #12 GND IN 3/4" C	MOTOR RATED TOGGLE SWITCH - E				-	-	N/A	NEMA 3R ENCLOSURE

NOTES:
1
2
3

City of Milwaukee
Department of Public Works
Infrastructure Services Division
Bridges & Buildings Section

GRUMMAN /BUTKUS ASSOCIATES
Energy Efficiency Consultants and Sustainable Design Engineers
1011 North Mayfair Road, Suite 300
414 476.8980
Copyright © 2015 Grumman/Butkus Associates

7th District Police Station RTUs Replacement
3626 West Fond du Lac Avenue
MECHANICAL EQUIPMENT SCHEDULE

REVISIONS

DESIGNED BY NJP
DRAWN BY NJP
CHECKED BY BMW
DATE 12/28/15
SCALE NONE
JOB NUMBER PL120130100
SHEET NUMBER E501
OF

Demolition Work MDP

PROJECT: **7th District Police Station**

LOCATION: Electrical Room FED FROM:

CKT	PH	CIRCUIT DESCRIPTION	AMPS	POLE	LOAD DISTRIBUTION: REC	LTG 125%	EQPT 100%	EQPT 125%	MOTOR 100%	HTG 100%	CLG 125%	CONN LOAD kVA
1	A											
3	B	**ROOF AIR COND. SOUTH**	**125**	3								
5	C											
7	A											
9	B	TSM & PANEL MD/NC	225	3								
11	C											
13	A											
15	B	**ROOF TOP AIR TO AIR HEAT EXCHANGER**	**125**	3								
17	C											
19	A											
21	B											
23	C											
25	A											
27	B											
29	C											
31	A											
33	B											
35	C											
37	A											
39	B											
41	C											
2	A											
4	B	PANEL 1/H	150	3								
6	C											
8	A											
10	B	TSA & PANEL MDP/C	225	3								
12	C											
14	A											
16	B	**ROOF AIR COND. NORTH**	**100**	3								
18	C											
20	A											
22	B											
24	C											
26	A											
28	B											
30	C											
32	A											
34	B											
36	C											
38	A											
40	B											
42	C											

AMPERES:	600A
VOLTS:	208Y/120V
PHASE:	3
WIRE:	4
BUS TYPE:	CU
A.I.C.:	
PANEL MFR:	SQUARE D
PANEL TYPE:	I-LINE
MAIN LUGS ONLY:	YES
MAIN CKT BKR:	NO
FLUSH MTD:	NO
SURFACE MTD:	YES
GND BUS:	YES
ISOLATED GND:	NO
200% NEUTRAL:	NO
PANEL TOTAL CONN LOAD:	
RECEPTACLES:	
LIGHTING:	
EQUIP 100%	
EQUIP 125%	
MOTORS	
HEATING:	
COOLING:	
TOTAL:	
FEEDER TOTAL CONN LOAD	
RECEPTACLES:	
LIGHTING:	
EQUIP 100%	
EQUIP 125%	
MOTORS	
HEATING:	
COOLING:	
TOTAL:	
FEEDER DEMAND LOAD	

LARGEST MOTOR

REMARKS:

New Work MDP

PROJECT: **7th District Police Station**

LOCATION: Electrical Room FED FROM:

CKT	PH	CIRCUIT DESCRIPTION	AMPS	POLE	LOAD DISTRIBUTION: REC	LTG 125%	EQPT 100%	EQPT 125%	MOTOR 100%	HTG 100%	CLG 125%	CONN LOAD kVA
1	A						13.90					13.90
3	B	**AHU-1**	**150**	3			13.90					13.90
5	C						13.90					13.90
7	A											
9	B	TSM & PANEL MD/NC	225	3								
11	C											
13	A						45.54					45.54
15	B	**PANEL 1/MEP (SECTION 1)**	**400**	3			45.54					45.54
17	C						45.54					45.54
19	A											
21	B											
23	C											
25	A											
27	B											
29	C											
31	A											
33	B											
35	C											
37	A											
39	B											
41	C											
2	A											
4	B	PANEL 1/H	150	3								
6	C											
8	A											
10	B	TSA & PANEL MDP/C	225	3								
12	C											
14	A						7.56					7.56
16	B	**AHU-2**	**80**	3			7.56					7.56
18	C						7.56					7.56
20	A											
22	B											
24	C											
26	A											
28	B											
30	C											
32	A											
34	B											
36	C											
38	A											
40	B											
42	C											

AMPERES:	600A
VOLTS:	208Y/120V
PHASE:	3
WIRE:	4
BUS TYPE:	CU
A.I.C.:	
PANEL MFR:	SQUARE D
PANEL TYPE:	I-LINE
MAIN LUGS ONLY:	YES
MAIN CKT BKR:	NO
FLUSH MTD:	NO
SURFACE MTD:	YES
GND BUS:	YES
ISOLATED GND:	NO
200% NEUTRAL:	NO
PANEL TOTAL CONN LOAD:	
RECEPTACLES:	
LIGHTING:	
EQUIP 100%	201.0kVA
EQUIP 125%	
MOTORS	
HEATING:	
COOLING:	
TOTAL:	201.0kVA
FEEDER TOTAL CONN LOAD	
RECEPTACLES:	
LIGHTING:	
EQUIP 100%	201.0kVA
EQUIP 125%	
MOTORS	
HEATING:	
COOLING:	
TOTAL:	201.0kVA
FEEDER DEMAND LOAD	
	201.0kVA
	558A

LARGEST MOTOR

REMARKS:

City of Milwaukee

Department of Public Works
Infrastructure Services Division

Bridges & Buildings Section

GRUMMAN /BUTKUS ASSOCIATES

Energy Efficiency Consultants and Sustainable Design Engineers
1011 North Mayfair Road, Suite 300
414 476.8980
Copyright © 2015 Grumman/Butkus Associates

7th District Police Station RTUs Replacement
3626 West Fond du Lac Avenue
ELECTRICAL PANEL SCHEDULES

REVISIONS

DESIGNED BY: NJP

DRAWN BY: NJP

CHECKED BY: BMW

DATE: 12/28/15 SCALE: NONE

JOB NUMBER: PL120130100

SHEET NUMBER: E601

OF

Demolition Work Existing Panel B/M

PROJECT: **7th District Police Station**
LOCATION: Mechanical Room B2 FED FROM: MDP/C

CKT	PH	CIRCUIT DESCRIPTION	AMPS	POLE	REC	LTG 125%	EQPT 100%	EQPT 125%	MOTOR 100%	HTG 100%	CLG 125%	CONN LOAD kVA
1	A											
3	B	FURNANCE #1	35	3								
5	C											
7	A											
9	B	FURNANCE #2	20	3								
11	C											
13	A	INDUCED DRAFT FAN 1	20	1								
15	B	INDUCED DRAFT FAN 2	20	1								
17	C	GARAGE OVERHEAD DOOR WEST	20	1								
19	A	GARAGE OVERHEAD DOOR EAST	20	1								
21	B	TRANE CONTROLS	20	1								
23	C	UNLABELED (ON)	20	1								
25	A	SPACE		1								
27	B	SPACE		1								
29	C	SPACE		1								
31	A	SPACE		1								
33	B	SPACE		1								
35	C	SPACE		1								
37	A	SPACE		1								
39	B	SPACE		1								
41	C	SPACE		1								
2	A											
4	B	**PRV-1**	20	3								
6	C											
8	A	**CAP & LT. TOILET EXHAUST FAN**	20	1								
10	B	**PRV-3**	20	1								
12	C	SUMP PUMP 1	20	1								
14	A	SUMP PUMP 2	20	1								
16	B	SANITARY SUMP PUMP	20	1								
18	C	AIR TO AIR HEAT EXCHANGER	20	1								
20	A	BLK IN OCTANCE	20	1								
22	B	EE CO UNIT & EMERGENCY STOP	20	1								
24	C											
26	A	SUBMERSIBLE PUMP	20	3								
28	B											
30	C	**SPACE**		1								
32	A	SPACE		1								
34	B	SPACE		1								
36	C	SPACE		1								
38	A	SPACE		1								
40	B	SPACE		1								
42	C	SPACE		1								

AMPERES:	225A
VOLTS:	208Y/120V
PHASE:	3
WIRE:	4
BUS TYPE:	CU
A.I.C.:	
PANEL MFR:	SQUARE D
PANEL TYPE:	NQOB
MAIN LUGS ONLY:	YES
MAIN CKT BKR:	NO
FLUSH MTD:	NO
SURFACE MTD:	YES
GND BUS:	YES
ISOLATED GND:	NO
200% NEUTRAL:	NO

PANEL TOTAL CONN LOAD:
RECEPTACLES:
LIGHTING:
EQUIP 100%
EQUIP 125%
MOTORS
HEATING:
COOLING:
TOTAL:

FEEDER TOTAL CONN LOAD
RECEPTACLES:
LIGHTING:
EQUIP 100%
EQUIP 125%
MOTORS
HEATING:
COOLING:
TOTAL:

FEEDER DEMAND LOAD

LARGEST MOTOR

REMARKS:

New Work Existing Panel B/M

PROJECT: **7th District Police Station**
LOCATION: Mechanical Room B2 FED FROM: MDP/C

CKT	PH	CIRCUIT DESCRIPTION	AMPS	POLE	REC	LTG 125%	EQPT 100%	EQPT 125%	MOTOR 100%	HTG 100%	CLG 125%	CONN LOAD kVA
1	A											
3	B	FURNANCE #1	35	3								
5	C											
7	A											
9	B	FURNANCE #2	20	3								
11	C											
13	A	INDUCED DRAFT FAN 1	20	1								
15	B	INDUCED DRAFT FAN 2	20	1								
17	C	GARAGE OVERHEAD DOOR WEST	20	1								
19	A	GARAGE OVERHEAD DOOR EAST	20	1								
21	B	TRANE CONTROLS	20	1								
23	C	UNLABELED (ON)	20	1								
25	A	SPACE		1								
27	B	SPACE		1								
29	C	SPACE		1								
31	A	SPACE		1								
33	B	SPACE		1								
35	C	SPACE		1								
37	A	SPACE		1								
39	B	SPACE		1								
41	C	SPACE		1								
2	A											
4	B	**SPARE**	20	3								
6	C											
8	A	**EF-1 CAPTAINS RESTROOM**	20	1								
10	B	**PRV-3**	20	1								
12	C	SUMP PUMP 1	20	1								
14	A	SUMP PUMP 2	20	1								
16	B	SANITARY SUMP PUMP	20	1								
18	C	AIR TO AIR HEAT EXCHANGER	20	1								
20	A	BLK IN OCTANCE	20	1								
22	B	EE CO UNIT & EMERGENCY STOP	20	1								
24	C											
26	A	SUBMERSIBLE PUMP	20	3								
28	B											
30	C	**PRV-1**	**20**	1								
32	A	SPACE		1								
34	B	SPACE		1								
36	C	SPACE		1								
38	A	SPACE		1								
40	B	SPACE		1								
42	C	SPACE		1								

AMPERES:	225A
VOLTS:	208Y/120V
PHASE:	3
WIRE:	4
BUS TYPE:	CU
A.I.C.:	
PANEL MFR:	SQUARE D
PANEL TYPE:	NQOB
MAIN LUGS ONLY:	YES
MAIN CKT BKR:	NO
FLUSH MTD:	NO
SURFACE MTD:	YES
GND BUS:	YES
ISOLATED GND:	NO
200% NEUTRAL:	NO

PANEL TOTAL CONN LOAD:
RECEPTACLES:
LIGHTING:
EQUIP 100%
EQUIP 125%
MOTORS
HEATING:
COOLING:
TOTAL:

FEEDER TOTAL CONN LOAD
RECEPTACLES:
LIGHTING:
EQUIP 100%
EQUIP 125%
MOTORS
HEATING:
COOLING:
TOTAL:

FEEDER DEMAND LOAD

LARGEST MOTOR

REMARKS:

City of Milwaukee
Department of Public Works
Infrastructure Services Division
Bridges & Buildings Section

GRUMMAN /BUTKUS ASSOCIATES
Energy Efficiency Consultants and Sustainable Design Engineers
1011 North Mayfair Road, Suite 300
414 476.8980

Copyright © 2015 Grumman/Butkus Associates

7th District Police Station RTUs Replacement
3626 West Fond du Lac Avenue
ELECTRICAL PANEL SCHEDULES

REVISIONS

DESIGNED BY	NJP
DRAWN BY	NJP
CHECKED BY	BMW
DATE 12/28/15	SCALE NONE
JOB NUMBER	PL120130100
SHEET NUMBER	E602
OF	

New Panel 1/MEP (Section 1)

PROJECT: **7th District Police Station**

LOCATION: STORAGE ROOM 142 FED FROM: MDP

CKT	PH	CIRCUIT DESCRIPTION	AMPS	POLE	LOAD DISTRIBUTION REC	LTG 125%	EQPT 100%	EQPT 125%	MOTOR 100%	HTG 100%	CLG 125%	CONN LOAD KVA
1	A						0.83					0.83
3	B	VAV-1-1	15	3			0.83					0.83
5	C						0.83					0.83
7	A											
9	B	VAV-1-2 (FUTURE)		3								
11	C											
13	A						1.17					1.17
15	B	VAV-1-3	15	3			1.17					1.17
17	C						1.17					1.17
19	A						1.66					1.66
21	B	VAV-1-4	20	3			1.66					1.66
23	C						1.66					1.66
25	A						0.33					0.33
27	B	VAV-1-5	15	3			0.33					0.33
29	C						0.33					0.33
31	A						2.17					2.17
33	B	VAV-1-6	30	3			2.17					2.17
35	C						2.17					2.17
37	A						3.33					3.33
39	B	VAV-1-7	35	3			3.33					3.33
41	C						3.33					3.33
2	A						0.83					0.83
4	B	VAV-1-8	15	3			0.83					0.83
6	C						0.83					0.83
8	A						1.17					1.17
10	B	VAV-1-9	15	3			1.17					1.17
12	C						1.17					1.17
14	A						0.50					0.50
16	B	VAV-1-10	15	3			0.50					0.50
18	C						0.50					0.50
20	A						0.33					0.33
22	B	VAV-1-11	15	3			0.33					0.33
24	C						0.33					0.33
26	A						0.33					0.33
28	B	VAV-1-12	15	3			0.33					0.33
30	C						0.33					0.33
32	A						1.83					1.83
34	B	VAV-1-13	25	3			1.83					1.83
36	C						1.83					1.83
38	A						0.33					0.33
40	B	VAV-1-14	15	3			0.33					0.33
42	C						0.33					0.33

AMPERES:	400A
VOLTS:	208Y/120V
PHASE:	3
WIRE:	4
BUS TYPE:	CU
A.I.C.:	
PANEL MFR:	TBD
PANEL TYPE:	TBD
MAIN LUGS ONLY:	NO
MAIN CKT BKR:	YES
FLUSH MTD:	NO
SURFACE MTD:	YES
GND BUS:	YES
ISOLATED GND:	NO
200% NEUTRAL:	NO
PANEL TOTAL CONN LOAD:	
RECEPTACLES:	
LIGHTING:	
EQUIP 100%	44.4KVA
EQUIP 125%	
MOTORS	
HEATING:	
COOLING:	
TOTAL:	44.4KVA
FEEDER TOTAL CONN LOAD	
RECEPTACLES:	
LIGHTING:	
EQUIP 100%	44.4KVA
EQUIP 125%	
MOTORS	
HEATING:	
COOLING:	
TOTAL:	44.4KVA
FEEDER DEMAND LOAD	
44.4KVA	
123A	

LARGEST MOTOR

REMARKS:

New Panel 1/MEP (Section 2)

PROJECT: **7th District Police Station**

LOCATION: STORAGE ROOM 142 FED FROM: FEED-THRU FROM 1/MEP SECTION 1

CKT	PH	CIRCUIT DESCRIPTION	AMPS	POLE	LOAD DISTRIBUTION REC	LTG 125%	EQPT 100%	EQPT 125%	MOTOR 100%	HTG 100%	CLG 125%	CONN LOAD KVA
43	A						2.17					2.17
45	B	VAV-1-15	30	3			2.17					2.17
47	C						2.17					2.17
49	A						4.33					4.33
51	B	VAV-1-16	60	3			4.33					4.33
53	C						4.33					4.33
55	A						1.17					1.17
57	B	VAV-1-17	20	3			1.17					1.17
59	C						1.17					1.17
61	A						2.17					2.17
63	B	VAV-1-18	30	3			2.17					2.17
65	C						2.17					2.17
67	A						4.06					4.06
69	B	ERV-1	45	3			4.06					4.06
71	C						4.06					4.06
73	A											
75	B	SPACE		3								
77	C											
79	A											
81	B	SPACE		3								
83	C											
44	A						0.50					0.50
46	B	HC-2-1	15	3			0.50					0.50
48	C						0.50					0.50
50	A						1.00					1.00
52	B	HC-2-2	15	3			1.00					1.00
54	C						1.00					1.00
56	A						0.83					0.83
58	B	HC-2-3	15	3			0.83					0.83
60	C						0.83					0.83
62	A							6.17				6.17
64	B	HC-2-4	80	3				6.17				6.17
66	C							6.17				6.17
68	A						2.67					2.67
70	B	HC-2-5	35	3			2.67					2.67
72	C						2.67					2.67
74	A						1.00					1.00
76	B	HC-2-6	15	3			1.00					1.00
78	C						1.00					1.00
80	A						4.67					4.67
82	B	HC-2-7	60	3			4.67					4.67
84	C						4.67					4.67

AMPERES:	400A
VOLTS:	208Y/120V
PHASE:	3
WIRE:	4
BUS TYPE:	CU
A.I.C.:	
PANEL MFR:	TBD
PANEL TYPE:	TBD
MAIN LUGS ONLY:	YES
MAIN CKT BKR:	NO
FLUSH MTD:	NO
SURFACE MTD:	YES
GND BUS:	YES
ISOLATED GND:	NO
200% NEUTRAL:	NO
PANEL TOTAL CONN LOAD:	
RECEPTACLES:	
LIGHTING:	
EQUIP 100%	73.7KVA
EQUIP 125%	18.5KVA
MOTORS	
HEATING:	
COOLING:	
TOTAL:	92.2KVA
FEEDER TOTAL CONN LOAD	
RECEPTACLES:	
LIGHTING:	
EQUIP 100%	73.7KVA
EQUIP 125%	18.5KVA
MOTORS	
HEATING:	
COOLING:	
TOTAL:	92.2KVA
FEEDER DEMAND LOAD	
96.8KVA	
269A	

LARGEST MOTOR

REMARKS:

City of Milwaukee
Department of Public Works
Infrastructure Services Division
Bridges & Buildings Section

GRUMMAN /BUTKUS ASSOCIATES
Energy Efficiency Consultants and Sustainable Design Engineers
1011 North Mayfair Road, Suite 300
414.476.8980

Copyright © 2015 Grumman/Butkus Associates

7th District Police Station RTUs Replacement
3626 West Fond du Lac Avenue
ELECTRICAL PANEL SCHEDULES

REVISIONS

DESIGNED BY: NJP
DRAWN BY: NJP
CHECKED BY: BMW
DATE: 12/28/15
SCALE: NONE
JOB NUMBER: PL120130100
SHEET NUMBER: E603
OF

SHEET NOTES

1. EXISTING ELECTRICAL EQUIPMENT SIZES AND RATINGS ARE BASED ON COM-MPD RECORD DRAWING DOCUMENTATION AND ENGINEER'S SITE WALK-DOWN OBSERVATIONS. EC SHALL FIELD VERIFY INDICATED EXISTING FEEDER CIRCUIT BREAKER RATINGS, LOCATIONS AND OPERATION WITHIN EXISTING SWITCHBOARD/PANELBOARD PRIOR TO COMMENCING DEMOLITION WORK.
2. ALL NEW WORK SHALL BE INSTALLED PRIOR TO DEMOLITION OR CUT-OVER OF EXISTING BRANCH CIRCUITS TO NEW POWER SOURCES AS INDICATED IN ONE-LINE DIAGRAM - NEW WORK.
3. THE ELECTRICAL WORK ASSOCIATED WITH THIS PROJECT WILL INTERRUPT POWER TO SELECT DEPARTMENTS ON THE BASEMENT AND FIRST FLOOR, DUE TO RELOCATION OF EXISTING EQUIPMENT WITHIN THE WORK AREAS. EC SHALL SCHEDULE AND COORDINATE ALL POWER INTERRUPTIONS WITH CITY OF MILWAUKEE OPERATIONS AND MAINTENANCE STAFF PRIOR TO COMMENCING ANY SUBJECT WORK ACTIVITIES.
4. EC SHALL COORDINATE ALL DEMOLITION WORK WITH OTHER TRADES TO AVOID CONFLICT WITH EXISTING EQUIPMENT OPERATION AND/OR MPD OPERATIONS.
5. IT IS THE EC RESPONSIBILITY TO FIELD VERIFY ALL EXISTING EQUIPMENT SIZE, RATINGS AND PHYSICAL CONDITIONS PRIOR TO BIDDING THE WORK. COORDINATE WITH COM-MPD MAINTENANCE STAFF FOR SCHEDULING SITE VISITS.

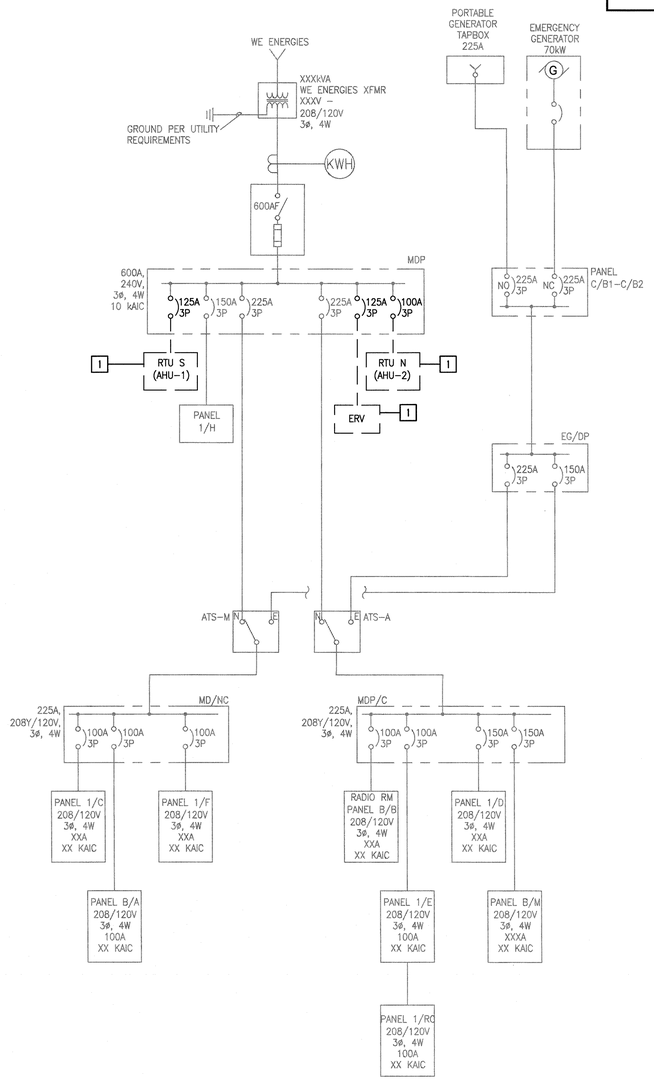

1 ELECTRICAL ONE-LINE DIAGRAM - DEMOLITION WORK

SCALE: NTS

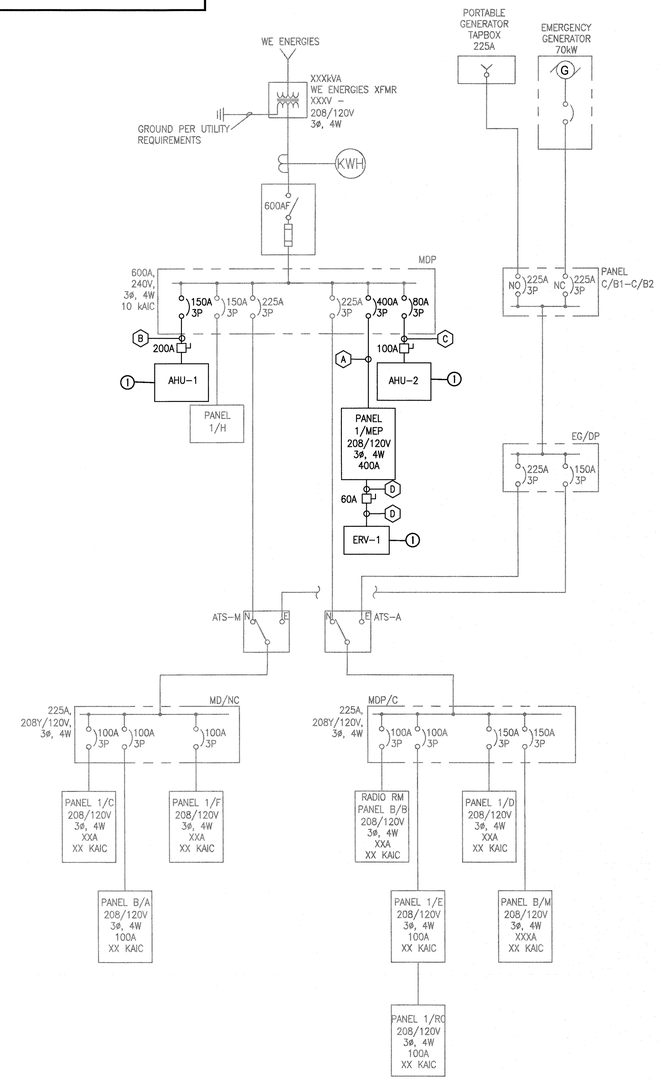

2 ELECTRICAL ONE-LINE DIAGRAM - NEW WORK

SCALE: NTS

CIRCUIT & RACEWAY SCHEDULE
A 3"C, (4)500 KCMIL, (1)#2 GND
B 2"C, (3)#3/0, (1)#6 GND
C 1-1/4"C, (3)#1, (1)#6 GND
D 1"C, (3)#6, (1)#10 GND

KEYED NOTES:(DEMOLITION WORK)

1. DISCONNECT AND REMOVE EXITING ROOF TOP (AHU) AND ENERGY RECOVERY VENTILATION UNITS. DEMOLISH ALL BRANCH POWER CIRCUITS, RACEWAYS AND CONDUCTORS BACK TO THEIR SOURCE. COORDINATE ALL EQUIPMENT SHUT-DOWNS WITH COM/MPD AND MECHANICAL CONTRACTOR PRIOR TO COMMENCEMENT.

KEYED NOTES:(NEW WORK)

1. INSTALL NEW BRANCH POWER FEEDER(S) TO SERVE NEW ROOF TOP (AHU) AND ENERGY RECOVERY VENTILATION (ERV) UNITS. SEE SHEETS E106 AND E107 FOR EQUIPMENT LOCATION(S) ON ROOF LEVEL. COORDINATE WITH COM/MPD AND MC FOR SCHEDULED EQUIPMENT INSTALLATION SEQUENCE OF CONSTRUCTION.

City of Milwaukee
Department of Public Works
Infrastructure Services Division
Bridges & Buildings Section

GRUMMAN /BUTKUS ASSOCIATES
Energy Efficiency Consultants and Sustainable Design Engineers
1011 North Mayfair Road, Suite 300
414 476.8980

Copyright © 2015 Grumman/Butkus Associates

7th District Police Station RTUs Replacement
3626 West Fond du Lac Avenue
ELECTRICAL ONE-LINE DIAGRAM

REVISIONS

DESIGNED BY	NJP
DRAWN BY	NJP
CHECKED BY	BMW
DATE 12/28/15	SCALE NONE
JOB NUMBER	PL120130100
SHEET NUMBER	E701
OF	