COMPRESSED NATURAL GAS
LINCOLN GARAGE
MILWAUKEE, WISCONSIN
SEPTEMBER 2013

N

10 - LINCOLN GARAGE MODIFICATIONS
3921 W. LINCOLN AVENUE
MILWAUKEE, WI 53215

DRAWING NO.	TITLE
	01 - GENERAL - LINCOLN GARAGE MODIFICATIONS
01-G-01	COVER SHEET, SITE LOCATION, AND DRAWING INDEX
01-G-02	ARCHITECTURAL AND STRUCTURAL LEGEND
01-G-03	ELECTRICAL ABBREVIATIONS AND PLAN SYMBOLS
01-G-04	ELECTRICAL ONE LINE AND SCHEMATIC SYMBOLS
	10 - LINCOLN GARAGE MODIFICATIONS
	ARCHITECTURAL AND STRUCTURAL
10-AS-01	OVERALL BUILDING PLAN & BUILDING CODE COMPLIANCE SUMMARY
10-AS-02	REMOVAL PLAN
10-AS-03	FLOOR PLAN
10-AS-04	ROOF PLAN
10-AS-05	BUILDING SECTIONS AND DETAILS
10-AS-06	SCHEDULES AND DETAILS
10-AS-07	FRAMING ELEVATION AND DETAILS
10-AS-08	STRUCTURAL DETAILS
10-AS-09	STRUCTURAL DETAILS
10-AS-10	STRUCTURAL DETAILS
	PLUMBING
10-P-01	COVER SHEET
10-P-02	FLOOR PLAN DEMOLITION
10-P-03	FLOOR PLAN
10-P-04	DETAILS
	HVAC
10-H-01	COVER SHEET
10-H-02	FLOOR PLAN DEMOLITION
10-H-03	ROOF PLAN DEMOLITION
10-H-04	FLOOR PLAN
10-H-05	ROOF PLAN
10-H-06	DETAILS
10-H-07	SCHEDULES
	ELECTRICAL
10-E-01	LIGHTING AND RECEPTACLES PLAN
10-E-02	POWER AND SYSTEMS PLAN
10-E-03	ONE-LINE DIAGRAMS
10-E-04	SCHEDULES AND DETAILS

AECOM

01-G-01 THRU 01-G-04
10-AS-01 THRU 10-AS-10
10-E-01 THRU 10-E-04

WISCONSIN KARL E. HOKANSON A-3360 Port Washington, Wis.

PSJ

10-P-01 THRU 10-P-04
10-H-01 THRU 10-H-07

WISCONSIN E-23701 MILWAUKEE PAUL R. BROWN PROFESSIONAL ENGINEER

PSJ ENGINEERING, INC.
CONSULTING ENGINEERS
7665 N. PORT WASHINGTON RD.
MILWAUKEE, WI 53217
PH:(414)352-7711
FAX:(414)351-8823

AECOM
4135 TECHNOLOGY PARKWAY
SHEBOYGAN, WI 53083-1883
T 920.458.8711 F 920.458.0537
WWW.AECOM.COM

City of Milwaukee
Department of Public Works
Infrastructure Services Division
Facilities Development & Management Section

APPROVED
SUPERVISOR IN CHARGE 10-29-13
CITY ENGINEER 10/31/13
COMMISSIONER OF PUBLIC WORKS 10/31/13

DRN	SDR	2013
DES	KEH	2013
CHK	JMK	2013
APP	RLW	2013

LINCOLN GARAGE MODIFICATIONS
VEHICLE SERVICE BAYS
LINCOLN AVENUE GARAGE
3291 WEST LINCOLN AVENUE
MILWAUKEE, WISCONSIN

COVER SHEET, SITE LOCATION, AND DRAWING INDEX

DATE 2013
CITY PROJECT # BU110030326
ENGINEER PROJECT # 60303317
FILENAME 01-G-01.dwg
SHEET NO
DRAWING NO **01-G-01**

Xref's: P:\60303317\900-Workingfocus-CAD\AEF2234signbd.dwg
Images: L:\work\60198094\000_CADD\00-General & 99-Standard Details\Lincoln Avenue.bmp
L:\work\60198094\000_CADD\00-General & 99-Standard Details\Signature.tif
Filename: P:\60303317\900-Workingfocus-CAD\AEF2234signbd.dwg
Layout: Sheet1 Layout: LAYOUT1
Plotted By: Johstm
Plot File Date Created: Oct/17/2013 5:40 AM

GENERAL LEGEND

DISCIPLINE IDENTIFIER

DISCIPLINE	DISCIPLINE IDENTIFIER	DISCIPLINE STANDARD DETAIL NUMBERS
GENERAL	G	NONE
CIVIL	C	02–000 TO 02–999
ARCHITECTURAL	A	07–000 TO 07–999
STRUCTURAL	S	08–000 TO 08–999
PROCESS–MECHANICAL	M	06–000 TO 06–499
INSTRUMENTATION & CONTROL	N	06–500 TO 06–999
PLUMBING	P	09–400 TO 09–499
HVAC	H	09–000 TO 09–399 & 09–500 TO 09–999
ELECTRICAL	E	10–000 TO 10–999
REMOVALS	R	NONE

DRAWING NUMBER DESIGNATION

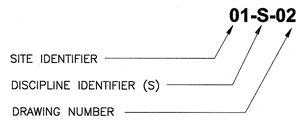

SECTION DESIGNATION

SECTION DESIGNATIONS USE LETTERS

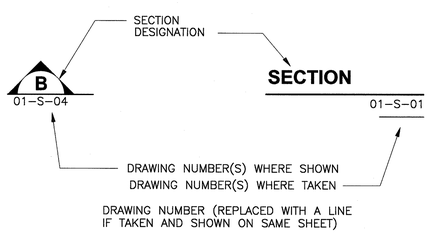

PLAN NOTE DESIGNATION

1 PLAN NOTE, SEE LIST ON SAME DRAWING

DETAIL DESIGNATION

DETAIL DESIGNATIONS USE NUMBERS

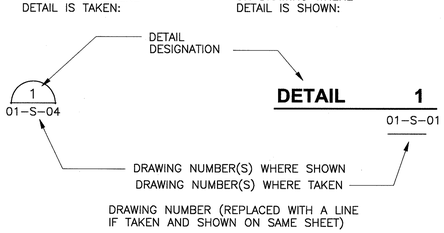

REMOVAL NOTE DESIGNATION

1 REMOVAL NOTE, SEE LIST ON SAME DRAWING

STANDARD DETAIL DESIGNATION

ARCHITECTURAL AND STRUCTURAL LEGEND

ABBREVIATIONS

ADDL	ADDITIONAL
AL	ALUMINUM
ALT	ALTERNATE
B/	BOTTOM OF
BLDG	BUILDING
BLK	BLOCK
BOT	BOTTOM
℄	CENTERLINE
CLR	CLEAR
COL	COLUMN
CONTR JT	CONTRACTION JOINT
CJT	CONTROL JOINT
CMU	CONCRETE MASONRY UNIT
CONT	CONTINUOUS
CONC	CONCRETE
DBL	DOUBLE
DIA	DIAMETER
DN	DOWN
DWG	DRAWING
EA	EACH
EXT	EXTERIOR
EQUIP	EQUIPMENT
EWC	ELECTRIC WATER COOLER
EXP	EXPANSION
EL	ELEVATION
EXP JT	EXPANSION JOINT
EW	EACH WAY
EF	EACH FACE
FE	FIRE EXTINGUISHER
FTG	FOOTING
FD	FLOOR DRAIN
GA	GAUGE
GALV	GALVANIZED
GHM	GALVANIZED HOLLOW METAL
HORZ	HORIZONTAL
HP	HIGH POINT
HVAC	HEATING VENTILATING AND AIR CONDITIONING
INSUL	INSULATION
INT	INTERIOR
LP	LOW POINT
LLV	LONG LEG VERTICAL
LLH	LONG LEG HORIZONTAL
MFR	MANUFACTURER
MH	MANHOLE
MIN	MINIMUM
MO	MASONRY OPENING
NO. OR #	NUMBER
NTS	NOT TO SCALE
OC	ON CENTER
OPNG	OPENING
ℙ	PLATE
PJF	PREFORMED JOINT FILLER
REINF	REINFORCING
RAD	RADIUS
RCP	REINFORCED CONCRETE PIPE
REQD	REQUIRED
R	RISER
RD	ROOF DRAIN
SIM	SIMILAR
SPA	SPACE OR SPACING
SS	STAINLESS STEEL
STC	SOUND TRANSMISSION CLASS
STL	STEEL
SQ	SQUARE
T	TREAD
T/	TOP OF
T/S	TOP OF STEEL
T&B	TOP AND BOTTOM
TYP	TYPICAL
UNO	UNLESS NOTED OTHERWISE
VERT	VERTICAL
WD	WOOD
WS	WATERSTOP
W/	WITH
WWR	WELDED WIRE REINFORCEMENT

NOTE:
1. THIS IS A STANDARD LEGEND. NOT ALL THE INFORMATION SHOWN ON THIS LEGEND IS USED ON THIS PROJECT.

SYMBOLS

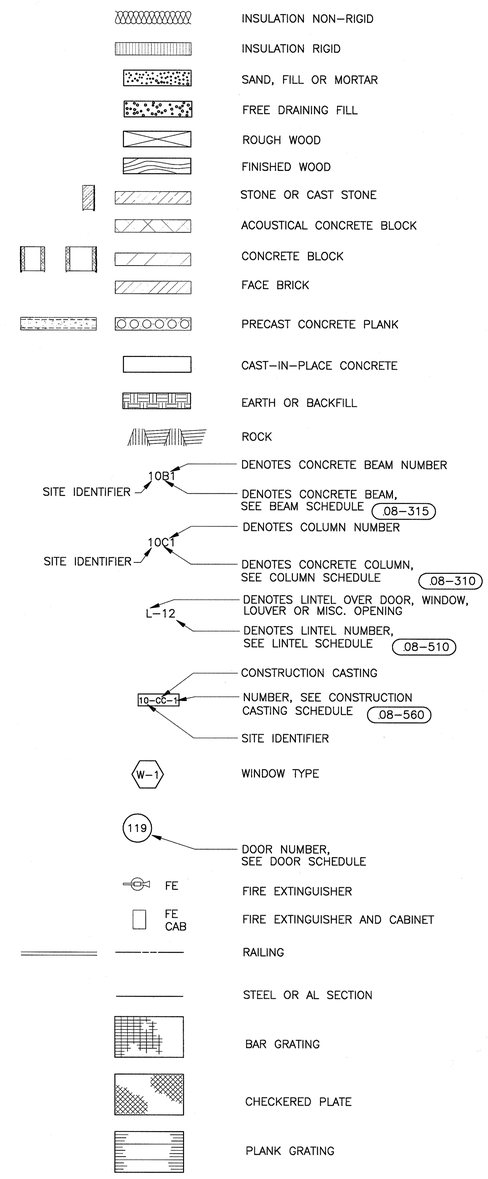

AECOM
4135 TECHNOLOGY PARKWAY
SHEBOYGAN, WI 53083-1983
T 920.458.8711 F 920.458.0537
WWW.AECOM.COM

City of Milwaukee
Department of Public Works
Infrastructure Services Division
Facilities Development & Management Section

NO	REVISIONS	DRN	CHK	DATE

DRN	SDR	2013
DES	KEH	2013
CHK	JMK	2013
APP	RLW	2013

LINCOLN GARAGE MODIFICATIONS
VEHICLE SERVICE BAYS
LINCOLN AVENUE GARAGE
3291 WEST LINCOLN AVENUE
MILWAUKEE, WISCONSIN

ARCHITECTURAL AND STRUCTURAL LEGEND

DATE 2013
CITY PROJECT # BU110030326
ENGINEER PROJECT # 60303317
FILENAME 01–G–02.dwg
SHEET NO
DRAWING NO **01-G-02**

Xrefs: P:\60303317\900-WorkingDocs-CAD\AE22346d.dwg
Images:
Plotted By: reimess
Plot File Date Created: Aug/30/2013 9:20 AM
Layout-Sheet Name: LAYOUT1
Filename: P:\60303317\900-WORKINGDOCS-CAD\10-LINCOLN GARAGE MODIFICATIONS\01-G-02.DWG

ABBREVIATIONS

1P – ONE POLE
2P – TWO POLE
3P – THREE POLE
4P – FOUR POLE
1P1W – ONE POLE, ONE WIRE
1P2W – ONE POLE, TWO WIRE
2P2W – TWO POLE, TWO WIRE
2P3W – TWO POLE, THREE WIRE
3P2W – THREE POLE, TWO WIRE
3P3W – THREE POLE, THREE WIRE
3P4W – THREE POLE, FOUR WIRE
4P4W – FOUR POLE, FOUR WIRE
A – AMPERE
AC – ALTERNATING CURRENT
AF – AMP FRAME
AFF – ABOVE FINISHED FLOOR
AFG – ABOVE FINISHED GRADE
AIC – AMPERE INTERRUPTING CAPACITY
AL – ALUMINUM
AS – AMP SWITCH
AT – AMP TRIP
ARCH – ARCHITECT
ATS – AUTOMATIC TRANSFER SWITCH
AUD – AUDIOMETER BOX CONNECTION
A/V – AUDIO VISUAL
BFG – BELOW FINISHED GRADE
BLDG – BUILDING
BP – BRANCH PANEL
C – CONDUIT (GENERIC TERM FOR RACEWAY. PROVIDE AS SPECIFIED.)
CAM – CAMERA
CAT – CATALOG
CATV – CABLE TELEVISION
CB – CIRCUIT BREAKER
CKT – CIRCUIT
COL – COLUMN
CP – CONTROL PANEL
CPT – CONTROL POWER TRANSFORMER
CT – CURRENT TRANSFORMER
CU – COPPER
℄ – CENTERLINE
Δ – DELTA
DC – DIRECT CURRENT
DISC – DISCONNECT
DP – DISTRIBUTION PANELBOARD
DT – DUSTTIGHT
DWG – DRAWING
E – WIRED ON EMERGENCY CIRCUIT
EC – ELECTRICAL CONTRACTOR
EMT – ELECTRIC METALLIC TUBING
EOL – END OF LINE
EP – EXPLOSION PROOF
ETM – ELAPSED TIME METER
EWC – ELECTRIC WATER COOLER
EXIST. – EXISTING
F – FLUSH
FA – FIRE ALARM
FBO – FURNISHED BY OTHERS
FC – FIRE PROTECTION CONTRACTOR
FDN – FOUNDATION
FLA – FULL LOAD AMPS
FMC – FLEXIBLE METALLIC CONDUIT
FRE – FIBERGLASS REINFORCED EPOXY CONDUIT
GC – GENERAL CONTRACTOR
GFCI – GROUND FAULT CIRCUIT INTERRUPTER
GFPE – GROUND FAULT PROTECTION EQUIPMENT
GND – GROUNDED
GRC – GALVANIZED RIGID CONDUIT
GRD – GROUND
GRS – GALVANIZED RIGID STEEL
HH – HANDHOLE
HID – HIGH INTENSITY DISCHARGE
HP – HORSEPOWER
HV – HIGH VOLTAGE
HVAC – HEATING, VENTILATING AND AIR CONDITIONING
HZ – HERTZ (CYCLE) PER SECOND
I&C – INSTRUMENTATION & CONTROL
IAM – INDIVIDUAL ADDRESSABLE MODULE
IG – ISOLATED GROUND
IMC – INTERMEDIATE METAL CONDUIT
JB – JUNCTION BOX
KCMIL – THOUSAND CIRCULAR MILS
K/O – KNOCK–OUT
KVA – KILOVOLT AMPERE
KVAR – KILOVOLT AMPERE REACTIVE
KW – KILOWATT
LCP – LOCAL CONTROL PANEL
LFMC – LIQUIDTIGHT FLEXIBLE METALLIC CONDUIT
LFNC – LIQUIDTIGHT FLEXIBLE NONMETALLIC CONDUIT
LP – LIGHTING PANELBOARD
LS – LIMIT SWITCH
LTG – LIGHTING
LV – LOW VOLTAGE
M – METER
MC – METAL CLAD CABLE
MCB – MAIN CIRCUIT BREAKER
MCC – MOTOR CONTROL CENTER
MDP – MAIN DISTRIBUTION PANEL
MH – MANHOLE
MISC – MISCELLANEOUS
MLO – MAIN LUGS ONLY
MOD – MOTOR OPERATED DISCONNECT SWITCH
MTD – MOUNTED
MTG – MOUNTING
MTR, M – MOTOR
MTS – MANUAL TRANSFER SWITCH
N/A – NOT APPLICABLE
NA – NON–AUTOMATIC
NC – NORMALLY CLOSED
NEC – NATIONAL ELECTRICAL CODE
NEUT, N – NEUTRAL
NF – NON FUSED
NIC – NOT IN CONTRACT
NL – NIGHT LIGHT
NM – NONMETALLIC SHEATHED CABLE
NO – NORMALLY OPEN
NRTL – NATIONALLY RECOGNIZED TESTING LAB
– NUMBER
NTS – NOT TO SCALE
OL – OVERLOAD RELAY
P – POLE
PB – PUSHBUTTON / PULL BOX
PC – PHOTOCELL
PSC – PLUMBING SYSTEM CONTRACTOR
PH ϕ – PHASE
PNL – PANEL(BOARD)
PIV – POST INDICATING VALVE
PP – POWER PANEL
PR – PAIR
PRI – PRIMARY
PT – POTENTIAL TRANSFORMER
PVC – POLYVINYL CHLORIDE CONDUIT
PWR – POWER
REC – RECESSED
RMC – RIGID METAL CONDUIT
RT – RAINTIGHT
RTD – RESISTANCE TEMPERATURE DETECTOR
RSC – RIGID STEEL CONDUIT
S – SURFACE MOUNTED
SB – SPLICEBOX
SEC – SECONDARY
SEL – SELECTOR SWITCH
SIG – SIGNAL
SN – SOLID NEUTRAL
SOL – SOLENOID VALVE
SP – SPARE
SPL – SPLICE
SS – STAINLESS STEEL
STP – SHIELDED TWISTED PAIR
STL – CARBON STEEL
SUSP – SUSPENDED
SW – SWITCH
SWBD – SWITCHBOARD
TC – TELEPHONE CABINET
TCI – TELECOMMUNICATIONS CABLING INSTALLER
TEL/DATA – TELEPHONE / DATA
TEL – TELEPHONE
TERM – TERMINAL(S)
TYP – TYPICAL
UG – UNDERGROUND
U.O.I. – UNLESS OTHERWISE INDICATED
UTP – UNSHIELDED TWISTED PAIR
V – VOLT
VFD – VARIABLE FREQUENCY DRIVE
VT – VAPORTIGHT
Y – WYE
W – WATT
WH – WATTHOUR
WP – WEATHERPROOF
WT – WATERTIGHT
XFMR – TRANSFORMER
XP – EXPLOSION PROOF
ZAM – ZONE ADAPTER MODULE
+72 – MOUNTING UNITS TO CENTERLINE ABOVE FINISHED FLOOR OR GRADE

RECEPTACLES AND OUTLETS NOTATIONS

a – SWITCHED OUTLET, a INDICATES SWITCH CONTROL
B – PEDESTAL MOUNTED ON BENCH TOP
BF – BELOW FLOOR
C – MOUNTED 6" ABOVE COUNTER OR 42" AFF COORDINATE EXACT MOUNTING HEIGHT WITH ARCHITECTURAL DRAWINGS.
CLG – CEILING MOUNTED
D – DEDICATED DEVICE ON INDIVIDUAL BRANCH CIRCUIT
E – EMERGENCY
EXIST. – EXISTING DEVICE / EQUIPMENT
F – FLUSH FLOOR BOX WITH FIRE / SMOKE RATED PENETRATION
GFCI – GROUND FAULT CIRCUIT INTERUPTER, PERSONAL PROTECTION
GFPE – GROUND FAULT PROTECTION OF EQUIPMENT
H – HORIZONTALLY MOUNTED
IG – ISOLATED GROUND RECEPTACLE WITH SEPARATE GREEN GROUND CONDUCTOR TO ISOLATED GROUND BUS IN PANEL
M – MODULAR FURNITURE SERVICE – PROVIDE FLEXIBLE CONNECTION, COORDINATE EXACT LOCATION WITH FURNITURE PLANS
PED – PEDESTAL MOUNTED WITH TWO HOUR FIRE / SMOKE RATED PENETRATION
PT – POKE THRU WITH TWO HOUR FIRE / SMOKE RATED PENETRATION
S – SURFACE MOUNTED FLOOR BOX
SP – SURGE PROTECTION RECEPTACLE
T – TAMPER RESISTANT SAFETY RECEPTACLE
TL – TWIST–LOCK
W – WALL MOUNTED DEVICE AT 48" AFF UNLESS OTHERWISE INDICATED
WP – WEATHERPROOF RECEPTACLE WITH "NRTL" LISTED COVERPLATE FOR WET LOCATION WITH PLUG INSTALLED. MTD. 48" AFF UNLESS OTHERWISE INDICATED
+XX – DIMENSIONED HEIGHT

LIGHTING SYMBOLS

SURFACE MOUNTED FIXTURE (LETTER DENOTES TYPE)
SUSPENDED FIXTURE (LETTER DENOTES TYPE)
WALL MOUNTED FIXTURE (LETTER DENOTES TYPE)
POLE MOUNTED FIXTURE (LETTER DENOTES TYPE)
EMERGENCY BACKUP FIXTURE (LETTER DENOTES TYPE)
DUAL HEAD EMERGENCY BATTERY LIGHT
RECESSED FIXTURE (LETTER DENOTES TYPE)
EMERGENCY BATTERY REMOTE LIGHTING HEADS
EXIT LIGHT WITH INDICATING DIRECTIONAL ARROW

DEVICE SYMBOLS

OCCUPANCY SENSOR, WALL MOUNTED WITH OFF–AUTO OVERRIDE SWITCH
SINGLE GROUNDED RECEPTACLE – 120V
DUPLEX GROUNDED RECEPTACLE – 120V
DUPLEX GROUNDED RECEPTACLE – 120V MOUNTED 6" ABOVE COUNTER
SINGLE GROUNDED RECEPTACLE – 208V NEMA 6–20R OR NEMA 6–30R
SPECIAL PURPOSE RECEPTACLE, NEMA TYPE AND AMPERE RATING AS INDICATED
JUNCTION BOX
SINGLE POLE SWITCH
TWO POLE SWITCH
3–WAY SWITCH
4–WAY SWITCH

MOTOR SYMBOLS

MANUAL STARTER WITH PILOT LIGHT
SINGLE PHASE MAGNETIC STARTER
COMBINATION MAGNETIC STARTER AND DISCONNECT SWITCH
NON–FUSED DISCONNECT SWITCH (NUMERAL INDICATES SWITCH RATING)
MOTOR
DAMPER MOTOR
CONNECTION TO EQUIPMENT
MOTOR STARTER SWITCH
TOGGLE DISCONNECT SWITCH
RELAY
MAGNETIC CONTACTOR (SIZE AS INDICATED ON DRAWINGS)
THREE PHASE MAGNETIC STARTER
THREE PHASE COMBINATION MAGNETIC STARTER AND DISCONNECT SWITCH
FUSED DISCONNECT SWITCH – 3 POLE UNLESS OTHERWISE INDICATED (UPPER NUMERAL INDICATES SWITCH RATING) (LOWER NUMERAL INDICATES FUSE RATING)
PHOTO CELL
PUSH BUTTON
TIME SWITCH
THERMAL MOTOR SWITCH WITH HANDLE GUARD AND PADLOCK CAPABILITY ("P" INDICATES PILOT LIGHT)
VARIABLE FREQUENCY DRIVE

SYSTEM SYMBOLS

SECURITY

CCTV CAMERA (WP – WEATHERPROOF EXTERIOR CAMERA)
ELECTRIC DOOR STRIKE (DR – ELECTRIC DOOR OPENER) (DS – DOOR SWITCH) (DC – SECURITY DOOR CONTACTS)
SECURITY KEYPAD (ML – SECURITY DOOR ALARM MAGNETIC LOCK)
LOUD RINGER
CCTV COAXIAL CABLE OUTLET AND POWER OUTLET (MTV – CCTV MONITOR OULET) (SCP – SECURITY CONTROL PANEL)
MOTION DETECTOR
MASTER INTERCOM AND DIRECTORY UNIT (IC – INTERCOM UNIT)
SECURITY CARD READER (WP – WEATHERPROOF)

FIRE

FIRE ALARM CONTROL PANEL (FAA INDICATES ANNUNCIATOR PANEL) (EVAC INDICATES VOICE EVACUATION PANEL)
HORN AND STROBE (INDOOR)
HORN AND STROBE (OUTDOOR)
BELL AND STROBE
SMOKE DETECTOR
SMOKE DETECTOR (D – DUCT) (A – AREA TYPE USED AT DUCT WORK OPENING) (E – ELEVATOR RECALL) (SC – SELF CONTAINED–SINGLE STATION TYPE) (V – VISUAL AND AUDIBLE SIGNAL)
BEAM SMOKE DETECTOR (R – RECEIVER) (S – SENDING UNIT)
REMOTE STATION FOR DUCT MOUNTED SMOKE DETECTORS
HORN UNIT ONLY (S – STROBE UNIT ONLY)
CARBON MONOXIDE DETECTOR
FLAME DETECTOR
AUTOMATIC HEAT DETECTOR (RATE OF RISE) (F – FIXED TEMPERATURE)
MANUAL PULL STATION
TAMPER SWITCH (FS – WATER FLOW SWITCH) (PS – LOW PRESSURE SWITCH)
METHANE GAS TRANSMITTER @ 54"
METHANE GAS DETECTOR
IONIZATION DETECTOR

COMMUNICATIONS

DATA OUTLET
TELEPHONE/DATA OUTLET
VOLUME CONTROL
MASTER INTERCOM AND DIRECTORY UNIT (IC – INTERCOM UNIT)
TELEPHONE OUTLET (W – WALL MOUNTED)
SPEAKER HORN
SPEAKER
TERMINAL CABINET

SITE SYMBOLS

HANDHOLE
DIRECT BURIAL CABLE
MANHOLE
UNDERGROUND ELECTRICAL DUCT

POWER SYMBOLS

POWER PANEL
MCC SECTION
GENERATOR
METER
METER AND SOCKET (P – PEDESTAL MOUNT) (S – SURFACE MOUNT)
LIGHTING PANEL
TRANSFORMER ("W" – WALL MOUNT)
TRANSFER SWITCH ("MTS" – MANUAL TRANSFER SWITCH) ("ATS" – AUTOMATIC TRANSFER SWITCH)

RACEWAY SYMBOLS

CONDUIT TURNING DOWN OR AWAY FROM OBSERVER
CONDUIT STUB
HOMERUN CIRCUIT OR CONDUCTORS
CONDUIT TURNING UP OR TO OBSERVER
FLEXIBLE CONDUIT CONNECTION

GROUNDING SYMBOLS

MAIN GROUND LOOP (SIZE PER DRAWING)
GROUND TAP (SIZE PER DRAWING)
CADWELD GROUND CONNECTION
GROUND ROD
GROUND TEST STATION
EQUIPMENT GROUND CABLE STUB–UP

MOTOR CONTROL CENTER

BUILDING NO. — 10MCC–1
MCC NO.

PANEL BOARDS

10LP1–4
BUILDING NO.
LIGHTING OR POWER PANEL AS INDICATED
PANEL NO.
CIRCUIT NO.

NOTE:

1. THIS LIST OF ABBREVIATIONS AND SYMBOLS SHOWN IS A STANDARD LIST. NOT ALL ABBREVIATIONS AND SYMBOLS ARE USED IN THESE CONTRACT DRAWINGS.

AECOM
4135 TECHNOLOGY PARKWAY
SHEBOYGAN, WI 53083-1883
T 920.458.8711 F 920.458.0537
WWW.AECOM.COM

City of Milwaukee
Department of Public Works
Infrastructure Services Division
Facilities Development & Management Section

NO	REVISIONS	DRN	CHK	DATE

DRN	KWB	2013
DES	WRW	2013
CHK	BMW	2013
APP	RLW	2013

LINCOLN GARAGE MODIFICATIONS
VEHICLE SERVICE BAYS
LINCOLN AVENUE GARAGE
3291 WEST LINCOLN AVENUE
MILWAUKEE, WISCONSIN

ELECTRICAL ABBREVIATIONS AND PLAN SYMBOLS

DATE 2013
CITY PROJECT # BU110030326
ENGINEER PROJECT # 60303317
FILENAME 01–G–03.dwg
SHEET NO
DRAWING NO **01-G-03**

Xrefs: P:\60303317\900-WorkingDocs-CAD\AEZ2314bd.dwg
Images:
Plotted By: brendelk
Plot File Date Created: Sep/05/2013 4:08 PM
Layout-Sheet Name: LAYOUT1
Filename: P:\60303317\900-WORKINGDOCS-CAD\10-LINCOLN GARAGE MODIFICATIONS\01-G-03.DWG

ONE-LINE SYMBOLS

XXAF / YYAT — MOLDED CASE CIRCUIT BREAKER (OPEN)
(XXAF – FRAME SIZE)
(YYAT – TRIP SIZE)

XXAF / YYAT — MOLDED CASE CIRCUIT BREAKER (ENCLOSED)
WITH THERMAL/MAGNETIC PROTECTION
(XXAF – FRAME SIZE)
(YYAT – TRIP SIZE)

XXAF / YY — MOLDED CASE CIRCUIT BREAKER (OPEN)
WITH THERMAL/MAGNETIC PROTECTION
(XXAF – FRAME SIZE)
(YYAT – TRIP SIZE)

A / M — MOLDED CASE CIRCUIT BREAKER (OPEN)
WITH MAGNETIC PROTECTION ONLY

XXAF / YYAT — LOW VOLTAGE DRAWOUT CIRCUIT BREAKER
WITH THERMAL/MAGNETIC PROTECTION
(XXAF – FRAME SIZE)
(YYAT – TRIP SIZE)

FOR 2 REV — 2a 1b — 2 (2a,1b) — MAGNETIC STARTER AND MOLDED CASE CIRCUIT
BREAKER IN MOTOR CONTROL CENTER STRUCTURE
(AFD – ADJUSTABLE FREQUENCY DRIVE)
(FVNR – FULL VOLTAGE NON–REVERSING)
(RVNR – REDUCED VOLTAGE NON–REVERSING)
(RVSS – REDUCED VOLTAGE SOLID STATE)
(VSD – VARIABLE SPEED DRIVE)
(2SPD – TWO SPEED)
(AUXILIARY CONTACTS – (2a TWO N.O.)(1b ONE N.C.)
(NUMERAL – NEMA SIZE)
(FOR/REV – FULL VOLTAGE REVERSING)

2 (2a,1b) — COMBINATION MAGNETIC STARTER
WITH MOLDED CASE CIRCUIT BREAKER
IN NEMA RATED ENCLOSURE

52 — XXAF / YYAT — PRIMARY DRAWOUT TYPE CIRCUIT BREAKER
(XXAF – FRAME SIZE)
(YYAT – TRIP SIZE)
(52 – ANSI DEVICE NUMBER)

XXA / YYA — DISCONNECT SWITCH AIR BREAK WITH FUSE
(ENCLOSED)
(XXA – FRAME SIZE)
(YYA – TRIP SIZE)

1 (2a,1b) — MAGNETIC STARTER WITH NEMA SIZE INDICATED
(AUXILLIARY CONTACTS–(2a TWO N.O.)(1b ONE N.C.)

A — DISCONNECT SWITCH (ENCLOSED) UNFUSED
(A – AMP SIZE)

A — FUSED CUTOUTS
(A – FUSE RATING)

KVAR — POWER FACTOR CORRECTION
CAPACITOR SIZE AS INDICATED

N E L — AUTO/MANUAL
TRANSFER SWITCH

T1 30 kVA 480–120/208V 3PH, 4W — TRANSFORMER

VFD (2a,1b) — VARIABLE FREQUENCY DRIVE
WITH AUXILARY CONTACTS

RVSS (2a,1b) — REDUCED VOLTAGE SOLID
STATE STARTER WITH
AUXILARY CONTACTS

2S CP L H 1 L (2a,1b) — 2 SPEED CONSEQUENT
POLE STARTER WITH
AUXILARY CONTACTS

2S 2W L H 1 (2a,1b) — 2 SPEED 2 WINDING
STARTER WITH AUXILARY
CONTACTS

F 1 R (2a,1b) — REVERSING STARTER WITH
AUXILARY CONTACTS

A — FUSE
(A – FUSE RATING)

(3) — POTENTIAL TRANSFORMER
(3 – QUANTITY)

(3) — CURRENT TRANSFORMER
(3 – QUANTITY)

STRESS CONE

GROUND ROD

GROUND

LIGHTNING ARRESTER AND
GROUNDING TO PROTECT ALL
PHASES

RESISTOR OR MOTOR WINDING
ANTI–CONDENSATION HEATER

GENERATOR

THREE PHASE
WYE CONNECTION

THREE PHASE
DELTA CONNECTION

G — PILOT LIGHT
(G – GREEN)
(R – RED)

MPM — MONITORING PROTECTION
METERING RELAY

MP — MOTOR PROTECTION RELAY

TVSS — TRANSIENT VOLTAGE SURGE
SUPPRESSOR

CT — CURRENT
TRANSFORMER CABINET

G — KW STANDBY GEN–SET — GENERATOR AND LABEL
(ENCLOSED)

3 — MOTOR NAME EQUIP. TAG CIRCUIT — MOTOR AND LABEL
(3 INDICATES HORSEPOWER)

20 HP — EQUIP. NAME EQUIP. TAG CIRCUIT — CONNECTION AND LABEL

LP1 — LIGHTING PANEL BOARD LP1 — LIGHTING PANEL AND LABEL

A — AMMETER
(AS – AMMETER PHASE SWITCH)
(CM – CUSTOMER METER)
(D – DEMAND METER)
(GD – GROUND DETECTOR)
(HZ – FREQUENCY METER)
(K – KEY INTERLOCK)
(MO – MOTOR OPERATOR)
(P – SYNCHROSCOPE)
(PF – POWER FACTOR METER)
(ST – SHUNT TRIP)
(TWM – TOTALIZING WATT HOUR METER)
(V – VOLTMETER)
(VA – VOLT–AMMETER)
(VAR – VARMETER)
(VS – VOLTMETER PHASE SWITCH)
(W – WATTMETER)
(WM – WATTHOUR METER)

HOA — CONTROL STATION
(AM – AUTO–MANUAL)
(CAM – COMPUTER–AUTO–MANUAL)
(CM – COMPUTER–MANUAL)
(DCS – DISTRIBUTED CONTROL SYSTEM)
(DS – DOOR SWITCH)
(ETM – ELAPSED TIME METER)
(FR – FORWARD–REVERSE)
(HLO – HIGH–LOW–OFF SWITCH)
(HOA – HAND–OFF–AUTO)
(HOR – HAND–OFF–REMOTE)
(LOS – LOCK–OUT–STOP)
(LR – LOCAL–REMOTE)
(MA – MANUAL–REMOTE)
(OC – OPEN–CLOSED)
(OCA – OPEN–CLOSED–AUTO)
(OCS – OPEN–CLOSED–STOP)
(OO – ON–OFF MAINTAINED CONTACT)
(OOA – ON–OFF–AUTO)
(PB – PUSHBUTTON)
(SF – SLOWER–FASTER)
(SS – START–STOP MOMENTARY CONTACT)
(USG – ULTRA SONIC GENERATOR)
(ZS – LIMIT SWITCH)

SCHEMATIC SYMBOLS

A — METER
(A – AMMETER)
(ETM – ELAPSED TIME METER)
(V – VOLTMETER)

CIRCUIT BREAKER

TO BUS L1 L2 L3 — 3 POLE NON FUSED
DISCONNECT SWITCH

TO BUS L1 L2 L3 — 3 POLE CIRCUIT BREAKER

TO BUS L1 L2 L3 A — 3 POLE FUSED
DISCONNECT SWITCH

T1 T2 T3 3 — 3 PHASE MOTOR
SINGLE SPEED

T1 T2 T3 T11 T12 T13 3 — 3 PHASE MOTOR
2 SPEED 2 WINDING

L H H H — 2 SPEED CONSEQUENT
POLE STARTER

L H — 2 SPEED 2 WINDING
STARTER

F R — FVR STARTER

M — FVNR STARTER

C — COIL

CONTACT
(N.C. – NORMALLY CLOSED)

CONTACT
(N.O. – NORMALLY OPEN)

A — FUSE
(A – FUSE RATING)

OHMS WATTS — RESISTOR

SOLENOID

GROUND

CURRENT TRANSFORMER

PC — PHOTOCELL

R — PUSH–TO–TEST
PILOT LIGHT

G — PILOT LIGHT
(G – GREEN)
(R – RED)

PUSH BUTTON (START)

PUSH BUTTON (STOP)

T.C. — TIMED DELAY
TIMED CLOSED

T.O. — TIMED DELAY
TIMED OPEN

FLOAT SWITCH

PRESSURE SWITCH

FLOW SWITCH

LIMIT SWITCH

OFF ON — ON–OFF SELECTOR SWITCH

OFF AUTO HAND — HOA SELECTOR SWITCH

H1 H2 H3 H4 TRANSFORMER X1 X2 GND — CONTROL POWER
TRANSFORMER

NOTE:

1. THIS LIST OF ABBREVIATIONS AND SYMBOLS SHOWN IS A STANDARD LIST. NOT ALL ABBREVIATIONS AND SYMBOLS ARE USED IN THESE CONTRACT DRAWINGS.

AECOM
4135 TECHNOLOGY PARKWAY
SHEBOYGAN, WI 53083-1883
T 920.458.8711 F 920.458.0537
WWW.AECOM.COM

City of Milwaukee
Department of Public Works
Infrastructure Services Division
Facilities Development & Management Section

NO	REVISIONS	DRN	CHK	DATE

DRN	KWB	2013
DES	WRW	2013
CHK	BMW	2013
APP	RLW	2013

LINCOLN GARAGE MODIFICATIONS
VEHICLE SERVICE BAYS
LINCOLN AVENUE GARAGE
3291 WEST LINCOLN AVENUE
MILWAUKEE, WISCONSIN

ELECTRICAL ONE LINE AND SCHEMATIC SYMBOLS

DATE 2013
CITY PROJECT # BU110030326
ENGINEER PROJECT # 60303317
FILENAME 01–G–04.dwg
SHEET NO
DRAWING NO **01-G-04**

Xrefs: P:\60303317\900-WorkingDocs-CAD\AE2234bd.dwg
Images:
Plotted By: brendelk
Plot File Date Created: Sep/05/2013 3:55 PM
Layout-Sheet Name: LAYOUT1
Filename: P:\60303317\900-WORKINGDOCS-CAD\10-LINCOLN GARAGE MODIFICATIONS\01-G-04.DWG

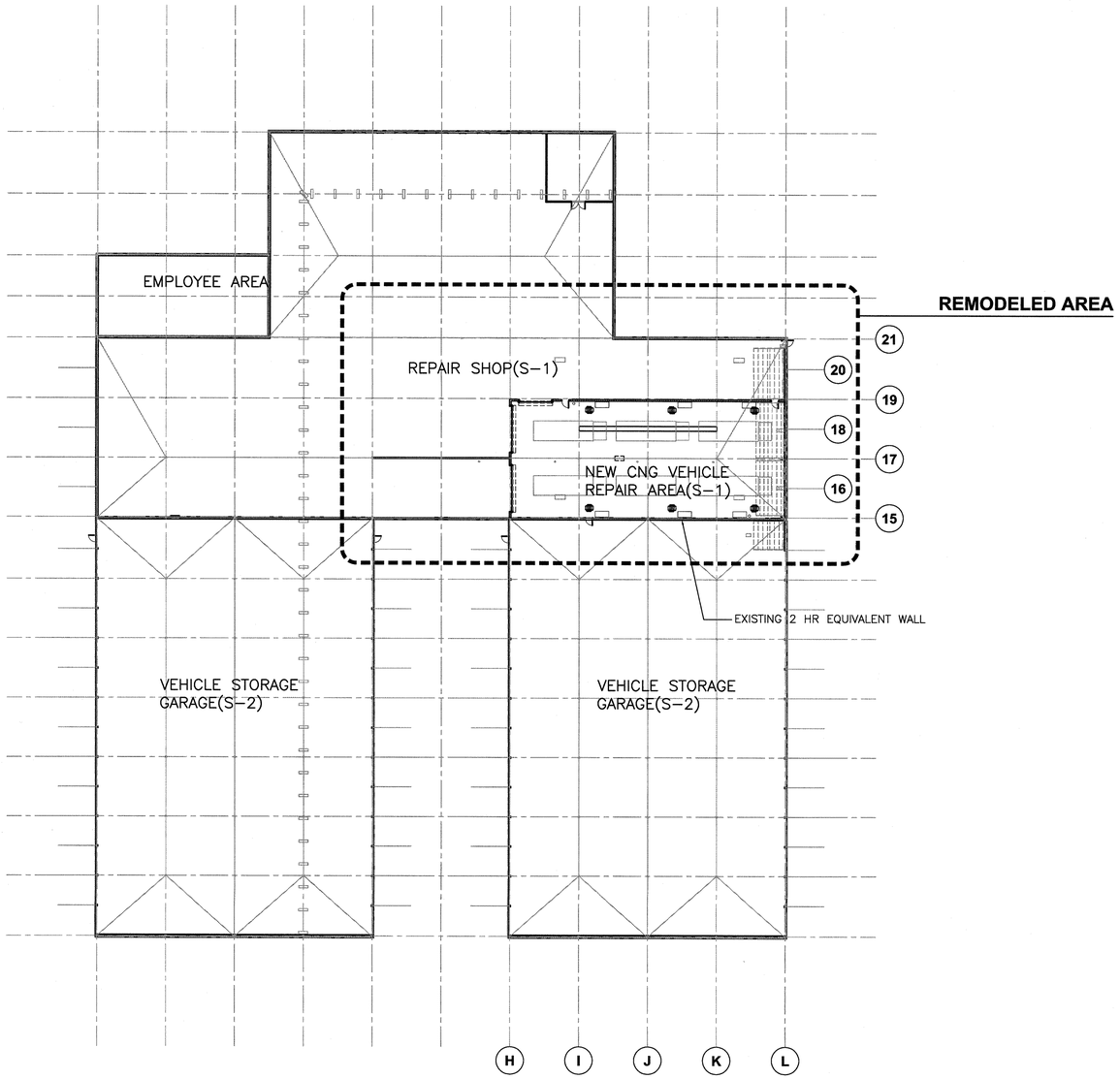

OVERAL BUILDING FLOOR PLAN

0' 16' 32' 64'
SCALE

N

BUILDING CODE COMPLIANCE SUMMARY

- BUILDING CODE–2009 IBC WITH WI AMMENDMENTS
- BUILDING FUNCTION: REMODEL AREA OF EXISTING REPAIR SHOP FOR STANDARD FUELS AND CNG VEHICLE REPAIR.
- ORIGINAL BUILDING CONSTRUCTED ... 1957–1958
- ORIGINAL BUILDING USE ... REPAIR GARAGE AND VEHICLE STORAGE
- PROPOSED BUILDING USE REMAINS THE SAME ... REPAIR GARAGE(S–1) AND VEHICLE STORAGE GARAGE(S–2)
- ORIGINAL CONSTRUCTION ...

  EXTERIOR WALLS – FACE BRICK AND CONCRETE BLOCK OR METAL PANELS ABOVE OVERHEAD DOOR SECTIONS – 0 HR
  INTERIOR WALLS – CONCRETE BLOCK – 0 HR
  INTERIOR STEEL COLUMNS AND BEAMS – 0 HR
  ROOF – STEEL BEAMS AND STEEL DECK
  ROOFING – CLASS A SINGLE PLY ADHERED (ASSUMED)

- ORIGINAL AND PROPOSED CONSTRUCTION TYPE ... II B
- AREA OF REMODELING ... 4,583 SF
- ORIGINAL AND PROPOSED TOTAL AREA ... 87,490 SF
- ORIGINAL AND PROPOSED STORY AND HEIGHT ... 1 STORY LESS THAN 20FT HIGH
- ORIGINAL AND PROPOSED EXIT DISTANCE ... LESS THAN 300FT
- HAZARDOUS MATERIALS / LIQUIDS ... BELOW ALLOWABLE QUANTITIES IN TABLE 307 AS IDENTIFIED BY OWNER
- FIRE RESISTIVE WALLS ... 2 HR EQUIVALENT OR BETTER
- BUILDING POPULATION ... NOT CHANGED
- FRONTAGE ... 4 STREETS
- FIRE PROTECTION ... PORTABLE FIRE EXTINGUISHERS

AECOM
4135 TECHNOLOGY PARKWAY
SHEBOYGAN, WI 53083-1883
T 920.458.8711 F 920.458.0537
WWW.AECOM.COM

City of Milwaukee
Department of Public Works
Infrastructure Services Division
Facilities Development & Management Section

NO	REVISIONS	DRN	CHK	DATE

DRN	SDR	2013
DES	KEH	2013
CHK	JMK	2013
APP	RLW	2013

LINCOLN GARAGE MODIFICATIONS
VEHICLE SERVICE BAYS
LINCOLN AVENUE GARAGE
3291 WEST LINCOLN AVENUE
MILWAUKEE, WISCONSIN

OVERALL BUILDING PLAN & & BUILDING CODE COMPLIANCE SUMMARY

DATE 2013
CITY PROJECT # BU110030326
ENGINEER PROJECT # 60303317
FILENAME 10–AS–01.dwg
SHEET NO
DRAWING NO **10-AS-01**

Xrefs: P:\60303317\900-WorkingDocs-CAD\10-Lincoln Garage Modifications\3dmodel\lincoln garage mod\Views\Architectural and structural\Plans\10-AS-FLR-01-3D.dwg
P:\60303317\900-WorkingDocs-CAD\10-Lincoln Garage Modifications\3dmodel\lincoln garage mod\Constructs\architectural\roofing and accessories.dwg
\3dmodel\lincoln garage mod\Constructs\Architectural\first floor level.dwg
\3dmodel\lincoln garage mod\Constructs\Structural\first floor level slab.dwg
\3dmodel\lincoln garage mod\Constructs\Structural\first floor level structural.dwg
\3dmodel\lincoln garage mod\Constructs\Structural\grid.dwg
\3dmodel\lincoln garage mod\Constructs\Architectural\first floor level - NEW.dwg
\3dmodel\lincoln garage mod\Constructs\Structural\first floor level structural - NEW.dwg
\3dmodel\lincoln garage mod\Constructs\Mechanical\garage equipment.dwg

Plotted By: Johstm
Plot File Date Created: Oct/17/2013 5:51 AM
Layout-Sheet Name: LAYOUT1
Filename: P:\60303317\900-WORKINGDOCS-CAD\10-LINCOLN GARAGE MODIFICATIONS\10-AS-01.DWG

ELEVATION 1

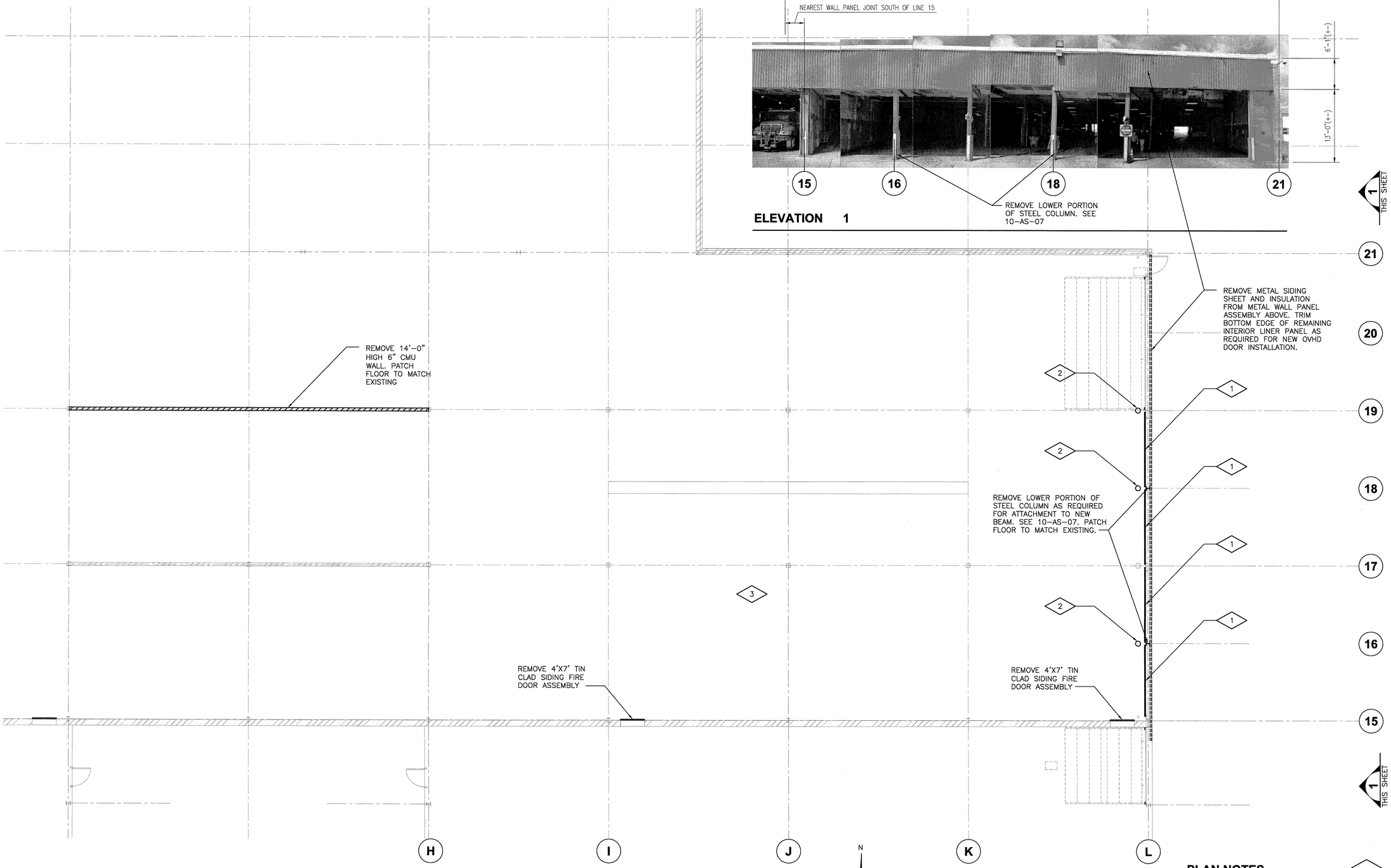

REMOVAL PLAN

0' 4' 8' 16'
SCALE

PLAN NOTES

1. REMOVE SECTIONAL OVERHEAD DOOR ASSEMBLY INCLUDING STEEL PIPE SILL TO DEPTH OF 2". CREATE KEY SHAPED CHANNEL FOR REPAIR GROUT. SEE 5 / 10-AS-06
2. REMOVE 10" DIA PIPE TO 4" BELOW FLOOR. PATCH FLOOR TO MATCH EXISTING.
3. SEE DRAWING 10-AS-04 FOR ROOF REMOVAL REQUIREMENTS.

AECOM
4135 TECHNOLOGY PARKWAY
SHEBOYGAN, WI 53083-1883
T 920.458.8711 F 920.458.0537
WWW.AECOM.COM

City of Milwaukee
Department of Public Works
Infrastructure Services Division
Facilities Development & Management Section

NO	REVISIONS	DRN	CHK	DATE

DRN	SDR	2013
DES	KEH	2013
CHK	JMK	2013
APP	RLW	2013

LINCOLN GARAGE MODIFICATIONS
VEHICLE SERVICE BAYS
LINCOLN AVENUE GARAGE
3291 WEST LINCOLN AVENUE
MILWAUKEE, WISCONSIN

REMOVAL PLAN

DATE 2013
CITY PROJECT # BU110030326
ENGINEER PROJECT # 60303317
FILENAME 10-AS-02.dwg
SHEET NO
DRAWING NO **10-AS-02**

Xrefs: P:\60303317\900-WorkingDocs-CAD\10-Lincoln Garage Modifications\3dmodel\lincoln garage mod\Views\Mechanical\Rb60-38Ra60A Plumbing\Rb60-38Ra60A Plumbing.dwg
P:\60303317\900-WorkingDocs-CAD\10-Lincoln Garage Modifications\3dmodel\lincoln garage mod\Constructs\architectural\first floor level.dwg
P:\60303317\900-WorkingDocs-CAD\10-Lincoln Garage Modifications\3dmodel\lincoln garage mod\Constructs\Structural\first floor level structural.dwg
P:\60303317\900-WorkingDocs-CAD\10-Lincoln Garage Modifications\3dmodel\lincoln garage mod\Constructs\Structural\grid.dwg
P:\60303317\900-WorkingDocs-CAD\10-Lincoln Garage Modifications\3dmodel\lincoln garage mod\Constructs\architectural\first floor level - REMOVAL.dwg
P:\60303317\900-WorkingDocs-CAD\10-Lincoln Garage Modifications\3dmodel\lincoln garage mod\Constructs\Structural\first floor level structural - REMOVAL.dwg
P:\60303317\900-WorkingDocs-CAD\10-Lincoln Garage Modifications\3dmodel\lincoln garage mod\Constructs\Structural\first floor level structural - NEW.dwg

Plotted By: reimess
Plot File Date Created: Sep/05/2013 1:54 PM
Layout-Sheet Name: WORK
Filename: P:\60303317\900-WORKINGDOCS-CAD\10-LINCOLN GARAGE MODIFICATIONS\

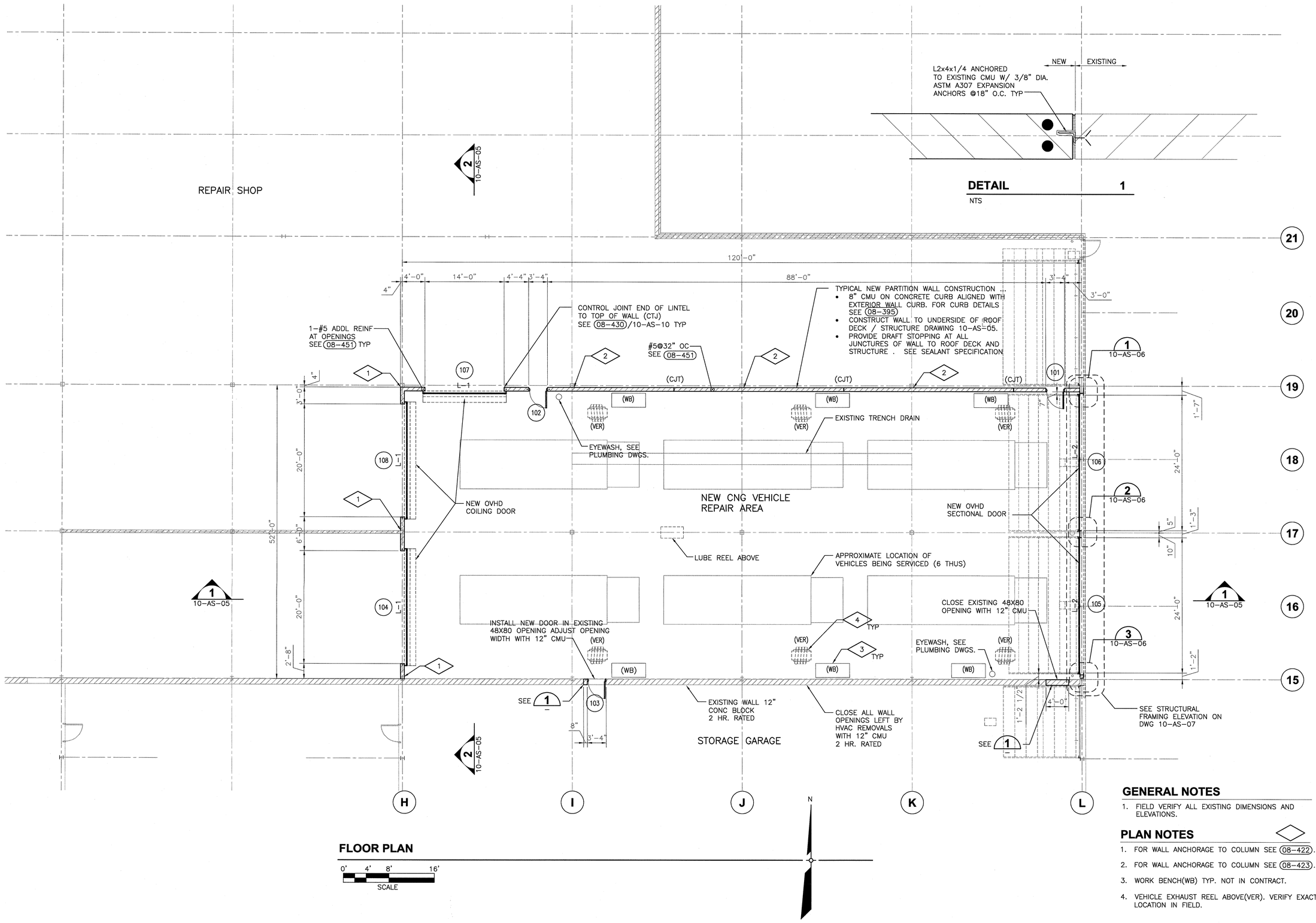

FLOOR PLAN

0' 4' 8' 16'
SCALE

GENERAL NOTES

1. FIELD VERIFY ALL EXISTING DIMENSIONS AND ELEVATIONS.

PLAN NOTES

1. FOR WALL ANCHORAGE TO COLUMN SEE (08-422).
2. FOR WALL ANCHORAGE TO COLUMN SEE (08-423).
3. WORK BENCH(WB) TYP. NOT IN CONTRACT.
4. VEHICLE EXHAUST REEL ABOVE(VER). VERIFY EXACT LOCATION IN FIELD.

AECOM
4135 TECHNOLOGY PARKWAY
SHEBOYGAN, WI 53083-1883
T 920.458.8711 F 920.458.0537
WWW.AECOM.COM

City of Milwaukee
Department of Public Works
Infrastructure Services Division
Facilities Development & Management Section

NO	REVISIONS	DRN	CHK	DATE

DRN	SDR	2013
DES	KEH	2013
CHK	JMK	2013
APP	RLW	2013

LINCOLN GARAGE MODIFICATIONS
VEHICLE SERVICE BAYS
LINCOLN AVENUE GARAGE
3291 WEST LINCOLN AVENUE
MILWAUKEE, WISCONSIN

FLOOR PLAN

DATE	2013
CITY PROJECT #	BU110030326
ENGINEER PROJECT #	60303317
FILENAME	10-AS-03.dwg
SHEET NO	
DRAWING NO	10-AS-03

Xrefs: P:\60303317\900-WorkingDocs-CAD\10-Lincoln Garage Modifications\3dmodel\lincoln garage mod\Views\Architectural and structural\Consultant Backgrounds\10-AS-FLR-01.dwg
P:\60303317\900-WorkingDocs-CAD\10-Lincoln Garage Modifications\3dmodel\lincoln garage mod\Views\Architectural and structural\Sections and Elevations\10-AS-SEC-01-3D.dwg
P:\60303317\900-WorkingDocs-CAD\10-Lincoln Garage Modifications\3dmodel\lincoln garage mod\Views\Architectural and structural\Plans\10-AS-FLR-01-3D.dwg
.\3dmodel\lincoln garage mod\Constructs\Structural\first floor level structural.dwg
.\3dmodel\lincoln garage mod\Constructs\Structural\first floor level structural.dwg
.\3dmodel\lincoln garage mod\Constructs\Structural\grid.dwg
.\3dmodel\lincoln garage mod\Constructs\Architectural\first floor level – NEW.dwg
.\3dmodel\lincoln garage mod\Constructs\Structural\first floor level structural – NEW.dwg
Plotted By: Johstm
Plot File Date Created: Oct/17/2013 6:01 AM
Layout-Sheet Name: LAYOUT1
Filename: P:\60303317\900-WORKINGDOCS-CAD\10-LINCOLN GARAGE MODIFICATIONS\10-AS-03.DWG

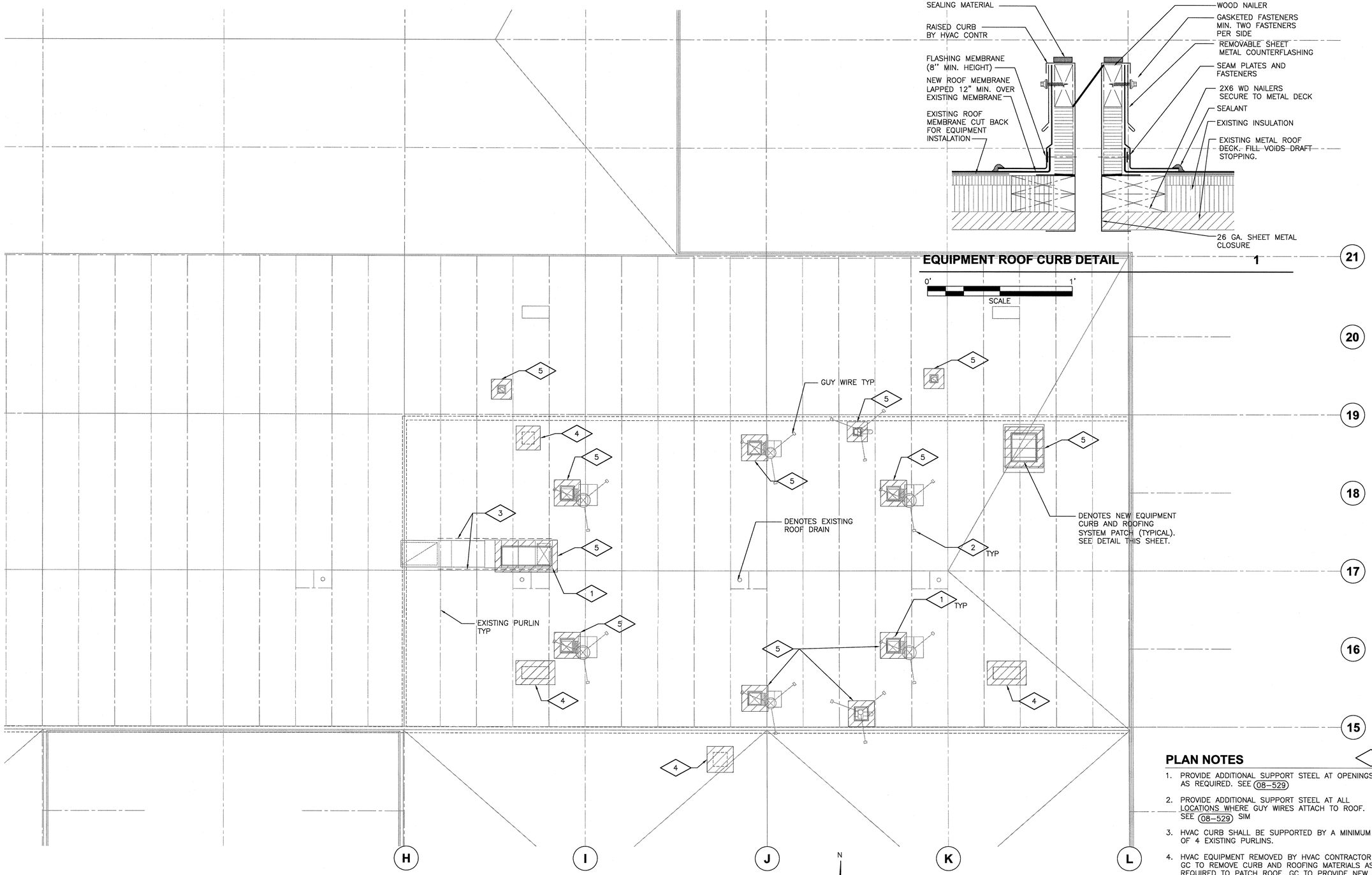

ROOF PLAN

0' 4' 8' 16'
SCALE

GENERAL NOTES

1. SEE HVAC DRAWINGS FOR GUY WIRE AND EQUIPMENT SUPPORT DETAILS.
2. SEE PLUMBING DRAWINGS FOR VENT THROUGH ROOF LOCATIONS.

PLAN NOTES

1. PROVIDE ADDITIONAL SUPPORT STEEL AT OPENINGS AS REQUIRED. SEE (08–529)
2. PROVIDE ADDITIONAL SUPPORT STEEL AT ALL LOCATIONS WHERE GUY WIRES ATTACH TO ROOF. SEE (08–529) SIM
3. HVAC CURB SHALL BE SUPPORTED BY A MINIMUM OF 4 EXISTING PURLINS.
4. HVAC EQUIPMENT REMOVED BY HVAC CONTRACTOR. GC TO REMOVE CURB AND ROOFING MATERIALS AS REQUIRED TO PATCH ROOF. GC TO PROVIDE NEW STEEL DECK TO MATCH EXISTING(TACK WELD IN PLACE) AND PROVIDE NEW ROOF INSULATION AND ROOFING TO MATCH EXISTING.
5. GC TO PROVIDE NEW ROOF OPENING FOR NEW HVAC EQUIPMENT AS REQUIRED. GC SHALL PROVIDE ANGLE FRAMING AT OPENINGS AND AT GUY WIRE ATTACHMENT TO ROOF. SEE (08–529) TYP. HVAC CONTRACTOR TO FURNISH CURB FOR GC INSTALLATION. GC TO PROVIDE ALL ROOF AND INSULATION AS REQUIRED FOR NEW HVAC WORK AND PLUMBING WORK, INCLUDING BOOTS AT ALL GUY WIRE LOCATIONS,

AECOM
4135 TECHNOLOGY PARKWAY
SHEBOYGAN, WI 53083-1883
T 920.458.8711 F 920.458.0537
WWW.AECOM.COM

City of Milwaukee
Department of Public Works
Infrastructure Services Division
Facilities Development & Management Section

NO	REVISIONS	DRN	CHK	DATE

DRN	SDR	2013
DES	KEH	2013
CHK	JMK	2013
APP	RLW	2013

LINCOLN GARAGE MODIFICATIONS
VEHICLE SERVICE BAYS
LINCOLN AVENUE GARAGE
3291 WEST LINCOLN AVENUE
MILWAUKEE, WISCONSIN

ROOF PLAN

DATE 2013
CITY PROJECT # BU110030326
ENGINEER PROJECT # 60303317
FILENAME 10–AS–04.dwg
SHEET NO
DRAWING NO **10-AS-04**

Plotted By: johstm
Plot File Date Created: Oct/17/2013 6:03 AM
Layout–Sheet Name: LAYOUT1
Filename: P:\60303317\900–WORKINGDOCS–CAD\10–LINCOLN GARAGE MODIFICATIONS\10–AS–04.DWG

Xrefs: P:\60303317\900–WorkingDocs–CAD\10–Lincoln Garage Modifications\3dmodel\lincoln garage mod\Views\Architectural and structural\Consultant Backgrounds\10–S–RD–01.dwg
P:\60303317\900–WorkingDocs–CAD\10–Lincoln Garage Modifications\3dmodel\lincoln garage mod\Views\Architectural and structural\Consultant Backgrounds\10–S–FLR–01.dwg
P:\60303317\900–WorkingDocs–CAD\10–Lincoln Garage Modifications\3dmodel\lincoln garage mod\Views\Architectural and structural\Consultant Backgrounds\10–AS–FLR–01.dwg
L:\work\60198694\000_CADD\10–Lincoln Garage Modifications\3dmodel\lincoln garage mod\Views\Architectural and structural\Consultant Backgrounds\10–S–RD–01.dwg
P:\60303317\900–WorkingDocs–CAD\XEZ234cd.dwg
P:\60303317\900–WorkingDocs–CAD\XREF hvac rtu.dwg

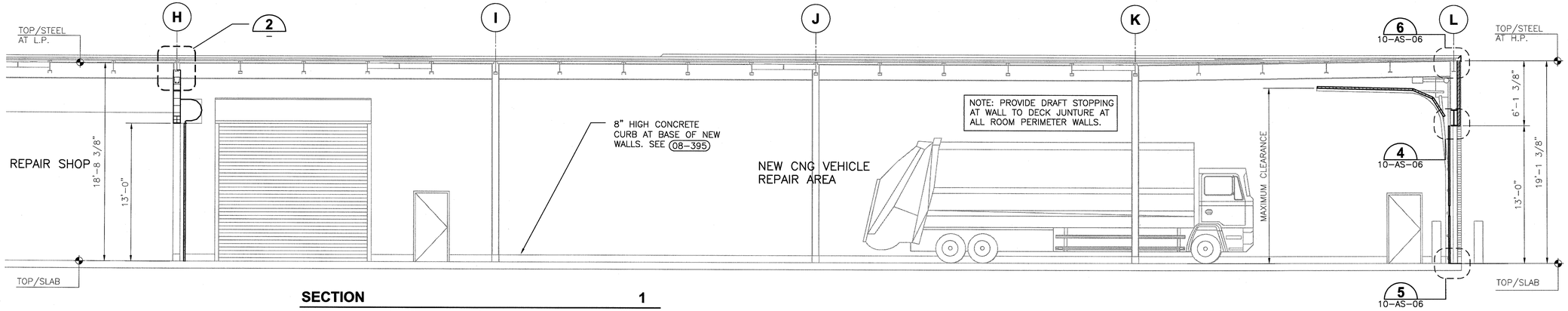

SECTION 1

0' 8' 16'
SCALE

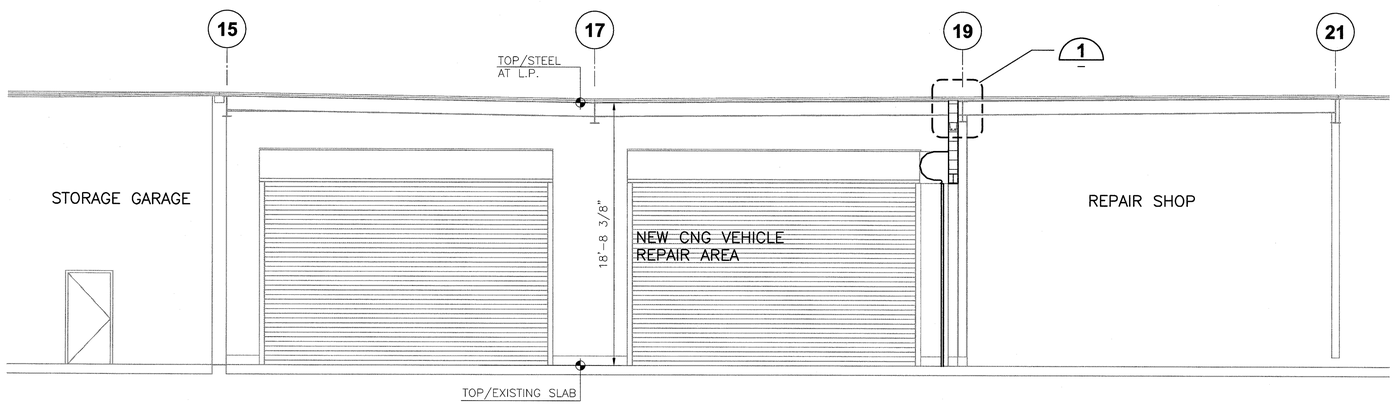

SECTION 2

0' 8' 16'
SCALE

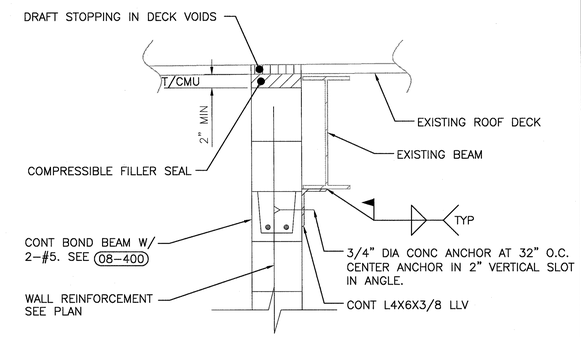

DETAIL 1

NTS

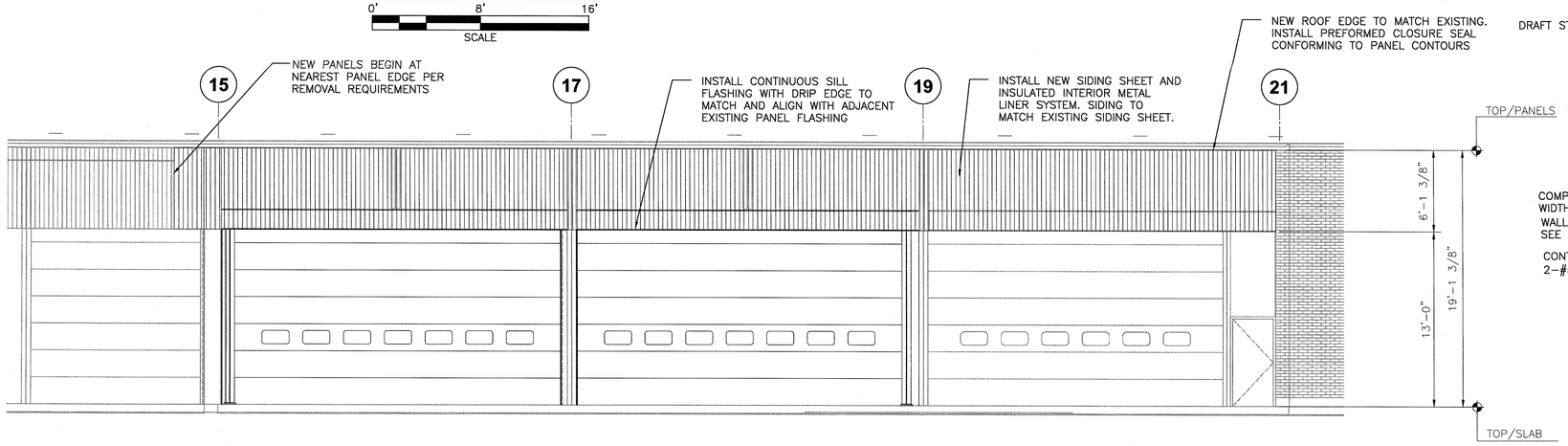

PARTIAL EAST BUILDING ELEVATION OF REMODELED AREA

0' 8' 16'
SCALE

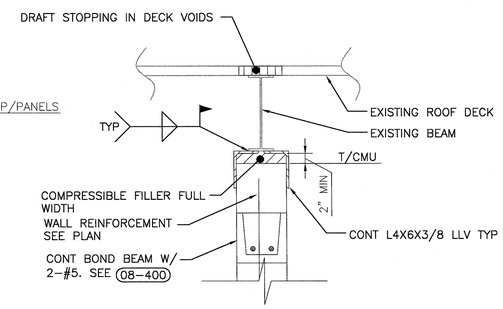

DETAIL 2

NTS

AECOM
4135 TECHNOLOGY PARKWAY
SHEBOYGAN, WI 53083-1883
T 920.458.8711 F 920.458.0537
WWW.AECOM.COM

City of Milwaukee
Department of Public Works
Infrastructure Services Division
Facilities Development & Management Section

NO	REVISIONS	DRN CHK	DATE

DRN	SDR	2013
DES	KEH	2013
CHK	JMK	2013
APP	RLW	2013

LINCOLN GARAGE MODIFICATIONS
VEHICLE SERVICE BAYS
LINCOLN AVENUE GARAGE
3291 WEST LINCOLN AVENUE
MILWAUKEE, WISCONSIN

BUILDING SECTIONS AND DETAILS

DATE 2013
CITY PROJECT # BU110030326
ENGINEER PROJECT # 60303317
FILENAME 10-AS-05.dwg
SHEET NO
DRAWING NO **10-AS-05**

Plotted By: Johstm
Plot File Date Created: Oct/17/2013 6:11 AM
Layout-Sheet Name: LAYOUT1
Filename: P:\60303317\900-WORKINGDOCS-CAD\10-LINCOLN GARAGE MODIFICATIONS\10-AS-05.DWG

DOOR, FRAME AND HARDWARE SCHEDULE

OPENING		DOOR							FRAME		HARDWARE												
		SIZE					LOUVER				HINGE	LOCKSET	CLOSURE	ELEC STRIKE	STOP	WTHR STRIP	SWEEP	ASTRAGAL	THRESHOLD	LOCK PROTECTOR	PROTECTION PLATE	DOOR NOTES
NUMBER	FIRE RATING	WDTH	HGT	THK	MATL	TYPE	WIDTH	HEIGHT	MATL	TYPE		(SCHLAGE)	(LCN)	(SCHLAGE)								
101	--	3'-0"	7'-0"	1 3/4"	GHM	D-N	0"	0"	GHM	F-4HD	BB1191NRP	ND53PD	4110 CUSH-N-STOP	YES	--	700S	200N	--	424	--	32X32	1 3
102	--	3'-0"	7'-0"	1 3/4"	GHM	D-N	0"	0"	GHM	F-4HD	BB1191NRP	ND53PD	4110 CUSH-N-STOP	YES	--	700S	200N	--	424	--	32X32	1 3
103	1.5 HR	3'-0"	6'-6"	1 3/4"	GHM	D-V	0"	0"	GHM	F-2HD	BB1191NRP	ND53PD	4110 CUSH-N-STOP	--	--	700S	200N	--	424	--	32X32	1 2
104	--	20'-0"	13'-0"	--	STL	D-COIL	0"	0"	--	--	--	--	--	--	--	--	--	--	--	--	--	--
105	--	24'-0"	13'-0"	1 5/8"	INS STL	D-SEC	0"	0"	--	--	--	--	--	--	--	--	--	--	--	--	--	--
106	--	24'-0"	13'-0"	1 5/8"	INS STL	D-SEC	0"	0"	--	--	--	--	--	--	--	--	--	--	--	--	--	--
107	--	14'-0"	13'-0"	--	STL	D-COIL	0"	0"	--	--	--	--	--	--	--	--	--	--	--	--	--	--
108	--	20'-0"	13'-0"	--	STL	D-COIL	0"	0"	--	--	--	--	--	--	--	--	--	--	--	--	--	--

1. ADJUST DOOR HEIGHT AS REQUIRED TO MATCH COURSING. MIN HEIGHT=6'-8".
2. FIRE RATED PROTECTION PLATE.
3. PROVIDE 3/4" RIGID CONDUIT AT DOOR FOR OWNER CARD ACCESS SYSTEM. PROVIDE HOME RUN CONDUIT FROM DOORS TO CONTROL ROOM IN NORTHEAST CORNER OF REPAIR SHOP.

DOOR AND FRAME DEFINITIONS

SCHEDULE ITEM	DEFINITION
GHM	GALVANIZED STEEL DOORS AND FRAMES
INS STL	INSULATED STEEL DOOR PANELS OR SLATS
--	--
--	--
--	--
--	--

FINISH DEFINITIONS

SCHEDULE ITEM	DEFINITION
CMU	CONCRETE MASONRY UNIT
COATING	SPEC SECTION 09 96 10
SEALER	CONCRETE SEALER SPEC SECTION 03 30 10
STEEL	FERROUS METAL (INCLUDING GALVANIZED) ITEMS DESCRIBED IN COATING SPEC SECTIONS 09 96 10
--	--
--	--

INTERIOR FINISH SCHEDULE

ROOM NAME	FLOOR		BASE		WALL		CEILING		DOOR AND FRAME		MISCELLANEOUS		
	MATERIAL	FINISH	MATERIAL	FINISH	MATERIAL	FINISH	MATERIAL	FINISH	MATERIAL	FINISH	MATERIAL	FINISH	NOTES
EXISTING AND NEW CNG VEHICLE REPAIR AREA SURFACES	CONCRETE	COATING	CONCRETE	COATING	CMU	COATING	STEEL STRUCTURE AND DECK	COATING	GHM	COATING	--	--	--
NEW SURFACES EXPOSED TO ADJACENT REPAIR SHOP	CONCRETE	--	CONCRETE	COATING	CMU	COATING	STEEL STRUCTURE AND DECK	--	GHM	COATING	--	--	--

EXTERIOR FINISH SCHEDULE

ITEM	FINISH
GHM DOOR / FRAME	COATING
OVHD SECTIONAL AND COILING DOORS	PREFINISHED
STRUCTURAL STEEL	COATING
MISC STEEL	COATING
NEW WALL PANELS	PREFINISHED
SHEET METAL TRIM AND FLASHING	PREFINISHED
--	--
--	--

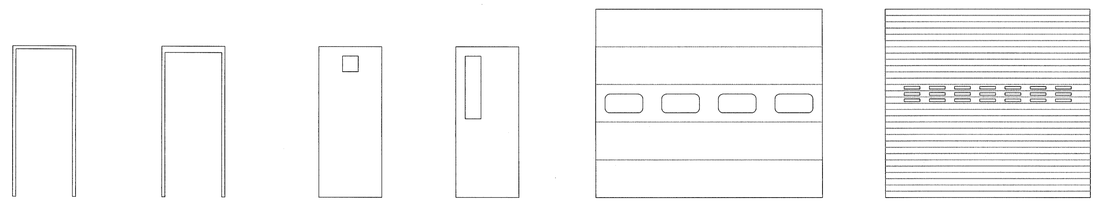

- 2X5 3/4 HEAD
- 2X5 3/4 JAMBS

F-2HD

- 4X5 3/4 HEAD
- 2X5 3/4 JAMBS

F-4HD

- FLUSH PANEL
- 8x12 FIRE RESISTANCE RATED & FIRE-PROTECTION RATED GLASS
- 1 1/2 HR. RATED D.V.

D-V

- FLUSH PANEL
- 1/4" TEMP PL.

D-N

- SECTIONAL OVERHEAD (INSULATED)
- INSULATED GLAZING (MATCH EXISTING)

D-SEC

- COILING OVERHEAD (INSULATED)
- 21 EVENLY SPACED LITES (3 ROWS)

D-COIL

DOOR AND FRAME TYPES

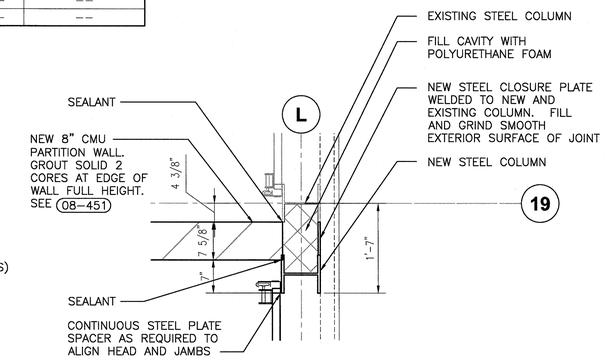

OVERHEAD DOOR JAMB 1

0' 2' 4' SCALE

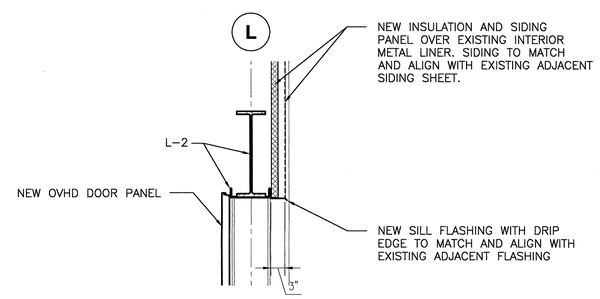

OVERHEAD DOOR HEAD 4

0' 2' 4' SCALE

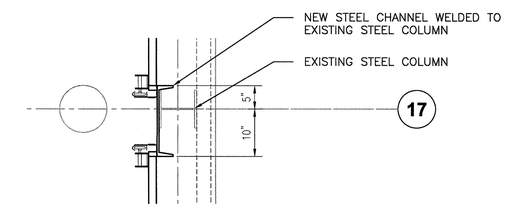

OVERHEAD DOOR JAMB 2

0' 2' 4' SCALE

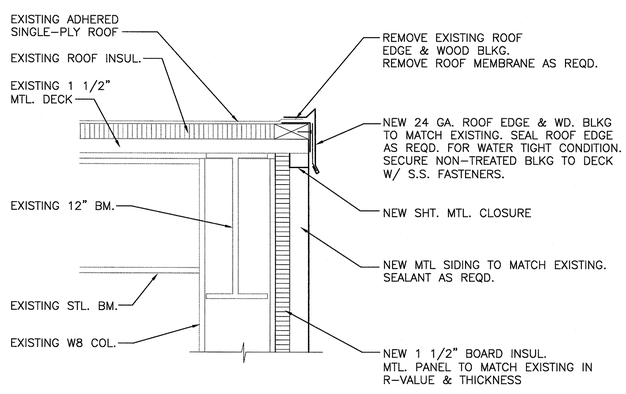

ROOF EDGE 6

0' 1' 2' SCALE

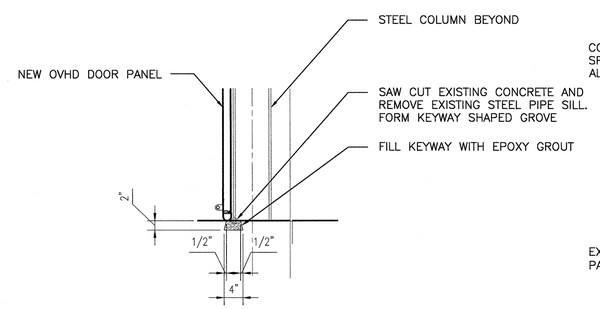

OVERHEAD DOOR SILL 5

0' 2' 4' SCALE

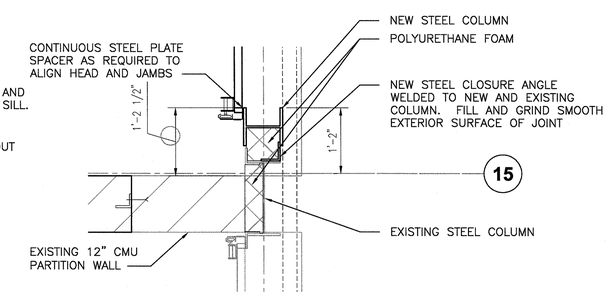

OVERHEAD DOOR JAMB 3

0' 2' 4' SCALE

AECOM
4135 TECHNOLOGY PARKWAY
SHEBOYGAN, WI 53083-1883
T 920.458.8711 F 920.458.0537
WWW.AECOM.COM

City of Milwaukee
Department of Public Works
Infrastructure Services Division
Facilities Development & Management Section

NO	REVISIONS	DRN	CHK	DATE

DRN	SDR	2013
DES	KEH	2013
CHK	JMK	2013
APP	RLW	2013

LINCOLN GARAGE MODIFICATIONS
VEHICLE SERVICE BAYS
LINCOLN AVENUE GARAGE
3291 WEST LINCOLN AVENUE
MILWAUKEE, WISCONSIN

SCHEDULES AND DETAILS

DATE 2013
CITY PROJECT # BU110030326
ENGINEER PROJECT # 60303317
FILENAME 10-AS-06.dwg
SHEET NO
DRAWING NO **10-AS-06**

Xrefs: L:\work\60198094\000_CADD\10-Lincoln Garage Modifications\3mode\lincoln garage mod\Views\Architectural and structural\Sections and Elevations\10-AS-SEC-01-3D.dwg
P:\603033\7\900-WorkingDocs-CADD\10-Lincoln Garage Modifications\3mode\lincoln garage mod\Views\Architectural and structural\Plans\10-AS-FLR-01-3D.dwg
P:\603033\7\900-WorkingDocs-CADD\10-Lincoln Garage Modifications\3mode\lincoln garage mod\Constructs\Structural\first floor level slab.dwg
\3dmode\lincoln garage mod\Constructs\Structural\first floor level structural.dwg
\3dmode\lincoln garage mod\Constructs\Structural\grid.dwg
\3dmode\lincoln garage mod\Constructs\Architectural\first floor level - NEW.dwg
\3dmode\lincoln garage mod\Constructs\Architectural\first floor level structural - NEW.dwg
Plotted By: Johstm
Plot File Date Created: Oct/17/2013 7:53 AM
Layout-Sheet Name: LAYOUT1
Filename: P:\603033\7\900-WORKINGDOCS-CADD\10-LINCOLN GARAGE MODIFICATIONS\10-AS-06.DWG

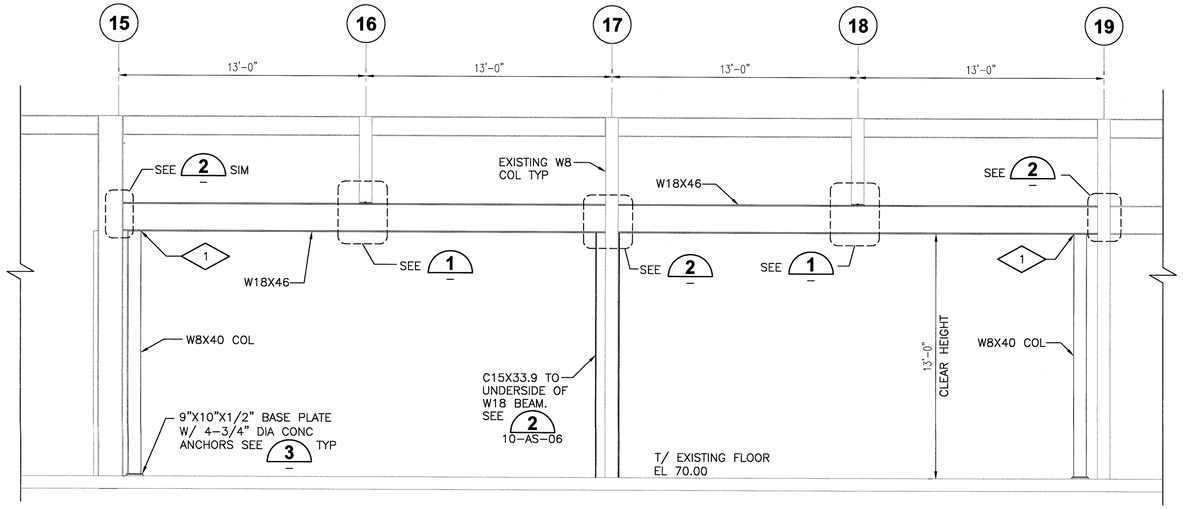

EAST WALL FRAMING ELEVATION

0' 2' 4' 8'
SCALE

GENERAL NOTES

1. FIELD VERIFY ALL EXISTING DIMENSIONS AND ELEVATIONS.

PLAN NOTES

1. FOR COLUMN CONNECTION TO BEAM SEE 08-521.

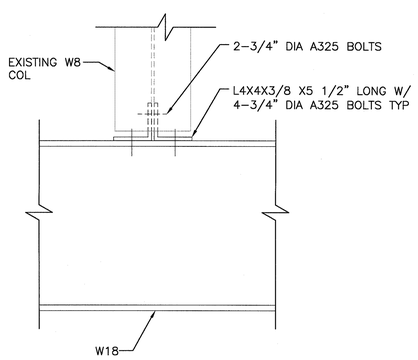

DETAIL 1

0' 1' 2'
SCALE

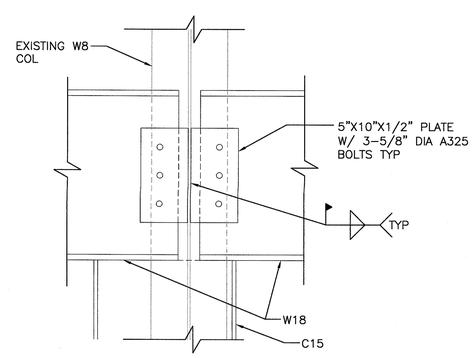

DETAIL 2

0' 1' 2'
SCALE

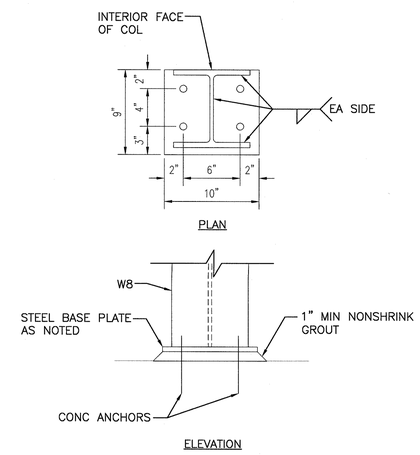

DETAIL 3

0' 1' 2'
SCALE

AECOM
4135 TECHNOLOGY PARKWAY
SHEBOYGAN, WI 53083-1883
T 920.458.8711 F 920.458.0537
WWW.AECOM.COM

City of Milwaukee
Department of Public Works
Infrastructure Services Division
Facilities Development & Management Section

NO	REVISIONS	DRN	CHK	DATE

DRN	SDR	2013
DES	SDR	2013
CHK	DRE	2013
APP	RLW	2013

LINCOLN GARAGE MODIFICATIONS
VEHICLE SERVICE BAYS
LINCOLN AVENUE GARAGE
3291 WEST LINCOLN AVENUE
MILWAUKEE, WISCONSIN

FRAMING ELEVATION AND DETAILS

DATE 2013
CITY PROJECT # BU110030326
ENGINEER PROJECT # 60303317
FILENAME 10-AS-07.dwg
SHEET NO
DRAWING NO **10-AS-07**

Xrefs: P:\60303317\900-WorkingDocs-CAD\10-Lincoln Garage Modifications\3dmodel\lincoln garage mod\Views\Architectural and structural\Sections and Elevations\10-AS-SEC-01-3D.dwg
P:\60303317\900-WorkingDocs-CAD\10-Lincoln Garage Modifications\3dmodel\lincoln garage mod\Views\Architectural and structural\Models\composite bldg and equip.dwg
\3dmodel\lincoln garage mod\Constructs\Mechanical\garage equipment.dwg
\3dmodel\lincoln garage mod\Constructs\Structural\first floor level slab.dwg
\3dmodel\lincoln garage mod\Constructs\Structural\roof structure - steel.dwg
\3dmodel\lincoln garage mod\Constructs\Structural\roof structure - wood.dwg
\3dmodel\lincoln garage mod\Constructs\Structural\first floor level structure.dwg
\3dmodel\lincoln garage mod\Constructs\Structural\roof structure - deck.dwg
\3dmodel\lincoln garage mod\Constructs\Architectural\roofing and accessories.dwg

Plotted By: reimess
Plot File Date Created: Aug/30/2013 9:48 AM
Layout-Sheet Name: WORK
Filename: P:\60303317\900-WORKINGDOCS-CAD\10-LINCOLN GARAGE MODIFICATIONS\10-AS-07.DWG

GENERAL STRUCTURAL NOTES (08-001)

1. THE GENERAL STRUCTURAL NOTES AND STANDARD STRUCTURAL DETAILS APPLY TO THE ENTIRE PROJECT UNLESS SPECIFICALLY STATED OTHERWISE.

DESIGN CRITERIA

1. DESIGN AND CONSTRUCT IN CONFORMANCE WITH THE WISCONSIN COMMERCIAL BUILDING CODE, LATEST EDITION
   A. MECHANICAL EQUIPMENT: VERIFY WITH EQUIPMENT SUPPLIER. (SEE EQUIPMENT SCHEDULES)
   B. CANOPY ROOF SNOW LOAD:
      1. GROUND SNOW LOAD, Pg — 30 PSF+DRIFT
      2. FLAT ROOF SNOW LOAD, Pf — 21 PSF
      3. SNOW EXPOSURE FACTOR, Ce — 1.0
      4. IMPORTANCE FACTOR, I — 1.0
      5. THERMAL FACTOR, Ct — 1.0
   C. WIND LOAD:
      1. BASIC WIND SPEED, V — 90 MPH, ASCE 7-05
      2. IMPORTANCE FACTOR, I — 1.0
      3. WIND EXPOSURE — B
2. SEISMIC DESIGN DATA:
   A. ZIP CODE — 53215
   B. IMPORTANCE FACTOR, I — 1.0
   C. MAPPED SPECTRAL RESPONSE ACCELERATIONS:
      1. Ss — 0.108
      2. S1 — 0.045
   D. SITE CLASS — D
   E. SPECTRAL RESPONSE COEFFICIENTS:
      1. SDS — 0.116
      2. SD1 — 0.072
   F. SEISMIC DESIGN CATEGORY — B

FOUNDATIONS

1. NET SOIL BEARING CAPACITIES — 1500 PSF ASSUMED
2. PLACE FOOTINGS ON NATURAL UNDISTURBED EARTH OR STRUCTURAL FILL.

CONCRETE

1. REINFORCING STEEL:
   A. DEFORMED BARS — ASTM A615-GRADE 60
2. UNLESS OTHERWISE SHOWN PROVIDE COVER FOR REINFORCEMENT AS FOLLOWS:
   A. CAST AGAINST:
      1. EARTH — 3 INCHES
      2. MUD SLAB — 2 INCHES
   B. EXPOSED TO EARTH, WEATHER, OR WATER:
      1. SLABS — 2 INCHES
      2. FOOTINGS AND BASE SLAB:
         FORMED SURFACES — 2 INCHES
         TOP OF FOOTINGS AND BASE SLABS — 2 INCHES
   C. NOT EXPOSED TO EARTH, WEATHER, OR WATER: — 1 1/2 INCHES
3. DO NOT WELD OR FIELD BEND REINFORCING BARS, EXCEPT AS APPROVED BY ENGINEER.
4. CONCRETE:
   A. FENCE POST PIERS, INTERIOR EQUIPMENT BASES, AND WHERE NOTED: CLASS B — F'c=3000 PSI
   B. ALL LOCATIONS EXCEPT WHERE CLASS B IS SPECIFIED. CLASS A — F'c=4500 PSI
5. UNLESS OTHERWISE NOTED, CONSTRUCTION JOINTS SHOWN ARE OPTIONAL. CONSTRUCTION JOINTS NOT SHOWN ON THE DRAWINGS SHALL BE APPROVED BY ENGINEER.
6. LIMIT SIZE OF CONCRETE POURS. MAXIMUM LENGTH OF SLAB POURS SHALL NOT EXCEED 60 FT.
7. BEFORE CONCRETE IS PLACED, CONSTRUCTION JOINTS SHALL BE CLEANED AND LAITANCE REMOVED AND SURFACE WETTED. STANDING WATER SHALL BE REMOVED.
8. CONSTRUCTION JOINTS SHALL HAVE KEYS OR ROUGHENED SURFACES. WHERE ROUGHENED SURFACE IS USED, THE SURFACE SHALL HAVE AN AMPLITUDE OF 1/4" MIN.
9. CHAMFER EXPOSED EDGES OF CONCRETE 3/4" UNLESS OTHERWISE NOTED.
10. EQUIPMENT PAD AND CURB LOCATIONS, DIMENSIONS AND HEIGHTS TO BE COORDINATED BY CONTRACTOR. VERIFY WITH EQUIPMENT MANUFACTURER'S REQUIREMENTS.

MASONRY

1. MASONRY OPENINGS LESS THAN 4'-0" IN WIDTH THAT DO NOT HAVE A LINTEL SCHEDULED SHALL HAVE A BOND BEAM WITH 2-#5 BARS OR DOUBLE STEEL ANGLE LINTEL WITH A TOTAL WIDTH OF HORIZONTAL LEGS APPROXIMATELY 1" LESS THAN WALL THICKNESS.
2. PROVIDE A MINIMUM OF 8" BEARING AT EACH END FOR STEEL BEAM LINTELS AND BOND BEAM LINTELS AND 6" BEARING AT EACH END FOR ANGLE LINTELS UNLESS NOTED OTHERWISE.
3. UNLESS OTHERWISE SHOWN, PROVIDE A CONTINUOUS BOND BEAM AROUND THE TOP OF WALLS, REINFORCED WITH 2-#5 BARS.
4. PROVIDE HORIZONTAL MASONRY REINFORCEMENT IN WALLS AT 16" O.C. MAXIMUM UNLESS OTHERWISE NOTED.
5. FILL JAMB CORES OF OPENINGS OVER 3'-0" WIDE WITH MASONRY GROUT FROM BOTTOM OF LINTEL TO BOTTOM OF WALL. REINFORCE CORES WHERE NOTED.
6. MATERIALS:
   A. CMU COMPRESSIVE STRENGTH, f'm — 1900 PSI
   B. MORTAR — TYPE S (1800 PSI)
   C. MASONRY GROUT — ASTM C476 (2500 PSI MIN)

METALS

1. STRUCTURAL STEEL SHAPES:
   A. W SHAPES — ASTM A992, 50 KSI
   B. S, C AND MC SHAPES — ASTM A36
   C. L SHAPES — ASTM A36
   D. HSS SQUARE AND RECTANGULAR SHAPES — ASTM A500, GRADE B, 46 KSI
   E. HSS ROUND SHAPES — ASTM A500, GRADE B, 42 KSI
   F. PIPE SHAPES — ASTM A53, GRADE B, 35 KSI
   G. PLATES AND BARS — ASTM A36
   H. STAINLESS STEEL:
      1. EXTERIOR AND SUBMERGED USES — AISI, TYPE 316
      2. CAST-IN-PLACE ANCHOR BOLTS — AISI, TYPE 302, 303 OR 304
2. CONNECTION BOLTS FOR STEEL MEMBERS — ASTM A325
3. ANCHOR BOLTS, 1/2" MINIMUM DIA: — STAINLESS STEEL
4. WELD STRUCTURAL STEEL WITH E70 ELECTRODES IN ACCORDANCE WITH A.W.S. REQUIREMENTS.

REMOVALS

1. REMOVE ALL CONCRETE ANCHORS, ANCHOR BOLTS AND OTHER EMBEDMENTS A MINIMUM OF 1" BEYOND FINISHED SURFACE AND PATCH SURFACE WITH PATCHING MORTAR TO MATCH EXISTING.
2. REMOVE CONCRETE AND REINFORCEMENT A MINIMUM OF 1" BEYOND FINISHED SURFACE AT ANY LOCATION WHERE NEW CONCRETE PAD WILL NOT COVER ROUGH SURFACE OF REMOVAL. PATCH BACK TO FINISHED SURFACE WITH PATCHING MORTAR TO MATCH ADJACENT SURFACE.

MISCELLANEOUS

1. FOR ADDITIONAL OPENINGS, ANCHORS AND EMBEDDED ITEMS SEE ARCHITECTURAL, PROCESS, PLUMBING, HVAC & ELECTRICAL DRAWINGS.
2. VERIFY PERTINENT EXISTING CONDITIONS AND DIMENSIONS BEFORE STARTING CONSTRUCTION AND/OR FABRICATION.
3. SUBMIT THE SIZE AND LAYOUT OF OPENINGS IN SLABS FOR MCC UNITS FOR APPROVAL PRIOR TO PLACEMENT OF CONCRETE.

PLAIN BAR MINIMUM REINFORCEMENT SPLICE AND ANCHORAGE LENGTH (INCHES) (08-010)

BAR SIZE IN-POUND	BAR SIZE METRIC mm	LAPPED SPLICE LENGTH		DEVELOPMENT LENGTH		STANDARD HOOK DEVELOPMENT LENGTH	COMPRESSION LAP LENGTH
		TOP BARS	OTHERS	TOP BARS	OTHERS		
3	10	25	19	19	15	6	12
4	13	33	25	25	19	7	15
5	16	41	31	31	24	9	19
6	19	49	37	37	29	11	23
7	22	71	54	54	42	12	27
8	25	81	62	62	48	14	30
9	29	91	70	70	54	16	34
10	32	101	78	78	60	17	38
11	36	111	85	85	66	19	42

NOTES:
1. TOP BARS ARE HORIZONTAL BARS SO PLACED THAT MORE THAN 12" OF CONCRETE IS CAST IN THE MEMBER BELOW THE BAR.
2. CTR TO CTR SPACING OF SPLICED BARS NOT TO EXCEED 1/5 MIN LAP LENGTH OR 6 IN WHICHEVER IS LESS.
3. WHEN LAPPING TWO DIFFERENT SIZE BARS USE THE LAP LENGTH OF THE SMALLER BAR UNLESS NOTED OTHERWISE.
4. DEVELOPMENT LENGTH IS MINIMUM LENGTH OF EMBEDMENT FOR STRAIGHT DOWELS WHERE END HOOK IS NOT SHOWN, UNLESS OTHERWISE NOTED.
5. COMPRESSION LAP LENGTH FOR VERTICAL COLUMN BARS ONLY.
6. HOOKS SHALL BE ACI STANDARD UNLESS OTHERWISE NOTED.

AECOM
4135 TECHNOLOGY PARKWAY
SHEBOYGAN, WI 53083-1883
T 920.458.8711 F 920.458.0537
WWW.AECOM.COM

City of Milwaukee
Department of Public Works
Infrastructure Services Division
Facilities Development & Management Section

NO	REVISIONS	DRN	CHK	DATE

DRN	SDR	2013
DES	SDR	2013
CHK	DRE	2013
APP	RLW	2013

LINCOLN GARAGE MODIFICATIONS
VEHICLE SERVICE BAYS
LINCOLN AVENUE GARAGE
3291 WEST LINCOLN AVENUE
MILWAUKEE, WISCONSIN

STRUCTURAL DETAILS

DATE 2013
CITY PROJECT # BU110030326
ENGINEER PROJECT # 60303317
FILENAME 10-AS-08.dwg
SHEET NO
DRAWING NO **10-AS-08**

Plotted By: reimess
Plot File Date Created: Aug/30/2013 1:31 PM
Layout-Sheet Name: LAYOUT
Filename: P:\60303317\900-WORKINGDOCS-CAD\10-LINCOLN GARAGE MODIFICATIONS\10-AS-08.DWG
Xref: P:\60303317\900-WorkingDocs-CAD\10-Lincoln Garage Modifications\98-S-S010-01.dwg
Image:

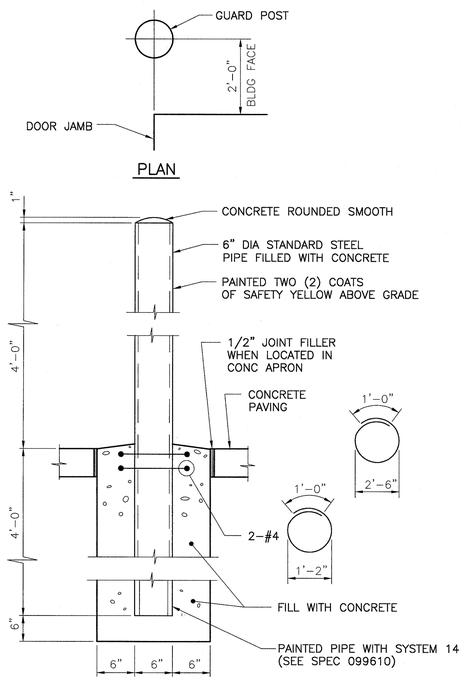

GUARD POST DETAIL (08-100)

NTS

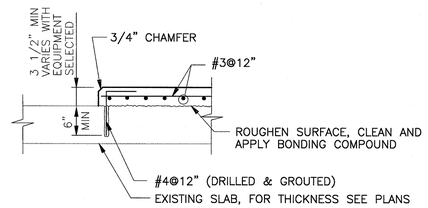

EQUIPMENT PAD DETAIL (08-341)

NTS

NOTE: FOR EQUIPMENT PAD WITH ANCHOR BOLTS SEE (08-343)

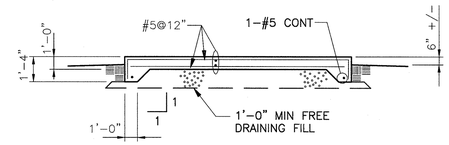

EQUIPMENT PAD DETAIL (08-346)

NTS

NOTE: AT CONTRACTORS OPTION, PAD CAN BE PLACED 1'-4" THICK THROUGHOUT.

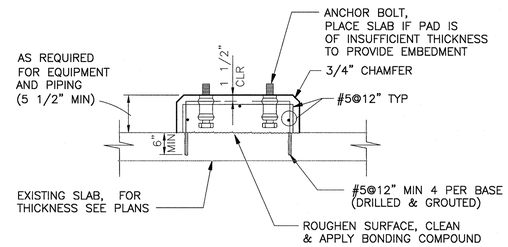

EQUIPMENT PAD DETAIL (08-343)

NTS

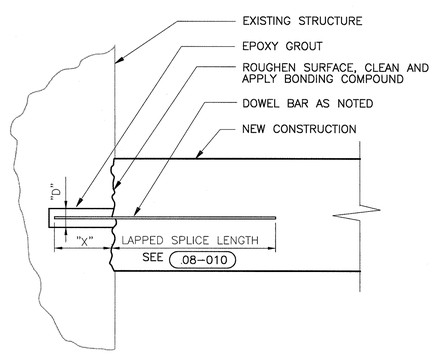

DRILLED IN DOWEL DETAIL (08-385)

NTS

NOTES:

1. EMBEDMENT "X" = 16 BAR DIAMETERS MIN UNO
2. HOLE DIAMETER "D" = AS RECOMMENDED BY EPOXY GROUT MFR.

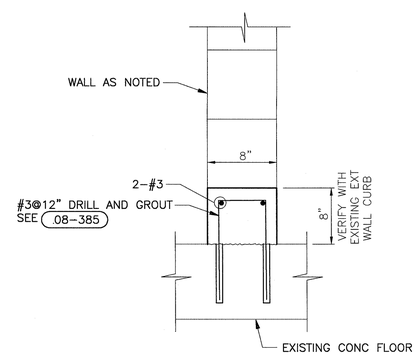

CURB DETAIL (08-395)

NTS

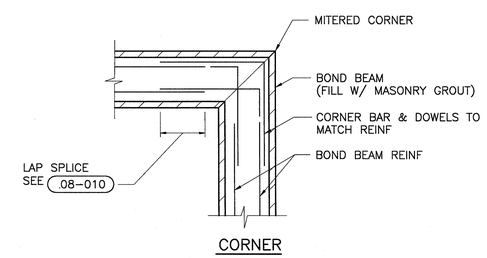

BOND BEAM REINFORCEMENT DETAIL (08-400)

NTS

AECOM
4135 TECHNOLOGY PARKWAY
SHEBOYGAN, WI 53083-1883
T 920.458.8711 F 920.458.0537
WWW.AECOM.COM

City of Milwaukee
Department of Public Works
Infrastructure Services Division
Facilities Development & Management Section

NO	REVISIONS	DRN	CHK	DATE

DRN	SDR	2013
DES	SDR	2013
CHK	DRE	2013
APP	RLW	2013

LINCOLN GARAGE MODIFICATIONS
VEHICLE SERVICE BAYS
LINCOLN AVENUE GARAGE
3291 WEST LINCOLN AVENUE
MILWAUKEE, WISCONSIN

STRUCTURAL DETAILS

DATE 2013
CITY PROJECT # BU110030326
ENGINEER PROJECT # 60303317
FILENAME 10-AS-09.dwg
SHEET NO
DRAWING NO **10-AS-09**

Xrefs: P:\60303317\900-WorkingDocs-CAD\10-Lincoln Garage Modifications\99-S-SDTL-01.dwg
P:\60303317\900-WorkingDocs-CAD\VE2234bdd.dwg
Images:
Plotted By: Johstm
Plot File Date Created: Oct/17/2013 8:08 AM
Layout-Sheet Name: LAYOUT
Filename: P:\60303317\900-WORKINGDOCS-CAD\10-LINCOLN GARAGE MODIFICATIONS\10-AS-09.DWG

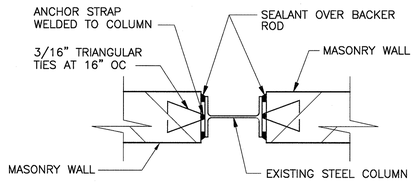

MASONRY WALL ANCHOR DETAIL (08-422)
NTS

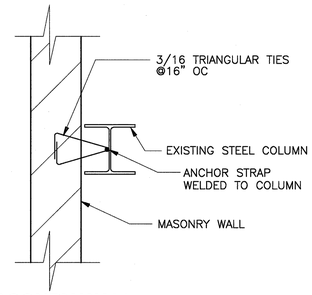

MASONRY WALL ANCHOR DETAIL (08-423)
NTS

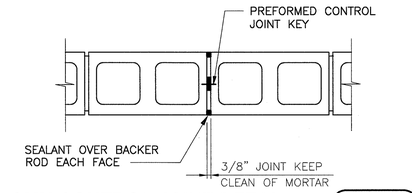

CMU CONTROL JOINT DETAIL (08-430)
NTS
NOTE: DISCONTINUE HORIZ REINF AT CONTROL JOINT.

LINTEL SCHEDULE (08-510)

MARK	DESCRIPTION	TYPE	REMARKS
L-1	W16X31 W/ 5/16" PLATE	I	8" BEARING EACH END, SEE (08-514)
L-2	W18X46 W/ 5/16" BENT PLATE	I	SEE (08-515)

NOTES:
1. MASONRY OPENINGS LESS THAN 4'-0" IN WIDTH THAT DO NOT HAVE A LINTEL SCHEDULED SHALL HAVE A BOND BEAM WITH 2-#5 BARS OR DOUBLE STEEL ANGLE LINTEL WITH A TOTAL WIDTH OF HORIZONTAL LEGS APPROXIMATELY 1" LESS THAN WALL THICKNESS.
2. PROVIDE A MINIMUM OF 8" BEARING AT EACH END FOR STEEL BEAM LINTELS AND BOND BEAM LINTELS AND 6" BEARING AT EACH END FOR ANGLE LINTELS UNLESS NOTED OTHERWISE.

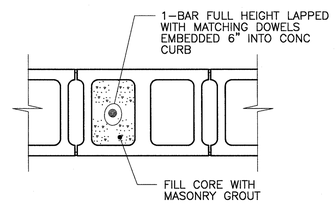

REINFORCED MASONRY DETAIL (08-451)
NTS
NOTES: 1. REINFORCING SIZE AND SPACING AS NOTED.

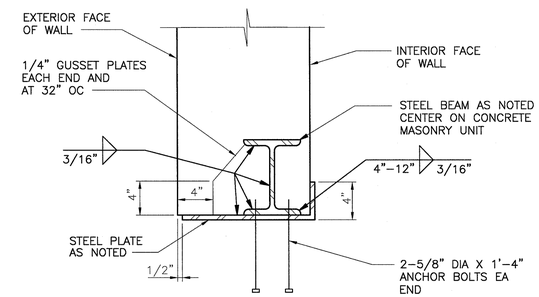

STEEL LINTEL DETAIL (08-514)
NTS

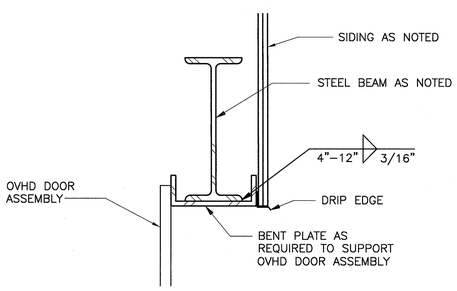

STEEL LINTEL DETAIL (08-515)
NTS

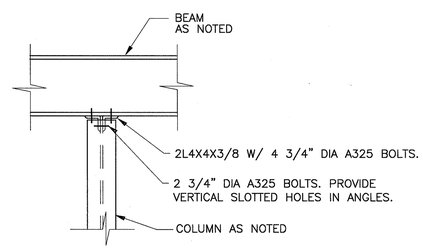

COLUMN - BEAM CONNECTION DETAIL (08-521)
NTS

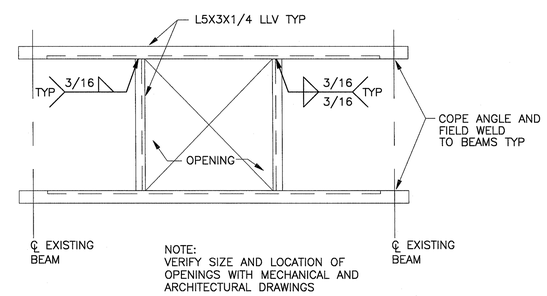

ROOF OPENING STEEL ANGLE FRAME DETAIL (08-529)
NTS

AECOM
4135 TECHNOLOGY PARKWAY
SHEBOYGAN, WI 53083-1883
T 920.458.8711 F 920.458.0537
WWW.AECOM.COM

City of Milwaukee
Department of Public Works
Infrastructure Services Division
Facilities Development & Management Section

NO	REVISIONS	DRN	CHK	DATE

DRN	SDR	2013
DES	SDR	2013
CHK	DRE	2013
APP	RLW	2013

LINCOLN GARAGE MODIFICATIONS
VEHICLE SERVICE BAYS
LINCOLN AVENUE GARAGE
3291 WEST LINCOLN AVENUE
MILWAUKEE, WISCONSIN

STRUCTURAL DETAILS

DATE 2013
CITY PROJECT # BU110030326
ENGINEER PROJECT # 60303317
FILENAME 10-AS-10.dwg
SHEET NO
DRAWING NO **10-AS-10**

Xrefs: P:\60303317\900-WorkingDocs-CAD\10-Lincoln Garage Modifications\99-S-SDTL-01.dwg
P:\60303317\900-WorkingDocs-CAD\AE2234bd.dwg
Images:
Plotted By: Johstm
Plot File Date Created: Oct/17/2013 8:09 AM
Layout-Sheet Name: LAYOUT
Filename: P:\60303317\900-WORKINGDOCS-CAD\10-LINCOLN GARAGE MODIFICATIONS\10-AS-10.DWG

GENERAL NOTES - PLUMBING

1. VERIFY UTILITY INFORMATION WITH LOCAL UTILITY COMPANIES, VISIT THE BUILDING SITE AND BECOME THOROUGHLY FAMILIAR WITH ALL EXISTING CONDITIONS AFFECTING THE WORK.
2. VERIFY ALL MEASUREMENTS, PIPE SIZES, PIPE LOCATIONS, ELEVATIONS, ETC. AT SITES.
3. DRAWINGS OF ALL OTHER TRADES SHALL BE REVIEWED. COORDINATE THE INSTALLATION AND SCHEDULING OF THE WORK WITH OTHER TRADES TO PREVENT INTERFERENCE WITH THEIR RESPECTIVE INSTALLATION.
4. INSTALL ALL WORK SUBSTANTIALLY AS SHOWN ON THE DRAWINGS. DEVIATIONS FROM LOCATIONS OF PIPING INDICATED ON THE DRAWINGS MAY HAVE TO BE MADE AT NO ADDITIONAL COST TO THE OWNER IN ORDER TO CLEAR THE WORK OF THE OTHER TRADES. HOWEVER, ALL SUCH DEVIATIONS SHALL BE PREVIOUSLY APPROVED BY THE OWNER'S REPRESENTATIVE.
5. IT IS THE INTENT OF THESE DRAWINGS THAT A COMPLETE WORKING SYSTEM PROPERLY TESTED, WILL BE OPERATIONAL UPON COMPLETION OF INSTALLATION.
6. CONFLICT BETWEEN DRAWINGS AND SPECIFICATIONS SHALL BE BROUGHT TO THE ATTENTION OF THE ENGINEER PRIOR TO BID OPENING. THE ENGINEER RESERVES THE RIGHT TO FINAL DECISION.
7. UNLESS NOTED OTHERWISE ALL PIPING 3" AND LARGER SHALL BE INSTALLED AT A SLOPE OF 1/8" PER FOOT AND PIPING 2" AND SMALLER AT 1/4" PER FOOT.
8. PLUMBING CONTRACTOR (DIVISION 22) SHALL BE RESPONSIBLE FOR ALL CUTTING AND PATCHING OF HOLES AND OPENINGS IN EXISTING WALLS AND FLOORS.
9. THE DRAWINGS ARE SCHEMATIC IN NATURE. ALL REQUIRED OFFSETS, FITTINGS, AND SUPPORTS SHALL BE INCLUDED IN THE BASE BID TO ACCOMMODATE ACTUAL FIELD CONDITIONS. FINAL LOCATIONS OF ALL WORK SHALL BE COORDINATED IN THE FIELD AND INSTALLED WHERE DIRECTED BY THE OWNER'S REPRESENTATIVE.

GENERAL DEMOLITION NOTES - PLUMBING

1. PLUMBING CONTRACTOR (DIVISION 22) SHALL REVIEW GENERAL NOTES PRIOR TO STARTING.
2. REMOVE ALL FIXTURES, INCLUDING CARRIERS, DRAINS, VALVES, WALL SLEEVES, AND FLOOR SLEEVES, AS NOTED ON THE DRAWINGS.
3. PLUMBING CONTRACTOR (DIVISION 22) SHALL PLUG AND PATCH ANY OPENING LEFT FROM PIPE OR FIXTURE REMOVAL, IN WALLS THAT ARE TO REMAIN. PATCHING SHALL BE DONE IN COMPLIANCE W/ GENERAL REQUIREMENTS.
4. PLUMBING CONTRACTOR (DIVISION 22) SHALL CUT DOWN FLOOR PENETRATION SLEEVES (FLUSH WITH FLOOR) AND PATCH OPENINGS LEFT FROM PIPE OR FIXTURE REMOVAL AS PER THE DETAILS, IN FLOORS THAT ARE TO REMAIN. PATCHING SHALL BE DONE IN COMPLIANCE W/ GENERAL REQUIREMENTS.
5. PROVIDE AND INSTALL CAPS AND PLUGS ON PIPING THAT IS TO REMAIN AFTER FIXTURES ARE REMOVED.
6. PROVIDE CAPS ON AND PROTECT EXISTING PIPING THAT WILL BE RECONNECTED TO DURING THE REMODEL PHASE OF THE PROJECT.
7. PLUMBING CONTRACTOR (DIVISION 22) TO PROTECT EXISTING FIXTURES THAT ARE TO REMAIN FROM DAMAGE OR REMOVAL.

PLUMBING SYMBOL SCHEDULE

	SE	SEWAGE EJECTOR
	SP	SUMP PUMP
	TT	TEMPERING TANK
	ST	STORAGE TANK
	ET	EXPANSION TANK
	HWX	WATER HEATER STEAM
	GWH	WATER HEATER GAS
	EWH	WATER HEATER ELECTRIC
	WS	WATER SOFTENER
	CP	CIRCULATING PUMP
	TMV	TEMPERATURE MIXING VALVE
	EEW	EMERGENCY EYE WASH
	EEWS	EMERGENCY EYE WASH SHOWER
	FFD	FLUSHING FLOOR DRAIN
	WC	WATER CLOSET
	L	LAVATORY
	UR	URINAL
	S	SINK
	BT	BATHTUB
	SH	SHOWER
	EWC	ELECTRIC WATER COOLER
	DF	DRINKING FOUNTAIN
	WCL	COMBINATION WATER CLOSET LAVATORY
	MB	MOP BASIN
	AWC	WASHING MACHINE WALL BOX
	LT	LAUNDRY TRAY
	DSN	DOWN SPOUT NOZZLE
	DBT	DRAINBACK TANK
	LI	LINT INTERCEPTOR
	FSEC	FOOD SERVICE (DIVISION 11) EQUIPMENT CONTRACTOR
	TYP	TYPICAL
	HPT	HYDRO PNEUMATIC TANK
	IW	INDIRECT WASTE
	RV	RELIEF VENT
	ANB	ACID NEUTRALIZATION BASIN

NOTE: ALL SYMBOLS MAY NOT BE USED FOR THIS PROJECT

PLUMBING SYMBOL SCHEDULE

	FCO	FLOOR CLEANOUT
	CO/WCO	CLEANOUT OR WALL CLEANOUT (AS NOTED)
	WHA	WATER HAMMER ARRESTOR
		PIPE CAP
	PRV	PRESSURE REDUCING VALVE
		BUTTERFLY VALVE
		BALL VALVE
		CHECK VALVE
		CALIBRATED BALANCE VALVE, INLINE FLOW SIGHT INDICATOR & CHECK VALVE
		RISING STEM GATE VALVE
		WATER MAIN VALVE AND BOX
		NATURAL GAS SHUT-OFF VALVE
IE= 000.00	IE	INVERT ELEVATION OF SEWER OR DRAIN
00		DRAINAGE/WATER FIXTURE UNIT TAG
0 / 000		DETAIL AND ISOMETRIC REFERENCE
		FOOD SERVICE EQUIPMENT TAG
FFE=100.00	FFE	FINISHED FLOOR ELEVATION
		NEW PIPE CONNECTION TO EXISTING
		CAP EXISTING PIPE
		EQUIPMENT / FIXTURE DEMOLITION
		PIPE DEMOLITION
	HB/WH	HOSE BIBB OR WALL HYDRANT (AS NOTED)
	BFP/RPBP	BACKFLOW PREVENTER
	FD	FLOOR DRAIN
	FS	FLOOR SINK
	HD	HUB DRAIN
	RD/OD	ROOF DRAIN / OVERFLOW DRAIN
	DD	DECK DRAIN
	AFF	ABOVE FINISHED FLOOR
	AP	ACCESS PANEL
	CLVTR	CLEAR WATER VENT THRU ROOF
	COND	STORM / CLEARWATER CONDUCTOR
	SV	STACK VENT
	VS	VENT STACK
	VTR	VENT THRU ROOF
	WS	WASTE STACK
	EXIST	EXISTING
	HS	HAND SINK
	PC	PLUMBING (DIVISION 22) CONTRACTOR

NOTE: ALL SYMBOLS MAY NOT BE USED FOR THIS PROJECT

PLUMBING SYMBOL SCHEDULE

EXISTING	NEW		
AV	AV	AV	ACID VENT ABOVE FLOOR
AV	AV	AV	ACID VENT BELOW GROUND / FLOOR
AW	AW	AW	ACID WASTE ABOVE FLOOR
AW	AW	AW	ACID WASTE BELOW GROUND / FLOOR
D	D	D	DRAIN PIPING
GW	GW	GW	GREASE WASTE
GW	GW	GW	GREASE WASTE BELOW GROUND / FLOOR
PD	PD	PD	PUMP DISCHARGE EFFLUENT / SANITARY
		V	VENT PIPE ABOVE FLOOR
		V	VENT PIPE BELOW GROUND / FLOOR
		W/SAN	WASTE / SANITARY DRAIN ABOVE FLOOR
		W/SAN	WASTE / SANITARY SEWER OR DRAIN BELOW GROUND / FLOOR
CLV	CLV	CLV	CLEAR WATER VENT ABOVE FLOOR
CLV	CLV	CLV	CLEAR WATER VENT BELOW GROUND/FLOOR
CLW	CLW	CLW	CLEAR WATER WASTE ABOVE FLOOR
CLW	CLW	CLW	CLEAR WATER WASTE BELOW GROUND/FLOOR
		STM	STORM DRAIN ABOVE FLOOR
		STM	STORM SEWER OR DRAIN BELOW GROUND / FLOOR
PD	PD	PD	PUMP DISCHARGE STORM / CLEARWATER
DT	DT	DT	DRAINTILE
CSW	CSW	CSW	COLD SOFT WATER PIPING
		CW	COLD WATER
140°	140°	140°	140° HOT WATER
		HW	HOT WATER
140°	140°	140°	140° HOT WATER RETURN
		HWR	HOT WATER RETURN
TW	TW	TW	TEMPERED WATER
TWR	TWR	TWR	TEMPERED WATER RETURN
NP	NP	NP	NON-POTABLE WATER
G	G	G	NATURAL GAS
A	A	A	COMPRESSED AIR
SS	SS	SS	SOLAR HEAT TRANSFER FLUID PIPING - SUPPLY
SR	SR	SR	SOLAR HEAT TRANSFER FLUID PIPING - RETURN
			FOR NON DESIGNATED BELOW SLAB PIPING
RO	RO	RO	REVERSE OSMOSIS

NOTE: ALL SYMBOLS MAY NOT BE USED FOR THIS PROJECT

AIR COMPRESSOR SCHEDULE

TAG	LOCATION	MANUFACTURER	MODEL	OPERATION	HP	SCFM	PSIG	MAX PSIG	RPM	EQUIPMENT VOLTAGE/HERTZ/PHASE	REMARKS
AC-1	GARAGE	INGERSOLL RAND	UP6-10TAS-150	SHOP AIR	10	34	145	150	3500	460 / 3 / 60	

SHEET INDEX PLUMBING

10-P-01 PLUMBING - COVER SHEET
10-P-02 PLUMBING - FLOOR PLAN - DEMOLITION
10-P-03 PLUMBING - FLOOR PLAN
10-P-04 PLUMBING - DETAILS

P&J ENGINEERING, INC.
CONSULTING ENGINEERS
MILWAUKEE, (414)355-2211
WWW.PANDJENGINEERING.COM
PLUMBING, HVAC, FIRE PROTECTION
DOCUMENTS DESIGNED BY:MAC/PLW
13-005

City of Milwaukee
Department of Public Works
Infrastructure Services Division
Facilities Development & Management Section

NO	REVISIONS	DATE	CHK	DRN

DRN	MAC	OCT 2013
DES	PRB	OCT 2013
CHK		
APP		

LINCOLN GARAGE MODIFICATIONS
VEHICLE SERVICE BAYS
LINCOLN AVENUE GARAGE
3291 WEST LINCOLN AVENUE
MILWAUKEE, WISCONSIN

PLUMBING - COVER SHEET

DATE OCTOBER 2013
CITY PROJECT # BU110030326
ENGINEER PROJECT # 13-005
FILENAME
SHEET NO
DRAWING NO 10-P-01

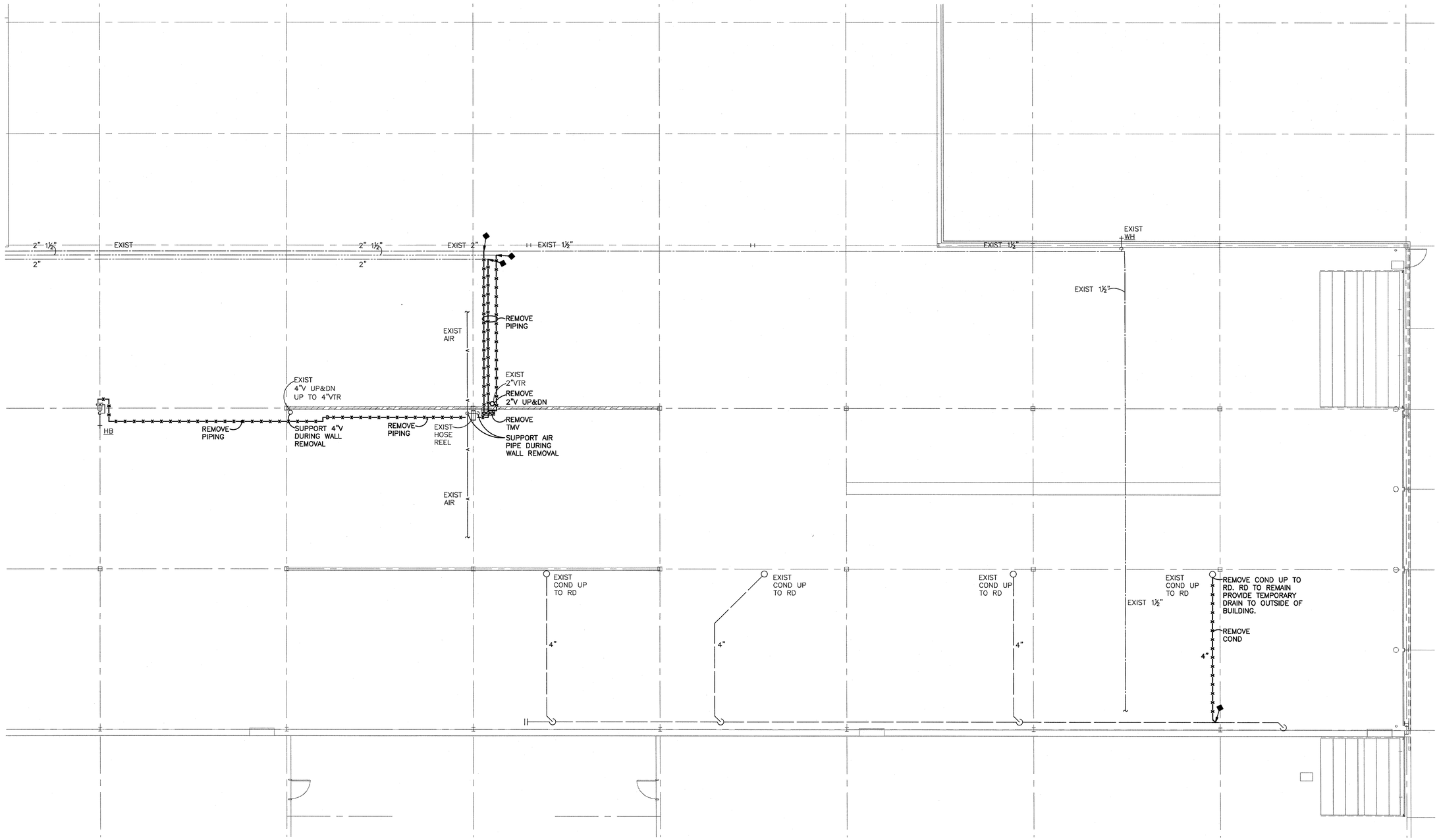

PLUMBING - FLOOR PLAN - DEMOLITION

0' 4' 8' 16'
SCALE

N

P.J. ENGINEERING, INC.
CONSULTING ENGINEERS
MILWAUKEE, (414)352-2311
WAUKESHA, (262)547-2400
PLUMBING, HVAC, FIRE PROTECTION
DOCUMENTS DESIGNED BY MAC/RJW
13-005

City of Milwaukee
Department of Public Works
Infrastructure Services Division
Facilities Development & Management Section

NO	REVISIONS	DRN	CHK	DATE

DRN	MAC	OCT 2013	
DES	PRB	OCT 2013	
CHK			
APP			

LINCOLN GARAGE MODIFICATIONS
VEHICLE SERVICE BAYS
LINCOLN AVENUE GARAGE
3291 WEST LINCOLN AVENUE
MILWAUKEE, WISCONSIN

PLUMBING - FLOOR PLAN - DEMOLITION

DATE OCTOBER 2013
CITY PROJECT # BU110030326
ENGINEER PROJECT # 13-005
FILENAME
SHEET NO
DRAWING NO 10-P-02

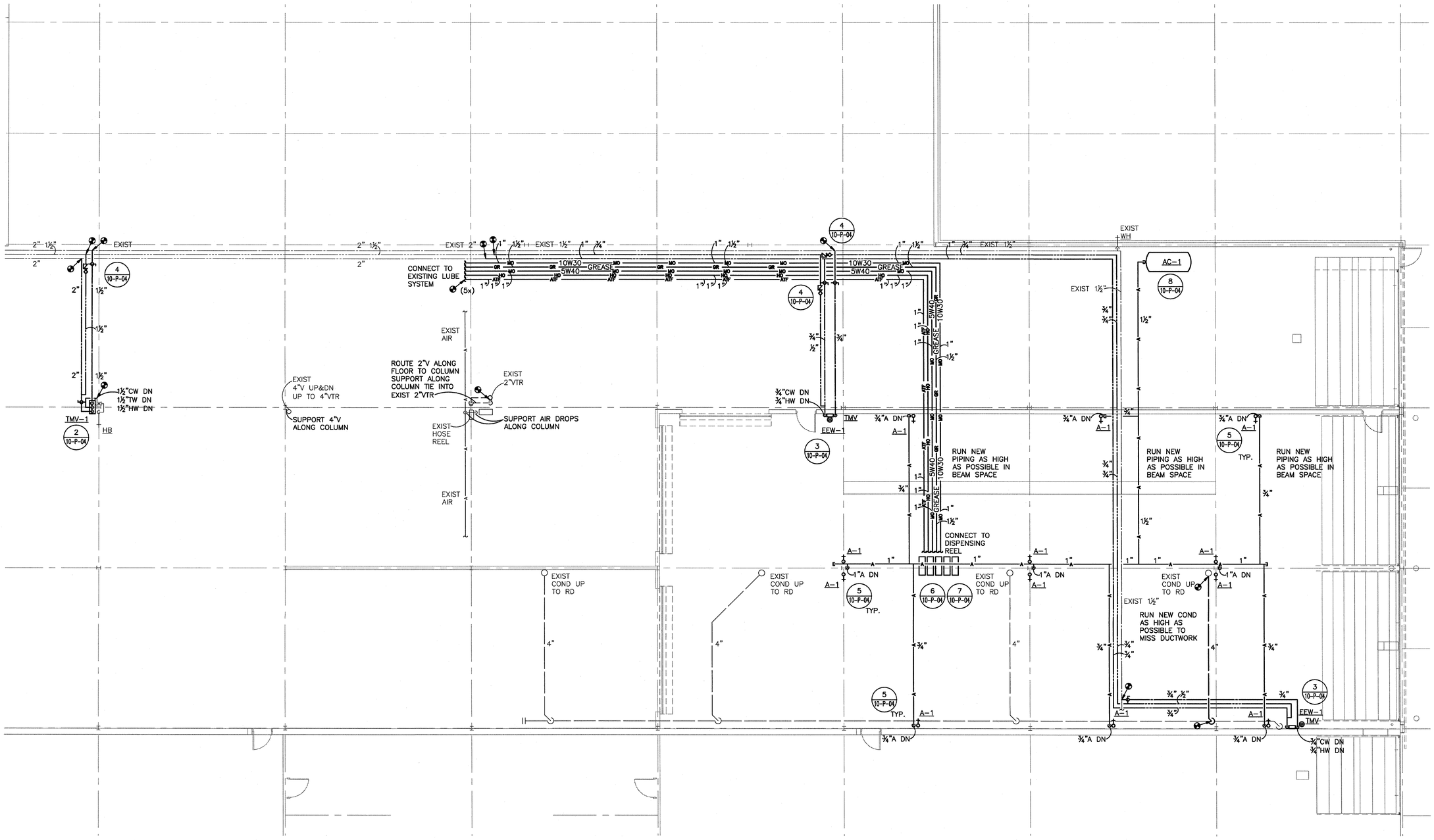

PLUMBING - FLOOR PLAN

0' 4' 8' 16'
SCALE

N

PSJ ENGINEERING, INC.
CONSULTING ENGINEERS
MILWAUKEE, (414)355-2211
WWW.PSJENGINEERING.COM
PLUMBING, HVAC, FIRE PROTECTION
DOCUMENTS DESIGNED BY:MAF/AJW
13-005

City of Milwaukee
Department of Public Works
Infrastructure Services Division
Facilities Development & Management Section

NO	REVISIONS	DRN	CHK	DATE

DRN	MAC	OCT 2013
DES	PRB	OCT 2013
CHK		
APP		

LINCOLN GARAGE MODIFICATIONS
VEHICLE SERVICE BAYS
LINCOLN AVENUE GARAGE
3291 WEST LINCOLN AVENUE
MILWAUKEE, WISCONSIN

PLUMBING - FLOOR PLAN

DATE OCTOBER 2013
CITY PROJECT # BU110030326
ENGINEER PROJECT # 13-005
FILENAME
SHEET NO
DRAWING NO 10-P-03

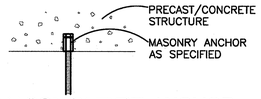

MASONRY TYPE ANCHOR

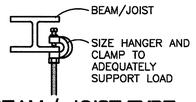

BEAM / JOIST TYPE ANCHOR

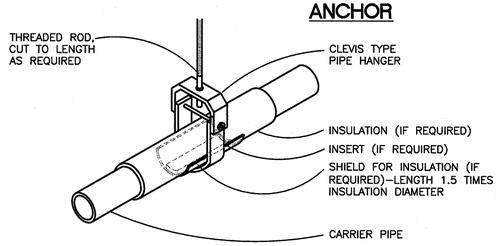

CLEVIS TYPE PIPE HANGER

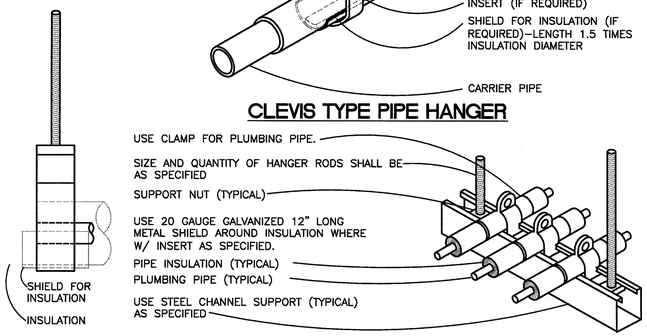

PIPE AND CONDUIT OF ALL TRADES MAY BE COMBINED ON SAME SUPPORT CHANNEL WHERE PRACTICAL. SUPPORT CHANNEL DESIGN SHALL NOT BE DETERMINED UNTIL ALL PIPING AND CONDUIT TO BE SUPPORTED IS COORDINATED. NOTE – CORROSIVE ATMOSPHERE SPECIFICATION REQUIREMENTS.

TRAPEZE PIPE HANGER DETAIL

1 PIPE HANGER DETAILS
SCALE: NONE

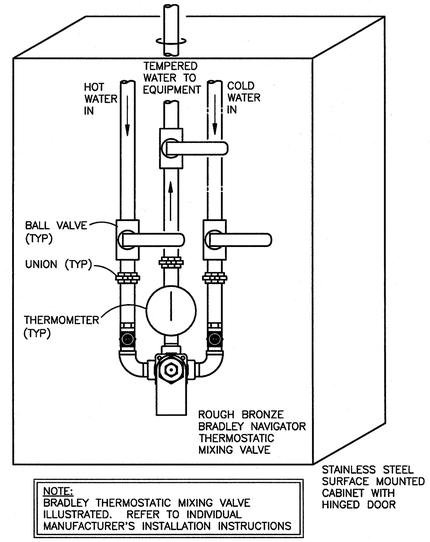

NOTE:
BRADLEY THERMOSTATIC MIXING VALVE ILLUSTRATED. REFER TO INDIVIDUAL MANUFACTURER'S INSTALLATION INSTRUCTIONS

2 MIXING VALVE DETAIL
SCALE: NONE

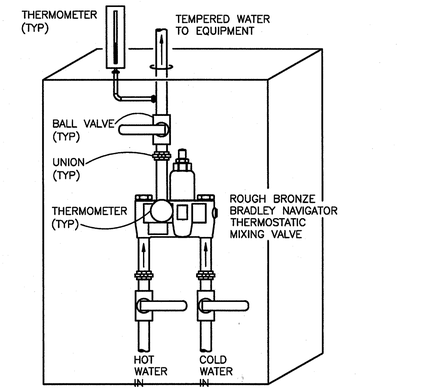

NOTE:
BRADLEY THERMOSTATIC MIXING VALVE ILLUSTRATED. REFER TO INDIVIDUAL MANUFACTURER'S INSTALLATION INSTRUCTIONS

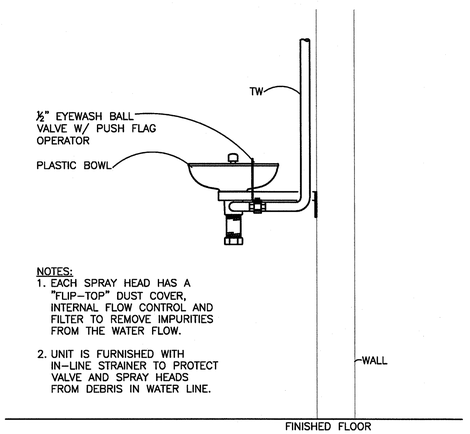

NOTES:
1. EACH SPRAY HEAD HAS A "FLIP–TOP" DUST COVER, INTERNAL FLOW CONTROL AND FILTER TO REMOVE IMPURITIES FROM THE WATER FLOW.
2. UNIT IS FURNISHED WITH IN–LINE STRAINER TO PROTECT VALVE AND SPRAY HEADS FROM DEBRIS IN WATER LINE.

(EEW-1) 3 EMERGENCY EYE WASH AND MIXING VALVE
SCALE: NONE

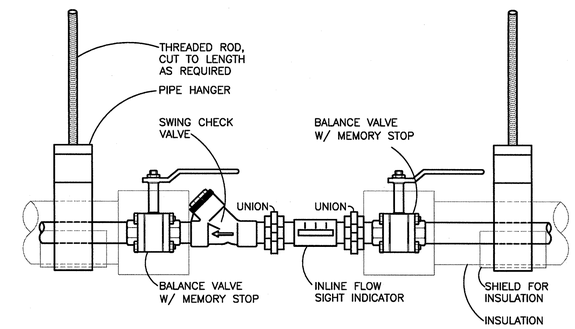

NOTE:
INLINE FLOW SIGHT INDICATOR SHALL BE INSTALLED ONLY AFTER THOROUGHLY FLUSHING THE SYSTEM.

4 HWR BALANCE VALVE DETAIL
SCALE: NONE

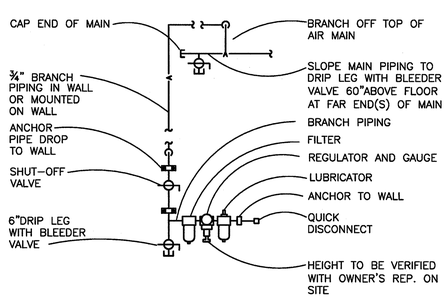

A-1 5 COMPRESSED AIR ACCESSORY
SCALE: NONE

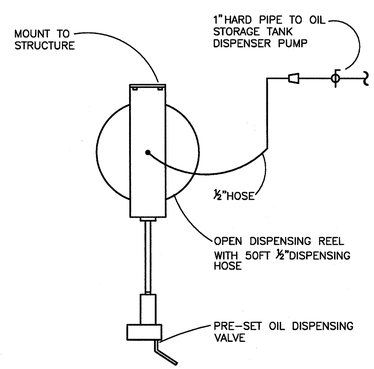

6 OVERHEAD OIL DISPENSING REEL DETAIL
SCALE: NONE

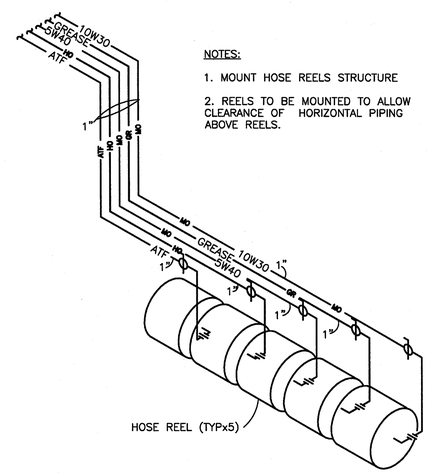

NOTES:
1. MOUNT HOSE REELS STRUCTURE
2. REELS TO BE MOUNTED TO ALLOW CLEARANCE OF HORIZONTAL PIPING ABOVE REELS.

7 DISPENSING REEL PIPING DETAIL
SCALE: NONE

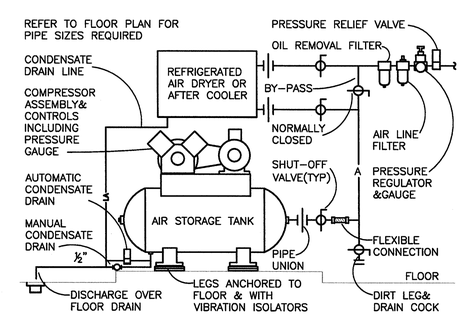

MAKE CONNECTION SHOWN AND/OR AS RECOMMENDED BY MANUFACTURER. PIPING SHOWN IS SCHEMATIC: ADJUST AS REQUIRED TO SUIT CONDITIONS

AIR COMPRESSOR CONNECTION DETAIL
SCALE: NONE

PSJ ENGINEERING, INC.
CONSULTING ENGINEERS
MILWAUKEE, (414)355-2211
MADISON, (608)251-9400
PLUMBING, HVAC, FIRE PROTECTION
DOCUMENTS DESIGNED BY:Cal/Pum
13-005

City of Milwaukee
Department of Public Works
Infrastructure Services Division
Facilities Development & Management Section

NO	REVISIONS	DRN	CHK	DATE

DRN	MAC	OCT 2013	
DES	PRB	OCT 2013	
CHK			
APP			

LINCOLN GARAGE MODIFICATIONS
VEHICLE SERVICE BAYS
LINCOLN AVENUE GARAGE
3291 WEST LINCOLN AVENUE
MILWAUKEE, WISCONSIN

PLUMBING – DETAILS

DATE OCTOBER 2013
CITY PROJECT # BU110030326
ENGINEER PROJECT # 13–005
FILENAME
SHEET NO
DRAWING NO 10–P–04

HVAC ABBREVIATIONS

°F	DEGREE FAHRENHEIT
AC	AIR CURTAIN
AC	AIR COMPRESSOR
ACC	AIR COOLED CONDENSER
ACCU	AIR COOLED CONDENSING UNIT
ACU	AIR CONDITIONING UNIT
AD	ACCESS DOOR
AFF	ABOVE FINISHED FLOOR
AHU	AIR HANDLING UNIT
AL	ALUMINUM
ALT	ALTERNATE
AMB	AMBIENT
AMS	AIR MEASURING STATION
APD	AIR PRESSURE DROP
APRX	APPROXIMATE
ARCH	ARCHITECT / ARCHITECTURAL
AWT	AVERAGE WATER TEMPERATURE
B	BOILER
B/N	BETWEEN
BC	BOOSTER COIL
BDD	BACKDRAFT DAMPER
BHP	BRAKE HORSEPOWER
BTU	BRITISH THERMAL UNIT
BTUH	BTU PER HOUR
C	CONVECTOR
CAP	CEILING ACCESS PANEL
CAP	CAPACITY
CAV	CONSTANT AIR VOLUME
CB	CHILLED BEAM
CC	COILING COIL
CD	CEILING DIFFUSER
CEF	CEILING EXHAUST FAN
CFH	CUBIC FEET PER HOUR
CFM	CUBIC FEET PER MINUTE
CFR	CONSTANT FLOW REGULATOR
CKTS	CIRCUITS
CMU	CONCRETE MASONRY UNIT
C/MAG	COMBINATION MAGNETIC
COND	CONDENSATE
CONN	CONNECTION
CONT	CONTINUATION
CONTR	CONTRACTOR
COP	COEFFICIENT OF PERFORMANCE
CPU	CENTRAL PROCESSING UNIT
CR	CONDENSER WATER RETURN
CS	CONDENSER WATER SUPPLY
CU FT	CUBIC FEET
CU IN	CUBIC INCHES
CUH	CABINET UNIT HEATER
CWR	CHILLED WATER RETURN
CWS	CHILLED WATER SUPPLY
D	DEHUMIDIFIER
DAP	DUCT ACCESS PANEL
DB	DRY BULB
dB	DECIBEL
DDC	DIRECT DIGITAL CONTROLS
DEC	DIRECT EVAPORATIVE COOLING
DG	DOOR GRILLE
DIA	DIAMETER
DISCH	DISCHARGE
DIV	DIVISION
DIV 21	FIRE PROTECTION WORK
DIV 22	PLUMBING WORK
DIV 23	HVAC WORK
DIV 26	ELECTRICAL WORK
DN	DOWN
DP	DIFFERENTIAL PRESSURE
DR	DRAIN
DS	DUCT SILENCER
EA	EXHAUST AIR
EAT	ENTERING AIR TEMPERATURE
EBB	ELECTRIC BASE BOARD
EC	ELECTRICAL CONTRACTOR
ECH	EACH
EDB	ELECTRIC DUCT HEATER
EER	ENERGY EFFICIENCY RATIO
EF	EXHAUST FAN
EFF	EFFICIENCY
EG	EXHAUST GRILLE
EG	ETHYLENE GLYCOL
EL	ELEVATION
ELEC	ELECTRIC/ELECTRICAL
ENTH	ENTHALPY
EQUIP	EQUIPMENT
ESP	EXTERNAL STATIC PRESSURE
ET	EXPANSION TANK
EUH	ELECTRIC UNIT HEATER
EVAP	EVAPORATIVE
EWH	ELECTRIC WALL HEATER
EWT	ENTERING WATER TEMPERATURE
EXIST	EXISTING
F	FILTER OR FURNACE
FA	FACE AREA
FCU	FAN COIL UNIT
FD	FIRE DAMPER
FLA	FULL LOAD AMPS
FLEX	FLEXIBLE
FOR	FUEL OIL RETURN
FOS	FUEL OIL SUPPLY
FOV	FUEL OIL VENT
FPM	FEET PER MINUTE
FS	FLOW SWITCH
FT	FEET
FTR	FINNED TUBE RADIATION
FV	FACE VELOCITY
GA	GAUGE
GAL	GALLON
GBD	GRAVITY BACKDRAFT DAMPER
GC	GENERAL CONTRACTOR
GI	GALVANIZED IRON
GPM	GALLONS PER MINUTE
H	HUMIDIFIER
HC	HEATING COIL
HD	HEAD
HF	HEAT FAN
HG	HOT GAS
HGB	HOT GAS BYPASS
H-O-A	HAND-OFF-AUTO
HP	HORSEPOWER
HPC	HIGH PRESSURE CONDENSATE
HPG	HIGH PRESSURE GAS
HPS	HIGH PRESSURE STEAM
HR	HOUR
HVAC	HEATING, VENTILATING, AIR CONDITIONING
HW	HOT WATER
HWC	HOT WATER COIL
HWR	HEATING HOT WATER RETURN
HWS	HEATING HOT WATER SUPPLY
HX	HEAT EXCHANGER
HZ	HERTZ
IAW	IN ACCORDANCE WITH
ID	INSIDE DIAMETER
IDEC	INDIRECT EVAPORATIVE COOLING
IN	INCHES
IN WC	INCHES WATER COLUMN
IRH	INFRARED HEATER
KW	KILOWATT
L	LOUVER
LAT	LEAVING AIR TEMPERATURE
LB	POUND
LD	LINEAR SLOT DIFFUSER
LF	LINEAR FEET
LPC	LOW PRESSURE CONDENSATE
LPG	PROPANE
LPS	LOW PRESSURE STEAM
LRA	LOCKED ROTOR AMPS
LWT	LEAVING WATER TEMPERATURE
MAG	MAGNETIC
MAN	MANUAL
MAU	MAKE-UP AIR UNIT
MAX	MAXIMUM
MBH	THOUSAND BTU PER HOUR
MC	MECHANICAL CONTRACTOR
MCA	MINIMUM CIRCUIT AMPACITY
MERV	MINIMUM EFFICIENCY REPORTING VALUE
MCC	MOTOR CONTROL CENTER
MFR	MANUFACTURER
MFS	MAXIMUM FUSE SIZE
MIN	MINIMUM
MOD	MOTOR OPERATED DAMPER
MOCP	MAXIMUM OVERCURRENT PROTECTION
MPC	MEDIUM PRESSURE CONDENSATE
MPS	MEDIUM PRESSURE STEAM
MU	MAKE UP WATER
MVD	MANUAL VOLUME DAMPER
NC	NORMALLY CLOSED
NC	NOISE CRITERIA
NFPA	NATIONAL FIRE PROTECTION ASSOC.
NG	NATURAL GAS
NO	NORMALLY OPEN
NO	NUMBER
NPSH	NET POSITIVE SUCTION HEAD
OA	OUTSIDE AIR
OD	OUTSIDE DIAMETER
OHP	OVERHEAT PROTECTION
OLP	OVERLOAD PROTECTION
OPR WT	OPERATING WEIGHT
OPNG	OPENING
OZ	OZONE
P	PUMP
PC	PLUMBING CONTRACTOR
PC	PUMPED CONDENSATE
PD	PRESSURE DROP
PH	PHASE
POC	POINT OF CONNECTION
PRESS	PRESSURE
PRV	POWER ROOF VENTILATOR
PRV	PRESSURE REDUCING VALVE
PRLV	PRESSURE RELIEF VALVE
PSI	POUNDS PER SQUARE INCH
PSIG	PSI GAUGE
PTAC	PACKAGED TERMINAL AIR CONDITION UNIT
PVC	POLYVINYLCHLORIDE
QTY	QUANTITY
RA	RETURN AIR
RC	REHEAT COIL
RD	REFRIGERANT DISCHARGE PIPING
REF	RETURN EXHAUST FAN
REQD	REQUIRED
RF	RELIEF FAN
RG	RETURN GRILLE
RH	RELATIVE HUMIDITY
RL	REFRIGERANT LIQUID LINE
RLA	RUNNING LOAD AMPS
RPM	REVOLUTIONS PER MINUTE
RS	REFRIGERANT SUCTION PIPING
RTU	ROOFTOP UNIT
SA	SUPPLY AIR
SAT	SATURATED
SB	SECURITY BARRIER
SCFM	CFM, STANDARD CONDTIONS
SD	SMOKE DAMPER
SEC GR	SECURITY GRILLE
SEER	SEASONAL ENERGY EFFICIENCY RATIO
SF	SUPPLY FAN
SFD	COMBINATION SMOKE/FIRE DAMPER
SG	SUPPLY GRILLE
SP	STATIC PRESSURE
SPEC	SPECIFICATION
SQ FT	SQUARE FEET
SS	STAINLESS STEEL
SST	SATURATED SUCTION TEMPERATURE
START	STARTER
TCC	TEMPERATURE CONTROL CONTRACTOR
TCP	TEMPERATURE CONTROL PANEL
TEMP	TEMPERATURE
TG	TRANSFER GRILLE
TS	TIP SPEED
TSP	TOTAL STATIC PRESSURE
TURB	TURBULATORS
TYP	TYPICAL
UCD	UNDERCUT DOOR
UH	UNIT HEATER
UM	UNIT MANUFACTURER
UON	UNLESS OTHERWISE NOTED
UV	UNIT VENTILATOR
UV	ULTRA VIOLET
VAV	VARIABLE AIR VOLUME
VEL	VELOCITY
VFD	VARIABLE FREQUENCY DRIVE
VIF	VERIFY IN FIELD
W	WATTS
W/	WITH
W/N	WITHIN
WAC	WINDOW AIR CONDITIONER
WAP	WALL ACCESS PANEL
WB	WET BULB
WC	WATER COLUMN
WG	WATER GAUGE
WPD	WATER PRESSURE DROP

PIPING SYMBOL SCHEDULE

	GATE VALVE – NON RISING STEM
	GLOBE VALVE, ANGLE
	GLOBE VALVE
	BUTTERFLY VALVE
	BALL VALVE
	BALANCE VALVE, CALIBRATED
	CHECK VALVE
	BALL TYPE DRAIN VALVE WITH 3/4" HOSE CONNECTION, CAP AND CHAIN.
	GAS COCK
	CONTROL VALVE, 2-WAY – MODULATING
	CONTROL VALVE, 3-WAY – MODULATING
	PRESSURE REDUCING VALVE
	RELIEF OR SAFETY VALVE
	RISING STEM GATE VALVE
	AIR VENT, MANUAL
	STRAINER
	PRESSURE/TEMPERATURE PLUG
	EMERGENCY SHUT-OFF VALVE
	FLEXIBLE CONNECTOR
	PIPE GUIDE
	PIPE ANCHOR
	TEE, TOP TAKEOFF
	TEE, BOTTOM TAKEOFF
	ELBOW, UP
	ELBOW, DOWN
R	PIPE RISE(R) OR DROP(D) IN DIRECTION OF FLOW
	PIPE CAP
	PIPE UNION
	PRESSURE GAUGE WITH 1/4" PIPING AND GAUGE COCKS
	THERMOMETER
P DP	PRESSURE, DIFFERENTIAL PRESSURE SENSOR
	POINT OF CONNECTION – NEW / DEMO
	CONSTANT FLOW REGULATOR
D	DRAIN PIPING
HWS	HEATING WATER SUPPLY PIPING
HWR	HEATING WATER RETURN PIPING
CWS	CHILLED WATER SUPPLY PIPING
CWR	CHILLED WATER RETURN PIPING
CS	CONDENSER WATER SUPPLY PIPING
CR	CONDENSER WATER RETURN PIPING
HPS	HIGH PRESSURE STEAM PIPING
HPC	HIGH PRESSURE STEAM CONDENSATE PIPING
LPS	LOW PRESSURE STEAM PIPING
LPC	LOW PRESSURE STEAM CONDENSATE PIPING
G	GAS PIPING
RD	REFRIGERANT DISCHARGE PIPING
RS	REFRIGERANT SUCTION PIPING
RL	REFRIGERANT LIQUID PIPING
HG	REFRIGERANT HOT GAS PIPING
FOS	FUEL OIL SUPPLY PIPING
FOR	FUEL OIL RETURN PIPING
FOV	FUEL OIL VENT PIPING
PC	PUMPED CONDENSATE PIPING
MU	MAKE-UP WATER PIPING
X—X—X—X—X	PIPING AND PIPE EQUIPMENT TO BE REMOVED
F	VENTURI FLOW METER
	FLOW DIRECTION
	CAP CONNECTION
	STEAM TRAP

DUCTWORK SYMBOL SCHEDULE

	MANUAL VOLUME DAMPER (MVD)
DAP	DUCT ACCESS PANEL (DAP)
	CEILING ACCESS PANEL (CAP)
	ELBOW WITH HIGH EFFICIENCY TURNING VANES
	FLEXIBLE DUCT CONNECTION
UP DOWN	ROUND DUCT
UP DOWN	SUPPLY/OUTSIDE AIR DUCT
UP DOWN	EXHAUST/RETURN/RELIEF DUCT
R	RISE (R) OR DROP (D) IN DIRECTION OF FLOW
MOD	MOTORIZED CONTROL DAMPER WITH ACCESS DOOR
GBD	GRAVITY BACKDRAFT DAMPER WITH ACCESS DOOR
	CONICAL BELLMOUTH ROUND TAKEOFF WITH MANUAL VOLUME DAMPER.
	45° ENTRY, RECTANGULAR-TO-ROUND TAKEOFF WITH MANUAL VOLUME DAMPER.
	RECTANGULAR-TO-ROUND TRANSITION
	DUCT CAP
AHU 1 / XXX XX TYPE NUMBER	EQUIPMENT TAG
EXAMPLE: CD-1 12"ø 300	GRILLE, REGISTER, OR DIFFUSER TAG TAG SIZE CFM
T H	CONTROL: THERMOSTAT, HUMIDISTAT
T H G	SENSOR: TEMPERATURE, HUMIDITY, NATURAL GAS
SP	DUCT STATIC PRESSURE SENSOR
SD	SMOKE DETECTOR
MC	MOTOR CONTROL/STARTER
	DUCTWORK OR DUCT EQUIPMENT TO BE REMOVED
	NEW DUCTWORK OR EQUIPMENT
	EXISTING DUCTWORK OR EQUIPMENT
FD	VERTICAL MOUNTED FIRE DAMPER (1½ HR) UON
FD	HORIZONTAL MOUNTED FIRE DAMPER (1½ HR) UON
SD	SMOKE DAMPER
SFD	COMBINATION FIRE/SMOKE DAMPER
	DUCT MOUNTED TEMPERATURE SENSOR
ø	DIAMETER FOR ROUND DUCTWORK
	OVAL SIZES
SB	DUCT MOUNTED SECURITY BARRIER
	AIRFLOW DIRECTION
UCD	1" UNDER CUT DOOR (BY DIV 8)
	FLEXIBLE DUCT
	DUCTWORK WITH ACOUSTICAL LINING.

GENERAL NOTES

1. NOT ALL SYMBOLS AND ABBREVIATIONS ARE USED ON THE DRAWINGS.
2. HVAC SYSTEM SHALL CONFORM TO SPECIFICATIONS AND OTHER CONTRACT REQUIREMENTS.
3. PROVIDE ACCESS PANELS IN DUCTWORK, WALLS AND CEILINGS FOR ACCESS TO ALL CONCEALED DAMPERS, SMOKE DETECTORS, CONTROLS, VALVES, AIR VENTS, AIR TERMINALS, EXPANSION COMPENSATING DEVICES, COILS, FILTERS, FANS AND EQUIPMENT.
4. ALL DUCT SIZES ARE NET FREE AREA INSIDE DIMENSIONS.
5. THE CONTRACTOR IS RESPONSIBLE FOR CONFIRMING AND CORRELATING ALL QUANTITIES, SIZES, CAPACITIES, ACCESSORIES, MATERIALS, SPACE REQUIREMENTS, ACCESSIBILITY, CODE CLEARANCES AND PERFORMANCE.
6. THE CONTRACTOR SHALL COORDINATE ALL WORK WITH THAT OF OTHER TRADES.
7. PSJ ENGINEERING, INC. ACCEPTS NO RESPONSIBILITY FOR DESIGN/BUILD CHANGES, EQUIPMENT SUBSTITUTIONS, AND VALUE ENGINEERING CHANGES PERFORMED BY THE CONTRACTOR.
8. THE DRAWINGS ARE SCHEMATIC IN NATURE. ALL REQUIRED DUCTWORK AND PIPING MODIFICATIONS SHALL BE INCLUDED IN THE BASE BID TO ACCOMMODATE ACTUAL FIELD CONDITIONS. FINAL LOCATIONS OF ALL WORK SHALL BE COORDINATED IN THE FIELD AND INSTALLED WHERE DIRECTED BY THE OWNERS REPRESENTATIVE.
9. VERIFY CONDITIONS AND DIMENSIONS ON SITE. DO NOT SCALE DRAWINGS. FIELD VERIFY AND COORDINATE ALL DUCT AND PIPING DIMENSIONS BEFORE FABRICATION.
10. CONTRACTOR IS RESPONSIBLE FOR THE MEANS AND METHODS OF FABRICATION, CONSTRUCTION, AND INSTALLATION OF THE HVAC SYSTEM AS DESIGNED AND SPECIFIED.
11. THE CONTRACTOR SHALL DETERMINE THE EXACT LOCATION OF ALL EXISTING UTILITIES BEFORE COMMENCING WORK. THE CONTRACTOR SHALL PAY FOR AND REPAIR ALL DAMAGES CAUSED BY FAILURE TO EXACTLY LOCATE AND PRESERVE ANY AND ALL UNDERGROUND UTILITIES UNLESS OTHERWISE INDICATED.
12. INSTALL ALL DUCTWORK, PIPING, SUSPENDED EQUIPMENT, ETC. AS HIGH AS POSSIBLE TO PROVIDE MAXIMUM CLEARANCE.
13. COORDINATE ALL EQUIPMENT CONNECTIONS WITH MANUFACTURERS' RECOMMENDATIONS. COORDINATE AND PROVIDE ALL DUCT AND PIPING TRANSITIONS REQUIRED FOR FINAL EQUIPMENT CONNECTIONS TO FURNISHED EQUIPMENT.
14. THE LOCATIONS OF ALL ITEMS SHOWN ON THE DRAWINGS, OR CALLED FOR IN THE SPECIFICATIONS, THAT ARE NOT FIXED BY DIMENSIONS ARE APPROXIMATE ONLY. THE EXACT LOCATIONS NECESSARY TO SECURE THE BEST CONDITIONS AND RESULTS MUST BE DETERMINED BY THE PROJECT SITE CONDITIONS AND SHALL HAVE THE APPROVAL OF THE ENGINEER BEFORE BEING INSTALLED BY THE MECHANICAL CONTRACTOR. DO NOT SCALE DRAWINGS.
15. ALL EQUIPMENT, PIPING, DUCTWORK, ETC., SHALL BE SUPPORTED AS DETAILED, SPECIFIED AND REQUIRED TO PROVIDE A VIBRATION FREE INSTALLATION.

PIPING

1. PIPING WORK SHALL BE COORDINATED WITH ALL TRADES INVOLVED. OFFSETS IN PIPING AROUND OBSTRUCTIONS SHALL BE PROVIDED AT NO ADDITIONAL COST TO THE OWNER. MECHANICAL CONTRACTOR SHALL FIELD VERIFY ALL EXISTING STRUCTURAL CONDITIONS PRIOR TO FABRICATION AND INSTALLATION OF PIPING SYSTEMS.

HVAC/SHEET METAL

1. CERTAIN ITEMS, SUCH AS RISES AND DROPS IN DUCTWORK, ACCESS DOORS, VOLUME DAMPERS, ETC. ARE INDICATED ON THE CONTRACT DOCUMENT DRAWINGS TO HIGHLIGHT SPECIFIC LOCATION REQUIREMENT, AND SHALL NOT BE INTERPRETED AS THE EXTENT OF THE REQUIREMENTS FOR THESE ITEMS.
2. COORDINATE DIFFUSER, REGISTER, AND GRILLE LOCATIONS WITH ARCHITECTURAL REFLECTED CEILING PLANS, LIGHTING, AND OTHER CEILING ITEMS AND MAKE MINOR DUCT MODIFICATIONS TO SUIT. LIGHTING FIXTURE LOCATIONS TAKE PRIORITY OVER DIFFUSER LOCATIONS.
3. LOCATE ALL MECHANICAL EQUIPMENT FOR UNOBSTRUCTED ACCESS TO PANELS, CONTROLS AND VALVING.
4. DUCTWORK SHALL BE COORDINATED WITH ALL TRADES INVOLVED. OFFSETS IN DUCTS, INCLUDING DIVIDED DUCTS AND TRANSITIONS AROUND OBSTRUCTIONS, SHALL BE PROVIDED AT NO ADDITIONAL COST TO THE OWNER. MECHANICAL CONTRACTOR SHALL FIELD VERIFY ALL EXISTING STRUCTURAL CONDITIONS PRIOR TO FABRICATION AND INSTALLATION OF DUCT SYSTEMS.

EQUIPMENT AND SUPPORTS

1. ALL MISCELLANEOUS STEEL REQUIRED TO SUPPORT HVAC EQUIPMENT, PIPING AND DUCTWORK TO ENSURE PROPER INSTALLATION AS DESCRIBED IN THE CONTRACT DOCUMENTS SHALL BE FURNISHED AND INSTALLED BY THE MECHANICAL CONTRACTOR.
2. EQUIPMENT THAT IS SUPPLIED BY THE MECHANICAL CONTRACTOR THAT EXCEEDS THE SCHEDULED WEIGHT OF THE SPECIFIC EQUIPMENT IN THE CONTRACT DOCUMENTS SHALL BE SUBMITTED TO THE STRUCTURAL ENGINEER FOR REVIEW AND COMMENT.
3. MODIFICATIONS AS REQUIRED BY THE STRUCTURAL ENGINEER TO SUPPORT THE ADDITIONAL WEIGHT OF THE MECHANICAL CONTRACTOR'S HVAC EQUIPMENT SHALL BE THE RESPONSIBILITY OF THE MECHANICAL CONTRACTOR.
4. THE MECHANICAL CONTRACTOR SHALL BE RESPONSIBLE FOR THE ACCESSIBILITY AND MAINTENANCE REQUIREMENTS OF HVAC EQUIPMENT THAT VARIES FROM THE FOOT PRINT OR EXCEEDS THE DIMENSIONS SHOWN ON THE CONTRACT DOCUMENTS

Sheet List Table - HVAC

Sheet Number	Sheet Title
10-H-01	COVER SHEET – HVAC
10-H-02	FLOOR PLAN DEMOLITION – HVAC
10-H-03	ROOF PLAN DEMOLITION – HVAC
10-H-04	FLOOR PLAN – HVAC
10-H-05	ROOF PLAN – HVAC
10-H-06	DETAILS – HVAC
10-H-07	SCHEDULES – HVAC

PSJ ENGINEERING, INC.
CONSULTING ENGINEERS
13-005

City of Milwaukee
Department of Public Works
Infrastructure Services Division
Facilities Development & Management Section

NO	REVISIONS	DRN CHK	DATE

DRN	MAC	OCT 2013
DES	PRB	OCT 2013
CHK		
APP		

LINCOLN GARAGE MODIFICATIONS
VEHICLE SERVICE BAYS
LINCOLN AVENUE GARAGE
3291 WEST LINCOLN AVENUE
MILWAUKEE, WISCONSIN

COVER SHEET – HVAC

DATE OCTOBER 2013
CITY PROJECT # BU110030326
ENGINEER PROJECT # 13-005
FILENAME
SHEET NO
DRAWING NO 10-H-01

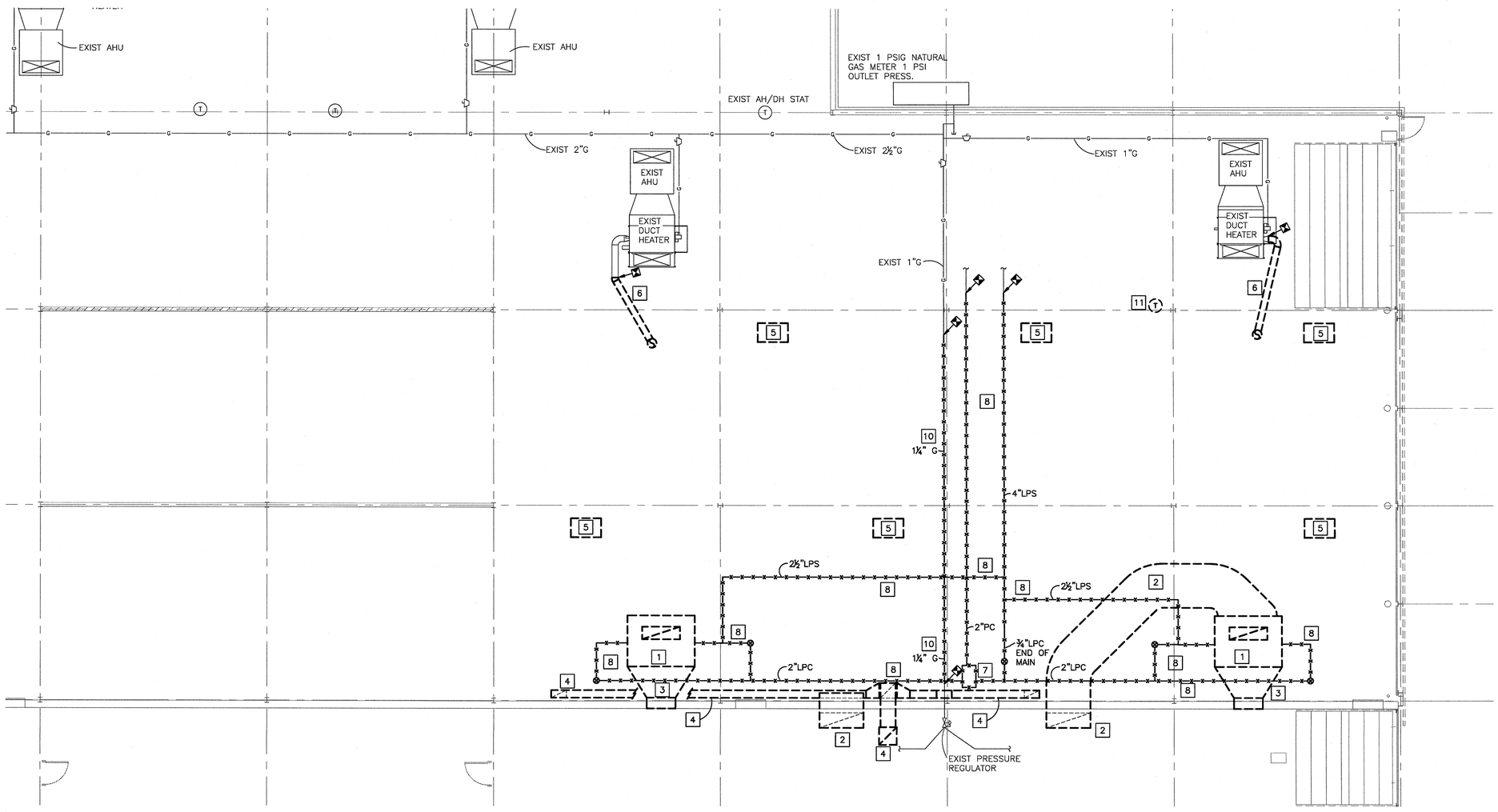

KEYED NOTES - DEMOLITION

1. REMOVE OBSOLETE STEAM HEATER AND ASSOCIATED ELECTRIC BACK TO SOURCE, STEAM/CONDENSATE PIPING AS INDICATED, DUCTS, CONTROLS AND HANGERS.
2. REMOVE OBSOLETE RETURN AIR DUCT AND DUCT DROPS. WALL PATCH BY GC AND SHALL MATCH EXISTING WALL MATERIALS AND COLOR.
3. REMOVE OBSOLETE SUPPLY AIR DUCT AND WALL SLEEVE. WALL PATCH BY GC AND SHALL MATCH EXISTING WALL MATERIALS AND COLOR.
4. REMOVE OBSOLETE EXHAUST AIR DUCT, DUCT DROPS, HANGERS, STARTERS, AND WALL SLEEVES. WALL PATCH BY GC AND SHALL MATCH EXISTING WALL MATERIALS AND COLOR.
5. REMOVE EXISTING ELECTROSTATIC AIR CLEANER AT CEILING. REMOVE ASSOCIATED ELECTRIC BACK TO SOURCE, CONTROLS, AND HANGERS.
6. REMOVE EXISTING VENT AS INDICATED AND RELOCATE AS SHOWN ON SHEET 10–H–04 AND 10–H–05. ROOF PATCH BY GC AND SHALL MATCH EXISTING ROOF MATERIALS AND COLOR.
7. REMOVE OBSOLETE WALL MOUNTED STEAM CONDENSATE PUMP, TANK AND SUPPORTS.
8. REMOVE OBSOLETE STEAM, CONDENSATE AND PUMPED CONDENSATE PIPING, INSULATION, VALVES AND HANGERS AS INDICATED.
9. REMOVE EXHAUST RISER UP THROUGH ROOF.
10. REMOVE 1¼" G PIPE NEAR CEILING. REROUTE AS INDICATED ON SHEET 10–H–04.
11. REMOVE THERMOSTAT AS REQUIRED FOR CONSTRUCTION OF WALL AND SALVAGE FOR REUSE.

FLOOR PLAN DEMOLITION - HVAC

0' 4' 8' 16'
SCALE

N

P&J ENGINEERING, INC.
CONSULTING ENGINEERS
MILWAUKEE, (414)355-2211
MADISON, (608)251-4843
PLUMBING, HVAC, FIRE PROTECTION
DOCUMENTS DESIGNED BY PRB
13-005

City of Milwaukee
Department of Public Works
Infrastructure Services Division
Facilities Development & Management Section

NO	REVISIONS	DRN	CHK	DATE

DRN MAC OCT 2013
DES PRB OCT 2013
CHK
APP

LINCOLN GARAGE MODIFICATIONS
VEHICLE SERVICE BAYS
LINCOLN AVENUE GARAGE
3291 WEST LINCOLN AVENUE
MILWAUKEE, WISCONSIN

FLOOR PLAN DEMOLITION – HVAC

DATE OCTOBER 2013
CITY PROJECT # BU110030326
ENGINEER PROJECT # 13–005
FILENAME
SHEET NO
DRAWING NO 10–H–02

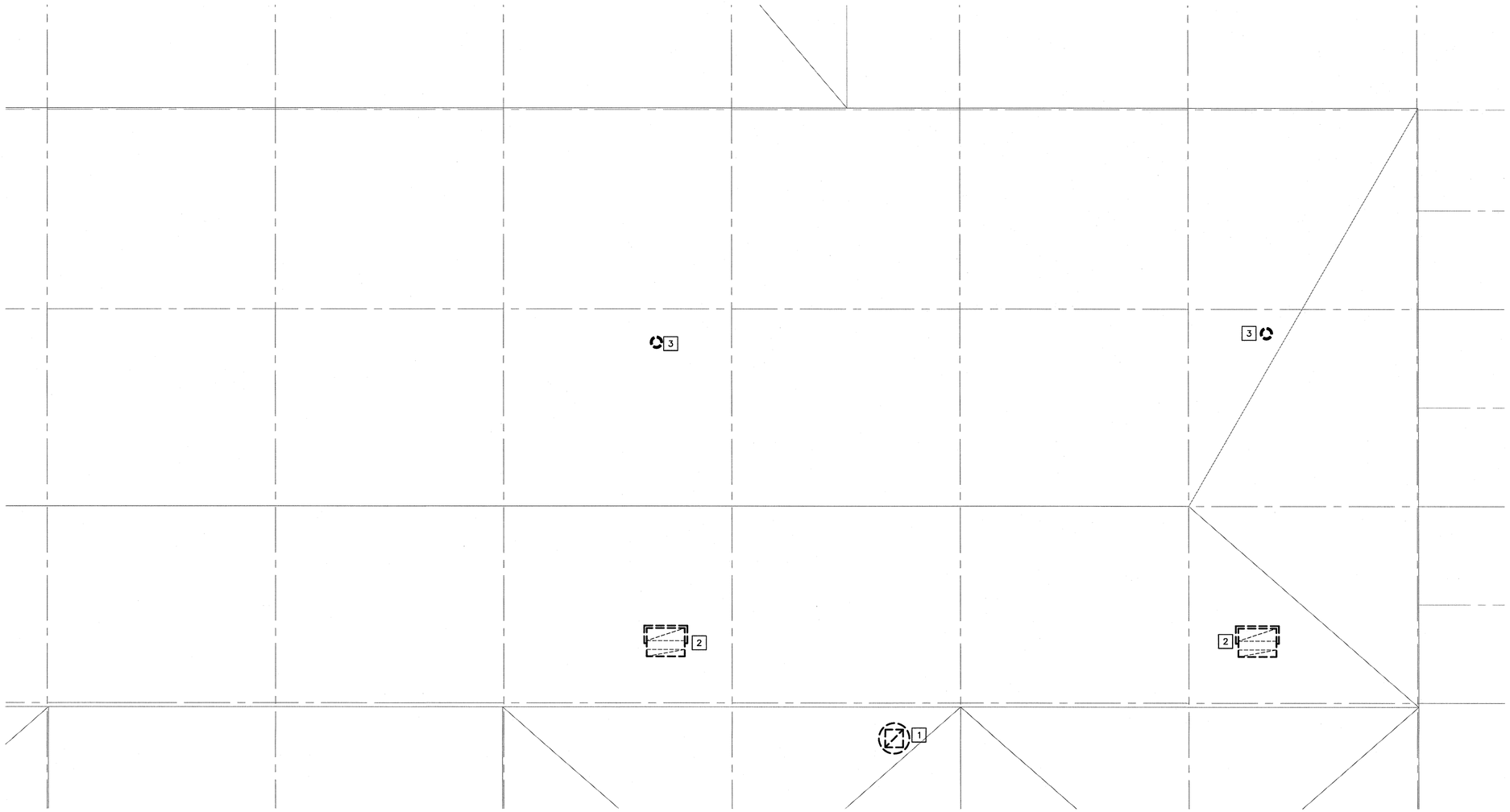

DRAWING NOTES - DEMOLITION

1. DECK AND ROOF PATCH BY GC AND SHALL MATCH EXISTING ROOF MATERIALS AND COLOR. COORDINATE DEMOLITION WORK WITH GC TO MINIMIZE REPAIR SCHEDULE. MC TO PROVIDE TEMPORARY WEATHER PROOF, OSHA APPROVED CAP OF PENETRATION AS NECESSARY TO FACILITATE COORDINATION WITH GC.

KEYED NOTES - DEMOLITION ☐

1. REMOVE OBSOLETE EXHAUST FAN, CURB, ELECTRIC BACK TO SOURCE, AND DUCT DROP
2. REMOVE OBSOLETE O.A. INTAKE GOOSENECK DUCT, CURB, AND DAMPER.
3. REMOVE EXISTING VENT, CAP, FLASHING AND SLEEVE.

ROOF PLAN DEMOLITION - HVAC

0' 4' 8' 16'
SCALE

N

P&J ENGINEERING, INC.
CONSULTING ENGINEERS
MILWAUKEE: (414)332-2211
MADISON: (608)233-9404
WWW.PJENGINEERING.COM
DOCUMENTS DESIGNED BY P&J

13-005

City of Milwaukee
Department of Public Works
Infrastructure Services Division
Facilities Development & Management Section

NO	REVISIONS	DRN	CHK	DATE

DRN	MAC	OCT 2013
DES	PRB	OCT 2013
CHK		
APP		

LINCOLN GARAGE MODIFICATIONS
VEHICLE SERVICE BAYS
LINCOLN AVENUE GARAGE
3291 WEST LINCOLN AVENUE
MILWAUKEE, WISCONSIN

ROOF PLAN DEMOLITION - HVAC

DATE OCTOBER 2013
CITY PROJECT # BU110030326
ENGINEER PROJECT # 13-005
FILENAME
SHEET NO
DRAWING NO 10-H-03

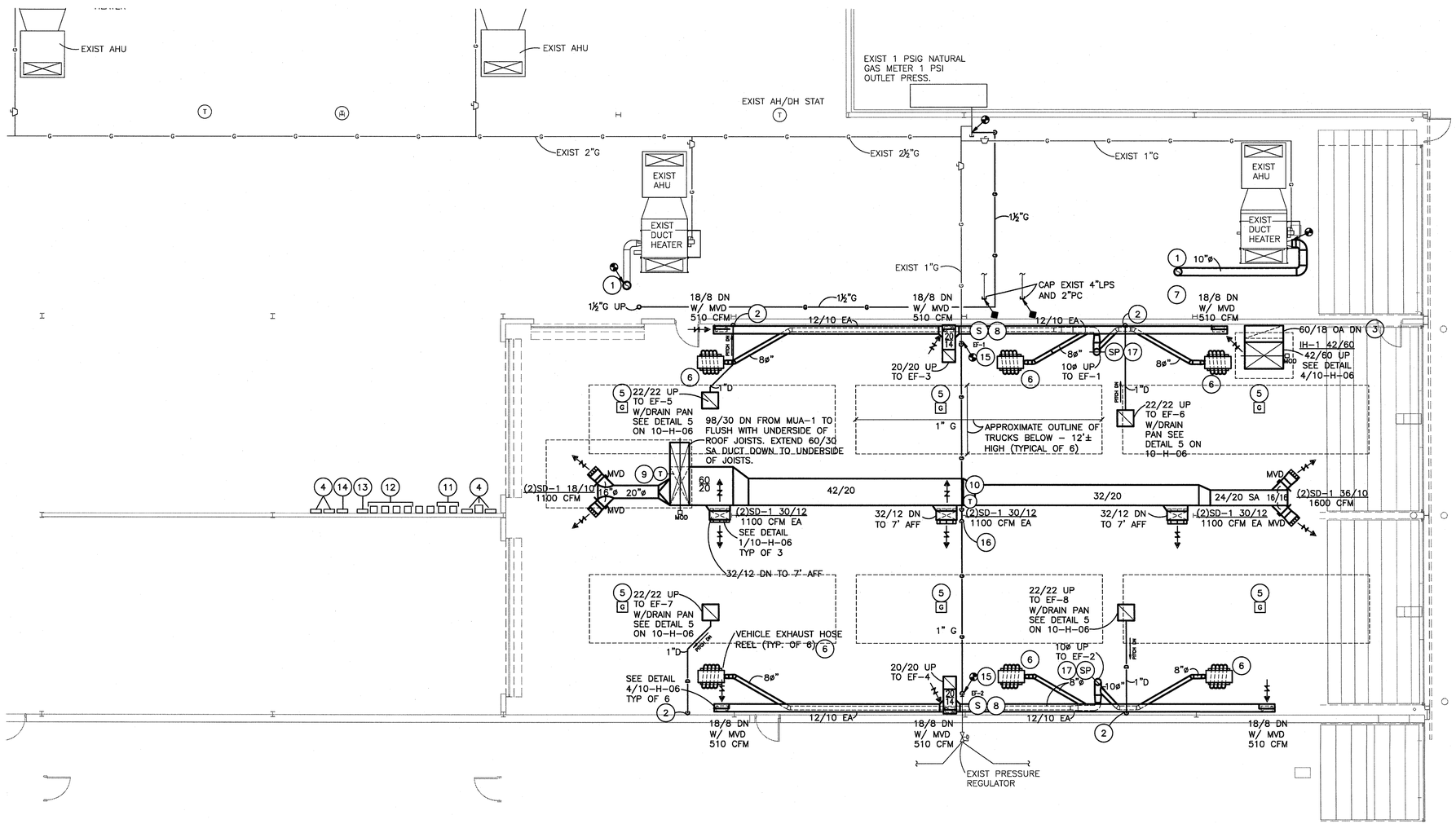

DRAWING NOTES

1. AREA OF WORK IS CLASSIFIED BY NFPA AS CLASS 1, DIVISION 2, GROUP D SPACE.

KEYED NOTES

1. PROVIDE FLUE VENT THROUGH ROOF AS DETAILED ON SHEET 10-H-06, VERIFY AND MATCH EXISTING DIAMETER (APPROX 10"ø).
2. 1" DRAIN FROM DRIP PAN DOWN AT WALL AND TO FLOOR.
3. TERMINATE O.A. INTAKE DUCT AT 18" AFF WITH ½" X ½" MESH SCREEN. SEE DETAIL 3/10-H-06.
4. ELECTRICAL EQUIPMENT. VERIFY EXACT LOCATIONS WITH DIV. 26 AT SITE.
5. PROVIDE NATURAL GAS SENSORS (TYP OF 6) AS SHOWN. INSTALL WITHIN 1" OF ROOF DECK MINIMUM 18" AWAY FROM STRUCTURAL BEAMS.
6. SECURELY MOUNT VEHICLE EXHAUST HOSE REELS TO ROOF STRUCTURE. PROVIDE STRUCTURAL STEEL AS REQUIRED PER UNIT MANUFACTURER RECOMMENDATIONS. COORDINATE FINAL LOCATION WITH OWNER AND OTHER TRADES PRIOR TO INSTALLATION. (TYP OF 6)
7. RELOCATE AND REINSTALL EXISTING AH/DH CONTROL. VERIFY AND COORDINATE LOCATION WITH EXISTING CONDITIONS AT SITE.
8. LOCATE STARTER SWITCHES FOR EF-1, EF-2 ON WALL. COORDINATE FINAL LOCATION WITH OWNER AND OTHER TRADES PRIOR TO INSTALLATION.
9. MAU-1 DUCT MOUNTED DISCHARGE AIR SENSOR IN DISCHARGE DUCT.
10. MUA-1 SPACE TEMPERATURE OVERRIDE SENSOR ON COLUMN AT 48" ABOVE FLOOR.
11. EF-1 & EF-2 VARIABLE SPEED DRIVES.
12. EF-5, EF-6, EF-7, & EF-8 VARIABLE SPEED DRIVES.
13. MUA-1 REMOTE CONTROL PANEL.
14. GAS DETECTION SYSTEM CONTROL PANEL.
15. CONNECT 1¼" G (VERIFY SIZE AT SITE) TO EXISTING, RISE UP TO UNDERSIDE OF ROOF DECK AND ROUTE ABOVE TRUCK SERVICE AISLES.
16. 1¼" G TO OFFSET BELOW STRUCTURE.
17. STATIC PRESSURE SENSOR FOR CONTROL OF EF-1 & EF-2 VFD'S.

FLOOR PLAN - HVAC

0' 4' 8' 16'
SCALE

N

P&J ENGINEERING, INC.
CONSULTING ENGINEERS
MILWAUKEE, (414)355-2211
MADISON, (608)251-2450
PLUMBING, HVAC, FIRE PROTECTION
DOCUMENTS DESIGNED BY PRB
13-005

City of Milwaukee
Department of Public Works
Infrastructure Services Division
Facilities Development & Management Section

NO	REVISIONS	DRN CHK	DATE

DRN	MAC	OCT 2013	
DES	PRB	OCT 2013	
CHK			
APP			

LINCOLN GARAGE MODIFICATIONS
VEHICLE SERVICE BAYS
LINCOLN AVENUE GARAGE
3291 WEST LINCOLN AVENUE
MILWAUKEE, WISCONSIN

FLOOR PLAN – HVAC

DATE OCTOBER 2013
CITY PROJECT # BU110030326
ENGINEER PROJECT # 13-005
FILENAME
SHEET NO
DRAWING NO 10-H-04

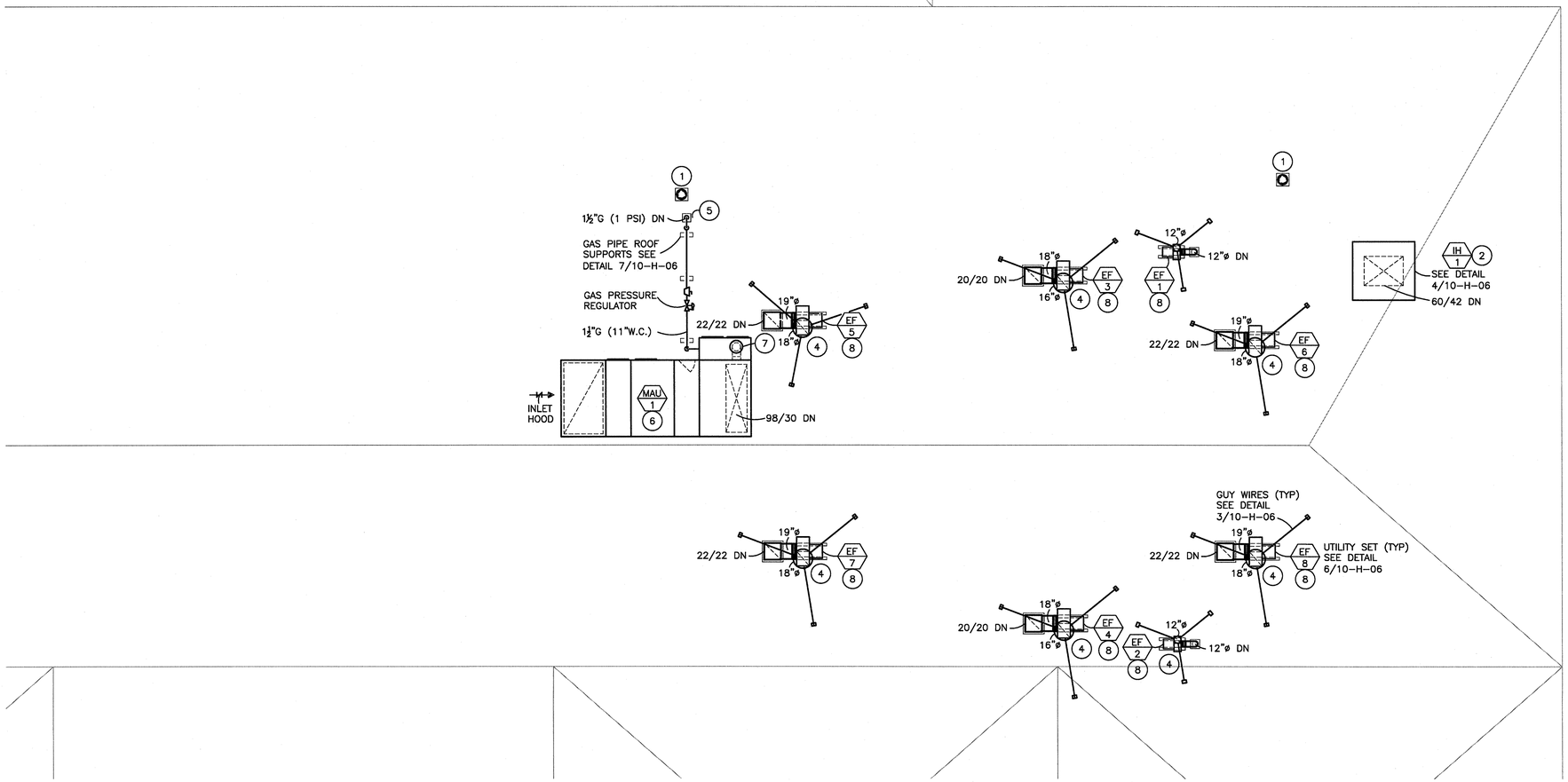

DRAWING NOTES

1. PROVIDE EQUIPMENT AND INSTALLATION INDICATED. ROOFING BY GC. COORDINATE INSTALLATION SEQUENCE WITH GC, AND CRANE USAGE IF REQUIRED WITH OWNER.

KEYED NOTES

1. UNIT HEATER FLUE VENT UP THROUGH ROOF WITH ROOF CURB AND FLASHING ACCESSORIES. TERMINATE AT MINIMUM 36" ABOVE ROOF WITH RAIN CAP. SEE DETAIL 10 ON 10-H-06.
2. INTAKE HOOD ON ROOF WITH 18" HIGH ROOF CURB. SEE DETAIL 4 ON 10-H-06.
3. MOUNT EXHAUST FAN ON ROOF WITH STEEL SUPPORT STAND. SEE DETAIL 6 ON 10-H-06.
4. NO LOSS EXHAUST STACK AT FAN DISCHARGE. PROVIDE GUY SUPPORTS ATTACHED TO ROOF. SEE DETAIL 6 ON 10-H-06.
5. GAS PIPE THROUGH ROOF WITH 12" HIGH PIPE PORTAL AND FLASHING ACCESSORIES. SIMILAR TO DETAIL 10 ON 10-H-06.
6. MOUNT MAKE-UP-AIR UNIT MANUFACTURER SUPPLIED 20" HIGH FULL PERIMETER ROOF CURB.
7. INSTALL MAKE-UP-AIR UNIT MANUFACTURER SUPPLIED FLUE VENT IN ACCORDANCE WITH MANUFACTURER RECOMMENDATIONS.

ROOF PLAN - HVAC

0' 4' 8' 16'
SCALE

N

P&J ENGINEERING, INC.
CONSULTING ENGINEERS
MILWAUKEE, (414)352-2311
MADISON, (608)257-2640
PLUMBING, HVAC, FIRE PROTECTION
DOCUMENTS DESIGNED BY P&J
13-005

City of Milwaukee
Department of Public Works
Infrastructure Services Division
Facilities Development & Management Section

NO	REVISIONS	DRN	CHK	DATE

DRN MAC OCT 2013
DES PRB OCT 2013
CHK
APP

LINCOLN GARAGE MODIFICATIONS
VEHICLE SERVICE BAYS
LINCOLN AVENUE GARAGE
3291 WEST LINCOLN AVENUE
MILWAUKEE, WISCONSIN

ROOF PLAN - HVAC

DATE OCTOBER 2013
CITY PROJECT # BU110030326
ENGINEER PROJECT # 13-005
FILENAME
SHEET NO
DRAWING NO 10-H-05

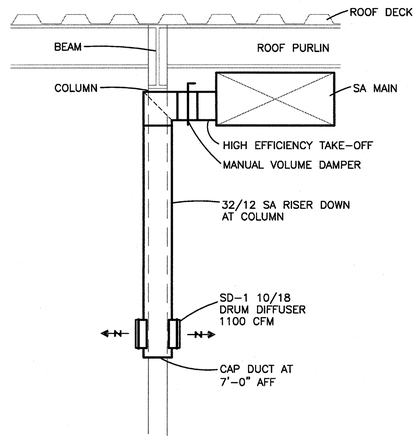

1 SUPPLY AIR DUCT DROP DETAIL
SCALE: NONE

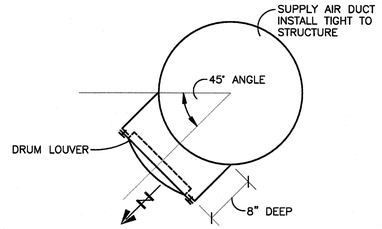

2 HORIZONTAL DRUM DIFFUSER DETAIL
SCALE: NONE

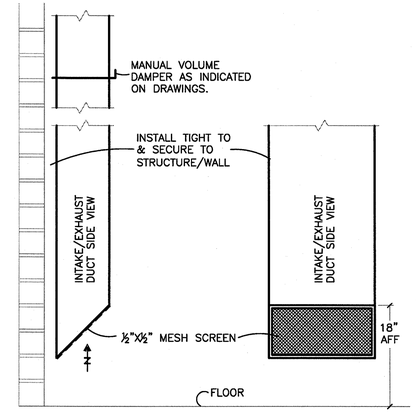

3 VERTICAL INTAKE/ EXHAUST DUCT DETAIL
SCALE: NONE

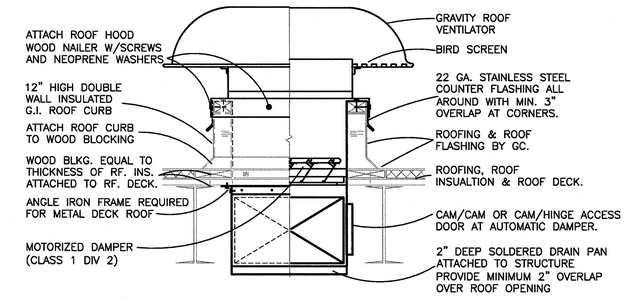

4 GRAVITY INTAKE HOOD ROOF CURB MOUNTING DETAIL
SCALE: NONE

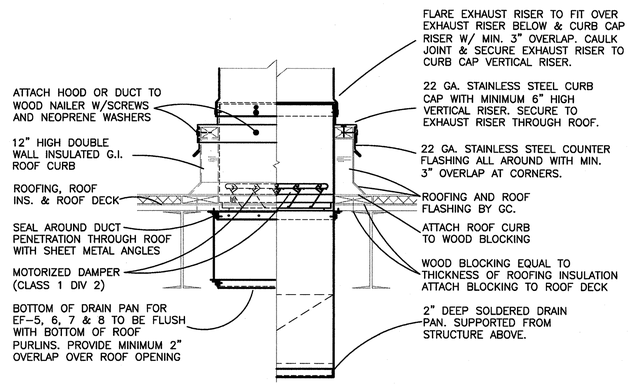

5 EXHAUST DUCT CURB, ROOF HOOD ROOF CURB MOUNTING DETAIL
SCALE: NONE

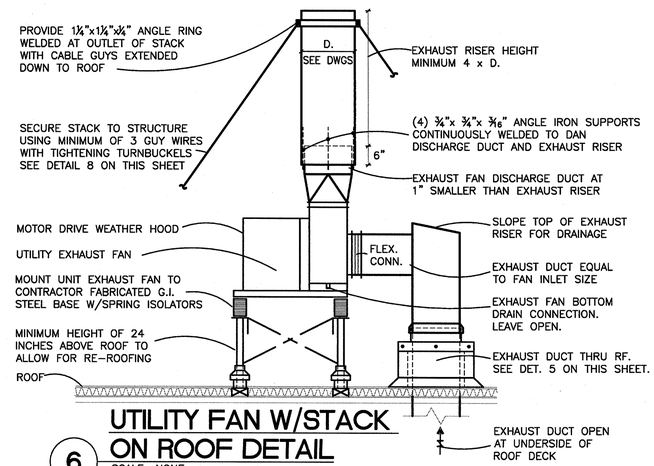

6 UTILITY FAN W/STACK ON ROOF DETAIL
SCALE: NONE
NOTE: CONSTRUCT SUPPORT STAND OF GALVANIZED STEEL. PAINT ALL WELDS AND EXPOSED STEEL WITH LPS COLD GALVANIZED PAINT.

NOTE: SEE DETAIL 8 ON THIS SHEET FOR FLASHING OF SUPPORT STAND TO ROOF.

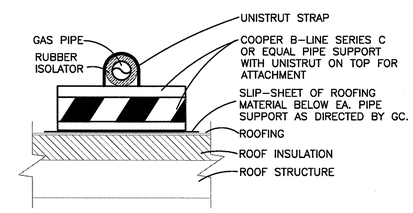

7 GAS PIPE ON ROOF SUPPORT DETAIL
SCALE: NONE

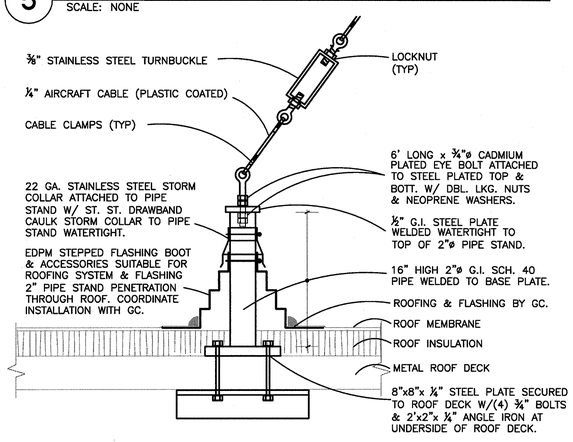

8 GUY WIRE SUPPORT DETAIL
SCALE: NONE

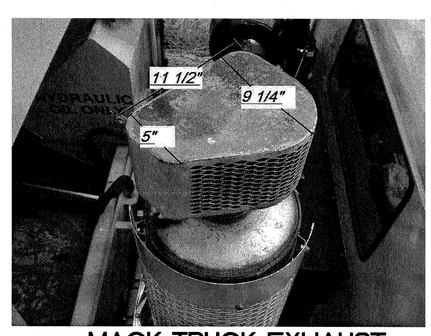

9 MACK TRUCK EXHAUST DIFFUSER DETAIL
SCALE: NONE

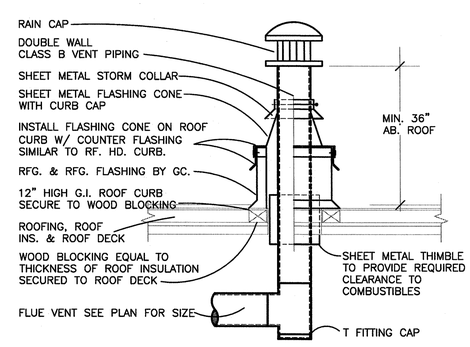

10 GAS VENT DETAIL
SCALE: NONE
NOTE: SEAL ALL JOINTS & SEAMS IN FLUE VENTING TO PREVENT LEAKING OF FLUE GASES.

P&J ENGINEERING, INC.
CONSULTING ENGINEERS
MILWAUKEE: (414)355-2211
MADISON: (608)223-2450
WWW.PANDJENGINEERING.COM
DOCUMENTS DESIGNED BY P&J
13-005

City of Milwaukee
Department of Public Works
Infrastructure Services Division
Facilities Development & Management Section

NO	REVISIONS	DRN	CHK	DATE

DRN MAC	OCT 2013	
DES PRB	OCT 2013	
CHK		
APP		

LINCOLN GARAGE MODIFICATIONS
VEHICLE SERVICE BAYS
LINCOLN AVENUE GARAGE
3291 WEST LINCOLN AVENUE
MILWAUKEE, WISCONSIN

DETAILS – HVAC

DATE OCTOBER 2013
CITY PROJECT # BU110030326
ENGINEER PROJECT # 13-005
FILENAME
SHEET NO
DRAWING NO 10-H-06

DIFFUSER, REGISTER AND GRILLE SCHEDULE

MARK	SERVICE	MAX. A.P.D. INCHES W.C.	MATERIAL	FINISH	FACE TYPE	PATTERN	THROW (FEET AT 100 FPM)	ACCESSORIES	MOUNTING	MAX. NC	MANUFACTURER		REMARKS
											MAKE	MODEL NO.	
SD-1	SUPPLY	0.1	ALUM	MILL	DRUM LOUVER	ADJ.	50	N/A	SURFACE	30	PRICE	AHCD1	–

EXHAUST FAN SCHEDULE

MARK	LOCATION	SERVICE	FAN DATA			DRIVE	TYPE	WHEEL DIA.	E.S.P.	LWA	MOTOR DATA			OPERATING WEIGHT LBS.	MANUFACTURER		REMARKS
			CFM	RPM	BHP						HP	EQUIPMENT VOLTS/PH/HZ	RPM		MAKE	MODEL NO.	
EF-1	ROOF	VEHICLE EXH.	1200	3819	1.39	BELT	BLOWER	10	4.0	94	2	460/3/60	3450	180	COOK	CPA-A 100	NOTE 1
EF-2	ROOF	VEHICLE EXH.	1200	3819	1.39	BELT	BLOWER	10	4.0	94	2	460/3/60	3450	180	COOK	CPA-A 100	NOTE 1
EF-3	ROOF	GARAGE EXH	1560	1565	0.41	BELT	BLOWER	13.5	1.0	82	3/4	460/3/60	1725	180	COOK	CPA-A 135	NOTE 1
EF-4	ROOF	GARAGE EXH	1560	1565	0.41	BELT	BLOWER	13.5	1.0	82	3/4	460/3/60	1725	180	COOK	CPA-A 135	NOTE 1
EF-5	ROOF	CNG EXH	2500	1735	0.92	BELT	BLOWER	15	1.0	88	1.5	460/3/60	1725	208	COOK	CPA-A 150	NOTE 1
EF-6	ROOF	CNG EXH	2500	1735	0.92	BELT	BLOWER	15	1.0	88	1.5	460/3/60	1725	208	COOK	CPA-A 150	NOTE 1
EF-7	ROOF	CNG EXH	2500	1735	0.92	BELT	BLOWER	15	1.0	88	1.5	460/3/60	1725	208	COOK	CPA-A 150	NOTE 1
EF-8	ROOF	CNG EXH	2500	1735	0.92	BELT	BLOWER	15	1.0	88	1.5	460/3/60	1725	208	COOK	CPA-A 150	NOTE 1

NOTES: 1. FLANGED INLET/OUTLET CONNECTIONS
WEATHER COVER/OSHA BELT GUARD
DRAIN CONNECTION
FAN SCROLL ACCESS DOOR
FAN MOUNTING RAILS W/ SPRING ISOLATORS
AMCA A SPARK RESISTANT CONSTRUCTION
UNIT MOUNTED AND WIRED DISCONNECT SWITCH

VARIABLE FREQUENCY DRIVE (VFD) SCHEDULE

SERVICE	LOCATION	HP	VOLTS/PH/HZ	INTEGRAL BYPASS	REMARKS
EF-1	SEE PLAN 10-H-04	2	460/3/60	NO	–
EF-2	SEE PLAN 10-H-04	2	460/3/60	NO	–
EF-5	SEE PLAN 10-H-04	1.5	460/3/60	NO	–
EF-6	SEE PLAN 10-H-04	1.5	460/3/60	NO	–
EF-7	SEE PLAN 10-H-04	1.5	460/3/60	NO	–
EF-8	SEE PLAN 10-H-04	1.5	460/3/60	NO	–
MAU-1	SEE PLAN 10-H-04	10	460/3/60	YES	–

ROOF HOOD SCHEDULE

(● INDICATES ACCESSORIES)

MARK	SERVICE	TYPE	CFM	THROAT SIZE (INCHES)	THROAT VELOCITY (F.P.M.)	PRESS. DROP INCHES W.C.	MANUFACTURER		ACCESSORIES: ANTI-CONDENSATE COATING	BACKDRAFT DAMPER	MOTORIZED DAMPER	BIRDSCREEN	ROOF CURB	ALUMINUM CONSTRUCTION	REMARKS
							MAKE	MODEL NO.							
IH-1	OA INTAKE	GRAVITY	10,000	60x42	571	0.085	COOK	GI	●		●	●	●	●	–

INDIRECT GAS FIRED MAKE-UP AIR UNIT SCHEDULE

MARK	LOCATION	SERVICE	TYPE	AIRFLOW (CFM)	MIN. O.A. (CFM)	INPUT CAPACITY (MBH)	OUTPUT CAPACITY (MBH)	E.S.P. (IN. WC)	GAS INLET PRESSURE MIN/MAX (IN WC)	HP	FLA	EQUIPMENT VOLTS/ PHASE	MANUFACTURER		WEIGHT	REMARKS
													MAKE	MODEL NO.		
MAU-1	ROOF	GARAGE	DOWNFLOW	12,000	6,000	1500	1200	1.0	7 / 14	10	20.1	460/3	ABSOLUTAIRE	I1500-S-PO-HV	6,650	1

NOTES: 1. 20" HIGH FULL PERIMETER ROOF CURB
INSULATED HOUSING
SCREENED OUTSIDE AIR HOOD
ANGLED FILTER SECTION WITH 2" TA FILTERS
10:1 POWER VENTED MODULATING BURNER
STAINLESS STEEL HEAT EXCHANGER AND BURNER
VARIABLE FREQUENCY SUPPLY FAN DRIVE
DISCHARGE, AUTOMATIC DAMPER & ACTUATOR
DISCHARGE AIR TEMPERATURE SENSOR
ROOM TEMPERATURE OVERRIDE SENSOR
DIRTY FILTER PRESSURE DIFFERENTIAL SWITCH
UNIT MOUNTED BACNET DDC CONTROLLER

MOTOR LOAD COORDINATION SCHEDULE

MARK	EQUIPMENT DESCRIPTION	LOCATION	EQUIPMENT POWER DATA					STARTER				DISCONNECT		CONTROL DEVICE				REMARKS
			LOAD	VOLTS/PH	MCA	MOCP	EMERG. POWER	TYPE	FURNISH BY	INSTALL BY	ACCESSORIES	FURNISH BY	INSTALL BY	TYPE	FURNISH BY	INSTALL BY	WIRED BY	
EF-1	VEHICLE EXHAUST FAN	ROOF	2 HP	460/3	–	–	NO	VFD	MC	EC	REMOTE NEMA9 H-O-A & P.L.	MFR	MFR	DUCT PRESS CONTROL	TCC	TCC	TCC	1
EF-2	VEHICLE EXHAUST FAN	ROOF	2 HP	460/3	–	–	NO	VFD	MC	EC	REMOTE NEMA9 H-O-A & P.L.	MFR	MFR	DUCT PRESS CONTROL	TCC	TCC	TCC	1
EF-3	GARAGE EXHAUST FAN	ROOF	3/4 HP	460/3	–	–	NO	COMBINATION	EC	EC	H-O-A & P.L.	MFR	MFR	–	–	–	–	
EF-4	GARAGE EXHAUST FAN	ROOF	3/4 HP	460/3	–	–	NO	COMBINATION	EC	EC	H-O-A & P.L.	MFR	MFR	–	–	–	–	
EF-5	CNG EXHAUST FAN	ROOF	1-1/2 HP	460/3	–	–	NO	VFD	MC	EC	H-O-A & P.L.	MFR	MFR	GAS DET. SYSTEM	TCC	TCC	TCC	
EF-6	CNG EXHAUST FAN	ROOF	1-1/2 HP	460/3	–	–	NO	VFD	MC	EC	H-O-A & P.L.	MFR	MFR	GAS DET. SYSTEM	TCC	TCC	TCC	
EF-7	CNG EXHAUST FAN	ROOF	1-1/2 HP	460/3	–	–	NO	VFD	MC	EC	H-O-A & P.L.	MFR	MFR	GAS DET. SYSTEM	TCC	TCC	TCC	
EF-8	CNG EXHAUST FAN	ROOF	1-1/2 HP	460/3	–	–	NO	VFD	MC	EC	H-O-A & P.L.	MFR	MFR	GAS DET. SYSTEM	TCC	TCC	TCC	
MAU-1	MAKE UP AIR UNIT	ROOF	10 HP	460/3	–	–	NO	VFD	MFR	MFR	–	MFR	MFR	–	MFR	MFR	MFR	

NOTES: 1. TCC TO PROVIDE LOW VOLTAGE CLASS 1/DIV 2 PUSH BUTTON START/STOP WITH STATUS INDICATOR LIGHT LOCATED WITHIN GARAGE.

P&J ENGINEERING, INC.
CONSULTING ENGINEERS
MILWAUKEE: (414)332-2511
MADISON: (608)223-9040
WWW.PJENGINEERING.COM
DOCUMENTS DESIGNED BY PJEI
13-005

City of Milwaukee
Department of Public Works
Infrastructure Services Division
Facilities Development & Management Section

REVISIONS	DATE	DRN	CHK
NO			

DRN MAC OCT 2013
DES PRB OCT 2013
CHK
APP

LINCOLN GARAGE MODIFICATIONS
VEHICLE SERVICE BAYS
LINCOLN AVENUE GARAGE
3291 WEST LINCOLN AVENUE
MILWAUKEE, WISCONSIN

SCHEDULES – HVAC

DATE OCTOBER 2013
CITY PROJECT # BU110030326
ENGINEER PROJECT # 13-005
FILENAME
SHEET NO
DRAWING NO 10-H-07

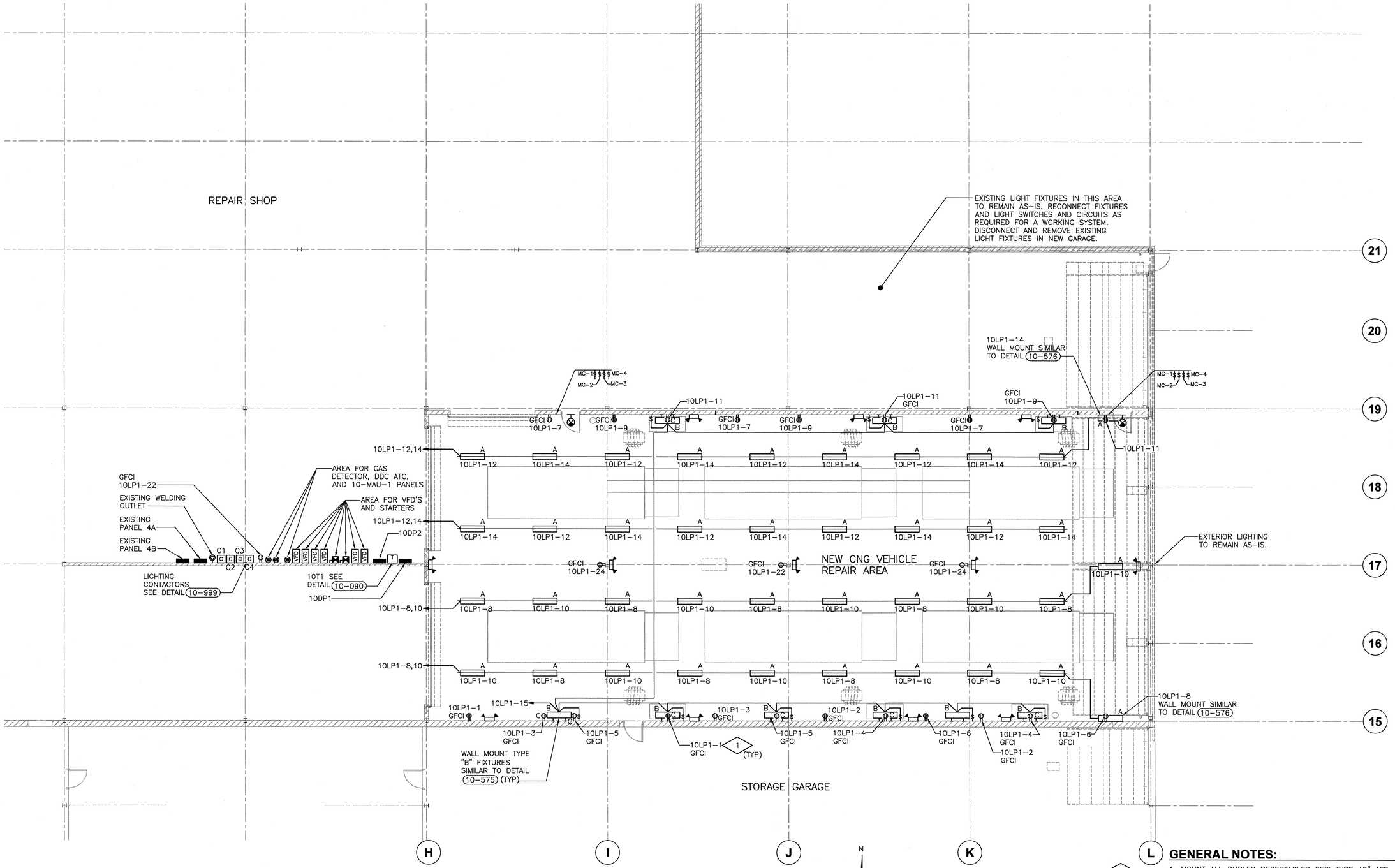

FLOOR PLAN

0' 4' 8' 16'
SCALE

PLAN NOTES:

1. C INDICATES RECEPTACLE LOCATED 6" ABOVE WORKBENCH. COORDINATE WITH OWNERS WORKBENCH LOCATION, PRIOR TO ROUGH-IN.

GENERAL NOTES:

1. MOUNT ALL DUPLEX RECEPTACLES GFCI TYPE 48" AFF, EXCEPT AS NOTED OTHERWISE.
2. AREA FROM FLOOR TO 18" AFF IS "CLASS I, DIV. 2 GROUP D HAZARDOUS CLASSIFIED LOCATION".
3. AREA FROM CEILING TO 18" BELOW CEILING IS "CLASS I, DIV. 2 GROUP D HAZARDOUS CLASSIFIED LOCATION".
4. CONDUIT BELOW OR IN SLAB SHALL BE GRS.
5. CIRCUIT EXIT FIXTURES AND EM FIXTURES – 10LP1-16.
6. PROVIDE ARC FLASH WARNING SIGNS PER NEC 110-16.

AECOM
4135 TECHNOLOGY PARKWAY
SHEBOYGAN, WI 53083-1883
T 920.458.8711 F 920.458.0537
WWW.AECOM.COM

City of Milwaukee
Department of Public Works
Infrastructure Services Division
Facilities Development & Management Section

NO	REVISIONS	DRN CHK	DATE

DRN	KWB	2013
DES	WRW	2013
CHK	BMW	2013
APP	BKL	2013

LINCOLN GARAGE MODIFICATIONS
VEHICLE SERVICE BAYS
LINCOLN AVENUE GARAGE
3291 WEST LINCOLN AVENUE
MILWAUKEE, WISCONSIN

ELECTRICAL
LIGHTING AND RECEPTACLES PLAN

DATE	2013
CITY PROJECT #	BU110030326
ENGINEER PROJECT #	60303317
FILENAME	10-E-01.dwg
SHEET NO	
DRAWING NO	**10-E-01**

Xrefs: P:\60303317\900-WorkingDocs-CAD\10-Lincoln Garage Modifications\3dmodel\lincoln garage mod\Views\Architectural and structural\Sections and Elevations\10-AS-SEC-01-3D.dwg
P:\60303317\900-WorkingDocs-CAD\10-Lincoln Garage Modifications\3dmodel\lincoln garage mod\Views\Architectural and structural\Plans\10-AS-FLR-01-3D.dwg
\3dmodel\lincoln garage mod\Constructs\Architectural\first floor level.dwg
\3dmodel\lincoln garage mod\Constructs\Structural\first floor level structural.dwg
\3dmodel\lincoln garage mod\Constructs\Structural\grid.dwg
\3dmodel\lincoln garage mod\Constructs\Architectural\first floor level – NEW.dwg
\3dmodel\lincoln garage mod\Constructs\Structural\first floor level structural – NEW.dwg
Plotted By: brendelk
Plot File Date Created: Sep/05/2013 3:54 PM
Layout-Sheet Name: WORK
Filename: P:\60303317\900-WORKINGDOCS-CAD\10-LINCOLN GARAGE MODIFICATIONS\10-E-01.DWG

PLAN NOTES:

1. EXISTING FIRE ALARM DEVICE TO REMAIN AS–IS.
2. EXISTING FIRE ALARM DEVICE TO BE RE–USED. INSTALL AT NEW LOCATION 24" BELOW CEILING, BELOW HAZARDOUS CLASSIFIED LOCATION. PROVIDE NEW WIRING TO MATCH EXISTING.
3. EXISTING FIRE ALARM DEVICE TO BE RELOCATED AND INSTALLED 24" BELOW CEILING, BELOW HAZARDOUS CLASSIFIED LOCATION.
4. NEW DEVICE, EXTEND EXISTING HORN/STROBE CIRCUIT. INSTALL 24" BELOW CEILING, BELOW HAZARDOUS CLASSIFIED LOCATION.
5. EXISTING WELDING OUTLET RELOCATED. PROVIDE NEW 60A FUSIBLE DISCONNECT SWITCH W/60A FUSES. INSTALL 48" AFF.
6. LOCATE DISCONNECT SWITCH 60" AFF. INSTALL AND WIRE DOOR SAFETY EQUIPMENT.
7. PROVIDE CIRCUIT 10LP1–13 FOR ELECTRIC DOOR LOCKS.
8. PROVIDE 3/4" CONDUIT TO SECURITY SYSTEM EQUIPMENT AT DOOR. ROUTE CONDUIT BETWEEN HAZARDOUS LOCATIONS AT FLOOR AND CEILING TO SECURITY MASTER EQUIPMENT ROOM.
9. PROVIDE 3/4" CONDUIT TO PUBLIC ADDRESS SYSTEM. ROUTE CONDUIT BETWEEN HAZARDOUS LOCATIONS AT FLOOR AND CEILING TO PUBLIC ADDRESS MASTER EQUIPMENT ROOM.
10. PROVIDE 3/4" CONDUIT, 4" SQUARE BOX WITH SINGLE GANG RING. ROUTE CONDUIT BETWEEN HAZARDOUS LOCATIONS AT FLOOR AND CEILING TO TELEPHONE MASTER EQUIPMENT ROOM. MOUNT BOX AT 55" AFF.
11. PROVIDE 3/4" CONDUIT, 4" SQUARE BOX WITH SINGLE GANG RING. ROUTE CONDUIT BETWEEN HAZARDOUS LOCATIONS AT FLOOR AND CEILING TO DATA MASTER EQUIPMENT ROOM. MOUNT BOX AT 55" AFF.
12. INSTALL ON WALL.
13. EXISTING PANELS 4A, 4B, AND WELDING OUTLET TO BE RELOCATED.
14. NEW LOCATION FOR EXISTING PANELS 4A, 4B, AND WELDING OUTLET RELOCATED. SEE DETAIL (10–998)
15. PROVIDE SQUARE D CLASS 9001 START/STOP SWITCH WITH PILOT LIGHT TO CONTROL 10–EF–1. 2#12, 3/4"C TO 10–EF–1 STARTER. PROVIDE SINGLE GANG BOX AND NAMEPLATE.
16. PROVIDE SQUARE D CLASS 9001 START/STOP SWITCH WITH PILOT LIGHT TO CONTROL 10–EF–2. 2#12, 3/4"C TO 10=EF–2 STARTER. PROVIDE SINGLE GANG BOX AND NAMEPLATE.
17. NEW HEAT DETECTOR. EXTEND EXISTING HEAT DETECTOR CIRCUIT.

GENERAL NOTES:

1. CONTRACTOR TO PROVIDE RACEWAY AND BOXES AS INDICATED IN PLAN NOTES FOR SECURITY, TELEPHONE, DATA, AND PA SYSTEMS. OWNER WILL PROVIDE WIRING, DEVICES TERMINATIONS AND TESTING.
2. AREA FROM FLOOR TO 18" AFF IS "CLASS I, DIV. 2 GROUP D HAZARDOUS CLASSIFIED LOCATION".
3. AREA FROM CEILING TO 18" BELOW CEILING IS "CLASS I, DIV. 2 GROUP D HAZARDOUS CLASSIFIED LOCATION". SEE DETAIL (10–051)
4. LOCATE DISCONNECT SWITCHES OUTSIDE OF HAZARDOUS LOCATION. PROVIDE EP DISCONNECT SWITCHES IF LOCATED IN HAZARDOUS LOCATION.

DEMOLITION NOTES:

1. REMOVE ALL EXISTING LIGHT FIXTURES, RECEPTACLES, HVAC POWER EQUIPMENT, POWER DISTRIBUTION EQUIPMENT, OVERHEAD DOOR POWER EQUIPMENT AND RELATED CONDUIT AND WIRE NOT SHOWN TO BE RE–USED.

FIRE ALARM NOTES:

1. PROVIDE BATTERY AND CIRCUIT LOAD CALCS, WITH SHOP DRAWINGS FOR ALL NEW AND EXISTING FIRE ALARM EQUIPMENT.
2. PROVIDE NEW RACEWAY SYSTEM FOR CONDUIT INSTALLED IN HAZARDOUS LOCATION IN ACCORDANCE WITH NEC. ART. 500.
3. CONTACT MIKE TERRY @ SIEMENS TELEPHONE NO. (414) 475–3696 TO PROVIDE PRICING.
4. REVISE EXISTING HORN/STROBE UNITS TO 110 CANDELA OUTPUT OR PROVIDE NEW 110 CANDELA OUTPUT.
5. NEW EQUIPMENT SHALL BE SIEMENS COMPATIBLE WITH EXISTING CONTROL PANEL AND MATCH EXISTING SYSTEM REQUIREMENTS.
6. EQUIPMENT SUSPENDED FROM CEILING SHALL BE LOCATED BELOW THE HAZARDOUS CLASSIFIED LOCATIONS FROM CEILING TO 18" BELOW. EXISTING EQUIPMENT SUSPENDED FROM CEILING SHALL BE RELOCATED TO BELOW HAZARDOUS CLASSIFIED LOCATIONS.
7. ALL FIRE ALARM WIRING SHALL BE IN GRS CONDUIT.
8. FACP IS LOCATED ON WALL IN NORTHEAST CORNER OF REPAIR AREA.
9. PROVIDE SHOP DRAWINGS WITH PRODUCT DATA, REQUIRED CALCULATIONS, RISER DIAGRAM IN CADD FORMAT OF SYSTEM DEPICTING NEW AND EXISTING EQUIPMENT.
10. PAY ALL FEES AND PROVIDE ALL REQUIRED APPROVALS AND SUBMITTALS TO ALL AGENCIES AND JURISDICTIONS AS REQUIRED.
11. PROVIDE POWER SUPPLIES PAD–3 AS REQUIRED.
12. INSTALL ALL WIRING IN CONDUIT.

FIRE ALARM SYSTEM

EQUIPMENT	CATALOG NO.	WIRING REQUIRED	REMARKS
F	PULL STATION MS1–20B	2/CONDUCTOR #18 TWISTED SHIELDED PAIR, 3/4"C	
F	HORN STROBE UNIT (110 CANDELA) ZH–MC–CR	2/CONDUCTOR #18 TWISTED SHIELDED PAIR, 3/4"C	
H F	HEAT DETECTOR DB–11/FPT–11	2/CONDUCTOR #18 TWISTED SHIELDED PAIR, 3/4"C	
SDD RTS R	SMOKE DUCT DETECTOR WITH REMOTE TEST SWITCH AND HVAC RELAY AD–2P/TR1–R	–2#14, 3/4"C – DC POWER FROM FACP –4#18, 3/4"C FROM RTS TO SDD –2#18, 3/4"C FROM HVAC RELAY TO SDD –2/C #18 SH.PR., 3/4"C FROM DETECTOR TO FACP	LOCATE ON SUPPLY SIDE TO SHUT DOWN MAU.

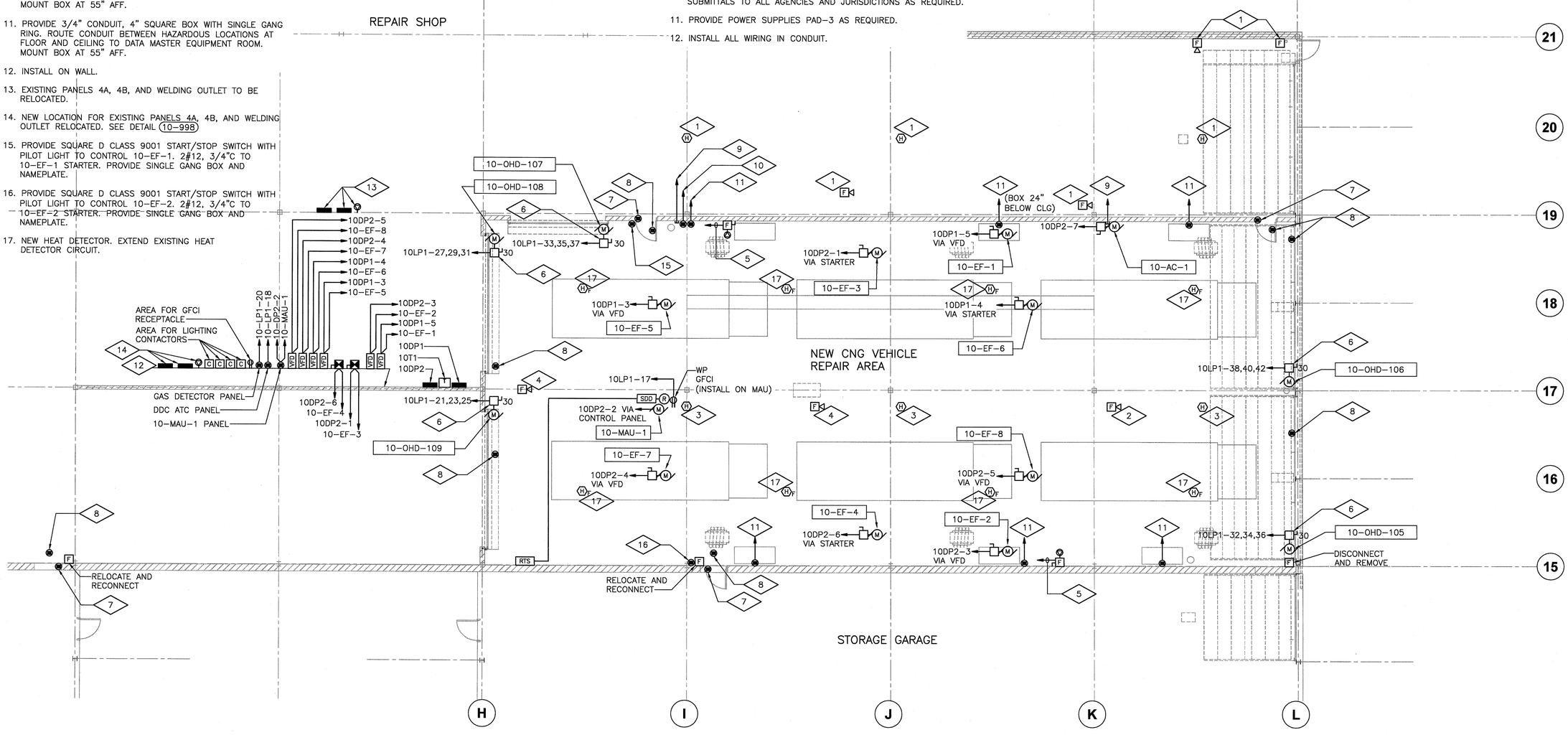

POWER AND SYSTEMS PLAN

0' 4' 8' 16'
SCALE

AECOM
4135 TECHNOLOGY PARKWAY
SHEBOYGAN, WI 53083-1883
T 920.458.8711 F 920.458.0537
WWW.AECOM.COM

City of Milwaukee
Department of Public Works
Infrastructure Services Division
Facilities Development & Management Section

NO	REVISIONS	DRN CHK	DATE

DRN	KWB	2013
DES	WRW	2013
CHK	BMW	2013
APP	BKL	2013

LINCOLN GARAGE MODIFICATIONS
VEHICLE SERVICE BAYS
LINCOLN AVENUE GARAGE
3291 WEST LINCOLN AVENUE
MILWAUKEE, WISCONSIN

ELECTRICAL
POWER AND SYSTEMS PLAN

DATE 2013
CITY PROJECT # BU110030326
ENGINEER PROJECT # 60303317
FILENAME 10–E–02.dwg
SHEET NO
DRAWING NO **10-E-02**

Xrefs: P:\60303317\900-Workingdocs-CAD\10-Lincoln Garage Modifications\3dmodel\lincoln garage mod\Views\Architectural and structural\Consultant Backgrounds\10-AS-FLR-01-3D.dwg
P:\60303317\900-Workingdocs-CAD\10-Lincoln Garage Modifications\3dmodel\lincoln garage mod\Views\Architectural and structural\Sections and Elevations\10-AS-SEC-01-3D.dwg
P:\60303317\900-Workingdocs-CAD\10-Lincoln Garage Modifications\3dmodel\lincoln garage mod\Views\Architectural and structural\Plans\10-AS-FLR-01-3D.dwg
\3dmodel\lincoln garage mod\Constructs\Structural\first floor level slab.dwg
\3dmodel\lincoln garage mod\Constructs\Structural\first floor level structural.dwg
\3dmodel\lincoln garage mod\Constructs\Structural\grid.dwg
\3dmodel\lincoln garage mod\Constructs\Architectural\first floor level – NEW.dwg
\3dmodel\lincoln garage mod\Constructs\Structural\first floor level structural – NEW.dwg
Exp: 10-ap13-Sy-
10-E-02.DWG
Plotted By: brendelk
Plot File Date Created: Oct/28/2013 8:41 AM
Layout-Sheet Name: LAYOUT1
Filename: P:\60303317\900-WORKINGDOCS-CAD\10-LINCOLN GARAGE MODIFICATIONS\10-E-02.DWG

GENERAL NOTES:

1. INSTALL 10DP1, 10DP2, SO THAT BOTTOM OF PANEL IS MIN. OF 19" AFF, AND ABOVE HAZARDOUS CLASSIFIED LOCATION FROM FLOOR TO 18" ABOVE. MAX. BREAKER HANDLE HEIGHT – 6'–7" AFF. INSTALL 10LP1 AND 10T1 PER DETAIL (10–090).

ONE-LINE NOTES:

1. COMBINATION MAGNETIC STARTER NEMA 12 ENCLOSURE. NON–FUSIBLE DISCONNECT TYPE WITH PADLOCK PROVISIONS (30A, 3 POLE) NEMA SIZE 1, WITH 2 N.O., 1 N.C. AUXILLARY CONTACTS, CONTROL POWER TRANSFORMER (120v) FUSED ON PRIMARY AND SECONDARY SIDES. H–O–A SWITCH AND RED PUSH TO TEST RUN LIGHT IN DOOR.
2. INSTALL VFD PROVIDED BY HVAC CONTRACTOR.
3. VFD CABLE – BELDEN NO.29502 OR EQUAL, 1"C.
4. DISCONNECT ON ROOF. PROVIDE SIGN "WHEN MAU IS RUNNING TURN POWER OFF AT 10DP2 PRIOR TO OPERATING SWITCH".
5. DISCONNECT PROVIDED WITH PRV'S/VEF'S (TYP).
6. INTERCEPT EXISTING 1 1/4" CONDUIT AND EXTEND TO NEW PANELS 10DP1 AND 10DP2. PROVIDE 3#1, 1#6 GRD TO EACH PANEL. REMOVE EXISTING CONDUCTOR.
7. REMOVE EXISTING PANELS NO.1 AND NO.2 AND ASSOCIATED FEEDER CONDUCTORS AND PORTION OF CONDUITS NOT BEING RE–USED.
8. REMOVE EXISTING WELDING OUTLETS AND TURN OVER TO OWNER FOR CLEANING. INSTALL AT NEW LOCATION IN CNG GARAGE 48" ABOVE FLOOR. PROVIDE NEW 3#6, 1#6 GRD FROM EXISTING WELDING OUTLET LOCATED ADJACENT TO EXISTING PANEL 4A IN NEW LOCATION.
9. PROVIDE SIGN SIMILAR TO NOTE 4.
10. VFD CABLE – BELDEN #29503 OR EQUAL, 1"C.

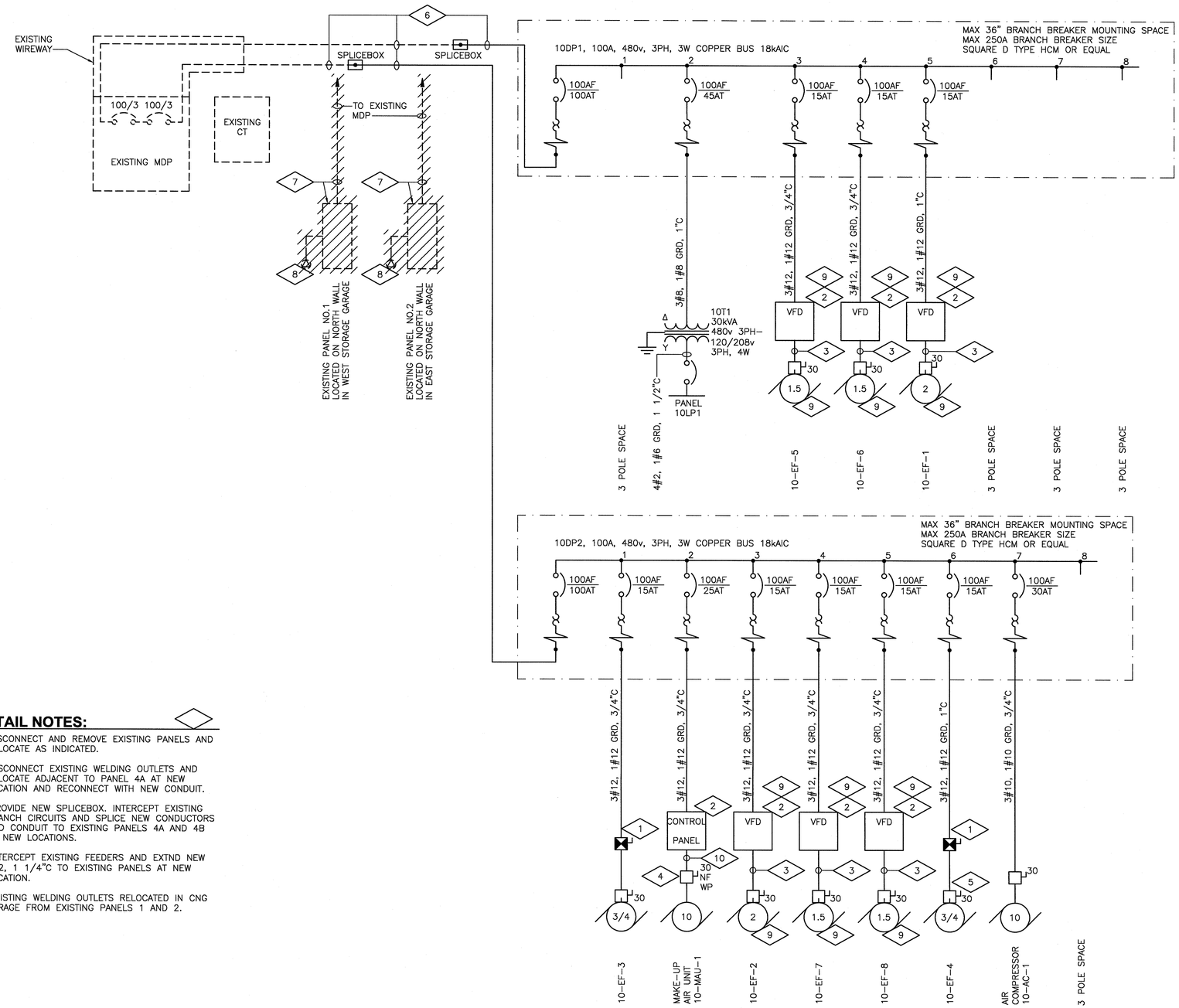

10DP1/10DP2 ONE-LINE DIAGRAM
NTS

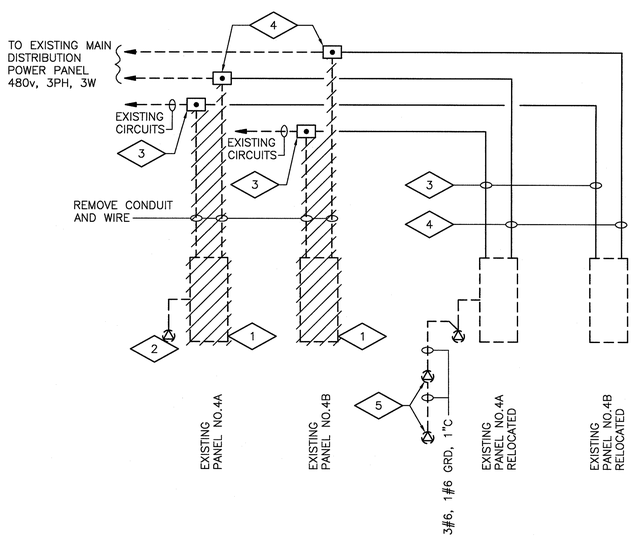

POWER PANELS 4A AND 4B REVISIONS - DETAIL (10-998)
NTS

DETAIL NOTES:

1. DISCONNECT AND REMOVE EXISTING PANELS AND RELOCATE AS INDICATED.
2. DISCONNECT EXISTING WELDING OUTLETS AND RELOCATE ADJACENT TO PANEL 4A AT NEW LOCATION AND RECONNECT WITH NEW CONDUIT.
3. PROVIDE NEW SPLICEBOX. INTERCEPT EXISTING BRANCH CIRCUITS AND SPLICE NEW CONDUCTORS AND CONDUIT TO EXISTING PANELS 4A AND 4B AT NEW LOCATIONS.
4. INTERCEPT EXISTING FEEDERS AND EXTND NEW 3#2, 1 1/4"C TO EXISTING PANELS AT NEW LOCATION.
5. EXISTING WELDING OUTLETS RELOCATED IN CNG GARAGE FROM EXISTING PANELS 1 AND 2.

AECOM
4135 TECHNOLOGY PARKWAY
SHEBOYGAN, WI 53083-1883
T 920.458.8711 F 920.458.0537
WWW.AECOM.COM

City of Milwaukee
Department of Public Works
Infrastructure Services Division
Facilities Development & Management Section

NO	REVISIONS	DRN	CHK	DATE

DRN	KWB	2013
DES	WRW	2013
CHK	BMW	2013
APP	BKL	2013

LINCOLN GARAGE MODIFICATIONS
VEHICLE SERVICE BAYS
LINCOLN AVENUE GARAGE
3291 WEST LINCOLN AVENUE
MILWAUKEE, WISCONSIN

ELECTRICAL
ONE-LINE DIAGRAMS

DATE	2013
CITY PROJECT #	BU110030326
ENGINEER PROJECT #	60303317
FILENAME	10–E–03.dwg
SHEET NO	
DRAWING NO	10-E-03

Plotted By: brendelk
Plot File Date Created: Sep/05/2013 3:19 PM
Layout–Sheet Name: WORK
Filename: P:\60303317\900–WORKINGDOCS–CAD\10–LINCOLN GARAGE MODIFICATIONS\10–E–03.DWG

PANEL SCHEDULE 10LP1

SURFACE MOUNTED NEMA 1
120 / 208 V, 3 PHASE, 4 WIRE
RATING 22,000 A.I.C.

100A MAIN BREAKER
225A MAIN BUS
225A GRD. BUS

CKT. NO.	TRIP/P	DESCRIPTION	PHASE A	PHASE B	PHASE C	DESCRIPTION	TRIP/P	CKT. NO.
1	20/1	RECEPTACLES				RECEPTACLES	20/1	2
3	20/1	RECEPTACLES				RECEPTACLES	20/1	4
5	20/1	RECEPTACLES				RECEPTACLES	20/1	6
7	20/1	RECEPTACLES				LIGHTS	25/1	8
9	20/1	RECEPTACLES				LIGHTS	25/1	10
11	20/1	RECEPTACLES				LIGHTS	25/1	12
13	20/1	SECURITY DOOR LOCKS				LIGHTS	25/1	14
15	20/1	WORK BENCH LIGHTS				* EMERGENCY AND EXIT LIGHTS	20/1	16
17	20/1	RECEPTACLE ON ROOF				DDC ATC PANEL	20/1	18
19	20/1	SPARE				GAS DETECTOR PANEL	20/1	20
21	15/3	10-OHD-109				RECEPTACLES	20/1	22
23						RECEPTACLES	20/1	24
25						SPACE		26
27	15/3	10-OHD-108				SPACE		28
29						SPACE		30
31	15/3	10-OHD-107				10-OHD-105	15/3	32
33								34
35								36
37						10-OHD-106	15/3	38
39	20/1	SPARE						40
41	20/1	SPARE						42

* PROVIDE "LOCK ON" FEATURE ON CIRCUIT BREAKER.

LIGHTING FIXTURE SCHEDULE

FIX. DES.	LAMPS NO.	LAMPS ORD. ABB.	DESCRIPTION/CATALOG NO.	FINISH	LENS	MOUNTING	NOTES
A	4	4 MOD LED	4' CLASS I, DIV. 2 GROUP D RATED ENCLOSED & GASKETED LED FIXTURE. INDATECH #HRT44LRUSC4TW OR EQUAL	FIBERGLASS REINFORCED POLYESTER	100% DR ACRYLIC DIFFUSER	SEE DETAIL (10-576)	–
B	2	2 MOD LED	4' CLASS I, DIV. 2 GROUP D RATED ENCLOSED & GASKETED LED FIXTURE. INDATECH #HRT42LRUSC4TW OR EQUAL	FIBERGLASS REINFORCED POLYESTER	100% DR ACRYLIC DIFFUSER	SEE DETAIL (10-575)	–
	–	LED	6v LED TYPE EXIT WITH EM HEADS & BATTERY. SURE-LITES #LPXH70RWHDHSD OR EQUAL	FORMED STEEL HOUSING W/WHITE POWDER COAT FINISH	STENCIL FACE/WHITE RED LETTERS	MOUNT 1'-0" ABOVE DOOR	DO NOT INSTALL IN HAZARDOUS LOCATION
	2	9 WATT W/UNIT	6v EMERGENCY BATTER UNIT. SURE-LITES #HR180MHVKISD OR EQUAL	FORMED STEEL HOUSING W/WHITE POWDER COAT FINISH	–	WALL MOUNT 8'-0" AFF	DO NOT INSTALL IN HAZARDOUS LOCATION

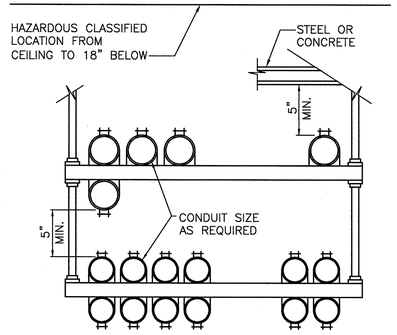

CONDUIT RACKING SYSTEM (10-051)

NTS NOTE: LOCATE BELOW HAZARDOUS CLASSIFIED LOCATION AND TO THE SIDES OF THE VEHICLE TRAFFIC LANES.

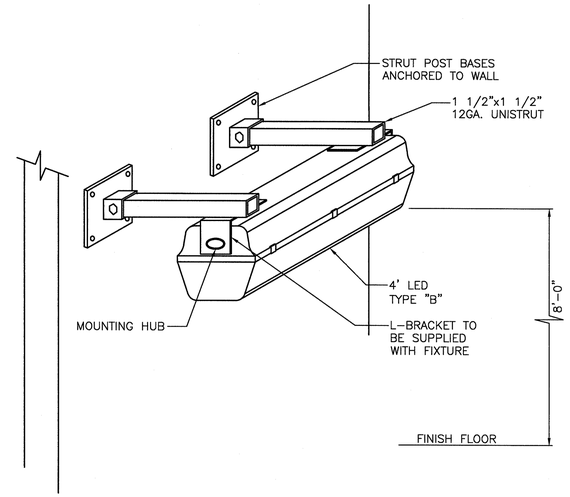

FIXTURE MOUNTING AT WORKBENCH (10-575)

NTS

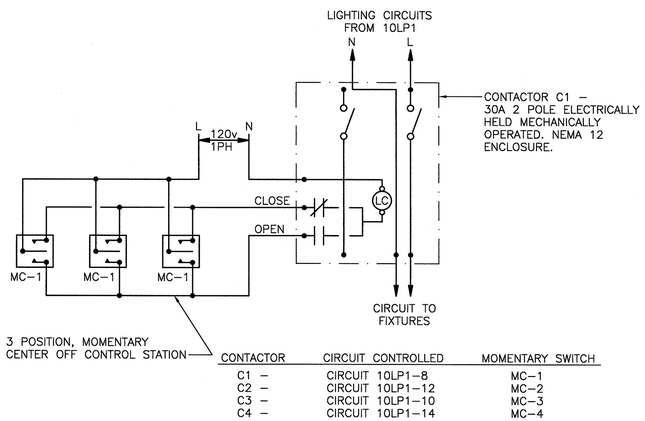

CONTACTOR	CIRCUIT CONTROLLED	MOMENTARY SWITCH
C1 –	CIRCUIT 10LP1-8	MC-1
C2 –	CIRCUIT 10LP1-12	MC-2
C3 –	CIRCUIT 10LP1-10	MC-3
C4 –	CIRCUIT 10LP1-14	MC-4

TYPICAL LIGHTING CONTROL DIAGRAM DETAIL (10-999)

NTS (TYPICAL FOR CONTACTORS C1, C2, C3, C4)

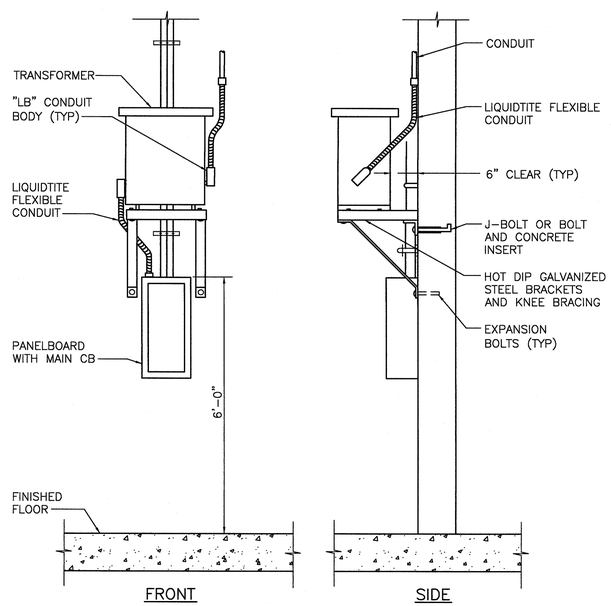

TRANSFORMER/PANEL DETAIL (10-090)

NTS

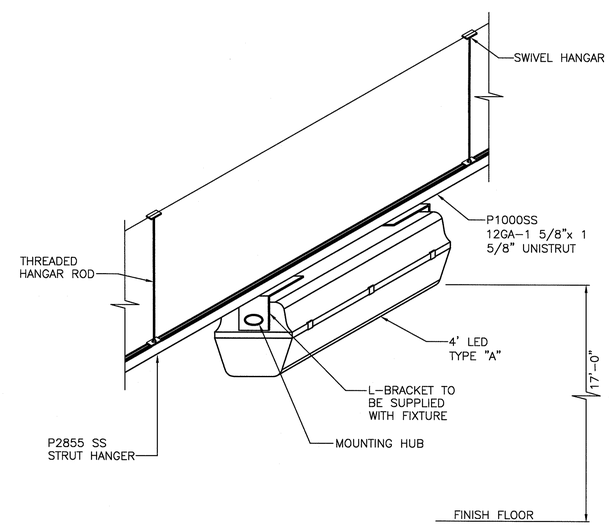

FIXTURE MOUNTING TYPE "A" (10-576)

NTS

AECOM
4135 TECHNOLOGY PARKWAY
SHEBOYGAN, WI 53083-1863
T 920.458.8711 F 920.458.0537
WWW.AECOM.COM

City of Milwaukee
Department of Public Works
Infrastructure Services Division
Facilities Development & Management Section

NO	REVISIONS	DRN/CHK	DATE

DRN	KWB	2013
DES	WRW	2013
CHK	BMW	2013
APP	BKL	2013

LINCOLN GARAGE MODIFICATIONS
VEHICLE SERVICE BAYS
LINCOLN AVENUE GARAGE
3291 WEST LINCOLN AVENUE
MILWAUKEE, WISCONSIN

ELECTRICAL SCHEDULES AND DETAILS

DATE 2013
CITY PROJECT # BU110030326
ENGINEER PROJECT # 60303317
FILENAME 10-E-04.dwg
SHEET NO
DRAWING NO **10-E-04**

Xrefs: AE23404d.dwg
Images:
Plotted By: brendelk
Plot File Date Created: Oct/28/2013 8:35 AM
Layout-Sheet Name: WORK
Filename: P:\60303317\900-WORKINGDOCS-CAD\10-LINCOLN GARAGE MODIFICATIONS\10-E-04.DWG