NOTES :

- (I), (II), (III), DENOTES RAMP TYPE.
- CONSTRUCT ALL CARRIAGE WALKS AND DRIVEWAYS PER CITY OF MILWAUKEE SPECIFICATIONS.
- OFFSET MEASUREMENTS TO TREES, WOOD POLES AND LIGHT POLES ARE TAKEN TO EDGE NEAREST THE CENTERLINE.
- OFFSET MEASUREMENTS TO HYDRANTS ARE TAKEN TO THE OPERATING NUT.

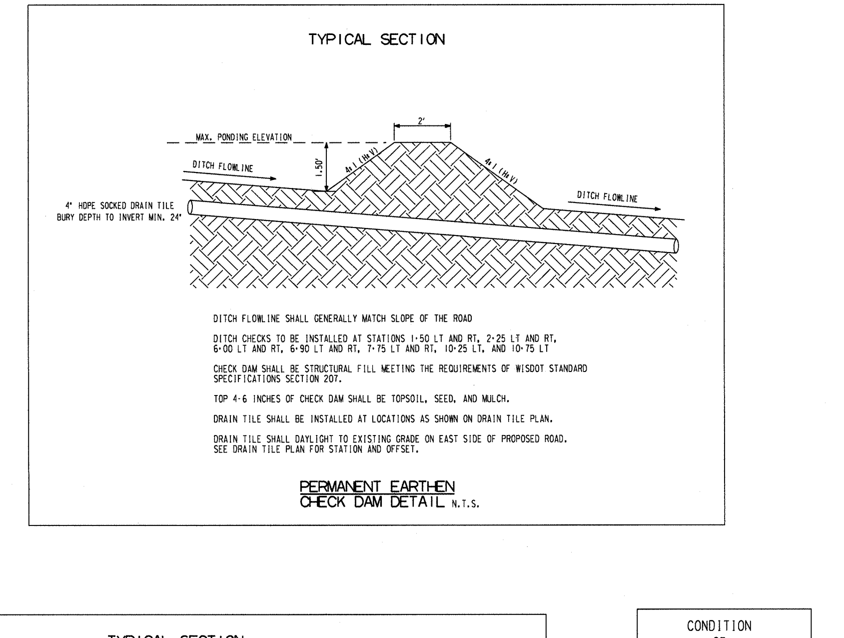

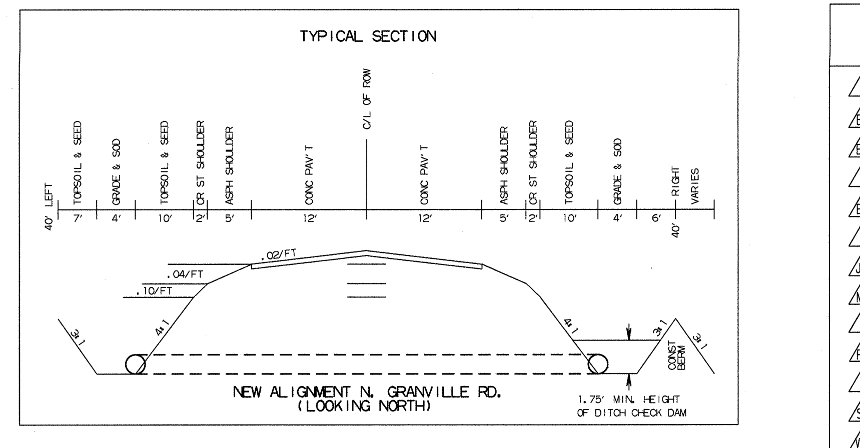

CONDITION OF CONCRETE
B BROKEN
BL BLUE LINED
BP BACK PITCHED
C CRACKED
EP EXCESSIVE PITCH
H HEAVED
JF JOINT FAILURE
MJ MUD JACKED
P PATCHED
PC POOR CONDITION
S SETTLED
SP SPALLED
VGC VERY GOOD
VPC VERY POOR

ESTIMATE / CERTIFICATE QUANTITIES

	DESCRIPTION	UNIT	ASSESS.	X-ING			PLAN TOT.	PROJ.TOT.
X	MOBILIZATION	L.S.						
X	FINISHING ROADWAY	L.S.						
X	BARRICADING AND SIGNING	L.S.						
X	CUTTING	C.Y.						
X	ROADWAY CUTTING	C.Y.						
X	FILLING	C.Y.						
X	ROADWAY FILLING	C.Y.						
	PAVEMENT REMOVAL	S.Y.						
	BITUMINOUS SURFACE REMOVAL	S.Y.						
X	CURB &/OR CURB & GUTTER REMOVAL	L.F.						
	CONC. WALK &/OR DRIVEWAY REMOVAL	S.F.						
X	SAWING (FULL DEPTH)	L.F.						
X	SAWING	L.F.						
X	TREES CLEARING	I.D.						
X	TREES GRUBBING	I.D.						
X	31" CONCRETE CURB & GUTTER	L.F.						
	V.T. CONC. WALK &/OR DRIVEWAY	C.Y.						
	5" CONCRETE WALK	S.F.						
	7" CONCRETE DRIVEWAY	S.F.						
X	8" CONCRETE PAVEMENT	S.Y.						
	7" CONCRETE ALLEY PAVEMENT	S.Y.						
X	V.T. CONCRETE BASE	C.Y.						
	CONCRETE BASE	S.Y.						
X	TACK COAT	GAL.						
X	BASE PREP. FOR ASPHALT SURFACE	L.S.						
X	V.T.ASPH.CONC.PAV'T.(MAX.)	S.Y.						
X	SEEDING	S.Y.						
X	CRUSHED STONE BASE							
	CRUSHED GRAVEL BASE							
	GRAVEL FILLING	TON						
X	SODDING	S.Y.						
X	TOPSOIL	C.Y.						
X	PAVEMENT GRINDING (ASPHALT)	S.Y.						
	PAVEMENT GRINDING (CONCRETE)	S.Y.						
X	SEALING PAV'T JOINTS & CRACKS	S.Y.						
	MANHOLE RINGS	EACH						
	SEWER FRAME ADJUSTMENT	V.F.						
	MANHOLE SEAL (CITY FURNISHED)	EACH						
X	EROSION CONTROL (TYPE M)	EACH						
X	18" CULVERT (CONC)	L.F.						
X	24" CULVERT (CONC)	L.F.						
X	CHECK DAM	EA.						

DEPARTMENT OF PUBLIC WORKS
INFRASTRUCTURE SERVICES DIVISION
FIELD OPERATIONS
FIELD & DESIGN ENGINEERING
MILWAUKEE, WISCONSIN

FILE NO. 99

PLAN OF: N. GRANVILLE RD. RELOCATED

W. GOOD HOPE RD. TO A PT. 1000' +/- NORTH OF W. GOOD HOPE RD.

THIS SECTION: W. GOOD HOPE RD. TO A PT. 500' +/- NORTH OF W. GOOD HOPE RD.

DRAWN BY		DATE:	PROJECT NO.
DESCRIPTIONS BY		DATE:	ST211110141 SHEET 1 OF 5
LEVELS BY	ALVEY	DATE: 01/19/09	SCALE 1"=10' / 1/4 SEC. 109 / ALD.DIST. 5
LEVELS TRANSF. BY	BEKELE	DATE: 12/10/11	
DESIGNED BY	R.DUCHOW	DATE: 02/14/13	OBSTRUCTIONS - SEE OBSTRUCTION LIST
GRADES TRANSF. BY	B.MATHENY	DATE: 02/28/13	REVISED: 11/19/13 CHECK DAM TYP. & LOCATIONS
CHECKED BY	D. Ulabash	DATE: 11/19/13	REVISED:
APPROVED BY	[signature]	DATE: 11/19/13	REVISED:
FILE: V:\PWELIB\PAVING\29079.FIN			
PLOT DATE: 14-NOV-2013			

STORM DRAINAGE UNITS		
C.B.W.- 0	RESET- 0	ABANDON- 0
PROJECT IN SEPARATED AREA		

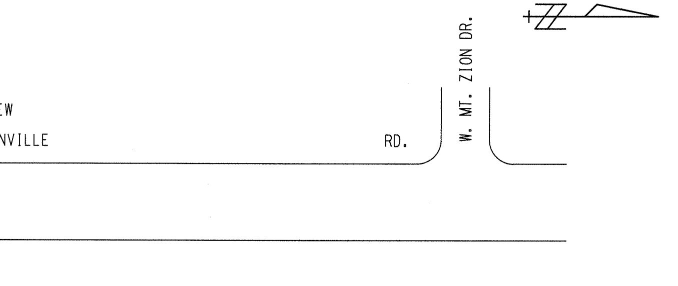

EROSION	CONTROL	AND C.B.	REQUISITION	PLAN
TYPE M	☒ - CBW	☐ - RESET	X - ABANDON	⌀
1	0	0	0	NO WORK

TO \ DATE	4-19-13	11/30/13	12/12/13		
ESTIMATING	1	1			
HOLLOW WALKS	1	1			
PUBLIC HEARING	1	1			
CONSTRUCTION	1	1	6		
SEWER	1	1			
WATER	1	1			
STREET LIGHTING	1	1			
BLDG. SEWERS	1	1			
MEASURING			1		
FIELD			1		
DISTRICT FILE	2	2			
FORESTRY	1	1			
W.E. / G.O.					
WIS. GAS CO.	1	1			
TRANSIT SYSTEM					
CABLE TV					
UND. GRD. COND.	1	1			
WATER DIST.	1	1			
WEPCO N/S	1	1			
WEPCO S/S					
SEWER SERVICES					
UTILITY COOR.	1	1			
TRAFFIC ENG.	1	1			
Rm 506			15		
PLAN SIZE	17.5"X96"				

W. GOOD HOPE RD. TO A PT. 1000' +/- NORTH OF W. GOOD HOPE RD.
ST211110141
(1 OF 5) W. GOOD HOPE RD. 29079 17.5"X96" #

NOTES :

- (I), (II), (III), DENOTES RAMP TYPE.
- CONSTRUCT ALL CARRIAGE WALKS AND DRIVEWAYS PER CITY OF MILWAUKEE SPECIFICATIONS.
- OFFSET MEASUREMENTS TO TREES, WOOD POLES AND LIGHT POLES ARE TAKEN TO EDGE NEAREST THE CENTERLINE.
- OFFSET MEASUREMENTS TO HYDRANTS ARE TAKEN TO THE OPERATING NUT.

ESTIMATE / CERTIFICATE QUANTITIES

DESCRIPTION	UNIT	ASSESS.	X-ING			PLAN TOT.	PROJ.TOT.
MOBILIZATION	L.S.						
FINISHING ROADWAY	L.S.						
BARRICADING AND SIGNING	L.S.						
CUTTING	C.Y.						
ROADWAY CUTTING	C.Y.						
FILLING	C.Y.						
ROADWAY FILLING	C.Y.						
PAVEMENT REMOVAL	S.Y.						
BITUMINOUS SURFACE REMOVAL	S.Y.						
CURB &/OR CURB & GUTTER REMOVAL	L.F.						
CONC.WALK &/OR DRIVEWAY REMOVAL	S.F.						
SAWING (FULL DEPTH)	L.F.						
SAWING	L.F.						
TREES CLEARING	I.D.						
TREES GRUBBING	I.D.						
31" CONCRETE CURB & GUTTER	L.F.						
V.T. CONC.WALK &/OR DRIVEWAY	C.Y.						
5" CONCRETE WALK	S.F.						
7" CONCRETE DRIVEWAY	S.F.						
8" CONCRETE PAVEMENT	S.Y.						
7" CONCRETE ALLEY PAVEMENT	S.Y.						
V.T. CONCRETE BASE	C.Y.						
CONCRETE BASE	S.Y.						
TACK COAT	GAL.						
BASE PREP. FOR ASPHALT SURFACE	L.S.						
V.T.ASPH.CONC.PAV'T.(MAX.)	S.Y.						
SEEDING	S.Y.						
CRUSHED STONE BASE							
CRUSHED GRAVEL BASE							
GRAVEL FILLING	TON						
SODDING	S.Y.						
TOPSOIL	C.Y.						
PAVEMENT GRINDING (ASPHALT)	S.Y.						
PAVEMENT GRINDING (CONCRETE)	S.Y.						
SEALING PAV'T JOINTS & CRACKS	S.Y.						
MANHOLE RINGS	EACH						
SEWER FRAME ADJUSTMENT	V.F.						
MANHOLE SEAL (CITY FURNISHED)	EACH						
EROSION CONTROL (TYPE M)	EACH						
18" CULVERT (CONC)	L.F.						
24" CULVERT (CONC)	L.F.						

CONDITION OF CONCRETE	
B	BROKEN
BL	BLUE LINED
BP	BACK PITCHED
C	CRACKED
EP	EXCESSIVE PITCH
H	HEAVED
JF	JOINT FAILURE
MJ	MUD JACKED
P	PATCHED
PC	POOR CONDITION
S	SETTLED
SP	SPALLED
VGC	VERY GOOD
VPC	VERY POOR

DEPARTMENT OF PUBLIC WORKS
INFRASTRUCTURE SERVICES DIVISION
FIELD OPERATIONS
FIELD & DESIGN ENGINEERING
MILWAUKEE, WISCONSIN

FILE NO.

PLAN OF: N. GRANVILLE RD. RELOCATED

W. GOOD HOPE RD. TO A PT. 1000' +/- NORTH OF W. GOOD HOPE RD.

THIS SECTION: A PT. 500'+/- OF W. GOOD HOPE RD. TO A PT. 825'+/- NORTH OF W. GOOD HOPE RD.

DRAWN BY		DATE:	PROJECT NO. ST211110141		SHEET 2 OF 5
DESCRIPTIONS BY		DATE:			
LEVELS BY	ALVEY	DATE: 01/19/09	SCALE	1/4 SEC.	ALD.DIST.
LEVELS TRANSF. BY	BEKELE	DATE: 12/10/11	1" = 10'	109	5
DESIGNED BY	R.DUCHOW	DATE: 02/14/13	OBSTRUCTIONS - SEE OBSTRUCTION LIST		
GRADES TRANSF. BY	B.MATHENY	DATE: 02/28/13	REVISED: 11/19/13 CHECK DAM TYP. & LOCATIONS		
CHECKED BY	D. Ulatowski	DATE: 11/19/13	REVISED:		
APPROVED BY	[signature]	DATE: 11/19/13	REVISED:		
FILE: V:\PWELIB\PAVING\29079.FIN					
PLOT DATE: 14-NOV-2013					

STORM DRAINAGE UNITS		
C.B.W.-	RESET-	ABANDON-
PROJECT IN SEPARATED AREA		

SEE SHEET 1

EROSION CONTROL AND C.B. REQUISITION PLAN

TYPE M | ☒ - CBW | ☐ - RESET | X - ABANDON | NO WORK

TO \ DATE	4-19-13	11/20/13	12/12/13		
ESTIMATING	1	1			
HOLLOW WALKS	1	1			
PUBLIC HEARING	1	1			
CONSTRUCTION	1	1	6		
SEWER	1	1			
WATER	1	1			
STREET LIGHTING	1	1			
BLDG. SEWERS	1	1			
MEASURING			1		
FIELD			1		
DISTRICT FILE	2	2			
FORESTRY	1	1			
W.E. / G.O.					
WIS. GAS CO.	1	1			
TRANSIT SYSTEM					
CABLE TV					
UND. GRD. COND.	1	1			
WATER DIST.	1	1			
WEPCO N/S	1	1			
WEPCO S/S					
SEWER SERVICES					
UTILITY COOR.	1	1			
TRAFFIC ENG	1	1			
Km SOG			15		
PLAN SIZE	17.5' X 100'				

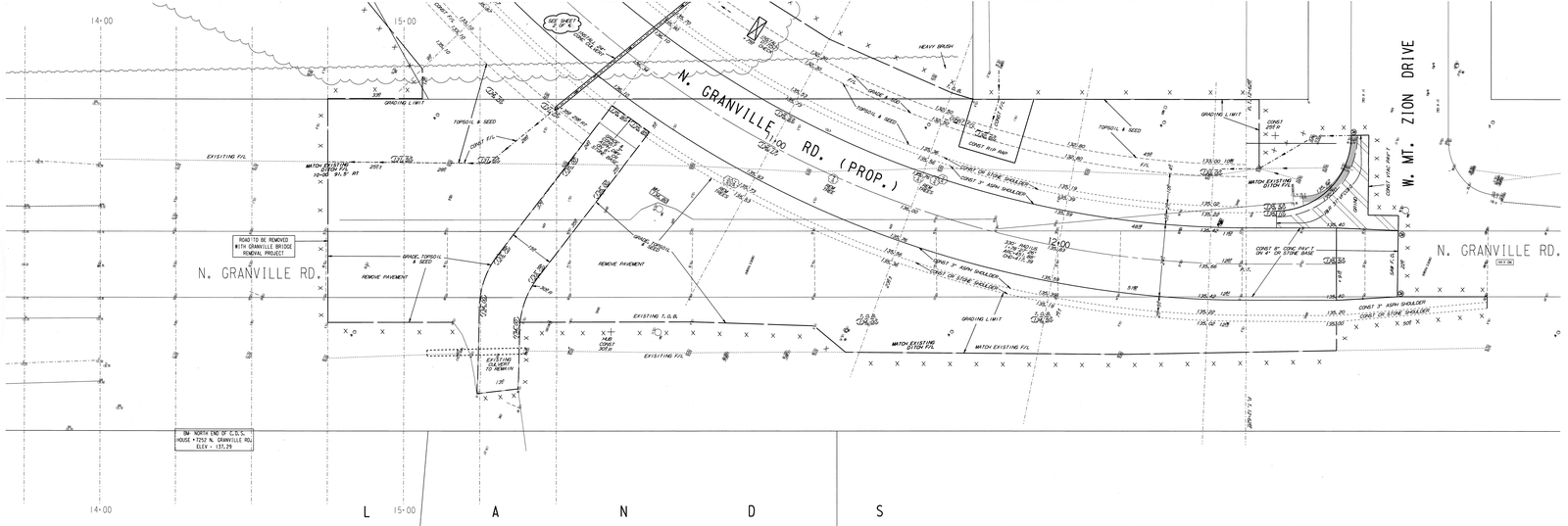

NOTES :

- ①, ②, ③, ④, DENOTES RAMP TYPE.
- CONSTRUCT ALL CARRIAGE WALKS AND DRIVEWAYS PER CITY OF MILWAUKEE SPECIFICATIONS.
- OFFSET MEASUREMENTS TO TREES, WOOD POLES AND LIGHT POLES ARE TAKEN TO EDGE NEAREST THE CENTERLINE.
- OFFSET MEASUREMENTS TO HYDRANTS ARE TAKEN TO THE OPERATING NUT.

ESTIMATE / CERTIFICATE QUANTITIES

DESCRIPTION	UNIT	ASSESS.	X-ING			PLAN TOT.	PROJ. TOT.
MOBILIZATION	L.S.						
FINISHING ROADWAY	L.S.						
BARRICADING AND SIGNING	L.S.						
CUTTING	C.Y.						
ROADWAY CUTTING	C.Y.						
FILLING	C.Y.						
ROADWAY FILLING	C.Y.						
PAVEMENT REMOVAL	S.Y.						
BITUMINOUS SURFACE REMOVAL	S.Y.						
CURB &/OR CURB & GUTTER REMOVAL	L.F.						
CONC.WALK &/OR DRIVEWAY REMOVAL	S.Y.						
GRAVEL (FULL DEPTH)	S.Y.						
GRAVEL	L.F.						
TREES CLEARING	L.S.						
TREES GRUBBING	L.S.						
6" CONCRETE CURB & GUTTER	L.F.						
4" CONCRETE WALK & DRIVEWAY	S.F.						
5" CONCRETE WALK	S.F.						
7" CONCRETE DRIVEWAY	S.F.						
8" CONCRETE PAVEMENT	S.Y.						
9" CONCRETE ALLEY PAVEMENT	S.Y.						
4" CONCRETE BASE	S.Y.						
5" CONCRETE BASE	S.Y.						
TACK COAT	GAL.						
BASE PREP. FOR ASPHALT SURFACE	L.S.						
4.5"-ASPH.CONC.PAV'T. MIX.	S.Y.						
SEEDING	S.Y.						
CRUSHED STONE BASE							
CRUSHED GRAVEL BASE							
FERTILIZING	TON						
SODDING	S.Y.						
TOPSOIL	C.Y.						
PAVEMENT GRINDING (ASPHALT)	S.Y.						
PAVEMENT GRINDING (CONCRETE)	S.Y.						
SEAL/RE PAV'T JOINTS & CRACKS	S.Y.						
MANHOLE RINGS	EACH						
SEWER FRAME ADJUSTMENT	L.F.						
MANHOLE SEAL (CITY FURNISHED)	EACH						
18" CULVERT (CONC.)	L.F.						
24" CULVERT (CONC.)	L.F.						
36" CULVERT (CONC.)	L.F.						

CONDITION OF CONCRETE
BROKEN
BLUE LINED
BACK PITCHED
CRACKED
EXCESSIVE PITCH
HEAVED
JOINT FAILURE
MUD JACKED
PATCHED
POOR CONDITION
SETTLED
SPALLED
VERY GOOD
VERY POOR

DEPARTMENT OF PUBLIC WORKS
INFRASTRUCTURE SERVICES DIVISION
FIELD OPERATIONS
FIELD & DESIGN ENGINEERING
MILWAUKEE, WISCONSIN

FILE NO.

PLAN OF: N. GRANVILLE RD. RELOCATED
N. GOOD HOPE RD. TO A PT. 1000' +/- NORTH OF W. GOOD HOPE RD.
IN: SECTIONS 4 PT. 805' +/- OF N. 1000 HOPE RD. 10 & W. 21N 10W.

DRAWN BY:	DATE:	PROJECT:	
LAYOUT SECTIONS BY:	DATE:	11/01/01	SHEET 3 OF 5
LEVELS BY: R.KEY	DATE: 01/09/00	SCALE:	1"=40' HOR. 1"=5' VERT.
LEVELS TRANSF. BY: TRAVIS	DATE: 01/01/01	1"=10'	100 5
DESIGNED BY: R.LOUCKS	DATE: 02/01/01	DISTRIBUTION:	SEE DISTRIBUTION LIST
GRADES TRANSF. BY: R.MATHER	DATE: 02/08/01	REVISED:	Apply chkpt. DAR Dir. & Contract
CHECKED BY: R. Loucks	DATE: 4/9/01	REVISED:	
APPROVED BY: Wm. F. Sugrue	DATE: 4/9/01	REVISED:	
FILE: N-GRNV. SEURATE\MISC\PLAN			
PLOT DATE: 14-NOV-2011			

STORM DRAINAGE UNITS
C.B. ☐ RESET ☐ ABANDON
PROJECT IN SEPARATED AREA

SEE SHEET 1

EROSION	CONTROL	AND	C.B.	REQUISITION	PLAN
TYPE - M	☒ - CBM		☐ - RESET	☒ - ABANDON	☑ NO WORK

NO.	DATE	REVISION	BY	APPROVED

ESTIMATED		
FIELD NOTES		
PUBLIC WORKS		
CONSTRUCTION		
CONTRACTOR		
NEWS		
FILE		
PUBLIC LIBRARY		
BUS. OFFICE		
MILWAUKEE		
CITY		
CONSULTING		
ENGINEERS		
WATER		
W.E.C.O.		
TELEPHONE		
TRAFFIC SIGNAL		
CABLE TV		
GAS		
ATT. TEL. CABLE		
WISCONSIN		
PUBLIC SERVICE		
MILW. COUNTY		
SEWER DIVISION		
DATE: APR. 1998		
For Bidding		
PLAN NO.		

W:\GRANVILLE RD\ RELOCATED\ W:\GOOD HOPE RD\ 10 W\ W:\10W\ 21N\ 11/01/01 11:2.182 S3013 W:\GRANVILLE RD\ RELOCATED\ W:\GOOD HOPE RD\ 10 W\ 1.DGN, \\ WMBLN\ DL W:\GOOD HOPE RD\ 13 DL 2 9.4" 835 \\ DL W:\GOOD HOPE RD\ 10 W\ W:\10W\ 21N\ 11/01/01 11:2.182 S3013 W:\GRANVILLE RD\ RELOCATED\ W:\GOOD HOPE RD\ 13 DL 2 9.4" 835 \\ DL W:\GOOD HOPE RD\ 10 W\ W:\10W\ 21N\ 11/01/01 11:2.182 S3013

NOTES :

- (I), (II), (III), DENOTES RAMP TYPE.
- CONSTRUCT ALL CARRIAGE WALKS AND DRIVEWAYS PER CITY OF MILWAUKEE SPECIFICATIONS.
- OFFSET MEASUREMENTS TO TREES, WOOD POLES AND LIGHT POLES ARE TAKEN TO EDGE NEAREST THE CENTERLINE.
- OFFSET MEASUREMENTS TO HYDRANTS ARE TAKEN TO THE OPERATING NUT.

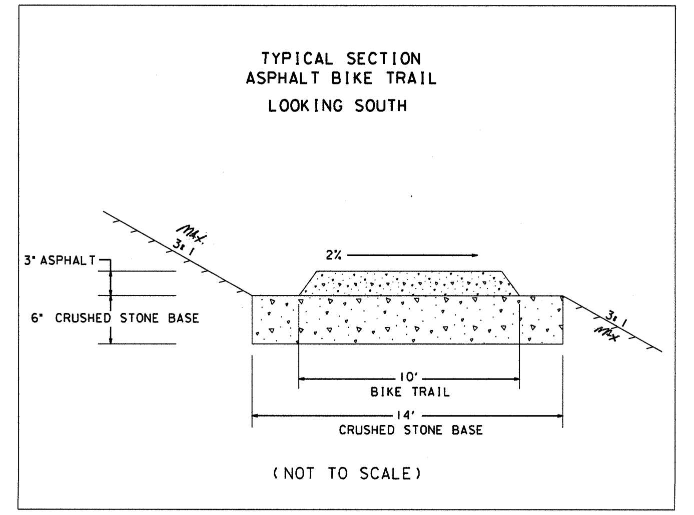

CONDITION OF CONCRETE

- BROKEN
- BLUE LINED
- BACK PITCHED
- CRACKED
- EXCESSIVE PITCH
- HEAVED
- JOINT FAILURE
- MUD JACKED
- PATCHED
- POOR CONDITION
- SETTLED
- SPALLED
- VERY GOOD
- VERY POOR

ESTIMATE / CERTIFICATE QUANTITIES

DESCRIPTION	UNIT	ASSESS.	X-ING			PLAN TOT.	PROJ. TOT.
MOBILIZATION	L.S.						
FINISHING ROADWAY	L.S.						
BARRICADING AND SIGNING	L.S.						
CUTTING	C.Y.						
ROADWAY CUTTING	C.Y.						
FILLING	C.Y.						
ROADWAY FILLING	C.Y.						
PAVEMENT REMOVAL	S.Y.						
BITUMINOUS SURFACE REMOVAL	S.Y.						
CURB &/OR CURB & GUTTER REMOVAL	L.F.						
CONC. WALK &/OR DRIVEWAY REMOVAL	S.F.						
SAWING (FULL DEPTH)	L.F.						
SAWING	L.F.						
TREES CLEARING	I.D.						
TREES GRUBBING	I.D.						
31" CONCRETE CURB & GUTTER	L.F.						
V.T. CONC. WALK &/OR DRIVEWAY	C.Y.						
5" CONCRETE WALK	S.F.						
7" CONCRETE DRIVEWAY	S.F.						
8" CONCRETE PAVEMENT	S.Y.						
7" CONCRETE ALLEY PAVEMENT	S.Y.						
V.T. CONCRETE BASE	C.Y.						
CONCRETE BASE	S.Y.						
TACK COAT	GAL.						
BASE PREP. FOR ASPHALT SURFACE	L.S.						
V.T. ASPH. CONC. PAV'T. (MAX.)	S.Y.						
SEEDING	S.Y.						
CRUSHED STONE BASE							
CRUSHED GRAVEL BASE							
GRAVEL FILLING	TON						
SODDING	S.Y.						
TOPSOIL	C.Y.						
PAVEMENT GRINDING (ASPHALT)	S.Y.						
PAVEMENT GRINDING (CONCRETE)	S.Y.						
SEALING PAV'T JOINTS & CRACKS	S.Y.						
MANHOLE RINGS	EACH						
SEWER FRAME ADJUSTMENT	V.F.						
MANHOLE SEAL (CITY FURNISHED)	EACH						
EROSION CONTROL (TYPE M)	EACH						
18" CULVERT (CONC)	L.F.						
24" CULVERT (CONC)	L.F.						

DEPARTMENT OF PUBLIC WORKS
INFRASTRUCTURE SERVICES DIVISION
FIELD OPERATIONS
FIELD & DESIGN ENGINEERING
MILWAUKEE, WISCONSIN

FILE NO.

PLAN OF: N. GRANVILLE RD. RELOCATED
W. GOOD HOPE RD. TO A PT. 1000' +/- NORTH OF W. GOOD HOPE RD.
THIS SECTION: BIKE TRAIL ALONG N. 91ST ST.

DRAWN BY		DATE:	PROJECT NO. ST211110141	SHEET 4 OF 5	
DESCRIPTIONS BY		DATE:			
LEVELS BY	ALVEY	DATE: 01/19/09	SCALE	1/4 SEC.	ALD. DIST.
LEVELS TRANSF. BY	BEKELE	DATE: 12/10/11	1" = 10'	109	5
DESIGNED BY	R. DUCHOW	DATE: 02/14/13	OBSTRUCTIONS - SEE OBSTRUCTION LIST		
GRADES TRANSF. BY	S. BIEGANSKI	DATE: 04/10/13	REVISED:		
CHECKED BY	D. Ulabeh	DATE: 4/17/13	REVISED:		
APPROVED BY	[signature]	DATE: 4/17/13	REVISED:		
FILE: V:\PWELIB\PAVING\29079.FIN					
PLOT DATE: 17-APR-2013					

STORM DRAINAGE UNITS		
C.B.W.-	RESET-	ABANDON-
PROJECT IN SEPARATED AREA		

SEE SHEET 1

EROSION CONTROL AND C.B. REQUISITION PLAN

TYPE M — CBW — RESET — ABANDON — NO WORK

TO \ DATE	4/19/13	12/12/13
ESTIMATING	1	
HOLLOW WALKS	1	
PUBLIC HEARING	1	
CONSTRUCTION	1	6
SEWER	1	
WATER	1	
STREET LIGHTING	1	
BLDG. SEWERS	1	

BIKE TRAIL ALONG N. 91ST ST.
N. GRANVILLE RD. RELOCATED - W. GOOD HOPE RD. TO A PT. 1000' +/- NORTH OF W. GOOD HOPE RD.
ST211110141
24" X 30"

NOTES :

- (I), (II), (III), DENOTES RAMP TYPE.
- CONSTRUCT ALL CARRIAGE WALKS AND DRIVEWAYS PER CITY OF MILWAUKEE SPECIFICATIONS.
- OFFSET MEASUREMENTS TO TREES, WOOD POLES AND LIGHT POLES ARE TAKEN TO EDGE NEAREST THE CENTERLINE.
- OFFSET MEASUREMENTS TO HYDRANTS ARE TAKEN TO THE OPERATING NUT.

ESTIMATE / CERTIFICATE QUANTITIES

DESCRIPTION	UNIT	ASSESS.	X-ING			PLAN TOT.	PROJ. TOT.
MOBILIZATION	L.S.						
FINISHING ROADWAY	L.S.						
BARRICADING AND SIGNING	L.S.						
CUTTING	C.Y.						
ROADWAY CUTTING	C.Y.						
FILLING	C.Y.						
ROADWAY FILLING	C.Y.						
PAVEMENT REMOVAL	S.Y.						
BITUMINOUS SURFACE REMOVAL	S.Y.						
CURB &/OR CURB & GUTTER REMOVAL	L.F.						
CONC. WALK &/OR DRIVEWAY REMOVAL	S.F.						
SAWING (FULL DEPTH)	L.F.						
SAWING	L.F.						
TREES CLEARING	I.D.						
TREES GRUBBING	I.D.						
31" CONCRETE CURB & GUTTER	L.F.						
V.T. CONC. WALK &/OR DRIVEWAY	C.Y.						
5" CONCRETE WALK	S.F.						
7" CONCRETE DRIVEWAY	S.F.						
8" CONCRETE PAVEMENT	S.Y.						
7" CONCRETE ALLEY PAVEMENT	S.Y.						
V.T. CONCRETE BASE	C.Y.						
CONCRETE BASE	S.Y.						
TACK COAT	GAL.						
BASE PREP. FOR ASPHALT SURFACE	L.S.						
V.T. ASPH. CONC. PAV'T. (MAX.)	S.Y.						
SEEDING	S.Y.						
CRUSHED STONE BASE							
CRUSHED GRAVEL BASE							
GRAVEL FILLING	TON						
SODDING	S.Y.						
TOPSOIL	C.Y.						
PAVEMENT GRINDING (ASPHALT)	S.Y.						
PAVEMENT GRINDING (CONCRETE)	S.Y.						
SEALING PAV'T JOINTS & CRACKS	S.Y.						
MANHOLE RINGS	EACH						
SEWER FRAME ADJUSTMENT	V.F.						
MANHOLE SEAL (CITY FURNISHED)	EACH						
EROSION CONTROL (TYPE M)	EACH						
18" CULVERT (CONC)	L.F.						
24" CULVERT (CONC)	L.F.						

DEPARTMENT OF PUBLIC WORKS
INFRASTRUCTURE SERVICES DIVISION
FIELD OPERATIONS
FIELD & DESIGN ENGINEERING
MILWAUKEE, WISCONSIN

FILE NO. 103

PLAN OF: N. GRANVILLE RD. RELOCATED

W. GOOD HOPE RD. TO A PT. 1000' +/- NORTH OF W. GOOD HOPE RD.

THIS SECTION: WALK ALONG W. GOOD HOPE RD.

DRAWN BY	G. LANGE	DATE: 05/30/13	PROJECT NO. ST211110141		SHEET 5 OF 5
DESCRIPTIONS BY		DATE:			
LEVELS BY	ALVEY	DATE: 01/19/09	SCALE	1/4 SEC.	ALD. DIST.
LEVELS TRANSF. BY	BEKELE	DATE: 12/10/11	1" = 10'	109	5
DESIGNED BY	R. DUCHOW	DATE: 02/14/13	OBSTRUCTIONS - SEE OBSTRUCTION LIST		
GRADES TRANSF. BY	S. BIEGANSKI	DATE: 04/10/13	REVISED:		
CHECKED BY	D. Ulubah	DATE: 6/6/13	REVISED:		
APPROVED BY	[signature]	DATE: 6/6/13	REVISED:		
FILE: V:\PWELIB\PAVING\29079.FIN					
PLOT DATE: 04-JUN-2013					

STORM DRAINAGE UNITS		
C.B.W. - 0	RESET - 0	ABANDON - 0
PROJECT IN SEPARATED AREA		

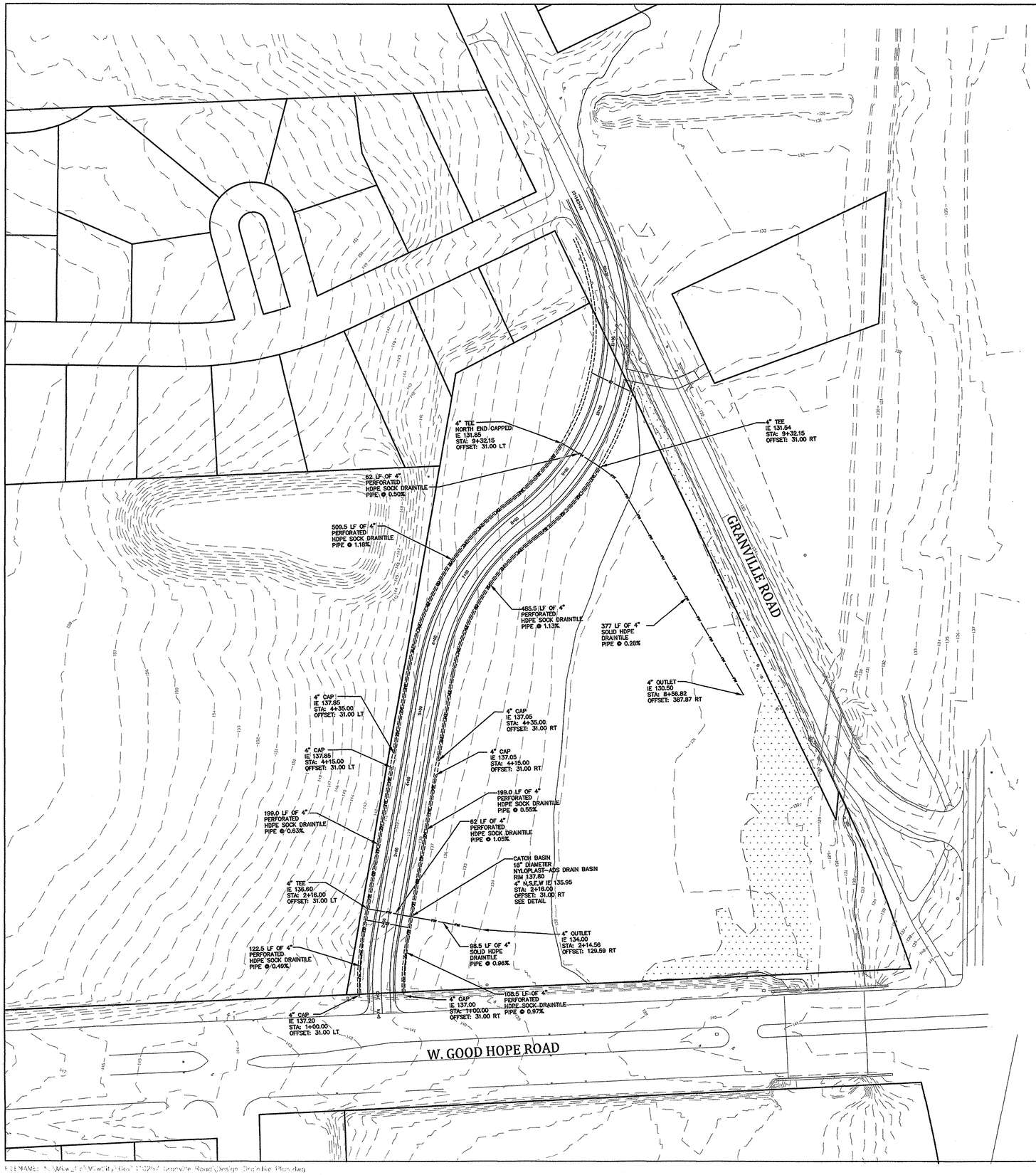

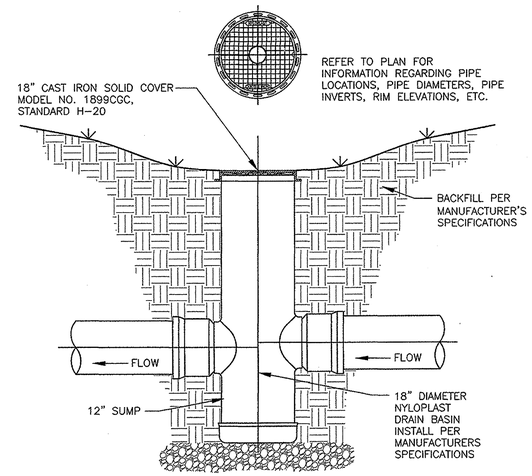

18" NYLOPLAST DRAIN BASIN WITH INLET AND OUTLET N.T.S.

DRAINTILE SPECIFICATIONS

1. ALL DRAINTILE SHALL BE 4" HIGH DENSITY POLYETHYLENE, SINGLE WALL, HIGHWAY GRADE. DRAINTILE IS EITHER SOLID OR PERFORATED AND SOCKED. PIPE SHALL MEET AASHTO M252, TYPE C OR CP. SEE PLAN FOR LOCATIONS.
2. FITTINGS SHALL CONFORM TO AASHTO M252.
3. INSTALLATION SHALL BE IN ACCORDANCE WITH ASTM D2321 AND MANUFACTURER SPECIFICATIONS. SPOIL BACKFILL IS ALLOWED. ORGANIC AND CLAY TYPE SOILS SHOULD BE AVOIDED TO PREVENT CLOGGING.

ESTIMATE OF QUANTITIES

18" DIA. NYLOPLAST DRAIN BASIN	1	EA
4" PERFORATED HDPE SOCK DRAINTILE	1,748	LF
4" SOLID HDPE DRAINTILE	476	LF

NOTE:

PRIOR TO CONNECTING ANY UTILITIES, THE CONTRACTOR SHALL EXCAVATE & LOCATE EACH EXISTING UTILITY AT EACH POINT OF CONNECTION TO VERIFY THE EXISTING LOCATION & ELEVATION. ALL DISCREPANCIES BETWEEN THE PLANS & EXISTING UTILITIES SHALL BE IMMEDIATELY REPORTED TO THE ENGINEER FOR POSSIBLE REDESIGN. THE CONTRACTOR SHALL NOT COMMENCE WITH WORK ON ANY UTILITIES UNTIL THE DISCREPANCIES HAVE BEEN RESOLVED TO THE SATISFACTION OF THE ENGINEER.

KAPUR AND ASSOCIATES ASSUMES NO RESPONSIBILITY FOR DAMAGES, LIABILITY OR COSTS RESULTING FROM CHANGES OR ALTERATIONS MADE TO THIS PLAN WITHOUT THE EXPRESSED WRITTEN CONSENT OF KAPUR AND ASSOCIATES.

CONTRACTOR SHALL PROVIDE EROSION CONTROL FACILITIES IN ACCORDANCE WITH THE NAME EROSION CONTROL ORDINANCE AND THE WISCONSIN CONSTRUCTION SITE BEST MANAGEMENT PRACTICE HANDBOOK.

THE LOCATIONS OF EXISTING UTILITY INSTALLATIONS AS SHOWN ON THIS PLAN ARE APPROXIMATE. THERE MAY BE OTHER UNDERGROUND UTILITY INSTALLATIONS WITHIN THE PROJECT AREA THAT ARE NOT SHOWN.

DIGGERS HOTLINE
Toll Free (800) 242-8511
Milwaukee Area (414) 259-1181
Hearing Impaired TDD (800) 542-2289
www.DiggersHotline.com

KAPUR & ASSOCIATES, INC.
CONSULTING ENGINEERS
7711 N. PORT WASHINGTON ROAD
MILWAUKEE, WISCONSIN 53217
Phone: 414.351.6668 Fax: 414.351.4117
www.kapurengineers.com

PROJECT:
GRANVILLE ROAD

LOCATION:
MILWAUKEE, WI

TO \ DATE	5/13/13
ESTIMATING	
HOLLOW WALKS	
PUBLIC HEARING	
CONSTRUCTION	6
SEWER	
WATER	
STREET LIGHTING	
BLDG. SEWERS	
MEASURING	1
FIELD	1
DISTRICT FILE	
FORESTRY	
W.E. / G.O.	
WIS. GAS CO.	
TRANSIT SYSTEM	
CABLE TV	
UND. GRD. COND.	
WATER DIST.	
WEPCO N/S	
WEPCO S/S	
SEWER SERVICES	
UTILITY COOR.	
Km 506	15
PLAN SIZE	

REVISIONS:

#	DATE	DESCRIPTION

NORTH ARROW:

SCALE: 1" = 70'
0 35 70 140

SEAL:

we listen. we innovate.
we turn your vision into reality.

SHEET:
DRAIN TILE PLAN
REVISED 12/19/13

PROJECT MANAGER:	KF
PROJECT NUMBER:	110257.01
DATE:	05-03-2013

SHEET NUMBER:
DT-1

FILENAME: S:\Mke_Cd\Mke_Eng\110257 Granville Road\Design\Draintile Plan.dwg

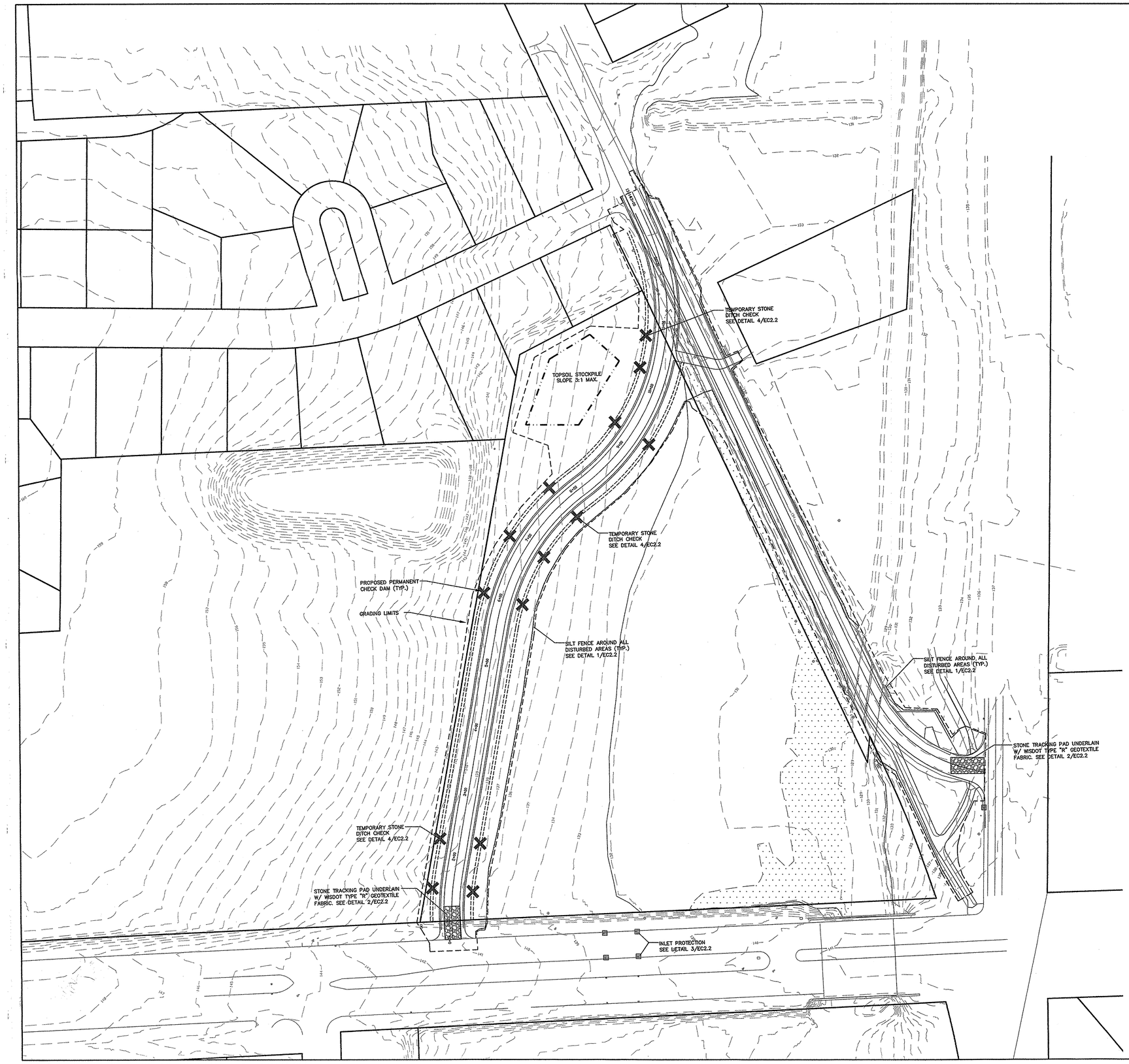

POINTS OF CONTACT

LAND OWNER:

CITY OF MILWAUKEE
JEFFERY POLENSKE–CITY ENGINEER
809 N. BROADWAY
MILWAUKEE, WI 53202
PHONE: (414) 286–2400

PROJECT ENGINEER:

KURT FARRENKOPF, P.E.
KAPUR & ASSOCIATES, INC
7711 NORTH PORT WASHINGTON ROAD
MILWAUKEE, WI 53217
PHONE: (414) 351–6668

CONSTRUCTION MANAGER:

T.B.D

INSPECT ALL EROSION CONTROL MEASURES PRIOR TO COMMENCING GRADING, GRUBBING OR OTHER LAND DISTURBING ACTIVITIES. EROSION CONTROL MEASURES MUST BE INSPECTED WEEKLY AND WITHIN 24 HOURS OF EVERY PRECIPITATION EVENT OF 0.50 INCH OR GREATER. IN ADDITION THE CONTRACTOR SHALL CONDUCT DAILY INSPECTIONS AND DOCUMENT CONDITIONS AND REPAIRS MADE ALONG WITH DATE, TIME OF INSPECTION AND WEATHER CONDITIONS IN A DAILY LOG BOOK. THE DAILY LOG BOOK, WEEKLY / 0.50 INCH PRECIPITATION REPORTS, APPROVED PLANS AND WPDES PERMIT & CHAPTER 30 PERMIT SHALL BE KEPT IN AN ACCESSIBLE LOCATION, LIKE A MAILBOX, WITHIN THE STAGING AREA.

AT ABSOLUTELY NO TIME MAY CONSTRUCTION EQUIPMENT, DEBRIS, FILL, ETC. BE PLACED WITHIN WETLANDS, WATERWAYS OR FLOOD PLAINS UNLESS IDENTIFIED IN THE PLANS.

EROSION CONTROL LEGEND

- PROJECT LIMITS
- TOPSOIL STOCKPILE
- FILTER FABRIC FENCE SEE DETAIL 1/C2.1
- DESIGNATES EXISTING INLETS THAT MUST BE PROTECTED SEE DETAIL 3/C2.1 – TYPE D PROTECTION
- DESIGNATES DITCH CHECKS SEE DETAIL 4/C2.1 – TYPE D PROTECTION

DIGGERS HOTLINE
Toll Free (800) 242-8511
Milwaukee Area (414) 259-1181
Hearing Impaired TDD (800) 542-2289
www.DiggersHotline.com

KAPUR & ASSOCIATES, INC.
CONSULTING ENGINEERS
7711 N. PORT WASHINGTON ROAD
MILWAUKEE, WISCONSIN 53217
Phone: 414.351.6668 Fax: 414.351.4117
www.kapurengineers.com

PROJECT:
GRANVILLE ROAD

LOCATION:
MILWAUKEE, WI

TO \ DATE	12/10/13			
ESTIMATING				
HOLLOW WALKS				
PUBLIC HEARING				
CONSTRUCTION	6			
SEWER				
WATER				
STREET LIGHTING				
BLDG. SEWERS				
MEASURING	1			
FIELD	1			
DISTRICT FILE				
FORESTRY				
W.E. / G.O.				
WIS. GAS CO.				
TRANSIT SYSTEM				
CABLE TV				
UND. GRD. COND.				
WATER DIST.				
WEPCO N/S				
WEPCO S/S				
SEWER SERVICES				
UTILITY COOR.				
am cpb	15			
PLAN SIZE				

REVISIONS:

#	DATE	DESCRIPTION

NORTH ARROW:

SCALE: 1" = 70'
0 35 70 140

SEAL:

we listen. we innovate. we turn your vision into reality.

SHEET:
EROSION CONTROL PLAN
REVISED 11.19.13

PROJECT MANAGER:	KF
PROJECT NUMBER:	110257.01
DATE:	05-03-2013

SHEET NUMBER:
EC-1

FILENAME: S:\Milw Co\MilwCity\Gov\110257 Granville Road\Erosion Control\110257 EC Plan.dwg

EROSION CONTROL MEASURES

1. CONTRACTOR TO INSTALL AND MAINTAIN EROSION CONTROL MEASURES AS INDICATED ON THIS PLAN AND PER THE LATEST WDNR TECHNICAL STANDARDS. TECHNICAL STANDARDS MAY BE VIEWED ONLINE AT:
http://dnr.wi.gov/runoff/stormwater/techstds.htm

2. INLETS AND CATCH BASINS SHALL BE PROTECTED WITH INLET FILTERS THAT ARE PHASED IN WITH CONSTRUCTION TO REDUCE SEDIMENT FROM ENTERING THESE AREAS PER WDNR TECHNICAL STANDARD 1060 AS FOLLOWS:

   A. ALL FABRIC BARRIERS SELECTED FOR INLET/CATCH BASIN PROTECTION DEVICES SHALL BE SELECTED FROM THE LIST OF APPROVED FABRICS CERTIFIED FOR INLET PROTECTION, GEOTEXTILE FABRIC, TYPE FF IN THE CURRENT EDITION OF THE WDOT PRODUCT ACCEPTABILITY LIST, TO OBTAIN THE PAL, PLEASE REFER TO THIS WEBSITE:
   http://www.dot.wisconsin.gov/business/engrserv/pal.htm

   B. INLET PROTECTION SHALL BE AT A MINIMUM INSPECTED WEEKLY AND WITHIN 24 HOURS AFTER EVERY PRECIPITATION EVENT OF ½ INCH OR GREATER DURING A 24-HOUR PERIOD.

   C. PLACEMENT OF SPOIL MATERIAL, DEBRIS, SOILS, ETC. ON TOP OF INLETS/CATCH BASINS, EVEN IF TEMPORARY, IS STRICTLY DISCOURAGED AND PROHIBITED.

   D. SEDIMENT DEPOSITS SHALL BE REMOVED AND THE INLET PROTECTION DEVICE RESTORED TO ITS ORIGINAL DIMENSIONS WHEN THE SEDIMENT HAS ACCUMULATED BETWEEN 1/3 TO ½ THE DESIGN DEPTH OF THE DEVICE, OR WHEN THE DEVICE IS NO LONGER FUNCTIONING PER MANUFACTURER'S SPECIFICATIONS. ALL SEDIMENT COLLECTED SHALL BE PROPERLY DISPOSED OF TO PREVENT DISCHARGE INTO AREA WATERWAYS AND WETLANDS.

   E. DUE CARE SHALL BE TAKEN TO ENSURE SEDIMENT DOES NOT FALL INTO THE INLETS/CATCH BASINS AND IMPEDE THE INTENDED FUNCTION OF THE DEVICE. ANY MATERIAL FALLING INTO THE INLET/CATCH BASIN SHALL BE REMOVED AND PROPERLY DISPOSED OF PER NOTE D ABOVE.

   F. INLET FILTERS MAY BE REMOVED AND PROPERLY DISPOSED OF UPON COMPLETION OF CONSTRUCTION, HAULING OR MOVEMENT OF CONSTRUCTION EQUIPMENT THROUGHOUT THE SITE, AND ONCE THE SITE IS ADEQUATELY STABILIZED, UNLESS AS OTHERWISE NOTIFIED BY THE WDNR.

3. A TRACKING PAD SHALL BE INSTALLED AS SHOWN ON THE PLAN SHEET PRIOR TO THE START OF CONSTRUCTION TO REDUCE OFF-SITE SEDIMENTATION BY ELIMINATING THE TRACKING OF SEDIMENT FROM THE SITE PER WDNR TECHNICAL STANDARD 1057 AS FOLLOWS:

   A. A WISDOT TYPE R GEOTEXTILE FABRIC SHALL BE USED TO PREVENT MIGRATION OF UNDERLYING SOIL INTO THE STONE.

   B. AGGREGATE USED FOR TRACKING PADS SHALL BE 3 TO 6 INCH CLEAR OR WASHED STONE. ALL MATERIAL TO BE RETAINED BY 3 INCH SIEVE.

   C. THE AGGREGATE SHALL BE PLACED IN A LAYER ON TOP OF THE TYPE R GEOTEXTILE FABRIC AT LEAST 12 INCHES THICK.

   D. THE TRACKING PAD SHALL BE THE FULL WIDTH OF THE EGRESS POINT AND BE AT LEAST 50 FEET LONG.

   E. VEHICLES TRAVELING ACROSS THE TRACKING PAD SHALL MAINTAIN A SLOW CONSTANT SPEED.

   F. ANY SEDIMENT OR ROCK ACCUMULATION ONTO LOCAL ROADWAYS SHALL BE REMOVED BY STREET CLEANING, NOT FLUSHING BEFORE THE END OF EACH WORKING DAY.

   G. THE TRACKING PAD SHALL, AT A MINIMUM BE INSPECTED WEEKLY AND WITHIN 24 HOURS AFTER EVERY PRECIPITATION EVENT OF ½ INCH OF RAIN OR MORE DURING A 24-HOUR PERIOD.

   H. THE TRACKING PAD PERFORMANCE SHALL BE MAINTAINED BY SCRAPING OR TOP-DRESSING WITH ADDITIONAL AGGREGATE.

   I. A MINIMUM 12-INCH THICK PAD SHALL BE MAINTAINED.

4. THE CONSTRUCTION SITE PERIMETER AND TOPSOIL STOCKPILE AREA SHALL BE PROTECTED WITH SILT FENCE AS SHOWN ON THE PLAN SHEET PRIOR TO THE START OF CONSTRUCTION TO INTERCEPT AND REDUCE THE FLOW OF SEDIMENT-LADEN SHEET FLOW RUNOFF FROM THE CONSTRUCTION SITE PER WDNR TECHNICAL STANDARD 1056 AS FOLLOWS:

   A. SILT FENCE ENDS SHALL BE EXTENDED UPSLOPE TO PREVENT WATER FROM FLOWING AROUND THE ENDS OF THE FENCE AS SHOWN ON THE PLAN SHEET.

   B. INSTALLED SILT FENCE SHALL BE A MINIMUM 14 INCHES HIGH AND SHALL NOT EXCEED 28 INCHES IN HEIGHT MEASURED FROM THE INSTALLED GROUND ELEVATION.

   C. SILT FENCE SHALL BE SUPPORTED BY EITHER STEEL OR WOOD SUPPORT POSTS.

   D. THE MAXIMUM SPACING OF POSTS FOR NONWOVEN SILT FENCE SHALL BE 3 FEET OR FOR WOVEN FABRIC 8 FEET.

   E. SILT FENCE SHALL HAVE A SUPPORT CORD AT THE TOP OF THE FENCE.

   F. WHERE JOINTS ARE NEEDED, EACH END OF THE FABRIC SHALL BE SECURELY FASTENED TO A POST. THE POSTS SHALL BE WRAPPED AROUND EACH OTHER TO PRODUCE A STABLE AND SECURE JOINT OR SHALL BE OVERLAPPED THE DISTANCE BETWEEN TWO POSTS.

   G. A MINIMUM OF 20 INCHES OF THE POSTS SHALL EXTEND INTO THE GROUND AFTER INSTALLATION.

   H. SILT FENCE SHALL BE ANCHORED BY SPREADING AT LEAST 8 INCHES OF THE FABRIC IN A 4 INCH WIDE BY 6 INCH DEEP TRENCH, OR 6 INCH DEEP V-TRENCH ON THE UPSLOPE SIDE OF THE FENCE. THE TRENCH SHALL BE BACKFILLED AND COMPACTED. TRENCHES SHALL NOT BE EXCAVATED ANY WIDER OR DEEPER THAN NECESSARY FOR PROPER INSTALLATION.

   I. ON THE TERMINAL ENDS OF THE SILT FENCE THE FABRIC SHALL BE WRAPPED AROUND THE POST SUCH THAT THE STAPLES ARE NOT VISIBLE.

   J. GEOTEXTILE FABRIC SPECIFICATIONS SHALL MEET VALUES ESTABLISHED IN TECHNICAL STANDARD 1056.

   K. SILT FENCE SHALL BE REMOVED ONCE THE SITE IS ADEQUATELY STABILIZED.

   L. WHEN PLACING SILT FENCE NEAR TREES, CARE SHALL BE TAKEN TO MINIMIZE DAMAGE TO THE ROOT SYSTEM BY AVOIDING COMPACTION AND ROOT CUTTING WITHIN 1.5 FEET MULTIPLIED BY THE INCH DIAMETER OF THE TREE.

   M. THE CONTRACTOR MAY FURTHER STRENGTHEN THE SILT FENCE BY USING HAY BALES ON THE DOWN SLOPE SIDE AS NEEDED.

   N. SILT FENCE SHALL AT A MINIMUM BE INSPECTED WEEKLY AND WITHIN 24 HOURS AFTER EVERY PRECIPITATION EVENT THAT PRODUCES ½ INCH OF RAIN OR MORE DURING A 24 HOUR PERIOD.

   O. DAMAGED OR DECOMPOSED SILT FENCE, UNDERCUTTING, OR FLOW CHANNELS AROUND THE END OF BARRIERS SHALL BE REPAIRED OR CORRECTED.

   P. SEDIMENT SHALL BE PROPERLY DISPOSED OF ONCE THE DEPOSITS REACH ½ THE HEIGHT OF THE FENCE TO PREVENT DISCHARGE INTO AREA WATERWAYS AND WETLANDS.

5. SEEDING AND MULCHING TECHNIQUES SHALL BE USED ON AREAS OF EXPOSED SOIL WHERE THE ESTABLISHMENT OF VEGETATION IS DESIRED. TEMPORARY SEEDING APPLIES TO DISTURBED AREAS THAT WILL NOT BE BROUGHT TO FINAL GRADE OR ON WHICH LAND-DISTURBING ACTIVITIES WILL NOT BE PERFORMED FOR A PERIOD GREATER THAN 14 CALENDAR DAYS, REQUIRING VEGETATIVE COVER FOR LESS THAN ONE YEAR. SEED AND MULCH SHALL BE UTILIZED THROUGHOUT THE DURATION OF CONSTRUCTION TO ESTABLISH TEMPORARY VEGETATION TO HELP REDUCE EROSION PER WDNR TECHNICAL STANDARDS 1059 AND 1058 RESPECTIVELY AS FOLLOWS:

   A. TEMPORARY SEEDING REQUIRES A SEEDBED OF LOOSE SOIL TO A MINIMUM DEPTH OF 2 INCHES.

   B. FERTILIZER APPLICATION IS NOT GENERALLY REQUIRED FOR TEMPORARY SEEDING. HOWEVER, ANY APPLICATION OF FERTILIZER OR LIME SHALL BE BASED ON SOIL TESTING.

   C. THE SOIL SHALL HAVE A PH RANGE OF 5.5 TO 8.0.

   D. ALL SEED SHALL CONFORM TO THE REQUIREMENTS OF THE WISCONSIN STATE STATUTES AND OF THE ADMINISTRATIVE CODE CHAPTER ATCP 20.01 REGARDING NOXIOUS WEED SEED CONTENT AND LABELING.

   E. SEED SHALL NOT BE USED LATER THAN ONE YEAR AFTER THE TEST DATE ON THE LABEL.

   F. IN THE SUMMER-SPRING, CONTRACTOR SHALL USE OATS APPLIED AT 131 LBS/ACRE FOR TEMPORARY SEEDING PURPOSES. IN THE FALL THE CONTRACTOR SHALL USE ANNUAL RYEGRASS APPLIED AT 80 LBS/ACRE OR WINTER WHEAT APPLIED AT 131 LBS/ACRE. THE CONTRACTOR SHALL USE STRAW MULCH APPLIED AT 1.5 TONS/ACRE. DORMANT SEED SHALL BE USED WHEN SOIL TEMPERATURE IS CONSISTENTLY BELOW 53 DEGREES FAHRENHEIT (TYPICALLY NOV. 1 UNTIL SNOW COVER ANNUALLY). NEVER PLACE SEED ON TOP OF SNOW. IF COVER IS NEEDED AFTER SNOW FALL, CONTRACTOR MAY CHOOSE TO USE A DRY, NONTOXIC TYPE B SOIL STABILIZER PER MANUFACTURER'S SPECIFICATIONS AS REQUIRED BY THE WDNR.

   G. SEEDING SHALL NOT TAKE PLACE WHEN THE SOIL IS TOO WET.

   H. CONTRACTOR MAY CONSIDER WATERING TO HELP ESTABLISH THE SEED. WATER APPLICATION RATES SHALL BE CONTROLLED TO HELP PREVENT RUNOFF AND EROSION.

   I. DURING CONSTRUCTION, AREAS THAT HAVE BEEN SEEDED AND MULCHED SHALL AT A MINIMUM BE INSPECTED WEEKLY AND WITHIN 24 HOURS AFTER EVERY PRECIPITATION EVENT THAT PRODUCES ½ INCH OF RAIN OR MORE DURING A 24 HOUR PERIOD. INSPECT WEEKLY DURING THE GROWING SEASON UNTIL VEGETATION IS DENSELY ESTABLISHED OR THE SOD IS LAID. REPAIR AND RESEED AREAS THAT HAVE EROSION DAMAGE AS NECESSARY.

   J. CONTRACTOR IS TO LIMIT VEHICLE TRAFFIC AND OTHER FORMS OF COMPACTION IN AREAS THAT ARE SEEDED AS MUCH AS POSSIBLE. RE-SEED DRIVEN OVER AREAS AS NEEDED.

   K. MULCH SHOULD BE PLACED WITHIN 24 HOURS OF SEEDING.

   L. MULCHING OPERATIONS SHALL NOT TAKE PLACE DURING PERIODS OF EXCESSIVELY HIGH WINDS THAT WOULD PRECLUDE THE PROPER PLACEMENT OF MULCH.

   M. MULCH THAT IS DISPLACED SHALL BE REAPPLIED AND PROPERLY ANCHORED. MAINTENANCE SHALL BE COMPLETED AS SOON AS POSSIBLE WITH CONSIDERATION TO SITE CONDITIONS.

   N. WHEN CHANNEL EROSION MAT IS USED WITHIN CONSTRUCTION SITE DIVERSION AREAS, TECHNICAL STANDARDS 1053 AND 1066 SHALL BE FOLLOWED.

   O. WHEN NON-CHANNEL EROSION MAT IS USED TECHNICAL STANDARD 1052 SHALL BE FOLLOWED.

   P. DEPENDING ON DURATION OF CONSTRUCTION, THE CONTRACTOR MAY NEED TO RE-SEED AND RE-STABILIZE THE TOPSOIL STOCKPILE AS NECESSARY TO DISCOURAGE SEDIMENT AND EROSION.

6. A COPY OF EROSION CONTROL INSPECTION REPORTS AND THE APPROVED EROSION CONTROL PLANS SHALL BE KEPT ON SITE.

7. CONTRACTOR SHALL MAINTAIN ALL EROSION CONTROL PRACTICES BY THE END OF EACH WORKDAY.

8. LOCAL ROADS SHALL BE CLEAN BY THE END OF EACH WORKDAY. CONTRACTOR SHALL HAVE LOCAL ROADS SWEPT WHERE SEDIMENT ACCUMULATES.

EROSION CONTROL OPERATION SEQUENCE + SCHEDULE

AFTER BIDS ARE RECEIVED AND A MASS GRADING CONTRACTOR IS SELECTED, A PRE-CONSTRUCTION MEETING SHALL TAKE PLACE WITH ALL RELEVANT PARTIES IN ATTENDANCE.

THE GENERAL CONTRACTOR IS RESPONSIBLE FOR INSTALLING AND MAINTAINING ALL SILT FENCES, SEEDING, EROSION MATTING, AND OTHER EROSION CONTROL MEASURES. GENERAL CONTRACTOR SHALL INSPECT ALL EROSION CONTROL MEASURES PRIOR TO COMMENCING GRADING, GRUBBING, OR OTHER LAND DISTURBING ACTIVITIES. EROSION CONTROL MEASURES MUST BE INSPECTED WEEKLY AND WITHIN 24 HOURS OF EVERY PRECIPITATION EVENT OF ½ INCH OR GREATER. IN ADDITION, THE ACTIVE CONTRACTOR SHALL CONDUCT DAILY INSPECTIONS AND DOCUMENT CONDITIONS AND REPAIRS MADE, ALONG WITH DATE, TIME OF INSPECTION, AND WEATHER CONDITIONS IN A DAILY LOG BOOK.

ALL REGULATORY PERMITS, PROJECT PLANS, AND INSPECTION LOGS SHALL BE KEPT ON SITE IN AN ACCESSIBLE LOCATION, SUCH AS A MAILBOX, AVAILABLE TO REGULATORY AGENCIES UPON REQUEST.

CONTRACTORS ARE TO MAINTAIN THE CONSTRUCTION SITE IN A NEAT AND TIDY MANNER FOR THE DURATION OF THE PROJECT.

THE TIMING AND SEQUENCE OF CONSTRUCTION IS SCHEDULED AS FOLLOWS:

1. OBTAIN PLAN APPROVAL FROM THE CITY OF MILWAUKEE, AND ALL APPLICABLE PERMITS, INCLUDING EROSION CONTROL PERMIT.

2. CONSTRUCTION IS SCHEDULED TO BEGIN IN FALL 2013, DEPENDING ON WEATHER & GROUND CONDITIONS.

3. A GRAVEL TRACKING PAD UNDERLAIN WITH WISDOT TYPE R GEOTEXTILE FABRIC, ALONG WITH A TEMPORARY CULVERT IF NECESSARY, SHALL BE INSTALLED AS SHOWN ON THE PLANS. RE-GRADE EXISTING ROADWAY DITCH AS NECESSARY. IF INSTALLED, THE TEMPORARY CULVERT SHALL BE REMOVED AT END OF CONSTRUCTION ACTIVITIES.

4. SILT FENCE, INLET FILTER PROTECTION, AND TRIANGULAR SILT DIKES SHALL BE INSTALLED AS SHOWN ON THE PLANS, AND INSPECTED PRIOR TO COMMENCING OF ANY LAND DISTURBING ACTIVITIES PER PROJECT PLANS AND DETAILS.

5. TOPSOIL STRIPPING AND ROUGH GRADING WILL FOLLOW. TOPSOIL STOCKPILES WILL BE LOCATED AS SHOWN ON THE PLANS. STOCKPILES WILL BE USED FOR FINAL LANDSCAPING. REMAINING STOCKPILES WILL BE REMOVED FROM THE SITE.

6. CONSTRUCTION OF THE ROADWAY, WILL BEGIN IMMEDIATELY AFTER THE TOPSOIL STRIPPING AND GRADING IS COMPLETE IN PROPOSED ROADWAY AREA.

7. AFTER ROUGH GRADING IS COMPLETE THE TOPSOIL WILL BE REAPPLIED AND THE LANDSCAPE CONTRACTOR WILL COMPLETE SEEDING/SODDING/FERTILIZING/MULCHING AND INSTALL EROSION MATTING AS PER APPROVED PLANS AND SPECIFICATIONS.

8. AFTER ALL TOPSOIL HAS BEEN REAPPLIED AND STABILIZATION IS UNDERWAY, THE ROADWAY BASE MATERIAL WILL BE APPLIED PER PROJECT SPECIFICATIONS.

9. AFTER FINAL PAVING OPERATIONS ARE COMPLETED FOR THE PROPOSED ROAD, DEMOLITION OF THE EXISTING ROADWAY AND BIKE PATH, ETC. MAY COMMENCE.

10. FINAL SITE STABILIZATION IS ANTICIPATED FOLLOWING THE COMPLETION OF DEMOLITION ACTIVITIES. IF SITE STABILIZATION CANNOT BE COMPLETED BY OCTOBER 1, THEN THE USE OF ANIONIC POLYACRYLAMIDE CONFORMING TO WDNR TECHNICAL STANDARD 1050 SHALL BE USED.

11. THE GENERAL CONTRACTOR WILL REQUEST A FINAL INSPECTION BY THE CITY. UPON APPROVAL, ALL SILT FENCES, INLET FILTER PROTECTION, AND OTHER EROSION CONTROL MEASURES INCLUDING ANY ACCUMULATED SEDIMENT SHALL REMOVED AND PROPERLY DISPOSED OF.

12. IF REQUIRED, FINAL "AS-BUILT" SURVEYS ARE TO BE CONDUCTED BY THE OWNER AND FINAL DOCUMENTS FORWARDED TO THE CITY.

13. BARE SOIL LEFT UNDISTURBED FOR 14 CALENDAR DAYS MUST BE TEMPORARILY STABILIZED PER WDNR TECHNICAL STANDARD 1059, OR TEMPORARY GRADING PRACTICES PER WDNR TECHNICAL STANDARD 1067 MAY BE IMPLEMENTED. HOWEVER BY OCTOBER 1, THE SITE SHALL BE STABILIZED PER NOTE 12 ABOVE.

14. WE DO NOT ANTICIPATE THE NEED FOR WATERING WITH THIS CONSTRUCTION SCHEDULE, HOWEVER, IF ADEQUATE RAIN IS NOT EXPERIENCED WITHIN ONE WEEK AFTER INITIAL SEED GERMINATION AT ANY POINT DURING THE CONSTRUCTION PROCESS, WATER SHALL BE TRUCKED IN AND APPLIED ONCE PER WEEK.

IF CONSTRUCTION SCHEDULES SHOULD CHANGE SIGNIFICANTLY, THIS PLAN NARRATIVE WILL BE UPDATED AND RESUBMITTED BY THE GENERAL CONTRACTOR TO THE CITY AND WDNR.

DEWATERING PLAN

TO FACILITATE CONSTRUCTION AT THE PROJECT SITE, DEWATERING MAY TAKE PLACE BY THE SELECTED CONTRACTOR. CONTRACTOR TO FOLLOW THESE INSTRUCTIONS WHILE PERFORMING DEWATERING ACTIVITIES ON-SITE.

NOTE: THESE INSTRUCTIONS DO NOT APPLY TO WATER BEING DISCHARGED DIRECTLY TO GROUNDWATER OR KARST FEATURES OR WELL DEWATERING SYSTEMS. CONTRACTOR SHALL COORDINATE ACCORDINGLY FOR OTHER DEWATERING ACTIVITIES AS DEEMED NECESSARY WITH THE WDNR.

1. THE CONTRACTOR SHALL ENSURE THAT THE DEWATERING PRACTICES CARRIED OUT MEET OR EXCEED WNDR TECHNICAL STANDARD NUMBER 1061.

2. A PAN OR OTHER CONTAINMENT DEVICE SHALL BE PLACED UNDERNEATH THE PUMP TO CAPTURE ANY SPILLS. OILS, GASOLINE, ETC. SHALL NOT BE STORED WITHIN WETLANDS, NEAR THE STORMWATER POND, OR OTHER ON-SITE WATER AREAS.

3. A TYPE 2 GEOTEXTILE BAG THAT IS NO SMALLER THAN 100 SQUARE FEET; HAS A MAXIMUM APPARENT OPENING SIZE OF 0.212 mm; HAS A GRAB TENSILE STRENGTH OF 300 LBS; MULLEN BURST OF 580 PSI; PERMEABILITY OF 0.2 CM/SEC; FABRIC WEIGHT OF 12 OZ SHALL BE USED. THE GEOTEXTILE BAG AREA AND DOWNGRADE FLOW AREA SHALL CONSIST OF VEGETATED AND UNDISTURBED SOILS.

4. POLYMER APPROVED BY THE WDNR MEETING WDNR TECHNICAL STANDARD 1051 MAY BE USED IN COMBINATION WITH THE DEWATERING BAG IF THE DEWATERING BAG IS NOT DOING AN ADEQUATE JOB ALONE OF FILTERING SEDIMENTS. THE CONTRACTOR SHALL SUPPLY TOXICITY TESTING DATA TO THE WDNR BEFORE USE ON-SITE FOR WDNR APPROVAL. POLYMER SHALL NOT BE DIRECTLY APPLIED TO SURFACE WATER. CONTRACTOR SHALL OBTAIN THE POLYMER MATERIAL SAFETY DATA SHEETS (MSDS) FOR THE SELECTED POLYMER, MANUFACTURER'S INFORMATION AND WDNR USE RESTRICTIONS (SEE TECHNICAL STANDARD 1051) AND KEEP ALL THIS INFORMATION ON-SITE. CONTRACTOR SHALL ADHERE TO MANUFACTURER AND WDNR'S APPLICATION RATES FOR THE POLYMER. THE APPLICATION RATE SHALL NOT EXCEED THE WDNR USE RESTRICTION, EVEN IF THIS IS THE RECOMMENDED RATE BY THE MANUFACTURER. THE CONTRACTOR SHALL TAKE STEPS TO ENSURE THAT THE POLYMER IS NOT SPILLED. THE MANUFACTURER'S RECOMMENDED CLEANUP PROCEDURES SHALL BE FOLLOWED IN THE EVENT OF A SPILL.

5. A TARP MAY BE UTILIZED UNDERNEATH THE TYPE 2 GEOTEXTILE BAG AND JUST DOWN SLOPE OF THE BAG TO DISCOURAGE EROSION AND SCOUR.

6. A FLOATING SUCTION HOSE OR OTHER FLOTATION METHOD SHALL BE UTILIZED WHEN PUMPING FROM AN AREA WITH STANDING WATER TO AVOID SUCKING SEDIMENT FROM GRADE.

7. IF TURBID WATER IS LEAVING THE GEOTEXTILE BAG, THE CONTRACTOR SHALL SHUT OFF THE PUMP TO ALLOW SEDIMENTS TO SETTLE INTO THE BAG. CONTRACTOR SHALL FOLLOW THE MANUFACTURER'S SPECIFICATIONS FOR DETERMINING THE SEDIMENT CAPACITY OF THE GEOTEXTILE BAG USING GOOD COMMON SENSE. SEDIMENT LEVELS CONTAINED IN THE BAG SHALL BE MONITORED TO MEASURE THE LOSS OF STORAGE CAPACITY OVER TIME. THE CONTRACTOR SHALL PROPERLY DISPOSE OF THE GEOTEXTILE BAG IN A WASTE RECEPTACLE ONCE IT IS NO LONGER USED.

8. DURING DEWATERING ACTIVITIES THE CONTRACTOR SHALL MONITOR DEWATERING PRACTICES AND KEEP A LOG OF THE FOLLOWING:

   A. DISCHARGE DURATION AND SPECIFIED PUMPING RATE.

   B. OBSERVED WATER TABLE AT TIME OF DEWATERING.

   C. MAINTENANCE ACTIVITIES

   D. NAME AND QUANTITY OF POLYMER USED. PRODUCT TYPE.

   E. APPLICATION RATE OF POLYMER IN POUNDS/ACRE FEET OF WATER.

   F. DATE AND TIME APPLIED.

   G. WEATHER CONDITIONS DURING APPLICATION.

   H. METHOD OF APPLICATION.

THIS LOG NEEDS TO BE KEPT ON SITE FOR WDNR REGULATORY REVIEW. COPIES OF THIS DOCUMENTATION SHOULD BE KEPT IN THE CONTRACTOR'S MONITORING LOG AND MADE AVAILABLE UPON REQUEST.

REVIEW THE FOLLOWING FOR MORE INFORMATION:

WDNR TECHNICAL STANDARD 1061 FOR DEWATERING –
http://dnr.wi.gov/runoff/pdf/stormwater/techstds/erosion/Dewatering_1061.pdf

WDNR TECHNICAL STANDARD 1051 FOR POLYMER –
http://dnr.wi.gov/runoff/pdf/stormwater/techstds/erosion/Dewatering_1061.pdf

INSPECT ALL EROSION CONTROL MEASURES PRIOR TO COMMENCING GRADING, GRUBBING OR OTHER LAND DISTURBING ACTIVITIES. EROSION CONTROL MEASURES MUST BE INSPECTED WEEKLY AND WITHIN 24 HOURS OF EVERY PRECIPITATION EVENT OF 0.50 INCH OR GREATER. IN ADDITION THE CONTRACTOR SHALL CONDUCT DAILY INSPECTIONS AND DOCUMENT CONDITIONS AND REPAIRS MADE, ALONG WITH DATE, TIME OF INSPECTION AND WEATHER CONDITIONS IN A DAILY LOG BOOK. THE DAILY LOG BOOK, WEEKLY / 0.50 INCH PRECIPITATION REPORTS, APPROVED PLANS WPDES PERMIT & CHAPTER 30 PERMIT SHALL BE KEPT IN AN ACCESSIBLE LOCATION, LIKE A MAILBOX, WITHIN THE STAGING AREA.

AT ABSOLUTELY NO TIME MAY CONSTRUCTION EQUIPMENT, DEBRIS, FILL, ETC. BE PLACED WITHIN WETLANDS, WATERWAYS OR FLOODPLAINS UNLESS IDENTIFIED IN THE PLANS & APPROVED BY DNR/ USACOE.

KAPUR & ASSOCIATES, INC.
CONSULTING ENGINEERS
7711 N. PORT WASHINGTON ROAD
MILWAUKEE, WISCONSIN 53217
Phone: 414.351.6668 Fax: 414.351.4117
www.kapurengineers.com

PROJECT:
GRANVILLE ROAD

LOCATION:
MILWAUKEE, WI

DATE / TO	11/21/13			
ESTIMATING				
HOLLOW MALKS				
PUBLIC HEARING				
CONSTRUCTION	6			
SEWER				
WATER				
STREET LIGHTING				
BLDG. SEWERS				
MEASURING	1			
FIELD	1			
DISTRICT FILE				
FORESTRY				
W.E. / G.O.				
WIS. GAS CO.				
TRANSIT SYSTEM				
CABLE TV				
UND. GRD. COND.				
WATER DIST.				
WEPCO N/S				
WEPCO S/S				
SEWER SERVICES				
UTILITY COOR.				
Rev 5/20	15			
PLAN SIZE				

REVISIONS:

#	DATE	DESCRIPTION

NORTH ARROW:

SCALE: 1" = 70'
0 35 70 140

SEAL:

we listen. we innovate.
we turn your vision into reality.

SHEET:
SITE DETAILS
REVISED 11.19.13

PROJECT MANAGER:	KF
PROJECT NUMBER:	110257.01
DATE:	05-03-2013

SHEET NUMBER:
EC-2.1

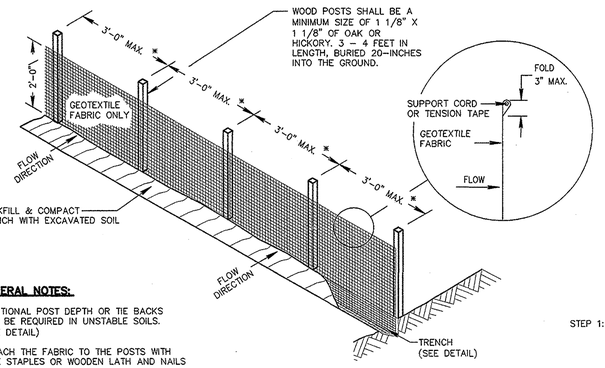

GENERAL NOTES:

ADDITIONAL POST DEPTH OR TIE BACKS MAY BE REQUIRED IN UNSTABLE SOILS. (SEE DETAIL)

ATTACH THE FABRIC TO THE POSTS WITH WIRE STAPLES OR WOODEN LATH AND NAILS

*8'–0" POST SPACING ALLOWED IF A WOVEN GEOTEXTILE FABRIC IS USED.

IF POSSIBLE, CONSTRUCT SILT FENCE FROM A CONTINUOUS ROLL TO AVOID JOINTS. IF A JOINT IS NECESSARY, USE ONE OF THE FOLLOWING METHODS:
(1)TWIST METHOD: OVERLAP END POSTS & TWIST AT LEAST 180 DEGREES.
(2)HOOK METHOD: HOOK THE END OF EACH SILT FENCE LENGTH.

AXONIMETRIC VIEW

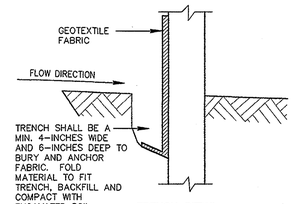

TRENCH DETAIL

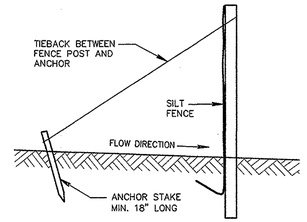

SILT FENCE TIE BACK (WHEN ADDITIONAL SUPPORT REQUIRED)

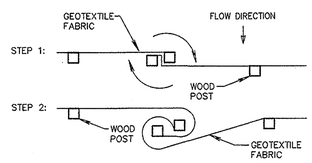

TWIST METHOD

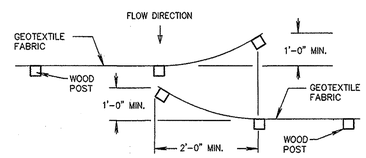

HOOK METHOD

JOINING TWO LENGTHS OF SILT FENCE

1 FILTER FABRIC SILT FENCE DETAIL
N.T.S.

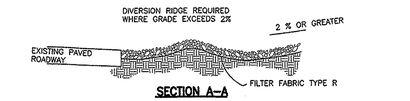

SECTION A–A

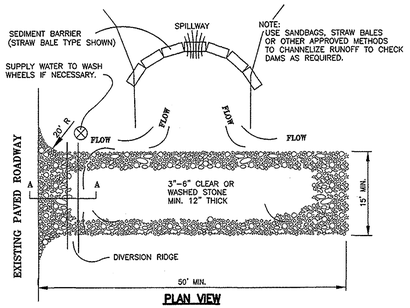

PLAN VIEW

GENERAL NOTES:

THE AGGREGATE SIZE FOR CONSTRUCTION OF THE PAD SHALL BE 3– TO 6–INCH STONE. PLACE THE GRAVEL TO THE SPECIFIC GRADE & DIMENSIONS SHOWN ON THE PLANS & GRADE TO CREATE A SMOOTH SURFACE.

THE THICKNESS OF THE PAD SHALL NOT BE LESS THAN 12 INCHES. USE GEOTEXTILE FABRICS, IF NECESSARY, TO IMPROVE STABILITY OF THE FOUNDATION IN LOCATIONS SUBJECT TO SEEPAGE OR HIGH WATER TABLE.

THE WIDTH OF THE PAD SHALL NOT BE LESS THAN THE FULL WIDTH OF ALL POINTS OF INGRESS OR EGRESS & IN ANY CASE SHALL NOT BE LESS THAN 15 FEET WIDE.

THE LENGTH OF THE PAD SHALL BE AS REQUIRED, BUT NOT LESS THAN 50 FEET.

LOCATE CONSTRUCTION ENTRANCES & EXITS TO LIMIT SEDIMENT LEAVING THE SITE & TO PROVIDE FOR MAXIMUM UTILITY BY ALL CONSTRUCTION VEHICLES. AVOID ENTRANCES WHICH HAVE STEEP GRADES & ENTRANCES AT CURVES IN PUBLIC ROADS.

THE ENTRANCE SHALL BE MAINTAINED IN A CONDITION THAT WILL PREVENT TRACKING OR FLOWING OF SEDIMENT ONTO PUBLIC RIGHTS–OF–WAY. THIS MAY REQUIRE PERIODIC TOP DRESSING WITH ADDITIONAL STONE AS CONDITIONS DEMAND, & REPAIR AND/OR CLEANOUT OF ANY MEASURES USED TO TRAP SEDIMENT.

ALL SEDIMENT SPILLED, DROPPED, WASHED OR TRACKED ONTO PUBLIC RIGHTS–OF–WAY SHALL BE REMOVED IMMEDIATELY.

PROVIDE DRAINAGE TO CARRY WATER TO A SEDIMENT TRAP OR OTHER SUITABLE OULET.

WHEN NECESSARY, WHEELS SHALL BE CLEANED TO REMOVE SEDIMENT PRIOR TO ENTRANCE ONTO PUBLIC RIGHTS–OF–WAY. WHEN WASHING IS REQUIRED, DESIGNATE AN AREA WITH CRUSHED STONE THAT DRAINS INTO AN APPROVED SEDIMENT TRAP OR SEDIMENT BASIN.

2 STONE TRACKING CONSTRUCTION ENTRANCE
N.T.S.

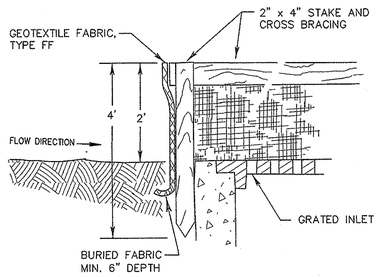

INLET PROTECTION, TYPE A

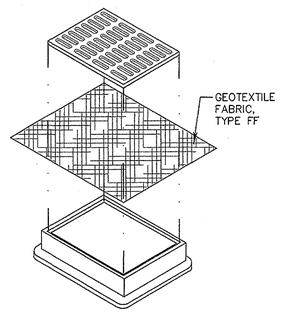

INLET PROTECTION, TYPE B, WITHOUT CURB BOX (CAN BE INSTALLED IN ANY INLET WITHOUT A CURB BOX)

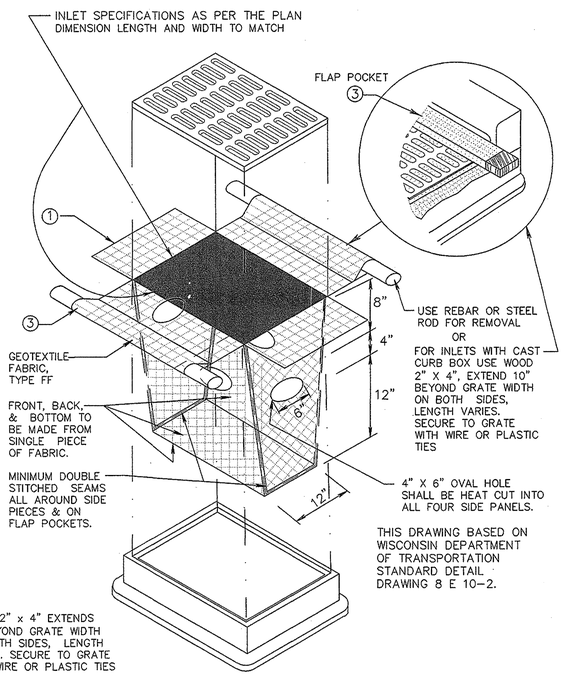

INLET PROTECTION, TYPE D. (CAN BE INSTALLED IN ANY INLET TYPE, WITH OR WITHOUT A CURB BOX)

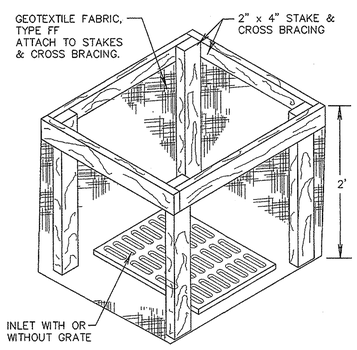

INLET PROTECTION, TYPE C, WITH CURB BOX

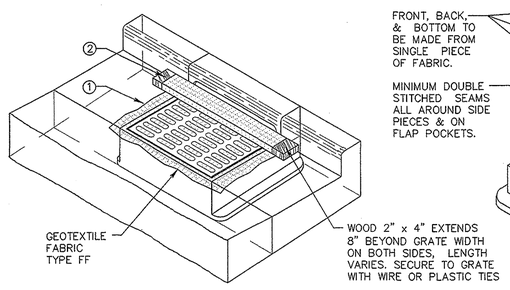

GENERAL NOTES

MANUFACTURED ALTERNATIVES APPROVED AND LISTED ON THE DEPARTMENT'S EROSION CONTROL PRODUCT ACCEPTABILITY LIST MAY BE SUBSTITUTED.

WHEN REMOVING OR MAINTAINING INLET PROTECTION, CARE SHALL BE TAKEN SO THAT THE SEDIMENT TRAPPED ON THE GEOTEXTILE FABRIC DOES NOT FALL INTO THE INLET. ANY MATERIAL FALLING INTO THE INLET SHALL BE REMOVED IMMEDIATELY.

1. FINISHED SIZE, INCLUDING FLAP POCKETS WHERE REQUIRED, SHALL EXTEND A MINIMUM OF 10" AROUND THE PERIMETER TO FACILITATE MAINTENANCE OR REMOVAL.
2. FOR INLET PROTECTION, TYPE C (WITH CURB BOX), AN ADDITIONAL 18" OF FABRIC IS WRAPPED AROUND THE WOOD AND SECURED WITH STAPLES. THE WOOD SHALL NOT BLOCK THE ENTIRE HEIGHT OF THE CURB BOX OPENING.
3. FLAP POCKETS SHALL BE LARGE ENOUGH TO ACCEPT WOOD 2X4.

INSTALLATION NOTES

TYPE B & C

TRIM EXCESS FABRIC IN THE FLOW LINE TO WITHIN 3" OF THE GRATE. THE CONTRACTOR SHALL DEMONSTRATE A METHOD OF MAINTENANCE, USING A SEWN FLAP, HAND HOLDS OR OTHER METHOD TO PREVENT ACCUMULATED SEDIMENT FROM ENTERING THE INLET.

TYPE D

DO NOT INSTALL INLET PROTECTION TYPE D IN INLETS SHALLOWER THAN 30", MEASURED FROM THE BOTTOM OF THE INLET TO THE TOP OF THE GRATE.
TRIM EXCESS FABRIC IN THE FLOW LINE TO WITHIN 3" OF THE GRATE. THE INSTALLED BAG SHALL HAVE A MINIMUM SIDE CLEARANCE, BETWEEN THE INLET WALLS AND THE BAG, MEASURED AT THE BOTTOM OF THE OVERFLOW HOLES, OF 3".
WHERE NECESSARY THE CONTRACTOR SHALL CINCH THE BAG, USING PLASTIC ZIP TIES, TO ACHIEVE THE 3" CLEARANCE. THE TIES SHALL BE PLACED AT A MAXIMUM OF 4" FROM THE BOTTOM OF THE BAG.

3 INLET PROTECTION DETAIL
N.T.S.

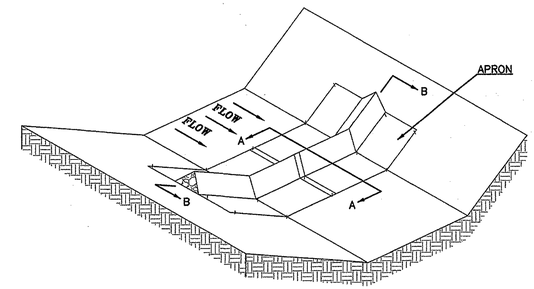

STONE DITCH CHECK UNIT CUT SECTION

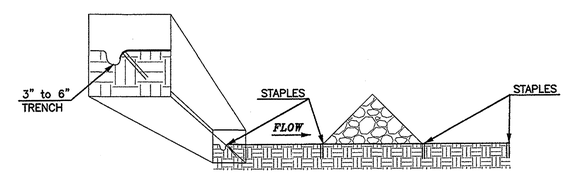

DETAIL A–A

O STAPLES SHALL BE PLACED WHERE THE UNITS OVERLAP AND IN THE CENTER OF THE 7' UNIT AS SHOWN ONTHE DIAGRAMS

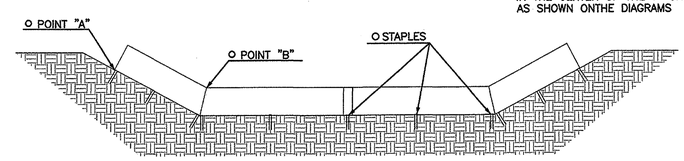

STONE DITCH CHECK SECTION DETAIL B–B

O POINT "A" MUST BE HIGHER THAN POINT "B" TO ENSURE THAT WATER FLOWS OVER THE DIKE AND NOT AROUNT THE ENDS.

4 TEMPORARY TRIANGULAR STONE DITCH CHECK
N.T.S.

KAPUR & ASSOCIATES, INC.
CONSULTING ENGINEERS
7711 N. PORT WASHINGTON ROAD
MILWAUKEE, WISCONSIN 53217
Phone: 414.351.6668 Fax: 414.351.4117
www.kapurengineers.com

PROJECT:
GRANVILLE ROAD

LOCATION:
MILWAUKEE, WI

	DATE / TO				
	ESTIMATING				
	HOLLOW WALKS				
	PUBLIC HEARING				
	CONSTRUCTION				
	SEWER				
	WATER				
	STREET LIGHTING				
	BLDG. SEWERS				
	MEASURING				
	FIELD				
	DISTRICT FILE				
	FORESTRY				
	W.E. / G.O.				
	WIS. GAS CO.				
	TRANSIT SYSTEM				
	CABLE TV				
	UND. GRD. COND.				
	WATER DIST.				
	WEPCO N/S				
	WEPCO S/S				
	SEWER SERVICES				
	UTILITY COOR.				
	PLAN SIZE				

CLI

REL

REVISIONS:

#	DATE	DESCRIPTION

NORTH ARROW:

SCALE: 1" = 70'
0 35 70 140

SEAL:

we listen. we innovate. we turn your vision into reality.

SHEET:
SITE DETAILS
REVISED 11-19-13

PROJECT MANAGER:	KF
PROJECT NUMBER:	110257.01
DATE:	05-03-2013

SHEET NUMBER:
EC-2.2

FILENAME: S:\Milw_Co\MilwCity\Gov\110257 Granville Road\Erosion Control\C2.1 – SITE DETAILS.dwg