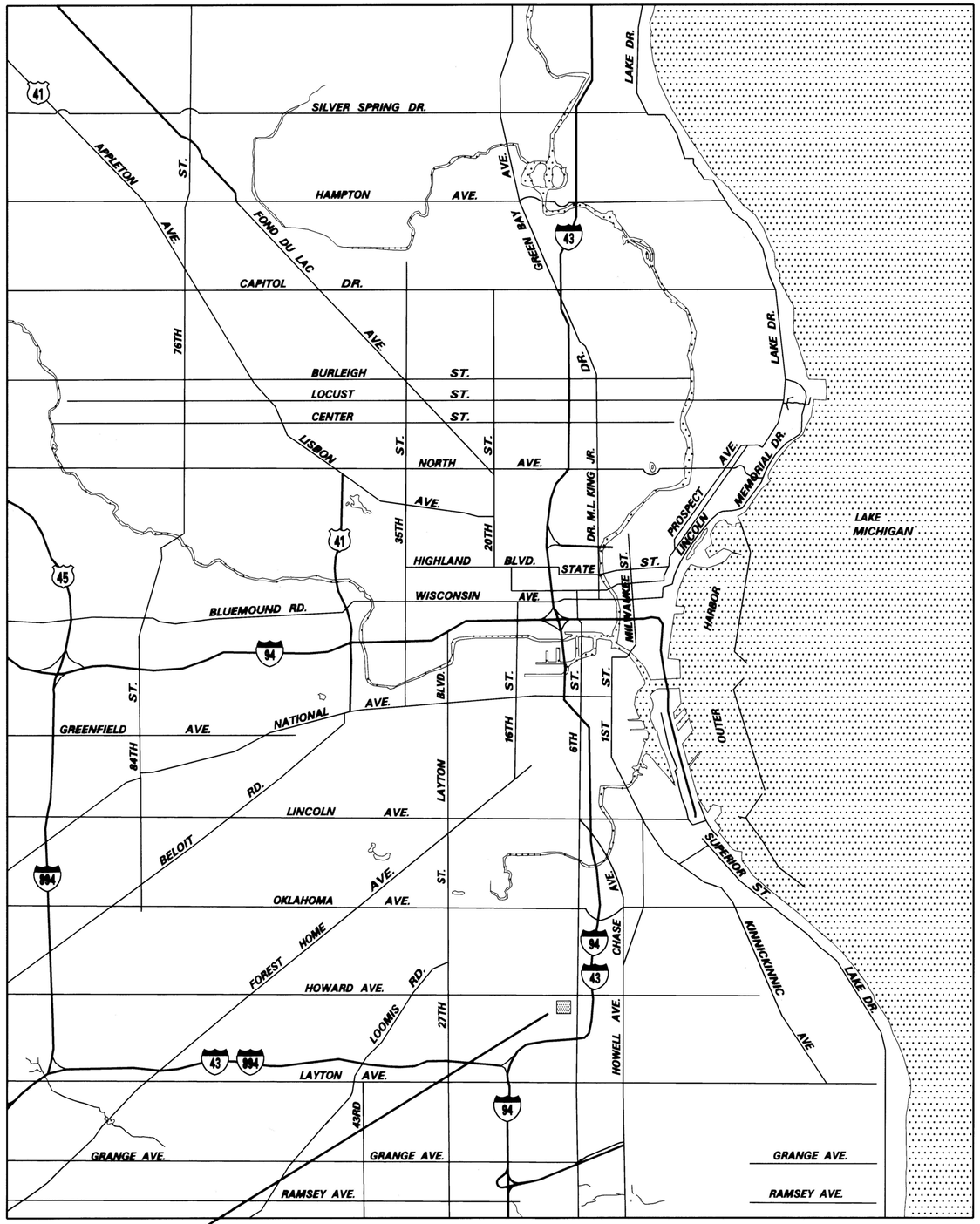

PROJECT LOCATION

MILWAUKEE, WISCONSIN

LOCATION MAP

0 0.5 1.0 1.5

APPROX SCALE IN MILES

Milwaukee Water Works

HOWARD AVE. PUMPING STATION

HS-26: PUMP #5, #6, #7, #8 SOFT START

DRAWING INDEX

DRAWING NO.		TITLE
CONTRACT DRAWINGS		
HS-26-01		LOCATION MAP - DRAWING INDEX
HS-26-02		BREAKER AND VALVE CONTROL SCHEMATICS
HS-26-03		ELECTRICAL ONE-LINE & MISCELLANEOUS DETAILS
HS-26-04		RVSS MOTOR CONTROL SCHEMATICS
HS-26-05		GENERAL PLAN OF PUMP FLOOR, WIRE & CONDUIT INSTALLATION PLAN
REFERENCE DRAWINGS		
HS-07-05	(HS-05)	GENERAL PLAN OF PUMP FLOOR
HS-07-09	(HS-09)	BUILDING SECTION
HS-07-28	(HS-28)	FUNCTIONAL ONE-LINE DIAGRAM
HS-07-29	(HS-29)	COMPREHENSIVE ONE-LINE DIAGRAM
HS-07-30	(HS-30)	BREAKER AND VALVE CONTROL TYPICAL SCHEMATICS
HS-07-32	(HS-32)	MISC. DETAILS AND TYPICAL SCHEMATICS
HS-07-39	(HS-39)	PUMP FLOOR POWER WIRING
HS-07-40	(HS-40)	BASEMENT POWER WIRING
HS-16-01	(HS-16-1)	SUPERVISORY CONTROL EQUIPMENT

WISCONSIN DINAH G. GANT E-24682 MILWAUKEE, WI PROFESSIONAL ENGINEER

NO.	BY	REVISION	DATE

Milwaukee Water Works — Water Engineering, Department of Public Works

HOWARD AVE. PUMPING STATION

PUMP #5, #6, #7 & #8 SOFT START

LOCATION MAP - DRAWING INDEX

DESIGNED BY	BST
DRAWN BY	JFS
CHECKED BY	BST
DATE	8-2-2011
SCALE	AS SHOWN
WORK ORDER	WT450115200
OFFICIAL NOTICE	1532011
FILE NO.	

APPROVED — DATE 8/11/11 — PLANTS PROJECT ENGINEER

8/16/2011 — CHIEF DESIGN ENGINEER

8/17/11 — SPECIAL DEPUTY COMMISSIONER OF PUBLIC WORKS

DRAWING NO. HS-26-01

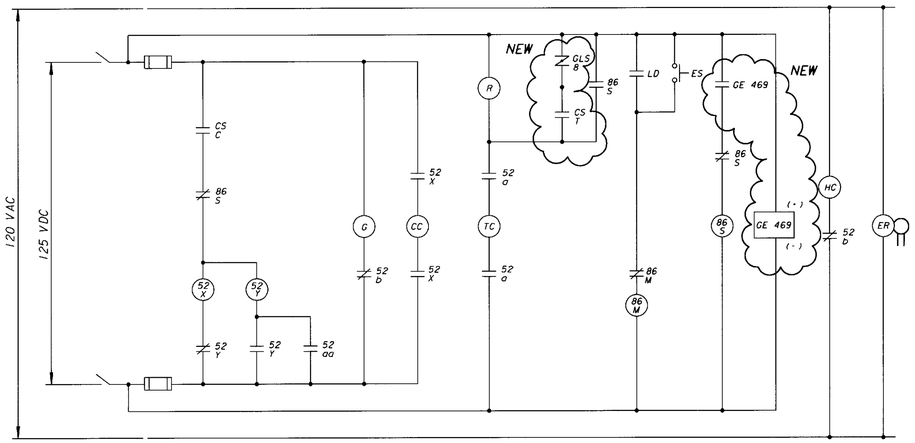

NEW SWITCHGEAR SCHEMATIC HIGH SERVICE PUMPS 5, 6, 7, & 8

NEW CIRCUITS IN "BUBBLES"

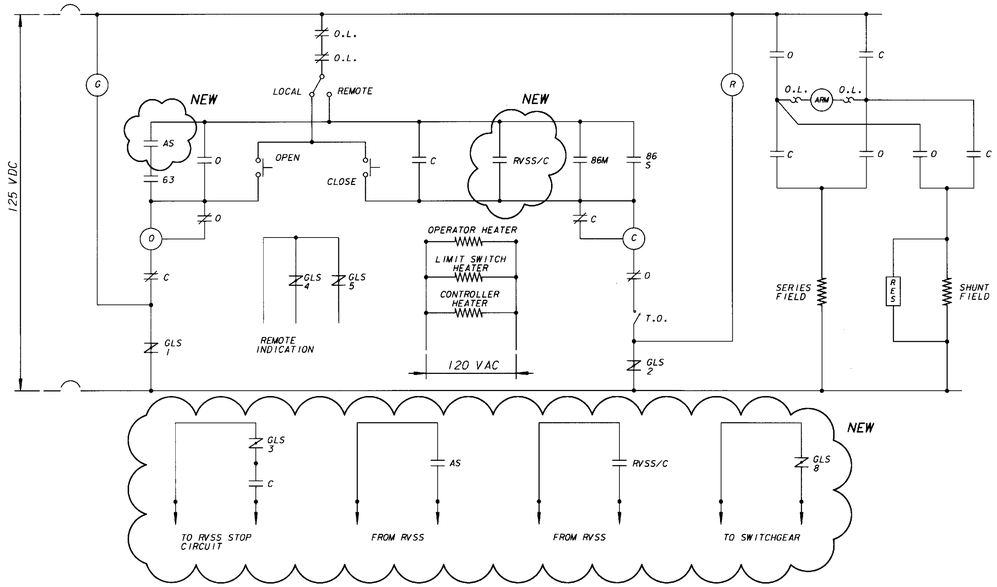

NEW DISCHARGE VALVE - HIGH SERVICE PUMPS

NEW CIRCUITS IN "BUBBLES"

LEGEND

BPS	-	VFD/OFF/BYPASS SELECTOR SWITCH
C	-	VALVE CONTROLLER "CLOSE" CONTACTOR
CC	-	BREAKER CLOSING COIL
CS	-	CONTROL SWITCH, SPRING RETURN
ER	-	ELECTRODE RELAY - CONTACT CLOSES WHEN PUMP IS PRIMED
ES	-	EMERGENCY STOP PUSHBUTTON AT MOTOR
G	-	GREEN INDICATING LIGHT
GLS/1	-	GEARED LIMIT SWITCH ON VALVE - CONTACT OPEN ONLY WHEN VALVE IS FULLY OPEN
GLS/2	-	GEARED LIMIT SWITCH ON VALVE - CONTACT OPEN ONLY WHEN VALVE IS FULLY CLOSED
GLS/3	-	GEARED LIMIT SWITCH ON VALVE - CONTACT CLOSES ONLY WHEN VALVE IS 95% CLOSED.
GLS/4	-	GEARED LIMIT SWITCH ON VALVE - CONTACT OPEN ONLY WHEN VALVE IS FULLY OPEN
GLS/5	-	GEARED LIMIT SWITCH ON VALVE - CONTACT OPEN ONLY WHEN VALVE IS FULLY CLOSED
GLS/6	-	GEARED LIMIT SWITCH ON VALVE - CONTACT OPEN ONLY WHEN VALVE IS FULLY OPEN
GLS/7	-	GEARED LIMIT SWITCH ON VALVE - CONTACT OPEN ONLY WHEN VALVE IS FULLY CLOSED
GLS/8	-	GEARED LIMIT SWITCH ON VALVE - CONTACT CLOSES ONLY WHEN VALVE IS FULLY CLOSED
HC	-	CONTACTOR FOR MOTOR SPACE HEATER
IP/C	-	INTERPOSING RELAY - CLOSE
IP/T	-	INTERPOSING RELAY - TRIP
IP/X	-	INTERPOSING RELAY - AUXILIARY FOR WHITE LIGHT
KO	-	VFD CONTACTOR
KI	-	BYPASS CONTACTOR
LC	-	LEAKAGE DETECTOR
MS	-	MINIMUM SPEED CONTACT - DRIVE
O	-	VALVE CONTROLLER "OPEN" CONTACTOR
O.L.	-	OVERLOAD DEVICE
R	-	RED INDICATING LIGHT
-SG	-	PERTAINS TO SWITCHGEAR
-SS	-	PERTAINS TO SOFT START
S/C	-	SUPERVISORY CONTROL "CLOSE" CONTACT
S/T	-	SUPERVISORY CONTROL "TRIP" CONTACT
TC	-	BREAKER TRIPPING COIL
TH	-	TOTAL HOUR METER
T.O.	-	TORQUE OVERLOAD DEVICE
W	-	WHITE INDICATING LIGHT
26	-	STARTING PROTECTION
38	-	BEARING TEMPERATURE DEVICE
41	-	FIELD CONTACTOR
43	-	SUPERVISORY CONTROL DISABLING SWITCH
47	-	PHASE SEQUENCE AND UNDERVOLTAGE RELAY
49	-	MOTOR THERMAL RELAY
50	-	INSTANTANEOUS OVERCURRENT RELAY
51	-	TIME OVERCURRENT - PHASE
51/G	-	TIME OVERCURRENT - GROUND
52/a	-	NORMALLY OPEN BREAKER AUXILIARY SWITCH
52/b	-	NORMALLY CLOSED BREAKER AUXILIARY SWITCH
63	-	DISCHARGE PRESSURE SWITCH
67	-	DIRECTIONAL OVERCURRENT RELAY
86/M	-	PROTECTIVE LOCKOUT RELAY ON MOTOR/DRIVE
86/S	-	PROTECTIVE LOCKOUT RELAY ON SWITCHGEAR
86/T	-	TRANSFORMER LOCKOUT RELAY
87/M	-	MOTOR DIFFERENTIAL RELAY
87/T	-	TRANSFORMER DIFFERENTIAL RELAY
TDO	-	TIME DELAY OPEN
CS/SS	-	CONTROL SWITCH SOFT START CONTROLLER
IP/SS	-	INTERPOSING RELAY SOFT START CONTROLLER
AS	-	AT SPEED CONTACT SOFT START CONTROLLER
RVSS/C	-	REDUCED VOLTAGE STARTER VALVE CLOSE COMMAND CONTACT

NOTE:

1) CONTRACTOR SHALL MAKE ALL CONTROL CIRCUIT WIRING CHANGES TO REFLECT REMOVAL AND REPLACEMENT OF OLD RELAYS AND DEVICES.

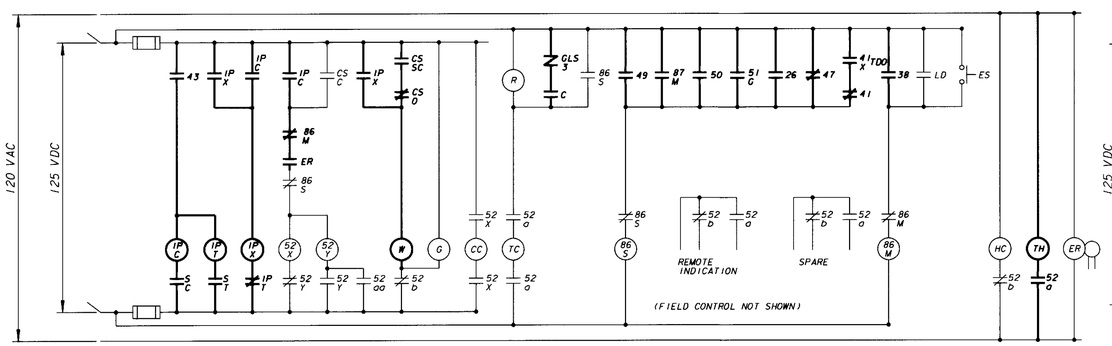

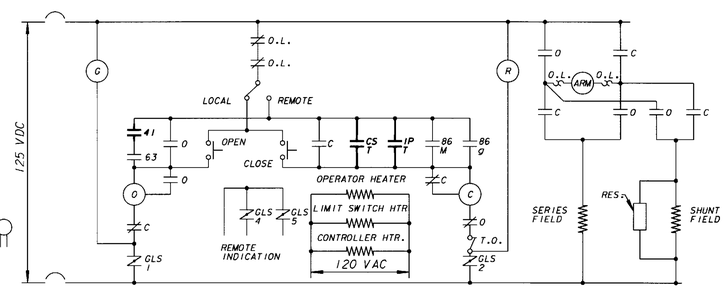

HIGH SERVICE PUMP & DISCHARGE VALVE

REMOVALS ARE BOLDED

NO.	BY	REVISION	DATE

Milwaukee Water Works — Water Engineering, Department of Public Works

PUMPING STATION

PUMP #5, #6, #7, & #8 SOFT START

BREAKER AND VALVE CONTROL SCHEMATICS

DESIGNED BY	BST
DRAWN BY	JFS
CHECKED BY	BST
DATE	8-2-2011
SCALE	NOT TO SCALE
WORK ORDER	WT4501115280
OFFICIAL NOTICE	1532011
FILE NO.	

APPROVED — PLANTS PROJECT ENGINEER — DATE 8/11/11

CHIEF PROJECT ENGINEER — DATE 8/16/2011

SPECIAL DEPUTY COMMISSIONER OF PUBLIC WORKS — 8/17/11

DRAWING NO. HS-26-02

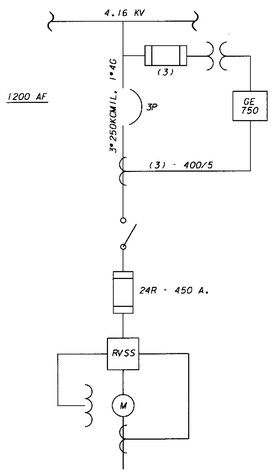

NEW PARTIAL ONE-LINE DIAGRAM

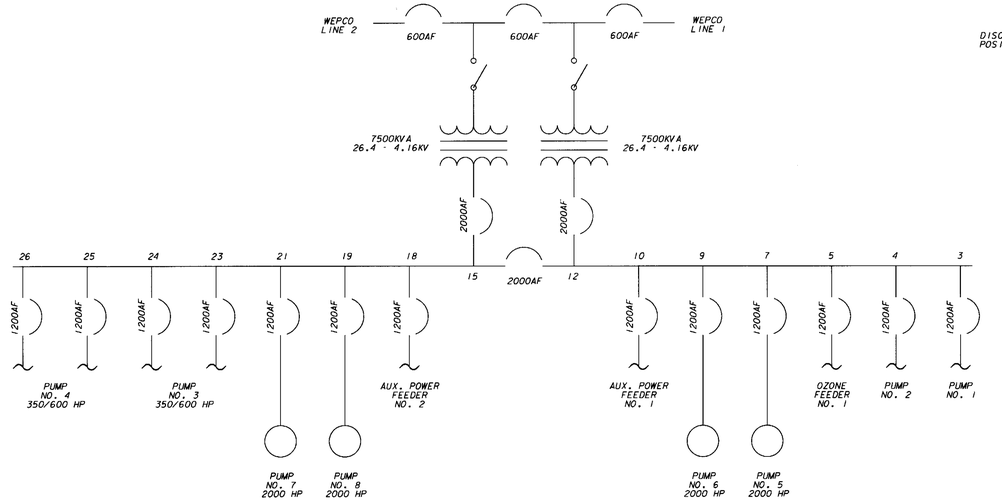

EXISTING ONE-LINE DIAGRAM

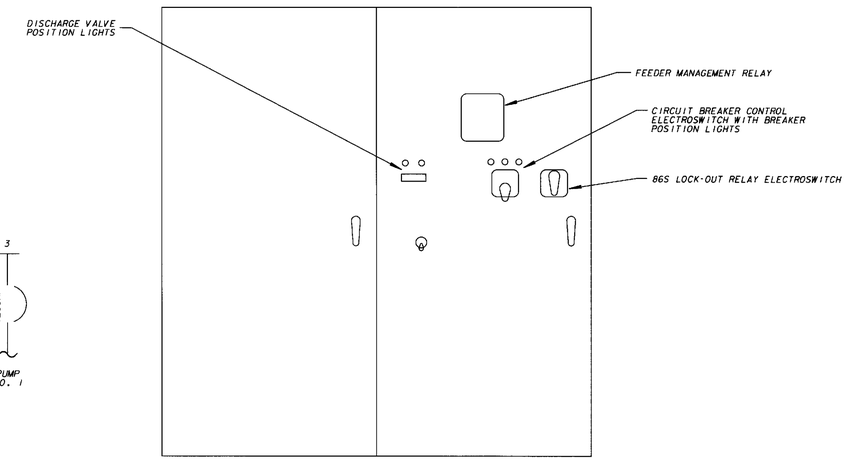

NEW 4.16 KV DOOR ELEVATION (TYPICAL)

MOTOR STARTER/WIRING SCHEDULE

NOTES:
1. ALL COMBINATION STARTERS SHALL BE CIRCUIT BREAKER TYPE UNLESS OTHERWISE NOTED.
2. PROVIDE A DISCONNECT SWITCH FOR ALL MOTORS LOCATED IN SIGHT OF MOTOR.

#	HP	VOLT	PH	LOC (RM)	DRIVING	FEED FROM		BREAKER		BRANCH WIRING		
						PANEL	CKT	SIZE	POLE	#	SIZE	COND
1	2000	4160	3	PUMP ROOM	PUMP 5	SWITCHGEAR SECTION 7	-	400A	3			
2	2000	4160	3	PUMP ROOM	PUMP 6	SWITCHGEAR SECTION 9						
3	2000	4160	3	PUMP ROOM	PUMP 7	SWITCHGEAR SECTION 21						
4	2000	4160	3	PUMP ROOM	PUMP 8	SWITCHGEAR SECTION 19						

#	STARTER TYPE: INTEGRAL TO UNIT	MANUAL	COMBINATION, MAGNETIC, FULL VOLTAGE NON-REVERSING	MAGNETIC, FULL VOLTAGE REVERSING	VFD	SOLID-STATE REDUCED VOLTAGE	TWO SPEED, 1 WINDING	TWO SPEED, 2 WINDING	STARTER FURNISHED BY: EQUIPMENT MANUFACTURER	MECHANICAL CONTRACTOR	ELECTRICAL CONTRACTOR	ACCESSORIES ON STARTER: ON-OFF, PUSHBUTTON	ON-OFF, SWITCH	HAND-OFF-AUTO	PILOT LIGHT	PHASE LOSS PROTECTION
1						●					●			●		
2						●					●			●		
3						●					●			●		
4						●					●			●		

#	MOTOR DISCONNECT TYPE: NEMA STARTER SIZE	INTEGRAL TO UNIT	NOT REQUIRED	NON-FUSED SWITCH NEAR MOTOR	FUSIBLE SWITCH NEAR MOTOR	CIRCUIT BREAKER NEAR MOTOR	NEMA 4X ENCLOSURE	FURNISHED BY: EQUIPMENT MANUFACTURER	MECHANICAL CONTRACTOR	ELECTRICAL CONTRACTOR	ACCESSORIES NEAR EQUIPMENT WIRED TO STARTER: ON-OFF, PUSHBUTTON	ON-OFF, SWITCH	HAND-OFF-AUTO	PILOT LIGHT	PHASE LOSS PROTECTION	STARTER/UNIT CONTROL: SEE HVAC DRAWINGS AND SPECIFICATION	MANUAL	INTEGRAL	SEE NOTES	#
1					●					●										1
2					●					●										
3					●					●										
4					●					●										

MOTOR STARTER/WIRING SCHEDULE NOTES:
1. NONE

NO.	BY	REVISION	DATE

Milwaukee Water Works — Water Engineering, Department of Public Works

PUMPING STATION

PUMP #5, #6, #7, & #8 SOFT START

ELECTRICAL ONE-LINE & MISCELLANEOUS DETAILS

DESIGNED BY	BST
DRAWN BY	JFS
CHECKED BY	BST
DATE	8-2-2011
SCALE	NOT TO SCALE
WORK ORDER	WT460116200
OFFICIAL NOTICE	7532011
FILE NO.	

APPROVED — DATE
PLANTS PROJECT ENGINEER 8/11/11
CHIEF DESIGN ENGINEER 8/11/2011
SPECIAL DEPUTY COMMISSIONER OF PUBLIC WORKS 8/17/11

DRAWING NO. HS-26-03

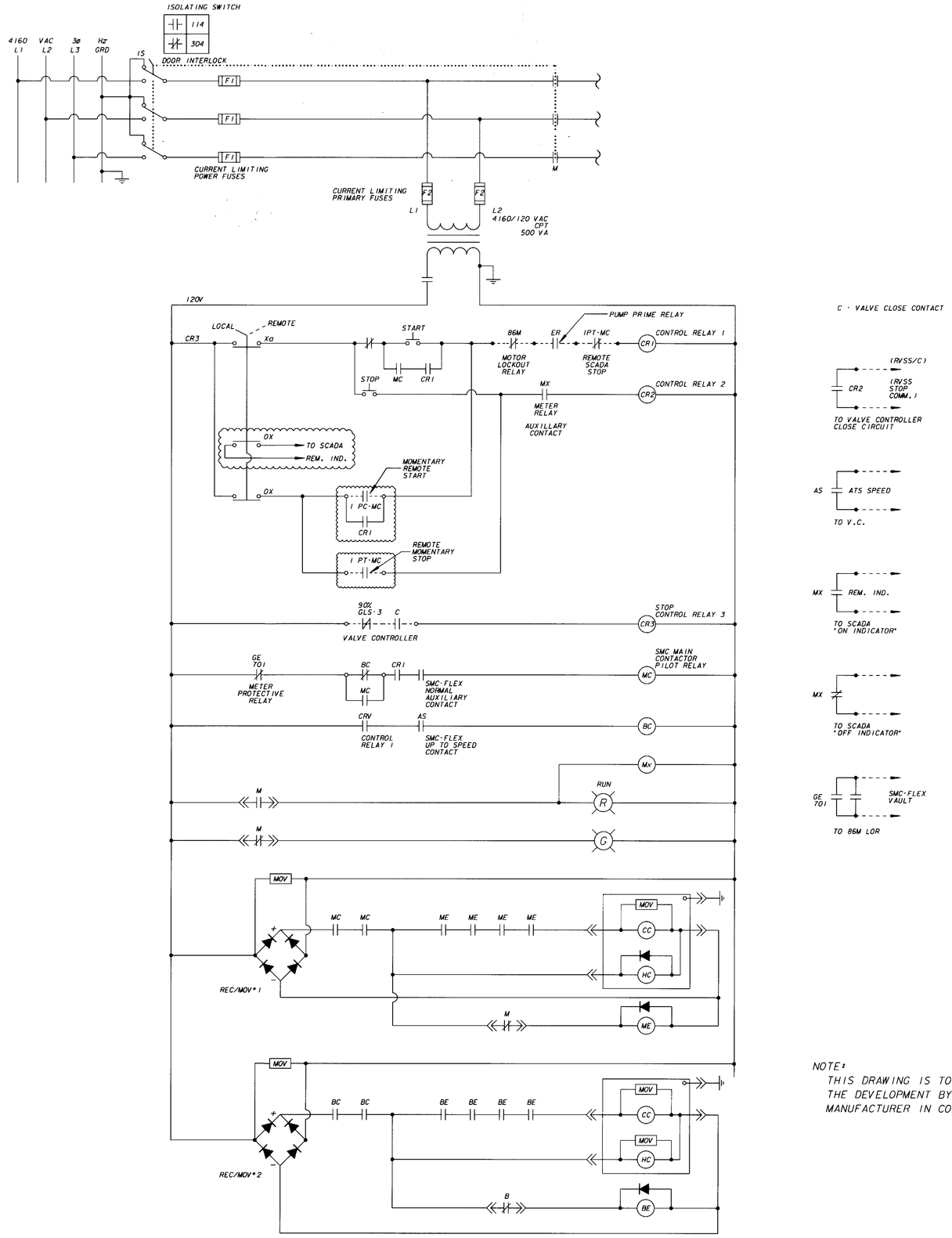

NOTE:
THIS DRAWING IS TO BE USED AS A BASIS FOR THE DEVELOPMENT BY THE MOTOR CONTROLLER MANUFACTURER IN CONJUNCTION WITH THE CITY.

NO.	BY	REVISION	DATE

Milwaukee Water Works — Water Engineering, Department of Public Works

PUMPING STATION

PUMP #5, #6, #7, #8 SOFT START

RVSS MOTOR CONTROL SCHEMATICS

DESIGNED BY	BST
DRAWN BY	JFS
CHECKED BY	BST
DATE	8-2-2011
SCALE	NOT TO SCALE
WORK ORDER	WT460116200
OFFICIAL NOTICE	1632011
FILE NO.	

APPROVED — DATE
8/11/11 — PLANTS PROJECT ENGINEER
8/16/2011 — CHIEF DESIGN ENGINEER
8/17/11 — SPECIAL DEPUTY COMMISSIONER OF PUBLIC WORKS

DRAWING NO. HS-26-04

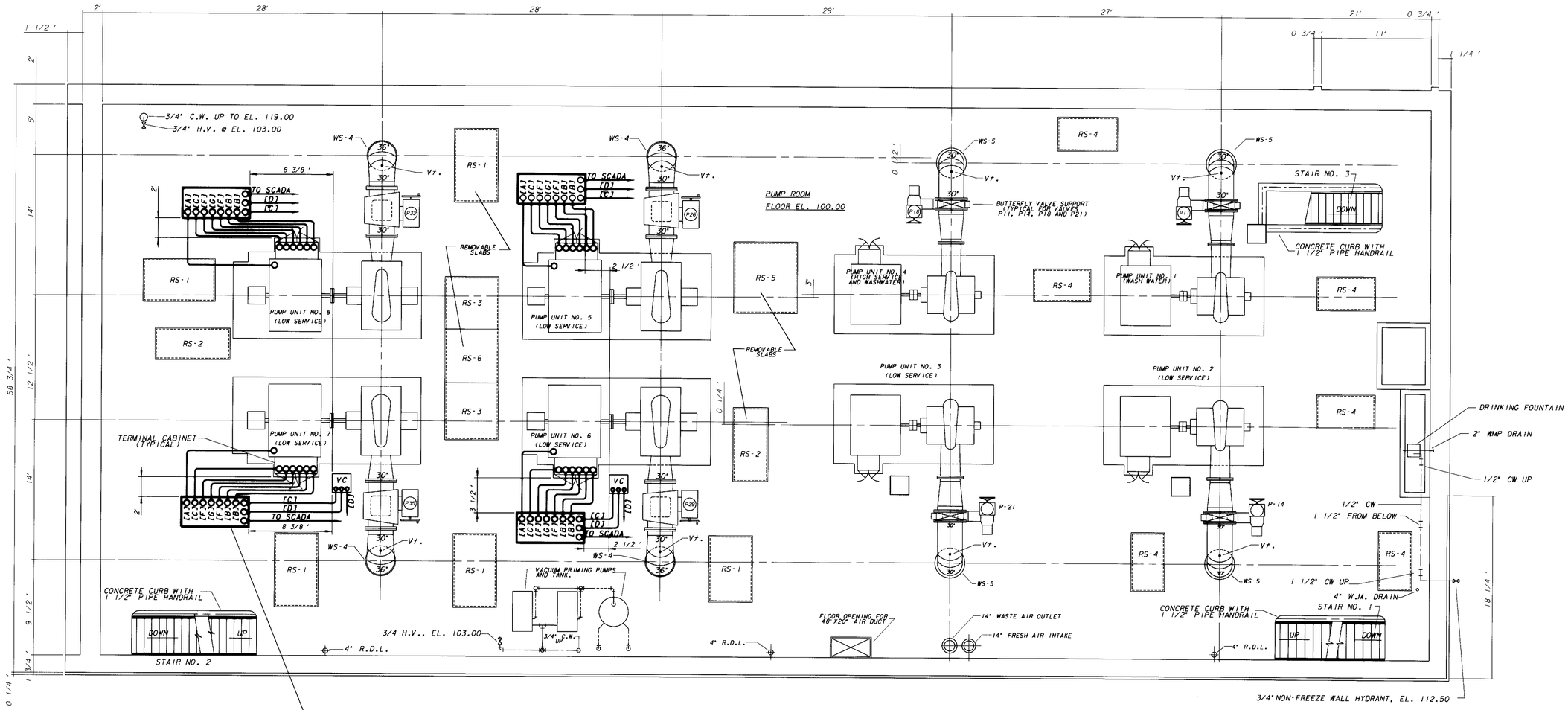

GENERAL PLAN OF PUMP FLOOR

SCALE 3/16" = 1'-0"

CONTRACTOR TO VERIFY DIMENSIONS PRIOR TO FABRICATION

NOTES:

1) CONTRACTOR TO PROVIDE NEW LUGS FOR FEEDER TERMINATION AT NEW AND EXISTING EQUIPMENT, SIZED FOR NEW FEEDER.

2) CONTRACTOR TO POUR CONCRETE PAD FOR EACH CONTROLLER UNIT. PAD TO BE 4" HIGH AND TO EXTEND 2" BEYOND PERIMETER OF EQUIPMENT.

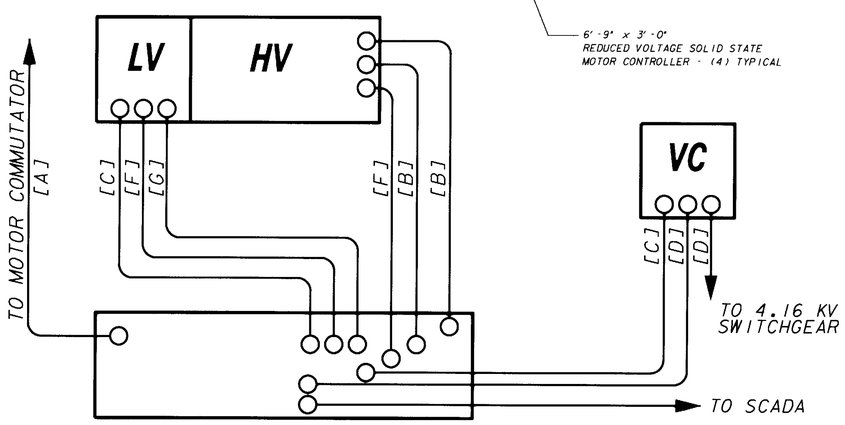

RVSS MOTOR CONTROLLER
TYPICAL PUMPS 6 & 7
(NOT TO SCALE)

NOTE: HIGH AND LOW VOLTAGE CUBICLES REVERSED FOR PUMPS 5 & 8

[A] 2*6, 1" RMC (EXCITER)
[B] 3*250MCM, 1*4G, 3" RMC (FEEDER)
[C] 6*12, 1" RMC
[D] 2*12, 1*12G, 3/4" RMC
[E] 14*12, 1 1/2" RMC
[F] 4*10, 1 1/2" RMC
[G] BELDEN 1095-A12, *18 TRIAD, 1" RMC

NO.	BY	REVISION	DATE
△			
△			
△			

Milwaukee Water Works — Water Engineering, Department of Public Works

HOWARD AVENUE PUMPING STATION

PUMP #5, #6, #7 & #8 SOFT START

GENERAL PLAN OF PUMP FLOOR, WIRE & CONDUIT INSTALLATION PLAN

DESIGNED BY	BST
DRAWN BY	PJG & JFS
CHECKED BY	BST
DATE	8-2-2011
SCALE	AS SHOWN
WORK ORDER	WT450115200
OFFICIAL NOTICE	1532011
FILE NO.	

APPROVED BST 8/11/11 — PLANTS PROJECT ENGINEER
8/16/2011 — CHIEF DESIGN ENGINEER
8/17/11 — SPECIAL DEPUTY COMMISSIONER OF PUBLIC WORKS

DRAWING NO. HS-26-05

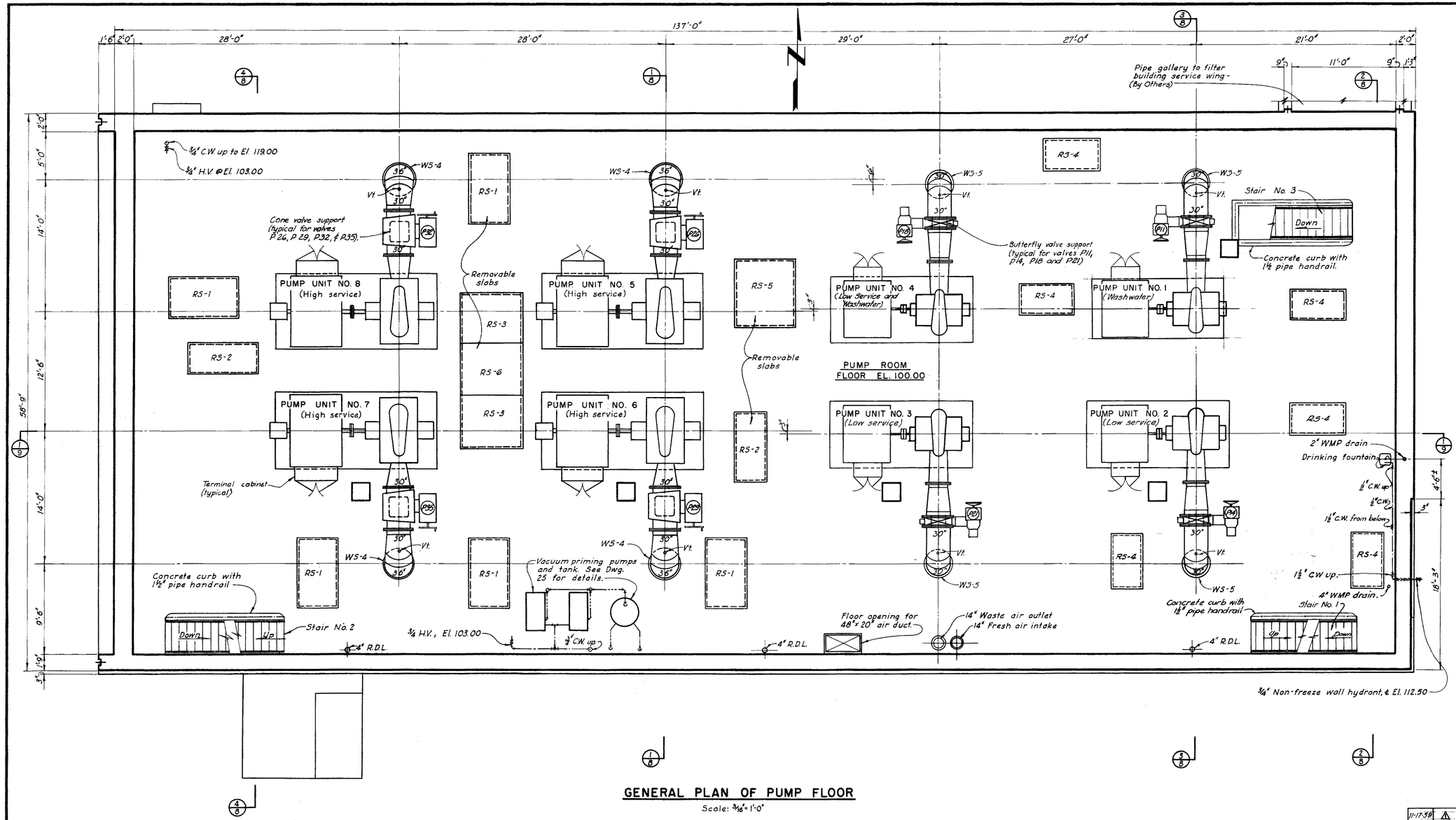

GENERAL PLAN OF PUMP FLOOR

Scale: 3/16" = 1'-0"

VALVE SCHEDULE

Valve No.	Size (in.)	Type	Service	Oper. Pos.
P 1			Located at 15 mg. Howard Avenue Clearwell.	
P 2				
P 3				
P 4				
P 5				
P 6	42	BF	Washwater -sectionalize	B-5
P 7	42	BF	" " "	A-5
P 8	36	BF	" " "	B-1
P 9	36	BF	" " "	A-3
P 10	42	BF	Low Service -sectionalize	A-5
P 11	30	BF	W.W. Discharge-pump shutoff	A-3
△ P 12	30	BF	W.W. Suction -pump shutoff	A-3
△ P 13	30	BF	L.S. Suction - " "	A-3
P 14	30	BF	L.S. Discharge - " "	A-3
P 15	42	BF	" " - sectionalize	A-5
P 16	36	BF	" " "	A-7
P 17	36	BF	" " "	A-3
P 18	30	BF	L.S. Discharge -pump shutoff	A-3
△ P 19	30	BF	" Suction - " "	A-3
△ P 20	30	BF	" " " "	A-3
P 21	30	BF	L.S. Discharge - " "	A-3
P 22	48	BF	H.S. Discharge-sectionalize	B-1
P 23	60	BF	Suction - sectionalize	A-1
P 24	60	BF	" "	B-1
P 25	48	BF	H.S. Discharge-sectionalize	A-5
P 26	30	Cone	H.S. Discharge-pump shutoff	—
△ P 27	36	BF	H.S. Suction, pump shutoff	A-3
△ P 28	36	BF	" " " "	A-3
P 29	30	Cone	H.S. Discharge-pump shutoff	—
P 30	48	BF	H.S. Disharge-sectionalize	A-5
P 31	48	BF	" " "	A-5
P 32	30	Cone	H.S. Discharge-pump shutoff	—
△ P 33	36	BF	H.S. Suction-pump shutoff	A-3
△ P 34	36	BF	" " " "	A-3
P 35	30	Cone	H.S. Discharge-pump shutoff	—
P 36	60	BF	Suction-sectionalize	B-7
P 37	48	BF	H.S. Discharge-sectionalize	A-5
P 38	48	BF	" " "	A-1

Note:
"Operator Position" refers to mounting position as shown in Henry Pratt. Co. Catalog B-2, page B-5

Note
See Dwg. 4 for explanation of symbols and reference drawings

Date	Revision	Description	By	Ch'kd
11-17-59	△	Revise valve diameters and operator positions.	PES	RAM

WATER ENGINEERING DIVISION
BUREAU OF ENGINEERS
MILWAUKEE WATER WORKS
DEPARTMENT OF PUBLIC WORKS

HOWARD AVENUE PUMPING STATION

GENERAL PLAN OF PUMP FLOOR

APPROVED [signature] CONSULTING ENGINEER
APPROVED [signature] ENGINEER IN CHARGE
APPROVED [signature] SPEC. DEP. COMMISSIONER OF PUBLIC WORKS
APPROVED [signature] CITY ENGINEER

BLACK & VEATCH
CONSULTING ENGINEERS, KANSAS CITY, MO.

DESIGNED WEM
DRAWN PES WEM WDS
TRACED LSF ACW
CHECKED RAM
DATE 7-24-59
SCALE: AS SHOWN
FILE 4-41-1
DWG. HS-5

MICROFILMED 10-8-70

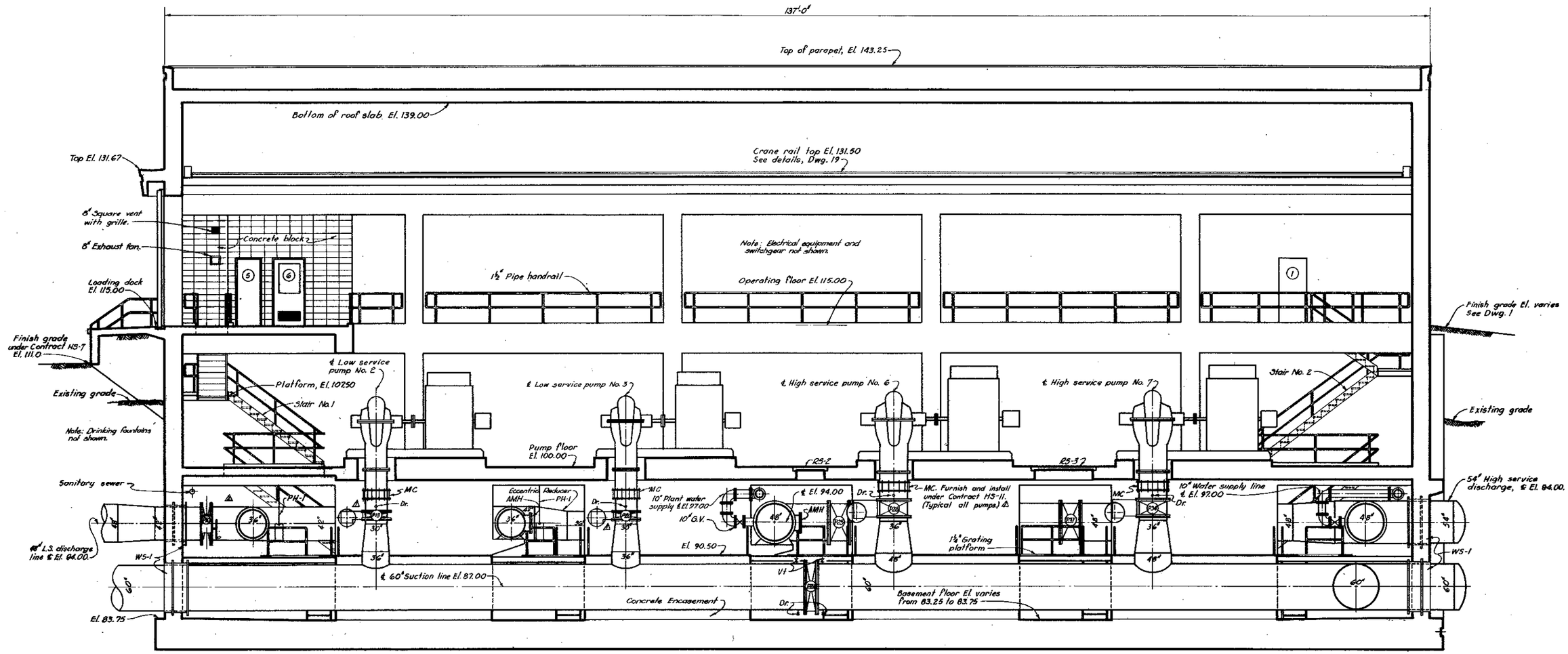

SECTION 1

Scale: 3/16" = 1'-0"
See Dwgs. 4, 5, 6 & 7

Note:
See Dwg. 4 for explanation of symbols and reference drawings.

Date	Revision	Description	By	Chkd.
12-27-59	△	Relocate 42" Low Service discharge line.	PES	WEM
11-17-59	△	Revise L.S. suction valves & misc. revisions as indicated.	PES	RAM

WATER ENGINEERING DIVISION
BUREAU OF ENGINEERS
MILWAUKEE WATER WORKS
DEPARTMENT OF PUBLIC WORKS

HOWARD AVENUE PUMPING STATION

BUILDING SECTION

APPROVED (CONSULTING ENGINEER) APPROVED (ENGINEER IN CHARGE)
APPROVED (SPEC. DEP. COMMISSIONER OF PUBLIC WORKS) APPROVED (CITY ENGINEER)

BLACK & VEATCH
CONSULTING ENGINEERS, KANSAS CITY, MO.

DESIGNED WEM
DRAWN PES WDS
TRACED FMC
CHECKED RAM
FILE 4-41-2
DATE 7-24-59
SCALE: AS SHOWN
DWG. HS-9

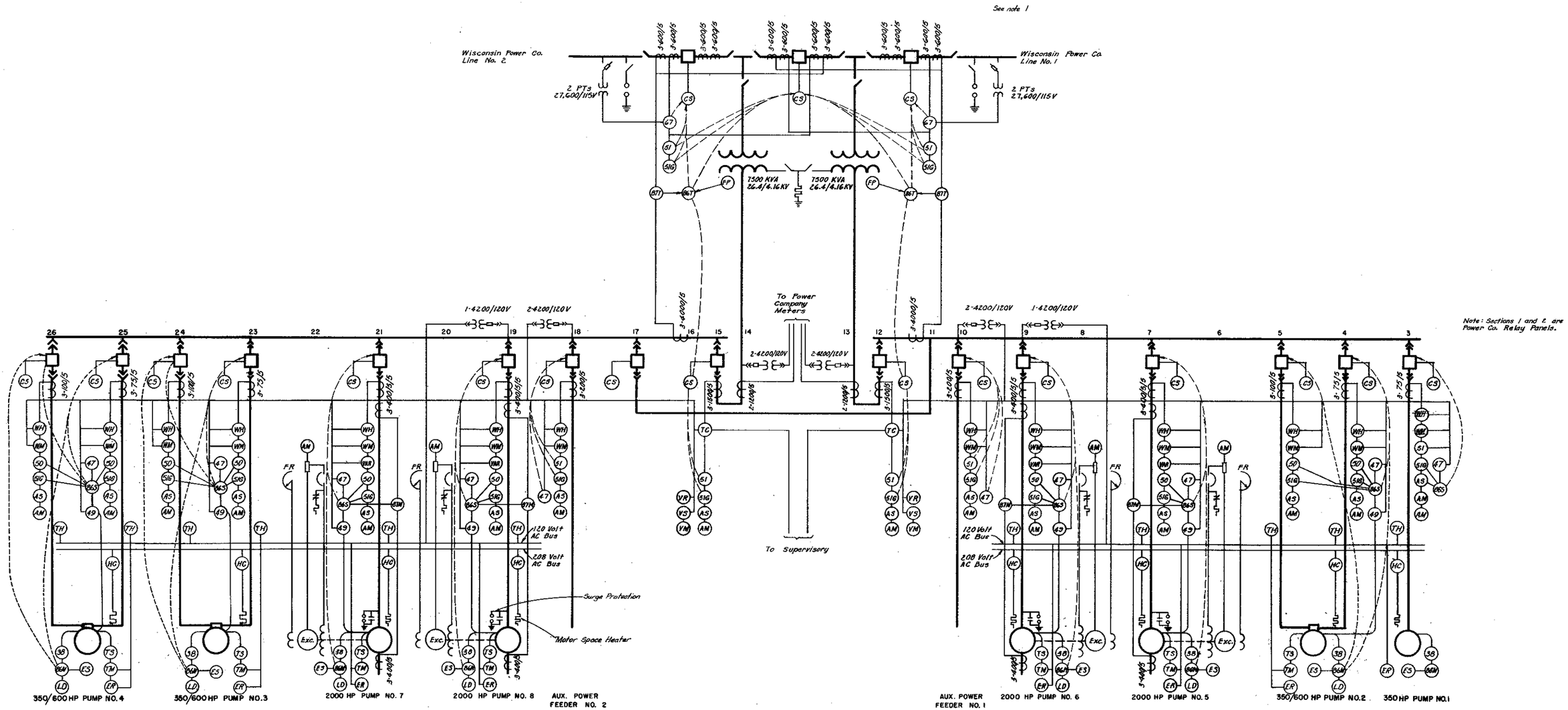

Note: Sections 1 and 2 are Power Co. Relay Panels.

LEGEND

AM	Ammeter
AS	Ammeter Switch
CS	Control Switch
ES	Emergency Stop Pushbutton
ER	Electrode Relay - detects pump prime
FP	Fault Pressure Relay
FR	Exciter Field Rheostat
HC	Contactor for motor space heaters
LD	Leakage Detector
TC	Thermal Converter for telemetering
TH	Total Hour Meter
TM	Temperature Meter
TS	Temperature Switch
VAR	Varmeter
VM	Voltmeter
VR	Voltage Recorder
VS	Voltmeter Switch
WH	Watthour Meter
WM	Watt Meter
38	Bearing Temperature Relay
47	Phase Sequence and Undervoltage Relay
49	Motor Thermal Relay
50	Instantaneous Overcurrent Relay
51	Induction-type Overcurrent Relay
51G	Ground Overcurrent Relay
86M	Lockout Relay - on motor
86S	Lockout Relay - on switchgear
86T	Transformer Lockout Relay
87M	Motor Differential Relay
87T	Transformer Differential Relay
67	Directional Overcurrent Relay

NOTE

1. Key interlock - Disconnect switches may not be opened unless breaker is open.

WATER ENGINEERING DIVISION
BUREAU OF ENGINEERS
MILWAUKEE WATER WORKS
DEPARTMENT OF PUBLIC WORKS

HOWARD AVENUE PUMPING STATION

FUNCTIONAL ONE-LINE DIAGRAM

APPROVED _____ CONSULTING ENGINEER
APPROVED _____ ENGINEER IN CHARGE
APPROVED _____ SPEC. DEP. COMMISSIONER OF PUBLIC WORKS
APPROVED _____ CITY ENGINEER

BLACK & VEATCH
CONSULTING ENGINEERS, KANSAS CITY, MO.

DESIGNED REM
DRAWN REM
TRACED REM
CHECKED DEC
FILE 4-41-4
DATE 1-14-60
SCALE: AS SHOWN
DWG. HS-28

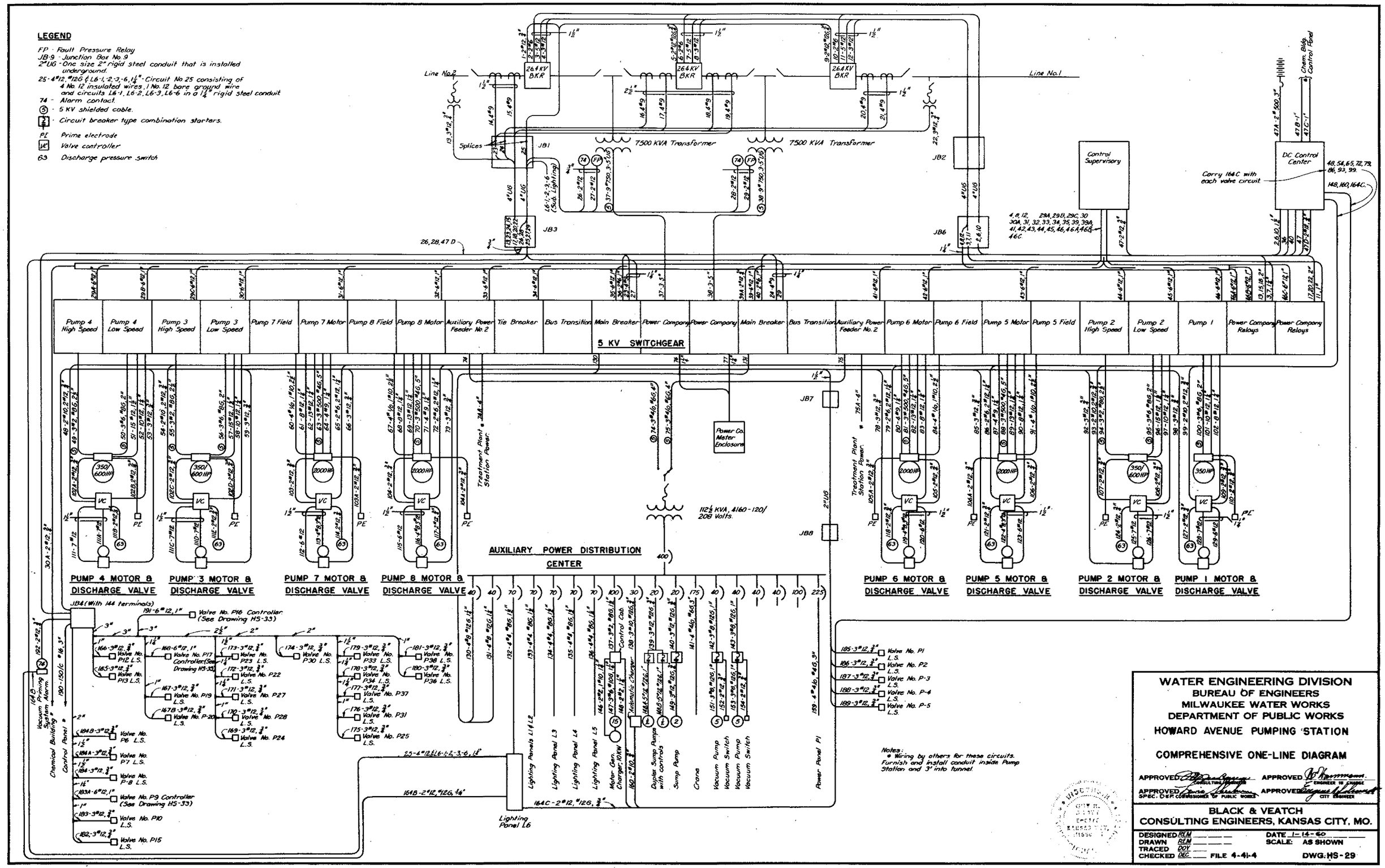
LEGEND
FP - Fault Pressure Relay
JB-9 - Junction Box No. 9
2"UG - One size 2" rigid steel conduit that is installed underground.
25-4#12, #12G & L6-1,-2,-3,-6, 1¼" - Circuit No. 25 consisting of 4 No. 12 insulated wires, 1 No. 12 bare ground wire and circuits L6-1, L6-2, L6-3, L6-6 in a 1¼" rigid steel conduit
74 - Alarm contact.
5 - 5 KV shielded cable.
Circuit breaker type combination starters.
PE Prime electrode
VC Valve controller
63 Discharge pressure switch
Line No. 2
Line No. 1
264 KV BKR
7500 KVA Transformer
Splices
JB1
JB2
JB3
JB6
JB7
JB8
Control Supervisory
DC Control Center
Chem. Bldg. Control Panel
Corry 164C with each valve circuit.
5 KV SWITCHGEAR
Pump 4 High Speed
Pump 4 Low Speed
Pump 3 High Speed
Pump 3 Low Speed
Pump 7 Field
Pump 7 Motor
Pump 8 Field
Pump 8 Motor
Auxiliary Power Feeder No. 2
Tie Breaker
Bus Transition
Main Breaker
Power Company
Power Company
Main Breaker
Bus Transition
Auxiliary Power Feeder No. 2
Pump 6 Motor
Pump 6 Field
Pump 5 Motor
Pump 5 Field
Pump 2 High Speed
Pump 2 Low Speed
Pump 1
Power Company Relays
Power Company Relays
Power Co. Meter Enclosure
112½ KVA, 4160-120/208 Volts.
AUXILIARY POWER DISTRIBUTION CENTER
PUMP 4 MOTOR & DISCHARGE VALVE
PUMP 3 MOTOR & DISCHARGE VALVE
PUMP 7 MOTOR & DISCHARGE VALVE
PUMP 8 MOTOR & DISCHARGE VALVE
PUMP 6 MOTOR & DISCHARGE VALVE
PUMP 5 MOTOR & DISCHARGE VALVE
PUMP 2 MOTOR & DISCHARGE VALVE
PUMP 1 MOTOR & DISCHARGE VALVE
Treatment Plant Station Power
Lighting Panels L1 & L2
Lighting Panel L3
Lighting Panel L4
Lighting Panel L5
Lighting Panel L6
Motor Gen. Charger, 10KW
Duplex Sump Pumps with controls
Sump Pump
Crane
Vacuum Pump
Vacuum Switch
Vacuum Pump
Vacuum Switch
Power Panel P1
Valve No. P1 L.S.
Valve No. P2 L.S.
Valve No. P-3 L.S.
Valve No. P-4 L.S.
Valve No. P-5 L.S.
Valve No. P16 Controller (See Drawing HS-33)
Valve No. P9 Controller (See Drawing HS-33)
Valve No. P10 L.S.
Valve No. P15 L.S.
Valve No. P6 L.S.
Valve No. P7 L.S.
Valve No. P-8 L.S.
Chemical Building
Control Panel
Vacuum Priming System Alarm
Notes:
* Wiring by others for these circuits. Furnish and install conduit inside Pump Station and 3' into tunnel.
WATER ENGINEERING DIVISION
BUREAU OF ENGINEERS
MILWAUKEE WATER WORKS
DEPARTMENT OF PUBLIC WORKS
HOWARD AVENUE PUMPING STATION
COMPREHENSIVE ONE-LINE DIAGRAM
APPROVED
APPROVED
APPROVED
APPROVED
SPEC. DEP. COMMISSIONER OF PUBLIC WORKS
CITY ENGINEER
BLACK & VEATCH
CONSULTING ENGINEERS, KANSAS CITY, MO.
DESIGNED REM
DRAWN REM
TRACED DOY
CHECKED DEC
FILE 4-41-4
DATE 1-14-60
SCALE: AS SHOWN
DWG. HS-29

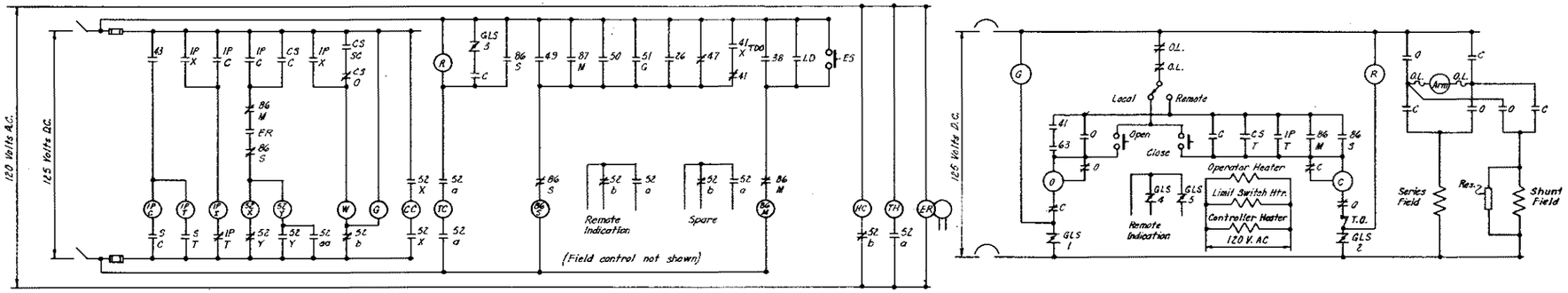

HIGH SERVICE PUMP & DISCHARGE VALVE

LEGEND

C - Valve controller "Close" contactor.
CC - Breaker closing coil.
CS - Control switch
ER - Electrode relay - contact closes when pump is primed.
ES - Emergency stop pushbutton at motor.
G - Green indicating light.
GLS/1 - Geared limit switch on valve - contact open only when valve is fully open.
GLS/2 - Geared limit switch on valve - contact open only when valve is fully closed.
GLS/3 - Geared limit switch on valve - contact closes only when valve is 95% closed.
GLS/4 - Geared limit switch on valve - contact open only when valve is fully open.
GLS/5 - Geared limit switch on valve - contact open only when valve is fully closed.
HC - Contactor for motor space heater.
IP/C - Interposing relay close
IP/T - Interposing relay - trip.
IP/X - Interposing relay - auxiliary for white light.
LD - Leakage detector.
O - Valve controller "Open" contactor.
O.L. - Overload device.
R - Red indicating light.
S/C - Supervisory control "Close" contact.
S/T - Supervisory control "Trip" contact.
TC - Breaker tripping coil.
TH - Total hour meter
T.O. - Torque overload device.
W - White indicating light.
26 - Starting protection.
38 - Bearing temperature device.
41 - Field contactor.
43 - Supervisory control disabling switch.
47 - Phase sequence and undervoltage relay.
49 - Motor thermal relay.
50 - Instantaneous overcurrent relay.
51 - Time overcurrent - phase.
51/G - Time overcurrent - ground.
52/a - Normally open breaker auxiliary switch.
52/b - Normally closed breaker auxiliary switch.
63 - Discharge pressure switch.
67 - Directional overcurrent relay.
86/T - Transformer lockout relay
86/S - Protective lockout relay on switchgear.
86/M - Protective lockout relay on motor.
87/M - Motor differential relay
87/T - Transformer differential relay.
TDO - Time delay open

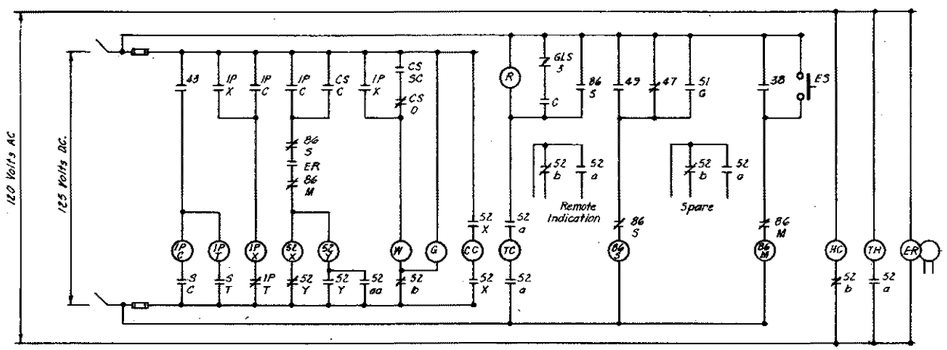

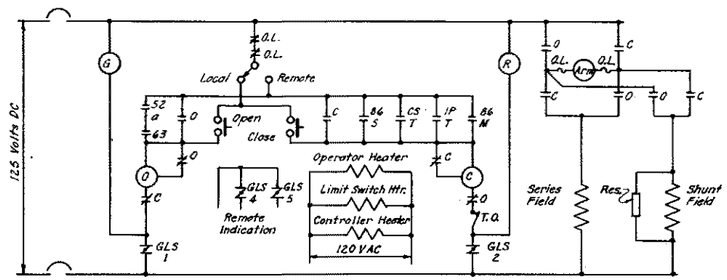

WASHWATER PUMP & DISCHARGE VALVE

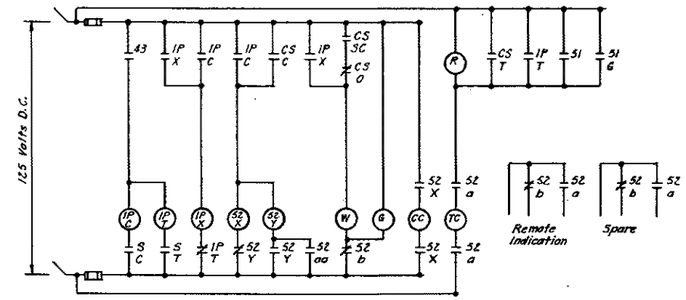

AUXILIARY POWER FEEDER

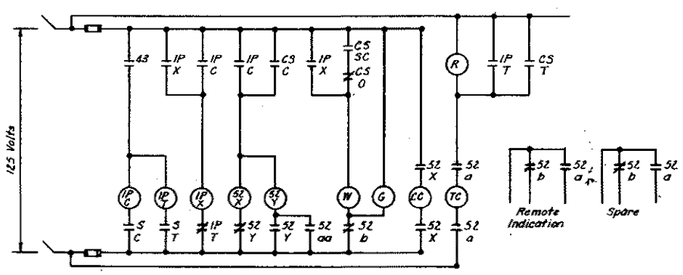

5 KV TIE BREAKER

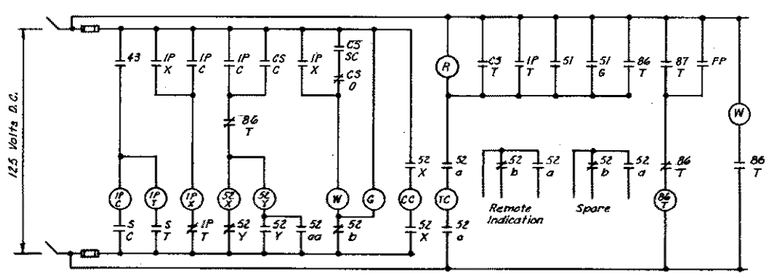

5 KV MAIN BREAKER

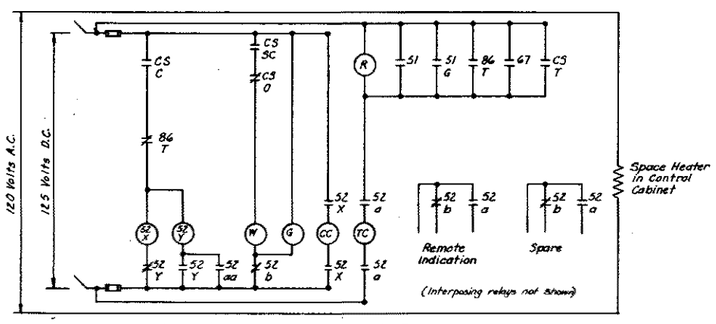

26.4 KV LINE BREAKER

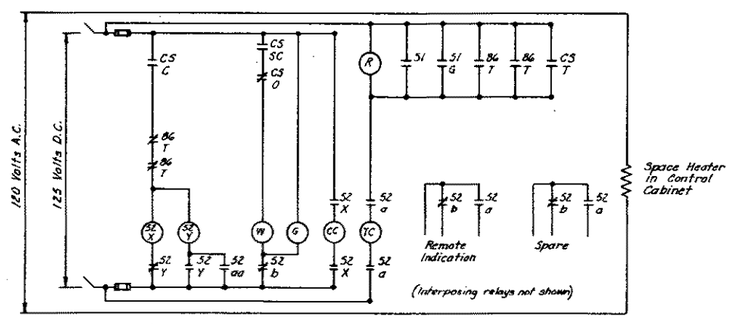

26.4 KV TIE BREAKER

WATER ENGINEERING DIVISION
BUREAU OF ENGINEERS
MILWAUKEE WATER WORKS
DEPARTMENT OF PUBLIC WORKS

HOWARD AVENUE PUMPING STATION

BREAKER AND VALVE CONTROL TYPICAL SCHEMATICS

APPROVED _____ CONSULTING ENGINEERS
APPROVED _____ ENGINEER IN CHARGE
APPROVED _____ SPEC. DEP. COMMISSIONER OF PUBLIC WORKS
APPROVED _____ CITY ENGINEER

BLACK & VEATCH
CONSULTING ENGINEERS, KANSAS CITY, MO.

DESIGNED REM
DRAWN REM
TRACED REM
CHECKED DEC
FILE 4-41-4
DATE 1-14-60
SCALE: AS SHOWN
DWG. HS-30

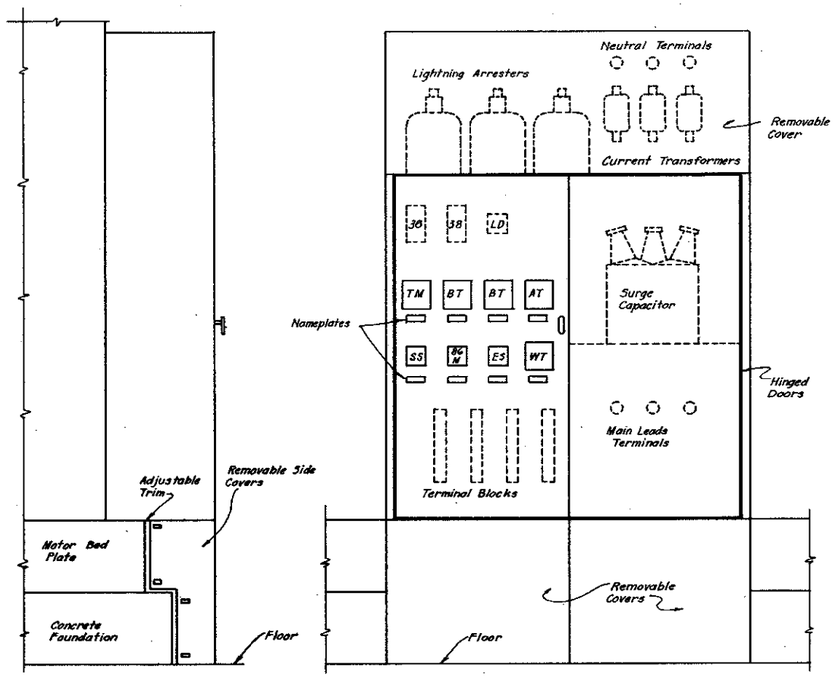

TYPICAL MOTOR TERMINAL COMPARTMENT FOR HIGH SERVICE PUMPS

Not To Scale

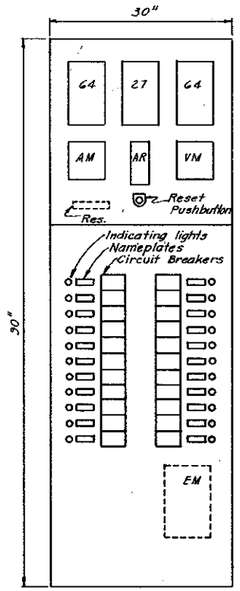

D.C. CONTROL CENTER

Scale : 1"=1'-0"

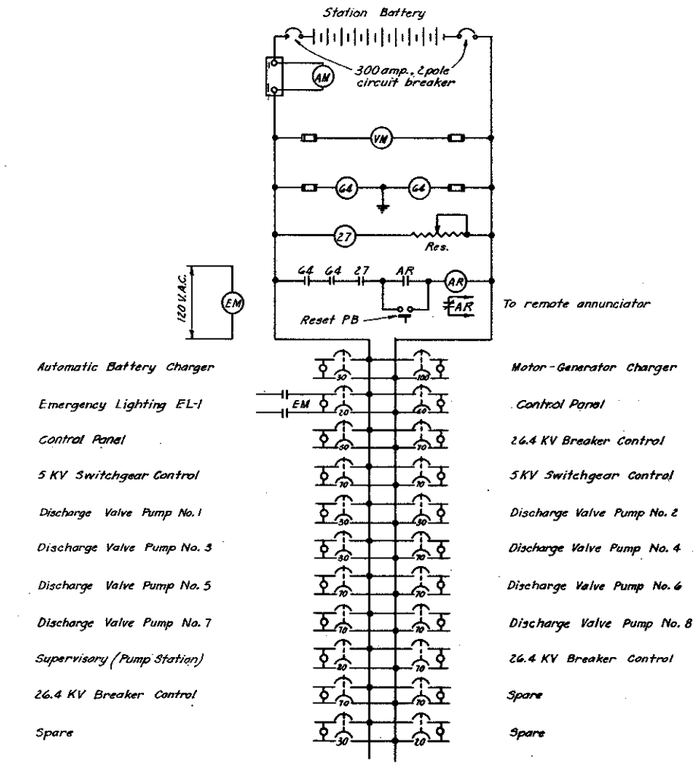

D.C. CONTROL CENTER SCHEMATIC

LEGEND

AM - Ammeter
AR - Auxiliary Relay
AT - Air Temperature Meter
BT - Bearing Temperature Meter
EM - Emergency Lighting Contactor
ES - Emergency Stop Switch
M - Motor Starter
1ML - Motor Starter for low speed of fan motor.
1MH - Motor Starter for high speed of fan motor.
2M - Motor Starter for Kathabar Pump.
3M - Motor Starter for regeneration fan.
SS - Motor Temperature Selector Switch.
TM - Motor Temperature Meter
VM - Voltmeter
WT - Water Temperature Meter
27 - Undervoltage Relay
64 - Ground Detector Relay
38 - Bearing Temperature Relay.
86/M - Hand-Reset Lockout Relay on motor terminal cabinet.
R Red indicating light

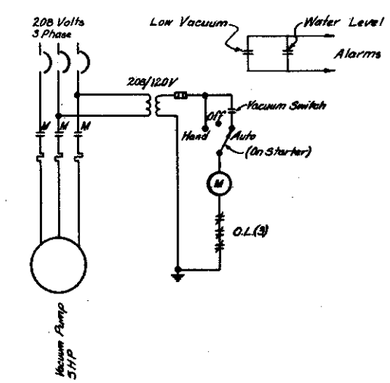

VACUUM PRIMING

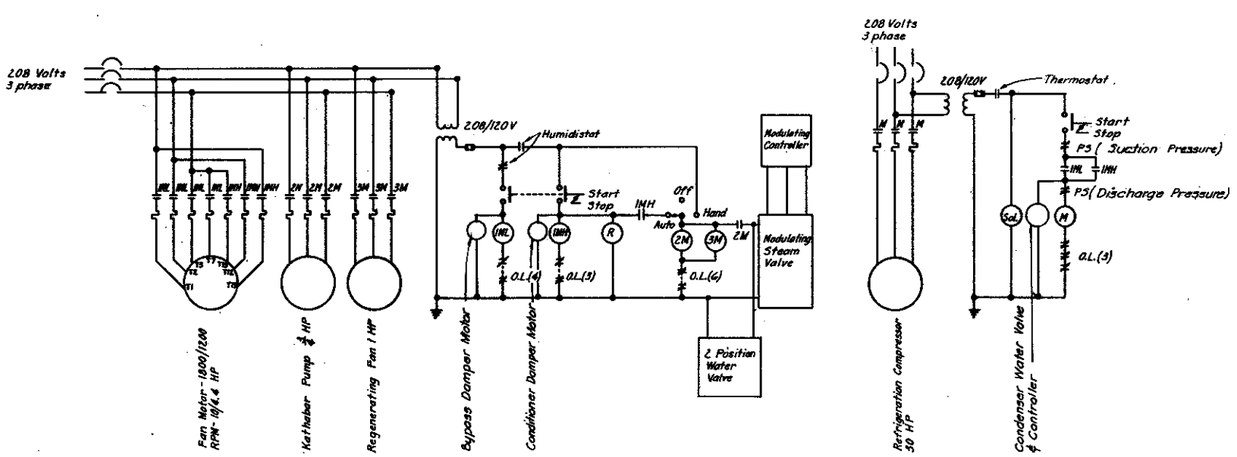

DEHUMIDIFICATION EQUIPMENT

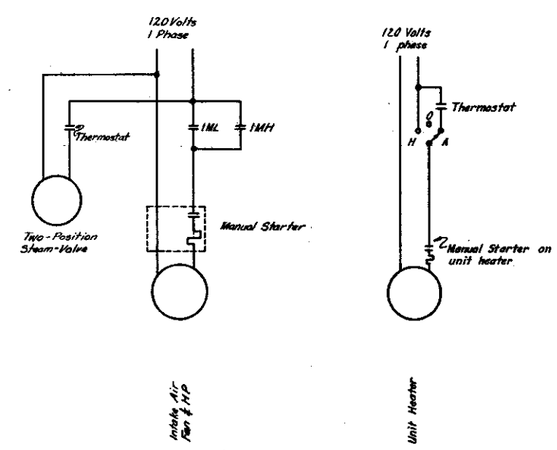

HEATING

WATER ENGINEERING DIVISION
BUREAU OF ENGINEERS
MILWAUKEE WATER WORKS
DEPARTMENT OF PUBLIC WORKS

HOWARD AVENUE PUMPING STATION

MISC. DETAILS AND TYPICAL SCHEMATICS

APPROVED [illegible] CONSULTING ENGINEER
APPROVED [illegible]
APPROVED [illegible] SPEC. DIR. COMMISSIONER OF PUBLIC WORKS
APPROVED [illegible] CITY ENGINEER

BLACK & VEATCH
CONSULTING ENGINEERS, KANSAS CITY, MO.

DESIGNED R.E.M.
DRAWN R.E.M.
TRACED R.E.M. DAB
CHECKED DEE
FILE 4-4T-4
DATE 1-14-52
SCALE: AS SHOWN
DWG. HS-32

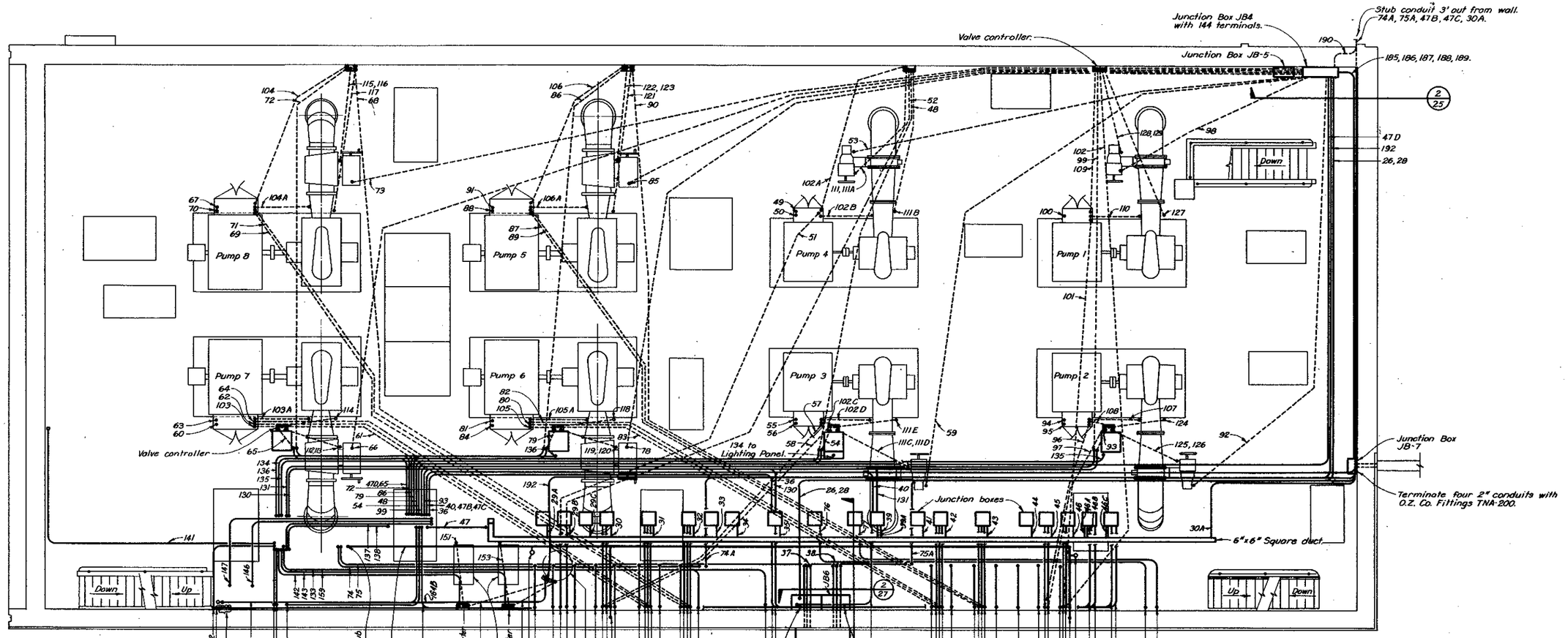

PUMP FLOOR POWER WIRING

Scale: 3/16" = 1'-0"

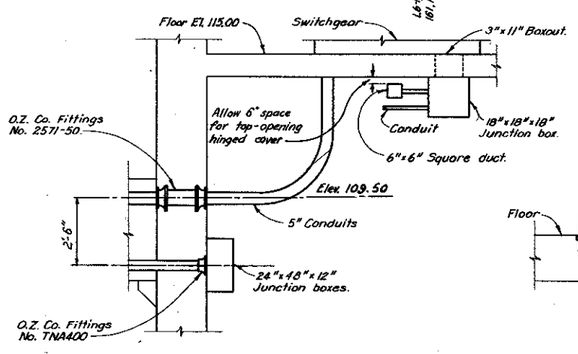

SECTION I

Scale: 3/8" = 1'-0"
See this Dwg.

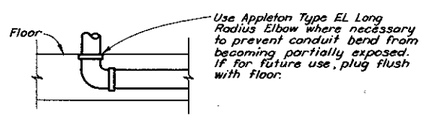

CONDUIT EXIT DETAIL

Not to Scale

POWER WIRING LEGEND

- Rigid conduit concealed in floor or wall.
- Rigid conduit concealed in ceiling or wall.
- Exposed conduit.
- Tee conduit fitting.
- Conduit passing from floor below to floor above.
- Conduit rising to floor above.
- Conduit rising from floor below.
- Conduit terminations.
- (P6) Valve No. P6
- (H) Humidistat-mount 5'-0" above floor.
- (T) Thermostat-mount 5'-0" above floor.
- (L) Valve limit switches.

WATER ENGINEERING DIVISION
BUREAU OF ENGINEERS
MILWAUKEE WATER WORKS
DEPARTMENT OF PUBLIC WORKS

HOWARD AVENUE PUMPING STATION

PUMP FLOOR POWER WIRING

APPROVED [signature] CONSULTING ENGINEER — APPROVED [signature] ENGINEER IN CHARGE
APPROVED [signature] SPEC. DEP. COMMISSIONER OF PUBLIC WORKS — APPROVED [signature] CITY ENGINEER

BLACK & VEATCH
CONSULTING ENGINEERS, KANSAS CITY, MO.

DESIGNED REM — DATE 1-14-60
DRAWN REM — SCALE: AS SHOWN
TRACED DOY
CHECKED DRC — FILE 4-41-5 — DWG. HS-39

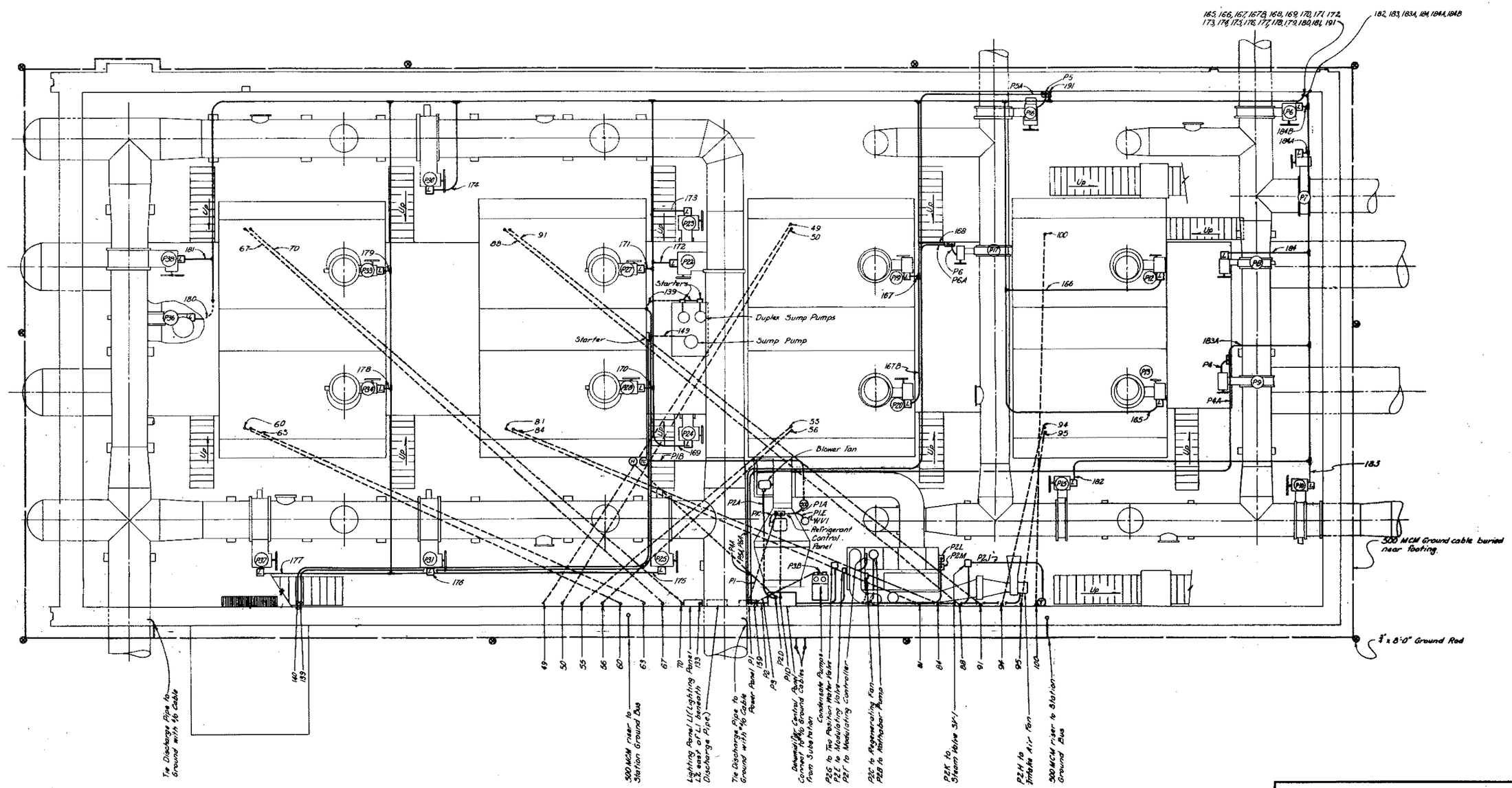

Note: See drawing 38 for legend

BASEMENT POWER WIRING

Scale: 1/8" = 1'-0"

WATER ENGINEERING DIVISION
BUREAU OF ENGINEERS
MILWAUKEE WATER WORKS
DEPARTMENT OF PUBLIC WORKS
HOWARD AVENUE PUMPING STATION

BASEMENT POWER WIRING

APPROVED (Consulting Engineer) APPROVED (Engineer in Charge)
APPROVED (Spec. Dep. Commissioner of Public Works) APPROVED (City Engineer)

BLACK & VEATCH
CONSULTING ENGINEERS, KANSAS CITY, MO.

DESIGNED REM DATE 1-14-60
DRAWN REM DAB SCALE: AS SHOWN
TRACED DAB
CHECKED DEC FILE 4-41-5 DWG. HS-40

Nameplate
2" x 12" Nominal Size
With 3/4" Lettering

HOWARD STATION DEVICE & NAMEPLATE LEGEND

NO.	DESCRIPTION	NAMEPLATE
1.	Nameplate	- Howard Station
2.	Printer	-
3.	Breaker Control Point	- 26KV Feeder No. 1
4.	" " "	- " " No. 2
5.	" " "	- " Tie Breaker
6.	" " "	- 5KV Main Breaker No. 1
7.	" " "	- " " " No. 2
8.	" " "	- " Tie Breaker
9.	" " "	- Aux. Power Feeder No. 1
10.	Motor Control Point	- High Service Pump No. 6
11.	" " "	- " " " No. 5
12.	" " "	- Low Service Pump No. 2-Low Speed
13.	" " "	- " " " No. 2-High Speed
14.	" " "	- Washwater Pump No. 1
15.	Breaker " "	- Aux. Feeder No. 2
16.	Motor " "	- High Service Pump No. 8
17.	" " "	- " " " No. 7
18.	" " "	- Low " " No. 3-Low Speed
19.	" " "	- " " " No. 3-High Speed
20.	" " "	- " " " No. 4-Low Speed
21.	" " "	- " " " No. 4-High Speed
22.	Valve " "	- Valve No. Y4
23.	" " "	- " " P9
24.	" " "	- " " P16
25.	" " "	- " " P17
26.	Breaker Trip Control	- Breaker Trip
27.	Pump Stop "	- Pump Stop
28.	Blank	-
29.	"	-
30.	"	-
31.	"	-
32.	"	-
33.	As Required by System	- As Required by System
34.	" " " "	- " " " "
35.	" " " "	- " " " "
36.	Pump Run Control	- Pump Start
37.	Breaker Close "	- Breaker Close
38.	Line Identification	- W.E.P. Co. Line 3282 SW. # 537
39.	" "	- W.E.P. Co. Line 3271 SW. # 498
40.	Access Panel to RS-232 Port	

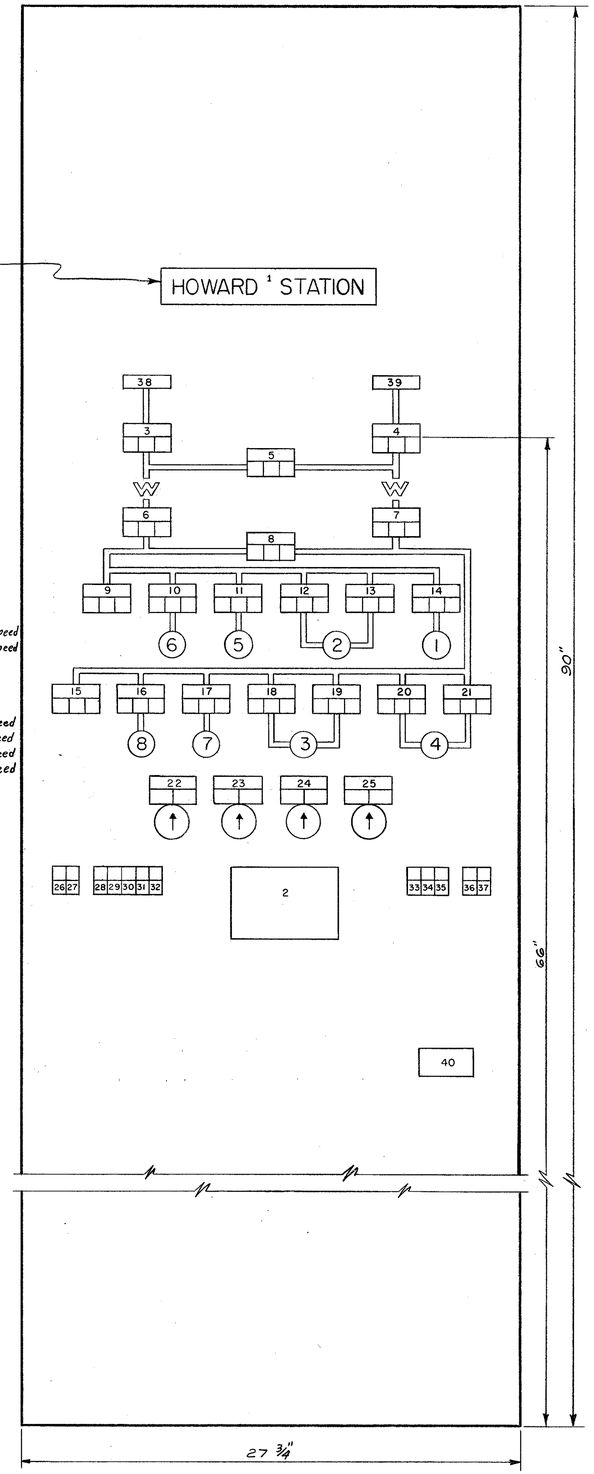

MASTER CONTROL PANEL

SCALE 1/4" = 1"

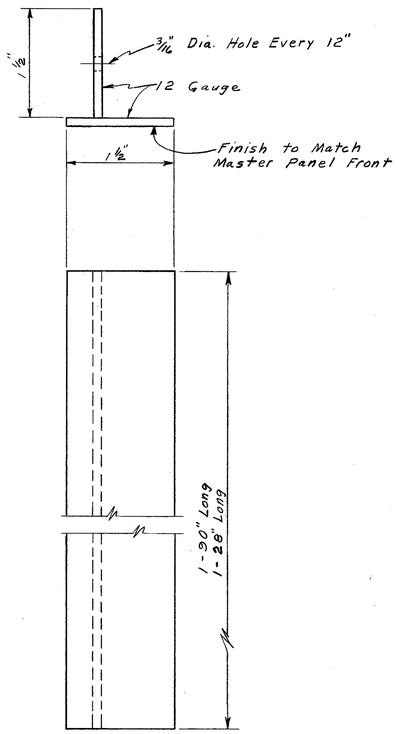

TRIM PIECE

FULL SCALE

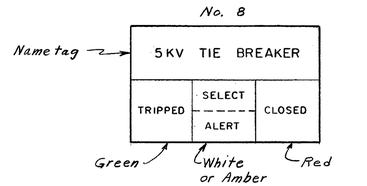

TYPICAL BREAKER CONTROL

FULL SCALE

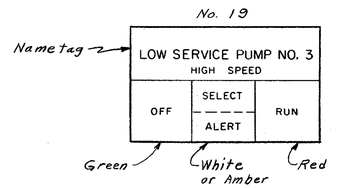

TYPICAL PUMP CONTROL

FULL SCALE

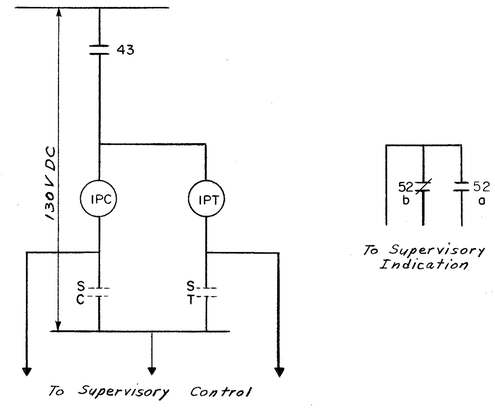

TYPICAL BREAKER CIRCUIT CONNECTIONS

N.T.S.

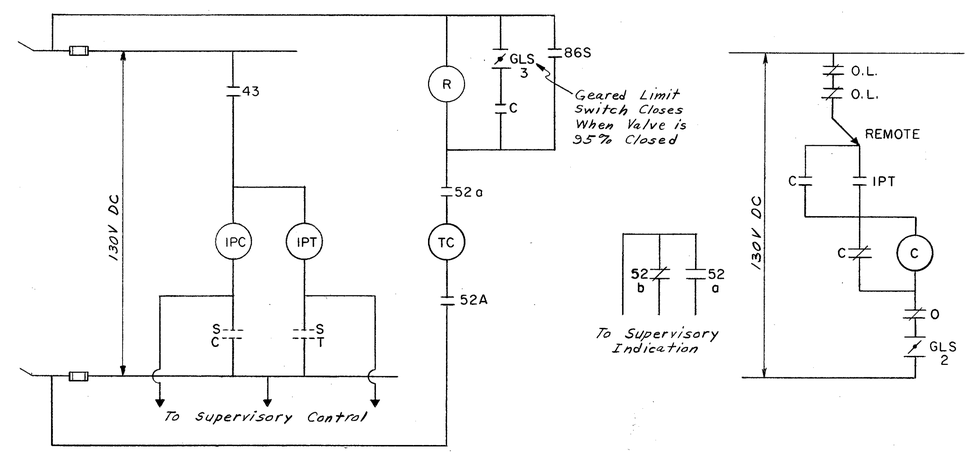

TYPICAL HIGH SERVICE PUMP & DISCHARGE VALVE OR WASHWATER PUMP & DISCHARGE VALVE CIRCUIT CONNECTIONS

N.T.S.

WISCONSIN RAYMOND J. KOCOL E-627 MILWAUKEE, WIS. PROFESSIONAL ENGINEER

No.	Date	Revision	By	Chk'd.

WATER ENGINEERING DIVISION
BUREAU OF ENGINEERS
MILWAUKEE WATER WORKS
DEPARTMENT OF PUBLIC WORKS

HOWARD AVE. PUMPING STATION
SUPERVISORY CONTROL EQUIPMENT

APPROVED A.V. Simeno 11-15-83 (PLANT DESIGN ENGINEER) APPROVED R. J. Kocol 11/15/83 (ENGINEER IN CHARGE)
APPROVED Norma P. Cannon 11-16-83 (SPEC. DEPUTY COMMISSIONER OF PUBLIC WORKS) APPROVED E. J. Pegorski 11/15/83 (CHF ENGINEER)

DESIGNED BY A.F.H.
DRAWN BY N.P.L.
TRACED BY
CHECKED BY AVS
DATE NOV. 2, 1983
SCALE AS SHOWN
FILE 4-41-6
DRWG. HS-16-1

MICROFILMED 5-6-86