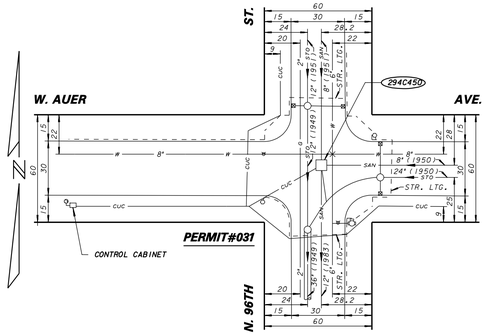

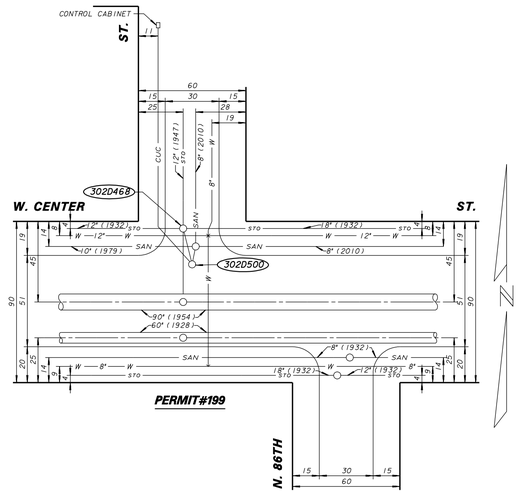

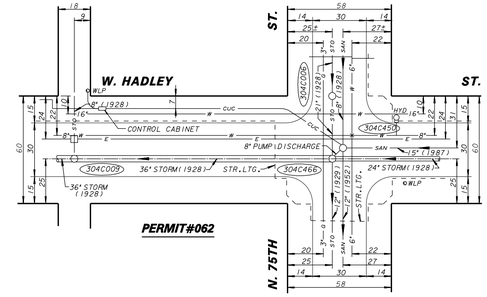

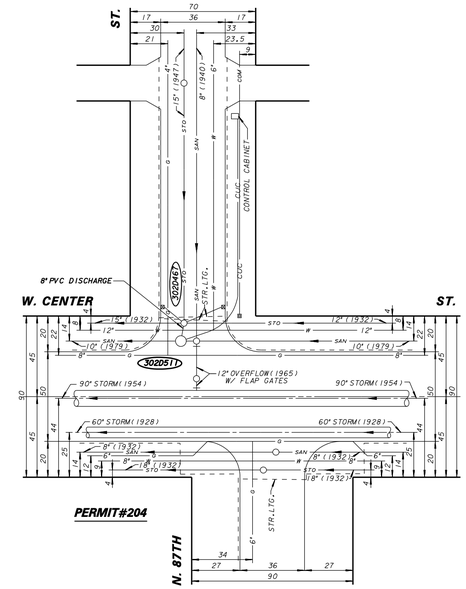

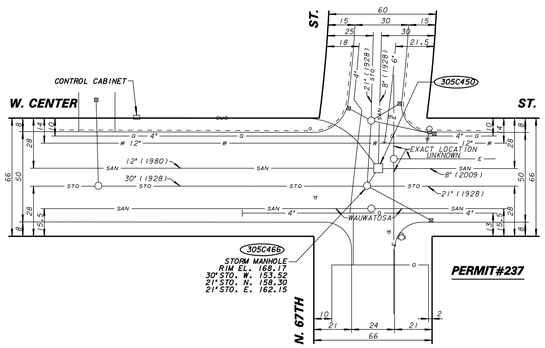

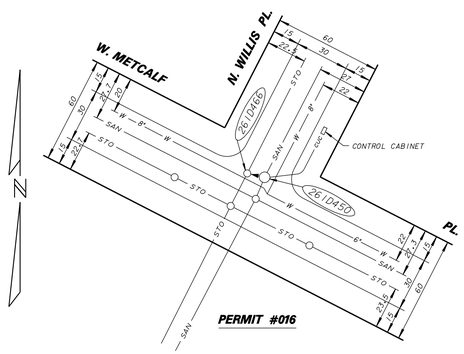

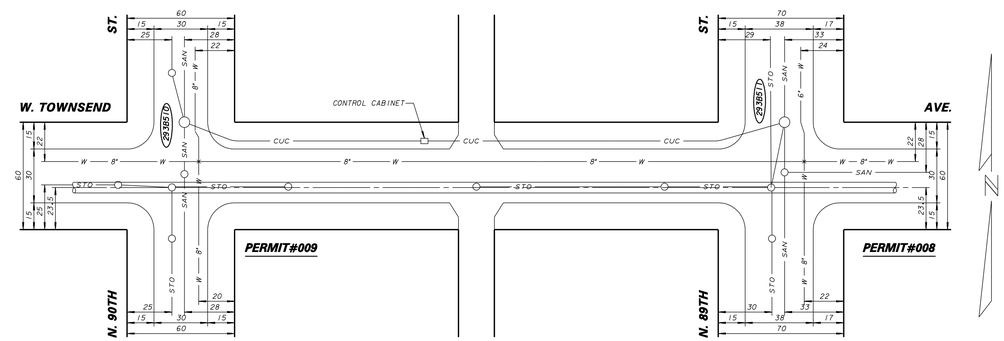

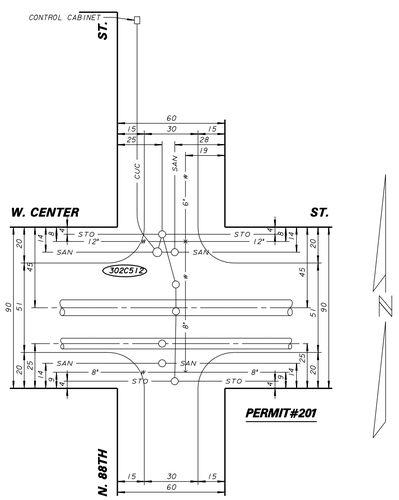

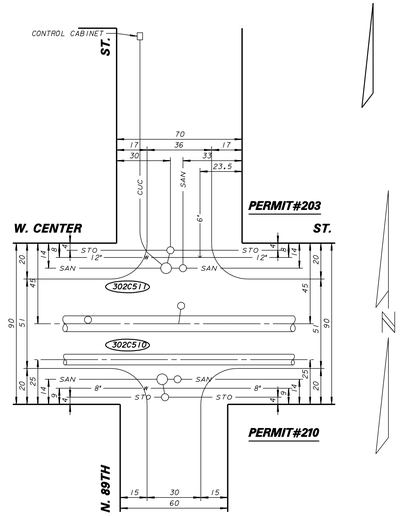

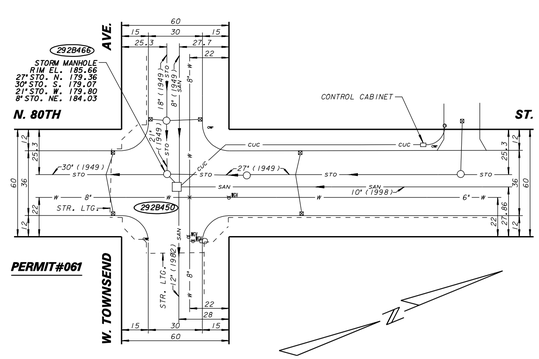

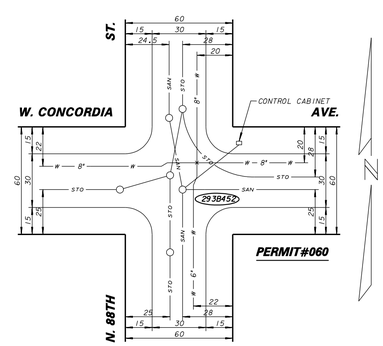

SHEET 1

ESTIMATE OF QUANTITIES		
ITEM NO.	QUANTITY	DESCRIPTION

ENVIRONMENTAL ENGINEERING SECTION
INFRASTRUCTURE SERVICES DIVISION
DEPARTMENT OF PUBLIC WORKS
MILWAUKEE, WISCONSIN

BYPASS PUMP INSPECTION

IN
FROM
TO

SCALE HORIZONTAL 1" =
VERTICAL 1" =

1/4 SEC. NO.
PLAN DATE
DESIGNED BY
DRAWN BY
CHECKED BY
SYSTEM NO.
EASEMENT NO.
CONTRACT NO.
PROJ. ID.

APPROVED DATE
DESIGN ENGINEER
ENGINEER IN CHARGE
CITY ENGINEER & SPECIAL DEPUTY COMMISSIONER OF PUBLIC WORKS
PROJECT NO. C.C. FILE NO.
OFF. NOTICE NO. DATE ADOPTED

PLAN FILE **PUMP SITES**

MMSO _____ SCANNED _____ MICROFILMED _____