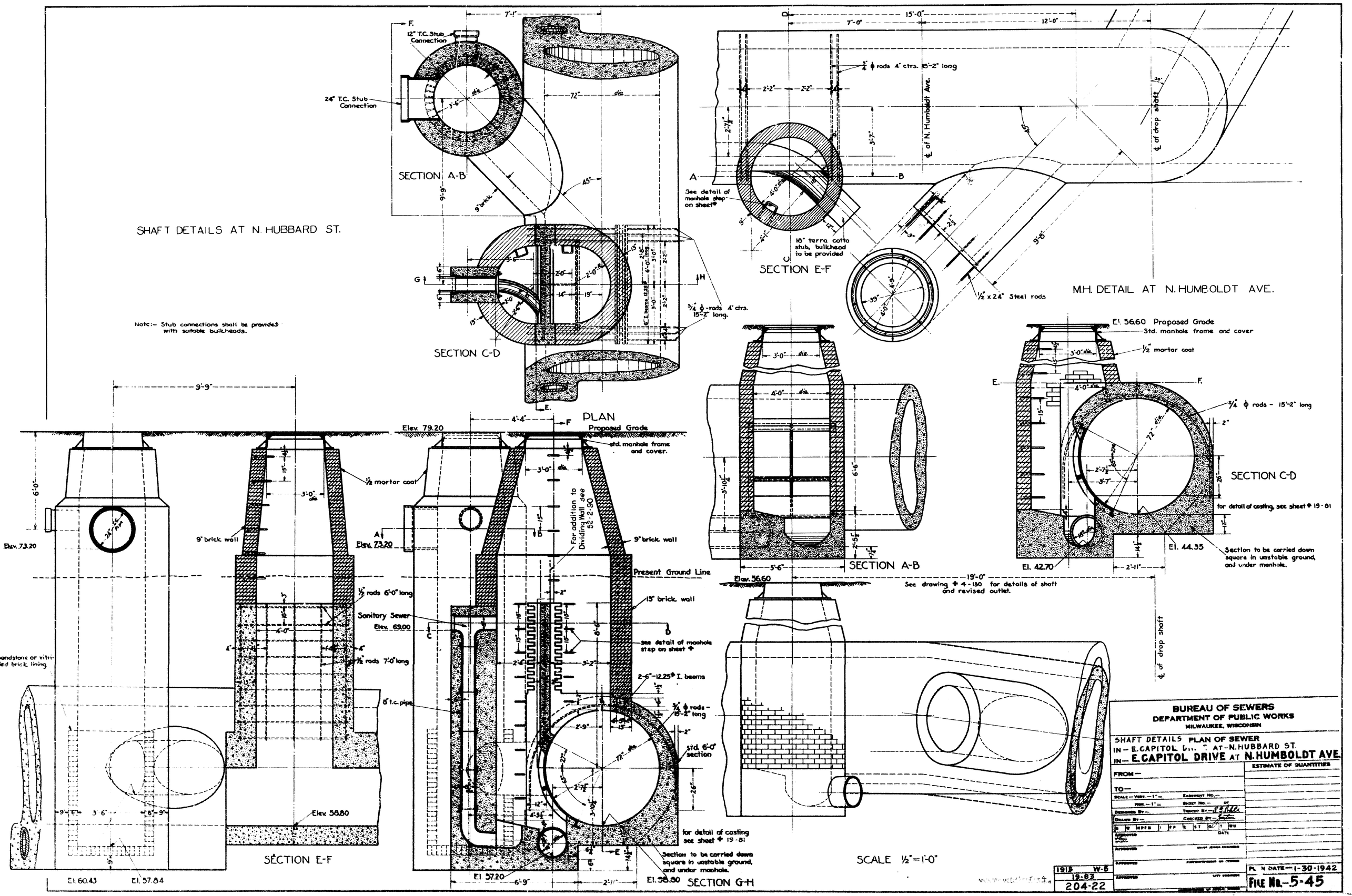SHAFT DETAILS AT N. HUBBARD ST.