City Of Milwaukee
Department of Public Works
Room 501 – Frank P. Zeidler Municipal Building
841 North Broadway
Milwaukee, Wisconsin 53202-3684

INVITATION TO BID

Commissioner of Public Works
Phone: 414-286-3314

OFFICIAL NOTICE NO. 138

Sealed bids for the work, material, labor, and services hereinafter described will be received at the Department of Public Works **Contract Office**, Room 506, Frank P. Zeidler Municipal Building, 841 North Broadway, Milwaukee, Wisconsin 53202-3684, no later than **Monday, October 12, 2015, at 10:30 A.M.**

One MANDATORY pre-bid meeting will be held at the Century City Site on Thursday, September 24, 2015, and begin PROMPTLY at 9:00 a.m. The pre-bid meeting will take place in Building 36 located at 3533 N. 27th St., Gate #3

(Please Note: Prior to entering the site, anyone showing up for the site visit will need to have a flash light, steel tipped boots, hard hat, safety glasses, and a reflective vest.)

IMPORTANT

This bid is your offer to perform or supply the subject matter under "DESCRIPTION" below according to the terms and conditions set forth in this Invitation to Bid, Specific Official Notice No. 138, General Specifications, Detailed Specifications, Special Provisions, Plans of this particular project, the proposed contract and Special Conditions when applicable.

Your bid must meet the Detailed Specifications and the Plans for this particular project.

You must agree to comply with all applicable requirements of the Americans with Disabilities Act of 1990, 42 U.S.C. Section 12101, et seq.

The bid must be signed as set forth in the General Specifications and must comply with all the requirements therein set forth, or it will not be considered. If submitted by a corporation, the bid proposal must bear the corporate seal.

Bid security hereinafter specified must be submitted with your bid. If a bid bond is used, it must be sealed by the bonding company and be accompanied by an affidavit of no interest and a copy of a power of attorney. Bonding agents must be licensed to do business in the State of Wisconsin.

Bids received after the date and the time above specified will not be opened and read and will be deemed rejected.

NOTE: Also **read** the General Official Notice to Contractors, General and Detailed Specifications, Special Provisions, and Special Conditions when applicable pertaining to this bid.

DESCRIPTION **Century City, Building 36**
Project Area E
Interior Lighting Improvements
3533 North 27th Street, Milwaukee, WI

DETAILS OF SPECIFICATIONS: dated September 14, 2015

FOR: **Century City, Building 36**
Project Area E
Interior Lighting Improvements
3533 North 27th Street, Milwaukee, WI

The SBE Requirement for this Project is: 25%
The Residency Requirement for this Project is: 40%
The Apprenticeship Requirements for this Project are: 0

Liquidated damages per diem: $150.00

Time for Completion: 21 Days from receipt of the Notice to Proceed

One MANDATORY pre-bid meeting will be held at the Century City site on September 24, 2015, beginning PROMPTLY at 9:00 a.m. CST. The pre-bid meeting will take place in Building 36 located at 3533 N. 27th St., Gate #3

(Please Note: Prior to entering the site, anyone showing up for the site visit will need to have a flashlight, steel tipped boots, hard hat, safety glasses, and a reflective vest.)

BID SECURITY REQUIRED: BOND, CERTIFIED CHECK, CASHIER'S CHECK, OR CASH TO ACCOMPANY BID: 10% OF CONTRACTOR'S BASE BID.

DETAILED SPECIFICATIONS: September 14, 2015

THE SUCCESSFUL CONTRACTOR SHALL FURNISH A PERFORMANCE BOND AND A PAYMENT BOND IN THE AMOUNT OF 100% OF THE BID WITH EACH EXECUTED CONTRACT.

NOTE: BIDS WILL BE OPENED AND PUBLICLY READ AT THE OFFICE OF THE COMMISSIONER OF PUBLIC WORKS ON **Monday, October 12, 2015, at 10:30 A.M.**

Plans and specifications will be furnished to the prospective bidders upon payment of a non-refundable fee of $10.00, for each project in Room 506, Frank P. Zeidler Municipal Building, 841 N. Broadway, Milwaukee, Wisconsin 53202. A $10.00 per set additional non-refundable fee is required to obtain bid documents by mail.

THE CONTRACTOR SHALL SPECIFICALLY NOTE THE SBE AND RESIDENCY FORMS FOR THIS PROJECT. IF THE FORMS ARE NOT FILLED OUT PROPERLY, IT WILL BE CAUSE FOR REJECTION OF THE BID.

Contractor must comply with all provisions of the CITY OF MILWAUKEE GENERAL OFFICIAL NOTICE TO CONTRACTORS, published at http://mpw.milwaukee.gov/services/bids_home.

Questions regarding this Bid should be addressed to Scott Stange in writing via email at: sstang@milwaukee.gov. Deadline for questions regarding the Formal Bid are due by **4:45 p.m.** on **September 30, 2015**. Any additional information and/or clarification(s) regarding this Bid will be issued in the form of an addendum to this Bid on or before **October 5, 2015.**

FORM DPW-125 (REV. 01/26/05)

OFFICIAL NOTICE 138

Century City, Building 36
Project Area E
Interior Lighting Improvements
3533 North 27th Street, Milwaukee, WI

B I D

City of Milwaukee
Department of Public Works
Room 501 - Frank P. Zeidler Municipal Building
841 North Broadway
Milwaukee, Wisconsin 53202

Bids Close: **Monday, October 12, 2015 @ 10:30 A.M.** (Time and Date)

Submit bids to: City of Milwaukee
Department of Public Works **Contract Office**
Room **506**, 841 North Broadway
Milwaukee, Wisconsin 53202.

The undersigned _____
(A Corporation) (A Partnership) (An Individual)
(use one)

of _____
Street City Zip Code Telephone Number

hereby proposes to furnish work, material, labor and services as set forth in the description in the Invitation to Bid at and for the prices hereinafter named according to the provisions in the Official Notice and the Invitation to Bid, Detail Specifications, Special Provisions, Addenda's, if any, and Plans for this particular project on file in the office of the Commissioner of Public Works, and if successful, hereby agrees to enter into a contract with the City of Milwaukee with such sureties as required and set forth in the aforesaid documents for the performance of said contract (said contract form being on file in the office of the Commissioner of Public Works), and in accordance with the terms and conditions set forth in the contract documents, to-wit: written agreement, official notice, invitation to bid, bid, instructions to bidders, detail specifications, special provisions, special conditions when applicable, plans, schedule of fixed prices, supplemental agreements and all addenda.

In case of obtaining the award, the undersigned bidder anticipates using, subject to the approval of the Commissioner, the following subcontractors, with the class of work to be performed by each, which list shall not be added to nor altered without the written consent of the Commissioner:

Name of Proposed Subcontractors	Class of Work	Amount	Check Box If SBE

BID RESPONSE FORM

CITY OF MILWAUKEE
OFFICIAL NOTICE NO. 138-1-2015

Century City Building 36 – Area E
Interior Lighting Modifications
3533 North 27th Street, Milwaukee, Wisconsin

ALL BIDS MUST BE TYPED OR PRINTED

010000.001 MOBILIZATION AND DEMOBILIZATION 1 Lump Sum

(Bid in figures) $ _____ /Lump Sum

(Bid in words) $ _____ /Lump Sum

260000.010 LIGHTING FIXTURE TYPE "A" 30 Each

(Bid in figures) $ _____ / Each

(Bid in words) _____ / Each

260000.020 EMERGENCY LIGHTING FIXTURES 21 Each

(Bid in figures) $ _____ / Each

(Bid in words) _____ / Each

260000.030 EXIT SIGNS WITH ADDITIONAL EXTERIOR EM HEAD 5 Each.

(Bid in figures) $ _____ / Each.

(Bid in words) _____ / Each

260000.040 PANELBOARD BREAKERS, CONDUIT, WIRING AND CONTROLS 1 Lump Sum

(Bid in figures) $ _____ / Lump Sum

(Bid in words) _____ / Lump Sum

BASE BID TOTAL:

(Bid in Figures) $ _____

(Bid in Words) _____

*** IMPORTANT NOTICE ***

ALL BID PRICES MUST BE ENTERED IN WORDS AND IN NUMERALS. IN CASE OF VARIATION BETWEEN THE TWO, THE WORDS WILL PREVAIL.

IN ADDITION, IF THERE IS A DISCREPANCY BETWEEN THE TOTAL INDICATED IN THE PROPOSAL AND THE AMOUNT OBTAINED BY ADDING THE PRODUCTS OF THE QUANTITIES TIMES THE UNIT PRICES, THE LATTER SHALL GOVERN. ANY ERRORS FOUND IN THE TOTAL INDICATED SHALL BE CORRECTED AND THE CONTRACT AWARD SHALL BE MADE TO THE LOWEST RESPONSIBLE BIDDER BASED ON THE CORRECTED TOTAL.

If DOUBT EXISTS AS TO WHAT IS BID, THE BID WILL BE REJECTED.

ACKNOWLEDGEMENTS PAGE

Official Notice No. _138_____
Project No. _____

SMALL BUSINESS ENTERPRISE PROGRAM, RESIDENT PREFERENCE AND APPRENTICESHIP PROGRAM REQUIREMENTS

In submitting this bid, the bidder acknowledges, understands and agrees that submission of a bid shall commit the bidder to comply with the City's requirements as outlined in the SMALL BUSINESS ENTERPRISE PROGRAM (SBE), the Resident Preference Program and the Apprenticeship Program provisions. The bidder also agrees to comply with the specific requirements as follows:

The bidder's commitment for SBE participation on this project is ___25___ %

The bidder's commitment for Resident Preference Program Participation on the project is __40___ %

The bidder's commitment for Apprenticeship Program participation on this project is:
Apprentice(s) from _____0___of the following trade(s) are to be employed.

In submitting this bid, the bidder understands that the Commissioner of Public Works reserves the right to reject any and all bids. If written notice of the acceptance of the bid is mailed, telegraphed, or delivered to the undersigned within forty-five (45) days after the opening thereof, the undersigned agrees to execute and deliver the contract in the prescribed form (contract form on file in the office of the Commissioner of Public Works) and furnish the required performance and payment bonds, and to meet such insurance requirements as may be required, within ten days after the receipt of the official notice of award.

This bidder understands that if they are the successful bidder and the contract is awarded, that pursuant to Sec. 7.14, Milwaukee City Charter, 1971 Compilation, as amended, failure to execute and to deliver the contract or to furnish the required insurance and the required security within ten (10) days after receipt of the official notice of award or such extension thereto as the Commissioner only may deem reasonable, the City, in addition to any other legal or equitable remedy which it may have, may annul the award and notice of award, and the bid security of this bidder will be forfeited.

Attached hereto is an affidavit in proof that the undersigned has not colluded with any person in respect to this bid or any other bid for the contract for which this bid is submitted.

We acknowledge the receipt of Addenda _____to _____inclusive.

Bidder assures the City and acknowledges that the Official Notice, Special Provisions, if any, Special Conditions where applicable, Invitation to Bid and Bid, Detail Specifications, Addenda, if any, and Plans of this particular project have been read and has a full understanding of the provisions therein.

SIGNATURE PAGE – IMPORTANT – THREE(3) SIGNATURES ARE REQUIRED OR BID WILL BE CONSIDERED NONRESPONSIVE.

Rev. 2/2012

Official Notice No. 138

Project No. _____

In signing and submitting this bid, the bidder assures the City of Milwaukee that the Official Notice, Notice to Bidders, Special Conditions where applicable, Invitation to Bid and Bid, Detail Specifications, Special Provisions, schedule of fixed prices, Addenda, and Plans of this particular project have been read and understood and that the furnishing of the subject work, material, labor and services is under bidder's control. If the bidder's performance is contingent upon the acts of another party, the bidder assures that they have the necessary commitments to complete the contract which may be awarded.

Submitted by _____
Name of Bidder (person, firm or corporation)

Telephone No. _____
Fax No. _____

Address _____

_____
(City, State, Zip Code)

MUST BE SIGNED

Signed per _____
(Manual **signature required**)

Official Capacity _____

BID DATED _____ SBE Contractor: Yes: _____
No _____

If a Corporation, answer the following:

Incorporated under laws of what state? _____

If a foreign corporation, are you licensed to do business in Wisconsin? _____

SWORN STATEMENT OF BIDDER
AS REQUIRED BY
SECTION 66.0901 (7) WISCONSIN STATUTES

I, being first duly sworn at _____
(City, State)

on oath state on behalf of said bidder, that I have examined and carefully prepared this proposal from the plans, specifications, and the other contract documents and have checked the same in detail before submitting this proposal; and this sworn statement is hereby made a part of the foregoing proposal.

MUST BE SIGNED

Signature _____

_____
(Title, if any)

Subscribed and sworn to before me this

_____ day of _____, 20___

_____
(**Notary Signature**)

Notary Public, _____ County

State of _____

My commission expires _____

NON-COLLUSION AFFIDAVIT

State of _____)
) ss.
County of _____)

_____, being first duly sworn, deposes and says that:

(1) He is _____
(owner, partner, officer, representative, or agent)

of _____, the Bidder that has submitted the attached Bid;

(2) He is fully informed respecting the preparation and contents of the attached Bid and of all pertinent circumstances respecting such Bid;

(3) Such Bid is genuine and is not a collusive or sham Bid;

(4) Neither the said Bidder nor any of its officers, partners, owners, agents, representatives, employees, or parties in interest, including this affiant, has in any way colluded, conspired, connived, or agreed, directly or indirectly with any other Bidder, firm, or person to submit a collusive or sham Bid in connection with the Contract for which the attached Bid has been submitted or to refrain from bidding in connection with such Contract, or has in any manner, directly or indirectly, sought by agreement or collusion or communication or conference with any other Bidder, firm, or person to fix the price or prices in the attached Bid or of any other Bidder, or to fix any overhead, profit, or cost element of the Bid price or the Bid price of any other Bidder, or to secure through any collusion, conspiracy, connivance, or unlawful agreement any advantage against the Commissioner of Public Works or any person interested in the proposed Contract; and

(5) The price or prices quoted in the attached Bid are fair and proper and are not tainted by any collusion, conspiracy, connivance, or unlawful agreement on the part of the Bidder or any of its agents, representatives, owners, employees, or parties in interest, including this affiant.

(Check One) _____
Signature of

_____ Bidder if the bidder is an individual;

_____ Partner if the bidder is a partnership;

_____ Officer if the bidder is a corporation.

Subscribed and sworn to before me this

_____ day of _____, 20_____.

_____
Notary Signature

My commission expires _____, 20_____.

To ensure DPW is in compliance with any federal procurement requirements regarding suspension and debarment, CONTRACTOR must sign this "Suspension/Debarment Certification Form".

Please complete and sign below and return this form to:

Department of Public Works Contract Office
Room **506**, Municipal Building
841 North Broadway
Milwaukee, WI 53202

Submittal required prior to start of work on this project.

CERTIFICATION REGARDING SUSPENSION AND DEBARMENT

The CONTRACTOR certifies that all potential sub-recipients, contractors, and any and all of their principals are not debarred, suspended or proposed for debarment for federal assistance (e.g., General Services Administration's List of Parties Excluded from Federal Procurement and Non-Procurement Programs), and that throughout the term of its federally-funded contracts with the City of Milwaukee, the CONTRACTOR will not enter into any transactions with any sub-recipients, contractors, or any of their principals who are debarred, suspended or proposed for debarment.

_____ _____
Signature/Authorized Official Date

_____ ___C_____
Printed Name Contract Number

_____
Title

_____
Name of Company

Rev. 1/2012 (9/22/09)
Fed Susp Debar Form

State of Wisconsin
Department of Workforce Development
Equal Rights Division

Disclosure of Ownership

The statutory authority for the use of this form is prescribed in Sections 66.0903(12)(d), 66.0904(10)(d) and 103.49(7)(d), Wisconsin Statutes.
The use of this form is mandatory. The penalty for failing to complete this form is prescribed in Section 103.005(12), Wisconsin Statutes.
Personal information you provide may be used for secondary purposes [Privacy Law, s. 15.04(1) (m), Wisconsin Statutes].

(1) On the date a contractor submits a bid to or completes negotiations with a state agency, local governmental unit, or developer, investor or owner on a project subject to Section 66.0903, 66.0904 or 103.49, Wisconsin Statutes, the contractor shall disclose to such state agency, local governmental unit, or developer, investor or owner, the name of any "other construction business," which the contractor, or a shareholder, officer or partner of the contractor, owns or has owned within the preceding three (3) years.

(2) The term "other construction business" means any business engaged in the erection, construction, remodeling, repairing, demolition, altering or painting and decorating of buildings, structures or facilities. It also means any business engaged in supplying mineral aggregate, or hauling excavated material or spoil as provided by Sections 66.0903(3), 66.0904(2), 103.49(2) and 103.50(2), Wisconsin Statutes.

(3) This form must ONLY be filed, with the state agency project owner, local governmental unit project owner, or developer, investor or owner of a publicly funded private construction project that will be awarding the contract, if **both (A) and (B) are met**.

(A) The contractor, or a shareholder, officer or partner of the contractor:
(1) Owns at least a 25% interest in the "other construction business," indicated below, on the date the contractor submits a bid or completes negotiations; or
(2) Has owned at least a 25% interest in the "other construction business" at any time within the preceding three (3) years.

(B) The Wisconsin Department of Workforce Development (DWD) has determined that the "other construction business" has failed to pay the prevailing wage rate or time and one-half the required hourly basic rate of pay, for hours worked in excess of the prevailing hours of labor, to any employee at any time within the preceding three (3) years.

Other Construction Business

Business Name			
Street Address or P O Box	City	State	Zip Code
Business Name			
Street Address or P O Box	City	State	Zip Code
Business Name			
Street Address or P O Box	City	State	Zip Code
Business Name			
Street Address or P O Box	City	State	Zip Code

I hereby state under penalty of perjury that the information, contained in this document, is true and accurate according to my knowledge and belief.

Print the Name of Authorized Officer			
Authorized Officer Signature	Date Signed		
Corporation, Partnership or Sole Proprietorship Name			
Street Address or P O Box	City	State	Zip Code

If you have any questions call (608) 266-6861

PREVAILING WAGE NOTICE

ALL PREVAILING WAGE CONTRACTS AWARDED BY THE DEPARTMENT OF PUBLIC WORKS AFTER THE FIRST OF ANY CALENDAR YEAR ARE SUBJECT TO THE NEW PREVAILING WAGE SCHEDULE THAT GOES INTO EFFECT ON JANUARY 2ND. THE PREVAILING WAGE SCHEDULE INCLUDED IN BID PACKAGES ISSUED LATE IN THE PRECEDING YEAR MAY NOT BE TOTALLY ACCURATE FOR CONTRACTS OFFICIALLY AWARDED AFTER THE TURN OF THE YEAR. THE NEW PREVAILING WAGE WILL BE INCORPORATED INTO THE CONTRACT WHEN AWARDED.

BIDDERS ARE REQUIRED TO UTILIZE THE WISCONSIN DEPARTMENT OF WORKFORCE DEVELOPMENT'S "DICTIONARY OF OCCUPATIONAL CLASSIFICATIONS AND WORK DESCRIPTIONS" TO DETERMINE THE APPROPRIATE JOB CLASSIFICATIONS AND WAGE RATES FOR THEIR EMPLOYEES PRIOR TO BIDDING. THIS DOCUMENT CAN BE FOUND ON THEIR WEBSITE AT DWD.WISCONSIN.GOV; TYPE "DICTIONARY" IN THE SEARCH BOX.

Rev. 06/07

Revised: 7/15/2009
Updated 5/2013

City of Milwaukee
Department of Public Works

Residents Preference Program Provisions

I. General

A. In accordance with Chapter 309 of the Milwaukee Code of Ordinances, residents preference hiring is required for all construction contracting activities of the Department of Public Works. The ordinance requires that 40% of WORKER HOURS worked on a DPW contract be performed by UNEMPLOYED or UNDEREMPLOYED RESIDENTS of the City, except in special cases where the Commissioner of Public Works determines there is sufficient reason to impose lesser levels of participation. Further, the Commissioner of Public Works may increase the percentage of RESIDENT worker participation to more than 40% on specific contracts. For this contract, bidders are required to show that the minimum percent of WORKER HOURS, as listed in the acknowledgements section/page and/or the Official Notice document will be performed by UNEMPLOYED or UNDEREMPLOYED RESIDENTS of the City. Up to one-third of required worker hours may be achieved by documenting the use of UNEMPLOYED or UNDEREMPLOYED RESIDENTS on projects undertaken by the contractor where such compliance is not required, or by hiring UNEMPLOYED or UNDEREMPLOYED RESIDENTS on a full-time permanent basis for non-construction job categories connected to the project. Such adjustments must be proposed in an affidavit on a form provided by the department setting forth the facts upon which the request for adjustment is based.

B. The contractor, prior to commencing work, shall submit an affidavit (Form I) for proof of residency for all employees utilized by the contractor and subcontractors to meet the Residents Preference Program requirements, stating that each employee is either UNEMPLOYED or UNDEREMPLOYED and is a RESIDENT of the City. The contractor shall prepare and submit accurate and timely resident utilization forms and reports to the Department of Public Works. Time Reports shall be submitted within ten (10) days following completion of work, or every three months, whichever comes first. The reports shall identify the name, address, race, gender, work classification, wage rates and hours worked of all employees utilized on the contract by the contractor and all subcontractors. Failure to submit the required forms and reports to the Department of Public Works may result in disqualification of future bids, delay of payments, or other appropriate sanctions. Final contract payments will not be made until the summary of hours worked on the back of the Prime Contractor's Affidavit of Compliance is completed and on file with the Department of Public Works. Forms shall be submitted to DPW, Room 506, Municipal Building, 841 North Broadway, Milwaukee, WI 53202.

C. During the performance of this contract the Department of Public Works reserves the right to conduct compliance reviews. If the contractor is not in compliance with the specifications, the Commissioner of Public Works will notify the contractor in writing of the corrective action that will bring the contractor into compliance. If the contractor fails or refuses to take corrective action as directed, or if the contractor, prime or sub, submits any documents which contain any false, misleading, or fraudulent information, or if the contractor or subcontractor fail to comply with this ordinance, the Department of Public Works may take one or more of the actions listed below.

1. Withhold payments on the contract.

2. Terminate or cancel the contract, in whole or in part.

3. Consider possible debarment of the contractor from bidding for a period of up to two years.

4. Any other remedy available to the City at law or in equity.

D. The penalty for any person, firm, or corporation knowingly engaging in fraud, misrepresentation, or in any attempt directly or indirectly, to evade the provisions of this ordinance by providing false, misleading, or fraudulent information shall, upon conviction, forfeit not less than $1,000 or more than $5,000 together with the costs of prosecution and, upon default of payment, shall be

imprisoned in the county jail or house of correction not to exceed 90 days, or until the forfeiture costs are paid.

II. Definitions

A. RESIDENT – A person who maintains his or her place of permanent abode in the City of Milwaukee. Domiciliary intent is required to establish that a person is maintaining his or her place of permanent abode in the City. Mere ownership of real property is not sufficient to establish domiciliary intent. Evidence of domiciliary intent includes, without limitations, the location where a person votes, pays personal income taxes, or obtains a driver's license.

B. UNEMPLOYED or UNDEREMPLOYED – a RESIDENT that has worked less than 1,200 hours in the preceding 12 months or has not worked in the preceding 30 days or, regardless of employment status, has household income at or below the federal poverty guidelines as adjusted by the Wisconsin Department of Public Instruction to define eligibility for reduced lunch in public schools. A RESIDENT will continue to qualify as unemployed or underemployed for five (5) years from the date he or she first participates in a contract under Chapter 309. If a RESIDENT becomes an apprentice for a contractor or becomes a participant in an on-the-job training program as determined by the City immediately after or in the course of performing on a particular construction contract, he or she shall continue to qualify as unemployed or underemployed for a period not exceeding 5 years from the date the person became an apprentice or participant in such on-the-job training program.

C. WORKER HOURS – means the total hours worked on a construction contract by skilled and unskilled construction trade workers, whether those workers are employed by the contractor or any subcontractor. In determining the total worker hours to be furnished at a construction site, the number of hours devoted to all tasks customarily performed on a construction site shall be included, whether or not such tasks are performed on the construction site. "Worker hours" includes work performed by persons filling apprenticeships and participating in on-the-job training programs and excludes the number of hours of work performed by all non-Wisconsin residents.

III. Residency Utilization Requirements

A. The contractor shall utilize UNEMPLOYED or UNDEREMPLOYED RESIDENTS of the City in a minimum amount equal to the percentage of the WORKER HOURS as stated in paragraph IA above.

B. The contractor, by signing and submitting a bid, certifies that it understands the provisions of Chapter 309 and knows of and intends to comply with them, and shall ensure that all subcontractors are also informed.

C. The contractor shall maintain, and shall ensure that all subcontractors maintain, personnel records listing the name, address, race and gender of all employees utilized for this contract and any records demonstrating that the employees utilized by the contractor in meeting the residency requirements are actual residents of the City. These records shall be maintained for seven (7) years after the contractor has received final payment under the contract and shall be made available to the Commissioner of Public Works upon reasonable notice.

D. Compliance with these residency requirements is an element of bid responsiveness. Failure to meet the specified residency requirements will render the bid unresponsive, and the Commissioner of Public Works may then recommend the award to the next apparent low bidder.

E. The City recognizes the following organization which can be contacted for access to trained or qualified workers from the City. Other organizations or sources of qualified RESIDENTS can be used at the bidder's discretion.

Big Step, located at 3841 West Wisconsin Avenue, Milwaukee, WI 53208.
Telephone 414-342-9787, fax number 414-342-3546.

F. If the prime contractor has problems in meeting the residency requirements or if any other problems relative to residency participation arise during the completion of this project, the prime contractor shall immediately contact the Commissioner of Public Works.

G. Right to Appeal – All contracts awarded under ss. 7-14-2 and 7-22 of the City Charter shall be awarded by the Commissioner of Public Works to the lowest responsible bidder determined in accordance with any applicable City ordinances relating to the participation of Small Business Enterprise Programs or requiring participation of City RESIDENTS. Following the opening of any bid where the Commissioner has considered compliance with such City ordinances, the Commissioner shall publish in an official City newspaper his or her determination as to the lowest responsible bidder. Any bidder who objects to the determination based on the consideration of such City Ordinances, may appeal the recommendation by filing a written appeal with the Commissioner within five (5) working days of the date of publication. The appeal shall state the specific objection to the determination, including supporting documentation, and specify an alternative determination. Any appeals that do not conform to this section shall not be considered. The Commissioner shall schedule a hearing before the Public Works Contract Appeals Committee which shall be comprised of the chair of the Economic Development Committee or his or her designee and a member of the Economic Development Committee selected by the chair and the Director of Administration or his or her designee to be held within five days of receipt of the appeal. The Public Works Contract Appeals Committee shall have the authority by majority vote to affirm or set aside the determination of the Commissioner and their decision in this regard shall be final. In the event that a timely appeal meeting the requirements of this paragraph is not filed, or the Committee affirms the Commissioner's determination following a timely appeal, the Commissioner shall make an award in accordance with his or her determination.

FORM I (Rev.2009)

_____
Contractor Name

_____
DPW Contract No.

Employee Affidavit

Residents Preference Program

I certify that I maintain my permanent residence in the City of Milwaukee and that I vote, pay personal income tax, obtain my driver's license, etc. at _____, Milwaukee, WI _____
(Address) (Zip Code)

Residency status:

To verify my resident status, attached please find the following (check one)

_____ Copy of my voter's certification form.
_____ Copy of my last year's Form 1040.
_____ Copy of my current Wisconsin Driver's License or State ID.
_____ Copy of Other (i.e., Utility bill, Lease, etc.)

AND

Unemployment status:

I certify that I have been unemployed as follows: (Check those that apply)

_____ I have worked less than 1,200 hours in the preceding 12 months.
_____ I have not worked in the preceding 30 days.

OR

Underemployed status:

_____I certify that based on the attached chart (Income Eligibility Guidelines), I am underemployed.
.

_____
Print Name

_____
Sign Name

_____
Social Security Number

_____
Home Telephone Number

Subscribed and sworn to me this _____day

Of _____, _____ A.D.

My Commission Expires _____.

_____
Notary Public Milwaukee County

Income Eligibility Guidelines
July 1, 2015 to June 30, 2016

Eligibility determination is based on household size and income.
Total income must be *at* or *below* the amounts in this table.

Household Size	Yearly	Monthly	Twice per month	Every 2 weeks	Weekly
1	**21,775**	**1,815**	**908**	**838**	**419**
2	**29,471**	**2,456**	**1,228**	**1,134**	**567**
3	**37,167**	**3,098**	**1,549**	**1,430**	**715**
4	**44,863**	**3,739**	**1,870**	**1,726**	**863**
5	**52,559**	**4,380**	**2,190**	**2,022**	**1,011**
6	**60,255**	**5,022**	**2,511**	**2,318**	**1,159**
7	**67,951**	**5,663**	**2,832**	**2,614**	**1,307**
8	**75,647**	**6,304**	**3,152**	**2,910**	**1,455**
9	**83,343**	**6,946**	**3,473**	**3,206**	**1,603**
10	**91,039**	**7,588**	**3,794**	**3,502**	**1,751**
11	**98,735**	**8,230**	**4,115**	**3,798**	**1,899**
12	**106,431**	**8,872**	**4,436**	**4,094**	**2,047**
For Each Additional Household Member Add	**7,696**	**642**	**321**	**296**	**148**

Source: Wisconsin Department of Public Instruction School Nutrition Programs

City Of Milwaukee

Department Of Public Works

Small Business Enterprise (SBE) Provisions

I. General

A. In accordance with Chapter 370 of the Milwaukee Code of Ordinances, Small Business Enterprise (SBE) participation is required in all contracting activities of the Department of Public Works. The ordinance requires that certified SBEs be utilized for 25% of the total dollars annually expended through prime contracts or subcontracts for Construction and the purchase of Goods and Services. For the purchase of Professional Services the requirement is 18%. To that end, the Commissioner of Public Works, as a contracting officer for the City, requires all bidders to utilize SBEs as subcontractors and material suppliers on all contracts. For this contract, bidders are required to achieve the minimum percent of SBE participation listed in the Acknowledgements page/section and/or the Official Notice document.

B. The prime contractor shall prepare and submit accurate and timely SBE utilization forms and reports to the Department of Public Works. The reports shall include, but not be limited to, Compliance Plan (Form A), monthly utilization (Form D), and SBE subcontractor payment certification (Form E) forms as directed. Failure to submit the required forms and reports to the Department of Public Works may result in disqualification of future bids, delay of payments, or other appropriate sanctions. Final contract payments will not be made until final SBE utilization reports and SBE subcontractor payment certification forms are on file with the Department of Public Works.

C. During the performance of this contract, the Department of Public Works reserves the right to conduct compliance reviews. If the contractor is not in compliance with the specifications, the Commissioner of Public Works will notify the contractor in writing of the corrective action that will bring the contractor into compliance. If the contractor fails or refuses to take corrective action as directed, the Department of Public Works may take one or more of the actions listed below:

1. Terminate or cancel the contract, in whole or in part.

2. Consider possible debarment of the prime contractor from bidding.

3. Withhold payments on the contract.

4. Any other remedy available to the City at law or in equity.

II. Definitions

A. "SMALL BUSINESS ENTERPRISE" (SBE) means a small business concern that is 51% owned, operated and controlled by one or more individuals who are a minority, woman and/or a small business owner (who is at an “economic disadvantage”). The individuals must have day-to-day operational and managerial control and interest in capital, financial risks and earnings commensurate with the percentage of their ownership.

B. "OWNED, OPERATED AND CONTROLLED" means a business which is one of the following:

1. A sole proprietorship legitimately owned and operated and controlled by a minority, women or an individual at a disadvantage as defined in Chapter 370.

2. A partnership or joint venture legitimately owned, operated and controlled by individuals who are minorities, women or individuals who are at a disadvantage and who own at least 51% of the beneficial ownership interests in the enterprise and who hold at least 51% of the voting interests of the enterprise eligible as defined in Chapter 370.

3. A corporation legitimately owned, operated and controlled by one or more individuals who are a minority, woman or individual at a disadvantage and who own at least 51% of the outstanding shares and who hold at least 51% of the voting interests of the corporation eligible as defined in Chapter 370.

III. SBE Utilization Requirements

A. Each prime contractor shall utilize SBE to the minimum percent listed in the Acknowledgements section/page and or Official Notice Document for this contract. Note that the prime contractors shall be required to attain SBE participation on their base bid excluding specified allowances, alternatives, and change orders. SBE commitments relative to contract award shall be based upon the approved SBE Compliance Plan (Form A).

B. The determination of SBE utilization shall be based on the following criteria:

1. The firms identified as SBE by the prime contractor on the SBE Compliance Plan (Form A) must be certified by the Office of Small Business Development prior to bid opening.

2. The prime contractor shall be credited for the entire expenditure to SBE firms only if all of the identified scope of work is performed directly by the certified SBE firm.

3. The prime contractor shall be credited for the entire expenditure to SBE manufacturer only if the manufacturer produces goods from raw materials or substantially alters them for resale. Only 20% of the SBE goals may be expended for SBE suppliers that do not manufacture products they supply.

4. The prime contractor shall count toward the SBE requirement only those payments to SBEs who perform a commercially-useful function in the actual performance of the contract. While that generally means an SBE should be engaged in direct contract work, a "commercially-useful function" may also include management of a third tier subcontractor. For example, while an SBE trucking subcontractor is always expected to perform some direct work on the project, in some cases it may become necessary to subcontract work out to one or more third tier subcontractors. If a third tier subcontractor is also an SBE, the full amount of the work performed by that third tier SBE can be counted toward SBE participation. However, if the third party subcontractor is not an SBE, the prime contractor may only count 20% of the amount being subcontracted to the third tier non-SBE subcontractor. SBEs are required to notify the Department of Public Works if they subcontract out work so that the Department can determine how much, if any, of the subcontracted work can be counted toward the SBE requirement. The Commissioner of Public Works will make the final determination and evaluation of whether the SBE is performing a commercially-useful function.

C. The contractor, by signing and submitting a bid, certifies that the contractor understands the provisions of Chapter 370 and knows of and intends to comply with them. The completed SBE Compliance Plan (Form A) must be submitted by the apparent low bid contractor within three (3) working days after the identification of the "low bidder."

1. Information on Form A shall include, but not be limited to:

a. The names, addresses, telephone numbers, SBE Certification designation and contact person names for the certified SBE contractors that will participate on the project as subcontractors or suppliers;

b. A description of the scope of work to be performed by the SBE on this project; and

c. The SBE contractor dollar value(s) and corresponding percentages that the dollar values represent of the total contract amount.

2. Listing an SBE on the Compliance Plan (Form A) shall constitute a representation that the contractor has communicated directly with the SBEs listed. If awarded the contract, the bidder will enter into a subcontract with the firm for the portion of the work listed.

3. SBE participation is an element of bid responsiveness. Failure to meet the specified SBE requirements will render the bid unresponsive. The contract may then be awarded to the next apparent low bidder. Under certain circumstances, failure to meet specified SBE requirements after submission of an apparent low bid may result in surrender of the bidder's bid bond.

4. Only SBEs that have been certified by the Office of Small Business Development may be listed on the SBE Compliance Plan (Form A) and counted towards the percentage requirements on this project. A listing of the currently City certified SBE firms is maintained at:

Office of Small Business Development
200 East Wells Street
City Hall, Room 606
Milwaukee, Wisconsin 53202
Phone: (414) 286-5553
FAX: (414) 286-8752
www.milwaukee.gov/osbd

D. After execution of the contract, if for any reason an SBE cannot perform, the prime contractor shall contact the Commissioner of Public Works for approval to substitute another certified SBE firm. The prime contractor must submit a written request for substitution which specifies the reasons for the request. Approval must be obtained prior to making substitutions. Any difference in the cost occasioned by such substitution shall be borne by the prime contractor. If the prime contractor cannot find another certified firm to do the work at a comparable price, a non-SBE firm may be substituted with the approval of the Commissioner of Public Works.

E. If the prime contractor has a problem in meeting the SBE requirements or if any other problems relative to SBE(s) arise during the completion of this project, the prime contractor shall immediately contact the Commissioner of Public Works.

F. Certification from programs other than the Office of Small Business Development is neither accepted by the City of Milwaukee nor do they have any bearing whatsoever on the eligibility criteria established by the City of Milwaukee.

G. Right to Appeal.

All contracts awarded under ss.7-14-2 and 7-22 of the City Charter shall be awarded by the Commissioner of Public Works to the lowest responsible bidder determined in accordance with applicable City ordinances for participation of the Office of Small Business Development. Following the opening of any bid involving a determination under applicable City ordinances for participation of SBE, the Commissioner of Public Works shall make a written recommendation as to the lowest responsible bidder and notify all bidders by publication in an official City newspaper as to the content of the written recommendation. Any bidder who objects to the recommendation on grounds of determinations made under applicable City ordinances for participation of SBE may appeal the recommendation on such grounds by filing a written appeal with the Commissioner of Public Works within five (5) working days of the date of publication. The appeal shall state the specific objection to the recommendation, include supporting documentation and specify an alternative recommendation. The Commissioner of Public Works shall schedule a hearing before an appeals committee consisting of the Chair of the Economic Development Committee or the Chair's designee, a member of the Economic Development Committee selected by the Chair and the Director of the Office of Small Business Development to be held within five (5) days of receipt of the appeal. The Committee shall have authority by majority vote to affirm or set aside the recommendation of the Commissioner of Public Works and its decision in this regard shall be final. In the event a timely appeal, meeting the requirements above is not filed, or the Committee affirms the Commissioner's recommendation following a timely appeal, meeting the requirements above, the Commissioner shall make an award in accordance with the recommendation.

H. **Percentage of Required SBE Participation**

Construction 25%
The Purchase of Goods and Services 25%
The Purchase of Professional Services 18%

FORM A - COMPLIANCE PLAN - CITY OF MILWAUKEE – DEPARTMENT OF PUBLIC WORKS
SBE PARTICIPATION FOR SUBCONTRACTORS AND/OR MATERIAL SUPPLIERS

PRIME CONTRACTOR'S NAME:_____ OFFICIAL NOTICE NUMBER: _____

DATE:_____ TOTAL BID AMOUNT:_____ TOTAL SBE AMOUNT:_____

This Form A must be completed in its entirety and is a **required** submission in conjunction with a Bid or Request for Proposal. Submit either with the bid or within **3** days of being notified as the apparent low bidder. List all proposed SBE subcontractor(s) and/or material supplier(s) for this project. **NOTE:** To receive full credit, SBE's must perform commercially useful work at the job site. ONLY up to twenty percent (20%) credit may be given under certain circumstances to SBE suppliers or other SBE contractors who assist in management of the project. I/We propose to utilize the following SBE subcontractor(s) and/or material supplier(s):

Fill in BID REQUIREMENTS: _____%**SBE**

SBE FIRM(S) NAME ADDRESS/CONTACT PERSON AND PHONE NUMBER	**LIST DESIGNATION: WHETHER SUPPLIER OR CONSTRUCTION LABOR**	PERCENT OF BID	AMOUNT	EXPLAIN WORK TO BE PERFORMED/MATERIAL SUPPLIED	AUTHORIZED SBE(S) OWNER/REPRESENTATIVE SIGNATURE OF ACKNOWLEDGEMENT
1.					
2.					
3.					
4.					
5.					

I certify that the information included on this Form A is true and complete to the best of my knowledge. I further understand and agree that this Form A is a condition of my Bid/RFP responsiveness. Failure to submit this form and/or meet the specified SBE requirements may render the Bid/RFP nonresponsive.

CONTRACTOR: _____ DATE: _____/_____/_____
(SIGNATURE & TITLE REQUIRED)

REVIEWED BY OSBD ANALYST: _____ DATE: _____/_____/_____

DEPARTMENT OF PUBLIC WORKS: _____ DATE: _____/_____/_____

Form D
(Rev. 5/2013)

DEPARTMENT OF PUBLIC WORKS
SMALL BUSINESS ENTERPRISE PROGRAM

Form D –SBE MONTHLY REPORT

(1) Report for the Month of _____20_____ (Final: yes ___ no ___)

(2)Prime Contractor/Firm_____

(3)Full Address & Phone Number:_____

(4)Description of work/service performed and/or material supplied_____

(5) DPW Contract No. **C**_____ (6) Official Notice No. / Project Number _____

7) Start Date: _____ (8) Prime Contractor's Total $: _____

(9) Completion Date: _____ (10) Prime Contractor paid to date $: _____

(11) Small Business %_____ and Small Business $ amount _____

List all SBE subcontractor firm(s) utilized in connection with the above contract, either as service performed and/or supplier for the month. This form shall be signed and returned. **If this represents the final report, be sure to attach SBE Payment Certification Form (Form E) for each sub listed.**

NAME OF SBE FIRM(s)	WORK/SERVICE PERFORMED or MATERIAL SUPPLIED	AMOUNT PAID FOR THE MONTH	TOTAL $ PAID TO DATE
TOTAL PAID TO SBE(s)			

I/we hereby certify that I/we have read the above and approved this information to be precise and confirmed.

(12) Report Prepared By: _____
(Name) (Title) (Phone Number)

(13) Authorized Signature : _____
(Name) (Title)

(14) Date_____

Note: This form should be submitted no later than the **20th of every month** to **DEPARTMENT of PUBLIC WORKS CONTRACT ADMINISTRATION, Room 506, Municipal Building, 841 North Broadway, Milwaukee, WI 53202.**

DIRECTIONS FOR SBE MONTHLY REPORT (FORM D)

1. List the month and year that the report is being submitted for. **Note: If this is the final report, check yes and submit Form E Subcontractor Payment Certification Form.**
2. Prime contractor's or firm's registered company name.
3. List full registered business address to include city/state, zip code and telephone number.
4. Brief description service performed and/or material supplied on this contract.
5. List the DPW Contract Number, as represented on the contract document.
6. List the official notice & project number as represented on the front page of the contract.
7. List the start date of the project.
8. List the total dollars awarded to the prime contractor.
9. List the completion date of the project.
10. Total dollars paid to Prime contractor to date.
11. List SBE percentage **REQUIRED** on this project and the SBE dollar amount.
12. List the name, title and phone number of the individual who prepared the report.
13. Provide the authorized signature and title of the individual who approves the report.
14. List the date that the report is completed.

THIS REPORT IS DUE THE 20TH OF EVERY MONTH FOR THE PREVIOUS MONTH'S ACTIVITY. FAILURE TO RETURN THIS FORM BY THE SPECIFIED TIME MAY CAUSE A DELAY IN PAYMENTS.

City Of Milwaukee

Department Of Public Works

Small Business Enterprise Program (SBE)
Subcontractor Payment Certification

(This form must be completed by the SBE subcontractor and attached to the Prime Contractor's Final SBE Form D Report)

-PRIME CONTRACTOR & SUBCONTRACTOR EXECUTE-

Section A - **SBE** Company Officer & Prime Contractor Complete **For Payment That Has Been Received**

SBE Subcontractor Name : _____

Official Notice No.: _____Project No. _____ **DPW Contract No**. **C**_____

I hereby certify that I have received $ _____ for subcontract work on the above project.

Dated: _____Signature of **SBE** Subcontractor: _____

Printed Name & Title of **Certified SBE** Subcontractor:

_____

Acknowledged by **Prime** Contractor Signature: _____

Printed name & Title of **Prime** Contractor: _____

****

-PRIME CONTRACTOR & SUBCONTRACTOR EXECUTE-

Section B – Prime contractor and SBE Company Officers Complete if **Full Payment Has Not Been Made to the SBE Subcontractor and a balance remains to be paid.**

Prime Contractor: _____

SBE Subcontractor: _____

Official Notice No.: _____Project No. _____ **DPW Contract No**. **C**_____

I hereby certify that I will pay $_____ to _____
for subcontract work on the above project. (Name of SBE Firm)

Dated: _____ Signature of **Prime** Contractor: _____

Printed Name & Title of **Prime** Contractor: _____

Acknowledged by: **SBE** Subcontractor Signature: _____

Printed name & Title of **SBE** Subcontractor: _____

PAYMENT MONITORING REQUIREMENTS: All Contractors awarded a contract valued at $25,000.00 or more are required to participate in training on the City of Milwaukee's B2GNow contract compliance software. Contractors must complete the training no later than 30 days after the date of contract award. Throughout the contract term, Contractors are required to regularly provide timely payment information in the City's contract compliance software.

Please contact the Office of Small Business Development (OSBD) at 414-286-5553 should you have any questions or concerns regarding the training or *reporting process.*

CITY OF MILWAUKEE

PRIME CONTRACTOR AFFIDAVIT OF COMPLIANCE

WITH MINIMUM WAGE SCALE AND SPECIAL AREA WORKER HOURS PROVISIONS

STATE OF _____) Project Name _____
) SS.
_____County) DPW Contract No. _____

I, _____, being duly sworn, state that:

1. I am the _____ of_____, a _____
(State)
corporation, partnership, or individual of _____, _____,
(City, Village, Township) (State)
and make this affidavit pursuant to the provisions of § 66.0903 (9), Wisconsin Statutes, and Wisconsin Administrative Code section §DWD 290.14 regarding wage and fringe benefit rates for municipal contracts for construction of public works and pursuant to Section 309-41 of the Milwaukee Code of Ordinances.

2. I have recently completed the work required under the terms of the contract dated _____, 20_____, with the City of Milwaukee, Department of Public Works for the construction of all or part of the above-named public works project and make this affidavit in order to obtain my final payment.

3. I have fully complied with the wage and hour requirements as set forth in the above-referenced contract and paid overtime rates (1½ times) for any work over ten (10) hours per day or forty (40) hours per week.

4. I have received similar evidence of compliance with the contract wage rates and special impact area worker hour requirements in the form of completed affidavits from each of my agents and subcontractors who worked on this project and have listed their names on the reverse side of this affidavit along with numbers and percentages of worker hours.

5. I have full and accurate records which clearly show the name, trade or occupation, and home address of every laborer, worker, or mechanic that I employed in connection with the work on this project, as well as the hours worked and actual wage and fringe benefits paid to such employees. These records will be kept at _____ _____ in the custody of _____, who address and telephone number are _____ _____ . These payroll records and the evidence of compliance set in Paragraph 4 will be retained and made available for inspection for a period of at least **seven (7)** years following the completion of the project and will not be removed without prior notification to the commissioner of Public Works.

Title	Officer Name	Address
President	_____	_____
Vice-President	_____	_____
Secretary-Treasure	_____	_____

Subscribed and sworn to before me this _____
day of _____, 20_____

_____

Notary Public, State of _____ _____
(Signature)

My Commission Expires: _____

- OVER -

SUMMARY OF HOURS WORKED
(TARGET RESIDENCY VS TOTAL HOURS)

(REV. 01/01/01)

Name	No. of Hours of Special Impact Area Workers	% of Total Hours	No. of Hours of All Other Workers	% of Total Hours	Total of All Worker Hours
Prime Contractor:					
Subcontractors:					
GRAND TOTAL					

CITY OF MILWAUKEE

SUBCONTRACTOR AFFIDAVIT OF COMPLIANCE

WITH MINIMUM WAGE SCALE AND SPECIAL AREA WORKER HOURS PROVISIONS

STATE OF _____)
) SS.
_____County)

Project Name _____

DPW Contract No. _____

I, _____, being duly sworn, state that:

1. I am the _____ of_____, a _____ (State) corporation, partnership, or individual of _____ (City, Village, Township), _____ (State) and make this affidavit pursuant to the provisions of § 66.0903 (9), Wisconsin Statutes, and Wisconsin Administrative Code section § DWD 290.13 regarding wage and fringe benefit rates for municipal contracts for construction of public works and pursuant to Section 309-41 of the Milwaukee Code of Ordinances.

2. I have recently completed the work required under the terms of the contract dated _____, 20_____ , with the City of Milwaukee, Department of Public Works and _____ (Name of Prime Contractor) for the construction of all or part of the above-named public works project and make this affidavit in order to obtain my final payment.

3. I have fully complied with the wage and hour requirements as set forth in the above-referenced contract and paid overtime rates (1½ times) for any work over ten (10) hours per day or forty (40) hours per week.

4. I have full and accurate records which clearly show the name, trade or occupation, and home address of every laborer, worker, or mechanic that I employed in connection with the work on this project, as well as the hours worked and actual wage and fringe benefits paid to such employees. These records will be kept at _____ _____ in the custody of _____, who address and telephone number are _____ . These payroll records and the evidence of compliance set in Paragraph 4 will be retained and made available for inspection for a period of at least **seven (7)** years following the completion of the project and will not be removed without prior notification to the commissioner of Public Works.

5. I certify that _____ were the total number of hours worked on this project with _____ hours being worked by residents of the special impact area and _____ hours being worked by all other workers.

Title	Officer Name	Address
President	_____	_____
Vice-President	_____	_____
Secretary-Treasure	_____	_____

Subscribed and sworn to before me this _____

day of _____, 20_____

_____

Notary Public, State of _____

My Commission Expires: _____

_____
(Contractor Signature)

AFFIDAVIT OF COMPLIANCE
WITH WISCONSIN STATUTE 103.503
SUBSTANCE ABUSE PREVENTION REQUIREMENTS

STATE OF _____) PROJECT NAME _____
) ss.
_____ COUNTY) DPW Contract No._____

I, _____ , being first duly sworn state that:
(Print name)

1. I am the _____ of _____, a _____.
(Title) (Company Name) (State)

   Corporation, partnership, or individual of _____, _____ ,
(City, Village, Township) (State)
   and make this affidavit pursuant to the provisions of Wis. Stat. § 103.503.
2. I have entered into City of Milwaukee, Department of Public Works' Contract No. _____ , to which the provisions of Wis. Stat. 66.0903 apply.
3. I have in place a substance abuse prevention program that meets the requirements of Wis. Stat. 103.503, and I will fully comply in all respects with the requirements of Wis. Stat. 103.503 during the performance of this Contract.
4. I will include in each subcontract covering work performed under this Contract to which the provisions of Wis. Stat. 66.0903 apply, a provision similar to that in Paragraph 3 above, together with a clause requiring such insertion in further subcontracts that may in turn be made.

Title	Officer Name	Address
President	_____	_____
Vice President	_____	_____
Secretary/Treasurer	_____	_____

Subscribed and sworn before me this _____

day of _____ , 20_____ .

_____ _____
Notary Signature Contractor Signature

Notary Public, State of _____

My Commission Expires: _____

1121-2004-1516/96897

(REV. 04/03/07)

FORM F

PROPOSED RESIDENT/APPRENTICE UTILIZATION FORM

This is a preliminary statement of proposed workforce needs where known

Official Notice # _____ Project # _____ Contract # _____

Contractor_____

JOB CATEGORY	PROPOSED # OF HOURS ON THIS PROJECT	PROPOSED # OF HOURS FOR SPECIAL IMPACT AREA RESIDENTS	PROPOSED # OF HOURS FOR ALL OTHER WORKERS
TRUCK DRIVERS:		(%)	(%)
OPERATING ENGINEERS:			
Journeymen		(%)	(%)
Apprentices		(%)	(%)
SKILLED TRADES: (Specify)			
Journeymen		(%)	(%)
Apprentices		(%)	(%)
Trainees		(%)	(%)
LABORERS: (Specify type)			
		(%)	(%)
		(%)	(%)
		(%)	(%)
		(%)	(%)
		(%)	(%)

NAME and ADDRESS of Target Area Residents:

_____ _____
_____ _____
_____ _____

_____ _____ _____
_____ _____ _____
_____ _____ _____

_____ _____ _____
_____ _____ _____
_____ _____ _____

NAME and ADDRESS of Apprentices:

_____ _____
_____ _____
_____ _____

_____ _____ _____
_____ _____ _____
_____ _____ _____

(REV. 10/16/02)

NOTICE TO CONTRACTORS

PLEASE NOTE: Effective December 28, 2005, the City of Milwaukee adopted an ordinance relative to the disclosure of participation in or profits derived from slavery by contractors. All contractors awarded a contract on behalf of the City of Milwaukee, whether or not subject to a competitive bid, shall complete an affidavit prior to entering into the contract verifying that the contractor has searched any and all records of the company or any predecessor company regarding records of investments or profits from slavery or slaveholder insurance policies during the slavery era. The names of any enslaved persons or slaveholders described in those records must be disclosed in the affidavit.

The City shall make the information contained in the affidavit available to the public. Any contract between the City and a contractor which fails to provide the requisite affidavit or which includes material false information on such affidavit shall be rendered null and void. To reference Milwaukee Code of Ordinances 310-14, please see:

http://cctv25.milwaukee.gov/code/volume3/ch310.pdf

CITY OF MILWAUKEE - DEPARTMENT OF PUBLIC WORKS

AFFIDAVIT OF COMPLIANCE

DISCLOSURE OF PARTICIPATION IN OR PROFITS DERIVED FROM SLAVERY BY CONTRACTORS

COMPANY NAME: _____

ADDRESS:
_____

CITY/STATE/ZIP:
_____

This affidavit of compliance will be the contractor's sworn statement that publicly discloses any slavery policies sold by any companies, or profits from slavery by industries or their predecessors who are doing business with the City of Milwaukee as defined in the Milwaukee Code of Ordinances 310-14.

Please check one:

_____ This business **was not** in existence prior to 1865.

_____ This business **was** in existence prior to 1865. I have searched any and all records for records of investments or profits from slavery and have found no such records.

_____ This business **was** in existence prior to 1865. I have searched any and all records for records of investments or profits from slavery and am disclosing the findings on the attached pages.

I hereby declare that all statements are true, accurate and complete as of the date furnished to the City of Milwaukee.

AUTHORIZED SIGNATURE: _____

PRINTED NAME: _____

Subscribed to before me this _____ day of _____, 20___

NOTARY PUBLIC _____County, _____State _____

SIGNATURE: _____

PRINT NAME: _____ (Seal)

My commission expires: _____

Ref: slaverydisclosureaffidavit

PREVAILING WAGE RATE DETERMINATION
Issued by the State of Wisconsin
Department of Workforce Development
Pursuant to s. 66.0903, Wis. Stats.
Issued On: 01/07/2015
Last Amended On: 01/29/2015

DETERMINATION NUMBER:	201500024
EXPIRATION DATE:	Prime Contracts MUST Be Awarded or Negotiated On Or Before 12/31/2015. If NOT, You MUST Reapply.
PROJECT NAME:	ALL PUBLIC WORKS PROJECTS UNDER SEC. 66.0903, STATS-CITY OF MILWAUKEE
PROJECT LOCATION:	MILWAUKEE CITY, MILWAUKEE COUNTY, WI
CONTRACTING AGENCY:	CITY OF MILWAUKEE-DEPT OF PUBLIC WORKS

CLASSIFICATION:	Contractors are responsible for correctly classifying their workers. Either call the Department of Workforce Development (DWD) with trade or classification questions or consult DWD's Dictionary of Occupational Classifications & Work Descriptions on the DWD website at: dwd.wisconsin.gov/er/prevailing_wage_rate/Dictionary/dictionary_main.htm.
OVERTIME:	Time and one-half must be paid for all hours worked: - over 10 hours per day on prevailing wage projects - over 40 hours per calendar week - Saturday and Sunday - on all of the following holidays: January 1; the last Monday in May; July 4; the 1st Monday in September; the 4th Thursday in November; December 25; - The day before if January 1, July 4 or December 25 falls on a Saturday; - The day following if January 1, July 4 or December 25 falls on a Sunday. Apply the time and one-half overtime calculation to whichever is higher between the Hourly Basic Rate listed on this project determination or the employee's regular hourly rate of pay. Add any applicable Premium or DOT Premium to the Hourly Basic Rate before calculating overtime. A DOT Premium (discussed below) may supersede this time and one-half requirement.
FUTURE INCREASE:	When a specific trade or occupation requires a future increase, you MUST add the full hourly increase to the "TOTAL" on the effective date(s) indicated for the specific trade or occupation.
PREMIUM PAY:	If indicated for a specific trade or occupation, the full amount of such pay MUST be added to the "HOURLY BASIC RATE OF PAY" indicated for such trade or occupation, whevenever such pay is applicable.
DOT PREMIUM:	This premium only applies to highway and bridge projects owned by the Wisconsin Department of Transportation and to the project type heading "Airport Pavement or State Highway Construction." DO NOT apply the premium calculation under any other project type on this determination.
APPRENTICES:	Pay apprentices a percentage of the applicable journeyperson's hourly basic rate of pay and hourly fringe benefit contributions specified in this determination. Obtain the appropriate percentage from each apprentice's contract or indenture.
SUBJOURNEY:	Subjourney wage rates may be available for some of the trades or occupations indicated below with the exception of laborers, truck drivers and heavy equipment operators. Any employer interested in using a subjourney classification on this project MUST complete Form ERD-10880 and request the applicable wage rate from the Department of Workforce Development PRIOR to using the subjourney worker on this project.

This document **MUST BE POSTED** by the **CONTRACTING AGENCY** in at least one conspicuous and easily accessible place **on the site of the project** . A local governmental unit may post this document at the place normally used to post public notices if there is no common site on the project. This document **MUST** remain posted during the entire time any worker is employed on the project and **MUST** be physically incorporated into the specifications and all contracts and subcontracts. If you have any questions, please write to the Equal Rights Division, Labor Standards Bureau, P.O. Box 8928, Madison, Wisconsin 53708 or call (608) 266-6861.

The following statutory provisions apply to local governmental unit projects of public works and are set forth below pursuant to the requirements of s. 66.0903(8), Stats.

s. 66.0903 (1) (f) & s. 103.49 (1) (c) "PREVAILING HOURS OF LABOR" for any trade or occupation in any area means 10 hours per day and 40 hours per week and may not include any hours worked on a Saturday or Sunday or on any of the following holidays:

1. January 1.
2. The last Monday in May.
3. July 4.
4. The first Monday in September.
5. The 4th Thursday in November.
6. December 25.
7. The day before if January 1, July 4 or December 25 falls on a Saturday.
8. The day following if January 1, July 4 or December 25 falls on a Sunday.

s. 66.0903 (10) RECORDS; INSPECTION; ENFORCEMENT.
(a) Each contractor, subcontractor, or contractor's or subcontractor's agent performing work on a project of public works that is subject to this section shall keep full and accurate records clearly indicating the name and trade or occupation of every person performing the work described in sub. (4) and an accurate record of the number of hours worked by each of those persons and the actual wages paid for the hours worked.

s. 66.0903 (11) LIABILITY AND PENALTIES.
(a) 1. Any contractor, subcontractor, or contractor's or subcontractor's agent who fails to pay the prevailing wage rate determined by the department under sub. (3) or who pays less than 1.5 times the hourly basic rate of pay for all hours worked in excess of the prevailing hours of labor is liable to any affected employee in the amount of his or her unpaid wages or his or her unpaid overtime compensation and in an additional amount as liquidated damages as provided under subd. 2., 3., whichever is applicable.
2. If the department determines upon inspection under sub. (10) (b) or (c) that a contractor, subcontractor, or contractor's or subcontractor's agent has failed to pay the prevailing wage rate determined by the department under sub. (3) or has paid less than 1.5 times the hourly basic rate of pay for all hours worked in excess of the prevailing hours of labor, the department shall order the contractor to pay to any affected employee the amount of his or her unpaid wages or his or her unpaid overtime compensation and an additional amount equal to 100 percent of the amount of those unpaid wages or that unpaid overtime compensation as liquidated damages within a period specified by the department in the order.
3. In addition to or in lieu of recovering the liability specified in subd. 1. as provided in subd. 2., any employee for and in behalf of that employee and other employees similarly situated may commence an action to recover that liability in any court of competent jurisdiction. If the court finds that a contractor, subcontractor, or contractor's or subcontractor's agent has failed to pay the prevailing wage rate determined by the department under sub. (3) or has paid less than 1.5 times the hourly basic rate of pay for all hours worked in excess of the prevailing hours of labor, the court shall order the contractor, subcontractor, or agent to pay to any affected employee the amount of his or her unpaid wages or his or her unpaid overtime compensation and an additional amount equal to 100 percent of the amount of those unpaid wages or that unpaid overtime compensation as liquidated damages.
5. No employee may be a party plaintiff to an action under subd. 3. unless the employee consents in writing to become a party and the consent is filed in the court in which the action is brought. Notwithstanding s. 814.04 (1), the court shall, in addition to any judgment awarded to the plaintiff, allow reasonable attorney fees and costs to be paid by the defendant.

BUILDING OR HEAVY CONSTRUCTION

Includes sheltered enclosures with walk-in access for the purpose of housing persons, employees, machinery, equipment or supplies and non-sheltered work such as canals, dams, dikes, reservoirs, storage tanks, etc. A sheltered enclosure need not be "habitable" in order to be considered a building. The installation of machinery and/or equipment, both above and below grade level, does not change a project's character as a building. On-site grading, utility work and landscaping are included within this definition. Residential buildings of four (4) stories or less, agricultural buildings, parking lots and driveways are NOT included within this definition.

SKILLED TRADES

Fringe Benefits Must Be Paid On All Hours Worked

CODE	TRADE OR OCCUPATION	HOURLY BASIC RATE OF PAY $	HOURLY FRINGE BENEFITS $	TOTAL $
101	Acoustic Ceiling Tile Installer Future Increase(s): Add $1.50/hr on 6/1/2015; Add $1.65/hr on 6/1/2016. Premium Increase(s): DOT PREMIUM: Pay two times the hourly basic rate on Sunday, New Year's Day, Memorial Day, Independence Day, Labor Day, Thanksgiving Day & Christmas Day.	34.13	20.61	54.74
102	Boilermaker Future Increase(s): Add $1.50/hr. on 01/01/2016	33.35	28.24	61.59
103	Bricklayer, Blocklayer or Stonemason Future Increase(s): Add $1.35on 06/01/2015; Add $1.45 on 06/06/2016 Premium Increase(s): DOT PREMIUM: Pay two times the hourly basic rate on Sunday, New Year’s Day, Memorial Day, Independence Day, Labor Day, Thanksgiving Day & Christmas Day.	35.89	18.64	54.53
104	Cabinet Installer Future Increase(s): Add $1.42/hr on 6/1/2015; Add $1.42/hr on 6/1/2016.	32.72	16.00	48.72
105	Carpenter Future Increase(s): Add $1.50/hr on 6/1/2015; Add $1.65/hr on 6/1/2016. Premium Increase(s): DOT PREMIUM: Pay two times the hourly basic rate on Sunday, New Year's Day, Memorial Day, Independence Day, Labor Day, Thanksgiving Day & Christmas Day.	34.13	20.61	54.74
106	Carpet Layer or Soft Floor Coverer	33.68	19.98	53.66
107	Cement Finisher Future Increase(s): Add $1.30 on 06/01/2015; Add $1.40 on 06/06/2016	32.09	19.21	51.30
108	Drywall Taper or Finisher Future Increase(s): Add $.90/hr eff. 06/01/2015; Add $1.00/hr eff. 06/01/2016; Add $1.05/hr eff. 06/01/2017	29.97	20.74	50.71

CODE	Fringe Benefits Must Be Paid On All Hours Worked TRADE OR OCCUPATION	HOURLY BASIC RATE OF PAY $	HOURLY FRINGE BENEFITS $	TOTAL $
109	Electrician Premium Increase(s): DOT PREMIUM: Pay two times the hourly basic rate on Sunday, New Year's Day, Memorial Day, Independence Day, Labor Day, Thanksgiving Day & Christmas Day.	33.93	22.77	56.70
110	Elevator Constructor	43.84	27.09	70.93
111	Fence Erector	23.73	19.09	42.82
112	Fire Sprinkler Fitter	39.10	19.94	59.04
113	Glazier Future Increase(s): Add $.75/hr eff. 06/01/2015; Add $.90/hr eff. 06/01/2016	34.19	18.50	52.69
114	Heat or Frost Insulator	33.43	25.81	59.24
115	Insulator (Batt or Blown) Future Increase(s): Add $1.42/hr on 6/1/2015; Add $1.42/hr on 6/1/2016.	32.72	16.00	48.72
116	Ironworker Premium Increase(s): DOT PREMIUM: Pay two times the hourly basic rate on Sunday, New Year's Day, Memorial Day, Independence Day, Labor Day, Thanksgiving Day & Christmas Day.	30.77	23.97	54.74
117	Lather	33.68	19.81	53.49
118	Line Constructor (Electrical)	37.43	18.19	55.62
119	Marble Finisher	20.00	0.52	20.52
120	Marble Mason	35.37	17.99	53.36
121	Metal Building Erector	22.05	8.08	30.13
122	Millwright	28.53	25.19	53.72
123	Overhead Door Installer	20.00	6.10	26.10
124	Painter Future Increase(s): Add $.90/hr on 06/01/2015; Add $1.00/hr on 06/01/2016; Add $1.05/hr on 06/01/2017 Premium Increase(s): Add $.20/hr for paperhanging; Add $.35/hr for bridge, iron and drywall; Add $.75/hr for spraying and sandblasting; Add $.60/hr for EIFS work; Add $1.00/hr for lead based paint removal.	29.62	20.74	50.36
125	Pavement Marking Operator	30.10	18.08	48.18

CODE	Fringe Benefits Must Be Paid On All Hours Worked TRADE OR OCCUPATION	HOURLY BASIC RATE OF PAY $	HOURLY FRINGE BENEFITS $	TOTAL $
126	Piledriver Future Increase(s): Add $1.50/hr on 6/1/2015; Add $1.60/hr on 6/1/2016. Premium Increase(s): Add $.65/hr for Piledriver Loftsman; Add $.75/hr for Sheet Piling Loftsman. DOT PREMIUM: Pay two times the hourly basic rate on Sunday, New Year's Day, Memorial Day, Independence Day, Labor Day, Thanksgiving Day & Christmas Day.	30.11	26.51	56.62
127	Pipeline Fuser or Welder (Gas or Utility)	31.88	20.89	52.77
129	Plasterer Premium Increase(s): Add $.40/hr for swing stage work.	31.21	19.93	51.14
130	Plumber	38.37	19.55	57.92
132	Refrigeration Mechanic Future Increase(s): Add $1.70 on 6/1/15	41.01	21.54	62.55
133	Roofer or Waterproofer Future Increase(s): Add $1.25/hr eff. 06/01/2015; Add $1.25/hr eff. 06/01/2016	29.65	18.15	47.80
134	Sheet Metal Worker	36.94	20.22	57.16
135	Steamfitter	41.01	21.54	62.55
137	Teledata Technician or Installer Future Increase(s): Add $.86/hr on 6/1/2015. Premium Increase(s): DOT PREMIUM: Pay two times the hourly basic rate on Sunday, New Year’s Day, Memorial Day, Independence Day, Labor Day, Thanksgiving Day & Christmas Day.	25.63	17.25	42.88
138	Temperature Control Installer	39.76	21.09	60.85
139	Terrazzo Finisher	20.00	0.52	20.52
140	Terrazzo Mechanic	31.18	17.35	48.53
141	Tile Finisher Future Increase(s): Add $.20/hr on 1/ 5/2015	24.24	17.54	41.78
142	Tile Setter	30.38	17.33	47.71
143	Tuckpointer, Caulker or Cleaner Future Increase(s): Add $1.35on 06/01/2015; Add $1.45 on 06/01/2016 Premium Increase(s): DOT PREMIUM: Pay two times the hourly basic rate on Sunday, New Year’s Day, Memorial Day, Independence Day, Labor Day, Thanksgiving Day & Christmas Day.	34.28	18.48	52.76

CODE	Fringe Benefits Must Be Paid On All Hours Worked TRADE OR OCCUPATION	HOURLY BASIC RATE OF PAY $	HOURLY FRINGE BENEFITS $	TOTAL $
144	Underwater Diver (Except on Great Lakes)	35.40	15.90	51.30
146	Well Driller or Pump Installer	25.32	15.65	40.97
147	Siding Installer	36.17	19.44	55.61
150	Heavy Equipment Operator - ELECTRICAL LINE CONSTRUCTION ONLY	30.16	15.11	45.27
151	Light Equipment Operator -ELECTRICAL LINE CONSTRUCTION ONLY	31.60	15.71	47.31
152	Heavy Truck Driver - ELECTRICAL LINE CONSTRUCTION ONLY	27.65	14.49	42.14
153	Light Truck Driver - ELECTRICAL LINE CONSTRUCTION ONLY	27.83	15.01	42.84
154	Groundman - ELECTRICAL LINE CONSTRUCTION ONLY	24.00	11.57	35.57

TRUCK DRIVERS

CODE	Fringe Benefits Must Be Paid On All Hours Worked TRADE OR OCCUPATION	HOURLY BASIC RATE OF PAY $	HOURLY FRINGE BENEFITS $	TOTAL $
201	Single Axle or Two Axle	34.07	18.10	52.17
203	Three or More Axle	23.49	12.02	35.51
204	Articulated, Euclid, Dumptor, Off Road Material Hauler Future Increase(s): Add $1.60/hr on 5/30/2016.	33.02	18.70	51.72
205	Pavement Marking Vehicle	20.85	11.02	31.87
207	Truck Mechanic	23.49	12.02	35.51

LABORERS

CODE	Fringe Benefits Must Be Paid On All Hours Worked TRADE OR OCCUPATION	HOURLY BASIC RATE OF PAY $	HOURLY FRINGE BENEFITS $	TOTAL $
301	General Laborer Future Increase(s): Add $1.35/hr eff. 06/01/2015; Add $1.25/hr eff. 06/06/2016 Premium Increase(s): Add $.11 for mortar mixer, fork lift operator, air and electric equipment and power buggy operators; Add $.22 for jackhammer operator, certified welder, gunite machineman.	29.01	17.22	46.23
302	Asbestos Abatement Worker	22.05	19.16	41.21
303	Landscaper	15.44	11.20	26.64

CODE	Fringe Benefits Must Be Paid On All Hours Worked TRADE OR OCCUPATION	HOURLY BASIC RATE OF PAY $	HOURLY FRINGE BENEFITS $	TOTAL $
310	Gas or Utility Pipeline Laborer (Other Than Sewer and Water)	20.13	17.79	37.92
311	Fiber Optic Laborer (Outside, Other Than Concrete Encased) Premium Increase(s): DOT PREMIUMS: Pay two times the hourly basic rate on New Year's Day, Memorial Day, Independence Day, Labor Day, Thanksgiving Day & Christmas Day.	18.06	16.76	34.82
314	Railroad Track Laborer	14.50	4.39	18.89
315	Final Construction Clean-Up Worker	28.31	12.30	40.61

HEAVY EQUIPMENT OPERATORS
SITE PREPARATION, UTILITY OR LANDSCAPING WORK ONLY

CODE	Fringe Benefits Must Be Paid On All Hours Worked TRADE OR OCCUPATION	HOURLY BASIC RATE OF PAY $	HOURLY FRINGE BENEFITS $	TOTAL $
501	Air Track, Rotary or Percussion Drilling Machine &/or Hammers, Blaster; Asphalt Milling Machine; Boring Machine (Directional, Horizontal or Vertical); Backhoe (Track Type) Having a Mfgr's Rated Capacity of 130,000 Lbs. or Over; Backhoe (Track Type) Having a Mfgr's Rated Capacity of Under 130,000 Lbs., Backhoe (Mini, 15,000 Lbs. & Under); Bulldozer or Endloader (Over 40 hp); Compactor (Self-Propelled 85 Ft Total Drum Width & Over, or Tractor Mounted, Towed & Light Equipment); Concrete Batch Plant, Batch Hopper; Concrete Breaker (Large, Auto, Vibratory/Sonic, Manual or Remote); Crane, Shovel, Dragline, Clamshells; Forklift (Machinery Moving or Steel Erection, 25 Ft & Over); Gradall (Cruz-Aire Type); Grader or Motor Patrol; Master Mechanic; Mechanic or Welder; Robotic Tool Carrier (With or Without Attachments); Scraper (Self Propelled or Tractor Drawn) 5 cu yds or More Capacity; Tractor or Truck Mounted Hydraulic Backhoe; Tractor or Truck Mounted Hydraulic Crane (10 Tons or Under); Tractor (Scraper, Dozer, Pusher, Loader); Trencher (Wheel Type or Chain Type Having Over 8 Inch Bucket). Future Increase(s): Add $1.50/hr on 6/1/2015; Add $1.60/hr on 5/30/2016.	34.47	18.70	53.17
502	Backfiller; Broom or Sweeper; Bulldozer or Endloader (Under 40 hp); Environmental Burner; Forestry Equipment, Timbco, Tree Shear, Tub Grinder, Processor; Jeep Digger; Screed (Milling Machine); Skid Rig; Straddle Carrier or Travel Lift; Stump Chipper; Trencher (Wheel Type or Chain Type Having 8 Inch Bucket & Under). Future Increase(s): Add $1.50/hr on 6/1/2015; Add $1.60/hr on 5/30/2016.	34.17	18.70	52.87

CODE	Fringe Benefits Must Be Paid On All Hours Worked TRADE OR OCCUPATION	HOURLY BASIC RATE OF PAY $	HOURLY FRINGE BENEFITS $	TOTAL $
503	Air Compressor (&/or 400 CFM or Over); Augers (Vertical & Horizontal); Compactor (Self-Propelled 84 Ft Total Drum Width & Under, or Tractor Mounted, Towed & Light Equipment); Crusher, Screening or Wash Plant; Farm or Industrial Type Tractor; Forklift; Generator (&/or 150 KW or Over); Greaser; High Pressure Utility Locating Machine (Daylighting Machine); Mulcher; Oiler; Post Hole Digger or Driver; Pump (3 Inch or Over) or Well Points; Refrigeration Plant or Freeze Machine; Rock, Stone Breaker; Skid Steer Loader (With or Without Attachments); Vibratory Hammer or Extractor, Power Pack. Future Increase(s): Add $1.50/hr on 6/1/2015; Add $1.60/hr on 5/30/2016.	34.17	18.70	52.87
504	Work Performed on the Great Lakes Including Diver; Wet Tender or Hydraulic Dredge Engineer.	41.65	21.71	63.36
505	Work Performed on the Great Lakes Including Crane or Backhoe Operator; Assistant Hydraulic Dredge Engineer; Hydraulic Dredge Leverman or Diver's Tender; Mechanic or Welder; 70 Ton & Over Tug Operator. Premium Increase(s): Add $.50/hr for Friction Crane, Lattice Boom or Crane Certification (CCO).	41.65	21.71	63.36
506	Work Performed on the Great Lakes Including Deck Equipment Operator or Machineryman (Maintains Cranes Over 50 Tons or Backhoes 115,000 Lbs. or More); Tug, Launch or Loader, Dozer or Like Equipment When Operated on a Barge, Breakwater Wall, Slip, Dock or Scow, Deck Machinery.	35.72	17.85	53.57
507	Work Performed on the Great Lakes Including Deck Equipment Operator, Machineryman or Fireman (Operates 4 Units or More or Maintains Cranes 50 Tons or Under or Backhoes 115,000 Lbs. or Under); Deck Hand, Deck Engineer or Assistant Tug Operator; Off Road Trucks - Great Lakes ONLY.	35.46	20.40	55.86

HEAVY EQUIPMENT OPERATORS
EXCLUDING SITE PREPARATION, UTILITY, PAVING LANDSCAPING WORK

CODE	Fringe Benefits Must Be Paid On All Hours Worked TRADE OR OCCUPATION	HOURLY BASIC RATE OF PAY $	HOURLY FRINGE BENEFITS $	TOTAL $
508	Boring Machine (Directional); Crane, Tower Crane, Pedestal Tower or Derrick, With or Without Attachments, With a Lifting Capacity of Over 100 Tons, Self-Erecting Tower Crane With a Lifting Capacity of Over 4,000 Lbs., Crane With Boom Dollies; Crane, Tower Crane, Pedestal Tower or Derrick, With Boom, Leads &/or Jib Lengths Measuring 176 Ft or Over; Master Mechanic. Future Increase(s): Add $1.55/hr on 6/1/2015. Premium Increase(s): Crane Operators with CCO certification add $.50/hr. Cranes with boom length over 200 ft. not exceeding 300 ft. OR lifting capacity over 200 ton not exceeding 300 ton add $.50/hr. Over 300 ton OR 300 ft. add $.01/hr. per foot OR ton whichever is greater.	40.61	20.15	60.76

CODE	Fringe Benefits Must Be Paid On All Hours Worked TRADE OR OCCUPATION	HOURLY BASIC RATE OF PAY $	HOURLY FRINGE BENEFITS $	TOTAL $
509	Backhoe (Track Type) Having a Mfgr's Rated Capacity of 130,000 Lbs. or Over; Boring Machine (Horizontal or Vertical); Caisson Rig; Crane, Tower Crane, Portable Tower, Pedestal Tower or Derrick, With or Without Attachments, With a Lifting Capacity of 100 Tons or Under, Self-Erecting Tower Crane With A Lifting Capacity Of 4,000 Lbs. & Under; Crane, Tower Crane, Portable Tower, Pedestal Tower or Derrick, With Boom, Leads &/or Jib Lengths Measuring 175 Ft or Under; Pile Driver; Versi Lifts, Tri-Lifts & Gantrys (20,000 Lbs. & Over). Future Increase(s): Add $1.55/hr on 6/1/2015. Premium Increase(s): Crane Operators with CCO certification add $.50/hr.	40.11	20.15	60.26
510	Backhoe (Track Type) Having a Mfgr.'s Rated Capacity of Under 130,000 Lbs., Backhoe (Mini, 15,000 Lbs. & Under); Concrete Bump Cutter, Grinder, Planing or Grooving Machine; Concrete Laser/Screed; Concrete Paver (Slipform); Concrete Pump (Over 46 Meter), Concrete Conveyor (Rotec or Bidwell Type); Concrete Slipform Placer Curb & Gutter Machine; Concrete Spreader & Distributor; Dredge (NOT Performing Work on the Great Lakes); Forklift (Machinery Moving or Steel Erection, 25 Ft & Over); Gradall (Cruz-Aire Type); Hydro-Blaster (10,000 PSI or Over); Milling Machine; Skid Rig; Traveling Crane (Bridge Type). Future Increase(s): Add $1.55/hr on 6/1/2015. Premium Increase(s): Crane Operators with CCO certification add $.50/hr.	39.61	20.15	59.76
511	Air, Track, Rotary or Percussion Drilling Machine &/or Hammers, Blaster; Bulldozer or Endloader (Over 40 hp); Compactor (Self-Propelled 85 Ft Total Drum Width & Over, or Tractor Mounted, Towed & Light Equipment); Concrete Pump (46 Meter & Under), Concrete Conveyor (Rotec or Bidwell Type); Crane (Carry Deck, Mini) or Truck Mounted Hydraulic Crane (10 Tons or Under); Environmental Burner; Gantrys (Under 20,000 Lbs.); Grader or Motor Patrol; High Pressure Utility Locating Machine (Daylighting Machine); Manhoist; Material or Stack Hoist; Mechanic or Welder; Railroad Track Rail Leveling Machine, Tie Placer, Extractor, Tamper, Stone Leveler or Rehabilitation Equipment; Roller (Over 5 Ton); Scraper (Self Propelled or Tractor Drawn) 5 cu yd or More Capacity; Screed (Milling Machine); Sideboom; Straddle Carrier or Travel Lift; Tining or Curing Machine; Tractor (Scraper, Dozer, Pusher, Loader); Tractor or Truck Mounted Hydraulic Backhoe; Tractor or Truck Mounted Hydraulic Crane (10 Tons or Under); Trencher (Wheel Type or Chain Type Having Over 8-Inch Bucket). Future Increase(s): Add $1.55/hr on 6/1/2015.	38.92	20.15	59.07

CODE	Fringe Benefits Must Be Paid On All Hours Worked TRADE OR OCCUPATION	HOURLY BASIC RATE OF PAY $	HOURLY FRINGE BENEFITS $	TOTAL $
512	Backfiller; Broom or Sweeper; Bulldozer or Endloader (Under 40 hp); Compactor (Self-Propelled 84 Ft Total Drum Width & Under, or Tractor Mounted, Towed & Light Equipment); Concrete Batch Plant, Batch Hopper; Concrete Breaker (Large, Auto, Vibratory/Sonic, Manual or Remote); Concrete Conveyor System; Concrete Finishing Machine (Road Type); Fireman (Pile Driver & Derrick NOT Performing Work on the Great Lakes); Grout Pump; Hoist (Tugger, Automatic); Industrial Locomotives; Jeep Digger; Lift Slab Machine; Mulcher; Roller (Rubber Tire, 5 Ton or Under); Screw or Gypsum Pumps; Stabilizing or Concrete Mixer (Self-Propelled or 14S or Over); Stump Chipper; Trencher (Wheel Type or Chain Type Having 8-Inch Bucket & Under); Winches & A-Frames. Future Increase(s): Add $1.55/hr on 6/1/2015.	37.04	20.15	57.19
513	Air Compressor (&/or 400 CFM or Over); Air, Electric or Hydraulic Jacking System; Augers (Vertical & Horizontal); Boatmen (NOT Performing Work on the Great Lakes); Boiler (Temporary Heat); Crusher, Screening or Wash Plant; Elevator; Farm or Industrial Type Tractor; Fireman (Asphalt Plant NOT Performing Work on the Great Lakes); Forklift; Generator (&/or 150 KW or Over); Greaser; Heaters (Mechanical); Loading Machine (Conveyor); Oiler; Post Hole Digger or Driver; Prestress Machine; Pump (3 Inch or Over) or Well Points; Refrigeration Plant or Freeze Machine; Robotic Tool Carrier (With or Without Attachments); Rock, Stone Breaker; Skid Steer Loader (With or Without Attachments); Vibratory Hammer or Extractor, Power Pack. Future Increase(s): Add $1.55/hr on 6/1/2015.	31.89	20.15	52.04
514	Gas or Utility Pipeline, Except Sewer & Water (Primary Equipment). Future Increase(s): Add $1/hr on 6/1/2015; Add $1/hr on 5/30/2016.	36.34	22.14	58.48
515	Gas or Utility Pipeline, Except Sewer & Water (Secondary Equipment). Future Increase(s): Add $1.65/hr on 6/1/2015.	34.06	19.35	53.41
516	Fiber Optic Cable Equipment	28.89	17.95	46.84

SEWER, WATER OR TUNNEL CONSTRUCTION

Includes those projects that primarily involve public sewer or water distribution, transmission or collection systems and related tunnel work (excluding buildings).

SKILLED TRADES

CODE	Fringe Benefits Must Be Paid On All Hours Worked TRADE OR OCCUPATION	HOURLY BASIC RATE OF PAY $	HOURLY FRINGE BENEFITS $	TOTAL $
103	Bricklayer, Blocklayer or Stonemason	35.37	17.99	53.36
105	Carpenter Future Increase(s): Add $1.50/hr on 6/1/2015; Add $1.65/hr on 6/1/2016. Premium Increase(s): DOT PREMIUM: Pay two times the hourly basic rate on Sunday, New Year's Day, Memorial Day, Independence Day, Labor Day, Thanksgiving Day & Christmas Day.	34.13	20.61	54.74
107	Cement Finisher Future Increase(s): Add $1.87 on 6/1/15; Add $1.75 on 6/1/16. Premium Increase(s): DOT PREMIUMS: 1) Pay two times the hourly basic rate on Sunday, New Year's Day, Memorial Day, Independence Day, Labor Day, Thanksgiving Day & Christmas Day. 2) Add $1.40/hr when the Wisconsin Department of Transportation or responsible governing agency requires that work be performed at night under artificial illumination with traffic control and the work is completed after sunset and before sunrise.	35.18	16.78	51.96
109	Electrician	47.76	0.00	47.76
111	Fence Erector	23.73	19.09	42.82
116	Ironworker	31.50	20.01	51.51
118	Line Constructor (Electrical)	37.43	18.19	55.62
125	Pavement Marking Operator	30.10	18.08	48.18
126	Piledriver	29.56	25.71	55.27
130	Plumber	21.50	0.00	21.50
135	Steamfitter	39.76	21.09	60.85
137	Teledata Technician or Installer	24.89	17.15	42.04
143	Tuckpointer, Caulker or Cleaner	33.76	17.82	51.58
144	Underwater Diver (Except on Great Lakes)	35.40	15.90	51.30
146	Well Driller or Pump Installer	25.32	15.65	40.97
150	Heavy Equipment Operator - ELECTRICAL LINE CONSTRUCTION ONLY	35.55	15.57	51.12

CODE	Fringe Benefits Must Be Paid On All Hours Worked TRADE OR OCCUPATION	HOURLY BASIC RATE OF PAY $	HOURLY FRINGE BENEFITS $	TOTAL $
151	Light Equipment Operator -ELECTRICAL LINE CONSTRUCTION ONLY	31.60	15.19	46.79
152	Heavy Truck Driver - ELECTRICAL LINE CONSTRUCTION ONLY	27.65	13.44	41.09
153	Light Truck Driver - ELECTRICAL LINE CONSTRUCTION ONLY	25.68	13.28	38.96
154	Groundman - ELECTRICAL LINE CONSTRUCTION ONLY	21.75	12.97	34.72

TRUCK DRIVERS

CODE	Fringe Benefits Must Be Paid On All Hours Worked TRADE OR OCCUPATION	HOURLY BASIC RATE OF PAY $	HOURLY FRINGE BENEFITS $	TOTAL $
201	Single Axle or Two Axle Future Increase(s): Add $1.15/hr on 6/1/2015. Premium Increase(s): DOT PREMIUM: Pay two times the hourly basic rate on Sunday, New Year's Day, Memorial Day, Independence Day, Labor Day, Thanksgiving Day & Christmas Day.	25.18	18.31	43.49
203	Three or More Axle	18.00	0.00	18.00
204	Articulated, Euclid, Dumptor, Off Road Material Hauler	32.89	18.96	51.85
205	Pavement Marking Vehicle	20.85	11.02	31.87
207	Truck Mechanic	18.00	0.00	18.00

LABORERS

CODE	Fringe Benefits Must Be Paid On All Hours Worked TRADE OR OCCUPATION	HOURLY BASIC RATE OF PAY $	HOURLY FRINGE BENEFITS $	TOTAL $
301	General Laborer Future Increase(s): Add $1.35/hr eff. 06/01/2015; Add $1.25/hr eff. 06/06/2016 Premium Increase(s): Add $2.29 for bottomman; Add $2.15 for concrete manhole builder, bracer, jointman, or pipelayer; Add $5.44 for blaster. Add $2.00 for all tunnel work under 15 lbs. compressed air; Add $2.00 for 0-30 lbs. compressed air; Add $3.00 for over 30 lbs. compressed air.	29.16	17.72	46.88
303	Landscaper	39.43	0.00	39.43
304	Flagperson or Traffic Control Person	31.95	0.00	31.95
311	Fiber Optic Laborer (Outside, Other Than Concrete Encased)	17.71	16.01	33.72

314	Railroad Track Laborer	14.50	4.39	18.89

HEAVY EQUIPMENT OPERATORS
SEWER, WATER OR TUNNEL WORK

Fringe Benefits Must Be Paid On All Hours Worked

CODE	TRADE OR OCCUPATION	HOURLY BASIC RATE OF PAY $	HOURLY FRINGE BENEFITS $	TOTAL $
521	Backhoe (Track Type) Having a Mfgr.'s Rated Capacity of 130,000 Lbs. or Over; Caisson Rig; Crane, Tower Crane, Pedestal Tower or Derrick, With Boom, Leads &/or Jib Lengths Measuring 176 Ft or Over; Crane, Tower Crane, Pedestal Tower or Derrick, With or Without Attachments, With a Lifting Capacity of Over 100 Tons, Self-Erecting Tower Crane With a Lifting Capacity Of Over 4,000 Lbs., Crane With Boom Dollies; Master Mechanic; Pile Driver. Future Increase(s): Add $1.55/hr on 6/1/2015. Premium Increase(s): Add $.25/hr for operating tower crane.	37.24	20.10	57.34
522	Backhoe (Track Type) Having a Mfgr.'s Rated Capacity of Under 130,000 Lbs., Backhoe (Mini, 15,000 Lbs. & Under); Boring Machine (Directional); Concrete Bump Cutter, Grinder, Planing or Grooving Machine; Concrete Laser/Screed; Concrete Paver (Slipform); Concrete Pump (Over 46 Meter), Concrete Conveyor (Rotec or Bidwell Type); Concrete Spreader & Distributor; Crane, Tower Crane, Portable Tower, Pedestal Tower or Derrick, With Boom, Leads &/or Jib Lengths Measuring 175 Ft or Under; Crane, Tower Crane, Portable Tower, Pedestal Tower or Derrick, With or Without Attachments, With a Lifting Capacity of 100 Tons or Under, Self-Erecting Tower Crane With a Lifting Capacity of 4,000 Lbs. & Under; Dredge (NOT Performing Work on the Great Lakes); Milling Machine; Skid Rig; Telehandler; Traveling Crane (Bridge Type). Future Increase(s): Add $1.55/hr on 6/1/2015. Premium Increase(s): Add $.25/hr for operating tower crane.	36.46	20.10	56.56
523	Air Track, Rotary or Percussion Drilling Machine &/or Hammers, Blaster; Boring Machine (Horizontal or Vertical); Bulldozer or Endloader (Over 40 hp); Crane (Carry Deck, Mini) or Truck Mounted Hydraulic Crane (10 Tons or Under); Concrete Pump (46 Meter & Under), Concrete Conveyor (Rotec or Bidwell Type); Concrete Slipform Placer Curb & Gutter Machine; Gradall (Cruz-Aire Type); Grader or Motor Patrol; Hydro-Blaster (10,000 PSI or Over); Manhoist; Material or Stack Hoist; Mechanic or Welder; Roller (Over 5 Ton); Scraper (Self Propelled or Tractor Drawn) 5 cu yd or More Capacity; Screed (Milling Machine); Sideboom; Straddle Carrier or Travel Lift; Tractor (Scraper, Dozer, Pusher, Loader); Tractor or Truck Mounted Hydraulic Backhoe; Tractor or Truck Mounted Hydraulic Crane (10 Tons or Under); Trencher (Wheel Type or Chain Type Having Over 8-Inch Bucket). Future Increase(s): Add $1.55/hr on 6/1/2015. Premium Increase(s): Add $.25/hr for operating tower crane.	35.51	20.10	55.61

CODE	Fringe Benefits Must Be Paid On All Hours Worked TRADE OR OCCUPATION	HOURLY BASIC RATE OF PAY $	HOURLY FRINGE BENEFITS $	TOTAL $
524	Backfiller; Broom or Sweeper; Bulldozer or Endloader (Under 40 hp); Compactor (Self-Propelled 85 Ft Total Drum Width & Over, or Tractor Mounted, Towed & Light Equipment); Concrete Batch Plant, Batch Hopper; Concrete Breaker (Large, Auto, Vibratory/Sonic, Manual or Remote); Concrete Conveyor System; Concrete Finishing Machine (Road Type); Environmental Burner; Fireman (Pile Driver & Derrick NOT Performing Work on the Great Lakes); Forestry Equipment, Timbco, Tree Shear, Tub Grinder, Processor; Hoist (Tugger, Automatic); Grout Pump; Jeep Digger; Lift Slab Machine; Mulcher; Power Subgrader; Pump (3 Inch or Over) or Well Points; Robotic Tool Carrier (With or Without Attachments); Roller (Rubber Tire, 5 Ton or Under); Screw or Gypsum Pumps; Stabilizing or Concrete Mixer (Self-Propelled or 14S or Over); Stump Chipper; Tining or Curing Machine; Trencher (Wheel Type or Chain Type Having 8-Inch Bucket & Under); Winches & A-Frames.	36.79	19.15	55.94
525	Air Compressor (&/or 400 CFM or Over); Air, Electric or Hydraulic Jacking System; Augers (Vertical & Horizontal); Compactor (Self-Propelled 84 Ft Total Drum Width & Under, or Tractor Mounted, Towed & Light Equipment); Crusher, Screening or Wash Plant; Farm or Industrial Type Tractor; Fireman (Asphalt Plant NOT Performing Work on the Great Lakes); Generator (&/or 150 KW or Over); Heaters (Mechanical); High Pressure Utility Locating Machine (Daylighting Machine); Loading Machine (Conveyor); Post Hole Digger or Driver; Refrigeration Plant or Freeze Machine; Rock, Stone Breaker; Skid Steer Loader (With or Without Attachments); Vibratory Hammer or Extractor, Power Pack.	50.50	0.42	50.92
526	Boiler (Temporary Heat); Forklift; Greaser; Oiler.	31.64	19.15	50.79
527	Work Performed on the Great Lakes Including Diver; Wet Tender or Hydraulic Dredge Engineer.	41.65	21.71	63.36
528	Work Performed on the Great Lakes Including 70 Ton & Over Tug Operator; Assistant Hydraulic Dredge Engineer; Crane or Backhoe Operator; Hydraulic Dredge Leverman or Diver's Tender; Mechanic or Welder.	41.65	21.71	63.36
529	Work Performed on the Great Lakes Including Deck Equipment Operator or Machineryman (Maintains Cranes Over 50 Tons or Backhoes 115,000 Lbs. or More); Tug, Launch or Loader, Dozer or Like Equipment When Operated on a Barge, Breakwater Wall, Slip, Dock or Scow, Deck Machinery.	35.72	17.85	53.57
530	Work Performed on the Great Lakes Including Deck Equipment Operator; Machineryman or Fireman (Operates 4 Units or More or Maintains Cranes 50 Tons or Under or Backhoes 115,000 Lbs. or Under), Deck Hand, Deck Engineer or Assistant Tug Operator; Off Road Trucks - Great Lakes ONLY.	35.46	20.40	55.86

AIRPORT PAVEMENT OR STATE HIGHWAY CONSTRUCTION

Includes all airport projects (excluding buildings) and all projects awarded by the Wisconsin Department of Transportation (excluding buildings).

SKILLED TRADES

CODE	Fringe Benefits Must Be Paid On All Hours Worked TRADE OR OCCUPATION	HOURLY BASIC RATE OF PAY $	HOURLY FRINGE BENEFITS $	TOTAL $
103	Bricklayer, Blocklayer or Stonemason	35.37	17.99	53.36
105	Carpenter	33.68	19.99	53.67
107	Cement Finisher Future Increase(s): Add $1.87 on 6/1/15; Add $1.75 on 6/1/16. Premium Increase(s): DOT PREMIUMS: 1) Pay two times the hourly basic rate on Sunday, New Year's Day, Memorial Day, Independence Day, Labor Day, Thanksgiving Day & Christmas Day. 2) Add $1.40/hr when the Wisconsin Department of Transportation or responsible governing agency requires that work be performed at night under artificial illumination with traffic control and the work is completed after sunset and before sunrise.	32.75	19.21	51.96
109	Electrician Premium Increase(s): DOT PREMIUM: Pay two times the hourly basic rate on Sunday, New Year’s Day, Memorial Day, Independence Day, Labor Day, Thanksgiving Day & Christmas Day.	33.93	22.77	56.70
111	Fence Erector	23.73	19.09	42.82
116	Ironworker Premium Increase(s): DOT PREMIUM: Pay two times the hourly basic rate on Sunday, New Year's Day, Memorial Day, Independence Day, Labor Day, Thanksgiving Day & Christmas Day.	30.77	23.97	54.74
118	Line Constructor (Electrical)	37.43	18.19	55.62
124	Painter	29.22	16.69	45.91
125	Pavement Marking Operator	30.27	18.79	49.06
126	Piledriver Future Increase(s): Add $1.50/hr on 6/1/2015; Add $1.60/hr on 6/1/2016. Premium Increase(s): Add $.65/hr for Piledriver Loftsman; Add $.75/hr for Sheet Piling Loftsman. DOT PREMIUM: Pay two times the hourly basic rate on Sunday, New Year's Day, Memorial Day, Independence Day, Labor Day, Thanksgiving Day & Christmas Day.	30.11	26.51	56.62
133	Roofer or Waterproofer	29.40	17.05	46.45

CODE	Fringe Benefits Must Be Paid On All Hours Worked TRADE OR OCCUPATION	HOURLY BASIC RATE OF PAY $	HOURLY FRINGE BENEFITS $	TOTAL $
137	Teledata Technician or Installer	24.89	17.15	42.04
143	Tuckpointer, Caulker or Cleaner	33.76	17.82	51.58
144	Underwater Diver (Except on Great Lakes)	35.40	15.90	51.30
150	Heavy Equipment Operator - ELECTRICAL LINE CONSTRUCTION ONLY	35.55	15.57	51.12
151	Light Equipment Operator -ELECTRICAL LINE CONSTRUCTION ONLY	31.60	14.64	46.24
152	Heavy Truck Driver - ELECTRICAL LINE CONSTRUCTION ONLY	27.65	13.44	41.09
153	Light Truck Driver - ELECTRICAL LINE CONSTRUCTION ONLY	25.68	12.83	38.51
154	Groundman - ELECTRICAL LINE CONSTRUCTION ONLY	21.75	11.63	33.38

TRUCK DRIVERS

CODE	Fringe Benefits Must Be Paid On All Hours Worked TRADE OR OCCUPATION	HOURLY BASIC RATE OF PAY $	HOURLY FRINGE BENEFITS $	TOTAL $
201	Single Axle or Two Axle Future Increase(s): Add $1.15/hr on 6/1/2015. Premium Increase(s): DOT PREMIUM: Pay two times the hourly basic rate on Sunday, New Year's Day, Memorial Day, Independence Day, Labor Day, Thanksgiving Day & Christmas Day.	25.18	18.31	43.49
203	Three or More Axle Future Increase(s): Add $1.15/hr on 6/1/2015. Premium Increase(s): DOT PREMIUM: Pay two times the hourly basic rate on Sunday, New Year's Day, Memorial Day, Independence Day, Labor Day, Thanksgiving Day & Christmas Day.	25.28	18.31	43.59
204	Articulated, Euclid, Dumptor, Off Road Material Hauler Future Increase(s): Add $1.25/hr on 6/1/2015; Add $1.30/hr on 6/1/2016; Add $1.25/hr on 6/1/2017. Premium Increase(s): DOT PREMIUMS: 1) Pay two times the hourly basic rate on Sunday, New Year's Day, Memorial Day, Independence Day, Labor Day, Thanksgiving Day & Christmas Day. 2) Add $1.50/hr night work premium. See DOT'S website for details about the applicability of this night work premium at: http://www.dot.wi.gov/business/civilrights/laborwages/pwc.htm.	30.27	21.15	51.42
205	Pavement Marking Vehicle	23.16	17.13	40.29
206	Shadow or Pilot Vehicle	24.37	17.77	42.14

207	Truck Mechanic	24.52	17.77	42.29

LABORERS

Fringe Benefits Must Be Paid On All Hours Worked

CODE	TRADE OR OCCUPATION	HOURLY BASIC RATE OF PAY $	HOURLY FRINGE BENEFITS $	TOTAL $
301	General Laborer Future Increase(s): Add $1.05/hr eff. 06/01/2015; Add $1.00/hr eff. 06/01/2016; Add $1.00/hr eff. 06/01/2017 Premium Increase(s): Add $.15/hr for air tool operator, joint sawer and filler (pavement), vibrator or tamper operator (mechanical hand operated), chain saw operator and demolition burning torch laborer; Add $.35/hr for bituminous worker (raker and luteman), formsetter (curb, sidewalk and pavement) and strike off man; Add $.50/hr for line and grade specialist; Add $.65/hr for blaster and powderman; Add $2.01/hr for topman; Add $2.46/hr for bottomman; Add $3.23/hr for pipelayer. / DOT PREMIUMS: 1) Pay two times the hourly basic rate on Sunday, New Year's Day, Memorial Day, Independence Day, Labor Day, Thanksgiving Day & Christmas Day. 2) Add $1.25/hr for work on projects involving temporary traffic control setup, for lane and shoulder closures, when work under artificial illumination conditions is necessary as required by the project provisions (including prep time prior to and/or cleanup after such time period).	27.06	20.03	47.09
302	Asbestos Abatement Worker	22.05	18.41	40.46
303	Landscaper Future Increase(s): Add $1.05/hr eff. 06/01/2015; Add $1.00/hr eff. 06/01/2016; Add $1.00/hr eff. 06/01/2017 Premium Increase(s): DOT PREMIUMS: 1) Pay two times the hourly basic rate on Sunday, New Year's Day, Memorial Day, Independence Day, Labor Day, Thanksgiving Day & Christmas Day. 2) Add $1.25/hr for work on projects involving temporary traffic control setup, for lane and shoulder closures, when work under artificial illumination conditions is necessary as required by the project provisions (including prep time prior to and/or cleanup after such time period).	27.06	20.03	47.09
304	Flagperson or Traffic Control Person	22.55	19.37	41.92
311	Fiber Optic Laborer (Outside, Other Than Concrete Encased)	17.71	16.01	33.72
314	Railroad Track Laborer	14.50	4.39	18.89

HEAVY EQUIPMENT OPERATORS
AIRPORT PAVEMENT OR STATE HIGHWAY CONSTRUCTION

CODE	Fringe Benefits Must Be Paid On All Hours Worked TRADE OR OCCUPATION	HOURLY BASIC RATE OF PAY $	HOURLY FRINGE BENEFITS $	TOTAL $
531	Crane, Tower Crane, Pedestal Tower or Derrick, With Boom, Leads &/or Jib Lengths Measuring 176 Ft or Over; Crane, Tower Crane, Pedestal Tower or Derrick, With or Without Attachments, With a Lifting Capacity of Over 100 Tons, Self-Erecting Tower Crane With a Lifting Capacity Of Over 4,000 Lbs., Crane With Boom Dollies; Traveling Crane (Bridge Type). Future Increase(s): Add $1.25/hr on 6/1/2015; Add $1.30/hr on 6/1/2016; Add $1.25/hr on 6/1/2017. Premium Increase(s): DOT PREMIUMS: 1) Pay two times the hourly basic rate on Sunday, New Year's Day, Memorial Day, Independence Day, Labor Day, Thanksgiving Day & Christmas Day. 2) Add $1.50/hr night work premium. See DOT'S website for details about the applicability of this night work premium at: http://www.dot.wi.gov/business/civilrights/laborwages/pwc.htm.	37.72	21.15	58.87
532	Backhoe (Track Type) Having a Mfgr.'s Rated Capacity of 130,000 Lbs. or Over; Caisson Rig; Crane, Tower Crane, Portable Tower, Pedestal Tower or Derrick, With Boom, Leads &/or Jib Lengths Measuring 175 Ft or Under; Crane, Tower Crane, Portable Tower, Pedestal Tower or Derrick, With or Without Attachments, With a Lifting Capacity of 100 Tons or Under, Self-Erecting Tower Crane With A Lifting Capacity Of 4,000 Lbs., & Under; Dredge (NOT Performing Work on the Great Lakes); Licensed Boat Pilot (NOT Performing Work on the Great Lakes); Pile Driver. Future Increase(s): Add $1.25/hr on 6/1/2015; Add $1.30/hr on 6/1/2016; Add $1.25/hr on 6/1/2017. Premium Increase(s): DOT PREMIUMS: 1) Pay two times the hourly basic rate on Sunday, New Year's Day, Memorial Day, Independence Day, Labor Day, Thanksgiving Day & Christmas Day. 2) Add $1.50/hr night work premium. See DOT'S website for details about the applicability of this night work premium at: http://www.dot.wi.gov/business/civilrights/laborwages/pwc.htm.	37.22	21.15	58.37

CODE	Fringe Benefits Must Be Paid On All Hours Worked TRADE OR OCCUPATION	HOURLY BASIC RATE OF PAY $	HOURLY FRINGE BENEFITS $	TOTAL $
533	Air Track, Rotary or Percussion Drilling Machine &/or Hammers, Blaster; Asphalt Heater, Planer & Scarifier; Asphalt Milling Machine; Asphalt Screed; Automatic Subgrader (Concrete); Backhoe (Track Type) Having a Mfgr.'s Rated Capacity of Under 130,000 Lbs., Backhoe (Mini, 15,000 Lbs. & Under); Bituminous (Asphalt) Plant & Paver, Screed; Boatmen (NOT Performing Work on the Great Lakes); Boring Machine (Directional, Horizontal or Vertical); Bridge (Bidwell) Paver; Bulldozer or Endloader; Concrete Batch Plant, Batch Hopper; Concrete Breaker (Large, Auto, VIbratory/Sonic, Manual or Remote); Concrete Bump Cutter, Grinder, Planing or Grooving Machine; Concrete Conveyor System; Concrete Laser/Screed; Concrete Paver (Slipform); Concrete Pump, Concrete Conveyor (Rotec or Bidwell Type); Concrete Slipform Placer Curb & Gutter Machine; Concrete Spreader & Distributor; Crane (Carry Deck, Mini) or Truck Mounted Hydraulic Crane (10 Tons or Under); Crane WIth a Lifting Capacity of 25 Tons or Under; Forestry Equipment, Timbco, Tree Shear, Tub Grinder, Processor; Gradall (Cruz-Aire Type); Grader or Motor Patrol; Grout Pump; Hydro-Blaster (10,000 PSI or Over); Loading Machine (Conveyor); Material or Stack Hoist; Mechanic or Welder; Milling Machine; Post Hole Digger or Driver; Roller (Over 5 Ton); Scraper (Self Propelled or Tractor Drawn) 5 cu yds or More Capacity; Shoulder Widener; Sideboom; Skid Rig; Stabilizing or Concrete Mixer (Self-Propelled or 14S or Over); Straddle Carrier or Travel Lift; Tractor (Scraper, Dozer, Pusher, Loader); Tractor or Truck Mounted Hydraulic Backhoe; Trencher (Wheel Type or Chain Type); Tube Finisher; Tugger (NOT Performing Work on the Great Lakes); Winches & A-Frames. Future Increase(s): Add $1.25/hr on 6/1/2015; Add $1.30/hr on 6/1/2016; Add $1.25/hr on 6/1/2017. Premium Increase(s): DOT PREMIUMS: 1) Pay two times the hourly basic rate on Sunday, New Year's Day, Memorial Day, Independence Day, Labor Day, Thanksgiving Day & Christmas Day. 2) Add $1.50/hr night work premium. See DOT'S website for details about the applicability of this night work premium at: http://www.dot.wi.gov/business/civilrights/laborwages/pwc.htm.	36.72	21.15	57.87

CODE	Fringe Benefits Must Be Paid On All Hours Worked TRADE OR OCCUPATION	HOURLY BASIC RATE OF PAY $	HOURLY FRINGE BENEFITS $	TOTAL $
534	Belting, Burlap, Texturing Machine; Broom or Sweeper; Compactor (Self-Propelled or Tractor Mounted, Towed & Light Equipment); Concrete Finishing Machine (Road Type); Environmental Burner; Farm or Industrial Type Tractor; Fireman (Asphalt Plant, Pile Driver & Derrick NOT Performing Work on the Great Lakes); Forklift; Greaser; Hoist (Tugger, Automatic); Jeep Digger; Joint Sawer (Multiple Blade); Launch (NOT Performing Work on the Great Lakes); Lift Slab Machine; Mechanical Float; Mulcher; Power Subgrader; Robotic Tool Carrier (With or Without Attachments); Roller (Rubber Tire, 5 Ton or Under); Self Propelled Chip Spreader; Shouldering Machine; Skid Steer Loader (With or WIthout Attachments); Telehandler; Tining or Curing Machine. Future Increase(s): Add $1.25/hr on 6/1/2015; Add $1.30/hr on 6/1/2016; Add $1.25/hr on 6/1/2017. Premium Increase(s): DOT PREMIUMS: 1) Pay two times the hourly basic rate on Sunday, New Year's Day, Memorial Day, Independence Day, Labor Day, Thanksgiving Day & Christmas Day. 2) Add $1.50/hr night work premium. See DOT'S website for details about the applicability of this night work premium at: http://www.dot.wi.gov/business/civilrights/laborwages/pwc.htm.	36.46	21.15	57.61
535	Air Compressor (&/or 400 CFM or Over); Air, Electric or Hydraulic Jacking System; Augers (Vertical & Horizontal); Automatic Belt Conveyor & Surge Bin; Boiler (Temporary Heat); Concrete Proportioning Plant; Crusher, Screening or Wash Plant; Generator (&/or 150 KW or Over); Heaters (Mechanical); High Pressure Utility Locating Machine (Daylighting Machine); Mudjack; Oiler; Prestress Machine; Pug Mill; Pump (3 Inch or Over) or Well Points; Rock, Stone Breaker; Screed (Milling Machine); Stump Chipper; Tank Car Heaters; Vibratory Hammer or Extractor, Power Pack. Future Increase(s): Add $1.25/hr on 6/1/2015; Add $1.30/hr on 6/1/2016; Add $1.25/hr on 6/1/2017. Premium Increase(s): DOT PREMIUMS: 1) Pay two times the hourly basic rate on Sunday, New Year's Day, Memorial Day, Independence Day, Labor Day, Thanksgiving Day & Christmas Day. 2) Add $1.50/hr night work premium. See DOT'S website for details about the applicability of this night work premium at: http://www.dot.wi.gov/business/civilrights/laborwages/pwc.htm.	36.17	21.15	57.32
536	Fiber Optic Cable Equipment.	28.89	17.95	46.84
537	Work Performed on the Great Lakes Including Diver; Wet Tender or Hydraulic Dredge Engineer.	41.65	21.71	63.36
538	Work Performed on the Great Lakes Including 70 Ton & Over Tug Operator; Assistant Hydraulic Dredge Engineer; Crane or Backhoe Operator; Hydraulic Dredge Leverman or Diver's Tender; Mechanic or Welder.	41.65	21.71	63.36

CODE	Fringe Benefits Must Be Paid On All Hours Worked TRADE OR OCCUPATION	HOURLY BASIC RATE OF PAY $	HOURLY FRINGE BENEFITS $	TOTAL $
539	Work Performed on the Great Lakes Including Deck Equipment Operator or Machineryman (Maintains Cranes Over 50 Tons or Backhoes 115,000 Lbs. or More); Tug, Launch or Loader, Dozer or Like Equipment When Operated on a Barge, Breakwater Wall, Slip, Dock or Scow, Deck Machinery.	35.72	17.85	53.57
540	Work Performed on the Great Lakes Including Deck Equipment Operator, Machineryman or Fireman (Operates 4 Units or More or Maintains Cranes 50 Tons or Under or Backhoes 115,000 Lbs. or Under); Deck Hand, Deck Engineer or Assistant Tug Operator; Off Road Trucks-Great Lakes ONLY.	35.46	20.40	55.86

LOCAL STREET OR MISCELLANEOUS PAVING CONSTRUCTION

Includes roads, streets, alleys, trails, bridges, paths, racetracks, parking lots and driveways (except residential or agricultural), public sidewalks or other similar projects (excluding projects awarded by the Wisconsin Department of Transportation).

SKILLED TRADES

CODE	Fringe Benefits Must Be Paid On All Hours Worked TRADE OR OCCUPATION	HOURLY BASIC RATE OF PAY $	HOURLY FRINGE BENEFITS $	TOTAL $
103	Bricklayer, Blocklayer or Stonemason	35.37	17.99	53.36
105	Carpenter Future Increase(s): Add $1.42/hr on 6/1/2015; Add $1.42/hr on 6/1/2016. Premium Increase(s): DOT PREMIUM: Pay two times the hourly basic rate on Sunday, New Year's Day, Memorial Day, Independence Day, Labor Day, Thanksgiving Day & Christmas Day.	32.72	16.00	48.72
107	Cement Finisher	30.96	18.53	49.49
109	Electrician Premium Increase(s): DOT PREMIUM: Pay two times the hourly basic rate on Sunday, New Year’s Day, Memorial Day, Independence Day, Labor Day, Thanksgiving Day & Christmas Day.	33.93	22.77	56.70
111	Fence Erector	23.73	19.09	42.82
116	Ironworker	30.52	23.47	53.99
118	Line Constructor (Electrical)	37.43	18.19	55.62
124	Painter	29.52	19.99	49.51
125	Pavement Marking Operator	30.10	18.08	48.18
126	Piledriver	29.56	25.71	55.27
133	Roofer or Waterproofer	29.40	17.05	46.45
137	Teledata Technician or Installer	24.89	17.15	42.04
143	Tuckpointer, Caulker or Cleaner	33.76	17.82	51.58
144	Underwater Diver (Except on Great Lakes)	35.40	15.90	51.30
150	Heavy Equipment Operator - ELECTRICAL LINE CONSTRUCTION ONLY	35.55	15.57	51.12
151	Light Equipment Operator -ELECTRICAL LINE CONSTRUCTION ONLY	31.60	15.19	46.79
152	Heavy Truck Driver - ELECTRICAL LINE CONSTRUCTION ONLY	27.65	13.44	41.09
153	Light Truck Driver - ELECTRICAL LINE CONSTRUCTION ONLY	25.68	13.28	38.96
154	Groundman - ELECTRICAL LINE CONSTRUCTION ONLY	21.75	12.97	34.72

TRUCK DRIVERS

Fringe Benefits Must Be Paid On All Hours Worked

CODE	TRADE OR OCCUPATION	HOURLY BASIC RATE OF PAY $	HOURLY FRINGE BENEFITS $	TOTAL $
201	Single Axle or Two Axle Future Increase(s): Add $1.15/hr on 6/1/2015. Premium Increase(s): DOT PREMIUM: Pay two times the hourly basic rate on Sunday, New Year's Day, Memorial Day, Independence Day, Labor Day, Thanksgiving Day & Christmas Day.	25.18	18.31	43.49
203	Three or More Axle	18.00	0.00	18.00
204	Articulated, Euclid, Dumptor, Off Road Material Hauler Future Increase(s): Add $1.60/hr on 6/2/2015; Add $1.60/hr on 6/3/2016.	33.69	19.78	53.47
205	Pavement Marking Vehicle	20.85	11.02	31.87
206	Shadow or Pilot Vehicle	24.37	17.77	42.14
207	Truck Mechanic	18.00	0.00	18.00

LABORERS

Fringe Benefits Must Be Paid On All Hours Worked

CODE	TRADE OR OCCUPATION	HOURLY BASIC RATE OF PAY $	HOURLY FRINGE BENEFITS $	TOTAL $
301	General Laborer	24.75	19.69	44.44
303	Landscaper Future Increase(s): Add $1.05/hr eff. 06/01/2015; Add $1.00/hr eff. 06/01/2016; Add $1.00/hr eff. 06/01/2017 Premium Increase(s): DOT PREMIUMS: 1) Pay two times the hourly basic rate on Sunday, New Year's Day, Memorial Day, Independence Day, Labor Day, Thanksgiving Day & Christmas Day. 2) Add $1.25/hr for work on projects involving temporary traffic control setup, for lane and shoulder closures, when work under artificial illumination conditions is necessary as required by the project provisions (including prep time prior to and/or cleanup after such time period).	27.06	20.03	47.09
304	Flagperson or Traffic Control Person	25.67	12.66	38.33
311	Fiber Optic Laborer (Outside, Other Than Concrete Encased)	17.71	16.01	33.72
314	Railroad Track Laborer	14.50	4.39	18.89

HEAVY EQUIPMENT OPERATORS
CONCRETE PAVEMENT OR BRIDGE WORK

CODE	Fringe Benefits Must Be Paid On All Hours Worked TRADE OR OCCUPATION	HOURLY BASIC RATE OF PAY $	HOURLY FRINGE BENEFITS $	TOTAL $
541	Crane, Tower Crane, Pedestal Tower or Derrick, With or Without Attachments, With a Lifting Capacity of Over 100 Tons, Self-Erecting Tower Crane With a Lifting Capacity Of Over 4,000 Lbs., Crane With Boom Dollies; Crane, Tower Crane, Pedestal Tower or Derrick, With Boom, Leads &/or Jib Lengths Measuring 176 Ft or Over; Master Mechanic. Future Increase(s): Add $1.25/hr on 6/1/2015; Add $1.30/hr on 6/1/2016; Add $1.25/hr on 6/1/2017. Premium Increase(s): DOT PREMIUMS: 1) Pay two times the hourly basic rate on Sunday, New Year's Day, Memorial Day, Independence Day, Labor Day, Thanksgiving Day & Christmas Day. 2) Add $1.50/hr night work premium. See DOT'S website for details about the applicability of this night work premium at: http://www.dot.wi.gov/business/civilrights/laborwages/pwc.htm.	37.72	21.15	58.87
542	Backhoe (Track Type) Having a Mfgr.'s Rated Capacity of 130,000 Lbs. or Over; Caisson Rig; Crane, Tower Crane, Portable Tower, Pedestal Tower or Derrick, With or Without Attachments, With a Lifting Capacity of 100 Tons or Under, Self-Erecting Tower Crane With a Lifting Capacity of 4,000 Lbs. & Under; Crane, Tower Crane Portable Tower, Pedestal Tower or Derrick, With Boom, Leads &/or Jib Lengths Measuring 175 Ft or Under; Dredge (NOT Performing Work on the Great Lakes); Licensed Boat Pilot (NOT Performing Work on the Great Lakes); Pile Driver. Future Increase(s): Add $1.25/hr on 6/1/2015; Add $1.30/hr on 6/1/2016; Add $1.25/hr on 6/1/2017. Premium Increase(s): DOT PREMIUMS: 1) Pay two times the hourly basic rate on Sunday, New Year's Day, Memorial Day, Independence Day, Labor Day, Thanksgiving Day & Christmas Day. 2) Add $1.50/hr night work premium. See DOT'S website for details about the applicability of this night work premium at: http://www.dot.wi.gov/business/civilrights/laborwages/pwc.htm.	37.22	21.15	58.37

CODE	Fringe Benefits Must Be Paid On All Hours Worked TRADE OR OCCUPATION	HOURLY BASIC RATE OF PAY $	HOURLY FRINGE BENEFITS $	TOTAL $
543	Air Track, Rotary or Percussion Drilling Machine &/or Hammers, Blaster; Automatic Subgrader (Concrete); Backhoe (Track Type) Having a Mfgr.'s Rated Capacity of Under 130,000 Lbs., Backhoe (Mini, 15,000 Lbs. & Under); Boring Machine (Directional, Horizontal or Vertical); Bridge (Bidwell) Paver; Bulldozer or Endloader; Concrete Batch Plant, Batch Hopper; Concrete Breaker (Large, Auto, Vibratory/Sonic, Manual or Remote); Concrete Bump Cutter, Grinder, Planing or Grooving Machine; Concrete Conveyor System; Concrete Laser/Screed; Concrete Paver (Slipform); Concrete Pump, Concrete Conveyor (Rotec or Bidwell Type); Concrete Slipform Placer Curb & Gutter Machine; Concrete Spreader & Distributor; Crane (Carry Deck, Mini) or Truck Mounted Hydraulic Crane (10 Tons or Under); Crane With a Lifting Capacity of 25 Tons or Under; Forestry Equipment, Timbco, Tree Shear, Tub Grinder, Processor; Gradall (Cruz-Aire Type); Grader or Motor Patrol; Grout Pump; Hydro-Blaster (10,000 PSI or Over); Loading Machine (Conveyor); Manhoist; Material or Stack Hoist; Mechanic or Welder; Milling Machine; Post Hole Digger or Driver; Scraper (Self Propelled or Tractor Drawn) 5 cu yds or More Capacity; Shoulder Widener; Sideboom; Skid Rig; Stabilizing or Concrete Mixer (Self-Propelled or 14S or Over); Straddle Carrier or Travel Lift; Tractor (Scraper, Dozer, Pusher, Loader); Tractor or Truck Mounted Hydraulic Backhoe; Trencher (Wheel Type or Chain Type); Tube Finisher; Tugger (NOT Performing Work on the Great Lakes); Winches & A-Frames.	35.72	17.85	53.57
544	Backfiller; Belting, Burlap, Texturing Machine; Broom or Sweeper; Compactor (Self-Propelled or Tractor Mounted, Towed & Light Equipment); Concrete Finishing Machine (Road Type); Environmental Burner; Farm or Industrial Type Tractor; Fireman (Pile Driver & Derrick NOT Performing Work on the Great Lakes); Forklift; Greaser; Jeep Digger; Joint Sawer (Multiple Blade); Launch (NOT Performing Work on the Great Lakes); Lift Slab Machine; Mechanical Float; Mulcher; Power Subgrader; Robotic Tool Carrier (WIth or Without Attachments); Self Propelled Chip Spreader; Shouldering Machine; Skid Steer Loader (With or Without Attachments); Telehandler; Tining or Curing Machine. Future Increase(s): Add $1.25/hr on 6/1/2015; Add $1.30/hr on 6/1/2016; Add $1.25/hr on 6/1/2017. Premium Increase(s): DOT PREMIUMS: 1) Pay two times the hourly basic rate on Sunday, New Year's Day, Memorial Day, Independence Day, Labor Day, Thanksgiving Day & Christmas Day. 2) Add $1.50/hr night work premium. See DOT'S website for details about the applicability of this night work premium at: http://www.dot.wi.gov/business/civilrights/laborwages/pwc.htm.	36.46	21.15	57.61
545	Air Compressor (&/or 400 CFM or Over); Air, Electric or Hydraulic Jacking System; Automatic Belt Conveyor & Surge Bin; Boiler (Temporary Heat); Concrete Proportioning Plant; Crusher, Screening or Wash Plant; Generator (&/or 150 KW or Over); Heaters (Mechanical); High Pressure Utility Locating Machine (Daylighting Machine); Mudjack; Oiler; Prestress Machine; Pug Mill; Pump (3 Inch or Over) or Well Points; Rock, Stone Breaker; Screed (Milling Machine); Stump Chipper; Tank Car Heaters; Vibratory Hammer or Extractor, Power Pack.	35.17	20.40	55.57
546	Fiber Optic Cable Equipment.	28.89	17.95	46.84

CODE	Fringe Benefits Must Be Paid On All Hours Worked TRADE OR OCCUPATION	HOURLY BASIC RATE OF PAY $	HOURLY FRINGE BENEFITS $	TOTAL $
547	Work Performed on the Great Lakes Including Diver; Wet Tender or Hydraulic Dredge Engineer.	41.65	21.71	63.36
548	Work Performed on the Great Lakes Including 70 Ton & Over Tug Operator; Assistant Hydraulic Dredge Engineer; Crane or Backhoe Operator; Hydraulic Dredge Leverman or Diver's Tender; Mechanic or Welder.	41.65	21.71	63.36
549	Work Performed on the Great Lakes Including Deck Equipment Operator or Machineryman (Maintains Cranes Over 50 Tons or Backhoes 115,000 Lbs. or more); Tug, Launch or Loader, Dozer or Like Equipment When Operated on a Barge, Breakwater Wall, Slip, Dock or Scow, Deck Machinery.	35.72	17.85	53.57
550	Work Performed on the Great Lakes Including Deck Equipment Operator; Machineryman or Fireman (Operates 4 Units or More or Maintains Cranes 50 Tons or Under or Backhoes 115,000 Lbs. or Under); Deck Hand, Deck Engineer or Assistant Tug Operator; Off Road Trucks - Great Lakes ONLY.	35.46	20.40	55.86

HEAVY EQUIPMENT OPERATORS
ASPHALT PAVEMENT OR OTHER WORK

CODE	Fringe Benefits Must Be Paid On All Hours Worked TRADE OR OCCUPATION	HOURLY BASIC RATE OF PAY $	HOURLY FRINGE BENEFITS $	TOTAL $
551	Crane, Tower Crane, Pedestal Tower or Derrick, With or Without Attachments, With a Lifting Capacity of Over 100 Tons, Self Erecting Tower Crane With a Lifting Capacity of Over 4,000 Lbs., Crane With Boom Dollies; Crane, Tower Crane, Pedestal Tower or Derrick, With Boom, Leads and/or Jib Lengths Measuring 176 Ft or Over; Master Mechanic.	36.72	20.40	57.12
552	Backhoe (Track Type) Having a Mfgr.'s Rated Capacity of 130,000 Lbs. or Over; Caisson Rig; Crane, Tower Crane, Portable Tower, Pedestal Tower or Derrick, With or Without Attachments, With a Lifting Capacity of 100 Tons or Under, Self-Erecting Tower Crane With a Lifting Capacity Of 4,000 Lbs. & Under; Crane, Tower Crane, Portable Tower, Pedestal Tower or Derrick, With Boom, Leads &/or Jib Lengths Measuring 175 Ft or Under; Dredge (NOT Performing Work on the Great Lakes); Licensed Boat Pilot (NOT Performing Work on the Great Lakes); Pile Driver. Future Increase(s): Add $1.25/hr on 6/1/2015; Add $1.30/hr on 6/1/2016; Add $1.25/hr on 6/1/2017. Premium Increase(s): DOT PREMIUMS: 1) Pay two times the hourly basic rate on Sunday, New Year's Day, Memorial Day, Independence Day, Labor Day, Thanksgiving Day & Christmas Day. 2) Add $1.50/hr night work premium. See DOT'S website for details about the applicability of this night work premium at: http://www.dot.wi.gov/business/civilrights/laborwages/pwc.htm.	37.22	21.15	58.37

CODE	Fringe Benefits Must Be Paid On All Hours Worked TRADE OR OCCUPATION	HOURLY BASIC RATE OF PAY $	HOURLY FRINGE BENEFITS $	TOTAL $
553	Air, Track, Rotary or Percussion Drilling Machine &/or Hammers, Blaster; Asphalt Heater, Planer & Scarifier; Asphalt Milling Machine; Asphalt Screed; Backhoe (Track Type) Having a Mfgr.'s Rated Capacity of Under 130,000 Lbs., Backhoe (Mini, 15,000 Lbs. & Under); Bituminous (Asphalt) Plant & Paver, Screed; Boring Machine (Directional, Horizontal or Vertical); Bulldozer or Endloader; Concrete Breaker (Large, Auto, Vibratory/Sonic, Manual or Remote); Concrete Conveyor System; Concrete Laser/Screed; Concrete Slipform Placer Curb & Gutter Machine; Crane (Carry Deck, Mini) or Truck Mounted Hydraulic Crane (10 Tons or Under); Crane With a Lifting Capacity of 25 Tons or Under; Forestry Equipment, Timbco, Tree Shear, Tub Grinder, Processor; Gradall (Cruz-Aire Type); Grader or Motor Patrol; Hydro-Blaster (10,000 PSI or Over); Loading Machine (Conveyor); Manhoist; Material or Stack Hoist; Mechanic or Welder; Milling Machine; Post Hole Digger or Driver; Railroad Track Rail Leveling Machine, Tie Placer, Extractor, Tamper, Stone Leveler or Rehabilitation Equipment; Roller (Over 5 Ton); Scraper (Self Propelled or Tractor Drawn) 5 cu yds or More Capacity; Shoulder Widener; Sideboom; Skid Rig; Stabilizing or Concrete Mixer (Self-Propelled or 14S or Over); Tractor (Scraper, Dozer, Pusher, Loader); Tractor or Truck Mounted Hydraulic Backhoe; Trencher (Wheel Type or Chain Type); Tube Finisher; Tugger (NOT Performing Work on the Great Lakes); Winches & A-Frames. Future Increase(s): Add $1.25/hr on 6/1/2015; Add $1.30/hr on 6/1/2016; Add $1.25/hr on 6/1/2017.	36.17	20.80	56.97
554	Backfiller; Broom or Sweeper; Compactor (Self-Propelled or Tractor Mounted, Towed & Light Equipment); Concrete Finishing Machine (Road Type); Environmental Burner; Farm or Industrial Type Tractor; Fireman (Asphalt Plant, Pile Driver & Derrick NOT Performing Work on the Great Lakes); Forklift; Greaser; Hoist (Tugger, Automatic); Jeep Digger; Joint Sawer (Multiple Blade); Launch (NOT Performing Work on the Great Lakes); Lift Slab Machine; Mechanical Float; Mulcher; Power Subgrader; Robotic Tool Carrier (With or Without Attachments); Roller (Rubber Tire, 5 Ton or Under); Self-Propelled Chip Spreader; Shouldering Machine; Skid Steer Loader (With or Without Attachments); Telehandler. Future Increase(s): Add $1.25/hr on 6/1/2015; Add $1.30/hr on 6/1/2016; Add $1.25/hr on 6/1/2017.	36.17	20.80	56.97

CODE	Fringe Benefits Must Be Paid On All Hours Worked TRADE OR OCCUPATION	HOURLY BASIC RATE OF PAY $	HOURLY FRINGE BENEFITS $	TOTAL $
555	Air Compressor (&/or 400 CFM or Over); Air, Electric or Hydraulic Jacking System; Augers (Vertical & Horizontal); Automatic Belt Conveyor & Surge Bin; Boiler (Temporary Heat); Crusher, Screening or Wash Plant; Generator (&/or 150 KW or Over); Heaters (Mechanical); High Pressure Utility Locating Machine (Daylighting Machine); Mudjack; Oiler; Prestress Machine; Pug Mill; Pump (3 Inch or Over) or Well Points; Rock, Stone Breaker; Screed (Milling Machine); Stump Chipper; Tank Car Heaters; Vibratory Hammer or Extractor, Power Pack. Future Increase(s): Add $1.25/hr on 6/1/2015; Add $1.30/hr on 6/1/2016; Add $1.25/hr on 6/1/2017. Premium Increase(s): DOT PREMIUMS: 1) Pay two times the hourly basic rate on Sunday, New Year's Day, Memorial Day, Independence Day, Labor Day, Thanksgiving Day & Christmas Day. 2) Add $1.50/hr night work premium. See DOT'S website for details about the applicability of this night work premium at: http://www.dot.wi.gov/business/civilrights/laborwages/pwc.htm.	36.17	21.15	57.32
556	Fiber Optic Cable Equipment.	27.89	17.20	45.09

RESIDENTIAL OR AGRICULTURAL CONSTRUCTION

Includes single family houses or apartment buildings of no more than four (4) stories in height and all buildings, structures or facilities that are primarily used for agricultural or farming purposes, excluding commercial buildings. For classification purposes, the exterior height of a residential building, in terms of stories, is the primary consideration. All incidental items such as site work, driveways, parking lots, private sidewalks, private septic systems or sewer and water laterals connected to a public system and swimming pools are included within this definition. Residential buildings of five (5) stories and above are NOT included within this definition.

SKILLED TRADES

Fringe Benefits Must Be Paid On All Hours Worked

CODE	TRADE OR OCCUPATION	HOURLY BASIC RATE OF PAY $	HOURLY FRINGE BENEFITS $	TOTAL $
101	Acoustic Ceiling Tile Installer	33.07	16.07	49.14
102	Boilermaker	32.05	28.04	60.09
103	Bricklayer, Blocklayer or Stonemason	23.89	4.78	28.67
104	Cabinet Installer	18.00	0.00	18.00
105	Carpenter	25.00	6.52	31.52
106	Carpet Layer or Soft Floor Coverer	30.00	0.00	30.00
107	Cement Finisher	26.60	3.99	30.59
108	Drywall Taper or Finisher	18.00	5.75	23.75
109	Electrician Premium Increase(s): DOT PREMIUM: Pay two times the hourly basic rate on Sunday, New Year's Day, Memorial Day, Independence Day, Labor Day, Thanksgiving Day & Christmas Day.	33.93	22.77	56.70
110	Elevator Constructor	23.26	0.00	23.26
111	Fence Erector	19.00	1.34	20.34
112	Fire Sprinkler Fitter	39.00	18.00	57.00
113	Glazier Future Increase(s): Add $.75/hr eff. 06/01/2015; Add $.90/hr eff. 06/01/2016	37.07	14.42	51.49
114	Heat or Frost Insulator	33.43	25.81	59.24
115	Insulator (Batt or Blown)	20.00	0.00	20.00
116	Ironworker	31.50	11.33	42.83
117	Lather	25.00	6.52	31.52
119	Marble Finisher	20.00	0.52	20.52
120	Marble Mason	23.89	4.78	28.67
121	Metal Building Erector	18.00	5.88	23.88

CODE	Fringe Benefits Must Be Paid On All Hours Worked TRADE OR OCCUPATION	HOURLY BASIC RATE OF PAY $	HOURLY FRINGE BENEFITS $	TOTAL $
123	Overhead Door Installer	28.00	1.61	29.61
124	Painter	18.00	4.50	22.50
125	Pavement Marking Operator	18.75	2.47	21.22
129	Plasterer	22.00	0.00	22.00
130	Plumber	36.47	20.47	56.94
132	Refrigeration Mechanic	17.00	13.52	30.52
133	Roofer or Waterproofer Future Increase(s): Add $1.25/hr eff. 06/01/2015; Add $1.25/hr eff. 06/01/2016	29.65	18.15	47.80
134	Sheet Metal Worker	26.13	20.22	46.35
135	Steamfitter	23.62	16.12	39.74
137	Teledata Technician or Installer	18.00	28.48	46.48
138	Temperature Control Installer	22.00	2.45	24.45
139	Terrazzo Finisher	20.00	0.52	20.52
140	Terrazzo Mechanic	30.71	16.52	47.23
141	Tile Finisher	23.77	16.52	40.29
142	Tile Setter	30.50	0.68	31.18
143	Tuckpointer, Caulker or Cleaner	14.00	8.75	22.75
146	Well Driller or Pump Installer	29.00	0.00	29.00
147	Siding Installer	17.00	0.65	17.65

TRUCK DRIVERS

CODE	Fringe Benefits Must Be Paid On All Hours Worked TRADE OR OCCUPATION	HOURLY BASIC RATE OF PAY $	HOURLY FRINGE BENEFITS $	TOTAL $
201	Single Axle or Two Axle	17.25	5.70	22.95
203	Three or More Axle	23.49	14.07	37.56
205	Pavement Marking Vehicle	20.85	11.02	31.87
207	Truck Mechanic	23.49	14.07	37.56

LABORERS

CODE	Fringe Benefits Must Be Paid On All Hours Worked TRADE OR OCCUPATION	HOURLY BASIC RATE OF PAY $	HOURLY FRINGE BENEFITS $	TOTAL $
301	General Laborer	15.00	10.33	25.33
302	Asbestos Abatement Worker	16.50	8.21	24.71
303	Landscaper	12.00	0.00	12.00
311	Fiber Optic Laborer (Outside, Other Than Concrete Encased)	17.71	16.01	33.72
315	Final Construction Clean-Up Worker	10.00	2.21	12.21

HEAVY EQUIPMENT OPERATORS RESIDENTIAL OR AGRICULTURAL CONSTRUCTION

CODE	Fringe Benefits Must Be Paid On All Hours Worked TRADE OR OCCUPATION	HOURLY BASIC RATE OF PAY $	HOURLY FRINGE BENEFITS $	TOTAL $
557	Asphalt Heater, Planer & Scarifier; Asphalt Milling Machine; Asphalt Screed; Backhoe (Track Type); Backhoe (Mini, 15,000 Lbs. & Under); Bituminous (Asphalt) Plant & Paver, Screed; Boring Machine (Directional, Horizontal or Vertical); Bulldozer or Endloader; Concrete Breaker (Large, Auto, VIbratory/Sonic, Manual or Remote); Concrete Bump Cutter, Grinder, Planing or Grooving Machine; Concrete Conveyor System; Concrete Laser/Screed; Concrete Paver (Slipform); Concrete Pump, Concrete Conveyor (Rotec or Bidwell Type); Concrete Slipform Placer Curb & Gutter Machine; Concrete Spreader & DIstributor; Crane (Carry Deck, Mini) or Truck Mounted Hydraulic Crane (10 Tons or Under); Crane With a Lifting Capacity of 25 Tons or Under; Crane, Shovel, Dragline, Clamshells; Forestry Equipment, TImbco, Tree Shear, Tub Grinder, Processor; Grader or Motor Patrol; Grout Pump; Hydro-Blaster (10,000 PSI or Over); Loading Machine (Conveyor); Manhoist; Material or Stack Hoist; Mechanic or Welder; Milling Machine; Roller (Over 5 Ton); Scraper (Self Propelled or Tractor Drawn) 5 cu yds or More Capacity; Shoulder Widener; Skid Rig; Stabilizing or Concrete Mixer (Self-Propelled or 14S or Over); Tractor (Scraper, Dozer, Pusher, Loader); Tractor or Truck Mounted Hydraulic Backhoe; Tractor or Truck Mounted Hydraulic Crane (10 Tons or Under); Trencher (Wheel Type or Chain Type); WInches & A-Frames.	36.06	19.02	55.08

558	Air Compressor (&/or 400 CFM or Over); Air, Electric or Hydraulic Jacking System; Backfiller; Belting, Burlap, Texturing Machine; Boiler (Temporary Heat); Broom or Sweeper; Compactor (Self-Propelled or Tractor Mounted, Towed & LIght Equipment); Concrete Finishing Machine (Road Type); Farm or Industrial Type Tractor; Forklift; Generator (&/or 150 KW or Over); Heaters (Mechanical); High Pressure Utility Locating Machine (Daylighting Machine); Jeep Digger; Lift Slab Machine; Mulcher; Oiler; Post Hole Digger or Driver; Power Subgrader; Pump (3 Inch or Over) or Well Points; Robotic Tool Carrier (With or Without Attachments); Rock, Stone Breaker; Roller (Rubber Tire, 5 Tons or Under); Screed (Milling Machine); Self Propelled Chip Spreader; Shouldering Machine; Skid Steer Loader (With or Without Attachments); Stump Chipper; Telehandler; Vibratory Hammer or Extractor, Power Pack.	36.79	18.81	55.60

********** END OF RATES **********

Department of Public Works General Specifications

Provisions of the Department of Public Works General Specifications dated January 31, 1992, and subsequent addenda, except as may be modified or expanded upon in this Invitation to Bid, shall apply to all contractors and subcontractors working on the project. For a copy, please go to the following link and click on "General Specifications"

http://www.mpw.net/services/bids_home

Specifications

Department of Public Works
Official Notice #138

Century City, Building 36
Project Area E
Interior Lighting Improvements
3533 North 27th Street,
Milwaukee, WI

Technical Specifications

DIVISION 01- GENERAL REQUIREMENTS

01 10 00	Summary of Work
01 31 19	Project Meetings
01 33 00	Submittals and Requests for Information
01 40 00	Quality Control
01 57 00	Environmental Protection
01 70 00	Contract Closeout
01 71 23	Field Engineering

APPENDIX A - DRAWINGS

- GRAEF Drawings – Sheet T100
- GRAEF Drawings – Sheet A101
- Leedy & Petzold Associates, LLC Drawing – Sheet E 101

APPENDIX B – CUT SHEETS

- Isolite High-Output MR16 Emergency Light

SECTION 01 10 00
SUMMARY OF WORK

PART 1 – GENERAL

1.01 RELATED DOCUMENTS

A. All of the Contract Documents including, Invitation to Bid, Instructions to Bidders, Forms, General Specifications, Technical Specifications and Drawings and Appendices apply to the Work in this Section and are hereby made part of this Section.

B. The documents in Appendix A of the Specifications.

1.02 REFERENCES

A. State of Wisconsin Commercial Building Code, Current Edition.

B. ICC International Existing Building Code, 2009 Edition

1.03 DESCRIPTION OF WORK

A. Generally, the Work under this contract includes providing all labor, materials, equipment and services to modify the lighting in the eastern section of the Century City Building 36 (Site) at 3533 North 27st Street in Milwaukee, WI. The Work is summarized (though not completely) below:
   1. Install lighting fixtures, including, fixture supports, wiring and controls.
   2. Install emergency lighting and exit signs.
   3. Install electrical breakers in existing panelboard.

B. Contractor shall be responsible for all temporary facilities required to execute the Work, including, but not limited to, temporary sanitary facilities for Contractor's workers use.

C. The Work includes all necessary coordination and cooperation with utility companies, City agencies, regulatory agencies and other City's contractors working on the Site, and with the tenants that occupy the building.

D. Contractor is responsible for clearing the site of any debris generated by the Work, all equipment related to the Work and restoring to its original condition, any facilities or items, not included in the Work, that are damaged as a result of activities related to the Work.

E. Contractor is responsible for site safety related to the Work and shall comply in all respects with all applicable Federal, State and Local safety regulations including current OSHA regulations.

1.04 WORK BY OTHERS

A. All work noted as "by Others" in the Drawings or Specifications.

1.05 WORK NOT INCLUDED IN CONTRACT

A. Work mentioned in the Drawings and Technical Specifications as not being a part of this contract.

1.06 WORK SEQUENCE

A. Contractor shall construct the Work in a sequence that efficiently accommodates all of the Work requirements of the Contract Documents. The Contractor shall be wholly responsible for sequencing the work and shall submit a work sequence plan to the City for approval, prior to commencement of the Work.

B. Contractor shall sequence the Work to coordinate with work being done by Others.

1.07 COORDINATION WITH OTHER CONTRACTORS ONSITE

A. The Contractor shall coordinate, as provided in the Contract Documents and as directed by the City, with other contractors operating on the project site.

1.08 CONTRACTOR'S USE OF THE PREMISES

A. The Contractor shall submit, for City approval, documents indicating the proposed location of storage, staging, site office and other operations.

1. Once the location of the Contractor's storage, staging, site office and other operations is approved by the City, the Contractor shall be responsible for the location.
    a. The City will provide general security for the Century City site but the Contractor is responsible for the security of Contractor's equipment and Contractor's other property on the Site.

B. The Contractor's use of the site, including the areas approved by the City for Contractor's use, is limited by:

1. The City's rights to perform work, employ separate contractors to perform work and to provide access to the City's visitors at City's convenience.
2. Regulatory requirements for exiting the building.
3. The building's tenants' rights to access the Site.

1.09 SITE CLEANING

A. Contractor shall keep the site clean of rubbish, in accordance with the General Conditions and applicable regulations, throughout the duration of the project.

B. Maintain the site in a manner to comply with codes, ordinances, regulations, and anti-pollution laws.

1. Provide approved on-site containers for the collection of waste materials, debris, and rubbish.

C. Remove waste materials, debris, and rubbish from the site at the end of the Work and dispose of in a legal manner away from the site.

PART 2 – PRODUCTS (Not Used)

PART 3 – EXECUTION (Not Used)

END OF SECTION

SECTION 01 31 19
PROJECT MEETINGS

PART 1 – GENERAL

1.01 RELATED DOCUMENTS

A. All of the Contract Documents including the General Specifications and General Requirements apply to the work in this Section.

1.02 SCOPE OF WORK

A. The City will conduct project meetings in which the Contractor is required to participate and make available the appropriate personnel. These meetings include, but are not limited to the following:

1. Pre-construction Project Meeting.
2. Project Progress Meetings.
3. Other Project Meetings.

1.03 PRE-CONSTRUCTION PROJECT MEETINGS

A. The City will schedule a pre-construction meeting within 5 days of issuance of the Notice to Proceed, to be attended by all project managers, Contractor's field superintendent other representatives of the Contractor and their major subcontractors. Prior to this time, Contractor shall make specified pre-construction submittals including the following:

1. Typed list of Contractor's sub-contractors, consultants and personnel, with names, titles, addresses, email addresses, and telephone numbers. Indicate at least two personnel who shall be the emergency contacts for the Project. Provide landline and mobile telephone information for the emergency contacts.
2. Contractor’s site specific health and safety plan.
3. Typed list of the submittals required for the work as indicated in the individual Specification Sections, including a schedule for the submittals.
4. Certificates of insurance.
5. Schedule of Values.
6. Permits.
7. Specified bonds.

B. The pre-construction meeting agenda shall include the following:

1. Communication lines between all parties including written, electronic and verbal means.
2. Processing applications for payment, including the format, schedule of values, frequency of applications, retainage, and other administrative requirements.
3. Processing and distribution of submittals.
4. Maintenance of as-built and record documents.

5. Procedure for field changes, change estimates, contract modification orders, etc.
6. Site security.
7. Meeting schedule.

1.04. PROJECT PROGRESS MEETINGS

A. The City will conduct progress meetings at the Project site at bi-weekly intervals to address matters related to the Work including but not limited to, safety, schedule, cost, changes and issues. The Contractor shall at least have its project manager present at these meetings.

1.05. OTHER PROJECT MEETINGS

A. The City will conduct other project meetings, at any time, as required, in its judgment, to achieve the project objectives. These meetings could include, but are not limited to: coordination meetings, issue meetings, project payment meetings and substantial completion and completion meetings.

PART 2 – PRODUCTS (Not Used)

PART 3 – EXECUTION (Not Used)

END OF SECTION

SECTION 01 33 00
SUBMITTALS AND REQUESTS FOR INFORMATION

PART 1 – GENERAL

1.01 RELATED DOCUMENTS

A. All of the Contract Documents, including General Specifications, Specifications, Appendices, Attachments and Drawings.
   1. This Section contains general information that applies to all work performed under the Contract and is inherently made a part of each specification section.

1.02 SUMMARY OF WORK

A. The Scope of Work in this section includes, but is not limited to, the following:
   1. Product Data and Samples.
   2. Project schedule.
   3. Work logistics and plans.
   4. Construction photographs.
   5. Contractor's Request for Information (RFI).
   6. Any information needed to complete the Work.
   7. Worker certifications
   8. Contaminated/hazardous material disposal manifests
   9. Dust Control Plan

1.03 PRODUCT DATA AND SAMPLES

A. Required Submittals: Submit, product data, initial selection samples, verification samples, schedules and all other submittals as specified for each part of the work.
   1. Substitutions: Where a submittal proposes a material or product different than specified, clearly note substitution on the submittal for each item. Contractor's submittal and City's acceptance of submittals is not a valid request for, nor an approval of, a substitution, unless the Contractor presents this information when first submitted as a formal "Request for Substitution".

B. Submittal Schedule: Within 10 days after award of contract and before first application for payment, prepare list of submittals in chronological sequence showing all submittals and proposed date first due at City or its Agent's office and proposed date due to be returned to Contractor. Use Submittal Reference Numbers on submittal schedule as indicated below. Allow proper time for reviewing each submission and time for resubmission, if needed. Make first submission of a submittal no more than 7 days after notice of Award of Contract.

C. Contractor's Preparation of Submittals: Modify and customize all submittals to show interface and coordination with adjacent work and actual field conditions. Identify each submittal with name of project, date of origination, Contractor's name, subcontractor's

name, manufacturer's name, fabricator's name, submittal name and description, and individual Submittal Reference. Use the Submittal Reference Number exclusively in communications about submittals. Clearly note and fully describe all qualifications and all deviations from the requirements of the Contract Documents. Stamp, date, and sign each submittal to show the Contractor's review and approval of each submittal before delivery to City or its Agent's office. Unstamped, undated or unsigned submittals will be returned without action by the City or its Agent. Leave minimum 4" x 6" open space for City or its Agent's stamp and notations.

D. Product Data: Provide manufacturer's printed literature including, without limitation, manufacturer's standard printed description of product, materials and construction, recommendations for application and use, certification of compliance with standards, instructions for installation, and special coordination requirements. Collect data into one submittal for each unit of work or system; clearly mark each copy with ink to show which choices and options are applicable to project.
    1. Product Data Submittal Quantities: Submit at least five copies. City or its Agent will return two copies to the Contractor if not rejected; if rejected, only one copy will be returned. Provide, reproduce, and distribute additional copies as needed.
    2. Installer Copy: Verify that the Installer has a current copy of the relevant product data, including installation instructions, before permitting installation to begin.

E. Samples: Provide at least two sample units for each sample submission. Sample units shall be identical to final materials and products installed in the work and shall clearly show the complete and full range of finish, color, texture and appearance variations expected. Work in the field which falls outside the accepted range shown by the samples shall be rejected. Where indicated, prepare samples to match City or its Agent's sample. Label each sample with description, source, varietal name or manufacturer's name and model number. City or its Agent will review samples for confirmation of visual design intent, color, pattern, texture and type only; City or its Agent will not test samples for compliance with other Contract requirements that shall remain the exclusive responsibility of the Contractor.
    1. Initial Selection Samples Submittal Quantities: For initial selection purposes, submit one set of samples showing the complete range of colors and finishes available.
    2. Verification Samples Submittal Quantities: For verification of an initial selection, submit two sets of samples; one set will be returned to Contractor to be maintained at project site for quality control comparisons. Discard rejected samples; do not store at the site.
    3. Additional Samples: The City and City or its Agent reserve the right to require additional samples or samples not listed in the Contract Documents. Provide these samples as indicated for specified samples.
    4. If samples are rejected, Contractor shall provide, at no additional cost, additional samples until accepted by the City or its Agent.

F. Timing of Submittals: Submit submittals in a timely fashion to allow at least 5 business days for the City or its Agent's review and handling. For submittals which have to be reviewed by the City or its Agent and his/ her project team sub-consultants add five more

business days for each consultant.

1. Testing: Submit samples and materials for testing sufficiently in advance of need for use on Project. Allow adequate time for testing and, if necessary, re-testing.
2. Allow sufficient time for review and acceptance of mock-ups/ sample panels before performing work.

G. City or its Agent's Action on Submittals: City or its Agent will review submittals, stamp with "action stamp", mark action, and return to Contractor. City or its Agent will review submittals only for conformance with the design concept of the project. The Contractor is responsible for confirming compliance with other Contract requirements, including without limitation, performance requirements, field dimensions, fabrication methods, means, methods, techniques, sequences and procedures of construction, and coordination with other work. The City or its Agent's review and approval of submittals shall be held to the limitations stated in the General Conditions of the Contract for Construction. In no case shall approval or acceptance by the City or its Agent be interpreted as a release of Contractor of his responsibilities to fulfill all of the requirements of the Contract Documents. City or its Agent's action will be one of the following:

1. Reviewed: When so marked, City or its Agent and his/ her sub-consultants are indicating that they have reviewed the submittal but do not assume responsibility for the use of that submittal.
2. Accepted: When so marked, the work covered by the submittal may proceed provided it complies with the requirements of the Contract Documents. Acceptance of the work will be based on that compliance.
3. Accepted Subject to Condition as Noted: When so marked, the work covered by the submittal may proceed provided it complies with the requirements of the Contract Documents and the City or its Agent's notes and comments. Acceptance of the work shall be based on that compliance.
4. Resubmission Required: Do not permit submittals with this action marking to be used at the project site or elsewhere where work is in progress.
   a. Submit Additional Item as Noted: When so marked, resubmit the item[s] noted.
   b. Revise Submission as Noted and Resubmit: When so marked, make corrections or changes to original submittal or prepare a new submittal and resubmit to City or its Agent for additional review.
5. Disapproved: When so marked, prepare a new submittal and resubmit to City or its Agent for review. Do not permit submittals with this action marking to be used at the project site or elsewhere where work is in progress.
6. Incomplete, illegible, erroneous or other faulty submittals shall be returned to Contractor without any submittal designation. The Contractor shall correct the submittal and return it for additional review.
7. Distribution of submittals: When submittal is noted "accepted" or "accepted subject to conditions as noted", make prints or copies and distribute to City, Subcontractors involved, and to all other parties requiring information from the submittal for performance or coordination of related work within 10 calendar

days after date of City or its Agent's action. Provide and pay for all copies of submittals as reasonably necessary for proper completion of the Work. Print shop drawings for distribution only from the final approved reproducible drawing. Maintain one complete set of submittals at the project site in a neat, organized file.

1.04 MANUFACTURER'S CERTIFICATES AND TEST RESULTS

A. Submit manufacturer's certificates required by individual Sections.

B. Indicate that the product complies with or exceeds specified requirements. Submit supporting reference data, affidavits and/or certifications as appropriate.

C. Certificates that are not current must be acceptable to the City or its Agent.

1.05 WORKERS' CERTIFICATION

A. Contractor is to submit to the City or its Agent, documentation that proves all workers involved in asbestos abatement or any hazardous material handling work have the required certifications.

B. Contractor is to submit to the City or its Agent, documentation that proves all workers involved in soil remediation or any hazardous material handling work have the required 40-hour HAZWOPER training, and annual refresher training, if required.

C. Contractor is to submit to the City or its Agent, documentation that proves that all workers are certified as to discipline or trade as required in permits issued to complete the work

1.06 REQUESTS FOR INFORMATION

A. When the Contractor encounters any question concerning the Work or when he/ she requires additional information to perform the Work, the Contractor shall submit a written Request for Information (RFI), on the approved form, as attached, to the City or its Agent. The RFI shall contain the project name, names and addresses of the Contractor, City and City or its Agent, RFI number, related drawings and specification numbers, nature of the question, space for a reply, and due date for the response.

B. The Contractor shall number the RFI's sequentially and shall keep a record of all RFI s and their responses.

C. Each RFI shall pertain to one topic only. Topics shall not be mixed on RFIs.

PART 2 – PRODUCTS (Not Used)

PART 3 – EXECUTION (Not Used)

END OF SECTION

SECTION 01 40 00
QUALITY REQUIREMENTS

PART 1 – GENERAL

1.01 RELATED DOCUMENTS

A. All of the Contract Documents, including General Specifications, Specifications and Drawings.

B. This Section contains general information that applies to all work performed under the Contract and is inherently made a part of each specification section.

1.02 SUMMARY OF WORK

A. The Contractor shall procure permits and implement procedures, including testing as required to ensure that all Work complies with the applicable regulatory requirements and the quality requirements of the Contract Documents.
   1. The City may arrange for a qualified Testing Laboratory or other inspection or measurement services, to verify compliance with requirements specified or indicated. These services do not relieve Contractor of responsibility for compliance with the Contract Document requirements.
   2. Specified tests, inspections, and related actions do not limit Contractor's quality-control procedures that facilitate compliance with the Contract Document requirements.
   3. Requirements for Contractor to provide quality-control services required by City or its Agent, or authorities having jurisdiction are not limited by provisions of this Section.

B. See the respective sections of the Technical Specifications for specific test and inspection requirements.

C. Contractor shall provide, quality-control services to verify conformance of the Work with the requirements of the Specifications.

1.03 PERMITS

A. Contractor shall procure applicable local, state, and federal permits for the Work. Contractor is responsible for verifying that all applicable permits have been obtained for the Work.
   1. Contractor shall conform to the existing Century City site WPDES permit

B. The contractor shall be responsible for implementing and maintaining the requirements of applicable permits whether the permit was obtained by Contractor or by City.

1.04 DEFINITIONS

A. Quality-Assurance Services: Activities, actions, and procedures performed before and

during execution of the Work to guard against defects and deficiencies and ensure that proposed construction complies with requirements.

B. Quality-Control Services: Tests, inspections, procedures, and related actions during and after execution of the Work to evaluate that completed construction comply with requirements. Services do not include contract enforcement activities performed by City or its Agent.

C. Testing Agency: An entity engaged to perform specific tests, inspections, or both. Testing laboratory shall mean the same as testing agency.

1.05 SUBMITTALS

A. Qualification Data: For testing agencies specified in "Quality Assurance" Article to demonstrate their capabilities and experience. Include proof of qualifications in the form of a recent report on the inspection of the testing agency by a recognized authority.

B. Reports: When required by the Contract Documents or when requested by the City, prepare and submit certified written reports that include the following:
   1. Date of issue.
   2. Project title and number.
   3. Name, address, and telephone number of testing agency.
   4. Dates and locations of samples and tests or inspections.
   5. Names of individuals making tests and inspections.
   6. Description of the Work and test and inspection method.
   7. Identification of product and Specification Section.
   8. Complete test or inspection data.
   9. Test and inspection results and an interpretation of test results.
   10. Ambient conditions at time of sample taking and testing and inspecting.
   11. Comments or professional opinion on whether tested or inspected Work complies with the Contract Document requirements.
   12. Name and signature of laboratory inspector.
   13. Recommendations on retesting and re-inspecting.

C. Permits, Licenses, and Certificates: For City's records, submit copies of permits, licenses, certifications, inspection reports, releases, jurisdictional settlements, notices, receipts for fee payments, judgments, correspondence, records, and similar documents, established for compliance with standards and regulations bearing on performance of the Work.

1.06 QUALITY ASSURANCE

A. Professional Engineer Qualifications: A professional engineer who is legally qualified to practice in jurisdiction where Project is located and who is experienced in providing engineering services of the kind indicated. Engineering services are defined as those performed for installations of the system, assembly, or products that are similar to those indicated for this Project in material, design, and extent.

B. Testing Agency Qualifications: An agency with the experience and capability to conduct testing and inspecting indicated, as documented by ASTM E 548, and that specializes in types of tests and inspections to be performed.

1.07 QUALITY CONTROL

A. City Responsibilities: Where quality-control services are indicated as City's responsibility, City will engage a qualified testing agency to perform these services.
   1. City will furnish Contractor with names addresses, and telephone numbers of testing agencies engaged and a description of the types of testing and inspecting they are engaged to perform.
   2. Costs for retesting and re-inspecting construction that replaces or is necessitated by work that failed to comply with the Contract Documents will be charged to Contractor.

B. Contractor Responsibilities: Unless otherwise indicated, provide quality-control services specified and required by authorities having jurisdiction.
   1. Where services are indicated as Contractor's responsibility, engage a qualified testing agency to perform these quality-control services. Contractor shall not employ the same entity engaged by City, unless agreed to in writing by City.
   2. Notify testing agencies at least 24 hours in advance of time when Work that requires testing or inspecting will be performed.
   3. Where quality-control services are indicated as Contractor's responsibility, submit a certified written report, in duplicate, of each quality-control service.
   4. Testing and inspecting requested by Contractor and not required by the Contract Documents are Contractor's responsibility.
   5. Submit additional copies of each written report directly to authorities having jurisdiction, when they so direct.

C. Retesting/Re-inspecting: Regardless of whether original tests or inspections were Contractor's responsibility, provide quality-control services, including retesting and re-inspecting, for construction that revised or replaced Work that failed to comply with requirements established by the Contract Documents.

D. Testing Agency Responsibilities:
   1. Cooperate with the City or its Agent, and Contractor in performance of duties. Provide qualified personnel to perform required tests and inspections.
   2. Notify City or its Agent and Contractor promptly of irregularities or deficiencies observed in the Work during performance of its services.
   3. Interpret tests and inspections and state in each report whether tested and inspected work complies with or deviates from requirements.
   4. Submit a certified written report, in duplicate of each test, inspection, and similar quality-control service through Contractor.
   5. The testing agency shall not release, revoke, alter, or increase requirements of the Contract Documents or approve or accept any portion of the Work.
   6. The testing agency shall not perform any duties of Contractor.

E. Associated Services: Cooperate with agencies performing required tests, inspections, and similar quality-control services, and provide reasonable auxiliary services as requested. Notify agency sufficiently in advance of operations to permit assignment of personnel. Provide the following:
   1. Access to the Work.
   2. Incidental labor and facilities necessary to facilitate tests and inspections.
   3. Adequate quantities of representative samples of materials that require testing and inspecting. Assist agency in obtaining samples.
   4. Facilities for storage and field-curing of test samples.
   5. Preliminary design mix proposed for use for material mixes that require control by testing agency.

F. Coordination: Coordinate sequence of activities to accommodate required quality-assurance and quality-control services with a minimum of delay and to avoid necessity of removing and replacing construction to accommodate testing and inspecting.

PART 2 – PRODUCTS (Not Used)

PART 3 – EXECUTION

3.01 REPAIR AND PROTECTION

A. General: On completion of testing, inspecting, sample taking, and similar services, repair damaged construction and restore substrates and finishes.

B. Protect construction exposed by or for quality-control service activities.

C. Repair and protection are Contractor's responsibility, regardless of the assignment of responsibility for quality-control services.

END OF SECTION

SECTION 01 57 00
ENVIRONMENTAL PROTECTION

PART 1 - GENERAL

1.01 SUMMARY

A. Contractor, in executing Work, shall maintain Work areas on- and off-site free from environmental pollution that would be in violation of federal, state or local regulations.

B. Payment:
   1. Work specified in this section is incidental to the Work and should be included as part of appropriate lump sum or unit prices specified in Bid Form.

1.02 RELATED SECTIONS

A. All sections of these Specifications are related to this section.

1.03 REFERENCES

A. City of Milwaukee Code of Ordinances Vol. 2, Chapter 290 – Erosion Control

B. Wisconsin Department of Transportation Standard Specification for Highway and Structure Construction

C. WPDES Permit.

1.04 PROTECTION OF SEWERS

A. Prevent construction material, pavement, concrete, earth or other debris from entering existing culverts or sewer structures.

1.05 DISPOSAL OF EXCESS EXCAVATED AND OTHER WASTE MATERIALS

A. Excess excavated material not required or unsuitable for backfill, and other waste material shall be disposed of in accordance with state and local solid and hazardous waste regulatory requirements.

B. Provide watertight conveyance for liquid, semi-liquid or saturated solids which tend to bleed during transport. Liquid loss from transported materials is not permitted, whether being delivered to construction site or hauled away for disposal. Fluid materials hauled for disposal must be specifically acceptable at selected disposal site.

1.06 PROTECTION OF AIR QUALITY

A. Minimize air pollution by use of properly operating combustion emission control devices on construction vehicles and equipment and encourage shutdown of motorized equipment not

in use.

B. Do not burn trash on construction site.

C. If temporary heating devices are necessary for protection of Work, they shall not cause air pollution.

1.08 THAWING OF FROZEN GROUND

A. Obtain permit from appropriate local authority before building fire to thaw frozen ground, and comply with conditions of permit.

B. Use fuel which does not create air pollution or inconvenience public.

C. Engineer reserves right to prohibit fires for thawing whenever deemed undesirable.

1.09 USE OF CHEMICALS

A. Chemicals used during project construction or furnished for project operation, whether herbicide, pesticide, disinfectant, polymer, reactant or of other classification, shall be approved by U.S. EPA or U.S. Department of Agriculture or any other applicable regulatory agency.

B. Use and disposal of chemicals and residues shall comply with manufacturer's instructions.

1.10 NOISE CONTROL

A. Conduct operations to cause least annoyance to residents in vicinity of Work, and comply with applicable local ordinances.

B. Equip compressors, hoists, and other apparatus with mechanical devices necessary to minimize noise and dust. Equip compressors with silencers on intake lines.

C. Equip gasoline or oil-operated equipment with silencers or mufflers on intake and exhaust lines.

D. Line storage bins and hoppers with material that will deaden sounds.

E. Conduct operation of dumping rock and of carrying rock away in trucks so as to cause minimum of noise and dust.

F. Route vehicles carrying rock, concrete or other material over such streets as will cause least annoyance to public and do not operate on public streets between hours of 6:00 p.m. and 7:00 a.m., or on Saturdays, Sundays or legal holidays unless approved by City.

1.11 DUST CONTROL

A. Contractor shall develop and implement a dust control plan that ensures conformance with the dust control standards of the Wisconsin DNR, the City of Milwaukee Code of Ordinances and other applicable federal, state and local standards, at all times during the Work.

B. If dust emissions are problematic, the Contractor will identify the source of emissions and take corrective action, at no additional cost to the City.

C. Any anti-freeze that is added to the water for dust control on the project site shall be approved by the Wisconsin Department of Natural Resources prior to its use on the site.

1.12 FUELS AND LUBRICANTS

A. Project site is within well recharge area.

B. Minimize use of potentially hazardous materials including fuels and lubricants.

C. Keep motorized equipment in good working order with no fuel or lubricant leakage. Protect ground surface from leakage using tarps or other material methods.

D. If grease, oil, solvent, or other residue from Contractor operations occurs, Contractor shall conduct remedial investigation and remediate as required by City.

E. Do not change oil on equipment or store or dispose of fuels, solvents, lubricants, or other potentially hazardous materials on Site.

PART 2 – PRODUCTS (Not Used)

PART 3 – EXECUTION (Not Used)

END OF SECTION

SECTION 01 70 00
CONTRACT CLOSEOUT REQUIREMENTS

PART 1 – GENERAL

1.01 RELATED DOCUMENTS

A. All of the Contract Documents, including General Specifications and other requirements of the Specifications apply to the work of this Section and are hereby made a part of this Section.

1.02 SCOPE OF WORK

A. This Section includes administrative and procedural requirements for contract closeout, including, but not limited to, the following:
   1. Inspection and acceptance procedures.
   2. Project Record Documents.
   3. Punch List.
   4. Final cleaning.

B. See Technical Specifications for specific closeout and special cleaning requirements for products of those Sections.

1.03 SUBSTANTIAL COMPLETION

A. Preliminary Procedures: Before requesting inspection for determining date of Substantial Completion, complete the following. List items below that are incomplete in request.
   1. Prepare a list of items to be completed and corrected (punch list), the value of items on the list, and reasons why the Work is not complete.
   2. Advise City of pending insurance changeover requirements.
   3. Submit specific warranties, workmanship bonds, maintenance service agreements, final certifications, waste disposal manifests (contaminated soil, sewer sediment, and asbestos), and similar documents.
   4. Obtain and submit releases permitting City unrestricted use of the Work and access to services and utilities.
   5. Prepare and submit Project Record, Final Completion construction photographs, damage or settlement surveys, and similar final record information.
   6. Legally dispose of materials not returned or retained by the City.
   7. Terminate and remove temporary facilities from Project site, along with mockups, construction tools, and similar elements.
   8 Advise City of changeover for all utilities.
   9. Complete final cleaning requirements.
   10. Touch up and otherwise repair and restore pavements, fences and other features that were damaged by the Work.

B. Inspection: Submit a written request for inspection for Substantial Completion. On receipt of request, City or its Agent will either proceed with inspection or notify Contractor of unfulfilled requirements. City or its Agent will prepare the Certificate of Substantial Completion after inspection or will notify Contractor of items, either on Contractor's list or

additional items identified by City or its Agent, that must be completed or corrected before certificate will be issued.

1. Re-inspection: Request re-inspection when the Work identified in previous inspections (the Punch List) as incomplete is completed or corrected.
2. Results of completed inspection will form the basis of requirements for Final Completion.

1.04 FINAL COMPLETION

A. Preliminary Procedures: Before requesting final inspection for determining date of Final Completion, complete the following:
   1. Submit a final Application for Payment according to the General Conditions and the Specifications
   2. Submit certified copy of City or its Agent's Substantial Completion inspection list of items to be completed or corrected (punch list), endorsed and dated by City or its Agent. The certified copy of the list shall state that each item has been completed or otherwise resolved for acceptance.
   3. Submit evidence of final, continuing insurance coverage complying with insurance requirements.

B. Inspection: Submit a written request for final inspection for Final Acceptance. On receipt of request, City or its Agent will either proceed with inspection or notify Contractor of unfulfilled requirements. City or its Agent will prepare a final Certificate for Payment after inspection or will notify Contractor of construction that must be completed or corrected before certificate will be issued.
   1. Re-inspection: Request re-inspection when the Work identified in previous inspections as incomplete is completed or corrected.

C. The City or its Agent shall establish the date of Final Acceptance and submit written notice of that date. The warranty and maintenance periods will not commence until the City or its Agent has made a Final Acceptance of the Project.

1.05 LIST OF INCOMPLETE ITEMS (PUNCH LIST)

A. Preparation: Submit three copies of Punch List. Include name and identification of each space and area affected by construction operations for incomplete items and items needing correction including, if necessary, areas disturbed by Contractor that are outside the limits of construction.

1.06 PROJECT RECORD AND AS-BUILT DOCUMENTS

A. General: Do not use Project Record Documents for construction purposes. Protect Project Record Documents from deterioration and loss. Provide access to Project Record Documents for City or its Agent's reference during normal working hours.

B. Maintain field record documents neatly and accurately, and carefully record information

regularly as the work progresses. Include in record documents all field changes made to the original Contract Documents, all change order modifications, all construction change directives, all field directions and instructions from the City or its Agent, all relevant dimensions, and all relevant details of the work. Information and locations of work that is readily obvious does not need to be recorded in record documents. Keep record documents up to date at all times.

1. Progress Payments: Maintaining record documents accurately and up to-date shall be a prerequisite for approval of Contractor's application for progress payments.
2. Record Documents Required: The following record documents are required:
   a. Record specifications.
   b. Waste disposal manifests.

C. Record Submittals: Product Data, and other data shall be assembled in sequential order of the specification format and provided to the City.

1.07 FINAL CLEANING

A. General: Just prior to Final Acceptance provide final cleaning. Conduct cleaning and waste-removal operations to comply with local laws and ordinances and Federal and local environmental and antipollution regulations.

B. Complete the following cleaning operations before requesting inspection for certification of Substantial Completion for entire Project or for a portion of Project:
   1. Clean Project site, yard, and grounds in areas disturbed by construction activities, including landscape development areas, of debris, rubbish, waste material, litter, and other foreign substances.
   2. Sweep paved areas broom clean. Remove petrochemical spills, stains, and other foreign deposits.
   3. Rake grounds that are neither planted nor paved to a smooth, even-textured surface.
   4. Remove tools, construction equipment, machinery, and surplus material from Project site.
   5. Leave Project site clean.

C. Comply with safety standards for cleaning. Do not burn waste materials. Do not bury debris or excess materials on City's property. Do not discharge volatile, harmful, or dangerous materials or any chemicals into drainage systems. Remove waste materials from Project site and dispose of lawfully.

PART 2 – PRODUCTS (Not Used)

PART 3 – EXECUTION (Not Used)

END OF SECTION

SECTION 01 71 23
FIELD ENGINEERING

PART 1 – GENERAL

1.01 RELATED DOCUMENTS

A. All of the Contract Documents, including General Specifications and Specifications, Appendices and Drawings, apply to the work of this Section and are hereby made a part of this Section.

1.02 SCOPE OF WORK

A. This Section specifies administrative and procedural requirements for field engineering services, including, but not necessarily limited to, the following:
   1. Land Survey Work.
   2. Establishment and maintenance of layout and elevation control points.
   3. Horizontal and vertical layout of all site improvements for review by the City or its Agent prior to and during construction.

1.03 SUBMITTALS

A. Project Record and As-Built Documents: Submit a record of work performed and record survey data as required under provisions of sections "Submittals" and "Contract Closeout".

B. When requested by the City or its Agent, provide supplemental horizontal and vertical data to aid in the design or construction of the Work. Provide supplementary data at no additional cost to the Project.

1.04 QUALITY ASSURANCE

A. Surveyor: The Contractor shall engage a Registered Land Surveyor, registered in the state of Wisconsin to perform land/building surveying services required.

1.05 EXAMINATION

A. Verify layout information shown on the Drawings, in relation to the property survey and existing benchmarks before proceeding to lay out the work. Locate and protect existing benchmarks and control points. Preserve permanent reference points during construction.
   1. Establish existing control points in areas convenient to but outside of Work area, prior to the commencement of any Work. Confer with City's Agent prior to reestablishing control points.
   2. Do not change or relocate benchmarks or control points without prior written approval. Promptly report lost or destroyed reference points, or requirements to relocate reference points because of necessary changes in grades or locations. Base replacements on the original survey control points.

B. Establish and maintain a minimum of two permanent benchmarks on the site, referenced to

data established by survey control points. Record benchmark locations, with horizontal and vertical data, on Project Record Documents.

C. Existing utilities and equipment: The existence and location of underground and other utilities and construction indicated as existing are not guaranteed. Before beginning site work, investigate and verify the existence and location of underground utilities and other construction.
   1. Prior to construction, verify the location and invert elevation at points of connection of sanitary sewer, storm sewer and water service piping.

1.06 PERFORMANCE

A. Record deviations from required layout, and advise the City's Agent when deviations that exceed indicated or recognized tolerances are detected. On Project Record Drawings, record deviations that are accepted and not corrected.

PART 2 – PRODUCTS (Not Used)

PART 3 – EXECUTION (Not Used)

END OF SECTION

GRÄEF

REDEVELOPMENT AUTHORITY OF THE CITY OF MILWAUKEE

CENTURY CITY BUILDING 36
AREA E
INTERIOR LIGHTING MODIFICATIONS

3533 NORTH 27TH STREET, MILWAUKEE, WI 53216

SHEET INDEX

COVER SHEET

T100 COVER SHEET

ARCHITECTURAL

A101 EXITING PLAN

ELECTRICAL

E101 ELECTRICAL PLAN, DETAILS, AND SCHEDULES

SUBMITTAL INDEX

DATE	SUBMITTAL NAME
09/14/2015	ISSUED FOR BID

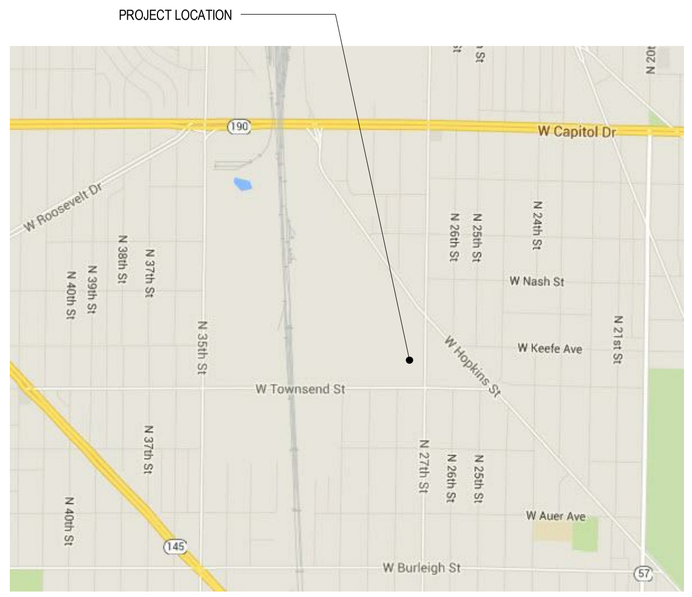

LOCATION MAP

NTS

N

C:\Users\14472\Documents\20100064.00_AE_V3_Cntrl_Revit2015_14472.rvt
9/14/2015 4:24:39 PM

T100

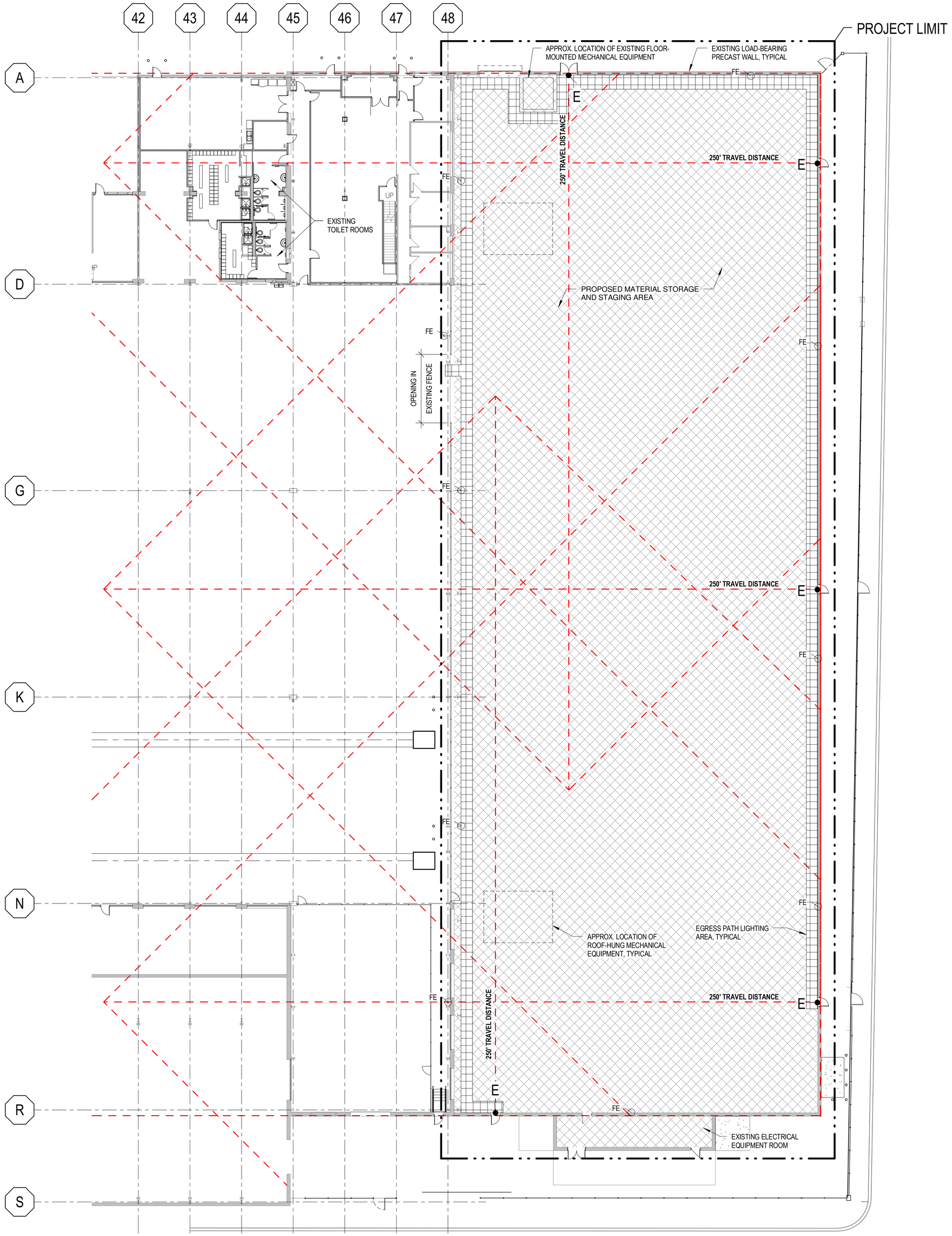

1 PARTIAL FLOOR PLAN

1" = 20'-0"

N

BUILDING CODE DATA:

APPLICABLE CODE RESOURCE:
2009 INTERNATIONAL EXISTING BUILDING CODE AS ADOPTED BY THE STATE OF WISCONSIN

PRIMARY OCCUPANCY:
GROUP: FACTORY F-1

SECONDARY OCCUPANCIES:
GROUP: N/A

SEPARATION OF OCCUPANCIES REQUIRED:
☒ NO
☐ YES

CLASSIFICATION OF CONSTRUCTION: II B

FIRE RESISTIVE RATINGS:

STRUCTURE:	0 HOUR
EXTERIOR BEARING WALLS:	0 HOUR
INTERIOR BEARING WALLS:	0 HOUR
INTERIOR NON-BEARING WALLS:	0 HOUR
ROOF CONSTRUCTION:	0 HOUR

SPRINKLER SYSTEM: YES NFPA 13 ☒ NO ☐

NUMBER OF STREETS: 4

AREA/HEIGHT INCREASE DUE TO:
SPRINKLER SYSTEM ☒
FRONTAGE ☒

ALLOWABLE BUILDING HEIGHT: 75'-0"

ACTUAL BUILDING HEIGHT: 65'-6"

ALLOWABLE NUMBER OF STORIES: TWO

ACTUAL NUMBER OF STORIES: TWO

ALLOWABLE BUILDING AREA/STORY: UNLIMITED

ACTUAL BUILDING AREA/STORY: 282,092 SF

FIRE WALL(S) REQUIRED:
☒ NO
☐ YES

FIRE BARRIER(S) REQUIRED:
☒ NO
☐ YES

SHAFT ENCLOSURE(S) REQUIRED:
☒ NO
☐ YES

NUMBER OF OCCUPANTS:
BASED ON OVERALL SQUARE FOOTAGE

OCCUPANCY	GROSS AREA	SQ. FT. / RATIO	OCCUPANTS
FACTORY	46,564 SF	100/SF	466
TOTAL			466 PERSONS
ACTUAL OCCUPANTS*			80 PERSONS

* OCCUPANT LOAD INCLUDES ADJACENT AREAS THAT ARE NOT WITHIN THE SCOPE OF THIS PROJECT

MAXIMUM EXITING DISTANCE ALLOWED:
GROUP F-1 250' - 0"

EXITING DISTANCE PROVIDED:
GROUP F-1 132' - 0"+/-

AGGREGATE EXIT WIDTH REQUIRED:
466 PERSONS @ .2" = 93.2"

AGGREGATE EXIT WIDTH PROVIDED:
(5) DOORS @ 32" = 160"

SANITARY REQUIREMENTS:

PLUMBING FIXTURES REQUIRED: (80 OCCUPANTS)

MEN:		WOMEN:	
WATERCLOSETS	1	WATERCLOSETS	1
LAVATORIES	1	LAVATORIES	1
DRINKING FOUNTAINS	1		
SERVICE SINKS	1		

PLUMBING FIXTURES PROVIDED:

MEN:		WOMEN:	
WATERCLOSETS	3	WATERCLOSETS	3
URINALS	3	LAVATORIES (WASH FOUNTAINS)	4
LAVATORIES (WASH FOUNTAINS)	8	SHOWERS	1
SHOWERS	2		
DRINKING FOUNTAINS	3		
SERVICE SINKS	1		

NOTES:

- PROJECT IS A LEVEL 2 ALTERATION PER IEBC 2009
- PROJECT AREA IS 46,564 SQUARE FEET WITHIN THE EXISTING FACILITY
- ALL EXISTING CONDITIONS ARE TO BE FIELD VERIFIED BY CONTRACTOR. NOTIFY ARCHITECT OR ENGINEER OF ANY DISCREPANCIES FOUND IN THE FIELD.
- EACH WASH BASIN UNIT IS EQUIVALENT TO (4) LAVATORIES
- THE FACTORY OCCUPANCY HAS REMAINED UNCHANGED FROM THE EXISTING CONDITION. THEREFORE THE NON-EXISTENCE OF ROOF SMOKE AND HEAT VENTS SHOULD COMPLY WITH CONDITION AS PREVIOUSLY APPROVED

KEY:

E — EMERGENCY EXIT

EGRESS COVERAGE AREA

PERIMETER AND TRAVEL LENGTH OF EGRESS TRIANGLE

FE — PORTABLE FIRE EXTINGUISHER. TO BE INSTALLED PER SECTION 906 OF IBC, AND NFPA 10.

GRAEF

One Honey Creek Corporate Center
125 South 84th Street, Suite 401
Milwaukee, WI 53214-1470
414 / 259 1500
414 / 259 0037 fax

www.graef-usa.com

CONSULTANTS:

PROJECT TITLE:

CENTURY CITY BUILDING 36
AREA E
INTERIOR LIGHTING MODIFICATIONS

ISSUE:

1 09/14/2014 ISSUED FOR BID

PROJECT INFORMATION:

PROJECT NUMBER:	2015-0190.02
DATE:	09/14/2015
DRAWN BY:	CWH
CHECKED BY:	LLR/WPT
APPROVED BY:	CWH
SCALE:	AS NOTED

SHEET TITLE:

EXITING PLAN

SHEET NUMBER:

A101

C:\Users\14472\Documents\20100064.00_AE_V3_Cntrl_Revit2015_1472.rvt
9/14/2015 4:24:09 PM

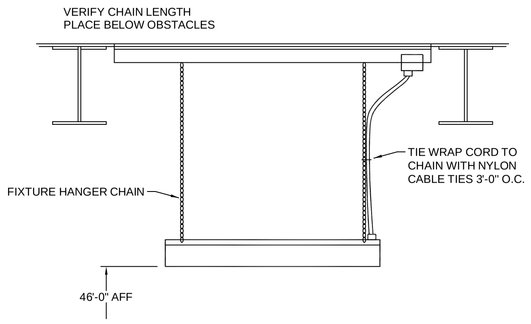

CHAIN HUNG FLOURESCENT MOUNTING DETAIL

2 / E1.0

NOT TO SCALE

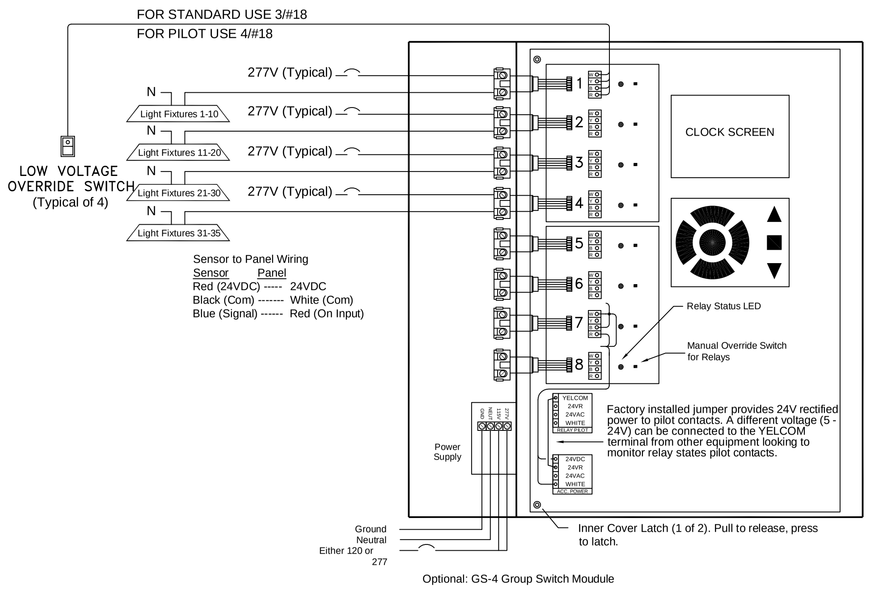

Lighting Control Panel Schedule

LCP Name:	LCP 1
Location:	WEST WALL BENSON DOCK
Surface/Flush:	Surface
Power Circuit:	PP2-26

Relay #	Circuit	Description	LV Switch/Sensor	Channel
1	LA-1	NORTH TWO ROWS	Scheduled On/Off	A
2	LA-3	UPPER MIDDLE TWO ROWS	Scheduled On/Off	B
3	LA-5	LOWER MIDDLE TWO ROWS	Scheduled On/Off	C
4	LA-7	SOUTH ROW	Scheduled On/Off	D
5				
6				
7				
8				

TIME CLOCK (TC)

3 / E1.0

NO SCALE

EXISTING PANELBOARD SCHEDULE(CULTER HAMMER)

PANEL LP/1 VOLTAGE 480Y/277 AIC 65K

☐ FLUSH ■ MAIN 400 ☐ GROUND BUS BUS
☐ SURFACE ☐ MLO ☐ ISOLATED GROUND BUS ☐ FEED THRU

REMARKS:

CIR #	C/B SIZE	DESCRIPTION	LOAD KVA	LOAD A Ø KVA	LOAD B Ø KVA	LOAD C Ø KVA	LOAD KVA	DESCRIPTION	C/B SIZE	CIR #	
1	20	◇ 27	3	16.3			13.3	SPO - A	60	2	
3			3		16.3		13.3			4	
5			3			16.3	13.3			6	
7	20	◇ 3	4.4	17.7			13.3	SPO - A	60	8	
9			4.4		17.7		13.3			10	
11			4.4			17.7	13.3			12	
13	20	◇ 4	4.4	17.7			13.3	SPO - A	60	14	
15			4.4		17.7		13.3			16	
17			4.4			17.7	13.3			18	
19	20	OFFICE LTG.	2.5	15.8			13.3	SPO - A	60	20	
21	20	OFFICE LTG.	2.3		15.8		13.3			22	
23		SPACE				13.3	13.3			24	
25		SPACE		0				BLDG 36, N, LTG	20	26	ADD BREAKER
27		SPACE			0			BLDG 36, N, LTG	20	28	ADD BREAKER
29		SPACE				0		BLDG 36, N, LTG	20	30	ADD BREAKER
31		SPACE		0				BLDG 36, N, LTG	20	32	ADD BREAKER
33		SPACE			0			SPARE	20	34	
35		SPACE				0		SPARE	20	36	
37		SPACE		0				XMFR T/2	125	38	
39		SPACE			0					40	
41	20	EXIT LTG. & BATT.	0.5			.5				42	
		TOTALS		67.5	67.5	65					
		TOTAL CONNECT, KVA		0							

LIGHTING FIXTURE SCHEDULE

DES.	DESCRIPTION	LAMP DATA NO.	LAMP DATA TYPE	VOLT	DEPTH	LIGHTING FIXTURE MFR.	LIGHTING FIXTURE CAT. NO.	SURFACE CEILING	SURFACE WALL	SURFACE SUSP.	SURFACE SPECIAL	RECESS LAY-IN	RECESS CONCEAL	RECESS DRYWALL	RECESS WALL	SEE NOTE
A	HIGH BAY FLUORESCENT	8	T8 HO	277	0	COOPER	HBL-65415-N-UNV-L5850-EBT2-35PT/OSF-3/UE-SQT-CORD/DNL-C-U			●						LF-0
◇		0	0	0	0	ISOLITE	IMR-12-50-WW		●							LF-0
X	EXIT SIGNAGE WITH (2) REMOTE EXTERIOR HEADS	0	0	0	0	ISOLITE	CMBRUWW 2RBRH2WP		●							LF-0

LIGHTING FIXTURE SUBSCRIPTS:
1. FLUORESCENT SURFACE
2. FLUORESCENT PENDANT
3. INCANDESCENT OR HID RECESSED
4. INCANDESCENT OR HID SURFACE
5. INCANDESCENT OR HID PENDANT
6. FLUORESCENT RECESSED - EXPOSED GRID SUSPENSION SYSTEM
7. FLUORESCENT RECESSED - CONCEALED SUSPENSION SYSTEM
8. FLUORESCENT RECESSED - PLASTER SUSPENSION SYSTEM
9. FLUORESCENT RECESSED - CONSEALED INVERTED T SYSTEM
0.
* SPECIAL

INTERIOR LIGHTING POWER DENSITY

BUILDING AREA METHOD					INSTALLED			
AREA		SQUARE FOOTAGE	WATTS PER SQ. FOOT	TOTAL WATTS ALLOWED	FIXTURE TYPE	WATTS PER FIXTURE	QUANTITY OF FIXTURES	WATTS
FIRST FLOOR		17,280	1.3	22,464	A	346	35	12,110
TOTAL WATTS ALLOWED				22,464	TOTAL WATTS			12,110

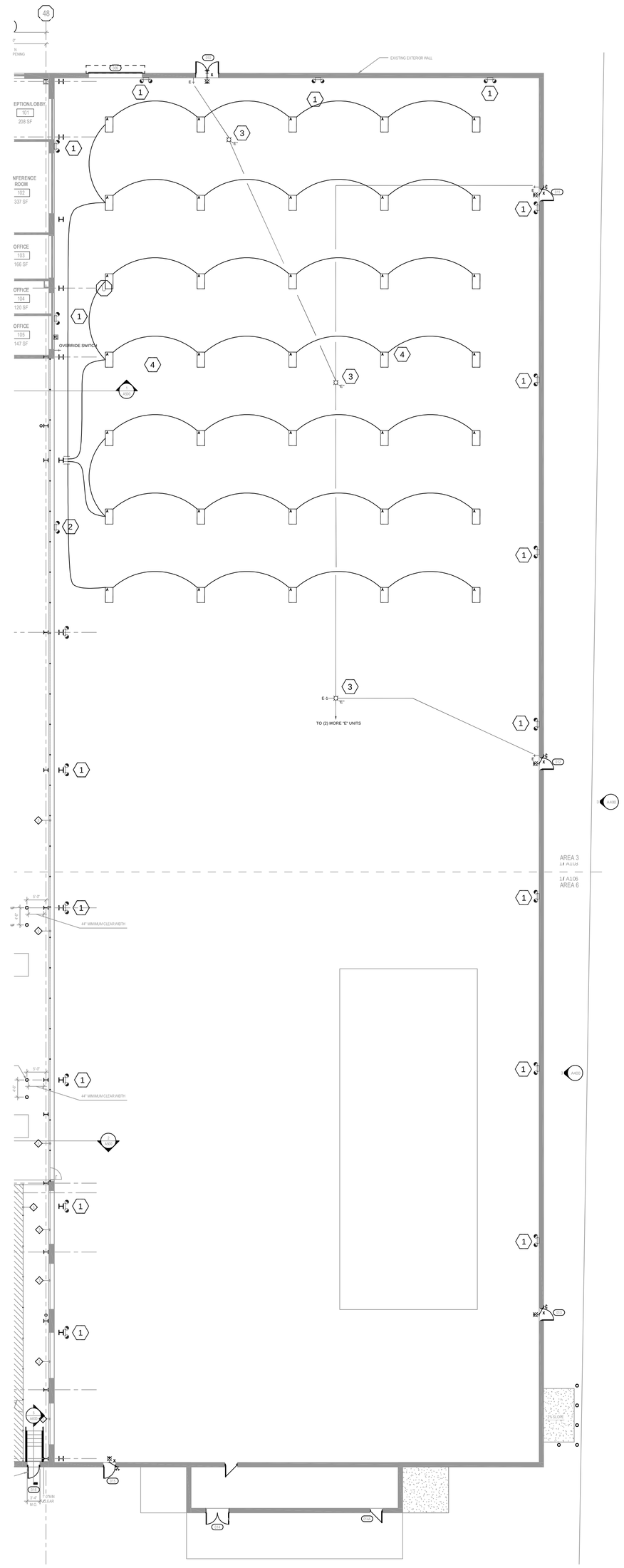

SYMBOLS LIST

	WALK-THRU / EMERGENCY LIGHT FIXTURE - CONNECTED TO I-BEAM
	EXIT SIGN - WALL MOUNTED, SINGLE FACED WITH DIRECTIONAL ARROWS AS SHOWN
	LIGHT FIXTURE - EMERGENCY BATTERY UNIT. WIRE TO LOCAL LIGHTING CIRCUIT AHEAD OF ANY SWITCHING OR OTHER CONTROL.
	LOCAL SWITCH, SINGLE POLE, OR AS NOTED. SUBSCRIPTS: (E) - EXITING CONTROLS TO REMAIN
LTG CONT	FACTORY LIGHTING CONTROLLER ILC - APPRENTICE II SUBSCRIPTS: (#) FILL NUMBER IN PANEL INDICATED NEXT TO CONTROLLER (IS) INTELLIGENT SWITCH - ILC - LSG2-V-6 OR APPROVED EQUAL
#	PANELBOARD, SURFACE OR RECESSED MOUNTED, AS SHOWN. # INDICATES PANELBOARD DESIGNATION

GENERAL NOTES

1. ALL ELECTRICAL DRAWINGS ARE TO BE READ IN CONJUNCTION WITH THE PROJECT SPECIFICATIONS AND ALL OTHER DRAWINGS RELATED TO THE PERFORMANCE OF THE WORK.
2. THE CONTRACTOR RESPONSIBLE FOR THE EXECUTION OF THIS WORK SHALL BECOME THOROUGHLY FAMILIAR WITH THE PROJECT SPECIFICATIONS BEFORE COMMENCING ANY WORK. THE PROJECT SPECIFICATIONS AND DRAWINGS FORM THE BASIS OF THE CONTRACT REQUIREMENTS AND INCLUDE THE TYPE AND GRADE OF MATERIALS TO BE INSTALLED, EQUIPMENT TO BE FURNISHED, THE MANNER BY WHICH TO BE INSTALLED AND WHERE TO BE LOCATED. IN THE EVENT OF A CONFLICT BETWEEN THE PROJECT SPECIFICATIONS AND DRAWINGS, SPECIFICATIONS GOVERN UNLESS THE ARCHITECT/ENGINEER DIRECTS OTHERWISE.
3. THE ELECTRICAL CONTRACTOR SHALL CHECK CAREFULLY ALL CONSTRUCTION DRAWINGS AND SPECIFICATIONS THAT ARE PART OF THIS PROJECT TO INSURE THAT NO FIXTURE, OUTLET, ALARM STATION OR CONTROL AND POWER WIRING IS OMITTED. HE SHALL CONSULT ALL TRADES FURNISHING EQUIPMENT AND OBTAIN FROM THEM ALL DATA. IN SOME CASES EQUIPMENT, FIXTURES AND DEVICES ARE SHOWN ONLY. ASCERTAIN AND PROVIDE THE WIRING AND CONTROL STATIONS REQUIRED FOR THE PROPER FUNCTION OF BUILDING EQUIPMENT. NO EXTRA CHARGES SHALL BE ACCEPTED BY OWNER AFTER BIDDING FOR SUCH EQUIPMENT AND LABOR.
4. EQUIPMENT LABELS AND INSTRUCTIONS REGARDING THE APPLICATION AND INSTALLATION OF THE LISTED EQUIPMENT SHALL BE FOLLOWED TO INSURE THAT THE EQUIPMENT IS BEING INSTALLED IN ACCORDANCE WITH THE MANUFACTURER'S LISTING INSTRUCTIONS. THE TEMPERATURE RATING OF THE EQUIPMENT TERMINATIONS MUST BE CAREFULLY CORRELATED WITH THE CONDUCTOR AMPACITY TO PREVENT OVERHEATING AND PREMATURE FAILURE.
5. COORDINATE WORK WITH OTHER TRADES AND INSTALL CONDUIT AND BOXES TO CLEAR EMBEDDED DUCTS, OPENINGS, AND OTHER STRUCTURAL FEATURES.
6. ALL WORK IS TO BE DONE IN ACCORDANCE WITH THE LATEST REQUIREMENTS OF THE APPLICABLE CODES AND REGULATIONS.
7. ALL LIGHTING FIXTURES ARE TO BE LOCATED AS REQUIRED ON THE JOB TO CLEAR, DUCTS, PIPING, EQUIPMENT, AND/OR MECHANICAL UNITS.
8. CONDUIT RUNS SHOWN ON DRAWINGS ARE DIAGRAMMATIC. ALL CONDUITS MAY RUN EXPOSED, IN ACCORDANCE WITH SPECIFICATIONS SECTION 16100.
9. FURNISH AND INSTALL EQUIPMENT DISCONNECT SWITCHES IN STRICT COMPLIANCE WITH CODE REQUIREMENTS.
10. ALL OUTDOOR RECEPTACLES SHALL BE W.P. AND GFI TYPE.
11. ALL OUTDOOR ENCLOSURES SHALL BE NEMA 3R CORROSION RESISTANT AND GASKETED.
12. CONTRACTOR SHALL PROVIDE WIRING THROUGHOUT THIS PROJECT AS REQUIRED SO THE VOLTAGE DROP STIPULATED IN THE GOVERNING CODE IS NOT EXCEEDED.

EXISTING PROJECT CONDITIONS

INFORMATION RELATIVE TO EXISTING PROJECT CONDITIONS, SUCH AS PRESENT LOCATIONS OF ARCHITECTURAL AND STRUCTURAL BUILDING COMPONENTS, MECHANICAL AND ELECTRICAL EQUIPMENT, PIPING, DUCTWORK, AND OTHER MISCELLANEOUS CONSTRUCTION, APPEARS ON THESE DRAWINGS. WHILE SUCH INFORMATION HAS BEEN BASED ON AVAILABLE RECORDS AND COLLECTED WITH REASONABLE CARE, THE ARCHITECT AND ENGINEER DO NOT ASSUME ANY EXPRESSED OR IMPLIED GUARANTEE THAT CONDITIONS AS INDICATED ARE SHOWN ENTIRELY COMPLETE, CORRECT AND REPRESENTATIVE OF THOSE ACTUALLY EXISTING. ALL CONTRACTORS SHALL THOROUGHLY FAMILIARIZE THEMSELVES WITH ALL EXISTING JOB CONDITIONS PRIOR TO BIDDING AND SHALL FIELD VERIFY ALL DIMENSIONS SHOWN HEREIN.

SHEET NOTES

1. INSTALL FIXTURES 9' FROM FINISHED FLOOR.
2. INSTALL FIXTURES ON HORIZONTAL BEAM. -15'-8"
3. EXISTING TO REMAIN AS IS.
4. MOUNT AT 19', JUST BELOW HVAC UNIT, VERIFY WHICH UNITS WILL NEED TO BE HUNG BELOW HVAC UNIT PRIOR TO INSTALLATION.

NORTH

1 / E1.0

RELIGHT - BUILDING 36 NORTHEAST

SCALE: 1/8" = 1'-0"

0 4 8 16 32 64

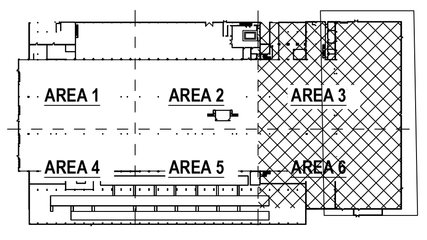

NO.	DATE	REVISION DESCRIPTION

DESIGNED BY DSP
DRAWN BY UV
CHECKED BY DSP

LEEDY & PETZOLD ASSOCIATES, LLC
CONSULTING ELECTRICAL ENGINEERS/PLANNERS
12970 W. BLUEMOUND ROAD - SUITE 101
ELM GROVE, WISCONSIN 53122
PH. (262) 860-1544, FAX (262) 860-1588

PROJECT DESCRIPTION
INTERIOR LIGHTING MODIFICATIONS

PROJECT LOCATION
OFFICIAL NOTICE NUMBER #138-1-2015
CENTURY CITY BUILDING 36 - PROJECT AREA E
3533 NORTH 27TH STREET, MILWAUKEE, WI

SHEET TITLE
ELECTRICAL PLAN, DETAILS, AND SCHEDULES

PROJECT NUMBER 8262
DATE 09/14/2015

SHEET NUMBER
E101

High-Output MR16 Emergency Light

isolite

Type 9 EM

High Output MR16 Emergency Light

Self Diagnostic Option

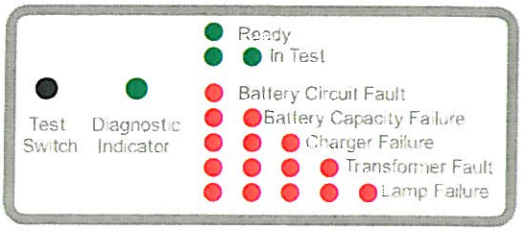

- Compact, low-profile design
- High-Output 12 Volt, 50 Watt Version available
- Two adjustable Super-Bright 6 Volt, 5.4 Watt MR16 lamps standard
- Optional higher wattage lamps available
- Simple snap-on canopy for ceiling mount
- Optional full self-diagnostics available
- UL listed to UL924 standard

ISOLITE IMR Series High-Output MR16 Emergency Light

Dimensions

12 Volt, 50 Watt

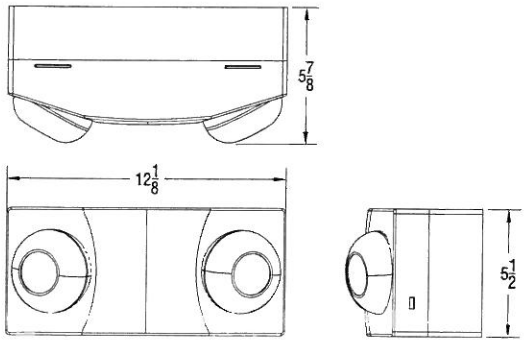

6 Volt, 11 Watt

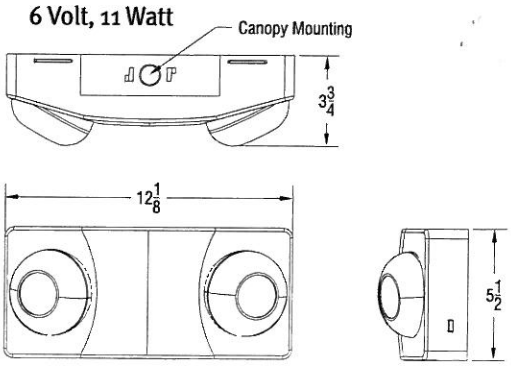

Isofootcandle Distribution Curves

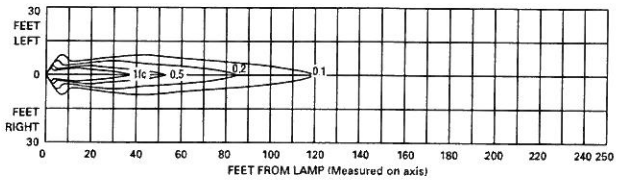

12 Watt MR16

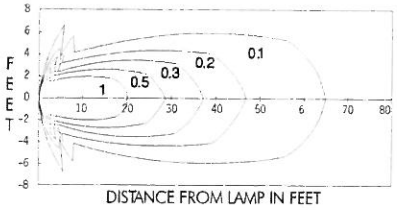

5.4 Watt MR16

Specifications

Construction:
- UV stabilized, UL94V-O flame-retardant Polycarbonate injection-molded thermoplastic in pure white finish

Battery:
- 6 Volt, 11 Watt or 12 Volt, 50 Watt maintenance-free sealed lead calcium
- Operating temperature range 0-40° C
- Recharge rate of 24 hours

Lamps:
- Two adjustable 6 Volt, 5.4 Watt super bright MR16 halogen lamp heads standard on 11 Watt IMR
- Two adjustable 12 Volt, 12 Watt super-bright MR16 halogen lamp heads standard on 50 Watt IMR
- Optional higher wattage lamps available on 50 Watt IMR

Approvals:
- UL Listed to the UL924 Standard and meets or exceeds all requirements of NFPA70, NFPA101, NEC and OSHA

Electronics:
- Energy-efficient, automatic self-regulating battery charger and power supply
- Line latch prevents unnecessary discharge of battery during installation
- Low voltage disconnect prevents battery damage and ensures positive charge after extended discharge
- Brownout sensing

Features:
- Fully automatic operation
- Remote capability to run remote heads on 50 Watt IMR
- Extended run times on 50 Watt IMR
- Simple, snap-fit assembly and canopy for easy installation
- Compact, low-profile design
- Knockout mounting pattern on back plate and top conduit entry
- Field-selectable 120 or 277 VAC input
- Push-to-test switch and LED AC status indicator
- Damp location standard

Warranty:
- 3 year limited warranty

Series	Battery Capacity	Color	Options
IMR	6-11 Volt, 11 Wat 12-50 = 12 Volt, 50 Watt	WW = White BK = Black	SD = Self Diagnostics L110002 = 12 Volt, 20 Watt Lamps (50 Watt version only) VRS = Polycarbonate Shield IMRCAN = Ceiling Canopy Kit (11 Watt version only) VRSI = Polycarbonate Shield for IMR 12-50

Project_____ Date_____ Type_____ Catalog Number_____

Remarks_____

Headquarters: 31 Waterloo Avenue • Berwyn, PA 19312 • 800-888-5483 • 610-647-8200 • 610-296-8952 Fax **WWW.ISOLITE.COM**
Western Office: 3563 Sueldo, Suite M • San Luis Obispo, CA 93401 • 800-799-5343 • 805-546-9669 • 805-546-9564 Fax

Type "X"

isolite

THERMOPLASTIC COMBINATION

- Attractive contemporary thermoplastic design
- 22 Watt battery capacity available for remote heads
- Side mounted emergency heads rotate 360 degrees
- Standard unit includes:
  - Wall or Ceiling mounting
  - Single or Double Face
  - Dual Voltage
  - Universal Chevrons

UL LISTED

ENERGY STAR

rict Standards: Non-static method DataObject::sqlx() should not be called statically in **ome/isolite/public_html/products/product.php** on line **22**

Products

LED/Photoluminescent Hybrid Exits

Inverters

Emergency Transfer Devices

Emergency Lighting

LED Exit Signs

Hazardous Location

ıotoluminescent Exit Signs

Self-Luminous Exit Signs

City of Chicago Products

NYC Approved Products

Fluorescent Emergency Ballasts

Industrial Lighting

Accessories

Remote Lamp Heads

Technical Data

General Warranty and Obligations

PAR36 Thermoplastic Remote Lamp Head

Downloads
- Spec Sheet

◆ Constructed of high-impact thermoplastic Rotary locking collar that securely locks the lens and reflector assembly into place. Innovative design allows for quick and easy relamping. Adjustable swivel lock secures the head in place once adjusted. Matching canopy is designed to fit nearly all standard electrical junction boxes. White finish standard Black finish available

Specifications

Ordering Information

Model Head	Heads	Options
BRH	1 = Single Head	NC = No Canopy
	2 = Double Head	BK = Black Housing
	3 = Triple Head	WP = Weather Proof
		TC = Teflon Coated

Copyright © 2007 Isolite Corporation. All rights reserv

ISOLITE SERIES CMB THERMOPLASTIC COMBINATION EXIT SIGN

Dimensions

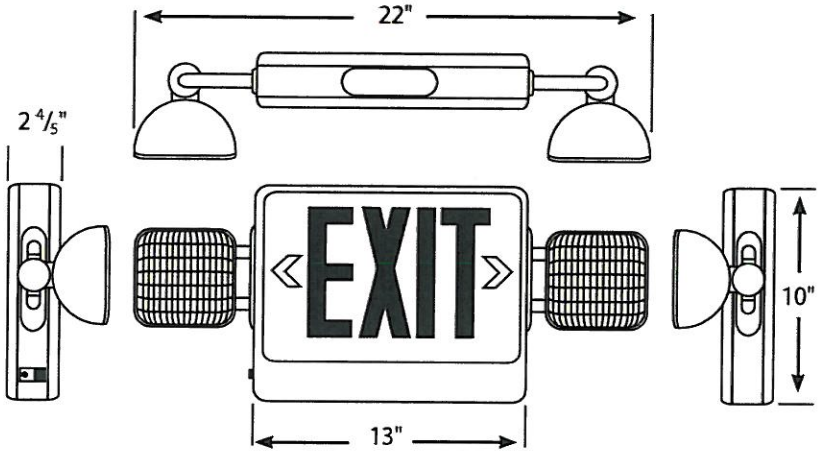

Specifications

Overall Size:	With Heads: 22" x 10" x 2 4/5" Without Heads: 13" x 10" x 2 4/5"
Weight:	10 lbs.
Construction:	Corrosion and flame resistant thermoplastic
Letters:	6" high; 3/4" stroke
Arrows:	NFPA-type, universal field-selectable chevrons
Battery:	6V 4Ah 11 Watt maintenance-free, sealed lead acid battery standard. 22 Watt available when "remote capable" option is ordered
Lamps:	Two side mounted, 360 degree adjustable, 5.4 Watt incandescent wedge base lamp heads
Input Power:	Red: 4.0 watts; Green: 2.0 watts
Approvals:	Listed by Underwriters Laboratories to UL 924 Standard

Electronics:
- Solid state charger and transfer
- High-output, energy efficient LED technology
- Line-latch prevents unnecessary discharge of battery
- Brownout protection
- LED AC present indicator and push-to-test switch
- 120 or 277 field selectable inputs

Features:
- 22 Watt battery capacity available for remote heads
- Wall or ceiling mount standard
- Swivel pendant mounting available upon request
- Standard white housing
- Black housing available upon request
- Incandescent exit sign available upon request
- Can be ordered with 0, 1, or 2 heads for maximum efficiency

Warranty: Isolite offers a 3-year limited warranty. For further details, refer to General Warranty and Obligations in Isolite manual.

Ordering Information

Series	LED	Faces/Mounting	Housing	Heads	Options
CMB	R - Red G = Green	U = Universal	WW = All White BB = All Black	1 = 1 Head 2 = 2 Heads 0 = None	R = Remote Capable (Order Remote Heads Separately) IN = Incandescent Exit

Example: CMB-R-U-WW-2-R

Project _____

Date _____ Type _____

Catalog Number _____

Remarks _____

Visit us on the web at www.isolite.com or email sales@isolite.com

isolite

Call the Isolite office nearest you.

HEADQUARTERS
31 Waterloo Avenue
Berwyn, PA 19312
800-888-5483
610-647-8200
610-296-8952 Fax

WESTERN OFFICE
3563 Sueldo, Suite M
San Luis Obispo, CA 93401
800-799-5343
805-546-9669
805-546-9564 Fax

isolite

BRH – PAR36 Thermoplastic Remote Lamp Head

- Constructed of high-impact thermoplastic
- Rotary locking collar that securely locks the lens and reflector assembly into place
- Innovative design allows for quick and easy relamping
- Adjustable swivel lock secures the head in place once adjusted
- Matching canopy is designed to fit nearly all standard electrical junction boxes
- White finish standard
- Black finish available

Ordering Information:

Model	Heads	Voltage/Wattage	Options
BRH	1 = Single Head 2 = Double Head 3 = Triple Head	See Lamp Selection	NC = No Canopy BK = Black Housing WP = Weather Proof TC = Teflon Coated

Lamp Selection:

	6 Volt	12 Volt	24 Volt
Standard	3.6W, 5.4W 7.2W, 9W	9W, 18W	9W, 18W, 24W
Halogen	H8W, H10W H12W, H20W	H6W, H8W, H12W H20W, H35W, H55W	H20W, H70W
Sealed Beam	SB8W, SB9W, SB12W SB18W, SB25W	SB8W, SB12W SB18W, SB25W	
Sealed Beam Halogen	SBH12W, SBH20W	SBH8W	

LRH – PAR18 Thermoplastic Remote Lamp Head

- Constructed of high-impact thermoplastic
- Rotary locking collar that securely locks the lens and reflector assembly into place
- Innovative design allows for quick and easy relamping
- Adjustable swivel lock secures the head in place once adjusted
- Matching canopy is designed to fit nearly all standard electrical junction boxes
- White finish standard
- Black finish available

Ordering Information:

Model	Heads	Voltage/Wattage	Options
LRH	1 = Single Head 2 = Double Head 3 = Triple Head	See Lamp Selection	NC = No Canopy BK = Black Housing

Lamp Selection:

	6 Volt	12 Volt	24 Volt
Standard	3.6W, 5.4W 7.2W, 9W	9W, 18W	9W, 18W, 24W
Halogen	H8W, H10W H12W, H20W	H6W, H8W, H12W, H20W	