NOTES :

- Ⓘ, Ⓘ, Ⓘ, DENOTES RAMP TYPE.
- CONSTRUCT ALL CARRIAGE WALKS AND DRIVEWAYS PER CITY OF MILWAUKEE SPECIFICATIONS.
- OFFSET MEASUREMENTS TO TREES, WOOD POLES AND LIGHT POLES ARE TAKEN TO EDGE NEAREST THE CENTERLINE.
- OFFSET MEASUREMENTS TO HYDRANTS ARE TAKEN TO THE OPERATING NUT.

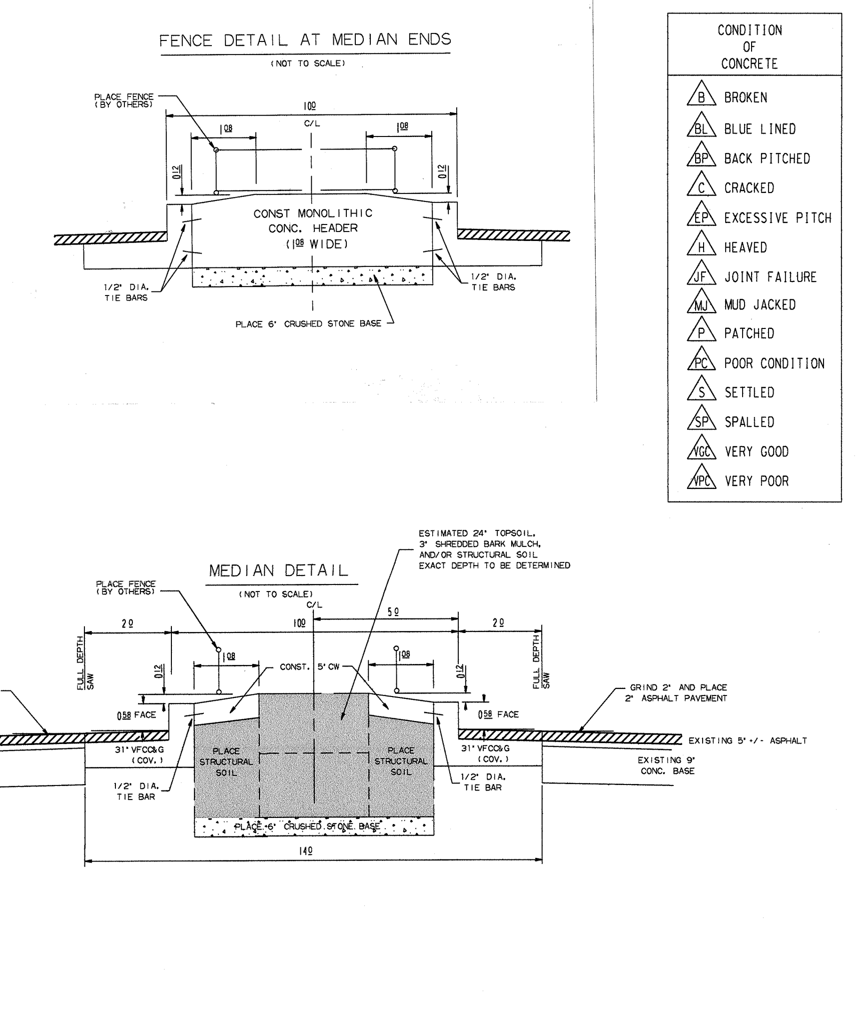

CONDITION OF CONCRETE

- B BROKEN
- BL BLUE LINED
- BP BACK PITCHED
- C CRACKED
- EP EXCESSIVE PITCH
- H HEAVED
- JF JOINT FAILURE
- MJ MUD JACKED
- P PATCHED
- PC POOR CONDITION
- S SETTLED
- SP SPALLED
- VGC VERY GOOD
- VPC VERY POOR

ESTIMATE / CERTIFICATE QUANTITIES

	DESCRIPTION	UNIT	ASSESS.	X-ING			PLAN TOT.	PROJ. TOT.
X	MOBILIZATION	L.S.						
X	FINISHING ROADWAY	L.S.						
X	BARRICADING AND SIGNING	L.S.						
X	CUTTING	C.Y.						
X	ROADWAY CUTTING	C.Y.						
X	FILLING	C.Y.						
X	ROADWAY FILLING	C.Y.						
X	PAVEMENT REMOVAL	S.Y.						
	BITUMINOUS SURFACE REMOVAL	S.Y.						
	CURB &/OR CURB & GUTTER REMOVAL	L.F.						
	CONC. WALK &/OR DRIVEWAY REMOVAL	S.F.						
	SAWING (FULL DEPTH)	L.F.						
X	SAWING	L.F.						
	TREES CLEARING	I.D.						
	TREES GRUBBING	I.D.						
X	31" CONCRETE CURB & GUTTER	L.F.						
	V.T. CONC. WALK &/OR DRIVEWAY	C.Y.						
X	5" CONCRETE WALK STAMPED & COLORED	S.F.						
	7" CONCRETE DRIVEWAY	S.F.						
	CONCRETE PAVEMENT	S.Y.						
	7" CONCRETE ALLEY PAVEMENT	S.Y.						
	V.T. CONCRETE BASE	C.Y.						
	CONCRETE BASE	S.Y.						
X	TACK COAT	GAL.						
X	BASE PREP. FOR ASPHALT SURFACE	L.S.						
X	V.T. ASPH. CONC. PAV'T. (MAX.)	S.Y.						
X	6" CRUSHED STONE BASE							
	CRUSHED GRAVEL BASE							
X	GRAVEL FILLING	TON						
	SODDING	S.Y.						
X	TOPSOIL	C.Y.						
X	PAVEMENT GRINDING (ASPHALT)	S.Y.						
	PAVEMENT GRINDING (CONCRETE)	S.Y.						
	SEALING PAV'T JOINTS & CRACKS	S.Y.						
	MANHOLE RINGS	EACH						
X	SEWER FRAME ADJUSTMENT	V.F.						
	MANHOLE SEAL (CITY FURNISHED)	EACH						
X	EROSION CONTROL (TYPE M)	L.S.						
X	STRUCTURAL SOIL							

DEPARTMENT OF PUBLIC WORKS
INFRASTRUCTURE SERVICES DIVISION
FIELD OPERATIONS
FIELD & DESIGN ENGINEERING
MILWAUKEE, WISCONSIN

FILE NO.

PLAN OF: N. MILWAUKEE ST.

E. MENOMONEE ST. TO E. ST. PAUL AVE.

THIS SECTION: E. MENOMONEE ST. TO STA. 18+00

DRAWN BY	S.B./B.M.	DATE: 6/18/13	PROJECT NO. ST211130173		SHEET 1 OF 2
DESCRIPTIONS BY	S.BIEGANSKI	DATE: 6/18/13			
LEVELS BY	LUECKING	DATE: 4/30/13	SCALE	1/4 SEC.	ALD. DIST.
LEVELS TRANSF. BY		DATE:	1" = 10'	396	4
DESIGNED BY	S.WALCZAK	DATE: 6/10/13	OBSTRUCTIONS - SEE OBSTRUCTION LIST		
GRADES TRANSF. BY	S.B./B.M.	DATE: 6/18/13	REVISED: 8/26/13 S. WALCZAK		
CHECKED BY	DV	DATE: 9/5/13	MEDIAN NOSE		
APPROVED BY	[signature]	DATE: 9/5/13	REVISED:		
FILE: V:\PWELIB\PAVING\29336.FIN					
PLOT DATE: 05-SEP-2013					

STORM DRAINAGE UNITS		
C.B.W. - 0	RESET - 0	ABANDON - 0
PROJECT IN COMB AREA		

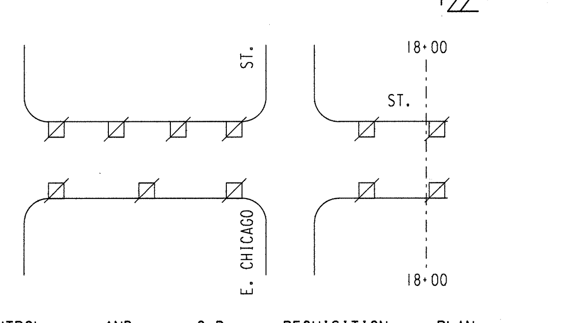

EROSION CONTROL AND C.B. REQUISITION PLAN

	TYPE M	☒ - CBW	☐ - RESET	✕ - ABANDON	⍁
THIS SHEET	11	0	0	0	NO WORK
PROJECT TOTAL	20	0	0	0	

TO \ DATE					
ESTIMATING					
HOLLOW WALKS					
PUBLIC HEARING					
CONSTRUCTION					
SEWER					
WATER					
STREET LIGHTING					
BLDG. SEWERS					
MEASURING					
FIELD					
DISTRICT FILE					
FORESTRY					
W.E. / G.O.					
WIS. GAS CO.					
TRANSIT SYSTEM					
CABLE TV					
UND. GRD. COND.					
WATER DIST.					
WEPCO N/S					
WEPCO S/S					
SEWER SERVICES					
UTILITY COOR.					
PLAN SIZE	17.5' X 120'				

N. MILWAUKEE ST. - E. MENOMONEE ST. TO E. ST. PAUL AVE. E. MENOMONEE ST. TO STA. 18+00 ST211130173 17.5' X 120' 29336 # (1 OF 2)

NOTES :

- (I), (II), (III), DENOTES RAMP TYPE.
- CONSTRUCT ALL CARRIAGE WALKS AND DRIVEWAYS PER CITY OF MILWAUKEE SPECIFICATIONS.
- OFFSET MEASUREMENTS TO TREES, WOOD POLES AND LIGHT POLES ARE TAKEN TO EDGE NEAREST THE CENTERLINE.
- OFFSET MEASUREMENTS TO HYDRANTS ARE TAKEN TO THE OPERATING NUT.

CONDITION OF CONCRETE
B BROKEN
BL BLUE LINED
BP BACK PITCHED
C CRACKED
EP EXCESSIVE PITCH
H HEAVED
JF JOINT FAILURE
MJ MUD JACKED
P PATCHED
PC POOR CONDITION
S SETTLED
SP SPALLED
VGC VERY GOOD
VPC VERY POOR

ESTIMATE / CERTIFICATE QUANTITIES

DESCRIPTION	UNIT	ASSESS.	X-ING			PLAN TOT.	PROJ.TOT.
MOBILIZATION	L.S.						
FINISHING ROADWAY	L.S.						
BARRICADING AND SIGNING	L.S.						
CUTTING	C.Y.						
ROADWAY CUTTING	C.Y.						
FILLING	C.Y.						
ROADWAY FILLING	C.Y.						
PAVEMENT REMOVAL	S.Y.						
BITUMINOUS SURFACE REMOVAL	S.Y.						
CURB &/OR CURB & GUTTER REMOVAL	L.F.						
CONC. WALK &/OR DRIVEWAY REMOVAL	S.F.						
SAWING (FULL DEPTH)	L.F.						
SAWING	L.F.						
TREES CLEARING	I.D.						
TREES GRUBBING	I.D.						
CONCRETE CURB & GUTTER	L.F.						
V.T. CONC. WALK &/OR DRIVEWAY	C.Y.						
5" CONCRETE WALK	S.F.						
7" CONCRETE DRIVEWAY	S.F.						
CONCRETE PAVEMENT	S.Y.						
7" CONCRETE ALLEY PAVEMENT	S.Y.						
V.T. CONCRETE BASE	C.Y.						
CONCRETE BASE	S.Y.						
TACK COAT	GAL.						
BASE PREP. FOR ASPHALT SURFACE	L.S.						
V.T. ASPH. CONC. PAV'T. (MAX.)	S.Y.						
CRUSHED STONE BASE							
CRUSHED GRAVEL BASE							
GRAVEL FILLING	TON						
SODDING	S.Y.						
TOPSOIL	C.Y.						
PAVEMENT GRINDING (ASPHALT)	S.Y.						
PAVEMENT GRINDING (CONCRETE)	S.Y.						
SEALING PAV'T JOINTS & CRACKS	S.Y.						
MANHOLE RINGS	EACH						
SEWER FRAME ADJUSTMENT	V.F.						
MANHOLE SEAL (CITY FURNISHED)	EACH						
EROSION CONTROL (TYPE M)	EACH						

DEPARTMENT OF PUBLIC WORKS
INFRASTRUCTURE SERVICES DIVISION
FIELD OPERATIONS
FIELD & DESIGN ENGINEERING
MILWAUKEE, WISCONSIN

FILE NO.

PLAN OF: N. MILWAUKEE ST.

E. MENOMONEE ST. TO E. ST. PAUL AVE.

THIS SECTION: STA. 18+00 TO E. ST. PAUL AVE.

DRAWN BY	S.B./B.M.	DATE: 6/18/13	PROJECT NO. ST211130173		SHEET 2 OF 2
DESCRIPTIONS BY	S.BIEGANSKI	DATE: 6/18/13			
LEVELS BY		DATE:	SCALE	1/4 SEC.	ALD.DIST.
LEVELS TRANSF. BY		DATE:	1"=10'	396	4
DESIGNED BY	S.WALCZAK	DATE: 6/10/13	OBSTRUCTIONS - SEE OBSTRUCTION LIST		
GRADES TRANSF. BY	S.B./B.M.	DATE: 6/18/13	REVISED: 8/26/13 S. WALCZAK		
CHECKED BY	D.V.	DATE: 9/5/13	MEDIAN NOSE		
APPROVED BY	[signature]	DATE: 9/5/13	REVISED:		
FILE: V:\PWELIB\PAVING\29336.FIN					
PLOT DATE: 05-SEP-2013					

STORM DRAINAGE UNITS		
C.B.W.- 0	RESET- 0	ABANDON- 0
PROJECT IN COMB AREA		

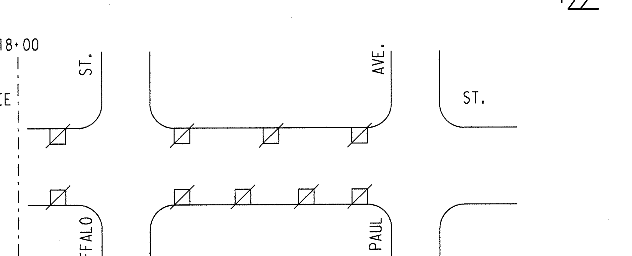

EROSION CONTROL AND C.B. REQUISITION PLAN

	TYPE M	☒ - CBW	☐ - RESET	X - ABANDON	☐
THIS SHEET	9	0	0	0	NO WORK

DATE / TO					
ESTIMATING					
HOLLOW WALKS					
PUBLIC HEARING					
CONSTRUCTION					
SEWER					
WATER					
STREET LIGHTING					
BLDG. SEWERS					
MEASURING					
FIELD					
DISTRICT FILE					
FORESTRY					
W.E. / G.O.					
WIS. GAS CO.					
TRANSIT SYSTEM					
CABLE TV					
UND. GRD. COND.					
WATER DIST.					
WEPCO N/S					
WEPCO S/S					
SEWER SERVICES					
UTILITY COOR.					
PLAN SIZE	17.5"X120"				

N. MILWAUKEE ST. - E. MENOMONEE ST. TO E. ST. PAUL AVE. ST211130173 17.5"X120" 29336 (2 OF 2)